ACKNOWLEDGEMENT

Individual volumes of this document were prepared by:

Volume I - D. S. Duncan and W. M. Bryan

Volume II - G. M. Witcraft

Volume III- D. Syrek

NOTICE

PORTIONS OF THIS REPORT [illegible] ILLEGIBLE. It has been reproduced from [illegible] available copy to permit the broadest possible availability.

TID/SNA-- 691

NOTICE

PORTIONS OF THIS REPORT ARE ILLEGIBLE. It has been reproduced from the best available copy to permit the broadest possible availability.

AEROJET GENERAL

NOTICE

This report was prepared as an account of work sponsored by the United States Government. Neither the United States nor the United States Energy Research and Development Administration, nor any of their employees, nor any of their contractors, subcontractors, or their employees, makes any warranty, express or implied, or assumes any legal liability or responsibility for the accuracy, completeness or usefulness of any information, apparatus, product or process disclosed, or represents that its use would not infringe privately owned rights.

R202-CP090290-F1

RELIABILITY ALLOCATIONS, ASSESSMENTS, AND ANALYSIS REPORT

VOLUME I
RELIABILITY MODEL, PREDICTIONS AND ALLOCATIONS

VOLUME II
SYSTEM FAILURE-MODE EFFECTS AND CRITICALITY ANALYSIS

VOLUME III
TREND DATA

NERVA Program

Contract SNP-1

SEPTEMBER 1971

J. H. Ramsthaler, Manager
Reliability & Safety Department
Engineering Operations

W. O. Wetmore, Vice President
and NERVA Program Director

W. E. Campbell, Manager
Engineering Operations

Classification Category
UNCLASSIFIED

Classifying Officer

28 Sep 71
Date

DISTRIBUTION OF THIS DOCUMENT UNLIMITED

VOLUME I

RELIABILITY MODEL, PREDICTIONS AND ALLOCATIONS

VOLUME I

TABLE OF CONTENTS

SECTION		PAGE
1.0	INTRODUCTION	1-1
1.1	SCOPE	1-1
1.2	GENERAL APPROACH	1-2
1.3	RELIABILITY REQUIREMENTS	1-4
1.4	DEFINITIONS	1-6
1.5	APPLICABLE DOCUMENTS	1-9
2.0	SUMMARY	2-1
3.0	RELIABILITY ALLOCATION AND PREDICTION	3-1
3.1	RELIABILITY MODEL	3-3
3.1.1	Math Model Development	3-3
3.1.1.1	Series and Parallel Systems	3-3
3.1.1.2	NERVA System Model	3-5
3.1.1.3	Allocation Factor	3-7
3.1.2	Assumptions	3-9
3.2	ANALYSIS	3-12
3.2.1	Failure Mode Probability Predictions	3-12
3.2.2	Category III Single Failure Allocations	3-12
3.2.3	Category IV Single Failure Allocations	3-22
3.2.4	Double Failures	3-22
3.2.5	Summary of Results	3-25
3.2.5.1	Non-Nuclear Subsystem	3-25
3.2.5.2	Nuclear Subsystem	3-25
APPENDICES		
A.	DERIVATION OF RELATIVE FAILURE RATE ESTIMATES	A-1
A.1	INTRODUCTION	A-1
A.2	VALVES	A-3
A.3	TURBOPUMP ASSEMBLY	A-5
A.4	NOZZLE	A-6
A.5	NOZZLE EXTENSION	A-8
A.6	THRUST STRUCTURE	A-9
A.7	EXTERNAL SHIELD	A-12

		PAGE
A.8	GIMBAL ASSEMBLY	A-13
A.9	ESSURE VESSEL AND CLOSURE ASSEMBLY	A-14
A.10	LINES	A-17
A.11	CONTROLS AND INSTRUMENTATION	A-18
	A.11.1 C&I Components	A-18
	A.11.2 Valve Actuator Components	A-18
A.12	NUCLEAR SUBSYSTEM	A-24
B.	COMPARISON OF EXACT AND APPROXIMATE RELIABILITY MODELS	B-1
C.	RELIABILITY PREDICTION FOR STRUCTURES EXPOSED TO N CYCLES	C-1

LIST OF FIGURES

FIGURE NO.		PAGE
1-1	RELIABILITY ALLOCATION BREAKDOWN	1-5
3-1	NERVA ENGINE SPECIFICATION TREE	3-2

LIST OF TABLES

TABLE NO.		PAGE
2-1	NERVA ENGINE RELIABILITY SUMMARY	2-2
2-2	SUMMARY OF NNSS COMPONENT ALLOCATIONS AND PREDICTIONS	2-3
2-3	NNSS COMPONENT ALLOCATIONS BY FAILURE EFFECT CATEGORY	2-4
3-1	CATEGORY II-A FAILURE MODE PROBABILITY SUMMARY	3-13
3-2	CATEGORY II-B FAILURE MODE PROBABILITY SUMMARY	3-14
3-3	CATEGORY 1. FAILURE MODE PROBABILITY SUMMARY	3-15
3-4	CATEGORY III-A FAILURE MODE PROBABILITY SUMMARY	3-16
3-5	CATEGORY III-B FAILURE MODE PROBABILITY SUMMARY	3-18
3-6	CATEGORY IV FAILURE MODE PROBABILITY SUMMARY	3-20
3-7	NNSS DOUBLE FAILURE SUMMARY	3-24
3-8	NNSS RELIABILITY SUMMARY	3-26
3-9	NERVA ENGINE RELIABILITY ALLOCATIONS BY COMPONENT FAILURE MODE	3-27
3-10	NSS RELIABILITY PREDICTIONS VERSUS ALLOCATIONS	3-33
A-1	VALVE HISTORICAL FAILURE RATE ASSESSMENTS	A-4
A-2	TPA HISTORICAL FAILURE RATE ASSESSMENTS	A-7
A-3	NOZZLE HISTORICAL FAILURE RATE ASSESSMENTS	A-7
A-4	NOZZLE EXTENSION HISTORICAL FAILURE RATE ASSESSMENTS	A-8

TABLE NO.		PAGE
A-5	COMPONENT MECHANISM OF FAILURE ANALYSIS FOR NERVA THRUST STRUCTURE	A-10
A-6	"FAILURE RATE POTENTIAL" VALUES	A-11
A-7	THRUST STRUCTURE HISTORICAL FAILURE RATE ASSESSMENTS	A-11
A-8	GIMBAL ASSEMBLY HISTORICAL FAILURE RATE ASSESSMENTS	A-13
A-9	COMPONENT MECHANISM OF FAILURE ANALYSIS FOR NERVA PRESSURE VESSEL AND CLOSURE ASSEMBLY	A-15
A-10	PVDA HISTORICAL FAILURE RATE ASSESSMENT	A-17
A-11	PROPELLANT LINE COMPLEXITY RANKINGS	A-19
A-12	PROPELLANT LINE HISTORICAL FAILURE RATE ASSESSMENTS	A-20
A-13	CONTROL & INSTRUMENTATION SYSTEM HISTORICAL FAILURE RATE ASSESSMENTS	A-22
A-14	VALVE/ACTUATOR ELECTRONICS HISTORICAL FAILURE RATE ASSESSMENTS	A-23
A-15	NSS FAILURE RATE SUMMARY FOR FAILURE EFFECT CATEGORIES III AND IV	A-25
B-1	COMPARISON OF SYSTEM MODELS FOR 60 CYCLES OF OPERATION	B-5

SECTION I

INTRODUCTION

1.0 INTRODUCTION

1.1 SCOPE

This document presents the preliminary reliability analysis results for the 75K NERVA Full Flow Engine. Included in this report are allocations and predictions, system failure modes and effects, single failure points, models, and trend data. This document updates and supersedes the initial draft of Data Item R-202 issued in September 1970.

The details of the reliability analyses for the non-nuclear subsystem (NNSS) are described herein. The analysis described is based on Flight Engine Flow Diagram 1137401, Revision F. The details of the reliability analyses for the nuclear subsystem (NSS) are presented in the NSS Reliability Allocations, Assessments and Analysis Report, WANL-TME-2770, dated February 1971, and are based on Flight Engine Flow Diagram 1137401, Revision D. Brief Summaries of the WANL results are included in appropriate sections of this report.

This issue of Data Item R-202 is divided into three volumes for ease of handling and to more easily accommodate future revisions. Each volume is devoted to a particular phase of the system reliability engineering activity.

Volume I - Reliability Model, Predictions and Allocations

Volume II - System Failure-Mode Effects & Criticality Analysis

Volume III - Trend Data

Failure mode analyses, math models, and reliability assessments for the individual components of the NNSS are being prepared and will be issued initially as a part of the Component Design Reports which are used to support Detail Design Review.

This volume of Data Item R-202 contains an initial reliability assessment of the NERVA Engine. Section 2 contains an

overall summary of the reliability status of the engine system including the reliability allocations for each major subsystem or component of the engine and the current reliability predictions based upon initial reliability estimates of the failure probabilities for component failure modes. Section 3 describes the reliability model, the assumptions used in allocating the reliability requirements to the individual components of the NNSS, and the detailed allocation and prediction results by component failure mode and criticality of failure. Three appendices are provided which discuss the derivation of the component failure rate estimates, exact versus approximate reliability models, and reliability predictions for structures exposed to multiple cycles of operation.

A detailed description of the NERVA engine and the operational phases that constitute an engine cycle are contained in Volume II of this data item.

1.2 GENERAL APPROACH

The NERVA reliability program as defined by the Reliability Plan, Data Item R-101, establishes the design and analysis approach to be followed in achieving the high reliability required for the NERVA engine. The reliability methodology defined necessitates a probabilistic determination of design success based on analysis of all recognized ways the design can be anticipated to fail.

Failure mode analysis is the principal analytical tool in the probabilistic design approach. The analysis process is initiated with the system-level failure-mode effects and criticality analysis (FMECA) to determine system effects and interactions and to provide a basis for selecting component concepts that preclude critical system failure modes. The basic objectives of the system-level FMECA are (1) to assess the effects of failure on operation of the system, (2) to assess methods of control or isolation within subsystems, and (3) to provide the basis for subsequent

component FMA's. The analysis assures a systematic and detailed review of all possible system effects that result from component failur .

Concurrent with, and on completion of, the system-level analysis, the component-level failure-mode analyses (FMA's) are initiated by the designer to determine the causes of failure within components and to determine the inherent design reliability estimates. At this level the engineering disciplines, such as stress, materials, radiation, thermal, instrumentation and controls, and quality assurance, are actively included in the analysis process. Probabilistic analyses are conducted on selected critical causes of failure identified in the component FMA.

Component failure-mode analysis (FMA) is a major portion of the reliability program for the NERVA engine and is the primary tool whereby reliability can be an effective design parameter. A component FMA supplements the FMECA by identifying and assessing the probability of occurrence of possible means by which a component can fail from a physical or structural standpoint. It is also a systematic procedure for identifying the primary causes (mechanisms) of each mode of failure and eliminating from further consideration those that have no adverse system effects as judged by the FMECA, or those that, in engineering judgment, require no detailed analysis because margins of safety of the mechanisms of failure are inherently high. The likelihood of each selected critical mechanism of failure is assessed by testing and/or is analyzed in terms of "failure-causing stress" and "failure-resisting strength." The stress-strength analyses include considerations of structural, electrical, performance, dynamic, and environmental stresses and strengths as well as foreign influences such as contamination. The nominal levels and expected variations in these stress and strength values provide the means for assessing the probability of the design concept performing without physical failure.

1.3 RELIABILITY REQUIREMENTS

The NERVA reliability requirement contained in the Engine Specification, CP-90290C, specifies:

"The engine system shall be designed to satisfy all normal mode performance, endurance, and useful life requirements under the environmental conditions set forth in this specification with a probability of 0.995 ..... In addition, the engine shall be designed such that the probability of Category IV system failures occurring during any single normal-mode operating cycle with ten (10) minutes at steady state and considering all engine operational phases including a 100-day coast period shall not exceed 1×10^{-8}.

"The system reliability analysis for space application shall be based on ten (10) missions, each mission consisting of six (6) engine cycles including all phases, and each cycle to include ten (10) minutes at the normal steady state phase. The time between missions and between engine cycles shall be consistent with the space service life ...." of three (3) years.

".....The overall engine reliability assessment may take credit for repair or replacement of the I&C system computer between missions (as defined above) provided the computer is located forward of the remote interface plane (Engine Station 0.00)."

The numerical reliability requirements stated in the first paragraph above have been apportioned to the engine system as shown in Figure 1-1. This breakdown, though somewhat arbitrary was made based on early predictions of the relative failure likelihoods of the nuclear and non-nuclear subsystems and on the relative significance and likelihood of single and double Category IV failures in the non-nuclear subsystem.

WANL did not use the above requirement in performing the reliability allocation to components of the nuclear subsystem since this requirement was not established until after issuance of the NSS Reliability Allocations, Assessments and Analysis Report, WANL-TME-2770. Rather, the

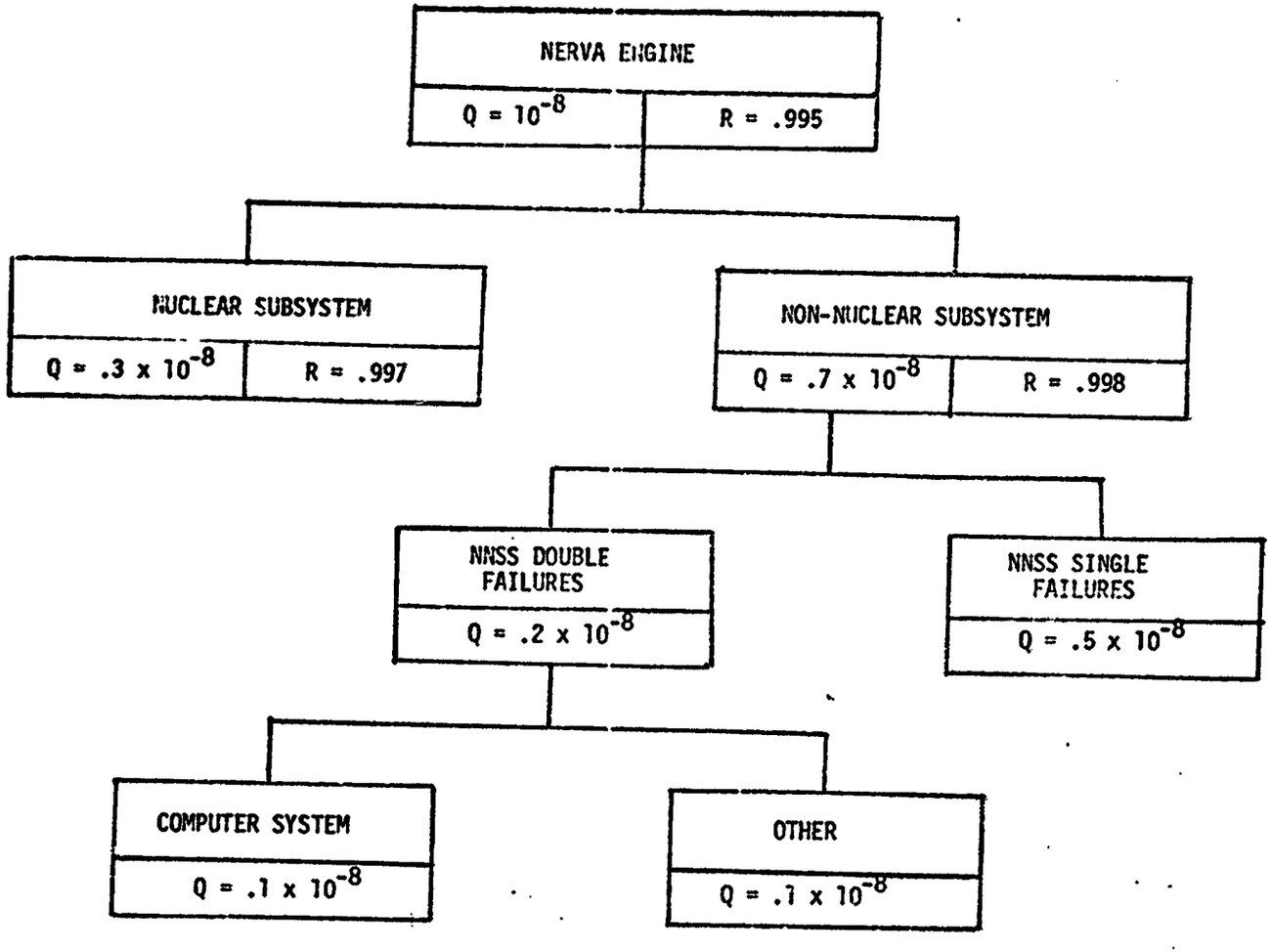

Q = CATEGORY IV FAILURE PROBABILITY PER ENGINE CYCLE

R = RELIABILITY PER ENGINE LIFE

FIGURE 1-1

RELIABILITY ALLOCATION BREAKDOWN

following statement was used in preparing the NSS component allocations.

"Redundancy applied to preclude directly the effect of critical single failures shall not be credited to achievement of the engine reliability requirement. Having precluded the departure from normal mode performance by use of redundancy to circumvent the effect of critical single failures, the use of additional redundancy internal to components and parts may be credited to the NSS reliability requirement of 0.997".

Since WANL used the same definition for an engine operating cycle as is used herein, the major differences between the two reliability statements pertain to the way in which component redundancy is treated and the addition of a separate designation for the Category IV failure probability. A re-allocation to NSS components based on the new reliability requirement will be contained in a subsequent issue of this data item.

1.4 DEFINITIONS

While a complete glossary of terms is presented in NERVA Reliability Procedure R101-NRP-307, certain definitions are essential in understanding subsequent sections of this report. A FAILURE is defined as the inability of a material or part to perform a required function within specified limits. A FAILURE EFFECT is a description of the expected change in operation that can be attributed to a failure. A FAILURE MODE is the description of the presumed way in which a component or part ceases to perform an intended function within design performance limits. A FAILURE MECHANISM is a description of the physical process that results in a part or equipment failure mode. A component failure mode has some initial effect on a subsystem. This subsystem mode of failure may be isolated or compensated for to result in a final subsystem effect. This subsystem failure results in some engine effect that can be discussed as an engine mode of failure. A mechanism of failure is usually reserved for detailed component failure-mode analysis where specific causes of failure of component parts are being analyzed.

To provide a basis for comparing the criticality of component failure modes, FAILURE EFFECT CATEGORIES have been established. These categories are defined as follows:

CATEGORY 1 - Failures which produce no significant performance or safety degradation of the system, allow continued operation in the normal mode throughout the rated engine life, and do not result in the addition of Single Failure Points to the system.

CATEGORY II - Failures from which the engine can recover and still meet its normal-mode performance and service life requirements by switching to or reverting to a recovery mode, but which do result in the addition of one or more Single Failure Points to the system. Failures in this category are further subdivided as follows:

IIA - Failures which degrade the safety of continued operations, but which do not produce transient effects and, at the time of failure, do not require automatic or manual action for the recovery mode. Failures of safety systems and standby-redundant components fall within this category.

IIB - Failures which are compensated for automatically by the normal control mode or which produce transient effects which can be tolerated by the system and which permit time for human judgement to be exercised on the method and desirability of the recovery mode. Failures which require the functioning of safety systems or redundant components to preclude Category IIIB effects fall within this category.

IIC - Failures which require immediate malfunction detection and subsequent action to remove or lessen the transient effect and to preclude system damage. Switching to the recovery mode is usually accomplished automatically by the malfunction detection system or by the engine control system. Failures which require the automatic functioning of safety systems or redundant components to preclude Category IV effects fall within this category.

CATEGORY III - Failures which result in inability of the engine to meet its normal-mode performance or service-life requirements but which allow Emergency Mode Operation or Single Turbopump Operation. Failures in this category are further subdivided as follows:

IIIA - Failures which require Single Turbopump Operation.

IIIB - Failures which require Emergency Mode Operation.

CATEGORY IV - Failures which result in direct injury to the crew, endanger the earth's population, or damage the spacecraft or other stage modules upon which crew survival depends, and/or which preclude Emergency Mode Operation. This category includes failures which produce one or more of the following system effects:

(a) Uncorrectable thrust vector misalignment.

(b) Loss of thrust to less than that required to effect Emergency Mode Operation.

(c) Inability to reduce thrust or unsuccessful shutdown and/or cooldown which precludes engine restart.

(d) Unsuccessful startup to attain thrust equal to or greater than that required for Emergency Mode Operation.

A SINGLE FAILURE POINT is defined as any single mode of failure that can be attributed to one or more specific mechanisms at the part level that results in the inability of the engine to meet its normal performance and service life requirements. All such modes of failure are assigned either a Failure Effect Category III or IV.

1.5 APPLICABLE DOCUMENTS

The following documents were used as a source of requirements or information, or for guidance in the preparation of this data item.

R-101, Reliability Plan

S-019, NERVA Safety Plan

S-103, Flight Safety Contingency Analysis Report

S-001, System Analysis Summary Report

C002-CP090290C, NERVA Engine Specification

SNPO-C ST-1, NERVA Engine Specification Tree, Revision H

R101-NRP-300B, System Failure-Mode Effects and Criticality Analysis for the NERVA Engine

R101-NRP-303A, Reliability Apportionment

R101-NRP-307A, Glossary of Reliability Terms

R101-NRP-400, Failure Rate Derivation

R101-NRP-506, Identification and Control of Trend Characteristics

ANSC Dwg. No. 1137400, Revision E, 75K NERVA Flight Engine Layout, Full Flow

ANSC Dwg. No. 1137401, Revision F, 75K NERVA Flight Engine Flow Diagram

SECTION 2

SUMMARY

2.0 SUMMARY

This section contains an overall summary of the reliability predictions and allocations for the NERVA engine. Table 2-1 summarizes the allocated and predicted values for the 60-cycle reliability and 1-cycle Category IV failure probability for both the nuclear and non-nuclear subsystems. The number of Category III and IV single failure points are also listed.

A comparison of the predicted and allocated reliabilities for the NNSS shows that the predicted failure probability for this subsystem must be reduced by a factor of approximately 335 in order for the NNSS to achieve its reliability goal. A similar comparison for the NSS shows a reduction factor of 27 is required. A comparison of the predicted and allocated Category IV failure probabilities for the NNSS shows that a reduction factor of approximately 140,000 is needed.

The major contributors to the very low reliability prediction for the NNSS are the single Category IIIA failures associated with each propellant feed system leg and the double failures in the I&C subsystem which lead to Category IV system failure. The contributions made by these two subsystems to the predicted unreliability of the NNSS are approximately 42% and 33% respectively.

Table 2-2 summarizes for each major component in the non-nuclear subsystem the allocated and predicted values for the 60-cycle reliability and the 1-cycle failure probability based on consideration of all Category II, III and IV failures. Table 2-3 summarizes the NNSS component allocations by failure effect category. Each of these tables list the components in ascending order of total allocated reliability.

TABLE 2-1

NERVA ENGINE RELIABILITY SUMMARY

	NNSS	NSS
RELIABILITY (60 CYCLE)		
ALLOCATED	.998	.997
PREDICTED	.33	.92
CAT. IV. FAILURE PROB.. (1 CYCLE)		
ALLOCATED	$.0_8 7$*	$.0_8 3$
PREDICTED	$.0_2 1$	(tbd)
SINGLE FAILURE POINTS		
CATEGORY III	81	17**
CATEGORY IV	47	15**

* Subscript refers to number of zeros that precede the next digit, e.g., $.0_3 1 \approx .0001$.

** The NSS single failure point count does not reflect the total number of SFP's in like or redundant components. For example, though there are 18 control drums, the failure mode "control drum fails in place" is counted as only one SFP.

TABLE 2-2

SUMMARY OF MMSS COMPONENT ALLOCATIONS AND PREDICTIONS*

COMPONENT	RELIABILITY (60 CYCLES)**		FAILURE PROBABILITY (1-CYCLE)**	
	ALLOCATED	PREDICTED	ALLOCATED	PREDICTED
CSCV	$.9_{3}3$	.90	$.0_{4}1$	$.0_{2}2$
CSOV	$.9_{3}4$	.90	$.0_{5}9$	$.0_{2}2$
BCV	$.9_{3}6$	.94	$.0_{5}7$	$.0_{3}9$
SSBV	$.9_{3}6$	.95	$.0_{5}6$	$.0_{3}8$
PDCV	$.9_{3}6$	.95	$.0_{5}6$	$.0_{3}8$
PDBV	$.9_{3}6$	.95	$.0_{5}6$	$.0_{3}8$
BBV	$.9_{3}6$	.95	$.0_{5}6$	$.0_{3}8$
PSOV	$.9_{3}8$	.94	$.0_{5}3$	$.0_{2}1$
TPA	$.9_{3}8$	.94	$.0_{5}3$	$.0_{2}1$
TBV	$.9_{4}0$	.95	$.0_{5}2$	$.0_{3}8$
TDBV	$.9_{4}0$	.95	$.0_{5}2$	$.0_{3}8$
PDKVA	$.9_{4}0$	.95	$.0_{5}2$	$.0_{3}8$
PDKV	$.9_{4}7$	$.9_{2}7$	$.0_{6}3$	$.0_{4}5$
I&C	$.9_{5}7$	.69	$.0_{8}2$	$.0_{3}1$
NOZZLE	$.9_{6}0$	$.9_{3}5$	$.0_{5}1$	$.0_{3}5$
NOZZLE EXTENSION	$.9_{6}0$	$.9_{3}6$	$.0_{5}1$	$.0_{3}4$
GIMBAL PIVOT	$.9_{7}0$	$.9_{4}6$	$.0_{6}1$	$.0_{4}2$
GIMBAL ACTUATOR	$.9_{7}1$	.98	$.0_{8}1$	$.0_{3}3$
PROPELLANT LINES	$.9_{7}4$	$.9_{3}8$	$.0_{7}6$	$.0_{3}2$
PRESSURE VESSEL & CLOSURE	$.9_{8}7$	$.9_{4}8$	$.0_{8}3$	$.0_{4}2$
THRUST STRUCTURE	$.9_{9}8$	$.9_{4}6$	$.0_{9}2$	$.0_{4}4$
EXTERNAL SHIELD	$.9_{11}4$	$.9_{6}0$	$.0_{11}6$	$.0_{5}1$

* Component failure mode predictions are based on the relative failure probability estimates documented in Appendix A.

** Total values based on Category II, III and IV failures.

TABLE 2-3

NNSS COMPONENT ALLOCATIONS BY FAILURE EFFECT CATEGORY

COMPONENT	RELIABILITY (60 CYCLES)			FAILURE PROBABILITY (1 CYCLE)		
	CAT. II	CAT. III	CAT. IV	CAT. II	CAT. III	CAT. IV
CSCV	$.9_{3}^{3}$	$.9_{7}^{8}$	$.9_{11}^{4}$	$.0_{4}^{1}$	$.0_{7}^{2}$	$.0_{11}^{6}$
CSOV	$.9_{3}^{6}$	$.9_{3}^{8}$	$.9_{11}^{4}$	$.0_{5}^{6}$	$.0_{5}^{3}$	$.0_{11}^{6}$
BCV	$.9_{3}^{6}$	$.9_{7}^{0}$	$.9_{11}^{4}$	$.0_{5}^{7}$	$.0_{6}^{1}$	$.0_{11}^{6}$
SSBV	$.9_{3}^{6}$	$.9_{7}^{8}$	$.9_{11}^{4}$	$.0_{5}^{6}$	$.0_{7}^{2}$	$.0_{11}^{6}$
PDCV	$.9_{3}^{6}$	$.9_{7}^{8}$	$.9_{11}^{4}$	$.0_{5}^{6}$	$.0_{7}^{2}$	$.0_{11}^{6}$
PDBV	$.9_{3}^{6}$	$.9_{7}^{8}$	$.9_{11}^{4}$	$.0_{5}^{6}$	$.0_{7}^{2}$	$.0_{11}^{6}$
BBV	$.9_{3}^{6}$	$.9_{7}^{8}$	$.9_{11}^{4}$	$.0_{5}^{6}$	$.0_{7}^{2}$	$.0_{11}^{6}$
PSOV	$.9_{5}^{8}$	$.9_{3}^{8}$	$.9_{11}^{0}$	$.0_{7}^{4}$	$.0_{5}^{3}$	$.0_{10}^{1}$
TPA	-	$.9_{3}^{8}$	$.9_{10}^{7}$	-	$.0_{5}^{3}$	$.0_{10}^{3}$
TBV	$.9_{4}^{8}$	$.9_{4}^{0}$	$.9_{11}^{0}$	$.0_{6}^{5}$	$.0_{5}^{2}$	$.0_{10}^{1}$
TDBV	$.9_{4}^{8}$	$.9_{4}^{0}$	$.9_{11}^{0}$	$.0_{6}^{5}$	$.0_{5}^{2}$	$.0_{10}^{1}$
PDKVA	$.9_{4}^{8}$	$.9_{4}^{0}$	$.9_{11}^{4}$	$.0_{6}^{4}$	$.0_{5}^{2}$	$.0_{11}^{6}$
PDKV	$.9_{4}^{8}$	$.9_{5}^{0}$	$.9_{11}^{4}$	$.0_{6}^{3}$	$.0_{7}^{4}$	$.0_{11}^{6}$
I&C	-	-	$.9_{5}^{7}$*	-	-	$.0_{8}^{2}$
NOZZLE	-	$.9_{6}^{0}$	$.9_{9}^{8}$	-	$.0_{5}^{1}$	$.0_{9}^{2}$
NOZZLE EXTENSION	-	$.9_{6}^{0}$	$.9_{9}^{4}$	-	$.0_{5}^{1}$	$.0_{9}^{6}$
GIMBAL PIVOT	$.9_{7}^{0}$	-	$.9_{11}^{8}$	$.0_{6}^{1}$	-	$.0_{11}^{2}$
GIMBAL ACTUATOR	-	-	$.9_{7}^{1}$	-	-	$.0_{8}^{1}$
PROPELLANT LINES	-	$.9_{7}^{4}$	$.9_{9}^{2}$	-	$.0_{7}^{6}$	$.0_{9}^{8}$
PRESSURE VESSEL & CLOSURE	-	$.9_{8}^{7}$	$.9_{10}^{0}$	-	$.0_{8}^{3}$	$.0_{9}^{1}$
THRUST STRUCTURE	-	-	$.9_{9}^{8}$	-	-	$.0_{9}^{2}$
EXTERNAL SHIELD	-	-	$.9_{11}^{4}$	-	-	$.0_{11}^{6}$

* Based on a redundant computer system with maintenance between missions.

SECTION 3

RELIABILITY ALLOCATION AND PREDICTION

3.0 RELIABILITY ALLOCATION AND PREDICTION

This section describes the methodology used in the apportionment of the NNSS reliability requirements to the component failure-mode level and summarizes the allocated and predicted reliabilities that result from the apportionment process.

Reliability apportionment is defined as the process of determining the subsystem and component reliability allocations from the system reliability allocation. The system reliability allocation has been specified previously in Figure 1-1.

The purpose of reliability apportionment is to establish numerical reliability goals for each component design based on overall system reliability requirements, criticality of component failures and relative difficulty between component designs. Apportioned reliability values are developed for each subsystem and component listed in the NERVA-engine specification tree, Figure 3-1. These apportionments or allocations are made a part of the requirements generated by systems-engineering personnel and eventually are incorporated in each design specification. The initial allocations derived in this report will be reviewed and revised, if required, to reflect unforeseen problems with components. Components whose initial reliability allocations appear too high because of unexpected difficulties may be reallocated lower values at the expense of components for which no undue difficulties are experienced.

Reliability predictions are the numerical evaluations (or estimates) of the capability of systems and components to perform their required functions without physical failure. They provide a basis for reliability apportionment and a measure of the capability of a design to achieve its objectives. Early predictions are a consideration in design selection along with such other attributes as weight, cost, and performance. Reliability predictions also provide a means of determining potential reliability problem areas and of guiding design trade-off studies.

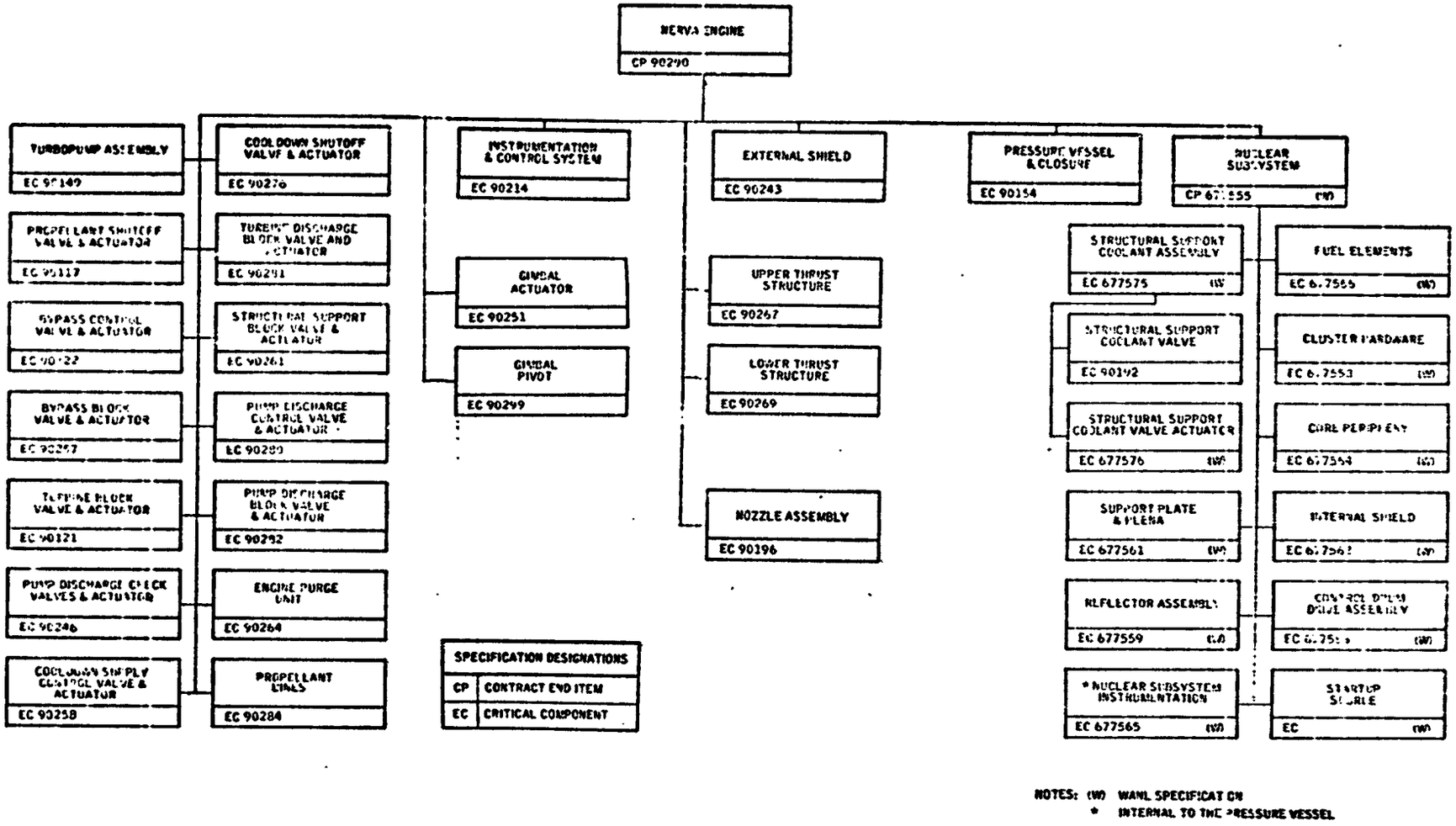

FIGURE 3-1

NERVA ENGINE SPECIFICATION TREE

The reliability predictions are developed by using mathematical models. Predicted component reliability values are provided as input to the models, resulting in system or component network predictions. The system or network predictions are then compared with reliability requirements to determine the extent to which the requirements have been satisfied.

3.1 RELIABILITY MODEL

The purpose of the reliability model is to provide a means to integrate all identified failure modes with their probabilities of occurrence and to develop their functional relationships to estimate the probability of success for the engine system. The basis for the model is the failure-modes and effects analysis contained in Volume II of this report. This analysis assesses the effects of component failure modes on system operations. Once developed, the engine mathematical model is used for reliability prediction and apportionment during the design stage and for reliability assessment during the development stage.

3.1.1 Math Model Development

3.1.1.1 Series and Parallel Systems

A series system is defined as one which is comprised of a group of elements each of which is considered vital to the successful operation of the system and each of which is assumed to fail independently of the others. Mathematically the reliability of a series system operated over N cycles is expressed as

$$R_{SS} = \prod_{i=1}^{I} R_i^N, \qquad [1]$$

where:

R_{SS} = series system reliability

R_i = reliability of the ith element

I = total number of series elements in the system

N = number of system operating cycles.

Since the reliability of each element can also be expressed as $(1-p_i)$ where p_i is the element failure probability, Equation [1] may also be written as

$$R_{SS} = \prod_{i}^{I} (1-p_i)^N. \qquad [2]$$

The expansion of this expression results in

$$R_{SS} = \prod_{i}^{I} \left(1-Np_i + \frac{N(N-1)\ p_i^2}{2!} - \ldots\right), \qquad [3]$$

which, for values of R_{SS} very close to 1 can be approximated by

$$R_{SS} \cong 1-N \sum_{i=1}^{I} p_i, \text{ for } (1-R_{SS}) \leq .01. \qquad [4]$$

For example, if $p_i = .0_62$*, N = 100 cycles and I = 500 series elements, the series system reliability from Equation [2] equals .99005 and from Equation [4] equals .99000.

A parallel system is defined as one which is comprised of a group of elements, each of which must fail in order to fail the system. Mathematically the reliability of a parallel 2-element system operated over N cycles is expressed as

---

* $.0_62 \approx .0000002$

$$R_{PS} = R_1^N + R_2^N - (R_1 R_2)^N \qquad [5]$$

$$= (1-p_1)^N + (1-p_2)^N - (1-p_1)^N (1-p_2)^N. \qquad [6]$$

In this case, if the element reliabilities R_i, are very close to one so that the higher order terms (third order and higher) in the expansion of [6] can be neglected, then Equation [6] reduces to

$$R_{PS} \cong 1-N^2 p_1 p_2, \text{ for } Np_1 \text{ and } Np_2 \leq .01. \qquad [7]$$

For example, if $p_1 = p_2 = .0_3 1$ and $N = 100$, the parallel system reliability from Equation [6] equals $.9_4 01$ and from Equation [7] equals $.9_4 00$.

3.1.1.2 NERVA System Model

The reliability model for the NERVA system has been formulated assuming that the system can be represented by a series of both individual elements and parallel 2-element systems, i.e.,

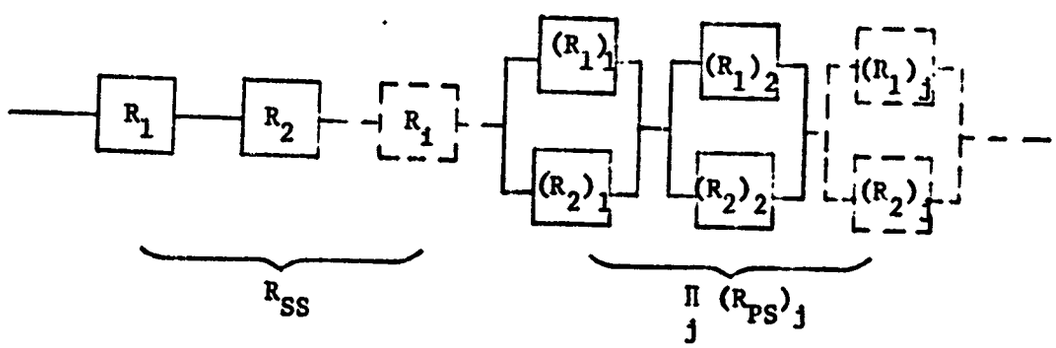

Thus, the system reliability, R, is

$$R = R_{SS} \prod_j (R_{PS})_j, \qquad [8]$$

which by substitution of Equations [4] and [7] becomes

$$R \cong [1-N \sum_i p_i] \prod_j [1-N^2 (p_1 p_2)_j]. \qquad [9]$$

Since the approximations for R_{SS} and R_{PS} are valid only when the reliability values are very close to 1, Equation [9] will be applied to allocated reliabilities only, which for the NERVA system, satisfy this criterion. Thus, redefining Equation [9] in terms of allocated component failure-mode probabilities,

$$R_a \cong [1-N \sum_i (q_a)_i] \prod_j [1-N^2(q_{a1}q_{a2})_j] \qquad [10]$$

where:

R_a = allocated system reliability for N cycles.

$(q_a)_i$ = allocated component failure mode probabilities for failure modes which can individually fail the system.

$(q_{a1}q_{a2})_j$ = double failure probability for combinations of allocated component failure modes which can fail the system.

By expansion of Equation [10] and neglecting all higher order terms, the system reliability reduces to

$$R_a \cong 1-N \sum_i (q_a)_i - N^2 \sum_j (q_{a1}q_{a2})_j. \qquad [11]$$

Thus the system reliability can be interpreted as being approximately equal to 1 minus the sum of the failure allocations associated with all single and double component failures that cause system failure. Appendix B shows the validity of this approximation for a number of simple systems for which exact reliability models have been derived. In every case, excellent agreement is shown between the approximate model described by Equation [11] and the exact system model contained in the appendix when the product of the number of cycles, N, and the failure probability, q, for each failure mode is less than .01.

3.1.1.3 Allocation Factor

The component allocation factor is defined as the ratio of the predicted one-cycle component failure mode probability to the allocated one-cycle component failure mode probability, i.e.,

$$A = \frac{q_i}{(q_a)_i}, \qquad [12]$$

where:

A = component allocation factor which is constant for all i

q_i = predicted one-cycle component failure mode probability.

This quantity is a direct measure of the factor by which the predicted failure probability of each component failure mode must be reduced to satisfy the NERVA system reliability allocation.

Using the above definition, the NERVA system model can be expressed in terms of predicted failure probabilities and the allocation factor, i.e.,

$$R_a \cong 1 - \frac{N}{A} \sum_i q_i - \frac{N^2}{A^2} \sum_j (q_1 q_2)_j . \qquad [13]$$

Since the allocated system reliability (R_a), the number of cycles (N), and the predicted single and double failure probabilities [q_i and $(q_1 q_2)_j$] are known or can be readily determined, Equation [13] can be solved for the allocation factor A and then the allocated single-cycle component failure-mode probabilities can be determined from Equation [12]. These in turn are used to calculate the N-cycle allocated reliabilities for each component failure mode.

When the system reliability is [illegible] by single failures, the double failure term of Equation [13] can be neglected with the result that the allocation factor can be approximated by

$$A \cong \frac{N \sum q_i}{1-R_a}, \text{ for single failures} \qquad [14]$$

Similarly, when the system reliability is dominated by double failures

$$A \cong \frac{N[\sum_j (q_1 q_2)_j]^{1/2}}{[1-R_a]^{1/2}}, \text{ for double failures.} \qquad [15]$$

Another useful expression is the relationship between the predicted system reliability, the allocated system reliability, and the allocation factor when only single failures are involved in the reliability calculation. This relationship will be used in subsequent sections to calculate the predicted reliability of the system after the allocation factor has been determined.

Since the reliability for a series system is

$$R_a = \prod_i [1-(q_a)_i]^N, \qquad [16]$$

then

$$R_a^A = \prod_i (1-\frac{q_i}{A})^{AN}. \qquad [17]$$

but

$$(1-\frac{q_i}{A})^A \cong 1 - q_i, \text{for } q_i \leq .01. \qquad [18]$$

so that

$$(R_a)^A \cong \prod_i (1-q_i)^N. \qquad [19]$$

The right hand side of this equation is the expression for the predicted system reliability, R_p. Consequently,

$$R_p \cong (R_a)^A, \text{ for single failures when } q_i \leq .01. \qquad [20]$$

As an example, consider a system which has a 100-cycle reliability requirement of .998 and which consists of 10 components each of which has a single-cycle failure probability of .001. From Equation [14],

$$A = \frac{100 \times 10 \times .001}{1 - .998} = 500.$$

Thus, from Equation [20]

$$R_p \cong (.998)^{500} = .3675$$

The exact values for the predicted and allocated system reliabilities using an allocation factor of 500 with the stated component failure probabilities are:

$$R_p = (1-.001)^{10 \times 100} = .3677$$

$$R_a = (1-\frac{.001}{500})^{10 \times 100} = .998002$$

These values are in excellent agreement with the approximate values given above.

3.1.2 Assumptions

The assumptions used in performing the reliability allocation to the engine component failure modes are listed below:

a. An engine cycle consists of 10 minutes at full thrust, 53 hours of cooldown and 385 hours of coast. 60 cycles comprise the space service life for the engine.

b. It is assumed that failure probabilities associated with periods outside of the space service life of 3 years are negligible in comparison to the failure probabilities during the space service life; consequently the failure probabilities during these periods were not considered in the model nor in the failure rate predictions.

c. There is no allocation made directly to performance parameters, e.g., thrust, specific impulse, state points, etc. The specified performance limits provide estimates of the mean and standard deviation of the performance attributes. These parameters are used in stress/strength calculations and therefore have a direct effect upon probabilities of occurrence of various failure modes. Consequently, if a performance parameter lies outside of its specification limits, its effects upon reliability will be assessed. However, the "failure" of a performance parameter to remain within specified limits does not in itself constitute a reliability failure.

d. The following times are associated with the NNSS valve positions and control modes:

TIME/ENGINE CYCLE (MINUTES)

ACTUATOR	CLOSED	OPEN	CONTROLLING	ELECTRONICS ON-TIME
PSOV	26262	18	-	60
PDKVA	26262	18	-	60
PDBV	0	26280	-	7
PDCV	0	26280	7	7
TBV	26262	18	-	60
TDBV	26262	18	-	60
BCV	0	26264	16	16
BBV	0	26280	-	60
CSOV	23100	3180	-	3180
CSCV	26210	15	55	3180
SSBV	11	26269	-	33

e. Checkout of all engine valves except the PSOV's, PDKV's and CSOV's is assumed to occur prior to the start of each engine cycle. The effects of this checkout are included in the predicted single-cycle valve failure rate.

f. The electronics associated with each valve/actuator are included in the reliability allocation for the valve/actuator. The block diagram and the predicted "on-time" failure rates for the actuator electronics are:

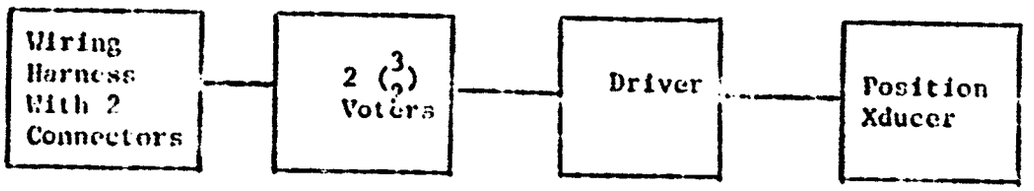

$\lambda(hr^{-1}) = .0_7 83 \quad = .0_6 8 \quad = .0_4 127 \quad = .0_5 26$

Thus the total "on-time" failure rate for actuator electronics is $16.2 \times 10^{-6}\ hr^{-1}$.

g. The ratio of the on-time to off-time failure rates for all engine electronics is assumed to be 10.

h. The total on-time failure rate for actuator electronics is apportioned to the actuator failure modes as follows:

Fails to control or fails in place	70%
Inadvertent open	15%
Inadvertent close	15%

100% of the off-time failure rate is apportioned to the actuator failure mode of "fails in place."

i. The drivers and A-MOD amplifiers for the control drums and SSCV are a part of the WANL allocation.

j. Structural failures of lines, nozzle, thrust structure, gimbal, pressure vessel and valves that cannot be attributed to low cycle fatigue are given a single failure probability which is independent of time or the number of engine cycles performed. The justification for this approach is given in Appendix C.

3.2 ANALYSIS

3.2.1 Failure Mode Probability Predictions

The NNSS component failure modes identified in the System FMECA, Volume II, are listed in Tables 3-1 through 3-6 by maximum failure effect category. These tables also list the predicted and allocated failure probabilities, and the allocated reliability for each failure mode. The predicted failure probabilities were obtained using the failure probability estimates derived in Appendix A in conjunction with the assumptions given in the previous section. For example, Table 3-1 gives the total predicted single-cycle failure probability for failure of the PDKVA to move from its full open position as $.0_4341$. From Table A-1 the non I&C valve/actuator failure probability for this mode is 30×10^{-6}/cycle. The I&C contribution is obtained using assumptions d., f., and h. of Section 3.1.2 as follows

$$q_i(\text{I\&C}) = \frac{18}{60} \times (16.2 \times 10^{-6}) \times (.70 + .15) = 4.13 \times 10^{-6}/\text{cycle}.$$

The sum of the non-I&C and I&C probabilities gives the total single-cycle prediction listed in Column 5 of Table 3-1. This process was followed for each of the failure modes listed. The quantity $N_i q_i$ given in Column 6 was calculated using $N_i = 60$ for all failures except structural failures for which N_i was assumed equal to 1 in accordance with assumption j of Section 3.1.2.

3.2.2 Category III Single Failure Allocations

Figure 1-1 establishes the NNSS 60-cycle reliability as .998. Thus the probability of system failure must not exceed .002. By definition system failure includes all Category III and IV failures; however, since the required failure probability for Category IV failures is very small ($\leq .7 \times 10^{-8}$ per engine cycle), the Category IV contribution to the system unreliability can be neglected. In addition, as will be shown in Section 3.2.4, the probability of double failures which combine to give a Category III failure effect can also be neglected. Therefore, the system unreliability of .002 can be assumed to be the summation of all Category III single failure probabilities in the system, i.e.,

$$1-R_a = \frac{1}{A}\left[\sum_i N_i q_i\right]_{III}.$$

TABLE 3-1

CATEGORY IIA FAILURE-MODE PROBABILITY SUMMARY

COMPONENT (NUMBER IN SYSTEM)	(CODE)*	COMPONENT FAILURE MODES	PREDICTED SINGLE-CYCLE FAILURE PROBABILITY, q_i ($\times 10^6$) NON I&C	I&C	TOTAL	$N_i q_i$ ($\times 10^6$)	ALLOCATED FAILURE PROBABILITY ($\times 10^6$) q_{ai}	$N_i q_{ai}$	ALLOCATED RELIABILITY $R_{ai} = 1-N_i q_{ai}$
PDKVA(2)	(01)	Fails to move from full open position	30	4.13	34.1	2060	.253	15.2	$.9_4 85$
	(05)	Inadvertent open (actuator)	-	2.43	2.43	146	.0180	1.08	$.9_5 89$
	(08)	Internal leakage	11	-	11	660	.0815	4.89	$.9_5 51$
PDKV(2)	(01)	Fails to move from full open position	34	-	34	2040	.252	15.1	$.9_4 85$
	(08)	Internal Leakage	2	-	2	120	.0148	.889	$.9_6 11$
PDBV(2)	(01)	Fails to move from full open position	41	709	750	45000	5.56	333	$.9_3 67$
BNV(2)	(01)	Fails to move from full open position	41	709	750	45000	5.56	333	$.9_3 67$
TNV(2)	(01)	Fails to move from full open position	49	4.13	53.1	3186	.393	23.6	$.9_4 76$
	(05)	Inadvertent open	-	2.43	2.43	146	.0180	1.081	$.9_5 89$
	(08)	Internal leakage	6	-	6	360	.0444	2.67	$.9_5 73$
TDBV(2)	(01)	Fails to move from full open position	49	4.13	53.1	3186	.393	23.6	$.9_4 76$
	(05)	Inadvertent open	-	2.43	2.43	146	.0180	1.081	$.9_5 89$
	(08)	Internal leakage	6	-	6	360	.0444	2.67	$.9_5 73$
Gimbal Pivot (2)	(03)	Failure of pivot bearing	5	-	5	5	.0370	.0370	$.9_7 63$
		TOTALS:	548	2875	3423	204800	25.4	1516.	.9985

* Failure mode identification code referred to in Volume II.

TABLE 3-2

CATEGORY IIB FAILURE-MODE PROBABILITY SUMMARY

COMPONENT (NUMBER IN SYSTEM)	(CODE)	COMPONENT FAILURE-MODES	PREDICTED SINGLE-CYCLE FAILURE PROBABILITY, q_i ($\times 10^6$) NON I&C	I&C	TOTAL	$N_i q_i$ ($\times 10^6$)	ALLOCATED FAILURE PROBABILITY ($\times 10^6$) q_{ai}	$N_i q_{ai}$	ALLOCATED RELIABILITY $R_{ai} = 1 - N_i q_{ai}$
PSOV(2)	(11)	Fails to vent	5	-	5	300	.0370	2.22	$.9_5 78$
PUBV(2)	(02)	Fails to move from full closed position	54	Neg.	54	3240	.400	24.0	$.9_4 76$
	(06)	Fails at intermediate position	10	-	10	600	.0741	4.44	$.9_5 56$
BRV(2)	(02)	Fails to move from full closed position	54	Neg.	54	3240	.400	24.0	$.9_4 76$
	(06)	Fails at intermediate position	10	-	10	600	.0741	4.44	$.9_5 56$
BUV(2)	(01)	Fails to move from full open position	45	709	754	45240	5.59	335	$.9_3 66$
SSBV(2)	(01)	Fails to move from full open position	51	709	760	45600	5.62	338	$.9_3 66$
	(02)	Fails to move from full closed position	64	2.52	66.5	3990	.493	30.1	$.9_4 70$
	(05)	Inadvertent open	-	.446	.4[illegible]	26.7	.00330	.198	$.9_6 80$
	(06)	Fails at intermediate position	13	-	13	780	.0963	5.78	$.9_5 42$
CSOV(2)	(02)	Fails to move from full closed position	54	623	677	40620	5.01	301	$.9_3 70$
CSCV(2)	(01)	Fails to move from full open position	23	3.44	26.4	1590	.196	11.73	$.9_4 88$
	(08)	Internal leakage	92	-	92	5520	.681	40.9	$.9_4 59$
	(11)	Fails to vent	5	-	5	300	.0370	2.22	$.9_5 78$
Gimbal Pivot (2)	(02)	Flecture blade failure	13	-	13	13	.0963	.0963	$.9_7 04$
		TOTALS:	986	4095	5081	303300	37.6	2250	.9977

TABLE 3-3

CATEGORY IIC FAILURE MODE PROBABILITY SUMMARY

COMPONENT (NUMBER IN SYSTEM)	(CODE) COMPONENT FAILURE MODES	PREDICTED SINGLE-CYCLE FAILURE PROBABILITY, q_i ($\times 10^6$) NON I&C	I&C	TOTAL	$N_i q_i$ ($\times 10^6$)	ALLOCATED FAILURE PROBABILITY ($\times 10^6$) q_{ai}	$N_i q_{ai}$	ALLOCATED RELIABILITY $R_{ai} = 1 - N_i q_{ai}$
PDBV(2)	(03,04) Inadvertent closure	1	.284	1.28	18.0	.00948	.133	$.9_6 87$
PDCV(2)	(01) Fails to move from full open position	28	709	737	44220	5.46	328	$.9_3 67$
	(03,04) Inadvertent closure	1	.284	1.28	18.0	.00948	.133	$.9_6 87$
	(05) Inadvertent open	-	.284	.284	17.0	.00210	.126	$.9_6 87$
	(07) Fails to control	112	1.32	113	6800	.837	50.2	$.9_4 50$
BBV(2)	(03,04) Inadvertent closure	1	2.43	3.43	147	.0254	1.089	$.9_5 89$
BCV(2)	(03,04) Inadvertent closure	1	.648	1.65	39.9	.0122	.296	$.9_6 70$
	(07) Fails to control	186	3.02	189	11340	1.40	84.0	$.9_4 16$
SSBV(2)	(03,04) Inadvertent closure	-	.891	.891	53.5	.00660	.396	$.9_6 60$
CSOV(2)	(03,04) Inadvertent closure	1	129	130	7730	.963	57.3	$.9_4 43$
CSCV(2)	(02) Fails to move from full closed position	28	1309	1337	80220	9.90	594	$.9_3 41$
	(03,04) Inadvertent closure	-	2.84	2.84	170	.0210	1.259	$.9_5 87$
	(05) Inadvertent open	-	129	129	7730	.956	57.3	$.9_4 43$
	(07) Fails to control	82	10.4	92	5540	.681	40.9	$.9_4 59$
	TOTALS:	882	4597	5479	328000	40.6	2430	.9976

TABLE 3-4

CATEGORY IIIA FAILURE MODE PROBABILITY SUMMARY

COMPONENT (NUMBER IN SYSTEM)	(CODE)	COMPONENT FAILURE MODES	PREDICTED SINGLE-CYCLE FAILURE PROBABILITY, q_i ($\times 10^6$) NON I&C	I&C	TOTAL	$N_i q_i$ ($\times 10^6$)	ALLOCATED FAILURE PROBABILITY ($\times 10^6$) q_{ai}	$N_i q_{ai}$	ALLOCATED RELIABILITY $R_{ai} = 1-N_i q_{ai}$
PSOV(2)	(02)	Fails to move from full closed position	65	709	774	46440	2.49	150	$.9_3 85$
	(03)	Inadvertent closure (normal speed)	-	2.43	2.43	146	.00784	.470	$.9_6 53$
PDKVA(2)	(02)	Fails to move from full closed position	15	709	724	43440	2.34	140	$.9_3 86$
	(03)	Inadvertent closure		.729	.729	43.7	.00235	.141	$.9_6 86$
	(06)	Fails at intermediate position	5	-	5	300	.0161	.968	$.9_6 03$
	(09)	External leakage	5	-	5	5	.0161	.0161	$.9_7 84$
PDKV(2)	(02)	Fails to move from full closed position	2	-	2	120	.00645	.387	$.9_6 61$
	(06)	Fails at intermediate position	4	-	4	240	.0129	.774	$.9_6 23$
TBV(2)	(02)	Fails to move from full closed position	65	709	774	46440	2.49	150	$.9_3 85$
	(03)	Inadvertent closure (actuator speed)	-	.729	.729	43.7	.00235	.141	$.9_6 86$
	(06)	Fails at intermediate position	11	-	11	660	.0355	2.13	$.9_5 79$
TDBV(2)	(02)	Fails to move from full closed position	65	709	774	46440	2.49	150	$.9_3 85$
	(03)	Inadvertent closure (actuator speed)	-	.729	.729	43.7	.00235	.141	$.9_6 86$
	(06)	Fails at intermediate position	11	-	11	660	.0355	2.13	$.9_5 79$

TABLE 3-4

CATEGORY IIIA FAILURE MODE PROBABILITY SUMMARY (Continued)

COMPONENT (NUMBER IN SYSTEM)	(CODE)	COMPONENT FAILURE MODES	PREDICTED SINGLE-CYCLE FAILURE PROBABILITY, q_i ($\times 10^6$) NON I&C	I&C	TOTAL	$N_i q_i$ ($\times 10^6$)	ALLOCATED FAILURE PROBABILITY ($\times 10^6$) q_{ai}	$N_i q_{ai}$	ALLOCATED RELIABILITY $R_{ai} = 1-N_i q_{ai}$
TPA* (Dual) (2)	(01)	Fails to start	340	-	340	20400	1.10	65.8	$.9_4 34$
	(02)	Premature stop	45	-	45	2700	.145	8.71	$.9_5 13$
	(03)	Low performance	500	-	500	30000	1.61	96.8	$.9_4 03$
	(05)	Excessive vibration	90	-	90	5400	.290	17.4	$.9_4 83$
	(06)	External leakage	20	-	20	20	.0645	.0645	$.9_7 35$
		TOTALS:	2486	5681	8167	487000	26.3	1570	.9984

* For single TPA operation add 10% to failure probabilities

TABLE 3-5

CATEGORY IIIB FAILURE MODE PROBABILITY SUMMARY

COMPONENT (NUMBER IN SYSTEM)	(CODE)	COMPONENT FAILURE MODE	PREDICTED SINGLE CYCLE FAILURE PROBABILITY, q_i ($\times 10^6$) NON I&C	I&C	TOTAL	$N_i q_i$ ($\times 10^6$)	ALLOCATED FAILURE PROBABILITY ($\times 10^6$) q_{ai}	$N_i q_{ai}$	ALLOCATED RELIABILITY $R_{ai} = 1 - N_i q_{ai}$
PSOV(2)	(01)	Fails to move from full open position	49	4.13	53.1	3190	.1713	10.28	$.9_4 90$
	(05)	Inadvertent open	-	2.43	2.43	145.8	.00784	.470	$.9_6 53$
	(06)	Fails at intermediate position	12	-	12	720	.0387	2.32	$.9_5 77$
	(08)	Internal leakage	166	-	166	9960	.535	32.1	$.9_4 68$
	(09)	External leakage	5	-	5	5	.01613	.01613	$.9_7 84$
PDKV(2)	(09)	External leakage	5	-	5	5	.01613	.01613	$.9_7 84$
PDBV(2)	(09)	External leakage	5	-	5	5	.01613	.01613	$.9_7 84$
PDCV(2)	(09)	External leakage	5	-	5	5	.01613	.01613	$.9_7 84$
BCV(2)	(05)	Inadvertent open	-	.648	.648	38.9	.00209	.1254	$.9_6 87$
	(09)	External leakage	5	-	5	5	.01613	.01613	$.9_7 84$
BBV(2)	(09)	External leakage	5	-	5	5	.01613	.01613	$.9_7 84$
SSBV(2)	(09)	External leakage	5	-	5	5	.01613	.01613	$.9_7 84$
TBV(2)	(09)	External leakage	5	-	5	5	.01613	.01613	$.9_7 84$
TDBV(2)	(09)	External leakage	5	-	5	5	.01613	.01613	$.9_7 84$
CSOV(2)	(01)	Fails to move from full open position	41	730	771	46250	2.49	149.2	$.9_3 85$
	(06)	Fails at intermediate position	10	-	10	600	.0323	1.935	$.9_5 81$
	(08)	Internal leakage	86	-	86	5160	.277	16.65	$.9_4 83$
	(09)	External leakage	5	-	5	5	.01613	.01613	$.9_7 84$

TABLE 3-5

CATEGORY IIIB FAILURE MODE PROBABILITY SUMMARY (Continued)

COMPONENT (NUMBER IN SYSTEM)	(CODE)	COMPONENT FAILURE MODE	PREDICTED SINGLE CYCLE FAILURE PROBABILITY, q_i ($\times 10^6$) NON I&C	I&C	TOTAL	$N_i q_i$ ($\times 10^6$)	ALLOCATED FAILURE PROBABILITY ($\times 10^6$) q_{ai}	$N_i q_{ai}$	ALLOCATED RELIABILITY $R_{ai} = 1-N_i q_{ai}$
CSCV(2)	(09)	External leakage	5	-	5	5	.01613	.01613	$.9_7 84$
Propellant Lines (1)	(01)	External leakage	19	-	19	19	.0613	.0613	$.9_7 39$
Nozzle Extension (1)	(01)	External leakage	303	-	303	303	.977	.977	$.9_6 02$
Nozzle (1)	(01)	External leakage from coolant stream	392	-	392	392	1.265	1.265	$.9_5 87$
	(02)	External leakage from exhaust stream	39	-	39	39	.1258	.1258	$.9_6 87$
PV & Closure (1)	(01)	External leakage	1	-	1	1	.00323	.00323	$.9_8 68$
		TOTAL:	1592	1474	3066	133000	9.89	429	$.9_3 57$

TABLE 3-6

CATEGORY IV FAILURE MODE PROBABILITY SUMMARY

COMPONENT (NUMBER IN SYSTEM)	(CODE)	COMPONENT FAILURE MODES	PREDICTED SINGLE-CYCLE FAILURE PROBABILITY, q_i ($\times 10^6$) NON I&C	I&C	TOTAL	$N_i q_i$ ($\times 10^6$)	ALLOCATED FAILURE PROBABILITY ($\times 10^6$) q_{ai}	$N_i q_{ai}$	ALLOCATED RELIABILITY $R_{ai} = 1-N_i q_{ai}$
PSOV(2)	(04)	Inadvertent closure (rupture speed)	1	-	1	1	$.0_5552$	$.0_5552$	$.9_{11}45$
	(10)	Body rupture	1	-	1	1	$.0_5552$	$.0_5552$	$.9_{11}45$
PDRVA(2)	(10)	Body rupture	1	-	1	1	$.0_5552$	$.0_5552$	$.9_{11}45$
PDRV(2)	(10)	Body rupture	1	-	1	1	$.0_5552$	$.0_5552$	$.9_{11}45$
PDBV(2)	(10)	Body rupture	1	-	1	1	$.0_5552$	$.0_5552$	$.9_{11}45$
PDCV(2)	(10)	Body rupture	1	-	1	1	$.0_5552$	$.0_5552$	$.9_{11}45$
BDV(2)	(10)	Body rupture	1	-	1	1	$.0_5552$	$.0_5552$	$.9_{11}45$
BCV(2)	(10)	Body rupture	1	-	1	1	$.0_5552$	$.0_5552$	$.9_{11}45$
S[illegible]V(2)	(10)	Body rupture	1	-	1	1	$.0_5552$	$.0_5552$	$.9_{11}45$
TBV(2)	(04)	Inadvertent closure (rupture speed)	1	-	1	1	$.0_5552$	$.0_5552$	$.9_{11}45$
	(10)	Body rupture	1	-	1	1	$.0_5552$	$.0_5552$	$.9_{11}45$
TPAV(2)	(04)	Inadvertent closure (rupture speed)	1	-	1	1	$.0_5552$	$.0_5552$	$.9_{11}45$
	(10)	Body rupture	1	-	1	1	$.0_5552$	$.0_5552$	$.9_{11}45$
CSDV(2)	(10)	Body rupture	1	-	1	1	$.0_5552$	$.0_5552$	$.9_{11}45$
CSCV(2)	(10)	Body rupture	1	-	1	1	$.0_5552$	$.0_5552$	$.9_{11}45$
TPA(2)	(04)	Total loss of containment	5	-	5	5	$.0_4276$	$.0_4276$	$.9_{10}72$

TABLE 3-6

CATEGORY IV FAILURE MODE PROBABILITY SUMMARY (Continued)

COMPONENT (NUMBER IN SYSTEM)	(CODE)	COMPONENT FAILURE MODES	PREDICTED SINGLE-CYCLE FAILURE PROBABILITY, q_i ($\times 10^6$) NON I&C	I&C	TOTAL	$N_i q_i$ ($\times 10^6$)	ALLOCATED FAILURE PROBABILITY ($\times 10^6$) q_{ai}	$N_i q_{ai}$	ALLOCATED RELIABILITY $R_{ai} = 1-N_i q_{ai}$
Gimbal Actuator(2)	(1)	Fails in place	68	Neg.	68	4080	$.0_3375$	.0225	$.9_77$
	(2)	Improper position or rate control	192	Neg.	192	11520	.001061	.0636	$.0_736$
	(3)	Structural failure	2	-	2	2	$.0_41105$	$.0_41105$	$.9_{10}89$
Gimbal pivot (1)	(01)	Structural failure	0.3	-	0.3	0.3	$.0_5166$	$.0^5166$	$.9_{11}83$
Propellant lines (1)	(02)	Loss of containment	140	-	140	140	$.0_3773$	$.0_3773$	$.9_923$
Nozzle(1)	(03)	Loss of containment	20	-	20	20	$.0_31105$	$.0_31105$	$.9_989$
	(04)	Failure to support reactor assembly	19	-	19	19	$.0_31050$	$.0_31050$	$.9_989$
Nozzle Extension (1)	(02)	Loss of containment	100	-	100	100	$.0_3552$	$.0_3552$	$.9_945$
PV & Closure (1)	(02)	Structural failure	23	-	23	23	$.0_31271$	$.0_31271$	$.9_987$
Thrust Structure(1)	(01)	Fails to transmit thrust along proper axis	32	-	32	32	$.0_31768$	$.0_31768$	$.9_982$
	(02)	Fails to support interface components	3	-	3	3	$.0_4166$	$.0_4166$	$.9_{10}83$
External Shield	(01)	Structural failure	1	-	1	1	$.0_5552$	$.0_5552$	$.9_{11}45$
		Total:	902	-	902	31580	.00501	.1750	$.9_682$

From Tables 3-4 and 3-5, the bracketed term in this expression is equal to

$$\left[\sum_i N_i q_i\right]_{III} = .487 + .133$$

$$= .620$$

Thus, the allocation factor for Category III failure modes is

$$A = \frac{.620}{1-.998} = 310$$

This factor was used to compute all the Category III allocations presented in Tables 3-4 and 3-5.

3.2.3 Category IV Single Failure Allocations

The Category IV single failure allocations were obtained in the same manner as the Category III allocations. The Category IV failure modes and their predicted probabilities of occurrence are listed in Table 3-6. Using the total predicted single-cycle failure probability of 902×10^{-6} from this table and the NNSS Category IV single failure allocation of $.5 \times 10^{-8}$ from Figure 1-1, the Category IV single failure allocation factor is

$$A = \frac{902 \times 10^{-6}}{.5 \times 10^{-8}} = 180{,}000$$

This factor results in the Category IV single failure allocations given in Table 3-6.

3.2.4 Double Failures

As shown in Figure 1-1, a significant portion of the NNSS Category IV failure probability has been allocated to double failures.

Since Category II and III single failures make up the double failure combinations which produce Category IV system effects, the Category IV double failure analysis provides the basis for the Category II single failure allocations.

The doubl. failure matrices which define all of the identified double failure combinations that lead to Category IIIB and IV system effects are presented in the Flight Safety Contingency Analysis Report, Data Item S-103, dated September 1971. By using the predicted failure mode probabilities in Tables 3-1 through 3-5 in conjunction with the double failure combinations identified by these matrices, the predicted double failure probabilities for each subsystem within the NNSS were determined. The results of this analysis are reported in Table 3-7. The Category II single failure allocation factor was then computed by determining the factor by which the Category II predicted failure mode probabilities had to be reduced in order to satisfy the Category IV allocation of $.1 \times 10^{-8}$ for NNSS double failures not involving the computer system. For Category III failures appearing in the double failure matrix the failure allocations presented in Tables 3-4 and 3-5 were used. As a result of this analysis an allocation factor of 135 was determined for the Category II single failures. This factor produces the allocated double failure probabilities summarized in Table 3-7 and the Category II single failure allocations given in Tables 3-1 through 3-3.

It should be noted that the predicted double-failure probability of the computer system dominates the Category IV predictions in Table 3-7. It is for this reason and the fact that the computer system concept is not well defined at the present time, that a separate double-failure allocation for the computer system was established. However, if it is assumed that the redundant computer system, which is a part of the reference I&C concept described in Data Item S-103, is retained for the flight engine, then the predicted single-cycle failure probability for the computer will have to be reduced by a factor of 303 in order to satisfy the Category IV allocation of $.1 \times 10^{-8}$ for the computer system.

TABLE 3-7

NNSS DOUBLE FAILURE SUMMARY

TYPE OF FAILURE	NO. OF DOUBLE FAILURES	RELIABILITY (60 CYCLES)		FAILURE PROBABILITY (1 CYCLE)	
		PREDICTED	ALLOCATED	PREDICTED	ALLOCATED
CATEGORY IIIB					
COOLDOWN SUBSYSTEM	25	.979	$.9_{5}88$	$.0_{5}59$	$.0_{9}32$
TURBOPUMP & BYPASS	37	.980	$.9_{6}42$	$.0_{5}57$	$.0_{9}16$
CATEGORY IV					
COOLDOWN SUBSYSTEM	8	$.9_{2}86$	$.9_{7}67$	$.0_{6}39$	$.0_{11}93$
TURBOPUMP & BYPASS	200	.951	$.9_{6}50$	$.0_{4}14$	$.0_{9}14$
PUMP DISCHARGE	28	$.9_{2}25$	$.9_{6}60$	$.0_{5}21$	$.0_{9}11$
C&I LESS COMPUTER	631	.954	$.9_{5}74$	$.0_{4}13$	$.0_{9}71$
COMPUTER SYSTEM	12	.718	$.9_{6}64$*	$.0_{4}92$	$.0_{8}10$

* Computer system maintenance between missions assumed.

3.2.5 Summary of Results

3.2.5.1 Non-Nuclear Subsystem

The NNSS predictions and allocations are summarized by failure effect category in Table 3-8. The total predicted reliability of the NNSS for 60 cycles of engine operation is .33 and the predicted 1-cycle Category IV failure probability is .001. These results are based on an analysis of 214 single failure modes and 941 double failure combinations within the NNSS. The allocated reliability and failure probability of each component failure mode considered in the analysis is listed in Table 3-9.

3.2.5.2 Nuclear Subsystem

A reliability prediction based on FMECA, FMA, probabilistic design, and reliability modeling methodology has been made for the NSS for the defined reliability mission. The predicted value obtained is 0.921 compared to the allocated goal of 0.997. NSS component values are derived in detail in WANL-TME-2770 and are summarized in Table 3-10.

The reliability predictions listed are based on "stress/strength" probabilistic estimates, wherever possible. The analytical results are related to the most significant (highly stressed) failure modes and their related mechanisms. In each NSS ECC a number of the most significant modes, determined by the combined judgment of personnel from design, structural, thermal, and reliability disciplines, were analyzed using the "stress/strength" method. The remaining modes were estimated using a technique based upon judgment of the level of anticipated stress (percentage of yield or ultimate) and a knowledge of the ranges of percent of variation of load and strength for ductile and brittle materials being used in the NERVA Program.

Failure modes of a non-structural type were estimated by engineering judgment, historical results from previous experimental reactor tests, or use of data from other sources such as FARADA.

TABLE 3-8

NNSS RELIABILITY SUMMARY

TYPE OF FAILURE	NO.	ALLOCATION FACTOR	RELIABILITY (60 CYCLES) PREDICTION	RELIABILITY (60 CYCLES) ALLOCATION	FAILURE PROB. (1 CYCLE) PREDICTION	FAILURE PROB. (1 CYCLE) ALLOCATION
CATEGORY II		135	.43	$.9_{2}38$	.014	$.0_{3}10$
IIA (NON I&C)	28		.82	$.9_{2}85$	$.0_{2}34$	$.0_{4}25$
IIB	30		.73	$.9_{2}77$	$.0_{2}51$	$.0_{4}38$
IIC	28		.72	$.9_{2}76$	$.0_{2}55$	$.0_{4}40$
CATEGORY III		310	.52	$.9_{2}80$	.011	$.0_{4}36$
IIIA	38		.61	$.9_{2}84$	$.0_{2}82$	$.0_{4}26$
IIIB						
SINGLE	43		.88	$.9_{3}57$	$.0_{2}31$	$.0_{5}99$
DOUBLE	62		.96	$.9_{5}82$	$.0_{4}12$	$.0_{9}48$
CATEGORY IV		180,000	.63	$.9_{5}59$	$.0_{2}10$	$.0_{8}70$
SINGLE	47		.97	$.9_{6}82$	$.0_{3}90$	$.0_{8}50$
DOUBLE						
NON I&C	236		.94	$.9_{6}06$	$.0_{4}16$	$.0_{9}26$
I&C	643		.69	$.9_{5}70$*	$.0_{3}10$	$.0_{8}17$

* Computer maintenance between missions assumed.

TABLE 3-9

NERVA ENGINE RELIABILITY ALLOCATIONS BY COMPONENT FAILURE MODE

COMPONENT/ FAILURE MODE		MAXIMUM FAILURE EFFECT CATEGORY*	RELIABILITY (60 CYCLES)	FAILURE PROBABILITY (1 CYCLE)
PSOV				
(01)	Fails to move from full open position	IIIB	$.9_{5}0$	$.0_{6}2$
(02)	Fails to move from full closed position	IIIA	$.9_{4}0$	$.0_{5}2$
(03)	Inadvertent closure - normal speed	IIIA	$.9_{6}5$	$.0_{8}8$
(04)	Inadvertent closure - rupture speed	IV	$.9_{11}4$	$.0_{11}6$
(05)	Inadvertent open	IIIB	$.9_{6}5$	$.0_{8}8$
(06)	Fails at intermediate position	IIIB	$.9_{5}8$	$.0_{7}4$
(08)	Internal leakage	IIIB	$.9_{4}7$	$.0_{6}5$
(09)	External leakage	IIIB	$.9_{7}8$	$.0_{7}2$
(10)	Body rupture	IV	$.9_{11}4$	$.0_{11}6$
(11)	Fails to vent	IIB	$.9_{5}8$	$.0_{7}4$
PDKVA				
(01)	Fails to move from full open position	IIA	$.9_{4}8$	$.0_{6}3$
(02)	Fails to move from full closed position	IIIA	$.9_{4}0$	$.0_{5}2$
(03, 04)	Inadvertent closure (Actuator)	IIIA	$.9_{7}0$	$.0_{8}2$
(05)	Inadvertent open (Actuator)	IIA	$.9_{6}0$	$.0_{7}2$
(06)	Fails at intermediate position	IIIA	$.9_{6}0$	$0_{7}2$
(08)	Internal leakage	IIA	$.9_{5}5$	$.0_{7}8$
(09)	External leakage	IIIA	$.9_{7}8$	$.0_{7}2$
(10)	Body rupture	IV	$.9_{11}4$	$.0_{11}6$
PDKV				
(01)	Fails to move from full open position	IIA	$.9_{4}8$	$.0_{6}3$
(02)	Fails to move from full closed position	IIIA	$.9_{6}6$	$.0_{8}6$
(06)	Fails at intermediate position	IIIA	$.9_{6}2$	$.0_{7}1$

* Failure effect category justification is delineated in Volume II.

TABLE 3-9 (Continued)

COMPONENT/ FAILURE MODE	MAXIMUM FAILURE EFFECT CATEGORY	RELIABILITY (60 CYCLES)	FAILURE PROBABILITY (1 CYCLE)
(08) Internal leakage	IIA	$.9_6 1$	$.0_7 1$
(09) External leakage	IIIB	$.9_7 8$	$.0_7 2$
(10) Body rupture	IV	$.9_{11} 4$	$.0_{11} 6$
PDBV			
(01) Fails to move from full open position	IIA	$.9_3 7$	$.0_5 6$
(02) Fails to move from full closed position	IIB	$.9_4 8$	$.0_6 4$
(03, 04) Inadvertent closure	IIC	$.9_7 0$	$.0_8 9$
(06) Fails at intermediate position	IIB	$.9_5 6$	$.0_7 7$
(09) External leakage	IIIB	$.9_7 8$	$.0_7 2$
(10) Body rupture	IV	$.9_{11} 4$	$.0_{11} 6$
PDCV			
(01) Fails to move from full open position	IIC	$.9_3 7$	$.0_5 5$
(03, 04) Inadvertent closure	IIC	$.9_7 0$	$.0_8 9$
(05) Inadvertent open	IIC	$.9_7 0$	$.0_8 2$
(07) Fails to control	IIC	$.9_4 5$	$.0_6 8$
(09) External leakage	IIIB	$.9_7 8$	$.0_7 2$
(10) Body rupture	IV	$.9_{11} 4$	$.0_{11} 6$
BBV			
(01) Fails to move from full open position	IIA	$.9_3 7$	$.0_5 6$
(02) Fails to move from full closed position	IIB	$.9_4 8$	$.0_6 4$
(03, 04) Inadvertent closure	IIC	$.9_6 0$	$.0_7 3$
(06) Fails at intermediate position	IIB	$.9_5 6$	$.0_7 7$
(09) External leakage	IIIB	$.9_7 8$	$.0_7 2$
(10) Body rupture	IV	$.9_{11} 4$	$.0_{11} 6$

TABLE 3-9 (Continued)

COMPONENT / FAILURE MODE	MAXIMUM FAILURE EFFECT CATEGORY	RELIABILITY (60 CYCLES)	FAILURE PROBABILITY (1 CYCLE)
BCV			
(01) Fails to move from full open position	IIB	$.9_{3}7$	$.0_{5}6$
(03, 04) Inadvertent closure	IIC	$9_{6}7$	$.0_{7}1$
(05) Inadvertent open	IIIB	$.9_{7}0$	$.0_{8}2$
(07) Fails to control	IIC	$.9_{4}2$	$.0_{5}1$
(09) External leakage	IIIB	$.9_{7}8$	$.0_{7}2$
(10) Body rupture	IV	$.9_{11}4$	$.0_{11}6$
TBV & TDBV			
(01) Fails to move from full open position	IIA	$.9_{4}8$	$.0_{6}4$
(02) Fails to move from full closed position	IIIA	$.9_{4}0$	$.0_{5}2$
(03) Inadvertent closure - normal speed	IIIA	$.9_{7}0$	$.0_{8}2$
(04) Inadvertent closure - rupture speed	IV	$.9_{11}4$	$.0_{11}6$
(05) Inadvertent open	IIA	$.9_{6}0$	$.0_{7}2$
(06) Fails at intermediate position	IIIA	$.9_{5}8$	$.0_{7}4$
(08) Internal leakage	IIA	$.9_{5}7$	$.0_{7}4$
(09) External leakage	IIIB	$.9_{7}8$	$.0_{7}2$
(10) Body rupture	IV	$.9_{11}4$	$.0_{11}6$
CSOV			
(01) Fails to move from full open position	IIIB	$.9_{3}8$	$.0_{5}2$
(02) Fails to move from full closed position	IIB	$.9_{3}7$	$.0_{5}5$
(03, 04) Inadvertent closure	IIC	$.9_{4}4$	$.0_{5}1$
(06) Fails at intermediate position	IIIB	$.9_{5}8$	$.0_{7}3$
(08) Internal leakage	IIIB	$.9_{4}8$	$.0_{6}3$
(09) External leakage	IIIB	$.9_{7}8$	$.0_{7}2$
(10) Body rupture	IV	$.9_{11}4$	$.0_{11}6$

TABLE 3-9 (Continued)

COMPONENT/ FAILURE MODE	MAXIMUM FAILURE EFFECT CATEGORY	RELIABILITY (60 CYCLES)	FAILURE PROBABILITY (1 CYCLE)
CSCV			
(01) Fails to move from full open position	IIB	$.9_5 0$	$.0_6 2$
(02) Fails to move from full closed position	IIC	$.9_3 4$	$.0_4 1$
(03, 04) Inadvertent closure	IIC	$.9_6 0$	$.0_7 2$
(05) Inadvertent open	IIC	$.9_4 4$	$.0_5 1$
(07) Fails to control	IIC	$.9_4 6$	$.0_6 7$
(08) Internal leakage	IIB	$.9_4 6$	$.0_6 7$
(09) External leakage	IIIB	$.9_7 8$	$.0_7 2$
(10) Body rupture	IV	$.9_{11} 4$	$.0_{11} 6$
(11) Fails to vent	IIB	$.9_5 8$	$.0_7 4$
SSBV			
(01) Fails to move from full open position	IIB	$.9_3 7$	$.0_5 6$
(02) Fails to move from full closed position	IIB	$.9_4 7$	$.0_6 5$
(03, 04) Inadvertent closure	IIC	$.9_6 6$	$.0_8 7$
(05) Inadvertent open	IIB	$.9_6 8$	$.0_8 3$
(06) Fails at intermediate position	IIB	$.9_5 4$	$.0_6 1$
(09) External leakage	IIIB	$.9_7 8$	$.0_7 2$
(10) Body rupture	IV	$.9_{11} 4$	$.0_{11} 6$
TPA (DUAL MODE OPERATION)*			
(1) Fails to start	IIIA	$.9_4 3$	$.0_5 1$
(2) Premature stop	IIIA	$.9_5 1$	$.0_6 1$
(3) Low performance	IIIA	$.9_4 0$	$.0_5 2$
(4) Total loss of containment	IV	$.9_{10} 7$	$.0_{10} 3$
(5) Excessive vibration	IIIA	$.9_4 8$	$.0_6 3$
(6) External leakage	IIIA	$.9_7 4$	$.0_7 6$

* For single TPA operation increase failure probabilities by 10%.

TABLE 3-9 (Continued)

COMPONENT/ FAILURE MODE	MAXIMUM FAILURE EFFECT CATEGORY	RELIABILITY (60 CYCLES)	FAILURE PROBABILITY (1 CYCLE)
GIMBAL ACTUATOR			
(01) Fails in place	IV	$.9_{7}8$	$.0_{9}4$
(02) Improper position or rate control	IV	$.9_{7}4$	$.0_{8}1$
(03) Structural failure	IV	$.9_{11}0$	$.0_{10}1$
GIMBOL PIVOT			
(01) Structural failure	IV	$.9_{11}8$	$.0_{11}2$
(02) Flexure blade failure	IIB	$.9_{7}0$	$.0_{6}1$
(03) Pivot bearing failure	IIA	$.9_{7}6$	$.0_{7}4$
PROPELLANT LINES			
(01) External leakage	IIIB	$.9_{7}4$	$.0_{7}6$
(02) Loss of containment	IV	$.9_{9}2$	$.0_{9}8$
NOZZLE			
(01) External leakage from coolant stream	IIIB	$.9_{6}0$	$.0_{5}1$
(02) External leakage from exhaust stream	IIIB	$.9_{7}0$	$.0_{6}1$
(03) Loss of containment	IV	$.9_{10}0$	$.0_{9}1$
(04) Failure to support reactor assembly	IV	$.9_{10}0$	$.0_{9}1$
NOZZLE EXTENSION			
(01) External leakage	IIIB	$.9_{6}0$	$.0_{5}1$
(02) Loss of containment	IV	$.9_{9}4$	$.0_{9}6$
PRESSURE VESSEL & CLOSURE			
(01) External leakage	IIIB	$.9_{8}7$	$.0_{8}3$
(02) Structural failure	IV	$.9_{10}0$	$.0_{9}1$
THRUST STRUCTURE			
(01) Fails to transmit thrust along proper axis	IV	$.9_{9}8$	$.0_{9}2$
(02) Fails to support interface components	IV	$.9_{10}8$	$.0_{10}2$

TABLE 3-9 (Continued)

COMPONENT/ FAILURE MODE	MAXIMUM FAILURE EFFECT CATEGORY	RELIABILITY (60 CYCLES)	FAILURE PROBABILITY (1 CYCLE)
EXTERNAL SHIELD			
(01) Structural failure	IV	$.9_{11}4$	$.0_{11}6$
I&C SUBSYSTEM			
(01) Failure of I&C subsystem less computer	IV	$.9_{5}7$	$.0_{9}7$
(02) Failure of computer subsystem	IV	$.9_{6}6$*	$.0_{8}1$

* Based on a redundant computer system with maintenance between missions.

TABLE 3-10

NSS RELIABILITY PREDICTIONS VERSUS ALLOCATIONS

ECG NAME	ALLOCATION	PREDICTION		COMMENTS
		60 CYCLE	SINGLE CYCLE	
Fuel and Central Support Element	0.998903 ($1,097 \times 10^{-6}$)	0.970000 ($30,000 \times 10^{-6}$)	0.9_{10} (10^{-10})	Composite, 60 cycle 10 hour value. Assumes that best 10 hr/60 cycle corrosion test performance so far demonstrated for 4000°R will extrapolate to 4250°R and a structural reliability for fuel element cracking of 0.996. If this were 0.999, fuel reliability = 0.999910 [illegible] would meet goal. A slight increase in reactivity limit $1.00 has a large effect on the reliability. Uncertainty in cracking and resulting corrosion must be better understood to confidently assess reliability.
Cluster Hardware	0.999700 (300×10^{-6})	0.976966 ($23,034 \times 10^{-6}$)	0.999616 (384×10^{-6})	Does not meet goal. Alternate design 3 with tungsten retainer and cold end support is the most reliable (0.993718).
Core Periphery	0.999160 (840×10^{-6})	0.999460 (540×10^{-6})	0.9_{51} (9×10^{-6})	Meets goal. Alternate design approaches have higher reliability potential than reference design.
Support Plate and Plena	$.9_{439}$ (61×10^{-6})	$.9_{458}$ (42×10^{-6})	0.9_{6} (1×10^{-6})	Meets goal.
Internal Shield	$.9_{60}$ (1×10^{-6})	0.9_{1278} (2.2×10^{-13})	0.9_{1463}) (3.7×10^{-15})	Meets goal.
Reflector Assembly	0.9_{3839} (161×10^{-6})	$0.0_{4}497$	$0.0_{4}497$	
1. Structure	$0.9_{5}8$ (2×10^{-6})	$0.9_{2}48$ (5200×10^{-6})	$0.9_{2}48$ (5200×10^{-6})	Sixty cycle reliability not computed since single cycle results do not meet goal. Buckling of barrel will have to be carefully understood to determine whether allocation will be met for flight. Present data indicates that uncertainties can be reduced to the point where the structure will meet its goal.
2. Lateral Support Reference	0.999877 (123×10^{-6})	$0.0_{4}5$	$0.0_{4}5$	Sixty cycle reliability not computed since single cycle results do not meet goal.
Alternate No. 5	0.999877 (123×10^{-6})	$0.9_{6}886$ (1×10^{-7})	$0.9_{8}81$ (2×10^{-9})	The recommended design meets present allocation.
3. Drums	$0.9_{4}64$ (36×10^{-6})	$0.9_{4}09$ (91×10^{-6})	$0.9_{4}09$ (91×10^{-6})	Nearly meets goal. Goal can be reallocated or reliability improved by design evolution and testing.

TABLE 3-10 (Continued)

ECC NAME	ALLOCATION	PREDICTION 60 CYCLE	PREDICTION SINGLE CYCLE	COMMENTS
CDDA	0.999820 (180×10^{-6})	$0.9_{4}552$ (45×10^{-6})	0.9_{6} (1×10^{-6})	Meets goal. Must be verified by further analysis and tests.
1. Actuator/ Controller	0.999700 (300×10^{-6})	0.999872 (128×10^{-6})		Meets goal. Must be verified by further analysis and tests.
2. AMOD	0.999850 (150×10^{-6})	$0.9_{5}768$ (2×10^{-6})		Meets goal. Must be verified by further analysis and tests.
3. RAM, Shaft, Mounting	$0.9_{5}1$ (9×10^{-6})	$0.9_{1}9$ (10^{-19})		Meets goal.
SSCA	0.999740 (260×10^{-6})	0.977128 ($22,872 \times 10^{-6}$)	$0.9_{3}618$ (383×10^{-6})	The uncertainty of the SSCA predictions are largely dependent on the degree to which ANSC test data on similar actuator/valve subsystems can be shown to be analogous to the SSCA reference design. An accurate determination of SSCA reliability will require component (FMA) level failure rate predictions of the reference design when they become available and life testing of the SSCA components/parts.
1. SSCV Actuator and Controller	0.999850 (150×10^{-6})	0.989785 ($10,215 \times 10^{-6}$)	$0.9_{3}83$ (170×10^{-6})	Prediction based on SSCA, FMECA. Engineering judgement used to proportion the reliability of the SSCVA and controller, with respect to the SSCV prediction.
2. SSCV	0.999950 (50×10^{-6})	0.996595 (3405×10^{-6})	$0.9_{3}77$ (226×10^{-6})	FMA prediction not available. The difference between the SSCA FMECA reliability prediction for SSCV, SSCV actuator, and controller and the actuator and controller prediction above is assigned to the SSCV. Must be verified by FMA predictions and tests.
NSS Instrumentation	$0.9_{4}0$	N/A	N/A	To be completed when instrumentation is defined in detail.
NSS OVERALL	0.997	0.921		Based on alternate 5 lateral support.

The predicted reliability values for each NSS ECC should not be taken as being justifiably accurate, but rather as the best present indicator of the designed-in reliability of the NSS. The level of sophistication of predictions is dependent upon assessment data available for making the prediction during a particular time period. The detailed design and analysis process being followed for all NERVA components will provide assessment data for future upgrading of predictions.

APPENDIX A

DERIVATION OF RELATIVE FAILURE RATE ESTIMATES

APPENDIX A

DERIVATION OF RELATIVE FAILURE RATE ESTIMATES

A.1 INTRODUCTION

Initial reliability estimates for component failure modes were derived to provide a basis for determining potential design problem areas and to provide input to the reliability math model to determine reliability allocations. These estimates were derived from probabilistic design analysis whenever possible, and secondarily, from generic failure rates of similar components factored to the NERVA engine. When neither of these sources were available, an estimate was made using systematic engineering evaluations. As a result, these estimates should be treated solely as relative rankings. These rankings are required in order to achieve a proper allocation to each component since future allocations are distributed between components in the same ratio as the initial failure estimates.

Failure rates based on operational experience or component testing can be grouped in four classes in order of desirability. Failure rates are based on:

a. Contractor testing of components with current design concepts.
b. Contractor testing of components with similar design concepts.
c. Contractor testing of piece parts with similar designs.
d. Aerospace industry collected data on generic piece parts.

The most readily accepted failure rates are those based on testing by the contractor of the current design concept. However, there are many problems associated with estimating testing failure rates. Among these are: limited numbers of tests, insufficient number of components, lack of any definable failures, design changes during a test series, component repairs during testing, inadequate measurement of variables, improper simulation of design use environment, and lack of any tests on components even similar to

the current design concept or use. In general, the ANSC test based failure rates are based on Class b (Apollo and Titan) data and are derived by a growth curve technique. The advantages of this technique and details of the process are presented in NRP 400, Failure Rate Derivation. The Apollo and Titan data should produce conservative failure rate data since the NERVA engine will have more inherent redundancy within components; will utilize improved analysis techniques during the design process (e.g., probabilistic analysis); will exhibit more predictable energy conversion than chemical engines; and will utilize longer response time and closed loop controls. Counter-balancing these factors, however, are orders of magnitude increases in the operational and mission duration for NERVA; additional complexity and number of components; and the smaller test programs (both Apollo and Titan experienced a rapid reliability growth rate based on an extensive test and debugging program).

The use of historical data and personal experience with various components in determining the relative probability of failures among various components included factors for such intangibles as fabrication difficulties, human error, and contamination. Other relative unknowns such as radiation, cryogenic temperatures, and long time operation in either hydrogen atmosphere or hard vacuum were not included. In past analyses environmental factors have been used to adjust the failure rates to the current application. This was not done for the current NERVA estimates since component material has been selected so that it does not experience chemical change when exposed to expected radiation levels. In these cases, the primary effect of radiation will be felt in the induced heating. Assuming that the thermal conditions can be predicted then the design analysis is no different than a non-nuclear design. The failure rates based on non-cryogenic test experience were not adjusted for the extreme temperature range which will be experienced on the NERVA engine. In general, metallic component strengths are improved with cryogenic temperatures. Hydrogen embrittlement has been recognized as a potential problem, however, preliminary results have not been conclusive enough to warrant an adjustment of the current failure rate estimates.

In conclusion it was felt that additional effort would be more effectively utilized performing actual reliability assessments, utilizing probabilistic techniques, than in modifying historical rates. Simple static primary stress/strength estimates have been completed as rapidly as design maturity permits. The more difficult combined stresses in complex structures often require finite element program solutions. Specific problems are being analyzed in order to develop probabilistic techniques. As soon as enough mechanisms in a component mode have been analyzed and an acceptable level of confidence in the more complex analyses exist, a reliability assessment will be made.

The following sections present the source of each failure rate utilized as well as a discussion of the method used to derate existing data.

A.2 VALVES

Probabilistic analyses have been completed for only two failure mechanisms within a valve and therefore cannot be extrapolated to a reliability estimate for all failure modes. A search for applicable cryogenic valve failure rate data was fruitless (e.g., Saturn 1 used pneumatically actuated valves, and the recorded failures were not identified as to whether they were actuation system or valve failures). A search of aircraft valve failure history reveals four distinct distributions of failure rates, the means of which vary from 7 to 1148 failures per million operating hours -- too large a spread to pick any single applicable rate. It was therefore decided to utilize the Apollo SPS engine bipropellant valve failure history as typical of the NERVA CSOV since this data was well documented and the CSOV was most similar to the Apollo valve. A simulated block valve failure rate of 184×10^{-6} failure per engine operating cycle was thereby derived. This rate was modified upward to 191×10^{-6} failure per engine operating cycle plus 7×10^{-6} failure per mission (operating life) to account for failure modes unique to the NERVA CSOV. Table A-1 shows the distribution of this total failure rate to the failure modes of the CSOV. This distribution was based on the Apollo history, but modified by the results of a qaulitative rating performed by the cognizant Design and Systems personnel.

Other NERVA valve failure rates were derived through the use of severity factors for valve size, relative number of cycles, and specified

TABLE A-1

VALVE HISTORICAL FAILURE RATE ASSESSMENTS

FAILURE MODE	FAILURE RATE ESTIMATES (Failures Per Million Thrusting Cycles)												
	BCV	PDCV	CSCV	SSCV	PDKV	PDKVA	PSOV	TBV	TDBV	BBV	CSOV	SSBV	PDBV
Fails to move from full open	45	28	23	56	34	30	49	49	49	41	41	51	41
Inadvertent open	N/A	N/A	N/A	N/A	N/A	N/A	N/A	N/A	N/A	N/A	N/A	N/A	N/A
Fails to move from full closed	N/A	N/A	28	N/A	2	15	65	65	65	54	54	64	54
Inadvertent closure (rupture speed)	1[A]	1[A]	N/A	1[A]	N/A	N/A	1[A]	1[A]	1[A]	1[A]	1[A]	N/A	1[A]
Fails to control	186	112	82	230	-	-	-	-	-	-	-	-	-
Fails in intermediate position	-	-	-	-	4	5	12	11	11	10	10	13	10
Internal leakage	N/A	2	92	3	2	11	166	6	6	6	86	2	6
External leakage	5[A]	5[A]	5[A]	5[A]	5[A]	5[A]	5[A]	5[A]	5[A]	5[A]	5[A]	5[A]	5[A]
Total loss of containment	1[A]	1[A]	1[A]	1[A]	1[A]	1[A]	1[A]	1[A]	1[A]	1[A]	1[A]	1[A]	1[A]
Fails to vent	N/A	N/A	5	N/A	N/A	N/A	5	N/A	N/A	N/A	N/A	N/A	N/A
TOTAL (Per Cycle)	231	142	230	289	42	61	297	131	131	111	191	130	111
TOTAL (Per Mission)	7	7	6	7	6	6	7	7	7	7	7	6	7

(A) Failure rate applies to total flight usage

maximum allowable internal leakage. Severity factors used for valve size were:

(a)	For 3", 4", and 5" valves	1.0
(b)	For 7-1/2" valves	1.1
(c)	For PSOV (12")	1.2

Severity factors used for valve cycles were:

(a)	For CSCV and SSBV, 5000 cycles each, operating at low stress level, and PDCV, 3000 cycles at medium stress level	1.25
(b)	For BCV, 10,000 cycles at medium high stress level	2.0
(c)	For SSCV, 49,000 cycles at low stress level	2.5

Leakage failure rates for the PSOV and CSCV were determined by engineering judgment, and rates for all other valves were established in inverse proportion of their allowable leakage to that of the CSOV. The failure rate for the PSOV was set at twice that for the CSOV because of much larger seat size (PSOV - 12" dia., and CSOV - 3" dia.) while the allowable leakage for the PSOV is only three times that of the CSOV (PSOV - 150 scim vs. CSOV - 50 scim).

A.3 TURBOPUMP ASSEMBLY

Probabilistic analyses have been completed for only three failure mechanisms within the TPA (bearing cooling, thrust balancer rub, and labyrinth seal leakage) and cannot be extrapolated to a reliability estimate for the entire TPA. A survey of state-of-the-art TPA failure rates shows a wide range, from $16f/10^6$ hours for aircraft turbines to over 1700 $f/10^6$ engine thrusting cycles for the Titan first stage turbopump. The Titan failure rate was selected as a basis for the estimate of the NERVA TPA since the data was well documented and the design and operational differences could be evaluated. The demonstrated failure rate of 1700 was determined to be excessively high due to:

(a) A majority of failures were the direct or indirect result of the high temperature environment on the Titan turbine which is not true of NERVA.

(b) A limited amount of Titan history is available with no failures in some modes.

(c) Shutdowns on the Titan system that were caused by low performance could, in some cases, be compensated for by the NERVA control system.

As a result, the NERVA estimate was reduced to 975 f/10^6 operating cycles and 25 f/10^6 missions by derating the two modes in the Titan history that experienced no failures and by rating the design complexity of the TPA and CSOV to derive a relative failure rate that was compatible to that used for the valves. Table A-2 shows the distribution of this total failure rate to the failures modes of the TPA. This distribution was based on engineering judgement and past history.

Malfunction mode rates were derived by applying a relative severity factor of 1.1 to the normal mode rates. This factor was derived by a qualitative rating of each mechanism of failure considering the operational severity.

A.4 NOZZLE

Table A-3 shows the distribution of the total nozzle failure rate to nozzle failure modes. The failure rate of 470 failures per 10^{-6} missions for the NERVA nozzle was derived using the Titan family first stage combustion chamber test history since it represents the most complete and available data of a similar component with respect to size, shape, regeneratively-cooled, etc. The method used for prediction was the Reliability Growth Curve, with nine failures in 2347 tests. The Titan engine history was screened and combustion chamber failures were excluded that had negligible performance loss or were shut down prematurely due to external tube leakage. It is assumed that external tube leaks cannot occur in the NERVA nozzle due to the solid jacket design. The rates were not "corrected" for the effect of cryogenic thermal cycling, radiation effects or the considerably longer NERVA duration. Although

TABLE A-2

TPA HISTORICAL FAILURE RATE ASSESSMENTS

FAILURE MODE	FAILURE RATE ESTIMATES (Per Million Thrusting Cycles) NORMAL MODE	MALFUNCTION MODE
Fails to start	340	374
Premature stop	45	49
Low performance	500	550
Total loss of containment	5[A]	6[A]
Excessive vibration	90	99
External leakage	20[A]	22[A]
TOTAL (Per Cycle)	975	1072
TOTAL (Per Mission)	25	28

(A) Failure rate applies to total flight usage.

TABLE A-3

NOZZLE HISTORICAL FAILURE RATE ASSESSMENTS

FAILURE MODE	FAILURE RATE ESTIMATE (Per Million Missions)
External leakage from coolant stream	392
External leakage from Exhaust gas stream	39
Total loss of containment	20
Failure to support nuclear reactor assembly	19
TOTAL	470

some mechanisms of failure in the nozzle are affected by pressure and thermal cycling, the assessments are based on the material capability after all required operational cycles. Probabilistic analyses have been completed for 13 of 17 mechanisms related to structural failure resulting in coolant leakage. All mechanisms substantiate the relative failure rate assessment with the exception of the coolant tube thermal fatigue cracking. Re-evaluation of this mechanism is dependent upon the conclusion of tests being performed to define actual allowable strains.

A.5 NOZZLE EXTENSION

Table A-4 shows the distribution of the total nozzle extension failure rate to the nozzle extension failure modes.

TABLE A-4

NOZZLE EXTENSION HISTORICAL FAILURE RATE ASSESSMENTS

FAILURE MODE	FAILURE RATE ESTIMATE (Per Million Missions)
External leakage	303
Loss of containment	100
TOTAL	403

The failure rate of 403 failures per 10^6 missions was derived from various programs which were awarded to evaluate Fibrous Graphite. The AG-Carb testing is based on a relatively small diameter nozzle, but pressures range from 100 to 550 psia. There were 2479 tests with one failure. Using the success ratio method, 2478 ÷ 2479 results in $.9_36$ reliability.

A success ratio generally results in a more conservative reliability estimate than the growth curve technique; however, the failure rate has been set relatively high due to the uncertainty in fabrication variability in this large structure.

The Apollo engine used a radiation-cooled metalic extension. Once flange separation occurred on the extension during 1104 tests providing a success ratio of $.9_3$. No probabilistic analyses have been completed.

A.6 THRUST STRUCTURE

A failure rate of 35 failures per million 60-cycle missions was derived for the thrust mount based on the qualitative failure mode analysis shown in Table A-5. This approach utilizes a method of establishing the relative reliability of each proposed design concept of a mechanical component during the conceptual design phase. It qualifies and combines the judgements of design and reliability engineers into a single value so as to provide a reliability criterion for design selection. The method requires that a failure mode analysis be conducted on each candidate design by a qualified design engineer. In performing the analysis, the engineer takes into consideration all environments and operating conditions encountered during the life cycle of the component, and rates each failure mode on its failure potential in accordance with the Table A-6. In this table, the alpha character designates the success potential of the design in decreasing magnitude from A through D, and the numerical designation indicates the degree of discovery and control through inspection or test methods. The degree of controllability is indicated by the numeric designator which decreases in magnitude from 1 through 4. The individual potentials for failure are then combined into a single numerical rating by Table A-6.

If a failure mode can be caused by more than one mechanism, the various mechanisms are then weighted by engineering judgment as to their relative probability of occurrence. The sum of the failure mechanism weights for each failure mode must total 1.0. The failure rate for each mechanism then becomes the product of the mechanism rating and the weighting factor.

Subsequent to the completion of the qualitative failure mode analysis documented in Table A-5, the failure mechanisms were re-combined under the two failure modes shown in Table A-7. These modes were used in the current reliability allocation process.

TABLE A-5

COMPONENT MECHANISM OF FAILURE ANALYSIS FOR NERVA THRUST STRUCTURE

Component Mode of Failure	Ident. No.	Component Failure Mechanism Description (Part Level)	R_D	R_Q	Wt.	Failure Rate Per 10^6 Missions
Upper thrust structure (UTS)- failure to transmit loads	1.1	Cyclic Fatigue	A	1	0.5	0.50
	1.2	Force Variability (Thrust, Boost and Transverse)	A	1	0.1	0.10
	1.3	Stress Concentration	B	1	0.15	1.50
	1.4	Material Variability	A	3	0.1	10.0
	1.5	Weld Failure	A	3	0.1	10.0
	1.6	Temperature Variability	A	1	0.05	0.05
Lower thrust structure (LTS) - failure to transmit loads	2.1	Cyclic Fatigue	A	1	0.5	0.5
	2.2	Force Variability (Thrust, Boost and Transverse)	A	1	0.1	0.1
	2.3	Stress Concentration	B	1	.15	1.5
	2.4	Material Variability	A	3	0.1	10.0
	2.5	Temperature Variability	B	1	0.1	1.0
	2.6	Fastener Failure	A	1	.05	.05
		TOTAL				35.30

TABLE A-6

"FAILURE RATE POTENTIAL" VALUES

		CONTROL RATING			
		1	2	3	4
DESIGN RATING	A	1	10	100	1000
	B	10	100	1000	10,000
	C	100	1000	10,000	100,000
	D	1000	10,000	100,000	1,000,000

TABLE A-7

THRUST STRUCTURE HISTORICAL FAILURE RATE ASSESSMENTS

FAILURE MODE	FAILURE RATE ESTIMATE (Per Million Missions)
Fails to transmit thrust along proper axis	32
Fails to support interface components	3
TOTAL	35

As a comparison, the Apollo thrust structure had one failure in 177,800 sec. A growth curve analysis provided 3.33×10^{-6} failure/sec or 1998/10 min. single burn. This value was not used because it is limited by the operating time accrued on the thrust structure and is not compatible with other NERVA failure rate estimates of more complex parts (e.g., 200 failures/thrusting cycles for most valves).

A preliminary probabilistic reliability analysis was performed on the UTS. Three mechanisms were influential in giving a predicted reliability of 0.9_20. The mechanism of failure responsible for the low reliability was tensile failure in the upper beam cap during flight. The cap is being redesigned to correct this condition. Only primary stresses were considered. No analyses has been made for residual stresses, stress interactions, vibration, fatigue, radiation effects, size effects, corrosion, erosion, or space aging.

A.7 EXTERNAL SHIELD

A failure rate estimate of 1 per million 60 cycle missions was derived for the structural failure mode of the external shield on the basis of a preliminary probabilistic analysis. Each failure mechanism was analyzed utilizing an approximation technique which equates reliability to margin of safety. This method produces a lower bound reliability value for structural failure modes based on conservative estimates of variances and margin of safety calculations. All 31 mechanisms analyzed had a lower bound reliability greater than $.9_8$. When combined in series, the lower bound reliability is $.9_67$. No consideration was given to residual stresses, stress interactions, vibrations, fatigue, radiation effects, size effects, corrosion, erosion or aging in space. Improper radiation attenuation or leakage (streaming) was not analyzed due to lack of analytical methods. As a result, the derived value of 0.3×10^{-6} was arbitrarily increased to 1×10^{-6}. No historical data on similar structures could be found.

A.8 GIMBAL ASSEMBLY

Table A-8 shows the distribution of the gimbal assembly failure rate to its failure modes. An Apollo electro-mechanical gimbal actuator failure rate of 26.2 failures/10^6 gimbal cycles was utilized as the bases for determining the NERVA prediction, based on a growth curve of 133 failures in 5,086,110 actuator cycles during development and qualification testing. Estimating 10 gimbal cycles per engine thrusting cycle results in an estimate of 262 failures per 10^6 thrusting cycles for NERVA. The total of 262 failures was divided among the three failure modes in the same proportion as the causes of the Apollo failures. The historical rates are considered to be conservative since the magnetic clutches which were the primary source of failures on Apollo will not be used in the NERVA design.

TABLE A-8

GIMBAL ASSEMBLY HISTORICAL FAILURE RATE ASSESSMENTS

FAILURE MODE		FAILURE RATE ESTIMATE (Per Million Engine Thrusting Cycles)
GIMBAL ACTUATOR		
Fails in place		68
Improper position or rate control		192
Structural failure		2
	SUBTOTAL	262
GIMBAL PIVOT & STRUCTURE		
Structural failure		0.3
Flecture blade failure		13
Failure of pivot bearing		5
	SUBTOTAL	18.3

Farada statistically grouped data, which includes aircraft electrical actuators, provides a range of 157 to 309 and a mean of 208 failures per million operating hours which is compatible with the Apollo failure rate of 262.

The estimated failure rate for the flexure blade and pivot bearing of the gimbal structure are based on Apollo test history. During Apollo testing, no failure of the gimbal bearing occurred and only one failure of a gimbal strut was recorded. Since the success data was not fully documented, an estimate was made, and a growth curve generated resulting in a failure rate of 13 failures/10^6 thrusting cycles for the flexure blade and 5 failures/10^6 thrusting cycles for the pivot bearing.

A probabilistic analysis was completed to estimate the probability of structural failure of the gimbal pivot. Nine location-mechanism combinations were calculated to be greater than $.9_8$ reliability for each mechanism. This provides a lower bound estimate of $.9_6 68$ for the failure mode. This includes the gimbal pivot and arms attaching to the trunnions. One location for bending, three locations for shear, four locations for normal and one location for torsional stresses were analyzed. Not included in this analysis were the trunnion blades or bolts attaching the gimbal assembly to the thrust structures. No analysis was made for rigidity reliability since no deflection limits are available. However, standard deviations were derived for future use in establishing overall expected engine flexibility on a probabilistic basis.

A.9 PRESSURE VESSEL AND CLOSURE ASSEMBLY

A failure mode estimate of 24 failures per million 60-cycle missions was derived based on qualitative failure mode analysis, as shown in Table A-9. These mechanisms were then re-combined under the two failure modes shown in Table A-10.

TABLE A-9

COMPONENT MECHANISM OF FAILURE ANALYSIS FOR NERVA PRESSURE VESSEL AND CLOSURE ASSEMBLY

Component Mode of Failure	Ident. No.	Component Failure Mechanism Description (Part Level)	R_D	R_Q	Wt.	Failure Rate Per 10^6 Missions
1. Pressure vessel cylinder rupture	1.1	Overpressure	A	1	0.30	0.30
	1.2	Overtemperature	B	1	0.20	2.00
	1.3	Metal Fatigue from Pressure, Thermal Cycling and Vibration	A	1	0.10	0.10
	1.4	Material Variability	A	2	0.10	1.0
	1.5	Stress Concentrations Due to Instrumentation Ports and Changes in Geometry	A	2	0.15	1.5
	1.6	Excessive External Loads	A	1	0.10	0.1
	1.7	Stress Corrosion	A	1	0.050	0.050
2. Pressure vessel dome end closure rupture	2.1	Overpressure	A	1	0.30	0.30
	2.2	Overtemperature	B	1	0.20	2.0
	2.3	Metal Fatigue from Pressure, Thermal Cycling and Vibration	A	1	0.10	0.1
	2.4	Material Variability	A	2	0.10	1.0
	2.5	Stress Concentrations Due to Pass	A	1	0.150	0.150
	2.6	Excess External Loads	A	1	0.10	0.10
	2.7	Stress Corrosion	A	1	0.050	0.05

TABLE A-9 (Continued)

COMPONENT MECHANISM OF FAILURE ANALYSIS FOR NERVA PRESSURE VESSEL AND CLOSURE ASSEMBLY

Component Mode of Failure	Ident. No.	Component Failure Mechanism Description (Part Level)	R_D	R_Q	Wt.	Failure Rate Per 10^6 Missions
3. Pressure vessel dome and closure bolts failure	3.1	Overpressure	A	1	0.250	0.250
	3.2	Overtemperature	B	1	0.350	3.50
	3.3	Bolt Fatigue from Pressure Thermal Cycling and Vibration	A	1	0.10	0.10
	3.4	Improper Installation	A	2	0.10	1.0
	3.5	Material Variability	A	2	0.20	2.0
4. Pressure vessel assembly gross leakage	4.1	Pressure - Thermal Deflection or Rotational Movement	B	1	0.40	4.0
	4.2	Vibration Loosening of Fasteners	A	1	0.10	0.10
	4.3	Non-Parallelism of Mating Flanges	A	2	0.10	1.0
	4.4	Uneven or Rough Flange Sealing Surface	A	2	0.10	1.0
	4.5	Seal Fatigue from Cycling	A	1	0.10	0.10
	4.6	Improper Torquing of Closure Nozzle Cylinder Bolts	A	2	0.10	1.0
	4.7	Unsealed Adapters in Closure Passthroughs	A	2	0.10	1.0
				TOTAL		23.8

TABLE A-10

PVCA HISTORICAL FAILURE RATE ASSESSMENTS

FAILURE MODE	FAILURE RATE ESTIMATE (Per Million Missions)
External leakage	1
Structural failure	23
TOTAL	24

Preliminary probabilistic analyses were completed for the structural failure mechanisms associated with the bolts, inserts, and wall rupture failure modes; and for the external leakage due to stresses exceeding bolt pre-load and bolt elongation. The predicted reliability from these analyses were $.9_{4}35$ and $.9_{7}88$ respectively. These results will be substituted for the current estimates in any future reliability analyses.

A.10 LINES

Generic failure data on propellant lines are incomplete. Failures have been documented, but successes have not. The best estimate of Apollo line reliability must be made from one failure in 83,600 total seconds of operation which results in a failure rate of 7150 per 10^6 ten-minute cycles. Such failure rates would be out of line with the other NERVA assessments. The lines are assumed inherently more reliable than valves. Therefore the predicted reliability of the best Apollo valve ($.9_{4}75$ was arbitrarily selected as lowest line reliability). Schematic layouts of each line section were prepared and sorted by line complexity considering numbers of bellows, flanges, elbows, "y's", "T's", and fittings and line lengths. The full thrust pressure and temperature was noted on each schematic and the complexity ranking was adjusted according to severity of operating environment. The most complex line with the severest environment was assigned a failure rate of 25 ($1 - .9_{4}75$).

The simplest line was assigned a failure rate of 1 ($.9_6$). These complexity rankings are presented in Table A-11. The resultant failure rate estimates are shown in Table A-12. Preliminary probabilistic analyses have been completed for the line/flange rupture and bellows failure modes. In each case, the failure rate calculated was less than the rates shown in Table A-12. As these analyses are refined, the probabilistic results will be substituted for the existing data.

A.11 CONTROLS AND INSTRUMENTATION

The Controls & Instrumentation system was divided into subsystems reduced in detail sufficient to obtain a failure probability. Circuit detail, where available, was utilized and circuit failure probabilities have been calculated by the parts count method, assigning failure probabilities to each part from references such as MIL-HDBK-217A.

A.11.1 C&I System Components

Table A-13 lists the major subsystems of the C&I system, the failure rate estimate utilized, and the source data.

A.11.2 Valve Actuator Components

Table A-14 lists the failure rate estimates for the electronics associated with each valve/actuator.

TABLE A-11

PROPELLANT LINE COMPLEXITY RANKINGS

LINE	EXTERNAL LEAKAGE			RUPTURE				BELLOWS FAILURE		
	No. Joints	Severity	Total	No. Joints	Severity	Line Severity	Total	No. Bellows	Severity	Total
PIL	0		0	2	1	1	3	3	1	3
PDL										
Common	3	2	6	7	2	3	17	1	3	3
Legs (2)	0		0	3	2	2	8	1	2	2
SSBL	3	1	3	3	1	1	4	0	0	0
TIL										
Common	1	2	2	1	2	2	4	1	2	2
Legs (2)	0		0	3	2	2	8	1	2	2
TDL										
Common	1	2	2	1	2	2	4	0		0
Legs (2)	0		0	3	2	2	8	2	2	4
SPSL	1	1	1	1	2	2	4	0		0
TBL	2	1	2	6	2	2	14	1	2	2
CL										
Up	1	1	1	3	1	1	4	0		0
Down	2	1	2	4	2	2	10	1	2	2

TABLE A-12

PROPELLANT LINE HISTORICAL FAILURE RATE ASSESSMENTS

FAILURE MODE	FAILURE RATE ESTIMATE (Per Million Missions)	REMARKS
1. External Seal/Flange Leakage	19	
PDL		
Common Line	6	3 Joints - 1 Torus and 2 PDBV-PDCV Module
SSBL	3	3 Joints - 1 PVC and 2 Orifice
TIL		
Common Line	2	1 Joint - PVC
SPSL	1	1 Joint - PVC
TBL	2	2 Joints BBV-BCV Module
TDL		
Common Line	2	1 Joint - PVC
CL		
Upstream	1	1 Joint - Module
Downstream	2	2 Joints - Module and PVC
Note: All valve-to-valve, valve-to-line, and TPA-to-line external leakages are included in the valve and TPA external leakage rates. Only joint leakages included here are line-to-torus, line-to-PVC, and valve module joints.		
2. Line/Flange Rupture	112	All flanged joints are considered in this mode. All line-to-valve joints are assumed to be flanged.
PIL	3	
PDL	33	
Common Line	17	
Legs (2)	8 (ea)	
SSBL	4	

TABLE A-12 (Cont'd)

PROPELLANT LINE HISTORICAL FAILURE RATE ASSESSMENTS

FAILURE MODE	FAILURE RATE ESTIMATE (Per Million Missions)	REMARKS
2. (cont'd.)		
TIL	20	
Common Line	4	
Legs (2)	8 (ea)	
TDL	20	
Common Line	4	
Legs (2)	8 (ea)	
SPSL	4	
TBL	14	
CL	14	
Upstream	4	
Downstream	10	
3. Bellows Failure	28	Line drawings were not released at this time. The number of bellows was assumed to be the same as the 1137400-D engine.
PIL	3	
PDL	7	
Common Line	3	
Legs (2)	2 (ea)	
TIL	6	
Common Line	2	
Legs (2)	2 (ea)	
TDL	8	
Legs (2)	4 (ea)	
TBL	2	
CL		
Downstream	2	

TABLE A-13

CONTROL & INSTRUMENTATION SYSTEM

HISTORICAL FAILURE RATE ASSESSMENTS

C&I SUBSYSTEM	FAILURE RATE ESTIMATE (Per Million Hours)	DATA SOURCE
Computer	60.00	MIT Analysis of Apollo Computer, modified by NERVA complexity and size
Decoder	2.66	MIL-HDBK-217A modified to estimated size of NERVA integrated circuit chips
Receiver	0.40	MIL-HDBK-217A IC chip
Voter, Sample & Hold	0.40	MIL-HDBK-217A IC chip
Transmitter	0.40	MIL-HDBK-217A IC chip
Connector (Wiring Harness)	0.042	MIL-HDBK-217A
DPST Switches	0.044	MIL-HDBK-217A
Amplifiers	0.50	MIL-HDBK-217A
Battery	1.00	Eagle-Picher and Lockheed based on 40,000 hours of field usage
Diodes	0.0036	MIL-HDBK-217A
Analog to Digital Converter	2.66	Engineering Judgment. Complexity was judged to be the same as a Decoder
Shift Register	2.66	Engineering Judgment. Complexity was judged to be the same as a Decoder
Selector, Charging CH	0.4	Engineering Judgment, Complexity was judged to be the same as a Switch
Power Buss	1.82	Average of Boeing and Autonetics Minuteman observed data
Load Selector	17.58	Average of Boeing and Autonetics Minuteman observed data
Logic	0.4	Engineering Judgment. Complexity was judged to be the same as a Voter
Logic Power Supply	0.8	Engineering Judgment. Complexity was judged to be the same as a Voter

TABLE A-14

VALVE/ACTUATOR ELECTRONICS HISTORICAL FAILURE RATE ASSESSMENTS

PART	FAILURE RATE ESTIMATE (Per Million Hours)	DATA SOURCE
Wiring Harness with 2 Connectors	0.083	MIL-HDBK-217A
Voters (each)	0.4	MIL-HDBK-217A IC Chip
Position Transducer	2.6	MIL-HDBK-217A
Driver (Includes On-Off Logic, Slip Frequency Control Module, Oscillator Module, Pulse Width Control Module, Square Wave Logic Module, 6-Phase Logic Stage, Tachometer, and Potentiometer)	12.81	MIL-HDBK-217A

A.12 NUCLEAR SUBSYSTEM

Failure probabilities for NSS failure modes have been derived for each NSS Critical Component. A summary of the failure probabilities of those modes identified as being of Failure Effect Category III and IV is presented in Table A-15. The failure governing part, failure mechanism, and failure rate within a given Critical Component leading to the NSS failure modes are included in the table with a reference made as to the WANL data source. Further background for these failure rates are presented in the WANL R-202 dated September 1970, "Reliability Allocations, Assessments, and Analysis Report".

Failure Effect Categories summarized are those leading to mission loss. Failure rates of failure governing parts are presented to provide a relative value of the reliability of those parts critical to the successful performance of the NSS during an assigned mission.

TABLE A-15

NSS FAILURE RATE SUMMARY FOR FAILURE EFFECT

CATEGORIES III & IV

FAILURE MODE	FAILURE PROBABILITY OF MODE	FAILURE GOVERNING PART/PART FAILURE MODE-MECHANISM/FAILURE PROBABILITY	PART FAILURE PROBABILITY DATA SOURCE
FUEL ELEMENTS			
1. Reactivity loss exceeds one dollar (NF 0001)	.03	Fuel Element/Bore corrosion/.03	WANL DRM No. 53041
2. Loss of structural integrity due to structural collapse (NF 0004)	10^{-5}	Fuel Element/Severe corrosion/10^{-5}	WANL DRM No. 53041
3. Pieces of fuel element ejected (NF 5203)	10^{-10}	Fuel Element/Cracking/10^{-10}	WANL DRM No. 53041
CLUSTER FAILURES			
1. Loss of common primary and secondary load path in cold end hardware (NC 5001)	10^{-19}	Cluster nut/threads shear/10^{-19}	WANL DRM No. 53394
2. External hydrogen leakage in cold end hardware - EOM required (NC 5006)	10^{-19}	Closure nut/threads shear/10^{-19}	WANL DRM No. 53394
3. External hydrogen leakage in hot end hardware - EOM required (NC 5206)	11×10^{-7}	Protection cup/corrodes/10^{-6}	WANL DRM No. 53394
4. Hot end hardware fails to retain fragments (NC [illegible])	10^{-19}	Retainer/excessive creep distortion/10^{-19}	WANL DRM No. 53394
5. Hydrogen flow blockage in cold end hardware - EOM required (NC 5008)	11×10^{-20}	Plenum screen/buckles/10^{-19}	Engineering Judgement
6. Hydrogen flow blockage in stem - EOM required (NC 5108)	10^{-39}	Support stem/buckles/10^{-19}	" "
7. Hydrogen flow blockage in hot end hardware - EOM required (NIC 5208)	10^{-19}	Support nut/fractures/10^{-19}	" "

TABLE A-15 (Cont'd)

NSS FAILURE RATE SUMMARY FOR FAILURE EFFECT

CATEGORIES III & IV

FAILURE MODE	FAILURE PROBABILITY OF MODE	FAILURE GOVERNING PART/PART FAILURE MODE-MECHANISM/FAILURE PROBABILITY	PART FAILURE PROBABILITY DATA SOURCE
CLUSTER HARDWARE (Cont'd)			
8. Hydrogen flow blockage in liner tube - EOM required (NC 5308)	10^{-19}	Liner tube/buckles/10^{-19}	Engineering judgement
9. Hydrogen flow diversion in support stem and shim tube (NC 5109)	2×10^{-29}	Support stem/breaks/2×10^{-10}	WANL DRM No. 53394
CORE PERIPHERY			
1. Fracture and ejection of aft end core periphery filler strip (NP 0101)	1.74×10^{-18}	Filler strip/fracture near very aft end/10^{-20}	WANL DRM No. 53224
2. Failure of aft end ledges and adjacent small X-section filler strips (NP 0101)	5.4×10^{-4}	Small filler strip/fracture near aft end subsequent fracture of adjacent strip/ 0.14×10^{-5} and 10^{-2} respectively	WANL DRM No. 53224
3. Deterioration of insulation tiles causing degradation of the thermal barrier (NP 0403)	2×10^{-10}	Tile/chemical/metallurgical changes and densification/10^{-10}	WANL DRM No. 53224
SUPPORT PLATE AND PLENA			
1. Fluid leakage, plate channels - support stem (NS 0101)	8.4×10^{-13}	Cylinder/yielding of sealing surfaces due to compression/10^{-8}	Engineering judgement
2. Excessive fluid leakage - support stem coolant supply (NS 0105)	1.1×10^{-7}	Elbow unions/rupture/3×10^{-9}, and reducing Y/welds crack/ 3×10^{-9}	WANL DRUM No. 53229
3. Bowing collapse of support plate structures (NS 0106)	1.1×10^{-7}	Plate/yields in vicinity of flange/10^{-7}	WANL DRM No. 53395
4. Buckling/collapse of forward support structures (NS 0107)	2×10^{-8}	Cylinder/buckles, or breaks at flange/ 10^{-8} for each mode	WANL DRM No. 53299
5. Excessive fluid leakage - bypass supply (NS 0106)	3.6×10^{-8}	Elbow union/rupture/3×10^{-9}, and inlet pipe/welds crack/ 3×10^{-9}	WANL DRM NO. 53299

TABLE A-15 (Cont'd)

NSS FAILURE RATE SUMMARY FOR FAILURE EFFECT

CATEGORIES III & IV

FAILURE MODE	FAILURE PROBABILITY OF MODE	FAILURE GOVERNING PART/PART FAILURE MODE-MECHANISM/FAILURE PROBABILITY	PART FAILURE PROBABILITY DATA SOURCE
SUPPORT PLATE AND PLENA (Cont'd)			
6. Excessive external fluid leakage of NSS/turbine inlet fluid (NS 0110)	2×10^{-12}	Seal/breaks/10^{-6}, and seal interface surface/galling/10^{-19}	WANL DRM No. 53299
7. Gross radial fluid leakage of NSS/turbine inlet fluid into turbine exit/NSS fluid (NS 0111)	1.1×10^{-11}	Instrumentation seals/buckling/10^{-11}	Engineering judgement
INTERNAL SHIELD			
1. Buckling or collapse of central shield support structure (NI 0105)	1.2×10^{-15}	Support plate/deforms by bowing/1.0×10^{-15}	WANL DRM No. 53296
2. Buckling or collapse of peripheral shield structure (NI 0106)	1.0×10^{-15}	Support ring/deforms/1.0×10^{-15}	WANL DRM No. 53296
3. Reduction in effective shield thickness of central shield (NI 0107)	9.9×10^{-16}	LATH modules/melting/9.9×10^{-16}	WANL DRM No. 53296
REFLECTOR ASSEMBLY			
1. Fracture and ejection of fragments of the aft seal ring (NR 0109)	10^{-18}	Aft outer seal segments/segment fractures/10^{-19}	WANL DRM No. 53591
2. Localized interference with core expansion (NR 0110)	5×10^{-5}	Plunger pin/pin binds/.99995	WANL DRM No. 53591
3. Loss of reflector structural support capability (NR 0215)	5.1×10^{-3}	Support cylinder/cylinder buckles/5×10^{-3}	WANL DRM No. 53591
4. Control drums fail in place at other than orifice position (NR 5104)	10^{-12}	Drum bearings/bearings size/10^{-13}	WANL DRM No. 53591
5. Control drum decouples from CDDA (NR 5103 and NR 5104)	10^{-18}	Drum shaft/shaft fails/10^{-19}	WANL DRM No. 53591

TABLE A-15 (Cont'd)

NSS FAILURE RATE SUMMARY FOR FAILURE EFFECT

CATEGORIES III & IV

FAILURE MODE	FAILURE PROBABILITY OF MODE	FAILURE GOVERNING PART/PART FAILURE MODE-MECHANISM/FAILURE PROBABILITY	PART FAILURE PROBABILITY DATA SOURCE
REFLECTOR ASSEMBLY (Cont'd)			
6. Loss or displacement of control drum poison plate (NR 5105)	10^{-18}	Control vane/vane melts/10^{-19}	WANL DRM No. 53591
7. Control drum distorts and binds during normal transient (NR 5106)	9×10^{-5}	Drum cylinder/cylinder distorts/5×10^{-6}	WANL DRM No. 53591
CDDA			
1. Excessive external leakage through CDDA housing (DA 5108)	$<10^{-19}$	Housing/housing rupture or flange breaks/$<10^{-19}$	WANL DRM No. 52047B
2. CDDU fails to maintain coupling with control drum (DA 5110)	$<10^{-19}$	CAM follower/breaks due to shear/$<10^{-19}$	WANL DRM No. 52047B
3. CDDA fails to a position other than orifice angle due to controller failure (DA 5102 and DA 5103)	1.0×10^{-4}	The controller has not yet been designed. The failure probability is assumed to be the allocated goal.	N/A
4. CDDU fails in place due to electrical failure of actuator motor (DA 5101)	25.4×10^{-6}	Motor stator coils/coils short or break/10^{-5}	WANL DRM No. 52047B

APPENDIX B

COMPARISON OF EXACT AND APPROXIMATE RELIABILITY MODELS

This appendix compares the exact reliability of three simple systems with the reliability determined by the approximate model derived in Section 3.1 for the NERVA engine.

The three systems for which the comparison is made consist of simple valve networks for which the reliability is defined as the probability that the system will allow for the initiation and termination of flow through N cycles of operation. All valves are assumed identical with only two failure modes, failure to open and failure to close. The lines are assumed to have a failure probability of zero.

SYSTEM 1

System 1 consists of a two-valve network as depicted below.

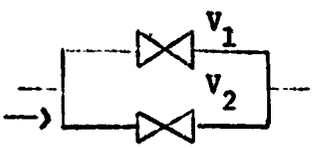

At least one valve must open to initiate flow and both valves must close to terminate flow. The exact reliability model for this system is

$$R = 1 - \left[\frac{(1-R_o)(1-R_o^N R_c^N)}{1-R_o R_c}\right]^2 - \frac{R_o^2(1-R_c^2)(1-R_o^{2N} R_c^{2N})}{1-R_o^2 R_c^2}$$

$$- \frac{2R_o(1-R_o)(1-R_c)(1-R_o^N R_c^N)(1-R_o^{N+1} R_c^{N+1})}{(1-R_o R_c)(1-R_o^2 R_c^2)}, \qquad [B.1]$$

where:

R = system success probability, i.e., system will allow for the initiation and termination of flow through N cycles.

N = number of cycles

R_o = probability of a valve opening as required during 1 cycle

R_c = probability of a valve closing as required during 1 cycle

The system fails if both of the valves fail in the closed position or if either valve fails in the open position. Consequently, using Equation [11] of Section 3.1, the approximate system reliability is

$$R \cong 1-2Nq_o - N^2 q_c^{\,2}, \qquad [B.2]$$

where:

q_o = probability of a valve failing in the open position during 1 cycle

$= 1 - R_c$

q_c = probability of a valve failing in the closed position during 1 cycle

$= 1 - R_o$

This expression can be obtained from Equation [B.1] by using the approximation

$$R^N = (1-q)^N \cong 1-Nq, \text{ for } Nq \ll 1. \qquad [B.3]$$

<u>SYSTEM 2</u>

System 2 consists of four valves in a quad-pack arrangement as follows:

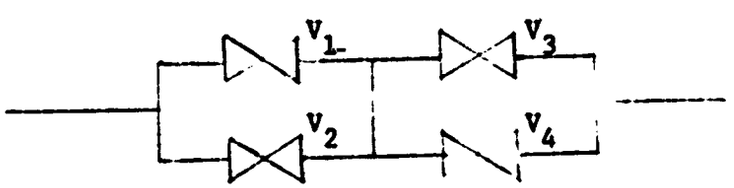

The exact reliability model for this system is

$$R = \left[1 - \left[\frac{(1-R_o)(1-R_o^N R_c^N)}{1-R_o R_c} \right]^2 \right]^2 - \left[\frac{R_o^2(1-R_c^2)(1-R_o^{2N} R_c^{2N})}{1-R_o^2 R_c^2} + \frac{2R_o(1-R_o)(1-R_c)(1-R_o^N R_c^N)(1-R_o^{N+1} R_c^{N+1})}{(1-R_o R_c)(1-R_o^2 R_c^2)} \right]^2 \qquad [B.4]$$

System 2 contains no single failures, but 6 double failures that fail the system, i.e.,

V_1 and V_2 fail closed

V_3 and V_4 fail closed

V_1 and V_3 fail open

V_1 and V_4 fail open

V_2 and V_3 fail open

V_2 and V_4 fail open

Consequently, the approximate reliability for System 2 is

$$R \cong 1-2N^2 q_c^{\,2} - 4N^2 q_o^{\,2}$$

$$\cong 1-2N^2(q_c^{\,2} + 2q_o^{\,2}). \qquad [B.5]$$

SYSTEM 3

System 3 contains 3 valves in parallel and requires two valves open for adequate flow. The system is depicted as follows:

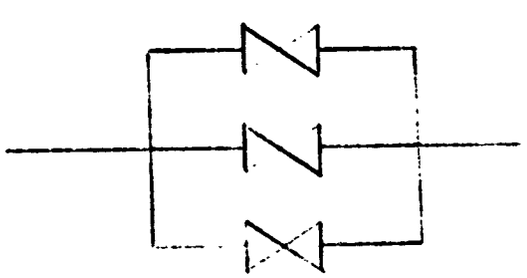

(Two valves open required for adequate flow)

The exact reliability model for this system is

$$R = R_o^{\,3N} R_c^{\,3N} + 3R_o^{\,2N} R_c^{\,2N} \; \frac{(1-R_o)(1-R_o^{\,N} R_c^{\,N})}{1-R_o R_c} \qquad [B.6]$$

Since there are three single failures which fail the system open and 3 double failures which preclude adequate flow, the approximate reliability model for System 3 is

$$R \cong 1-3Nq_o - 3N^2 q_c^{\,2}$$

$$\cong 1-3N(q_o - Nq_c^{\,2}). \qquad [B.7]$$

COMPARISON OF SYSTEM MODELS

A comparison of system failure probabilities using the exact and approximate models is shown in Table B-1 for each of the systems discussed above. For each case, 60 operating cycles were assumed and the one-cycle component failure mode probabilities were varied between 10^{-3} and 10^{-5}.

Based on the results of this study, the following conclusions are drawn:

1. Exact success modeling is too complex for real system application.

2. It is extremely difficult to interpret the significance of terms in the exact-model equations. Verification of the validity of these equations is also a problem.

3. Failure modeling is simple to develop and easy to interpret, and for values of $Nq \leq .01$, provides a close approximation to the exact solution. It should be noted that for 60-cycle operation and the high reliability required for NERVA, Nq will always be considerably less than .01.

4. The use of failure modeling is readily adaptable to the prediction of reliability associated with each of the failure effect categories. Thus, system reliability can be correlated with criticality.

TABLE B-1

COMPARISON OF SYSTEM MODELS FOR 60 CYCLES OF OPERATION

SYSTEM	OPEN AND CLOSED VALVE FAILURE RATE/CYCLE, q	Nq	FAILURE PROBABILITY/60 CYCLES, (1-R)	
			EXACT MODEL	APPROXIMATE MODEL
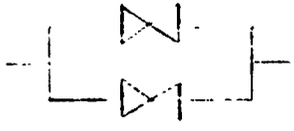	10^{-3}	.06	.113	.124
	10^{-4}	.006	.0119	.0120
	10^{-5}	.0006	.00120	.00120
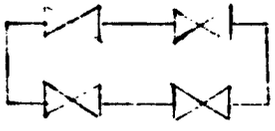	10^{-3}	.06	.0185	.0216
	10^{-4}	.006	.000213	.000216
	10^{-5}	.0006	.00000216	.00000216
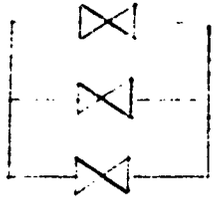	10^{-3}	.06	.169	.191
	10^{-4}	.006	.0179	.0181
	10^{-5}	.0006	.00180	.00180

APPENDIX C

RELIABILITY PREDICTIONS FOR STRUCTURES EXPOSED TO N CYCLES

The reliability analysis of structural type components generally consists of a stress/strength type analysis. Under this analysis the distribution of stresses is compared with the distribution of strength to determine the probability of the strength exceeding the applied stress and hence result in component success.

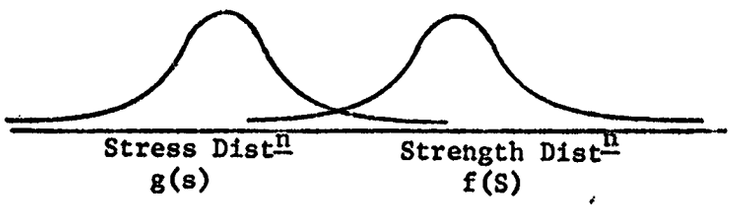

For a single cycle the reliability can be expressed as

$$R = \int_{-\infty}^{\infty}\int_{-\infty}^{S} g(s)\, f(S)\, ds dS$$

If the strength of the structure did not degrade as a function of cycles, and on each successive cycle assumed some random strength (independent of the strengths assumed on previous cycles), and on each successive cycle the structure were exposed to some random stress, the reliability for N cycles would be given by R^N. It should be noted that under this case, it would be implied that the structure could be exposed to some extremely high stress on some cycle and <u>not</u> fail and then be exposed to some significantly lower stress on a subsequent cycle and fail (because on the earlier cycle the structure assumed an extremely high strength and on the subsequent cycle an extremely low strength).

The above model, R^N, does not appear to realistically depict the true situation of a structure exposed to repeated stresses. The following discussions of this problem are presented to provide a realistic analysis.

CASE I - FIXED STRENGTH

Assume that the strength of the structure, although unknown, remains constant and does not degrade with cycles, however, on each successive cycle the structure is exposed to a random stress.

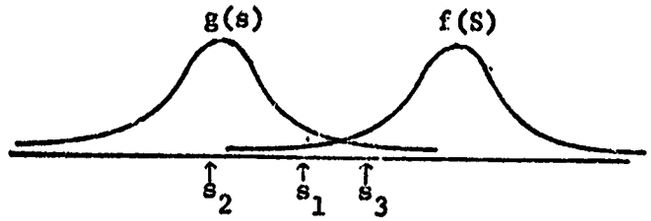

Suppose that a reliability analysis of the structure is performed prior to test and a single cycle reliability of $.9_8$ is determined. Assume that the actual stress to which the structure was exposed on Cycle #1 is s_1. If the structure does not fail during Cycle #1, it is concluded that the strength of the structure exceeds s_1. As a result the a priori reliability of the structure for Cycle #2 is higher than it was for Cycle #1, e.g., $.9_8 2$, because any stress less than s_1 cannot fail the structure. Assume that on Cycle #2, the actual stress incurred is s_2 ($s_2 < s_1$). Then the a priori reliability of the structure for Cycle #3 remains at $.9_8 2$. If on Cycle #3 a stress of s_3 is incurred and the structure does not fail, the a priori reliability of the structure for Cycle #4 would be higher, e.g., $.9_8 6$, etc. If the actual stress observed on each cycle is known, then the reliability model is a function of the observed stresses. Rarely are the actual stresses known, however.

In the more usual case the actual stresses to which the structure is exposed is not known. The reliability model in this case can be expressed as:

$$\text{Rel} = \int_{-\infty}^{\infty} \left[\int_{-\infty}^{S} g(s)\, ds \right]^{N} f(S)\, dS$$

which is the probability that non of N random stress values exceeds one randomly selected strength value.

Proof testing of the structure prior to flight is analogous to truncating a tail of the strength distribution. As a result of the successful completion of the proof test, it can be concluded that the actual strength exceeds the proof test point (assuming the proof test did not degrade the strength). If the proof test point is sufficiently high, a "rough" conservative estimate of the reliability for N cycles could be given by the following expression:

$$R = \left[\int_{-\infty}^{s_p} f(\varepsilon)ds \right]^N$$

where: s_p = the proof test point, and it is conservatively assumed that failure occurs if the structure is exposed to a stress higher than s_p.

CASE II - DEGRADING STRENGTH

If the strength of the structure degrades as a function of cycles, the problem becomes complex. Assume the stresses vary randomly and independently from cycle-to-cycle and the mean stress and variation in stress remain fixed. Also assume that the strength degrades as a function of cycles; however, the strength on cycle i is uniquely determinable from the random strength on Cycle 1. Also assume that the rate of strength degradation is independent of the magnitude of the initial strength on Cycle 1.

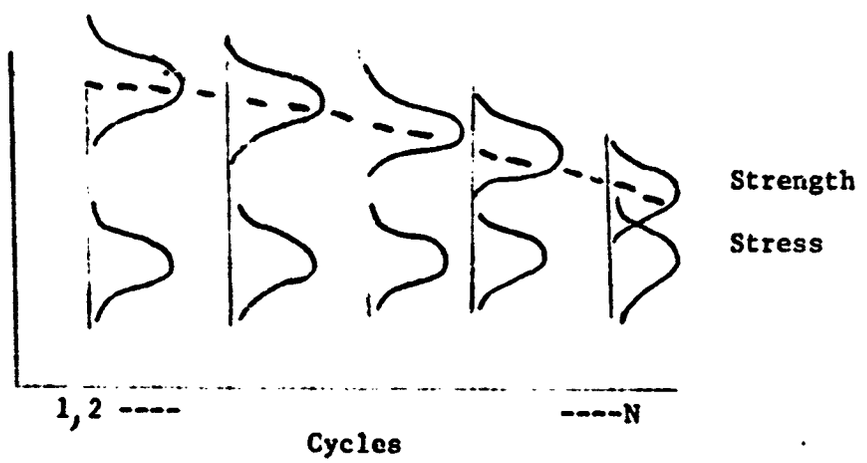

$$Rel = \int^{\infty} \left[\prod_{i=1}^{N} \int^{S_1 Q(i)} g(s)\, ds \right] f(S_1)\, dS_1$$

where: $Q_1(i)$ is a decreasing function representing the rate of degra[illegible]rength, and $Q(1) = 1$, and

S_1 represents the strength of the structure on Cycle 1.

Proof testing under the case of degrading strength would be of lesser value since the structure would be proof tested when its strength was maximum (prior to cycling). The results of the proof test would be more meaningful if good estimates of the strength degradation (Q(i) function) were available. Then the proof test result could be used to develop a conservative estimate of reliability.

PROPOSED METHODOLOGY DURING ENGINE PRELIMINARY DESIGN

In all but a very few cases, detailed data on the various structures will not be available. This precludes the use of the methods discussed previously. Historical failures for structures are available from previous programs. These failure rates are based on tests of varying duration, in some cases of unknown length. If it can be assumed that each of the tests were of sufficient duration such that the structure was exposed to the maximum possible stress, then these historical failure rates can be said to be the results of exposing structures to total operating life conditions. They would be analogous to 60 cycle/10 hour type failure rates of NERVA components. Based on this reasoning, reliability predictions for structures during engine preliminary design will be based on using historical failure rates raised to the first power only, since the failure rates are assumed to be 60 cycle rates.

$$Rel_{60\ cycles} = R$$

When more detailed data are available calculations will be made commensurate with the data.

VOLUME II

SYSTEM FMECA

TABLE OF CONTENTS

		PAGE
1.0	INTRODUCTION	1-1
1.1	SCOPE	1-1
1.2	DESCRIPTION OF CONTENTS	1-2
1.2.1	Summary	1-2
1.2.2	Analysis Procedure	1-3
2.0	SUMMARY	2-1
2.1	NNSS	2-1
2.2	NSS	2-2
3.0	ANALYSIS PROCEDURE AND FORMAT	3-1
3.1	FAILURE ANALYSIS PROCEDURE FORMAT	3-1
3.2	DEFINITIONS AND GROUND RULES	3-2
4.0	FAILURE MODES AND EFFECTS ANALYSIS	4-1
4.1	ENGINE SYSTEM DEFINITION	4-1
4.1.1	Description	4-1
4.1.2	Engine Operating Phases	4-4
4.1.3	Operating Assumptions	4-15
4.1.4	Valve Failure Modes	4-16
4.2	TURBOPUMP SUBSYSTEM	4-20
4.2.1	Description	4-20
4.2.2	Failure Analysis	4-23
4.2.2.1	Propellant Shutoff Valve (PSOV) (Typical Format for Each Component)	4-23
	a. Description & Function	
	b. Modes of Failure	
	c. Summary Sheet	
	d. Worksheets	

PAGE

		4.2.2.2	Pump Discharge Check Valve - Actuated (PDKVA)	4-37
		4.2.2.3	Pump Discharge Check Valve (PDKV)	4-47
		4.2.2.4	Turbine Block Valve (TBV)	4-58
		4.2.2.5	Turbine Discharge Block Valve (TDBV)	4-71
		4.2.2.6	Turbopump Assembly (TPA)	4-82
		4.2.2.7	Turbopump Lines	4-92
4.3	PUMP DISCHARGE CONTROL SUBSYSTEM			4-107
	4.3.1	Description		4-107
	4.3.2	Failure Analysis		4-109
		4.3.2.1	Pump Discharge Control Valve (PDCV)	4-109
		4.3.2.2	Pump Discharge Block Valve (PDBV)	4-122
4.4	TURBINE BYPASS CONTROL SUBSYSTEM			4-131
	4.4.1	Description		4-131
	4.4.2	Failure Analysis		4-133
		4.4.2.1	Bypass Control Valve (BCV)	4-133
		4.4.2.2	Bypass Block Valve (BBV)	4-144
		4.4.2.3	Bypass Control Lines	4-153
4.5	COOLDOWN SUBSYSTEM			4-158
	4.5.1	Description		4-158
	4.5.2	Failure Analysis		4-161
		4.5.2.1	Cooldown Shutoff Valve (CSOV)	4-161
		4.5.2.2	Cooldown Supply Control Valve (CSCV)	4-179
		4.5.2.3	Cooldown Lines	4-207

			PAGE
4.6	NOZZLE ASSEMBLY, PRESSURE VESSEL AND CLOSURE SUBSYSTEM		4-212
	4.6.1	Description	4-212
	4.6.2	Failure Analysis	4-213
	4.6.2.1	Nozzle (NOZ)	4-213
	4.6.2.2	Nozzle Extension (NE)	4-223
	4.6.2.3	Pressure Vessel & Closure (PV&C)	4-229
4.7	THRUST STRUCTURE AND EXTERNAL SHIELD SUBSYSTEM		4-238
	4.7.1	Description	4-238
	4.7.2	Failure Analysis	4-239
	4.7.2.1	Lower Thrust Structure (LTS)	4-239
	4.7.2.2	Upper Thrust Structure (UTS)	4-244
	4.7.2.3	External Shield (ES)	4-248
4.8	GIMBAL ASSEMBLY SUBSYSTEM		4-252
	4.8.1	Description	4-252
	4.8.2	Failure Analysis	4-252
	4.8.2.1	Gimbal Pivot	4-252
	4.8.2.2	Gimbal Actuator (GA)	4-259
4.9	REACTOR ASSEMBLY SUBSYSTEM		4-265
	4.9.1	Description	
	4.9.2	Failure Analysis	
	4.9.2.1	Fuel Elements	
	4.9.2.2	Cluster Hardware	
	4.9.2.3	Core Periphery	
	4.9.2.4	Support Plate & Plena	
	4.9.2.5	Internal Shield	
	4.9.2.6	Reflector Assembly	
	4.9.2.7	Control Drum Drive Assembly	

PAGE

4.10 STRUCTURAL SUPPORT COOLANT ASSEMBLY 4-266

4.10.1 Description

4.10.2 Failure Analysis

4.10.2.1 Structural Support Coolant Valve (SSCV)

4.10.2.2 Structural Support Blocking Valve (SSBV)

4.10.2.3 Structural Support Coolant Lines

LIST OF FIGURES

FIGURE	TITLE	PAGE
4.1-1	NERVA Engine Flow Schematic	4-5
4.1-2	Valve and Drum Positions	4-6
4.1-3	NERVA Engine Control Modes	4-8
4.1-4	NERVA Engine Operational Constraint Map	4-9
4.2-1	NNSS Subsystem Flow Schematics	4-21
4.2-2	Propellant Shutoff Valve (PSOV)	4-26
4.2-3	Pump Discharge Check Valve (PDKV and PDKVA)	4-38
4.2-4	Turbine Block Valve (TBV)	4-60
4.2-5	Turbine Discharge Block Valve (TDBV)	4-72
4.2-6	Turbopump Assembly (TPA)	4-83
4.3-1	Pump Discharge Control Valve (PDCV)	4-110
4.3-2	Pump Discharge Block Valve (PDBV)	4-123
4.4-1	Bypass Control Valve (BCV)	4-134
4.4-2	Bypass Block Valve (BBV)	4-145
4.5-1	Cooldown Shutoff Valve (CSOV)	4-162
4.5-2	Cooldown Supply Control Valve (CSCV)	4-180
4.6-1	Nozzle (NOZ)	4-214
4.6-2	Nozzle Extension (NE)	4-225
4.6-3	Pressure Vessel and Closure (PV&C)	4-230
4.6-4	Cylinder/Nozzle Joint	4-231
4.6-5	Forward Closure - Radial Section	4-232
4.6-6	Forward Closure - Top View	4-233

LIST OF FIGURES (Continued)

FIGURE	TITLE	PAGE
4.7-1	Lower Thrust Structure (LTS)	4-241
4.7-2	Upper Thrust Structure (UTS)	4-245
4.7-3	External Shield (ES)	4-247
4.8-1	Gimbal Pivot	4-255
4.8-2	Flexure Pivot	4-256
4.8-3	Gimbal Actuator	4-261

LIST OF TABLES

TABLE		PAGE
2-1	NNSS FMECA Summary	2-4
2-2	NSS FMECA Summary	2-7
3-1	Failure Effect Category Definitions	3-5
4-1	NERVA Engine Valve Actuation Times	4-7
4-2	Valve Failure Modes	4-17

SECTION I

INTRODUCTION

1.0 INTRODUCTION

Presented in this volume is the analysis portion of the System Failure-Mode Effects & Criticality Analysis (FMECA). The basic engine system analyzed and its mode of operation are described. The assumed methods of engine operation and control through all phases of operation are defined. For purposes of analysis, the engine system is divided into nine separate subsystems which are listed in Section 1.2. In addition, the analysis format is described, and the ground rules and assumptions used in the analysis are given.

1.1 SCOPE

This System FMECA documents the component failure modes and their effects on the engine system and classifies each according to its failure effect in each engine operating phase. Each component has one or more failure modes or states that preclude performance of its designed function for all or a portion of the engine operating cycle. Each failure mode can in turn be caused by one or more failure mechanisms either within the component or in the other parts of the system that can affect its action. The effect on system operation due to every component failure mode is described as either the expected change in other components in the engine system or a change in system integrity, operation, or performance. This analysis has been prepared using an initial assumption that only the failure under consideration has occurred (double failures are not considered).

This System FMECA will be maintained as an integral part of the engine design process and will be updated as a result of any reference engine design changes. A basic objective of this System FMECA is to assure a systematic and detailed review of all possible system effects due to the failure of system components to perform their design functions. It also provides the following:

a. Identification of single failure points critical to mission success.
b. A basis for system contingency analysis.
c. A basis for reliability and safety mathematical models.
d. A basis for maintainability studies.

e. A basis for identification of the malfunction detection requirements.

f. A basis for establishing the instrumentation and control requirements.

g. A basis for establishing computer simulation of malfunction runs necessary to determine system effects.

h. A basis for developing component test programs.

i. A basis for identification of trend data characteristics to be monitored.

The System FMECA will be used as a primary tool in demonstrating compliance with the safety and reliability requirements for the engine and, in conjunction with the FMA, will assure that reliability and safety are effective subsystem design parameters.

1.2 DESCRIPTION OF CONTENTS

1.2.1 Summary

For purposes of this System FMECA, the engine has been divided into the following functional subsystems:

a. Turbopump Subsystem
b. Pump Discharge Control Subsystem
c. Turbine Bypass Control Subsystem
d. Cooldown Subsystem
e. Nozzle Assembly, Pressure Vessel & Closure Subsystem
f. Gimbal Assembly Subsystem
g. Thrust Structure and External Shield Subsystem
h. Reactor Assembly Subsystem
i. Structural Support Coolant Assembly

This breakdown differs from that described for the reliability mathematical model (Volume I). It was chosen largely for the sake of convenience to the FMECA to give a more equitable division of the narrative and analysis content. Thus the bypass control, pump discharge control, and cooldown functions were given separate identities from the remainder of the propellant feed system, and the pressure

vessel and closure was combined with the nozzle assembly and the external shield with the thrust structure. The instrumentation and control subsystem does not appear since it acts only to affect other end control elements such as valves nd has no direct influence on the engine status at the system level of analysis.

A general definition of the engine and its subsystems and a description of the engine operating phases are contained in Section 4.1. A further description of each subsystem and its functions during each engine operating phase is provided in Sections 4.2 to 4.10.

1.2.2 Analysis Procedure

This analysis has been performed in accordance with Procedure R101-300A as set forth in Data Item R-101, NERVA Reliability Program Plan.

Each component of each subsystem is described, and its functions during each operating phase are defined. All of the failure modes pertinent to each component are listed and defined, and the effects on component, subsystem, and system operation due to each failure mode occurring in each operating phase are described. Finally, each failure mode is assigned a Failure Effect Category for each operating phase based on the severity of the effects on engine operation. The procedure format and analysis ground rules are described in Section 3.

SECTION 2

SUMMARY

2.0 SUMMARY

2.1 NNSS

The non-nuclear portion of the 400E engine contains 44 components with a total of 242 possible single failure events. The engine operating cycle is divided into 13 phases, and there are 2028 applicable single failure event - operating phase combinations. The distribution of these combinations by Failure Effect Category is as follows:

CATEGORY		NUMBER OF FAILURE EVENT - OPERATING PHASE COMBINATIONS	
I			22
IIA		531	
IIB		210	
IIC		119	
	TOTAL II		860
IIIA		236	
IIIB		359	
	TOTAL III		595
IV			551
	TOTAL		2028

The remainder of the potential of 3146 combinations (242 x 13) are inapplicable for operational or functional reasons described in the analysis of the individual components. The breakdown of these data by component and by subsystem is presented in Table 2-1.

Sixty of the above Category IV combinations result from violation of the current restraint on the rate of change of chamber temperature (± 175°R/sec max.) during the transient response to a rapid loss of flow through one of the TPA legs when the engine is operating at or near the design chamber temperature. The malfunctions involved are Inadvertent Closure (Rupture Speed) of a PSOV, TBV, or TDBV

or rupture of a pump inlet line, a turbine discharge line (isolatable segment), or a PDKVA valve body during the phases from Thrust Buildup through Temperature Retreat. Whether the consequences are severe enough to warrant the Category IV classification is not certain at this time. However, since there is the possibility of significant damage to the reactor core that could preclude further engine operation, these malfunctions are assigned to Category IV pending analysis of the specific effects.

A potential problem exists in the chilldown of the two TPA legs in parallel. If the flow impedances of the two pairs of spring closed pump discharge check valves are substantially different, the entire chilldown flow may pass through the lower impedance leg with consequent failure to condition the other TPA for the start of powered operation.

2.2 NSS

A System FMECA has been prepared for the NSS using an initial assumption that only the failure under consideration has occurred. Double failures have not been considered. NSS component failure modes and their effects on the engine system are documented in WANL-TME-2770. In that TME one or more failure modes have been postulated for each NSS component that precludes performance of the NSS design functions for all or a portion of the engine operating cycle.

Each failure mode identified is caused by one or more failure mechanisms either within the component or in other parts of the system that can affect its action. Failure mechanisms of component parts leading to an ECC NSS failure mode have been identified and are also documented in WANL-TME-2770.

When conducting a system level FMECA, the effect on total system operation due to every component failure mode is described in a manner that relates to either the expected change to other components in the engine system or a change in system integrity, operation, or performance. Key failure modes for the NSS have been abstracted from WANL-TME-2770 and are summarized in Table 2-2. Included with the data presented is the failure effect category for each failure mode. The key

failure modes were selected from the reliability prediction standpoint and/or from the criticalities assigned with regards to mission success. Growth factors for reliability improvement are included for consideration during detail design and assessment phases of the NERVA Program.

In summary, a total of ninety (90) applicable system level failure modes have been postulated for NSS components during an engine operating cycle. Of this total thirteen (13) have been assigned as Failure Effect Category IV, twenty-eight (28) classified as Category III, twenty-four (24) set as Category II and twenty-five (25) as having negligible effect and therefore assigned as being Category I.

TABLE 2-1

NON-NUCLEAR SUBSYSTEM FMECA SUMMARY

SUBSYSTEM	COMPONENT NAME	COMPONENT NUMBER	NUMBER OF FAILURE MODES	NUMBER OF POSSIBLE SINGLE FAILURE EVENTS	NUMBER OF OPERATING PHASE-FAILURE EVENTS BY FAILURE EFFECT CATEGORY I	IIA	IIB	IIC	IIIA	IIIB	IV
TURBOFUMP	PSOV	2	10	20	0	36	4	0	26	50	36
	PDKVA	2	8	16	0	70	0	0	42	0	10
	PDKV	2	6	12	0	38	0	0	6	20	20
	TBV	2	9	18	0	54	0	0	30	20	30
	TDBV	2	9	18	0	56	0	0	28	20	30
	TPA	2	6	12	0	20	0	0	60	0	16
	Lines										
	PIL	2	2	4	0	20	0	0	22	0	10
	PDL-C	1	2	2	0	0	0	0	0	10	10
	TIL-C	1	2	2	0	0	0	0	0	10	10
	TDL-S	2	2	4	0	20	0	0	22	0	10
	TDL-C	1	2	2	0	0	0	0	0	10	10
	Subsystem Total	19	58	110	0	314	4	0	236	140	192
PUMP DISCHARGE CONTROL	PDCV	2	8	16	0	24	46	32	0	20	20
	PDBV	2	9	18	0	44	24	24	0	20	20
	Subsystem Total	4	17	34	0	68	70	56	0	40	40

TABLE 2-1 (Cont'd)

NON-NUCLEAR SUBSYSTEM FMECA SUMMARY

SUBSYSTEM	COMPONENT NAME	COMPONENT NUMBER	NUMBER OF FAILURE MODES	NUMBER OF POSSIBLE SINGLE FAILURE EVENTS	NUMBER OF OPERATING PHASE-FAILURE EVENTS BY FAILURE EFFECT CATEGORY I	IIA	IIB	IIC	IIIA	IIIB	IV
TURBINE BYPASS CONTROL	BCV	2	7	14	0	0	60	24	0	20	20
	BBV	2	8	16	20	22	24	24	0	20	20
	Lines										
	Inlet	1	2	2	0	0	0	0	0	10	10
	Outlet	1	2	2	0	0	0	0	0	10	10
	Subsystem Total	6	19	34	20	22	84	48	0	60	60
COOLDOWN	$CSOV_1$	1	9	9	0	18	6	4	0	19	13
	$CSOV_2$	1	9	9	0	26	3	0	0	18	13
	$CSCV_1$	1	10	10	0	29	19	10	0	10	10
	$CSCV_2$	1	10	10	0	37	12	1	0	10	10
	Lines										
	Inlet	1	2	2	0	0	1	0	0	12	13
	Outlet	1	2	2	0	6	0	0	0	10	10
	Subsystem Total	6	42	42	0	116	41	15	0	79	69

TABLE 2-1 (Cont'd)

NON-NUCLEAR SUBSYSTEM FMECA SUMMARY

SUBSYSTEM	COMPONENT NAME	COMPONENT NUMBER	NUMBER OF FAILURE MODES	NUMBER OF POSSIBLE SINGLE FAILURE EVENTS	NUMBER OF OPERATING PHASE-FAILURE EVENTS BY FAILURE EFFECT CATEGORY I	IIA	IIB	IIC	IIIA	IIIB	IV
NOZZLE ASSEMBLY, PRESSURE VESSEL AND CLOSURE	Nozzle	1	4	4	0	0	0	0	0	20	23
	Nozzle Ext.	1	2	2	0	0	0	0	0	10	10
	Pressure Vessel & Closure	1	2	2	0	0	0	0	0	10	13
	Subsystem Total	3	8	8	0	0	0	0	0	40	46
THRUST STRUCTURE AND EXTERNAL SHIELD	LTS	1	2	2	0	0	0	0	0	0	26
	UTS	1	2	2	0	0	0	0	0	0	26
	ES	1	1	1	0	0	0	0	0	0	13
	Subsystem Total	3	5	5	0	0	0	0	0	0	65
GIMBAL ASSY.	Gimbal Pivot	1	3	3	2	11	11	0	0	0	13
	Gimbal Actuator	2	3	6	0	0	4	0	0	0	66
	Subsystem Total	3	6	9	2	11	11	0	0	0	79
	NNSS GRAND TOTAL	44	155	242	22	531	210	119	236	359	551

TABLE 2-2

NSS FMECA SUMMARY

Failure Mode	Contribution to Single Cycle Failure Probability		Failure Effects Category (Criticality)	Factors To Be Evaluated For Reliability Growth During Detail Design and Assessment Phase
	Failures	% of Total		
Fuel Elements				
1. Corrosion due to hot end coating degradation	See Footnote Below	100%	III-B	Further evaluation of coating/matrix interaction. Electrical and reactor test data correlation. Development of NDT for coating bond quality.
2. Structural failure allowing bare to interstitial flow				
Control Support Element				
1. Structural cracking of CSE allowing interstitial flow to attack insulation tube and/or CHESH insulation.	2×10^{-5}	Negligible	I	Analyses and tests to verify adequacy of these evaluation.

NOTE:

Composite, 60 cycle 10 hour value. Assumes that best 10 hr/60 cycle corrosion test performance as for demonstrated for 4000°R will extrapolate to 4250°R and a structural reliability for fuel element cracking of ~0.996. If this were 0.999, fuel reliability = 0.999910 which would meet goal. A slight increase in reactivity limit >$1.00 has a large effect on the reliability. Uncertainty in cracking and resulting corrosion must be better understood to confidently assess reliability.

TABLE 2-2 (Cont'd)

Failure Mode	Contribution to Single Cycle Failure Probability: Failures	Contribution to Single Cycle Failure Probability: % of Total	Failure Effects Category (Criticality)	Factors To Be Evaluated For Reliability Growth During Detail Design and Assessment Phase
Cluster Hardware				
1. Loss of primary and secondary load path - Cluster nut	1×10^{-19}	≈0	III-B	Reliability adequate.
2. External hydrogen leakage due to retainer fragmenting	1×10^{-7}	≈8%	III-B	Evaluation required.
3. Corrosion of protection cup aft of retainer	1×10^{-6}	≈84%	III-B	Corrosion of retainer and insulating cap. Evaluate failure of closure cap.
4. Fragmentation of hex section of retainer permitting CSE tip to be corroded	1×10^{-7}	≈8%	III-B	Evaluate coatings on tip of CSE and evaluate carburization barriers on tungsten retainer.
5. Hydrogen flow blockage or diversion due to plenum screen buckles, or support nut fractures, or liner tube buckles	1×10^{-19} 1×10^{-19} 1×10^{-19}	≈0% ≈0% ≈0%	III-B III-B III-B	Reliability adequate. Reliability adequate. Reliability adequate.

TABLE 2-2 (Cont'd)

Failure Mode	Contribution to Single Cycle Failure Probability		Failure Effects Category (Criticality)	Factors To Be Evaluated For Reliability Growth During Detail Design and Assessment Phase
	Failures	% of Total		
Core Periphery				
1. Fracture and ejection of aft end core periphery filler strip	1.74×10^{-18}	≈0	III-B	Reliability adequate.
2. Failure of aft end ledges of adjacent small X-section filler strips	539×10^{-6}* (for 60 cycles)	98%*	III-B	Evaluate friction of lateral seal segments against filler strips under vacuum. Minimize contact between smallest filler strips and lower seal segments.
3. Fragmentation of insulating tiles so as to allow bridging, which degrades bundling	74×10^{-6}	99%**	I	Reduction of interlocks projections will reduce stresses due to temperature gradients and lower probability of cracking. Determine optimum interlocks.

*A modification in the reference design has resulted in reduced frictional stresses on smallest filler strips so that this number would be reduced by an order of magnitude at the least. The next most probable mode is shown although it is Category I.

**Assumes above modification.

TABLE 2-2 (Cont'd)

Failure Mode	Contribution to Single Cycle Failure Probability		Failure Effects Category (Criticality)	Factors To Be Evaluated For Reliability Growth During Detail Design and Assessment Phase
	Failures	% of Total		
Support Plate and Plena				
1. Excessive leakage from dome at SSCA inlet and/or bypass inlet due to piston ring seal failures	2×10^{-12}	≈0%	III-B	Detailed analysis of piston ring seals and determination of flow bypass limits for system.
2. Excessive leakage of piston ring seal separating turbine inlet and exit	10^{-12}	≈0%	III-B	Detailed analysis of piston ring seals and determination of flow bypass limits for system.
3. Piping cylinder rupture	10^{-19}	≈0%	IV	Reliability adequate.
4. Flange break of central dome	10^{-15}	≈0%	IV	Reliability adequate.
5. Excessive leakage of O-ring seals	10^{-19}	≈0%	III-B	Flanges will be redefined as redundant seals for acceptably low failure probability.
6. Flange yielding of support plate	10^{-7}	76%	IV	Detailed evaluation of failure probability required.
7. Failure of cluster assembly support ledge	10^{-19}	≈0%	IV	Reliability adequate.
8. Excessive deflection of support plate	10^{-8}	8%	IV	Detailed evaluation of effects required.
9. Compression of plenum closure ring	10^{-19}	≈0%	IV	Reliability adequate.
10. Compression of instrumentation ring	10^{-16}	≈0%	IV	Reliability adequate.
11. Rupture of supply line tubing	10^{-19}	≈0%	III-B	Reliability adequate.
12. Rupture of inlet torus	3×10^{-9}	≈0%	IV	Evaluation required.

TABLE 2-2 (Cont'd)

Failure Mode	Contribution to Single Cycle Failure Probability		Failure Effects Category (Criticality)	Factors To Be Evaluated For Reliability Growth During Detail Design and Assessment Phase
	Failures	% of Total		
13. Rupture of bypass system supply	3×10^{-9}	≈0%	III-B	Evaluation required.
14. Support stem fluid leakage due to closure nut threads stripping in support plate	10^{-19}	≈0%	III-B	Reliability adequate.
15. Rupture of coolant supply system	3×10^{-9}	≈0%	III-B	Evaluation required.
16. Piping cylinder breaks or buckles	2×10^{-8}	16%	IV	Evaluation required.
17. Excessive leakage of instrumentation lead seals	10^{-11}	≈0%	IV	Evaluation required.

TABLE 2-2 (Cont'd)

Failure Mode	Contribution to Single Cycle Failure Probability		Failure Effects Category (Criticality)	Factors To Be Evaluated For Reliability Growth During Detail Design and Assessment Phase
	Failure	% of Total		
Internal Shield				
1. Buckling or collapse or support plate with possible damage of in-core instrumentation leads	10^{-15}	45%	IV	Reliability adequate.
2. Buckling or collapse of peripheral shield support ring with possible binding of one or more drums.	10^{-15}	45%	IV	Reliability adequate.
3. Melting of shield modules leading to reduction in effective shield thickness	5×10^{-16}	10%	III	Reliability adequate.

TABLE 2-2 (Cont'd)

Failure Mode	Contribution to Single Cycle Failure Probability		Failure Effects Category (Criticality)	Factors To Be Evaluated For Reliability Growth During Detail Design and Assessment Phase
	Failures	% of Total		
Reflector Assembly				
1. Fracture and ejection of fragments of the aft seal ring	$<10^{-19}$	≈0	III-B	Reliability adequate.
2. Localized interference with core expansion	$999{,}950 \times 10^{-6}$	≈100%	IV	This failure mode applies only to the reference LSS. Alternate concepts are presently being evaluated. A final concept selection is prerequisite to completing the reliability analysis.
3. Loss of reflector structural support capability	5000×10^{-6}	≈0	IV	A detailed study of the uncertainty of the data on critical buckling pressures required.
4. Control drums fail in place at other than orifice position	1×10^{-7}	≈0	III-B	Reliability adequate.
5. Control drum decouples from CDDA	$<10^{-19}$	≈0	IV	Reliability adequate.
6. Loss or displacement of control drum	$<10^{-19}$	≈0	III-B	Reliability adequate.
7. Control drum distorts and binds during normal transient	90×10^{-6}	≈0	III-B	A detailed design study and/or tests required to minimize distortion and eliminate binding.

TABLE 2-2 (Cont'd)

Failure Mode	Contribution to Single Cycle Failure Probability		Failure Effects Category (Criticality)	Factors To Be Evaluated For Reliability Growth During Detail Design and Assessment Phase
	Failures	% of Total		
CDDA				
1. Excessive external leakage through CDDA housing	$<10^{-19}$	≈0	IV	Reliability adequate.
2. CDDU fails to maintain coupling with control drum	$<10^{-19}$	≈0	IV	Reliability adequate.
3. Controller failure	1.67×10^{-6}	80%	II-C	FMA predictions of reference control drum controller required.
4. Electrical failures of CD actuator motor	0.42×10^{-6}	20%	II-C	Life tests of reference design required to verify failure rate estimates.

TABLE 2-2 (Cont'd)

Failure Mode	Contribution to Single Cycle Failure Probability: Failures	Contribution to Single Cycle Failure Probability: % of Total	Failure Effects Category (Criticality)	Factors To Be Evaluated For Reliability Growth During Detail Design and Assessment Phase
SSCA				
1. SSCV fails to an intermediate position	130×10^{-6}	38.4	II-C	The probability for the SSCA to provide the required proportional control needs significant improvement. The reference design should be considered in this light. Also the accuracy and applicability of the source failure rate predictions should be critically examined.
2. SSCV excessive external leakage (EOM available)	0.1×10^{-6}*	0.03	III-B	The contribution of the SSCV and SSBV excessive external leakage failure modes to SSCV reliability is not significant. The conclusion that critical failure modes have 6 chances in a million of occurrence should be examined in the context of the total set of critical engine/NSS failure modes.
3. SSCV excessive external leakage (EOM unavailable)	0.1×10^{-6}*	0.03	IV	
4. SSBV excessive external leakage (EOM available)	0.1×10^{-6}*	0.03	III-B	
5. SSBV excessive external leakage (EOM unavailable)	0.1×10^{-6}*	0.03	IV	
6. SSCL excessive external leakage (EOM unavailable)	26×10^{-6}	8.0	IV	The contribution of the SSCL to SSCA reliability is significant. Design improvements should be considered. Of primary concern, however, is the fact that the probability of not having a category IV single failure point is 0.998440. Clearly, a critical failure mode which has 3 chances in 2000 of occurring should be examined carefully.

*The EOM available and unavailable failure modes are each assigned to predicted value of probability of excessive external leakage since no breakdown is available.

SECTION 3

ANALYSIS PROCEDURE AND FORMAT

3.0 ANALYSIS PROCEDURE AND FORMAT

3.1 FAILURE ANALYSIS PROCEDURE FORMAT

The basic analysis element for the Engine System FMECA is the end component as defined in 3.2 below. For each component, the following information is supplied.

3.1.1 Description

a. The component is defined and described, and pertinent design information is supplied.

b. The required functions during each operating phase are defined.

3.1.2 Failure Modes

The applicable failure modes of each component are listed and defined.

3.1.3 Summary Sheet

The Summary Sheet lists the Failure Effect Category associated with each potential failure mode during each operating phase.

3.1.4 Work Sheet

The work sheet describes the effects on subsystem and system operation for each failure mode occurring during each of the engine operating phases. Both the effects under the influence of the normal engine control mode and any corrective action required to revert to a recovery mode of operation or an emergency mode of operation together with the end effect of that action are described. The final column on the work sheet is a preliminary assignment of the Failure Effect Category for each failure mode based on the engine operating effects. Final assignment of the Failure Effect Category will be made as part of the Flight Safety Contingency Analysis in Data Item S-103.

3.2 DEFINITIONS AND GROUND RULES

3.2.1 Definitions

The following definitions form a part of this analysis:

a. Component

For the purpose of this FMECA, a component is defined as a part or assemblage of parts that performs a distinct function and that exercises a direct influence on the operating status of the engine system without requiring action by an intervening part or assembly. Included are all individual valves, the lines and their joints, the TPA's, the control drums, the fixed portions of the reflector, the internal shield, the fuel elements, the core support structure, the stems, the nozzle, the chamber, the external shield, the thrust structure, and the engine gimbal assemblies. Excluded as separate components by this definition are the valve actuators, all part of the control and instrumentation subsystem, and any other parts of the system that act through another single part or assembly to influence the engine operation.

b. Failure Mode

Each component has one or more states or conditions that preclude performance of its intended function for all or a portion of the engine operating cycle. A failure mode is the description of that state of existence. Each failure mode can, in turn, be caused by one or more failure mechanisms either within the component or in the other parts of the system that can affect its action. For example, a component failure mode could be a valve fails to open while the part mechanisms which produce the failure mode could be actuator housing rupt[illegible], spring fails, solenoid fails, shaft breaks, etc.

c. Failure Mode Effect

A failure mode effect is a description of the expected change in other components in a system or change in system integrity, operation, or performance which results from the defined failure mode. A failure mode effect will carry through successively higher assemblies to the total system.

d. Operational Phase

An operational phase is a period of time where the engine is exposed to a different level of external and internal environments. The NERVA engine operation is divided into 13 such phases. These are listed and defined in Section 4.1.2.

e. Recovery Mode (Failure Effect Categories IIA, B or C)

A mode of operation by which mission objectives can be met following a failure.

f. Emergency Mode (Failure Effect Cagegory III)

A mode of operation designed to obtain a safe crew return and to prevent danger to the earth population following a failure which precludes meeting stated mission objectives. Minimum requirements to effect Emergency Mode are stated in the current NERVA Program Requirements Document, SNPO-C Document No. SNPO-NPRD-1 (NPRD).

Operations in an Emergency Mode must be attainable from all operating modes of the engine cycle including all shutdown modes and coast modes.

g. Emergency Action (Failure Effect Category IV)

Action required for crew survival following a failure which precludes operation in the Emergency Mode.

h. Failure Effect Category

The classification of each failure mode based on the

severity of its effect on engine operation. The Failure Effect Categories used for this FMECA are defined in Table 3-1.

3.2.2 Analysis Ground Rules

The following ground rules and assumptions were used in this analysis:

a. All components are designed and fabricated to correct specifications, and an engine built from such components will perform within the prescribed operating limits.

b. The analysis is made for single component failures only. Simultaneous or non-simultaneous independent failures of two or more components are beyond the scope of the present analysis.

c. A failure of a component, whether that failure is caused by the component itself, or by the actuator for that component, or by loss of electrical power to the actuator, or by loss of either input or output control signals, is considered to be a failure of the component being analyzed.

d. The system effects of a malfunction during a particular phase are evaluated on the basis that the engine entered the phase in an unfailed state.

e. The effects must be relative to the phase under consideration.

f. If a function is <u>not</u> required within a phase and that function is lost because of a failure, the failure will be categorized as NA (not applicable).

g. Assignment of the Failure Effect Category for a failure in an action ending a phase is made to that phase. The only exception is malfunctions

occurring in the transition from phase C to phase D. For example, failure of a PSOV to open would be assigned to phase D (Temperature Conditioning) rather than C (Pre-Start Operations).

h. Failures during checkout (Phase C) are categorized on the basis of their effects on subsequent operating phases.

i. A propellant line segment includes all lines, fittings, junctions, bellows, welds, etc. in the designated flow path description unless otherwise specified.

TABLE 3-1

FAILURE EFFECT CATEGORY DEFINITIONS

(1) CATEGORY I - Failures which produce no significant performance or safety degradation of the system, allow continued operation in the normal mode throughout the rated engine life, and do not result in the addition of Single Failure Points to the system.

(2) CATEGORY II - Failures from which the engine can recover and still meet its normal-mode performance and service life requirements by switching to or reverting to a recovery mode, but which do result in the addition of one or more Single Failure Points to the system. Failures in this category are further subdivided as follows:

IIA - Failures which degrade the safety of continued operations, but which do not produce transient effects and, at the time of failure, do not require automatic or manual action for the recovery mode. Failures of safety systems and standby-redundant components fall within this category.

IIB - Failures which are compensated for automatically by the normal control mode or which produce transient effects which can be tolerated by the system and which permit time for human judgement to be exercised on the method and desirability of the recovery mode. Failures which require the functioning of safety systems or redundant components to preclude Category IIIB effects fall within this category.

IIC - Failures which require immediate malfunction detection and subsequent action to remove or lessen the transient effect and to preclude system damage. Switching to the recovery mode is usually accomplished automatically by the malfunction detection system or by the engine control system. Failures which require the automatic functioning of safety systems or redundant components to preclude Category IV effects fall within this category.

(3) CATEGORY III - Failures which result in inability of the engine to meet its normal-mode performance or service-life requirements but which allow Emergency Mode Operation or Single Turbopump Operation. Failures in this category are further subdivided as follows:

IIIA - Failures which require Single Turbopump Operation.

IIIB - Failures which require Emergency Mode Operation

(4) CATEGORY IV - Failures which result in direct injury to the crew, endanger the earth's population, or damage the spacecraft or other stage modules upon which crew survival depends, and/or which preclude Emergency Mode Operation. This category includes failures which produce one or more of the following system effects:

(a) Uncorrectable thrust vector misalignment.

(b) Loss of thrust to less than that required to effect Emergency Mode Operation.

(c) Inability to reduce thrust or unsuccessful shutdown and/or cooldown which precludes engine restart.

(d) Unsuccessful startup to attain thrust equal to or greater than that required for Emergency Mode Operation.

SECTION 4

FAILURE MODES AND EFFECTS ANALYSIS

SECTION 4.1

ENGINE SYSTEM DEFINITION

4.0 NNSS FAILURE MODES AND EFFECTS ANALYSIS

4.1 ENGINE SYSTEM DEFINITION

4.1.1 Description

The NERVA engine utilizes a nuclear reactor to provide heat input to liquid hydrogen propellant to obtain a high specific impulse propulsive force for space-mission applications. The engine incorporates a pump-fed, full-flow cycle. Low pressure liquid hydrogen is received from the stage, increased in pressure by a pump, delivered to the nozzle coolant jacket and reflector where it receives some heat energy, passed through a turbine which drives the pump and then through the reactor core where it is heated to the desired temperature and finally exhausted through the thrust nozzle. The temperature of the exhaust gas and thus the specific impulse is controlled by the position of the control drums in the reactor assembly and by the quantity of hydrogen in the core. The thrust level is a function of the amount of hydrogen being exhausted and is controlled by the quantity and energy content of the gas flowing through the turbine.

The fluid flow paths are illustrated for the NERVA engine in Figure 4.1-1. The engine is divided into two major portions, the Nuclear Subsystem (NSS), comprised of the reactor and the SSCA which controls the propellant flow through the core support structure, and the Non-Nuclear Subsystem (NNSS) which is the remainder of the engine up to but not including the main propellant tank.

For purposes of the FMECA, the NNSS is further divided into seven subsystems. The five of these involved in the flow and control of propellant through the engine are outlined in Figure 4.2-1.

4.1.1.1 Turbopump Subsystem

The turbopump subsystem starts with two parallel flow paths from the Main Propellant Tank (MPT) each containing a block valve (PSOV). The flow paths continue through 9.7" low pressure pump inlet lines (PIL) to two separate turbopumps (TPA's) where the stream pressure is increased. The flow then is discharged into 5" pump discharge lines (PDL) each containing two check valves (PDKVA and PDKV). The two streams join into a common 5" line leading to the pump discharge control subsystem (PDCS). From the pump discharge control subsystem, the flow is

again picked up by the PDL and transmitted to the nozzle torus. Propellant is tapped off the PDL upstream of the PDCS for reactor coolant and reactivity control by the SSCL and downstream of the PDCS for supplemental reactor coolant by the SSBL.

After the high pressure flow has passed through the nozzle tubes and reflector, it is recombined with the SSCA stream inside the pressure vessel and then re-enters the turbopump subsystem through the 7 1/2" turbine inlet line (TIL). The flow continues through the TIL's to the turbine side of the TPA's except for that portion which is diverted through the bypass subsystem. The flow through the turbines discharges into another 7 1/2" line (TDL), combines with the bypass flow, and passes back to the pressure vessel, thus completing the cycle in the turbopump subsystem. Block valves (TBV's and TDBV's) are included in each of the TIL's and TDL's to provide emergency shutdown and isolation capability for a malfunctioned TPA and to prevent flow through the turbines during engine chilldown and cooldown periods.

4.1.1.2 Pump Discharge Control Subsystem

The pump discharge control subsystem consists of two block valves (PDBV's) and two control valves (PDCV's). Their package configuration is two parallel legs each containing one block and one control valve in series. The subsystem accepts the primary propellant flow stream from the upstream section of the pump discharge line and delivers it to the downstream section of the PDL. The purpose of the subsystem is to provide part of the system flow control during the startup and shutdown transients. During normal steady state operation at the design point, the valves are wide open and have no control function.

4.1.1.3 Turbine Bypass Control Subsystem

The turbine bypass control subsystem consists of two block valves (BBV's) and two control valves (BCV's) with the associated lines in a quad pack configuration similar to the pump discharge control subsystem. The 4 in. turbine bypass line (TBL) connects between the TIL and TDL of the turbopump subsystem. The purpose of the bypass control subsystem is to provide partial regulation of the quantity of drive gas available to the turbines and to provide a flow path around the turbines when propellant flow without turbine operation is desired.

4.1.1.4 Cooldown Subsystem

The cooldown subsystem consists of two block valves (CSOV's) and two control valves (CSCV's) joined together in a quad-pack and the 3" lines between the MPT and the discharge line from the SSCA. Its purpose is to provide coolant to the reactor following high power thrust operations.

4.1.1.5 Nozzle Assembly, Pressure Vessel and Closure Subsystem

The nozzle assembly consists of the nozzle and nozzle extension. Its function is to direct and expand the exiting propellant gas to provide the engine thrust. The nozzle contains coolant tubes and is cooled by propellant flow during operation. The nozzle extension is constructed of fibrous reinforced graphite composite. The nozzle has a 24:1 expansion ratio, while the nozzle extension increases the expansion ratio to 100:1.

The pressure vessel houses and provides support for the Nuclear Subsystem and contains the high pressure hydrogen propellant fluid which flows through the nozzle tubes and around the enclosed reflector to the internal shield. The assembly also transmits thrust from the nozzle to the lower thrust structure.

4.1.1.6 Thrust Structure and External Shield Subsystem

The thrust structure is the primary load carrying member of the engine. It transmits thrust and inertial loads between the pressure vessel forward closure and the main propellant tank structure. It is divided into two parts by the gimbal assembly. The lower thrust structure lies between the pressure vessel and the gimbal, and the upper thrust structure lies between the gimbal and the tank.

The external shield is attached to the lower thrust structure just forward of the pressure vessel. It is a composite inert structure used to attenuate the nuclear radiation from the reactor assembly for manned missions. The external shield is removed from the engine for unmanned missions.

4.1.1.7 Gimbal Assembly Subsystem

The gimbal assembly consists of the gimbal structure that interfaces with the upper and lower thrust structures and the gimbal actuators. The gimbal actuators are a servo-control system consisting of electro-mechanical actuation mechanisms and a control amplifier. The two gimbal actuactors are located 90° apart to provide thrust vector position control about the pitch and yaw axes.

4.1.2 Engine Operating Phases

The following is a description of the assumed operation of Reference Engine 1137400E, Revised per PD-12151A, as used in this analysis. Engine operation is divided into 13 different phases, and the FMECA's prepared for each component consider the effect on engine operation for each phase assuming the engine entered the phase in an unfailed state. The reference engine flow schematic is shown in Figure 4.1-1. Figure 4.1-2 indicates the engine valve and control drum positions for normal engine operation for each operating phase, and the valve actuation times are listed in Table 4-1. The primary engine control modes and the normal chamber pressure and temperature as a function of the engine operating phases are indicated in Figure 4.1-3. Figure 4.1-4 is a chamber temperature - chamber pressure operating map showing the principal operating constraints and the normal operating region during engine startup and shutdown.

4.1.2.1 Launch

Prior to launch, the engine is purged with nitrogen gas to rid the system of trapped air. This is followed by a purge with dry helium gas to remove the nitrogen. It is planned to use a burst disc to seal the system after these purges are completed. The propellant tank is then loaded with the desired quantity of liquid hydrogen, and the vehicle is launched by a booster rocket into earth orbit. During the launch phase, the main propellant tank pressure is maintained at a minimum of P_{SAT} = 15 psia.

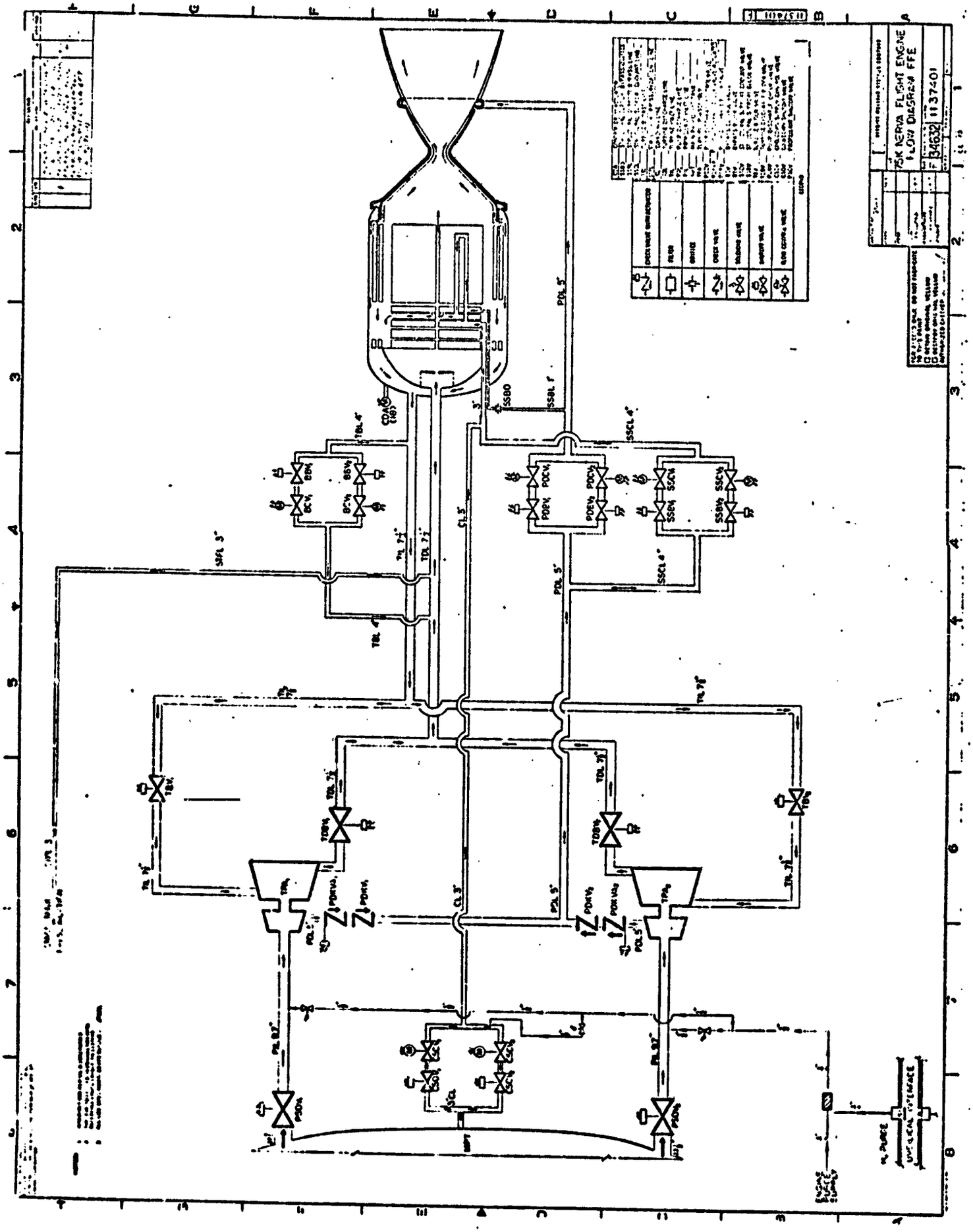

NERVA Engine Flow Schematic

Figure 4.1-1

VALVE AND DRUM POSITIONS

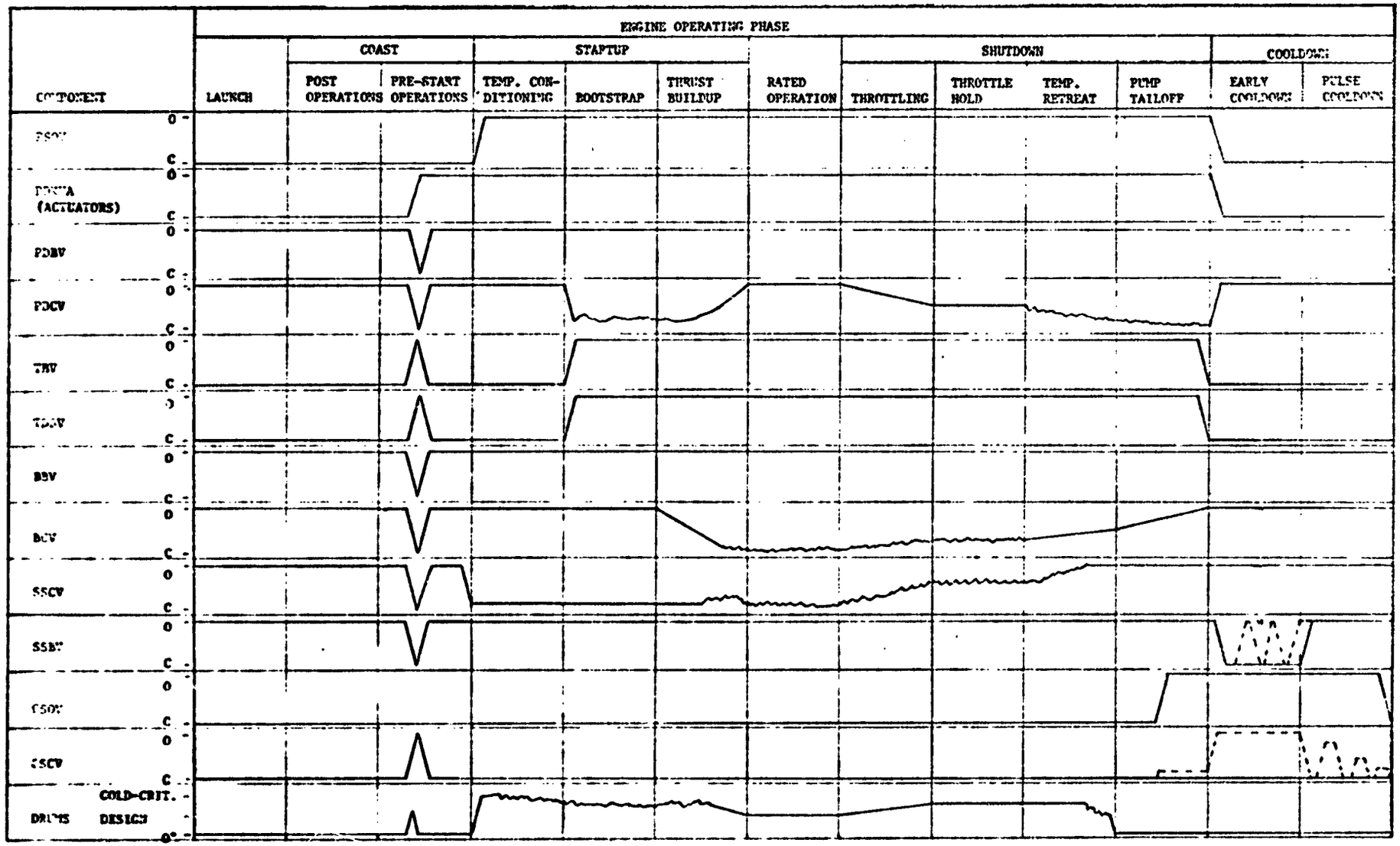

* DOTTED LINES INDICATE MOTION OF ONE VALVE OF THE PAIR

Figure 4.1-2

TABLE 4-1

NERVA ENGINE VALVE ACTUATION SPEEDS

VALVE	ACTUATION TIME, SEC		VALVE VELOCITY, %/SEC	
	OPEN	CLOSE	OPEN	CLOSE
PSOV	5.0 ± 1.0	5.0 ± 1.0		
PDKV(A)	10.0 Max.	3.0 ± 1.0		
PDCV			90 - 110	90 - 110
PDBV	1.0 ± 0.10	1.0 ± 0.10		
TBV	0.50 ± 0.05	0.50 ± 0.05		
TDBV	0.06 - 0.50	0.06 - 0.50		
BCV			90 - 110	90 - 110
BBV	0.50 ± 0.05	0.50 ± 0.05		
CSCV			33 - 100	33 - 100
CSOV	0.50 ± 0.05	0.50 ± 0.05		
SSCV			8 ± 2	8 ± 2
SSBV	1.0 ± 0.05	0.80 ± 0.08		

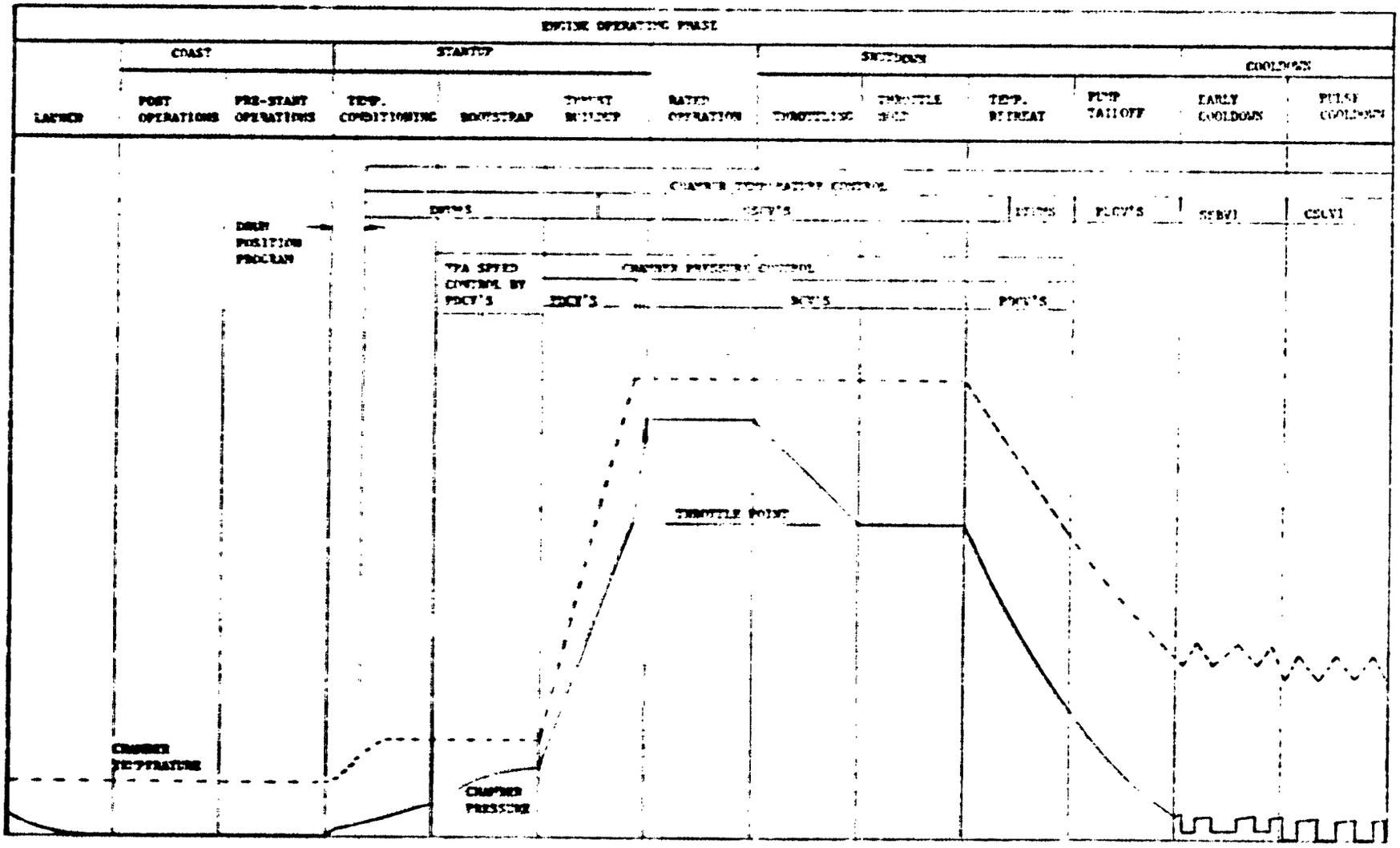
ENGINE OPERATING PHASE
COAST
STARTUP
SHUTDOWN
COOLDOWN
LAUNCH
POST OPERATIONS
PRE-START OPERATIONS
TEMP. CONDITIONING
BOOTSTRAP
RATED OPERATION
TEMP. RETREAT
PUMP TAILOFF
EARLY COOLDOWN
DRUM POSITION PROGRAM
THROTTLE POINT
CHAMBER PRESSURE

Figure 4.1-3

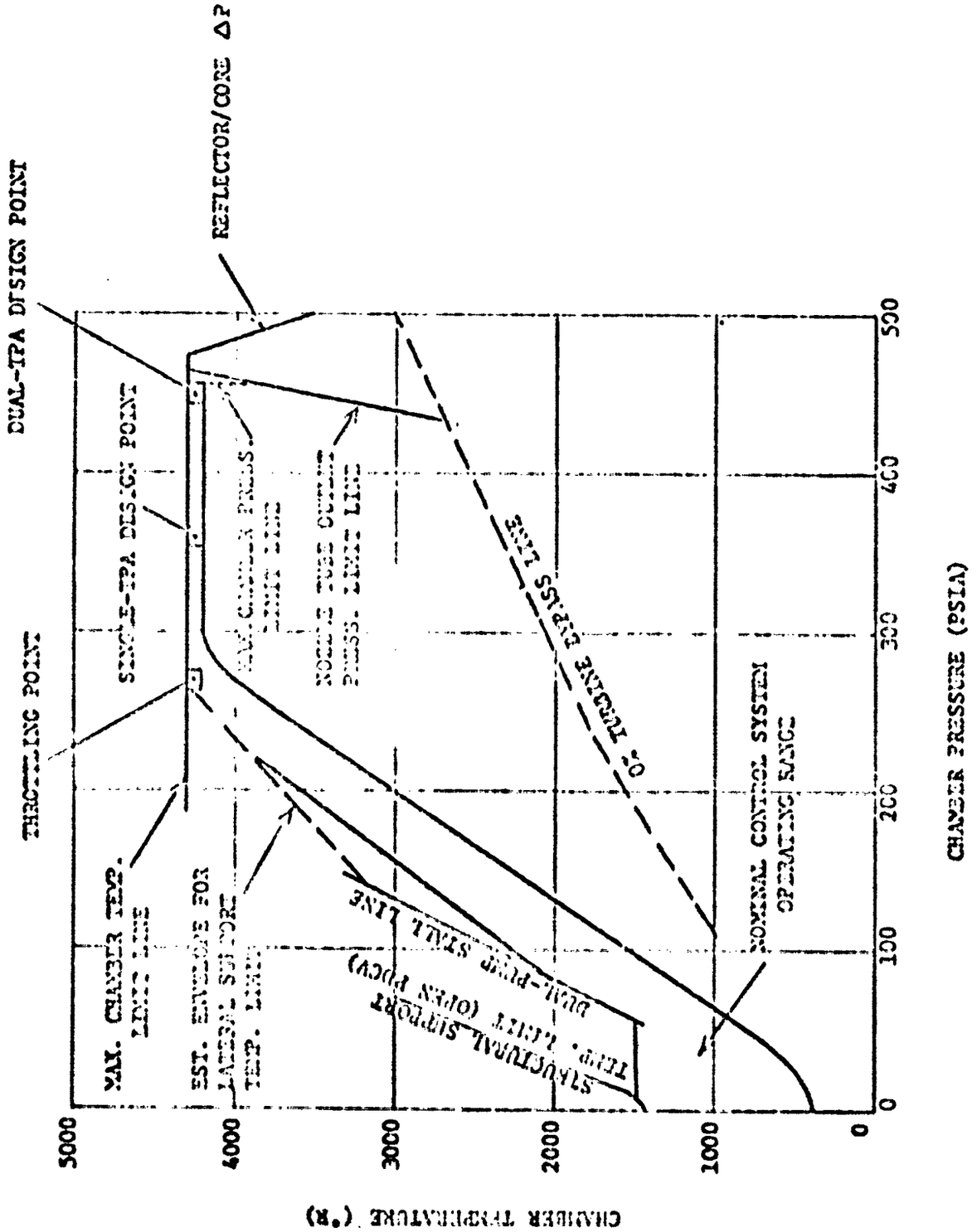

Figure 4.1-4

NERVA ENGINE OPERATIONAL CONSTRAINT MAP

Coast Period

4.1.2.2 Post Operations

The post operations phase, as used in this System FMECA, applies to both the initial coast period, after boost into orbit and before the first burn, and the period between the end of cooldown after one burn and the beginning of pre-start operations in preparation for the next. During post operations, the propellant tank pressure is held below 31.5 psia by means of a relief valve. This venting system is not considered to be part of the nuclear engine.

4.1.2.3 Pre-Start Operations

The pre-start operations phase consists of engine functional and status checks to assure readiness for startup. Prior to each burn, each of the BBV's, TBV's, TDBV's, PDBV's, BCV's, SSBV's, SSCV's, CSCV's and gimbal actuators is cycled through its total position span ending at its normal pre-start position. The control drums are moved out far enough to confirm that they can be rotated and then returned to the zero position. Finally, the PDKVA actuators are withdrawn to the open position, and the SSCV's are closed, completing preparations for the thermal conditioning phase.

Startup Period

4.1.2.4 Thermal Conditioning and Nuclear Startup

The thermal conditioning and nuclear startup phase consists of pump chilldown and reactor thermal conditioning and startup. The SSCV's are placed in position control at their minimum control position and the PSOV's are opened to initiate liquid hydrogen flow to the engine under tank pressure. At the same time, the drums are programmed out exponentially to a preset level and then placed on a slow linear ramp. When the chamber temperature increases to 900°R (or increases by a set increment in the case of a restart), temperature loop closure occurs, and chamber temperature control is initiated.

The chamber temperature is maintained at about 1250°R, using drum control, through the rest of the temperature conditioning and bootstrap phases.

Flow continues under tank pressure until the impeller areas of the pumps are sufficiently chilled to provide a head rise when powered. It is estimated that this condition will be satisfied when a quality of about 30% vapor volume exists at the pump inlet. When this occurs, a signal is generated to initiate the bootstrap period of startup.

4.1.2.5 Bootstrap and Powered Chilldown

Upon receipt of a signal to initiate bootstrap, the TBV's and TDBV's are opened to supply flow to the turbines with the BCV's held open in position control. The PDCV's are ramped to a near closed position and then placed in a closed loop control mode using pump speed as the prime feedback measurement with the demand ramped to the desired pump speed of about 6000-8000 RPM. A hold is made at this pump speed and a chamber temperature of about 1250°R in order to condition the TPA balance piston and bearing areas to liquid hydrogen conditions prior to operation at high pump speed. At 6000-8000 RPM, the pump discharge pressure is sufficient to drive hydrogen through the pump bearing cavities and balance piston and thus produce cooling of these areas. When both pumps have been sufficiently chilled, a chilldown complete signal is generated that initiates the thrust buildup period of operation.

4.1.2.6 Thrust Buildup

Receipt of the thrust buildup initiation signal starts a programmed engine ramp to the throttled operating point (270 psia chamber pressure and 4250°R) at 150°R/sec, and then to the rated conditions (450 psia chamber pressure and 4250°R chamber temperature) at 50 psia/sec. During the early portion of this transient, the SSCV's and BCV's are programmed in position control with the drums and PDCV's acting in closed loop engine feedback control to trim the engine along the desired path.

The temperature ramp is initially controlled by the drums with the SSCV's at a preset position. When the chamber temperature reaches 3000°R, the drums are placed in their throttle hold position, and temperature control is switched to the structural support coolant flow (SSCV's). The chamber pressure is controlled during thrust buildup to the throttle point by the PDCV's with the BCV's programmed from full open to their normal throttle point position. At the throttle point, pressure control is switched to the BCV's, and the PDCV's are programmed open during the traverse from the throttle point to the design point. The drums are ramped from their throttle position to the orifice position during this traverse.

4.1.2.7 Rated Operation

A... Normal Mode (Two TPA's)

Rated engine operation is maintained within the controllability limits at the design point by control of chamber pressure with the BCV's and control of chamber temperature with structural support flow regulation by the SSCV's. This mode of operation is continued until engine shutdown is initiated.

B. Malfunction Mode (One TPA)

The engine is designed to operate at rated chamber temperature, but at a reduced chamber pressure corresponding to 80% of rated thrust with one leg of the propellant feed subsystem inoperative. Should a condition be detected requiring shutdown of one leg, the PSOV, TBV, and TDBV of that leg are closed, the maximum chamber pressure demand is reduced to 360 psia, and the BCV's and SSCV's adjusted to give the reduced thrust level.

Shutdown Period

4.1.2.8 Throttling

The engine shutdown is initiated with a reduction in chamber pressure at a rate of 50 psi/sec to the throttle hold point (270 psia chamber pressure) while the chamber temperature is held constant

at the rated level (4250°R). During the transition, the pressure remains in BCV control, and the PDCV's and control drums are programmed to their normal throttle point positions.

4.1.2.9 Throttle Hold

A short steady-state hold is made at the throttle hold point to allow some of the fission product inventory generated earlier to decay and thus reduce the propellant requirement for pump tailoff and cooldown. Chamber temperature and pressure control remain with the SSCV's and BCV's respectively.

4.1.2.10 Temperature Retreat

Following the steady-state period at throttle hold, pressure control is switched to the PDCV's with the BCV's in programmed position control, and engine shutdown is continued with the chamber temperature and pressure ramped to 2600°R and 160 psia at a temperature ramp rate of -150°R/sec.

The shutdown is initiated with the chamber temperature in structural support flow control with the drums fixed at the throttle hold position. When the SSCV's go full open (or to a preset position), they are held fixed and control is switched to the drums. When the chamber temperature reaches 2600°R, the drums are rolled to their full in position at the maximum actuator rate, and temperature retreat is completed.

4.1.2.11 Pump Tailoff

When the drums have been rolled in, the chamber temperature control is switched to the PDCV's, initiating pump tailoff, and the chamber temperature demand is decreased along a programmed profile. When the chamber temperature decreases to the maximum cooldown limit, it is held constant by continued turbopump operation until the coolant flow requirement decreases to a level that can be supplied by tank pressure only. At this point, the TBV's and TDBV's are closed, terminating pump operation and the pump tailoff phase.

From their position at the end of temperature retreat, the BCV's are programmed to be full open at the end of pump tailoff.

At some point as yet to be defined during pump tailoff, the CSOV's are opened, and the operating CSCV is cracked open to permit the vapor accumulated in the cooldown line and that generated in chilling it to be vented back into the tank and the cooldown line to be filled with liquid prior to the start of the cooldown period.

NOTE: As the system power is reduced, the operating point of the pumps moves closer to the stall region. Recent engine system analysis indicates that the stall point may be reached some time during pump tailoff with both TPA's operating. To preserve stable engine operation, it would be necessary to shut down one TPA and conduct the rest of the tailoff phase on a single leg. At this time, it is not certain whether this is required and, if so, when the transition would be made. In addition, no assessment of the capability of bringing the idle leg on line in time to prevent nozzle and reactor damage in the event of a loss of flow through the active leg has been made. In light of these factors, the current analysis is made on the premise that both TPA's will be in operation during the pump tailoff phase.

Cooldown Period

4.1.2.12 Early Cooldown

When the pumps are shut off, the system pressure profile permits the return springs on the PDKV's and PDKVA's to close those valves, terminating flow through the pumps. The PSOV's and PDKVA's are then closed and the PDCV's, SSCV's, and operating CSCV fully opened. Continued liquid coolant flow to both the stems and reflector is supplied through the previously chilled cooldown subsystem.

When the chamber temperature decreases to the lower cooldown limit, the SSBV's are closed. This terminates flow to the reflector while structural support coolant flow is continued through the open CSCV. When the temperature of the stem liner material increases to a limiting value, one SSBV is opened to initiate flow through the reflector. The SSBV is closed terminating

reflector flow, when chamber temperature decreases to a minimum limit. This sequence is continued until the limiting reflector-material temperatures occur before those of the stem liner material. When the minimum temperature limit is attained during this pulse, all flow to the engine is interrupted by closing the CSCV. The SSBV remains open.

4.1.2.13 Pulse Cooldown

Cooldown pulses are introduced by opening the CSCV to a predetermined position when the reflector material temperature increases to the limit. The propellant flow rate is approximately 0.7-1.5 lb/sec during a pulse. Each pulse is terminated by closing the CSCV when chamber temperature decreases to the minimum cooldown limit. Successive pulses require the CSCV to come to successively less open positions to maintain the desired flow as the system cools.

The cooldown phase is terminated when reactor coolant is no longer required. Both the CSCV and CSOV's are closed at the termination of the final flow pulse.

4.1.3 Operating Assumptions

The assumptions regarding the component and subsystem operation and capacity used in the analysis are listed below:

a. The pump discharge control valves (PDCV) are operated in active redundancy. Total flow requirements can be handled through one PDCV leg.

b. The bypass subsystem is operated in active redundancy. Total bypass flow requirements can be handled through one bypass leg.

c. The structural support valves (SSCV and SSBV) are operated in active redundancy during engine thrusting phases and in standby redundancy during cooldown.

d. The cooldown supply control valves (CSCV) are operated in standby redundancy, and both coolant shutoff valves (CSOV) are open during cooldown.

e. A PDKVA can not be closed against full pump discharge pressure.

f. A PDKVA will hold tank pressure in the normal flow direction.

4.1.4 Valve Failure Modes

The failure modes of each component will be listed and defined in conjunction with the individual component FMECA. However, to avoid repetition of much of the same verbage for each of the valves in the system, reference will be made to the standard list of valve failure modes shown in Table 4-2. The failure modes of a particular valve will be shown by exception or addition to this list. The probability of occurrence of each failure mode is contained in Volume I of this report.

TABLE 4-2
VALVE FAILURE MODES

Code	Title and Definition
01	Fails to Move From Full Open Position
	Loss of the capability of the valve to move from the full open position after being opened by normal actuator operation. The valve failure position is wide open, and it remains in that position for all subsequent engine operation. For compatibility with the reliability model and the double failure matrix elsewhere in this Data Item, the inability of a block valve to close rapidly enough to perform its intended safety function is also included in this definition, and for purposes of analysis its failure position is taken as open.
02	Fails to Move From Full Closed Position
	Loss of the capability of the valve to move from the full closed position after being closed by normal actuator operation. The valve failure position is fully closed and sufficiently seated to maintain internal leakage either forward or reverse, within the specified requirements, and it remains in that position for all subsequent engine operation.
03	Inadvertent Closure (Actuator Speed)
	Movement of the valve to the fully closed, seated position when normal system operation requires it to be in an open or intermediate position. Closure occurs at a rate corresponding to the normal speed of the valve actuator. The final failed state is closed and sealed within the normal internal leakage requirements with no subsequent capability to move from that position.

TABLE 4-2 (Cont'd)

04 Inadvertent Closure (Rupture Speed)

Movement of the valve to the closed position when normal system operation requires it to be in an open or intermediate position. The closing time interval (20 - 50 ms typical) is much shorter than the actuator operating time. Closure occurs under the influence of the stream hydraulic forces or a closing bias spring (if any), or both. Hence the mechanism generally involves disengagement of the valve stem from the actuator or rupture of the stem. The final failed state is closed and sealed in the direction of the closing stream forces. Whether it is sealed in the reverse direction depends on the existence and strength of a closing bias spring and the existence and magnitude of stream forces tending to drive it open. Differentiation is made between the rupture and actuator closure speeds primarily because of the gross differences in the engine transient effects and the capability for continued operation following such a malfunction during the high power operating phases.

05 Inadvertent Open

Passage of the valve to the full open position when the normal required state is closed or intermediate, with no capability of subsequently moving from the open position.

06 Failed Intermediate

This failure mode is applicable to binary valves only. The valve failure position is neither sufficiently closed to adequately block flow nor open at a suitable position for continued operations at rated conditions. The valve cannot be moved from this intermediate position. The malfunction can occur as the result of a single failure only during the normal transition from one extreme position to the other. At any other time, it can result only from multiple malfunctions and hence is not treated in a single failure analysis.

TABLE 4-2 (Cont'd)

07 Fails to Control

This failure mode is applicable to any analog valve that is used either in automatic closed loop control or in programmed position control. It indicates the inability to respond properly to maintain the control variable within specified limits or the inability to properly follow a demand position profile. There is no specific failure position.

08 Internal Leakage

Internal leakage indicates the passage of fluid past the valve seat when the valve is in the closed position at a rate which, if unchecked, would preclude normal operation or would result in sufficient loss of propellant to preclude completion of the mission. The leakage can be either forward (in the direction of the normal flow path) or reverse (against the normal flow path) depending on the particular valve and the operating phase of the engine.

09 External Leakage

External leakage is the loss of propellant through openings in the valve body or past sealing surfaces at a rate that precludes normal operation or that results in sufficient loss of propellant to preclude completion of the mission. The leakage can occur on either side of the valve seat, and the availability and nature of the corrective action for such a malfunction may depend on the location of the leak.

10 Body Rupture

Loss of the physical integrity of the valve body with accompanying gross loss of propellant and complete inability to transmit or modulate flow between the contiguous line segments. The valve is not capable of sealing either joined line setment, and neither segment is usable for any phase of continued engine operation.

SECTION 4.2

TURBOPUMP SUBSYSTEM

4.2 TURBOPUMP SUBSYSTEM

4.2.1 Description

4.2.1.1 Function/Requirements

The turbopump subsystem draws low-pressure liquid hydrogen (LH_2) from the Modular Propellant Tank (MPT) and delivers it at high pressure to the nozzle and the reactor as necessary for engine thrust operations. It provides a flow path from the MPT to the pump, the structural support coolant assembly (SSCA), and the pump discharge control subsystem. It also provides a flow path from the pressure vessel to the turbine and return to the pressure vessel. The turbopump subsystem, in conjunction with the bypass and pump discharge control subsystems, must regulate the flow rates and pressures to satisfy startup and shutdown thrust requirements. The subsystem must also prevent propellant flow within prescribed leakage limitations during non-operational periods. For normal operations, these functions are satisfied with two turbopumps in parallel with their related valves and lines. In addition, under certain malfunction conditions with one turbopump shutdown, the subsystem must deliver propellant at pressures and flow rates to satisfy a maximum thrust level of 80% of normal rated operation.

4.2.1.2 Configuration

The schematic configuration of the turbopump subsystem is shown in Figure 4.2-1. It contains two turbopumps (TPA's) that are normally operated in parallel. Each turbopump leg has a PSOV between the MPT and the TPA inlet, two check valves (PDKV and PDKVA) in the pump outlet line, a TBV in the turbine inlet line, and a TDBV in the turbine discharge line. The individual pump outlet lines join in a common line that feeds the pump discharge control subsystem and the structural support coolant assembly subsystem. The section of line leading from the pump discharge control subsystem to the nozzle torus is considered part of this subsystem. The valves and TPA's are inter-connected by lines varying in size from 10.7 inches to 5" in diameter. These are the Pump Inlet Line (PIL), Pump Discharge Line (PDL), Turbine Inlet Line (TIL), and Turbine Discharge Line (TDL). In addition, a three inch line, STPL, from the TDL supplies pressurant to the MPT. The instrumentation and controls for the operation of the above components are considered to be part of the subsystem for this analysis.

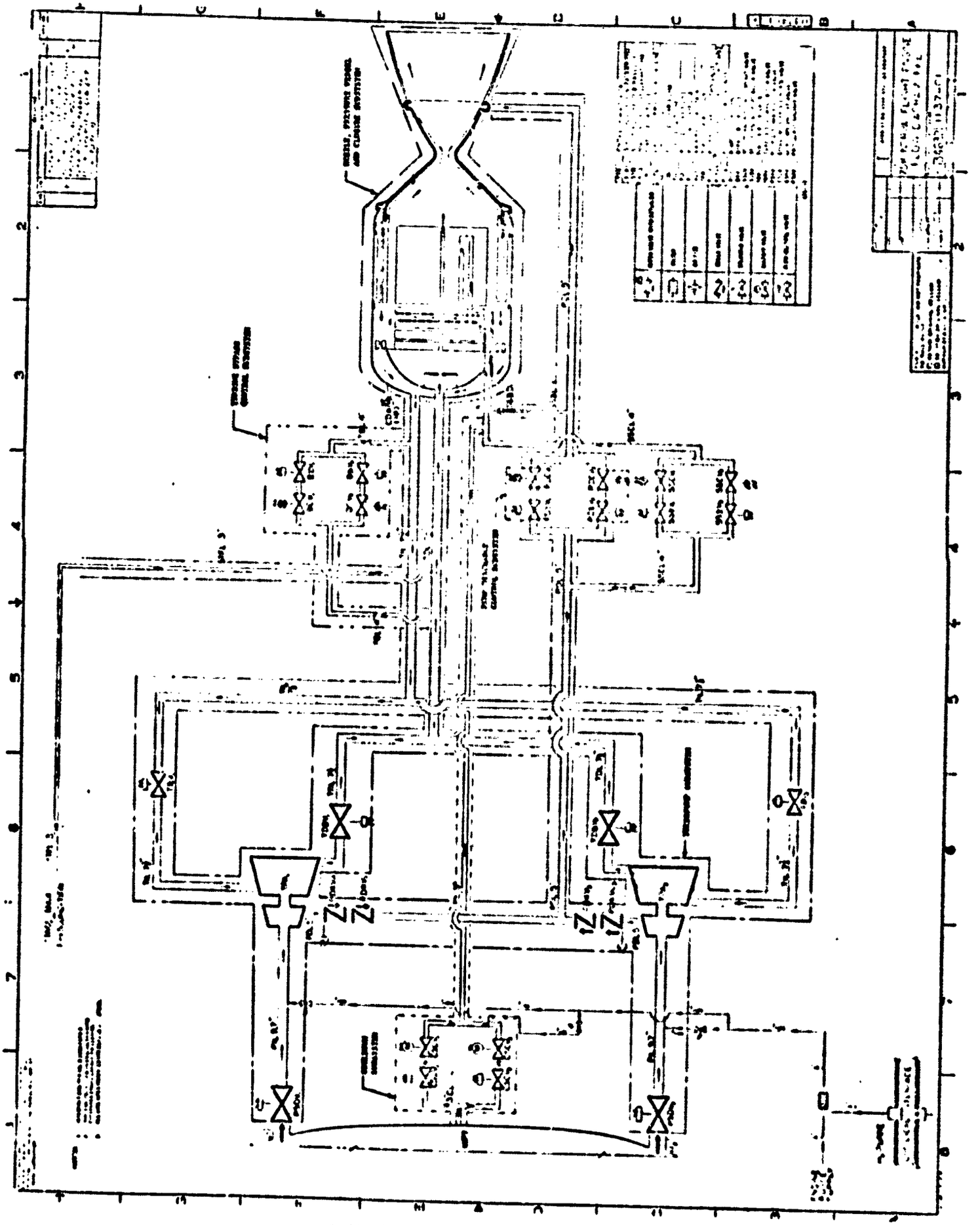

NNSS Subsystem Flow Schematics

Figure 4.2-1

The primary TPA control handles are the pump discharge control subsystem and the turbine bypass control subsystem. Analyses of these subsystems are presented in Sections 4.3 and 4.4.

4.2.1.3 Operation

The operating sequence of the valves in the turbopump subsystem is illustrated in Figure 4.1-2. During launch and post operations (coast) all valves are in the closed position. The PSOV's are the main block against propellant leakage from MPT. The PDKVA's, PDBV's, TDBV's and TBV's perform the function of secondary blocks against loss of propellant should the PSOV's leak grossly or be in other than the desired closed position.

At the start of the operational phase Temperature Conditioning and Nuclear Start, the PSOV's are opened to initiate LH_2 flow to the engine under tank pressure. (The actuators on the PDKVA's were withdrawn during pre-start operations). Tank pressure opens the four PDKV valves. At the same time of the PSOV opening, the drums are programmed out to obtain reactor core heating. This operational phase is continued for about 25 seconds during which time propellant flow continues at a rate of approximately 1.2 lb/sec. When the chamber temperature reaches 900°R (or increases by a specified amount), the drums are placed in closed loop control with a fixed temperature demand until pressure loop closure occurs. When liquid hydrogen quality requirements are satisifed at the pump inlet and reactor thermal conditioning requirements are met, the engine is ready to proceed to the next operational phase,bootstrap.

Bootstrap is initiated by opening the TBV's and TDBV's and placing the PDCV's in closed loop control of the turbine speed. The turbine speed demand is ramped from 0 to 7000 rpm in 10 sec. When the turbine speed reaches 7000 rpm, the system is held in that state until the TPA bearings and thrust balance cavities have been chilled sufficiently to permit high speed operation. The engine is then ready for the thrust buildup phase.

At the start of thrust buildup, the turbine speed control loop is opened, and the chamber pressure control loop is closed, with the control element still being the PDCV's. Chamber temperature and pressure demands are ramped at a rate of 150°R/sec and approximately 11.65 psi/second,respectively, until a T_c of 4250°R and P_c of 270 psia (throttle point) are reached. Chamber temperature is then held constant while the chamber pressure is ramped at a rate of 50 psi until the rated operation level of 450 psia is reached.

Up to 270 psia, the chamber pressure is controlled by the PDCV's, and the BCV's are programmed from their initial full open position to their normal throttle point position. At that point, the control is switched to the BCV's, and the PDCV's are programmed open during the traverse from 270 to 450 psia. At 3000°R during the startup ramp temperature control is switched from the drums to the SSCA, and the drums are placed in their throttle hold position. The drums are then ramped to their design orifice position during the pressure traverse to the rated operating point. Thrust buildup from bootstrap to rated operation takes about 26 seconds.

Operation at 4250°R and 450 psia is continued with the SSCA controlling T_c and the bypass subsystem controlling P_c until the planned duration is completed.

At the completion of rated operation, shutdown is initiated with the operational phase, throttling. During throttling, P_c is ramped at a rate of -50 psi/second until a P_c of 270 psia is reached. During this transition, pressure is controlled by the bypass subsystem and the PDCV's are programmed to their throttle hold position. The chamber temperature is held constant by the SSCA at 4250°R.

The operational phase throttle hold is a steady state hold position at 60% thrust and full I_{sp} (P_c = 270 psia and T_c = 4250°R) to allow additional time for some minor fission product decay to occur while the chamber temperature is high. Again P_c and T_c control are maintained by the bypass subsystem and the SSCA. The duration of the throttle hold varies depending on the duration of the prior rated operational period. A typical throttle hold duration is about 100 seconds.

Following throttle hold, pressure control is switched to the PDCV's, and shutdown is continued with the chamber temperature and pressure ramped down to 2600°R and 160 psia. This operational phase is Temperature Retreat. The temperature ramp rate is -150°R/second. The BCV's are programmed open during temperature retreat in order to have these valves fully open prior to the beginning of pump tailoff. Chamber temperature is controlled initially by the SSCA with the drums fixed at their throttle hold position. When the SSCV's reach a preset position, they are held fixed, and control is switched to the drums. When the chamber temperature reaches 2600°R the drums are rolled in, completing the temperature retreat phase.

At the end of the temperature retreat phase, the pressure control loop is opened, and the temperature control loop is switched to the PDCV's, initiating the pump tailoff phase. The chamber temperature decrease continues along a programmed demand profile under PDCV control until a T_c of 1524°R is reached and coolant flow has decreased to about 1.7 lb/sec. At that point, the TBV's and TDBV's are closed, shutting down the TPA's and terminating the phase. The PSOV's and PDKVA's can then be closed to conclude the subsystem operation. All of the valves in the turbopump subsystem are now closed, providing double blocks against gross leakage from the MPT through the main propellant lines. The duration of pump tailoff varies with the hold time at rated operation. The duration of pump tailoff varies with the hold time at rated operation. For 10 minues of full power, pump tailoff is about 4.5 minutes.

The turbopump subsystem has no operating function during the cooldown period except for that portion of the PDL used to transport coolant from the SSCA to the nozzle torus.

4.2.2 Failure Analysis

4.2.2.1 Propellant Shutoff Valve (PSOV)

a. Description and Function

The PSOV's are 9.7 inch spring-loaded poppet valves located in the pump inlet lines. They are binary valves providing on-off control of propellant from the MPT to the TPA's. When closed,

each must contain LH_2 within the MPT at a temperature of approximately 40°R and pressure of about 30 psia. The flow rate through each valve ranges from 0.5 lbs/sec during startup to 45 lbs/sec during rated operations in the dual TPA mode. For single TPA operation, flow can range up to 75 lbs/sec. When the engine is operating in the single TPA mode, propellant accumulated in the pump inlet line by leakage through the PDKV's or through the pump bearing is vented through the PSOV in the inoperative leg back to the main tank to prevent overpressurizing the PIL and rupturing its bellows. During cooldown and coast, this relief function is required at both PSOV's to dispose of the propellant trapped in the subsystem when it is shut down.

The valve design (Dwg. 1139051) is shown in Figure 4.2-2. The poppet stroke is 3.75", and the annular flow area around the poppet in the full open position is somewhat greater than the PIL cross-sectional area to provide minimum pressure drop during engine operation. In the closed position, the maximum allowable internal leakage (inlet to outlet)is 150 SCIM with liquid hydrogen at 40°R and a pressure differential of 30 psi. When the downstream pressure exceeds the tank pressure, the poppet will lift off the sealing surface against the spring force to vent the PIL back into the tank and prevent rupture of the bellows in that line.

The actuator is located on the side of the valve housing perpendicular to the flow direction and is downstream of the sealing surface so that maintenance can be performed on that portion of the valve while the poppet remains closed to prevent flow from the tank. The valve drive is an actuator shaft and pinion gear combined with a rack segment of the poppet shaft, converting rotary motion of the actuator shaft into linear motion of the poppet shaft. The PSOV's have a design opening and closing speed of 5.0 $\pm$ 1 second. Upon loss of electrical power to the actuator, the valve will remain in place.

For purposes of the FMECA, the PSOV is considered to consist of the valve, actuator, electrical power for actuator, and control signals, both input and output. A failure of any of these components is taken as a failure of the PSOV.

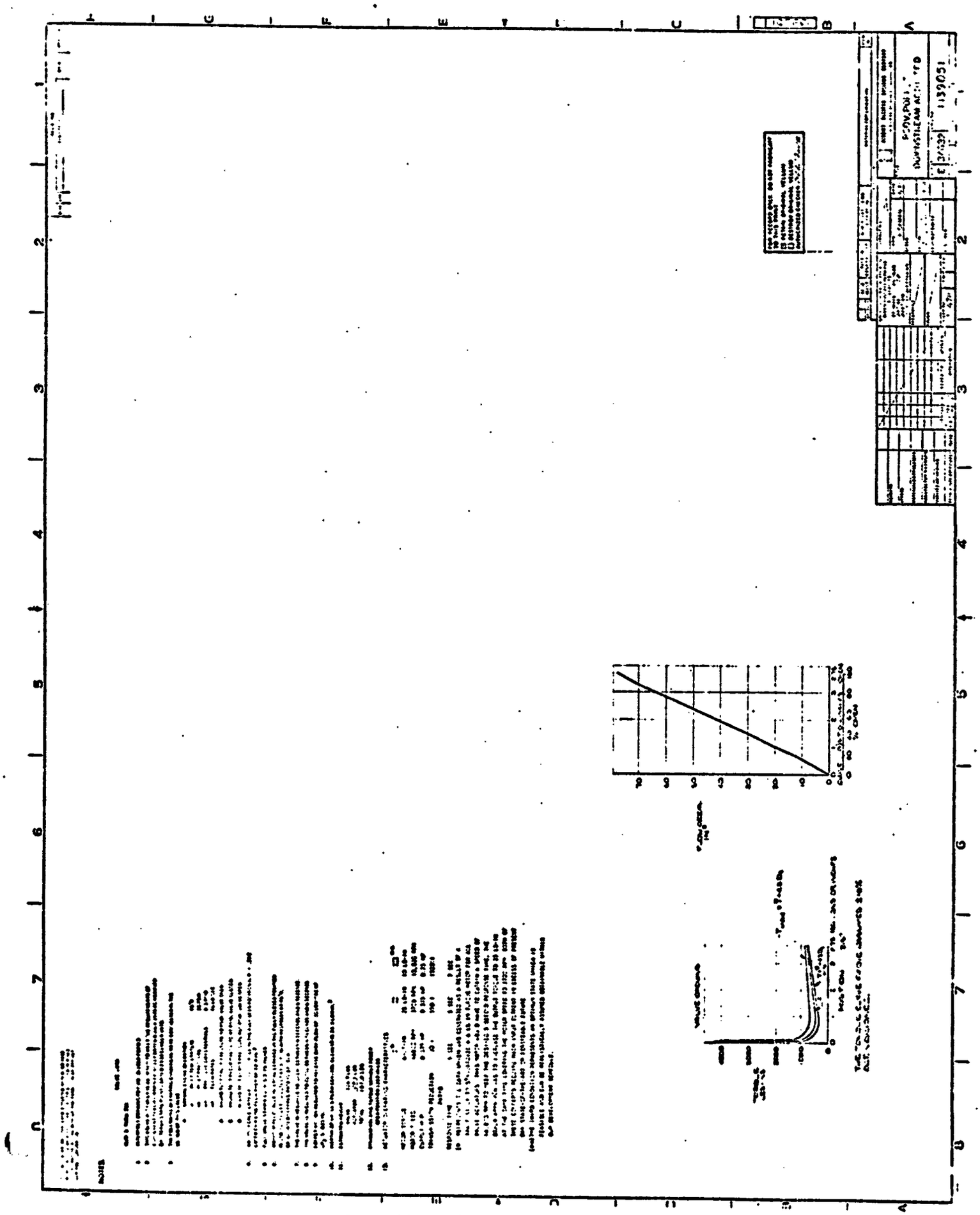

Propellant Shutoff Valve (PSOV)

Figure 4.2-2 (Sheet 1)

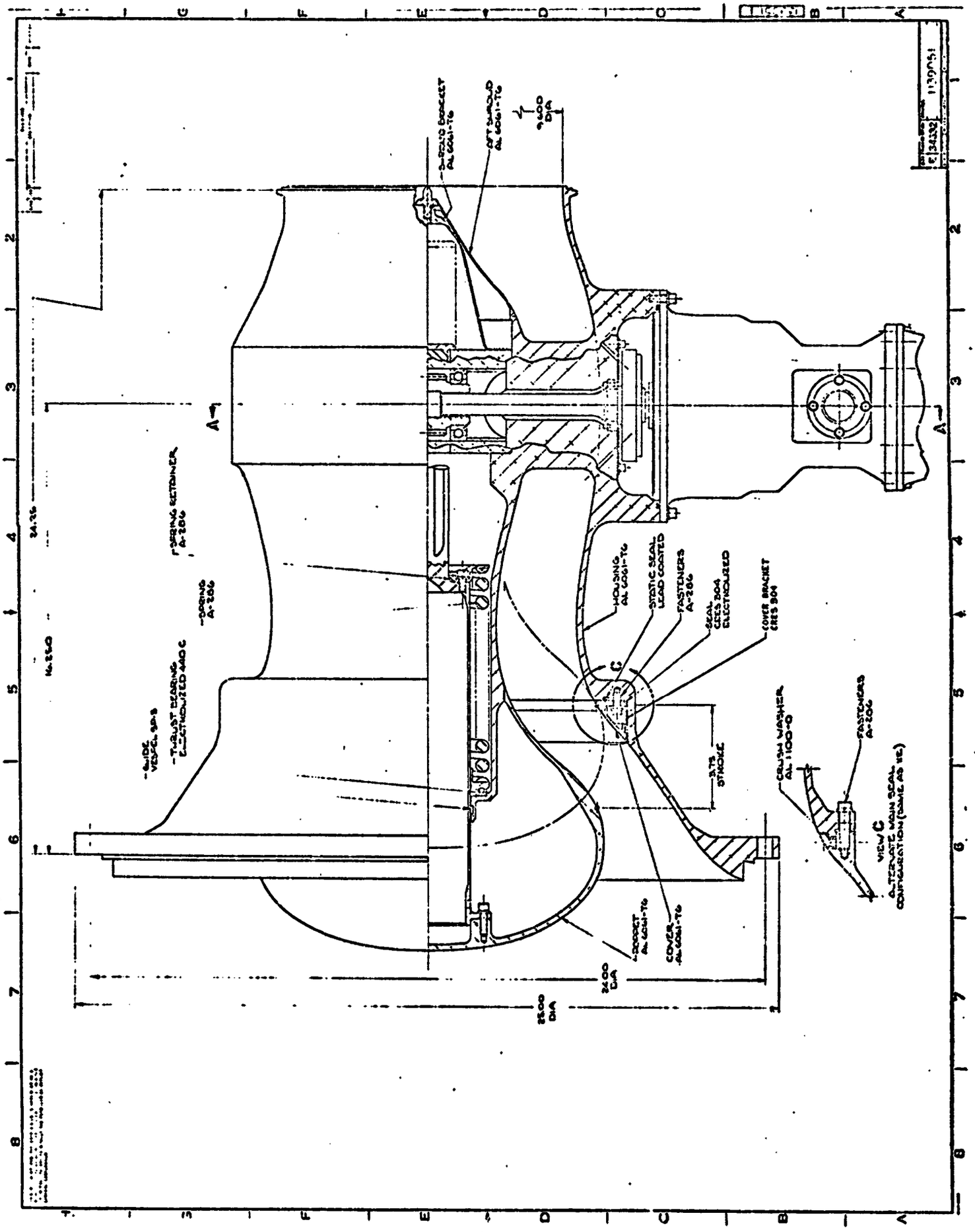

Figure 4.2-2 (Sheet 2)

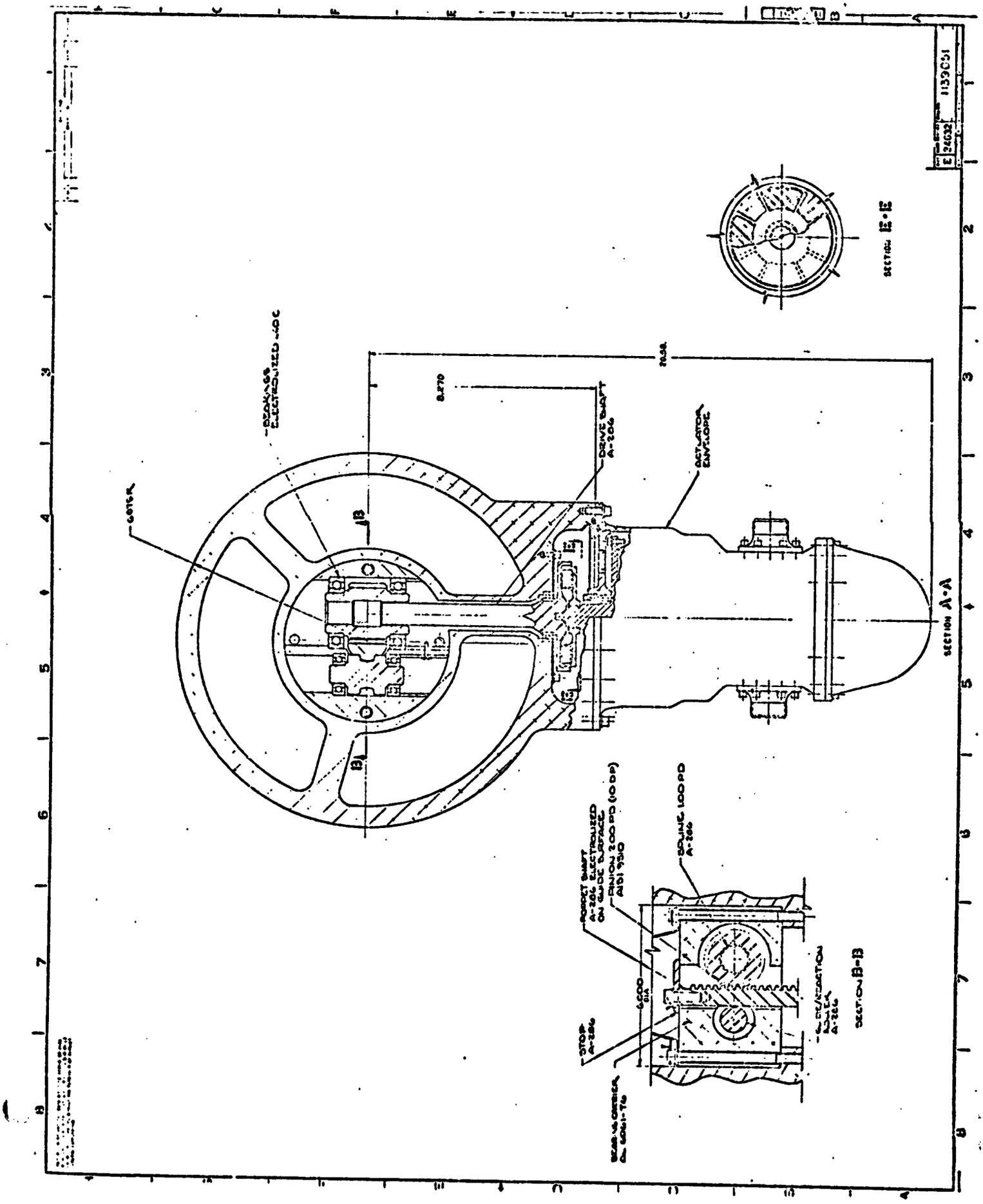

Figure 4.2-2 (Sheet 3)

b. Modes of Failure

All of the failure modes listed in Table 4-2 are applicable to the PSOV except Fails to Control (08), since the valve has no modulating or position control function. In addition, it has a mode called Fails to Vent, which is failure of the reverse venting of propellant in the pump inlet line back to the main tank through the PSOV in the inoperative leg during operation in the single IPA mode or during non-operating periods when propellant trapped in the pump inlet line generates pressures that must be relieved to prevent rupture of the bellows.

SYSTEM FAILURE MODE EFFECTS AND CRITICALITY ANALYSIS • • • SUMMARY SHEET

SHEET 1 OF 2

COMPONENT/SUBSYSTEM: PSOV/TURBOPUMP SUBSYSTEM

PREPARED BY: G. M. WITCRAFT

DATE: 7-30-71

REFERENCE: SPEC. EC-901[illegible]7

REVISION: A

DATE: 4-30-71

FAILURE MODE (CODE #)	FAILURE EFFECT CATEGORY — ENGINE OPERATIONAL PHASES												
	A	B	C	D	E	F	G	H	I	J	K	L	M
		← COAST →		← STARTUP →				← SHUTDOWN →				← COOLDOWN →	
	LAUNCH	POST OPERATIONS	PRE-START OPERATIONS	TEMP. CONDITION	BOOT STRAP	THRUST BUILDUP	RATED OPERATION	THROTTLING	THROTTLE HOLD	TEMP. RETREAT	PUMP TAILOFF	EARLY	PULSE
Fails to Move From Full Open Position (01)	NA →			IIA →							IIIB	NA →	
Fails to Move From Full Closed Position (02)	NA →			IIIA	NA →								
Inadvertent Closure (Actuator Speed) (03)	NA →			IIIA →								NA →	
Inadvertent Closure (Rupture Speed) (04)	NA →			IIIA →		IV →					IIIA	NA →	
Inadvertent Open (05)	IIIB →			NA →								IIIB →	
Failed at Intermediate Position (06)	MF →			IIIA	MF →						IIIB	MF →	

NA = Not Applicable

MF = Multiple Failure

SYSTEM FAILURE MODE EFFECTS AND CRITICALITY ANALYSIS • • • SUMMARY SHEET

SHEET 2 OF 2

COMPONENT/SUBSYSTEM: PSOV/Turbopump Subsystem PREPARED BY: G. M. Witcraft DATE: 7-30-71

REFERENCE: Spec. EC-90117 REVISION: A DATE: 4-30-71

FAILURE MODE (CODE #)	FAILURE EFFECT CATEGORY												
	ENGINE OPERATIONAL PHASES												
	A	B	C	D	E	F	G	H	I	J	K	L	M
		COAST		STARTUP				SHUTDOWN				COOLDOWN	
	LAUNCH	POST OPERATIONS	PRE-START OPERATIONS	TEMP. CONDITION	BOOT STRAP	THRUST BUILDUP	RATED OPERATION	THROTTLING	THROTTLE HOLD	TEMP. RETREAT	POST TAILOFF	EARLY	PULSE
Fails to Control (07)	NA	→	→	→	→	→	→	→	→	→	→	→	→
Internal Leakage (08)	IIIB	→	→	NA	→	→	→	→	→	→	→	IIIB	→
External Leakage (09)	IIIB	→	→	→	→	→	→	→	→	→	→	→	→
Body Rupture (10)	IV	→	→	→	→	→	→	→	→	→	→	→	→
Fails to Vent (11)	IIA	→	→	→	→	→	→	→	→	→	→	IIB	→

SYSTEM FAILURE MODE EFFECTS AND CRITICALITY ANALYSIS • • • WORK SHEET

SHEET 1 OF 7

COMPONENT/SUBSYSTEM: PSOV/Turbopump Subsystem PREPARED BY: G. M. Witcraft DATE: 7-27-71

REFERENCE: Spec. EC90117 REVISION: A DATE: 4-30-71

FAILURE MODE (CODE #)	PHASE	EFFECTS ON SYSTEM OPERATION	FAILURE EFFECT CATEGORY
Fails to Move From Full Open Position (01)	A-C,L-M	Not applicable. Valve is closed.	NA
	D-J	Loss of the capability of the valve to close degrades system safety through loss of the ability to isolate an external leak in the vicinity of a TPA.	IIA
	K	Failure of a PSOV to close on demand results in excessive propellant losses during the subsequent coast periods, precluding completion of the mission. The engine does retain emergency mode operating capability. The PDKVA in the same leg would be required to close to prevent continuous flow of propellant to the nozzle and permit normal operation of the early cooldown and pulse cooldown phases. The TDBV would be required to seal to prevent direct loss of propellant through the TPA bearing and out the nozzle. A potential leak path also exists via the TPA bearing, the TBV, the turbine bypass control subsystem and out the nozzle. However, this path could be blocked during the coast period by closing both bypass legs. End Effect: Emergency mode operating capability only	IIIB

SYSTEM FAILURE MODE EFFECTS AND CRITICALITY ANALYSIS • • • WORK SHEET

SHEET 2 OF 7

COMPONENT/SUBSYSTEM: PSOV/Turbopump Subsystem

PREPARED BY: G. M. Witcraft DATE: 7-27-71

REFERENCE: Spec. EC90117

REVISION: A DATE: 4-30-71

FAILURE MODE (CODE #)	PHASE	EFFECTS ON SYSTEM OPERATION	FAILURE EFFECT CATEGORY
Fails to Move From Full Closed Position (02)	A-C,L-M	Not applicable. Valve is not required to open.	NA
	D	Inability to open a PSOV would mean the complete loss of operation of one TPA leg for all phases D through K. Engine operation would have to be conducted in the single TPA mode, and the PDKVA, TBV, and TDBV in the malfunctioned leg should be left closed to isolate that leg.	IIIA
	E-K	Not applicable. Valve is open.	NA
		End Effect: Loss of operation of one TPA leg.	
Inadvertent Closure (Actuator Speed) (03)	A-C,L-M	Not applicable. Valve is closed.	NA
	D-K	The end effect of this failure mode is the loss of operation of one TPA leg. However, the transient effects and the required action to compensate for the malfunction depends on the operating phase and operating status of the engine at the time of failure. In Phase D, chilldown flow through the associated pump would stop, and the PDKV and PDKVA would be driven closed by their bias springs. Normal operation would continue through the other leg with no significant transient effects. During the powered phases (E-K), the pump would be unloaded with power being applied to the turbine. Rapid closure of either the TBD or the TDBV through an automatic detection and corrective action system is required to prevent excessive turbine speed with damage to the turbine and possible rupture of the case. In addition, during phases F, G and H, the maximum chamber pressure demand would have to be reduced to 360 psia	IIIA

SYSTEM FAILURE MODE EFFECTS AND CRITICALITY ANALYSIS • • • WORK SHEET

SHEET 3 OF 7

COMPONENT/SUBSYSTEM: PSOV/Turbopump Subsystem

PREPARED BY: G. M. Witcraft

DATE: 7-27-71

REFERENCE: Spec. EC90117

REVISION: A

DATE: 4-30-71

FAILURE MODE (CODE #)	PHASE	EFFECTS ON SYSTEM OPERATION	FAILURE EFFECT CATEGORY
Inadvertent Closure (Actuator Speed) (Continued)	D-K	to preclude exceeding the design pressure limit on the non-malfunctioned pump. The TBV, TDBV, and PDKVA should be maintained closed to isolate the malfunctioned leg during subsequent operation. End Effect: Loss of operation of one TPA leg.	

SYSTEM FAILURE MODE EFFECTS AND CRITICALITY ANALYSIS • • • WORK SHEET

SHEET 4 OF 7

COMPONENT/SUBSYSTEM: PSOV/Turbopump Subsystem
PREPARED BY: G. M. Witcraft
DATE: 7-27-71

REFERENCE: Spec EC90117
REVISION: A
DATE: 4-30-71

FAILURE MODE (CODE #)	PHASE	EFFECTS ON SYSTEM OPERATION	FAILURE EFFECT CATEGORY
Inadvertent Closure (Rupture Speed) (04)	A-C,L-M	Not applicable. Valve is closed.	NA
	D-E, K	Same as 03 above.	IIIA
	F-J	Sudden loss of flow through a TPA leg during operation of or near the design chamber temperature results in a rapid decrease in hydrogen inventory in the reactor stems with a corresponding drop in reactor power and temperatures. The transient violates the current constraint of ± 175°R/sec maximum or the rate of change of chamber temperature. In addition, computer simulation of this malfunction indicates that the constraint is also violated during the recovery to the design temperature with or without corrective action to reposition the SSCV's outside of the normal control loop in an effort to minimize the transient effects. The thermal shock can damage the fuel elements or reactor support structure. At the present time, it is not certain whether such damage would be severe enough to preclude further use of the engine. However, since that possibility exists, the failure is assigned to Category IV pending more detailed assessment of the specific effects. NOTE: These results are common to several component failures resulting in or requiring rapid termination flow through one TPA leg. The potential seriousness of the malfunctions makes further evaluation of the effects desirable to determine the suitability of the present temperature transient criterion or, if warranted, to assess the feasibility of modifying the temperature control response to reduce the reactor thermal shock. End Effect: Total loss of engine operating capability.	IV

SYSTEM FAILURE MODE EFFECTS AND CRITICALITY ANALYSIS • • • WORK SHEET

SHEET 5 OF 7

COMPONENT/SUBSYSTEM: PSOV/Turbopump Subsystem PREPARED BY: G. M. Witcraft DATE: 7-27-71

REFERENCE: Spec EC90117 REVISION: A DATE: 4-30-71

FAILURE MODE (CODE #)	PHASE	EFFECTS ON SYSTEM OPERATION	FAILURE EFFECT CATEGORY
Inadvertent Open (05)	A-C,L-M	Inadvertent opening of a PSOV results in excessive loss of propellant during the engine non-operating phases as described under (01), Phase K, above.	IIIB
	D-K	Not applicable. Valve is open. End Effect: Emergency mode operating capability only.	NA
Fails at Intermediate Position (06)	A-C,E-J, L-M	During the phases when a valve is either fully closed or fully open, independent failures of two or more parts are required to cause the valve to move from its original position and then to fail in an intermediate position. Such an occurrence is a multiple failure and is beyond the scope of this analysis.	MF
	D	Failure of the valve to open fully at engine start will have no immediate effect during Phase D. However, at some point during the startup, the pressure drop across the valve would become high enough to lower the pump suction pressure enough to cause cavitation, pump stall, and TPA overspeed. Therefore, the leg should be isolated by closing the PDKVA and leaving the TBV and TDBV closed and subsequent operations performed in the single TPA mode.	IIIA
	K	Failure of the valve to close completely at the end of pump tailoff would produce a condition as described under (01) Phase K above. End Effect: Emergency mode operating capability only.	IIIB
Fails to Control (07)	A-M	Not applicable. Valve has no control function.	NA

SYSTEM FAILURE MODE EFFECTS AND CRITICALITY ANALYSIS • • • WORK SHEET

SHEET 6 OF 7

COMPONENT/SUBSYSTEM: PSOV/Turbopump Subsystem

PREPARED BY: G. M. Witcraft DATE: 7-27-71

REFERENCE: Spec EC 90117

REVISION: A DATE: 4-30-71

FAILURE MODE (CODE #)	PHASE	EFFECTS ON SYSTEM OPERATION	FAILURE EFFECT CATEGORY
Internal Leakage (08)	A-C,L-M	Excessive internal leakage during the periods when the valve is closed produces a condition the same as described under (01), Phase K, above.	IIIB
	D-K	Not applicable. Valve is open.	
		End Effect: Emergency mode operating capability only.	
External Leakage (09)	A-M	The effect of an external leak depends on both the location and magnitude of the leak. A leak upstream of the valve seat would cause a continuous loss of propellant during all operating phases, requiring mission abort (IIIB), and return of the vehicle. (Leaks large enough to preclude emergency mode operation are included under Body Rupture, below). It may also present a fire and explosion hazard during launch (Phase A). A leak downstream of the valve seat could be isolated by closing the PSOV, PDKVA, TBV, and TDBV, permitting continued operation with the remaining TPA. End Effect: Emergency mode operating capability only.	IIIB
Body Rupture (10)	A-M	Rupture of the valve body or gross leakage will result in total loss of propellant in a relatively short time period precluding emergency mode operation and stranding the vehicle. During the powered phases (E-K) loss of flow into the pump will require emergency closure of the TBV or TDBV to prevent the turbine from rapidly driving the TPA to excessive speeds and causing massive damage to the turbine, housing, and adjacent equipment.	IV

SYSTEM FAILURE MODE EFFECTS AND CRITICALITY ANALYSIS • • • WORK SHEET

SHEET 7 OF 7

COMPONENT/SUBSYSTEM: PSOV/Turbopump Subsystem PREPARED BY: G. M. Witcraft DATE: 7-27-71

REFERENCE: Spec. EC 90117 REVISION: A DATE: 4-30-71

FAILURE MODE (CODE #)	PHASE	EFFECTS ON SYSTEM OPERATION	FAILURE EFFECT CATEGORY
Body Rupture (Cont'd)		After the burn has proceeded long enough to accumulate an appreciable fission product inventory (G-M), the loss of propellant for cooldown would result in overheating and disassembly of the reactor. End Effect: Gross loss of propellant and stranding the vehicle.	
Fails to Vent (11)	A-K	Loss of the capability to vent the pump inlet line of an idle TPA leg during single TPA operation is a slight degradation of the system safety. If a TPA leg were shut down to isolate an external leak in the vicinity of the TPA, the PSOV would be closed, and any reverse leakage past the check valves or turbine block valves would be expelled externally. If the leg were shut down because of the failure of any other component, the PSOV could be left open to permit free flow of any reverse leakage back to the tank. Only the failure of the PSOV in the closed position requires the venting feature to function to prevent rupture of the bellows in the pump inlet line and an accompanying small loss of propellant during powered operation with the surviving TPA leg.	IIA
	L-M	Failure of the valve to vent the propellant trapped when the subsystem is shut down would result in a gradual increase of pressure and eventual rupture of the bellows in the PIL. One of the downstream valves should be opened (probably PDKVA) to permit the propellant to escape. End Effect: System Safety Degradation	

4.2.2.2 Pump Discharge Check Valve With Actuator (PDKVA)

a. Description and Function

The PDKVA's (Figure 4.2-3) are 5 inch actuated check valves (Dwg. 1137291) located in the pump discharge lines. Their primary functions are to isolate an inoperative TPA by preventing back flow into the pump and to provide backup internal leak isolation to the PSOV's during cooldown and coast periods. Each PDKVA is equipped with an electrical actuator that can drive it closed against a pressure differential of 30 psi. Once driven closed, the valve is held in place without electrical power to the actuator, and the actuator must be retracted to permit subsequent opening. When the actuator is retracted, the valve functions as a normal check valve. Each contains a closing spring that will hold the flapper closed against a one "g" acceleration. To crack open the PDKVA, a pressure differential of 0.5 to 4.0 psi is required.

The PDKVA is a flapper valve with metal to metal sealing surfaces. The flapper face is self-aligning by means of a partial ball-joint. Torsion springs which hold the valve in a normally closed position are located on the pivot shaft between the hinge ears which connect the flapper to the shaft. Anti-chatter snubbers bear on each of the hinge ears, and each hinge is coupled to the shaft with a spline. The shaft is supported by double row ball bearings near either end. A potentiometer for monitoring the valve position is attached to one end of the shaft and is enclosed in a cover which is sealed to the valve housing. Attached to the other end of the shaft by a spline is a two-tooth dog clutch, which is the interface to the actuator. The actuator housing will be sealed to the valve housing. The potentiometer and clutch cavities are connected to the downstream side of the valve by small bleed-off lines.

The permitted actuator opening time is 10 seconds, maximum, while the specified closing time is 3.0 $\pm$ 1.0 sec. When being held in the closed position, the PDKVA will not leak from inlet to outlet in excess of 2.4 x 10^3 standard cubic inches per minute of GH_2 when the inlet pressure is 30 psia and the outlet pressure is

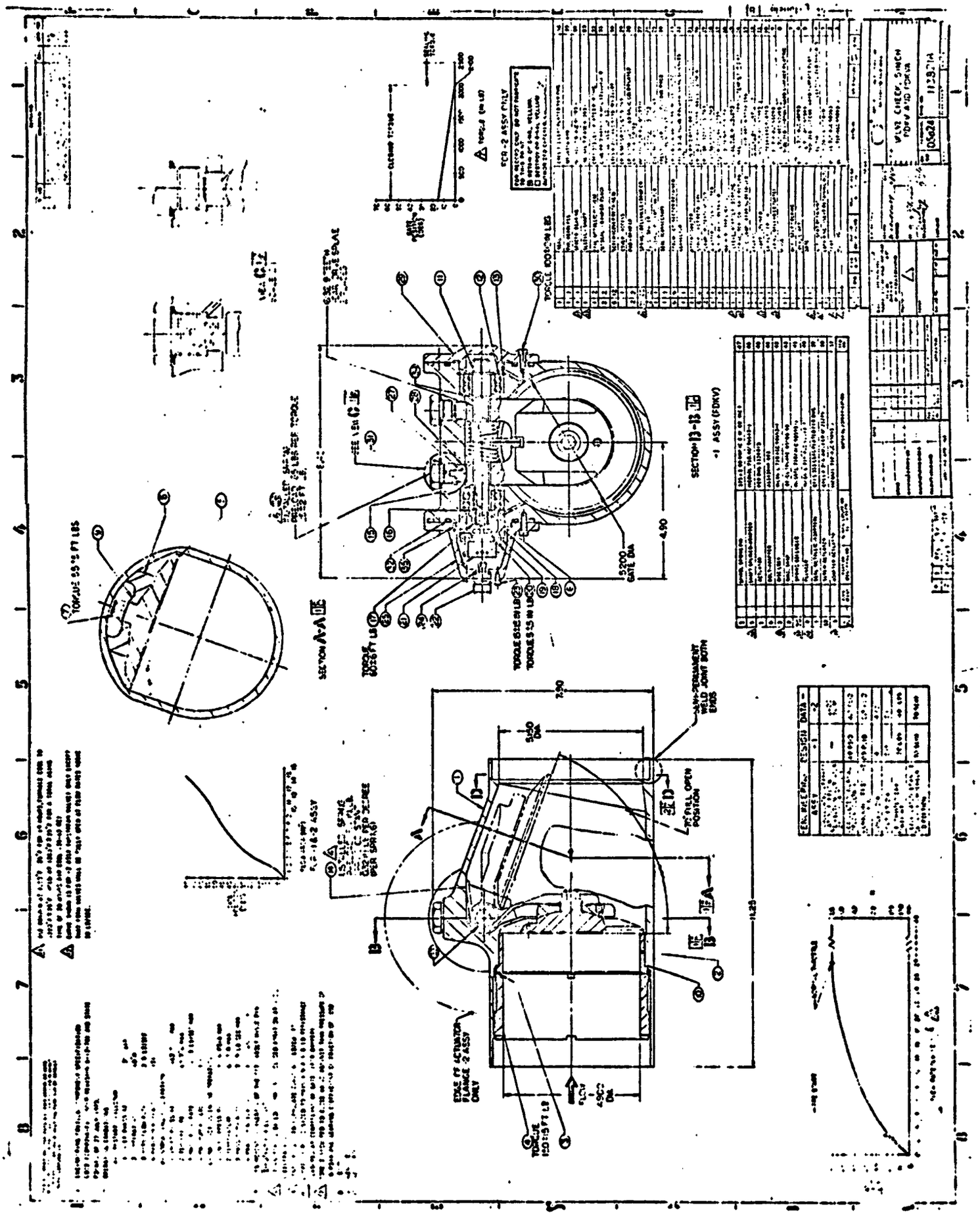

Pump Discharge Check Valve (PDKV and PDKVA)

Figure 4.2-3 (Sheet 1)

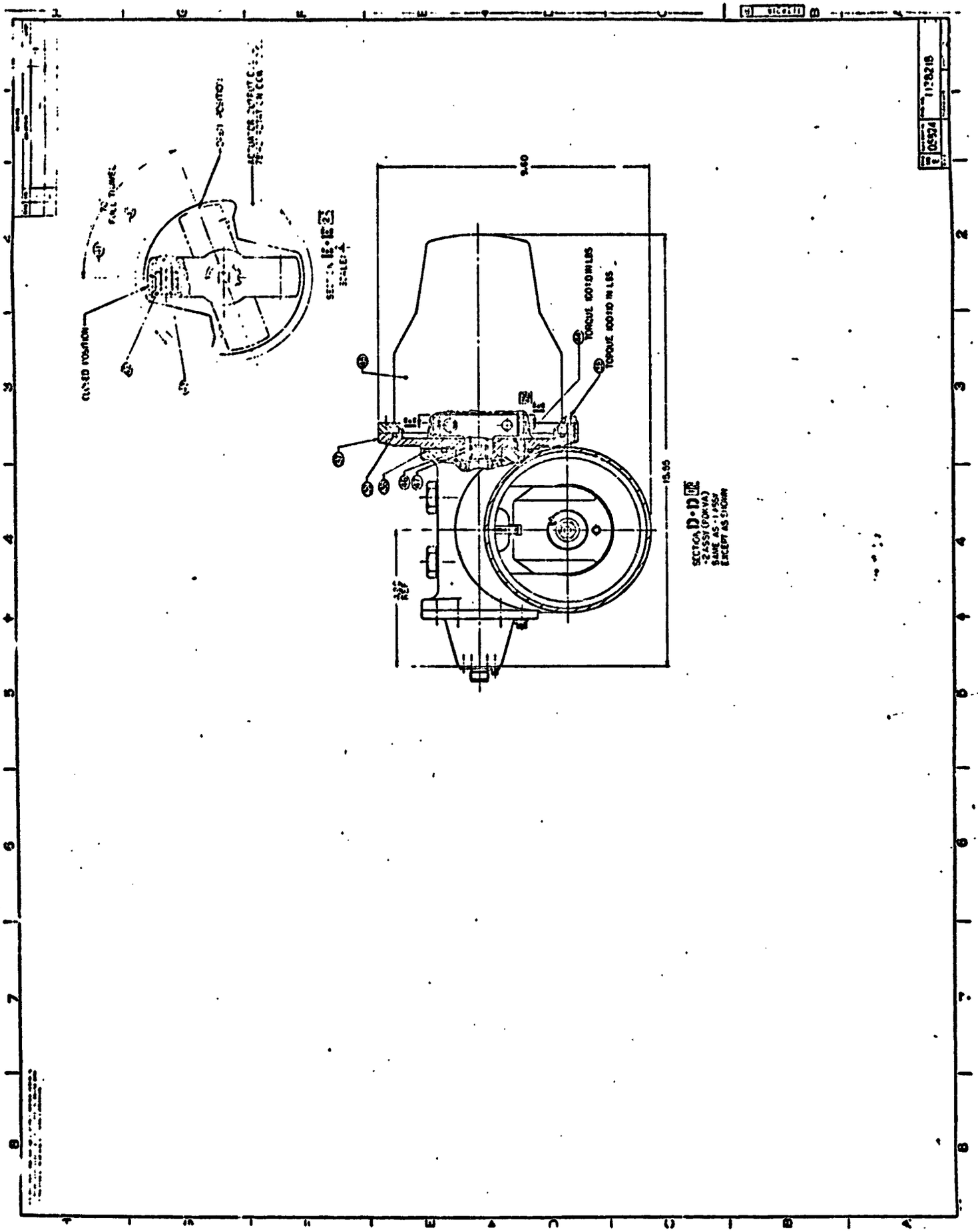

Figure 4.2-3 (Sheet 2)

zero. Under reverse flow conditions, the PDKVA will not leak from the outlet to the inlet in excess of 2×10^4 standard cubic inches per minute when the outlet pressure is 1450 psia and the inlet pressure is zero.

On loss of electrical actuator power, the PDKVA retains its normal check function but cannot be opened if it has been actuated closed.

b. Modes of Failure

All of the failure modes listed in Table 4-2 are applicable to the PDKVA's except 07, Fails to Control In addition, the definition of Inadvertent Open is modified to mean inadvertent retraction of the actuator from the closed position with no capability of moving from the retracted position. Whether the valve would actually open would depend on the pressure differential across the flapper.

A potential problem exists with both the PDKVA's and PDKV's during the Temperature Conditioning phase of operation. A positive pressure differential of 0.5 - 4 psi must be maintained across the valve to keep it open. If the valves in one leg are near the low end and the others near the high end of this range, flow may take place preferentially through the path of least resistance, resulting in failure to adequately chill the other pump. This might require some change to the operating procedure such as alternately flowing propellant through the two pumps by suitably opening and closing either the PSOV's or the PDKVA's to insure chilldown of both pumps.

SYSTEM FAILURE MODE EFFECTS AND CRITICALITY ANALYSIS • • • SUMMARY SHEET

SHEET 1 OF 2

COMPONENT/SUBSYSTEM: PDKVA/Turbopump Subsystem

PREPARED BY: C. M. Witcraft DATE: 7-30-71

REFERENCE: Spec. EC-90246

REVISION: A DATE: 4-30-71

FAILURE MODE (CODE #)	FAILURE EFFECT CATEGORY — ENGINE OPERATIONAL PHASES												
	A	B	C	D	E	F	G	H	I	J	K	L	M
		COAST		STARTUP				SHUTDOWN				COOLDOWN	
	LAUNCH	POST OPERATIONS	PRE-START OPERATIONS	TEMP. CONDITION	BOOT STRAP	THRUST BUILDUP	RATED OPERATION	THROTTLING	THROTTLE HOLD	TEMP. RETREAT	PUMP TAILOFF	EARLY	PULSE
Fails to Move from Full Open Position (01)	NA			IIA								NA	
Fails to Move From Full Closed Position (02)	NA		IIIA		NA								
Inadvertent Closure (Actuator Speed) (03)	NA		IIIA				NP*				IIIA	NA	
Inadvertent Closure (Rupture Speed) (04)	NA			NF								NA	
Inadvertent Open (05)	IIA			NA								IIA	
Fails at Intermediate Position (06)	MF		IIIA		MF		NP				IIIA	MF	

* Not Possible

SYSTEM FAILURE MODE EFFECTS AND CRITICALITY ANALYSIS • • • SUMMARY SHEET

SHEET 2 OF 2

COMPONENT/SUBSYSTEM: PDKVA/Turbopump Subsystem

PREPARED BY: G. M. Witcraft

DATE: 7-30-71

REFERENCE: Spec. EC-90246

REVISION: A

DATE: 4-30-71

FAILURE MODE (CODE #)	FAILURE EFFECT CATEGORY — ENGINE OPERATIONAL PHASES												
	A	B	C	D	E	F	G	H	I	J	K	L	M
		COAST		STARTUP				SHUTDOWN				COOLDOWN	
	LAUNCH	POST OPERATIONS	PRE-START OPERATIONS	TEMP. CONDITION	BOOT STRAP	THRUST BUILDUP	RATED OPERATION	THROTTLING	THROTTLE HOLD	TEMP. RETREAT	PUMP TAILOFF	EARLY	PULSE
Fails to Control (07)	NA												
Internal Leakage (08)	IIA			NA	IIA								
External Leakage (09)	IIA			IIIA								IIA	
Body Rupture (10)	IIA			IIIA		IV					IIIA	IIA	

SYSTEM FAILURE MODE EFFECTS AND CRITICALITY ANALYSIS • • • WORK SHEET

SHEET 1 OF 7

COMPONENT/SUBSYSTEM: PDKVA/Turbopump Subsystem PREPARED BY: G. M. Witcraft DATE: 3-27-71

REFERENCE: Spec. 90246 REVISION: A DATE: 4-30-71

FAILURE MODE (CODE #)	PHASE	EFFECTS ON SYSTEM OPERATION	FAILURE EFFECT CATEGORY
Fails to Move From Full Open Position (01)	A-C,L-M	Not applicable. Valve is closed.	NA
	D-K	Loss of the capability of the valve to close degrades system safety by removing the redundancy in blocking reverse flow through the pump in the event the TPA leg is shut down. In addition, failure of the actuator to close at the end of pump tailoff degrades system safety by removing the backup block against gross propellant flow from the tank during the cooldown and coast periods. The PSOV in the same line must seal to block flow from the tank to permit normal cooldown. Following cooldown, the turbine bypass subsystem could be closed to provide a secondary block against large propellant losses from the tank. End Effect: System safety degradation	IIA
Failure to Move From Full Closed Position (02)	A-B, L-M	Not applicable. Valve is not required to open.	NA
	C,D	The PDKVA can fail to open either because the valve actuator can not be retracted during Phase C or the valve does not respond to the normal pressure differential when the PSOV's are opened to start Phase D. In either case the operation of the TPA leg is lost, and subsequent operations must be performed in the single TPA mode.	IIIA
	E-K	Not applicable. Valve is open. End Effect: Loss of operation of one TPA leg.	NA

SYSTEM FAILURE MODE EFFECTS AND CRITICALITY ANALYSIS • • • WORK SHEET

SHEET 2 OF 7

COMPONENT/SUBSYSTEM: PDKVA/Turbopump Subsystem
PREPARED BY: G. M. Witcraft
DATE: 7-27-71

REFERENCE: Spec. EC 20246
REVISION: 1
DATE: 4-30-71

FAILURE MODE (CODE #)	PHASE	EFFECTS ON SYSTEM OPERATION	FAILURE EFFECT CATEGORY
Premature Closure (Actuator Speed) (03)	A,B, L-N	Not applicable. Valve and actuator are closed	N/A
	C-F, K	This failure mode can occur at any time the limited torque capability of the actuator is sufficient to drive the valve closed against the existing pressure differential. The exact portion of the operating cycle where the valve can not be closed has not yet been established. For this analysis, the transition is assumed to occur at some point during thrust buildup (Phase F) in the startup and in pump tailoff (Phase K) during shutdown. Although the end effect of the malfunction is the loss of operation of the TPA leg, the magnitude of the transient effects will depend on the engine operating point at the time of failure. In Phase C there is no transient effect, since flow through the system has not yet started. In Phase D and the applicable portion of L, flow through the leg will stop, but operation will continue with the surviving leg with no requirement for corrective action. During the phases where the turbine is operating, the malfunction would result in turbine overspeed and eventual massive damage unless turbine flow were stopped by rapid closure of either the TBV or TDBV. The time available for closing the block valve will also depend on the operating point at the time of failure, but it is expected to be short enough to require automatic detection and correction at any point.	IIIA
	G-J	Not possible. Valve cannot be closed against existing pressure differentials. End Effect: Loss of operation of TPA leg	NP

SYSTEM FAILURE MODE EFFECTS AND CRITICALITY ANALYSIS • • • WORK SHEET

SHEET 3 OF 7

COMPONENT/SUBSYSTEM: PDKVA/Turbopump Subsystem PREPARED BY: C. M. Witcraft DATE: 7-27-71

REFERENCE: Spec. EC 90246 REVISION: A DATE: 4-30-71

FAILURE MODE (CODE #)	PHASE	EFFECTS ON SYSTEM OPERATION	FAILURE EFFECT CATEGORY
[illegible] Closure [illegible] speed) (04)	A-C,I-M	Not applicable. Valve is closed	NA
	D-K	Not possible. Valve can not voluntarily close at rupture speed. The check valves can only close rapidly in response to some other malfunction that interrupts flow through the TPA leg, and under these circumstances, rapid closure under the influence of the reverse pressure differential is its normal checking function.	NP
Inadvertent Open (05)	A-C,L-M	Inadvertent retraction of the PDKVA actuator removes a secondary block against gross flow of propellant from the tank into the pump discharge line during the cooldown and coast periods. The PSOV must block flow from the tank to permit normal cooldown and to prevent large propellant losses during coast.	IIA
	D-K	Not applicable. Actuator is already retracted, and valve is open.	NA
		End Effect: System safety degradation	

SYSTEM FAILURE MODE EFFECTS AND CRITICALITY ANALYSIS • • • WORK SHEET

SHEET 4 OF 7

COMPONENT/SUBSYSTEM: PDKVA/Turbopump Subsystem PREPARED BY: G. M. Witcraft DATE: 7-27-71

REFERENCE: Spec. EC 90246 REVISION: A DATE: 4-30-71

FAILURE MODE (CODE #)	PHASE	EFFECTS ON SYSTEM OPERATION	FAILURE EFFECT CATEGORY
Fails at Intermediate Position (06)	A-B, E-F, L-M	Multiple failure. There are two primary mechanisms for this failure mode. The actuator can fail in an intermediate position during opening or closure or the motion of the valve itself can be restricted during opening or closing. Intermediate failure of the actuator during these phases when it is in either the fully closed or fully open position would require at least two independent malfunctions, the first to cause it to move from its normal position and the second to cause it to fail in an intermediate position. The valve, itself, can not spontaneously move from its normal position, and it is assumed to be fully open from the start of bootstrap until some point in pump tailoff where the flow is insufficient to keep the valve fully open against its bias spring.	NF
	C-D, K	This failure mode can occur by malfunction of the actuator in an intermediate during retraction (Phase C) or closure (End of Phase K) or by internal restriction of the valve motion during phases D, E, K. Although the actuator failure would still permit limited movement of the valve so that it could perform its checking function, the gross effect of both mechanisms is the same. The restriction of flow from the pump would cause an imbalance between the two TPA's, precluding their operation in parallel during the powered phases. The effect during the cooldown and coast periods would be as described under (01) above.	IIIA
	G-J	Not possible. Valve cannot be moved to intermediate position against existing pressure differentials. End Effect: Loss of operation of TPA leg.	NP

SYSTEM FAILURE MODE EFFECTS AND CRITICALITY ANALYSIS • • • WORK SHEET

SHEET 5 OF 7

COMPONENT/SUBSYSTEM: PDKVA/Turbopump Subsystem PREPARED BY: G. M. Witcraft DATE: 7-27-71

REFERENCE: Spec. EC 90246 REVISION: A DATE: 4-30-71

FAILURE MODE (CODE #)	PHASE	EFFECTS ON SYSTEM OPERATION	FAILURE EFFECT CATEGORY
Fails to Control (07)	A-M	Not applicable. Valve has no control function.	NA
Internal Leakage (08)	A-C, L-M	Excessive internal leakage during the coast and cooldown periods is a loss of redundancy in blocking gross flow from the propellant tank as described in (01) above.	IIA
	D	Not applicable. During this phase, the valve has no requirement to block flow in either direction.	NA
	E-K	Excessive reverse internal leakage degrades system safety through the loss of redundancy in blocking reverse flow through the pump if it is necessary to shut down that TPA leg. End Effect: System safety degradation.	IIA
External Leakage (09)	A-C	The specific effects of an external leak at the PDKVA depend on the location of the leak. If it occurs upstream of the valve seat, there is a loss of redundancy in containing the propellant in the tank during the coast period. The PSOV must seal to prevent continual propellant loss. A leak downstream of the seat has no system effect at this time, since the line has no operating function during coast.	IIA

SYSTEM FAILURE MODE EFFECTS AND CRITICALITY ANALYSIS • • • WORK SHEET

SHEET 6 OF 7

COMPONENT/SUBSYSTEM: PDKVA/Turbopump Subsystem

PREPARED BY: G. M. Witcraft

DATE: 7-27-71

REFERENCE: Spec. EC 90246

REVISION:

DATE: 4-30-71

FAILURE MODE (CODE #)	PHASE	EFFECTS ON SYSTEM OPERATION	FAILURE EFFECT CATEGORY
	D-K	An external leak either upstream or downstream of the valve seat requires shutting down the TPA leg and continuing operations in the single TPA mode. If it occurs upstream of the valve seat, the PSOV, TBV, and TDBV must all seal to prevent continuing loss of propellant either from the tank or through the pump bearing in the inoperative TPA. A leak downstream of the seat requires the PDKV to seal to block loss of propellant.	IIIA
	L-M	During cooldown, a leak downstream of the PDKVA seat is a loss of redundancy in containing the propellant in the pump discharge line. The PDKV must close to permit normal cooldown operation. For a leak upstream of the valve seat, the PSOV must close to block continuous loss of propellant. In addition, the TBV and the TDBV must both close to prevent small losses of propellant through the pump bearing during periods of cooldown flow. End Effect: Loss of operation of TPA leg	IIA
Body Rupture (10)	A-C,L-M	The effect of this failure mode during these phases is a loss of redundancy in containing propellant in the tank and in the pump discharge and turbine lines. The PSOV is required to close to block loss of propellant from the tank during all of these phases, the PDKV must close to permit cool-down to continue, and the TBV and TDBV must close to block a small loss of propellant through the pump bearing during cooldown flow.	IIA

SYSTEM FAILURE MODE EFFECTS AND CRITICALITY ANALYSIS • • • WORK SHEET

SHEET 7 OF 7

COMPONENT/SUBSYSTEM: PDKVA/Turbopump Subsystem PREPARED BY: G. M. Witcraft DATE: 7-27-71

REFERENCE: Spec. EC 90246 REVISION: A DATE: 4-30-71

FAILURE MODE (CODE #)	PHASE	EFFECTS ON SYSTEM OPERATION	FAILURE EFFECT CATEGORY
	D-E, K	Rupture of the PDKVA housing results in the loss of operation of the affected TPA leg. If it occurs during Phase D there is no significant transient effect. The PSOV would have to be closed to stop loss of propellant but operations would continue on the surviving leg. If it occurs while power is being applied to the turbine, the reduced pump discharge pressure will permit a large propellant flow, loss of pump suction pressure, and over-speed of the TPA with massive damage to the TPA and adjacent equipment. The TBV (or TDBV) must be closed rapidly to prevent the TPA runaway.	IIIA
	F-J	In addition to the problem of TPA runaway encountered during phase E or K, the sudden loss of flow through the TPA leg may cause damage to the reactor as described under Inadvertent Closure (Rupture Speed), (04), of the PSOV. End Effect: Total loss of engine operation. NOTE: Since both the PDKVA and PDKV are contained in a common housing, there could be a single failure resulting in rupture of both valves. In this event, the results would be as described under the PDKV, below. For the present analysis, however, the two valves are considered separate entities.	IV

SYSTEM FAILURE MODE EFFECTS AND CRITICALITY ANALYSIS • • • WORK SHEET

SHEET 7 OF 7

COMPONENT/SUBSYSTEM: PDKVA/Turbopump Subsystem PREPARED BY: G. M. Witcraft DATE: 7-27-71

REFERENCE: Spec. EC 90246 REVISION: A DATE: 4-30-71

FAILURE MODE (CODE #)	PHASE	EFFECTS ON SYSTEM OPERATION	FAILURE EFFECT CATEGORY
	D-E, K	Rupture of the PDKVA housing results in the loss of operation of the affected TPA leg. If it occurs during Phase D there is no significant transient effect. The PSOV would have to be closed to stop loss of propellant but operations would continue on the surviving leg. If it occurs while power is being applied to the turbine, the reduced pump discharge pressure will permit a large propellant flow, loss of pump suction pressure, and over-speed of the TPA with massive damage to the TPA and adjacent equipment. The TBV (or TDBV) must be closed rapidly to prevent the TPA runaway.	IIIA
	F-J	In addition to the problem of TPA runaway encountered during phase E or K, the sudden loss of flow through the TPA leg may cause damage to the reactor as described under Inadvertent Closure (Rupture Speed), (04), of the PSOV. End Effect: Total loss of engine operation. NOTE: Since both the PDKVA and PDKV are contained in a common housing, there could be a single failure resulting in rupture of both valves. In this event, the results would be as described under the PDKV, below. For the present analysis, however, the two valves are considered separate entities.	IV

4.2.2.3 Pump Discharge Check Valve (PDKV)

a. Description and Function

A 5-inch check valve is located downstream of the PDKVA in each of the pump discharge lines. They are actually contained in common housings with the PDKVA's (See Dwg. 1139291, Fig. 4.2-3). Their primary function is to permit isolation of an inoperative pump by preventing back flow of propellant from an operating pump into the inoperative pump exit.

The present concept of the PDKV is a flapper type valve with metal to metal sealing surfaces. It is similar to the PDKVA except it has no actuator. The flapper face is self-aligning by means of a partial ball-joint. Torsion springs which hold the valve in a normally closed position are located on the pivot shaft between the hinge ears which connect the flapper to the shaft. These springs will hold the valve closed against a pressure differential of 0.5 to 4.0 psi. Anti-chatter snubbers bear on each of the hinge ears. A potentiometer for monitoring the valve position is attached to one end of the shaft and is enclosed in a cover which is sealed to the valve housing. The potentiometer cavity is connected to the downstream side of the valve by a small bleed-off line. Under reverse flow conditions the PDKV will not leak from the outlet to the inlet in excess of 2.0×10^4 standard cubic inches per minute when the outlet pressure is 1450 psia and the inlet pressure is zero psia.

The PDKV assembly is redundant to the PDKVA in the propellant feed system to block the back-flow of propellant through an inoperative turbopump assembly during engine operation in the single TPA mode. The PDKV assembly permits propellant flow through the propellant feed system during all normal engine operating periods. It partially opens by pressure in the pump discharge line during engine chilldown and pre-start phases. Pump discharge pressure during the engine start operation opens it fully. When the PSOV closes at the end of the pump tailoff phase of engine shutdown, it is closed by the action of the return spring.

b. PDKV Modes of Failure

Several of the failure modes listed in Table 4-2 are not applicable to the PDKV. Since it has no actuator, the modes related to Inadvertent Closure (03 and 04) and Inadvertent Open (05) do not pertain. Fails to Control (07) does not apply because the valve has no control function.

SYSTEM FAILURE MODE EFFECTS AND CRITICALITY ANALYSIS * * * SUMMARY SHEET

SHEET 1 OF 2

COMPONENT/SUBSYSTEM: PDKV/Turbopump Subsystem

PREPARED BY: G. M. Witcraft

DATE: 7-30-71

REFERENCE: Spec. EC-90246

REVISION: A

DATE: 4-30-71

FAILURE MODE (CODE *)	FAILURE EFFECT CATEGORY												
	ENGINE OPERATIONAL PHASES												
	A	B	C	D	E	F	G	H	I	J	K	L	M
		COAST		STARTUP				SHUTDOWN				COOLDOWN	
	LAUNCH	POST OPERATIONS	PRE-START OPERATIONS	TEMP. CONDITION	BOOT STRAP	THRUST BUILDUP	RATED OPERATION	THROTTLING	THROTTLE HOLD	TEMP. RETREAT	PUMP TAILOFF	EARLY	PULSE
Fails to Move from Full Open Position (01)	NA			IIA								NA	
Fails to Move From Full Closed Position (02)	NA			IIIA	NA								
Inadvertent Closure (Actuator Speed) (03)	NA			NP								NA	
Inadvertent Closure (Rupture Speed) (04)	NA			NP								NA	
Inadvertent Open (05)	NP			NA								NP	
Fails at Intermediate Position (06)	NP			IIIA		MF					IIA	NP	

SYSTEM FAILURE MODE EFFECTS AND CRITICALITY ANALYSIS * * * SUMMARY SHEET

SHEET 2 OF 2

COMPONENT/SUBSYSTEM: PDKV/Turbopump Subsystem

PREPARED BY: G. M. Witcraft

DATE: 7-30-71

REFERENCE: Spec. EC-90246

REVISION: A

DATE: 4-30-71

FAILURE MODE (CODE #)	FAILURE EFFECT CATEGORY												
	ENGINE OPERATIONAL PHASES												
	A	B	C	D	E	F	G	H	I	J	K	L	M
		COAST		STARTUP				SHUTDOWN				COOLDOWN	
	LAUNCH	POST OPERATIONS	PRE-START OPERATIONS	TEMP. CONDITION	BOOT STRAP	THRUST BUILDUP	RATED OPERATION	THROTTLING	THROTTLE HOLD	TEMP. RETREAT	PUMP TAILOFF	EARLY	PULSE
Fails to Control (07)	NA												
Internal Leakage (08)	NA			IIA									
External Leakage (09)	NA			IIIB									
Body Rupture (10)	NA			IV									

SYSTEM FAILURE MODE EFFECTS AND CRITICALITY ANALYSIS • • • WORK SHEET

COMPONENT/SUBSYSTEM: PDKV/Turbopump Subsystem
REFERENCE: Spec. EC-90246

PREPARED BY: G. M. Witcraft
REVISION: A

SHEET 1 OF 5
DATE: 7-30-71
DATE: 4-30-71

FAILURE MODE (CODE #)	PHASE	EFFECTS ON SYSTEM OPERATION	FAILURE EFFECT CATEGORY
Fails to Move From Full Open Position (01)	A-C,L-M	Not applicable. Valve is closed.	NA
	D-K	Loss of the capability of the PDKV to close degrades system safety due to a loss of redundancy in isolating a malfunctioned TPA leg. If a leg is shut down, the PDKVA must close to prevent undesired flow out of the surviving system either back through the pump to the tank or externally in the event of a leak in the TPA area. End Effect: System safety degradation	IIA
Fails to Move From Full Closed Position (02)	A-C,L-M	Not applicable. Valve is not required to open during these phases.	NA
	D	Failure of a PDKV to open at the start of chilldown results in the loss of operation of the TPA leg for all subsequent phases D-K. Further operations must be performed in the single TPA mode. The TAV and TFBV in the malfunctioned leg should be left closed so that power is not applied to the unloaded pump, and the PSOV and PDKVA should be closed to complete the isolation of the inoperative leg.	IIIA.
	E-K	Not applicable. Valve is open. End Effect: Loss of operation of TPA leg.	NA

SYSTEM FAILURE MODE EFFECTS AND CRITICALITY ANALYSIS • • • WORK SHEET

SHEET 2 OF 5

COMPONENT/SUBSYSTEM: PDKV/Turbopump Subsystem PREPARED BY: G. M. Witcraft DATE: 7-30-71

REFERENCE: Spec. EC-90246 REVISION: A DATE: 4-30-71

FAILURE MODE (CODE #)	PHASE	EFFECTS ON SYSTEM OPERATION	FAILURE EFFECT CATEGORY
Inadvertent Closure (Actuator Speed) (03)	A-C,L-M	Not applicable. Valve is closed.	NA
	D-K	Not possible. The valve has no actuator and hence can not be closed by externally applied forces. Neither can it spontaneously close under normal engine operation.	NP
Inadvertent Closure (Rupture Speed) (04)	A-C,L-M	Same as (03), above.	NA
	D-K	Same as (03), above	NP
Inadvertent Open (05)	A-C,L-M	Not possible. Valve has no actuator and can not spontaneously move from the closed position.	NP
	D-K	Not applicable. Valve is open.	NA
Fails at Intermediate Position (06)	A-C,L-M	Not possible. Valve has no actuator and can not spontaneously move from the closed position.	NP
	D-E	Failure of a PDKV in an intermediate position during open (Phases D&E) will restrict flow through its TPA leg causing an imbalance between the two TPA's that will preclude their operation in parallel at some point in the later powered phases. Attempts to continue operations with both pumps may result in stalling the pump in the malfunctioned leg somewhere during the engine startup with accompanying overspeed of the TPA and potential structural damage. To prevent such damage, the malfunctioned leg should be isolated by leaving the TBV and TDBV closed and closing the PSOV and PDKVA and operation continued in the single TPA mode.	IIIA

SYSTEM FAILURE MODE EFFECTS AND CRITICALITY ANALYSIS WORK SHEET

SHEET 3 OF 5

COMPONENT/SUBSYSTEM: PDKV/Turbopump Subsystem

PREPARED BY: G. M. Witcraft DATE: 7-30-71

REFERENCE: Spec. EC-90246

REVISION: A DATE: 4-30-71

FAILURE MODE (CODE #)	PHASE	EFFECTS ON SYSTEM OPERATION	FAILURE EFFECT CATEGORY
	F-J	Multiple failure. The valve would only be called on to close in response to a malfunction that requires isolation of the TPA leg. Failure in an intermediate position during such a closing would represent a separate, independent malfunction.	MF
	K	Failure of the valve to close when the PSOV's are closed at the end of pump tailoff degrades system safety slightly by the loss of redundancy in containing propellant in the pump discharge line during the remainder of the cooldown operation. There would be no effect during the following coast period, but at the next engine start, the situation would be the same as if the valve failed intermediate during opening. End Effect: Loss of operation of TPA leg.	IIA

SYSTEM FAILURE MODE EFFECTS AND CRITICALITY ANALYSIS * * * WORK SHEET

SHEET 4 OF 5

COMPONENT/SUBSYSTEM: PDKV/Turbopump Subsystem

PREPARED BY: G. M. Witcraft

DATE: 7-30-71

REFERENCE: Spec. EC-90246

REVISION: A

DATE: 4-30-71

FAILURE MODE (CODE #)	PHASE	EFFECTS ON SYSTEM OPERATION	FAILURE EFFECT CATEGORY
Fails to Control (07)	A-M	Not applicable. [illegible] control function.	NA
Internal Leakage (08)	A-C	Not applicable. The [illegible] has no operating function during these phases.	NA
	D-M	Inability of the [illegible] to prevent reverse flow through the TPA leg degrades system [illegible] redundancy in the capability to [illegible] under [illegible] above. Under this failure mode, [illegible] to perform its normal transient [illegible], but the [illegible] must seal to prevent [illegible] the inoperative leg. If the leg were shut down [illegible] between the PDKV seat and the PDKVA seat, some [illegible] during all of these phases. End Effect: [illegible] gradation	IIA
External Leakage (09)	A-C	Not applicable. [illegible] has no operating function during these phases.	NA

SYSTEM FAILURE MODE EFFECTS AND CRITICALITY ANALYSIS WORK SHEET

COMPONENT/SUBSYSTEM: PDKV/Turbopump Subsystem

PREPARED BY: G. M. Witcraft

SHEET 5 OF 5

DATE: 7-30-71

REFERENCE: Spec. EC-90246

REVISION: A

DATE: 4-30-71

FAILURE MODE (CODE #)	PHASE	EFFECTS ON SYSTEM OPERATION	FAILURE EFFECT CATEGORY
	D-M	The effect of an external leak at a PDKV depends on which side of the valve seat it occurs. Upstream of the seat, it would require shutting down the leg and continuing operation in the single TPA mode. The valve would then have to seal to prevent external loss of propellant. Such a leak downstream of the seat can not be isolated and would result in excessive loss of propellant during engine operation and cooldown. The engine would still retain the capability of operating in some emergency mode for return of the vehicle to earth orbit. End Effect: Emergency mode operating capability only.	IIIB
Body Rupture (10)	A-C	Not applicable. Valve has no operating function during these phases.	NA
	D-M	Rupture of the PDKV housing results in complete loss of flow through the engine and total loss of all engine thrusting capability. If the operation has proceeded far enough to generate an appreciable fission product inventory for the burn (probably somewhere near or just after the end of the thrust buildup phase), the inability to cool the reactor may result in disassembly of the core. End Effect: Total loss of engine operation.	IV

4.2.2.4 Turbine Block Valve (TBV)

a. Description and Function

The TBV's (Figure 4.2-4) are 7 inch I.D. spring loaded poppet valves (Dwg. 1138915) located in the turbine inlet lines. They are used to block flow through the turbines during chilldown and cooldown and to provide an immediate emergency shutdown capability for a TPA during the powered operating phases.

The poppet is driven by an electric motor through a compound differential planetary gear system and ball screw. The valve opening or closing time is 500 $\pm$ 50 ms, and it will remain either open or closed without power to the actuator. (Note: This actuator speed differs from that indicated on the above drawing and the component specification. These documents have not yet been updated to reflect a recent decision to delete a separate emergency closing feature and increase the normal actuator speed to perform the emergency closing safety function).

The maximum allowable internal forward leakage is 5.2×10^5 standard cubic inches per minute of hydrogen with inlet pressure of 1000 psia. Maximum allowable internal leakage, outlet to inlet is 2.6×10^3 standard cubic inches per minute of hydrogen with outlet pressure of 30 psia and inlet pressure of 1×10^{-9} mm Hg.

The TBV's are maintained closed during the Temperature Conditioning and Cooldown phases to block flow through the turbines and during coast to prevent any loss of propellant through the pump bearings if a PSOV does not seal. Both valves are opened and closed for checkout during prestart operations. They are opened at the end of Temperature Conditioning to initiate bootstrap and are held open until the end of pump tailoff to permit operation of the TPA's. During these phases, they provide the capability for emergency shutdown of a TPA leg and for isolation of a portion of a malfunctioned leg under operation in the single TPA mode.

b. Modes of Failure

All of the failure modes of Table 4-2 are applicable to the TBV's except Fails to Control (07). These valves have no control function.

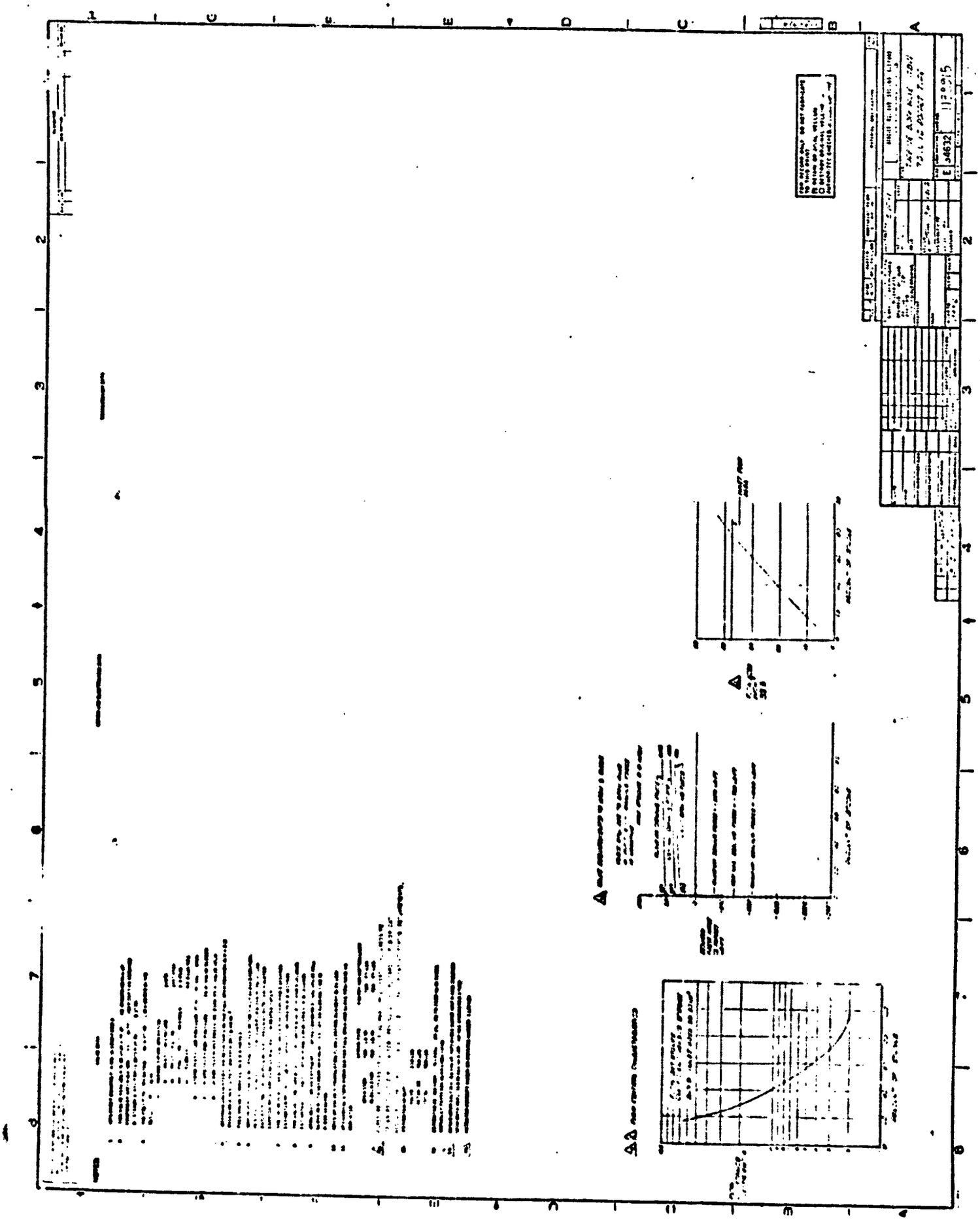

Turbine Block Valve (TBV)

Figure 4.2-4 (Sheet 1)

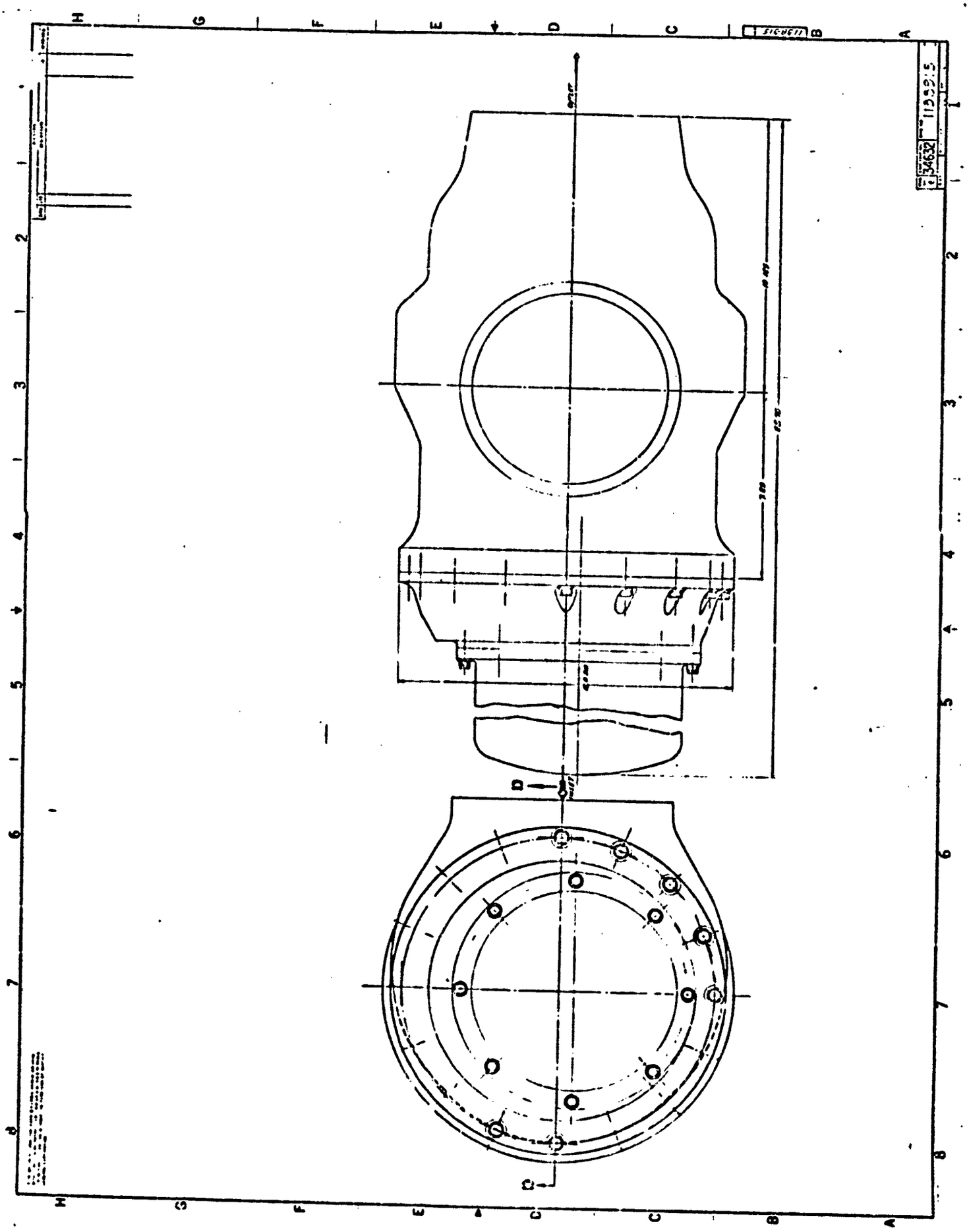

Figure 4.2-7 (Sheet 2)

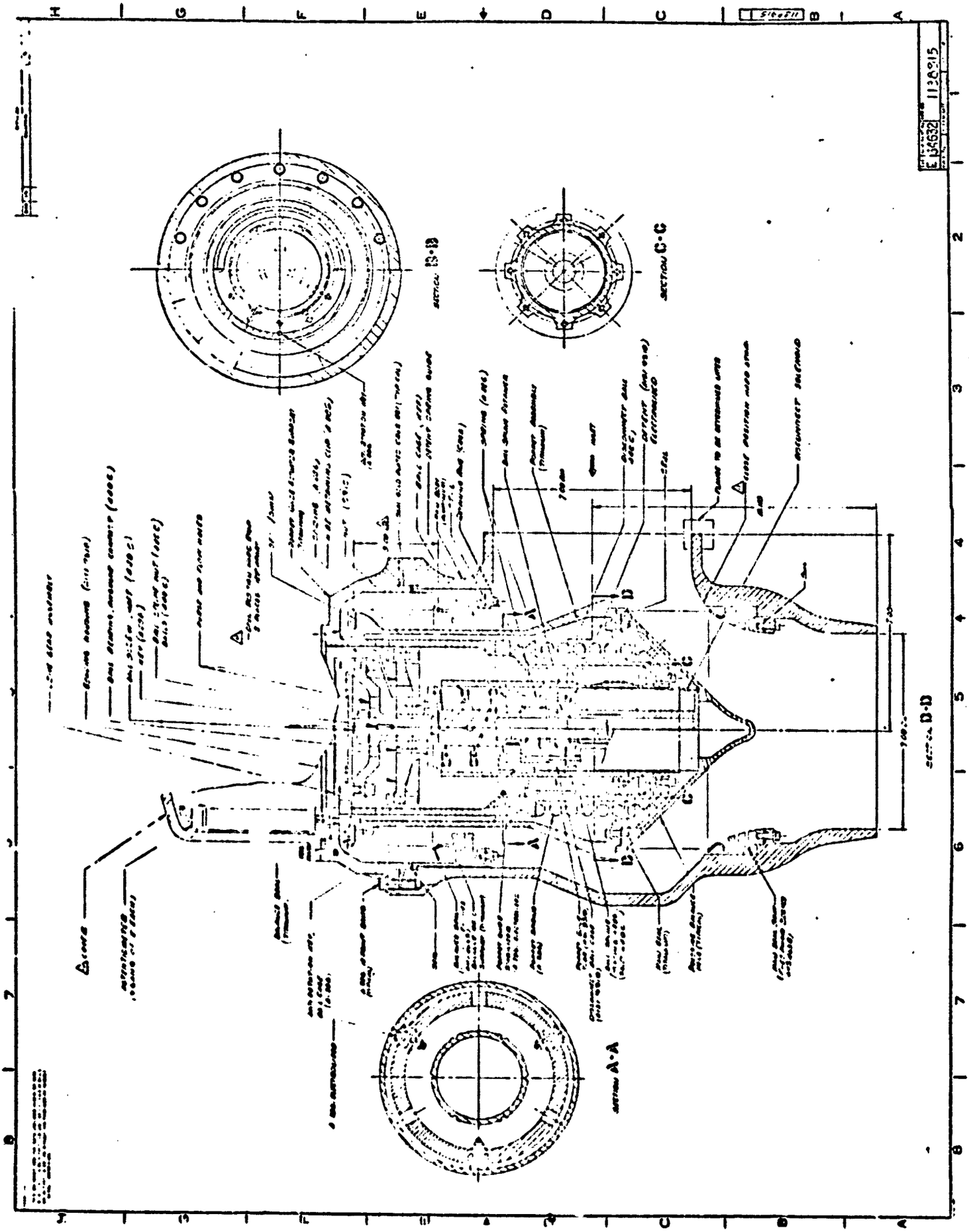

Figure 4.2-4 (Sheet 3)

SYSTEM FAILURE MODE EFFECTS AND CRITICALITY ANALYSIS • • • SUMMARY SHEET

SHEET 1 OF 2

COMPONENT/SUBSYSTEM: TBV/Turborump Subsystem

PREPARED BY: G. M. Witcraft

DATE: 7-30-71

REFERENCE: Spec. EC-90121

REVISION: A

DATE: 4-30-71

FAILURE MODE (CODE #)	FAILURE EFFECT CATEGORY												
	ENGINE OPERATIONAL PHASES												
	A	B	C	D	E	F	G	H	I	J	K	L	M
		COAST		STARTUP				SHUTDOWN				COOL DOWN	
	LAUNCH	POST OPERATIONS	PRE-START OPERATIONS	TEMP. CONDITION	BOOT STRAP	THRUST BUILDUP	RATED OPERATION	THROTTLING	THROTTLE HOLD	TEMP. RETREAT	PUMP TAILOFF	EARLY	PULSE
Fails to Move From Full Open Position (01)	NA	→	IIA	NA	IIA	→	→	→	→	→	→	NA	→
Fails to Move From Full Closed Position (02)	NA	→	IIIA	NA	IIIA	NA	→	→	→	→	→	→	→
Inadvertent Closure (Actuator Speed) (03)	NA	→	IIIA	NA	IIIA	→	→	→	→	→	→	NA	→
Inadvertent Closure (Rupture Speed) (04)	NA	→	IIIA	NA	IIIA	IV	→	→	→	→	IIIA	NA	→
Inadvertent Open (05)	IIA	→	→	→	NA	→	→	→	→	→	→	IIA	→
Fails at Intermediate Position (06)	MF	→	IIIA	MF	IIIA	MF	→	→	→	→	IIA	MF	→

SYSTEM FAILURE MODE EFFECTS AND CRITICALITY ANALYSIS • • • SUMMARY SHEET

SHEET 2 OF 2

COMPONENT/SUBSYSTEM: TBV/Turbopump Subsystem

PREPARED BY: G. M. Witcraft

DATE: 7-30-71

REFERENCE: Spec. EC-90121

REVISION: A

DATE: 4-30-71

FAILURE MODE (CODE •)	FAILURE EFFECT CATEGORY												
	ENGINE OPERATIONAL PHASES												
	A	B	C	D	E	F	G	H	I	J	K	L	M
		COAST		STARTUP				SHUTDOWN				COOLDOWN	
	LAUNCH	POST OPERATIONS	PRE-START OPERATIONS	TEMP. CONDITION	BOOT STRAP	THRUST PUTLUP	RATED OPERATION	THROTTLING	THROTTLE HOLD	TEMP. RETREAT	PUMP TAILOFF	EARLY	PULSE
Fails to Control (07)	NA												
Internal Leakage (08)	IIA				NA							IIA	
External Leakage (09)	IIA			IIIB									
Body Rupture (10)	IIA			IV									

SYSTEM FAILURE MODE EFFECTS AND CRITICALITY ANALYSIS • • • WORK SHEET

SHEET 1 OF 8

COMPONENT/SUBSYSTEM: TBV/Turbopump Subsystem PREPARED BY: G. M. Witcraft DATE: 7-30-71

REFERENCE: Spec. EC-90121 REVISION: A DATE: 4-30-71

FAILURE MODE (CODE #)	PHASE	EFFECTS ON SYSTEM OPERATION	FAILURE EFFECT CATEGORY
Fails to Move From Full Open Position (01)	A,B,D, L-M	Not applicable. Valve is closed.	NA
	C	During checkout, the TBV's will be cycled once through their operating span. Inability to close after opening represents a loss of redundancy in blocking flow through the turbines during chilldown and cooldown and in providing rapid shutdown and isolation of a malfunctioning TPA leg. An external leak in the vicinity of the TPA could not be isolated.	IIA
	E-J	During powered engine operation, a TBV would be called on to close only in response to some malfunction the TPA leg. This failure mode, then represents a loss of redundancy in the capability to provide emergency shutdown of a failed leg if it is required. The TDBV must perform the emergency shutdown function and must remain closed to prevent TPA runaway. Following shutdown of the malfunctioned TPA leg, operation can continue in the single TPA mode with the TBV in the inoperative leg open. There would be some backflow from the turbine inlet line through the TPA bearing to the tank. The TDBV must close to block flow through the turbine and either the PSOV left open or its internal vent function, to prevent rupture of the bellows in the pump inlet line.	IIA
	K	Failure of the valve to close at the end of pump tailoff degrades system safet by destroying the capability to isolate an external leak in the vicinity of the TPA during cooldown. It also represents a loss of redundancy in preventing large propellant losses from the tank via the pump inlet line, TPA bearing, and turbine bypass system during the coast period. Failure of	IIA

SYSTEM FAILURE MODE EFFECTS AND CRITICALITY ANALYSIS • • • WORK SHEET

SHEET 1 OF 8

COMPONENT/SUBSYSTEM: TBV/Turbopump Subsystem PREPARED BY: G. M. Witcraft DATE: 7-30-71

REFERENCE: Spec. EC-90121 REVISION: A DATE: 4-30-71

FAILURE MODE (CODE #)	PHASE	EFFECTS ON SYSTEM OPERATION	FAILURE EFFECT CATEGORY
Fails to Move From Full Open Position (01)	A,B,D, L-M	Not applicable. Valve is closed.	NA
	C	During checkout, the TBV's will be cycled once through their operating span. Inability to close after opening represents a loss of redundancy in blocking flow through the turbines during chilldown and cooldown and in providing rapid shutdown and isolation of a malfunctioning TPA leg. An external leak in the vicinity of the TPA could not be isolated.	IIA
	E-J	During powered engine operation, a TBV would be called on to close only in response to some malfunction the TPA leg. This failure mode, then represents a loss of redundancy in the capability to provide emergency shutdown of a failed leg if it is required. The TDBV must perform the emergency shutdown function and must remain closed to prevent TPA runaway. Following shutdown of the malfunctioned TPA leg, operation can continue in the single TPA mode with the TBV in the inoperative leg open. There would be some backflow from the turbine inlet line through the TPA bearing to the tank. The TDBV must close to block flow through the turbine and either the PSOV left open, or its internal vent function, to prevent rupture of the bellows in the pump inlet line.	IIA
	K	Failure of the valve to close at the end of pump tailoff degrades system safety by destroying the capability to isolate an external leak in the vicinity of the TPA during cooldown. It also represents a loss of redundancy in preventing large propellant losses from the tank via the pump inlet line, TPA bearing, and turbine bypass system during the coast period. Failure of	IIA

SYSTEM FAILURE MODE EFFECTS AND CRITICALITY ANALYSIS • • • WORK SHEET

SHEET 1 OF 8

COMPONENT/SUBSYSTEM: TBV/Turbopump Subsystem PREPARED BY: G. M. Witcraft DATE: 7-30-71

REFERENCE: Spec. EC-90121 REVISION: A DATE: 4-30-71

FAILURE MODE (CODE #)	PHASE	EFFECTS ON SYSTEM OPERATION	FAILURE EFFECT CATEGORY
Fails to Move From Full Open Position (01)	A,B,D, L-M	Not applicable. Valve is closed.	NA
	C	During checkout, the TBV's will be cycled once through their operating span. Inability to close after opening represents a loss of redundancy in blocking flow through the turbines during chilldown and cooldown and in providing rapid shutdown and isolation of a malfunctioning TPA leg. An external leak in the vicinity of the TPA could not be isolated.	IIA
	E-J	During powered engine operation, a TBV would be called on to close only in response to some malfunction the TPA leg. This failure mode, then represents a loss of redundancy in the capability to provide emergency shutdown of a failed leg if it is required. The TDBV must perform the emergency shutdown function and must remain closed to prevent TPA runaway. Following shutdown of the malfunctioned TPA leg, operation can continue in the single TPA mode with the TBV in the inoperative leg open. There would be some backflow from the turbine inlet line through the TPA bearing to the tank. The TDBV must close to block flow through the turbine and either the PSOV left open or its internal vent function, to prevent rupture of the bellows in the pump inlet line.	IIA
	K	Failure of the valve to close at the end of pump tailoff degrades system safety by destroying the capability to isolate an external leak in the vicinity of the TPA during cooldown. It also represents a loss of redundancy in preventing large propellant losses from the tank via the pump inlet line, TPA bearing, and turbine bypass system during the coast period. Failure of	IIA

SYSTEM FAILURE MODE EFFECTS AND CRITICALITY ANALYSIS • • • WORK SHEET

SHEET 2 OF 8

COMPONENT/SUBSYSTEM: TBV/Turbopump Subsystem PREPARED BY: G.M. Witcraft DATE: 7-30-71

REFERENCE: Spec. EC-90121 REVISION: A DATE: 4-30-71

FAILURE MODE (CODE #)	PHASE	EFFECTS ON SYSTEM OPERATION	FAILURE EFFECT CATEGORY
	K	the PSOV in an open or intermediate position would permit propellant losses large enough to preclude emergency mode operation. End Effect: System safety degradation	
Fails to Move From Full Closed Position (02)	A,B,D, L-M	Not applicable. Valve is not required to open during these phases.	NA
	C,E	Failure of a TBV to open either in checkout or at the start of the bootstrap phase results in complete loss of operation of the affected TPA leg. Further operation must be performed in the single TPA mode.	IIIA
	F-K	Not applicable. Valve is open. End Effect: Loss of Operation of TPA Leg.	NA

SYSTEM FAILURE MODE EFFECTS AND CRITICALITY ANALYSIS • • • WORK SHEET

COMPONENT/SUBSYSTEM: TBV/Turbopump Subsystem
REFERENCE: Spec. EC-90121

PREPARED BY: G. M. Witcraft
REVISION: A

SHEET 3 OF 8
DATE: 7-30-71
DATE: 4-30-71

FAILURE MODE (CODE #)	PHASE	EFFECTS ON SYSTEM OPERATION	FAILURE EFFECT CATEGORY
Inadvertent Closure (Actuator Speed) (03)	A-B,D, L-M	Not applicable. Valve is closed	NA
	C,E-K	Inadvertent closure of a TBV either in checkout or during engine operation results in loss of operation of the TPA leg. Further operation must be performed in the single TPA mode. In the high power phases where the chamber pressure demand exceeds 360 psi, the demand must be reduced to 360 psi to prevent the surviving pump from reaching excessive discharge pressures. The TDBV should be closed to block backflow from the turbine exit line through the TPA bearing to the tank. End Effect: Loss of operation of TPA leg.	IIIA
Inadvertent Closure (Rupture Speed) (04)	A-B,D, L-M	Not applicable. Valve is closed.	NA
	C,E,K	Same as (03) above	IIIA
	F-J	Rapid closure of a TBV during high chamber temperature operation may result in reactor core damage as previously described under Inadvertent Closure (Rupture Speed) (04) of the PSOV. In addition, the limit on the core seal pressure difference is exceeded. End Effect: Total loss of engine operation.	IV

SYSTEM FAILURE MODE EFFECTS AND CRITICALITY ANALYSIS • • • WORK SHEET

SHEET [illegible] OF 8

COMPONENT/SUBSYSTEM: TBV/Turbopump Subsystem — PREPARED BY: G. H. Witcraft — DATE: 7-[illegible]-71

REFERENCE: Spec. EC-[illegible]121 — REVISION: A — DATE: 4-30-71

FAILURE MODE (CODE #)	PHASE	EFFECTS ON SYSTEM OPERATION	FAILURE EFFECT CATEGORY
Inadvertent Open (05)	A-C	Opening of a TBV is a loss of redundancy in preventing large losses of propellant from the tank through the TPA bearing and out through the turbine bypass subsystem. During these phases, the turbine bypass could be closed to provide a secondary backup to a malfunctioned PSOV.	IIA
	D,L-M	The primary effect is a loss of redundancy in blocking flow through the turbine during chilldown and cooldown. The MDBV must remain closed to prevent continuous rotation of the TPA. Secondarily, there will be a small flow of propellant through the TPA bearing into the turbine inlet line during chilldown. During cooldown, there is a loss of redundancy in containing propellant in the tank and in the turbine inlet line. The PSOV must seal to prevent a continuous small flow of propellant via the TPA bearing. Such flow would provide some cooling of the core, but it would bypass the temperature sensitive reflector and stems. Any external leaks in the vicinity of the TPA could not be isolated.	IIA
	E-K	Not applicable. Valve is open. End Effect: System safety degradation	IA

SYSTEM FAILURE MODE EFFECTS AND CRITICALITY ANALYSIS • • • WORK SHEET

COMPONENT/SUBSYSTEM: TBV/Turbopump Subsystem
REFERENCE: Spec. EC-90171
PREPARED BY: G. M. Witcraft
REVISION: A
SHEET 5 OF 6
DATE: 7-20-71
DATE: 4-30-71

FAILURE MODE (CODE #)	PHASE	EFFECTS ON SYSTEM OPERATION	FAILURE EFFECT CATEGORY
Fails at Intermediate Position (06)	A,B,D, F-J, L-M	The failure of a TBV in an intermediate position during the phases where it is normally maintained in either the closed or open position is considered a multiple malfunction beyond the scope of this analysis. One malfunction would be required to cause the valve to move from its initial position and a second independent one to cause it to fail at some intermediate point in its span.	
	C,E	Failure of a TBV in an intermediate position during checkout or during opening at the start of bootstrap causes the loss of that TPA leg for all powered operating phases. The imbalance of flows through the two turbines would be too large to permit their operation in parallel, and engine operation would have to be performed in the single TPA mode. To permit the single TPA operation, the TPBV in the malfunctioned leg would be required to stay closed to block flow through the turbine and prevent runaway of the TPA and eventual structural damage to itself and adjacent components. During the powered operating phases (E-K), there would be a small backflow from the turbine inlet line, through the TPA bearing, to the pump inlet line. The PSOV would have to be left open, or its vent operate, to permit that flow to circulate back to the tank and prevent rupture of the bellows in the pump inlet line.	IIIA
	K	Failure of a TBV in an intermediate position during closing at the end of pump tailoff has effects as described under Fails to Move From Full Open Position (01), Phase K, above. End Effect: Loss of operation of TPA leg	IIA

SYSTEM FAILURE MODE EFFECTS AND CRITICALITY ANALYSIS • • • WORK SHEET

SHEET 1 OF 8

COMPONENT/SUBSYSTEM: TBV/Turbopump Subsystem

PREPARED BY: G. M. Witcraft

DATE: 7-30-71

REFERENCE: Spec. EC-00121

REVISION: A

DATE: 4-30-71

FAILURE MODE (CODE #)	PHASE	EFFECTS ON SYSTEM OPERATION	FAILURE EFFECT CATEGORY
Fails to Control (07)	A-H	Not applicable. Valve has no control function.	NA
Internal Leakage (08)	A-C	Failure of the valve to seal during these phases is a loss of redundancy in preventing large losses of propellant from the tank. The PSOV must seal to prevent a continuous flow of propellant through the TPA bearing to the turbine inlet line. For this period, the turbine bypass subsystem could be closed to provide a secondary block to a faulty PSOV.	IIA
	D, L-M	Excessive internal leakage of a TBV is a loss of redundancy in blocking flow through the turbine. The TDBV must seal to prevent continuous driving of the turbine during chilldown and during periods of propellant flow in cooldown. When the PSOV is open (Phase D) there will be a small flow of propellant through the TPA bearing into the turbine inlet line. After closure of the PSOV's, a leaking TBV is a loss of redundancy in containing propellant in the tank and in the turbine inlet line during cooldown flow. The PSOV must seal to prevent continuous flow of propellant through the TPA bearing into the turbine inlet line, and the system in the vicinity of the TPA must retain its physical integrity to prevent external loss of propellant during cooldown flow. In pulse cooldown (D), the turbine bypass subsystem could be closed to back up a faulty PSOV, but it would have to be cycled open for each cooldown pulse.	IIA
	E-K	Not applicable. Valve is open.	NA
		End Effect: System safety degradation	

SYSTEM FAILURE MODE EFFECTS AND CRITICALITY ANALYSIS • • • WORK SHEET

SHEET 7 OF 8

COMPONENT/SUBSYSTEM: TBV/Turbopump Subsystem

PREPARED BY: G. M. Witcraft

DATE: 7-31-71

REFERENCE: Spec. EC-90121

REVISION: A

DATE: 4-30-71

FAILURE MODE (CODE #)	PHASE	EFFECTS ON SYSTEM OPERATION	FAILURE EFFECT CATEGORY
External Leakage (09)	A-C	External leakage downstream of the valve seat (between seat and turbine) is a loss of redundancy in preventing large losses of propellant from the tank. The PSOV must seal to prevent such losses through the TPA bearing. A leak upstream of the seat is not applicable, since that portion of the system has no function during coast.	IIA
	D-M	A leak upstream of the valve seat would result in excessive external propellant loss during all periods of propellant flow. The loss of a substantial portion of the turbine drive stream would prevent the engine from maintaining the full programmed thrust. Attempts to operate at full thrust would generate excessive pump discharge pressures and core seal pressure differentials since the additional propellant must pass through the nozzle tubes and reflector before being lost from the system. During cooldown, the loss of flow through the nozzle may reduce the thrust level below that required to settle the propellant in the tank and maintain liquid flow sufficient to prevent damage to the reactor. Such a leak downstream of the valve seat could be isolated and operations continued in the single TPA mode. End effect: Emergency mode operating capability only.	IIID

SYSTEM FAILURE MODE EFFECTS AND CRITICALITY ANALYSIS • • • WORK SHEET

SHEET 8 OF 8

COMPONENT/SUBSYSTEM: TBV/Turbopump Subsystem

PREPARED BY: G. M. Witcraft

DATE: 7-30-71

REFERENCE: Spec. TC-00121

REVISION: A

DATE: 4-30-71

FAILURE MODE (CODE #)	PHASE	EFFECTS ON SYSTEM OPERATION	FAILURE EFFECT CATEGORY
Body Rupture (10)	A-C	The effect of a ruptured valve housing during coast is a loss of redundancy in blocking large losses of propellant from the main tank. The PSOV must seal to prevent continuous propellant loss through the TPA bearing.	IIA
	D-M	This failure mode results in nearly complete loss of flow through the thrust chamber and the loss of further engine operating capability. In chilldown, the reduced impedence downstream of the stems may permit flooding of the stems and cause a major power surge. After the burn has proceeded far enough to build an appreciable fission product inventory, inability to cool the reactor will result in reactor and pressure vessel melting and disassembly. End effect: Total loss of engine operation.	IV

4.2.2.5 Turbine Discharge Block Valve (TDBV)

a. Description and Function

The TDBV's are 7 inch I.D. poppet valves (Dwg. 1138916, Figure 4.2-5) located in the turbine discharge lines. Their functions are to provide redundant blockage of flow through the turbines during the chilldown and cooldown phases, redundant emergency TPA shutdown capability during powered operation and partial isolation capability for an inoperative leg. In addition, they are a backup to the PSOV against large losses of propellant from the tank during cooldown and coast. Their functional requirements and operating characteristics are identicial to the TBV's.

b. Modes of Failure

Same as TBV (4.2.2.4)

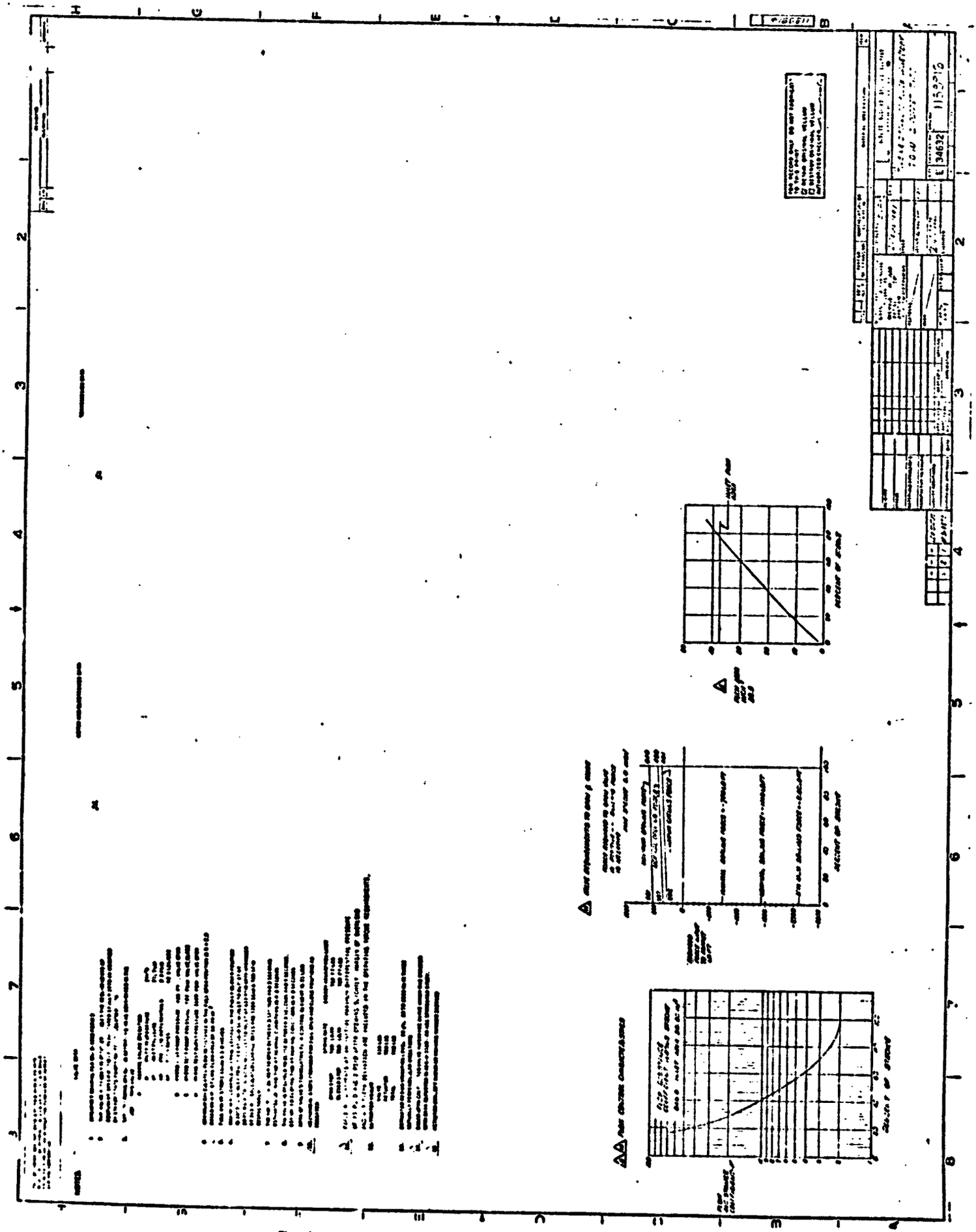

Turbine Discharge Block Valves (TDBV)

Figure 4.2-5 (Sheet 1)

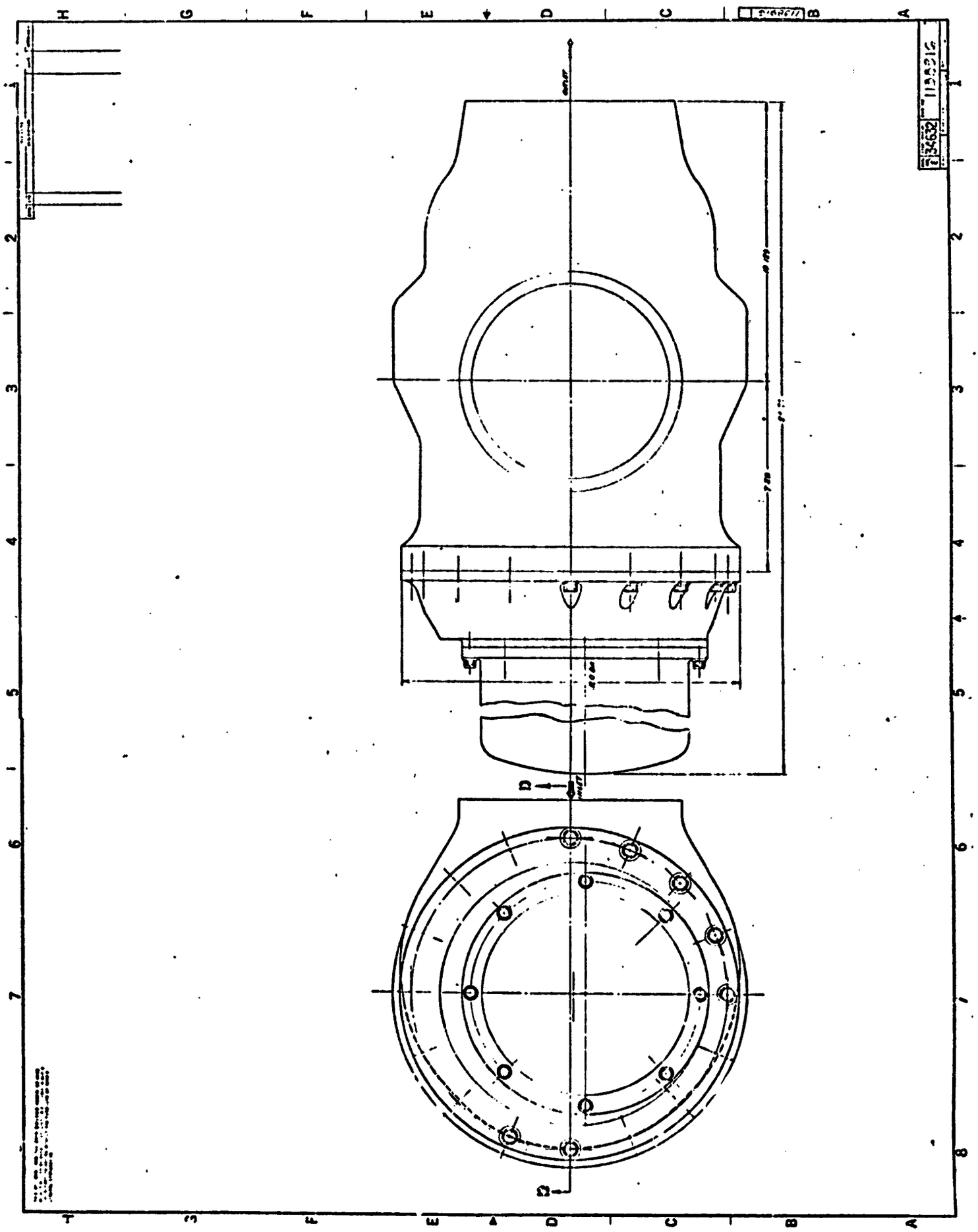

Figure 4.2-5 (Sheet 2)

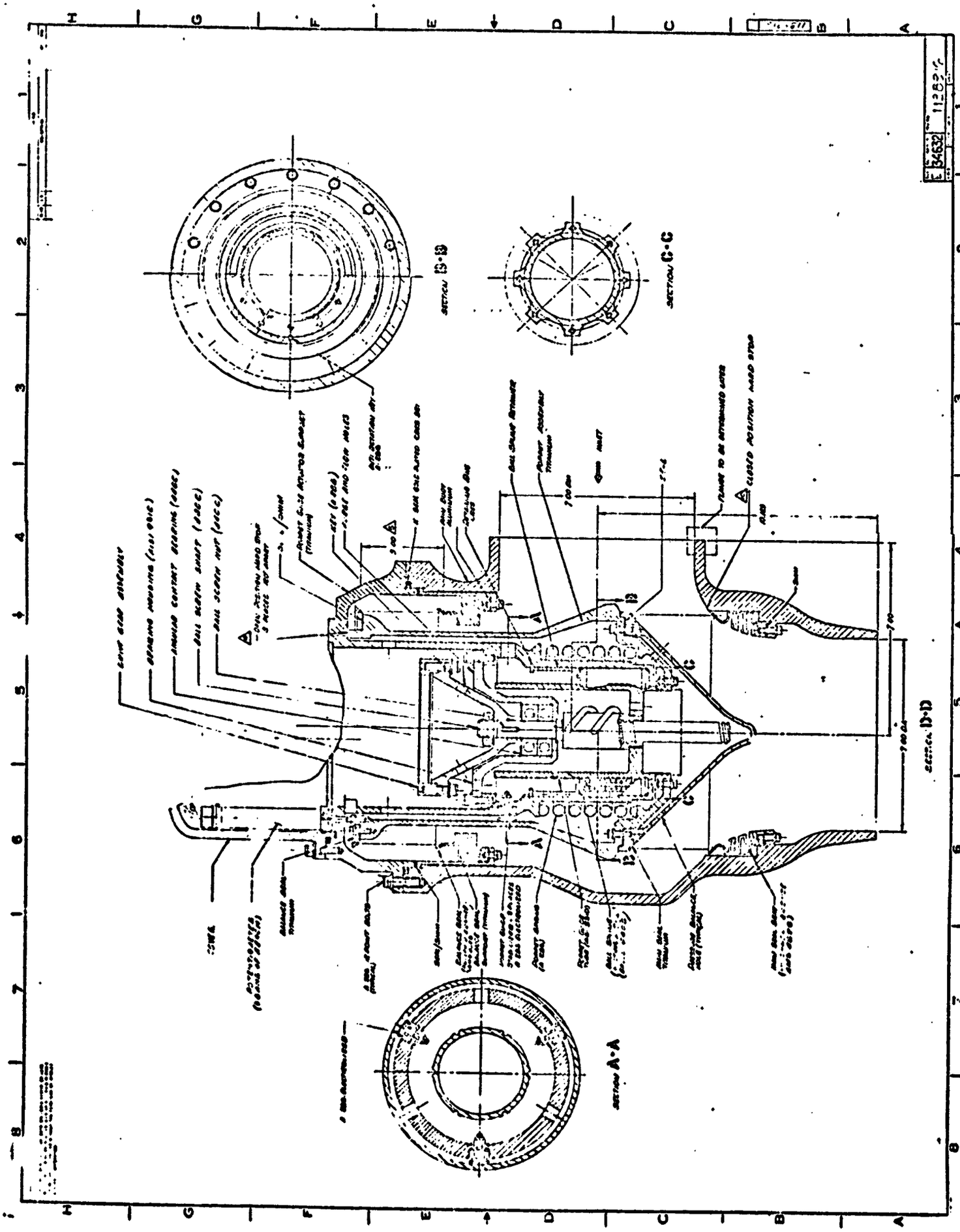

Figure 4.2-5 (Sheet 3)

SYSTEM FAILURE MODE EFFECTS AND CRITICALITY ANALYSIS • • • SUMMARY SHEET

SHEET 1 OF 2

COMPONENT/SUBSYSTEM: TDBV/Turbopump Subsystem PREPARED BY: G. M. Witcraft DATE: 7-30-71

REFERENCE: Spec. EC-90121 REVISION: A DATE: 4-30-71

FAILURE MODE (CODE #)	FAILURE EFFECT CATEGORY												
	ENGINE OPERATIONAL PHASES												
	A	B	C	D	E	F	G	H	I	J	K	L	M
		COAST		STARTUP				SHUTDOWN				COOLDOWN	
	LAUNCH	POST OPERATIONS	PRE-START OPERATIONS	TEMP. CONDITION	BOOT STRAP	THRUST BUILDUP	RATED OPERATION	THROTTLING	THROTTLE HOLD	TEMP. RETREAT	PUMP TAILOFF	EARLY	PULSE
Fails to Move From Full Open Position (01)	NA		IIA	NA	IIA							NA	
Fails to Move From Full Closed Position (02)	NA		IIIA	NA	IIA	NA							
Inadvertent Closure (Actuator Speed) (03)	NA		IIIA	NA	IIIA							NA	
Inadvertent Closure (Rupture Speed) (04)	NA		IIIA	NA	IIIA	IV					IIIA	NA	
Inadvertent Open (05)	IIA				NA							IIA	
Fails at Intermediate Position (06)	MF		IIIA	MF	IIIA	MF					IIA	MF	

SYSTEM FAILURE MODE EFFECTS AND CRITICALITY ANALYSIS • • • SUMMARY SHEET

SHEET 2 OF 2

COMPONENT/SUBSYSTEM: TDBV/Turbopump Subsystem

PREPARED BY: G. M. Witcraft

DATE: 7-30-71

REFERENCE: Spec. EC-90121

REVISION: A

DATE: 4-30-71

FAILURE MODE (CODE #)	FAILURE EFFECT CATEGORY												
	ENGINE OPERATIONAL PHASES												
	A	B	C	D	E	F	G	H	I	J	K	L	M
		COAST		STARTUP				SHUTDOWN				COOLDOWN	
	LAUNCH	POST OPERATIONS	PRE-START OPERATIONS	TEMP. CONDITION	BOOT STRAP	THRUST BUILDUP	RATED OPERATION	THROTTLING	THROTTLE HOLD	TEMP. RETREAT	PUMP TAILOFF	EARLY	PULSE
Fails to Control (07)	NA												
Internal Leakage (08)	IIA				NA							IIA	
External Leakage (09)	IIA			IIIB									
Body Rupture (10)	IIA			IV									

SYSTEM FAILURE MODE EFFECTS AND CRITICALITY ANALYSIS • • • WORK SHEET

SHEET 1 OF 7

COMPONENT/SUBSYSTEM: TDBV/Turbopump Subsystem PREPARED BY: G. M. Witcraft DATE: 7-30-71

REFERENCE: Spec EC-90121 REVISION: A DATE: 4-30-71

FAILURE MODE (CODE #)	PHASE	EFFECTS ON SYSTEM OPERATION	FAILURE EFFECT CATEGORY
Fails to Move from Full Open Position (01)	A-B,D, L-M	Not applicable. Valve is closed.	NA
	C	Same as TBV	IIA
	E-J	During powered engine opeation a TDBV would only be called on to close in response to some malfunction in the TPA leg. This failure mode degrades system safety through a loss of redundancy in the capability to provide emergency shutdown of a failed leg if it is required. The TBV must perform the emergency shutdown function and must remain closed to prevent catastrophic overspeed of the TPA.	IIA
	K	Failure of the valve to close at the end of pump tailoff degrades system safety by destroying the capability to isolate an external leak in the vicinity of the TPA during cooldown. It also represents a loss of redundancy in preventing large propellant losses from the tank via the pump inlet line, TPA bearing, and turbine exit line during the coast period. Failure of the PSOV in an open or intermediate position would permit propellant losses large enough to preclude emergency mode operation. End Effect: System safety degradation	IIA

SYSTEM FAILURE MODE EFFECTS AND CRITICALITY ANALYSIS • • • WORK SHEET

COMPONENT/SUBSYSTEM: TDBV/Turbopump Subsystem
REFERENCE: Spec. EC-90121

PREPARED BY: G. M. Witcraft
REVISION: A

SHEET 2 OF 7
DATE: 7-30-71
DATE: 4-30-71

FAILURE MODE (CODE #)	PHASE	EFFECTS ON SYSTEM OPERATION	FAILURE EFFECT CATEGORY
Fails to Move from Full Closed Position (02)	A-B, D, L-M	Not applicable. Valve is not required to open during these phases.	NA
	C, E	Failure of a TDBV to open either in checkout or at the start of the bootstrap phase results in complete loss of operation of the affected TPA leg. Further operation must be performed in the single TPA mode.	IIIA
	F-K	Not applicable. Valve is open.	NA
		End Effect: Loss of operation of TPA leg.	
Inadvertent Closure (Actuator Speed) (03)	A-B, D, L-M	Not applicable. Valve is closed.	NA
	C, E-K	Inadvertent closure of a TDBV either in checkout or during engine operation results in loss of operation of the TPA leg. Further operation must be performed in the single TPA mode. In the high power phases where the chamber pressure demand exceeds 360 psi, the demand must be reduced to 360 psi to prevent the surviving pump from reaching excessive discharge pressures. The TBV should be closed to block backflow from the turbine exit line through the TPA bearing to the tank.	IIIA
		End Effect: Loss of operation of TPA leg.	
Inadvertent Closure (Rupture Speed) (04)	A-B, D, L-M	Not applicable. Valve is closed	NA

SYSTEM FAILURE MODE EFFECTS AND CRITICALITY ANALYSIS • • • WORK SHEET

SHEET 3 OF 7

COMPONENT/SUBSYSTEM: TDBV/Turbopump Subsystem PREPARED BY: G. M. Witcraft DATE: 7-30-71

REFERENCE: Spec. EC-90121 REVISION: A DATE: 4-30-71

FAILURE MODE (CODE #)	PHASE	EFFECTS ON SYSTEM OPERATION	FAILURE EFFECT CATEGORY
Inadverent Closure (Rupture Speed) (04)	C,E,K	Same as (03).	IIIA
	F-J	Rapid closure of a TDBV during high chamber temperature operation may result in reactor core damage as previously described under Inadvertent Closure (Rupture Speed) (04) of the PSOV. End Effect: Total loss of engine operation.	IV
Inadvertent Open (05)	A-C	Opening of a TDBV is a loss of redundancy in preventing large losses of propellant from the tank through the TPA bearing and out the turbine exit line.	IIA
	D,L-M	The primary effect is a loss of redundancy in blocking flow through the turbine during chilldown and cooldown. The TBV must remain closed to prevent continuous rotation of the TPA. Secondarily, there will be a small flow of propellant through the TPA bearing into the turbine exit line during chilldown. During cooldown, there is a loss of redundancy in containing propellant in the tank and in the turbine inlet line. The PSOV must seal to prevent a continuous small flow of propellant via the TPA bearing. Such flow would provide some cooling of the core, but it would bypass the temperature sensitive reflector and stems. Any external leaks in the vicinity of the TPA could not be isolated.	IIA
	E-K	Not applicable. Valve is open. End Effect: System safety degradation.	NA

SYSTEM FAILURE MODE EFFECTS AND CRITICALITY ANALYSIS • • • WORK SHEET

SHEET 4 OF 7

COMPONENT/SUBSYSTEM: TDBV/Turbopump Subsystem

PREPARED BY: G. M. Witcraft

DATE: 7-30-71

REFERENCE: Spec EC-90121

REVISION: A

DATE: 4-30-71

FAILURE MODE (CODE #)	PHASE	EFFECTS ON SYSTEM OPERATION	FAILURE EFFECT CATEGORY
Fails at Intermediate Position (06)	A-B,D, F-J, L-M	Same as TBV	NF
	C-E	Failure of a TDBV in an intermediate position during checkout or during opening at the start of bootstrap causes the loss of that TPA leg for all powered operating phases. The imbalance of flows through the two turbines would be too large to permit their operation in parallel, and engine operation would have to be performed in the single TPA mode. To permit the single TPA operation, the TBV in the malfunctioned leg would be required to stay closed to block flow through the turbine and prevent runaway of the TPA and eventual structural damage to itself and adjacent components. During the powered operating phases (E-K), there would be a small backflow from the turbine exit line, through the TPA bearing, to the pump inlet line. The PSOV would have to be left open, or its vent function, to permit that flow to circulate back to the tank and prevent rupture of the bellows in the pump inlet line.	IIIA
	K	Failure of a TDBV in an intermediate position during closing at the end of pump tailoff has effects as described under Fails to Move from Full Open Position (01), phase K, above. End Effect: Loss of operation of TPA leg.	IIA

SYSTEM FAILURE MODE EFFECTS AND CRITICALITY ANALYSIS • • • WORK SHEET

COMPONENT/SUBSYSTEM: TDBV/Turbopump Subsystem
PREPARED BY: G. M. Witcraft
SHEET 5 OF 7
DATE: 7-30-71
REFERENCE: Sec. EC-90121
REVISION: A
DATE: 4-30-71

FAILURE MODE (CODE #)	PHASE	EFFECTS ON SYSTEM OPERATION	FAILURE EFFECT CATEGORY
Fails to Control (07)	A-M	Not applicable. Valve has no control function.	NA
Internal Leakage (08)	A-C	Failure of the valve to seal during these phases is a loss of redundancy in preventing large losses of propellant from the tank. The PSOV must seal to prevent a continuous flow of propellant through the TPA bearing and out the turbine exit line.	IIA
	D,L-M	Excessive internal leakage of a TDBV is a loss of redundancy in blocking flow through the turbine. The TBV must seal to prevent continuous driving of the turbine during chilldown and during periods of propellant flow in cooldown. When the PSOV is open (Phase D) there will be a small flow of propellant through the TPA bearing into the turbine exit line. After closure of the PSOV's, a leaking TDBV is a loss of redundancy in containing propellant in the tank and in the turbine inlet line during cooldown flow. The PSOV must seal to prevent continuous flow of propellant through the TPA bearing into the turbine exit line, and the system in the vicinity of the TPA must retain its physical integrity to prevent external loss of propellant during cooldown flow.	IIA
	E-K	Not applicable. Valve is open.	NA
		End Effect: System safety degradation.	

SYSTEM FAILURE MODE EFFECTS AND CRITICALITY ANALYSIS • • • WORK SHEET

SHEET 6 OF 7

COMPONENT/SUBSYSTEM: TDBV/Turbopump Subsystem

PREPARED BY: G. M. Witcraft

DATE: 7-30-71

REFERENCE: Spec. EC-90121

REVISION: A

DATE: 4-30-71

FAILURE MODE (CODE #)	PHASE	EFFECTS ON SYSTEM OPERATION	FAILURE EFFECT CATEGORY
External Leakage (09)	A-C	An external leak upstream of the valve seat (between seat and turbine) is a loss of redundancy in preventing large losses of propellant from the tank. The PSOV must seal to prevent such losses through the TPA bearing. A leak downstream of the seat is not applicable, since that portion of the system has no function during coast.	IIA
	D-M	A leak downstream of the valve seat would result in excessive external propellant loss during all periods of propellant flow. The loss of a substantial portion of the turbine exit stream would prevent the engine from maintaining the full programmed thrust. Attempts to operate at full thrust would generate excessive pump discharge pressures and core seal pressure differentials since the additional propellant must pass through the nozzle tubes and reflector before being lost from the system. During cooldown, the loss of flow through the nozzle may reduce the thrust level below that required to settle the propellant in the tank and maintain liquid flow sufficient to prevent damage to the reactor. Such a leak upstream of the valve seat could be isolated and operations continued in the single TPA mode. End Effect: Emergency mode operating capability only.	IIIB

SYSTEM FAILURE MODE EFFECTS AND CRITICALITY ANALYSIS • • • WORK SHEET

SHEET 7 OF 7

COMPONENT/SUBSYSTEM: TDBV/Turbopump Subsystem — PREPARED BY: G. M. Witcraft — DATE: 7-30-71

REFERENCE: Spec. EC-90121 — REVISION: A — DATE: 4-30-71

FAILURE MODE (CODE #)	PHASE	EFFECTS ON SYSTEM OPERATION	FAILURE EFFECT CATEGORY
Body Rupture (10)	A-C	The effect of a ruptured valve housing during coast is a loss of redundancy in blocking large losses of propellant from the main tank. The PSOV must seal to prevent continuous propellant loss through the TPA bearing.	IIA
	D-M	This failure mode results in nearly complete loss of flow through the thrust chamber and the loss of further engine operating capability. In chilldown, the reduced impedence downstream of the stems may permit flooding of the stems and cause a major power surge. After the burn has proceeded far enough to build an appreciable fission product inventory, inability to cool the reactor will result in reactor and pressure vessel melting and disassembly. End Effect: Total loss of engine operation.	IV

4.2.2.6 Turbopump Assembly (TPA)

a. Description and Function

The function of the TPA's is to raise the pressure of the propellant from the main tank to a level high enough to permit flow through the rest of the system at the rates required to maintain the programmed thrust level during the powered operating phases. The full flow cycle selected requires that the pump raise the pressure of the propellant, stored at 30 psia in the vehicle tanks to approximately 1400 psia at the pump discharge during normal mode operation. At this operating condition, the full flow turbine is being driven with hydrogen heated to approximately 290°R by the nozzle, reflector, and stems. During normal mode operation, the turbine operates at a pressure ratio of approximately 1.5 with a control bypass flow of 8%. Figure 4.2-1 shows the functional relation between the TPA's and the other TPS components.

During normal mode operation, both TPA's are operating, each supplying 50% of the flow at the required system pressure to provide an engine thrust of 75K. Malfunction operation requires that either TPA provide the flow and pressure necessary to produce 80% of rated thrust. During malfunction operation, the turbine operates at a pressure ratio of approximately 1.8 and a temperature of about 300°R.

The turbopump assembly (TPA) concept shown in Figure 4.2-6 (Drawing 1118101) consists of a two-stage centrifugal pump driven by a two-stage pressure compounded turbine. The first stage pump impeller is preceded by an inducer operating at main shaft speed. Pump inlet diameter is 9.5 inches at the pump to inlet duct interface, reducing to 6.95 inches at the inducer inlet. Pump impellers are arranged back-to-front with an internal continuous vaned crossover between the first and second-stage impellers. The second-stage impeller discharges into a vaned diffuser succeeded by a scroll with a single five inch diameter discharge duct. The turbine inlet manifold configuration is of the torus type with a 7 1/2 inch inlet duct diameter. Discharge is through a 90° vaned elbow with an exit diameter of 7 1/2 inches. Pressure rise of the pump at the nominal design flow of 46 lbs/sec is approximately 1400 psi with a shaft speed of 24,200

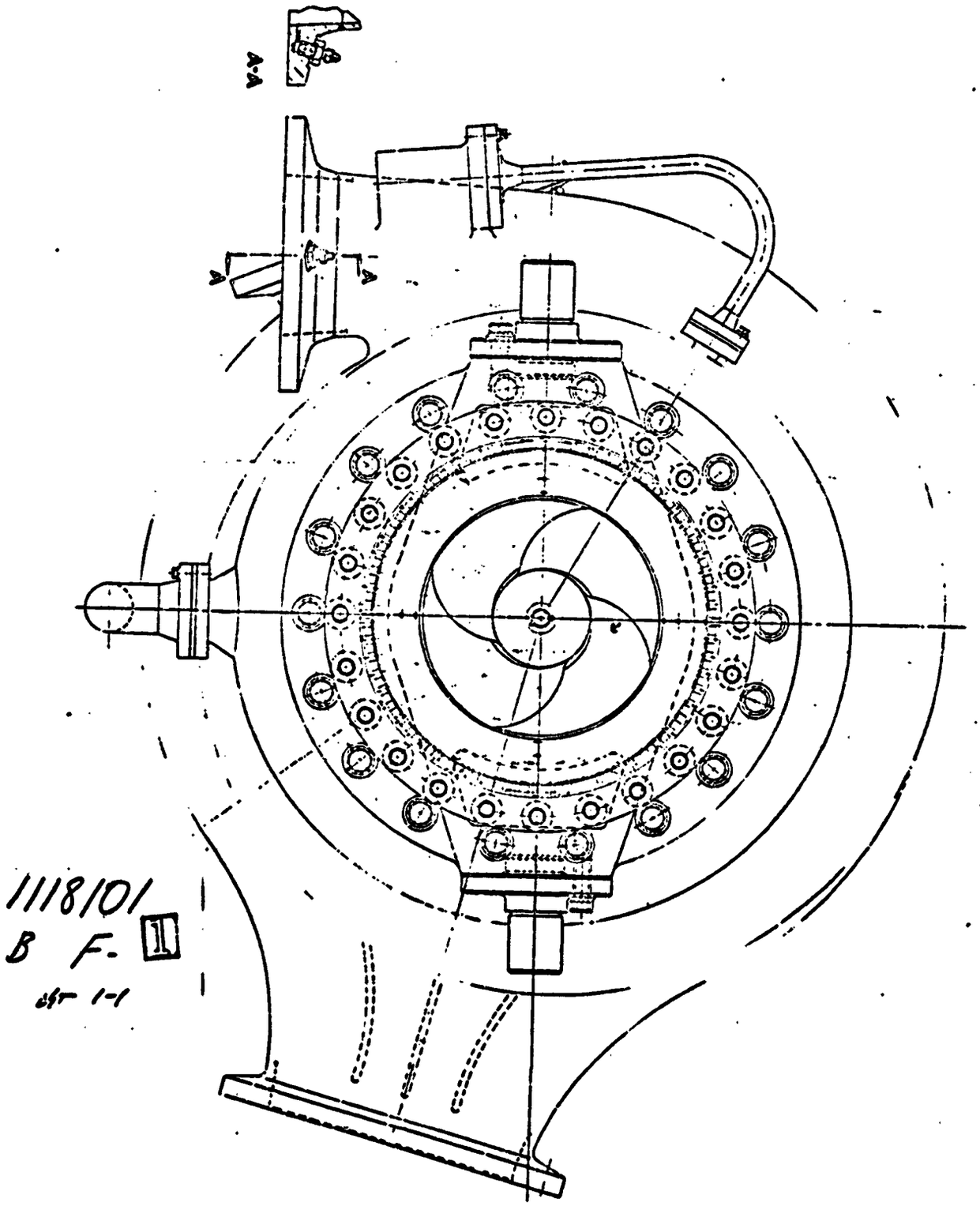

Turbopump Assembly (TPA)

Figure 4.2-6 (Sheet 1)
(Pump End View)

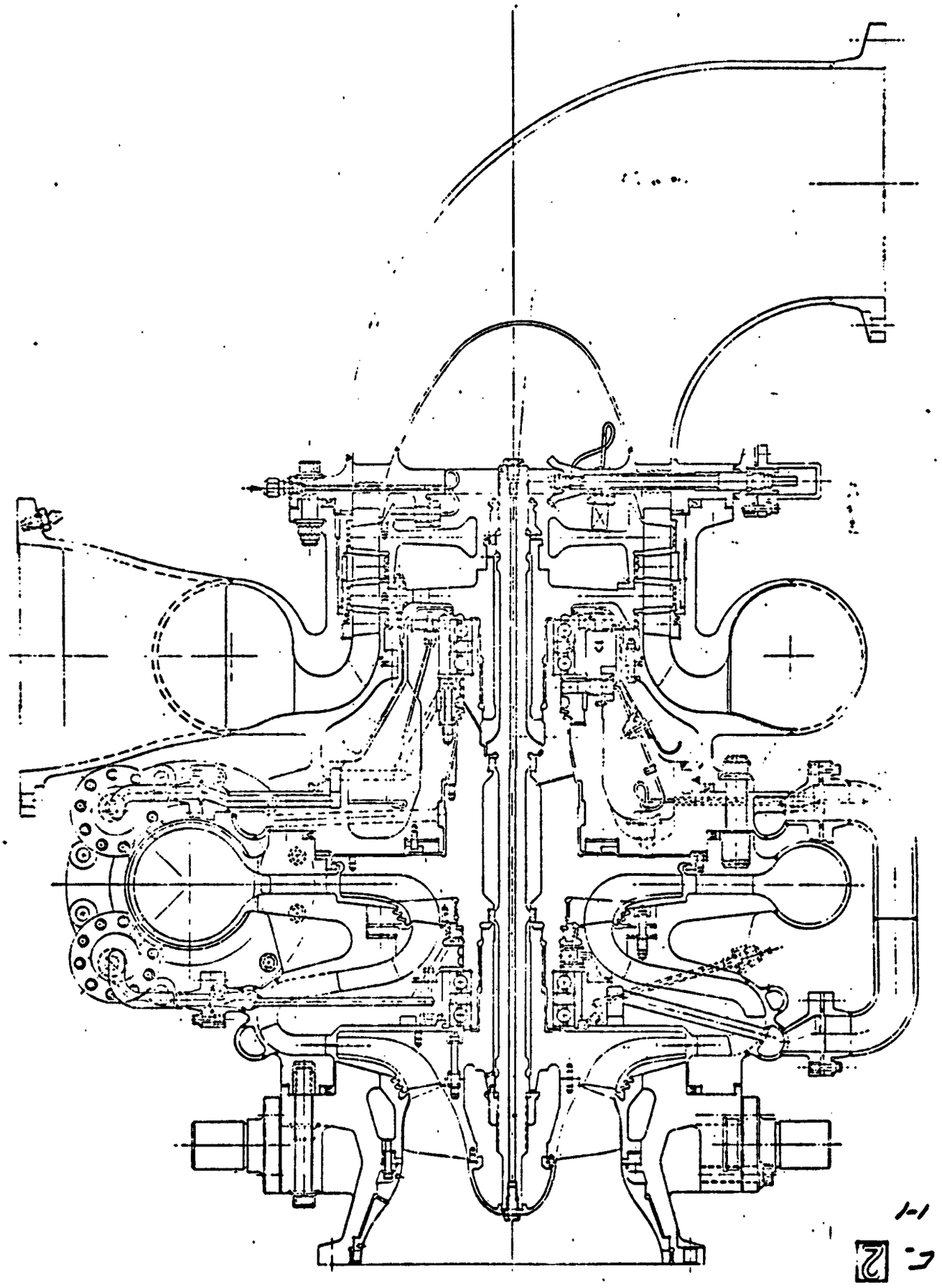

Figure 4.2-6 (Sheet 2
(Longitudinal Section)

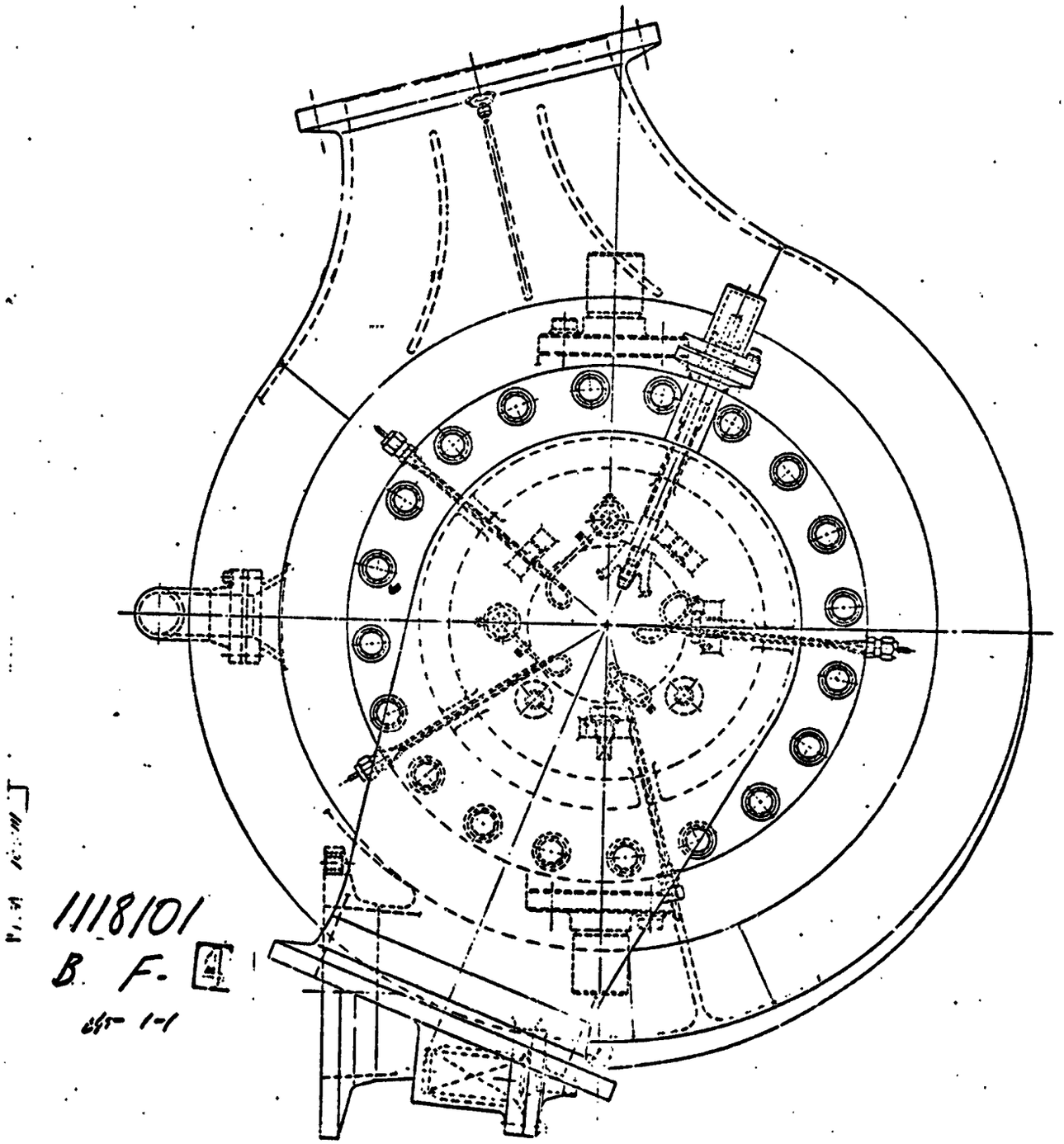

Figure 4.2-6 (Sheet 3)
(Turbine End View)

rpm. Corresponding values for the single TPA mode are 74.0 lb/sec, 1310 psi, and 26,500 rpm.

The TPA rotor system is supported by two sets of preloaded 65mm duplex ball bearings. One set of bearings is located between the first and second-stage impeller, with the other set being located between the second-stage impeller and the overhung turbine. At speeds above 8000 rpm, axial thrust of the rotor system is compensated by a self-acting balancer. The balancer bleeds flow from the discharge of the second stage impeller and returns it to the back shroud area of the first-stage impeller. Below 8000 rpm, axial thrust is absorbed by the turbine bearing set.

The TPA is supported by two trunions located on the inlet housing and a sway brace attached to the turbine discharge flange

The TPA has an overall length of approximately 38 inches and a maximum diameter of 27 inches.

The preliminary computed weight of the TPA is 770 pounds, as shown on Drawing 1118101. This assumes that the rotor is fabricated from titanium, and the pump and turbine housings are of 310 SS.

b. Failure Modes

The six system level TPA failure modes used in the analysis are as follows:

01 Fails to Start

Definition: Failure of the TPA to begin rotation following proper chilldown when the turbine inlet is supplied with hydrogen at normal temperature and pressure by opening the IBV and TDBV at the start of the bootstrap phase.

This failure mode is applicable only to the bootstrap phase because a TPA can not be brought on line against an already operating unit. Attemps to do so would result in stall and overspeed of the unit being brought on line even if the pump were properly chilled.

This probably limits the acceptable starting region of a TPA to the early part of the bootstrap phase, but the permissible lag between the starting times of the two TPA's has not yet been determined.

02 Premature Stop

Definition: Rotation of TPA ceases and remains stopped during operation when the turbine inlet is being supplied with hydrogen at the temperature and pressure appropriate to the engine operating status during the powered phases.

03 Low Performance

Definition: Performance outside the tolerance limits on the turbine or pump characteristic curves of sufficient magnitude as to cause or require retreat from normal engine operation. (Note: Analysis of the complete engine system is required to assess the limits of this failure mode in each powered operating phase).

04 Total loss of Containment

Definition: Loss of the physical integrity of the pump or turbine housing (or both) with accompanying gross loss of propellant and complete inability to transmit flow between the contiguous line segments.

05 Excessive Vibration

Definition: Vibration of a TPA during powered operation of sufficient amplitude or frequency as to present an imminent danger to the physical integrity of either itself or the adjacent components and requiring a retreat from normal engine operation.

06 External Leakage

Definition: Loss of propellant through openings in the pump or turbine housing or past sealing surfaces at a rate that precludes normal operation or that results in sufficient loss of propellant to preclude completion of the mission.

SYSTEM FAILURE MODE EFFECTS AND CRITICALITY ANALYSIS • • • SUMMARY SHEET

SHEET 1 OF 1

COMPONENT/SUBSYSTEM: TPA/Turbopump Subsystem PREPARED BY: G. M. Witcraft DATE: 7-30-71

REFERENCE: Spec. EC-90149 REVISION: A DATE: 4-30-71

FAILURE MODE (CODE #)	FAILURE EFFECT CATEGORY — ENGINE OPERATIONAL PHASES												
	A	B	C	D	E	F	G	H	I	J	K	L	M
		COAST		STARTUP				SHUTDOWN				COOLDOWN	
	LAUNCH	POST OPERATIONS	PRE-START OPERATIONS	TEMP. CONDITION	BOOT STRAP	THRUST. BUILDUP	RATED OPERATION	THROTTLING	THROTTLE HOLD	TEMP. RETREAT	POST TAILOFF	EARLY	PULSE
Fails to Start (01)	NA				IIIA	NA							
Premature Stop (02)	NA				IIIA							NA	
Low Performance (03)	NA				IIIA							NA	
Total Loss of Containment (04)	IIA			IV								IIA	
Excessive Vibration (05)	NA				IIIA							NA	
External Leakage (06)	IIA			IIIA								IIA	

SYSTEM FAILURE MODE EFFECTS AND CRITICALITY ANALYSIS • • • WORK SHEET

COMPONENT/SUBSYSTEM: TPA/Turbopump Subsystem
REFERENCE: SPEC. EC-90149

PREPARED BY: G. M. Witcraft
REVISION: A

SHEET 1 OF 5
DATE: 7-30-71
DATE: 4-30-71

FAILURE MODE (CODE #)	PHASE	EFFECTS ON SYSTEM OPERATION	FAILURE EFFECT CATEGORY
Fails to Start (01)	A-D,L-M	Not applicable. TPA's not required to operate during these phases.	NA
	E	Failure of a TPA to start during bootstrap results in loss of operation of the TPA leg for all of the powered phases. A TPA can not be brought on line against an already operating leg in later phases. If the TPA should break loose in later phases, the pump would be operating against a dead head, and the TPA would rapidly overspeed even if the pump were properly chilled. Flow through the inoperative turbine would effectively short circuit the operative unit, precluding completion of the startup phases. When the turbine housing pressure becomes greater than the tank pressure, there will be a small back flow of propellant through the TPA bearing to the tank. The malfunctioned leg should be isolated to prevent interference with operation of the other unit and to prevent runaway of the inoperative TPA if it should break free.	IIIA
	F-K	Not applicable. TPA's are already running. End Effect: Loss of operation of TPA leg	NA

SYSTEM FAILURE MODE EFFECTS AND CRITICALITY ANALYSIS • • • WORK SHEET

SHEET 2 OF 5

COMPONENT/SUBSYSTEM: TPA Turbopump Subsystem

PREPARED BY: G.M. Witcraft

DATE: 7-30-71

REFERENCE: Spec. EC-90149

REVISION: A

DATE: 4-30-71

FAILURE MODE (CODE #)	PHASE	EFFECTS ON SYSTEM OPERATION	FAILURE EFFECT CATEGORY
Premature Stop (02)	A-D,L-M	Not applicable. TPA's are not operating during these phases.	NA
	E-K	Flow through the malfunctioned pump will stop and the PDKV and PDKVA will close to block reverse flow through the pump. Continued flow through the inoperative turbine will act as added bypass flow around the operating turbine, and the bypass control valves will be driven closed in an attempt to maintain the demand chamber pressure. The inoperative TPA should be isolated by closing the TBV, TDBC, PDKVA actuator, and PSOV and operation continued in the single TPA mode. Note: If the stoppage could occur rapidly enough (ca.100 ms), the effects during high temperature operation would be comparable to rupture closure of a PSOV with reactor damage and disassembly of the core. However, it is judged that none of the failure mechanisms can stop the TPA in so short a time and the system can survive the transient effects of this failure mode. End Effect: Loss of operation of TPA leg.	IIIA
Low Performance (03)	A-D,L-M	Not applicable. TPA's are not operating during these phases.	NA

SYSTEM FAILURE MODE EFFECTS AND CRITICALITY ANALYSIS • • • WORK SHEET

COMPONENT/SUBSYSTEM: TPA/Turbopump Subsystem
PREPARED BY: G. M. Witcraft
SHEET 3 OF 5
DATE: 7-30-71
REFERENCE: Spec. EC-90149
REVISION: A
DATE: 4-30-71

FAILURE MODE (CODE •)	PHASE	EFFECTS ON SYSTEM OPERATION	FAILURE EFFECT CATEGORY
Low Performance (03)	E-K	A gradual deterioration of the performance of one TPA of greater magnitude than its mate would result in a realignment of the turbine flow rates, turbine speeds, and pump flow rates with the two units continuing to operate in parallel with a substantial bias between them. The bias would be such as to generate the same head rise in the two pumps since they must discharge into the same manifold. This progression could continue until the flow through the malfunctioning unit became small enough that the pump reaches the stall point. During the low power phases, this will probably be the limiting mechanism, since the pumps operate near the stall region. In the high power phases, a different operating limit will be reached. The reduced efficiency of the malfunctioning unit will require more power input to the turbines to maintain the same pump power output. To provide additional turbine flow, the BCV's will gradually be driven closed, and any further deterioration will preclude maintaining the rated engine thrust. At that point, or slightly before it if a useable control margin is to be preserved, it will be necessary to shut down the malfunctioning leg and proceed in the single TPA mode in order to maintain a stable engine thrust level. End Effect: Loss of operation of TPA leg.	IIIA
Total Loss of Containment (04)	A-C,L-M	The rupture of a TPA housing during coast or cooldown is a loss of redundancy in containing propellant in the tank and in the turbine flow lines. The PSOV must seat to prevent continuous large losses of propellant, and both the TBV and TDBV must seal to prevent propellant losses during cooldown flow.	IIA

SYSTEM FAILURE MODE EFFECTS AND CRITICALITY ANALYSIS • • • WORK SHEET

SHEET 4 OF 5

COMPONENT/SUBSYSTEM: TPA/Turbopump Subsystem — PREPARED BY: G. M. Witcraft — DATE: 7-30-71

REFERENCE: Spec. EC-90149 — REVISION: A — DATE: 4-30-71

FAILURE MODE (CODE #)	PHASE	EFFECTS ON SYSTEM OPERATION	FAILURE EFFECT CATEGORY
	D-K	Rupture of the housing when the TPA is internally pressurized will generate shrapnel that will damage other parts and components that are vital to engine operation. The instrumentation and power supply wiring harnesses are particularly vulnerable. During high temperature operation, the sudden reduction of flow may permanently damage the reactor as described under Inadvertent Closure (Rupture Speed) (04) of a PSOV. End Effect: Total loss of engine operation.	IV
Excessive Vibration (05)	A-D, L-M	Not applicable. TPA's are not operating during these phases.	NA
	E-K	Excessive vibration of a TPA will endanger the physical integrity of the subsystem and the adjacent hardware. At certain frequencies it may also induce excessive sympathetic vibration of components not in the immediate vicinity of the TPA. To prevent possible damage to the system, the offending TPA must be taken off line by closure of the TBV and TDBV and operation continued in the single TPA mode. End Effect: Loss of operation of TPA leg.	IIIA

SYSTEM FAILURE MODE EFFECTS AND CRITICALITY ANALYSIS • • • WORK SHEET

SHEET 5 OF 5

COMPONENT/SUBSYSTEM: TPA/ Turbopump Subsystem — PREPARED BY: G. M. Witcraft — DATE: 7-30-71

REFERENCE: Spec. EC-90149 — REVISION: A — DATE: 4-30-71

FAILURE MODE (CODE #)	PHASE	EFFECTS ON SYSTEM OPERATION	FAILURE EFFECT CATEGORY
External Leakage (06)	A-C,L-M	Excessive external leakage is a loss of redundancy in containing the propellant in the tank during coast and cooldown and in the turbine lines during cooldown. The PSOV must seal to prevent continuous large propellant losses, and both the TBV and TOV must seal to block losses during periods of cooldown flow.	IIA
	D-K	This failure mode results in excessive loss of propellant during all phases in which there is flow through the pump and/or turbine. During the powered phases, it will also require greater than normal turbine flow to furnish the power to pump the additional propellant. To provide the added turbine flow, the bypass control valves will be driven further toward the closed position, reducing the available control margin during operation at rated power. If the leak is on the turbine side, excessive pump discharge pressures will be generated in order to force the additional propellant through the nozzle coolant tubes and reflector before it is lost from the system. Continued engine operation will require isolating the leaking TPA and proceeding in the single TPA mode. End Effect: Loss of operation of TPA leg.	IIIA

4.2.2.7 Turbopump Lines

a. Description and Function

The turbopump subsystem propellant lines comprise the primary flow streams of the engine. They provide a path for propellant to flow from the propellant tank through the pumps to the nozzle assembly and to the structural support coolant assembly and from the pressure vessel dome through the turbines to the reactor core. They must contain and transport propellant at pressures ranging from 30 to 1400 psia and at temperatures from 40°R to ambient. They include all tubes, elbow segments, fittings,junctions, bellows, weld joints, mechanical joints, and seals in the flow paths. For purposes of description and analysis they are divided into the following segments: (Note: In the present configuration both the PDKVA's and the TBV's are coupled directly to the TPA's so there is no separate line segment between these components).

1. Pump Inlet Line

The sections of 9.7" diameter pipe between the PSOV's and the inlet of each pump. Each contains a bellows assembly to accommodate the movement required for engine gimballing.

2. Pump Discharge Line - Common

The sections of 5" diameter line between the PDKV's and the PDVB's and between the PDCV's and the nozzle torus. The support system bypass line (SSBL) is also taken as part of this line segment.

3. Turbine Inlet Line - Common

The sections of 7 1/2" diameter lines between the pressure vessel dome and the TBV's.

4. Turbine Discharge Line - Separate

The sections of 7 1/2" diameter line between each TPA and its TDBV.

5. Turbine Discharge Line - Common

The sections of 7 1/2" diameter line between the TDBV's and the pressure vessel dome.

b. Modes of Failure

01 Loss of propellant through openings in the line or past sealing surfaces at a rate that precludes normal operation or that results in sufficient loss of propellant to preclude completion of the mission. Leaks large enough to preclude emergency mode operation are included under Total Loss of Containment, below.

02 Total Loss of Containment

Loss of the physical integrity of the line with accompanying gross loss of propellant and complete inability to transmit flow between the end points.

SYSTEM FAILURE MODE EFFECTS AND CRITICALITY ANALYSIS • • • SUMMARY SHEET

SHEET 1 OF 1

COMPONENT/SUBSYSTEM: Pump Inlet Line/Turbopump Subsystem

PREPARED BY: G. M. Witcraft

DATE: 8-4-71

REFERENCE:

REVISION:

DATE:

FAILURE MODE (CODE #)	FAILURE EFFECT CATEGORY — ENGINE OPERATIONAL PHASES												
	A	B	C	D	E	F	G	H	I	J	K	L	M
		COAST		STARTUP				SHUTDOWN				COOLDOWN	
	LAUNCH	POST OPERATIONS	PRE-START OPERATIONS	TEMP. CONDITION	BOOT STRAP	THRUST BUILDUP	RATED OPERATION	THROTTLING	THROTTLE HOLD	TEMP. RETREAT	PUMP TAILOFF	EARLY	PULSE
External Leakage (01)	IIA	→	→	IIIA	→	→	→	→	→	→	→	IIA	→
Total Loss of Containment (02)	IIA	→	→	IIIA	→	IV	→	→	→	→	IIIA	IIA	→

SYSTEM FAILURE MODE EFFECTS AND CRITICALITY ANALYSIS • • • WORK SHEET

SHEET 1 OF 2

COMPONENT/SUBSYSTEM: Pump Inlet Line/Turbopump Subsystem

PREPARED BY: G. M. Witcraft

DATE: 8-4-71

REFERENCE:

REVISION:

DATE:

FAILURE MODE (CODE #)	PHASE	EFFECTS ON SYSTEM OPERATION	FAILURE EFFECT CATEGORY
External Leakage (01)	A-C, L-M	External leakage of a pump inlet line represents a loss of redundancy in preventing large propellant losses from the engine. The PSOV must seal to prevent such losses during the launch, coast, and cooldown periods, and the PDKVA (or PDKV), TBV, and TDBV must seal to block losses during cooldown.	IIA
	D-K	Same as External Leakage (09) of PSOV downstream of valve seat. End Effect: Loss of operation of TPA leg.	IIIA
Total Loss of Containment (02)	A-C, L-M	Same as External Leakage (01) above.	IIA
	D	Rupture of a PIL during chilldown would dump hydrogen from the tank through the PSOV at a very rapid rate (9" diameter line with 30 psi differential). The pump check valves would be driven closed to block backflow from the non-malfunctioned leg, but the PSOV in the broken leg must be closed to prevent large propellant losses. The TBV and TDBV must be left closed to prevent propellant losses via the TPA bearing and to prevent driving an unloaded TPA. Further operations would have to be performed in the single TPA mode.	IIIA
	E, K	In addition to the propellant losses described above, the pump would be unloaded with power on the turbine, and the TBV or TDBV must be rapidly closed to prevent TPA runaway and possible damage to adjacent components. The PSOV, PDKVA (or PDKV), TBV, and TDBV must remain closed to prevent propellant losses from the system.	IIIA

SYSTEM FAILURE MODE EFFECTS AND CRITICALITY ANALYSIS • • • WORK SHEET

COMPONENT/SUBSYSTEM: Pump Inlet Line/Turbopump Subsystem
REFERENCE:
PREPARED BY: G.M. Witcraft
REVISION:
SHEET 2 OF 2
DATE: 8-1-70
DATE:

FAILURE MODE (CODE #)	PHASE	EFFECTS ON SYSTEM OPERATION	FAILURE EFFECT CATEGORY
Total Loss of Containment (02)	F-J	During operation at or near the rated chamber temperature, rupture of a PIL would result in rapid termination of flow through the TPA leg with permanent damage to the reactor as described under Inadvertent Closure (Rupture Speed) (04) of a PSOV. End Effect: Total loss of engine operation.	IV

SYSTEM FAILURE MODE EFFECTS AND CRITICALITY ANALYSIS • • • SUMMARY SHEET

SHEET 1 OF 1

COMPONENT/SUBSYSTEM: Pump Discharge Line - Common/Turbopump Subsystem PREPARED BY: G. M. Witcraft DATE: 8-5-71

REFERENCE: REVISION: DATE:

FAILURE MODE (CODE #)	FAILURE EFFECT CATEGORY — ENGINE OPERATIONAL PHASES												
	A	B	C	D	E	F	G	H	I	J	K	L	M
		COAST		STARTUP				SHUTDOWN				COOLDOWN	
	LAUNCH	POST OPERATIONS	PRE-START OPERATIONS	TEMP. CONDITION	BOOT STRAP	THRUST BUILDUP	RATED OPERATION	THROTTLING	THROTTLE HOLD	TEMP. RETREAT	PUMP TAILOFF	EARLY	PULSE
External Leakage (01)	NA	→	→	IIIB	→	→	→	→	→	→	→	→	→
Total Loss of Containment (02)	NA	→	→	IV	→	→	→	→	→	→	→	→	→

SYSTEM FAILURE MODE EFFECTS AND CRITICALITY ANALYSIS • • • WORK SHEET

SHEET 1 OF 2

COMPONENT/SUBSYSTEM: Pump Discharge Line - Common/Turbopump Subsystem

PREPARED BY: G. M. Witcraft

DATE: 8-5-71

REFERENCE:

REVISION:

DATE:

FAILURE MODE (CODE #)	PHASE	EFFECTS ON SYSTEM OPERATION	FAILURE EFFECT CATEGORY
External Leakage (01)	A-C	Not applicable. This portion of the subsystem has no operating function during these phases.	NA
	D-M	A leak in this portion of the subsystem can not be isolated and will result in losses of propellant from the system during all periods of propellant flow and would require mission abort. The specific effects on other components and subsystems will depend on the operating phase and the location of the leak, whether upstream or downstream of the pump discharge control subsystem. In the powered phases, greater than normal power to the turbines would be required to pump the added flow being lost from the system. This would drive the PBCV's further open and the BCV's further closed than normal during their respective closed loop control phases, and the pump discharge pressures would be greater than normal. The engine would retain emergency mode operating capability. End Effect: Emergency mode operating capability only.	IIIB

SYSTEM FAILURE MODE EFFECTS AND CRITICALITY ANALYSIS • • • WORK SHEET

SHEET 2 OF 2

COMPONENT/SUBSYSTEM: Pump Discharge Line - Common/Turbopump Subsystem PREPARED BY: G. M. Witcraft DATE: 8-5-71

REFERENCE: REVISION: DATE:

FAILURE MODE (CODE #)	PHASE	EFFECTS ON SYSTEM OPERATION	FAILURE EFFECT CATEGORY
. tal Loss of Containment (02)	A-C	Not applicable. This portion of the subsystem has no operating function during these phases.	NA
	D-M	Rupture of the common PDL results in immediate and complete loss of engine operation. After phase E, inability to cool the reactor will result in its melting and disintegration. If the failure occurs during near earth operation, the fallout of radioactive debris will present a hazard to the earth's population. End Effect: Total loss of engine operation	IV

SYSTEM FAILURE MODE EFFECTS AND CRITICALITY ANALYSIS • • • SUMMARY SHEET

SHEET 1 OF 1

COMPONENT/SUBSYSTEM: Turbine Inlet Line - Common/Turbopump Subsystem PREPARED BY: G. M. Witcraft DATE: 8-4-71

REFERENCE: REVISION: DATE:

FAILURE MODE (CODE #)	FAILURE EFFECT CATEGORY — ENGINE OPERATIONAL PHASES												
	A	B	C	D	E	F	G	H	I	J	K	L	M
		COAST		STARTUP				SHUTDOWN				COOLDOWN	
	LAUNCH	POST OPERATIONS	PRE-START OPERATIONS	TEMP. CONDITION	BOOT STRAP	THRUST BUILDUP	RATED OPERATION	THROTTLING	THROTTLE HOLD	TEMP. RETREAT	PUMP TAILOFF	EARLY	PULSE
External Leakage (01)	NA			IIIB									
Total Loss of Containment (02)	NA			IV									

SYSTEM FAILURE MODE EFFECTS AND CRITICALITY ANALYSIS • • • WORK SHEET

SHEET 1 OF 1

COMPONENT/SUBSYSTEM: Turbine Inlet Line - Common/Turbopump Subsystem PREPARED BY: G. M. Witcraft DATE: 8-5-71

REFERENCE: REVISION: DATE:

FAILURE MODE (CODE #)	PHASE	EFFECTS ON SYSTEM OPERATION	FAILURE EFFECT CATEGORY
External Leakage (01)	A-C	Not applicable. This portion of the subsystem has no operating function during these phases.	NA
	D-M	Same as External Leakage (09) of TBV upstream of valve seat. End Effect: Emergency mode operating capability only.	IIIB
Total Loss of Containment (02)	A-C	Same as External Leakage (01), above.	NA
	D-M	Rupture of the common TIL will have effects similar to rupture of the common PDL except for the differences brought about by the ability to continue flow through the reflector and stems. During chilldown and bootstrap, the reduced impedance may result in flooding the stems and reflector with a consequent power excursion. During cooldown, the continued flow could be used to prevent disassembly of the reactor. End Effect: Total loss of engine operation.	IV

SYSTEM FAILURE MODE EFFECTS AND CRITICALITY ANALYSIS • • • SUMMARY SHEET

SHEET 1 OF 1

COMPONENT/SUBSYSTEM: Turbine Discharge Line - Separate/Turbopump Subsystem

PREPARED BY: G. M. Witcraft

DATE: 8-6-71

REFERENCE:

REVISION:

DATE:

FAILURE MODE (CODE #)	FAILURE EFFECT CATEGORY — ENGINE OPERATIONAL PHASES												
	A	B	C	D	E	F	G	H	I	J	K	L	M
		COAST		STARTUP				SHUTDOWN				COOLDOWN	
	LAUNCH	POST OPERATIONS	PRE-START OPERATIONS	TEMP. CONDITION	BOOT STRAP	THRUST BUILDUP	RATED OPERATION	THROTTLING	THROTTLE HOLD	TEMP. RETREAT	PUMP TAILOFF	EARLY	PULSE
External Leakage (01)	IIA	→	→	IIIA	→	→	→	→	→	→	→	IIA	→
Total Loss of Containment (02)	IIA	→	→	IIIA	→	IV	→	→	→	→	IIIA	IIA	→

SYSTEM FAILURE MODE EFFECTS AND CRITICALITY ANALYSIS • • • WORK SHEET

SHEET 1 OF 2

COMPONENT/SUBSYSTEM: Turbine Discharge Line - Separate/Turbopump Subsystem

PREPARED BY: G. M. Witcraft

DATE: 8-6-71

REFERENCE:

REVISION:

DATE:

FAILURE MODE (CODE #)	PHASE	EFFECTS ON SYSTEM OPERATION	FAILURE EFFECT CATEGORY
External Leakage (01)	A-C,L-M	An external leak in one of these segments is a loss of redundancy in preventing large losses of propellant from the system. The PSOV must remain closed to prevent losses from the tank via the TPA bearing, and the TBV, TDBV, and PDKVA (or PDKV) must remain closed to prevent losses during cooldown flow.	IIA
	D-K	Same as External Leakage (09) of TDBV upstream of valve seat. End Effect: Loss of operation of TPA leg.	IIIA
Total Loss of Containment (02)	A-C, L-M	Same as External Leakage (01) above	IIA
	D	Rupture of this line segment during chilldown will result in excessive propellant losses via the TPA bearing. The malfunction should be isolated by closing the PSOV and PDKVA and further operation conducted in the single TPA mode.	IIIA
	E,K	Rupture of this line during the powered phases would result in sudden and nearly complete loss of flow through the reactor core and out the nozzle, and the reactor temperatures would rise rapidly beyond the allowable limits. The reduced impedance downstream of the turbines would initially cause the speed of both TPA's to increase somewhat and more propellant would be pumped through the system. The loss of nozzle exit flow would nearly eliminate the transfer of heat into the nozzle coolant stream, and the coolant tubes would be filled with liquid hydrogen, presenting the possibility of flooding the reflector cavity and creating an uncontrolled power surge.	IIIA

SYSTEM FAILURE MODE EFFECTS AND CRITICALITY ANALYSIS • • • WORK SHEET

SHEET 2 OF 2

COMPONENT/SUBSYSTEM: Turbine Discharge Line - Separate/Turbopump Subsystem

PREPARED BY: G. M. Witcraft

DATE: 8-6-71

REFERENCE:

REVISION:

DATE:

FAILURE MODE (CODE #)	PHASE	EFFECTS ON SYSTEM OPERATION	FAILURE EFFECT CATEGORY
	E, K	To prevent damage to the reactor and excessive propellant losses, the TBV and TDBV should be quickly closed, the PSOV and PDKVA closed to isolate the malfunction, and further operations continued in the single TPA mode.	
	F -J	During high temperature operation, the sudden loss of flow through the core and the sudden loss of operation of one TPA leg will produce temperature transients in the reactor that will permanently damage the core and destroy its operating capability. End Effect: Total loss of engine operation.	IV

SYSTEM FAILURE MODE EFFECTS AND CRITICALITY ANALYSIS • • • SUMMARY SHEET

SHEET 1 OF 1

COMPONENT SUBSYSTEM: Turbine Discharge Line - Common/Turbopump Subsystem PREPARED BY: G. M. Witcraft DATE: 8-6-71

REFERENCE: REVISION: DATE:

FAILURE MODE (CODE #)	FAILURE EFFECT CATEGORY — ENGINE OPERATIONAL PHASES												
	A	B	C	D	E	F	G	H	I	J	K	L	M
		COAST		STARTUP				SHUTDOWN				COOLDOWN	
	LAUNCH	POST OPERATIONS	PRE-START OPERATIONS	TEMP. CONDITION	BOOT STRAP	THRUST BUILDUP	RATED OPERATION	THROTTLING	THROTTLE HOLD	TEMP. RETREAT	PUMP TAILOFF	EARLY	PULSE
External Leakage (01)	NA	—	→	IIIB									→
Total Loss of Containment (02)	NA	→	→	IV									→

SYSTEM FAILURE MODE EFFECTS AND CRITICALITY ANALYSIS • • • WORK SHEET

SHEET 1 OF 1

COMPONENT/SUBSYSTEM: Turbine Discharge Line - Common/Turbopump Subsystem

PREPARED BY: G. M. Witcraft

DATE: 8-6-71

REFERENCE:

REVISION:

DATE:

FAILURE MODE (CODE #)	PHASE	EFFECTS ON SYSTEM OPERATION	FAILURE EFFECT CATEGORY
External Leakage (01)	A-C	Not applicable. This portion of the subsystem has no operating function during these phases.	NA
	D-M	Same as External Leakage (09) of TDSV downstream of valve seat.	IIIB
		End Effect: Emergency mode operating capability only	
Total loss of Containment (02)	A-C	Same as External Leakage (01), above.	NA
	D-M	Rupture of the turbine discharge line will have effects very similar to rupture of the turbine inlet line except that the stoppage of drive gas through the turbine will not be quite as rapid.	IV
		End Effect: Total loss of engine operation.	

SECTION 4.3

PUMP DISCHARGE CONTROL SUBSYSTEM

4.3 PUMP DISCHARGE CONTROL SUBSYSTEM

4.3.1 Description

4.3.1.1 Function/Requirements

The pump discharge control subsystem accepts the main propellant stream from the upstream section of the common pump discharge line after takeoff of the stem coolant flow and delivers it to the downstream section of the PDL. The primary function of the subsystem is to modulate the flow from the pumps to provide control of the TPA's during the low power phases of startup and shutdown. It also gives the capability of increasing the impedance of the PDL downstream of the point of takeoff of the SSCA, permitting greater hydrogen inventory (higher flow and higher pressure) in the stems and increasing their effective reactivity worth in the low and intermediate power phases. This capability was once planned to be utilized to permit operation of the engine on the high impulse operating line and at the normal throttle point (270 psia-4250°R) over the complete life of the reactor. However, a subsequent decision to increase the control drum reactivity insertion to maintain a uniform temperature profile at the throttle point has negated this benefit.

4.3.1.2 Configuration

The subsystem consists of two pump discharge control valves (PDCV) and two pump discharge block valves (PDBV), (Figure 4.2-1). They are arranged in two parallel legs with a PDBV and a PDCV in series in each leg. The valve pairs are close coupled with no line segment between them so the subsystem contains no propellant lines. The lines connecting the subsystem to the pump discharge line are considered part of the turbopump subsystem.

4.3.1.3 Operation

During temperature conditioning, all four valves are maintained open to minimize impedance to the chilldown flow. At the time of startup of the TPA's at the beginning of bootstrap, the PDCV's are ramped nearly closed and placed in closed loop control of the TPA speed. The TPA speed demand will be ramped from 0 to about 7000 rpm and then held at that level to condition the TPA balance piston and bearings to liquid hydrogen conditions prior to operation at higher speeds.

When both pumps have been adequately chilled, the control feedback is switched from the TPA speed to the chamber pressure, and the demand ramp up to the high impulse operating line is started. At some point in the programmed ramp which is as yet not firmly established, a second control mode change is made. The chamber pressure control element is switched from the PDCV's to the turbine bypass control valves, and the PDCV's are placed in position control. As the thrust buildup phase continues, the PDCV's are programmed to be fully open on approach of the rated operating point.

In shutdown, an inverse procedure is used. During the traverse from rated operation to the throttle point, the PDCV's are programmed from full open to an appropriate intermediate position and maintained at thatposition during the throttle hold phase. At the end of throttle hold, or at some point in the temperature retreat, the pressure control is switched back to the PDCV's for the remainder of temperature retreat. At the end of temperature retreat, another control mode change is made for the pump tailoff phase. The chamber temperature is placed in closed loop control with the PDCV's, and the pump tailoff phase is conducted along a temperature demand profile until the reactor has cooled sufficiently that continued cooling can be performed without the aid of the TPA's. At the end of pump tailoff, the PDCV's are returned to the open position for the cooldown and coast periods.

The PDBV's provide the capability of closing off flow through a PDC leg in the event of a malfunction of one of the PDCV's. They are normally maintained open during all phases except for a checkout in preparation to start the engine.

Each of the legs has the capacity to handle the entire flow requirements for the system.

4.3.2 Failure Analysis

4.3.2.1 Pump Discharge Control Valve

a. Description and Function

The PDCV's are analog control valves used to modulate the flow through the common pump discharge line to provide control of the TPA's during the low power phases of engine startup and shutdown. They are also used to increase the impedance of the pump discharge line downstream of the SSCA take-off and increase the inventory of hydrogen in the core stems and hence the reactivity worth of the stems during operation in the vicinity of the throttle point.

The PDCV (Figure 4.3-1) is a venturi-visor type valve (Drwg. 1139076) with a 2.8" venturi diameter and a visor with a 3.8" spherical radius sealing surface and a 2.8" diameter circular port. The full valve stroke is 100°, and the nominal full opening or closing time is 1.0 seconds. In the open position, the full 2.8" venturi is uncovered, giving a very low impedance to the flow. The maximum allowable internal leakage in the fully closed position is 2×10^6 SCIM (inlet to outlet) at a pressure differential of 69.7 psi and inlet conditions of 83 psia and 50°R.

The valve is driven by a rotary shaft powered by an ac induction motor through a planetary gear train with a speed reduction of approximately 450:1. Loss of electrical power to the actuator causes the valve to fail in place.

b. Failure Modes

All of the failure modes listed in Para. 4.1.3.1 are applicable to the PDCV except Fails at Intermediate Position (06). Intermediate failure of a control valve is included under Fails to Control (07).

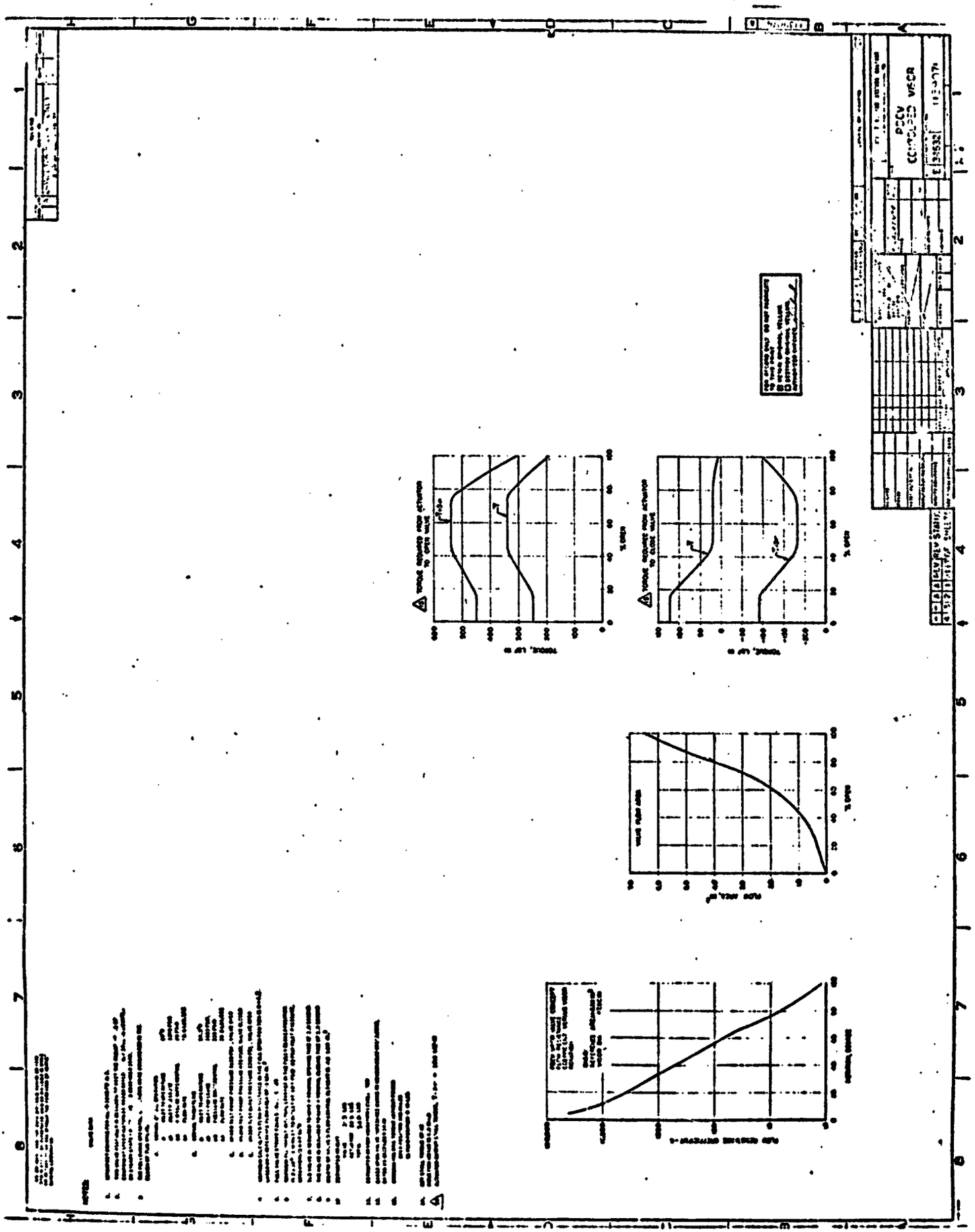

Pump Discharge Control Valve (PDCV)

Figure 4.3-1 (Sheet 1)

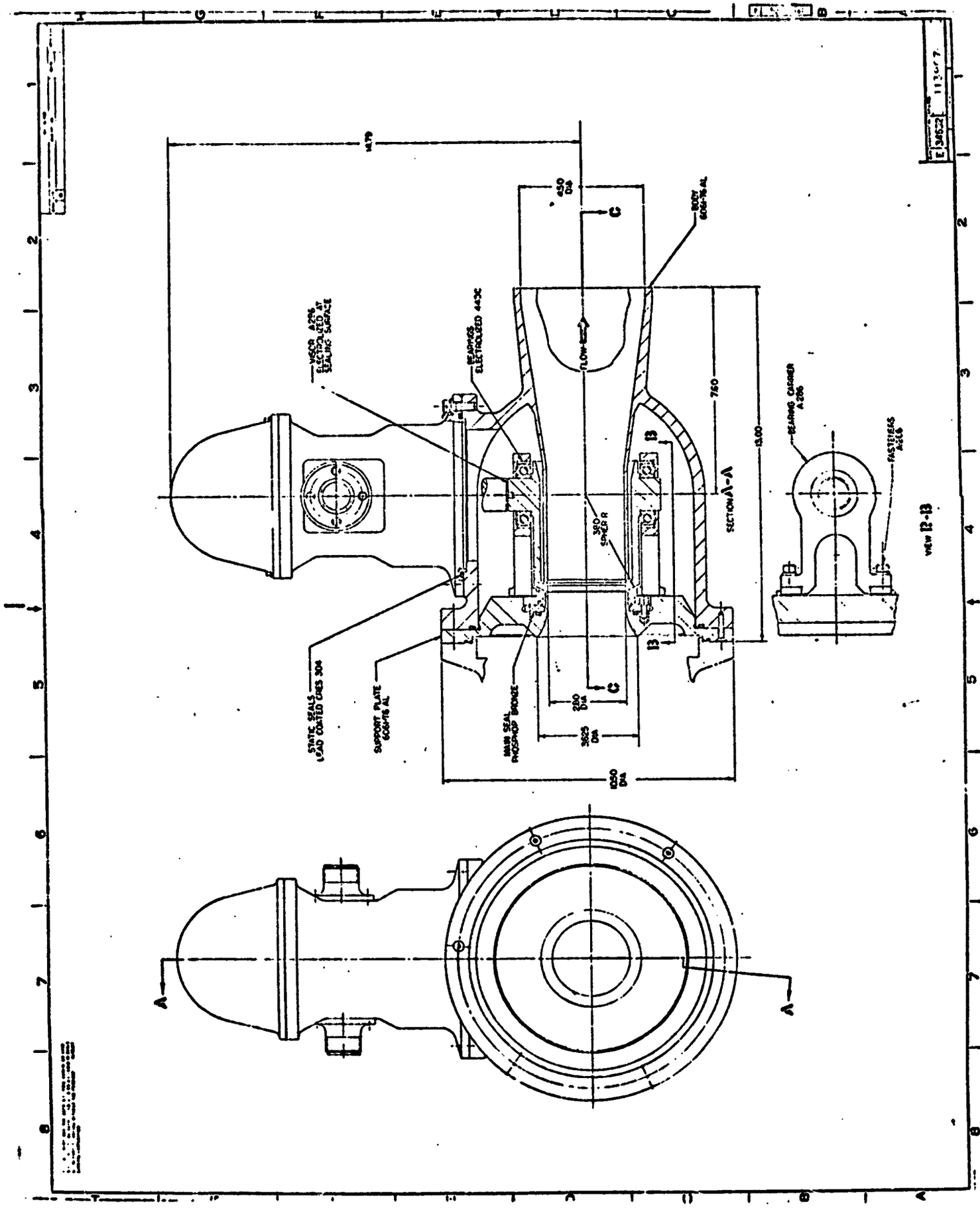

Figure 4.3-1 (Sheet 2)

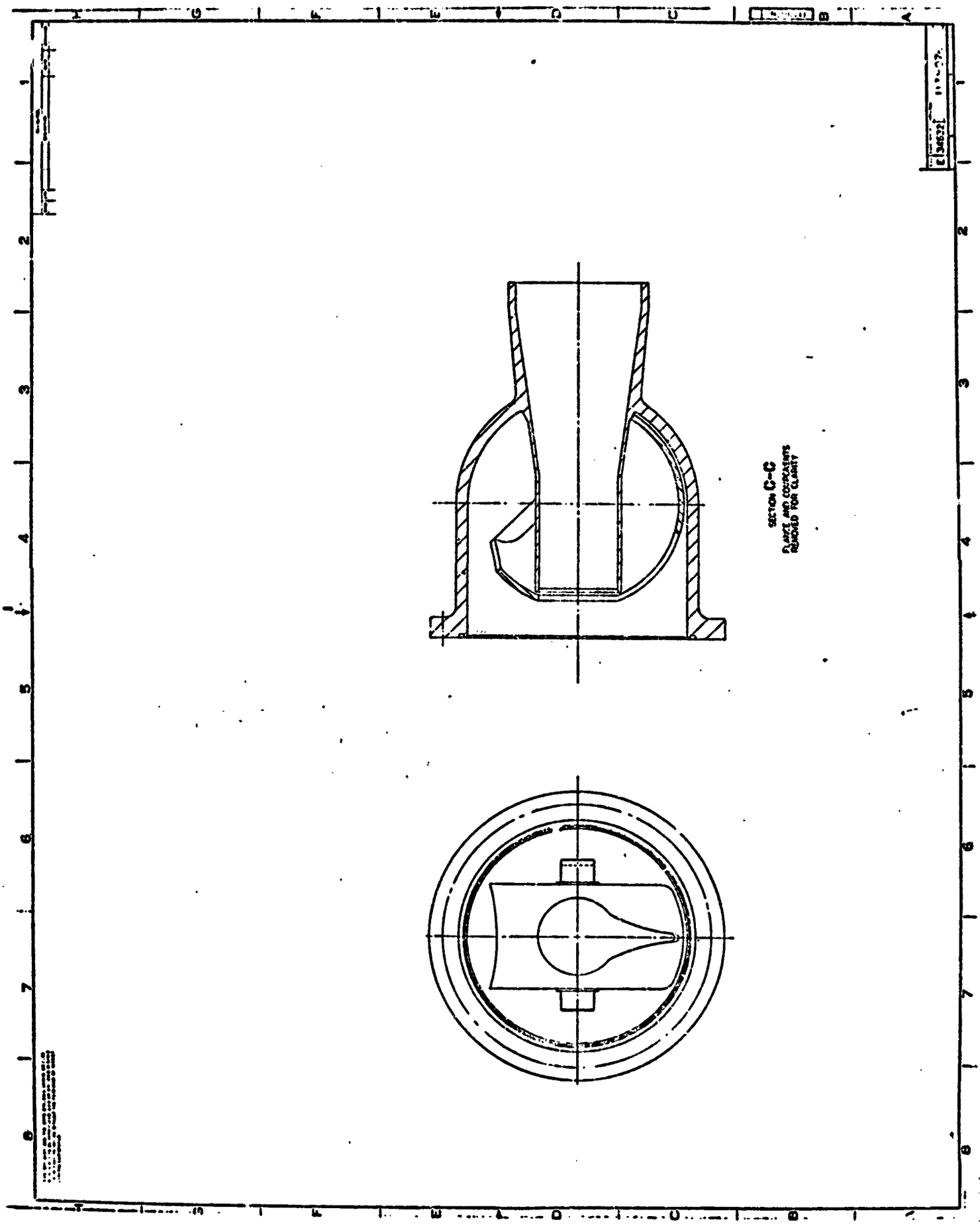

Figure 4.3-1 (Sheet 3)

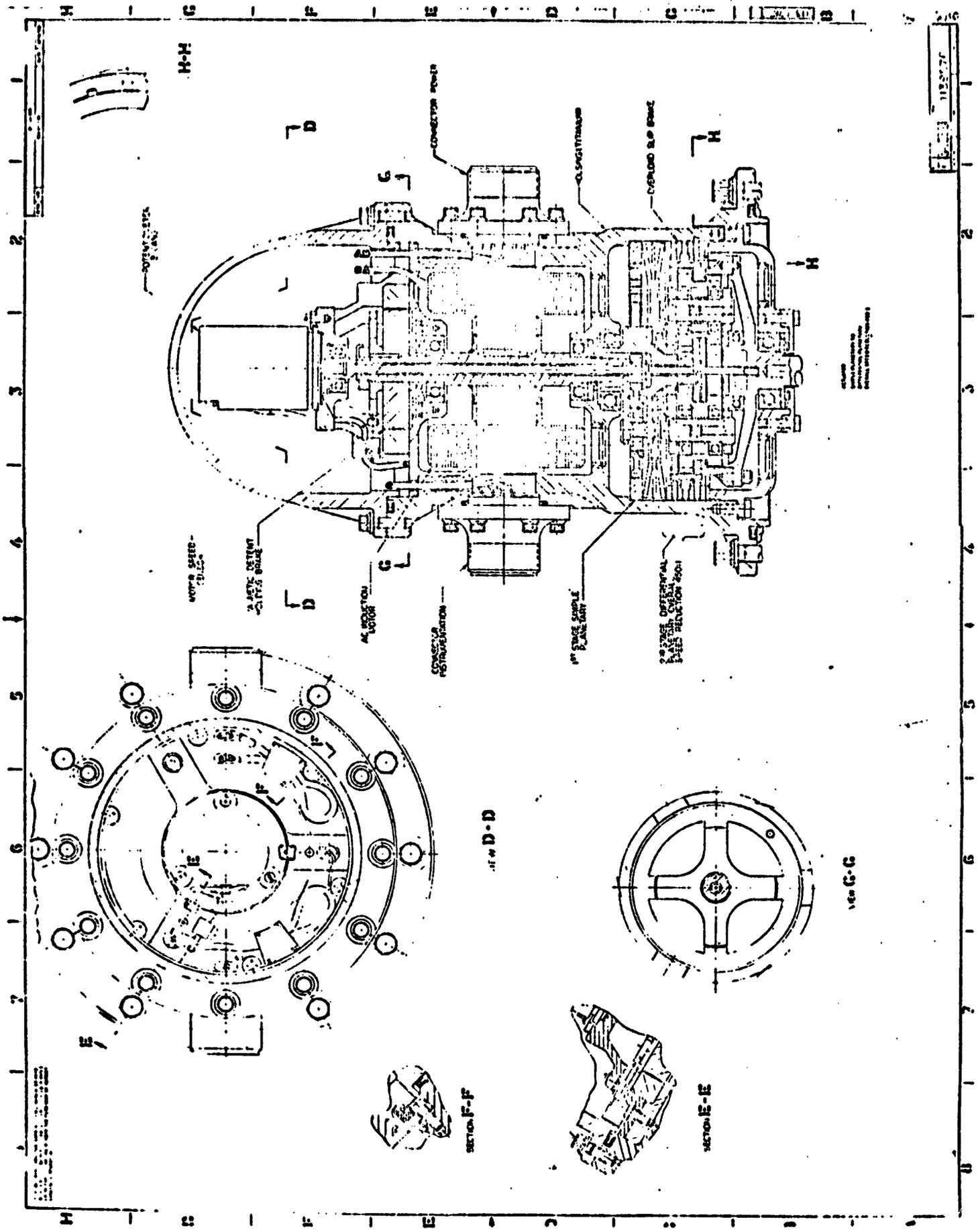

Figure 4.3-1 (Sheet 4)

SYSTEM FAILURE MODE EFFECTS AND CRITICALITY ANALYSIS • • • SUMMARY SHEET

SHEET 1 OF 2

COMPONENT/SUBSYSTEM: PDCV/Pump Discharge Control Subsystem

PREPARED BY: G. M. Witcraft

DATE: 8-9-71

REFERENCE: Spec. EC-90280

REVISION: A

DATE: 4-30-71

FAILURE MODE (CODE #)	FAILURE EFFECT CATEGORY — ENGINE OPERATIONAL PHASES												
	A	B	C	D	E	F	G	H	I	J	K	L	M
		COAST		STARTUP				SHUTDOWN				COOLDOWN	
	LAUNCH	POST OPERATIONS	PRE-START OPERATIONS	TEMP. CONDITION	BOOT STRAP	THRUST BUILDUP	RATED OPERATION	THROTTLING	THROTTLE HOLD	TEMP. RETREAT	PUMP TAILOFF	EARLY	PULSE
Fails to Move From Full Open Position (01)	NA	→	IIB	IIC	NA	→	IIB	NA			→	IIA	→
Fails to Move From Full Closed Position (02)	NA	→	→	→	→	→	→	→	→	→	→	→	→
Inadvertent Closure (Actuator Speed) (03)	NA	→	IIB	→	IIC	→	IIB	IIC	→	→	→	IIB	→
Inadvertent Closure (Rupture Speed) (04)	NA	→	IIB	→	IIC	→	IIB	IIC	→	→	→	IIB	→
Inadvertent Open (05)	NA	→	IIB	NA	IIC	→	NA	IIB	→	→	→	NA	→
Fails at Intermediate Position (06)	NA	→	→	→	→	→	→	→	→	→	→	→	→

SYSTEM FAILURE MODE EFFECTS AND CRITICALITY ANALYSIS • • • SUMMARY SHEET

SHEET 2 OF 2

COMPONENT/SUBSYSTEM: PDCV/Pump Discharge Control Subsystem PREPARED BY: G. M. Witcraft DATE: 8-9-71

REFERENCE: Spec. EC-90280 REVISION: A DATE: 4-30-71

FAILURE MODE (CODE #)	FAILURE EFFECT CATEGORY — ENGINE OPERATIONAL PHASES												
	A	B	C	D	E	F	G	H	I	J	K	L	M
		COAST		STARTUP				SHUTDOWN				COOLDOWN	
	LAUNCH	PRE-START OPERATIONS	PRE-START OPERATIONS	TEMP. CONDITION	BOOT STRAP	THRUST BUILDUP	RATED OPERATION	THROTTLING	THROTTLE HOLD	TEMP. RETREAT	PUMP TAILOFF	EARLY	PULSE
Fails to Control (07)	NA		IIB	NA	IIC	IIB	NA	IIB				NA	
Internal Leakage (08)	NA			IIA									
External Leakage (09)	NA			IIIB									
Body Rupture (10)	NA			IV									

SYSTEM FAILURE MODE EFFECTS AND CRITICALITY ANALYSIS • • • WORK SHEET

SHEET 1 OF 9

COMPONENT/SUBSYSTEM: PDCV/Pump Discharge Control Subsystem
PREPARED BY: G. M. Witcraft
DATE: 8-9-71
REFERENCE: Spec. EC-90280
REVISION: A
DATE: 4-30-71

FAILURE MODE (CODE #)	PHASE	EFFECTS ON SYSTEM OPERATION	FAILURE EFFECT CATEGORY
Fails to Move from Full Open Position (01)	A-B	Not applicable. Valve has no operating function during these phases.	NA
	C	Failure of PDCV in the open position during checkout represents a loss of the capability of the valve to perform its required control function in the later phases. To permit engine operation the malfunctioned leg must be blocked by closing the PDBV, and the remaining PDCV must perform the necessary control activity during startup and shutdown. The PDBV in the active leg must remain open to preclude a catastrophic total loss of flow through the system. The capability to isolate an external leak between the PDBV and PDCV seats is also lost.	IIB
	D	Failure of the valve to move from the full open position at the end of temperature conditioning is a loss of redundancy in performing the subsystem control functions. The PDBV in the malfunctioned leg must be rapidly closed to prevent TPA runaway when the TBV's and TDBV's are opened for the start of bootstrap. The non-malfunctioned PDCV must perform all of the subsystem functions, and the PDBV in the malfunctioned leg must remain closed to permit continued engine operation.	IIC
	E-F, H-K	Not applicable. Valve is not in full open position	NA
	G	Failure of a PDCV in the open position is a loss of redundancy in performing the subsystem control functions during the later phases. During the traverse to the throttle point, the BCVs and SSCV's will be driven further open than normal to maintain the demand chamber pressure and temperature. However, both controls have sufficient authority to maintain the system	IIB

SYSTEM FAILURE MODE EFFECTS AND CRITICALITY ANALYSIS • • • WORK SHEET

SHEET 2 OF 9

COMPONENT/SUBSYSTEM: PDCV/Pump Discharge Control Subsystem PREPARED BY: C. M. Hitcraft DATE: 8-9-71

REFERENCE: Spec. EC-90280 REVISION: A DATE: 4-30-71

FAILURE MODE (CODE *)	PHASE	EFFECTS ON SYSTEM OPERATION	FAILURE EFFECT CATEGORY
		on the normal control path until the transition to PDCV control during temperature retreat. To permit continued engine operation the PDBV must be closed to block flow through the malfunctioned leg. The subsystem control functions must be performed through the remaining leg. Its block valve must remain open to prevent a catastrophic loss of flow, and the block valve in the malfunctioned leg must remain closed to maintain engine control and permit engine startup for subsequent burns.	
	L-M	There is a small safety degradation from loss of the capability to isolate an external leak between the PDBV and PDCV seats. End Effect: Loss of operation of PTCS leg.	IIA

SYSTEM FAILURE MODE EFFECTS AND CRITICALITY ANALYSIS • • • WORK SHEET

SHEET 3 OF 9

COMPONENT/SUBSYSTEM: PDCV/Pump Discharge Control Subsystem PREPARED BY: [illegible] Witcraft DATE: 8-9-71

REFERENCE: Spec. [illegible] REVISION: A DATE: 4-30-71

FAILURE MODE (CODE #)	PHASE	EFFECTS ON SYSTEM OPERATION	FAILURE EFFECT CATEGORY
ails to Move From ull Closed Position (02)	A-M	Not applicable. Valve is never fully closed except during pre-operation checkout. Failure in the closed position at that time is included under Fails to Control (07) below.	NA
Inadvertent Closure (Actuator Speed) (03)	A-B	Not applicable. The valve has no operating function during these phases.	NA
	C-D, G L-M	Inadvertent closure of a PDCV results in the complete loss of flow through the subsystem leg with transient effects depending on the operating status at the time of failure. During the phases where the valves are wide open (D, G, L, M) the system upset would be minimal since the other leg is open and capable of passing the full propellant flow. The programmed position profile must be adjusted to compensate for the loss of the leg during subsequent phases.	IIB
	E,F,J-K	When the engine is operating at a low power level, such as the start of thrust buildup or the temperature retreat and pump tailoff phases, the PDCV's represent a major portion of the system impedance, and the pumps are operating close to stall. The sudden closure of one valve many drive both pumps into stall with a resultant major system upset requiring rapid, automatic detection and compensation to prevent major system damage.	IIC

SYSTEM FAILURE MODE EFFECTS AND CRITICALITY ANALYSIS • • • WORK SHEET

SHEET 4 OF 9

COMPONENT/SUBSYSTEM: PDCV/Pump Discharge Control Subsystem

PREPARED BY: C. H. Witcraft

DATE: 8-9-71

REFERENCE: Spec. EC-90280

REVISION: A

DATE: 4-30-71

FAILURE MODE (CODE #)	PHASE	EFFECTS ON SYSTEM OPERATION	FAILURE EFFECT CATEGORY
	H-I	If the engine is near rated operation, the change in impedance will be small enough so the bypass control subsystem can make complete compensation. However, at or near the throttle point, the remaining PDCV must be stepped to a new position to compensate for the impedance change to prevent violating the constraints on core seal pressure differential and rate of change of chamber temperature with permanent damage to the reactor assembly. End Effect: Loss of operation of PDCS leg.	IIC
Inadvertent Closure (Rupture Speed) (04)	A-B	Same as (03), above	NA
	C-D, G, L-M	Same as (03), above	IIB
	E-F, H-K	Same as (03) above	IIC

SYSTEM FAILURE MODE EFFECTS AND CRITICALITY ANALYSIS • • • WORK SHEET

COMPONENT/SUBSYSTEM: PDCV/Pump Discharge Control Subsystem
REFERENCE: Spec. EC-90280
PREPARED BY: G. M. Witcraft
REVISION: A
SHEET 5 OF 9
DATE: 8-9-71
DATE: 4-30-71

FAILURE MODE (CODE #)	PHASE	EFFECTS ON SYSTEM OPERATION	FAILURE EFFECT CATEGORY
Inadvertent Open (05)	A-B,D,G, L-M	Not applicable. Valve is full open.	NA
	C	Inadvertent opening of a PDCV during checkout results in loss of the operation of that leg of the subsystem for subsequent engine phases. The PDBV must be closed to block flow through the leg prior to the start of bootstrap to prevent runaway of the TPA's. All subsystem control functions must be performed by the remaining PDCV, and its block valve must remain open to prevent a catastrophic loss of flow to the nozzle.	IIB
	E	During bootstrap, the PDCV's are normally operating near the closed position. Opening of one of the valves would result in excessive TPA speeds prior to completion of the temperature conditioning of the bearings and thrust balance areas with possible damage to both TPA's and total loss of engine operation. At the same time, the non-malfunctioned PDCV will be driven closed in attempting to maintain the TPA speed demand. To avoid damage to the system, the operable PDCV must be stepped to its required position for single valve operation and the PDBV in the malfunctioned leg rapidly closed. Care must be exercised during the corrective action to avoid stalling the pumps while power is being applied to the turbines.	IIC

SYSTEM FAILURE MODE EFFECTS AND CRITICALITY ANALYSIS • • • WORK SHEET

COMPONENT/SUBSYSTEM: PDCV/Pump Discharge Control Subsystem

PREPARED BY: G. M. Witcraft

SHEET 6 OF 9

DATE: 8-9-71

REFERENCE: Spec. EC-00280

REVISION: A

DATE: 4-30-71

FAILURE MODE (CODE *)	PHASE	EFFECTS ON SYSTEM OPERATION	FAILURE EFFECT CATEGORY
	F,H-K	Inadvertent opening of either PDCV reduces the impedance of the pump discharge line, allowing increased flow through the system. During operation near the design point, the bypass control valves will have sufficient authority to bring the engine back to the demand chamber pressures and the system can tolerate the transient without corrective action. At lower pressures the BCV's will be driven full open, and the equilibrium pressure will be higher than the demand. The engine would be unable to maintain the demand startup and shutdown profiles. The rate of pressure increase on startup would be considerably greater than the demand, and the shutdown from the throttle hold would lag the demand pressure and temperature. During the periods when the engine is in closed loop control with the PDCV's (Phases F, J, K), the non-malfunctioned PDCV would be driven closed in attempting to meet the demanded operating conditions. Finally, the malfunction produces temperature transients that exceed the limits on both the maximum chamber temperature and its rate of change with possible damage to the nuclear reactor. The required corrective action is to rapidly close the PDBV in the malfunctioned leg so the other leg can assume the full subsystem functions. However, care must be exercised in making the transition. The operable PDCV must be opened to its new required position before the malfunctioned leg is closed to avoid stalling the pumps or momentary reduction of flow through the system to the point of possible physical damage to the nozzle coolant tubes and core support hardware. End Effect: Loss of operation of PDCS leg.	IIC

SYSTEM FAILURE MODE EFFECTS AND CRITICALITY ANALYSIS • • • WORK SHEET

SHEET 7 OF 9

COMPONENT/SUBSYSTEM: PDCV/Pump Discharge Control Subsystem
REFERENCE: Spec. EC-90280

PREPARED BY: G. M. Witcraft
REVISION: A

DATE: 8-9-71
DATE: 4-30-71

FAILURE MODE (CODE #)	PHASE	EFFECTS ON SYSTEM OPERATION	FAILURE EFFECT CATEGORY
Fails at Intermediate Position (06)	A-M	Not applicable. Failure of a control valve in an intermediate position is included under Fails to Control (07).	NA
Fails to Control (07)	A-B, D, G,L-M	Not applicable. PDCV has no control function during these phases.	NA
	C,F,H-K	Failure of a PDCV to properly respond to either closed or open loop demand signals will generally result in failure of the engine to follow the prescribed operating profile. If the valve drifts to a position more nearly closed than required, the other PDCV can fully compensate and maintain the subsystem function. If it drifts further open than normal, the operable valve may be driven closed, and the subsystem will lose its functional capability. Near the rated operating point, the PDCV's will be able to compensate for an open PDCV. If the malfunctioned valve does not remain in a fixed position, the controlling valve will be exercised excessively. The PDBV in the malfunctioned leg should be closed to permit continued operation via the operable PDCV.	IIB
	E	Failure to maintain the speed of the TPA's within the demand limits prior to satisfactory temperature conditioning of the bearings and thrust balancer can result in permanent damage to both TPA's and inability to operate the engine. The PDBV in the malfunctioned leg should be rapidly closed to prevent such damage. End Effect: Loss of operation of PDCS leg.	IIC

SYSTEM FAILURE MODE EFFECTS AND CRITICALITY ANALYSIS • • • WORK SHEET

SHEET 8 OF 9

COMPONENT/SUBSYSTEM: PDCV/Pump Discharge Control Subsystem
PREPARED BY: G. M. Witcraft
DATE: 8-9-71

REFERENCE: Spec. EC-10280
REVISION: A
DATE: 4-30-71

FAILURE MODE (CODE #)	PHASE	EFFECTS ON SYSTEM OPERATION	FAILURE EFFECT CATEGORY
Internal Leakage (08)	A-C	Not applicable. The PDCV's have no sealing function during these phases.	NA
	D-M	Excessive internal leakage is a degradation of system safety due to the inability to isolate an external leak between the PDBV and PDCV seats. End Effect: System safety degradation	IIA
External Leakage (09)	A-C	Not applicable. The PDCV's have no function during these phases.	NA
	D-M	Excessive external leakage downstream of the valve seat depletes the propellant reserves and precludes maintaining rated engine performance. Attempts to maintain full thrust will result in driving the BCV's closed to furnish the additional turbine power to pump the lost propellant. Until the leak is large enough to force the BCV's completely closed, full thrust can be obtained, but excessive pump pressures will be generated because of the added flow. A leak upstream of the valve seat can be isolated by closing both the PDCV and the PDBV in the malfunctioned leg. End Effect: Emergency mode operating capability only.	IIIB

SYSTEM FAILURE MODE EFFECTS AND CRITICALITY ANALYSIS • • • WORK SHEET

COMPONENT/SUBSYSTEM: PDCV/Pump Discharge Control Subsystem
PREPARED BY: G. M. Witcraft
SHEET 9 OF 9
DATE: 8-9-71
REFERENCE: Spec. EC-90280
REVISION: A
DATE: 4-30-71

FAILURE MODE (CODE #)	PHASE	EFFECTS ON SYSTEM OPERATION	FAILURE EFFECT CATEGORY
Body Rupture (10)	A-C	Not applicable. The PDCV's have no operating function during these phases..	NA
	D-M	This failure mode results in complete loss of flow through the pump discharge line and total loss of engine operation. At high power. the sudden loss of flow would cause burn through of the nozzle tubes and melting and disassembly of the pressure vessel and reactor. During the cooldown phases (L&M) flow could be forced through the stems and reflector by closing the turbine bypass subsystem, but the rupture can not be blocked off to force coolant through the core. All of the flow would have to pass through the stems. End Effect: Loss of engine operation	IV

4.3.2.2 Pump Discharge Block Valve (PDBV)

a. Description and Function

The primary purpose of the PDBV's is to provide the capability of blocking flow through a malfunctioned PDCV. In conjunction with the PDCV, it also permits isolation of an external leak between the two valve seats.

The PDBV is a ball valve (Figure 4.3-2) with a 6.5" outside ball diameter and a 3 5/8" diameter circular port (Dwg. 1139187). The valve stroke is 90°, and the nominal full opening or closing time is 1.0 seconds. In the open position, the full 3 5/8" diameter port is open to provide minimum impedance to the propellant flow. The maximum allowable internal leakage in the fully closed position is 2×10^6 SCIM, inlet to outlet, at a pressure differential of 59.7 psi and inlet conditions of 83 psia and 50°R.

The valve is driven by a rotary shaft powered by an induction motor through a planetary gear train with a speed reduction of 120:1. Loss of electrical power to the actuator causes the valve to fail in place.

b. Failure Modes

The PDBV's do not exercise any control function. Hence the failure mode Fails to Control (07) is not applicable. All of the remaining modes listed in Paragraph 4.1.3.1 are applicable to the PDBV.

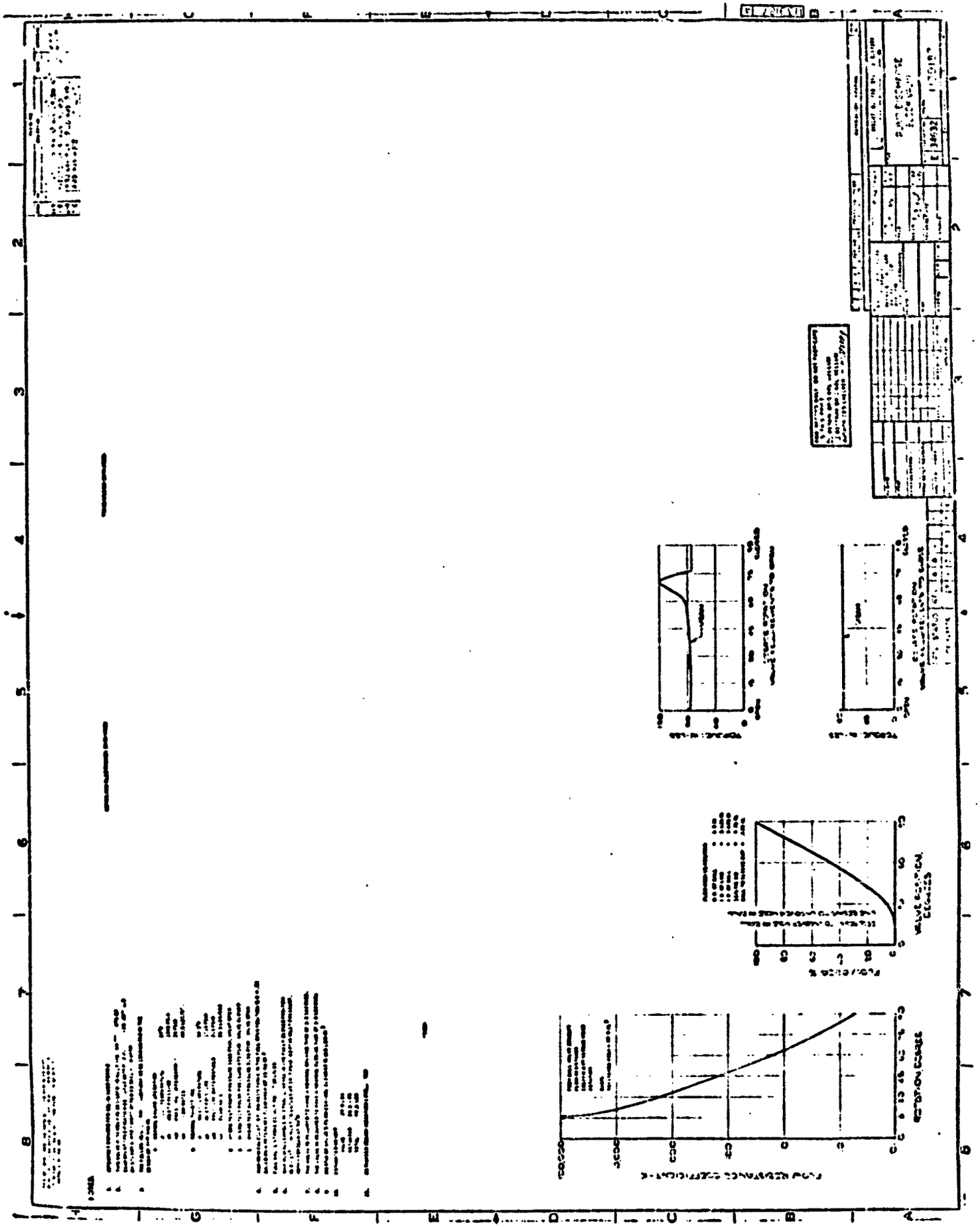

Pump Discharge Block Valve (PDBV)

Figure 4.3-2 Sheet 1)

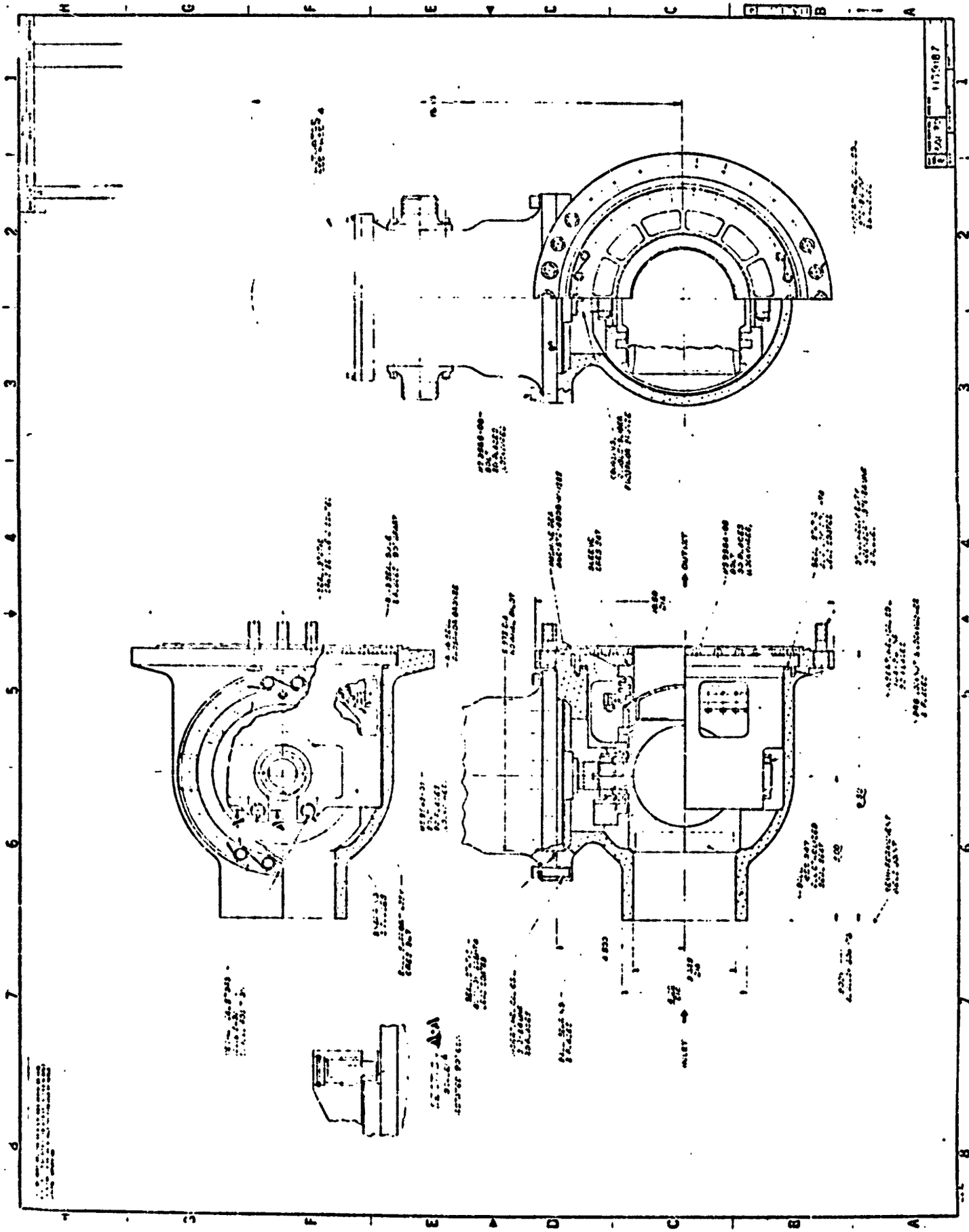

Figure 4.3-2 (Sheet 2)

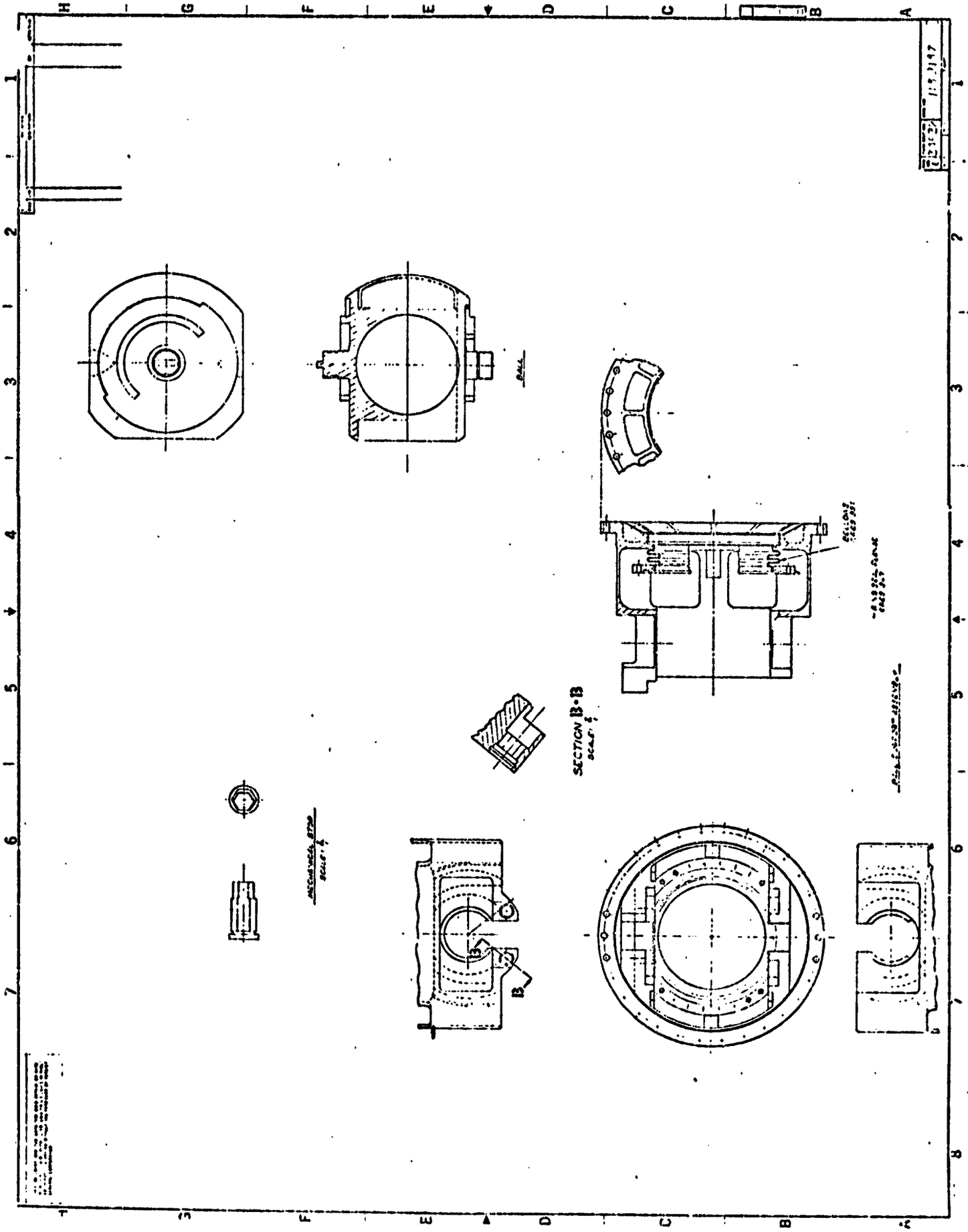

(Figure 4.3-2 Sheet)

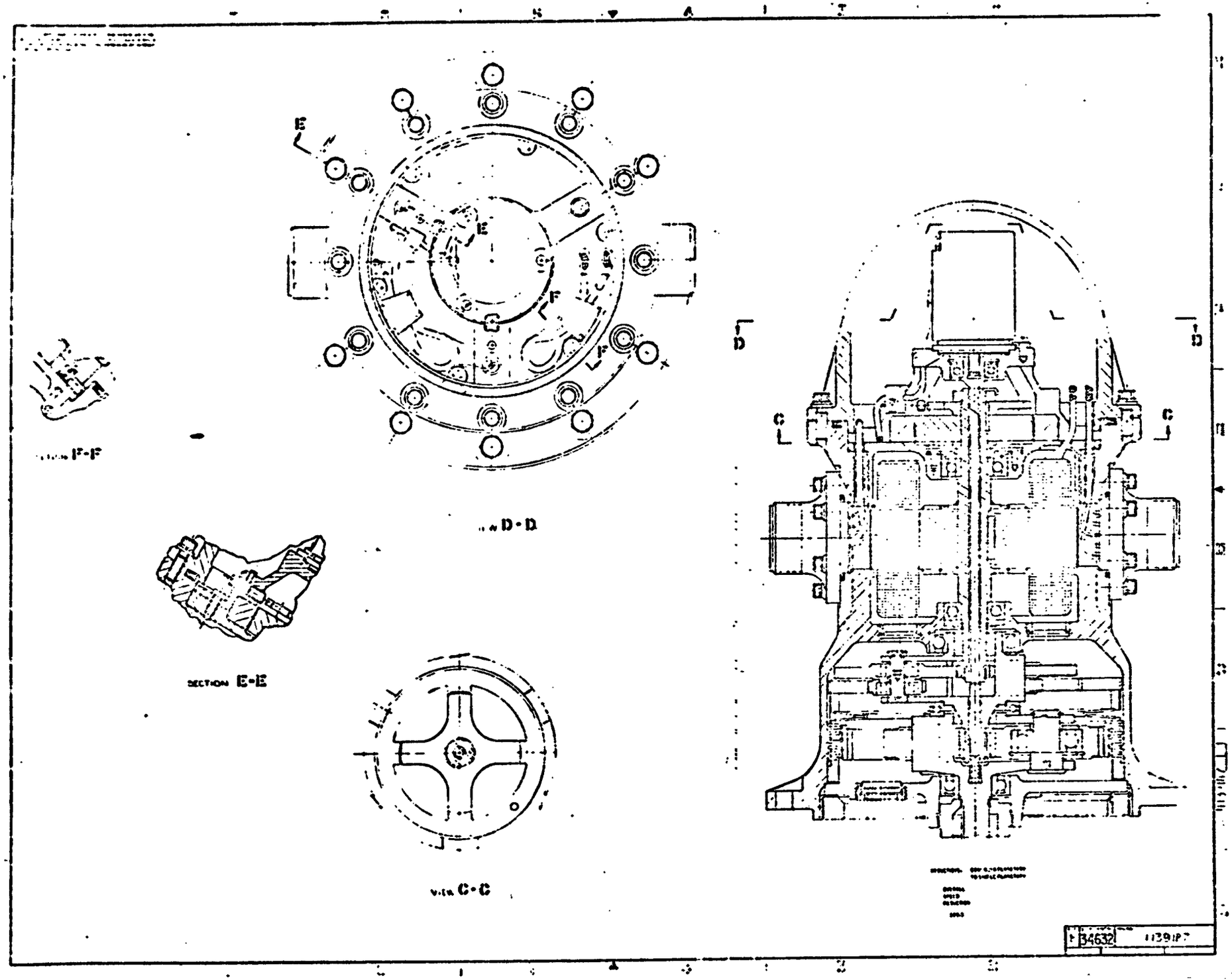
E
E
F
F
D
D
C
C
VIEW F-F
VIEW D-D
SECTION E-E
VIEW C-C
34632

SYSTEM FAILURE MODE EFFECTS AND CRITICALITY ANALYSIS • • • SUMMARY SHEET

SHEET 1 OF 2

COMPONENT/SUBSYSTEM: PDBV/Pump Discharge Control Subsystem

PREPARED BY: G. M. Witcraft

DATE: 8-9-71

REFERENCE: Spec. EC-90282

REVISION: A

DATE: 4-30-71

FAILURE MODE (CODE #)	FAILURE EFFECT CATEGORY — ENGINE OPERATIONAL PHASES												
	A	B	C	D	E	F	G	H	I	J	K	L	M
		COAST		STARTUP				SHUTDOWN				COOLDOWN	
	LAUNCH	POST OPERATIONS	PRE-START OPERATIONS	TEMP. CONDITION	BOOT STRAP	THRUST BUILDUP	RATED OPERATION	THROTTLING	THROTTLE HOLD	TEMP. RETREAT	PUMP TAILOFF	EARLY	PULSE
ails to Move From ull Open Position (01)	NA	→	IIA										→
ails to Move From ull Closed Position (02)	NA	→	IIB	NA									→
nadvertent losure ctuator Speed) (03)	NA	→	IIB	→	IIC	→	IIB	IIC	→	→	→	IIB	→
nadvertent Clos- re (Rupture eed) (04)	NA	→	IIB	→	IIC	→	IIB	IIC	→	→	→	IIB	→
nadvertent pen (05)	NA	→	IIA	NA	→	→	→	→	→	→	→	→	→
ails at Inter- ediate Position (06)	MF	→	IIB	MF	→	→	→	→	→	→	→	→	→

SYSTEM FAILURE MODE EFFECTS AND CRITICALITY ANALYSIS • • • SUMMARY SHEET

SHEET 2 OF 2

COMPONENT/SUBSYSTEM: PDRV/Pump Discharge Control Subsystem PREPARED BY: G. M. Witcraft DATE: 8-9-71

REFERENCE: Spec. EC-90282 REVISION: A DATE: 4-30-71

FAILURE MODE (CODE #)	FAILURE EFFECT CATEGORY												
	ENGINE OPERATIONAL PHASES												
	A	B	C	D	E	F	G	H	I	J	K	L	M
		COAST		STARTUP				SHUTDOWN				COOLDOWN	
	LAUNCH	POST OPERATIONS	PRE-START OPERATIONS	TEMP. CONDITION	BOOT STRAP	THRUST BUILDUP	RATED OPERATION	THROTTLING	THROTTLE HOLD	TEMP. RETREAT	PUMP TAILOFF	EARLY	PULSE
Fails to Control (07)	NA												
Internal Leakage (08)	NA			IIA									
External Leakage (09)	NA			IIIB									
Body Rupture (10)	NA			IV									

SYSTEM FAILURE MODE EFFECTS AND CRITICALITY ANALYSIS • • • WORK SHEET

COMPONENT/SUBSYSTEM: PDBV/Pump Discharge Control Subsystem

REFERENCE: Spec. EC-90282

PREPARED BY: G. M. Witcraft

REVISION: A

SHEET 1 OF 5

DATE: 8-9-71

DATE: 4-30-71

FAILURE MODE (CODE #)	PHASE	EFFECTS ON SYSTEM OPERATION	FAILURE EFFECT CATEGORY
Fails to Move From Full Open Position (01)	A-B	Not applicable. The PDBV's have no function during these phases.	NA
	C-M	Inability of the valve to close degrades system safety by removing the capability of blocking flow through a malfunctioning PDCV or of isolating an external leak between the PDBV and PDCV seats. Failure of the PDCV in the same leg to the open position results in loss of engine start capability. End Effect: System safety degradation	IIA
Fails to Move from Full Closed Position (02)	A-B,D-M	Not applicable. Valve is open.	NA
	C	Failure of a PDBV to open after closure during checkout results in the loss of operation of the PDCS leg for all operating phases. The PDCV in the other leg must perform all the subsystem functions, and its PDBV must remain open. End Effect: Loss of operation of PDCS leg.	IIB
Inadvertent Closure (Actuator Speed) (03)	A-B	Not applicable. The valve has no operating function during these phases.	NA
	C-D, G, L-M	Same as Inadvertent Closure (Actuator Speed) (03) of PDCV above.	IIB

SYSTEM FAILURE MODE EFFECTS AND CRITICALITY ANALYSIS • • • WORK SHEET

COMPONENT/SUBSYSTEM: PDBV/Pump Discharge Control Subsystem
REFERENCE: Sped. EC-90282

PREPARED BY: G. M. Witcraft
REVISION: A

SHEET 2 OF 5
DATE: 8-9-71
DATE: 4-30-71

FAILURE MODE (CODE #)	PHASE	EFFECTS ON SYSTEM OPERATION	FAILURE EFFECT CATEGORY
	E-F,J-K	Same as Inadvertent Closure (Actuator Speed) (03) of PDCV, above.	IIC
	H-I	Same as Inadvertent Closure (Actuator Speed) (03) of PDCV, above. End Effect: Loss of operation of PDCS leg.	IIC
Inadvertent Closure (Rupture Speed) (04)	A-B	Not applicable. The valve has no operating function during these phases.	NA
	C-D,G L-M	Same as Inadvertent Closure (Actuator Speed) (03) of PDCV, above.	IIB
	E-F,H-K	Same as Inadvertent Closure (Actuator Speed) (03) of PDCV, above. End Effect: Loss of operation of PDCS leg.	IIC
Inadvertent Open (05)	A-B,D-M	Not applicable. Valve is open.	NA
	C	Inadvertent opening of a PDBV during checkout degrades system safety the same as Fails to Move from Full Open Position (01), above. End Effect: System safety degradation.	IIA

SYSTEM FAILURE MODE EFFECTS AND CRITICALITY ANALYSIS • • • WORK SHEET

SHEET 3 OF 5

COMPONENT/SUBSYSTEM: PDBV/Pump Discharge Control Subsystem PREPARED BY: G. M. Witcraft DATE: 8-9-71

REFERENCE: Spec. EC-90282 REVISION: A DATE: 4-30-71

FAILURE MODE (CODE #)	PHASE	EFFECTS ON SYSTEM OPERATION	FAILURE EFFECT CATEGORY
Fails at Intermediate Position (06)	A-B,D-M	Multiple failure. The valve is normally maintained open and can only fail in an intermediate position as a result of multiple malfunctions.	MF
	C	Intermediate failure of a PDBV during checkout degrades the system safety during subsequent operation by removing the capability of blocking flow through a PDCS leg with a malfunctioned PDCV or of isolating an external leak between the PDBV and PDCV seats. If the valve fails near the open position, the control systems can fully compensate and maintain the demand profiles through all operating phases. If near the closed position, the system can fully compensate during the periods when the PDCV's are in closed loop control. In the periods of position control of the PDCV's, greater than normal impedance would exist in the subsystem. In the vicinity of the throttle point. the BCV's will not have sufficient authority to make full compensation. They will be driven closed, and the chamber pressure will still fall short of the demand. This condition will gradually disappear as the rated operating point is approached and the PDCV's are opened. To permit maintaining the demand pressure profile between the throttle point and design point, the PDCV's would have to be adjusted further open than their normal position. The PDCV in the malfunctioned leg should be closed to block flow through that leg and avoid ambiguity in the position control profile of the PDCV in the non-malfunctioned leg. End Effect: Loss of operation of PDCS leg.	IIB
Fails to Control (07)	A-M	Not applicable. The PDBV's have no control function.	NA

SYSTEM FAILURE MODE EFFECTS AND CRITICALITY ANALYSIS • • • WORK SHEET

SHEET 4 OF 5

COMPONENT/SUBSYSTEM: PDBV/Pump Discharge Control Subsystem PREPARED BY: G. M. Witcraft DATE: 8-9-71

REFERENCE: Spec. EC-90282 REVISION: A DATE: 4-30-71

FAILURE MODE (CODE #)	PHASE	EFFECTS ON SYSTEM OPERATION	FAILURE EFFECT CATEGORY
Internal Leakage (08)	A-C	Not applicable. Valve has no sealing function during these phases.	NA
	D-M	Excessive internal leakage degrades system safety by removing the capability of completely blocking flow through a PDCS leg with a malfunctioned PDCV or of isolating an external leak between the PDCV and PDBV seats. End Effect: System safety degradation.	IIA
External Leakage (09)	A-C	Not applicable. Valve has no flow function during these phases.	NA
	D-M	Excessive external leakage upstream of the valve seat depletes the propellant reserves and precludes maintaining rated engine performance. Attempts to maintain full thrust will result in driving the BCV's closed to furnish the additional turbine power to pump the lost propellant. Until the leak is large enough to force the BCV's completely closed, full thrust can be reached, but excessive pump pressures will be generated because of the added flow. A leak downstream of the valve seat can be isolated by closing both the PDBV and the PDCV in the malfunctioned leg. End Effect: Emergency mode operating capability only	IIIB

SYSTEM FAILURE MODE EFFECTS AND CRITICALITY ANALYSIS • • • WORK SHEET

COMPONENT/SUBSYSTEM: PDBV/Pump Discharge Control Subsystem
PREPARED BY: G. M. Witcraft
SHEET 5 OF 5
DATE: 8-9-71
REFERENCE: Spec EC-90282
REVISION: A
DATE: 4-30-71

FAILURE MODE (CODE #)	PHASE	EFFECTS ON SYSTEM OPERATION	FAILURE EFFECT CATEGORY
Body Rupture (10)	A-C	Not applicable. The PDBV's have no operating function during these phases.	NA
	D-M	This failure mode results in complete loss of flow through the pump discharge line and total loss of engine operation. At high power, the sudden loss of flow would cause burn through of the nozzle tubes and melting and disassembly of the pressure vessel and reactor. During cooldown, a rupture could be blocked off by closing the PDCV"s and the SSCA to force flow through the core. Opening either a PDCV or the SSCA would permit flow through the reflector. All of the flow must first pass through the stems. End Effect: Loss of engine operation.	IV

SECTION 4.4

TURBINE BYPASS CONTROL SUBSYSTEM

4.4 TURBINE BYPASS CONTROL SUBSYSTEM

4.4.1 Description

4.4.1.1 Function/Requirements

The bypass control subsystem provides an open flow path around the turbines for engine chilldown and cooldown, and is the primary pressure control element during powered operation at and above the throttle point.

4.4.1.2 Configuration

The bypass subsystem shown on the engine schematic, Figure 4.2-1, consists of two parallel legs, each containing a bypass control valve (BCV) in series with a bypass block valve (BBV) and the connecting lines (TBL), fittings, junctions and welds in the flow path between the TIL and TDL. The bypass subsystem also includes those parts of the instrumentation and controls that interact with the four valves.

Either BCV-BBV leg is capable of bypassing the required flow for operation with one or both TPA's. During normal operation, the BBV's are always open and the BCV's are operated in active redundancy.

4.4.1.3 Operation

During launch and coast, the BCV's and BBV's are in the full open position with no functional requirement because there is no hydrogen flow. During Phase C, all four valves are cycled closed and then re-opened to determine their readiness for engine start.

The subsystem is required to remain open during temperature conditioning and bootstrap. Flow is allowed to pass through the engine and exit the nozzle without going through the turbines to permit

proper chilldown of the pumps prior to bootstrap. At least one bypass leg must be full open (or equivalent through both legs) for successful execution of these phases.

During thrust buildup to the throttle point, the BCV's are programmed from full open to an intermediate position approximately the same as they will assume when the pressure control mode change is made from the PDCV's to the BCV's. After this switch, the remainder of the thrust buildup, the steady state operation, and the throttling and throttle hold portions of shutdown are conducted with the chamber pressure under the influence of the bypass control valves. They are the end control elements in a closed control loop with feedback that functions to reduce the difference between the demanded and measured chamber pressure to zero. With a nominal engine operating on two TPA's at full rated thrust, approximately 8% of the total flow goes through the turbine bypass control subsystem.

After completion of the throttle hold, the BCV's are again placed in position control for the temperature retreat and pump tailoff phases. The specific position program has not yet been established, but they will be wide open at the end of pump tailoff. The subsystem is required to remain open during the cooldown phases to provide a flow path around the turbines.

The bypass control concept presents some problems from the standpoint of closed loop control of the chamber pressure. The BCV's can influence the system only through changes to the impedance seen by a small stream of propellant flowing in parallel with the turbine drive gas. This indirect influence causes the initial response of the BCV's to component malfunctions to be generally 180° out of phase with the final equilibrium requirements, exaggerating the transient upset and making the system tend to overshoot and hunt for the new operating conditions. For example, a deviation of chamber pressure below the demand requires the BCV's to close, diverting more drive gas to the turbines. As the valves close, the total impedance is increased, causing a further reduction in the core flow and chamber pressure. This causes the BCV's to be closed even further, continuing the process until the pump output is increased sufficiently to override the additional impedance and start the chamber pressure back up toward the demand.

The control logic will have to anticipate these phenomena to minimize system transients. Many malfunctions may require temporarily opening the BCV control loop and moving the valves to predetermined positions to preclude violating system operating constraints. This is a serious complication to the control system and the malfunction detection and correction system that could be avoided by a more direct scheme of turbine control.

4.4.2 Failure Analysis

4.4.2.1 Bypass Control Valve (BCV)

a. Description and Function

The BCV's modulate the flow through the bypass control subsystem in accordance with the engine operating requirements for startup, steady state, and shutdown. During chilldown, bootstrap and cooldown, they are full open to minimize the subsystem impedance.

The BCV (Figure 4.4-1) is a nominal 4-inch visor-venturi type valve (Dwg. 1139049) with a 2.5" ID venturi. The circular visor port is also 2.5" in diameter so that the flow channel is unobstructed when the valve is in the full open position. The full valve stroke, including the shutoff seal is 123°, and the nominal opening or closing time is 1.0 second. The maximum allowable internal flow in the fully closed position is 3.4×10^6 SCIM (11.0 lb/min) at normal engine operation (inlet temperature 279°R, pressure 1078 psia, pressure differential 353 psi).

The valve is coupled to the drive shaft with a spline, and driven by a variable speed electric motor through a planetary gear train. In the event of loss of electrical power to the actuator, the valve will remain in place. It has no mechanical or electrical emergency close system.

b. Failure Modes

All of the failure modes listed in Table 4-2 are applicable to the BCV except Fails at Intermediate Position (06). Intermediate failure of a control valve is included under Fails to Control (07).

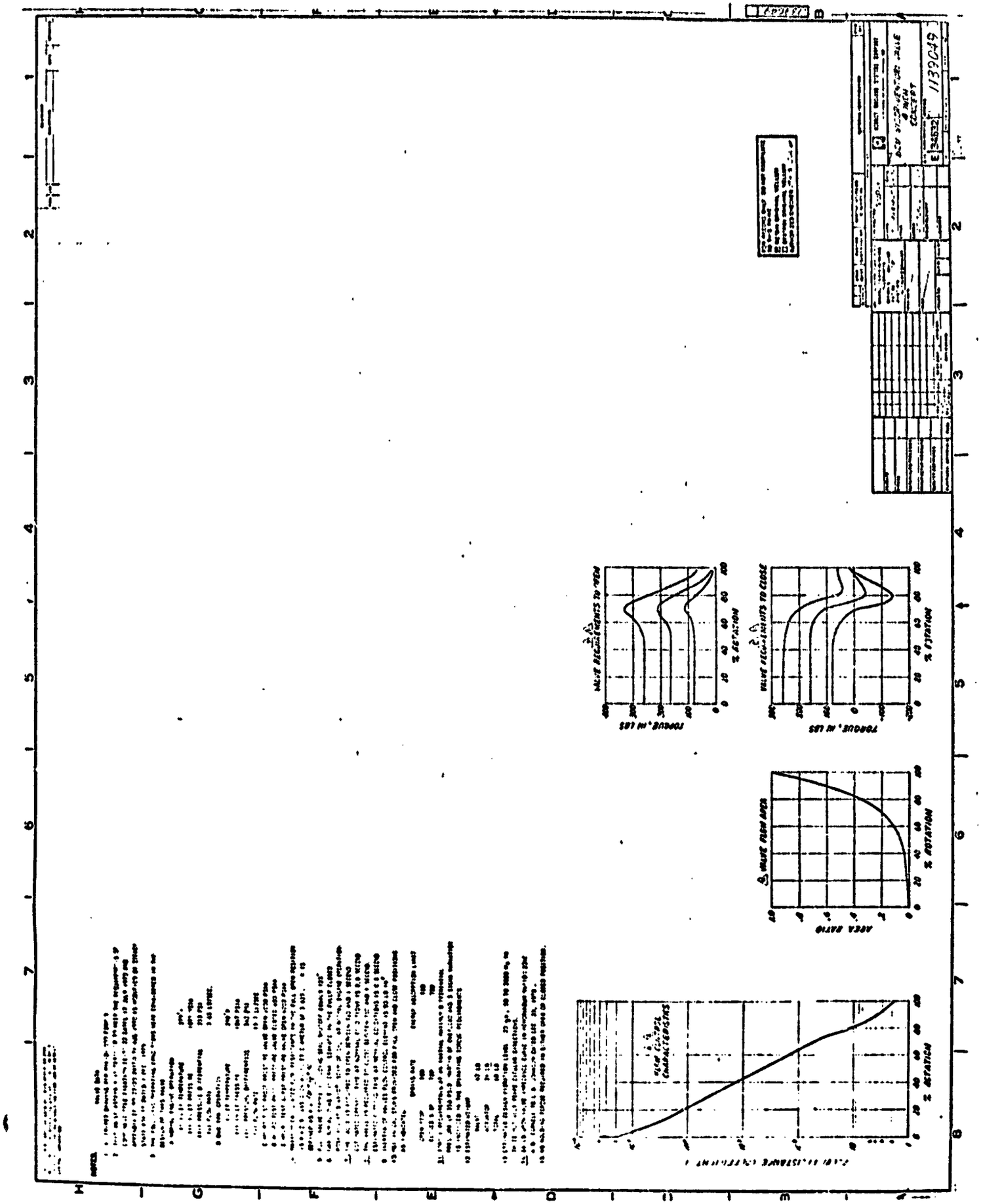

Bypass Control Valve (BCV)

Figure 4.4-1 (Sheet 1)

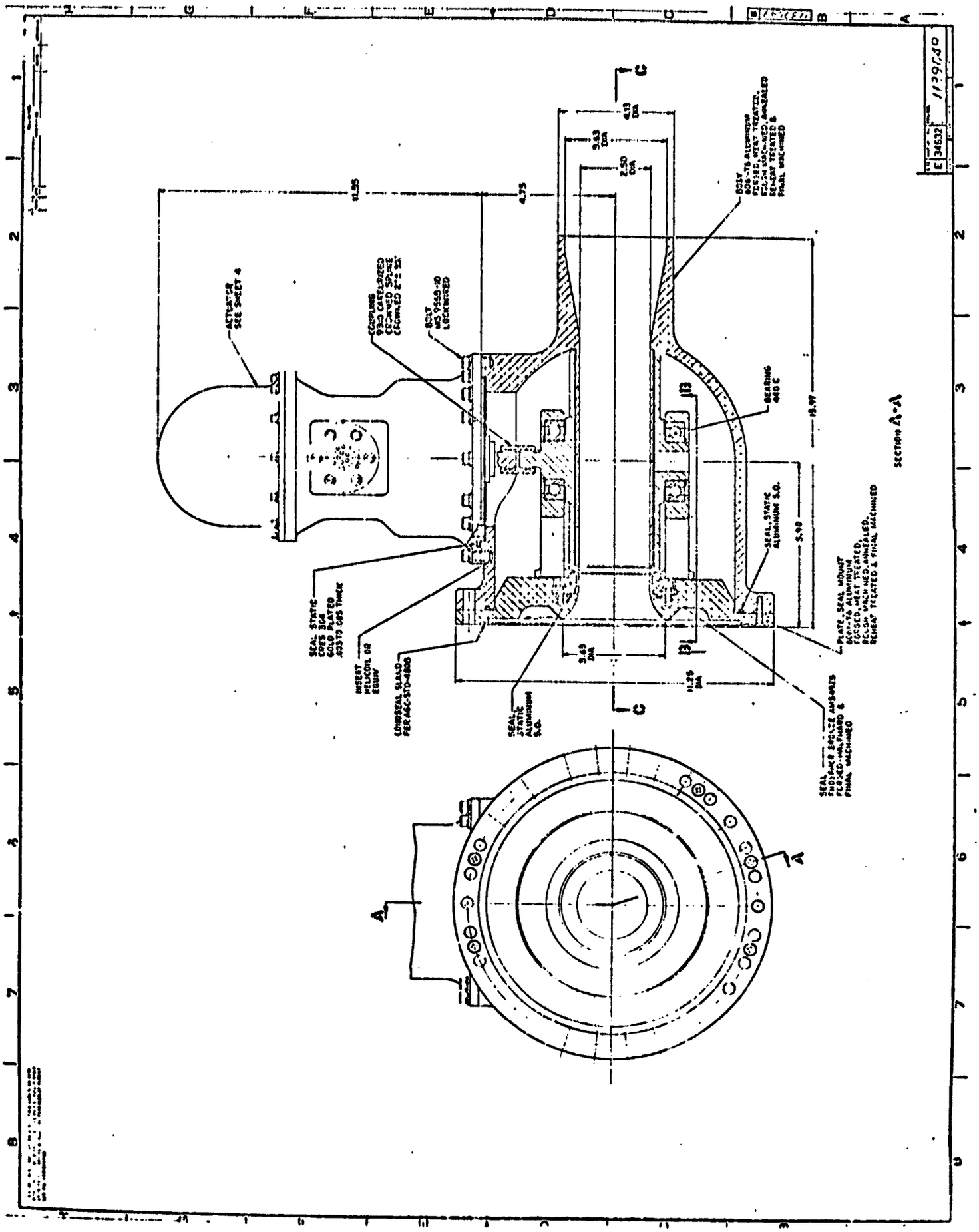

Figure 4.4-1 (Sheet 2)

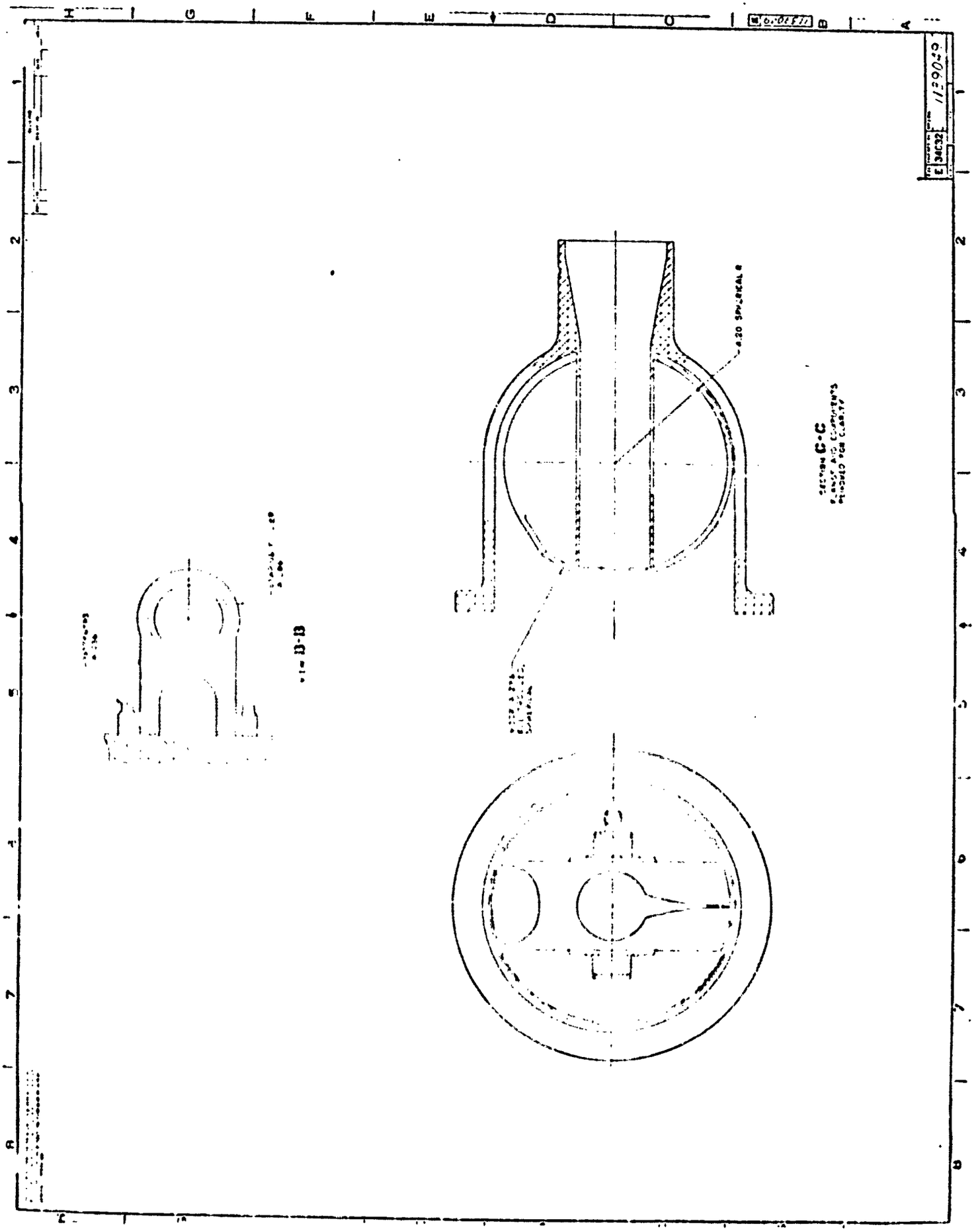

Figure 4.4-1 (Sheet 3)

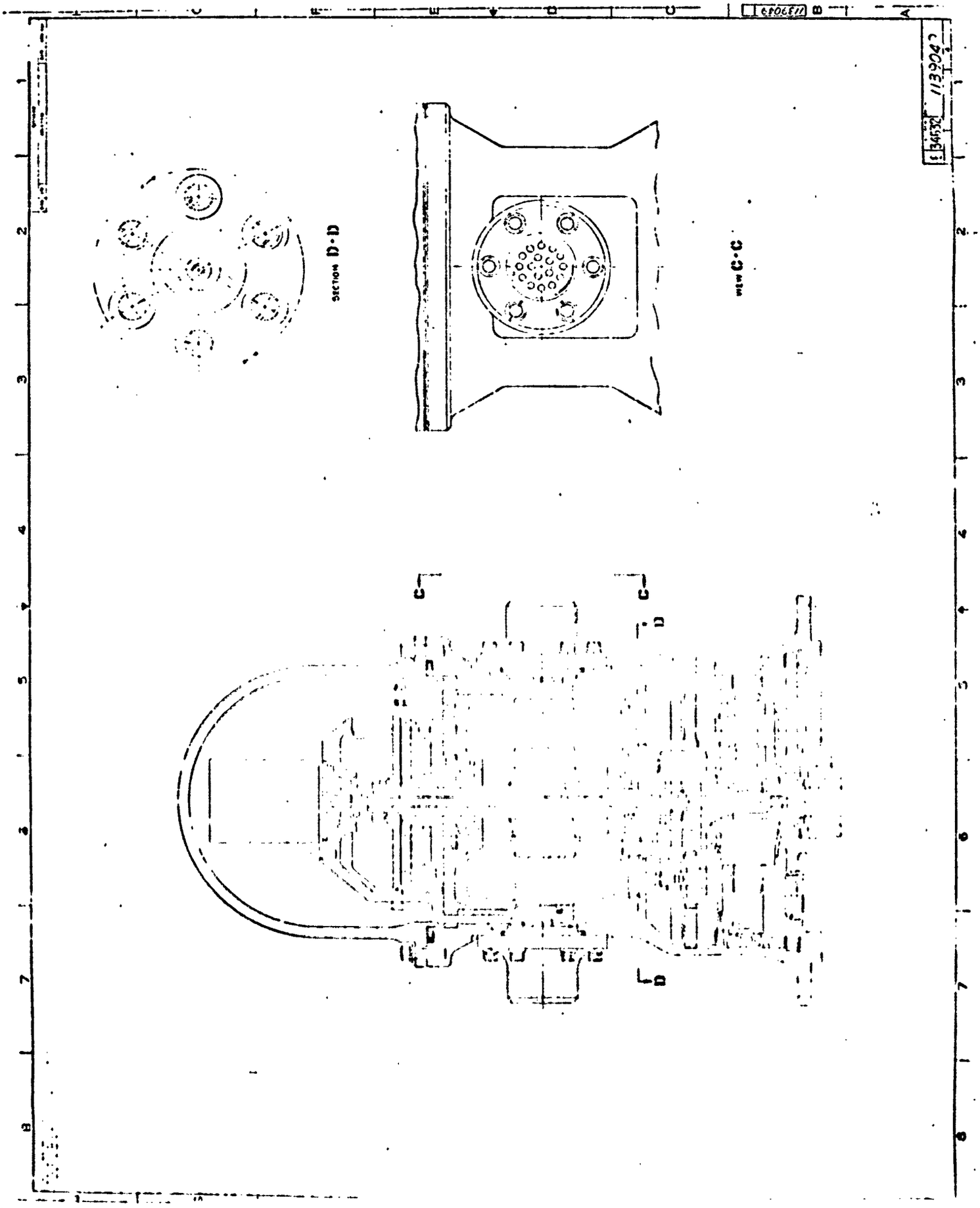

Figure 1 (cont)

SYSTEM FAILURE MODE EFFECTS AND CRITICALITY ANALYSIS * * * SUMMARY SHEET

SHEET 1 OF 2

COMPONENT/SUBSYSTEM: BCV/Turbine Bypass Control Subsystem

PREPARED BY: G. M. Witcraft

DATE: 8-10-71

REFERENCE: Spec. EC-90122

REVISION: A

DATE: 4-30-71

FAILURE MODE (CODE #)	FAILURE EFFECT CATEGORY — LOGIC OPERATIONAL PHASES												
	A	B	C	D	E	F	G	H	I	J	K	L	M
		COAST		STARTER				SHUTDOWN				COOLDOWN	
	LAUNCH	POST OPERATIONS	PRE-OPERATIONS	[illegible]	[illegible]	[illegible]	RATED OPERATION	THROTTLING	THROTTLE HOLD	TEMP. RETREAT	PUMP TAILOFF	EARLY	PULSE
Fails to Move From Full Open Position (01)	NA	→	IIB				NA					IIB	→
Fails to Move From Full Closed Position (02)	NA												→
Inadvertent Closure (Actuator Speed) (03)	NA	→	IIB		→	IIC					→	IIB	→
Inadvertent Closure (Rupture Speed) (04)	NA	→	IIB		→	IIC					→	IIB	→
Inadvertent Open (05)	NA	→	IIB	NA		IIB					→	NA	→
Fails at Intermediate Position (06)	NA												→

SYSTEM FAILURE MODE EFFECTS AND CRITICALITY ANALYSIS • • • SUMMARY SHEET

SHEET 2 OF 2

COMPONENT/SUBSYSTEM: BCV/Turbine Bypass Control Subsystem

PREPARED BY: G. M. Witcraft

DATE: 8-10-71

REFERENCE: Spec. EC-90122

REVISION: A

DATE: 4-30-71

FAILURE MODE (CODE #)	FAILURE EFFECT CATEGORY — ENGINE OPERATIONAL PHASES												
	A	B	C	D	E	F	G	H	I	J	K	L	M
		COAST		STARTUP				SHUTDOWN				COOLDOWN	
	LAUNCH	POST OPERATIONS	PRE-START OPERATIONS	TEMP. CONDITION	[illegible]	[illegible]	RATED OPERATION	THROTTLING	THROTTLE HOLD	TEMP. RETREAT	PUMP TAILOFF	EARLY	PULSE
Fails to Control (07)	NA	→	IIB	NA	→	IIB	→	→	→	→	→	NA	→
Internal Leakage (08)	NA	→	→	→	→	→	→	→	→	→	→	→	→
External Leakage (09)	NA	→	→	IIIB	→	→	→	→	→	→	→	→	→
Body Rupture (10)	NA	→	→	IV	→	→	→	→	→	→	→	→	→

SYSTEM FAILURE MODE EFFECTS AND CRITICALITY ANALYSIS WORK SHEET

COMPONENT/SUBSYSTEM: BCV/Turbine Bypass Control Subsystem
PREPARED BY: G. M. Witcraft
SHEET 1 OF 7
DATE: 8-10-71
REFERENCE: SPEC. [illegible]
REVISION: A
DATE: 4-30-71

FAILURE MODE (CODE #)	PHASE	EFFECTS ON SYSTEM OPERATION	FAILURE EFFECT CATEGORY
Failure Move From Full Open Position (1)	A-B	Not applicable. The BCV's have no function during these phases.	
	C, D-E, L-M	Failure of a BCV to move from the open position during checkout results in the loss of operation of the bypass control subsystem leg for all phases from bootstrap through pump tailoff. The BBV must be closed prior to the start of thrust buildup to permit engine startup and operation. The non-malfunctioned BCV must perform all the subsystem control functions, and its block valve must remain open to permit continued engine operation.	IIB
	F	Inability of a BCV to move from the open position at the start of thrust buildup precludes maintaining the demand operating pressure profile. The non-malfunctioned BCV would be driven closed attempting to meet the pressure demand, and the chamber pressure would slowly increase to an equilibrium value less than the throttle pressure. To permit normal engine operation, the malfunctioned leg must be shut off by closing its block valve, and the position of the non-malfunctioned valve adjusted to compensate for the loss of flow through the leg.	IIB
	G-K	Not applicable. Valve is not in full open position.	NA
		End Effect: Loss of operation of TBC subsystem leg.	

SYSTEM FAILURE MODE EFFECTS AND CRITICALITY ANALYSIS • • • WORK SHEET

SHEET 2 OF 7

COMPONENT/SUBSYSTEM: BCV/Turbine Bypass Control Subsystem PREPARED BY: G. M. Witcraft DATE: 8-10-71

REFERENCE: Spec. EC-90122 REVISION: A DATE: 4-30-71

FAILURE MODE (CODE #)	PHASE	EFFECTS ON SYSTEM OPERATION	FAILURE EFFECT CATEGORY
Fails to Move From Full Closed Position (02)	A-M	Not applicable. The only time the valve is fully closed is during prestart checkout. Failure in the closed position at that time will be included under Fails to Contr (07) below.	NA
Inadvertent Closure (Actuator Speed) (03)	A-B	Not applicable. The BCV's have no operating function during these phases.	NA
	C-E, L-M	Inadvertent closure of a BCV blocks flow through one leg of the bypass control subsystem for all subsequent operation, requiring the redundant leg to assume the full subsystem functions. The specific transient effects will depend on the operating status at the time of failure. There will be none during phase C since flow has not yet started. The effects during D, E, L, and M will be minimal. Both legs are normally full open, and closure of one does not significantly affect the operation. The program position profile of the remaining BCV must be adjusted to compensate for the loss of the subsystem leg prior to the start of thrust buildup.	IIB
	F-K	During the early portion of thrust buildup and in pump tailoff, the pumps are operating near the stall region. Sudden closure of one turbine bypass leg will force more drive gas through the turbines with danger of stalling and overspeeding the TPA's. The position profile of the remaining BCV must be quickly adjusted to compensate for the loss of flow through the subsystem leg to avoid pump stall. When the BCV's are in closed loop control, the non-malfunctioned BCV has sufficient authority to accommodate the equilibrium change in impedance due to loss of flow through the other valve, but the malfunction produces temperature and pressure transients that are unacceptable to the system without some automatic corrective action. The closure	IIC

SYSTEM FAILURE MODE EFFECTS AND CRITICALITY ANALYSIS • • • WORK SHEET

COMPONENT/SUBSYSTEM: BCV/Turbine Bypass Control Subsystem
PREPARED BY: G. M. Witcraft
SHEET 3 OF 7
DATE: 8-10-71
REFERENCE: Spec. EC-00122
REVISION: A
DATE: 4-30-71

FAILURE MODE (CODE #)	PHASE	EFFECTS ON SYSTEM OPERATION	FAILURE EFFECT CATEGORY
		of one turbine bypass leg initially reduces flow to the chamber, causing a drop in chamber pressure. The normal response to this condition is to drive the operable BCV further closed to divert more gas to the turbines. This accentuates the reduction in chamber pressure and adds to the system transients prior to recovery of the engine to the demand operating conditions. When the engine is operating at or near the design chamber temperature, be[illegible] maximum chamber temperature and rate of change of temperature constraints are violated. At rated operation, the core seal pressure differential limit is also exceeded. To avoid these effects and possible damage to the reactor, the pressure control loop must be opened and the remaining BCV rapidly opened to a position near that required for operation with a single bypass leg. The control loop can then be closed and operation continued on the single leg. End Effect: Loss of operation of TBC subsystem leg.	
Inadvertent Closure (Rupture Speed) (04)	A-B	Not applicable. The BCV's have no operating function during these phases.	NA
	C-E, L-M	Same as Inadvertent Closure (Actuator speed) (03) above	IIB
	F-K	Same as Inadvertent Closure (Actuator Speed) (03) above. End Effect: Loss of operation of TBC subsystem leg.	IIC

SYSTEM FAILURE MODE EFFECTS AND CRITICALITY ANALYSIS • • • WORK SHEET

SHEET 4 OF 7

COMPONENT/SUBSYSTEM: BCV/Turbine Bypass Control Subsystem

PREPARED BY: G. M. Witcraft

DATE: 8-10-71

REFERENCE: Spec. EC-90122

REVISION: A

DATE: 4-30-71

FAILURE MODE (CODE #)	PHASE	EFFECTS ON SYSTEM OPERATION	FAILURE EFFECT CATEGORY
Inadvertent Open (05)	A, B	Not applicable. The BCV's have no operating function during these phases.	NA
	C, F-K	Inadvertent opening of a BCV results in the inability of the engine to meet or maintain the demand operating profile. In periods of closed loop control with the BCV's, the operable valve will be driven closed. When the chamber pressure is being controlled with the PDCV's, they will be driven wide open in an attempt to meet the demand pressure. During pump tailoff, the system will be unable to meet the required chamber temperature demand. The equilibrium point reached following this malfunction during rated operation will be somewhat below the throttle point in both pressure and temperature. The SSCV's will be driven full open attempting to maintain the demand temperature. For a failure during the throttle hold or in transition between rated operation and the throttle point, the final equilibrium would be still lower because of the added system impedance introduced by the PDCV's. Recovery of full system operation requires closing the block valve in the malfunctioned leg. The operable valve must perform all the subsystem control functions, and its block valve must remain open to permit normal operation.	IIB
	D,E,L,M	Not Applicable. Valve is open. End effect: Loss of operation of TBC subsystem leg.	NA

SYSTEM FAILURE MODE EFFECTS AND CRITICALITY ANALYSIS • • • WORK SHEET

SHEET 5 OF 7

COMPONENT/SUBSYSTEM: BCV/Turbine Bypass Control Subsystem

PREPARED BY: G. M. Witcraft

DATE: 8-10-71

REFERENCE: Spec. EC-90122

REVISION: A

DATE: 4-30-71

FAILURE MODE (CODE #)	PHASE	EFFECTS ON SYSTEM OPERATION	FAILURE EFFECT CATEGORY
ailed Intermediate (06)	A-M	Not applicable. Failure of a control valve in an intermediate position is included under Fails to Control (07).	NA
ails to Control (07)	A-B,D-E, L-M	Not applicable. The BCV's have no control function during these phases.	NA
	C,F-K	This failure mode reduces or eliminates the capability of the subsystem to perform its required control functions in maintaining the demand operating profile. If a BCV is in a position that is further closed than normal, the other control valves can compensate and maintain the normal chamber pressure and temperature. During closed loop control with the PDCV's, they would be driven somewhat further closed than normal to adjust for the increase in bypass impedance. Under bypass pressure control, the operable BCV would open further to compensate. If the failed valve does not remain stable, the other control valves will be excessively exercised. On the other hand, if the failed BCV is further open than normal, the other valves can compensate for only a limited positional error. Under pump discharge control, the PDCV's will be driven further open than normal, and under bypass control, the operable BCV will be driven toward the closed position. Once the control valves reach their extreme position (full open for the PDCV's or closed for the operable BCV), further compensation can not be made, and the system will not maintain the demand operating conditions.	IIB

SYSTEM FAILURE MODE EFFECTS AND CRITICALITY ANALYSIS • • • WORK SHEET

SHEET 6 OF 7

COMPONENT/SUBSYSTEM: BCV/Turbine. Bypass Control Subsystem PREPARED BY: G. M. Witcraft DATE: 8-10-71

REFERENCE: Spec. EC-90122 REVISION: A DATE: 4-30-71

FAILURE MODE (CODE #)	PHASE	EFFECTS ON SYSTEM OPERATION	FAILURE EFFECT CATEGORY
		To restore the subsystem function, the BBV must be closed to block flow through the malfunctioned leg. The operable BCV must then perform all of the subsystem control functions, and its BBV must remain open to permit continued normal engine operation. End effect: Loss of operation of TBC subsystem leg.	
nternal Leakage (08)	A-M	Not applicable. The BCV's have no internal sealing requirement in any phase beyond the minimum flow control requirement in phases F, G, H and I.	NA
xternal Leakage (09)	A-C	Not applicable. The BCV's have no operational requirement during these phases.	NA
	D-M	External leakage from the turbine bypass control subsystem results in excessive loss of propellant during all propellant flow phases and the inability of the engine to meet the normal operating cycle. The loss of propellant will require pumping more propellant through the system up to the point of loss to maintain the demand operating conditions. The PDCV's will be driven toward the open position and the BCV's toward the closed position during closed loop operation with either subsystem. Excessive pump discharge and core seal pressures will be developed in forcing the added flow through the system. When the control valves reach their extreme positions, no further influence on the pressure is possible, and the system will reach an equilibrium lower than the demand and dependent on the magnitude of the leak. If the leak occurs upstream of the valve seat, it can be isolated by closing both the BCV and its BBV. If it occurs downstream of the seat, no corrective action is available and the engine retains only emergency mode operating capability. End Effect: Emergency mode operating capability only.	IIIB

SYSTEM FAILURE MODE EFFECTS AND CRITICALITY ANALYSIS • • • WORK SHEET

SHEET 7 OF 7

COMPONENT/SUBSYSTEM: BCV/Turbine Bypass Control Subsystem

PREPARED BY: G. M. Witcraft DATE: 8-10-71

REFERENCE: Spec. EC-90122

REVISION: A DATE: 4-30-71

FAILURE MODE (CODE #)	PHASE	EFFECTS ON SYSTEM OPERATION	FAILURE EFFECT CATEGORY
Body Rupture (10)	A-C	Not applicable. The BCVs have no operational function during these phases.	NA
	D-M	This failure mode will result in gross propellant loss during all propellant flow periods. By closing the BBV's, the losses can be restricted to downstream of the turbines so the pumps can still be driven, and some level of thrusting will be possible. However, it is doubtful whether the thrust and specific impulse required for emergency mode operation can be maintained, and the propellant losses will preclude prolonged operation in any event. End Effect: Loss of engine operation.	IV

4.4.2.2 Bypass Block Valve

a. Description and Function

The bypass block valve provides the capability of blocking flow through a turbine bypass control subsystem leg in the event of a malfunction of a BCV. In conjunction with the BCV, it also permits isolation of an external leak between the two valve seats. During normal operation, both BBV's are maintained open during all phases except for a checkout during prestart operations.

The BBV is a nominal 4 inch ball valve with a 3.625" diameter circular port, (Figure 4.4-2). In full open position, the port matches the inside diameter of the inlet line to provide minimum flow resistance. The maximum allowable internal leakage in the fully closed position is 3.4×10^6 SCIM at normal rated engine operation. The full valve stroke including seal shutoff is 90°. The normal valve opening or closing time is 0.5 ± 0.05 sec.

The valve is driven by a rotary shaft powered by an induction motor through a planetary gear train with a speed reduction of approximately 118:1. In either the open or closed position, the valve is held in place by a brake on the actuator shaft with no power to the actuator.

b. BBV Failure Modes

All of the failure modes listed in Table 4-2 are applicable to the BBV except Fails to Control (07). The valve has no control function.

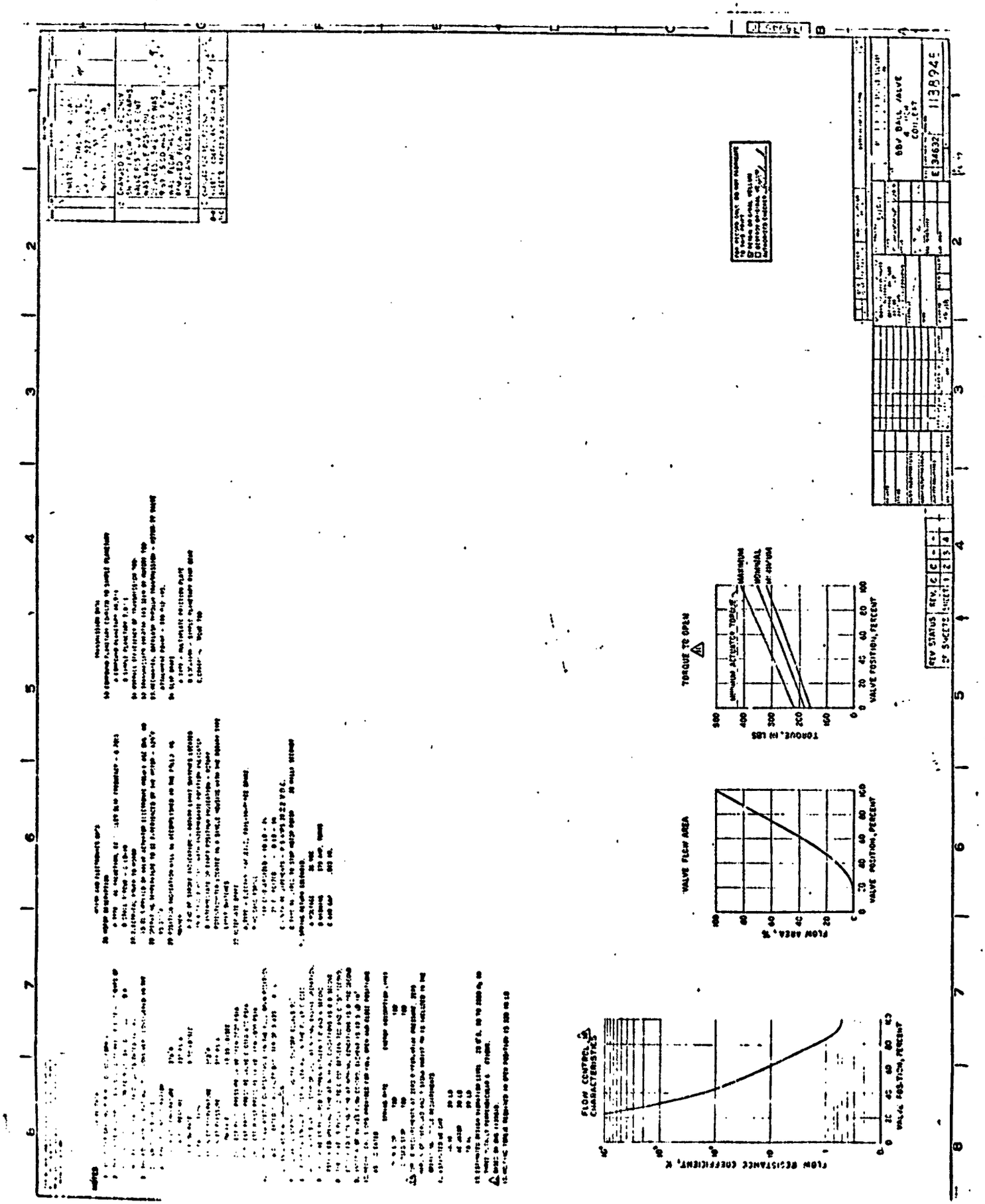

Bypass Block Valve (BBV)

Figure 4.4-2 (Sheet 1)

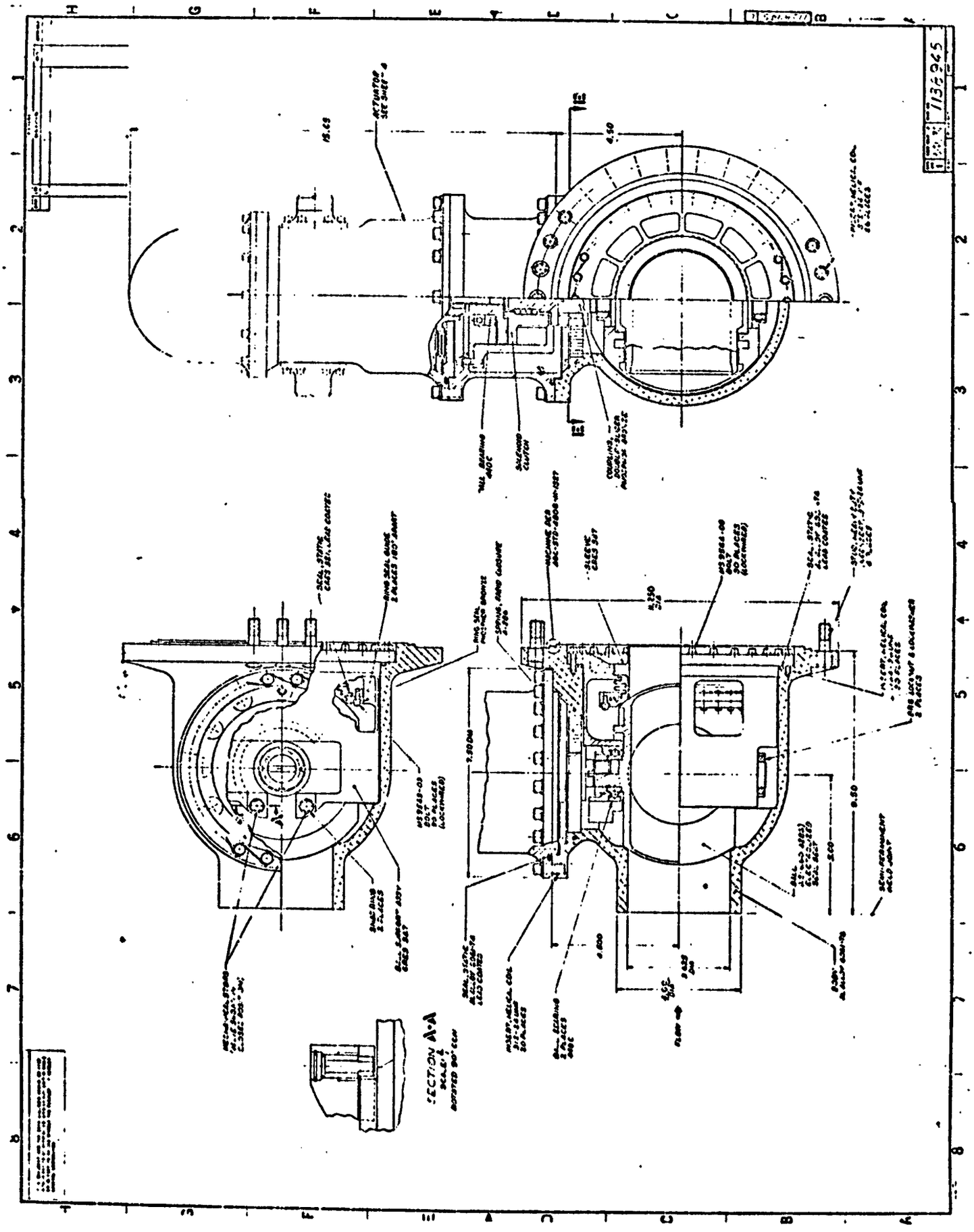

Figure 4.4-2 (Sheet 2)

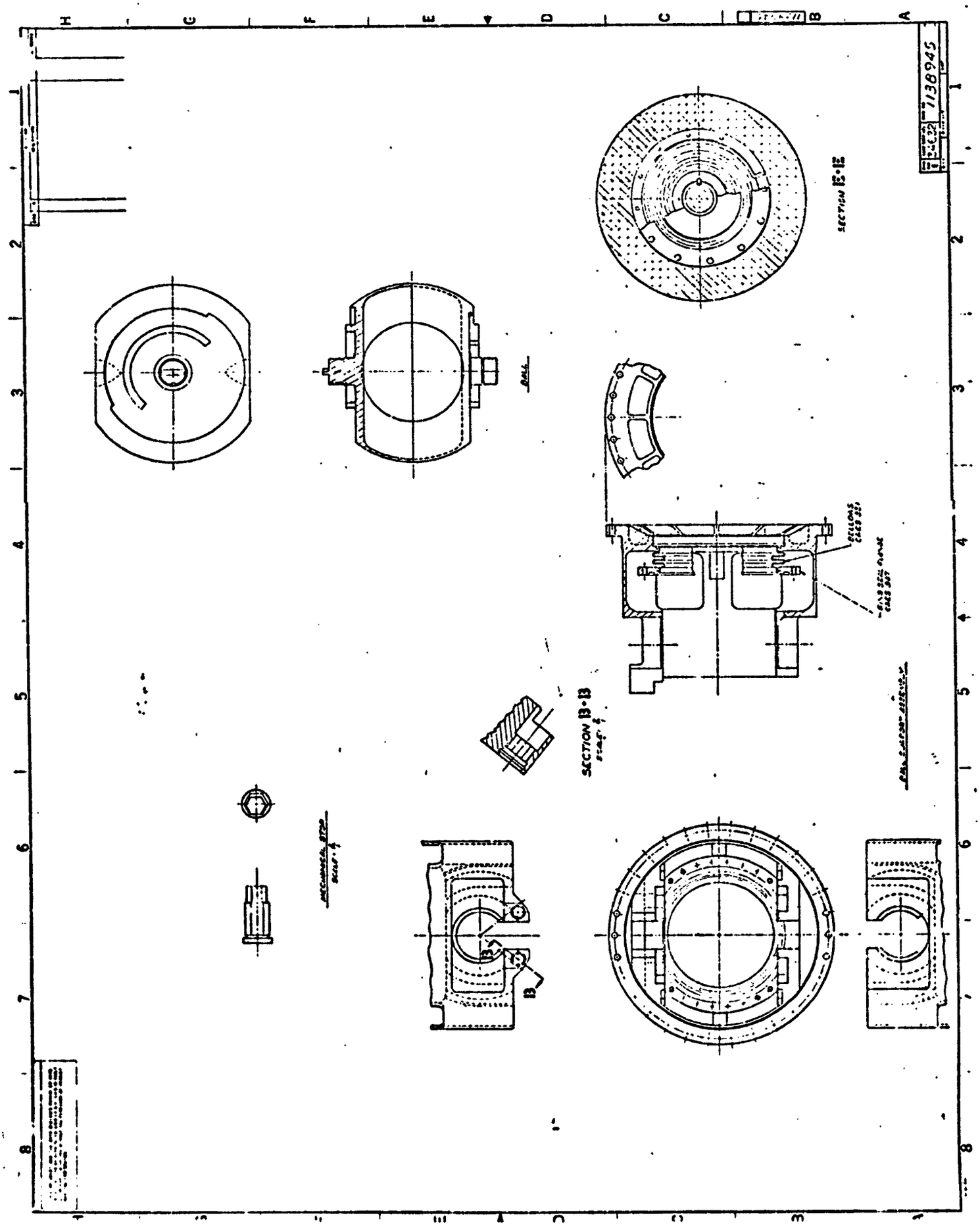

Figure 4.4-2 (Sheet 3)

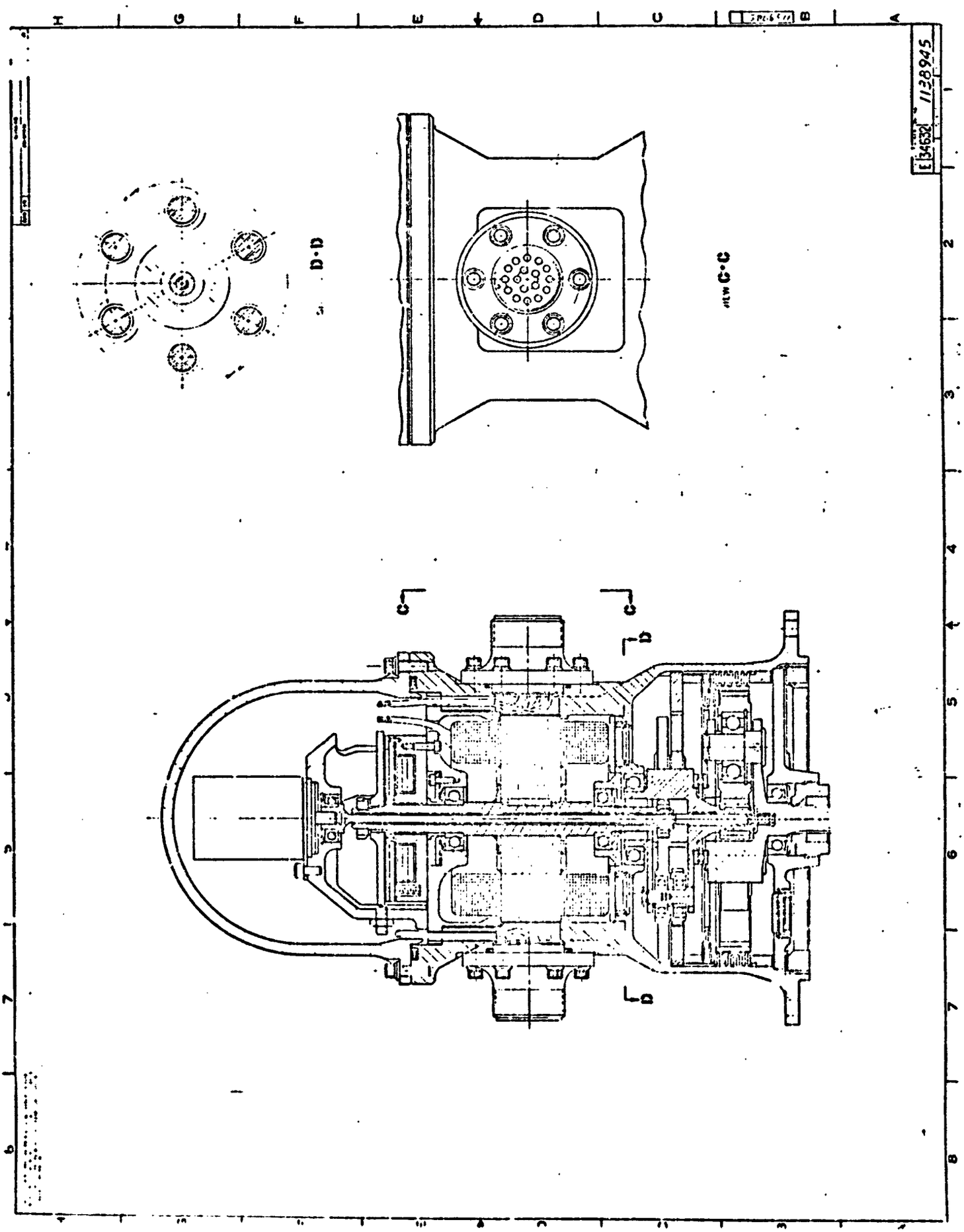

Figure 4.4-2 (sheet 4)

SYSTEM FAILURE MODE EFFECTS AND CRITICALITY ANALYSIS • • • SUMMARY SHEET

SHEET 1 OF 2

COMPONENT/SUBSYSTEM: BBV/Turbine Bypass Control Subsystem

PREPARED BY: G. M. Witcraft

DATE: 8-10-71

REFERENCE: Spec. EC-90257

REVISION: A

DATE: 4-30-71

FAILURE MODE (CODE #)	FAILURE EFFECT CATEGORY												
	ENGINE OPERATIONAL PHASES												
	A	B	C	D	E	F	G	H	I	J	K	L	M
		COAST		STARTUP				SHUTDOWN				COOLDOWN	
	LAUNCH	POST OPERATIONS	PRE-START OPERATIONS	TEMP. CONDITION	BOOT STRAP	THRUST BUILDUP	RATED OPERATION	THROTTLING	THROTTLE HOLD	TEMP. RETREAT	PUMP TAILOFF	EARLY	PULSE
Fails to Move From Full Open Position (01)	NA		IIA										
Fails to Move From Full Closed Position (02)	NA		IIB	NA									
Inadvertent Closure (Actuator Speed) (03)	NA		IIB			IIC						IIB	
Inadvertent Closure (Rupture Speed) (04)	NA		IIB			IIC						IIB	
Inadvertent Open (05)	NA												
Fails at Intermediate Position (06)	MF		IIB	MF									

SYSTEM FAILURE MODE EFFECTS AND CRITICALITY ANALYSIS • • • SUMMARY SHEET

SHEET 2 OF 2

COMPONENT/SUBSYSTEM: BBV/Turbine Bypass Control Subsystem

PREPARED BY: G. M. Witcraft

DATE: 8-10-71

REFERENCE: Spec. EC-90257

REVISION: A

DATE: 4-30-71

FAILURE MODE (CODE #)	FAILURE EFFECT CATEGORY — ENGINE OPERATIONAL PHASES												
	A	B	C	D	E	F	G	H	I	J	K	L	M
		COAST		STARTUP				SHUTDOWN				COOLDOWN	
	LAUNCH	POST OPERATIONS	PRE-START OPERATIONS	TEMP. CONDITION	BOOT STRAP	THRUST BUILDUP	RATED OPERATION	THROTTLING	THROTTLE HOLD	TEMP. RETREAT	PUMP TAILOFF	EARLY	PULSE
Fails to Control (07)	NA												
Internal Leakage (08)	NA			I									
External Leakage (09)	NA			IIIB									
Body Rupture (10)	NA			IV									

SYSTEM FAILURE MODE EFFECTS AND CRITICALITY ANALYSIS • • • WORK SHEET

SHEET 1 OF 5

COMPONENT/SUBSYSTEM: BBV/Turbine Bypass Control Suysystem PREPARED BY: G. M. Witcraft DATE: 8-10-71

REFERENCE: Spec. EC-90257 REVISION: A DATE: 4-30-71

FAILURE MODE (CODE #)	PHASE	EFFECTS ON SYSTEM OPERATION	FAILURE EFFECT CATEGORY
Fails to Move From Full Open Position (01)	A,B,	Not applicable. The BBV's have no functional requirement during these phases.	NA
	C-M	Inability to close a BBV degrades system safety by eliminating the capability of blocking flow through a malfunctioning BCV or of isolating a large external leak between the BBV and BCV. The BCV in the malfunctioned leg must not fail in a position further open than can be accommodated by adjustment of the PDCV's or by closing the other BCV, whichever is appropriate for the phase, if normal thrusting capability is to be maintained. End Effect: System safety degradation.	IIA
Fails to Move From Full Closed Position (02)	A,B	Not applicable. The BBV's have no functional requirement during these phases.	NA
	C	Inability of a BBV to be opened after closure during checking results in the loss of the subsystem leg for all subsequent operations. The BCV in the non-malfunctioned leg must perform all of the subsystem flow and control functions, and its BBV must remain open to permit continued engine operation.	IIB
	D-M	Not applicable. Valve is open. End Effect: Loss of operation of TBC subsystem leg.	NA

SYSTEM FAILURE MODE EFFECTS AND CRITICALITY ANALYSIS • • • WORK SHEET

COMPONENT/SUBSYSTEM: BBV/Turbine Bypass Control Subsystem
PREPARED BY: G. M. Witcraft
SHEET 2 OF 5
DATE: 8-10-71
REFERENCE: Spec. EC/90257
REVISION: A
DATE: 4-30-71

FAILURE MODE (CODE #)	PHASE	EFFECTS ON SYSTEM OPERATION	FAILURE EFFECT CATEGORY
Inadvertent Closure (Actuator Speed) (03)	A-B.	Not applicable. The BBV's have no operating function during these phases.	NA
	C-E,L-M	Same as Inadvertent Closure (Actutor Speed) (03) of BCV, above.	IIB
	F-K	Inadvertent closure of a BBV has the same effects as Inadvertent Closure (Actuator Speed) (03) of a BCV except that both BCV's will track during their closed loop control periods.	IIC
		End Effect: Loss of operation of TBC subsystem leg.	
Inadvertent Closure (Rupture Speed) (04)	A-B	Same as (03, above	NA
	C-E, L-M	Same as (03), above	IIB
	F-K	Same as (03), above	IIC
		End Effect: Loss of operation of TBC subsystem leg.	

SYSTEM FAILURE MODE EFFECTS AND CRITICALITY ANALYSIS • • • WORK SHEET

SHEET 3 OF 5

COMPONENT/SUBSYSTEM: BBV/Turbine Bypass Control Subsystem

PREPARED BY: G. M. Witcraft

DATE: 8-10-71

REFERENCE: Spec. EC 90257

REVISION: A

DATE: 4-30-71

FAILURE MODE (CODE #)	PHASE	EFFECTS ON SYSTEM OPERATION	FAILURE EFFECT CATEGORY
Inadvertent Open (05)	A-M	Not applicable. The only time the valve is not in the full open position is during pre-operation checkout. Inadvertent opening of the valve at that time is included under Fails to Move from Full Open Position (01), above.	NA
Fails at Intermediate Position (06)	A-B D-M	Multiple failure. The BBV's are normally maintained open in these phases. Failure in an intermediate position can only result from two or more independent malfunctions.	MF
	C	The specific effects on subsequent operation depend on the valve failure position. If it is nearly open, the effect on subsystem function will be virtually nil. If nearly closed, the results will approach loss of flow through the subsystem leg with the other leg assuming the subsystem functions. In either case, the ability to isolate an external leak between the BBV and BCV is lost. End Effect: Loss of operation of TBC subsystem leg and system safety degradation.	IIB
Fails to Control (07)	A-M	Not applicable. The BBV's have no control function.	NA

SYSTEM FAILURE MODE EFFECTS AND CRITICALITY ANALYSIS • • • WORK SHEET

COMPONENT/SUBSYSTEM: BBV/Turbine Bypass Control Subsystem
REFERENCE: Spec. EC-90257

PREPARED BY: G. M. Witcraft
REVISION: A

SHEET 4 OF 5
DATE: 8-10-71
DATE: 4-30-71

FAILURE MODE (CODE #)	PHASE	EFFECTS ON SYSTEM OPERATION	FAILURE EFFECT CATEGORY
Internal Leakage (08)	A-C	Not applicable. The BBV's have no operational function during these phases.	NA
	D-M	Internal leakage of a BBV in the closed position has no significant effect on system safety. Since the BCV is not required to be capable of completely blocking flow, external leaks between the BBV and BCV cannot be completely isolated anyway, and if the BBV is required to close to block flow through a failed BCV, the amount of flow represented by an internal leak will not be large enough to significantly affect normal engine operation. End Effect: No significant effect.	I
External Leakage (09)	A-M	Not applicable. The BBV's have no operating function during these phases.	NA
	D-M	External leakage from the turbine bypass control subsystem results in excessive loss of propellant during all propellant flow periods and inability of the engine to meet the normal operating cycle. The malfunction will require pumping more propellant through the system up to the point of leakage to maintain the demand operating conditions. The PDCV's will be driven toward the open position and the BCV's toward the closed position during closed loop operation with either subsystem. Excessive pump discharge and core seal pressures will be developed in forcing the added flow through the system. When the control valves reach their extreme positions, no further influence on the pressure is possible, and the system will reach an equilibrium lower than the demand and dependent on the magnitude of the leak. If the leak occurs downstream of	IIIB

SYSTEM FAILURE MODE EFFECTS AND CRITICALITY ANALYSIS • • • WORK SHEET

SHEET 5 OF 5

COMPONENT/SUBSYSTEM: B3V/Turbine Bypass Control Subsystem PREPARED BY: G. M. Witcraft DATE: 8-10-71

REFERENCE: Spec. EC-90257 REVISION: A DATE: 4-30-71

FAILURE MODE (CODE #)	PHASE	EFFECTS ON SYSTEM OPERATION	FAILURE EFFECT CATEGORY
		the valve seat, it can be reduced by closing both the BBV and BCV. If it occurs upstream of the seat, no corrective action is available, and the engine will retain only emergency mode operating capability. End Effect: Emergency mode operating capability only.	
Body Rupture (10)	A-C	Not applicable. The BBV's have no operating function during these phases.	NA
	D-M	This failure mode will result in gross propellant loss during all propellant flow periods. Since the losses will occur upstream of the turbines, the pumping capacity of the system will be severely reduced, and the flow through the system will rapidly decay to near zero. If a significant fission product inventory exists in the core at the time of failure, the inability to maintain adequate flow will permit the chamber and reactor to overheat and disassemble. End Effect: Complete loss of engine operation.	IV

4.4.2.3 Bypass Control Lines

a. Description and Function

The bypass control lines provide a flow path for propellant from the TIL to the BCV's (inlet) and from the BBV's to the TDL (outlet). Both segments are 4" pipe, and both are branched to provide two parallel paths in the subsystem. Each pair of valves (BCV-BBV) is close coupled so there is no separate line segment between them.

b. Modes of Failure

Same as Turbopump Lines (Paragraph 4.2.2.7).

SYSTEM FAILURE MODE EFFECTS AND CRITICALITY ANALYSIS • • • SUMMARY SHEET

SHEET 1 OF 1

COMPONENT/SUBSYSTEM: Bypass Control Lines-Inlet/TBCS PREPARED BY: G. M. Witcraft DATE: 8-10-71

REFERENCE: REVISION: DATE:

FAILURE MODE (CODE #)	FAILURE EFFECT CATEGORY												
	ENGINE OPERATIONAL PHASES												
	A	B	C	D	E	F	G	H	I	J	K	L	M
		COAST		STARTUP				SHUTDOWN				COOLDOWN	
	LAUNCH	POST OPERATIONS	PRE-START OPERATIONS	TEMP. CONDITION	BOOT STRAP	THRUST BUILDUP	RATED OPERATION	THROTTLING	THROTTLE HOLD	TEMP. RETREAT	PUMP TAILOFF	EARLY	PULSE
External Leakage (01)	NA	→	→	IIIB	→	→	→	→	→	→	→	→	→
Total Loss of Containment (02)	NA	→	→	IV	→	→	→	→	→	→	→	→	→

SYSTEM FAILURE MODE EFFECTS AND CRITICALITY ANALYSIS • • • WORK SHEET

SHEET 1 OF 1

COMPONENT/SUBSYSTEM: Bypass Control Lines - Inlet/TBCS

PREPARED BY: G. M. Witcraft

DATE: 8-10-71

REFERENCE:

REVISION:

DATE:

FAILURE MODE (CODE #)	PHASE	EFFECTS ON SYSTEM OPERATION	FAILURE EFFECT CATEGORY
External Leakage (01)	A-C	Not applicable. This portion of the system has no operating function during these phases.	NA
	D-M	Same as Turbine Inlet Line - Common of Turbopump Subsystem.	IIIB
		End Effect: Emergency mode operating capability only.	
Total Loss of Containment (02)	A-C	Same as (01), above.	NA
	D-M	Same as Turbine Inlet Line - Common of Turbopump Subsystem.	IV
		End Effect: Total loss of engine operation.	

SYSTEM FAILURE MODE EFFECTS AND CRITICALITY ANALYSIS • • • SUMMARY SHEET

SHEET 1 OF 1

COMPONENT/SUBSYSTEM: Bypass Control Lines - Outlet/TBCS

PREPARED BY: G. M. Witcraft

DATE: 8-10-71

REFERENCE:

REVISION:

DATE:

FAILURE MODE (CODE #)	FAILURE EFFECT CATEGORY — ENGINE OPERATIONAL PHASES												
	A	B	C	D	E	F	G	H	I	J	K	L	M
		COAST		STARTUP				SHUTDOWN				COOLDOWN	
	LAUNCH	POST OPERATIONS	PRE-START OPERATIONS	TEMP. CONDITION	BOOT STRAP	THRUST BUILDUP	RATED OPERATION	THROTTLING	THROTTLE HOLD	TEMP. RETREAT	PUMP TAILOFF	EARLY	PULSE
External Leakage (01)	NA →		→	IIIB →									→
Total Loss of Containment (02)	NA →		→	IV →									→

SYSTEM FAILURE MODE EFFECTS AND CRITICALITY ANALYSIS WORK SHEET

SHEET 1 OF 1

COMPONENT/SUBSYSTEM: Bypass Control Lines - Outlet/TBCS PREPARED BY: G. M. Witcraft DATE: 8-10-71

REFERENCE: REVISION: DATE:

FAILURE MODE (CODE #)	PHASE	EFFECTS ON SYSTEM OPERATION	FAILURE EFFECT CATEGORY
External Leakage (01)	A-C	Not applicable. This portion of the system has no operating function during these phases.	NA
	D-M	Same as Turbine Discharge Line-Common of Turbopump Subsystem	III
		End Effect: Emergency mode operating capability only.	
Total Loss of Containment (02)	A-C	Not applicable. This portion of the system has no operating function during these phases.	NA
	C-M	Same as Turbine Discharge Line - Common of Turbopump Subsystem.	IV
		End Effect: Total loss of engine operation.	

SECTION 4.5

COOLDOWN SUBSYSTEM

4.5 COOLDOWN SYBSYSTEM

4.5.1 Subsystem Description

4.5.1.1 Function/Requirements

The primary function of the cooldown subsystem is to provide a flow path and a means to control LH_2 coolant flow to the structural support system (stems) and to the reflector following powered use of the reactor. The coolant is required to remove decay energy and thus maintain reactor temperatures within acceptable limits. Since the subsystem includes a flow path between the Modular Propellant Tank (MPT) and the reactor, the subsystem must also prevent excape of hydrogen from the MPT during engine non-operational periods (launch and coast) and must prevent high pressure stem flow escape either externally into space or internally into the MPT during engine powered operational phases.

4.5.1.2 Configuration

The configuration of the cooldown subsystem is shown in Figure 4.2-1. It contains two parallel control valves (CSCV) each in series with a block valve (CSOV). The valves are located in a 3-inch line (CSL) starting from the MPT and continuing to a junction with the 4" structural support coolant line (SSCL). In addition, the cooldown subsystem includes those parts of the purge unit and the Instrumentation and Control Subsystem that interact with the cooldown subsystem and its functions.

The structural support coolant assembly (SSCA) and the turbine bypass subsystem functionally interact with the cooldown subsystem for the distribution and eventual exhaust of the coolant flow. The analyses of these subsystems during cooldown will be covered in respective sections on those subsystems. For the sake of completeness and clarity, their functions will be described in conjunction with the operation of the cooldown subsystem below.

4.5.1.3. Operation

The operation of the cooldown subsystem valves is illustrated in Figure 4.1-2. Both CSOV's and CSCV's are maintained closed for engine phases launch through temperature retreat to prevent flow from the tank during coast, and from the SSCL back into the tank during engine operation. At some point, as yet to be defined, in the pump tailoff phase, the cooldown subsystem is partially opened to permit circulation of some flow from the SSCA discharge back into the propellant tank. This chills the cooldown line and fills it with liquid hydrogen so there will be no interruption of the supply of liquid coolant to the reactor when the pumps are shut off.

The two legs of the cooldown subsystem are operated in standby redundancy. For purposes of this analysis, the operating line is defined as $CSOV_1$ and $CSCV_1$. The standby line is maintained closed except that the $CSOV_2$ is opened to facilitate rapid switchover in the event of a malfunction in the active leg.

Simultaneous with the closure of the turbine block valves at the end of pump tailoff, the active CSCV is fully opened, the PDCV's are opened, the SSCV's are opened, and coolant is supplied continuously to both the stems and reflector. The reflector stream enters the nozzle torus via the SSCA and the pump discharge control subsystem. Flow is continued through both paths until the chamber temperature decreases to a lower cooldown limit (tentatively 1475° R).

At some convenient time in the above period, the PSOV's are closed and the PDKVA actuators are driven to the closed position to block flow through the pumps to the reflector during the subsequent "reflector flow off" portions of early cooldown and the "off" portions of the pulse cooldown phase. These actions complete placement of all of the Turbopump Subsystem valves in their normal coast period status.

When the lower cooldown limit is reached, the SSBV's are closed, blocking flow to the reflector. Continuous flow is still being maintained through the stems, but the flow rate is insufficient to prevent the reactor and chamber temperatures from rising. When the chamber temperature reaches the upper cooldown limit (1575° R), one SSBV is opened to again provide additional coolant.

Two reactor temperature constraints must be accommodated during the "reflector off" periods. These are the maximum stem liner temperature and the maximum reflector material temperature. Initially, the stem liner limit is reached first even though there is continuous flow through the stems. The chamber upper cooldown limit is chosen to maintain the stem liner temperature within its limit.

The reflector flow cycling is repeated by means of one SSBV until, during one of the off periods, the reflector temperature limit is reached before the stem liner limit. At that time, the SSBV is opened and left open. This time, when the lower cooldown limit is reached, the CSCV is closed, interrupting all flow through the engine. This terminates early cooldown and initiates the pulse cooldown phase.

The chamber temperature limits are then changed to 1290° R to 1390° R for pulse cooldown, and coolant is supplied to both the reflector and stems by cycling $CSCV_1$ as required to maintain the new limits. During each pulse, the flow rate is maintained at approximately 0.7 lb/sec by appropriate positioning of $CSCV_1$. The precise mechanism by which the flow rate is measured and controlled has not yet been established. The pulse cooldown phase is terminated when reactor coolant is no longer required. Both the CSOV's and the CSCV are closed at the end of the final flow pulse.

To accomplish the above cooldown sequence, the CSOV's must open only once during pump tailoff, remain open, and then close at the completion of cooldown. On the other hand, the $CSCV_1$ must partially open during pump tailoff and then cycle between the fully closed and a full open or an intermediate position many times as well as control coolant flow while open. The duration of the cooldown period depends on the duration of the thrust period. For a 10 minutes of rate thrust operation, pulse cooldown continues for about 53 hours. During this time, $CSCV_1$ cycles 73 times and controls coolant flow for an accumulated duration of 70 minutes.

4.5.2 Failure Analysis

4.5.2.1 Cooldown Shutoff Valve (CSOV)

a. Description and Function

The CSOV (Figure 4.5-1 is a spring loaded poppet valve (Dwg. 1138008) in which the propellant flow makes a 90° turn. The poppet is driven by a cam powered by an electric motor through a compound planetary gear train. The bias spring exerts a closing force on the poppet, and a reverse pressure differential also tends to drive the valve closed.

The valve is required to fully open or close in 0.5 ± 0.05 seconds and is capable of remaining in either position with no power to the actuator. In case of an electrical power failure, the valve will fail in place.

The maximum internal leakage, inlet to outlet, with the valve in the closed position is 50 SCIM with an inlet pressure of 30 psia. The maximum reverse leakage (outlet to inlet) is 8600 SCIM with outlet and inlet pressures of 1179 and 22 psia, respectively.

The CSOV's are the primary block against loss of hydrogen from the main propellant tank during launch, coast, and temperature conditioning (Phases A-D). From bootstrap through a portion of pump

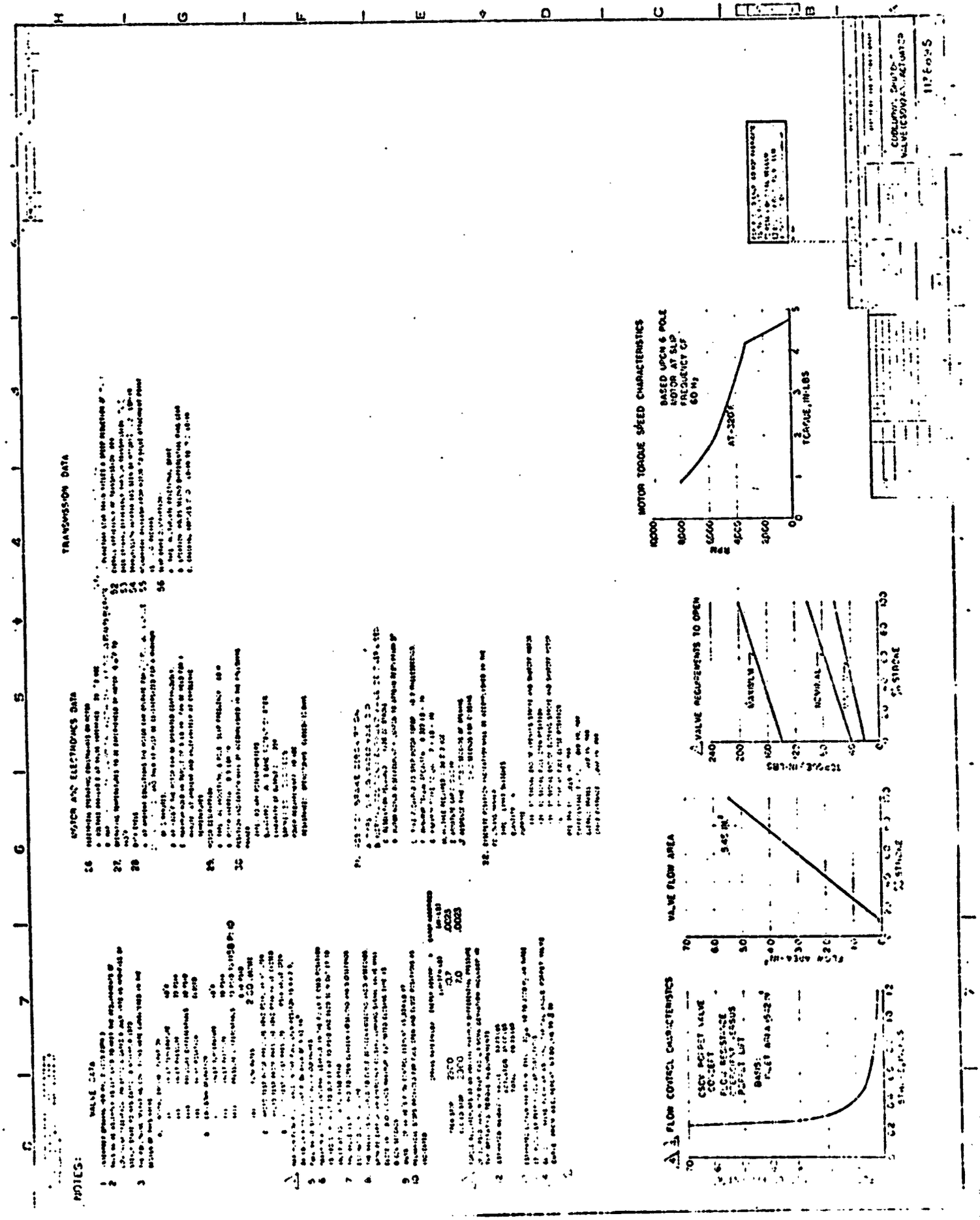

Cooldown Shutoff Valve (CSOV)

Figure 4.3-1 (Continued)

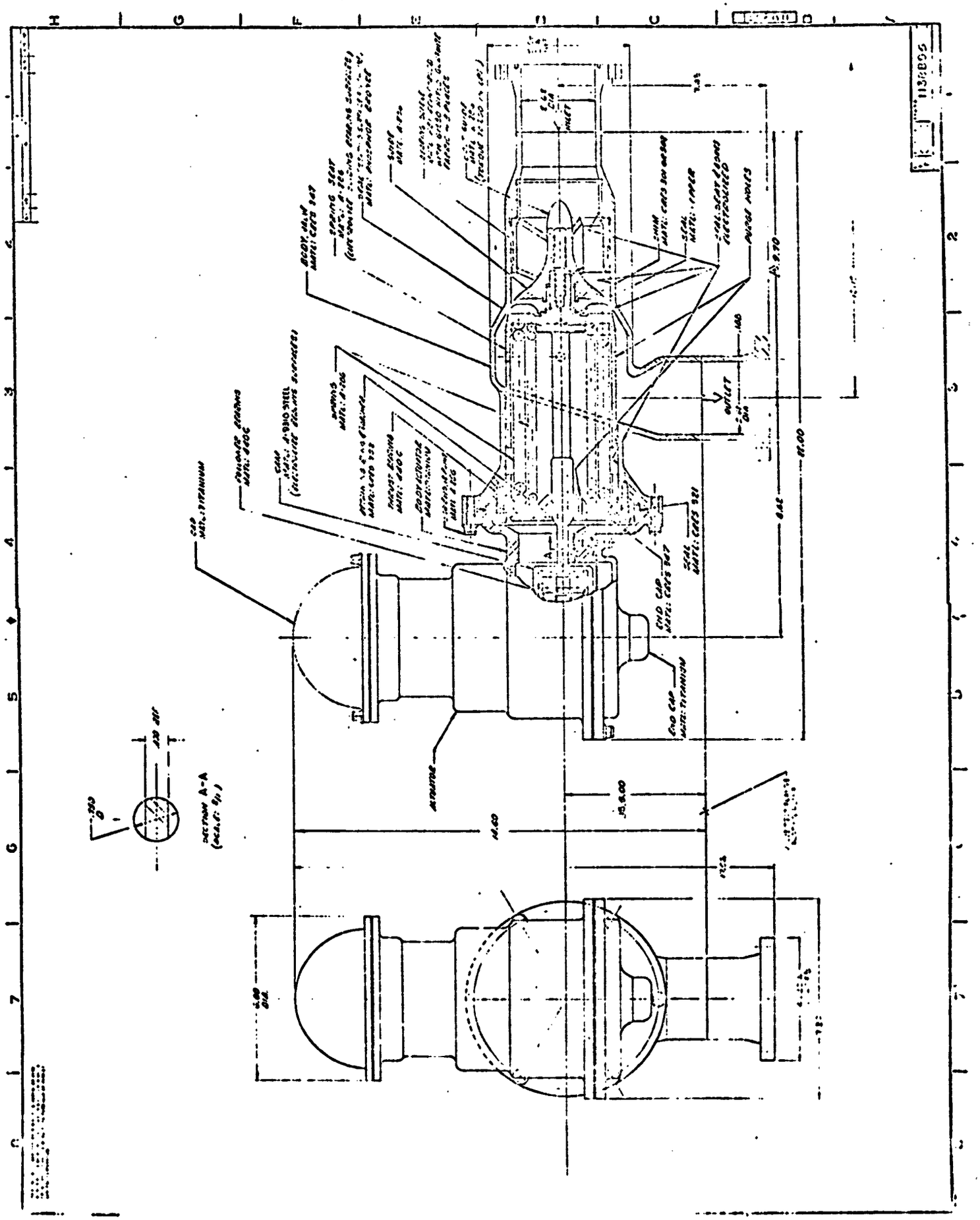

Figure 4.5-1 (Sheet 2)

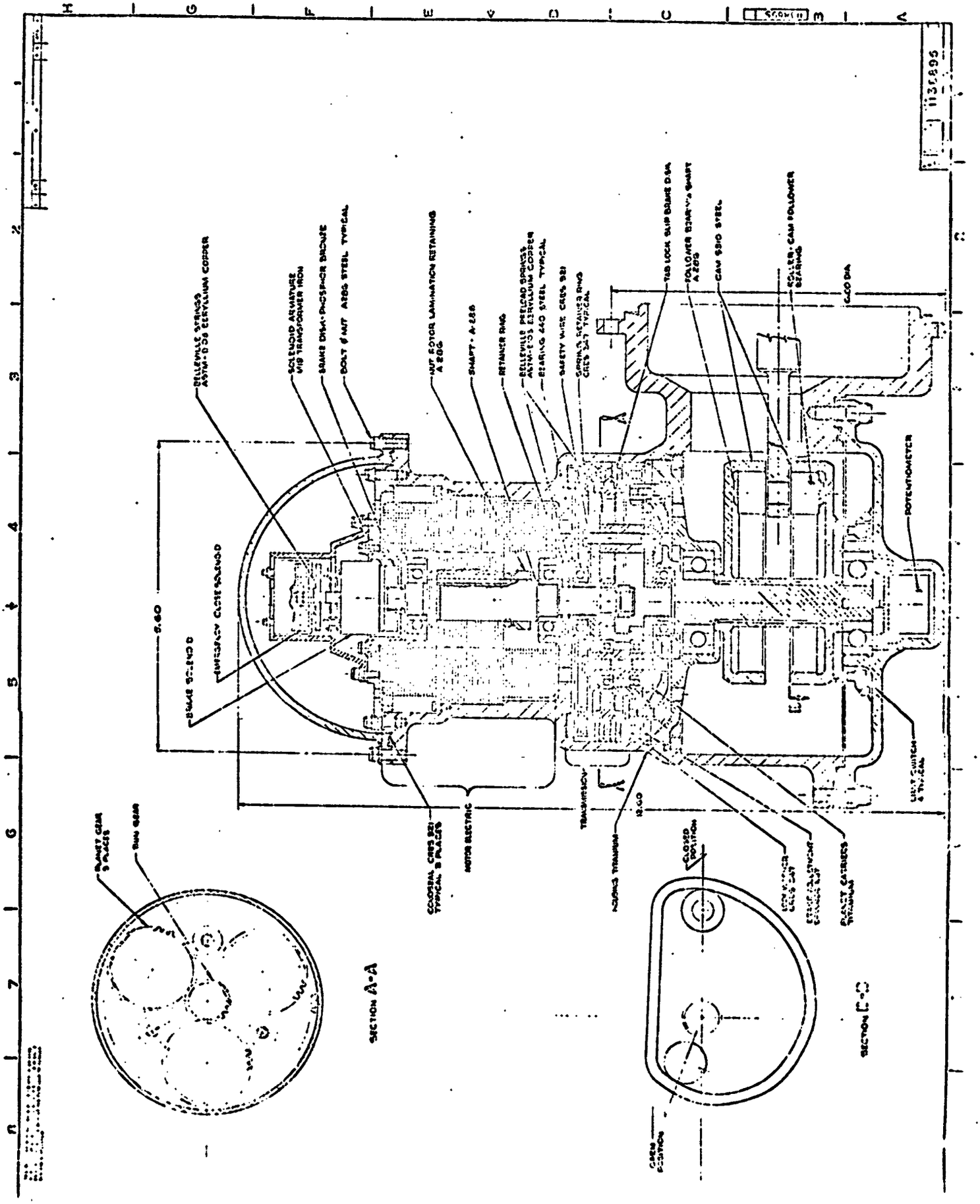

Figure 4.5-1 (Sheet 3)

tailoff they are redundant with the CSCV's in blocking excessive reverse flow from the SSCL back into the tank. During pump tailoff they are opened to permit chilling of the cooldown subsystem and subsequent performance of the cooldown function. The valves are closed at the end of the final cooldown pulse.

b. CSOV Modes of Failure

All of the modes of failure listed in Table 4-2 are applicable to the CSOV except Fails to Control (07). The valve has no control function.

SYSTEM FAILURE MODE EFFECTS AND CRITICALITY ANALYSIS • • • SUMMARY SHEET

SHEET 1 OF 2

COMPONENT/SUBSYSTEM: $CSOV_1$ / Cooldown Subsystem PREPARED BY: G. M. Witcraft DATE: 8-12-71

REFERENCE: Spec. #EC-90276 REVISION: A DATE: 4-30-71

FAILURE MODE (CODE #)	FAILURE EFFECT CATEGORY — ENGINE OPERATIONAL PHASES												
	A	B	C	D	E	F	G	H	I	J	K	L	M
		← COAST →		← STARTUP →				← SHUTDOWN →				← COOLDOWN →	
	LAUNCH	POST OPERATIONS	PRE-START OPERATIONS	TEMP. CONDITION	BOOT STRAP	THRUST BUILDUP	RATED OPERATION	THROTTLING	THROTTLE HOLD	TEMP. RETREAT	PUMP TAILOFF	EARLY	PULSE
Fails to Move From Full Open Position (01)	NA										IIA		IIIB
Fails to Move From Full Closed Position (02)	NA										IIB	NA	→
Inadvertent Closure (Actuator Speed) (03)	NA										IIB	IIC	→
Inadvertent Closure (Rupture Speed) (04)	NA										IIB	IIC	→
Inadvertent Open (05)	IIB	IIIB	→	IIA								NA	→
Fails at Intermediate Position (06)	MF										IIB	MF	IIIB

SYSTEM FAILURE MODE EFFECTS AND CRITICALITY ANALYSIS • • • SUMMARY SHEET

SHEET 2 OF 2

COMPONENT/SUBSYSTEM: $CSOV_1$ / Cooldown Subsystem PREPARED BY: G. M. Witcraft DATE: 8-12-71

REFERENCE: Spec. #EC-90276 REVISION: A DATE: 4-30-71

FAILURE MODE (CODE #)	FAILURE EFFECT CATEGORY												
	ENGINE OPERATIONAL PHASES												
	A	B	C	D	E	F	G	H	I	J	K	L	M
		← COAST →		← STARTUP →				← SHUTDOWN →				← COOLDOWN →	
	LAUNCH	POST OPERATIONS	PRE-START OPERATIONS	TEMP. CONDITION	BOOT STRAP	THRUST BUILDUP	RATED OPERATION	THROTTLING	THROTTLE HOLD	TEMP. RETREAT	PUMP TAILOFF	EARLY	PULSE
Fails to Control (07)	NA →												→
Internal Leakage (08)	IIB	IIIB →	→	IIA							→	NA →	→
External Leakage (09)	IIIB →												→
Body Rupture (10)	IV →												→

SYSTEM FAILURE MODE EFFECTS AND CRITICALITY ANALYSIS • • • WORK SHEET

SHEET 1 OF 7

COMPONENT/SUBSYSTEM: $CSOV_1$ / Cooldown Subsystem — PREPARED BY: G. M. Witcraft — DATE: 8-12-71

REFERENCE: Spec. #EC-90276 — REVISION: A — DATE: 4-30-71

FAILURE MODE (CODE #)	PHASE	EFFECTS ON SYSTEM OPERATION	FAILURE EFFECT CATEGORY
Fails to Move From Full Open Position (01)	A - J	Not applicable. Valve is never opened.	NA
	K	Loss of the capability of $CSOV_1$ to close during the portion of pump tailoff when the cooldown subsystem is being chilled degrades system safety by removing the protection against an inadvertent opening of $CSCV_1$. An open cooldown leg would short circuit flow from the SSCA outlet back to the tank, and cause reverse flow of hydrogen from the reflector outlet back through the stems. The loss of the inventory of liquid hydrogen in the stems would cause a rapid loss of power, reducing the chamber temperature below demand and driving the PDCV's wide open. The reduced power generation would also reduce the power available to drive the turbines, and the system would rapidly unwind down to a flow rate inadequate to keep the temperatures of the core support structure and nozzle within safe limits with consequent structural damage to the reactor or nozzle. The $CSOV_1$ would have to be quickly closed to prevent this series of events from occurring. The chilldown and subsequent cooldown operation would have to be switched to the stby cooldown leg.	IIA
	L	In the early cooldown phase, this malfunction degrades system safety through the loss of the capability to close the cooldown leg in the event of inadvertent opening, intermediate failure, or failure to control malfunctions of $CSCV_1$.	IIA
	M	Failure of $CSOV_1$ to close at the end of pulse cooldown may result in excessive propellant loss through the cooldown subsystem during the coast period. The maximum leak rate allotted to the CSOV is 50 SCIM, and that of the CSCV is 180 SCIM. If the actual leak rate of $CSCV_1$ is greater than 50 SCIM, the	IIIB

SYSTEM FAILURE MODE EFFECTS AND CRITICALITY ANALYSIS • • • WORK SHEET

SHEET 2 OF 7

COMPONENT/SUBSYSTEM: $CSOV_1$ / Cooldown Subsystem — PREPARED BY: G. M. Witcraft — DATE: 8-12-71

REFERENCE: Spec. #EC-90276 — REVISION: A — DATE: 4-30-71

FAILURE MODE (CODE #)	PHASE	EFFECTS ON SYSTEM OPERATION	FAILURE EFFECT CATEGORY
		combined leakage through the cooldown module and the two PSOV's may exceed the 400 SCIM total limit. An analysis should be performed to assess the probability of exceeding this leakage limit under these circumstances. $CSCV_1$ must close and remain closed to prevent gross propellant loss during coast and to permit subsequent engine startup. End effect: Emergency mode operating capability only.	
Fails to Move from Full Closed Position (02)	A - J	Not applicable. The valve is not required to open during these phases.	NA
	K	Failure of $CSOV_1$ to open results in the loss of operation of the normally active cooldown leg. Chilldown of the cooldown module and the subsequent cooldown function must be performed by the standby leg. The switchover to the standby leg must be made in time to permit chilldown of the cooldown subsystem prior to shutting down the pumps to insure that the supply of liquid hydrogen to the reactor is not interrupted at the end of pump tailoff.	IIB
	L -M	Not applicable. Valve is open End effect: Loss of operation of the normally active cooldown leg.	NA
Inadvertent Closure (Actuator Speed) (03)	A - J	Not applicable. Valve is already closed.	NA
	K	Inadvertent closure of $CSOV_1$ during the chilldown portion of pump tailoff results in the loss of operation of the normally active cooldown leg. The subsequent subsystem chilling and the cooldown functions must be performed by the standby leg. If the failure occurs before the cooldown subsystem	IIB

SYSTEM FAILURE MODE EFFECTS AND CRITICALITY ANALYSIS • • • WORK SHEET

SHEET 3 OF 7

COMPONENT/SUBSYSTEM: $CSOV_1$ / Cooldown Subsystem — PREPARED BY: G. M. Witcraft — DATE: 8-12-71

REFERENCE: Spec. #EC-90276 — REVISION: A — DATE: 4-30-71

FAILURE MODE (CODE #)	PHASE	EFFECTS ON SYSTEM OPERATION	FAILURE EFFECT CATEGORY
		is completely chilled, the switchover to the standby leg must be made in time to complete filling the cooldown line with liquid hydrogen prior to the end of pump tailoff in order to insure a continuous supply of liquid coolant to the reactor when the pumps are shut down.	
	L -M	This failure mode results in the loss of operation of the normally active cooldown leg. Subsequent cooldown functions must be performed by the standby leg. During early cooldown and the first portion of pulse cooldown, the system is working close to the stem liner and reflector temperature limits, and the rates of temperature rise are high enough to require automatic switching to the standby leg to preclude exceeding these limits. In the latter portion of pulse cooldown, the rate of temperature rise is much lower, and less rapid switching would be permissible. End effect: Loss of operation of the normally active cooldown leg.	IIC
Inadvertent Closure (Rupture Speed) (04)	A - J	Not applicable. Valve is already closed.	NA
	K	Same as (03), above.	IIB
	L - M	Same as (03), above. End Effect: Loss of operation of the normally active cooldown leg.	IIC
Inadvertent Open (05)	A	Inadvertent opening of $CSOV_1$ during the launch phase degrades system safety by removing the redundancy against substantial losses of propellant from the tank with attendant danger of fire or explosion during the time the vehicle is on the launch pad or in atmospheric flight. $CSCV_1$ must remain closed to preclude this situation, and $CSOV_1$ must be repaired prior to the first mission to prevent excessive loss of propellant in flight.	IIB

SYSTEM FAILURE MODE EFFECTS AND CRITICALITY ANALYSIS • • • WORK SHEET

SHEET 4 OF 7

COMPONENT/SUBSYSTEM: $CSOV_1$ / Cooldown Subsystem — PREPARED BY: G. M. Witcraft — DATE: 8-12-71

REFERENCE: Spec. #EC-90276 — REVISION: A — DATE: 4-30-71

FAILURE MODE (CODE •)	PHASE	EFFECTS ON SYSTEM OPERATION	FAILURE EFFECT CATEGORY
	B - C	During a coast period, this malfunction will have the same effects as described under failure of the valve to close after cooldown - see (01), phase M, above.	IIIB
	D	Inadvertent opening of $CSOV_1$ during temperature conditioning results in a loss of redundancy in preventing flow from the tank, through the cooldown subsystem, into the discharge line from the SSCA. $CSCV_1$ must remain closed to prevent this situation. If both valves should open, tank pressure would be introduced to the pump discharge line via the SSCA, and the loss of pressure differential across the pump and check valves would permit the check valve bias springs to close these valves, stopping flow through the pumps and halting their chilldown.	IIA
	E - K	During normal engine operation, this failure mode results in a loss of redundancy in preventing reverse flow of propellant from the SSCA discharge back to the tank. $CSCV_1$ must remain closed to prevent this short circuit and permit continued engine operation. The valve is opened near the end of pump tailoff (K) to permit chilldown of the cooldown subsystem. However, since most of the phase is performed with the valve closed, the category assignment is made on the basis of the normal position being closed.	IIA.
	L - M	Not applicable. Valve is already open. End effect: Emergency mode operating capability only.	NA

SYSTEM FAILURE MODE EFFECTS AND CRITICALITY ANALYSIS • • • WORK SHEET

SHEET 5 OF 7

COMPONENT/SUBSYSTEM: CSOV / Cooldown Subsystem — PREPARED BY: G. M. Witcraft — DATE: 8-12-71

REFERENCE: Spec. [illegible] — REVISION: A — DATE: 4-30-71

FAILURE MODE (CODE #)	PHASE	EFFECTS ON SYSTEM OPERATION	FAILURE EFFECT CATEGORY
Fails to Intermediate Position (06)	A - J	Multiple failure. The valve is maintained closed during these phases. It could only move from the closed position as the result of a malfunction, and failure in an intermediate position would be a second independent malfunction.	MF
	K	The effects of this malfunction on the chilldown of the cooldown module will depend on the failure position of the valve. If it is far enough open to permit the normal chill, the effect will be nil. If it is nearly closed, the reverse flow may be too small to provide adequate chilling of the subsystem before the pumps are stopped, and there will be a period at the start of early cooldown when only gaseous hydrogen is flowing through the stems and reflector. This could result in overheating and damage to either or both components. To preclude this situation, the chilldown and cooldown functions should be switched to the standby leg in time to complete the chill before the end of pump tailoff.	IIB
	L	Multiple failure. The valve is maintained open during this phase and could only fail in an intermediate position as the result of two independent malfunctions.	MF
	M	Failure of the valve in an intermediate position during closing after the final cooldown pulse will have the same effects as described under Fails to Move From Full Open Position (01), Phase M above. End effect: Emergency mode operating capability only.	IIIB
Fails to Control (07)	A - M	Not applicable. Valve has no control function.	NA

SYSTEM FAILURE MODE EFFECTS AND CRITICALITY ANALYSIS • • • WORK SHEET

COMPONENT/SUBSYSTEM: $CSOV_1$ / Cooldown Subsystem
REFERENCE: [illegible]c. #EC-9027A

PREPARED BY: G. M. Witcraft
REVISION: A

SHEET 6 OF 7
DATE: 8-12-71
DATE: 4-30-71

FAILURE MODE (CODE #)	PHASE	EFFECTS ON SYSTEM OPERATION	FAILURE EFFECT CATEGORY
Internal [illegible]age (08)	A	Excessive internal leakage during the launch phase will have the same effects described under inadvertent open, above -'se (05), phase A.	IIB
	B - C	During the coast period, excessive internal leakage will have the same effects as described under failure of the valve to close after cooldown. See (01), phase M, above.	IIIB
	D - K	During engine operation, excessive internal leakage is a loss of redundancy in preventing reverse flow of propellant from the SSCA discharged back into the tank. $CSCV_1$ must remain closed to permit continued normal operation.	IIA
	L - M	Not applicable. Valve is open.	NA
		End effect: Emergency mode operating capability only.	
External Leakage (09)	A	External leakage upstream of the valve seat will result in losses of propellant with attendant danger of fire and explosion while the vehicle is in the atmosphere. A leak downstream of the seat is a loss of redundancy in preventing such a situation. The valve must be replaced or repaired prior to mission operation to prevent excessive propellant losses in flight.	IIB
	B - M	A leak upstream of the valve seat will result in excessive propellant loss during all phases, leaving insufficient propellant available for normal engine operation. A leak downstream of the seat represents a loss of redundancy in preventing large propellant losses during engine operation and the loss of operation of the normally active cooldown leg during cool-down. $CSOV_1$ and $CSCV_1$ must remain closed to permit normal engine operation,	IIIB

SYSTEM FAILURE MODE EFFECTS AND CRITICALITY ANALYSIS • • • WORK SHEET

SHEET 7 OF 7

COMPONENT/SUBSYSTEM: $CSOV_1$ / Cooldown Subsystem

PREPARED BY: G. M. Witcraft

DATE: 8-12-71

REFERENCE: [illegible] EC-90276

REVISION: A

DATE: 4-30-71

FAILURE MODE (CODE #)	PHASE	EFFECTS ON SYSTEM OPERATION	FAILURE EFFECT CATEGORY
		and the cooldown function must be performed by the standby leg. End Effect: Emergency mode operating capability only.	
Body Rupture (10)	A	This failure mode will result in the total loss of propellant from the tank with attendant danger of fire and explosion while the vehicle is in the atmosphere. The valve must be replaced before the propellant tank can be reloaded and the engine operated.	IV
	B - M	Loss of containment by the $CSOV_1$ will result in total loss of propellant from the tank with consequent loss of the capability to start the engine from a coast period or to continue operations after starting. After engine operation has proceeded far enough to accumulate a substantial fission product inventory, the loss of propellant will preclude reactor cooldown, with massive damage to the nuclear subsystem, nozzle, and pressure vessel. End effect: Loss of engine operation.	IV

SYSTEM FAILURE MODE EFFECTS AND CRITICALITY ANALYSIS • • • SUMMARY SHEET

SHEET 1 OF 2

COMPONENT/SUBSYSTEM: $CSOV_2$/ Cooldown Subsystem PREPARED BY: G. M. Witcraft DATE: 8-12-71

REFERENCE: Spec. #EC-90276 REVISION: A DATE: 4-30-71

FAILURE MODE (CODE #)	FAILURE EFFECT CATEGORY — ENGINE OPERATIONAL PHASES												
	A	B	C	D	E	F	G	H	I	J	K	L	M
		COAST		STARTUP				SHUTDOWN				COOLDOWN	
	LAUNCH	POST OPERATIONS	PRE-START OPERATIONS	TEMP. CONDITION	BOOT STRAP	THRUST BUILDUP	RATED OPERATION	THROTTLING	THROTTLE HOLD	TEMP. RETREAT	PUMP TAILOFF	EARLY	PULSE
Fails to Move From Full Open Position (01)	NA										IIA		IIIB
Fails to Move From Full Closed Position (02)	NA										IIA	NA	
Inadvertent Closure (Actuator Speed) (03)	NA										IIA		
Inadvertent Closure (Rupture Speed) (04)	NA										IIA		
Inadvertent Open (05)	IIB	IIIB		IIA								NA	
Fails at Intermediate Position (06)	MF										IIA	MF	IIIB

SYSTEM FAILURE MODE EFFECTS AND CRITICALITY ANALYSIS • • • SUMMARY SHEET

SHEET 2 OF 2

COMPONENT/SUBSYSTEM: $CSOV_2$/ Cooldown Subsystem PREPARED BY: G. M. Witcraft DATE: 8-12-71

REFERENCE: Spec. #EC-90276 REVISION: A DATE: 4-30-71

FAILURE MODE (CODE #)	FAILURE EFFECT CATEGORY												
	ENGINE OPERATIONAL PHASES												
	A	B	C	D	E	F	G	H	I	J	K	L	M
		COAST		STARTUP				SHUTDOWN				COOLDOWN	
	LAUNCH	POST OPERATIONS	PRE-START OPERATIONS	TEMP. CONDITION	BOOT STRAP	THRUST BUILDUP	RATED OPERATION	THROTTLING	THROTTLE HOLD	TEMP. RETREAT	PUMP TAILOFF	EARLY	PULSE
Fails to Control (07)	NA →												→
Internal Leakage (08)	IIB	IIIB →		IIA →							→	NA →	
External Leakage (09)	IIB	IIIB →											→
Body Rupture (10)	IV →												→

SYSTEM FAILURE MODE EFFECTS AND CRITICALITY ANALYSIS • • • WORK SHEET

SHEET 1 OF 4

COMPONENT/SUBSYSTEM: $CSOV_2$/ Cooldown Subsystem PREPARED BY: G. M. Witcraft DATE: 8-12-71

REFERENCE: Spec. #EC-90276 REVISION: A DATE: 4-30-71

FAILURE MODE (CODE #)	PHASE	EFFECTS ON SYSTEM OPERATION	FAILURE EFFECT CATEGORY
Fails to Move From Full Open Position (01)	A - J	Not applicable. Valve is not in the open position.	NA
	K	Loss of the capability of the valve to close during the portion of pump tailoff when the cooldown subsystem is being chilled degrades system safety by removing the protection against an inadvertent opening of $CSCV_2$ with the consequences described under $CSOV_1$ (01), above.	IIA
	L	Inability to close the valve degrades system safety through loss of the capability to isolate an external leak between $CSOV_2$ and $CSCV_2$.	IIA
	M	During pulse cooldown, loss of the ability to close $CSOV_2$ degrades system safety by removing the capability to isolate an external leak between $CSOV_2$ and $CSCV_2$ or to protect against internal leakage or inadvertent opening of $CSCV_2$. Failure to close at the end of pulse cooldown results in excessive loss of propellant during the coast period. See $CSOV_1$ (01) phase M, above.	IIIB
		End effect: Emergency mode operating capability only.	
Fails to Move From Full Closed Position (02)	A - J	Not applicable. Valve is not required to open during these phases.	NA
	K	Failure of the valve to open degrades system safety through loss of the operating capability of the standby cooldown leg. The normally active leg must function to permit normal engine and cooldown operation.	IIA
	L - M	Not applicable. Valve is already open.	NA
		End effect: System safety degradation.	

SYSTEM FAILURE MODE EFFECTS AND CRITICALITY ANALYSIS • • • WORK SHEET

SHEET 2 OF 4

COMPONENT/SUBSYSTEM: $CSOV_2$ / Cooldown Subsystem PREPARED BY: G. M. Witcraft DATE: 8-12-71

REFERENCE: Spec. [illegible]-90276 REVISION: A DATE: 4-30-71

FAILURE MODE (CODE #)	PHASE	EFFECTS ON SYSTEM OPERATION	FAILURE EFFECT CATEGORY
Inadvertent Closure (Actuator Speed) (03)	A - J	Not applicable. Valve is already closed.	NA
	K - M	Inadvertent closure of $CSOV_2$ degrades system safety through loss of the operating capability of the standby cooldown leg.	IIA
		End effect: System safety degradation.	
Inadvertent Closure (Rupture Speed) (04)	A - J	Not applicable. Valve is already closed.	NA
	K - M	Same as (03), above.	IIA
		End effect: System safety degradation.	
Inadvertent Open (05)	A - M	Same as $CSOV_1$, above.	IIB
	B - C	Same as $CSOV_1$, above.	IIB
	D - K	Same as $CSOV_1$, above.	IIIB
	L - M	Not applicable. Valve is already open.	NA
		End effect: Emergency mode operating capability only.	
Fails at Intermediate Position (06)	A - J	Same as $CSOV_1$, above.	MF
	K	This malfunction degrades system safety through the loss of the operating capability of the standby cooldown leg.	IIA

SYSTEM FAILURE MODE EFFECTS AND CRITICALITY ANALYSIS • • • WORK SHEET

SHEET 3 OF 4

COMPONENT/SUBSYSTEM: $CSOV_2$ / Cooldown Subsystem — PREPARED BY: G. M. Witcraft — DATE: 8-12-71

REFERENCE: Spec. #EC-90276 — REVISION: A — DATE: 4-30-71

FAILURE MODE (CODE #)	PHASE	EFFECTS ON SYSTEM OPERATION	FAILURE EFFECT CATEGORY
	L	Multiple failure. The normal position is open during the entire phase, and the valve could fail in an intermediate position only as the result of two independent malfunctions.	MF
	M	Failure of the valve in an intermediate position during closing after cooldown will result in the same effects as described under failure of $CSOV_1$ to close. See $CSOV_1$, (01), phase M, above.	IIIL
		End effect: Emergency mode operating capability only.	
Fails to Control (07)	A - M	Not applicable. The valve has no control function.	NA
Internal Leakage (08)	A	Same as $CSOV_1$, above.	IIB
	B - C	Same as $CSOV_1$, above.	IIIB
	D - K	Same as $CSOV_1$, above.	IIA
	L - M	Same as $CSOV_1$, above.	NA
		End effect: Emergency mode operating capability only.	
External Leakage (09)	A	Same as $CSOV_1$, above.	IIB
	B - M	Same as $CSOV_1$, above.	IIIB
		End effect: Emergency mode operating capability only.	

SYSTEM FAILURE MODE EFFECTS AND CRITICALITY ANALYSIS • • • WORK SHEET

SHEET 4 OF 4

COMPONENT/SUBSYSTEM: $CSOV_2$/ Cooldown Subsystem

PREPARED BY: G. M. Witcraft

DATE: 8-12-71

REFERENCE: Spec. #EC-90276

REVISION: A

DATE: 4-30-71

FAILURE MODE (CODE #)	PHASE	EFFECTS ON SYSTEM OPERATION	FAILURE EFFECT CATEGORY
Total [illegible]s of Containment ([illegible])	A	Same as $CSOV_1$, above	IV
	B - M	Same as $CSOV_1$, above	IV

4.5.2.2 Cooldown Supply Control Valve (CSCV)

a. Description and Function

The CSCV's (Figure 4.5-2) are physically identical to the CSOV's. The external electronic control circuitry is modified to be compatible with the requirement to move the valve to intermediate positions to limit the coolant flow to the reactor during pulse cooldown.

The valve velocity is 33 - 100 % of full travel per second. When electrical power is removed from the actuator, the valve will remain in position.

The maximum internal leakage in the forward direction (inlet to outlet) is 180 SCIM with a pressure differential of 30 psi. This limit is greater than that of the CSOV (50 SCIM) in view of the much greater cycle duty of the valve. In the reverse direction, the internal leakage limit is 8600 SCIM with a pressure differential of 1158 psi.

Because of the higher forward leak limit, the CSCV is not fully redundant with the CSOV in preventing propellant loss from the tank during the coast period. It will, however, prevent gross propellant losses in the event a CSOV does not seal properly.

The primary function of the $CSCV_1$ is to modulate the flow of coolant to the nuclear subsystem during the pulse cooldown phase. It must also limit the reverse flow from the SSCA discharge back to the tank during the chilling of the cooldown subsystem. After completion of the reactor cooldown, it must be able to vent the propellant trapped between the CSOV and CSCV to prevent rupture of the lines.

Both CSCV's are maintained closed for all phases from launch through temperature retreat except for a single cycle checkout during prestart operations. They serve as a partial backup against excessive propellant loss during coast and are redundant with the CSOV's in blocking reverse flow back into the tank during engine operation.

NOTES:

MOTOR AND ELECTRONICS DATA

TRANSMISSION DATA

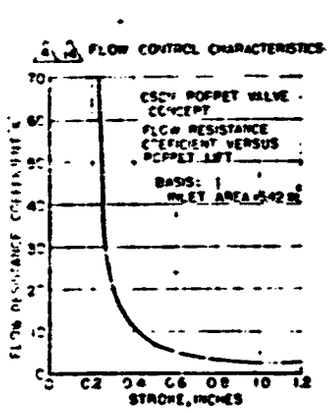

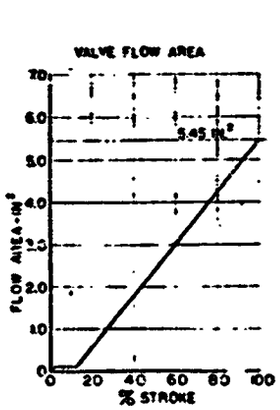

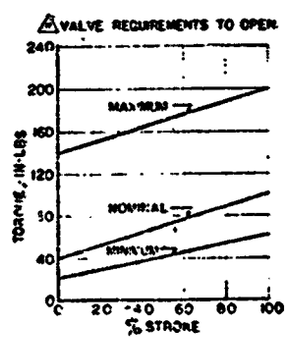

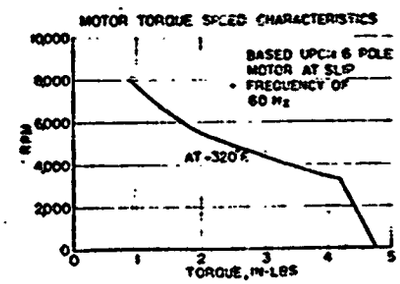

Figure 4.5-2 (Sheet 1)

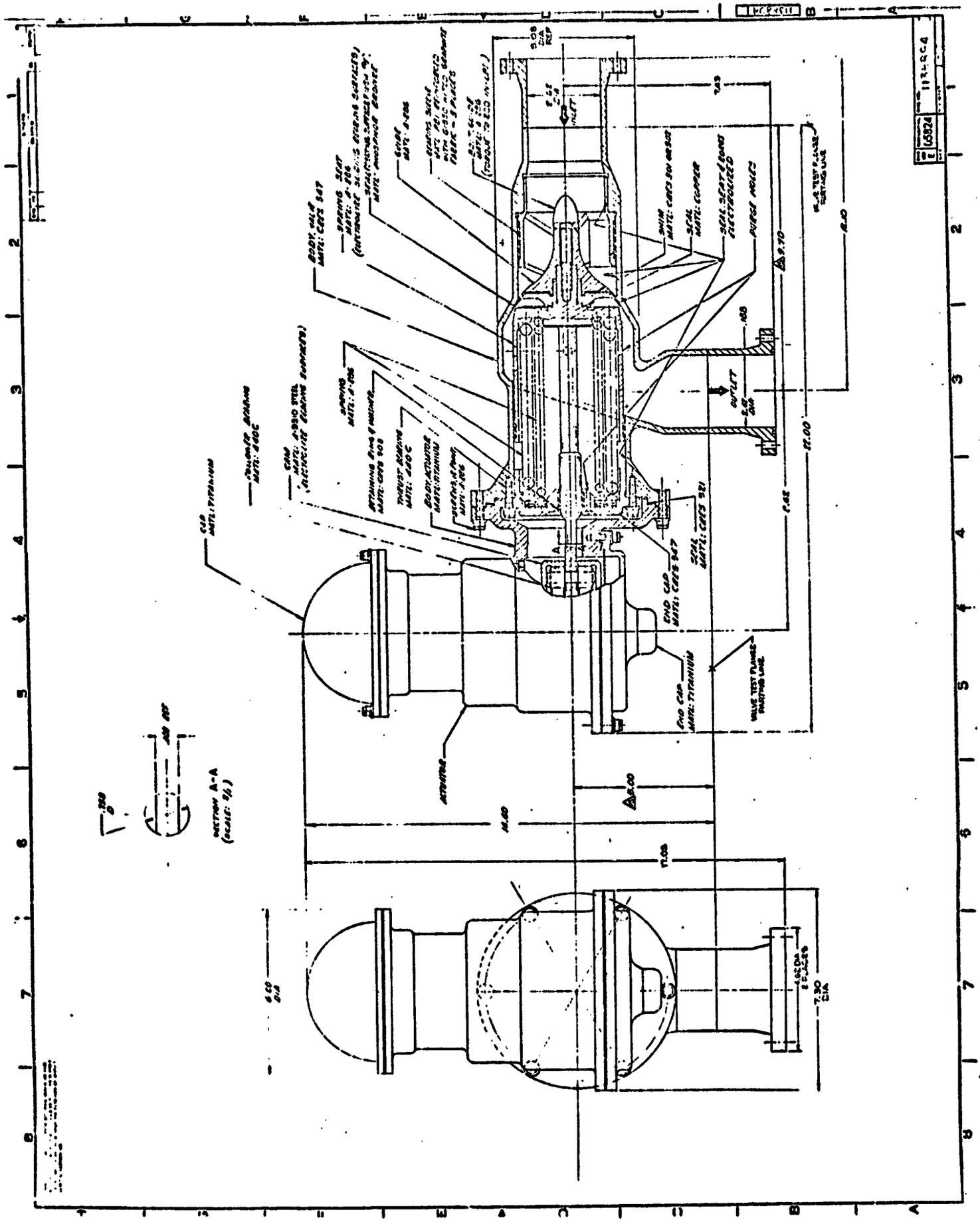

Figure 4.5-2 (Sheet 2)

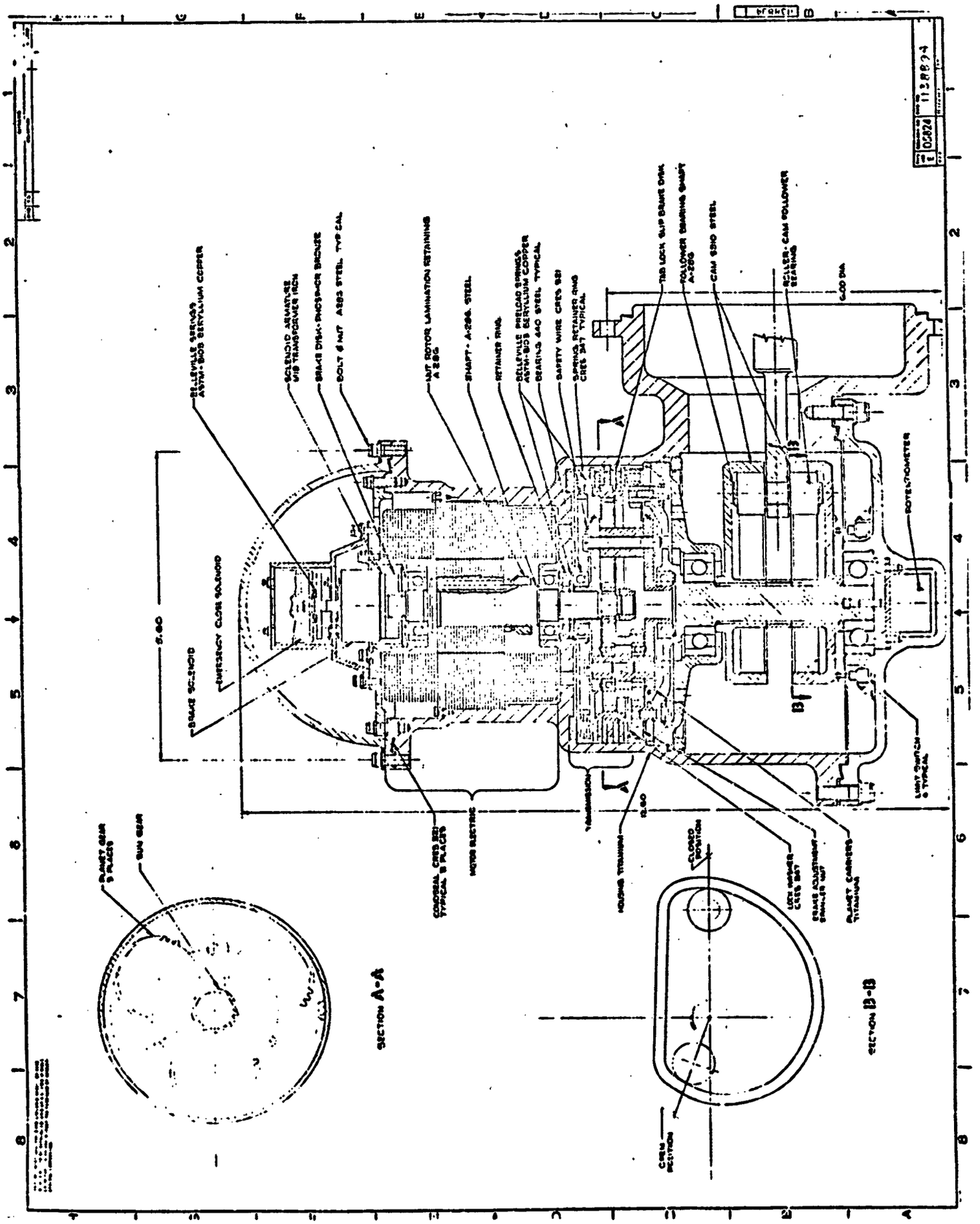

Figure 4.5-2 (Sheet 3)

Near the end of the pump tailoff phase, $CSCV_1$ is partially opened to permit a small reverse flow into the tank in order to chill the cool-down line and fill it with liquid hydrogen before the pumps are shut off. At the beginning of early cooldown this valve is opened and held open for the entire phase.

During pulse cooldown, $CSCV_1$ is cycled between closed and an intermediate position dependent on the flow rate that is desired through the reactor for each pulse. The valve will remain in a fixed position for the duration of the pulse. Since the temperature of the nuclear subsystem components will change during the pulse, the flow rate through the system will not remain constant during the pulse. It will be smallest at the beginning of a pulse and increase gradually until the lower cooldown chamber temperature limit is reached and the $CSCV_1$ is closed to terminate the pulse. As the reactor decay power level decreases, the position of the valve will be progressively less open for successive pulses. The mechanism for determining the position for each pulse has not yet been established. At the end of the final pulse, the valve is returned to the closed position.

$CSCV_2$ is maintained closed in standby redundancy. It will only be used in the event of a malfunction in the normally active leg.

b. Modes of Failure

All of the failure modes listed in Paragraph 4.1.3.1 are applicable to the CSCV's except Fails at Intermediate Position (06). Intermediate failure of a control valve is included under Fails to Control (07). In addition, there is a mode called Fails to Vent (11), which is inability of the valve to permit escape of propellant trapped between the CSOV and CSCV when the valves are closed.

SYSTEM FAILURE MODE EFFECTS AND CRITICALITY ANALYSIS * * * SUMMARY SHEET

SHEET 1 OF 2

COMPONENT/SUBSYSTEM: $CSCV_1$/Cooldown Subsystem

PREPARED BY: G. M. Witcraft

DATE: 8-12-71

REFERENCE: Spec C-90258

REVISION: A

DATE: 4-3[illegible]-71

FAILURE MODE (CODE #)	FAILURE EFFECT CATEGORY — ENGINE OPERATIONAL PHASES												
	A	B	C	D	E	F	G	H	I	J	K	L	M
		COAST		STARTUP				SHUTDOWN				COOLDOWN	
	LAUNCH	POST PERATIONS	PRE-START OPERATIONS	TEMP. CONDITIONS	DUST STAMP	THRUST BUILDUP	RATED PERATION	THROTTLING	THROTTLE HOLD	TEMP. RETREAT	POST CATEGORY	EARLY	PULSE
Fail to Move From Full Open Position (01)	NA	→	IIB	NA	→	→	→	→	→	→	IIA	→	IIB
Fail to Move From Full Closed Position (02)	NA	→	IIB	NA	→	→	→	→	→	→	IIC	NA	IIC
Inadvertent Closure (Actuator Speed) (03)	NA	→	IIB	NA	→	→	→	→	→	→	IIC	→	→
Inadvertent Closure (Rupture Speed) (04)	NA	→	IIB	NA	→	→	→	→	→	→	IIC	→	→
Inadvertent Open (05)	IIA	→	→	→	→	→	→	→	→	→	IIC	NA	IIB
Fail at Intermediate Position (06)	NA	→	→	→	→	→	→	→	→	→	→	→	→

SYSTEM FAILURE MODE EFFECTS AND CRITICALITY ANALYSIS • • • SUMMARY SHEET

SHEET 2 OF 2

COMPONENT/SUBSYSTEM: $CSCV_1$/Cooldown Subsystem — PREPARED BY: G. M. Witcraft — DATE: 8-12-71

REFERENCE: Spec. EC-90258 — REVISION: A — DATE: 4-30-71

FAILURE MODE (CODE #)	FAILURE EFFECT CATEGORY / EFFECTS OPERATIONAL PHASES												
	A	B	C	D	E	F	G	H	I	J	K	L	M
		COAST		STARTUP				SHUTDOWN				COOLDOWN	
	LAUNCH	POST OPERATIONS	PRE-START OPERATIONS	TEMP. CONDITION	BOOT STRAP	SHUNT BUILDUP	RATED OPERATION	THROTTLING	THROTTLE HOLD	TEMP. RETREAT	PUMP TAILOFF	EARLY	PULSE
Control	NA	→	→	→	→	→	→	→	→	→	IIB	NA	IIC
Leakage	IIA	→	→	→	→	→	→	→	→	→	→	NA	IIB
Leakage	IIA	→	→	IIIB	→	→	→	→	→	→	→	→	→
Rupture (10)	IIA	→	→	IV	→	→	→	→	→	→	→	→	→
Fails to Vent (11)	IIB	→	→	→	→	→	→	→	→	→	→	NA	→

SYSTEM FAILURE MODE EFFECTS AND CRITICALITY ANALYSIS • • • WORK SHEET

SHEET 1 OF 16

COMPONENT/SUBSYSTEM: $CSCV_1$ / Cooldown Subsystem PREPARED BY: G. M. Witcraft DATE: 8-12-71

REFERENCE: Spec. #EC-90258 REVISION: A DATE: 4-30-71

FAILURE MODE (CODE #)	PHASE	EFFECTS ON SYSTEM OPERATION	FAILURE EFFECT CATEGORY
Fails to Move From Full Open Position (01)	A - B, D - J	Not applicable. Valve is not in the open position.	NA
	C	Inability of $CSCV_1$ to close during checkout results in loss of the operating capability of the normally active cooldown leg. In addition, system safety is degraded through the loss of redundancy in preventing reverse flow into the tank during engine operation and in preventing uncontrolled propellant loss during the subsequent coast periods. $CSOV_1$ must remain closed to permit engine startup and operation, and the cool-down function must be switched to the standby leg prior to the chilldown of the cooldown subsystem during pump tailoff.	IIB
	K - L	Inability of the valve to close degrades system safety through loss of the capability to isolate an external leak between $CSOV_1$ and $CSCV_1$.	IIA
	M	Failure of the valve to close at the start of pulse cooldown or at the end of a cooldown pulse would permit continued coolant flow with overcooling of the reactor components and consequent inefficient utilization and excessive consumption of propellant. $CSOV_1$ should be closed to block flow through the malfunctioned leg and the cooldown functions switched to the standby leg. Failure to close at the end of the final pulse degrades system safety through loss of the partial redundancy against excessive loss of propellant during the coast period and the loss of redundancy in blocking reverse flow during subsequent engine operation. The capability to isolate an external leak between $CSOV_1$ and $CSCV_1$ is also lost. End effect: Loss of operating capability of the normally active cooldown leg.	IIB

SYSTEM FAILURE MODE EFFECTS AND CRITICALITY ANALYSIS • • • WORK SHEET

SHEET 2 OF 16

COMPONENT/SUBSYSTEM: $CSCV_1$ / Cooldown Subsystem — PREPARED BY: G. M. Witcraft — DATE: 8-12-71

REFERENCE: Spec. #EC-90258 — REVISION: A — DATE: 4-30-71

FAILURE MODE (CODE #)	PHASE	EFFECTS ON SYSTEM OPERATION	FAILURE EFFECT CATEGORY
Fails to Move From Full Closed Position (02)	A - B, D - J	Not applicable. Valve is not required to open during these phases.	NA
	C	Failure of the valve to open during checkout results in loss of the operating capability of the normally active cooldown leg for the cooldown functions. The cooldown operations must be switched to the standby leg prior to the subsystem chill during pump tailoff.	IIB
	K	Failure of the valve to open for chilling the subsystem results in loss of the operating capability of the normally active cooldown leg. The cooldown functions must be switched to the standby leg in time to complete the chill and fill the line with liquid hydrogen prior to shutting off the pumps to insure a continuous supply of liquid coolant during the initial part of early cooldown.	IIC
	L	Not applicable. Valve is already open	NA
	M	Failure of $CSCV_1$ to open for a cooldown pulse will prevent flow of coolant to the reactor with overheating and permanent damage to the reactor components. If the malfunction occurs early in the phase, the standby leg must be opened within a few seconds to prevent such damage. Later in the phase, the time available for corrective action will increase to a few minutes. Subsequent cooldown functions must be performed by the standby leg. End effect: Loss of operating capability of the normally active cooldown leg.	IIC

SYSTEM FAILURE MODE EFFECTS AND CRITICALITY ANALYSIS • • • WORK SHEET

SHEET 3 OF 16

COMPONENT/SUBSYSTEM: $CSCV_1$ / Cooldown Subsystem — PREPARED BY: G. M. Witcraft — DATE: 8-12-71

REFERENCE: Spec. #EC-90258 — REVISION: A — DATE: 4=3--71

FAILURE MODE (CODE •)	PHASE	EFFECTS ON SYSTEM OPERATION	FAILURE EFFECT CATEGORY
Inadvertent Closure (Actuator Speed) (03)	A - B, D - J	Not applicable. Valve is already closed.	NA
	C	Inadvertent closure of the valve during checkout has the same effects as described under failure to open, (02), above.	IIB
	K	Inadvertent closure of $CSCV_1$ during chilldown of the cooldown line results in interruption of the chill and loss of the operating capability of the normally active leg for the cooldown functions. The operations must be switched to the standby leg in time to complete the chill before the end of pump tailoff to insure an uninterrupted supply of liquid coolant to the reactor during the initial portion of early cooldown.	IIC
	L - M	Inadvertent closure of the valve during early cooldown or during a flow period in pulse cooldown interrupts all coolant flow to the reactor. The cooldown functions must be switched to the standby leg within a few seconds in early cooldown and the initial part of pulse cooldown to prevent overheating and permanent damage to the reflector and core support structure. In the latter stages of pulse cooldown, when the decay power level has been reduced, the time available to take corrective action will be increased perhaps to a few minutes. End effect: Loss of operating capability of the normally active cooldown leg.	IIC
Inadvertent Closure (Rupture Speed) (04)	A-B, D-J	Not applicable. Valve is already closed.	NA
	C	Same as (03) above.	IIB
	K	Same as (03) above.	IIC

SYSTEM FAILURE MODE EFFECTS AND CRITICALITY ANALYSIS • • • WORK SHEET

SHEET 4 OF 16

COMPONENT/SUBSYSTEM: $CSCV_1$/Cooldown Subsystem PREPARED BY: G. M. Witcraft DATE: 8-12-71

REFERENCE: Spec. #EC-90258 REVISION: A DATE: 4-30-71

FAILURE MODE (CODE #)	PHASE	EFFECTS ON SYSTEM OPERATION	FAILURE EFFECT CATEGORY
Inadvertent Closure (Rupture Speed) (04)	L - M	Same as (03), above. End effect: Loss of operating capability of the normally active cooldown leg.	IIC
Inadvertent Open (05)	A - C	Inadvertent opening of $CSCV_1$ degrades system safety through the loss of redundancy against uncontrolled propellant loss from the tank with attendant danger of fire and explosion while the vehicle is in the atmosphere and the possible loss of enough propellant during a coast period to preclude emergency mode operation. $CSOV_1$ must remain closed and not leak excessively internally to prevent this situation and to permit subsequent engine operation. The ability to isolate an external leak between the $CSOV_1$ and $CSCV_1$ is also lost.	IIA
	D	This failure mode degrades system safety through loss of redundancy in preventing propellant flow from the tank to the SSCA discharge before the pumps are turned on and in preventing reverse flow back into the tank after they are started. $CSOV_1$ must remain closed to permit engine startup and operation. If it opens before the pumps are started, tank pressure will be introduced downstream of the pump check valves and the bias springs will close these valves, terminating flow through both pumps. There is also a danger of flooding the stems and a resultant uncontrolled reactor power excursion. If it opens after the pumps are started, propellant will be short circuited back into the tank, rapidly reducing the hydrogen inventory in the stems and hence the power level. The combined loss of power and reduced turbine drive gas flow will fairly quickly cause the TPA's to unwind and flow through the pumps to stop. At that point, the system will	IIA

SYSTEM FAILURE MODE EFFECTS AND CRITICALITY ANALYSIS • • • WORK SHEET

SHEET 5 OF 16

COMPONENT/SUBSYSTEM: $CSCV_1$/Cooldown Subsystem PREPARED BY: G. M. Witcraft DATE: 8-12-71

REFERENCE: Spec. #EC-90258 REVISION: A DATE: 4-30-71

FAILURE MODE (CODE #)	PHASE	EFFECTS ON SYSTEM OPERATION	FAILURE EFFECT CATEGORY
		again be endangered by uncontrolled flow through the cooldown line into the stems. The system also loses the capability to isolate an external leak between $CSOV_1$ and $CSCV_1$.	
	E - J	System safety is degraded through loss of redundancy in preventing reverse flow from the SSCA discharge back into the tank. $CSOV_1$ must remain closed to permit continued engine operation. The ability to isolate an external leak between the $CSOV_1$ and $CSCV_1$ is also lost. The cooldown functions, including the chill of the cooldown line, must be switched to the standby leg in time to complete the chill before the pumps are shut off.	IIA
	K	If $CSCV_1$ opens after the CSOV's have been opened, propellant will be short circuited from the SSCA discharge line back into the tank. There will be a sudden loss of hydrogen inventory in the stems and a rapid decay of reactor power. The combined reduction of turbine flow and reduced power will rapidly slow down the TPA's, and the system flow rate will be insufficient to prevent the nozzle and reactor components from overheating and being permanently damaged beyond further use. $CSOV_1$ must be rapidly closed and the cooldown functions switched to the standby leg to prevent damage to the reactor.	IIC
	L	Not applicable. Valve is already open.	NA
	M	Inadvertent opening of $CSCV_1$ during pulse cooldown would result in continuous uncontrolled flow of coolant through the reactor with excessive cooling of the system, inefficient propellant utilization, and inability to meet the cooldown impulse predictability requirements.	IIB

SYSTEM FAILURE MODE EFFECTS AND CRITICALITY ANALYSIS • • • WORK SHEET

SHEET 6 OF 16

COMPONENT/SUBSYSTEM: $CSCV_1$ / Cooldown Subsystem

PREPARED BY: G. M. Witcraft

DATE: 8-12-71

REFERENCE: Spec. #EC-90258

REVISION: A

DATE: 4-30-71

FAILURE MODE (CODE #)	PHASE	EFFECTS ON SYSTEM OPERATION	FAILURE EFFECT CATEGORY
Fails at Intermediate Position (06)	A-M	$CSOV_1$ should be closed to block flow through the malfunctioned leg and the cooldown functions switched to the standby leg. End effect: Loss of operating capability of the normally active cooldown leg. Not applicable. Failure of a control valve in an intermediate position is included under Fails to Control (07).	NA

SYSTEM FAILURE MODE EFFECTS AND CRITICALITY ANALYSIS • • • WORK SHEET

SHEET 7 OF 16

COMPONENT/SUBSYSTEM: $CSCV_1$ / Cooldown Subsystem — PREPARED BY: G. M. Witcraft — DATE: 8-12-71

REFERENCE: Spec. #EC-90258 — REVISION: A — DATE: 4-30-71

FAILURE MODE (CODE #)	PHASE	EFFECTS ON SYSTEM OPERATION	FAILURE EFFECT CATEGORY
ils to Control (07)	A-J, L	Not applicable. The valve has no control function during these phases.	NA
	K	If the valve does not hold the proper position for chill of the cooldown line, it should be demanded closed, and $CSOV_1$ should be left in the closed position to isolate the malfunctioned leg. The cooldown functions must then be switched to the standby leg in time to complete the line chill before the end of pump tailoff. The $CSCV_1$ can be demanded to the required chill position at any convenient time prior to opening of the CSOV's, allowing adequate time to check the valve position and take corrective action if required. This analysis assumes that $CSCV_1$ will be demanded to a slightly open position for chill of the cooldown lines and will remain in that for the remainder of pump tailoff.	IIB
	M	The effects of failure of the valve to open to the proper position and remain there for the duration of a pulse will depend on the position reached. If it does not open far enough to provide adequate coolant flow, the reactor components will be overheated and may be structurally damaged. If it is too far open, coolant utilization will be less efficient and excessive propellant will be consumed during the phase. In addition the duration of a pulse will be less than programmed, and their frequency will	IIC

SYSTEM FAILURE MODE EFFECTS AND CRITICALITY ANALYSIS • • • WORK SHEET

SHEET 8 OF 16

COMPONENT/SUBSYSTEM: $CSCV_1$ / Cooldown Subsystem PREPARED BY: G. M. Witcraft DATE: 8-12-71

REFERENCE: Spec. #EC-90258 REVISION: A DATE: 4-30-71

FAILURE MODE (CODE #)	PHASE	EFFECTS ON SYSTEM OPERATION	FAILURE EFFECT CATEGORY
		be increased. To preclude possible damage to the reactor components from too little coolant flow, the cooldown functions must be switched to the standby leg. Both $CSOV_1$ and $CSCV_1$ should then be closed to isolate the malfunctioned leg. End effect: Loss of operating capability of the normally active cooldown leg.	
Internal Leakage (08)	A - C	Excessive internal leakage is a degradation of system safety similar to that described under inadvertent open, (06) above	IIA
	D	This failure mode degrades system safety through a loss of redundancy in blocking propellant flow through the cooldown subsystem into the SSCA discharge. If such flow becomes too great, the pressure differential across the pump discharge check valves will become too low to keep them open against their bias springs, and chilldown of the pumps will be terminated. $CSOV_1$ must remain closed to prevent this condition. The ability to isolate an external leak between $CSCV_1$ and $CSCV_1$ is also lost.	IIA
	E-J	During engine operation, excessive internal leakage degrades system safety through loss of redundancy in preventing reverse flow from the SSCA discharge back into the tank. $CSOV_1$ just remain closed to permit normal engine operation. The ability to isolate an external leak between $CSOV_1$ and $CSCV_1$ is also lost.	IIA NA

SYSTEM FAILURE MODE EFFECTS AND CRITICALITY ANALYSIS * * * WORK SHEET

SHEET 9 OF 16

COMPONENT/SUBSYSTEM: $CSCV_1$ / Cooldown Subsystem — PREPARED BY: G. M. Witcraft — DATE: 8-12-71

REFERENCE: Spec. #EC-90258 — REVISION: A — DATE: 4-30-71

FAILURE MODE (CODE #)	PHASE	EFFECTS ON SYSTEM OPERATION	FAILURE EFFECT CATEGORY
	K	Up to the time that $CSCV_1$ is opened, the effect is the same as during phases E-J, above. For the rest of the phase, the failure mode is not applicable, since the valve is not required to seal.	III
	L	Not applicable. Valve is open.	NA
	M	Excessive internal leakage during pulse cooldown will result in the inability to completely shut off coolant flow between pulses with effects as described under failure to close, (01), Phase M, above. End effect: Loss of the operating capability of the normally active cooldown leg.	IIB
External Leakage (10)	A - C	Excessive external leakage upstream of the valve seat degrades system safety through a loss of redundancy in preventing uncontrolled propellant loss from the tank with the danger of fire and explosion in the atmosphere and the possible loss of enough propellant during a coast period to preclude emergency mode operation. $CSOV_1$ must remain closed to prevent this situation. During these phases, this failure mode is not applicalbe to leaks downstream of the seat, since that portion of the system has no function.	IIA
	D	A leak upstream of the valve seat degrades system safety through a loss of redundancy in preventing loss of propellant either through $CSOV_1$ or $CSCV_1$. Both valves must remain closed to prevent this situation. An external leak downstream of the seat results in continuous loss of propellant from the cooldown line at all times when there is propellant flow through the engine.	IIIB

SYSTEM FAILURE MODE EFFECTS AND CRITICALITY ANALYSIS • • • WORK SHEET

SHEET 10 OF 16

COMPONENT/SUBSYSTEM: CSCV / Cooldown Subsystem
PREPARED BY: G. M. Witcraft
DATE: 8-12-71
REFERENCE: Spec. #EC-90258
REVISION: A
DATE: 4-30-71

FAILURE MODE (CODE #)	PHASE	EFFECTS ON SYSTEM OPERATION	FAILURE EFFECT CATEGORY
		Since the propellant is being lost from the stem flow inlet, the inventory of hydrogen in the stems will be reduced during temperature conditioning and the drums will be withdrawn slightly more than normal to reach the reactor cold-critical condition. Because the SSCV's are in a fixed position nearly closed, there may be reverse flow from the reflector, through the stems, and out the leak opening, if the leak is large. The propellant losses will preclude completion of the mission. For purposes of this analysis, however, it is assumed that the leak will not be large enough to preclude emergency mode operation. Larger leaks are included under the failure mode Body Rupture (10).	
	E	A leak upstream of the valve seat degrades system safety as described under phase D, above. A leak downstream of the seat will cause continuous loss of propellant from the cooldown line at a rate dependent on the pressure in the stem inlet line. The loss of hydrogen from the stem inlet line will reduce the hydrogen inventory in the stems. To maintain the demand chamber temperature, the control drums will be driven out further than normal. Since the TPA's are in closed loop speed control, the reduced downstream impedance will cause the flow through the pumps to increase and the pump discharge pressure to be reduced slightly. This will further reduce the hydrogen flow through the stems and drive the drums out still further. If the leak is large enough, the stem flow will not be sufficient to keep the stem liner below its maximum temperature limit.	IIIB

SYSTEM FAILURE MODE EFFECTS AND CRITICALITY ANALYSIS • • • WORK SHEET

SHEET 11 OF 16

COMPONENT/SUBSYSTEM: $CSCV_1$ / Cooldown Subsystem PREPARED BY: G. M. Witcraft DATE: 8-12-71

REFERENCE: Spec. #EC-90258 REVISION: A DATE: 4-30-71

FAILURE MODE (CODE #)	PHASE	EFFECTS ON SYSTEM OPERATION	FAILURE EFFECT CATEGORY
	F	Finally, the reduced flow rate through the main core will cause the chamber temperature to tend to rise above the demand, and the drums will be driven in to a new position dependent on the size of the leak. The engine thrust level will also be reduced from normal operation. As stated under phase D, above, this analysis assumes the leak is not large enough to preclude emergency mode operation. An external leak upstream of the valve seat degrades system safety as described under phase D, above. The effects of an external leak downstream of the seat will depend on the operating point of the engine at the time of the failure with grossly different transient conditions for each of the engine control mode regimes. In the early stages of thrust buildup the chamber pressure and temperature are in closed loop control by the PDCV's and control drums, respectively. Such a leak during this period would reduce the hydrogen inventory in the stems, and the control drums would be driven out to maintain the chamber temperature demand. The reduced stem flow may cause the stems to exceed their upper temperature limit. At the same time, the chamber pressure will be momentarily reduced, and the PDCV's will be driven further open to maintain the demand. This will cause the pump flow and discharge pressure to rise above normal, forcing more flow through the SSCV's, raising the pressure in the stem inlet line, raising the stem reactivity insertion, and causing the drums to move inward to maintain chamber temperature demand. If the leak is large enough to force the PDCV's wide open, the engine will be unable to meet the chamber pressure demand. The rate of propellant	IIIB

SYSTEM FAILURE MODE EFFECTS AND CRITICALITY ANALYSIS • • • WORK SHEET

SHEET 12 OF 16

COMPONENT/SUBSYSTEM: CSCV / Cooldown Subsystem

PREPARED BY: G. M. Witcraft DATE: 8-12-71

REFERENCE: Spec. #EC-90258

REVISION: A DATE: 4-20-71

FAILURE MODE (CODE #)	PHASE	EFFECTS ON SYSTEM OPERATION	FAILURE EFFECT CATEGORY
		loss through the leak will increase as the system pressures build up. The change of temperature control from the drums to the SSCV's modifies the transient response somewhat. During this period, the SSCV's will be driven further open to maintain the stem reactivity and meet the chamber temperature demand. The PDCV's will open further to meet the chamber pressure demand, and the pump flow and pump discharge pressure will increase to provide the additional propellant being lost from the system. If the leak is large enough to force the PDCV's wide open, the engine will be unable to maintain the demand pressure and temperature ramp. The rate of propellant loss will increase as the system pressures rise. After the pressure control is switched from the PDCV's to the BCV's, the system response is again changed. In this region, the SSCV's will still be driven further open to maintain the demand temperature. At the same time, the BCV's will be driven further closed to maintain the demand chamber pressure, and the pump flow rate and discharge pressure will increase to supply the additional propellant being lost. If the leak is large enough, the BCV's will be driven fully closed, and the system will be unable to meet the pressure demand, particularly as the demand approaches the normal steady state pressure. As the rated operating pressure is approached, the pump discharge pressure will exceed the design limit.	
	G	An external leak upstream of the valve seat degrades system safety as described under phase B, above. At rated operation, an external leak downstream of the seat will momentarily reduce the hydrogen inventory in the stems, reducing reactor power, and the	IIIB

SYSTEM FAILURE MODE EFFECTS AND CRITICALITY ANALYSIS • • • WORK SHEET

SHEET 13 OF 16

COMPONENT/SUBSYSTEM: $CSCV_1$ / Cooldown Subsystem — PREPARED BY: G. M. Witcraft — DATE: 8-12-71

REFERENCE: Spec. #EC-90258 — REVISION: A — DATE: 4-30-71

FAILURE MODE (CODE #)	PHASE	EFFECTS ON SYSTEM OPERATION	FAILURE EFFECT CATEGORY
		SSCV's will drive further open to maintain the demand chamber temperature. Simultaneously, there will be a reduction in chamber pressure, and the PCV's will drive further closed to maintain the demand pressure. The pump flow and discharge pressure will increase to supply the propellant being lost. The pump pressure will exceed the design limit, and, if the leak is large enough, the PCV's will be driven fully closed. The system will then be unable to maintain the demand pressure.	
	H -I	An external leak upstream of the valve seat degrades system safety as described under phase D, above. The response to a leak downstream of the seat will be the same as described above for the portion of phase F when the system is under closed loop control by the PCV's and SSCV's.	IIIB
	J	An external leak upstream of the valve seat degrades system safety as described under phase D, above. The response to a leak downstream of the seat is the same as described above for the portion of phase F where the system is under closed loop control by the drums and PPCV's.	IIIB
	K	An external leak upstream of the valve seat prior to the opening of $CSCV_1$ degrades system safety as described under phase D, above. After $CSCV_1$ is opened, it would result in unacceptable propellant losses and require switching the cooldown functions to the standby leg. A leak downstream of the seat will momentarily decrease the propellant flow through the reactor causing the chamber temperature to exceed demand, and calling for the	IIIB

SYSTEM FAILURE MODE EFFECTS AND CRITICALITY ANALYSIS • • • WORK SHEET

SHEET 14 OF 16

COMPONENT/SUBSYSTEM: $CSCV_1$ / Cooldown Subsystem
PREPARED BY: G. M. Witcraft
DATE: 8-12-71

REFERENCE: Spec. #EC-90258
REVISION: A
DATE: 4-30-71

FAILURE MODE (CODE •)	PHASE	EFFECTS ON SYSTEM OPERATION	FAILURE EFFECT CATEGORY
		PDCV's to open to a point that will furnish the flow through the core to regain the demand chamber temperature. However, a higher proportion of the flow will now pass through the nozzle tube - reflector path and less through the stems. The reduced stem flow may permit the core support hardware to exceed the maximum permissible temperatures with possible permanent damage to the structure. To prevent such damage, the SSCV's should be opened from their normal nearly closed (~2°) position to provide additional coolant through the stems. If the leak is large enough, the PDCV's may be driven fully open and still be unable to maintain the demand chamber temperature. In that event, the BCV's can be partially closed to provide added power to the turbines and higher flow through the reactor.	
	L - M	An external leak upstream of the valve seat would result in continuous loss of propellant during both phases. To prevent excessive losses, the cooldown functions must be switched to the standby leg and $CSOV_1$ and $CSCV_1$ closed to isolate the leak. A leak downstream of the valve seat will result in external propellant losses during all periods of coolant flow. In early cooldown where the operating cooldown leg is wide open, a leak that would not be large enough to preclude subsequent emergency mode operation would not be large enough to significantly increase the pressure drop through the leg and hence reduce the supply of coolant to the reactor. Any such slight reduction would merely cause the reflector pulses to occur somewhat more frequently or be sustained slightly longer. In pulse cooldown, where the control valve is a significant portion of the total system impedance, such a leak would substantially reduce the flow through the reactor and may permit the reactor hardware to exceed the	IIIB

SYSTEM FAILURE MODE EFFECTS AND CRITICALITY ANALYSIS • • • WORK SHEET

SHEET 15 OF 16

COMPONENT/SUBSYSTEM: $CSCV_1$ / Cooldown Subsystem PREPARED BY: G. M. Witcraft DATE: 8-12-71

REFERENCE: Spec. #EC-90258 REVISION: A DATE: 4-30-71

FAILURE MODE (CODE #)	PHASE	EFFECTS ON SYSTEM OPERATION	FAILURE EFFECT CATEGORY
		maximum temperature limits and be permanently damaged. To preclude such damage, $CSCV_1$ or $CSCV_2$ must be opened to supply additional coolent through the reactor. End effect: Emergency mode operating capability only.	
Body Rupture (10)	A - C	During launch and coast, this failure mode degrades system safety through a loss of redundancy in preventing loss of the entire load of propellant in the tank. $CSOV_1$ and the standby leg must remain closed to contain the propellant.	IIA
	D - K	This failure mode results in gross losses of propellant from the SSCA discharge line during all phases of engine operation and the loss of any continued operating capability. In periods where the SSCV's are in position control near the closed position (D, E, and part of F) the resulting pressure gradients will cause reverse flow from the reflector, through the stems, and out the cooldown line. In periods of closed loop control, the SSCV's will be driven full open in an unsuccessful attempt to maintain the demand chamber temperature. The combined loss of flow and loss of power will rapidly reduce the turbine flow and pump output, and the system will essentially shut itself down. Shortly after the startup, the loss of flow will result in excessive temperatures in the nozzle and reactor with probable melting and disassembly of these components.	IV
	L -M	During cooldown, this failure mode will interrupt the supply of coolant to the reactor with resultant overheating of the reactor components and disassembly of the core. Some coolant could be supplied through the pump	IV

SYSTEM FAILURE MODE EFFECTS AND CRITICALITY ANALYSIS *** WORK SHEET

SHEET 16 OF 16

COMPONENT/SUBSYSTEM: $CSCV_1$ / Cooldown Subsystem
PREPARED BY: G. M. Witcraft
DATE: 8-12-71
REFERENCE: Spec. #EC-90258
REVISION: A
DATE: 4-30-71

FAILURE MODE (CODE #)	PHASE	EFFECTS ON SYSTEM OPERATION	FAILURE EFFECT CATEGORY
		legs to the reflector, and a portion of this would pass in the reverse direction through the stems, but there would be very little flow through the main core, and it is doubtful whether the coolant flow and distribution would be adequate to prevent the reactor disassembly. In any event, the engine would be inoperative. End effect: Total loss of engine operating capability.	
Fails to Vent (11)	A - K	Inability of the valve to vent propellant that may be present between the CSOV and CSCV either by leaking into the cavity past either valve or by entrapment when the valves are closed after cooldown is a degradation of system safety. Either the $CSOV_1$ or $CSCV_1$ would have to be opened periodically or permanently to relieve the excess pressure and prevent rupture of the line.	IIB
	L - M	Not applicable. $CSOV_1$ is open at all times during these phases so no propellant can be trapped. End effect: System safety degradation.	NA

SYSTEM FAILURE MODE EFFECTS AND CRITICALITY ANALYSIS • • • SUMMARY SHEET

SHEET 1 OF 2

COMPONENT/SUBSYSTEM: $CSCV_2$/ Cooldown Subsystem PREPARED BY: G. M. Witcraft DATE: 8-12-71

REFERENCE: Spec. #EC-90258 REVISION: A DATE: 4-30-71

FAILURE MODE (CODE #)	FAILURE EFFECT CATEGORY — ENGINE OPERATIONAL PHASES												
	A	B	C	D	E	F	G	H	I	J	K	L	M
		COAST		STARTUP				SHUTDOWN				COOLDOWN	
	LAUNCH	POST OPERATIONS	PRE-START OPERATIONS	TEMP. CONDITION	BOOT STRAP	THRUST BUILDUP	RATED OPERATION	THROTTLING	THROTTLE HOLD	TEMP. RETREAT	PUMP TAILOFF	EARLY	PULSE
Fails to Move From Full Open Position (01)	NA	→	IIA	NA	→	→	→	→	→	→	MF	→	→
Fails to Move From Full Closed Position (02)	NA	→	IIA	NA	→	→	→	→	→	→	IIA	→	→
Inadvertent Closure (Actuator Speed) (03)	NA	→	IIA	NA	→	→	→	→	→	→	MF	→	→
Inadvertent Closure (Rupture Speed) (04)	NA	→	IIA	NA	→	→	→	→	→	→	MF	→	→
Inadvertent Open (05)	IIA	→	→	→	→	→	→	→	→	→	IIC	IIA	IIB
Fails at Intermediate Position (06)	NA	→	→	→	→	→	→	→	→	→	→	→	→

SYSTEM FAILURE MODE EFFECTS AND CRITICALITY ANALYSIS • • • SUMMARY SHEET

SHEET 2 OF 2

COMPONENT/SUBSYSTEM: $CSCV_2$/ Cooldown Subsystem PREPARED BY: G. M. Witcraft DATE: 8-12-71

REFERENCE: Spec. #[illegible]-90258 REVISION: A DATE: 4-30-71

FAILURE MODE (CODE #)	FAILURE EFFECT CATEGORY — ENGINE OPERATIONAL PHASES												
	A	B	C	D	E	F	G	H	I	J	K	L	M
		COAST		STARTUP				SHUTDOWN				COOLDOWN	
	LAUNCH	POST OPERATIONS	PRE-STAR. OPERATIONS	TEMP. CONDITION	BOOT STRAP	THRUST BUILDUP	RATED OPERATION	THROTTLING	THROTTLE HOLD	TEMP. RETREAT	PUMP TAILOFF	EARLY	PULSE
Fails to Control (07)	NA										MF	NA	MF
Internal Leakage ([illegible])	IIA												
Internal Leakage ([illegible])	IIA			IIIB									
[illegible]upture (10)	IIA			IV									
Fails to Vent (11)	IIB											NA	

SYSTEM FAILURE MODE EFFECTS AND CRITICALITY ANALYSIS • • • WORK SHEET

SHEET 1 OF 5

COMPONENT/SUBSYSTEM: CSCV[illegible] PREPARED BY: G. M. Witcraft DATE: 8-12-71

REFERENCE: Spec. HEC-[illegible] REVISION: A DATE: 4-30-71

FAILURE MODE (CODE #)	PHASE	EFFECTS ON SYSTEM OPERATION	FAILURE EFFECT CATEGORY
Fails to Move From Full Open Position (01)	A - [illegible] D - J	Not applicable. Valve is already closed.	NA
	C	Failure of the valve to close after opening for checkout degrades system safety through a loss of redundancy in blocking large propellant losses from the tank during non-operating periods and in blocking reverse flow from the [illegible] discharge line to the tank during engine operation and through the loss of the operating capability of the standby cooldown leg. The [illegible] must remain closed to prevent such propellant losses and to permit [illegible] chilldown, operation, and cooldown. $CSCV_1$ and $CSCV_1$ must perform all of the cooldown functions. The system also loses the capability to isolate an external leak between $CSCV_2$ and $CSCV_2$.	IIA
	K - M	Multiple failure. $CSCV_2$ would only be required to operate in the event of a failure in the normally active leg. Loss of the ability to close is also a separate, independent failure. Net effect: System safety degradation.	MF
Fails to Move From Full Closed Position (02)	A - B, D - J	Not applicable. The valve is not required to open during these phases.	NA
	C, K-M	Failure of the valve to open degrades system safety through loss of the operating capability of the standby cooldown leg. The active leg must perform all of the cooldown functions. Net effect: System safety degradation.	IIA

SYSTEM FAILURE MODE EFFECTS AND CRITICALITY ANALYSIS * * * WORK SHEET

SHEET 2 OF 5

COMPONENT/SUBSYSTEM: [illegible]

PREPARED BY: C. M. Witcraft DATE: 8-12-71

REFERENCE: Spec. [illegible]

REVISION: A DATE: 4-30-71

FAILURE MODE (CODE)	PHASE	EFFECTS ON SYSTEM OPERATION	FAILURE EFFECT CATEGORY
Inadvertent Closure (Return Speed) (03)	A - [illegible]	Not applicable. The valve is already closed.	NA
	-	Inadvertent closure after opening for checkout degrades system safety in the same manner as failure to open, (02), above.	IIA
	A - M	Multiple failure. The valve would only be called on to be open in the event of a malfunction in the normally active cooldown leg, and this failure would represent at least a double malfunction.	MF
		End effect: System safety degradation.	
Inadvertent Closure (Rupture Speed) (04)	A - [illegible]	Not applicable. The valve is already closed.	NA
	-	Same as (03), above	IIA
	A - M	Same as (03) above.	MF
		End effect: System safety degradation	
Inadvertent Open (05)	A - [illegible]	Inadvertent opening of $CSCV_2$ degrades system safety in the same manner as described under failure to close, (01), phase C, above.	IIA
	-	Same as $CSCV_1$.	IIC

SYSTEM FAILURE MODE EFFECTS AND CRITICALITY ANALYSIS • • • WORK SHEET

COMPONENT/SUBSYSTEM: CSOV[illegible] Cooldown Subsystem

REFERENCE: [illegible]

PREPARED BY: G. M. Witcraft

REVISION: A

SHEET 3 OF 5

DATE: 8-12-71

DATE: 4-30-71

FAILURE MODE (CODE #)	PHASE	EFFECTS ON SYSTEM OPERATION	FAILURE EFFECT CATEGORY
	-	Inadvertent opening during early cooldown will have no significant effect on engine operation since the active cooldown line is already wide open. However, the system safety will be degraded through loss of the capability to isolate an external leak between $CSOV_2$ and $CSOV_2$.	IIA
	M	Inadvertent opening during pulse cooldown would permit a continuous, uncontrolled supply of propellant to the reactor with consequent excessive cooling of the reactor components, inefficient utilization of the coolant, and failure to meet the cooldown impulse predictability. $CSOV_2$ must be closed to block flow through the wide open leg and permit continued normal cooldown operation. The normally active leg must perform all required cooldown functions. End effect: System safety degradation.	IIB
Fails at Intermediate Position (06)	A-M	Not applicable. Failure of a control valve in an intermediate position is included under Fails to Control (07).	NA
Fails to Control (07)	A-[illegible]	Not applicable. The valve has no control functions during these phases.	NA

SYSTEM FAILURE MODE EFFECTS AND CRITICALITY ANALYSIS • • • WORK SHEET

SHEET 4 OF 5

COMPONENT/SUBSYSTEM: $CSCV_2$/ Cooldown Subsystem

PREPARED BY: G. M. Witcraft

DATE: 8-12-71

REFERENCE: Spec. EC-90258

REVISION: A

DATE: 4-30-71

FAILURE MODE (CODE #)	PHASE	EFFECTS ON SYSTEM OPERATION	FAILURE EFFECT CATEGORY
	E - H	Multiple failure. The valve would only be required to operate in the event of a malfunction in the normally active leg, and failure to control would represent a separate, independent malfunction.	MF
Internal Leakage (08)	A - J	Same as $CSCV_1$.	IIA
	K	Up to the time the CSOV's are opened the effect is the same as for $CSCV_1$. For the rest of the phase, there would be greater flow circulating back to the tank than desired, and the chill of the cooldown line would proceed more rapidly than normal. The PDCV's would be driven slightly further open to permit the pumps to provide the added flow and still maintain the demand chamber temperature. The flow rate through the stems would be reduced somewhat with danger of overheating and damaging the core support structure. $CSOV_2$ should be closed to permit the active leg to perform the normal cooldown function.	IIA
	L	Same effects as inadvertent open, (05), above.	IIA
	M	Excessive internal leakage during pulse cooldown would result in greater than desired coolant flow during a pulse and some flow continuing during the non-flow periods with possible overcooling of the reactor components, inefficient utilization of the cooldown propellant, and failure to meet the cooldown impulse predictability. $CSOV_2$ should be closed to block flow through the malfunctioned leg and permit the active leg to perform the normal cooldown functions. The ability to isolate an external leak between $CSOV_2$ and $CSCV_2$ is lost.	IIA
		End effect: System safety degradation.	

SYSTEM FAILURE MODE EFFECTS AND CRITICALITY ANALYSIS • • • WORK SHEET

SHEET 5 OF 5

COMPONENT/SUBSYSTEM: $CSCV_2$/ Cooldown Subsystem

PREPARED BY: G. M. Whitcraft

DATE: 8-12-71

REFERENCE: Spec. #EC-90258

REVISION: A

DATE: 4-30-71

FAILURE MODE (CODE #)	PHASE	EFFECTS ON SYSTEM OPERATION	FAILURE EFFECT CATEGORY
External Leakage (09)	A - C	Same as $CSCV_1$.	IIA
	D - M	Same as $CSCV_1$.	IIIB
		End effect: Emergency mode operating capability only.	
Body Rupture (10)	A - C	Same as $CSCV_1$.	IIA
	D - M	Same as $CSCV_1$.	IV
		End effect: Total loss of engine operating capability.	
Fails to Vent (11)	A - K	Same as $CSCV_1$.	IIB
	L - M	Not applicable. $CSOV_2$ is open so no propellant can be trapped.	NA
		End effect: System safety degradation.	

4.5.2.3 Cooldown Lines

a. Description and Function

The cooldown lines are the segments of 3" diameter pipe between the MPT and the CSOV's (Inlet) and between the CSCV's and the junction of the discharge line from the SSCA (Outlet). Their function is to contain the propellant against tank pressure (Inlet section) and against SSCA discharge pressure (Outlet section) and to provide a flow path for coolant during the early cooldown and pulse cooldown phases. The CSOVs and CSCVs are close coupled so there is no separate line segment between them.

b. Modes of Failure

Same as Turbopump Lines

SYSTEM FAILURE MODE EFFECTS AND CRITICALITY ANALYSIS • • • SUMMARY SHEET

SHEET 1 OF 1

COMPONENT/SUBSYSTEM: Cooldown Lines - Inlet/Cooldown Subsystem PREPARED BY: G. M. Witcraft DATE: 8-12-71

REFERENCE: REVISION: DATE:

FAILURE MODE (CODE #)	FAILURE EFFECT CATEGORY — ENGINE OPERATIONAL PHASES												
	A	B	C	D	E	F	G	H	I	J	K	L	M
		COAST		STARTUP				SHUTDOWN				COOLDOWN	
	LAUNCH	POST OPERATIONS	PRE-START OPERATIONS	TEMP. CONDITION	BOOT STRAP	THRUST BUILDUP	RATED OPERATION	THROTTLING	THROTTLE HOLD	TEMP. RETREAT	PUMP TAILOFF	EARLY	PULSE
Internal Leakage (01)	IIB	IIIB	→	→	→	→	→	→	→	→	→	→	→
Ruptures of Containment (02)	IV	→	→	→	→	→	→	→	→	→	→	→	→

SYSTEM FAILURE MODE EFFECTS AND CRITICALITY ANALYSIS • • • WORK SHEET

SHEET 1 OF 1

COMPONENT/SUBSYSTEM: Cooldown Lines-Inoet/Cooldown Subsystem PREPARED BY: G M Witcraft DATE: 8/12/71

REFERENCE: REVISION: DATE:

FAILURE MODE (CODE #)	PHASE	EFFECTS ON SYSTEM OPERATION	FAILURE EFFECT CATEGORY
[illegible]l Leakage (01)	A	Same as CSOV 1	IIB
	B-M	Same as CSOV 1	IIIB
		End Effect: Emergency mode operating capability only.	
[illegible]oss of Containment (02)	A	Same as Body Rupture (10) of $CSOV_1$	
	B-M	Same as Body Rupture (10) of $CSOV_1$	IV
		End Effect: Total loss of engine operation.	

SYSTEM FAILURE MODE EFFECTS AND CRITICALITY ANALYSIS • • • SUMMARY SHEET

SHEET 1 OF 1

COMPONENT/SUBSYSTEM: Cooldown Lines - Outlet/Cooldown Subsystem PREPARED BY: G. M. Witcraft DATE: 8-12-71

REFERENCE: REVISION: DATE:

FAILURE MODE (CODE #)	FAILURE EFFECT CATEGORY												
	ENGINE OPERATIONAL PHASES												
	A	B	C	D	E	F	G	H	I	J	K	L	M
		← COAST →		← STARTUP →				← SHUTDOWN →				← COOLDOWN →	
	LAUNCH	POST OPERATIONS	PRE-START OPERATIONS	TEMP. CONDITION	BOOT STRAP	THRUST BUILDUP	RATED OPERATION	THROTTLING	THROTTLE HOLD	TEMP. RETREAT	PUMP TAILOFF	EARLY	PULSE
External Leakage (01)	IIA	→	→	IIIB	—							→	→
Total Loss of Containment (02)	IIA	→	→	IV	—							→	→

SYSTEM FAILURE MODE EFFECTS AND CRITICALITY ANALYSIS • • • WORK SHEET

SHEET 1 OF 1

COMPONENT/SUBSYSTEM: Cooldown Lines-Outlet/Cooldown Subsystem PREPARED BY: G. M. Witcraft DATE: 8/12/71

REFERENCE: REVISION: DATE:

FAILURE MODE (CODE #)	PHASE	EFFECTS ON SYSTEM OPERATION	FAILURE EFFECT CATEGORY
External Leakage (01)	A-C	Same as CSCV 1	IIA
	D-M	Same as CSCV 1	IIIB
		End effect: Emergency mode operating capability only.	
Total Loss of Containment (02)	A-C	Same as Body Rupture (10) of $CSCV_1$	IIA
	D-M	Same as Body Rupture (10) of $CSCV_1$	IV
		End Effect: Total loss of engine operation.	

SECTION 4.6

NOZZLE ASSEMBLY, PRESSURE VESSEL AND CLOSURE SUBSYSTEM

4.6 NOZZLE ASSEMBLY, PRESSURE VESSEL AND CLOSURE SUBSYSTEM

4.6.1 Description

4.6.1.1 Function/Requirements

This subsystem houses and supports the nuclear reactor assembly and provides for generation of the engine thrust through acceleration and expulsion of the propellant heated by the reactor. The nozzle accepts propellant from the pump discharge line and delivers it to the reflector plenum of the reactor assembly. The pressure vessel contains the propellant flowing around the reactor assembly and provides access for the passage of the various propellant streams into and out of the nuclear subsystem. It also mechanically supports the control drum actuators, provides access between the actuators and the control drums, and supports the associated propellant lines, wiring harness, and instrumentation. The nozzle assembly accepts heated propellant from the reactor, accelerates, expands, and expels it through the nozzle extension to produce thrust. Finally, the subsystem transmits the generated thrust and relevant inertial loads to the lower thrust structure.

The thrust vector generated must be concentric with and parallel to the engine centerline within the limits defined in Specification No. EC-90196A.

4.6.1.2 Configuration

The Nozzle Assembly, Pressure Vessel and Closure Subsystem consists of the Nozzle and Nozzle Extension, and the Pressure Vessel and Closure Assembly, (Figure 4.2-1).The subsystem mates with and is attached to the lower thrust structure at the forward closure.

Seals to prevent external leakage through the cylinder-to-closure and cylinder-to-nozzle joints, through the joint between the nozzle and reactor, and through the joint between the

nozzle and nozzle extension are considered part of the Nozzle Assembly, Pressure Vessel and Closure Subsystem. All other external seals, where the various parts attach to this subsystem, are considered to be a part of the individual components.

4.6.1.3 Operation

The subsystem contains no actuated or "moving" components, and so performs all of its functions in all of the engine phases in nominally the same mechanical configuration.

4.6.2 Failure Analysis

4.6.2.1 Nozzle

a. Description and Function

The NERVA nozzle (Figure 4.6-1 is a convectively cooled single pass design with an expansion ratio of 24:1. It is attached to the pressure vessel (PV) with internally cooled bolts. Specification DS 90196 defines the requirements for the nozzle. It is cooled by propellant entering from the pump discharge line through a torus and thence through 216 oval, thin-walled, steel channels attached to the structural shell and then discharging into the aft end of the reflector plenum of the nuclear reactor assembly. The energy received by this stream in its pass through the nozzle is a major portion of the total energy supplied to drive the turbines. About 4% of the flow is diverted through internal passages in the nozzle /PV flange to cool the flange and attachment bolts and then returned to the reflector plenum.

A portion of the nozzle extends into the pressure vessel to support the reactor assembly. A sealing surface on the forward face of the nozzle mates with a seal on the reactor to prevent flow from the reflector plenum into the chamber.

The heated propellant from the reactor core enters the forward end of the nozzle, passes through the convergent and divergent sections, and is discharged into the forward end of the nozzle extension.

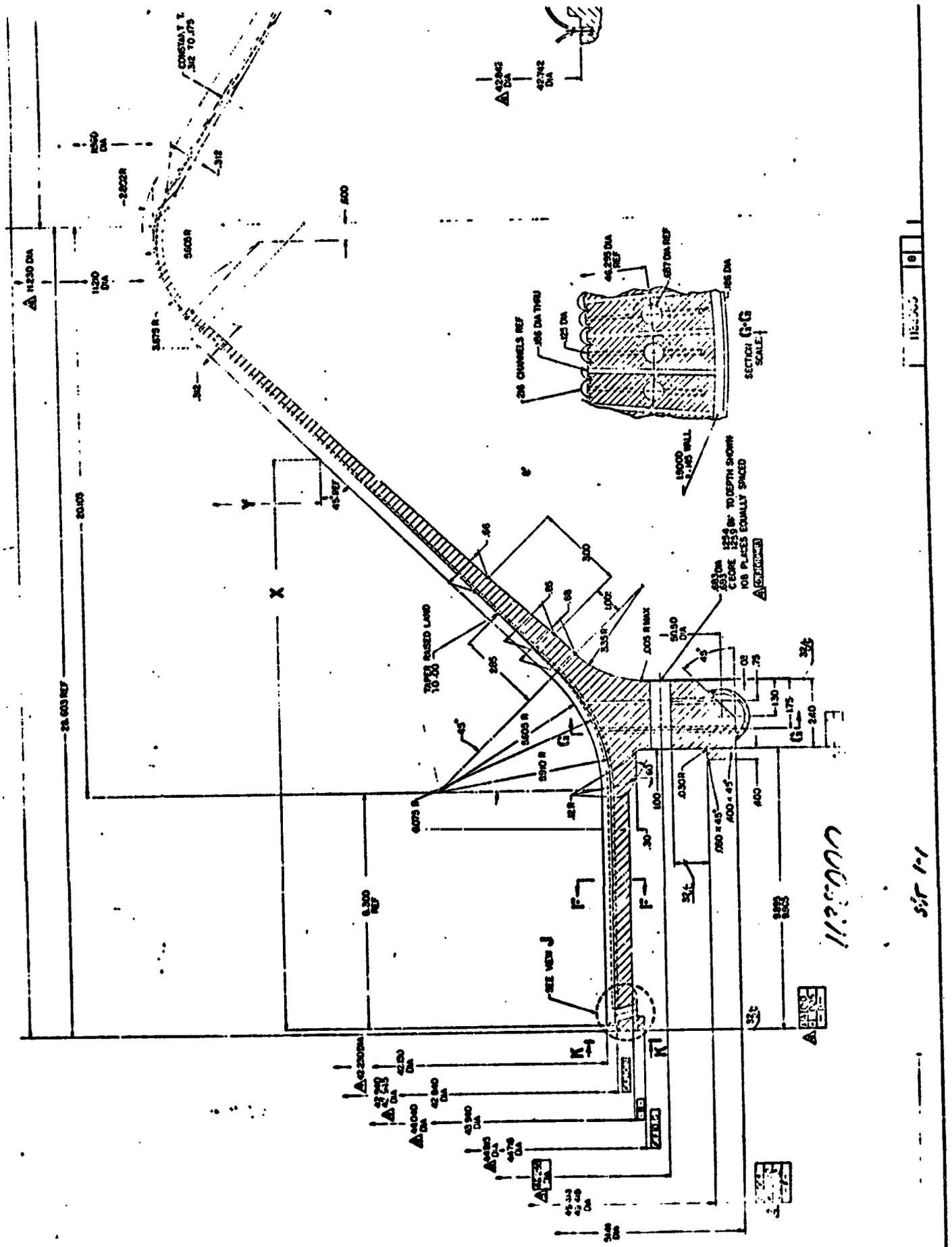

Nozzle (NOZ)

Figure 4.6-1 (Sheet 1)
(Convergent Section)

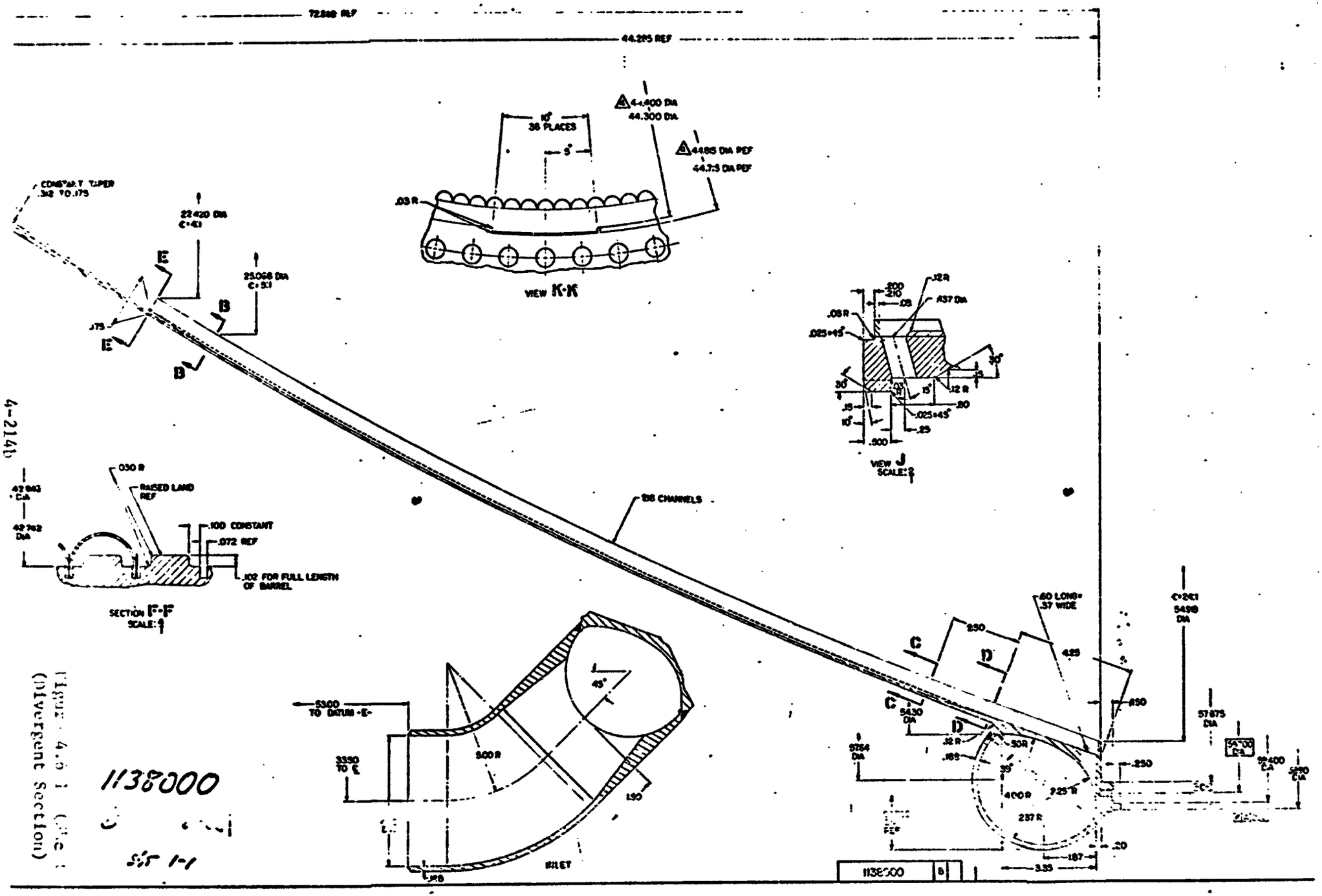

Figure 4.6 1 (Sheet 1)
(Divergent Section)

1138000

SIS 1-1

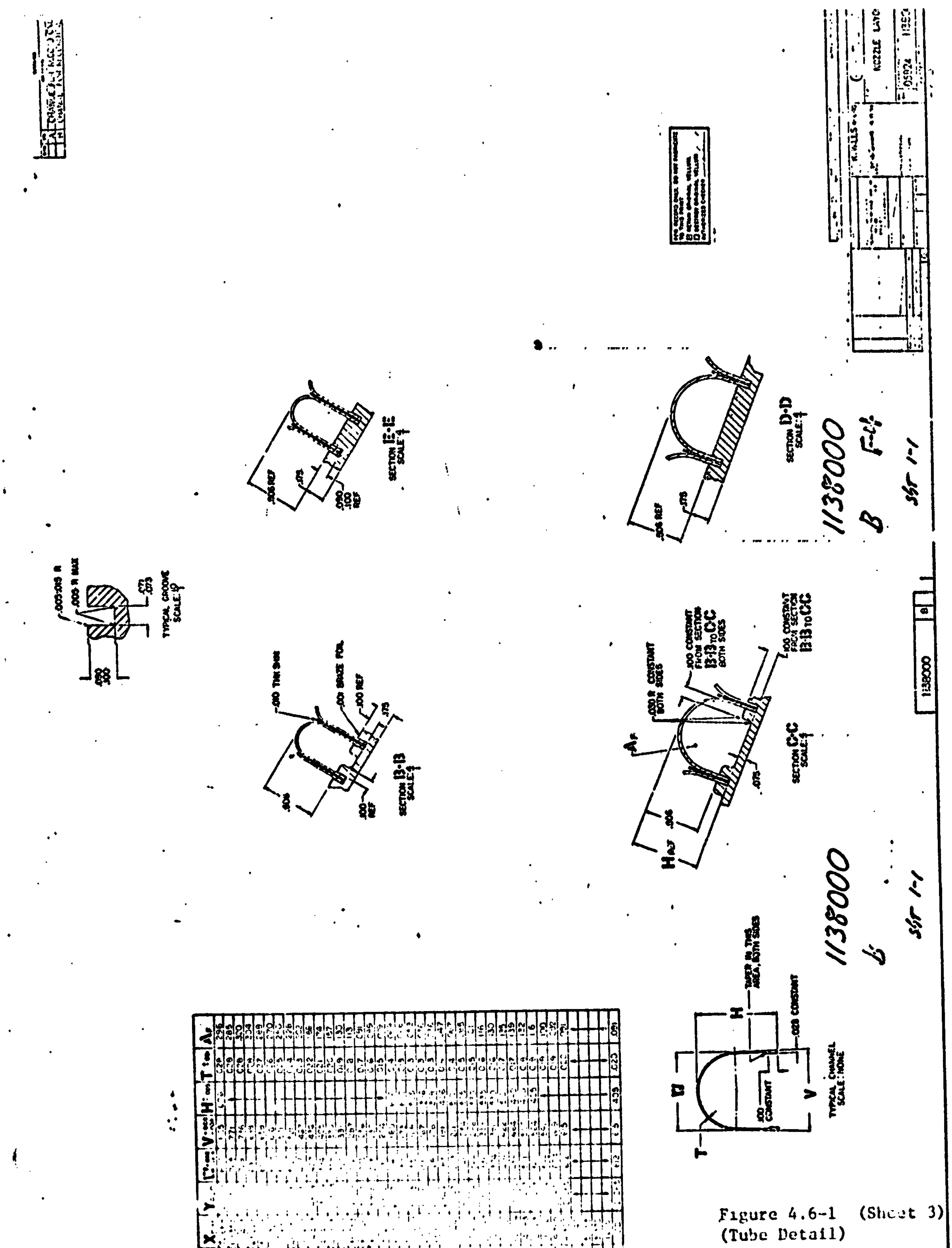

Figure 4.6-1 (Sheet 3)
(Tube Detail)

Mountings are provided in the convergent section of the nozzle for diagnostic and engine control instrumentation, and a bolted joint at the aft end (ε = 24:1) is used for attachment and alignment of the nozzle extension.

The nozzle is attached to the chamber with 108 hollow steel bolts. Propellant for cooling these bolts is taken from 108 nozzle coolant tubes through small radial channels to the outside of each bolt, through the bolt wall, and out through the bolt center, discharging into the reflector plenum. Additional propellant is taken from the alternate 108 nozzle tubes and passed radially through the nozzle flange to a manifold and back to the outside of the bolts for cooling the flange. The main flange seal is outside the attachment bolt circle so each of the bolt holes must also be sealed to prevent external leakage at this joint.

During normal engine operation at rated conditions, the nozzle conducts 81.7 lbm/sec of hydrogen at 1374 psia and 55.8°R from the PDL to the reflector plenum with a 124 psi pressure drop and 131°R temperature increase (nominal start of reactor life values). The maximum gas-side wall temperature in the coolant channel crowns during steady state operating conditions is about 1500°R. The nozzle throat area is sized to achieve a nominal rated operating chamber pressure of 450 psia. Flow through the nozzle is 91.8 lb/sec at a chamber pressure and temperature of 450 psia and 4250°R. The throat area, nozzle and nozzle extension contour, and expansion ratio are such that, in combination with the Pressure Vessel and Nozzle Extension, the subsystem will produce a nominal 75,000 lbf thrust and 825 lbf - sec/lbm vacuum specific impulse per Spec. CP-90290C. The gas stream pressure at the exit of the nozzle is approximately 2.2 psia. The net thrust vector must lie along the longidunal axis of the engine and the expanding flow must not induce undue vibrations or oscillations that could cause malfunction or failure of the nozzle or other engine components.

At rated operation, the nozzle transfers an axial force of about 900,000 lbf from the reactor assembly to the pressure vessel.

b. Failure Modes

(01) External Leakage From Coolant Stream

This failure mode is defined as loss of propellant from the nozzle coolant flow path at a rate above the normal operating limit but within a rate that will permit operation of the engine in the emergency mode. The loss can be either exterior to the nozzle such as through a crack or hole in the torus, shell, or flange coolant manifold or past the nozzle/chamber flange or bolt seals or into the nozzle such as past the nozzle/reflector seal or through an opening in a nozzle coolant tube.

(02) External Leakage From Exhaust Gas Stream

The only available path for external leakage of the hot exit gas stream from the nozzle is through the seal at the joint between the nozzle and the nozzle extension. At all other points, the exhaust stream is contained within a coolant stream at substantially higher pressures, effectively preventing its external loss. This failure mode, then, involves the passage of the hot gas past the aft seal at a rate greater than the normal engine operating limit but within a rate that will permit emergency mode operation and will not produce lateral forces beyond the vectoring capability of the gimbal system.

(03) Total Loss of Containment

This failure mode is the loss of propellant from either the coolant or hot gas side at such a rate as to preclude emergency mode operation or that produces lateral forces beyond the gimbal system capability. The most severe instances of this mode would involve complete loss of the structural integrity of the nozzle such as splitting of the shell or disengagement from the pressure vessel.

(04) Failure To Support Nuclear Reactor Assembly

This mode means loss of the capability of the nozzle to prevent movement of the nuclear reactor assembly, either

rotational or translational, of sufficient magnitude to cause damage to the reactor or to prevent its proper functioning. Such motion could result in breaking the propellant lines entering or leaving the reactor, breaking the internal seals in the reactor, binding the control drums, or otherwise damaging the assembly in such a way as to preclude its continued operation.

Note: It is assumed for this analysis that the failure of a single nozzle coolant tube or the failure of a single attachment bolt or bolt coolant passage will not propagate to cause failure of adjacent tubes or bolts, resulting in total failure of the nozzle. Analyses should be conducted to assess whether this assumption is valid and to determine the specific effects and the final failed state of the nozzle following burn through or rupture of a coolant tube, rupture of a bolt, or other such single part failure.

SYSTEM FAILURE MODE EFFECTS AND CRITICALITY ANALYSIS • • • SUMMARY SHEET

SHEET 1 OF 1

COMPONENT/SUBSYSTEM: Nozzle/Nozzle Assembly, Pressure Vessel, and [illegible]

PREPARED BY: C. N. Witcraft

DATE: 6-24-71

REFERENCE: Spec. EC-90196

REVISION: A

DATE: 4-30-71

FAILURE MODE (CODE #)	A	B	C	D	E	F	G	H	I	J	K	L	M
		COAST		STARTED				SHUTDOWN				COOLDOWN	
	LAUNCH	POST OPERATION	PRE-START OPERATION	[illegible]	[illegible]	[illegible]	RATED OPERATION	THROTTLING	THROTTLE HOLD	TEMP. RETREAT	PUMP TAILOFF	EARLY	PULSE
External Leakage From Coolant Stream (01)	NA			IIIB									
External Leakage From Exhaust Gas Stream (02)	NA			IIIB									
Total Loss of Containment (03)	NA			IV									
Failure to Support Nuclear Reactor Assembly (04)	IV												

SYSTEM FAILURE MODE EFFECTS AND CRITICALITY ANALYSIS • • • WORK SHEET

COMPONENT/SUBSYSTEM: Nozzle/Nozzle Assembly, Pressure Vessel, and Closure Subsystem

REFERENCE: Spec. EC-90196

PREPARED BY: G. M. Witcraft

REVISION: A

SHEET 1 OF 4

DATE: 6-21-71

DATE: 4-30-71

FAILURE MODE (CODE #)	PHASE	EFFECTS ON SYSTEM OPERATION	FAILURE EFFECT CATEGORY
External Leakage from Coolant Stream (1)	A-C	Not applicable. The nozzle has no operating function during these phases.	NA
	D-M	Escape of hydrogen from its normal coolant flow path results in inefficient utilization and excessive consumption of propellant during all phases of engine operation. The specific effects will depend on the location and magnitude of the leak as well as the particular operating phase. If the leak occurs through the reflector nozzle seal or through a coolant tube, the leaking propellant will enter the hot gas stream and be expelled via the nozzle. If it enters upstream of the throat, it will contribute to maintaining the chamber pressure, and the thrust will remain essentially unchanged. If it enters downstream of the throat, it will be added to the normal nozzle flow, and the thrust will rise. In either instance, the specific impulse will be reduced, since the added hydrogen enters at a substantially lower temperature than the main stream. Leakage outside the nozzle shell through the nozzle chamber seal or a bolt seal or through a crack or opening in the torus, flange coolant manifold, or the shell itself will produce a thrust vector whose direction and magnitude depends on the location of the leak. To define one of the limits of the emergency mode operation, specific analyses should be made to estimate the amount of leakage that could occur before the total thrust misalignment exceeds the engine vectoring capability. Leakage from a coolant tube into the hot gas stream downstream of the throat will also produce a significant side force from both the momentum of the injected propellant and the higher pressures generated along the nozzle in the vicinity of the leak. Preliminary analysis indicates that the most severe situation would exist with a tube ruptured at the aft end, exposing the entry port from the torus. At full power, approximately 13 lb/sec of propellant would flow from the coolant channel into the hot gas stream.	IIIB

SYSTEM FAILURE MODE EFFECTS AND CRITICALITY ANALYSIS • • • WORK SHEET

SHEET 2 OF 4

COMPONENT/SUBSYSTEM: Nozzle/Nozzle Assembly, Pressure Vessel, [illegible]

PREPARED BY: G. M. Witcraft

DATE: 6-21-71

REFERENCE: Spec. [illegible]

REVISION: A

DATE: 4-30-71

FAILURE MODE (CODE •)	PHASE	EFFECTS ON SYSTEM OPERATION	FAILURE EFFECT CATEGORY
External Leakage From Coolant Stream (Cont'd)	D-M	About 11 lb/sec [illegible] through the port, with 2 lb/sec passing through the tube [illegible]. The resultant thrust vector misalignment would be [illegible] within the engine gimballing capability. [illegible] from such secondary injection is limited to about 1.7 [illegible] injection rate of 28 lb/sec. Higher flows cause the generated [illegible] wave to impinge on the wall opposite to the point of injection, reducing the net jet deflection (Ref: Memo 7734:035 "Predicted Jet Deflection Resulting from [illegible] Nozzle Cooling Tube", J.D. Mockenhaupt, [illegible]). For all such leaks during powered operation, the pressure control elements would be required to supply more power to the turbines in order to pump the additional propellant, and the system pressures would be raised above normal. The inefficient utilization of propellant and the possible excessive thrust misalignment will preclude normal engine operation. However, the engine will retain [illegible] operating capability. End Effect: Emergency Mode Operating Capability Only. NOTE: Detailed analysis should be performed to determine the effects of specific sized leaks at specific points along a coolant tube and assess whether such leaks will propagate or cause additional failures at other points in the tube. The flow rate through a leaking tube would be expected to increase upstream of the leak with a consequent change in the heat flux and pressure distribution. The throughput downstream of the leak may be decreased, making that portion of the tube more vulnerable to burnout. Under some conditions, the flow downstream of the leak may become small enough to cause burnout of a significant length of the tube with possible catastrophic effects on the nozzle shell.	

SYSTEM FAILURE MODE EFFECTS AND CRITICALITY ANALYSIS • • • WORK SHEET

COMPONENT/SUBSYSTEM: Nozzle/Nozzle Assembly, Pressure Vessel, and Closure Diaphragm

PREPARED BY: G. M. Witcraft

SHEET 3 OF 4

DATE: 6-21-71

REFERENCE: Spec. EC-90196

REVISION: A

DATE: 4-30-71

FAILURE MODE (CODE *)	PHASE	EFFECTS ON SYSTEM OPERATION	FAILURE EFFECT CATEGORY
External Leakage from Exhaust Gas Stream (02)	A-C	Not applicable. The nozzle has no operating function during these phases.	NA
	D-M	External leakage from the exhaust gas stream through the seal at the nozzle/nozzle extension flange will generate a lateral force dependent on the magnitude of the leak and the engine operating conditions. At the same time, the longitudinal thrust will be reduced slightly since part of the propellant does not contribute to the thrust generated through the nozzle extension. The loss of propellant would result in some degradation of the effective specific impulse. However, on the assumption that the leak does not propagate to become catastrophic to the nozzle, the engine would retain emergency mode operating capability up to the point where the thrust vector misalignment exceeds the engine gimballing capability. End Effect: Emergency mode operating capability only.	IIIB
Total Loss of Containment (03)	A-C	Not applicable. The nozzle has no operating function during these phases.	NA
	D-M	This failure mode results in immediate and complete loss of engine operation. Flow through the reactor will drop to essentially zero, and except for phases D and E, the core structural support components will overheat, and the reactor will disassemble. End Effect: Total loss of engine operation.	IV

SYSTEM FAILURE MODE EFFECTS AND CRITICALITY ANALYSIS • • • WORK SHEET

SHEET 4 OF 4

COMPONENT/SUBSYSTEM: Nozzle/Nozzle Assembly, Pressure Vessel, and Closure Subsystem

PREPARED BY: G. M. Witcraft

DATE: 6-21-71

REFERENCE: Spec. EC-98196

REVISION: A

DATE: 4-30-71

FAILURE MODE (CODE #)	PHASE	EFFECTS ON SYSTEM OPERATION	FAILURE EFFECT CATEGORY
ailure to Support uclear Reactor Assy. (04)	A-M	Inability of the nozzle to provide physical support to the reactor assembly results in total loss of engine operating capability. Connecting lines to the reactor could be ruptured. Reactor internal seals and other parts could be physically failed, and the control drums could be inoperative. The engine could not be started if the failure occurred during a non-operating phase. If it occurred after Phase E, the core support components could melt, and the reactor disassemble. End Effect: Total loss of engine operating capability.	IV

4.6.2.2 Nozzle Extension

a. Description and Function

The nozzle extension (Figure 4.6-2) is a radiation cooled contoured shell attached to the downstream end of the nozzle. It begins at an expansion ratio of 24:1 and terminates at 100:1. The internal contour is based on the Rao design criteria. Specification EC-90196A describes the requirements for the nozzle extension.

The shell is made of fibrous reinforced graphite. The main body is constructed by laying up resin impregnated graphite cloth on a mandrel. A previously prepared honeycomb structure of the same material is placed around the shell, and the whole extension is then cured, carbonized, and graphitized into a homogeneous structure. Finally, it is impregnated with pitch and reprocessed to increase the graphite density of the final product. One prospective modification incorporates a three dimensional woven structure of the graphite cloth in the forward few inches of the shell to minimize possible delamination in this transition area. However, the existing design as of June 1971 does not include this feature.

The extension is attached to the nozzle by a segmented ring (3 segments) that bears on a lip at the forward end of the extension and is in turn bolted (120 bolts) to the aft nozzle flange. A Grafoil seal between the two components serves both to prevent external leakage through the joint and to reduce heat flow from the extension into the cooled nozzle flange.

The nozzle extension accepts the engine exhaust flow from the nozzle and permits its acceleration and expansion to produce thrust. At rated operation, the pressure of the stream entering the extension is about 2 psia, and it is exhausted at about 0.3 psi. The resulting thrust contribution is approximately 5400 lbs.

b. Failure Modes

(01) External Leakage

Definition: Loss of propellant past

the nozzle/extension seal in excess of the normal operating limit or any loss via cracks, holes, or other openings through the shell body. The upper limit of this mode is a leak rate that produces a lateral thrust equal to the vector capability of the engine gimbal.

(02) Loss of Containment

Definition: Loss of propellant past the nozzle/extension seal or through an opening in the shell at a rate that produces lateral thrust beyond the engine gimbal capability or that reduces the engine thrust or propellant specific impulse below the minimum acceptable value.

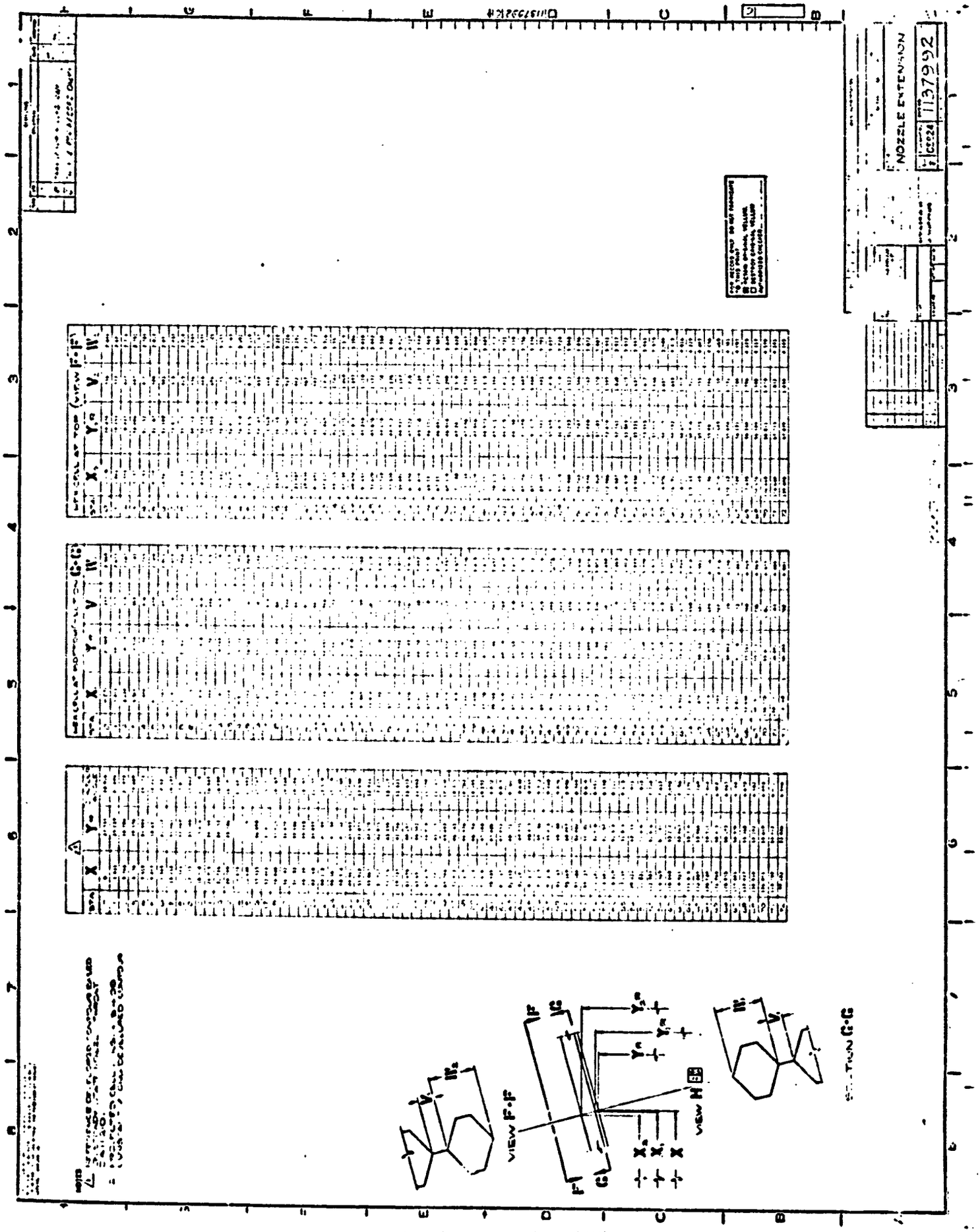

Nozzle Extension (NE)

Figure 4.6-2 (Sheet 1)

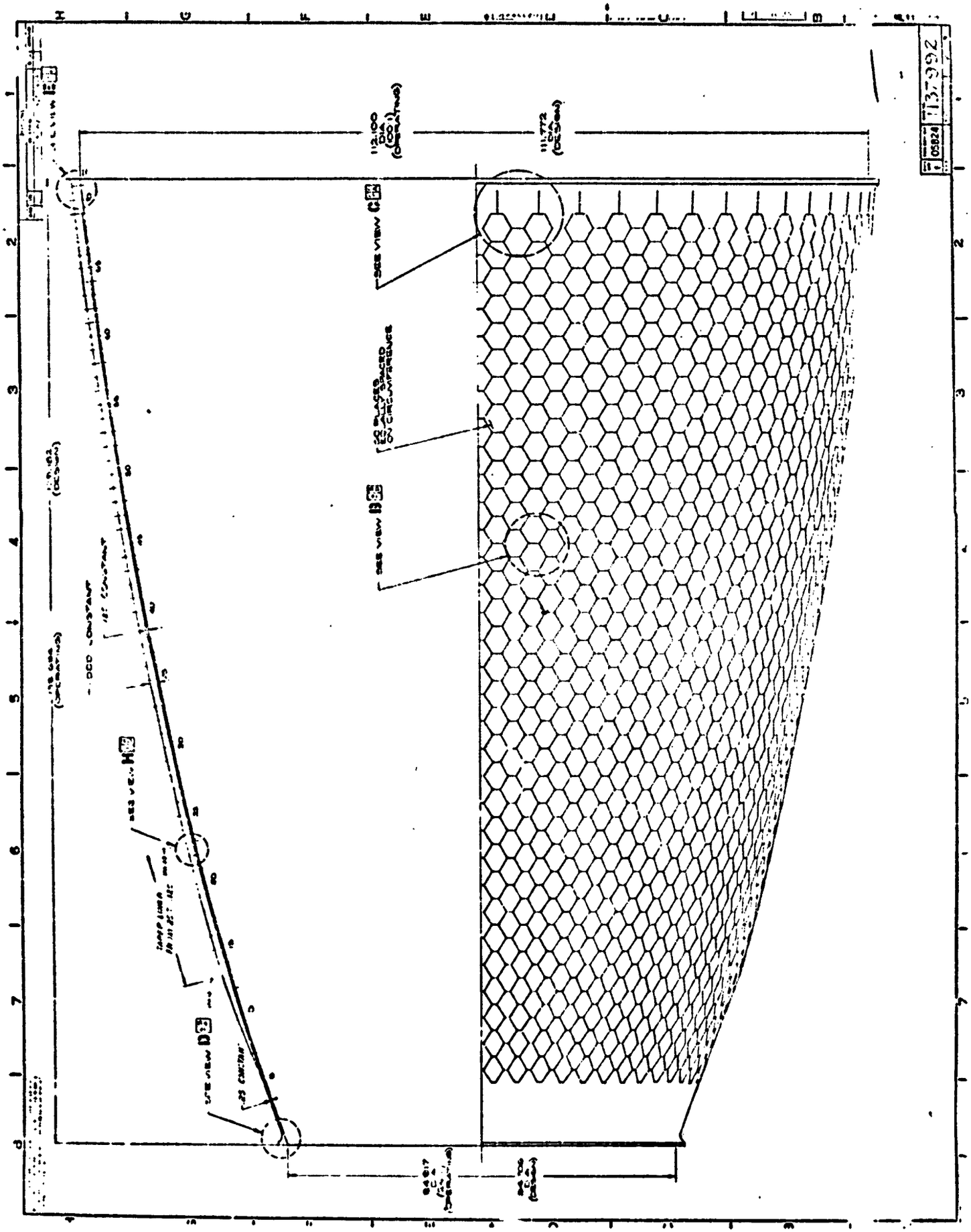

Figure 4.6-2 (Sheet

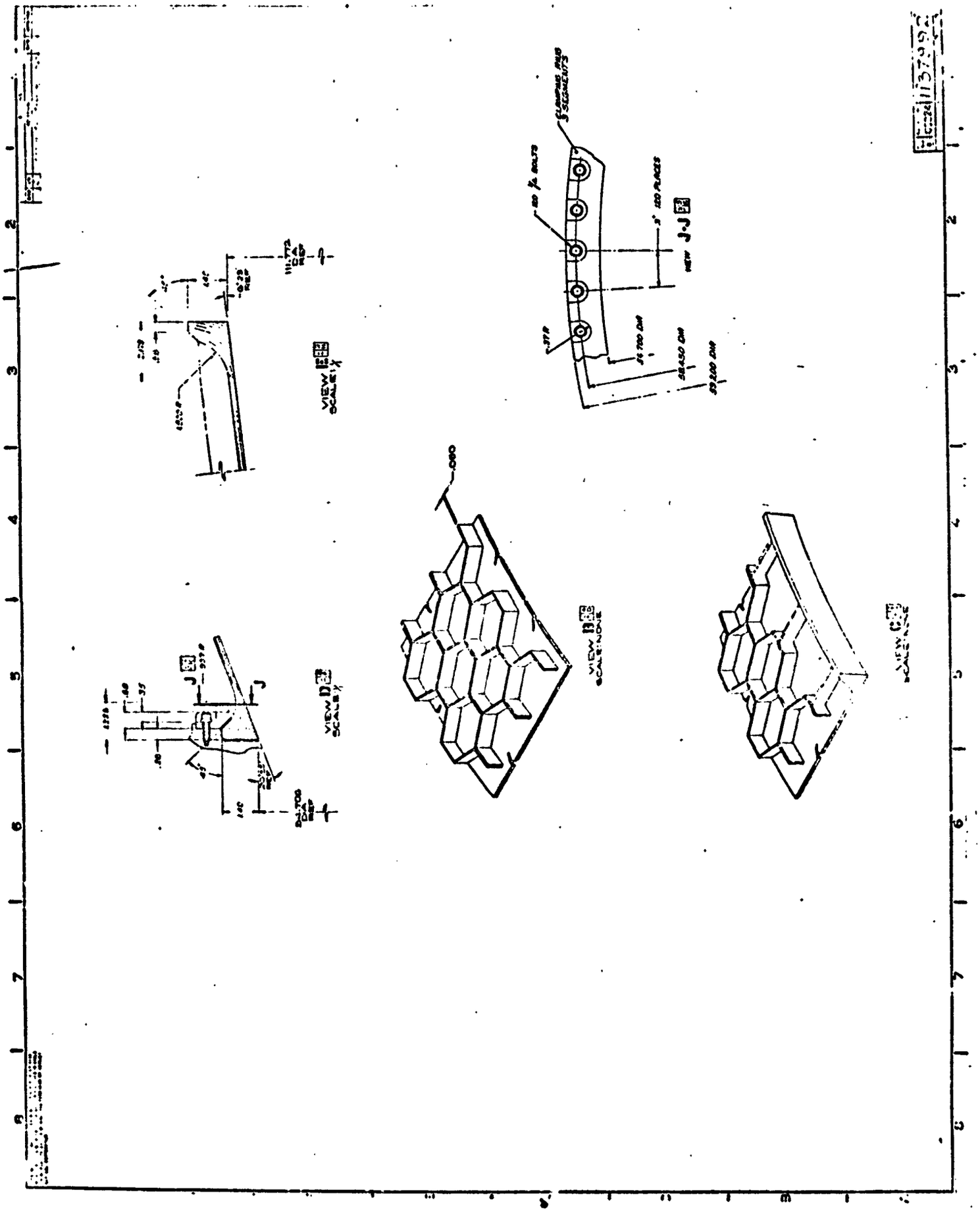

Figure 4.6-2 (Sheet 3)

SYSTEM FAILURE MODE EFFECTS AND CRITICALITY ANALYSIS • • • SUMMARY SHEET

SHEET 1 OF 1

COMPONENT/SUBSYSTEM: Nozzle Extension/Nozzle Assembly, Pressure Vessel and Closure Subsystem

PREPARED BY: G. M. Witcraft

DATE: 7-2-71

REFERENCE: Spec. EC-90196

REVISION: A

DATE: 4-30-71

FAILURE MODE (CODE #)	FAILURE EFFECT CATEGORY												
	ENGINE OPERATIONAL PHASES												
	A	B	C	D	E	F	G	H	I	J	K	L	M
		COAST		STARTUP				SHUTDOWN				COOLDOWN	
	LAUNCH	POST OPERATIONS	PRE-START OPERATIONS	TEMP. CONDITION	BOOT STRAP	THRUST BUILDUP	RATED OPERATION	THROTTLING	THROTTLE HOLD	TEMP. RETREAT	PUMP TAILOFF	EARLY	PULSE
External Leakage (01)	NA	→	→	IIIB	→	→	→	→	→	→	→	→	→
Loss of Containment (02)	NA	→	→	IV	→	→	→	→	→	→	→	→	→

SYSTEM FAILURE MODE EFFECTS AND CRITICALITY ANALYSIS • • • WORK SHEET

COMPONENT/SUBSYSTEM: Nozzle Extension/Nozzle Assembly, Pressure Vessel and Closure Subsystem

PREPARED BY: G. M. Witcraft

SHEET 1 OF 2

DATE: 7-2-71

REFERENCE: Spec. EC-90196

REVISION: A

DATE: 4-30-71

FAILURE MODE (CODE #)	PHASE	EFFECTS ON SYSTEM OPERATION	FAILURE EFFECT CATEGORY
External Leakage (01)	A-C	Not applicable. The nozzle extension has no operating function during these phases.	NA
	D-M	External leakage will generate a lateral force dependent on the magnitude of the leak and the engine operating conditions. At the same time, the longitudinal thrust will be reduced slightly since part of the propellant is not expelled through the normal flow path. The loss of propellant would result in some small degradation to the effective specific impulse. However, on the assumption that the leak does not propagate, the engine would retain emergency mode operating capability up to the point where the thrust vector misalignment exceeds the engine gimbal capability. End Effect: Emergency mode operating capability only.	IIIB
Loss of Containment (02)	A-C	Not applicable. The nozzle extension has no operating function during these phases.	NA
	D-M	This failure mode will cause thrust misalignment beyond the vector capability of the gimbal with resultant hard over gimbal actuation and loss of directional control of the vehicle. The vehicle will tumble at increasing rates until it breaks apart. To prevent breakup of the vehicle, the engine should be immediately shut down. It is assumed that the RCS has sufficient restoring torque to limit the tumbling to permit emergency shutdown and cooldown. Depending on the magnitude of the malfunction and possibly on the nature of the vehicle guidance system, it may be possible to execute emergency mode operation by rotating the vehicle slowly in flight to cancel out the thrust vector misalignment. If the malfunction propagates so as to remove	IV

SYSTEM FAILURE MODE EFFECTS AND CRITICALITY ANALYSIS • • • WORK SHEET

SHEET 2 OF 2

COMPONENT/SUBSYSTEM: Nozzle Extension/Nozzle Assembly, Pressure Vessel and Closure Subsystem

PREPARED BY: G. M. Witcraft

DATE: 7-2-71

REFERENCE: Spec. EC-90126

REVISION: A

DATE: 4-30-71

FAILURE MODE (CODE #)	PHASE	EFFECTS ON SYSTEM OPERATION	FAILURE EFFECT CATEGORY
		the extension nearly completely, the extreme thrust misalignment would be reduced, and emergency mode operating capability would be retained. End Effect: Loss of vehicle guidance control.	

4.6.2.3 Pressure Vessel and Closure

a. Description and Function

The Pressure Vessel and Closure Assembly (Dwg. 1138808) is essentially a cylinder with an elliptical forward closure (Figure 4.6-3). Both the cylinder and closure are made of alluminum alloy 7075-T73. The details of the cylinder/nozzle joint are shown in Figure 4.6-4. Figures 4.6-5 and 4.6-6 show a radial section and a top view of the forward closure. The main cylinder is 54.32" ID with a 0.820" wall thickness. The length between flange faces is 85.650 in. The closure is attached to the forward end with a bolted (120 bolts) flanged joint. The primary flange seal is at a larger diameter than the bolt circle, so each bolt must be individually sealed. The current design does not include provisions for cooling the forward flange and bolts. The closure provides access for inlet of the core support system coolant and bypass streams, for exit of the main propellant stream from the dome, and for its return from the turbine discharge line to the core. It also provides mounts for the 18 control drum actuators and access for passage of each control drum shaft.

The pressure vessel and closure assembly houses the nuclear reactor assembly and contains the hydrogen flowing external to the reactor during all periods of propellant flow. It provides for generation of part of the engine thrust and transmits thrust and inertial loads between the nozzle and the lower thrust structure. The closure furnishes mechanical support for the control drum actuators, the turbine inlet and discharge lines, the structural support coolant lines, and the required instrumentation adaptors.

During normal engine operation, the highest pressure within the vessel occurs at the inlet to the reflector. At the start of reactor life, this pressure is a nominal 1190 psia (1162-1237 spec. extreme range), and it increases gradually to 1198 psia nominal at the end of life. The temperature of the main propellant stream in contact with the pressure vessel during full power operation ranges from 187°R at the reflector inlet to 276°R at the dome exit to the turbine inlet line.

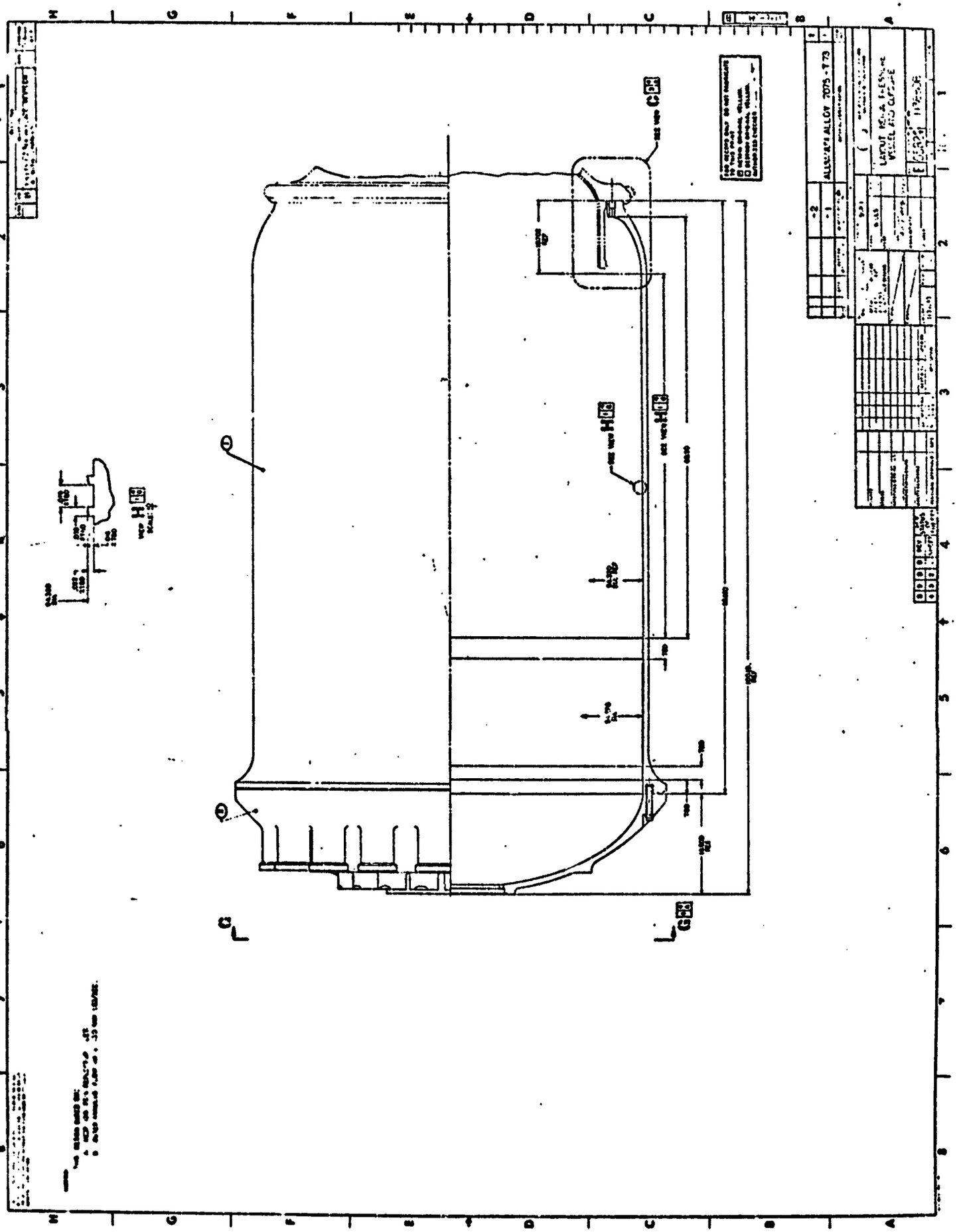

[illegible] (PV & C)

Figure 4.6-3

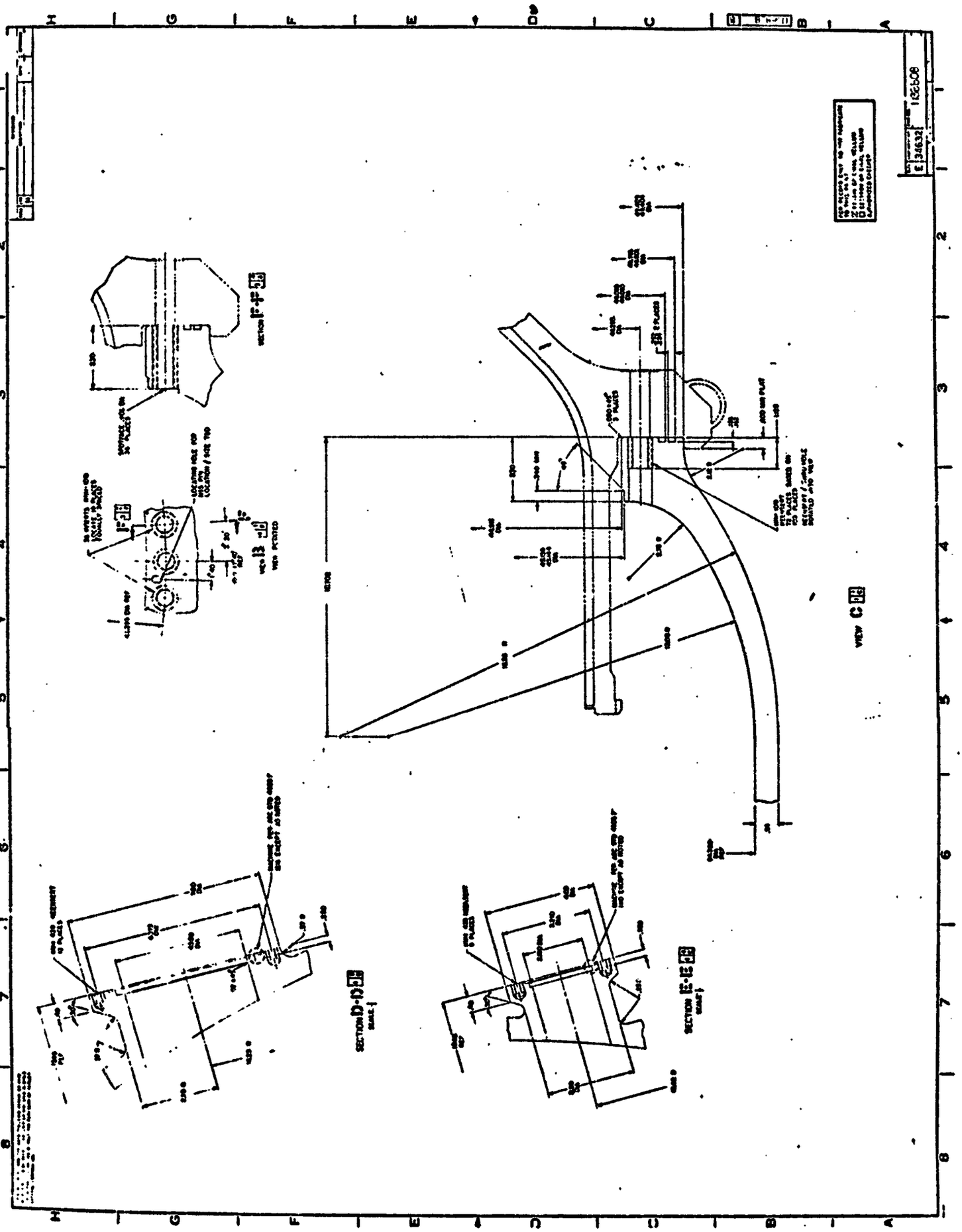

Cylinder/Nozzle Joint

Figure 4.6-4

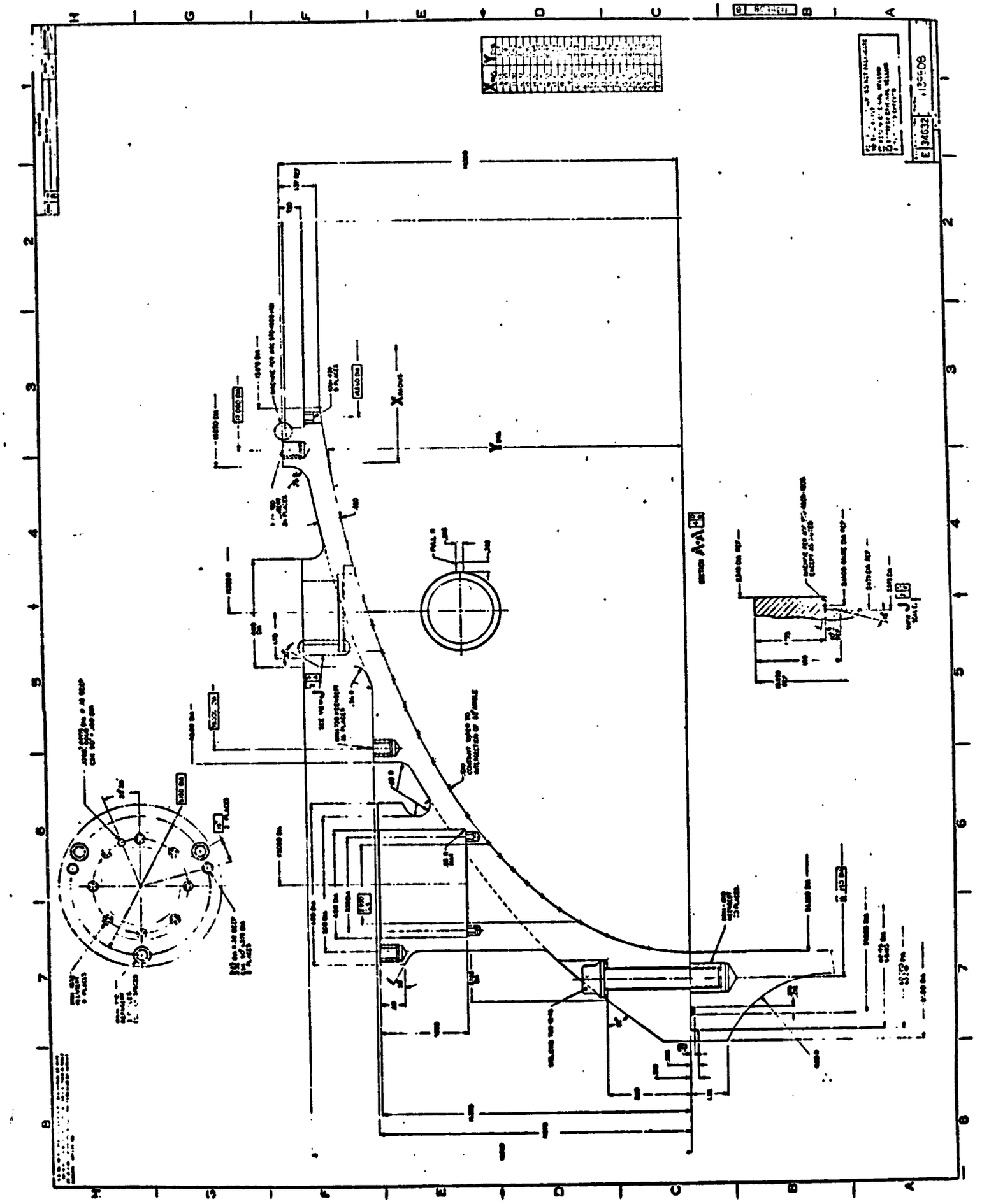

Forward Closure - Radial Section

Figure 4.6-5

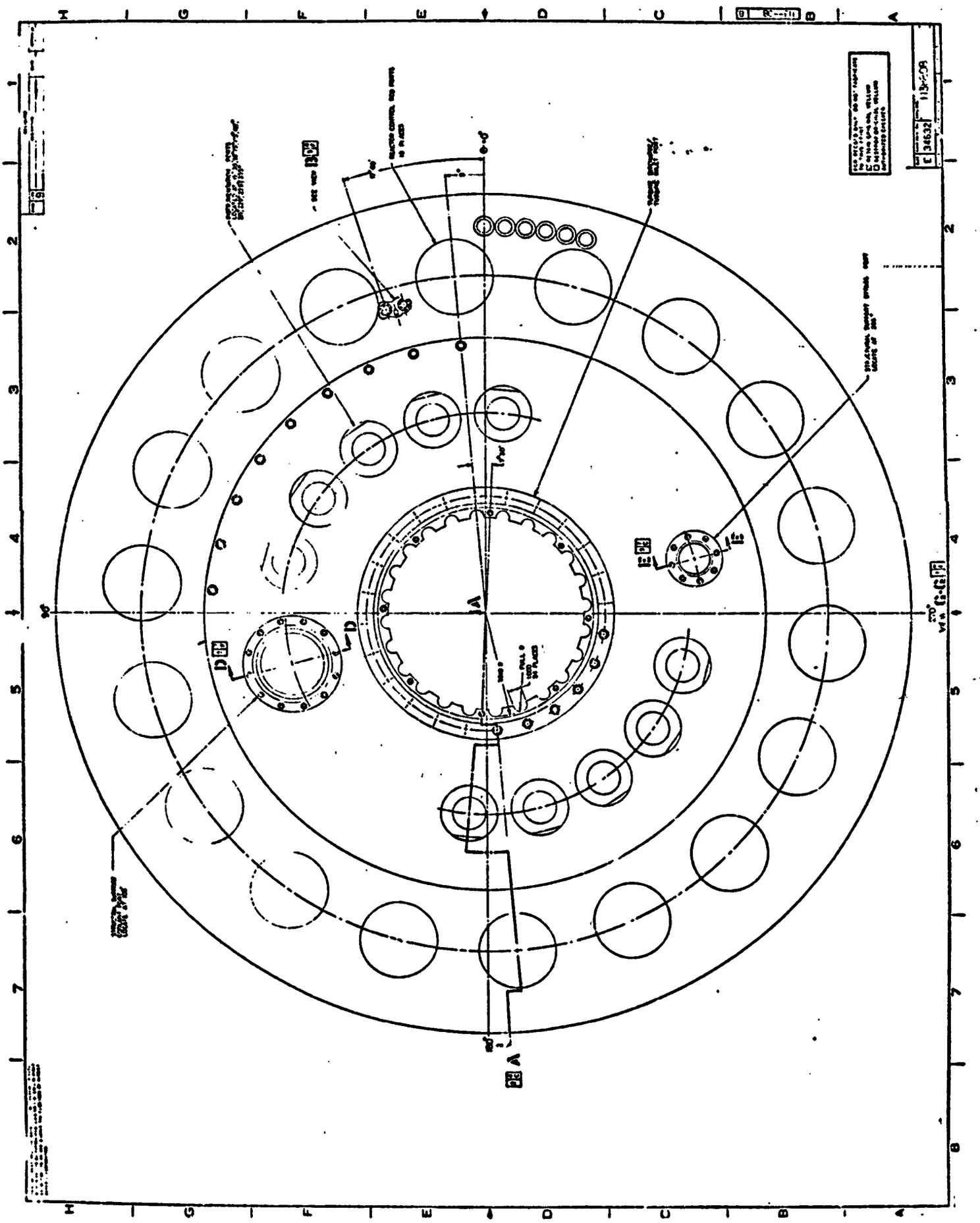

Forward Closure - Top View

Figure 4.6-6

All seals to prevent inter-channel leakage between the pressure vessel and reactor are considered part of the reactor assembly. Seals to prevent external leakage through the cylinder/closure joint are taken as part of the pressure vessel and closure assembly. Seals external to the pressure vessel such as drum actuator closures, instrumentation operatures, SSCL and SSBL closures, and TIL and TDL closures are considered part of the respective hardware.

b. Modes of Failure

(01) External Leakage

Definition: Loss of propellant external to the pressure vessel and closure at a rate in excess of the normal operating limit but not large enough to preclude emergency mode operation or to generate a lateral thrust in excess of the engine gimballing capacity. The leakage can occur via an external joint seal or through an opening through the vessel body.

(02) Structural Failure

Definition: Loss of physical integrity of such severity as to cause loss of propellant at rates that result in thrust misalignment beyond the engine gimbal capacity or that preclude emergency mode operation or as to preclude transmission of normal loads between the nozzle and lower thrust structure.

SYSTEM FAILURE MODE EFFECTS AND CRITICALITY ANALYSIS • • • SUMMARY SHEET

SHEET 1 OF 1

COMPONENT/SUBSYSTEM: Pressure Vessel and Closure/Nozzle Assembly, ~~Pressure Vessel & Closure Subsystem~~ PREPARED BY: G. M. Witcraft DATE: 7-8-71

REFERENCE: Spec. EC-90154 REVISION: A DATE: 4-30-71

FAILURE MODE (CODE #)	FAILURE EFFECT CATEGORY												
	ENGINE OPERATIONAL PHASES												
	A	B	C	D	E	F	G	H	I	J	K	L	M
		COAST		STARTUP				SHUTDOWN				COOLDOWN	
	LAUNCH	POST OPERATIONS	PRE-START OPERATIONS	TEMP. CONDITION	BOOT STRAP	THRUST BUILDUP	RATED OPERATION	THROTTLING	THROTTLE HOLD	TEMP. RETREAT	PUMP TAILOFF	EARLY	PULSE
External Leakage (01)	NA	→	→	IIIB	→	→	→		→	→	→	→	→
Structural Failure (02)	IV	→	→	→	→	→	→	→	→	→	→	→	→

SYSTEM FAILURE MODE EFFECTS AND CRITICALITY ANALYSIS • • • WORK SHEET

COMPONENT/SUBSYSTEM: Pressure Vessel & Closure/Nozzle Assembly, Pressure Vessel & Closure Subsystem

REFERENCE: Spec. EC-90154

PREPARED BY: G. M. Witcraft

REVISION: A

SHEET 1 OF 2

DATE: 7-7-71

DATE: 4-30-71

FAILURE MODE (CODE #)	PHASE	EFFECTS ON SYSTEM OPERATION	FAILURE EFFECT CATEGORY
External Leakage (01)	A-C	Not applicable. The assembly has no propellant containment requirement during these phases.	NA
	D-M	During all propellant flow phases, this mode results in excessive loss of propellant from the system and precludes continued normal operation. Depending on the location of the leak, a lateral thrust may be produced, requiring compensation by the gimbal system. During periods of closed loop pressure control, the control elements (either PDCV's or BCV's) will be driven to new positions to provide more power to the turbines to pump the additional propellant being lost. The pump discharge pressure will be increased somewhat, and the SSCV's will be driven further closed to maintain the same stem reactivity insertion. If the leak is severe enough, this reduced stem flow could cause overheating and damage to the stems. These effects will require retreat from normal engine operation, but emergency mode capability will be retained. End Effect: Emergency mode operating capability only.	IIIB
Structural Failure (02)	A-C	During these non-operating phases, the assembly would be unable to transmit inertial loads between the nozzle and thrust structure. Such loads as generated during launch or maneuvering of the vehicle during coast would cause gross permanent physical distortion of the vessel and damage to contiguous components and to the reactor assembly. The engine would be rendered unfit for any subsequent operation.	IV

SYSTEM FAILURE MODE EFFECTS AND CRITICALITY ANALYSIS • • • WORK SHEET

COMPONENT/SUBSYSTEM: Pressure Vessel & Closure/Nozzle Assembly, Pressure Vessel and Closure Subsystem

PREPARED BY: G. M. Witcraft

SHEET 2 OF 2

DATE: 7-7-71

REFERENCE: Spec. EC-90154

REVISION: A

DATE: 4-30-71

FAILURE MODE (CODE #)	PHASE	EFFECTS ON SYSTEM OPERATION	FAILURE EFFECT CATEGORY
	D-M	Structural failure of the pressure vessel during any period of propellant flow is likely to propagate to cleavage of the vessel at the point of failure with complete separation of the aft section, including the reactor assembly from the rest of the vehicle. Even under tank flow, there is significant pressure load in the cylinder and dome and some longitudinal load from the core pressure differential so that a failure initiated under those circumstances will probably propagate to catastrophic separation of the vessel. End effect: Total loss of engine thrusting capability.	IV

SECTION 4.7

THRUST STRUCTURE AND EXTERNAL SHIELD SUBSYSTEM

4.7 THRUST STRUCTURE AND EXTERNAL SHIELD SUBSYSTEM

4.7.1 Description

4.7.1.1 Function and Requirements

The thrust structure is the primary engine load carrying member between the forward closure of the pressure vessel and the main propellant tank. It transmits engine thrust and inertial loads between the pressure vessel and a structural ring attached to the tank and must withstand the loads imposed by gimballing. It also provides structural support for the wiring harness, gimbal actuators, external shield, and propellant and tank pressurization lines.

The external shield is a sandwich radiation shield structure that is supported from the thrust structure near the pressure vessel dome. It attenuates radiation from the nuclear reactor to maintain exposure of the crew and passengers within acceptable levels. In conjunction with indigenous shielding in the payload, it limits exposure to a maximum of 3 rem for flight crew members and 10 rem for passengers during each mission. The shield is removed for unmanned missions.

4.7.1.2 Configuration

The thrust structure consists of two sub-assemblies. The Lower Thrust Structure (LTS) interfaces with the pressure vessel closure and the aft section of the gimbal assembly. The Upper Thrust Structure interfaces with the forward section of the gimbal and the main propellant tank. Both structures are made of aluminum. The LTS is a cylindrical-conical member with gross dimensions about 69" long and 38" diameter, not including the flanges and the various mounting brackets and pads attached to it. The UTS is a trussed-beam configuration 17" long with a diameter increasing from about 30" at the aft face to 58" at the forward face. The longitudinal axes of both sections lie on the neutral position centerline of the engine.

The overall dimensions of the external shield are 99" diameter and 10" thick. It is mounted on the LTS with its aft face a few inches forward of the attachment plane between the LTS and the

pressure vessel closure. Its longitudinal axis coincides with the LTS centerline.

4.7.2 Failure Analysis

4.7.2.1 Lower Thrust Structure

a. Description and Function

The LTS (Figure 4.7-1) consists of two primary sections. A cylindrical shell 38" in diameter extends from the interface with the pressure vessel closure to the forward face of the external shield. A conical section extends from that point forward to interface with the gimbal subsystem. This section is approximately 51" long with diameters of 38" at the base and 30" at the forward end. Access holes are cut through the shell for passage of the TIL, TDL, SSGL, and SSBV and for installing the central portion of the external shield. Brackets and mounts are provided for the TPA's, the aft end of the gimbal actuators, the external shield, and for support of the propellant lines and the instrumentation and controls and power cables.

The LTS transmits thrust and inertial loads from the pressure vessel closure to the gimbal assembly and the gimballing forces from the gimbal actuators to the aft section of the engine. It also provides structural support for the TPA's, the external shield, several propellant lines, and part of the wiring harness.

b. Modes of Failure

(01) Fails to Transmit Thrust Along Proper Axis

Definition: Loss of physical integrity of such magnitude as to destroy the capability to carry the normal thrust and inertial loads or as to cause deformation resulting in thrust vector misalignment beyond the engine gimbal capacity.

DISTRIBUTION OF THIS DOCUMENT UNLIMITED

(02) Failure to Support Interface Components

Definition: Loss of physical integrity of support brackets or bearing surfaces or detachment of the bracket from the LTS resulting in damage to the component being supported or to other nearby components. In the case of the gimbal actuator bracket, this mode includes inability to transmit the normal actuator loads or impairs or destroys the engine gimballing capability.

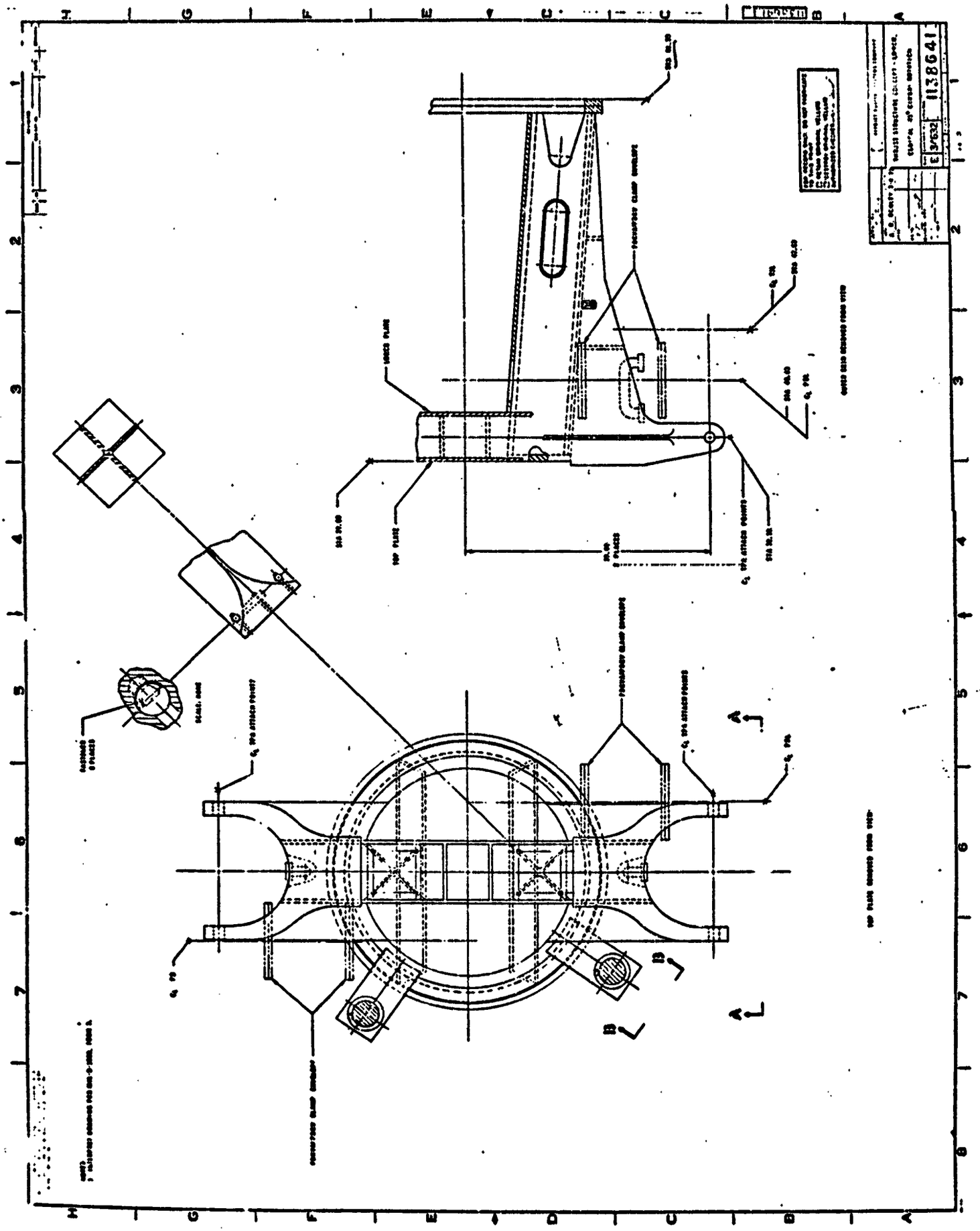

Lower Thrust Structure

Figure 4.7-1 (Sheet 1)

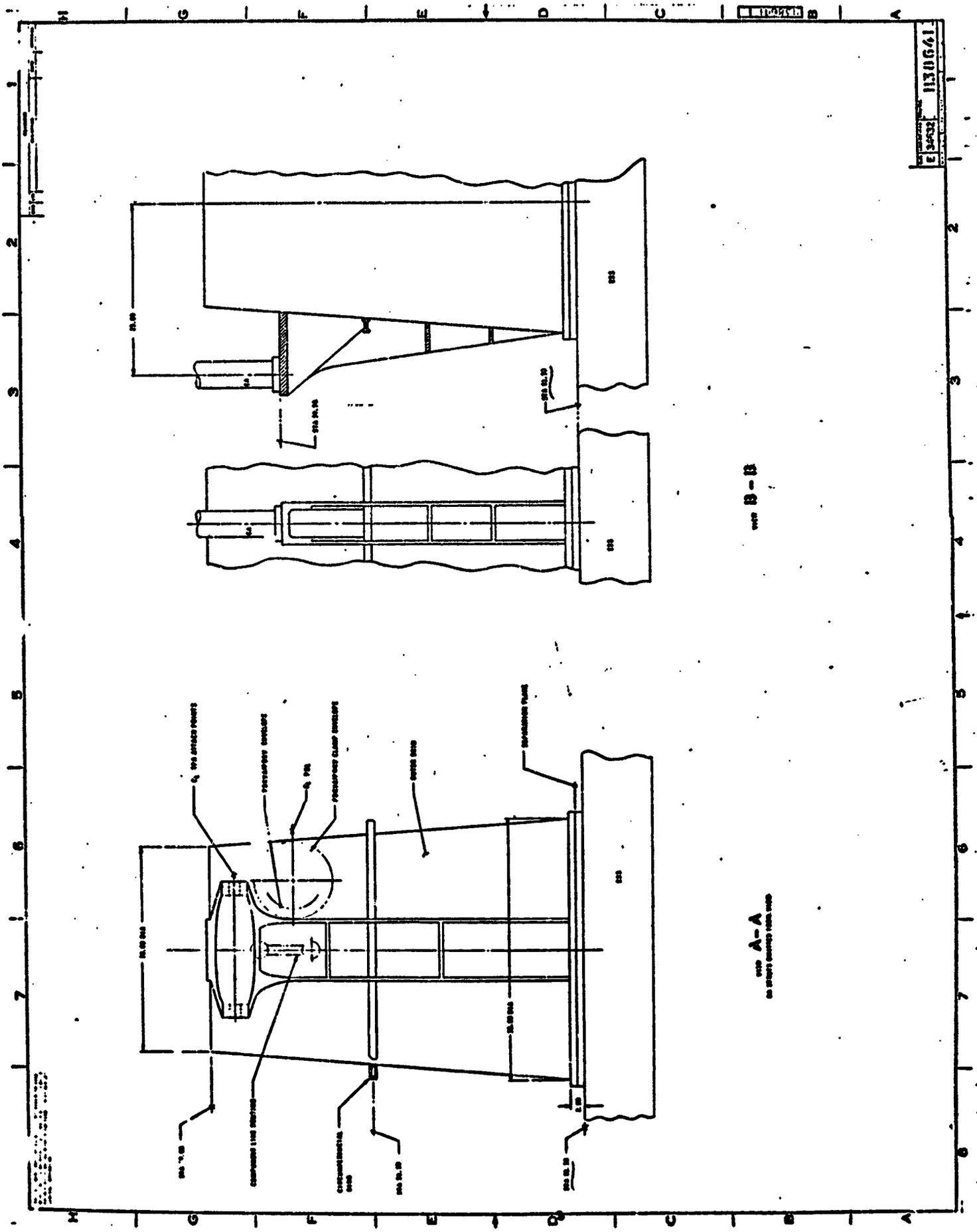

Figure 4.7-1 (Sheet 2)

SYSTEM FAILURE MODE EFFECTS AND CRITICALITY ANALYSIS • • • SUMMARY SHEET

SHEET 1 OF 1

COMPONENT/SUBSYSTEM: Lower Thrust Structure/Thrust Structure and External Shield Subsystem

PREPARED BY: G. M. Witcraft

DATE: 7-14-71

REFERENCE: Spec. EC-90269

REVISION: A

DATE: 4-30-71

FAILURE MODE (CODE #)	FAILURE EFFECT CATEGORY												
	ENGINE OPERATIONAL PHASES												
	A	B	C	D	E	F	G	H	I	J	K	L	M
		COAST		STARTUP				SHUTDOWN				COOLDOWN	
	LAUNCH	POST OPERATIONS	PRE-START OPERATIONS	TEMP. CONDITION	BOOT STRAP	THRUST BUILDUP	RATED OPERATION	THROTTLING	THROTTLE HOLD	TEMP. RETREAT	PUMP TAILOFF	EARLY	PULSE
Failure to Transmit Thrust Along Proper Axis (01)	IV												
Failure to Support Interface Components (02)	IV												

SYSTEM FAILURE MODE EFFECTS AND CRITICALITY ANALYSIS • • • WORK SHEET

COMPONENT/SUBSYSTEM: Lower Thrust Structure/Thrust Structure and External Shield Subsystem

PREPARED BY: G. M. Witcraft

SHEET 1 OF 1

DATE: 7-13-71

REFERENCE: Spec. EC-90269

REVISION: A

DATE: 4-30-71

FAILURE MODE (CODE #)	PHASE	EFFECTS ON SYSTEM OPERATION	FAILURE EFFECT CATEGORY
Failure to Transmit Thrust Along Proper Axis (01)	A-C	Inability to sustain launch vehicle, space tug or RCS thrust and inertial loads could lead to vehicle breakup or otherwise render the engine unsuitable for subsequent operation.	IV
	D-M	The specific effects may vary from misalignment of thrust beyond the engine vector capability with consequent loss of vehicle control to immediate catastrophic rupture of the LTS, propellant lines, wiring harness, or other vital engine components and melting and disassembly of the nuclear reactor. In either event, the useful operating capability is destroyed, and such an occurrence during near earth operation (except the first outbound burn) would present a radiation hazard to the earth's population. End Effect: Loss of engine operating capability.	IV
Failure to Support Interface Components (02)	A-M	The specific effects will depend on the particular component involved in the failure mechanism. The failure mode can range from degradation or loss of engine gimballing capability to propellant line rupture with immediate loss of flow through the system and melting and disassembly of the reactor. End Effect: Loss of engine operating capability.	IV

4.7.2.2 Upper Thrust Structure

a. Description and Function

The UTS (Figure 4.7-2) is a 17" long aluminum beam structure with attachment flanges on each face and a generally conical longitudinal section. The diameters are 30" and 58" at the aft and forward faces, respectively. Mounts are provided for the forward end of the gimbal actuators, the cooldown line, the tank pressurization line, and the wiring harness.

The UTS transmits engine thrust and inertial loads from the gimbal assembly to the main propellant tank and transmits the engine gimballing forces from the gimbal actuators to the vehicle structure. It also provides structural support for the individual components listed above.

b. Modes of Failure

(01) Failure to Transmit Thrust Along Proper Axis

Definition: Same as for LTS, above

(02) Failure to Support Interface Components

Definition: Same as for LTS, above

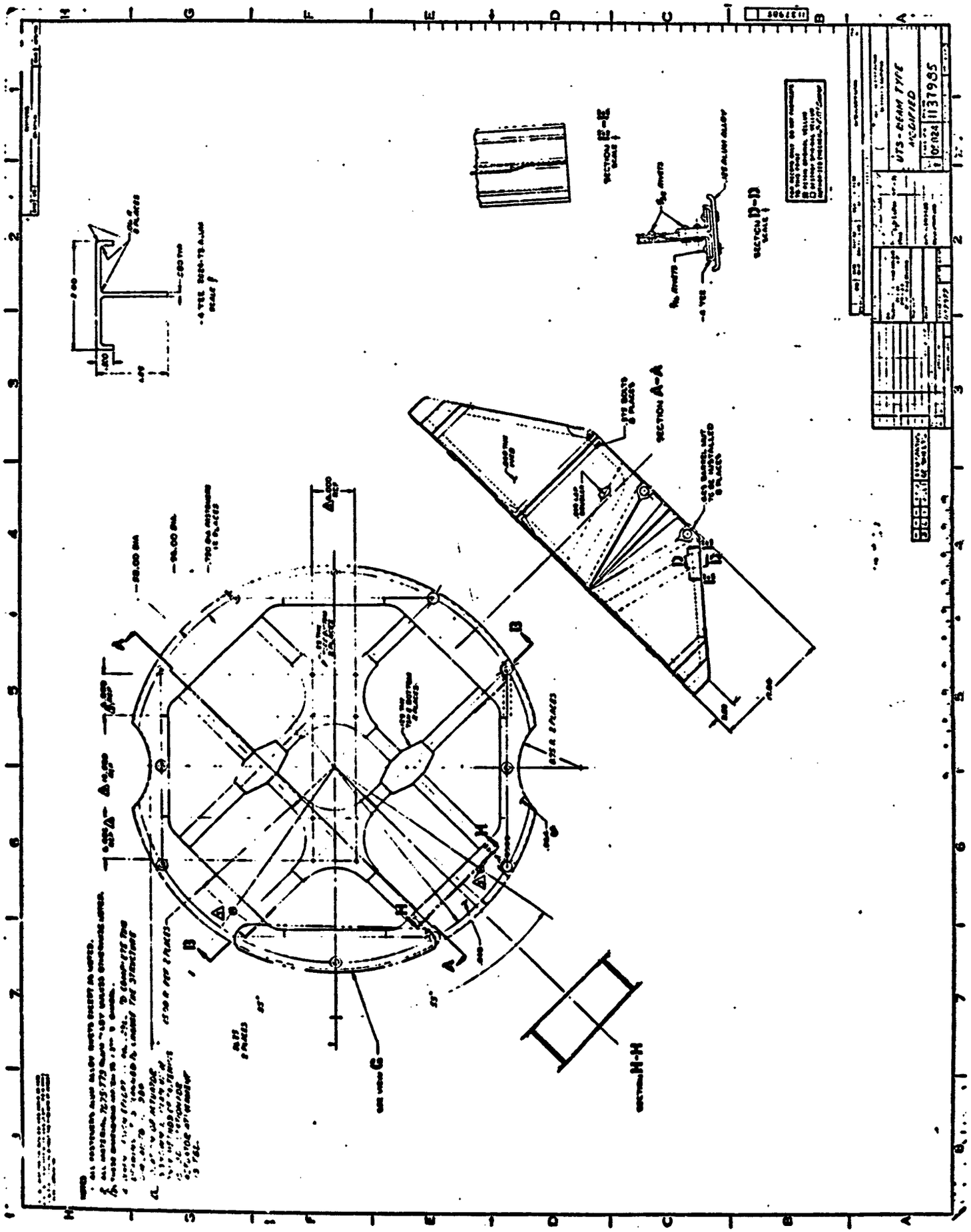

Upper Thrust Structure

Figure 4.7-2 (Sheet 1)

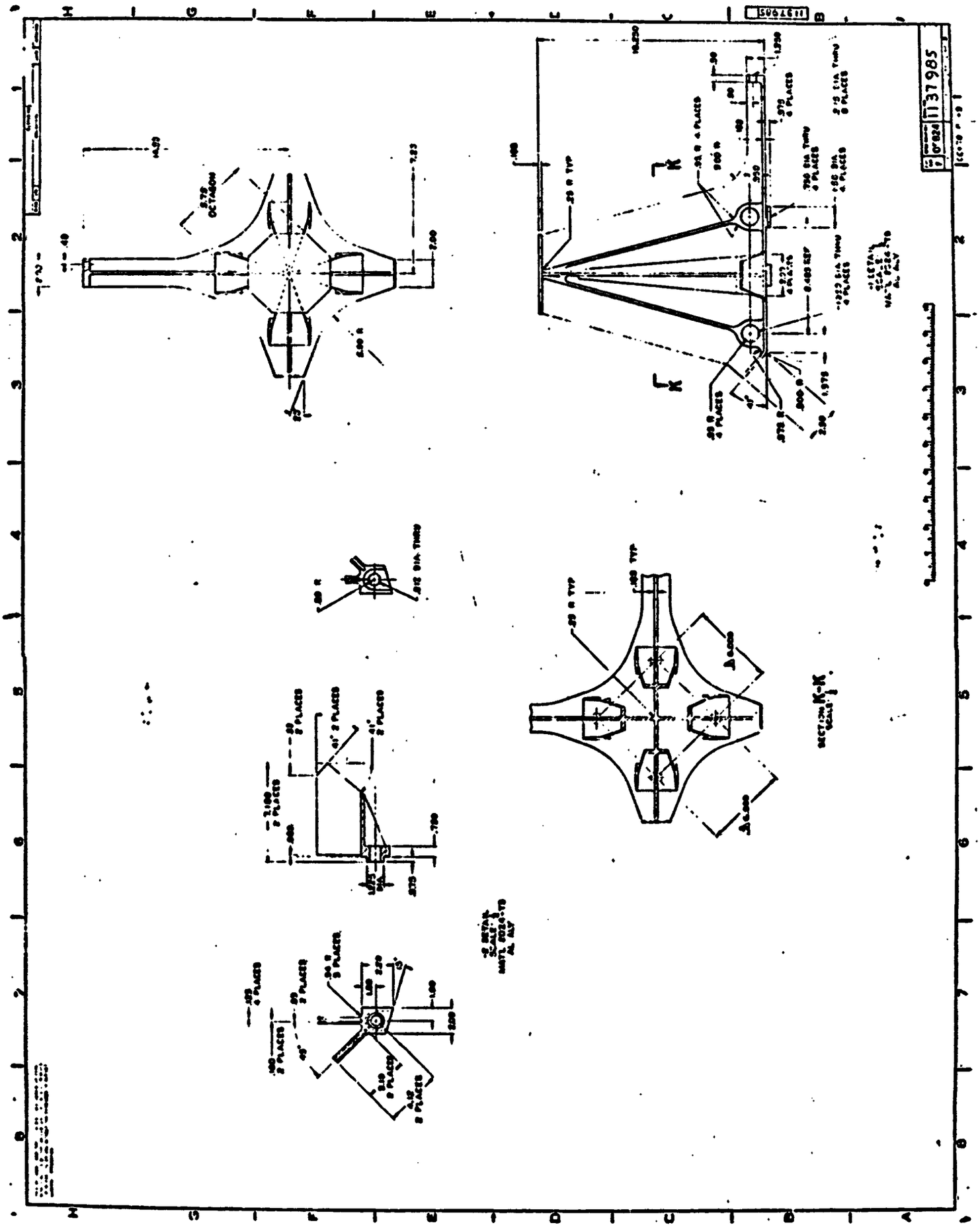

Figure 4.7-2 (Sheet 2)

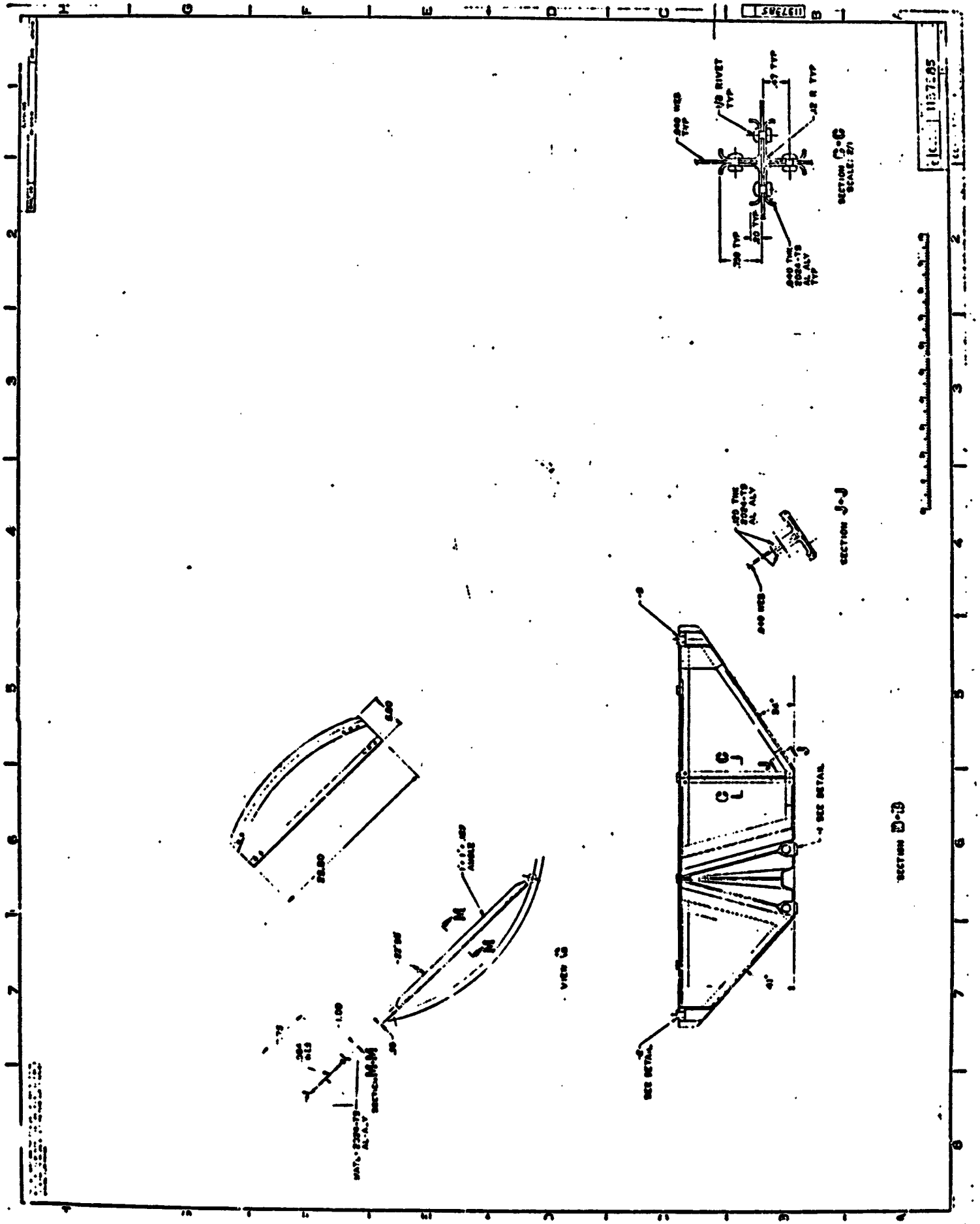

Figure 4.7-2 (Sheet 3)

SYSTEM FAILURE MODE EFFECTS AND CRITICALITY ANALYSIS • • • SUMMARY SHEET

SHEET 1 OF 1

COMPONENT/SUBSYSTEM: Upper Thrust Structure/Thrust Structure and External Shield Subsystem

PREPARED BY: G. M. Witcraft

DATE: 7-14-71

REFERENCE: Spec. EC-90267

REVISION: A

DATE: 4-30-71

FAILURE MODE (CODE #)	FAILURE EFFECT CATEGORY												
	ENGINE OPERATIONAL PHASES												
	A	B	C	D	E	F	G	H	I	J	K	L	M
		COAST		STARTUP				SHUTDOWN				COOLDOWN	
	LAUNCH	POST OPERATIONS	PRE-START OPERATIONS	TEMP. CONDITION	BOOT STRAP	THRUST BUILDUP	RATED OPERATION	THROTTLING	THROTTLE HOLD	TEMP. RETREAT	PUMP TAILOFF	EARLY	PULSE
Failure to Transmit Thrust Along Proper Axis (01)	IV												
Failure to Support Interface Components (02)	IV												

SYSTEM FAILURE MODE EFFECTS AND CRITICALITY ANALYSIS • • • WORK SHEET

COMPONENT/SUBSYSTEM: Upper Thrust Structure/Thrust Structure and External Shield Subsystem

PREPARED BY: G.M. Witcraft

SHEET 1 OF 1

DATE: 7-14-71

REFERENCE: Spec. EC-90267

REVISION: A

DATE: 4-30-71

FAILURE MODE (CODE #)	PHASE	EFFECTS ON SYSTEM OPERATION	FAILURE EFFECT CATEGORY
Failure to Transmit Thrust Along Proper Axis (01)	A-C	Same as LTS, above.	IV
	D-M	Same as LTS, above.	IV
Failure to Support Interface Components (02)	A-M	Same as LTS, above.	IV

4.7.2.3 External Shield

a. Description and Function

The External Shield (Figure 4.7-3) is a composite structure 99 inches in diameter and 10 inches thick and is mounted on the lower thrust structure (LTS) at Station 69.33 between the reactor and the rest of the stage. It consists basically of separate layers of borated graphite, lead, and lithium hydride with a void space near the forward face to permit future design modifications that may be found necessary. The shielding materials are enclosed and supported by a stainless steel structure consisting of two horizontal plates joined by concentric cylindrical and conical sections. The horizontal plates serve both as shielding material and as structural members. The cylindrical and conical sections serve only as structural members.

The assembly is divided into two areas by the lower thrust structure; a circular area inside the thrust structure, and a ring shaped area surrounding the thrust structure. The internal section is supported on cross members of the thrust structure. It is divided into three segments to permit removal through an opening in the side wall of the thrust structure. The section outside of the thrust structure is divided into four quadrants, each of which is individually attached to the thrust structure and to its adjacent quadrants.

For manned missions, the External Shield attenuates radiation so as to limit radiation exposure to 3 Rem for flight crew members and 10 Rem for passengers per mission. For unmanned missions, the External Shield Assembly is required to be removed to permit greater payload capability for the vehicle.

b. Modes of Failure

(01) Structural Failure

Definition: Any loss of physical integrity of the shield structure or mounting brackets that allows a section of the shield to move to a position outside the normal assembly tolerances or to disengage from the rest of the assembly.

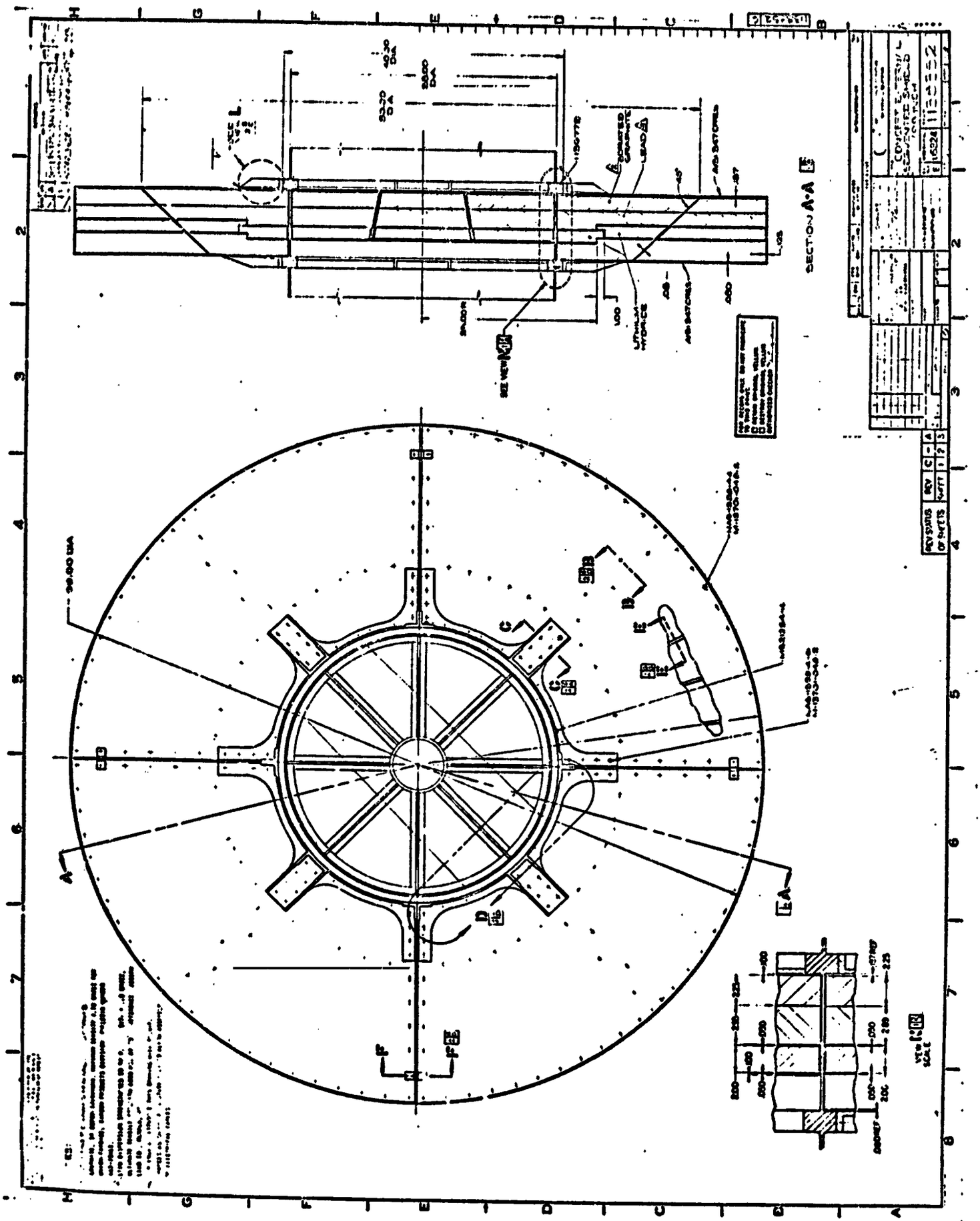

External Shield

Figure 4.7-3 (Sheet 1)

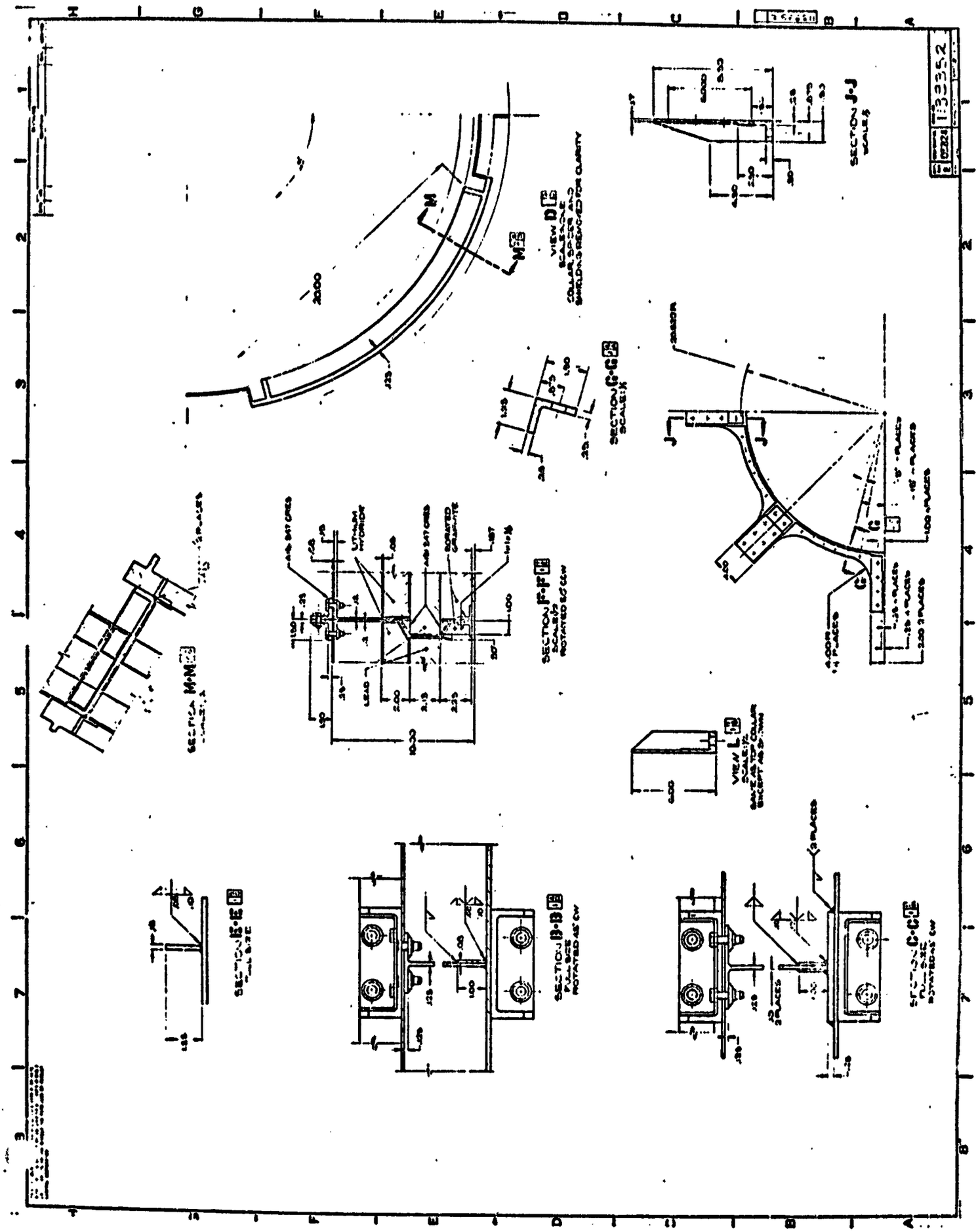

Figure 4.7-3 (Sheet 2)

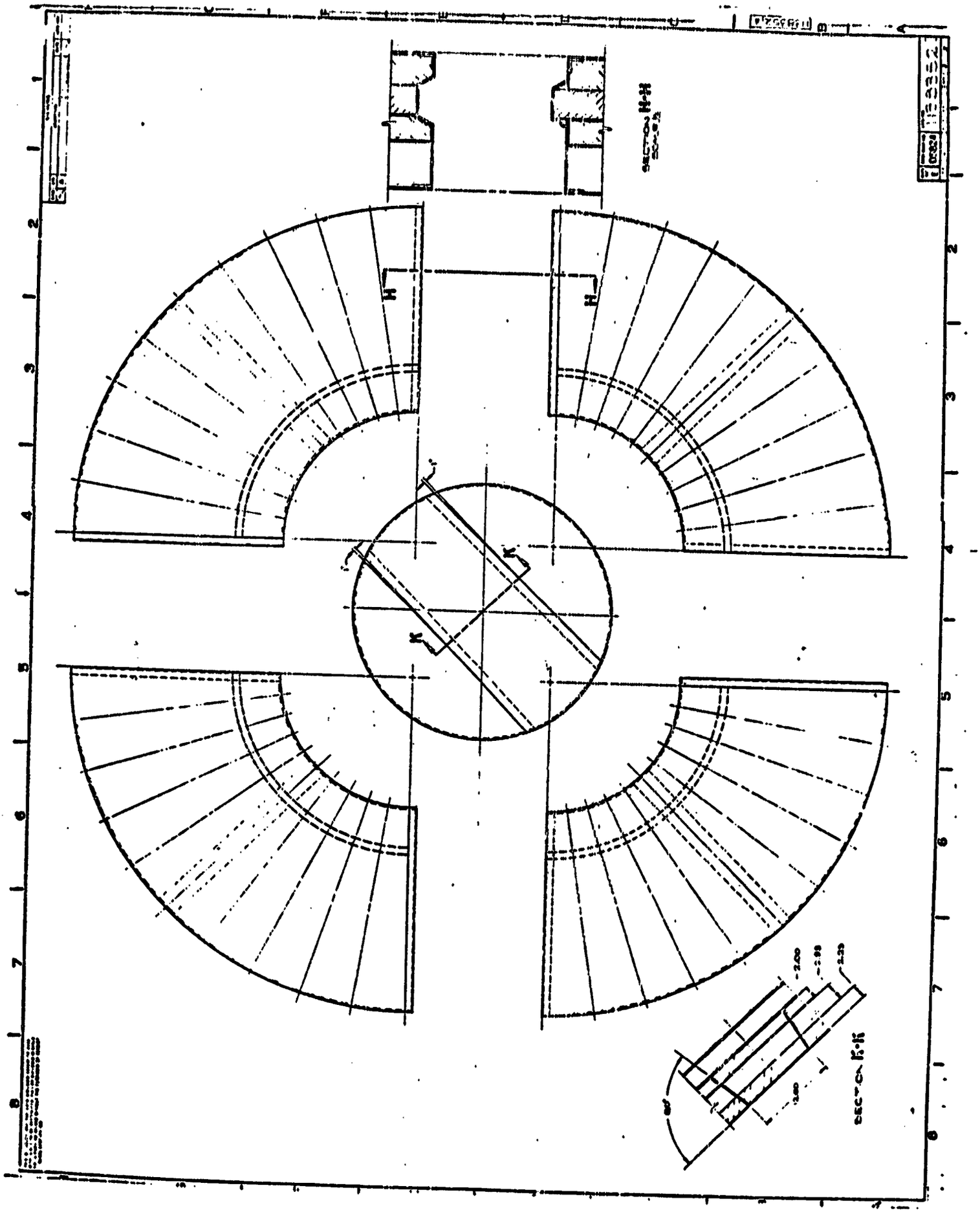

Figure 4.7-3 (Sheet 3)

SYSTEM FAILURE MODE EFFECTS AND CRITICALITY ANALYSIS • • • SUMMARY SHEET

SHEET 1 OF 1

COMPONENT/SUBSYSTEM: External Shield/Thrust Structure & External Shield Subsystem

PREPARED BY: G. M. Witcraft

DATE: 7-13-71

REFERENCE: Spec. EC-90243

REVISION: A

DATE: 4-30-71

FAILURE MODE (CODE #)	FAILURE EFFECT CATEGORY												
	ENGINE OPERATIONAL PHASES												
	A	B	C	D	E	F	G	H	I	J	K	L	M
		COAST		STARTUP				SHUTDOWN				COOLDOWN	
	LAUNCH	POST OPERATIONS	PRE-START OPERATIONS	TEMP. CONDITION	BOOT STRAP	THRUST BUILDUP	RATED OPERATION	THROTTLING	THROTTLE HOLD	TEMP. RETREAT	PUMP TAILOFF	EARLY	PULSE
Structural Failure (01)	IV	→	→	→	→	→	→	→	→	→	→	→	→

SYSTEM FAILURE MODE EFFECTS AND CRITICALITY ANALYSIS • • • WORK SHEET

COMPONENT/SUBSYSTEM: External Shield/Thrust Structure and External Shield Subsystem

PREPARED BY: G. M. Witcraft

SHEET 1 OF 1

DATE: 7-13-71

REFERENCE: Spec. EC-90243

REVISION: A

DATE: 4-30-71

FAILURE MODE (CODE #)	PHASE	EFFECTS ON SYSTEM OPERATION	FAILURE EFFECT CATEGORY
Structural Failure (01)	A-M	Structural failure of the external shield is expected to cause damage to instrumentation or power lines or other components, making the engine incapable of further operation. Depending on the operating phase and the particular damage, it may preclude cooldown of the reactor, with disassembly of the core and loss of the fuel elements. Such an occurrence during near-earth operation could present an earth radiation hazard. End Effect: Total loss of engine operation.	IV

SECTION 4.8

GIMBAL ASSEMBLY SUBSYSTEM

4.8 GIMBAL ASSEMBLY SUBSYSTEM

4.8.1 Description

4.8.1.1 Function and Requirements

The primary function of the gimbal assembly is to provide a means for varying the direction of the engine thrust vector relative to the vehicle center of gravity to permit directional control of the vehicle. The subsystem is required to provide gimballing of the engine in any direction (circular pattern) around the null position as follows:

(a)	Angle from null	3.0 deg. minimum
(b)	Angular velocity	0.25 °/sec minimum
(c)	Angular acceleration	0.5 °/sec^2 minimum

It must also transmit the engine thrust and inertial loads between the lower and upper thrust structures.

4.8.1.2 Configuration

The gimbal assembly subsystem consists of the gimbal structure that joins the lower and upper thrust structures and contains the pivots and bearings to permit the required motion and the gimbal actuators that provide the forces necessary to perform the gimballing. Two actuators are located 90° apart to provide motion in the pitch and yaw axes. Combined operation of the two actuators is used to furnish motion in the off-axis directions.

4.8.2 Failure Analysis

4.8.2.1 Gimbal Pivot

a. Description and Function

The gimbal pivot (Figure 4.8-1) consists of two pairs of bearings located on orthogonal axes, the connecting cruciform

yoke, and a set of flexure pivots in each of the bearings. The four trunnion housings are attached to the thrust structure, one pair to the LTS and the other to the UTS. The flexure pivot assemblies (Figure 4.8-2) transmit the bearing loads between each trunnion and its housing through a set of flexures in tension. Bending of these flexures permits gimballing of the engine with no sliding contact in the bearing under normal loads. Under extreme loads, the flexures will elastically deform far enough to permit the trunnion to contact the flexure assembly housing and transmit the excess load by direct bearing. In addition, if a flexure should break, the assembly will function as a loose conventional bearing, providing a redundancy for the pivot.

The gimbal structure permits motion of the portion of the engine aft of the pivot point to alter the direction of the thrust vector within 3 degrees in any direction about the null position. It must also transmit the engine thrust, inertial, and gimballing loads between the LTS and UTS.

b. Modes of Failure

(01) Flexure Blade Failure

Definition: Rupture or permanent deformation of a flexure blade resulting in its inability to carry design loads and permitting the journal to bear directly on the flexure housing under normal operating loads.

(02) Pivot Bearing Failure

Definition: Alteration of a surface of a flexure housing through corrosion, contamination, etc. that prevents or restricts relative motion between the trunnion and flexure housing or between the flexure housing and the trunnion housing sufficient to preclude the required engine gimballing.

(03) Structural Failure

Definition: Loss of physical integrity or deformation of the yoke or a trunnion housing of sufficient magnitude to destroy the capability of carrying the required loads or to preclude the required engine gimballing.

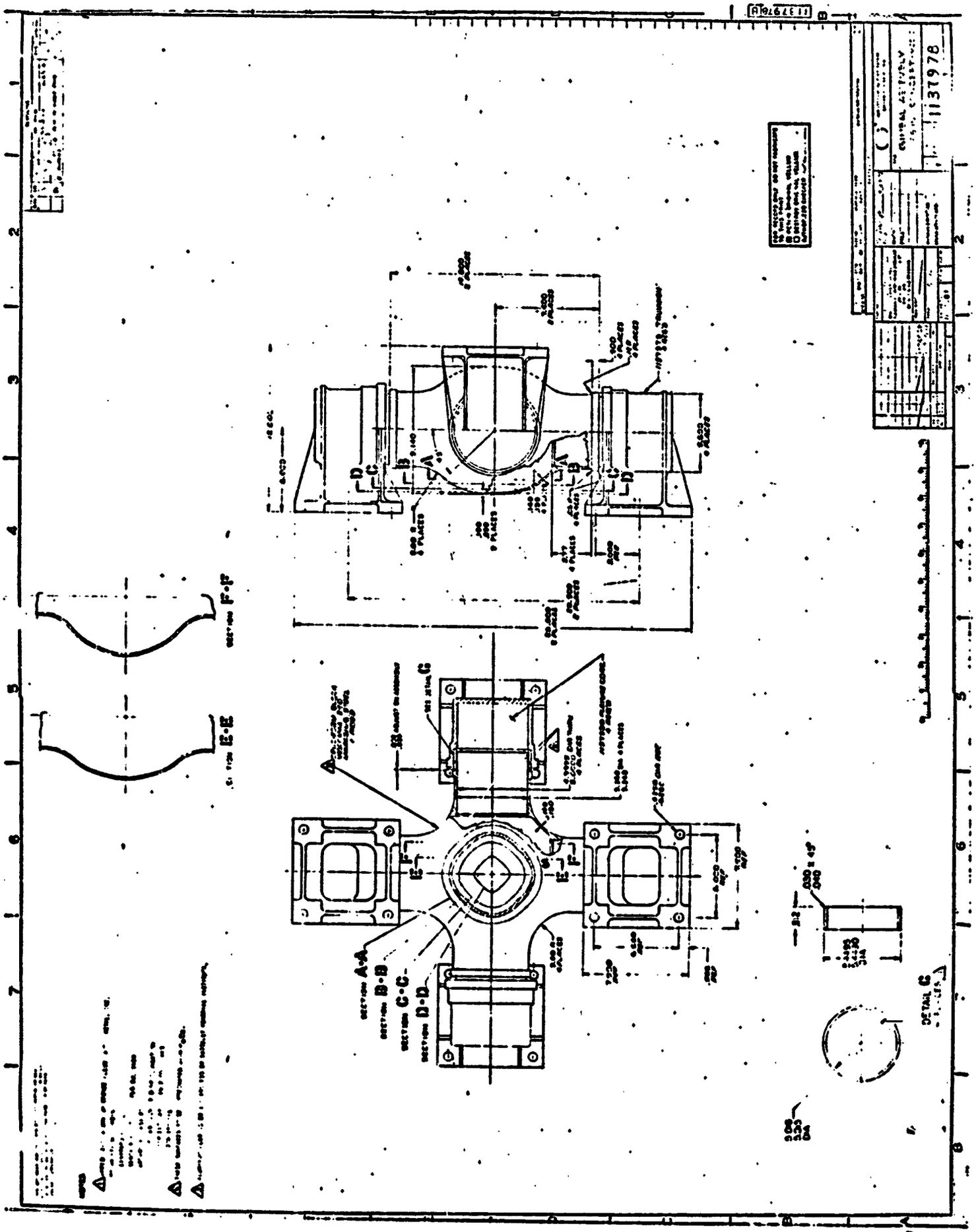

Gimbal Pivot

Figure 4.8-1

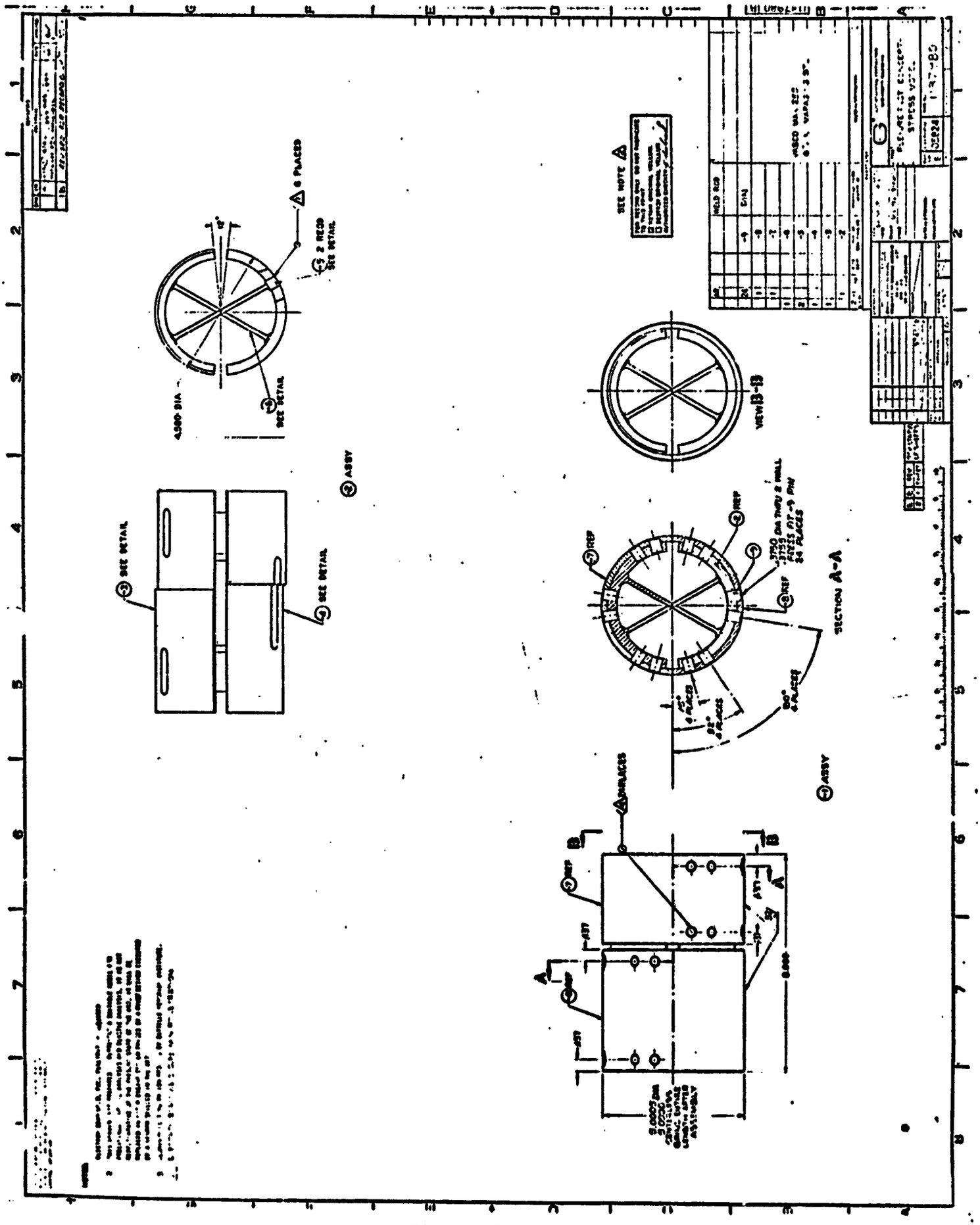

Flexure Pivot

Figure 4.8-2 (Sheet 1)

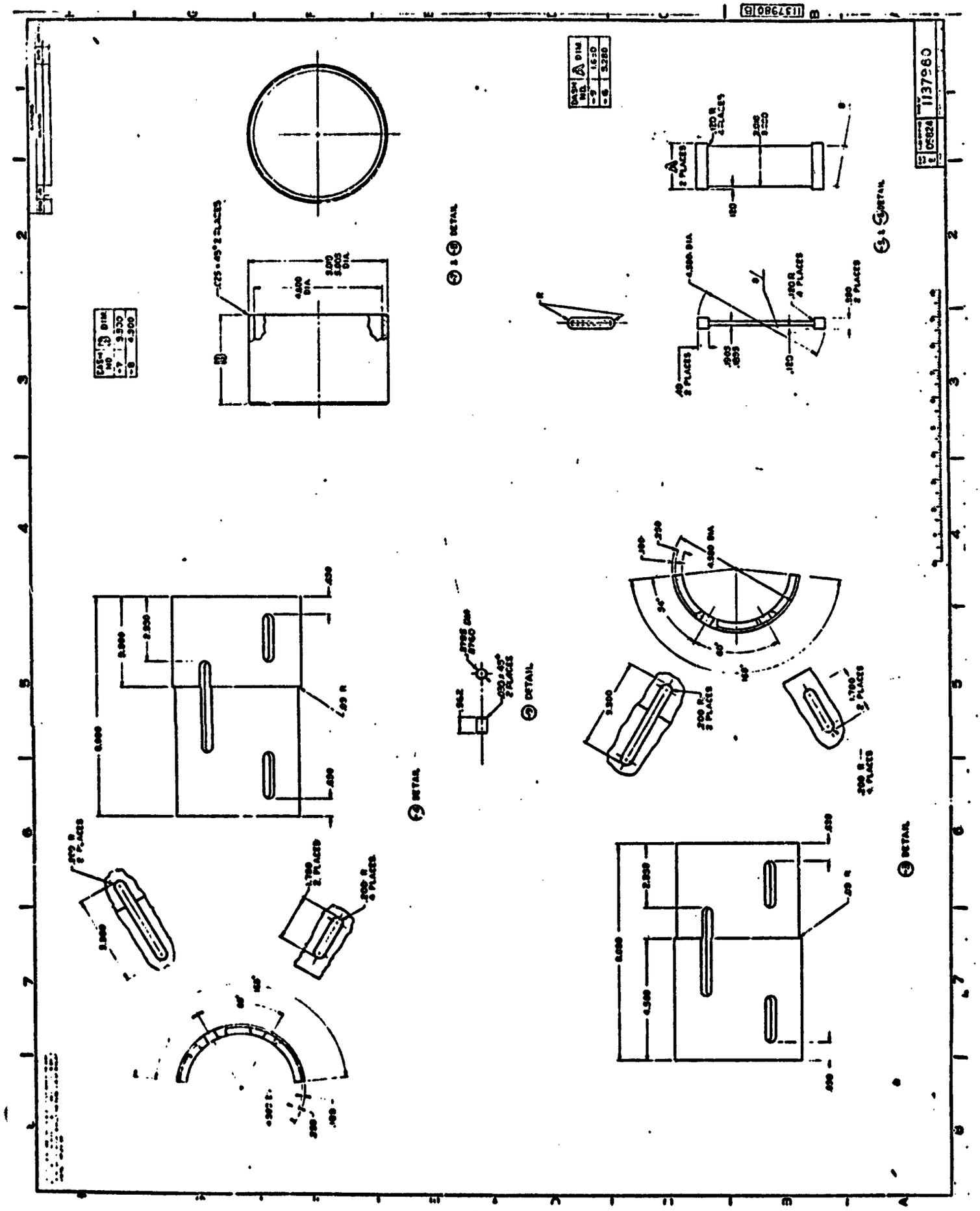

Figure 4.8-2 (Sheet 2)

SYSTEM FAILURE MODE EFFECTS AND CRITICALITY ANALYSIS • • • SUMMARY SHEET

SHEET 1 OF 1

COMPONENT/SUBSYSTEM: Gimbal Pivot/Gimbal Assembly Subsystem

PREPARED BY: G.M. Witcraft

DATE: 7-16-71

REFERENCE: Spec. EC-90299

REVISION: A

DATE: 4-30-71

FAILURE MODE (CODE #)	FAILURE EFFECT CATEGORY — ENGINE OPERATIONAL PHASES												
	A	B	C	D	E	F	G	H	I	J	K	L	M
		COAST		STARTUP				SHUTDOWN				COOLDOWN	
	LAUNCH	POST OPERATIONS	PRE-START OPERATIONS	TEMP. CONDITION	BOOT STRAP	THRUST BUILDUP	RATED OPERATION	THROTTLING	THROTTLE HOLD	TEMP. RETREAT	PUMP TAILOFF	EARLY	PULSE
Flexure Blade Failure (01)	I	→	IIB										→
Pivot Bearing Failure (02)	NA	→	IIA										→
Structural Failure (03)	IV												→

SYSTEM FAILURE MODE EFFECTS AND CRITICALITY ANALYSIS • • • WORK SHEET

COMPONENT/SUBSYSTEM: Gimbal Pivot/Gimbal Assembly Subsystem
REFERENCE: Spec. EC-90299

PREPARED BY: G. M. Witcraft
REVISION: A

SHEET 1 OF 1
DATE: 7-15-71
DATE: 4-30-71

FAILURE MODE (CODE #)	PHASE	EFFECTS ON SYSTEM OPERATION	FAILURE EFFECT CATEGORY
Flexure Blade Failure (01)	A-B	This failure mode permits slight movement of the journal of the affected bearing until it contacts the housing directly for transmission of the gravity and inertial loads. It does not impair the load carrying capacity of the gimbal assembly, and there is no significant operating effect during the engine non-operating phases.	I
	C-M	Failure of a flexure blade will permit the journal to move slightly to bear directly on the housing for transmission of loads across the bearing. The assembly will function as a conventional bearing for engine gimballing. However, the precision of the thrust vector positioning will be reduced because of the added motion permitted by the bearing clearance. End Effect: Loss of primary redundancy of gimbal bearing pivot path.	IIB
Pivot Bearing Failure (02)	A-B	Not applicable. The bearing is not required to pivot during these phases.	NA
	C-M	This failure mode represents a loss of redundancy in the capability of pivoting a bearing. The flexure must perform the pivot function without failure to maintain engine gimballing capability. End Effect: Loss of secondary redundancy of gimbal bearing pivot path.	IIA
Structural Failure (03)	A-M	Structural failure of the yoke or a trunnion housing destroys the load carrying capacity of the subsystem with consequent catastrophic damage to the propellant lines and wiring harness in the vicinity of the gimbal and possible complete separation of the engine from the rest of the vehicle. End Effect: Total loss of engine operation.	IV

4.8.2.2 ... Gimbal Actuator

a. Description and Function

The Gimbal Actuator is a pair of electro-mechanical actuators (Figure 4.8-3) together with their controller - amplifiers. The two actuators are located 90° apart to provide thrust vector control in the pitch and yaw planes. One end of each actuator is attached to the LTS and the other end to the UTS. The actuator rod is driven by a high speed dc motor through a clutch, gear train, and ball screw. Extend and retract directions are accomplished by reversing the motor. If the primary drive motor fails, it will be decoupled and a back-up motor coupled to the gear train by energizing a second clutch. Snubbing devices are used to cushion the rod travel at the extreme positions. Rod end bearings on each end of the actuator assembly are protected with steel bellows. Two completely redundant electrical power and control channels, including rate generators and linear position transducers are provided.

Each actuator has a nominal stroke of ± 1.48 inches from the null position (maximum stroke 3.40 in), and the design linear rate is 0.33 in/sec. The nominal actuator stall load is 27000 lb, and the design maximum static load is 30,000 lb.

b. Modes of Failure

(01) Fails in Place

Definition: Inability of an actuator to be moved (either extended or retracted) from its present position by the drive motor(s) or by the loads applied to the push rod. The failure position can be any point within the actuator span.

(02) Improper Position or Rate Control

Definition: Failure of an actuator to move to or maintain the position required to provide vehicle directional

control or inability to achieve such position within the time limits required to maintain vehicle control.

(03) Structural Failure

Definition: Loss of structural integrity or permanent deformation of such magnitude as to destroy the capability to transmit normal actuator loads or to achieve the gimbal positions required to maintain vehicle directional control.

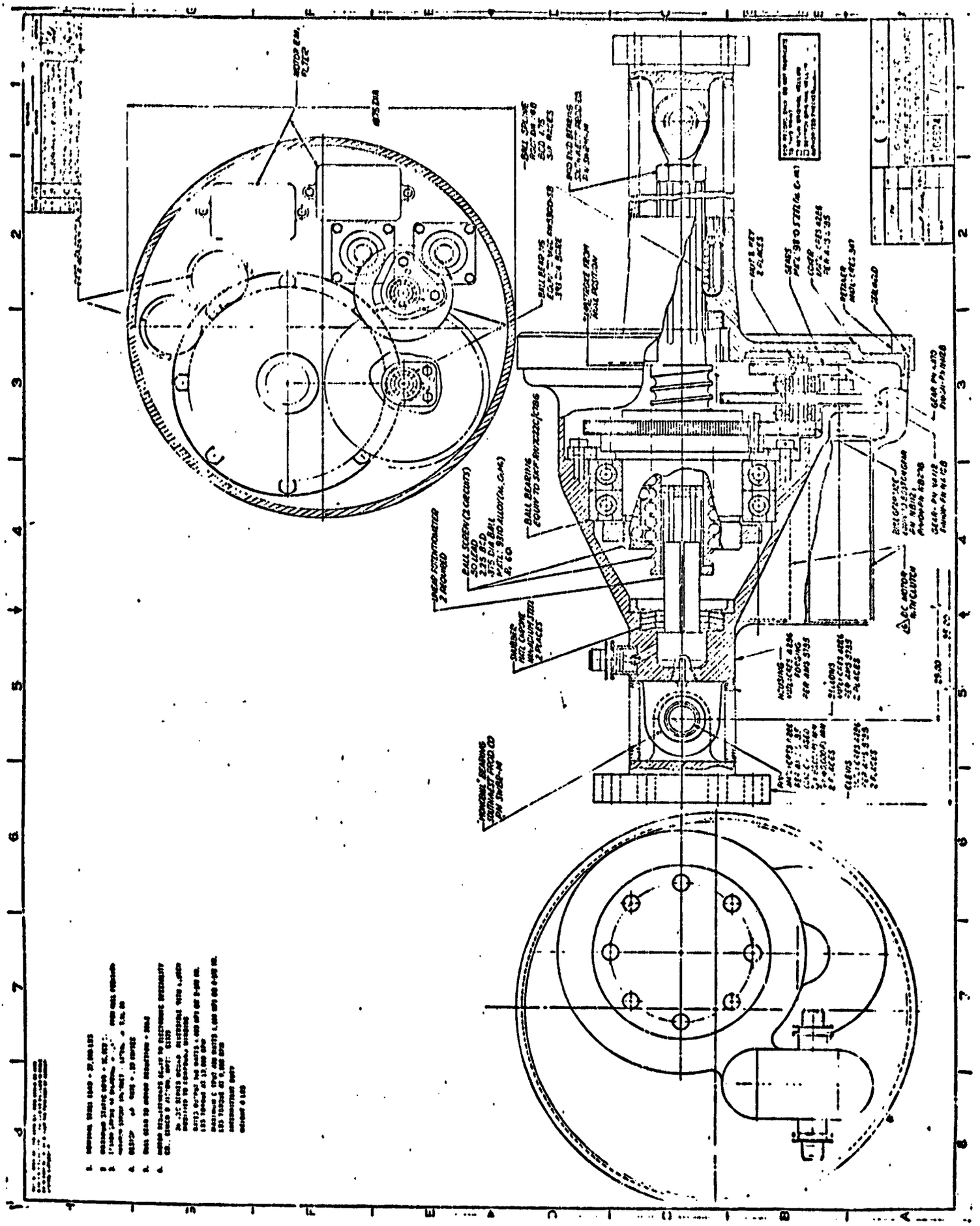

Gimbal Actuator

Figure 4.8-3

SECTION 5

DISCUSSION OF RESULTS OF THE ANALYSIS

5.0 DISCUSSION OF RESULTS OF THE ANALYSIS

5.1 GENERAL OBSERVATIONS

The results of the analysis presented in Sections 3 and 4 indicate that potential trend characteristics are present in all engine components and that methods for monitoring them during flight operation vary significantly in complexity and reliability. For example, trends such as those reflected in degradation of valve response characteristics can be monitored with little or no addition instrumentation required beyond that needed to control the engine. On the other hand, the development of monitoring techniques for other trends such as hot gas corrosion of the nozzle extension might involve instrumentation development programs as extensive as some of the NERVA components themselves.

It is also apparent that the probability of the trend mechanisms identified occurring varies markedly and since this probability will not be confirmed with any certainty until further analysis and/or development and qualification testing is completed. It is difficult to establish which trends should be monitored in flight on the basis of present probability estimates alone. It should be noted that a primary purpose of the development program is to eliminate or control wear and deteriorating trend mechanisms to the point where the expected frequency of occurrence is so negligible the potential progression of these mechanisms need not be monitored.

5.2 USE OF TREND MONITORING TO PREDICT CATEGORY IV FAILURES

On the other hand, it was observed that the end effect of the various trend progressions on the engine varies drastically, and while it might be difficult to justify monitoring a trend on a valve that is not a single failure point, it might be highly desirable to be able to monitor the progression of a trend on the nozzle, pressure vessel, or reactor that could result in a Category IV failure, regardless of how unlikely analysis and testing indicated such a progression would be. Indeed, it would appear that trend instrumentation that would prevent starting off on a mission that could terminate in a Category IV failure should be discussed,

justified, and traded off just as if it were a redundant component being considered, since its net effect on mission safety could be substantially the same as a piece of redundant hardware.

5.3 NEED FOR INTREGATED DIAGNOSTICS ANALYSIS

Both the analysis and the study of related diagnostic functions in other vehicles point out quite clearly that instrumentation for the trend monitoring function should not be considered solely by itself, but should be identified, analyzed, and justified as part of an integrated program also concerned with the related functions of engine operation, malfunction detection, checkout, verification and fault isolation. While it is probable that certain measurements might only be required for trend monitoring because of the need for early or precise detection of the initiation or progression of a critical trend mechanism, it is also likely that many trend monitoring requirements can be satisfied with the same instrumentation adequate for other functions. However, unless all diagnostic functional requirements are defined to the same degree and studied jointly, it will be difficult to determine the optimum system and assure that prior information is available for definitive C and I subsystem design.

SYSTEM FAILURE MODE EFFECTS AND CRITICALITY ANALYSIS • • • SUMMARY SHEET

SHEET 1 OF 1

COMPONENT/SUBSYSTEM: Gimbal Actuator/Gimbal Assembly Subsystem

PREPARED BY: G. M. Witcraft

DATE: 7-19-71

REFERENCE: Spec. EC-90251

REVISION: A

DATE: 4-30-71

FAILURE MODE (CODE #)	FAILURE EFFECT CATEGORY — ENGINE OPERATIONAL PHASES												
	A	B	C	D	E	F	G	H	I	J	K	L	M
		COAST		STARTUP				SHUTDOWN				COOLDOWN	
	LAUNCH	POST OPERATIONS	PRE-START OPERATIONS	TEMP. CONDITION	BOOT STRAP	THRUST BUILDUP	RATED OPERATION	THROTTLING	THROTTLE HOLD	TEMP. RETREAT	PUMP TAILOFF	EARLY	PULSE
Fails in Place (01)	NA	→	IV									→	→
Improper Position or Rate Control (02)	NA	→	IV									→	→
Structural Failure (03)	IIB	→	IV									→	→

SYSTEM FAILURE MODE EFFECTS AND CRITICALITY ANALYSIS • • • WORK SHEET

SHEET 1 OF 2

COMPONENT/SUBSYSTEM: Gimbal Actuator/Gimbal Assembly Subsystem PREPARED BY: G. M. Witcraft DATE: 7-19-71

REFERENCE: Spec. EC-90251 REVISION: A DATE: 4-30-71

FAILURE MODE (CODE #)	PHASE	EFFECTS ON SYSTEM OPERATION	FAILURE EFFECT CATEGORY
Fails in Place (01)	A-B	Not applicable. The actuators are not required to operate during these phases.	NA
	C-M	Inability of the actuator to respond to required changes in position results in loss of vehicle directional control for all subsequent operation. If the failure position is near the null point, it may be possible to perform the emergency mode operation using lateral thrust from the auxilliary RCS to perform the directional control function of the failed actuator. The unfailed actuator will still be able to function in its control plane. If the failure position is outside the capability of the RCS, the vehicle will be stranded. Continued operation of the engine will cause the vehicle to tumble at accelerating rates until it breaks apart. End Effect: Loss of vehicle directional control.	IV
Improper Position or Rate Control (02)	A-B	Not applicable. The actuators are not required to operate during these phases.	NA
	C-M	This failure mode results in loss of vehicle control for all subsequent engine operation. If the malfunction involves only a response rate that is unacceptably slow for normal operation, it may be possible to operate in the emergency mode for return of the vehicle. In general, however, the motion will be erratic and uncontrolled, precluding safe return. End Effect: Loss of vehicle directional control.	IV

SYSTEM FAILURE MODE EFFECTS AND CRITICALITY ANALYSIS • • • WORK SHEET

SHEET 2 OF 2

COMPONENT/SUBSYSTEM: Gimbal Actuator/Gimbal Assembly Subsystem PREPARED BY: G. M. Witcraft DATE: 7-19-71

REFERENCE: Spec. EC-90251 REVISION: A DATE: 4-30-71

FAILURE MODE (CODE #)	PHASE	EFFECTS ON SYSTEM OPERATION	FAILURE EFFECT CATEGORY
Structural Failure (03)	A-B	Structural failure destroys the ability of an actuator to maintain the engine in a stable fixed position relative to the rest of the vehicle. Any lateral loads will cause the engine to flip-flop between the mechanical limits of the gimbal structure in the control plane of the failed actuator. If it occurs during launch, the ascent shell or shroud may be damaged with possible damage to some of the engine components near the shell. End Effect: Loss of ability to maintain stable engine position.	IIB
	C-M	During any thrusting period, the gimbal would be rapidly driven to its extreme mechanical position in the control plane of the malfunctioned actuator in the direction of the moment produced by any small thrust misalignment. Continued operation will cause the vehicle to tumble at accelerating rates until it breaks apart. End Effect: Loss of vehicle directional control.	IV

SECTION 4.9

REACTOR ASSEMBLY SUBSYSTEM

4.9 REACTOR ASSEMBLY SUBSYSTEM

4.9.1 Description

See NSS FMECA, Chapter 2

4.9.2 Failure Analysis

4.9.2.1 Fuel Elements

See NSS FMECA, Chapter 3

4.9.2.2 Cluster Hardware

See NSS FMECA, Chapter 4

4.9.2.3 Core Periphery

See NSS FMECA, Chapter 5

4.9.2.4 Core Support and Plena

See NSS FMECA, Chapter 6

4.9.2.5 Internal Shield

See NSS FMECA, Chapter 7

4.9.2.6 Reflector Assembly

See NSS FMECA, Chapter 8

4.9.2.7 Control Drum Drive Assembly

See NSS FMECA, Chapter 9

SECTION 4.10

STRUCTURAL SUPPORT COOLANT ASSEMBLY

4.10 STRUCTURAL SUPPORT COOLANT ASSEMBLY

4.10.1 Description

See NSS FMECA, Chapter 10

4.10.2 Failure Analysis

4.10.2.1 Structural Support Coolant Valve (SSCV)

See NSS FMECA, Chapter 10

4.10.2.2 Structural Support Blocking Valve (SSBV)

See NSS FMECA, Chapter 10

4.10.2.3 Structural Support Coolant Lines

See NSS FMECA, Chapter 10

VOLUME III

TREND DATA

ABSTRACT

This report summarizes the work performed by ANSC and WANL in the initial identification of trend characteristics of the NERVA engine. It contains a description of the identification procedure and the relationship of trend data monitoring to other diagnostic functions. An initial identification of possible trend monitoring methods is also included, together with recommendations for further analytical work relative to selecting trend characteristic measurement methods and techniques.

VOLUME III

TABLE OF CONTENTS

		PAGE
1.0	INTRODUCTION	1-1
2.0	TREND CHARACTERISTIC IDENTIFICATION PROCEDURE	2-1
2.1	IDENTIFICATION OF DIAGNOSTIC FUNCTIONS	2-1
2.2	RELATIONSHIP OF TREND DATA MONITORING TO OTHER DIAGNOSTIC FUNCTIONS	2-2
2.3	PROCEDURE FOLLOWED IN IDENTIFYING TREND CHARACTERISTICS AND MONITORING METHODS	2-2
3.0	DISCUSSION OF IDENTIFIED TREND CHARACTERISTICS AND POSSIBLE MONITORING METHODS	3-1
3.1	TURBOPUMP ASSEMBLY	3-1
3.1.1	Introduction	3-1
3.1.2	Bearing Wear	3-1
3.1.3	Labyrinth Seal Wear	3-1
3.1.4	Balance Piston Land Wear	3-2
3.1.5	Blade Creep and Fatigue	3-2
3.1.6	External Leakage	3-2
3.1.7	Rotor Dynamic Balance Degradation	3-3
3.1.8	Pump Cavitation	3-3
3.1.9	Coolant Supply Filter Clogging	3-3
3.1.10	Turbine Blade/Flow Passage Distortion	3-4
3.2	VALVES AND GIMBAL ACTUATORS	3-4
3.2.1	Introduction	3-4
3.2.2	Internal Leakage	3-5
3.2.3	Position Indicator Degradation	3-5
3.2.4	External Leakage	3-5
3.2.5	Gimbal Actuators	3-6

		PAGE
3.3	NOZZLE ASSEMBLY	3-6
	3.3.1 Introduction	3-6
	3.3.2 Contamination/Tube Blockage	3-7
	3.3.3 Hot Gas Erosion of Nozzle Tubes	3-7
	3.3.4 Tube Wall Thermal Buckling	3-8
	3.3.5 Vibration Fatigue and Pressure Cycle Deformation	3-8
	3.3.6 External Leakage Through Nozzle/ Extension Joint	3-8
	3.3.7 Hot Gas Corrosion of Nozzle Extension	3-8
3.4	PRESSURE VESSEL AND CLOSURE	3-9
	3.4.1 Introduction	3-9
	3.4.2 Fatigue Due to Vibration	3-9
	3.4.3 External Leakage Through Joints	3-10
	3.4.4 Creep/Distortion	3-10
3.5	EXTERNAL SHIELD	3-10
	3.5.1 Introduction	3-10
	3.5.2 Attenuation Degradation	3-11
3.6	LINES (INCLUDING JOINTS, BELLOWS, ETC.)	3-11
	3.6.1 Introduction	3-11
	3.6.2 Vibration, Temperature, Pressure Actuation Cycle Fatigue	3-11
	3.6.3 External Leakage	3-12
3.7	THRUST STRUCTURE AND GIMBAL PIVOTS	3-12
	3.7.1 Introduction	3-12
	3.7.2 Gimbal Flexure Pivots	3-12
3.8	NUCLEAR SUBSYSTEM	3-13
	3.8.1 Introduction	3-13
	3.8.2 Matrix of Interrelationships	3-13
3.9	INSTRUMENTATION AND CONTROL SUBSYSTEM	3-16

		PAGE
4.0	TABULAR SUMMATION OF CHARACTERISTICS AND MONITORING METHODS	4-1
5.0	DISCUSSION OF RESULTS OF THE ANALYSIS	5-1
5.1	GENERAL OBSERVATIONS	5-1
5.2	USE OF TREND MONITORING TO PREDICT CATEGORY IV FAILURES	5-1
5.3	NEED FOR INTREGRATED DIAGNOSTICS ANALYSIS	5-2
6.0	CONCLUSIONS AND RECOMMENDATIONS	6-1
6.1	CONCLUSIONS	6-1
6.2	RECOMMENDATIONS	6-1

APPENDIX

A.	A HISTORICAL EVOLUTION OF DIAGNOSTIC FUNCTIONS	A-1
A.1	INTRODUCTION	A-1
A.1.1	Checkout Verification and Fault Isolation	A-1
A.1.2	Trend Monitoring	A-4
A.1.3	Malfunction Detection and Warning	A-4
A.2	EVOLUTION OF TECHNIQUES FOR SELECTING DIAGNOSTIC INSTRUMENTATION	A-5
A.3	IMPLICATION FOR FUTURE DIAGNOSTIC SYSTEMS	A-6

LIST OF TABLES

TABLE NO.		PAGE
3-1	NSS TREND CHARACTERISTIC - PARAMETER MATRIX	3-14
4-1	SUMMARY OF TREND CHARACTERISTICS AND POSSIBLE MONITORING TECHNIQUES	4-2
A-1	GROWTH OF DIAGNOSTIC SYSTEMS	A-2
A-2	COMPARISON OF DIAGNOSTIC SYSTEMS	A-3

SECTION I

INTRODUCTION

1.0 INTRODUCTION

This volume contains a summary of the wear and deterioration trend characteristics that have been identified for the 400E NERVA engine. Although detailed failure mode analyses have not been completed for all components of this engine, sufficient historical information was available to provide a basis for establishing a comprehensive list of potential trend characteristics that can form the basis for further study and analysis.

While this list of identified trend characteristics is necessarily tentative, the significant progress made in analyzing trend mechanisms and their interrelationships with other non-wear and deterioration mechanisms has lead to a better understanding of degradation failure modes and to the steps that can be taken within the framework of a trend data monitoring program to eliminate them or control their effects.

In addition to identifying trend characteristics, considerable progress was made in determining what possible monitoring techniques exist that could be applied or adapted to measure the progression of wear and deterioration in a flight engine, should it be deemed necessary to do so. In general, it was found that many of the trends could be monitored by available instrumentation, but that there were some that could only be sensed by laboratory type devices whose applicability to the NERVA flight engine environment is indeterminate at this time.

In the process of associating possible monitoring techniques with the identified trend mechanisms, it has become apparent that the interrelationship of trend monitoring to the engine controls, malfunction detection and pre-use checkout functions should have a significant role in determining the optimum type and quantity of instrumentation to be employed in a flight engine design. One of the positive products of this work is a recommendation as to the kind of factors that must be considered in determining the methods by which trends and other phenomena will be monitored or sensed.

Another significant accomplishment was the development of the concept that flight trend monitoring might be most effectively used in preventing Category IV failures, (for which no contingency action is feasible) by predicting the need for corrective maintenance before a critical time is reached.

To present these findings in the most comprehensive manner, this volume is divided into three sections, (1) a brief discussion of how the identification procedure was developed, (2) a subsystem by subsystem discussion of the identified trend characteristics and possible monitoring methods and (3) a cross tabulation of characteristics, monitoring methods, and pertinent measurements identified in the Measurement Requirements List (Data Item C103) published in Feburary 1971.

SECTION 2

TREND CHARACTERISTIC IDENTIFICATION PROCEDURE

2.0 TREND CHARACTERISTIC IDENTIFICATION PROCEDURE

2.1 IDENTIFICATION OF DIAGNOSTIC FUNCTIONS

To accomplish the task of identifying trend characteristics, it was first necessary to distinguish the trend monitoring function from the various overlapping functions using diagnostic instrumentation on spacecraft and aircraft that have previously been identified by various names. A study was conducted which concluded that the functions using instrumentation should be categorized separately as follows:

(a) Control. This function uses instruments for the primary purpose of controlling the vehicles subsystems. Control can be open or closed loop and may or may not involve man in the loop. Operation of all vehicle subsystems is covered including power plant, structure, environmental controls, communication, etc.

(b) Checkout and Verification, are closely related functions that utilize instruments prior to a system's operation to assure its readiness to operate in a safe and reliable manner. Checkout usually refers to action occurring prior to first use or following major maintenance. Verification refers to action following successful prior checkout or operational usage to assure that a system is ready to operate or continue operating in a safe and reliable manner.

(c) Trend Monitoring is the function of monitoring the progress of wear and deterioration for the purpose of anticipating or predicting the need for corrective maintenance, or for altering the planned operation to reduce the risk of failure. Trend monitoring can be intermittent or continuous during operation or can be based on observing the pattern of degradation from checkout to checkout.

(d) Malfunction Detection is the function of determining that a failure mode has progressed to a predetermined point at which contingency action should be initiated.

(e) Fault Isolation is the function of tracking down to the component or lower level the source of some manifestation of unsatisfactory performance detected at the system or subsystem level. Typically, the unsatisfactory performance is manifested as a result of operation, check-out/verification, trend monitoring, or malfunction detection and it is desired to determine more precisely the cause or causes so that corrective maintenance or other appropriate action can be implemented.

2.2 RELATIONSHIP OF TREND DATA MONITORING TO OTHER DIAGNOSTIC FUNCTIONS

As indicated in the foregoing categorization of diagnostic functions, trend data monitoring is restricted to following the progress of parameters related to wear and deterioration. Reference should be made to Data Items S102 and S103 for information pertaining to engine control and malfunction detection instrumentation.

To aid in understanding the interrelationships of diagnostic functions; a brief history of their evolution as pertains to aircraft and spacecraft has been included in Appendix A of this volume.

2.3 PROCEDURE FOLLOWED IN IDENTIFYING TREND CHARACTERISTICS AND MONITORING METHODS

Based upon the concepts discussed in the previous section, the following procedure was evolved and followed for the purposes of identifying the trend characteristics and associated monitoring methods for the NERVA engine:

(a) Available failure mode analyses (FMA), failure modes and effects analyses (FMECA's), contingency analysis, drawings, and specifications are reviewed to determine characteristics involving one or more of the following manifestations:

(1) Surface physical wear due to sliding or rolling contact.

(2) Surface or internal deterioration due to heat, radiation, etc.

(3) Electronic property deterioration due to heat, radiation, etc.

(4) Surface corrosion due to contact with fluids, gasses, lubricants.

(5) Mechanical property degradation due to fatigue, creep, etc.

(b) Gradual, relatively long term trend mechanisms involving wear or deterioration that can result in component degradation or failure are given primary consideration when identifying trend characteristics. Relatively fast, short term trends that would progress from the initial detectable onset through to failure during a period of a few seconds are considered to be within the provence of the malfunction detection system.

(c) Neither the probability of occurrence nor the engine effect category are considered in the preliminary identification of trend characteristics presented in this report. Such factors, along with weight, commonality, and reliability of monitoring devices would be proper factors for consideration in a subsequent evaluation to determine the optimum engine instrumentation requirements.

(d) Possible monitoring methods are to be identified for each parameter. Preferably these should be feasible during flight operations, should be capable of detecting a deterioration as early as possible, and should yield a signal proportional to the degree of trend progression.

SECTION 3

DISCUSSION OF TREND CHARACTERISTICS AND POSSIBLE MONITORING METHODS

3.0 DISCUSSION OF IDENTIFIED TREND CHARACTERISTICS AND POSSIBLE MONITORING METHODS

3.1 TURBOPUMP ASSEMBLY

3.1.1 Introduction

The TPA, because of its high-speed close-clearance rotating components, is a prime candidate for wear and deterioration parameter monitoring. The principal trend phenomena that might be expected are surface wear (in the bearings, labyrinth seals, and balance piston lands), coolant filter clogging, and creep and fatigue in the turbine blades. Other potential degradation trend manifestations include external leakage at inlet and outlet flanges of coolant-supply lines.

3.1.2 Bearing Wear

Present plans call for the monitoring of bearing coolant temperature entering and leaving both sets of bearings as the primary means of detecting bearing wear, backed up by axial and radial shaft displacement measurements. Also under consideration is the shock pulse method which records both the frequency and magnitude of ultrasonically transmitted shock impulse. Shock pulse is reputed to be able to detect bearing wear far in advance of any other method; however, its capability to do so with a cryogenic coolant has not been fully evaluated. Bearing temperature monitoring has the advantage of also supplying data on pump chilldown, but previous test experience indicates temperature rise warning of bearing failure is sometimes only of the order of minutes, and there are some types of bearing failures that conceivably would not be preceded by such rises. Similar experience has occurred with shaft displacement monitoring.

3.1.3 Labyrinth Seal Wear

Wear of any of the ten labyrinth seals as a result of rotor or housing displacement could be monitored indirectly by radial

and axial displacement measurement which should be capable of detecting movement that could lead to wear. Should post test inspection during the development test program indicate seal wear occurred that was not detected by displacement indicators, consideration can be given to measurement of differential pressures of coolant flow through each labyrinth. Although additional parameters such as turbine speed and inlet and outlet pressures of turbine and pump might also have to be simultaneously evaluated to detect true labyrinth ΔP degradation, an advantage results in that a measure of TPA efficiency would be derived.

3.1.4 Balance Piston Land Wear

As with labyrinth seals, wear of the balance piston lands would be detectable by a combination of axial displacement, balance cavity pressure, pump discharge pressure, and RPM.

3.1.5 Blade Creep and Fatigue

Although detection of these trends has been accomplished by strain gages and test stand mounted infrared scanners, the mounting of such equipment within the TPA does not appear feasible for operational usage at this time.

3.1.6 External Leakage

The existence of external leakage of liquid or gaseous hydrogen through external joints can be detected in several ways. Ultrasonics or resistance temperature transducers have the potential to detect external leakage; however, their capability to quantify leakage rate is unknown. On the other hand, external leakage rates on NRX/EST were quantified by collecting the leakage in a manifold and monitoring the pressure rise and temperature of the gas flowing into a ventable accumulator. A more practical system for real time monitoring would require development of a method for measuring gas leakage rate on a continuous basis. Since there are a number of external joints on the TPA, the best solution might involve monitoring or collecting data for each joint that would flow the

leakage gas past a common flow meter. This would yield the total leakage rate for the module and, if more specific fault isolation were required, resistance temperature transducers could be added at each joint to identify the source, if not the magnitude, of the leak.

3.1.7 Rotor Dynamic Balance Degradation

Excluding the effects of bearing wear, the slow degradation of rotor dynamic balance due to such causes as material creep or distortion of shaft or housing components does not appear likely. Such slow buildup might be detectable by shaft displacement measurements; however, they would tend to be obscured by transitory displacements resulting from changes in fluid dynamics or forces acting on the housing external to the TPA. Similarly, balance degradation induced by turbine blade loss would be sudden in nature and would not come under the function of trend monitoring.

Experience with the use of accelerometers on TPA's and other rotating equipment indicates that they are too sensitive to the numerous sources of vibration change to be used for monitoring a gradual low level trend.

3.1.8 Pump Cavitation

Pump cavitation is the result of attempting to operate a pump when inlet conditions are marginal. While this phenomena can result in pump blade errosion or pitting with some fluids, such deterioration effects are not expected to result with liquid hydrogen due to its low density. If cavitation does occur, it is more likely to result in unbalanced loads on the pump bearings which could produce bearing wear symptoms that could be detected by the previously discussed techniques.

3.1.9 Coolant Supply Filter Clogging

Clogging of bearing coolant supply filters could buildup to the point where bearing overheating would result. This is

not considered likely, but if it should occur, the effects would be detected by an increase in the pressure drop across the filter.

3.1.10 Turbine Blade/Flow Passage Distortion

The possibility exists that cumulative thermal distortion of turbine blades and components affecting the direction of flow passage could result in gradual TPA performance degradation. Such a trend would be manifested in a loss in TPA efficiency and would require measurement of pump and turbine input and output pressure and temperature conditions, plus TPA speed, to detect.

3.2 VALVES AND GIMBAL ACTUATORS

3.2.1 Introduction

The failure mechanisms of these components that are associated with relatively gradual wear and deterioration principally involve the electrical motor, the valve seats and sealing surface, surface contact elements of the actuating mechanisms, and the detection instrumentation itself. Actuator motor circuit degradation is possible both in terms of insulation degradation and deterioration of the various controller electronic elements in the radiating environment. Motor bearing wear is possible if lubrication degradation occurs. Surface-to-surface wear in the gear trains and between moving actuator components and valve housings can occur. Another prime consideration for any valve is seat wear. At the present time it is planned to monitor the progression of such wear and deterioration by a combination of actuator circuit characteristics and valve response characteristics (position vs time). To eliminate the masking effects of system pressure variability, it is anticipated that primary trend measurements will be obtained during the prestart checkout actuation before every firing. It should be noted that degradation in response characteristics could be a result of problems within either motor circuit, the actuator drive train, or the valve itself. However, since there appears to be no compelling reasons why more specific fault isolation capability is required for flight operations, it should not be necessary to provide trend detection capability to lower levels within the replacement modules.

3.2.2 Internal Leakage

One of the valve trend mechanisms for which monitoring techniques are still being evaluated is internal leakage. At the present time, the possible methods of instrumented leak detection include externally mounted ultrasonic sensors and internally mounted resistance temperature transducers. The determination of whether either would be capable of quantitatively assessing the buildup of low leakage rates of gaseous or liquid hydrogen will require further investigation.

3.2.3 Position Indicator Degradation

The current design policy for all valves except those in the purge system is to have three position indicators each directly reading the amount of valve opening. While this policy most directly benefits the malfunction detection function, since it enables assessment of the degree of intermediate failure, it has two advantages for trend data monitoring. The first is that by comparing the three readings among themselves, the degradation of one of the three position indicators could be detected (if more than one indicator would start to degrade, interpretation would be difficult). The second advantage is that continuous position indicators, as opposed to limit sensing devices, permit calculation of position vs time response characteristic parameters. Used in conjunction with motor circuit characteristic data, this information has the potential to det .t degradation in performance at an early point in time.

3.2.4 External Leakage

The question of external leakage monitoring is currently under evaluation. Assuming such monitoring would be confined to areas of housing seals and line/housing joints, it is possible that some sort of resistance temperature wire with or without a collecting duct or manifold could be devised that could sense the onset of such leakage. Whether such a detection system could quantitatively assess leakage rates is questionable. Another possibility is designing each joint with a double seal with a

leak collection cavity between them. Monitoring of the buildup of pressure in this cavity could provide an indicator of inner seal degradation. A third possibility would involve a system of collecting ducts or manifolds that would assemble all of the leakage from all the external joints in a given replacement module. A flow meter could be incorporated that would monitor total module external leakage.

3.2.5 Gimbal Actuators

The gimbal actuators, like the valve actuators, will have three continuous position indicators that can be used to assess response rate and indicator degradation. Motor current could also be measured. Additional trend data parameters under consideration are housing pressure, actuation rate, and shaft load. Housing pressure could be monitored to detect early leakage of pressurant which might lead to mechanical bindup in certain designs. Actuation rate, which may be required for control purposes, could also be of value in incipient trend detection. Shaft load, measured as strain, could help distinguish between mechanical and electricl degradation trends.

3.3 NOZZLE ASSEMBLY

3.3.1 Introduction

Unlike valves and the TPA which have moving component parts, the nozzle should be free of trend characteristics involving physical surface wear. Some degradation trend possibilities do exist, however, as a result of such originating mechanisms as coolant borne contamiantion and hot gas erosion. Structural degradation is also conceivable as a result of fatigue induced by vibration, thermal cycling, and pressure cycling. The monitoring of the progression of such failure modes is difficult, and is complicated by the trade off between detection accuracy, freedom from false alarms, and completeness of coverage. The results of analysis to date have indicated that reasonably effective coverage of most trends is possible; however, some additional instrumentation development will probably be required.

3.3.2 Contamination/Tube Blockage

The blockage of coolant tubes by contamination from other sources such as valve seat wear, internal surface spalling of lines from meteorite impact, etc. is a potential failure mode. Depending upon the location of the blockage and the number of tubes affected, the loss of coolant flow could have a variety of effects ranging from none to nozzle jacket melt-through and ejection. Under consideration to detect such effects is the use of circumferential twin wire temperature sensing cable mounted externally in both converging and diverting sections. Although such devices can only detect the maximum temperature being experienced at some point on the exterior circumference and not the extent or location, it appears to be the most reliable means available for detecting impending melt-through or overheating of the jacket exterior surface. An alternative technique which would detect the effects of tube blockage (followed by melt-through) is the mounting of detectors on the torus to detect plume temperature changes or irregularities.

3.3.3 Hot Gas Erosion of Nozzle Tubes

The erosion of the inner surface of the nozzle particularly in the barrel and convergent sections, by hot exhaust gas is a possible long term deterioration trend. The effects of such erosion could be internal leakage into the nozzle, and possibly loss of coolant to a portion of the eroded tube. Coolant loss to a significant number of adjacent tubes would be detectable by surface exterior temperature abnormality. Depending on the rate of internal coolant leakage, the resulting reduced flow through the reflector might be detectable by a combination of pressure and temperature measurements at the nozzle inlet torus, the reflector inlet, and by an increase in reflector material temperature. Further detailed analysis is required to determine the reliability and sensitivity of such a monitoring technique.

3.3.4 Tube Wall Thermal Buckling

Tube wall buckling, induced by thermal cycle fatigue in the barrel section, could result in the leakage of coolant into

the core exit plenum. In addition to resulting in loss of reflector cooling capability, this leakage might also lead to a temperature drop in the core exit plenum and result in loss of specific impulse. This temperature drop is potentially detectable by a combination of core exit plenum temperature and SSCV position. Further analysis of controls logic is required to validate this monitoring method.

3.3.5 Vibration Fatigue and Pressure Cycle Deformation

The cracking of the nozzle jacket or coolant tubes as a result of vibration fatigue or pressurization cycle effects is a possible deterioration mode that is difficult to detect at the early stages. Some consideration is being given at present to the mounting of accelerometers on the nozzle flanges to estimate cumulative fatigue damage. The detection accuracy and falsealarm rate of such a monitoring method have yet to be evaluated.

3.3.6 External Leakage Through Nozzle/Extension Joint

Progressive external hot gas leakage through the nozzle/extension joint is potentially detectable by the use of circumferential twin wire temperature sensing cable mounted externally over the probable leakage path.

3.3.7 Hot Gas Corrosion of Nozzle Extension

Interaction of hot GH_2 with carbon of the nozzle skirt is not expected to occur at a significant rate. The detection of excessive corrosion, if it were to occur, is complicated by an environment extremely inhospitable to instrumentation. Temperatures on the exterior surface ranging from 2850°R at the joint to 2050°R at the exit plane require that most conventional instrumentation mounted there must also be liquid cooled. Thus even if some type of ultrasonic thickness gage could be developed that could operate in the radiation environment, several problems in mounting and protection would have to be overcome. An alternative concept of using infrared emission sensors to detect uneven heat radiation patterns on the nozzle

extension exterior surface is complicated by problems of radiation hardening and signal discrimination. The use of twin wire metal sheathed temperature sensing cable might also be feasible if it could withstand the temperature environment.

3.4 PRESSURE VESSEL AND CLOSURE

3.4.1 Introduction

As with the nozzle, the trend characteristics of the pressure vessel are essentially those of the non-wear type of degradation. Most prominent mechanisms are those involving fatigue due to vibration and pressure cycling. Cumulative creep effects on the pressure vessel wall due to heating from nuclear radiation must also be considered should the cooling capability be reduced for any reason. Leakage through joints between the pressure vessel and the closure and nozzle and between the closure and drum actuator housings and the inlet and outlet lines is also a potential trend characteristic.

3.4.2 Fatigue Due to Vibration

Metal fatigue due to effects of vibration, pressure and thermal cycling is a potential deterioration mechanism. Three monitoring methods are conceptually applicable, however, all present difficulties in mounting or in signal analysis. The strain gage type of cumulative fatigue damage sensor has intuitive appeal; however, problems with bonding degradation in the radiation environment coupled with the historical reliability problems of strain gages in general would have to be overcome. Stress wave accoustical techniques have been suggested which monitor crack growth by recording both frequency and amplitude of microcrack propagation. They have also been reported to be capable of detecting progressive embrittlement due to radiation damage, working of joints, and leakage of fluid. A prime factor tending to limit the reliability of this detection technique is the presence of obscuring background noise that must be filtered out. Another candidate for evaluation is the monitoring of emmited ultrasonic signals for microcrack attenuation. Tests on fatigue specimens have shown that as cyclical fatigue damage builds

up, the ultrasonic signal between transmitter and receiver is attenuated. However, problems in coverage, mounting techniques, and discontinuity sensitivity would have to be resolved.

3.4.3 External Leakage Through Joints

The external joint leakage through the pressure vessel/forward closure joint, the CDDA joints, and the dome/line joints are primarily cold gas/high pressure problems. Candidate detection techniques would use collector ducts or cavities circumferential with resistance temperature transducers sensing the leakage of GH_2 by bolts and seals. Quantitative leakage rate assessment would require a flow meter mounted in common collection manifold.

3.4.4 Creep/Distortion

If distortion from successive pressurization cycles is considered a possibility, its effect could be measured by strain gages directly implanted in the bolts or on the adjacent joints. Similarly, the creep of the pressure vessel wall resulting from nuclear radiation heating in conjunction with reduced coolant capability could be measured by strain gages in conjunction with reflector coolant and pressure vessel external wall temperature.

3.5 EXTERNAL SHIELD

3.5.1 Introduction

The principal function of the external shield is to protect the crew against excessive radiation. As no moving parts or fluids are involved, the primary types of deterioration that might be expected would fall into the metalurgical/chemical category. Two possible approaches to monitoring such trends exist. These are cause-environment monitoring of temperature and vibration environment to detect if design conditions are exceeded and end-effect monitoring of loss of radiation attenuation capability. At the present time, end effect monitoring appears more reliable if mounting location problems can be overcome.

3.5.2 Attenuation Degradation

Degradation of radiation attenuating capability of the shield could occur as a result of cracks in the lithium hydride or borated graphite caused by vibration or thermal cycling. In addition, excessive temperature could cause lead melting or outgassing of lithium hydride to the extent that attenuation capability is reduced. Provided that mounting problems can be resolved, it would appear that sensors capable of detecting the transmission of gamma, fast neutron, and thermal neutron radiation through the shield would be the most direct and effective means of detecting shield degradation regardless of the cause. Since the current engine layout leaves little space directly above the shield, it may be necessary to mount such detectors forward of the gimbal plane where the signal will be complicated by scatter from the intervening components. If the primary purpose is to provide crew (and not engine component) protection, this more remote location may be fully acceptable.

The alternative approach to shield degradation monitoring would employ a combination of temperature and vibration sensors. Since these would be monitoring damage potential and not effect magnitude, they would provide a less reliable means of trend monitoring.

3.6 LINES (INCLUDING JOINTS, BELLOWS, ETC.)

3.6.1 Introduction

Deterioration trends of the lines are similar to the pressure vessel in that they primarily involve fatigue and leakage mechanisms. Fatigue damage can occur at various locations in the lines and bellows as well as at the joints, fittings, and attachment brackets. External leakage potential exists at the many joints between module interfaces.

3.6.2 Vibration, Temperature, Pressure and Actuation Cycle Fatigue

The most practical approach would be to mount

cumulative fatigue damage sensors at those locations deemed most susceptible to crack initiation. Foil gages would appear to be more suitable than either passive or active ultrasonic techniques. These gages, which are bonded directly to the surface, will indicate increased resistance as the material is subjected to repeated cyclical loading. A departure from a linear resistance vs log cycle relationship is a warning of increased likelihood of fatigue cracking; however, remaining cycles to failure is not always defined, unless previous tests to failure have been run with similarly mounted devices implanted. Primary candidates for mounting locations would include the bellows on the pump inlet lines and the coolant supply line at the gimbal plane since these see actuation cycles in addition to the vibration, temperature, and pressurization cycles that are present in the rest of the lines and bellows. A limitation of these gages is that, historically, many fatigue crack induced failures have initiated at sites of machining or fabrication discontinuities rather than at the location of maximum stress concentration predicted by the stress analysis.

3.6.3 External Leakage

The same concept discussed under the TPA would apply to pipe joint leakage. The collection of leakage from all joints in a given module with ducting that would lead to a central flow meter for the module would appear most feasible.

3.7 THRUST STRUCTURE AND GIMBAL PIVOTS

3.7.1 Introduction

Compared to other engine components, the thrust structure would appear to have an insignificant susceptibility to wear and deterioration trends. The only exception is the gimbal pivot which could be sensitive to cyclical fatigue.

3.7.2 Gimbal Flexure Pivots

These devices, which transmit rotational loads without introducing surface-to-surface contact, eliminate a potential source

of wear by their design. However, fatigue damage is a possibility and monitoring of this phenomena should be considered. Potential monitoring methods include measuring of increased resistance in a bonded foil gage and attenuation of an ultrasonic signal between a suitably mounted emitter and receiver.

3.8 NUCLEAR SUBSYSTEM

3.8.1 Introduction

The primary trend characteristic of concern in the nuclear subsystem is, of course, the degradation of the core due to corrosion and related effects; however, there are other potential deterioration type failure modes that may warrant monitoring for possible trends. Some of these involve the buildup of blockage in coolant channels due to coolant borne contamination. Others involve increasing leakage of coolant or hot gas due to gradual seal failure. Other potential failure modes include those involving time-dependent mechanisms of thermal creep, pressure and thermal cycling, and insulation degradation. Other trend mechanisms, such as those involving the control drum actuators and the structural support coolant assembly, are very similar to those discussed previously under valves and gimbal actuators.

3.8.2 Matrix of Interrelationships

Because the components of the nuclear subsystem are more closely interrelated physically, as well as functionally, than many other NERVA engine subsystems, a good opportunity exists to utilize multiple parameter techniques to identify sources to deterioration trends. Table 3-1 depicts how the principal NSS trend characteristics would be detected by the instrumentated trend parameters. As can be seen, some characteristics would require more than one instrumented parameter to verify that an unplanned trend was occurring. Similarly, the same instrumented parameter could be involved in the detection of several distinctly different trend characteristics. For example, diffusion of carbon through the fuel element coating would be detectable by a combination of SSCV valve position, control drum actuator position, core temperature, and core exit gas temperature. Conversely, control drum actuator position would also be utilized to detect

TABLE 3-1

NSS Trend Characteristic · Parameter Matrix

ECC	TREND CHARACTERISTIC \ TREND PARAMETER	SSCA-AO1; PROP FLOW RATE IN EA SSCA LEG-INCL. REVERSE FLOW	SSCA-AO2; VALVE POSITION OF SSCV	RA-AO1, REFLECTOR MATERIAL TEMPERATURE	NSS-AO1; FAST NEUTRON RADIATION	SSCA-AO3; PROP FLOW RATE IN EACH SSBV	CODA-AO1; ACTUATOR POSITION	CORE-AO1; CORE TEMPERATURE	RA-AO2, CONTROL DRUM POSITION	CODA-AO2; ACTUATOR POWER	RA-AO3, REFLECTOR SUPPORT STRUCTURE DISPLACEMENT	IS-AO1, THERMAL NEUTRON RADIATION	IS-AO2, GAMMA RADIATION	SP/P-AO1, AXIAL DISPLACEMENT OF THE THREE PLENA SUPPORT PLATE	CH-AO1, SUPPORT STEM COOLANT FLUID PRESSURE	CH-AO2, SUPPORT STEM COOLANT FLOW	CORE-AO2, CORE INLET PLENUM TEMPERATURE	RA-AO4, ESS SEAL REGION PRESSURE DISTRIBUTION	CP-AO1, CORE PERIPHERY TEMPERATURE	CP-AO2, CORE PERIPHERY DIAMETER	CH-AO3, SUPPORT STEM LINER TEMPERATURE	CH-AO4, SUPPORT STEM END CAP TEMPERATURE	CORE-AO3, CORE EXIT GAS TEMPERATURE	CORE-AO4, CORE DIFFERENTIAL PRESSURE	SP/P-AO2, SUPPORT PLATE MATERIAL TEMPERATURE	RA-AO5, CONTROL DRUM VANE TEMPERATURE
FUEL ELEMENTS	DIFFUSION OF CARBON		▲				▲	▲																		
	DEGRADATION OF COATING		▲				▲																▲			
	HOT END CREEP OF CENTRAL SUPPORT ELEMENTS																▲									
CLUSTER HARDWARE	DEGRADATION OF H_2 CONTAINMENT																			▲	▲	▲				
	DEGRADATION OF REACTIVITY CONTROL																			▲	▲	▲				
CORE PERIPHERY	DEGRADATION OF INSULATION			▲																						
	DEGRADATION OF PNEUMATIC BUFFERING																	▲								
	DEGRADATION OF RADIAL FLOW BARRIER																▲		▲							
SUPPORT PLATE AND PLENA	YIELDING OF 3-PLENA SUPPORT PLATE													▲	▲	▲	▲									
	UNEVEN DISTRIBUTION OF PROPELLANT AT CORE INLET																▲						▲	▲		
INTERNAL SHIELD	DECREASED RADIATION ATTENUATION				▲						▲	▲														
REFLECTOR ASSEMBLY	MECHANICAL BINDING OF DRUM BEARING					▲	▲	▲	▲																	
	DISTORTION OF DRUM					▲	▲	▲	▲													▲				
	DEGRADATION OF CONTROL VANE MATERIAL																					▲				
	DEGRADATION OF REFLECTOR STRUCTURAL SUPPORT									▲															▲	
CONTROL DRUM DRIVE ASSEMBLY	MECHANICAL BINDING OF ACTUATOR MECHANISM					▲	▲		▲																	
	ELECTRICAL DEGRADATION OF ACTUATOR CONTROLLER					▲	▲															▲				
																						▲				
STRUCTURAL SUPPORT COOLANT ASSEMBLY	EXCESSIVE INTERNAL LEAKAGE OF SSCV	▲																								
	EXCESSIVE EXTERNAL LEAKAGE OF SSCV	▲																								
	ERRATIC OPERATION OF SSCV		▲	▲	▲																					
	EXCESSIVE INTERNAL LEAKAGE OF SSBV			▲		▲																				

613619-67C

and measure such trend characteristics as binding and distortion of the control drums and actuators. The detection of most of the trend characteristics of the nuclear subsystem will require, in addition to monitoring a combination of parameters, a certain amount of analysis and comparison with reference or base data. For example, the detection or buildup of flow channel blockage by contamination requires that the computer be able to compare current data with historical data for the similar general engine conditions of propellant flow rate, chamber temperature, etc. in addition to monitoring core inlet plenum temperature core axial ΔP and support plate temperature.

Matrix type detection techniques similar to this that are proposed for the nuclear subsystem have been used to control chemical processes and to detect and plot aircraft jet engine deterioration. They have the advantage of increased discrimination between failure modes for the same or reduced number of instrumented parameters. However, their most successful applications have been in well characterized and understood systems where significant amounts of prior experience and data were available to enable development of unique characterization patterns. Presumably such information could be developed for a NERVA flight engine application.

One of the advantages of the matrix detection system shown is that much of the information needed is either required for control purposes or can be considered feasible in terms of the current state of the art. There are several parameters, however, whose method is still to be determined or verified. These include the measurement of excessive internal and external leakage flow rates of the SSCV and SSBV and detection of actual drum position as opposed to actuator position.

Possible detection techniques for external and internal valve leakage are covered under the section on valves and gimbal actuators. The detection of drum position, apart from actuator position, is only required if it is necessary to distinguish between failures involving drum movement as opposed to actuator movement. Such a distinction might be of benefit in determining the proper contingency action to take; however, further analysis is required to validate the necessity of such a measurement.

3.9 INSTRUMENTATION AND CONTROL SUBSYSTEM

Several types of deterioration failure modes of the I&C subsystem would appear to warrant monitoring. One type, common to many I&C components, involves failure modes that result in increased current consumption or reduced bus voltages. Gradual changes in such parameters are indicative of several potential failure mechanisms and could be monitored without too much difficulty. Similar drifts in some instrumentation devices could also be used to detect impending transducer failure. Another type of trend that could profitably be monitored is frequency of disagreement of voter outputs. Since triple modular redundancy with majority voting will probably be used for a portion of the I&C circuits, the incidence of 2 out of 3 voting (as opposed to 3 out of 3) could be used to obtain a good overall measure of the health of a large number of redundant circuit elements. Such disagreement detectors were incorporated in the Saturn I/V instrumentation unit and proved useful in assessing flight readiness. Since triple modular redundancy with majority voting has the effect of concealing failure of redundant circuits, the extent of loss of redundancy would be a useful parameter to know and could probably be monitored without adding significantly to circuit complexity.

SECTION 4

TABULAR SUMMATION OF CHARACTERISTICS AND MONITORING METHODS

4.0 TABULAR SUMMATION OF CHARACTERISTICS AND MONITORING METHODS

Table 4-1 presents a summation, by major subsystem grouping, of the identified trend characteristics and the possible monitoring method or methods that could be used. Also shown is the degree to which the February 1971 Flight Operational Measurement Requirements List (MRL) shown in Data Item C103 contains instrumentation capable of providing at least minimal coverage of the identified trend characteristics. The MRL channel numbers referenced are also shown.

TABLE 4-1

SUMMARY OF TREND CHARACTERISTICS AND POSSIBLE MONITORING TECHNIQUES

TURBOPUMP ASSEMBLY WEAR/DETERIORATION CHARACTERISTIC	POSSIBLE TREND MONITORING TECHNIQUE	DEGREE OF COVERAGE	CURRENT MPL STATUS: MEASUREMENT DESCRIPTION	MPL CHANNEL NO'S
Bearing Wear	Bearing coolant temperature combined in the shaft position displacement (ultrasonic shock pulse also under consideration)	Complete	Turbine bearing (exit) temp Pump bearing (exit) temp Feed manifold temp Turbine bearing displacement 2nd stg. turbine rotor displacement	618,619,622,623 616,617,620,621 1257,1258 1247,1248,1249,1250 1251,1252,1253,1254
Labyrinth seal wear	Shaft position displacement combined with ΔP measurements across seals	Partial	Pump inlet pressure Pump discharge pressure Turbine inlet press. Turbine discharge press. Feed manifold pressure Thrust balance cavity press. Turbine bearing displacement 2nd stg. turbine rotor displacement	1386,1387,1390,1391,424,445 415,416 378,379 364,365 1255,1256 610,611 1247,1248,1249,1250 1251,1252,1253,1254
Piston land wear	Shaft position displacement combined with ΔP measurements across seals	Partial	2nd stage impeller displacement Thrust balance cavity pressure Feed manifold pressure Pump discharge pressure	1243,1244,1245,1246 610,611 1255,1256 610,611
Turbine blade fatigue	None yet identified which can provide early detection prior to failure	None	-	-
Rotor dynamic balance degradation	Shaft position and displacement accelerometers (acceleromet[illegible] detection complicated by [illegible] noise)	Partial	See displacement measurements above.	-
External leakage through housing seals	Combinations of ultrasonic or resistance temperature transducers with metering of leakage flow rate through collector duct.	None	-	-
Clogging of coolant supply filter	ΔP across filter.	Complete	Pump discharge press. Feed manifold press.	415,416 1255,1256
Turbine blade/flow passage distortion	Combination of turbine and pump input/output pressures and temperatures, plus TPA speed		Pump inlet pressure Pump discharge pressure Turbine inlet pressure Turbine discharge pressure Turbine shaft speed	1386,1387,1390,1391,424,445 415,416 378,379 364,365 435,436,437,438

TABLE 4-1 (Continued)

WEAR/DETERIORATION CHARACTERISTIC	POSSIBLE TREND MONITORING TECHNIQUE	DEGREE OF COVERAGE	CURRENT MRL STATUS: MEASUREMENT DESCRIPTION	MRL CHANNEL NO'S
EXTERNAL SHIELD				
Degradation of radiation attenuation capability due to melting of lead leakage of generated lithium hydride gas, cracking of lithium hydride or borated graphite.	Combination of gamma ray, fast neutron and thermal neutron detectors.	Partial	Gamma radiation dose rate Fast neutron flux Thermal neutron flux	1424,1425,1426 1427,1428,1429 1430,1431,1432
LINES (INCLUDING JOINTS, BELLOWS, ETC.)				
Fatigue due to vibration, temp and pressure cycling	Cumulative fatigue damage foil gage mounted at critical stress concentration points	None	-	-
External leakage at joints, bellows, etc.	Combination of ultrasonic or resistance temperature transducers with monitoring of leakage flow rate through collector duct.	None	-	-
THRUST STRUCTURE AND GIMBAL PIVOT				
Gimbal flexure pivot fatigue	Cumulative fatigue damage foil gage or ultrasonic signal attenuation between surface mounted emitter and receiver.	None	-	-

TABLE [illegible]-1 (Continued)

PRESSURE VESSEL & CLOSURE

WEAR/DETERIORATION CHARACTERISTIC	POSSIBLE TREND MONITORING TECHNIQUE	DEGREE OF COVERAGE	CURRENT MRL STATUS: MEASUREMENT DESCRIPTION	CURRENT MRL STATUS: MRL CHANNEL NO'S
Vibration fatigue	Stress wave acoustical technique using externally mounted transducers. Other possibilities include foil gage cumulative damage sensors or attenuation of emitted ultrasonic signals between emitting and receiving transducers.	Partial	Nozzle/PV Flange Accelerometer	0024-0029
External leakage thru joints	Resistance temperature transducers and/or flow meter in common collector duct.	None	-	-
Creep/Distribution - pressure vessel wall	Combination of strain gages, reflector coolant temperature and pressure, external wall temperature	Partial	Reflector inlet plenum temp. " " " press. Pressure vessel external wall temp. (360°) " " " "	124,125,126 178,179,1261 1383 328,329,330,331
Creep/distortion - bolts	Internally mounted strain gages	None	-	-

NOZZLE ASSEMBLY

TABLE 4-1 (Continued)

WEAR/DETERIORATION CHARACTERISTIC	POSSIBLE TREND MONITORING TECHNIQUE	DEGREE OF COVERAGE	CURRENT MRL STATUS: MEASUREMENT DESCRIPTION	CURRENT MRL STATUS: MRL CHANNEL NO'S.
Tube blockage by contamination	Twin wire circumferential cable sensing external temp (also under consideration plume temperature change monitoring by propellant tank mounted in le ertors)	Complete	Nozzle external wall temp. 360° circum.	1259,1260
Hot gas tube erosion	Combination of techniques used for (1) above plus coolant ΔP and ΔT through nozzle and reflector matl. temp.	Complete	Nozzle external wall temp. 360° circum. Nozzle inlet to reflector inlet ΔP Reflector material temp. Reflector inlet plenum press.	1259,1260 324,325 132,133,134 178,179,1261
Tube wall thermal buckling	Combination of techniques used in (1) plus core exit temp vs SSCV position	Complete	Nozzle external wall temp. 360° circum. Cluster Exit Gas Temp. SSCV position	1259,1260 64-85 1452,1453,1454,1455
Jacket or tube fatigue due to vibration or pressure cycling	Externally mounted accelerometer	Complete	Nozzle/PV flange accelerometer Nozzle torus accelerometer	24-29 30-31
Hot gas external leakage thru nozzle/ext. joint	Twin wire circumferential cable sensing maximum temp.	Complete	Nozzle external wall temp.	1423
Nozzle extension hot gas corrosion	Possibilities include ultrasonics; infrared emmission and twin wire temperature sensing cable.	None	-	-

TABLE -1 (Continued)

VALVES & GIMBAL ACTUATOR

WEAR/DEGRADATION CHARACTERISTIC	POSSIBLE TREND MONITORING TECHNIQUE	DEGREE OF COVERAGE	CURRENT MRL STATUS: MEASUREMENT DESCRIPTION	MRL CHANNEL NO'S
Motor circuit degradation (insulation breakdown, etc.)	Combination of actuator motor current and position vs time response characteristics.	Complete	Actuator current Valve position (3 ea value)	1183-1194,1203-1214, 459-462 See pages 2,3,6 of Prop.Feed Syst. (MRL)
Gear train wear, shaft binding, bearing wear, seat wear.	" " "	Complete	See motor circuit degradation	
Position indicator degradation	Comparison of δ's between 3 indicator readings	Complete	" " " "	
Internal leakage past valve load seats when closed	Either externally mounted ultrasonic detector or internal resistance temp. transducers above and below valve.	None	-	-
External leakage through valve housing seals.	Combination of ultrasonic or external resistance temp. transducer with metering of leakage flow rate through collector duct.	None	-	-
External leakage of gimbal housing pressurant	Pressure transducer	Complete	Actuator housing pressure	346,347,1063,1064

NUCLEAR SUBSYSTEM

TABLE 4-1 (Continued)

WEAR/DETERIORATION CHARACTERISTIC	POSSIBLE TREND MONITORING TECHNIQUE	DEGREE OF COVERAGE	CURRENT MRL STATUS: MEASUREMENT DESCRIPTION	CURRENT MRL STATUS: MRL CHANNEL NO.
Fuel Elements				
Diffusion of carbon through fuel element coating	Combination of: SSCA Valve Position, CDDA Actuator Position, Core Temperature, and Core Exit Gas Temp.	Complete	SSCV Position Control Drum Position Average Fuel Element Temp. Unfueld Element Temp. Cluster Exit Gas Temp.	1452 thru 1455 1335 thru 1352 0038 thru 0041 0043 thru 0061 0064 thru 0085
Degradation of fuel element coating due to crack propagation following cyclic operation	Combination of: SSCV Valve Position and CDDA Actuator Position	Complete	See Above	See Above
Rot and creep of central support elements	LSS seal region pressure differential	Complete	Final LSS Seal/Core exit ΔP	1332, 1333, 1334
Cluster Hardware				
CM retainer worn thru by corrosion, flow channel blockage by contamination, or leakage past seals	Combination of: Support stem liner temp, Support stem end cap temp, and Cluster exit gas temp.	Complete	Struct Support Liner Temp. Struct Support End Cap Matl. Temp. Cluster Exit Gas Temp.	0104 thru 0109 1269 thru 1272 0110 thru 0112 0064 thru 0085
Core Periphery				
Degradation of insulating tile insulating capability	Combination of: Reflector Material Temp. and Core Periphery Temp.	Partial	Reflector Material Temp. TBD	132 thru 134 TBD
Tearing/buckling of wrapper	Combination of: LSS seal region pressure differential and core periphery diameter	Complete	Final LSS seal/core exit ΔP Core Radial Displacement	1332 thru 1334 0164 thru 0170
Support Plate and Plena				
Thermal creep/yielding of support plate and plena	Combination of: Axial Displacement of Support Plate, Support Stem Coolant Pressure, Support System Differential Pressure, Core Inlet Plenum Temperature, Core Axial Differential Pressure, Support Plate Material Temp.	Complete	Core Axial Displacement Struct.Supp. Supply Plenum Press. Struct.Supp.Inlet/Exit Plenum ΔP Core Inlet Plenum Temp. Core Axial Diff. Pressure Support Plate Matl. Temp.	0160 thru 0163 0192 thru 0195 0208 thru 0211 0143 thru 0148 0201 thru 0205 0155 yhru 0157
Flow channel blockage by contamination	Combination of: Core Inlet Plenum Temp. Core Axial Differential Pressure Support Plate Material Temp.	"	Core Inlet Plenum Temp. Core Axial Diff. Press. Support Plate Matl. Temp.	0143 thru 0148 0201 thru 0205 0155 thru 0157

TABLE 4-1 (Continued)

NUCLEAR SUBSYSTEM (Continued)

WEAR/DEGRADATION CHARACTERISTIC	POSSIBLE TREND MONITORING TECHNIQUE	DEGREE OF COVERAGE	CURRENT MRL STATUS: MEASUREMENT DESCRIPTION	CURRENT MRL STATUS: MRL CHANNEL NO.
Internal Shield	Combination of:			
Deterioration of shield BATH material	Gamma radiation thru shield & reflector Fast neutron thru shield and reflector Thermal neutron thru shield & reflector	"	Shield reflector Gamma Dose Rates Shield reflector Fast Neutron Flux Shield reflector Thermal Neutron Flux	0230, 0231, 1353 1359, 1360, 1361 1354 thru 1356 1363 thru 1365 1357 thru 1359 1366 thru 1368
Reflector Assembly	Combination of:			
Drum Bearing Wear or Drum Thermal Creep	Actuator Position Core Temperature Distribution Actuator Power Core Exit Gas Temp. Distribution	Partial	Control Drum Position Fueled & Unfueled Element Temp. CDA Position Current Cluster Exit Gas Temp.	See MRL 0038 thru 0061 1209 thru 1331 0064 thru 0083
Melting of Control Drum Vanes	Control Drum Vane Temp.		Control Drum Vane Matl. Temp.	1263 thru 1265
Erosion of Refl. Support Struct. Insulation	Reflector Support Structure Displacement		TBD	-
Control Drum Drive Assy.	Combination of:			
Mechanical and Actuator Bearing Wear and Electrical/Electronic Degradation of Actuator Control Circuit	Actuator Position Core Temp. Distribution Actuator Power Core Exit Gas Temp. Distribution	Complete	(See reflector assy.)	
Structural Support Coolant Assy.				
(SSCV and SSBV) Excessive Internal and External Leakage	(See valves & gimbal actuators)			
Erratic operation	" " " "			

SECTION 6

CONCLUSIONS AND RECOMMENDATIONS

6.0 CONCLUSIONS AND RECOMMENDATIONS

6.1 CONCLUSIONS

(a) Potential trend characteristics can be identified in all NERVA engine subsystems.

(b) Techniques for monitoring their progression vary greatly in feasibility, complexity, and reliability.

6.2 RECOMMENDATIONS

(a) Further work in identifying trend characteristics and selecting monitoring techniques should be undertaken as part of an integrated diagnostics program that simultaneously considers the requirements for engine controls, trend monitoring, malfunction detection, checkout/verification, and fault isolation.

(b) Selection of optimum flight trend instrumentation should be undertaken as a design study considering the following factors:

(1) Weight and cost

(2) Signal processing complexity

(3) Reliability of measurement method

(4) Protection provided in terms of failure modes detectable, their probability of occurrence and the consequence of failure to detect

(5) Degree of multiple use for engine operation and the various diagnostic functions

APPENDIX A

A HISTORICAL EVOLUTION OF DIAGNOSTIC FUNCTIONS

APPENDIX A

A HISTORICAL EVOLUTION OF DIAGNOSTIC FUNCTIONS

A.1 INTRODUCTION

To better understand the function of the trend monitoring and to develop optimum parameter selection procedures, a study of its historical growth pattern in relation to other diagnostic functions was performed. This growth pattern which is summarized in Table A-1 and A-2 was observed to follow a pattern of increasing scope and complexity.

A.1.1 Checkout Verification and Fault Isolation

Checkout, verification and fault isolation of aircraft systems initially consisted of using ground test equipment to supplement cockpit instrument readings. Additional built-in-test-equipment (BITE) was added to supplement and speed up use of ground test equipment on such craft as the DC-9. The latest generation aircraft (DC-10, 747) provide capability for direct status verification of many of the subsystems. The DC-10, for example has 45 BITE instrumentation channels wired direct to the cockpit of data that are not required for flight control. The C-5A similarly provides 191 channels (mostly to non-propulsion system components) that can be directly interrogated to verify status or track down failures.

A similar trend towards increasing checkout channel quantity and direct interrogation capability has occurred in launch vehicles and spacecraft. Early launch vehicle relied on a collection of separate ground support checkout testers to evaluate the readiness of various different components. As the complexity of the launch vehicle increased in the Saturn I, it became necessary to consolidate all checkout equipment. This factor, together with the need to reduce launch pad delays caused by differences in test stand and launch pad equipment, tend to the increasing use of on-board (engine mounted) test equipment that would increase the probability of getting the same readout regardless of test site. Increasing use was made of computer programmed and directed checkout which automatically and sequentially interrogated the various components to confirm their flight readiness. Eventually, as much as 50% of all Saturn I checkout was computer controlled with the progression to Saturn V - Apollo seeing even higher percentages. The increasing sophistication

TABLE A-1

GROWTH OF DIAGNOSTIC SYSTEMS

	Diagnostic Function	Early	Intermediate	Most Advanced
Aircraft				
	Checkout, verification, and fault isolation	Cockpit instr. plus GSE testers	Ditto, plus BITE to supplement GSE testers (DC-9)	In-flight interrogation for most subsystems (DC-10, C5A)
	Trend Monitoring	Post-flight plotting of manually, recorded cockpit instr. data (DC8, 707)	Post-flight computer analysis of tape recorded cockpit and other data (DC-9, DC-10)	In-flight limited trend analysis using on-board computer stored data (C5A)
	Malfunction detection and warning	Limited indication for critical engine and control parameters (DC8, 707)	Warning signals for critical parameters, caution for redundant components (DC-10)	Warning signals plus printout of out of spec data on all monitored subsystems (C5A)
Launch Vehicles and Spacecraft	Checkout, verification, and fault isolation	Non automated checkout (Atlas)	Semi-Automated checkout using ground computer (Saturn I)	Semi Automated checkout using ground computer and on-board test equipment (Saturn V)
	Malfunction detection and warning	Limited number of booster parameters (Atlas)	Thirteen launch vehicle parameters (Titan-Gemini)	Thirty nine launch vehicle parameters plus sixty spacecraft parameters (Saturn Apollo)

TABLE A-2

COMPARISON OF DIAGNOSTIC SYSTEMS

AIRCRAFT	APPROX. NUMBER OF PARAMETERS MONITORED (1)	ON BOARD DIAGNOSTICS COMPUTER MEMORY SIZE (WORDS)	FUNCTIONS
707, 727	7	-	Post-flight trend plotting of manually recorded data
DC9	52	2000	Post-flight computer trend plotting of in-flight teletype or magnetic tape recorded data
DC10	75 (a) 45 (b)	(2)	(a) In-flight malfunction warning and fault isolation (b) Built-in test instrumentation (Ground fault isolation only)
747	120	1024	In-flight malfunction warning, post flight trend analysis and fault isolation
C5A	960	8000	In-flight trend analysis, malfunction warning and fault isolation; post-flight computer trend plotting of magnetic tape data
SPACECRAFT			
Gemini Launch Veh.	13	-	Launch malfunction detection
Saturn Launch Veh.	39 (a) 3800 (b)	8192	(a) Launch malfunction detection (b) Prelaunch checkout
Apollo Spacecraft	60 (a) 242 (b) 2300 (c)	(3)	(a) In-flight malfunction detection (b) Total telemetered to ground (c) Prelaunch checkout
Shuttle Booster	1200	-	In-flight malfunction detection, trend monitoring, and prelaunch checkout

NOTES

(1) Some parameters also used for controls
(2) Automatic computer directed pre-flight checkout system under development
(3) Computer memory size not available

of electronic equipment eventually led to a light weight on-board computer for the uprated Saturn I and Saturn V which accomplished a considerable amount of checkout in addition to on-board analog to digital conversion and data management. To achieve high reliability, approximately 74% of the components used triple modular redundancy employing voting elements to detect and correct errors. Even the flight readiness of this computer itself was automatically verified by disagreement detectors which noted and recorded the frequency that the voting elements were detecting one of the three redundant channels to be in error.

A.1.2 Trend Monitoring

Development of this function has been primarily limited to aircraft becuase of the relatively short service life of most space propulsion systems used to date. Early trend data acquisition was accomplished by flight engineers on DC8's and 707's manually recording data from cockpit instruments once a day during steady state cruise conditions. This data was teletyped to a central location, keypunched, and then analyzed and plotted by computer. The data acquisition was improved on the 727's, DC9's, DC10's and 747's by use of on-board tape recorders. The C5A on-board computer has capacity to also do a limited amount of short range trend analysis.

A.1.3 Malfunction Detection and Warning

Initial aircraft systems used warning lights to signal limit exceedence on critical propulsion and control parameters. More advanced systems such as DC-10 increased the number of such critical warning parameters and also provided notice to flight engineers that redundant components (not immediately critical) had failed. The most advanced system is that on the C5A which uses an 8000 word on-board computer to direct continuous monitoring of 802 parameters. If one parameter goes out of specification, it is identified by printout and compared with others in the same subsystem. If logic confirms failure, a failed status confirmation is also printed out.

The progression from Atlas/Mercury to Titan/Gemini to Saturn/Apollo launch vehicles has seen significant changes in the concepts of

what the launch vehicle malfunction detection system is to accomplish. Starting with a system oriented towards automatic detection and abort implementation for Mercury, the trend towards greater and greater dependency on crew initiated abort led from a monitoring of 13 channels on Titan/Gemini to a total of 39 for Saturn/Apollo. Accompanying this increasing quantity trend is a movement towards monitoring later and later during the failure mode progression to minimize the probability of false abort.

Paralleling the increase in launch vehicle malfunction parameter monitoring has been an increase in the amount of spacecraft malfunction detection instrumentation. For the Apollo flights, a total of 60 parameters were continually monitored by the on-board caution and warning system. An additional 180 parameters were telemetered to the ground and observed in consoles at mission control.

The development and growth of launch vehicle/spacecraft malfunction and warning systems has been complicated by the fact that the launch involved critical parameters for a short duration as opposed to the longer duration requirements of spacecraft. From the 13 launch vehicle parameters on Titan/Gemini the total has grown to 39 for the Saturn V. The Apollo spacecraft has a total of 60 parameters in its caution and warning system, backed up by an additional 180 parameters telemetered to the ground.

A.2 EVOLUTION OF TECHNIQUES FOR SELECTING DIAGNOSTIC INSTRUMENTATION

It was observed during the analysis of the evaluation of diagnostic functions that the technique of selecting the parameters to be monitored also has experienced an evolutionary change. The early systems appear to have been developed on a trial and error basis making maximum use of existing or conventional instrumentation. As experience was gained, it became apparent that regardless of the diagnostic functions - checkout, trend monitoring, or malfunction detection - highly reliable, rapid diagnosis could not be obtained by using existing or conventional instrumentation alone. More and more it became necessary to add instrumentation at a lower component level or to develop new instrumentation that could detect failure modes at an earlier point in

their progression than conventional instrumentation could. The selection of this added or new instrumentation required a good understanding of the manner in which subsystems and systems failed and it is, therefore, not surprising that FMA's, FMECA's and fault tree analyses were used in developing most of the intermediate diagnostic systems tabulated and in all of the advanced ones. The most advanced aircraft system, the C5A, also made use of a ranking technique to select the most beneficial instrumentation. Factors considered were:

Benefit Variables	Component failure rate Redundancy Effect of failure Troubleshooting time without added instrument Time between detection and failure
Cost Variables	Sensor cost Signal conditioning complexity Weight penalty