05952-H235-R0-00

CR151259

APOLLO REFERENCE MISSION PROGRAM
VERSION ARM 05

USER'S MANUAL AND TEST CASES

NAS 9-4810

26 JUNE 1967

Prepared for
NATIONAL AERONAUTICS AND SPACE ADMINISTRATION
MANNED SPACECRAFT CENTER
HOUSTON, TEXAS

APR 1977
RECEIVED
NASA STI FACILITY
INPUT BRANCH

(NASA-CR-151259) APOLLO REFERENCE MISSION PROGRAM VERSION ARM 05: USER'S MANUAL AND TEST CASES (TRW Systems, Redondo Beach, Calif.) 410 p

N77-76287

Unclas
00/12 24341

TRW SYSTEMS

05952-H235-R0-00

APOLLO REFERENCE MISSION PROGRAM
VERSION ARM 05

USER'S MANUAL AND TEST CASES

NAS 9-4810

26 JUNE 1967

Prepared for
NATIONAL AERONAUTICS AND SPACE ADMINISTRATION
MANNED SPACECRAFT CENTER
HOUSTON, TEXAS

Prepared by J. J. Miller
J. J. Miller
Flight Mechanics Section

Approved by D M Austgen
D. M. Austgen, Manager
Mission Simulation
Department

Approved by E D Stuckle
E. D. Stuckle, Manager
Manned Missions
Programming Department

Approved by R. W. Johnson
R. W. Johnson, Manager
Mission Design and Analysis
Mission Trajectory Control
Program

TRW SYSTEMS

ACKNOWLEDGMENTS

The following people have contributed significantly to the preparation of this document.

C. A. Beeler
D. L. Grass
G. D. Hitchcock
R. P. Moore

FOREWORD

The Apollo Reference Mission Program (ARMP) was originally intended as a tool for designing Apollo Mission 504 excluding earth launch and reentry. The purpose has been expanded so that ARMP now serves as a general trajectory design tool capable of completely simulating a lunar landing mission from launch through reentry.

This user's manual is updated approximately every two months to present all new, pertinent material.

CONTENTS

		Page
1.	CHANGES FROM ARM04	7
1.1	Changed Subroutines	7
1.2	New Subroutines	9
1.3	Deleted Subroutines	10
1.4	New Inputs	10
2.	COORDINATE SYSTEMS	15
3.	PROGRAM ORGANIZATION	35
3.1	Functional Description of Routines	35
3.2	Overlay Structure	41
3.2.1	ARM04 Overlay Structure	41
3.2.2	Plot Overlay Structure Package	42
3.2.3	Report Generator Overlay Structure Package	42
3.2.4	Summary Print Overlay Structure	42
3.2.5	LM S-band Program Overlay Structure Package	42
3.3	Program Flow Logic	43
4.	INPUT	65
4.1	Input Format	65
4.2	Phase Specification	65
4.3	Multiple Case Capability	66
4.3.1	Introduction	66
4.3.2	Definition	67
4.3.3	Use of Multicase Option	68
4.4	Glossary of Input Variables	69
4.5	Program Constants	83
4.6	Input Flow Chart	85
5.	STATE VECTOR INITIALIZATION	95
5.1	Ephemeris Injection Time	95
5.1.1	Ephemeris Errors	96
5.2	Earth Reference Options	96
5.2.1	Inertial Geocentric Cartesian Coordinates	96
5.2.2	Inertial Geocentric Polar Coordinates	97
5.2.3	Rotational Geodetic Polar Coordinates	98
5.2.4	Earth - Moon Plane Cartesian Coordinates	99
5.2.5	Earth - Moon Plane Polar Coordinates	99

CONTENTS (Continued)

Page

5.2.6 Inertial Cartesian Earth-centered Plumbline Coordinates 100
5.2.7 Inertial Geocentric Cartesian Restart Coordinates 101
5.2.8 Geocentric Inertial Orbital Elements 101
5.2.9 Geocentric Earth Relative Orbital Elements . . 102
5.2.10 Geographic Polar Coordinate/Orbital Element Combination 102

5.3 Moon Reference Options 102

5.3.1 Inertial Selenocentric Cartesian Coordinates 103
5.3.2 Earth - Moon Plane Polar Coordinates 104
5.3.3 Rotational Selenographic Polar Coordinates . . 104
5.3.4 Rotational Selenographic Cartesian Coordinates 105
5.3.5 Inertial Selenocentric Polar Coordinates 105
5.3.6 Earth - Moon Plane Cartesian Coordinates . . 106
5.3.7 Inertial Selenocentric Cartesian Restart Coordinates 107
5.3.8 Selenocentric Orbital Elements 107
5.3.9 Selenographic Polar Coordinate/Orbital Element Combination 108

6. TRAJECTORY DETERMINATION 109

6.1 Coasting Phase Rectification Control 109

6.2 Integration Step-size Control - Thrust Phase 110

6.3 Integration Step-size Control - Coast Phase 110

7. GUIDANCE 113

7.1 Guidance Equations Options 113

7.1.1 GUID1 - Calculates the Velocity Required to Inject a Vehicle Into a Circular Orbit Which Satisfies the Given Constraints 113
7.1.2 GUID2 - Calculates the Velocity Required to Inject on a Transearth Orbit Satisfying the Given Constraints 114
7.1.3 GUID3 - Calculates the Velocity Required to Inject on a Translunar Orbit Satisfying the Given Constraints 116
7.1.4 GUID4 - Calculates Velocity Required for Specified Terminal Conditions 116
7.1.5 GUID5 - Calculates Thrust Acceleration During a Powered Descent Phase 118
7.1.6 GUID6 - Miscellaneous Thrusting Modes 122

CONTENTS (Continued)

Page

7.1.7 GUID7 - Establishes Direction and Magnitude of Thrust Acceleration Using LM Ascent Guidance Logic 123
7.1.8 GUID8 - Calculates the Required Velocity for Terminal Rendezvous and Lambert's Steering 125
7.1.9 GUID9 - Iterative Guidance 126
7.1.10 GUID10 - Calculates the Velocity Required for Abort Maneuvers 131
7.1.11 Open Loop Steering 132

8. ATMOSPHERE AND VEHICLE DESCRIPTION 133

8.1 Vehicle Identification 133

8.2 Atmosphere 133

8.3 Vehicle Characteristics 134

8.3.1 Vehicle Mass 134
8.3.2 Vehicle Aerodynamics and Center of Gravity Characteristics 135

8.3.2.1 Aerodynamics 135
8.3.2.2 Center of Gravity Characteristics . . 135

8.3.3 Vehicle Moment Balance 136
8.3.4 Engine Hinge Angles 137

8.4 Vehicle Initialization for Docking and Separation 137

8.4.1 Vehicle Docking 137
8.4.2 Vehicle Separation 138

8.5 Attitude Control During Phase Execution 139

8.5.1 Guidance Steering 139
8.5.2 Gravity Turn 139
8.5.3 Local Horizontal Maintenance 140
8.5.4 Tabular Input for Turning Rates 141
8.5.5 Angular Displacement Polynomial for Y-axis 142
8.5.6 Angular Rate Polynomial 142
8.5.7 Vehicle to Vehicle Line-of-Sight Attitude Maintenance (to be Used with ATYPE = 11 Option, See Section 8.7.10) 143
8.5.8 Attitude Reorientation Maneuver 143
8.5.9 Attitude Pitch Angle of Attack and Bank Angle Maintenance 145

8.6 IMU Alignments 145

8.6.1 IMU Aligned with Initial Guidance Maneuver Attitude 145
8.6.2 Input of the IMU Axes 146

CONTENTS (Continued)

Page

8.6.3 Local Horizontal Alignment 147
8.6.4 Sun - Earth Line Alignment 148
8.6.5 Launch Site Alignment 148
8.6.6 LM Landing Site Alignment 149
8.6.7 Velocity Alignment 150
8.6.8 Negative Velocity Alignment 150
8.6.9 Solar Orientation Alignment 151
8.6.10 Vehicle-to-Vehicle Line-of-Sight IMU Alignment 152
8.6.11 IMU Alignment Based on Pitch Angle of Attack and Bank Angle 153

8.7 Vehicle Attitude System 153

8.7.1 Vehicle Attitude Aligned with Initial Guidance Maneuver Attitude 154
8.7.2 Input of Vehicle Dynamic Axes 154
8.7.3 Local Horizontal Alignment 155
8.7.4 Sun - Earth Line Alignment 156
8.7.5 Launch Site Alignment 157
8.7.6 LM Landing Site Alignment 158
8.7.7 Velocity Alignment 158
8.7.8 Negative Velocity Alignment 159
8.7.9 Solar Orientation Alignment 159
8.7.10 Vehicle-to-Vehicle Line-of-Sight Attitude Alignment 160
8.7.11 Vehicle Alignment Based on Pitch Angle of Attack and Bank Angle 161

8.8 Instantaneous Maneuvers About the Vehicle and IMU Axes 162

8.9 Attitude Alignment Based on IMU Gimbal Angles 162

8.10 Vehicle Windows 163

9. GRAVITY MODEL 177

10. PHASE TERMINATION 179

10.1 Coast Phase Termination - Moon Reference 179

10.1.1 Orbit Count 179
10.1.2 Selenographic Longitude 179
10.1.3 Declination 179
10.1.4 Selenographic Latitude 180
10.1.5 Altitude Above Spherical Moon 180
10.1.6 Selenocentric Flight Path Angle 180
10.1.7 Central Angle 180
10.1.8 Central Angle Time 181

CONTENTS (Continued)

		Page
10.2	Coast Phase Termination - Earth Reference	181
10.2.1	Orbit Count	181
10.2.2	Geographic Longitude	182
10.2.3	Geocentric Declination	182
10.2.4	Geodetic Latitude	182
10.2.5	Altitude Above Oblate Earth	182
10.2.6	Geocentric Flight Path Angle	183
10.2.7	Earth Relative Flight Path Angle	183
10.2.8	Central Angle	183
10.2.9	Central Angle Time	184
10.3	Back Up Terminations for All Phases	184
10.3.1	Two Vehicle Minimum Radius Difference	184
10.3.2	Time	184
10.3.3	Maximum Distance from Earth	184
10.3.4	Minimum Distance from Earth	185
10.3.5	Maximum Allowable Distance from Moon	185
10.3.6	Minimum Allowable Distance from Moon	185
10.4	Descent Phase Termination Options	185
10.4.1	Phase Time Lapse	185
10.4.2	Hohmann Descent Initiation	186
10.4.3	Hohmann Initiation Time for Non-pericynthion Initation of Powered Descent	186
10.5	Ascent Phase Termination Options	186
10.5.1	LM Liftoff Based on CSM Phase Angle	186
10.5.2	LM Liftoff Based on Concentric Flight Plan	187
10.5.3	LM Liftoff Without CSI Maneuver	187
10.5.4	Transfer Initiation Based on CSM Lead Angle	188
10.5.5	Transfer Initiation Based on Angle Between Earth Line and LM	188
10.5.6	Immediate Transfer	188
10.5.7	Transfer Initiation After Coast	189
10.5.8	Transfer Initiation on LM to CSM Look Angle	189
10.5.9	CSI Maneuver Computed After Ascent Burn	189
10.5.10	Coast Prior to CSI Burn	190
10.5.11	Coast Prior to Circularization Burn (Coast Through Time)	190
10.5.12	Coast Prior to Circularization Burn (Coast Through Angle)	190
10.5.13	Central Angle Coast	190
10.5.14	Terminal Rendezvous Termination (Range, Range Rate)	191

CONTENTS (Continued)

Page

10.5.15 Terminal Rendezvous Termination (Time from Liftoff) 191
10.5.16 Terminal Rendezvous Termination (Range, Range Rate Adjusted) 191
10.5.17 Terminal Rendezvous Termination (Continuation of Previous Option) 192
10.5.18 Terminal Rendezvous Termination (Discontinue LM Vehicle) 192
10.5.19 Attitude Maneuver Termination 192
10.5.20 Time Lapse from a Reference Point Termination 192

11. RADAR 195

11.1 Input 195

11.1.1 Selection of the Radar Station from the Table of Radar Stations 195
11.1.2 Manual Input of the Radar Station 195
11.1.3 Additional Radar Input 196
11.1.4 Tolerance Inputs for Event Determination . . 196

11.2 Output Selection 197

11.3 Error Messages 198

11.3.1 Input Error Messages 198
11.3.2 Initialization Error Messages 198
11.3.3 Event Error Messages 198

11.4 Table of Radar Stations 199

12. STAR AND LANDMARK SIGHTING 203

12.1 Star Input 203

12.1.1 Selection of the Star from the Table of Star Data 203
12.1.2 Manual Input of the Star 203
12.1.3 Additional Star Input 204

12.2 Landmark Input 204

12.2.1 Selection of the Landmark from the Table of Landmark Data 204
12.2.2 Manual Input of the Landmark 205
12.2.3 Additional Landmark Input 205

12.3 Error Messages 206

12.3.1 Input Error Messages for Star Data 206
12.3.2 Input Error Messages for Landmark Data . . 206
12.3.3 Initialization Error Messages 207

12.4 Output Selection 207

CONTENTS (Continued)

Page

13. ERROR ANALYSIS 219

13.1 Hardware Errors 219

13.1.1 Nominal Errors 219
13.1.2 Hardware Perturbations 220

13.2 Perturbation of State Vectors and Spacecraft Weight . . 221

14. TABLES 223

14.1 Symbols for Table Description 223

14.1.1 Simple Table 224
14.1.2 Master Table 224
14.1.3 Constant Value Table 225
14.1.4 Polynomial Expansion Table 225

14.2 Interpolation Types - Applicable for Master and Simple Tables Only 226

14.3 Tabular Data Format - Applicable for Master and Simple Tables Only 226

14.4 Extended Range Option Input as ERO = VALUE 226

14.5 Multipliers and Added Term 226

14.6 Restrictions 227

14.7 Core Available 227

14.8 Input Tables 227

15. VARIABLE TAPE FORMAT 229

15.1 Input Indicators 229

15.2 Tape Format 229

15.3 Example Problems 230

16. LM S-BAND COMMUNICATIONS AVAILABILITY ROUTINE (LSCAR) 233

16.1 Introduction 233

16.2 ARM Variable Format Tape Requirements 233

16.3 LSCAR Card Input Rules 234

16.4 Detailed LSCAR Input Instructions 234

16.4.1 Input Flags and Data 234

16.4.1.1 Fixed Point 234
16.4.1.2 Floating-point Data 235
16.4.1.3 Lunar Landing Time 235

CONTENTS (Continued)

Page

16.4.2 Example Inputs 236

16.5 Tape Setup 236

16.6 Multiple Case Capability 236

17. SC - 4020 PLOT OPTIONS 237

17.1 Group A Inputs 237

17.2 Group B Inputs 237

17.3 Other Inputs 238

17.4 Notes 238

17.5 Error Messages 238

17.6 Values of NCHAR - Plotting Symbols 239

17.7 Example of SC - 4020 Plot Case 240

18. REPORT GENERATOR FOR VARIABLE TAPE FORMAT . . . 243

18.1 Description 243

18.2 External Devices 243

18.3 Program Decks 243

18.4 Data Card Input 243

18.5 Error Messages 249

18.6 Restrictions 249

19. SUMMARY PRINT 251

19.1 Description 251

19.2 External Devices 251

19.3 Program Decks 251

19.4 Data Card Input 251

19.5 Consecutive Tables 254

19.6 Sample Test Case 255

19.7 Sample Output from Test Case 256

20. GENERALIZED ITERATOR 257

20.1 Input for Each Iteration Loop 257

20.2 Input for Each Independent Variable 258

20.3 Input for Each Dependent Variable 258

20.4 Input for Each Class 2 Variable 259

CONTENTS (Continued)

Page

20.5 Phase Restrictions 259

20.6 Independent Variable Restrictions 259

20.7 Print Options to Monitor the Iteration 259

20.8 Iterator Symbol Types 259

20.9 Example Iterator Input 260

21. OUTPUT 261

21.1 Print Control 261

21.2 Output Description 265

21.2.1 Output at Beginning of Each Phase 265
21.2.2 Output at Each Print Point 266

21.3 Print Groups 266

21.3.1 Shadow Print 266
21.3.2 Computation Identification 267
21.3.3 Restart Coordinates 267
21.3.4 Thrust Output 268
21.3.5 Selenocentric Reference 269
21.3.6 Selenographic Reference 269
21.3.7 Geocentric Reference 270
21.3.8 Earth - Moon Plane 271
21.3.9 Planetary Coordinates 271
21.3.10 Keplerian Osculating Elements 272
21.3.11 Selenocentric Osculating Elements 273
21.3.12 Unit Vectors 273
21.3.13 Body Attitude and Forces 274
21.3.14 Two-body and XI Terms 275
21.3.15 Perturbative Accelerations 276
21.3.16 Topocentric Sighting Angles 276
21.3.17 Rendezvous Parameters 278
21.3.18 Landing Site Coordinates 279
21.3.19 Iterative Guidance Print 280
21.3.20 Radar Output 282

21.3.20.1 Radar Tracking Data Output . . . 282
21.3.20.2 Radar Event Output 283
21.3.20.3 Radar Event Output with Vehicle State Vector and Radar Tracking Data 283
21.3.20.4 Radar and Shadow Summary Print 283

21.3.21 Sight Output 284

21.3.21.1 Star Output 284
21.3.21.2 Star-Star Output 285

CONTENTS (Continued)

Page

21.3.21.3 Landmark Output 286
21.3.21.4 Star - Landmark Output 287

21.3.22 Geographic Output 287

22. SAMPLE TEST CASES 293

INTRODUCTION

This document provides instructions for the use of the Apollo Reference Mission Program (ARMP), a digital computing program written in the FORTRAN IV language. This program has the capability of mathematically simulating the dynamics of a lunar landing mission from earth launch through earth reentry including all vehicle maneuvers. Multiple stacked input phases for simulating a complete mission or a specific series of mission events may be executed in one machine loading. A phase may be defined as the generation of an individual, continuous trajectory segment, whether coasting or thrusting. The program is presently limited to the calculation of trajectories in earth-moon space.

A simplified diagram of the ARMP control logic is shown below. A more complete description may be found in the overlay structure.

Control Logic Design

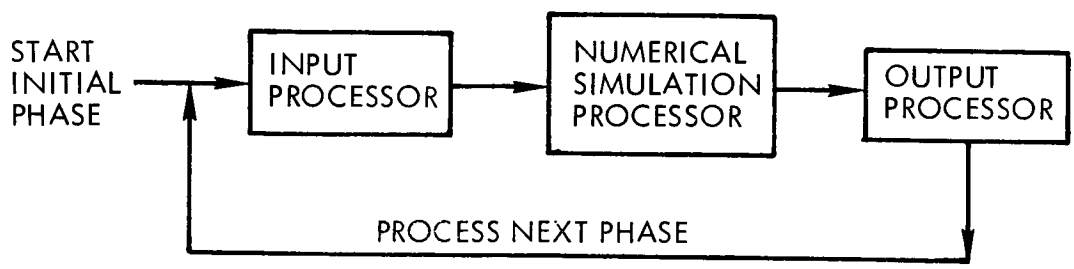

A. Input Processor

1. Input
2. Initialization

B. Numerical Simulation Processor

1. Cowell formulation
2. Encke formulation
3. Analytic prediction formulation

C. Output Processor

1. Process trajectory data on paper
2. Process trajectory data on microfilm
3. 4020 microfilm plots of any data combination
4. Generate tape with various combinations of output for interfacing with other programs

Under the heading of Numerical Simulation Processor are the three basic modes of trajectory computation in coast phases. The Cowell and Encke formulations each numerically integrate the second order equations of motion by employing a Cowell/Adams-Moulton-Bashforth sixth order prediction and correction method with finite differences. Starting values are obtained by Nystrom's version of the fourth order Runge-Kutta equations. The Cowell formulation directly integrates in rectangular coordinates, while the Encke formulation integrates noncentral body forces and solves analytically for the motion caused by the spherical primary body. For both methods, the second derivative includes the gravitational attractions of the sun and the nonreference body of the earth-moon system which are considered as point masses. In earth reference, perturbations include the effects of the second, third, and fourth zonal harmonics, and the second tesseral harmonic of the earth's gravitational field. In moon reference, the triaxial lunar potential is included. Drag perturbations on vehicles operating in the earth's atmosphere may also be included. The third mode of coast trajectory computation uses the two-body equations of motion to obtain an analytic solution. All thrust trajectories are computed by numerical integration using Nystrom's fourth order Runge-Kutta technique.

The ARMP is capable of generating trajectories using a fixed or variable integration step size. Variable step integration is controlled by a technique based on fifth and sixth order differences; fixed step integration control is set by the user. The program divides the earth-moon space into four regions for integration purposes. Switching of the reference body is performed automatically based on the relative position of the spacecraft.

The problem of orbit prediction over long periods of time requires a precise technique for integrating the equations of motion. The Encke

perturbation method requires minimum machine computation time with a minimum loss of numerical accuracy. The orbit prediction scheme uses a modified form of the Encke method. The initial position and velocity replace the conventional P and Q vectors of the Encke scheme. Numerical ambiguities arising from near circular orbits of low inclination are eliminated by avoiding reference to the position of perigee. When accuracy is not a governing criterion, extremely large integration intervals may be used in the Encke mode. This allows the program to approach patched conic speeds and still retain a high degree of accuracy.

The primary reference coordinate system in which all trajectory computations are made is a mean-of-epoch system. In this system the epoch is the beginning of a Besselian year nearest to the mission base time. The beginning of the Besselian (fictitious) solar year is when the right ascension of the fictitious mean sun, affected by aberration and measured from the mean equinox, is $18^h\ 40^m$. This instant always occurs near the beginning of the calendar year and is denoted by the notation .0 after the year; i.e., the beginning of the Besselian solar year 1960 is January $1^d.345$ E.T. = 1960.0. The crossover time for changing the reference epoch is 180 calendar days into the year (4320 hrs from 0.0^h January 1). This change of epoch time corresponds to 24^h (midnight) June 29 in a common year and 24^h June 28 in a leap year.

After the reference epoch has been defined, the inertial geocentric coordinate system is described by the X-axis coincident to the intersection of the mean equatorial plane and the mean ecliptic plane of epoch. The intersection of these planes is known as the mean-of-epoch line of equinoxes. The X-Y plane is the mean equatorial plane of epoch and the Z-axis is coincident with the earth's mean axis of rotation. (See the figure depicting the geocentric inertial system in the coordinate systems section of this manual.)

The following are some advantages of using the mean-of-epoch coordinates system. The precession of the earth can generally be neglected in computing the earth's oblateness acceleration. Since the reference equinox is always within six months of the mean equinox of date, the maximum deviation in the pole, caused by precession, is about 10

inches which gives an error of approximately $.5 \times 10^{-4}$ times the oblateness perturbation. If the epoch is as much as 10 years away, the error would be approximately 10 times the oblateness perturbation. This error is about the size of the third and fourth order zonal harmonic term and would have to be accounted for in the numerical simulation. The precession of the pole must be considered in the transformation between the earth fixed and the mean-of-epoch coordinate system. If the reference equinox is near the mean equinox of date, this transformation is small and many simplifications can be made. In fact, precession can be described by small angle rotations about the Y and Z axes. The mean-of-epoch coordinate system referenced to the beginning of the Besselian year is in common usage. It is desirable to remain compatible with AGC (Apollo Guidance Computer). For these reasons, the numerical integration and the planetary ephemeris tape are defined in the mean-of-epoch coordinate system. This system requires all phases of the mission to be referenced to the same epoch year. The program automatically chooses the proper reference epoch.

The initial state vector may be referenced through input to either the earth or moon. Eight different sets of coordinate options are available for each reference body. Also available is the ability to recall the initial state vector of the previous phase to use as an initial point for the current phase. Two vehicles may be simulated simultaneously provided both are referenced to the same central body.

Thrust phases require a specification of the initial vehicle mass, the thrust magnitude and either the mass flow rate or the specific impulse. The last three may be input in tabular form. A quantity of mass may be jettisoned at the start of a phase. This may be necessary to take into account a mass loss, such as boiloff, in the preceding coast phase. Integration step size control independent of the vehicle's position in space is available in thrust phases. Only one vehicle at a time may be thrusting.

Several guidance options are available for the control of thrusting phases. In addition to the capability of operating open loop, guidance is available for circular orbit insertion, translunar injection, transearth

injection, a burn prior to Hohmann transfer coast, lunar descent and ascent, rendezvous maneuvers, midcourse maneuvers, and iterative guidance.

The ARMP may be used to investigate error analysis using perturbations in hardware accuracy, vehicle position and velocity, and vehicle weight. These perturbations may be used to generate the partials required for a powered flight sensitivity matrix. The aerodynamic behavior of a spacecraft may be determined by using fixed or variable coefficients to specify the characteristics of the vehicle. The effect of winds upon the vehicle may be included by defining wind velocity and direction. Atmospheric density and pressure information is nominally provided by the 1962 U.S. standard atmosphere, but may be altered by tabular input.

Special features of the ARMP include a single loop generalized iterator and a special multiple case option. The iterator may be used to select or optimize a trajectory to satisfy mission constraints. The multiple case option minimizes the input effort required by the user in simulating successive trajectories of a similar nature.

The basic output of ARMP is grouped into seventeen blocks which are individually available to the user. In addition to these blocks of data, information of a less general nature may be obtained. Of particular usefulness is the information concerning the radar stations currently tracking a vehicle and the lighting condition of the vehicle. The program also provides an optional plotting capability to plot data in various formats. Other specialized output may be obtained through the use of the ARM Variable Tape Format capability. Through use of this feature the Report Generator and Summary Print capabilities may be utilized to produce output conforming to a user's special needs. It can also be used to conduct special studies of trajectory constraints based on the LM S-band antenna limitations.

The ARMP is being developed by the Mission Planning and Analysis Division in conjunction with TRW Systems under contract number 9-4810 (Task A-11). The program development is under the overall direction of Mr. M.D. Jenness and Mr. A.A. Menchaca.

1. CHANGES FROM ARM04

1.1. CHANGED SUBROUTINES

AERO3D	MOMENT BALANCE EQUATICNS REMOVED.
ATMOS	SET AIR PRESSURE, DENSITY, AND SPEED OF SOUND TO ZERO WHEN ABOVE MEANINGFUL ATMOSPHERE.
ATTCON	NEW ATTITUDE ALIGNMENT OPTIONS ADDED.
BLKDAT	PLOT ROUTINE CONVERTED TO 1108.
BLOCK	CHANGED FROM BLOCK DATA TO SUBROUTINE.
BLOSET	NEW OSET COMMON ADDED.
BSET	BODY ATTITUDE AND FORCES PRINT BLOCK CHANGED.
CDATX	PLOT ROUTINE CONVERTED TO 1108.
CDDATA	MODIFIED SO A COMMA IS NOT NEEDED BETWEEN A SYMBOL AND A SUBSCRIPT.
CINT	MINOR MODIFICATIONS.
CMPRS	MODIFICATIONS FOR MULTI CASE CAPABILITY.
CNVRT	ADDITION OF ORBITAL ELEMENTS INPUT.
CTSRCH	MINOR MODIFICATICNS.
CATE	MINOR MODIFICATIONS.
DERIV	MINOR MODIFICATIONS.
DFLPN	MINOR MODIFICATICNS.
DTERM	PHASE TIME LAPSE TERMINATION REMOVED.
EBLOCK	CHANGED FROM BLOCK DATA TO SUBROUTINE.
EMSET2	OSET COMMON BLOCK INCREASED.
EVEN	PLOT ROUTINE CONVERTED TO 1108.
FCOMP	ROUTINE REPLACED WITH NEW VERSICN.
GD5	SEVERAL MODIFICATIONS TO GUIDANCE COMPUTATIONS.
GD7	MODIFICATIONS TO GUIDANCE COMPUTATIONS.
GD10	MINOR MODIFICATIONS.
GD123	MINOR MODIFICATIONS.
GEMLD1	PLOT ROUTINE CONVERTED TO 1108.
GTERPA	MODIFICATIONS TO STEP TABLES.
GUIDE	MODIFICATIONS TO GUICANCE STEP SIZE (DTGUID).
IGPCMP	NEW OPTIONS ADDED.
IMUALN	NEW ALIGNMENT OPTICNS ADDED.
IMUERR	MINOR MODIFICATIONS.
ITGUID	NEW OPTIONS ADDED.
ITPRT	ITERATIVE GUIDANCE PRINT BLOCK CHANGED.
KOSET4	OSET COMMON BLOCK INCREASED.
LAMB	MINOR MODIFICATIONS.
LIMIT	PLOT ROUTINE CONVERTED TO 1108.
LOAD	MINOR MODIFICATIONS.
LOGR	PLOT ROUTINE CONVERTED TO 1108.
LSSET9	OSET COMMON BLOCK INCREASED.
MAIN	PLOT ROUTINE CONVERTED TO 1108.
MTRXMP	MODIFIED SO THE RESULT MAY BE STORED IN ONE OF THE MATRICES MULTIPLIED.
NAVIG	AVERAGE GRAVITY CCMPUTATION MOVED TO NEW ROUTINE.
ORBIT	MINOR MODIFICATIONS.
OSCUL	MINOR MODIFICATICNS.

OUTINT	MINOR MODIFICATIONS.
OUTPRC	MINOR MODIFICATIONS.
PASET7	OSET COMMON BLOCK INCREASED.
PCSET3	OSET COMMON BLOCK INCREASED.
PERTB	CAPABILITY ADDED TO GET PARTIALS PUNCHED ON CARDS. OTHER MINOR MODIFICATIONS.
PLT1	PLOT ROUTINE CONVERTED TO 1108.
PLTX	PLOT ROUTINE CONVERTED TO 1108.
POLAR	MINOR MODIFICATIONS.
PRECES	MINOR MODIFICATIONS.
PRLIST	MINOR MODIFICATIONS.
PRN617	OUTPUT PRINT CONTROL LOGIC CHANGED.
PROCIN	PART OF ROUTINE MOVED TO SUBROUTINE PHINIT. VEHICLE SEPARATION AND DOCKING LOGIC ADDED. SEVERAL MINOR MODIFICATIONS.
PVSET1	OSET COMMON BLOCK INCREASED.
RADAR	RADAR SUMMARY PRINT CAPABILITY ADDED.
RHRADR	MINOR MODIFICATIONS.
RHSHAD	MINOR MODIFICATIONS.
RKINT	INTEGRATION OF SENSED ACCELERATION ADDED.
RPRINT	OUTPUT FORMAT CHANGED.
SHADOW	MINOR MODIFICATIONS.
SIGHT	MINOR MODIFICATIONS.
SLDAT1	CHANGED FROM BLOCK DATA TO SUBROUTINE.
SLDAT2	CHANGED FROM BLOCK DATA TO SUBROUTINE.
SLDAT3	CHANGED FROM BLOCK DATA TO SUBROUTINE.
SPRFLG	MINOR MODIFICATIONS.
SPRINT	OUTPUT FORMAT CHANGED.
STDRIV	MODIFICATION TO GUIDANCE TIME STEP. MODIFICATIONS TO PRINT CONTROL LOGIC. SEVERAL MINOR MODIFICATIONS.
STEP	MINOR MODIFICATIONS.
STERM	MODIFIED LONGITUDE TERMINATION FOR POINTS OF DISCONTINUITY.
SYMBOL	CALL SYMDAT.
SYMDAT	SEVERAL NEW INPUT SYMBOLS ADDED.
SYMPRC	COMMENTS ADDED.
SYMTAB	PLOT ROUTINE CONVERTED TO 1108.
TBODY	CHANGED CALL TO FCCMP.
TBSET6	OSET COMMON BLOCK INCREASED.
TCSET8	RENDEZVOUS PARAMETERS PRINT BLOCK CHANGED.
TCUT	MODIFICATIONS TO DELV CUTOFF.
TERMIN	FTIME, REOR, AND PLTIME CUTOFF ADDED.
THRUST	MINOR MODIFICATIONS.
TPROC	MINOR MODIFICATIONS
TRWLOD	MODIFIED SO A COMMA IS NOT NEEDED BETWEEN A SYMBOL AND A SUBSCRIPT.
TS26	MINOR MODIFICATIONS.
TSET11	THRUST OUTPUT PRINT GROUP CHANGED.
TURN	NEW OPTIONS ADDED.
UVSET5	OSET COMMON BLOCK INCREASED.
WVET9	MINOR MODIFICATIONS.

1.2. NEW SUBROUTINES

ARM05	MAIN CONTROL PROGRAM OF ARMP
ARMP5	ARMP OVERLAY MAP RCUTINE.
AVEGIN	AVERAGE GRAVITY INTEGRATION PACKAGE.
CDDAT	INPUT ROUTINE WHICH IS EQUIVALENT TO CDCATA EXCEPT FOR MINOR MODIFICATIONS.
COND	SUBROUTINE TO CONVERT DEGREES TO DEGREES,MINUTES, AND SECONDS.
CONVT	SUBROUTINE USED TO CCNVERT SECONDS TO DAYS,HOURS, MINUTES AND SECONDS.
EPHINT	EPHEMERIS TAPE INITIALIZATION.
FORM	SUBROUTINE TO STORE VARIABLE FORMATS.
GONOGO	COMPUTES AZIMUTH AND ELEVATION LOCK ANGLES.
GRID	TESTS FOR ACCEPTABILITY OF S-BAND LOOK ANGLES.
HEAD	ROUTINE TO CONTROL HEADING PRINT AT THE BEGINNING OF EACH PRINT POINT.
HEADER	SUBROUTINE WHICH WRITES TABLE AND COLUMN HEADINGS FOR THE SUBROUTINE RGEN1.
IMAGE	RESETS CCMMON FOR MULTI-PHASE TRAJECTORIES
INPRC	ROUTINE USED TO CALL TRWLOD, WHICH IS MORE THAN 1 LINK LOWER THAN ARM05.
IPROC	INPUT PROCESSOR FOR THE ITERATOR
INTEGR	ENCKE LOOK-AHEAD INTEGRATICN PACKAGE.
ITDRIV	DRIVES THE FORWARD ITERATOR
ITER	THE MODIFIED MSC FORWARD ITERATOR
ITERAT	SEARCHES FOR LM BODY YAW ANGLE WITH ACCEPTABLE LOCK ANGLES.
ITERPR	ITERATION SUMMARY PRINT
LDLINK	ROUTINE USED TO CALL PHINIT,STDRIV,OR PERTB WHICH IS MORE THAN 1 LINK LOWER THAN ARM05.
LEGS	THE LINEAR EQUATICN SOLVER FOR THE ITERATOR
LSCAR	LM S-BAND COMMUNICATIONS AVAILABILITY MAP ROUTINE
LSCAR2	LSCAR MAIN CONTROL VERSION 2.
MOBAL	COMPUTES MOMENTS AND BALANCES FOR 3-D CAPABILITY.
MULCAS	MULTIPLE CASE CAPABILITY CONTROL.
NOPRNT	CONTROLS AMOUNT OF PRINT DURING ITERATION
PHINIT	INITIALIZES DATA AT THE BEGINNING OF EACH PHASE
PLOT	PLOT PACKAGE OVERLAY MAP ROUTINE.
PLOTA	PLOTS S-BAND COMMUNICATIONS AVAILABILITY VS. LM YAW ANGLE.
PRINT	ROUTINE USED TO PRINT THE PRINT GROUPS SELECTED.
PRTPR	RADAR AND SHADOW SUMMARY PRINT OUTPUT ROUTINE.
REORNT	CCMPUTES THE ROLL, PITCH/YAW, AND ROLL MANEUVERS NECESSARY TO REORIENT FROM THE PRESENT VEHICLE ATTITUDE TO A DESIRED ATTITUDE.
REPORT	REPORT GENERATOR MAP ROUTINE.
RGEN	REPORT GENERATOR MAIN PROGRAM
RGEN1	REPORT GENERATOR MAIN PROGRAM TO BE USED WITH TAPE CREATED BY VLIST OPTION IN CONJUNCTION WITH A BGEND OPTION.

ROCT	APPLIES THE ROLL, PITCH/YAW, AND ROLL RATES COMPUTED IN REORNT.
SETUP	INITIALIZES ITERATOR COMMON AND CHECKS LEGALITY OF THE CASE
SHADW	DETERMINES WHEN LM IS OCCULTED BY MOON.
SUMPRT	REPORT GENERATOR MAP ROUTINE TO BE USED WITH A TAPE CREATED BY VLIST OPTION IN CONJUNCTION WITH A BGEND OPTION.
SYMBA	INITIALIZE SYMBOL TABLE FOR LSCAR.
SYMBP	INITIALIZES SYMBOL TABLE FOR PLOT PACKAGE.
TRWINP	GENERALIZED INPUT ROUTINE SIMILAR TO TRWLOD EXCEPT THAT THERE ARE NO TAPES OR SPECIAL PREPROCESSORS USED.
VTAPEI	VARIABLE FORMAT INTERFACE TAPE INPUT.
YSRCH	A ROUTINE USED WITH THE ITERATOR TO SEARCH THE OSET COMMON ARRAY TO CHECK THAT THE REQUESTED DEPENDENT VARIABLE IS VALID.

1.3. DELETED SUBROUTINES

BLOTAB

1.4. NEW INPUTS

*NOTE - SEE SECTION 4.4. FOR REFERENCES TO THE SECTIONS WHERE DETAILED DEFINITIONS AND EXAMPLES MAY BE FOUND.

ANOMN	MEAN ANOMALY (SELENOCENTRIC OR GEOCENTRIC)
ANOMT	TRUE ANOMALY (SELENOGRAPHIC OR GEOGRAPHIC POLAR/ ORBITAL ELEMENT COMBINATION REFERENCE)
APOR	APOCYNTHION RADIUS (SELENOGRAPHIC OR GEOGRAPHIC POLAR/ORBITAL ELEMENT COMBINATION)
ARGPC	ARGUMENT OF PERICYNTHION (SELENOCENTRIC OR GEOCENTRIC)
BGEND	FLAG USED IN CONJUNCTION WITH REPORT GENERATOR SUMMARY PRINT PROGRAM TO INDICATE IF DATA IS TO BE WRITTEN ON THE VARIABLE FORMAT TAPE AT EVERY PRINT POINT OR ONLY AT THE BEGINNING AND END OF A PHASE.
BKANG	BANK ANGLE (DEG).
CA1,CA2	AXIAL DRAG COEFFICIENT ALONG THE NEGATIVE X-BODY AXIS (VEHICLES 1 AND 2)(ND).
CLASS	TYPE OF ITERATOR DEPENDENT VARIABLE.
CLIFT1	LIFT COEFFICIENT ALONG THE DIRECTION OF /(VR X Z) X VR/ FOR VEHICLE 1 (ND).
CLIFT2	LIFT COEFFICIENT ALONG THE DIRECTION OF /(VR X Z) X VR/ FOR VEHICLE 2 (ND).
CODE	CODE OF 6 CHARACTERS DESIRED ON PUNCHED PARTIALS OUTPUT
D	VEHICLE VELOCITY DIRECTIONAL FLAG (SELENOGRAPHIC OR GEOGRAPHIC POLAR/ORBITAL ELEMENT COMBINATION

	REFERENCE)
DEPV	NAME OF THE ITERATOR DEPENDENT VARIABLE.
DTLPS	TIME LAPSE BEFORE ATTITUDE MANEUVER INITIATION (SEC). DIMENSIONED FOR 2 VEHICLES.
DTMIN	MINIMUM ATTITUDE MANEUVER DURATION (SEC). DIMENSIONED FOR 2 VEHICLES.
ENDFP1	ENGINE DEFLECTION ANGLE ABOUT THE VEHICLE Y-AXIS. POSITIVE ANGLE DEFLECTS THE THRUST VECTOR TOWARD THE NEGATIVE Z-AXIS (DEG).
ENDFPA	ENGINE DEFLECTION ANGLE ABOUT THE VEHICLE Y-AXIS FOR ATTITUDE ALIGNMENT. POSITIVE ANGLE DEFLECTS THRUST VECTOR TOWARD NEGATIVE Z-AXIS. (DEG)
ENDFPI	ENGINE DEFLECTION ANGLE ABOUT THE VEHICLE Y-AXIS FOR IMU ALIGNMENT. POSITIVE ANGLE DEFLECTS THE THRUST VECTOR TOWARD NEGATIVE Z-AXIS. (DEG)
ENDFY1	ENGINE DEFLECTION ANGLE OUT OF THE VEHICLE X-Z PLANE. POSITIVE ANGLE MOVES THE THRUST VECTOR TOWARD THE VEHICLE Y-AXIS (DEG).
ENDFYA	ENGINE DEFLECTION ANGLE OUT OF THE VEHICLE X-Z PLANE FOR ATTITUDE ALIGNMENT. POSITIVE ANGLE MOVES THE THRUST VECTOR TOWARD THE VEHICLE Y-AXIS. (DEG)
ENDFYI	ENGINE DEFLECTION ANGLE OUT OF THE VEHICLE X-Z PLANE FOR IMU ALIGNMENT. POSITIVE ANGLE DEFLECTS THE THRUST VECTOR TOWARD THE VEHICLE Y-AXIS. (DEG)
IGA	LM IMU INNER GIMBAL ANGLE
INDEPV	NAME OF THE ITERATOR INDEPENDENT VARIABLE.
IPHASE	EITHER THE PHASE WHERE THE INDEPENDENT VARIABLE IS VARIED OR THE DEPENDENT VARIABLE IS COMPUTED, DEPENDING WHICH SYMBOL, 'INDEPV' OR 'DEPV' LAST APPEARED PREVIOUS TO IPHASE. (ITERATOR INPUT)
ITERPR	PRINT OPTION OF THE ITERATOR
K3	INITIAL ROLL MANEUVER FLAG. DIMENSIONED FOR 2 VEHICLES.
LGMULT	LAGRANGE MULTIPLIERS OPTION FOR THE ITERATOR
LOOP	THE NUMBER OF THE ITERATION LOOP
MGA	LM IMU MIDDLE GIMBAL ANGLE
NAZBP	NUMBER OF AZIMUTH BLIPS WITH HAND CONTROLLER DOING REDESIGNATION
NEGTOL	VALUE SUBTRACTED FROM 'TARGET' TO OBTAIN A LOWER BOUND ON THE DEPENDENT VARIABLE
NELBP	NUMBER OF ELEVATION BLIPS WITH HAND CONTROLLER DOING REDESIGNATION
NLOOP	THE ITERATION LOOP WHERE THE ITERATOR USES THE VARIABLE. THIS SYMBOL ALSO HAS THE SAME DEPENENCY AS 'IPHASE' ON CARD ORDER IN THE INPUT.
NPLOTS	INTEGER VALUE OF NUMBER OF PLOTS FOR PRESENT PHASE OR SET OF PHASES
NPTNT	CONTROLS ARMP PRINT DURING ITERATION.
NTHRUS	NO THRUST GUIDANCE INDICATOR
OGA	LM IMU OUTER GIMBAL ANGLE
OINC	ORBITAL INCLINATION (SELENOCENTRIC OR GEOCENTRIC)

CMEGRP	DIMENSIONED FOR 4 WHERE CMEGRP(1) AND OMEGRP(3) ARE THE ROLL MANEUVER RATES FOR VEHICLE 1 AND 2 AND OMEGRP(2) AND (4) ARE THE PITCH/YAW MANEUVER RATES FOR VEHICLE 1 AND 2. (DEG/SEC)
CMODE	FLAG TO START THE ITERATOR IN THE OPTIMIZE MODE
OPTMAT	NUMBER OF PARTIAL DERIVATIVE MATRICES GENERATED IN THE OPTIMIZATION MODE OF THE ITERATOR
ORECC	ORBITAL ECCENTRICITY (SELENOCENTRIC OR GEOCENTRIC)
OSMA	ORBITAL SEMIMAJOR AXIS (SELENOCENTRIC OR GEOCENTRIC)
PAATK	PITCH ANGLE OF ATTACK (DEG).
PAXS1D	COMPONENTS OF A UNIT VECTOR ALONG VEHICLE 1 DESIRED Y-AXIS IN THE INERTIAL COORDINATE SYSTEM.
PAXS2D	COMPONENTS OF A UNIT VECTOR ALONG VEHICLE 2 DESIRED Y-AXIS IN THE INERTIAL COORDINATE SYSTEM.
PERR	PERICYNTHION RADIUS (SELENOGRAPHIC OR GEOGRAPHIC POLAR/ORBITAL ELEMENT COMBINATION)
PERT	PERTURBATION INCREMENT TO OBTAIN PARTIAL DERIVATIVES
PHASP	FLAG TO COMPUTE INTERMEDIATE PARTIALS
PLATP	GEODETIC OR SELENOGRAPHIC LATITUDE OF VEHICLE POSITION (DEPENDS ON INJECT)
PLON	SELENOGRAPHIC OR GEOGRAPHIC LONGITUDE OF VEHICLE POSITION
POSTOL	VALUE ADDED TO 'TARGET' TO OBTAIN AN UPPER BOUND ON THE DEPENDENT VARIABLE
PRRAD	FLAG USED IN CONJUNCTION WITH RADAR SUMMARY PRINT ROUTINE TO INDICATE IF DATA ARE TO BE WRITTEN AT EVERY PRINT POINT OR ONLY AT THE INITIAL POINT OF A PHASE.
PRSHAD	FLAG USED IN CONJUNCTION WITH SHADOW SUMMARY PRINT TO INDICATE IF LIGHTING CONDITION CHANGES ARE TO BE WRITTEN AT THE INITIAL POINT OF EACH PHASE.
RAAN	RIGHT ASCENSION OF ASCENDING NODE (SELENOCENTRIC OR GEOCENTRIC)
RAXS1D	COMPONENTS OF A UNIT VECTOR ALONG VEHICLE 1 DESIRED X-AXIS IN THE INERTIAL COORDINATE SYSTEM.
RAXS2D	COMPONENTS OF A UNIT VECTOR ALONG VEHICLE 2 DESIRED X-AXIS IN THE INERTIAL COORDINATE SYSTEM.
RBKANG	RATE OF CHANGE OF BANK ANGLE (DEG/SEC)
RCON	RADIUS VECTOR ON DESIRED CUTOFF ELLIPSE.
REFMAT	NUMBER OF PARTIAL DERIVATIVE MATRICES GENERATED IN THE REFINEMENT MODE OF THE ITERATOR
SELMAT	NUMBER OF PARTIAL DERIVATIVE MATRICES GENERATED IN THE SELECTION MODE OF THE ITERATOR
TARGET	DESIRED VALUE OF THE DEPENDENT VARIABLE
THTDB	ATTITUDE DEADBAND ANGLE (DEG). DIMENSIONED FOR 2 VEHICLES.
TTF	TERMINATION PARAMETER(USED WITH TSTOP=31)
VCON	VELOCITY VECTOR ON DESIRED CUTOFF ELLIPSE.
WFACT	WEIGHT FACTOR ON THE DEPENDENT VARIABLE FOR

	PENALTY FUNCTION MINIMIZATION
WTOPT	WEIGHT FACTOR ON THE OPTIMIZATION VARIABLE IN THE OPTIMIZATION MODE
WTSEL	WEIGHT FACTOR ON THE OPTIMIZATION VARIABLE IN THE SELECTION MODE

2. COORDINATE SYSTEMS

The following coordinate systems are presented in this section:

1) Earth-Moon Plane Polar
2) Inertial Earth-Centered Plumbline
3) Local Horizontal
4) Launch Inertial
5) Geocentric Inertial
6) Geocentric Polar
7) Geocentric Rotational
8) Selenographic Polar
9) Earth-Moon Plane Cartesian
10) Guidance Coordinate System (LM Powered Descent)
11) Guidance Coordinate System (LM Powered Ascent)
12) Pad-Centered Plumbline Guidance
13) Earth Centered Guidance
14) Topocentric Polar Coordinate System
15) Vehicle System

EARTH-MOON PLANE POLAR COORDINATE SYSTEM

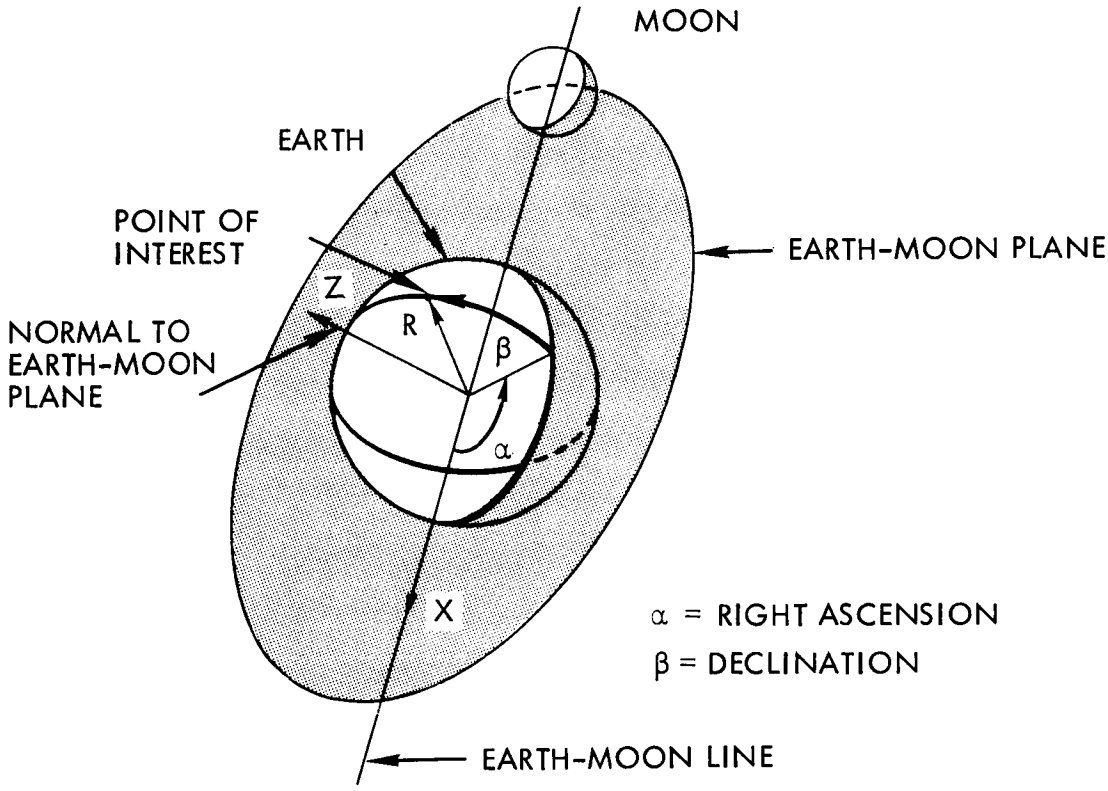

R - Radius vector (radial distance from the center of the earth to the point of interest)

α - Right ascension (the angle measured in the earth-moon plane from the x-axis to the projection of the radius vector in the earth-moon plane)

β - Declination (the angle between the radius vector and the earth-moon plane)

INERTIAL EARTH-CENTERED PLUMBLINE COORDINATE SYSTEM

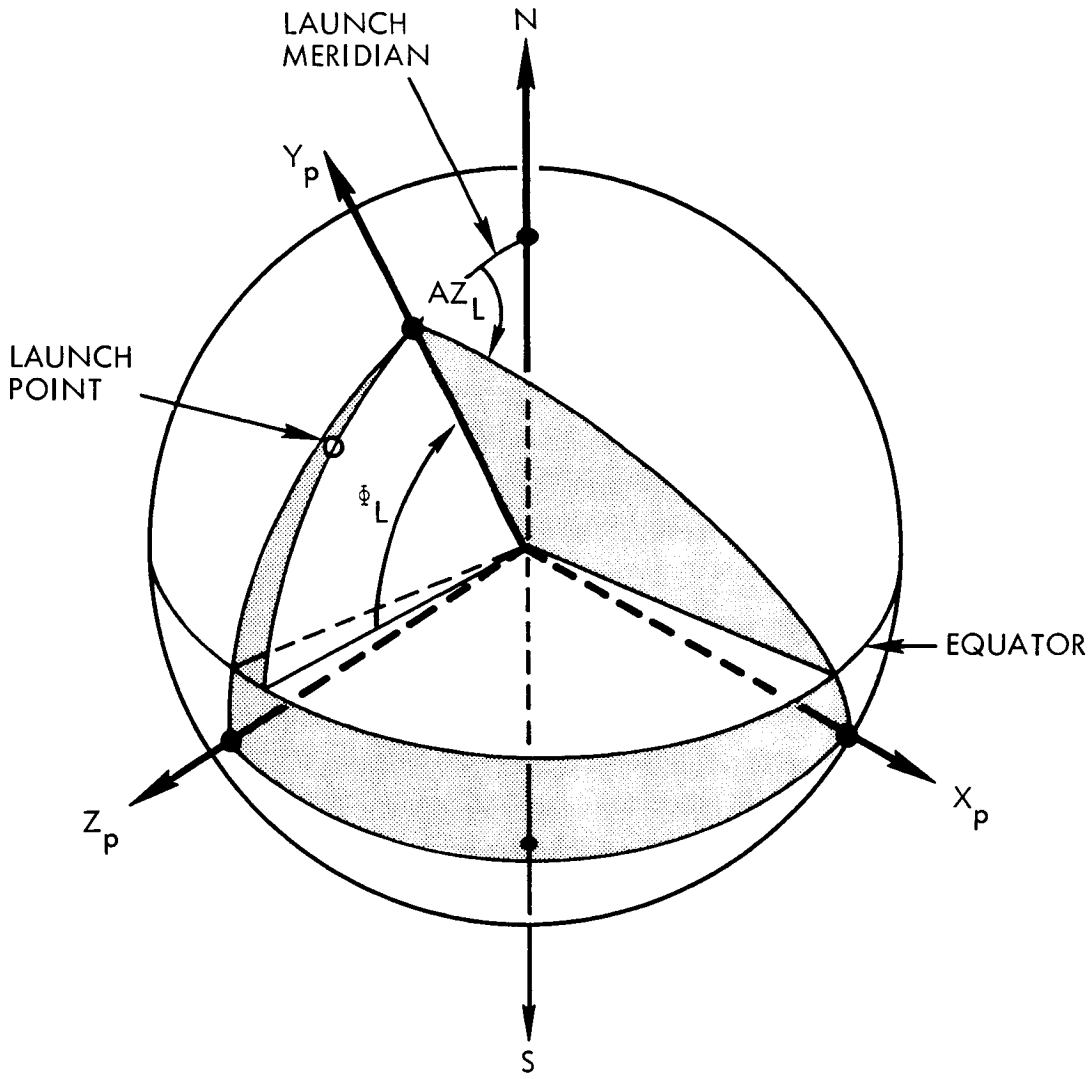

TYPE: Non-rotating, earth referenced

ORIGIN: At the geocentric center of the earth

ORIENTATION AND DEFINITION:

The Y-Axis is parallel to the gravity gradient at the launch site, and is positive up.

The X-Axis is the direction of the launch azimuth and is positive downrange.

The Z-Axis completes a standard right-handed system.

Φ_L is the geodetic latitude of the launch site.

AZ_L is the launch azimuth.

LOCAL HORIZONTAL COORDINATE SYSTEM

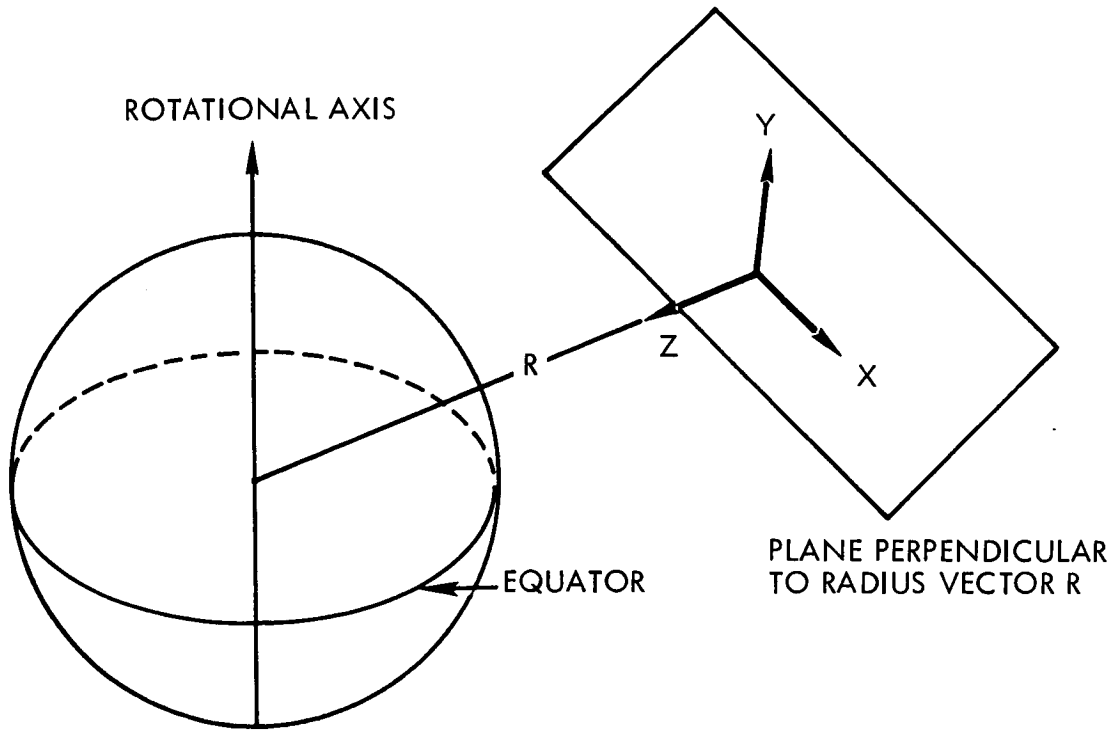

ORIENTATION AND DEFINITION:

The X-Axis is in the local horizontal plane and in the direction of motion.

The Z-Axis is directed toward the center of the current reference body.

The Y-Axis completes a standard right-handed system.

LAUNCH INERTIAL COORDINATE SYSTEM

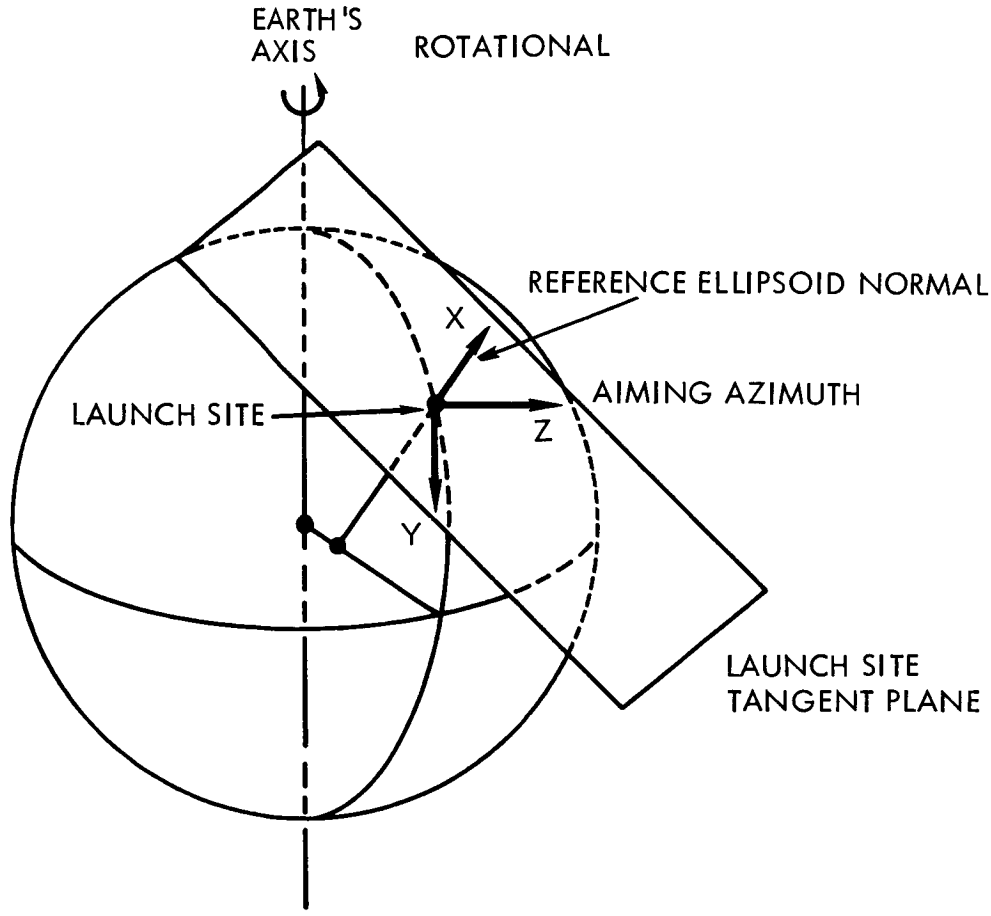

TYPE: Non-rotating, earth referenced

ORIGIN: At the intersection of the reference ellipsoid and the normal to it which passes through the launch site.

ORIENTATION AND DEFINITION:

The launch site tangent plane contains the site and is perpendicular to the reference ellipsoid normal which passes through the launch site.

The X-Axis coincides with the reference ellipsoid normal passing through the site, positive upward.

The Z-Axis is parallel to the earth-fixed aiming azimuth, defined at guidance reference release time, and is positive downrange.

The Y-Axis completes a standard right-handed system.

(The Y-Z plane is the launch site tangent plane.)

GEOCENTRIC INERTIAL COORDINATE SYSTEM

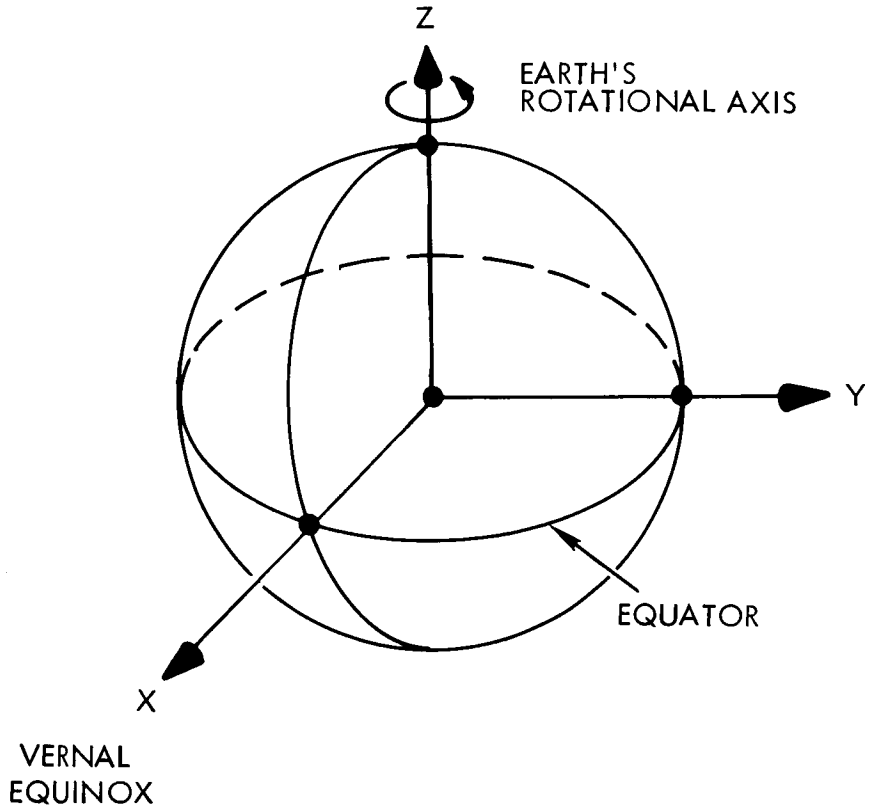

TYPE: Earth referenced, non-rotating

ORIGIN: The center of the earth.

ORIENTATION AND DEFINITION:

The Z-axis is directed along the earth's rotational axis, positive north.

The X-axis is directed toward the vernal equinox.

The Y-axis completes the standard right-handed system.

The epoch will generally be the nearest beginning of a Besselian year (nearest to initial trajectory computation time). However, special applications may involve other epochs. The equator and equinox can be either mean-of-epoch or true-of-date.

This system also defines the selenocentric system when translated along the earth-moon line through the radial distance of the moon from the earth.

GEOCENTRIC POLAR COORDINATE SYSTEM

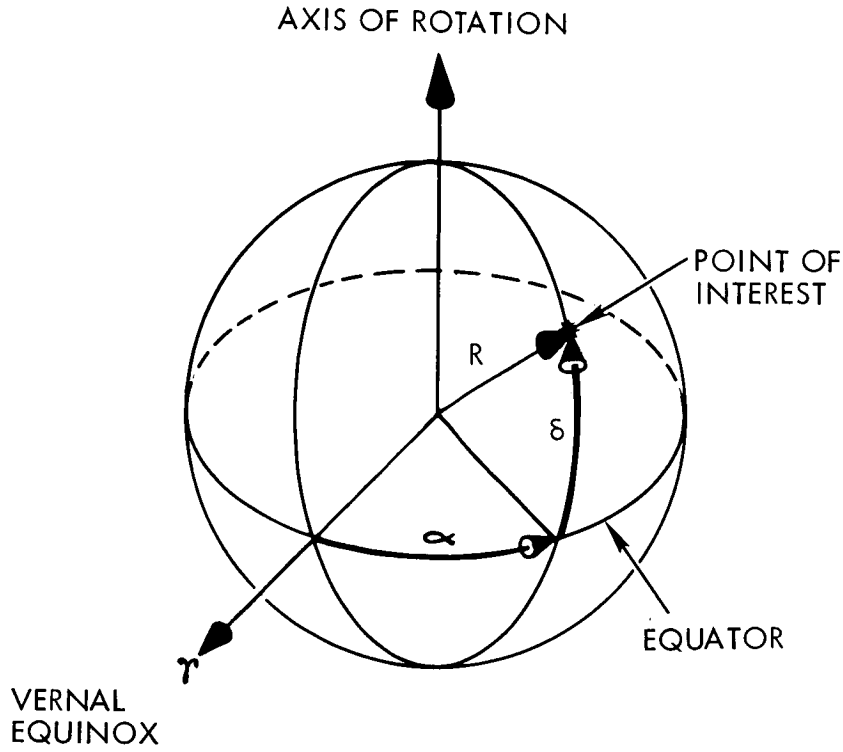

TYPE: Non-rotating, earth referenced

ORIGIN: The center of the earth

ORIENTATION AND DEFINITION:

The point of interest is defined by a radius (R), its right ascension (α), and declination (δ).

The radius is the radial distance from the center of the earth to the point of interest.

The right ascension is the angle measured from the vernal equinox, eastward, along the equator, to the meridian which passes through the point of interest.

The declination is the angle between the radius vector (R) and the equatorial plane.

This system also defines the selenocentric system when translated along the earth-moon line through the radial distance of the moon from the earth. The same epoch and equinox-equator flexibility as described for the geocentric inertial coordinate system applies for this coordinate system.

GEOCENTRIC ROTATIONAL COORDINATE SYSTEM

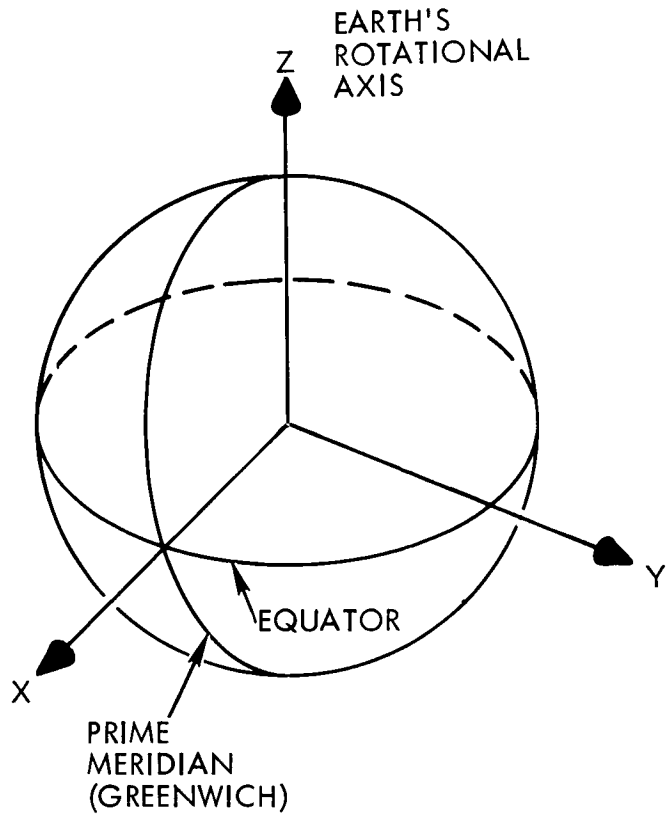

TYPE: Earth referenced, rotating

ORIGIN: The center of the earth

ORIENTATION AND DEFINITION:

The Z-axis is directed along the earth's rotational axis, positive north.

The X-axis passes through the Greenwich meridian and lies in the equatorial plane.

The Y-axis completes the standard right-handed system.

The velocity components are referenced to a rotating earth, and for polar output the geodetic latitude is computed separately as a function of declination. The orientation of the equatorial plane has the same flexibility as described for the geocentric inertial coordinate system.

SELENOGRAPHIC POLAR COORDINATE SYSTEM

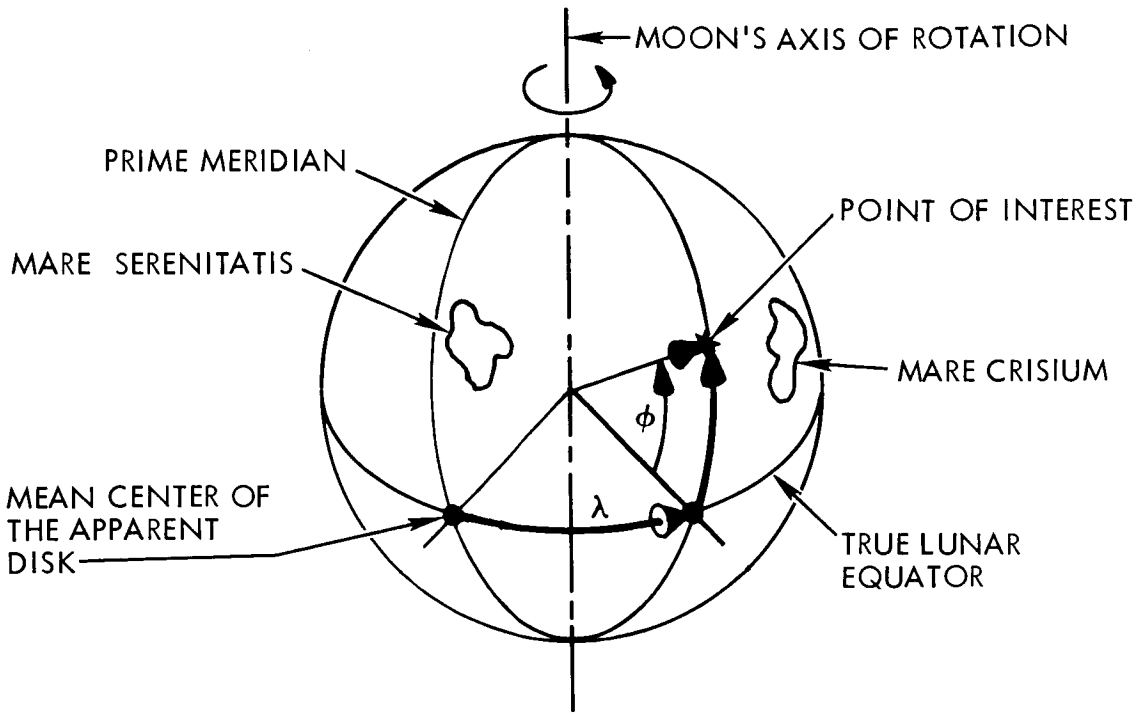

TYPE: Rotating, moon referenced

ORIGIN: The center of the moon

ORIENTATION AND DEFINITION:

The prime meridian passes through the mean center of the apparent disk, which is the 0° latitude, 0° longitude point.

The latitude ϕ is the angle defined by the intersection of the selenocentric radius vector to the point of interest and the true lunar equatorial plane, positive north (toward Mare Serenitatis) and negative south of the true lunar equator.

The longitude λ is the angle measured along the equatorial arc from the prime meridian to the meridian containing the point of interest, positive eastward (toward Mare Crisium).

R is the radial distance from the selenocenter to the point of interest.

EARTH-MOON PLANE CARTESIAN COORDINATE SYSTEM

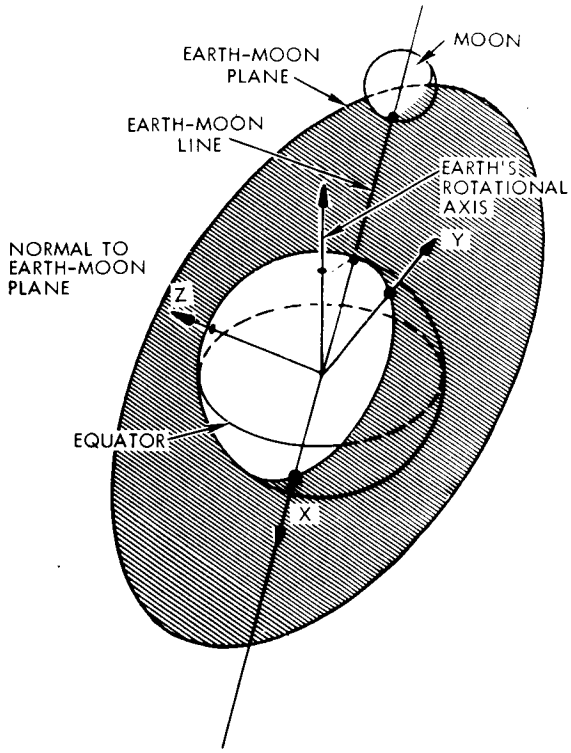

TYPE: Rotating

ORIGIN: The center of the specified central body, either earth or moon. (The earth centered system is shown in this figure).

ORIENTATION AND DEFINITION:

The earth-moon plane coordinate system is defined by the instantaneous radius and velocity vectors of the moon at the particular time in question. The X-axis lies along the earth-moon line, positive away from the earth away from the moon.

The Z-axis is normal to the earth-moon plane, and parallel to the moon's angular momentum vector, positive in a northerly direction.

The Y-axis completes the standard right handed system.

This system is redefined at the beginning of each computational cycle. It is an inertial system for the duration of each computational cycle.

This system is translated to the moon when it becomes the primary reference body for trajectory computation. In this case, the positive X-axis lies along the extended earth-moon line and is directed toward the earth.

GUIDANCE COORDINATE SYSTEM
(LM Powered Descent)

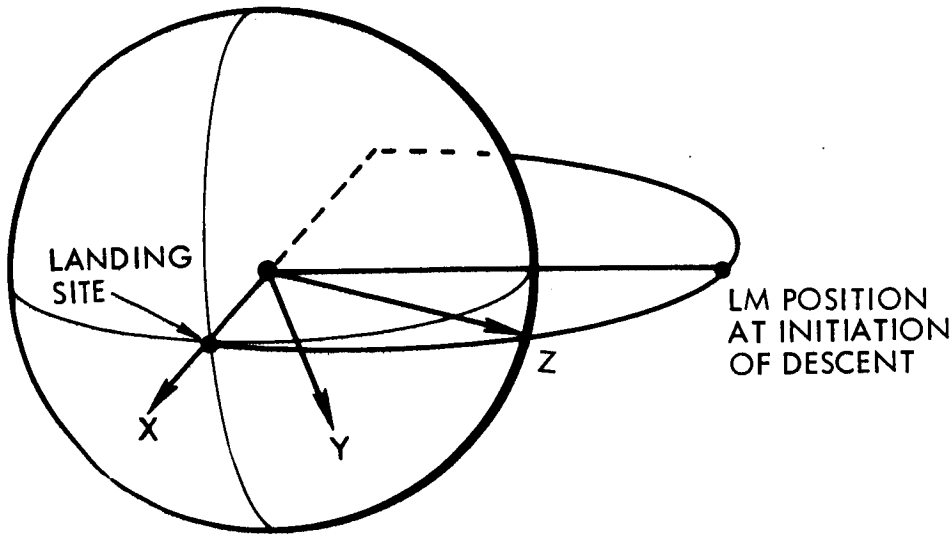

TYPE: Moon referenced, non-rotating

ORIGIN: The center of the moon

ORIENTATION AND DEFINITION:

This system is an inertial Cartesian coordinate system. The X-axis passes through the landing site at the time of thrust cutoff (positive away from the moon's center).

The Z-axis is contained in the plane made by the X-axis and the LM position vector at thrust initiation, positive towards the location of the initiation of powered descent.

The Y-axis completes the standard right handed system.

GUIDANCE COORDINATE SYSTEM
(LM Powered Ascent)

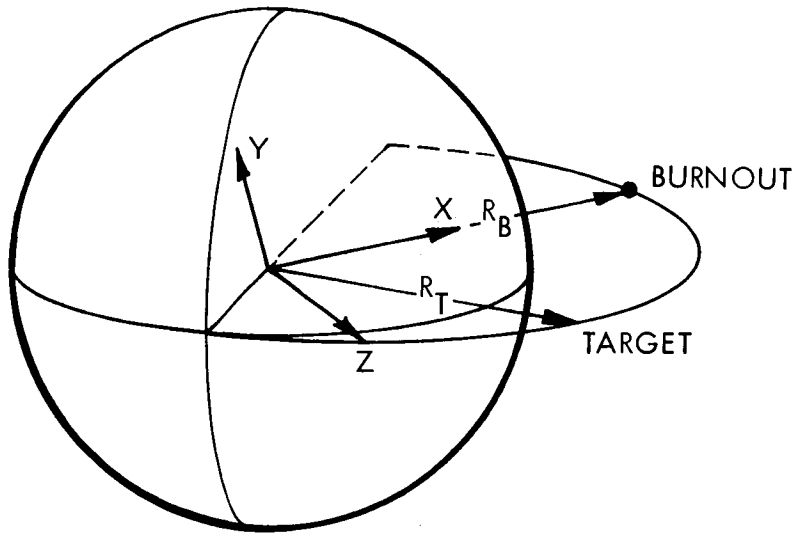

TYPE: Moon referenced, non-rotating

ORIGIN: The center of the moon

ORIENTATION AND DEFINITION:

This system is an inertial Cartesian coordinate system with two possible orientations.

For steering not inplane, the Y-axis is normal to a plane defined by the target position vector and the burnout position vector. The X-axis lies along the position vector at burnout. The Z-axis completes the standard right handed system.

For steering inplane, the Y-axis is normal to the plane of the target vehicle. The X-axis lies along the position vector at burnout, which lies in the plane of the target vehicle. The Z-axis completes the standard right handed system.

PAD-CENTERED PLUMBLINE GUIDANCE COORDINATE SYSTEM
(MSFC Iterative Guidance)

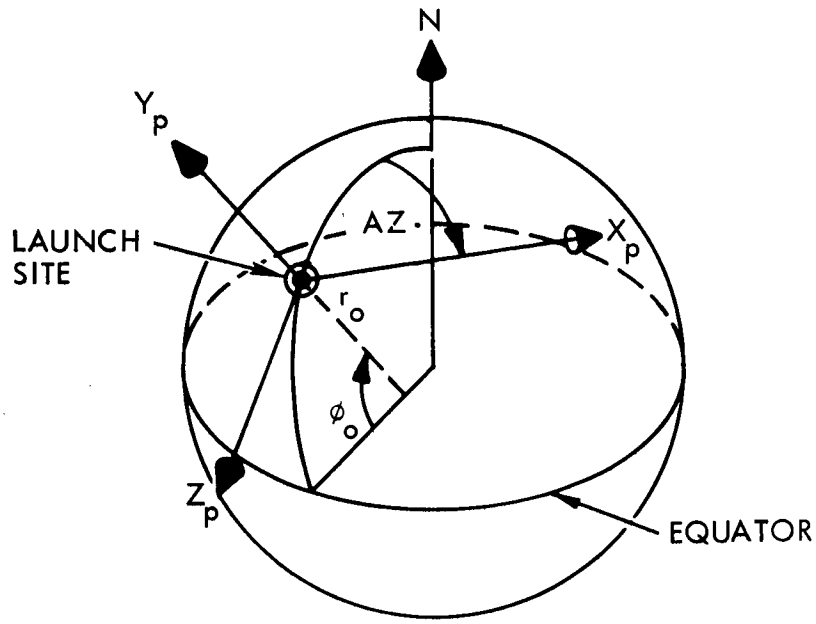

TYPE: Pad-centered plumbline guidance inertial

ORIGIN: Launch site

ORIENTATION AND DESCRIPTION:

The origin of this coordinate system is at the launch site. The Y_p-axis extends along the vertical from the launch site. The X_p-axis is defined by the launch azimuth measured clockwise from north, and the Z_p-axis completes the standard right-handed system.

This system also defines the earth-centered plumbline inertial system when translated from the launch site to the center of the earth.

Transformation from pad-centered to earth-centered coordinates is accomplished as follows:

$$X_E = X_p - r_o \cos AZ \sin \beta_o$$

$$Y_E = Y_p + r_o \cos \beta_o$$

$$Z_E = Z_p + r_o \sin AZ \sin \beta_o$$

where:

$$r_o = \sqrt{\frac{1 - \mu}{1 - \mu \cos 2 \psi_o}}$$

$$\mu = \frac{a^2 - b^2}{a^2 + b^2}$$

a = semi-major axis of the earth

b = semi-minor axis of the earth

$\beta_o = \phi_o - \psi_o$

where: $\psi_o = \tan^{-1}\left[\left(\frac{b^2}{a^2}\right) \tan \phi_o\right]$

ϕ_o = geodetic latitude of the launch site

EARTH CENTERED GUIDANCE COORDINATE SYSTEM
(MSFC Iterative Guidance)

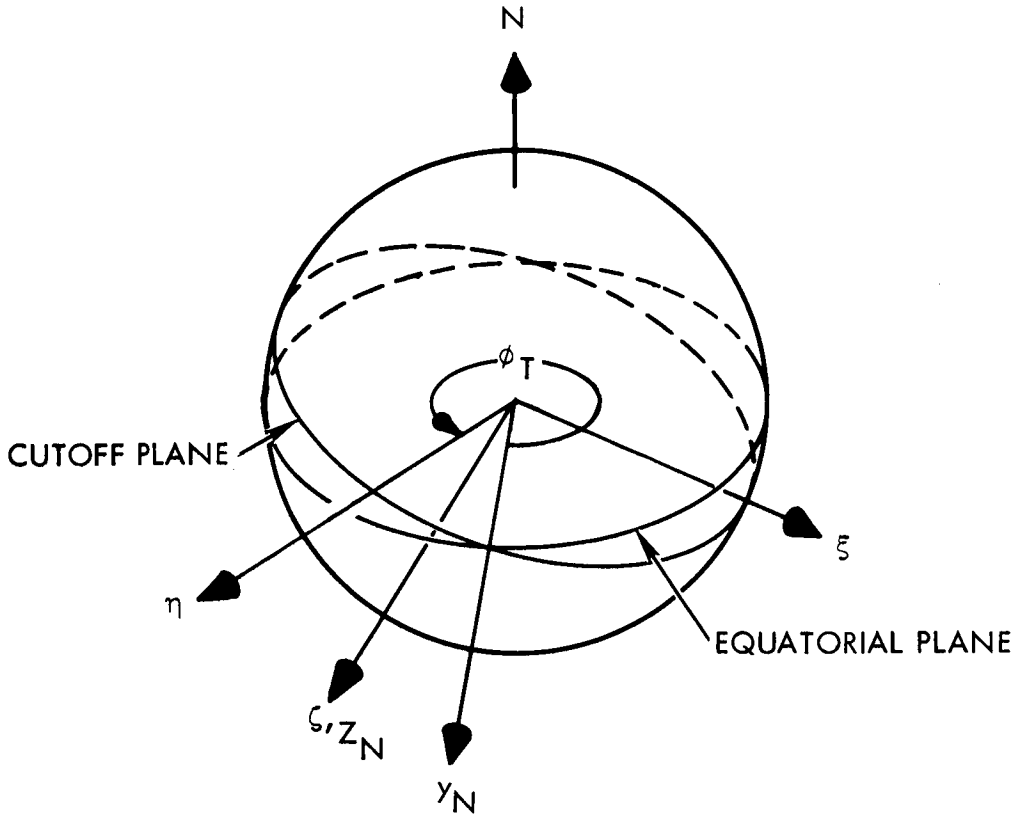

TYPE: Earth centered guidance

ORIGIN: Center of the earth

ORIENTATION AND DESCRIPTION:

The earth-centered guidance coordinate system, sometimes referred to as the guidance reference system, is the coordinate system of the guidance equations. Therefore, any trajectory simulation of the iterative guidance scheme must provide a transformation from the integrating or dynamics system to the ξ, η, ζ system. The guidance reference system is not inertial. Its orientation is determined by the range angle (ϕ_T) which is updated every evaluation cycle.

The η-axis lies in the cutoff plane and is determined by the range angle to the cutoff radial as estimated by the guidance equations. Range angle (ϕ_T) is measured in the cutoff plane from the descending node (y_N) clockwise about z_N to cutoff. Xi, ξ, lies in the cutoff plane perpendicular to η, and is ahead in the direction of flight. Zeta (ζ) completes a right-handed coordinate system. Summarizing, η, y_N and ξ are in the cutoff plane and ζ is perpendicular to the cutoff plane.

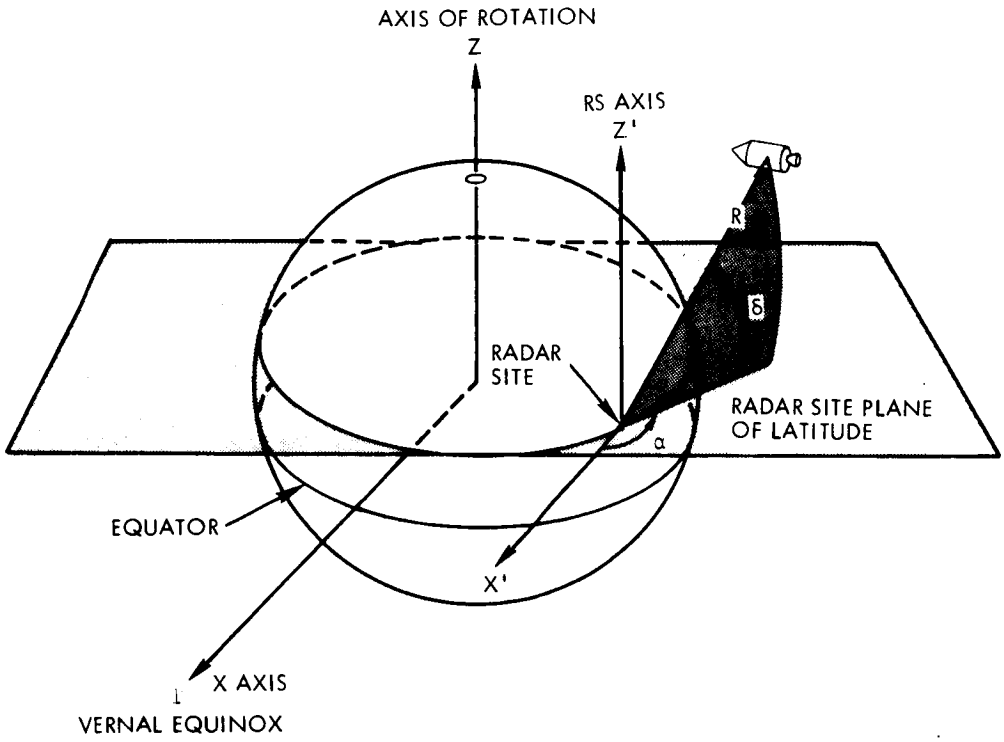

TOPOCENTRIC POLAR COORDINATE SYSTEM

TYPE: Non-rotating, earth referenced

ORIGIN: The position of the radar site on the earth

ORIENTATION AND DEFINITION:

The radar site Cartesian coordinates are translatable with the geocentric inertial Cartesian coordinates.

The X' axis is parallel to the geocentric inertial X axis. The X - Y plane contains the radar station of interest and is parallel to the geocentric equatorial plane. The Z' axis is parallel to the geocentric Z axis (North pole).

The point of interest is defined by a range (R), its right ascension (α), and declination (δ).

The range is the radial distance from the radar site to the point of interest.

The right ascension is the angle measured from X' eastward, parallel to the equator, to the projection of R into the latitudinal plane.

The declination is the angle between the range vector (R) and the projection of R into the latitudinal plane.

VEHICLE SYSTEM

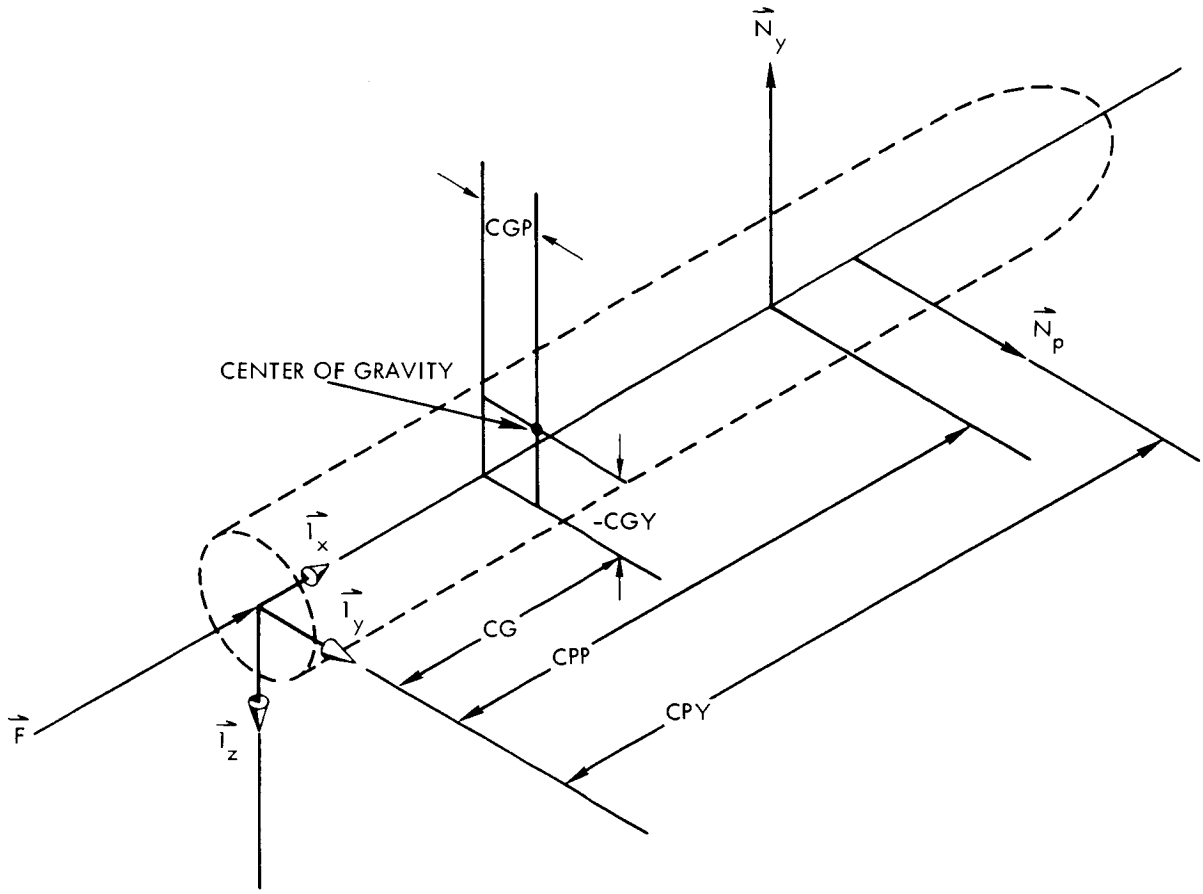

CG - X-Axis component of the center of gravity location.

CGP - Y-Axis component of the center of gravity location.

CGY - Z-Axis component of the center of gravity location.

CPP - Point of application (on the X-Axis) of the aerodynamic force along the Z-Axis.

CPY - Point of application (on the X-Axis) of the aerodynamic force along the Y-Axis.

$\bar{l}_x$ - Unit vector in the direction of the first axis.

$\bar{l}_y$ - Unit vector in the direction of the second axis.

$\bar{l}_z$ - Unit vector in the direction of the third axis.

$\bar{N}_y$ - Aerodynamic force along the Z-Axis.

$\bar{N}_p$ - Aerodynamic force along the Y-Axis.

$\bar{F}$ - Resultant force along the X-Axis.

3. PROGRAM ORGANIZATION

3.1. FUNCTIONAL DESCRIPTION OF ROUTINES

A LIST OF ALL THE SUBROUTINES AND THE FUNCTIONAL DESCRIPTION IN ALPHABETICAL ORDER FOLLOWS

SUBROUTINE	FUNCTION
AERO3D	3D ATMOSPHERIC FLIGHT SUBROUTINE
ARMO5	MAIN CONTROL PROGRAM OF ARMP
ARMP5	ARMP OVERLAY MAP ROUTINE.
ATMOS	COMPUTES ATMOSPHERIC PRESSURE, DENSITY AND SPEED OF SOUND AS A FUNCTION OF GEOMETRIC ALTITUDE
ATTCON	SETS UP THE VEHICLE ATTITUDE MATRIX AS DETERMINED BY ATYPE INPUT.
AVEGIN	AVERAGE GRAVITY INTEGRATION PACKAGE.
BLKDAT	BLOCK DATA ROUTINE FOR INITIALIZING PLOT DATA.
BLOCK	INITIALIZES SPECIFIC COMMON BLOCKS
BLOSET	DEFINES OUTPUT VARIABLE NAMES IN OSET COMMON BLOCK
BSET	GENERATES OUTPUT BLOCK FOR BODY ATTITUDE AND FORCES
CDATX	MODIFICATION OF SUBROUTINE CDDATA TO BE USED WITH PLOT PACKAGE.
CDDAT	MODIFICATION OF SUBROUTINE CDDATA TO BE USED WITH REPORT GENERATOR PACKAGE.
CDDATA	VARIABLE FORMAT CARD INPUT ROUTINE. (1)READS A CARD, (2)PRINTS OUT CARD IMAGE, (3) PROCESSES DATA FIELD, (4)STORES PROCESSED DATA IN AN INPUT BUFFER
CINT	COWELL INTEGRATION - SECOND SUM METHOD BASED ON SIXTH-ORDER BACKWARD DIFFERENCES
CMPRS	SETS UP MASTER TABLES
CNVRT	CONVERTS INPUT STATE VECTOR TO INTERNAL COORDINATE SYSTEM COMPUTING UNITS
COND	SUBROUTINE TO CONVERT DEGREES TO DEGREES,MINUTES, AND SECONDS.
CONVT	SUBROUTINE USED TO CONVERT SECONDS TO DAYS,HOURS, MINUTES AND SECONDS.
CROSS	COMPUTES CROSS PRODUCT OF TWO VECTORS
CSTEER	COMPUTES DESIRED THRUST DIRECTION BASED ON REQUIRED VELOCITY FOR ALL CROSS PRODUCT STEERING GUIDANCE MODULES
CTSRCH	COUNT SEARCH OPTION
DATE	CALCULATES LAUNCH TIME IN HOURS FROM JANUARY 0 FOR THE CALENDAR LAUNCH DATE INPUT, AND CALCULATES THE CURRENT DATE AT TIME T FROM LAUNCH
DERIV	CALCULATES THE TOTAL (COWELL) OR DIFFERENTIAL

	(ENCKE) ACCELERATICN VECTOR
DFLPN	DETERMINES POWERED DESCENT IGNITION POINT BASED ON THE IGNITION ALGORITHM
DOT	COMPUTES DOT PRODUCT OF TWO VECTORS
DSUM	SUMS THE PRODUCTS OF TWO VARIABLES
DTERM	TERMINATION OF COAST PHASE FOR (1) ELAPSED TIME, (2) LM/CSM SEPARATICN PRIOR TO HOHMANN DESCENT, AND (3) THRUST INITIATION FOR POWERED ASCENT
DVECT	COMPUTES IN DOUBLE PRECISION THE MAGNITUDE, SQUARE OF MAGNITUDE, AND CUBE OF MAGNITUDE OF A VECTOR
EBLOCK	INITIALIZES EVENT COMMON BLOCK.
EMSET2	CALCULATES OUTPUT MATRIX CONTAINING EARTH-MOON PLANE COORDINATES
EPHINT	EPHEMERIS TAPE INITIALIZATICN.
EULER	CALCULATES EULER ANGLES REQUIRED TO ROTATE ONE MATRIX INTO ANOTHER.
EVEN	SCALING ROUTINE FOR GRID.
FCOMP	COMPUTES FOUR FUNCTIONS OF INCREMENTAL ECCENTRIC ANOMALY USED IN THE SOLUTION OF KEPLER'S EQUATION
FLBLK	FILLS BUCKET WITH THE SYMBOLS FOLLOWING THE VLIST1 OR VLIST2 OPTICNS
FORM	SUBROUTINE TO STORE VARIABLE FORMATS.
FSFB	SPACES FORWARD OR BACKWARD OVER 'ISKIP' DATA FILE ON FORTRAN IV UNIT 11 TO FACILITATE RAPID ACCESS TO EPHEMERIS DATA
GD123	COMBINATICN OF THREE GUIDANCES TO COMPUTE THRUST ACCELERATION DURING LUNAR PARKING ORBIT, COMPUTE THRUST ACCELERATION FOR TRANSEARTH INSERTION, AND COMPUTE THRUST ACCELERATION FOR TRANSLUNAR INSERTION
GD4	COMPUTES THRUST ACCELERATION DURING HOHMANN TRANSFER
GD5	COMPUTES THRUST ACCELERATION DURING POWERED DESCENT PHASE
GD6	MISCELLANEOUS THRUSTING MODES
GD7	ESTABLISHES THE DIRECTION AND MAGNITUDE OF THE THRUST ACCELERATION USING THE LM ASCENT GUIDANCE LOGIC
GD8	COMPUTES THRUST ACCELERATICN DURING TERMINAL RENDEZVOUS
GD9	CCNTROLS CALLING OF INITIALIZATICN COMPUTATION FOR THE ITERATIVE GUIDANCE EQUATIONS
GD10	COMPUTES THRUST ACCELERATION DURING ABORT MANEUVER
GEMLD1	MODIFICATION OF SUBROUTINE TRWLOD TO BE USED WITH PLOT PACKAGE.
GONOGO	COMPUTES AZIMUTH AND ELEVATICN LOOK ANGLES.
GRID	TESTS FOR ACCEPTABILITY OF S-BAND LOOK ANGLES.
GTERPA	GENERALIZED TABLE LOOK-UP ROUTINE.
GUIDE	COMPUTES VELOCITY TO BE GAINED AND DESIRED THRUST DIRECTION. CALLS THE APPROPRIATE GUIDANCE ROUTINE AFTER CALCULATING THE

	VEHICLE ATTITUDE RATES.
HEAD	ROUTINE TO CONTROL HEADING PRINT AT THE BEGINNING OF EACH PRINT POINT.
HEADER	SUBROUTINE WHICH WRITES TABLE AND COLUMN HEADINGS FOR THE SUBROUTINE RGEN1.
IGPCMP	PERFORMS INITIALIZATICN COMPUTATICNS REQUIRED FOR THE ITERATIVE GUIDANCE SCHEME AS WELL AS PRINTING OUT THESE QUANTITIES
IMAGE	RESETS COMMON FOR MULTI-PHASE TRAJECTORIES
IMUALN	MISALIGNS INITIAL VEHICLE ATTITUDE MATRIX AND IDEAL IMU MATRIX
IMUERR	COMPUTES AN ESTIMATED VELOCITY INCREMENT DUE TO THRUST OVER THE COMPUTING INTERVAL
INPRC	ROUTINE USED TO CALL TRWLOD, WHICH IS MORE THAN 1 LINK LOWER THAN ARM05.
INTEGR	ENCKE LOOK-AHEAD INTEGRATION PACKAGE.
IPROC	INPUT PROCESSOR FOR THE ITERATOR
ITDRIV	DRIVES THE FORWARD ITERATOR
ITER	THE MODIFIED MSC FORWARD ITERATOR
ITERAT	SEARCHES FOR LM BODY YAW ANGLE WITH ACCEPTABLE LOOK ANGLES.
ITERPR	ITERATICN SUMMARY PRINT
ITGUID	CALCULATES THE STEERING COMMANDS AS A FUNCTION OF THE STATE OF THE VEHICLE AND THE DESIRED CUTOFF CONDITION
ITPRT	COMPUTES MATRIX CONTAINING OUTPUT FOR THE ITERATIVE GUIDANCE EQUATIONS
KOSET4	CALCULATES OUTPUT MATRIX CONTAINING THE KEPLERIAN OSCULATING ORBITAL ELEMENTS
LAMB	SOLVES LAMBERT'S PROBLEM
LDLINK	ROUTINE USED TO CALL PHINIT,STDRIV,OR PERTB WHICH IS MORE THAN 1 LINK LOWER THAN ARM05.
LEGS	THE LINEAR EQUATICN SOLVER FOR THE ITERATOR
LIMIT	FINDS MAXIMA AND MINIMA OF POINTS TO BE PLOTTED.
LINIT	INITIALIZES LANDMARK SIGHTING DATA
LOAD	READS INTERMEDIATE TAPE AND STORES THE INPUT IN THE PROPER INPUT AREA
LOGR	SCALING ROUTINE FOR LOGARITHMIC PLOTS.
LPROC	PROCESSES DATA INPUTS FOR LANDMARK SIGHTING
LSCAR	LM S-BAND COMMUNICATIONS AVAILABILITY MAP ROUTINE
LSCAR2	LSCAR MAIN CONTROL VERSION 2.
LSSET9	CALCULATES OUTPUT BLOCK CONTAINING THE LANDING SITE COORDINATES
MAIN	READS DATA AND INITIALIZES PLOT PACKAGE.
MATROT	ROTATES A 3 BY 3 ORTHOGONAL MATRIX ABOUT AN AXIS OF ROTATION THROUGH AN ANGLE
MDOT	COMPUTES THE ROTATICNAL VELOCITY CORRECTICN TERM FOR THE MOON
MOBAL	COMPUTES MOMENTS AND BALANCES FOR 3-D CAPABILITY.
MOP	COMPUTES THE ELEMENTS OF THE MOON-ORBIT PLANE TRANSFORMATION MATRIX
MTRXMP	PERFORMS MATRIX-MATRIX MULTIPLICATION OR MATRIX TRANSPOSED-MATRIX MULTIPLICATION IN EITHER DOUBLE

	OR SINGLE PRECISICN
MULCAS	MULTIPLE CASE CAPABILITY CONTROL.
NAVIG	UPDATES NAVIGATED POSITION AND VELOCITY
NEWT	DESIGNED TO DO INTERPOLATION IN N CONSECUTIVE DEPENDENT VARIABLE TABLES OF CONSTANT LENGTH IN TERMS OF ONE INDEPENDENT VARIABLE
NOPRNT	CONTROLS AMOUNT OF PRINT DURING ITERATION
ORBIT	COMPUTES TOTAL ORBIT COUNT, PHASE ORBIT COUNT, AND BURN ARC
OSCUL	COMPUTES EPOCHAL TWO-BODY PARAMETERS FOR TWO VEHICLES AND COMPUTES ORBITAL ELEMENTS
OUTINT	INITIALIZES DATA REQUIRED FOR OUTPUT
OUTPRC	OUTPUT CONTROL SUBROUTINE
PASET7	CALCULATES OUTPUT MATRIX CONTAINING THE PERTURBATIVE ACCELERATICNS
PCSET3	CALCULATES OUTPUT MATRIX CONTAINING THE PLANETARY COORDINATES
PDATA	PRINTS OUT INPUT ANC CONSTANT ARRAY FOR TITLE PRINT
PERTB	COMPUTES DEVIATIONS RESULTING FROM PERTURBATION OF STATE VECTORS AND HARDWARE ERRORS.
PHINIT	INITIALIZES DATA AT THE BEGINNING OF EACH PHASE
PLOT	PLOT PACKAGE OVERLAY MAP ROUTINE
PLOTA	PLOTS S-BAND COMMUNICATIONS AVAILABILITY VS. LM YAW ANGLE.
PLT1	READS INPUT PLOT TAPE AND SORTS DATA.
PLTX	PLOTS DATA SORTED BY PLT1
PLUMB	TRANSFORMS COORDINATES IN THE PROGRAM INTEGRATING SYSTEMS (BESSELIAN SYSTEM) TO COORDINATES IN THE EARTH-CENTERED PLUMBLINE COORDINATE SYSTEM, AND CONVERSELY
POLAR	TRANSFERS CARTESIAN TO POLAR ANC POLAR TO CARTESIAN COORDINATES
POLYEX	PERFORMS A POLYNCMIAL EXPANSICN-CALLED BY GTERPA
PRECES	COMPUTES PRECESSION MATRIX, NUTATION MATRIX, AND THEIR PRODUCT
PRLIST	ROUTINE USED TO PRINT THE PRINT GROUPS SELECTED. WRITES SYMBOLS AND CORRESPONDING VALUES SPECIFIED BY VLIST OPTIONS OF DATA INPUT ON UNIT 8.
PRN617	CONTROLS OUTPUT COMPUTATIONS FOR PRINTING
PROCIN	TRAJECTORY PHASE INITIALIZATION
PROJCT	STATE VECTOR INTERPOLATICN ROUTINE
PRTPR	RADAR AND SHADOW SUMMARY PRINT OUTPUT ROUTINE.
PVSET1	COMPUTES OUTPUT MATRIX CONTAINING GEOCENTRIC REFERENCE FOR BOTH EARTH AND MOON PHASE, AND SELENOCENTRIC AND SELENOGRAPHIC REFERENCE FOR MOON PHASE ONLY
RADAR	COMPUTES TRACKING CATA FOR RADAR STATIONS
RADINP	PROCESSES DATA INPUTS FOR RADAR STATIONS
RASCGR	CALCULATES EARTH ROTATIONAL RATE AND RIGHT ASCENSION OF GREENWICH
REORNT	COMPUTES THE ROLL, PITCH/YAW, AND ROLL MANEUVERS NECESSARY TO REORIENT FROM THE PRESENT VEHICLE

	ATTITUDE TO A DESIRED ATTITUDE
REPORT	REPORT GENERATOR MAP ROUTINE.
RGEN	REPORT GENERATOR MAIN PROGRAM
RGEN1	REPORT GENERATOR MAIN PROGRAM TO BE USED WITH TAPE CREATED BY VLIST OPTION IN CONJUNCTION WITH A BGEND OPTION.
RHRADR	COMPUTES THE OCCURRENCE AND TIME OF OCCURRENCE OF A RADAR EVENT
RHSHAD	COMPUTES THE OCCURRENCE AND TIME OF OCCURRENCE OF A CHANGE IN LIGHTING CONDITIONS
RINIT	INITIALIZES RADAR TRACKING DATA
RKINT	NUMERICAL INTEGRATION OF SECOND-ORDER DIFFERENTIAL EQUATION
ROCT	APPLIES THE ROLL, PITCH/YAW, AND ROLL RATES COMPUTED IN REORNT.
RPRINT	OUTPUT ROUTINE FOR RHRADR EVENTS
SELENO	PERFORMS SELENOCENTRIC AND SELENOGRAPHIC TRANSFORMATIONS WITH EITHER POLAR OR CARTESIAN COORDINATE SYSTEMS
SETUP	INITIALIZES ITERATOR COMMON AND CHECKS LEGALITY OF THE CASE
SHADOW	CALCULATES LIGHTING CONDITIONS OF THE VEHICLE(S) WITH RESPECT TO THE EARTH AND MOON
SHADW	DETERMINES WHEN LM IS OCCULTED BY MOON.
SHFTRN	COMPUTES SHAFT AND TRUNNION ANGLES
SHIFT	CIRCULAR SHIFT ROUTINE (AVAILABLE AS LIBRARY ROUTINE ON UNIVAC 1108)
SIGHT	CALCULATES THE VISIBILITY OF STARS AND LANDMARKS
SINIT	INITIALIZES STAR SIGHTING DATA
SLDAT1	CONTAINS TABLE OF STAR AND LANDMARK DATA
SLDAT2	CONTAINS TABLE OF STAR AND LANDMARK DATA
SLDAT3	CONTAINS TABLE OF STAR AND LANDMARK DATA
SPRFLG	SETS COMPUTE FLAGS FOR ALL SYMBOLS SPECIFIED BY VLIST OPTION
SPRINT	OUTPUT ROUTINE FOR RHSHAD EVENTS
SPROC	PROCESSES STAR INPUTS FOR STAR SIGHTING
STDRIV	CONTROLS EXECUTION OF TRAJECTORY LINK
STEP	SELECTS THE APPROPRIATE CENTRAL BODY AND COMPUTING STEP
STERM	TERMINATES TRAJECTORY USING PRESCRIBED CRITERIA FOR FREE COAST PHASES
SUMPRT	REPORT GENERATOR MAP ROUTINE TO BE USED WITH A TAPE CREATED BY VLIST OPTION IN CONJUNCTION WITH A BGEND OPTION.
SUMR	COMPUTES OSCULATING POSITION AND VELOCITY VECTOR FROM ITS INTEGRATED COMPONENTS
SYMBA	INITIALIZE SYMBOL TABLE FOR LSCAR.
SYMBOL	INITIALIZES SYMBOL TABLE.
SYMBP	INITIALIZES SYMBOL TABLE FOR PLOT PACKAGE.
SYMDAT	CONTAINS A TABLE OF INPUT SYMBOLS AND THE CORRESPONDING LOCATIONS
SYMPRC	SEARCHES THE SYMBOL TABLE TO FIND THE ADDRESS CORRESPONDING TO AN INPUT SYMBOL

SYMTAB	CONTAINS A TABLE OF INPUT SYMBOLS AND THE CORRESPONDING LOCATION FOR PLOT PACKAGE.
TBODY	COMPUTES TWO-BODY POSITION AND VELOCITY AS A FUNCTION OF TIME
TBSET6	CALCULATES OUTPUT MATRIX CONTAINING THE TWO-BODY AND INTEGRATED COORDINATES
TCSET8	CALCULATES OUTPUT MATRIX CONTAINING RENDEZVOUS PARAMETERS AND TOPOCENTRIC SIGHTING ANGLES
TCUT	THRUST INITIALIZATION COMPUTATIONS AND THRUST TERMINATION LOGIC
TERMIN	TERMINATION CONTROL ROUTINE
THRUST	IN CONJUNCTION WITH THE APPROPRIATE GUIDANCE SUBROUTINES,COMPUTES THRUST ACCELERATION FOR THE GUIDED VEHICLE
TITLEP	CONTROLS TITLE PRINT AT THE START OF EACH PHASE
TPROC	INPUT PROCESSOR FOR TABULAR INPUT.
TRW65E	CONSTRUCTS A TABLE OF EPHEMERIS DATA AND COMPUTES THE POSITION AND VELOCITY OF BOTH THE NON-REFERENCE BODY AND THE SUN AS WELL AS A PRECESSION-NUTATION-LIBRATION MATRIX FOR THE MOON
TRWINP	GENERALIZED INPUT ROUTINE SIMILAR TO TRWLOD EXCEPT THAT THERE ARE NO TAPES OR SPECIAL PREPROCESSORS USED.
TRWLOD	INPUT CONTROL ROUTINE
TS26	LM LIFT-OFF LOGIC
TS27	TRANSFER FROM LM PHASING ORBIT
TS28	COAST IN LOWER HOHMANN AND CSI OPTIMIZATION
TS29	LM RENDEZVOUS THRUST INITIATION
TSET11	CALCULATES THE OUTPUT MATRIX CONTAINING THE THRUST OUTPUT
TSTOPI	INITIALIZATION FOR STERM,DTERM,TS26,TS27, TS28,TS29
TSUM	SUMS THE PRODUCTS OF THREE VARIABLES
TURN	A MULTI-OPTION SUBROUTINE THAT COMPUTES THE TURNING RATE OF THE VEHICLE AND THE RESULTING ATTITUDE MATRIX
UNVEC	UNITIZES A VECTOR
UVSET5	CALCULATES OUTPUT MATRIX CONTAINING THE UNIT VECTORS
VCMSCN	COMPUTES IN DOUBLE PRECISION THE MAGNITUDE, SQUARE OF MAGNITUDE, AND CUBE OF MAGNITUDE OF A VECTOR
VECMG	COMPUTES VECTOR MAGNITUDE OF A VECTOR
VECT	COMPUTES MAGNITUDE, SQUARE OF MAGNITUDE,AND CUBE OF MAGNITUDE OF TWO DOUBLE PRECISION VECTORS
VTAPEI	VARIABLE FORMAT INTERFACE TAPE INPUT.
WVET9	STORES DATA ON AN AUXILIARY TAPE THAT WILL BE USED LATER BY THE OUTPUT SUBROUTINES
YSRCH	A ROUTINE USED WITH THE ITERATOR TO SEARCH THE OSET COMMON ARRAY TO CHECK THAT THE REQUESTED DEPENDENT VARIABLE IS VALID.

3.2 OVERLAY STRUCTURE

3.2.1 ARMO4 Overlay Structure

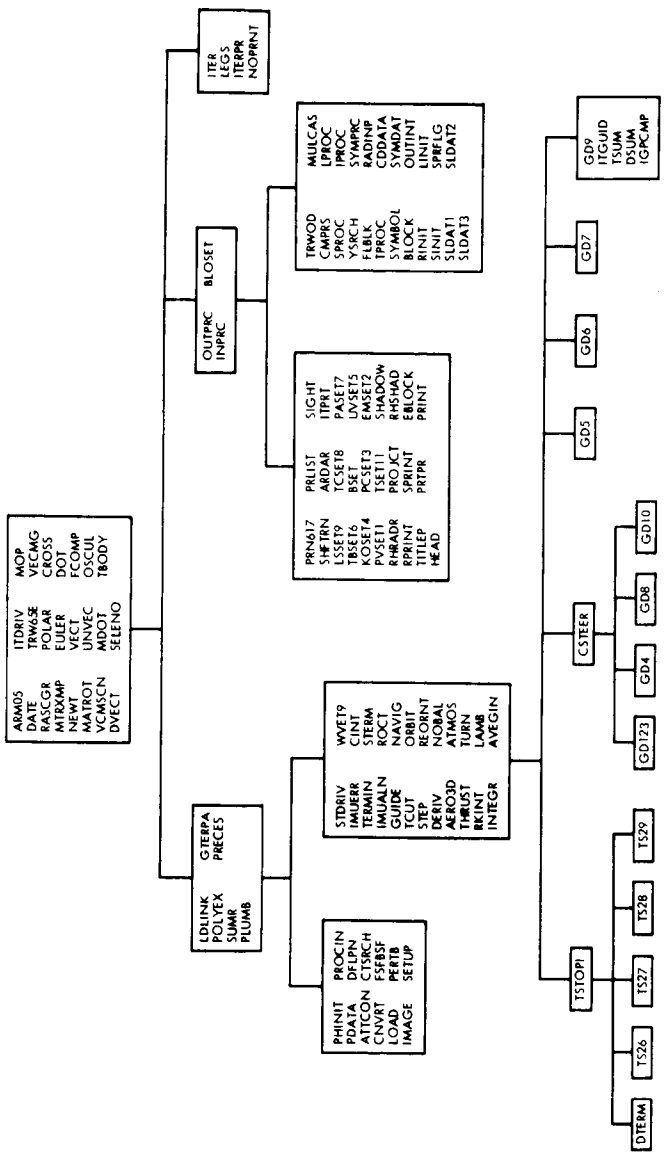

3.2.2 Plot Overlay Structure Package

∇ XQT PLOT

BLKDAT	SYMTAB	MAIN	CDATX
EVEN	GEMLD1	LIMIT	LOGR
PLT1	PLTX	SYMBP	SYMPRC

3.2.3 Report Generator Overlay Structure Package

∇ XQT REPORT

RGEN	FORM
CONVT	COND

3.2.4 Summary Print Overlay Structure

∇ XQT SUMPRT

RGEN1	CDDAT	COND	CONVT
FORM	HEADER		

3.2.5 LM S-band Program Overlay Structure Package

∇ XQT LSCAR

LSCAR2	SYMBA	VTAPE1	SHADW
TRWINP	CDDATA	SYMPRC	DATE
EPHINT	GONOGO	GRID	TRW65E
NEWT	VCMSCN	PLOTA	ITERAT

3.3 PROGRAM FLOW LOGIC

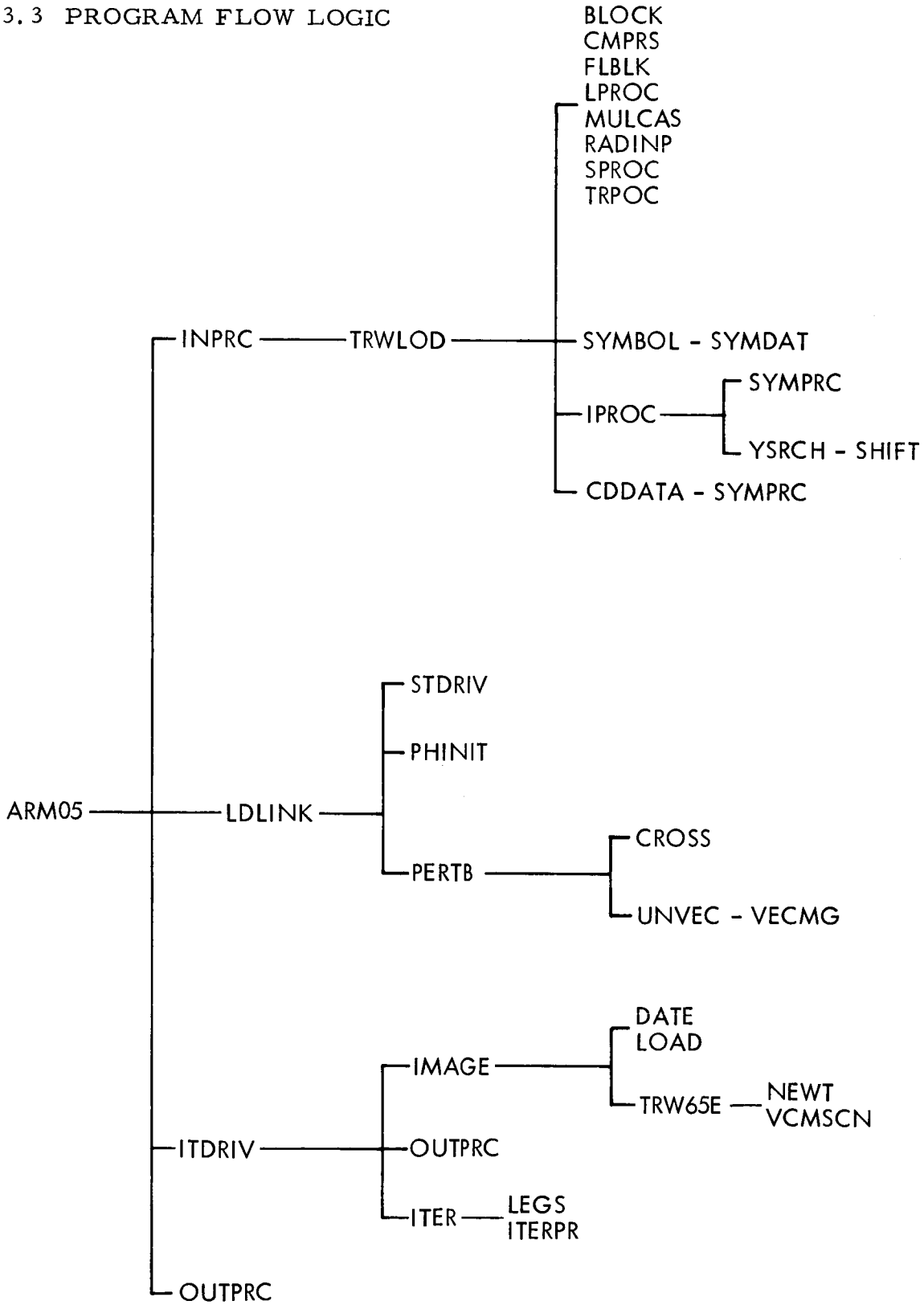

Figure 1. Program Flow Logic

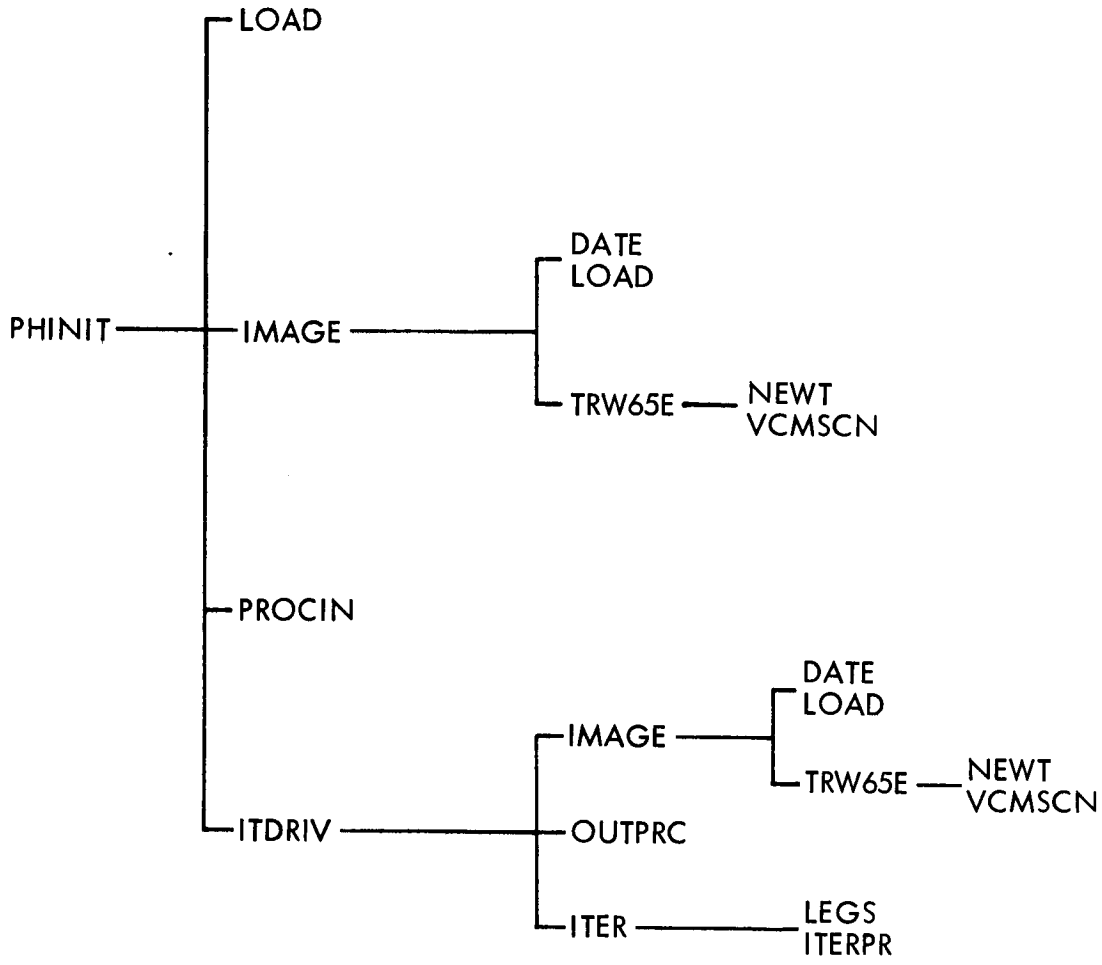

Figure 2. Program Flow Logic (Continued)

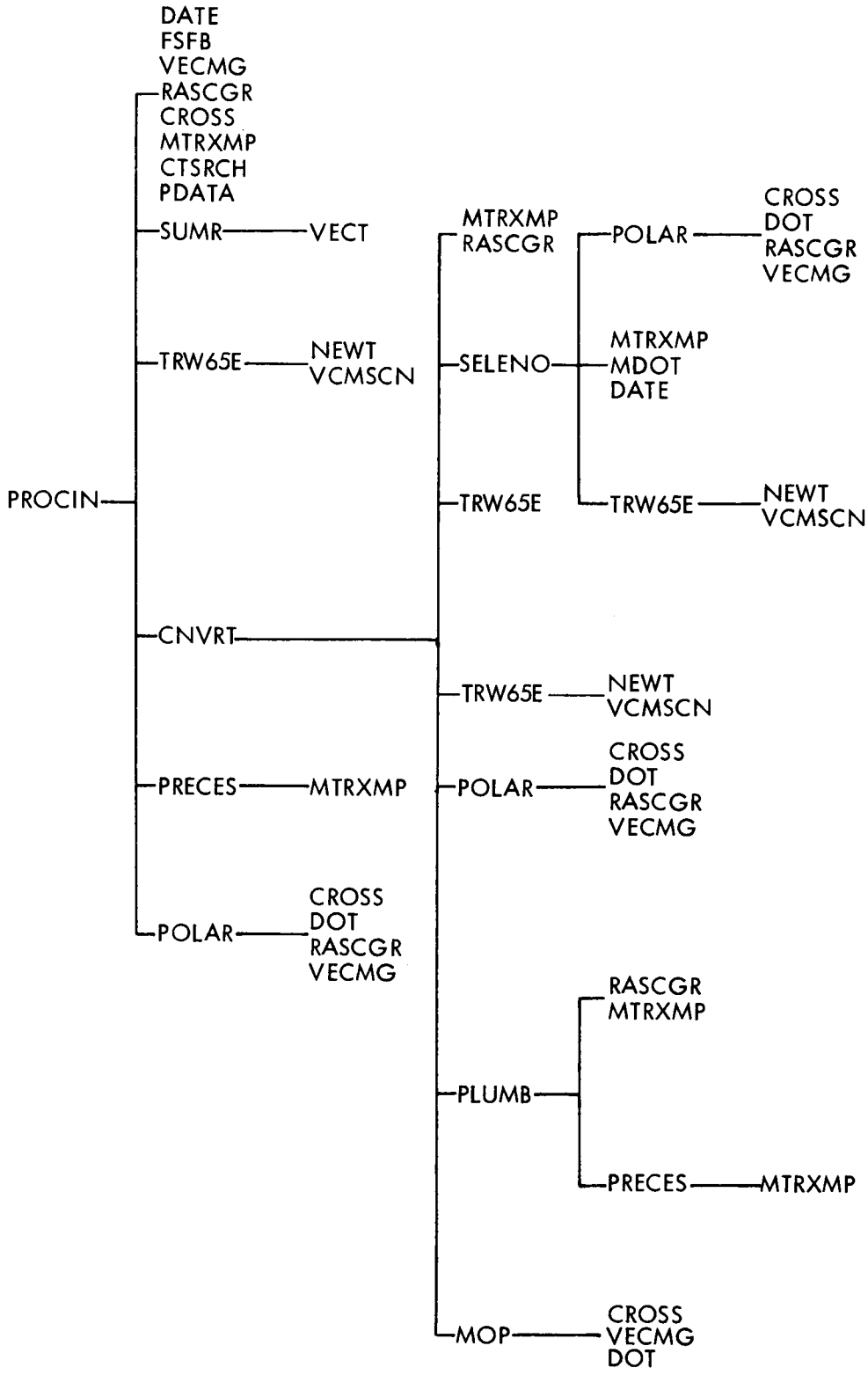

Figure 3. Program Flow Logic (Continued)

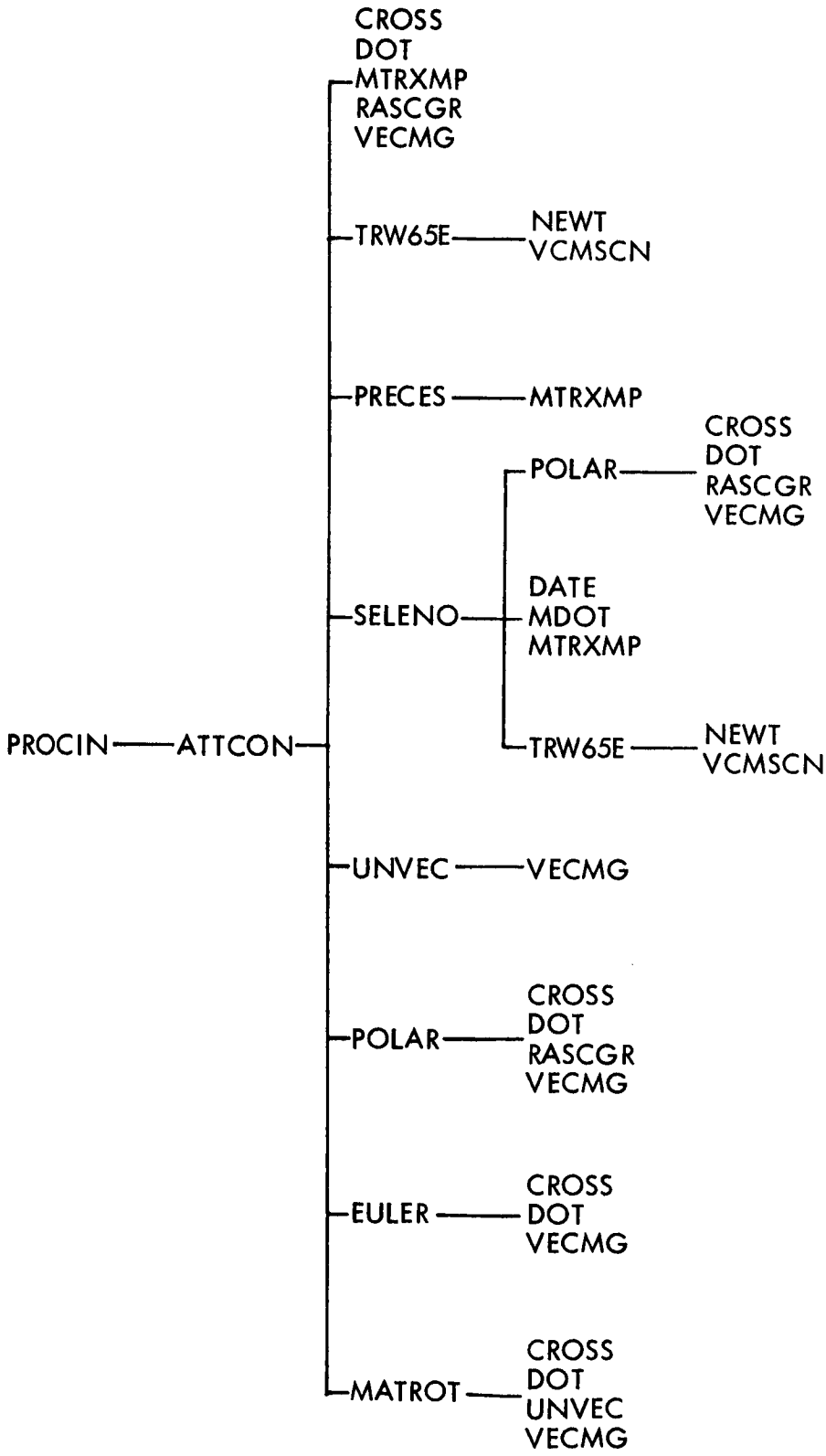

Figure 4. Program Flow Logic (Continued)

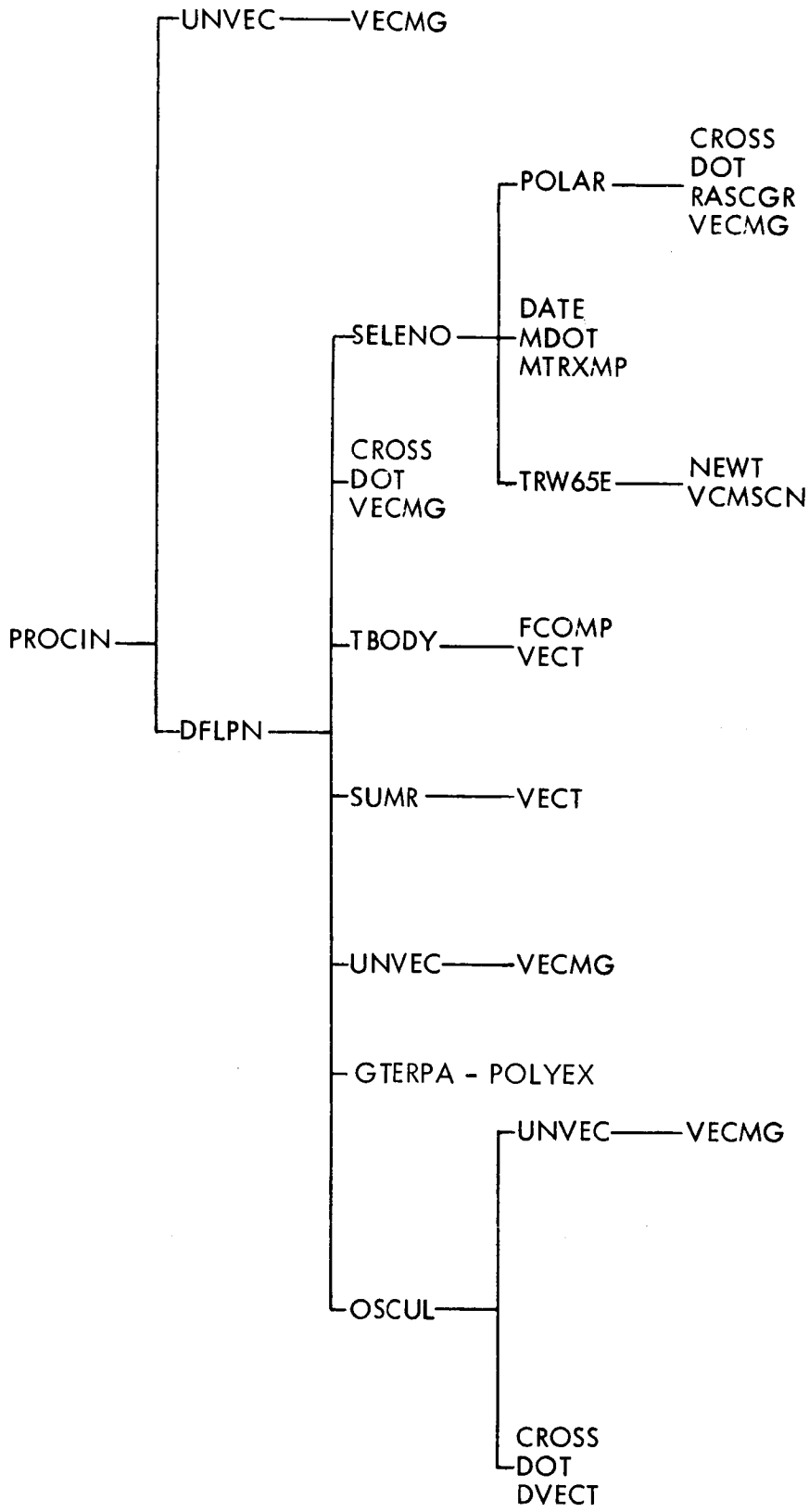

Figure 5. Program Flow Logic (Continued)

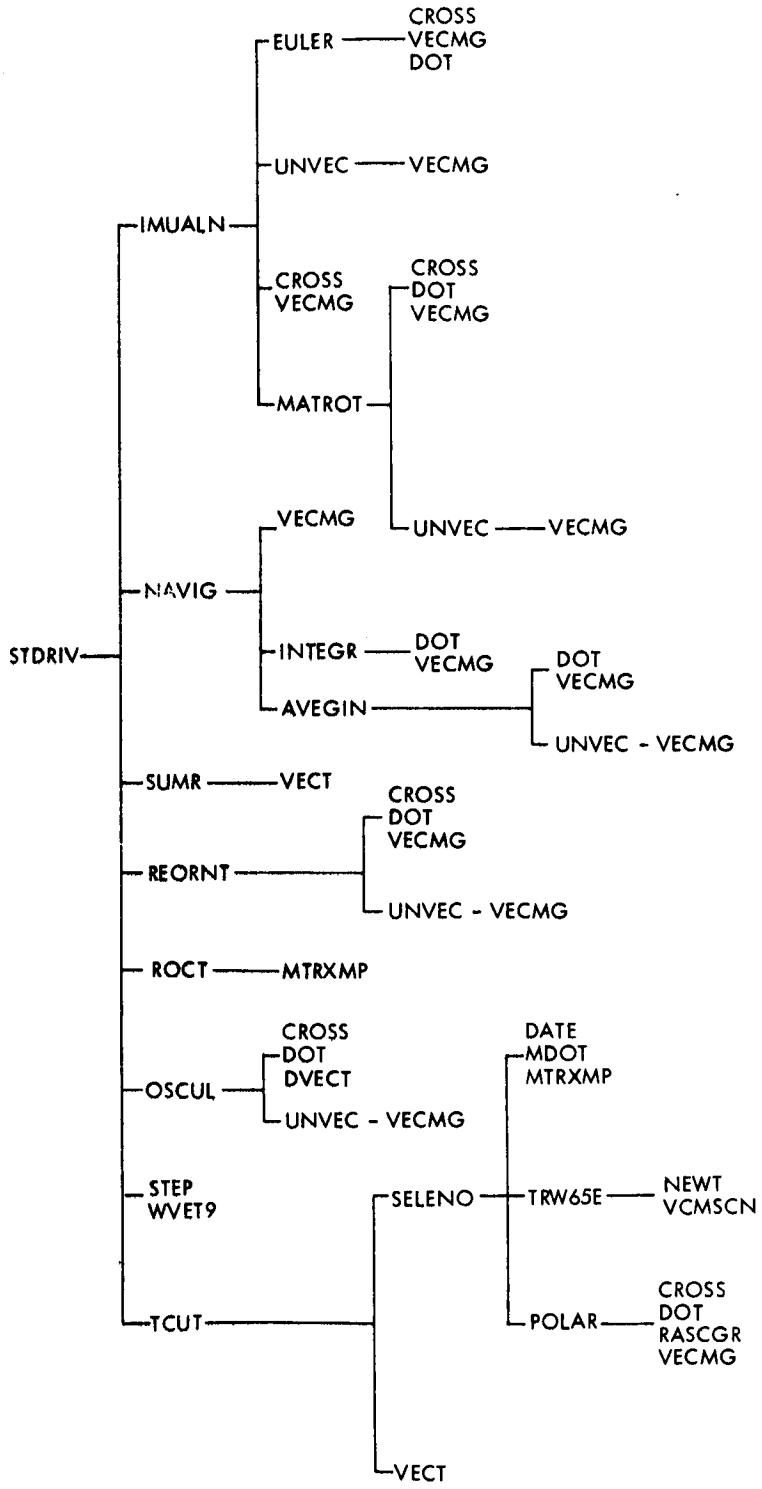

Figure 6. Program Flow Logic (Continued)

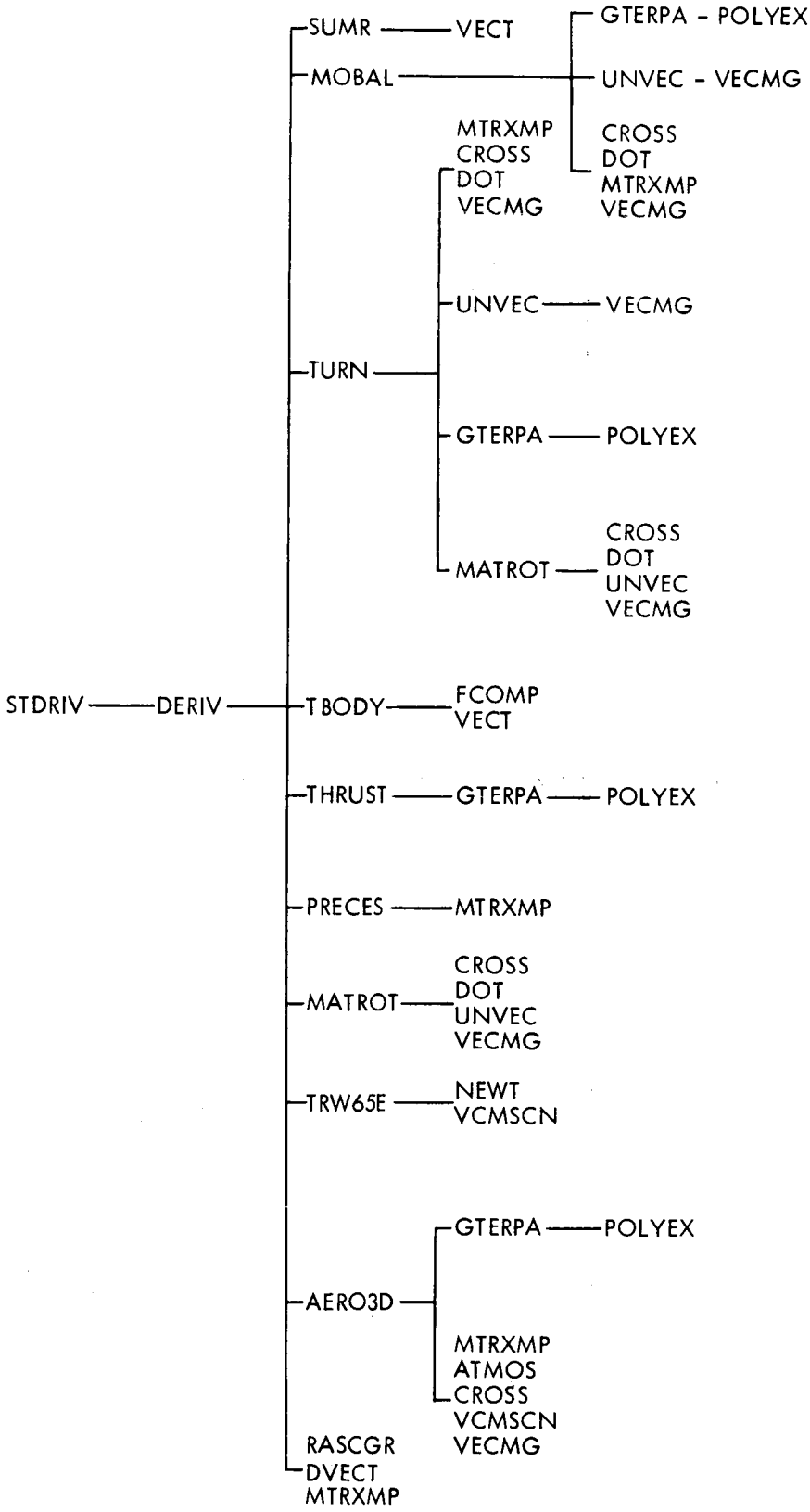

Figure 7. Program Flow Logic (Continued)

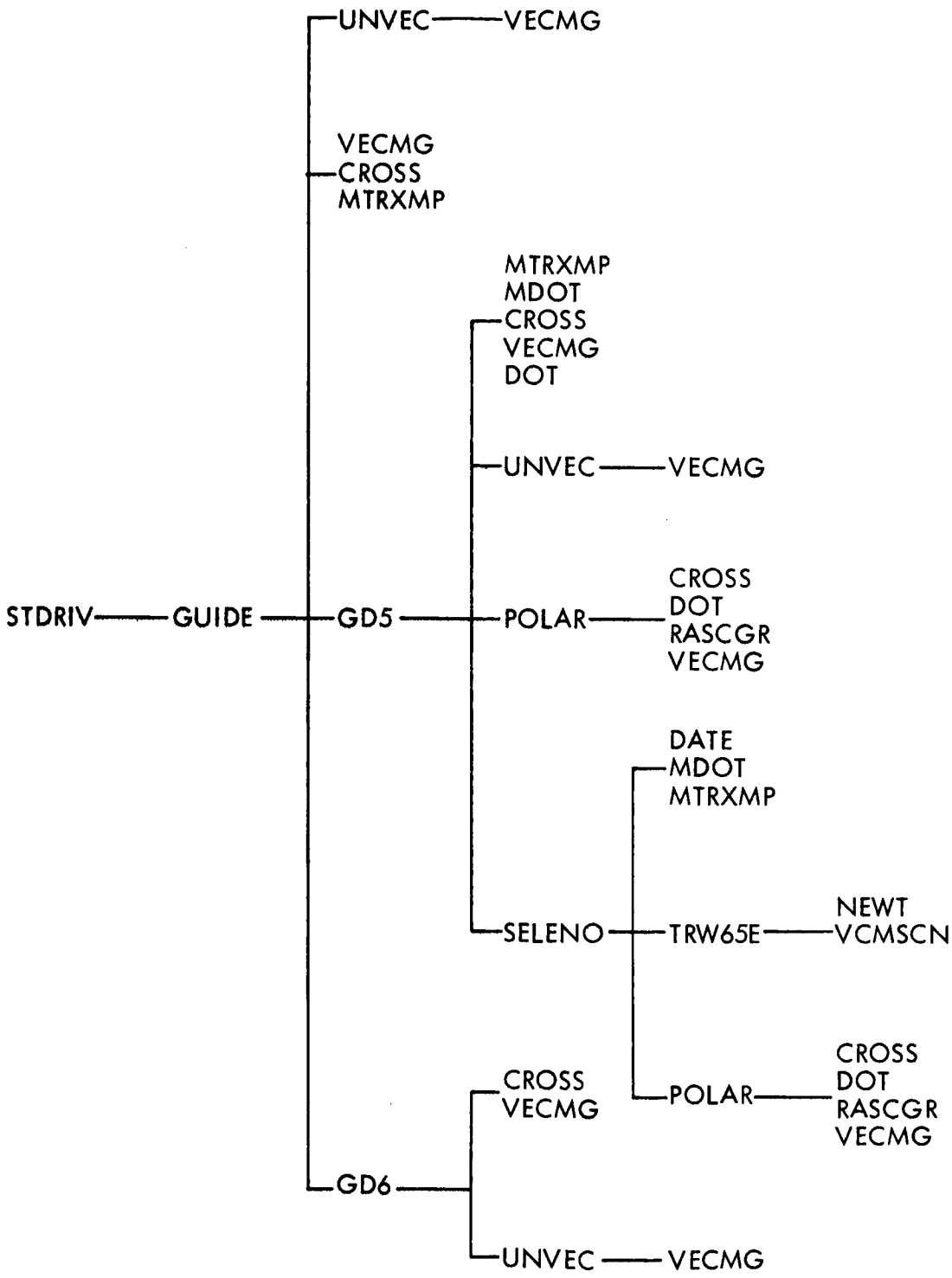

Figure 8. Program Flow Logic (Continued)

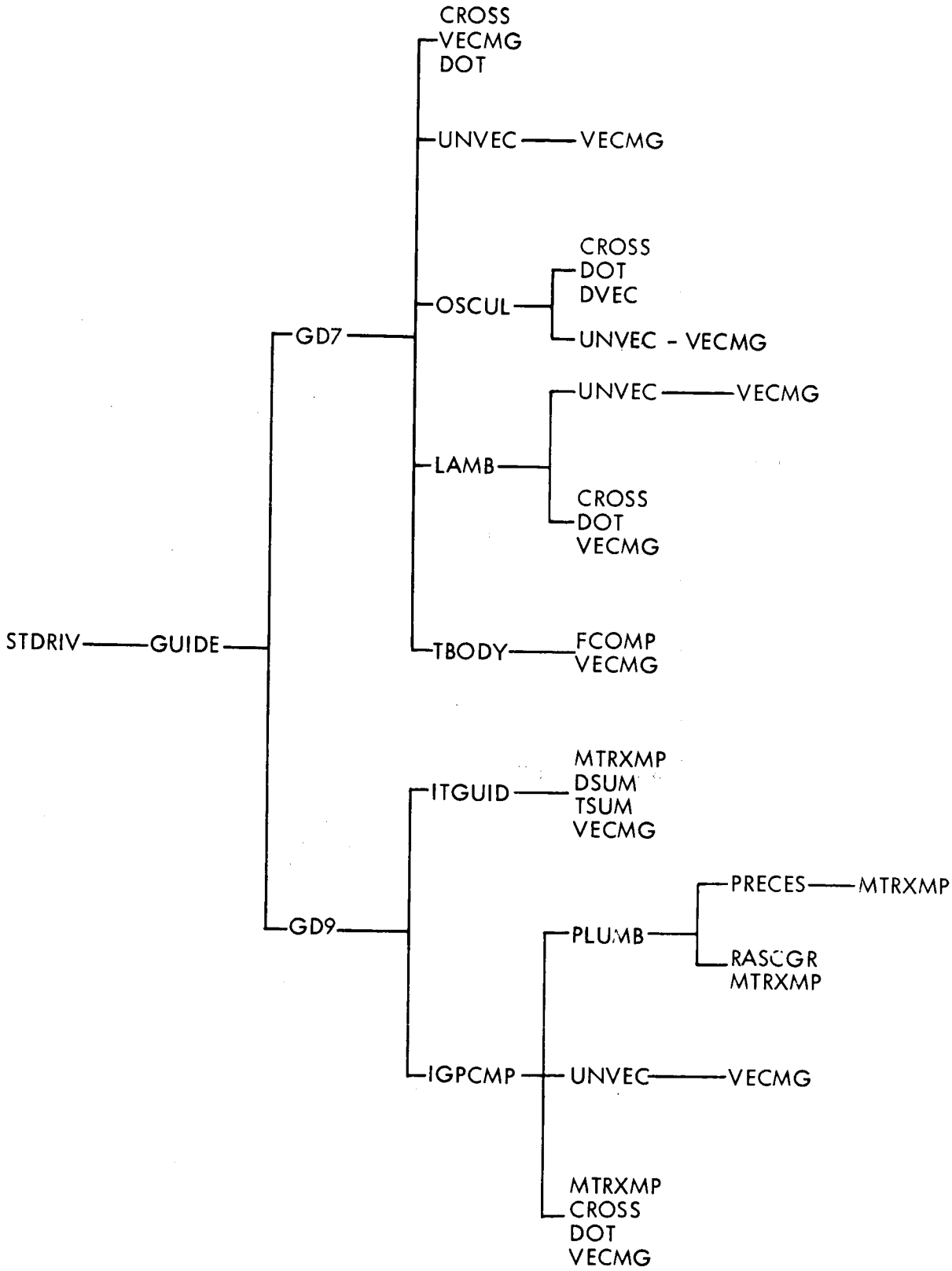

Figure 9. Program Flow Logic (Continued)

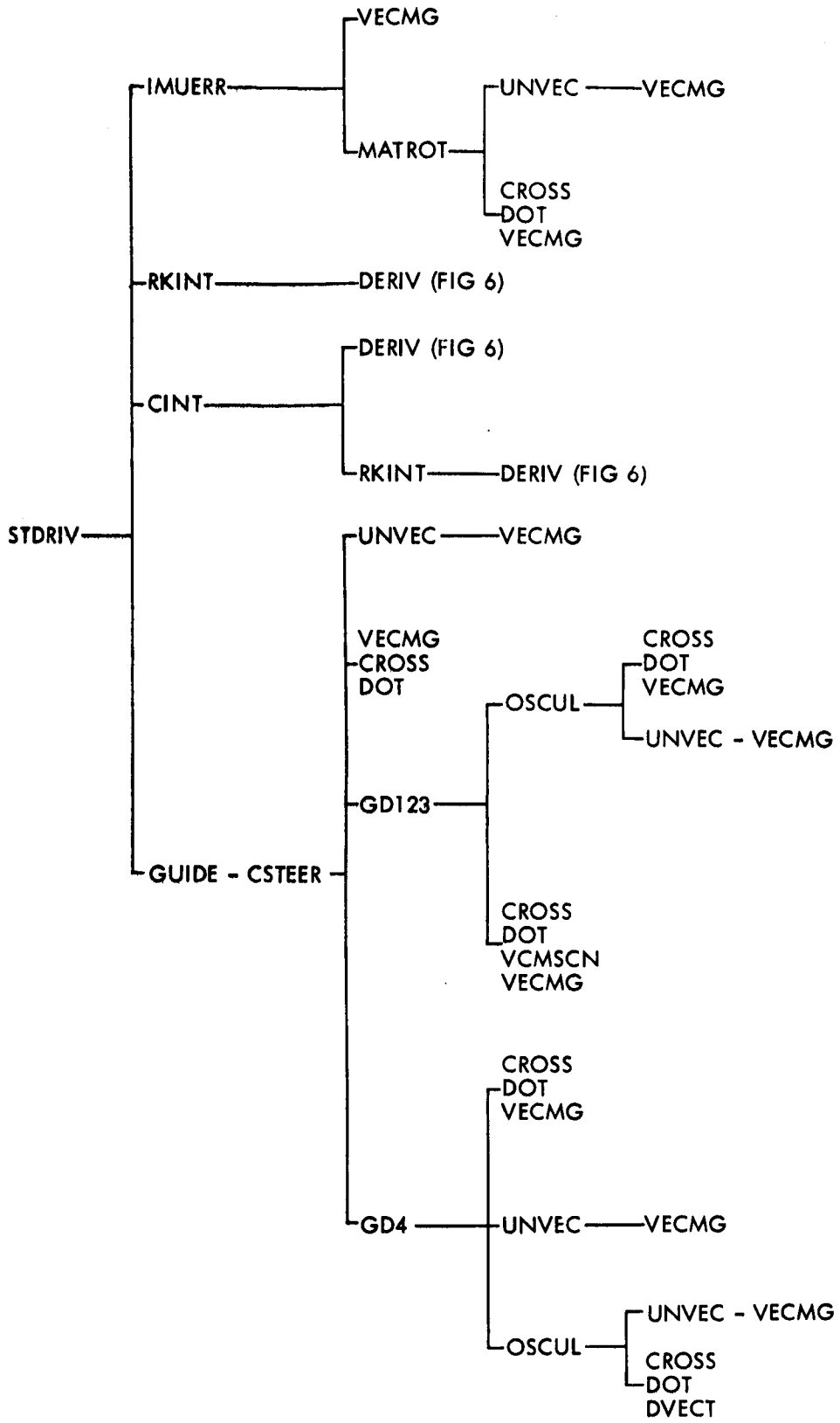

Figure 10. Program Flow Logic (Continued)

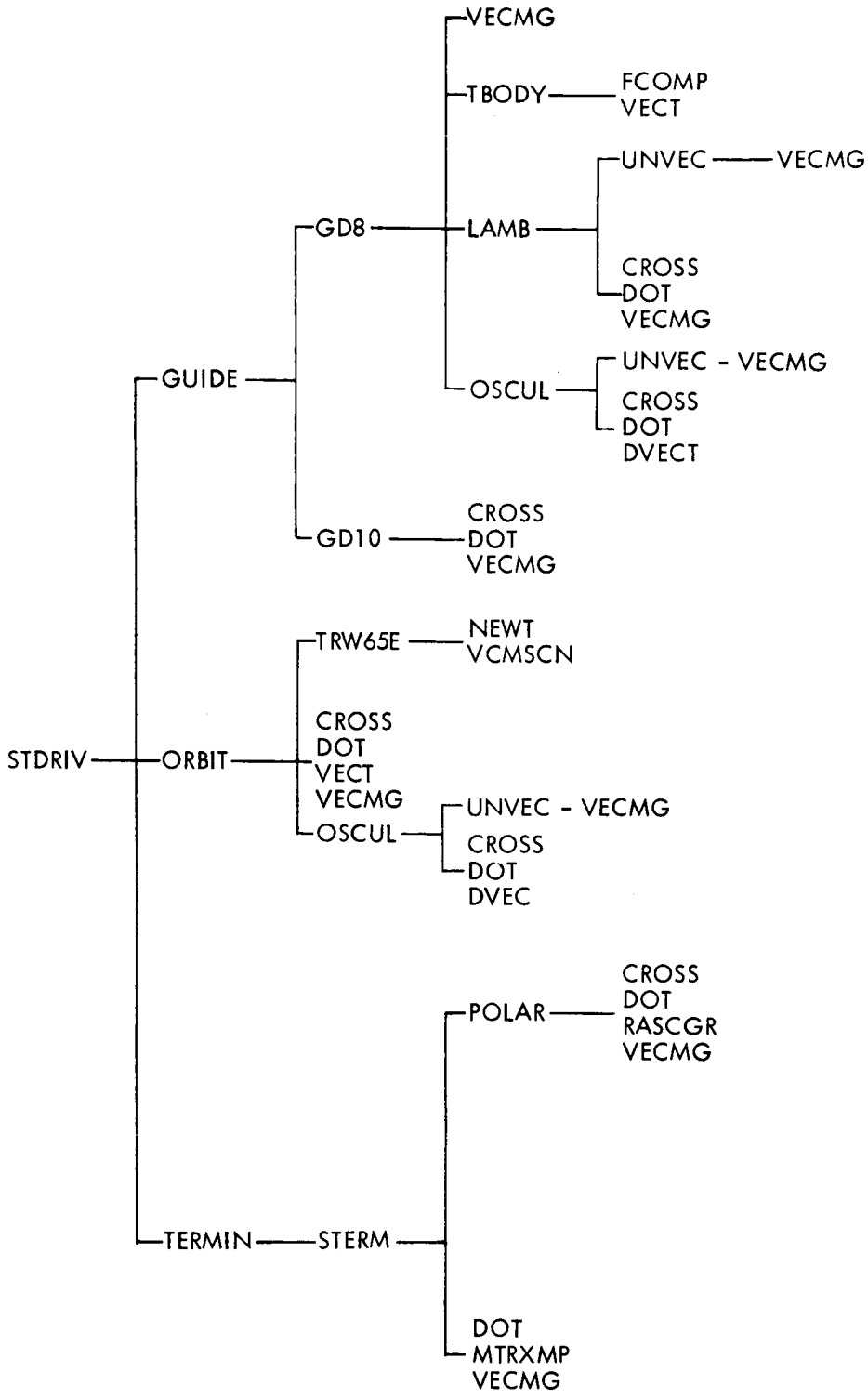

Figure 11. Program Flow Logic (Continued)

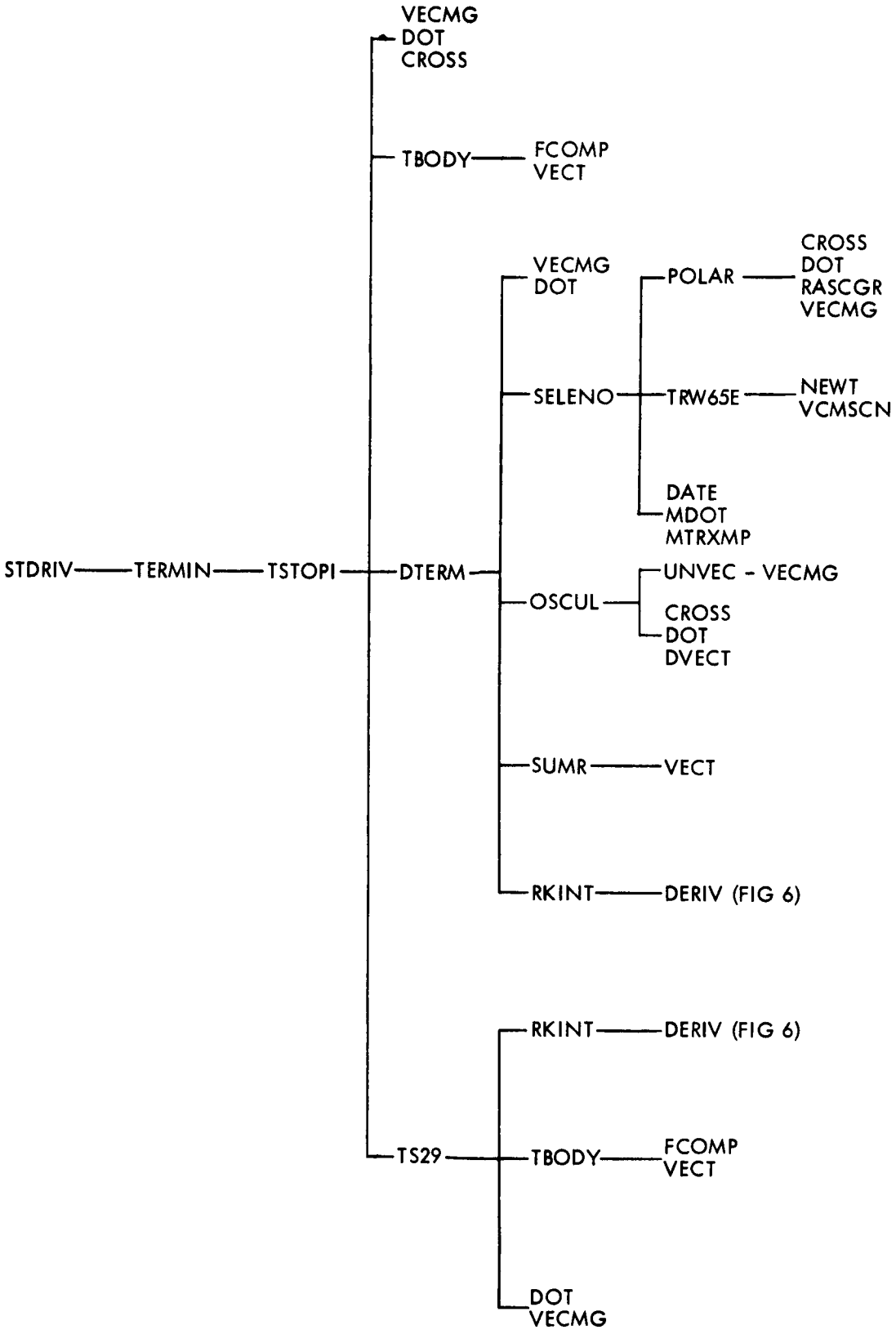

Figure 12. Program Flow Logic (Continued)

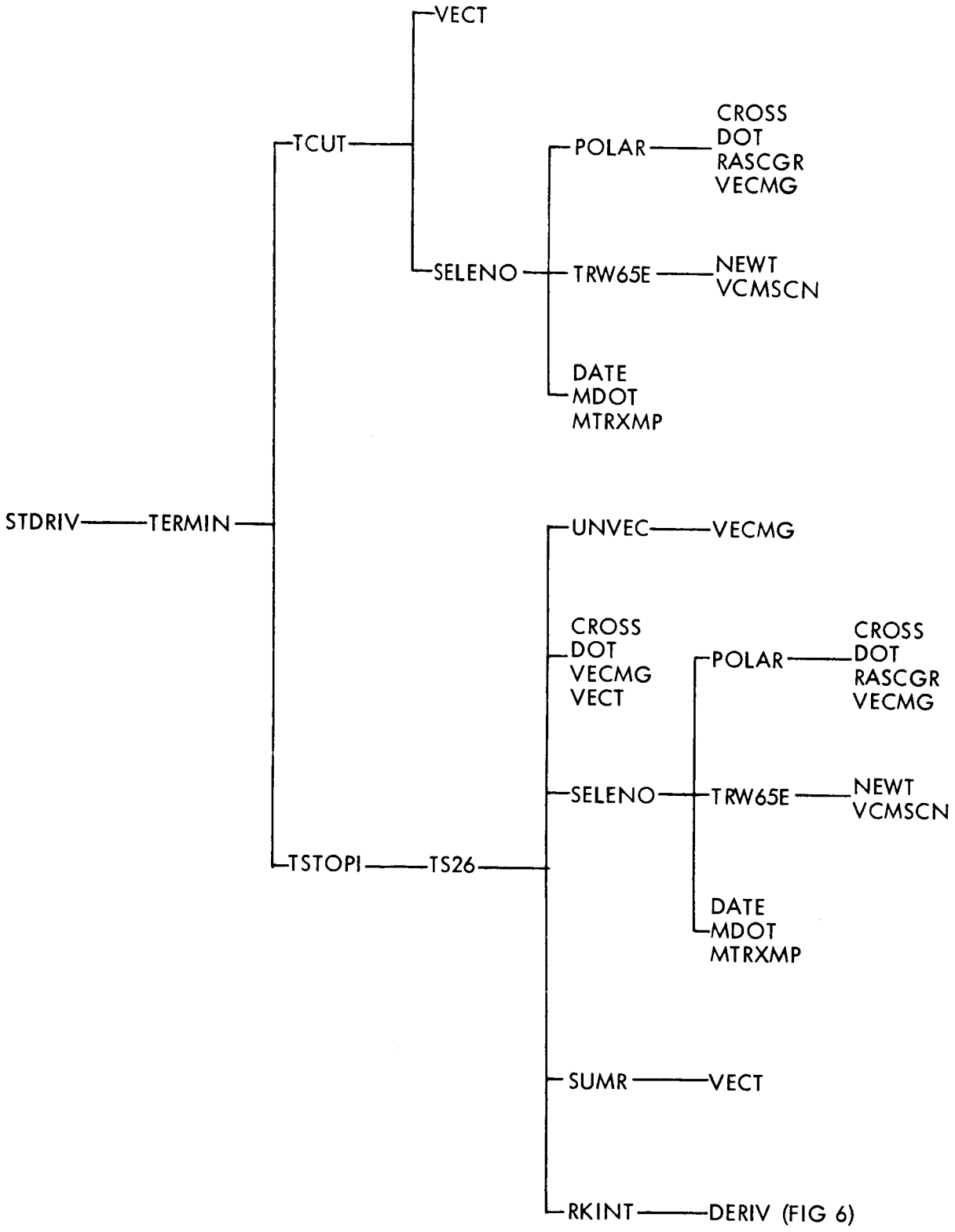

Figure 13. Program Flow Logic (Continued)

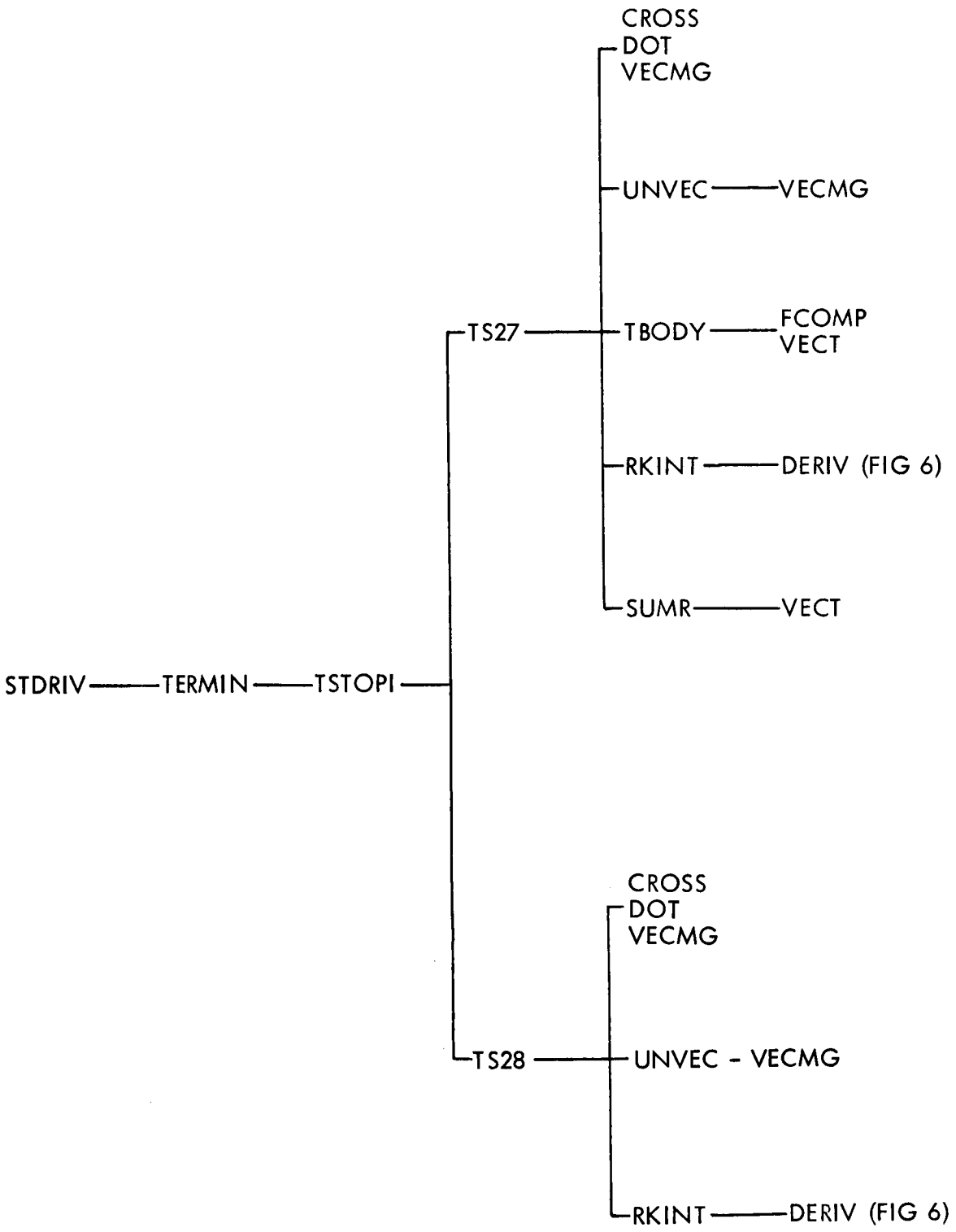

Figure 14. Program Flow Logic (Continued)

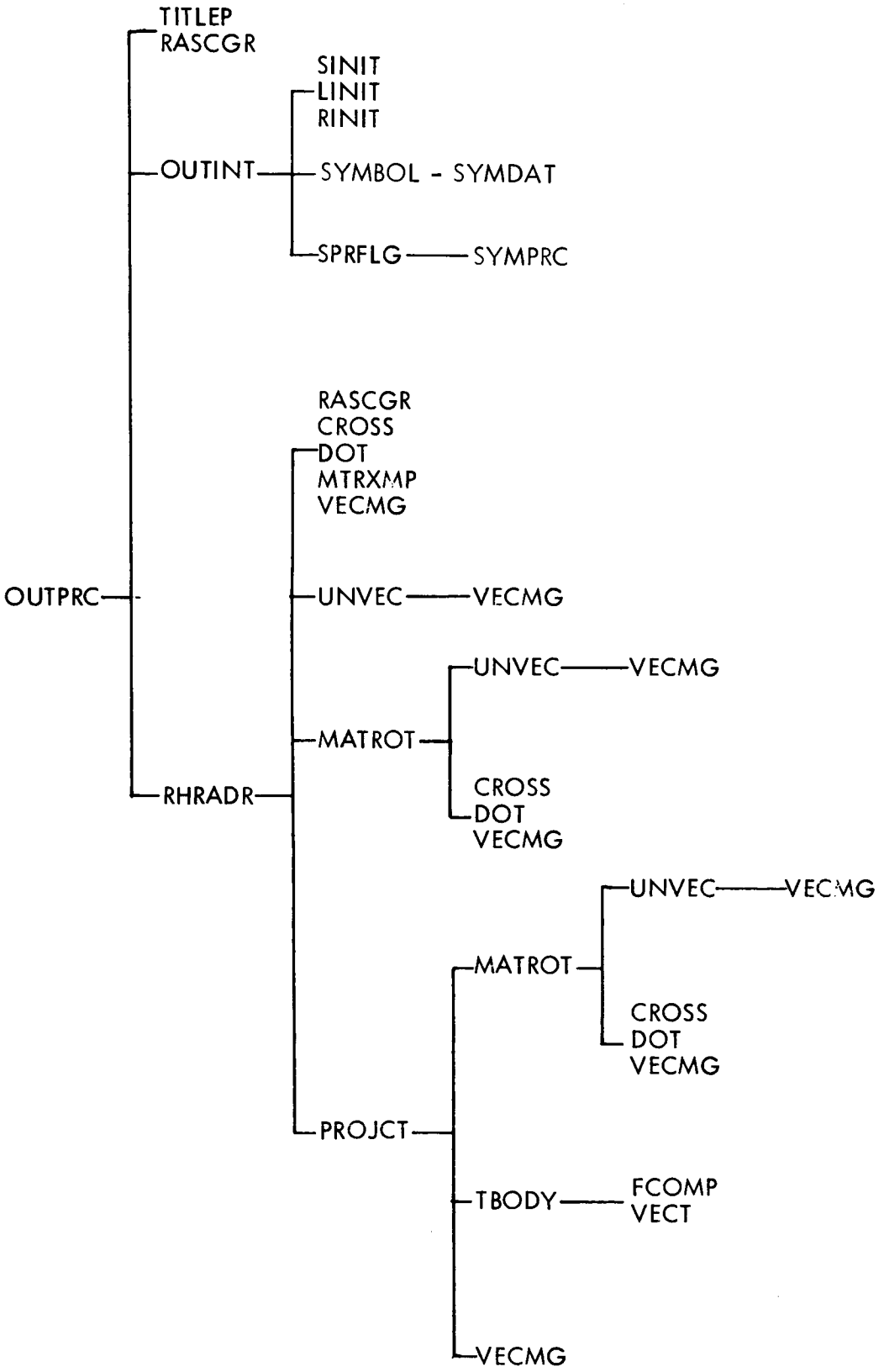

Figure 15. Program Flow Logic (Continued)

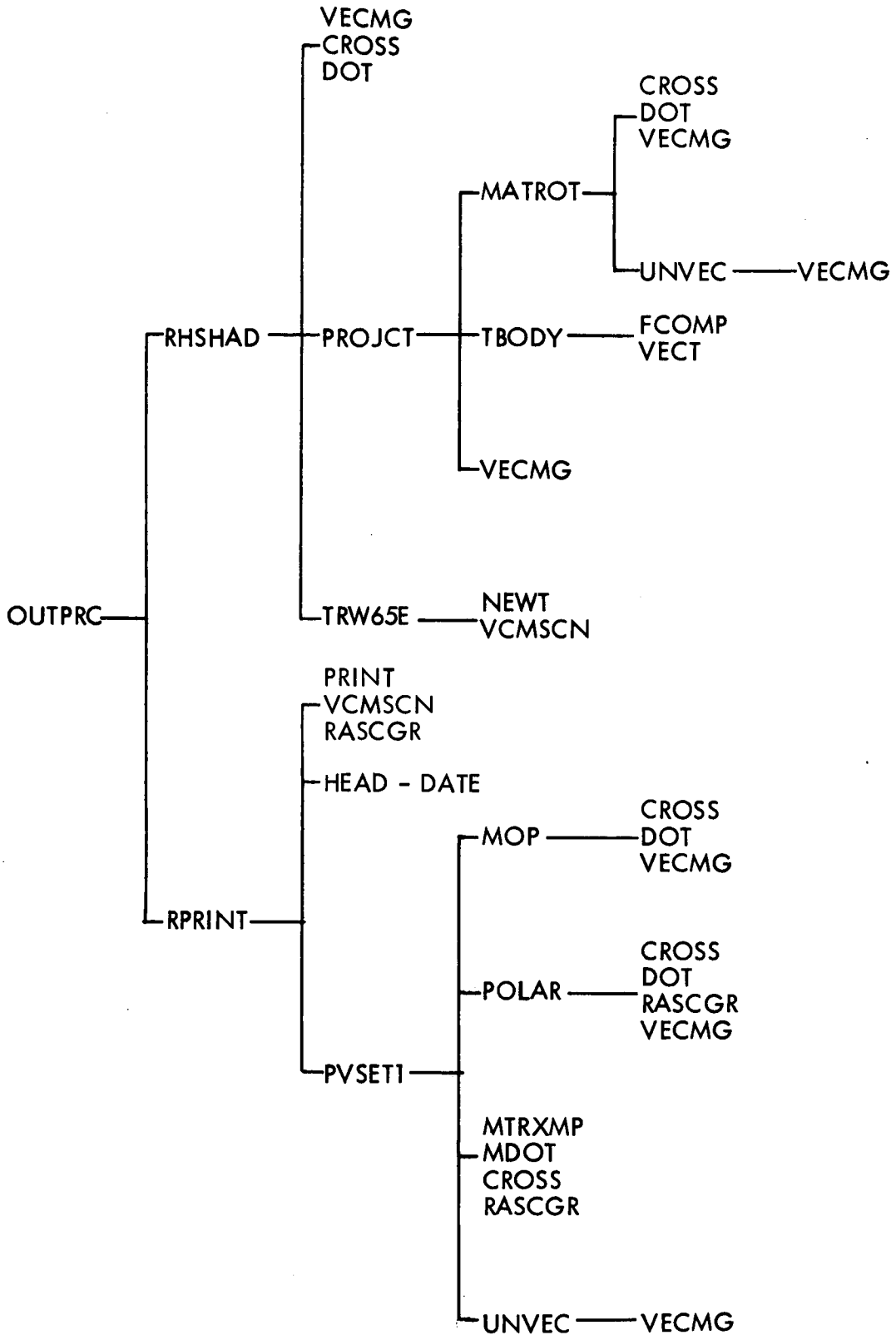

Figure 16. Program Flow Logic (Continued)

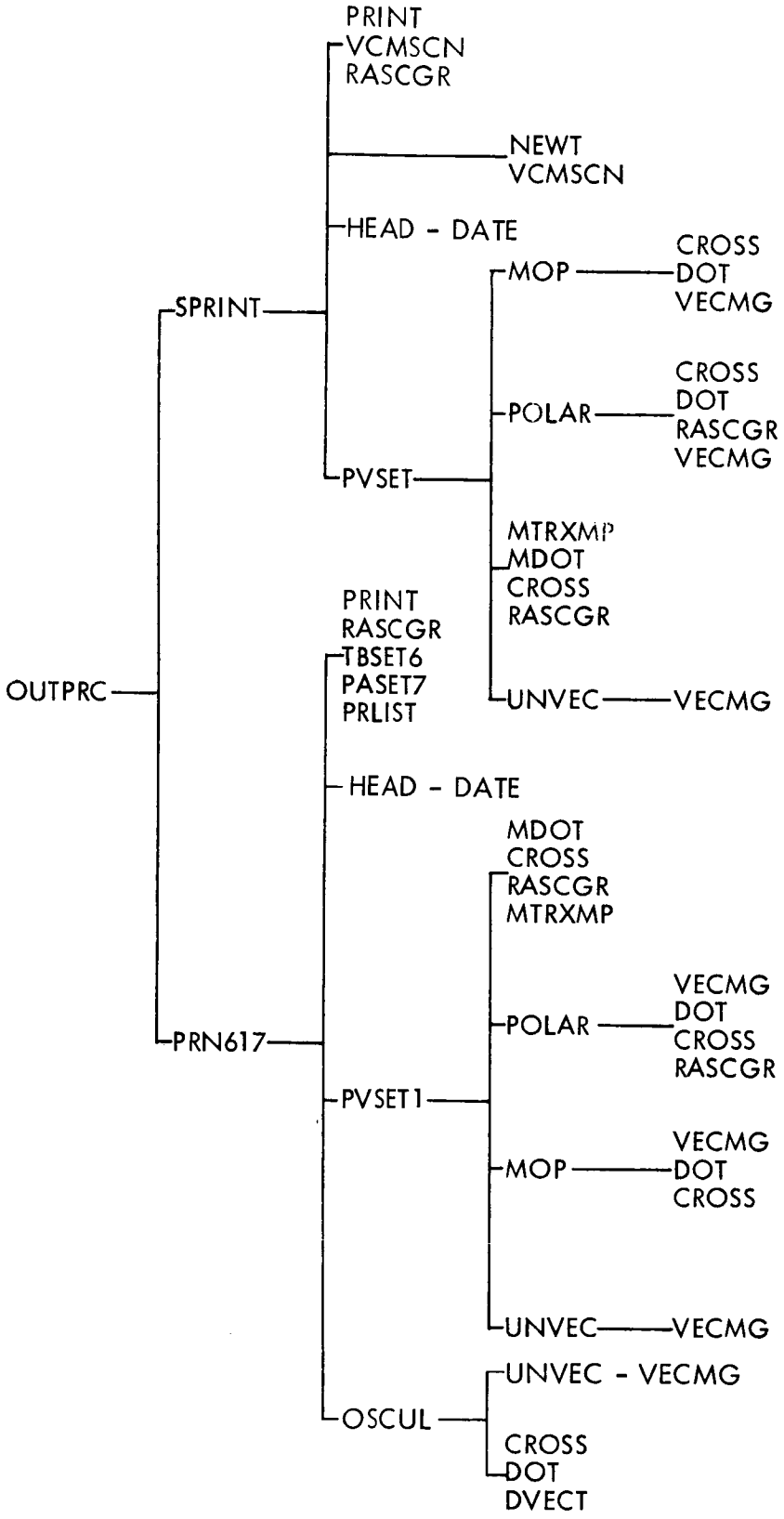

Figure 17. Program Flow Logic (Continued)

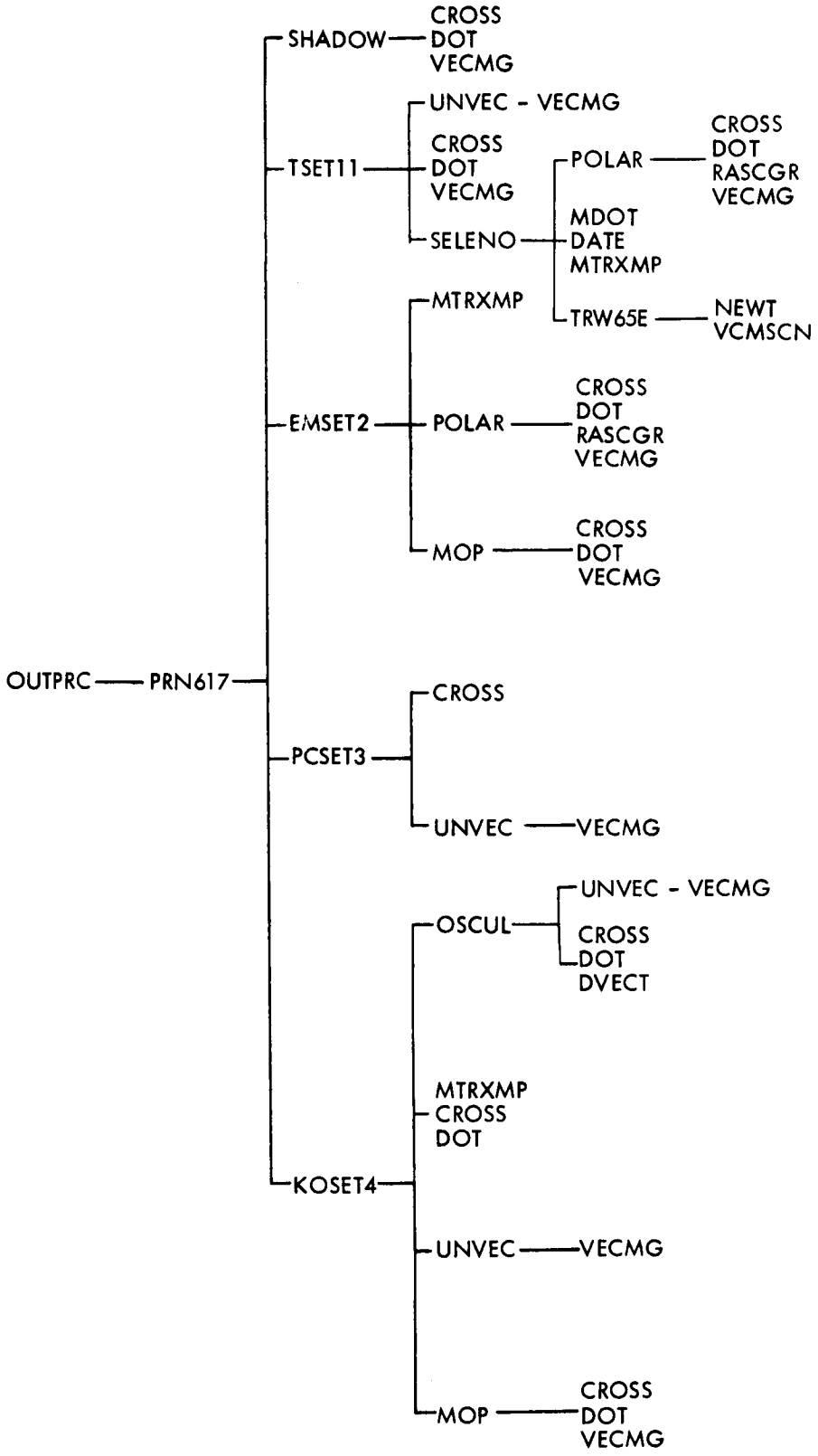

Figure 18. Program Flow Logic (Continued)

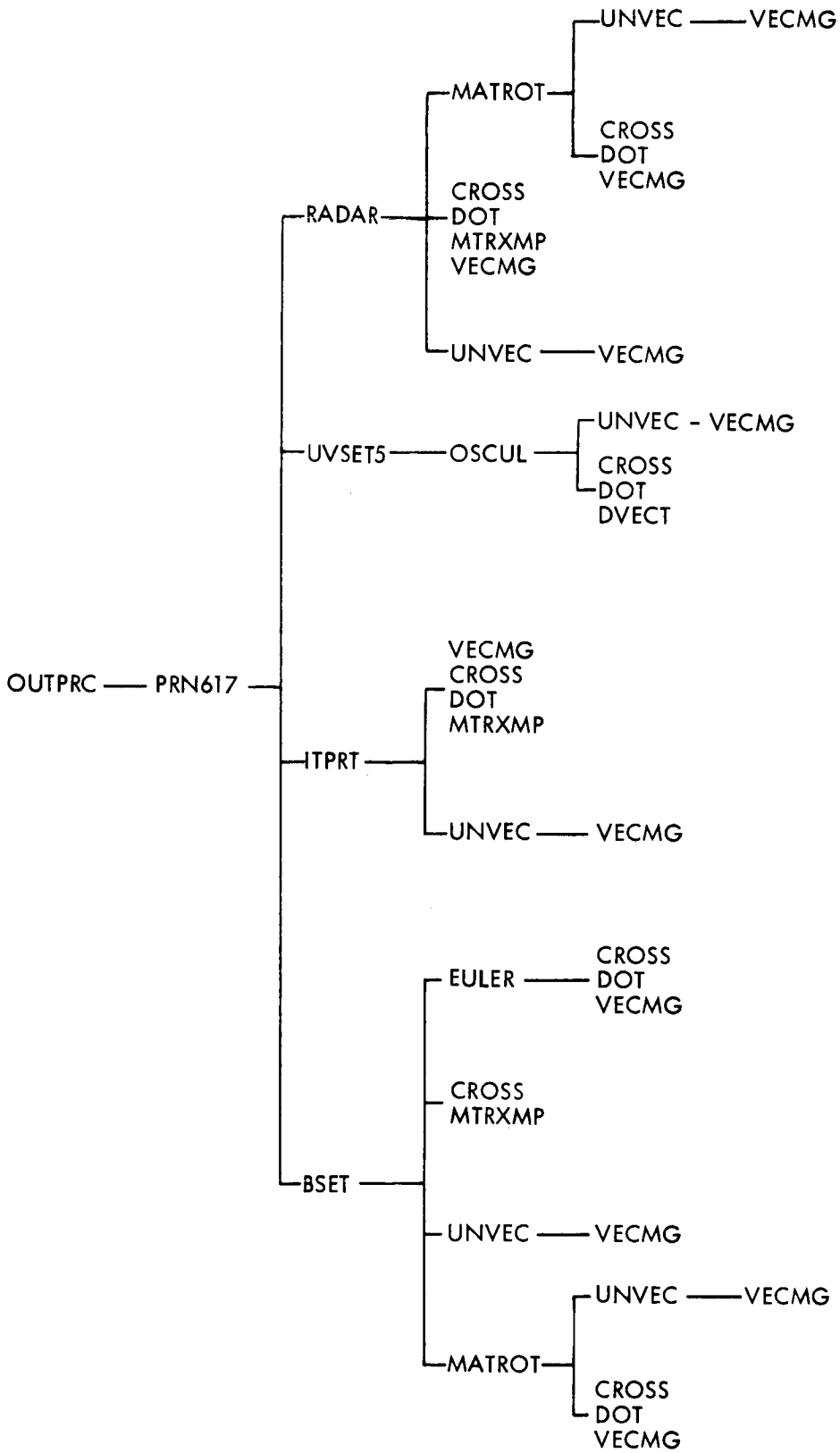

Figure 19. Program Flow Logic (Continued)

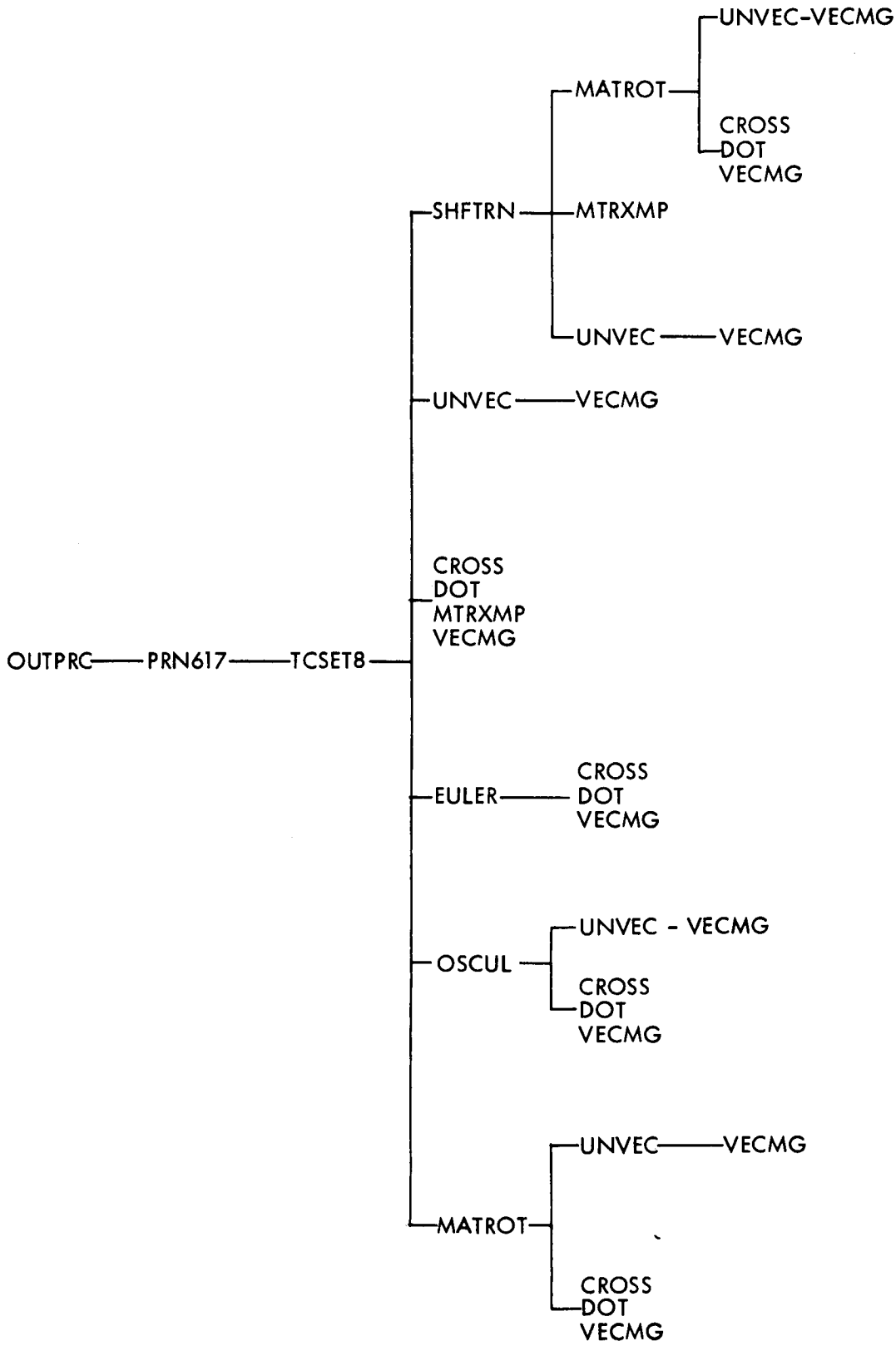

Figure 20. Program Flow Logic (Continued)

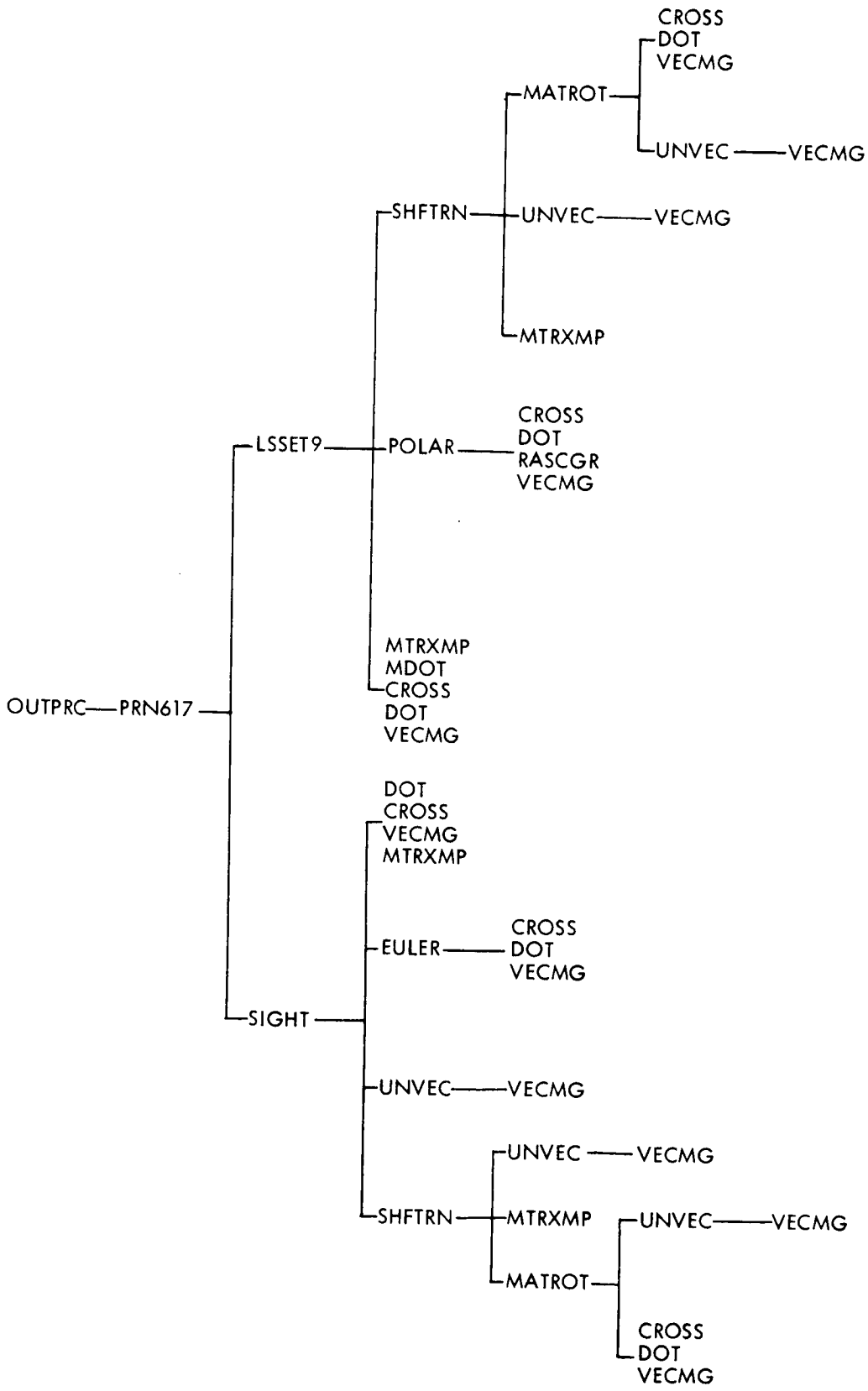

Figure 21. Program Flow Logic (Continued)

4. INPUT

4.1. INPUT FORMAT

THE INPUT FORMAT IS COMPLETELY VARIABLE WITH SPECIAL CHARACTERS TO SEPARATE FIELDS. EACH DATA FIELD IS INDEPENDENT OF ALL OTHERS AND MAY APPEAR ANYWHERE IN COLUMNS 1 THROUGH 72. LEADING AND TRAILING BLANKS ARE IGNORED WITHIN A FIELD.
THE SPECIAL CHARACTERS USED ALL SERVE AS FIELD SEPARATORS. SOME HAVE OTHER FUNCTIONS. THESE ARE

1. COMMA (,) AND EQUAL SIGN (=) ARE USED ONLY AS FIELD SEPARATORS.
2. ASTERISK (*) IS USED TO TERMINATE PROCESSING OF THE REMAINDER OF THE CARD FOLLOWING THE ASTERISK. COMMENTS MAY BE PLACED ON A CARD AFTER THE ASTERISK EXCEPT FOR PHASE CARDS
3. PARENTHESES () ARE USED TO ENCLOSE SUBSCRIPT OR PHASE TYPE INFORMATION GROUPS. IF THE PARENTHESES FOLLOW IMMEDIATELY AFTER THE SYMBOL 'PHASE', IT IS ASSUMED TO BE PHASE TYPE INFORMATION. OTHERWISE, IT IS ASSUMED TO BE SUBSCRIPT INFORMATION. THERE SHOULD NOT BE A COMMA BETWEEN A SYMBOL AND AN OPEN PARENTHESES.

THE SPECIFICATIONS FOR THE NUMERIC TYPE FIELDS ARE AS FOLLOWS

INTEGER

```
I=2,3,(5),25,8,J(4)=2,4*
WOULD GIVE I(1)=2, I(2)=3, I(5)=25, I(6)=8, J(4)=2,
           J(5)=4
```

REAL

```
X=2.5,4.6E2,(6),8.00001E-3,Y(7)=4.67E1*
WOULD GIVE X(1)=2.5, X(2)=460., X(6)=.00800001,
           Y(7)=46.7
```

DOUBLE PRECISION

```
A(3)=.4678912345678D5,216.27D-1, A(9)=7.617D3*
WOULD GIVE A(3)=46789.12345678 , A(5)=21.627,
AND A(9)=7617.0
```

4.2. PHASE SPECIFICATION

BEFORE EACH PHASE THERE MUST BE A PHASE CARD WHICH CONTAINS THE PHASE NUMBER, PHASE TYPE AND PHASE TITLE.

EXAMPLE

```
PHASE(1,0)= THIS IS THE TITLE
WHERE THE FIRST NUMBER IS THE PHASE NUMBER, THE
```

SECOND NUMBER IS THE PHASE TYPE AND THE REST OF CARD AFTER THE EQUAL SIGN IS TAKEN AS THE TITLE. A THIRD ARGUMENT IS NEEDED FOR MULTI CASE CAPABILITY. (SEE SECTION 4.3.)

PHASE TYPES

0 - INDICATES NEW CASE. ALL INPUTS ARE SET TO ZERO BEFORE THE DATA FOR THE PHASE ARE LOADED AND ALL PRESET VALUES ARE INITIALIZED.

1 - INDICATES SECONDARY PHASE. ALL INPUTS EXCEPT TABLES AND THE FOLLOWING LIST ARE CARRIED OVER. THE FOLLOWING LIST OF INPUTS ARE REINITIALIZED AS---

```
TMOON = 0.0
TSTOP = 0
CASTP = 0.0
TMODE = 0
TTR   = 0.0
ITYPE = 0
NVR   = 0
CC    = 0.0
IDENG = 0
XMTOV = 0.0
ATYPE = 0.0,0.0,0.0,0.0
ROLL = 0.,0.,0.,0.,0.,0.,0.,0.,0.,0.,0.,0.
ITURN = 0,0
GTURN = 0,0
NSTG = 0
ITG = 0
BKANG = 0.0,0.0,0.0,0.0
RBKANG = 0.0,0.0
PAATK = 0.0,0.0,0.0,0.0
```

2 - SAME AS PHASE TYPE 1 EXCEPT THAT TABLES ARE CARRIED OVER.

INITL - WHEN INPUT AS A POSITIVE INTEGER THIS INDICATOR ESTABLISHES THE TIME AT THE START OF THE PHASE IN WHICH INPUT AS THE LAUNCH TIME (TALF). THIS LAUNCH TIME IS USED AS THE BASIS FROM WHICH TPF IS MEASURED (SECTIONS 7.1.7 AND 7.1.8). THE VARIABLES TGO,ICUTOF,AND IWTC ARE INITIALIZED TO ZERO IF INITL IS A POSITIVE INTEGER. INITL IS THEN SET TO ZERO.

AT THE END OF THE FINAL PHASE A CARD CONTAINING THE WORD ENDRUN MUST BE PRESENT TO TERMINATE EXECUTION.

4.3. MULTIPLE CASE CAPABILITY

4.3.1. INTRODUCTION

EXECUTION OF THE ARM PROGRAM IS DIVIDED INTO JOB, RUNS, CASES, AND PHASES. A JOB IS A COMPLETE SET OF INPUT WHICH IS SUBMITTED FOR EXECUTION OF THE ARM PROGRAM. IT CONSISTS OF A RUN OR RUNS.

A RUN IS A CASE OR GROUP OF CASES THAT FORM AN ENTIRE SET OF INPUT FOR A COMPLETE EXECUTION OF THE PROGRAM. RUNS ARE TERMINATED BY AN 'ENDRUN' CARD. THE INPUT FOR AN ENTIRE RUN IS PROCESSED, THEN THE TRAJECTORY EXECUTION AND OUTPUT ARE PERFORMED.

A CASE IS A PHASE OR GROUP OF PHASES THAT ARE EXECUTED SERIALLY. A CASE IS STARTED BY INITIALIZING THE TRAJECTORY AND ALL TABLES. THUS, THE FIRST PHASE IN A RUN AND ALL TYPE 0 PHASES BEGIN A CASE.

A PHASE IS THE BASIC UNIT OF EXECUTION AND IS A DEFINED PORTION OF THE TRAJECTORY. INPUTS ARE MADE BY PHASE. EXECUTION OF THE TRAJECTORY AND OUTPUT IS DONE ONE PHASE AT A TIME. PARAMETERS AND TABLES MAY BE CARRIED OVER FROM ONE PHASE TO THE NEXT. DEFINITION OF THE 'PHASE' INPUT IS DESCRIBED IN THE PHASE SPECIFICATION SECTION.

4.3.2. DEFINITION

MULTIPLE CASES MAY BE EXECUTED WITHIN A RUN BY REINITIALIZING THE TRAJECTORY AND TABLES. THIS REQUIRES REINPUT OF THESE QUANTITIES. HOWEVER, A BASE CASE MAY BE SAVED. THIS BASE CASE MAY BE USED IN PLACE OF INPUTTING ALL THE REQUIRED QUANTITIES. THUS, ONLY THE DESIRED CHANGES TO THE BASE CASE NEED TO BE INPUT FOR SUBSEQUENT CASES.

THE CREATION, USE, AND MODIFICATION OF A BASE CASE ARE CONTROLLED BY INPUT OF THE 'MCASE' OPTION. MCASE IS INPUT AS THE THIRD SUBSCRIPT FOR 'PHASE' AS FOLLOWS,

```
PHASE(NO,TYPE,MCASE) = TITLE *      ,WHERE,
     NO = PHASE NUMBER,
     TYPE = PHASE TYPE,
     MCASE = MCASE OPTION (SEE BELOW),
     AND TITLE = BCI TITLE.
```

MCASE MAY BE OMITTED. IF SO, IT IS ASSUMED TO BE ZERO.

```
MCASE OPTIONS --
     0 = NO CHANGE
     1 = STANDARD (NOT MULTI-CASE) (INITIAL VALUE)
     2 = CREATE A BASE CASE
     3 = USE THE BASE CASE
     4 = MODIFY AND USE THE BASE CASE (CREATE NEW BASE CASE)
```

4.3.3. USE OF MULTICASE OPTION

THE MCASE OPTION IS A POSITIVE CONTROL, I.E., IT SHOULD BE INPUT ONLY WHEN A CHANGE IN THE OPTION IS DESIRED. IF THIS MULTIPLE CASE CAPABILITY IS NOT DESIRED, MCASE NEED NOT BE INPUT.

IF THIS MULTIPLE CASE CAPABILITY IS DESIRED, A BASE CASE MUST BE CREATED. THIS IS ACCOMPLISHED BY INPUTTING MCASE AS 2 IN THE FIRST PHASE CARD OF THE BASE CASE. ALL OTHER PHASE CARDS OF THE BASE CASE SHOULD NOT HAVE A MCASE INPUT (OR INPUT AS 0). THE END OF THE BASE CASE IS SIGNALLED WHEN THE NEXT PHASE CARD CONTAINS A NON-ZERO MCASE.

TO USE A BASE CASE, THE PHASE CARDS FOR THE PHASES TO BE MODIFIED SHOULD BE INPUT, EACH FOLLOWED BY THE NEW INPUTS FOR THAT PHASE FOR THIS CASE. THE FIRST PHASE CARD FOR THIS CASE SHOULD HAVE MCASE INPUT AS 3. ALL OTHER PHASE CARDS FOR THIS CASE SHOULD NOT HAVE A MCASE INPUT (OR INPUT AS 0). THE END OF THE CASE IS SIGNALLED WHEN THE NEXT PHASE CARD CONTAINS A NON-ZERO MCASE, OR AN ENDRUN CARD IS ENCOUNTERED.

THE BASE CASE MAY BE USED AS MANY TIMES AS DESIRED WITHIN A RUN. A NEW BASE CASE MAY BE CREATED WITHIN A RUN BY INPUTTING IT JUST AS IF IT WERE THE FIRST BASE CASE (MCASE OPTION 2). AN EXISTING BASE CASE MAY BE MODIFIED BY INPUTTING ONLY THE DESIRED CHANGES AND USING MCASE OPTION 4 SIMILAR TO MCASE OPTION 3. IN THIS INSTANCE THE MODIFIED BASE CASE WILL BE EXECUTED AND WILL REPLACE THE ORIGINAL BASE CASE.

EXAMPLE OF PHASE INPUTS TO UTILIZE MULTI-CASE CAPABILITY.
ONLY THE PHASE CARDS ARE SHOWN.

```
PHASE(1,0,2)= START BASE CASE          CASE 1  PHASE 1  INPUT 1A
PHASE(2,1)  = CONTINUE BASE CASE       CASE 1  PHASE 2  INPUT 2A
PHASE(3,1)  = CONTINUE BASE CASE       CASE 1  PHASE 3  INPUT 3A
PHASE(1,0,3)= START CASE 2             CASE 2  PHASE 1  INPUT 1B
PHASE(1,0,4)= START MOD TO BASE CASE   CASE 3  PHASE 1  INPUT 1C
PHASE(2,1)  = CONTINUE MOD             CASE 3  PHASE 2  INPUT 2C
PHASE(2,1,3)= START CASE 4             CASE 4  PHASE 2  INPUT 2D
PHASE(1,0,3)= START CASE 5             CASE 5  PHASE 1  INPUT 1E
PHASE(3,1)  = CONTINUE CASE 5          CASE 5  PHASE 3  INPUT 3E
ENDRUN
```

THIS EXAMPLE CREATES A BASE CASE, USES IT, MODIFIES THE BASE CASE, AND USES THE MODIFIED BASE CASE TWICE. THE RUN WILL BE EXECUTED AS IF THE INPUTS HAD BEEN MADE IN THE FOLLOWING ORDER.

```
CASE 1  PHASE 1    INPUT 1A
CASE 1  PHASE 2    INPUT 2A
```

CASE 1	PHASE 3	INPUT 3A	
CASE 2	PHASE 1	INPUT 1A + 1B	
CASE 2	PHASE 2	INPUT 2A	
CASE 2	PHASE 3	INPUT 3A	
CASE 3	PHASE 1	INPUT 1A + 1C	(DEFINE AS 1X)
CASE 3	PHASE 2	INPUT 2A + 2C	(DEFINE AS 2X)
CASE 3	PHASE 3	INPUT 3A	(DEFINE AS 3X)
CASE 4	PHASE 1	INPUT 1A + 1C	(= 1X)
CASE 4	PHASE 2	INPUT 2A + 2C + 2D	(= 2X + 2D)
CASE 4	PHASE 3	INPUT 3A	(= 3X)
CASE 5	PHASE 1	INPUT 1A + 1C + 1E	(= 1X + 1E)
CASE 5	PHASE 2	INPUT 2A + 2C	(= 2X)
CASE 5	PHASE 3	INPUT 3A + 3E	(= 3X + 3E)

4.4. GLOSSARY OF INPUT VARIABLES

SYMBOL	DEFINITION AND (SECTION REFERENCE)
A2	TARGET ACCELERATION VECTOR FOR FINAL APPROACH PHASE (7.1.5.)
AALT	COMPUTED ALTITUDE(FT)-TABLE ARGUMENT (14.1.2.)
AAP	PITCH ANGLE OF ATTACK (14.1.)
AASA	SMALL ANGLE APPROXIMATION FOR ANGLE OF ATTACK FOR VEHICLE (8.2.)
AAT	TOTAL ANGLE OF ATTACK (14.1.)
AAY	YAW ANGLE OF ATTACK (14.1.)
ACCM	ACCELERATION MISALIGNMENTS (13.1.1.)
ADD	VALUE ADDED TO TABLE FUNCTION (14.1.)
ADEN	ATMOSPHERIC DENSITY (8.2.)
AHB	HOHMANN BURN CENTRAL ANGLE (10.4.2.)
ALH	COAST ANGLE PRIOR TO CSI MANEUVER (10.5.3.)
ALPHA	ANGLE FROM PERIGEE TO DESCENDING NODE (7.1.9.)
ALPNB	ANGLE OF ROTATION ABOUT THE Y-AXIS REQUIRED TO TRANSFORM FROM THE VEHICLE AXIS SYSTEM TO THE NAVIGATION BASE SYSTEM (8.9.)
ALSC	REFERENCE TRUE ANOMALY (7.1.4.)
ALT	ALTITUDE (5.2.3.)
ALTL	ALTITUDE OF LANDMARK (12.2.2.)
ALTLS	ALTITUDE OF LANDING SITE (7.1.1.)
ALTR	STATION ALTITUDE (11.1.2.)
ALTS	LM ALTITUDE (16.2.)
AMLT	TABLE ARGUMENT MULTIPLIER (14.5.)
ANOMN	MEAN ANOMALY (5.2.8.)(5.3.8.)
ANOMT	TRUE ANOMALY (5.2.10.)(5.3.9.)
ANTAZ1,ANTAZ2	THE ANTENNA AZIMUTH ANGLES OF VEHICLE 1 AND VEHICLE 2 (11.1.3.)
ANTEL1,ANTEL2	THE ANTENNA ELEVATION ANGLES OF VEHICLE 1 AND VEHICLE 2 (11.1.3.)
APHD	LM RENDEZVOUS TRANSFER ANGLE (10.5.1.)

APOR	APOCYNTHION RADIUS (5.2.10.)(5.3.9.)
APSI	ATMOSPHERIC PRESSURE (8.2.)
AREA	AERODYNAMIC REFERANCE AREA OF VEHICLE(8.3.2.2.)
ARG	TABLE ARGUMENT (14.1.)
ARGPC	ARGUMENT OF PERICYNTHION (5.2.8.) (5.3.8.)
ATI	DESIRED TARGET ACCELERATION VECTOR (7.1.5.)
ATDM	DESIRED ACCELERATION MAGNITUDE (7.1.5.)
ATHD	DESIRED CSM PHASE ANGLE AT LIFTOFF (10.5.1.)
ATHR	DESIRED SEMI-MAJOR AXIS (7.1.3.)
ATLL	LOWER ALTITUDE LIMIT FOR CALCULATIONS OF AERODYNAMICS AND ATMOSPHERE (8.2.)
ATTER1,ATTER2	VEHICLES 1 AND 2 ATTITUDE MISALIGNMENT(13.1.1.)
ATUL	UPPER ALTITUDE LIMIT FOR WHICH AERODYNAMICS AND ATMOSPHERE WILL BE COMPUTED FOR VEHICLE (8.2.)
ATYPE(1), ATYPE(2)	OPTION INDICATOR FOR VEHICLE ATTITUDE ALIGNMENT (VEHICLES 1 AND 2) (8.7.)
ATYPE(3), ATYPE(4)	OPTION INDICATOR FOR IMU ALIGNMENT (VEHICLES 1 AND 2) (8.6.)
AZ	AZIMUTH (5.2.2.)
AZE	AZIMUTH (5.2.3.)
AZL	AZIMUTH (5.3.5.)
AZMP	AZIMUTH (5.2.5.)(5.3.2.)
AZR	AZIMUTH (5.3.3.)
AZRLS	RELATIVE AZIMUTH OF LANDING SITE (7.1.1.)
BAS1,BAS2	BASE PRESSURE FORCE (8.3.2.1.)
BETA	DESIRED THRUST ACCELERATION ANGLE (7.1.5.)
BETAI	ANGLE BETWEEN THE IGNITION RADIAL VECTOR AND S-VECTOR (7.1.9.)
BGEND	FLAG USED IN CONJUNCTION WITH REPORT GENERATOR SUMMARY PRINT PROGRAM TO INDICATE IF DATA ARE TO BE WRITTEN ON THE VARIABLE FORMAT TAPE AT EVERY PRINT POINT OR ONLY AT THE BEGINNING AND END OF PHASE. (15.1.)
BKANG	DESIRED BANK ANGLE (8.6.11. AND 8.7.11.)
CA1,CA2	AXIAL DRAG COEFFICIENT ALONG THE NEGATIVE X-BODY AXIS (VEHICLES 1 AND 2) (8.3.2.1.)
CASTP	CENTRAL ANGLE TERMINATION VALUE (10.2.8.)
CATIME	TERMINATION VALUE - CENTRAL ANGLE TIME (10.2.9.)
CC	GUIDANCE CONSTANT (THRUST MULTIPLIER)(7.1.1.)
CDRAG1, CDRAG2	DRAG COEFFICIENT FOR VEHICLES 1 AND 2 ALONG NEGATIVE RELATIVE VELOCITY VECTOR (8.3.2.1.)
CG1,CG2	X-AXIS COMPONENT OF THE CENTER OF GRAVITY LOCATION FOR VEHICLES 1 AND 2 (8.3.2.2.)
CGP1,CGP2	Y-AXIS COMPONENT OF THE CENTER OF GRAVITY FOR VEHICLES 1 AND 2 (8.3.2.2.)
CGY1,CGY2	Z-AXIS COMPONENT OF THE CENTER OF GRAVITY FOR VEHICLES 1 AND 2 (8.3.2.2.)
CINE	INTEGRATION STEP SIZE IN NEAR EARTH REGION (6.3.)
CINL	INTEGRATION STEP SIZE IN NEAR MOON REGION (6.3.)
CINNE	INTEGRATION STEP SIZE IN NOT NEAR EARTH REGION (6.3.)
CINNL	INTEGRATION STEP SIZE IN NOT NEAR MOON REGION (6.3.)

CJ2F	JERK COEFFICIENTS VECTOR FOR APPROACH PHASE (7.1.5.)
CJOF	JERK COEFFICIENTS FOR THROTTLABLE PORTION OF BRAKING PHASE (7.1.5.)
CJOX	JERK COEFFICIENT FOR IGNITION PHASE (7.1.5.)
CLASS	TYPE OF DEPENDENT VARIABLE (IN ITERATOR)(20.3.)
CLIFT1, CLIFT2	LIFT COEFFICIENT ALONG THE DIRECTION OF THE PROJECTION OF THE Z-BODY AXIS IN THE PLANE PERPENDICULAR TO THE RELATIVE VELOCITY VECTOR. (8.3.2.1.)
CNP01,CNP02, CNP11,CNP12, CNP21,CNP22, CNP31,CNP32	NORMAL FORCE COEFFICIENTS IN THE X-Z PLANE ALONG THE Z-AXIS OF VEHICLES 1 AND 2. (8.3.2.1.)
CNY01,CNY02, CNY11,CNY12, CNY21,CNY22, CNY31,CNY32	NORMAL FORCE COEFFICIENTS IN THE X-Y PLANE ALONG THE Y-AXIS OF VEHICLES 1 AND 2. (8.3.2.1.)
CODE	CODE OF 6 CHARACTERS DESIRED ON PUNCHED PARTIALS OUTPUT (13.1.1. AND 13.1.2.)
CONVAL	CONSTANT VALUE IN CONSTANT VALUE TABLE (14.1.)
COORD	INPUT COORDINATE SYSTEM INDICATOR (7.1.9.)
CPP1, CPP2	POINT OF APPLICATION OF THE AERODYNAMIC FORCE ALONG THE Z-AXIS FROM THE GIMBAL POINT(8.3.2.2.)
CPY1, CPY2	POINT OF APPLICATION OF THE AERODYNAMIC FORCE ALONG THE Y-AXIS FOR VEHICLES 1 AND 2.(8.3.2.2.)
D	VEHICLE VELOCITY DIRECTIONAL FLAG (5.2.10.,5.3.9)
D4(1),D4(2)	IMU ALIGNMENT FLAG (VEHICLES 1 AND 2) (13.1.1.)
DALT	ALTITUDE ABOVE SURFACE (7.1.5.)
DAYS	LAUNCH DAY OF MONTH (5.1.)
DEC	DECLINATION (5.2.2.)
DECL	DECLINATION (5.3.5.) (12.1.2.)
DELL	OUT OF PLANE LIMIT (10.5.1.)
DELSM	MINIMUM SUNLIGHT INTERFERENCE ANGLE (12.1.3.)
DELT	CENTRAL BODY MASS PARAMETER BIAS (7.1.1.)
DEMP	DECLINATION (5.3.2.)(5.2.5.)
DEPV	NAME OF THE DEPENDENT VARIABLE (20.3.)
DGAM	DESIRED TRUE ANOMALY OR PATH ANGLE (7.1.4.)
DIREC	MULTIPLIER TO DESIGNATE DIRECTION AND MAGNITUDE OF TRAJECTORY PROPAGATION (6.)
DISP	SPECIFIC IMPULSE (ASSOCIATED WITH THMOX)(7.1.5.)
DJERK(I)	COMPONENTS OF RATE OF CHANGE OF ACCELERATION (I=1,2,3) (7.1.5.)
DMASS	MASS JETTISONED AT START OF A THRUST PHASE(8.3.1)
DNODE	DESCENDING NODE OF THE CUTOFF PLANE FROM THE INITIAL VECTOR ALONG THE NODE DEFINED BY THE IGNITION PLANE AND THE CUTOFF PLANE (7.1.9.)
DRAN	SURFACE RANGE (7.1.5.)
DRIFT(1), DRIFT(4)	PLATFORM DRIFT RATES FOR VEHICLES 1 AND 2. (13.1.1.)
DRT	TARGET VELOCITY (7.1.1.)
DTGUID	FREQUENCY AT WHICH GUIDANCE EQUATIONS ARE SOLVED

	(7.1.)
DTLAND	TIME TO GO TO LANDING ON LUNAR SURFACE(8.6.6.)- OR -ELAPSED TIME SINCE LAUNCH (8.6.5.)
DTLPS	TIME LAPSE BEFORE ATTITUDE MANEUVER INITIATION (SEC) DIMENSIONED FOR 2 VEHICLES.(8.5.8.)
DTMIN	MINIMUM ATTITUDE MANEUVER DURATION (SEC). DIMENSIONED FOR 2 VEHICLES. (8.5.8.)
DVEL	DESIRED VELOCITY MAGNITUDE (7.1.4.)
DX,DY,DZ	INERTIAL GEOCENTRIC VELOCITY COMPONENTS (5.2.1.)
DXL,DYL,DZL	INERTIAL SELENOCENTRIC VELOCITY COMPONENTS (5.3.1.)
DXMP,DYMP,DZMP	EARTH-MOON PLANE VELOCITY COMPONENTS (5.3.6.)(5.2.4.)
DXPL,DYPL,DZPL	COMPONENTS OF VEHICLE VELOCITY (5.2.6.)
DXS,DYS,DZS	ROTATIONAL SELENOGRAPHIC VELOCITY COMPONENTS (5.3.4.)
ECC	ECCENTRICITY OF THE CUTOFF ELLIPSE (7.1.9.)
EDT	EPHEMERIS DELTA TIME (5.1.)
ELAS	ANISOELASTIC EFFECTS (13.1.1.)
ELMIN	MINIMUM ELEVATION THRESHOLD FOR RADAR ACQUISITION (11.1.3.)
EMPOT	FLAG TO EVALUATE ASPHERICAL ACCELERATION (9.)
ENDFP1	ENGINE DEFLECTION ANGLE ABOUT THE VEHICLE Y-AXIS. POSITIVE ANGLE DEFLECTS THE THRUST VECTOR TOWARD THE NEGATIVE Z-AXIS.(8.3.3)
ENDFPA	ENGINE DEFLECTION ANGLE ABOUT THE VEHICLE Y-AXIS FOR ATTITUDE ALIGNMENT. POSITIVE ANGLE DEFLECTS THRUST VECTOR TOWARD NEGATIVE Z-AXIS. (8.3.4.)
ENDFPI	ENGINE DEFLECTION ANGLE ABOUT THE VEHICLE Y-AXIS FOR IMU ALIGNMENT. POSITIVE ANGLE DEFLECTS THE THRUST VECTOR TOWARD NEGATIVE Z-AXIS.(8.3.4.)
ENDFY1	ENGINE DEFLECTION ANGLE OUT OF THE VEHICLE X-Z PLANE. POSITIVE ANGLE MOVES THE THRUST VECTOR TOWARD THE VEHICLE Y-AXIS.(8.3.3)
ENDFYA	ENGINE DEFLECTION ANGLE OUT OF THE VEHICLE X-Z PLANE FOR ATTITUDE ALIGNMENT. POSITIVE ANGLE MOVES THE THRUST VECTOR TOWARD THE VEHICLE Y-AXIS. (8.3.4.)
ENDFYI	ENGINE DEFLECTION ANGLE OUT OF THE VEHICLE X-Z PLANE FOR IMU ALIGNMENT. POSITIVE ANGLE DEFLECTS THE THRUST VECTOR TOWARD THE VEHICLE Y-AXIS. (8.3.4.)
ENDLST	END OF INPUT SYMBOLS (15.1.)
ENOM	NOMINAL ECCENTRICITY OF THE CUTOFF ELLIPSE(7.1.9)
ENRG	CUTOFF ENERGY (7.1.9.)
EPSS	MINIMUM STAR-STAR ANGLE (12.1.3.)
EQUINT	ARGUMENTS OF TABLE ARE TO BE SPACED AT EQUAL INTERVALS AFTER INITIAL ARGUMENT IS SPECIFIED (14.1.)
ERO	EXTENDED TABLE RANGE INDICATOR (14.1.)
ERRMDL	ERROR MODEL FLAG (13.1.1.)
ETOL	THE TOLERANCE ON ELEVATION ANGLE USED FOR

	DETERMINING RADAR ACQUISITION AND TERMINATION EVENTS AS A RESULT OF THE ELEVATION PASSING THROUGH THE MINIMUM ELEVATION THRESHOLD (13.1.4.)
FINCL	LM-CSM ORBIT INCLINATION (LM S-BAND)(16.4.1.2.)
FMLT	TABLE FUNCTION MULTIPLIER (14.1.)
FRZCT	TIME BEFORE CUTOFF TO FREEZE ENTIRE GUIDANCE (7.1.9.)
FRZEND	TIME BEFORE CUTOFF TO FREEZE CUTOFF CONDITIONS (7.1.9.)
FRZK	TIME BEFORE CUTOFF TO SET K1,K2,K3,K4 TO 0 (GD9) (7.1.9.)
FTINDC	INDICATOR FOR SPECIFYING KEYHOLE CONSTANT (11.1.2.)
FUNCT	TABLE FUNCTION (14.1.1.)
FVSTEP	STEP SIZE INDICATOR (6.)
GAMETH	TERMINATION VALUE-EARTH INERTIAL FLIGHT PATH ANGLE (10.2.6.)
GAMLUN	TERMINATION VALUE-MOON INERTIAL FLIGHT PATH ANGLE (10.1.6.)
GTURN(1), GTURN(2)	INDICATOR TO SELECT THE OPTION TO MAINTAIN THE VEHICLE X-AXIS ALONG THE INERTIAL OR RELATIVE VELOCITY VECTOR FOR VEHICLES 1 AND 2. (8.5.2.)
H3F	HEIGHT ABOVE LANDING SITE FOR START OF VERTICAL DESCENT (7.1.5.)
HDOT3	DESIRED VELOCITY AT START OF VERTICAL DESCENT (7.1.5.)
HDOT4	DESIRED DESCENT RATE (7.1.5.)
HRS	LAUNCH HOUR OF DAY (5.1.) AND LUNAR LANDING HOUR (16.4.1.3.)
IABRT	ASCENT PHASE TERMINATION INDICATOR (10.5.2.)
ICA	FLAG FOR TERMINATION ON A VALUE COMPUTED IN A PREVIOUS PHASE (10.5.10.-13.)
ICOORD	INPUT COORDINATES FLAG (13.1.2.)
ICUTOF	TERMINATES RENDEZVOUS WHEN SEPARATION DISTANCE IS LESS THAN SPECIFIED BY RCUTOF (10.5.14.) (10.5.18.)
IGA	LM IMU INNER GIMBAL ANGLE (16.2.)
ILPTR	TARGET OPTION INDICATOR (7.1.5.)
IMASS	MASS AT THRUST INITIATION OF VEHICLE (8.3.1.)
IMDC	OPTION INDICATOR(VARIES WITH TERMINAL RENDEZVOUS TERMINATION OPTION) (7.1.4.)
INAV	NAVIGATION SELECTOR (12.2.1.) (13.2.)
INC	INCLINATION OF THE CUTOFF PLANE (7.1.9.)
INDEPV	NAME OF THE INDEPENDENT VARIABLE (20.2.)
INITL	INITIAL PHASE INDICATOR (4.2.)
INJECT	SPECIFIES REFERENCE BODY AND INPUT COORDINATE SYSTEM (5.2.0.)
INPHI	INDICATOR TO CAUSE INPUT OF PHITAB TO BE USED INSTEAD OF OGA VALUES FROM THE VARIABLE TAPE (16.4.1.1.)
INSAVE	FLAG TO SAVE ALL INPUT DATA EXCEPT ITER AND IPLOT FOR POSSIBLE USE WITH SUBSEQUENT CASES(LM S-BAND) (16.4.1.1.)

IPCA	COORDINATE SYSTEM INDICATOR (7.1.5.) (7.1.7.)
IPHASE	EITHER THE PHASE WHERE THE INDEPENDENT VARIABLE IS VARIED OR THE DEPENDENT VARIABLE IS COMPUTED, DEPENDING WHICH SYMBOL, 'INDEPV' OR 'DEPV' LAST APPEARED PREVIOUS TO IPHASE (20.2.)
IPLOT	FLAG TO CAUSE PROGRAM SCAN AND PLOT OF COMMUNICATIONS AVAILABILITY AT 4 DEGREE INTERVALS OVER RANGE OF ALL POSSIBLE LM YAW ANGLES (LM S-BAND) (16.4.1.1.)
IPRINT	COAST PRINT MODE SELECTOR (21.1.)
IPTCH1	TURNING RATE TABLE-VEHICLE 1 Y-AXIS (8.5.4.)
IPTCH2	TURNING RATE TABLE-VEHICLE 2 Y-AXIS (8.5.4.)
IROLL1	TURNING RATE TABLE-VEHICLE 1 X-AXIS (8.5.4.)
IROLL2	TURNING RATE TABLE-VEHICLE 2 X-AXIS (8.5.4.)
ISCALE	INPUT OPTION FOR UNITS OF DISTANCE AND VELOCITY (5.2.) (5.3.)
ITERAT	CONTROL INDICATORS FOR ITERATION SUBROUTINES (13.1.2.)
ITERPR	PRINT OPTION OF THE ITERATOR (20.7.)
ITG	NUMBER OF GUIDANCE STAGES (4.2.)
ITHPR	INDICATOR WHICH CONTROLS PRINT FREQUENCY DURING A THRUST PHASE (21.1.)
ITURN(1)	SELECTS THE GRAVITY TURN OPTION FOR VEHICLE 1 (8.5.2.)
ITURN(2)	SELECTS THE GRAVITY TURN OPTION FOR VEHICLE 2 (8.5.2.)
ITYPE	GUIDANCE EQUATION INDICATOR (7.1.1.)
IVPRNT	VARIABLE TAPE INPUT PRINT SELECTOR (LM S-BAND) (16.4.1.1.)
IWNV	RELATIVE VELOCITY WIND FLAG FOR VEHICLE (8.2.)
IWTC	MASS INDICATOR (8.3.1.)
IYAW1,IYAW2	TURNING RATE TABLES (VEHICLES 1 AND 2)(14.8.)
J2E,J3E,J4E	EARTH HARMONIC COEFFICIENT,ND (9.)
J2M,J3M,J4M	MOON ZONAL HARMONIC COEFFICIENT,ND (9.)
J22E	EARTH SECTORIAL HARMONIC COEFFICIENT, ND (9.)
J22M	MOON SECTORIAL HARMONIC COEFFICIENT, ND (9.)
JJ	GRAVITY COEFFICIENT (IN NAVIG) (11.3.1.)
K3	INITIAL ROLL MANEUVER FLAG. DIMENSIONED FOR 2 VEHICLES (8.5.8.)
KL	ONE-HALF OF THE TOTAL WIDTH OF THE OPTICS BLIND ALONG THE GROUND TRACK (12.2.3.)
KSIX	MISSION CONSTANT FOR GRAVITY COMPUTATION (7.1.9.)
L22E	PHASE ANGLE FOR COMPUTING POSITION OF X-AXIS DIRECTED THROUGH EARTH'S EQUATOR (9.)
L22M	PHASE ANGLE FOR COMPUTING POSITION OF X-AXIS DIRECTED THROUGH MOON'S EQUATOR (9.)
LAMBDA	LONGITUDE OF THE LAUNCH SITE, POSITIVE EAST (5.2.6.) (7.1.9.)
LAML	LONGITUDE OF LANDMARK (12.2.2.)
LANDMK	LANDMARK IDENTIFICATION (12.2.2.)
LAT	LATITUDE (5.2.3.)
LAT	SELENOGRAPHIC LATITUDE OF LM LUNAR LANDING SITE

	(LM S-BAND) (16.4.1.2.)
LATLS	LATITUDE OF THE LANDING SITE (7.1.1.)
LATR	STATION LATITUDE (11.1.2.)
LATS	LATITUDE (5.3.3.)
LATSTP	TERMINATION VALUE-LATITUDE (10.1.3.)
LAZ	LAUNCH AZIMUTH (GUID9) (5.2.6.) (7.1.9.)
LINEAR	SPECIFIES A LINEAR TABLE (14.1)
LON	LONGITUDE (5.2.3.)
LONG	SELENOGRAPHIC LONGITUDE OF LM LUNAR LANDING SITE (LM S-BAND) (16.4.1.2.)
LONLS	LONGITUDE OF THE LANDING SITE (7.1.1.)
LONR	STATION LONGITUDE (11.1.2.)
LONS	LONGITUDE (5.3.3.)
LONSTP	TERMINATION VALUE-LONGITUDE (10.1.2.)
LOOP	THE NUMBER OF THE ITERATION LOOP (20.1.)
LSTG	NUMBER OF THE BURNING GUIDANCE STAGES (7.1.9.)
MASTER	SPECIFIES A MASTER TABLE (14.1.)
MCASE	MULTIPLE CASE OPTION INDICATOR (4.3.2.)
MGA	LM IMU MIDDLE GIMBAL ANGLE (16.2.)
MHAT	AIM VECTOR POINTING AWAY FROM THE MOON BEHIND THE EARTH (7.1.9.)
MINS	LAUNCH MINUTES OF HOUR (5.1.)
MITV	MIT OPTION INDICATOR FOR DESIRED PITCH STEERING EQUATIONS (7.1.9.)
MMAG	AIM VECTOR MAGNITUDE (7.1.9.)
MMASS	MINIMUM ALLOWABLE MASS DURING THRUST PHASE (8.3.1.)
MODE	INDICATOR FOR MODE OF IGM SIMULATION (7.1.9.)
MONTH	LAUNCH MONTH OF YEAR (16.4.1.3.)
MSFL	MASS FLOW RATE (22.3.4.)
MUE	EARTH'S GRAVITATIONAL PARAMETER (9.)
MUM	MOON'S GRAVITATIONAL PARAMETER (9.)
MVEC	UNIT AIM VECTOR TOWARD THE MOON (7.1.9.)
NAZBP	NUMBER OF AZIMUTH BLIPS WITH HAND CONTROLLER DOING REDESIGNATION (7.1.5.)
NDEG	NUMBER OF DEGREES OF FREEDOM (7.1.9.)
NEGTOL	VALUE SUBTRACTED FROM 'TARGET' TO OBTAIN A LOWER BOUND ON THE DEPENDENT VARIABLE (20.3.)
NELBP	NUMBER OF ELEVATION BLIPS WITH HAND CONTROLLER DOING REDESIGNATION (7.1.5.)
NLOOP	THE ITERATION LOOP WHERE THE ITERATOR USES THE VARIABLE, THIS SYMBOL ALSO HAS THE SAME DEPENDENCY AS 'IPHASE' ON CARD ORDER IN THE INPUT (20.3.)
NOPRNT	FLAG TO DELETE PRINT OF TRAJECTORY AND S-BAND LOOK ANGLE TIME HISTORY (LM S-BAND) (16.4.1.1.)
NPLOTS	INTEGER VALUE OF THE NUMBER OF PLOTS FOR THE PRESENT PHASE OR SET OF PHASES (17.1.)
NSTG	NUMBER OF GUIDANCE STAGES (7.1.9.)
NTAPE	OUTPUT TAPE SELECTOR (21.1.)
NTHRUS	NO THRUST GUIDANCE INDICATOR (7.1.5.)
NV	NUMBER OF VEHICLES (5.2.-.3.)
NVEHT	THRUSTING VEHICLE INDICATOR (7.1.1.)

NVR	TERMINAL VELOCITY INDICATOR (7.1.1.)
NVTERM	NUMBER OF VEHICLE TO WHICH TERMINATION CRITERIA APPLY (10.1.7.)
OGA	LM IMU OUTER GIMBAL ANGLE (16.2.)
OINC	ORBITAL INCLINATICN (5.2.8.) (5.3.8.)
CMAX	TERMINATION VALUE-ORBIT COUNT (10.1.1.)
OMEGRP	DIMENSIONED FOR 4 WHERE CMEGRP(1) AND OMEGRP(3) ARE THE ROLL MANEUVER RATES FOR VEHICLE 1 AND 2 AND OMEGRP(2) AND (4) ARE THE PITCH/YAW MANEUVER RATES FOR VEHICLE 1 AND 2 (8.5.8.)
CMODE	FLAG TO START THE ITERATOR IN THE OPTIMIZE MODE (20.1.)
OPTMAT	NUMBER OF PARTIAL DERIVATIVE MATRICES GENERATED IN THE OPTIMIZATICN MODE OF THE ITERATOR (20.1.)
ORECC	ORBITAL ECCENTRICITY (5.2.8.) (5.3.8.)
OSCALE	OUTPUT OPTION FOR UNITS OF DISTANCE AND VELOCITY (21.1)
OSMA	ORBITAL SEMIMAJOR AXIS (5.2.8.) (5.3.8.)
OTOL	THE TOLERANCE ON THE MOON OCCULTATION ANGLE FOR DETERMINING RADAR ACQUISITION AND TERMINATION EVENTS AS A RESULT OF THE VEHICLE BECOMING OCCULTED OR UNOCCULTED BY THE MOON (11.1.4.)
OVRLAY	OVERLAY INDICATOR (21.1.)
PAATK	PITCH ANGLE OF ATTACK (8.6.1.1.)
PABIAS	PERTURBATION IN ACCELEROMETER BIAS (13.1.2.)
PACCM	PERTURBATION IN ACCELERCMETER MISALIGNMENT (13.1.2.)
PANLIN	PERTURBATION IN ACCELEROMETER NONLINEARITY (13.1.2.)
PASCAL	PERTURBATICN IN ACCELEROMETER SCALE FACTOR (13.1.2.)
PATT	PERTURBATION IN ATTITUDE MISALIGNMENT (13.1.2.)
PAXIS1	COMPONENTS OF A UNIT VECTOR ALONG VEHICLE 1 Y-DYNAMIC AXIS IN THE INERTIAL COORDINATE SYSTEM (8.7.2.)
PAXIS2	COMPONENTS OF A UNIT VECTOR ALONG VEHICLE 2 Y-DYNAMIC AXIS IN THE INERTIAL COORDINATE SYSTEM (8.7.2.)
PAXIS3	COMPONENTS OF A UNIT VECTOR ALONG VEHICLE 1'S IMU X-AXIS IN THE INERTIAL COORDINATE SYSTEM (8.6.2.)
PAXIS4	COMPONENTS OF A UNIT VECTOR ALONG THE SECOND VEHICLE IMU Y-AXIS IN THE INERTIAL COORDINATE SYSTEM (8.6.2.)
PAXS1D	COMPONENTS OF A UNIT VECTOR ALONG VEHICLE 1 DESIRED Y-AXIS IN THE INERTIAL COORDINATE SYSTEM (8.5.8.)
PAXS2D	COMPONENTS OF A UNIT VECTOR ALONG VEHICLE 2 DESIRED Y-DYNAMIC AXIS IN THE INERTIAL COORDINATE SYSTEM (8.5.8)
PCFOF	NOMINAL THRUST MAGNITUDE DURING THROTTLABLE PORTION OF BRAKING PHASE (7.1.5.)
PCOEF1,PCOEF2	COEFFICIENTS OF THE SIXTH DEGREE WHICH DESCRIBES

	Y-AXIS RATE ANGULAR DISPLACEMENT (8.5.5.)
PCWOF	PERCENT OF WEIGHT REMAINING AT END OF BRAKING PHASE (7.1.5.)
PDRIFT	PERTURBATION IN GYRO BIAS DRIFT (13.1.2.)
PDX,PDY,PDZ	PERTURBATIONS IN ACTUAL VELOCITY (13.2.)
PDXE,PDYE,PDZE	PERTURBATIONS IN NAVIGATED VELOCITY (13.2.)
PELAS	PERTURBATIONS IN GYRO ANISOLELASTIC EFFECT (13.1.2)
PERR	PERICYNTHION RADIUS (5.3.9.)
PERT	PERTURBATION INCREMENT TO OBTAIN PARTIAL DERIVATIVES (20.2.)
PHASE	PHASE TITLE (4.2.)
PHASP	FLAG TO COMPUTE INTERMEDIATE PARTIALS(13.1.2.)
PHI	GEODETIC LATITUDE OF LAUNCH SITE (5.2.6.,7.1.9.)
PHIL	GEODETIC LATITUDE OF LANDMARK (12.2.2.)
PHITAB	ARRAY OF LM IMU OUTER GIMBAL ANGLES (USED WITH 'INPHI') (16.4.1.2.)
PLAPSE	TIME SINCE BEGINNING OF LAST PRIMARY PHASE(HR) - TABLE ARGUMENT (14.1.)
PLAT(1),PLAT(4)	PLATFORM MISALIGNMENT ANGLES FOR VEHICLES 1 AND 2 (13.1.1.)
PLATP	GEODETIC OR SELENOGRAPHIC LATITUDE OF VEHICLE POSITION (DEPENDS ON INJECT) (5.3.9 AND 5.2.10.)
PLON	SELENOGRAPHIC OR GEOGRAPHIC LONGITUDE OF VEHICLE POSITION (5.3.9. AND 5.2.10.)
POLYEX	DEGREE OF EXPANSION IN POLYNOMIAL TABLE (14.1.)
POSRC	POSITION RECTIFICATION TOLERANCE (6.1.)
POSTOL	VALUE ADDED TO 'TARGET' TO OBTAIN AN UPPER BOUND ON THE DEPENDENT VARIABLE (20.3.)
PPLAT	PERTURBATION IN PLATFORM ALIGNMENT (13.1.2.)
PROCES	INTEGER VALUE OF NUMBER OF PHASES TO BE PLOTTED ON THE SAME GRAPH (17.1.)
PRRAD	FLAG USED IN CONJUNCTION WITH RADAR SUMMARY PRINT ROUTINE TO INDICATE IF DATA ARE TO BE WRITTEN AT EVERY PRINT POINT OR ONLY AT THE INITIAL POINT OF A PHASE. (21.3.20.4.)
PRSHAD	FLAG USED IN CONJUNCTION WITH SHADOW SUMMARY PRINT TO INDICATE IF LIGHTING CONDITION CHANGES ARE TO BE WRITTEN AT THE INITIAL POINT OF EACH PHASE. (21.3.20.4.)
PRTG1	PRINTS THRUST OUTPUT (21.3.4.)
PRTG2,PRTG3	PRINTS SELENOGRAPHIC REFERENCE OUTPUT (21.3.5 AND 21.3.6.)
PRTG4	PRINTS GEOCENTRIC REFERENCE OUTPUT (21.3.7.)
PRTG5	PRINTS EARTH-MOON PLANCE OUTPUT (21.3.8.)
PRTG6	PRINTS PLANETARY COORDINATE OUTPUT (21.3.9.)
PRTG7	PRINTS KEPLERIAN OSCULATING ELEMENTS (21.3.10-11)
PRTG8	PRINTS UNIT VECTORS OUTPUT (21.3.12.)
PRTG9	PRINTS TWO-BODY AND XI TERMS OUTPUT (21.3.14.)
PRTG10	PRINTS PERTURBATIVE ACCELERATION OUTPUT(21.3.15.)
PRTG11	PRINTS TOPOCENTRIC SIGHTING ANGLES (21.3.16.) AND RENDEVOUS PARAMETERS (21.3.17.)
PRTG12	PRINTS LANDING SITE COORDINATES OUTPUT (21.3.18.)

PRTG13	PRINTS BODY ATTITUDE AND FORCES FOR VEHICLE NUMBER = NVEHT (21.3.13.)
PRTG14	PRINTS RESTART COORDINATES OUTPUT (21.3.3.)
PRTG15	PRINTS COMPUTATION IDENTIFICATION OUTPUT(21.3.2.)
PRTG16	PRINTS ITERATIVE GUIDANCE OUTPUT (21.3.19.)
PRTG17	PRINTS GEOGRAPHIC REFERENCE OUTPUT (21.3.22.)
PSPIM	PERTURBATION IN SPECIFIC IMPULSE (13.1.2.)
PTCOT	PERTURBATION IN THRUST CUTOFF TIME (13.1.2.)
PTE	FLIGHT PATH ANGLE (5.2.3.)
PTH	FLIGHT PATH ANGLE (5.2.2.)
PTHL	FLIGHT PATH ANGLE (5.3.5.)
PTINIT	PERTURBATION IN THRUST INITIATION TIME (13.1.2.)
PTMA	PERTURBATION IN THRUST MAGNITUDE (13.1.2.)
PTMP	FLIGHT PATH ANGLE (5.2.5. AND 5.3.2.)
PTR	FLIGHT PATH ANGLE (5.3.3.)
PTRLS	RELATIVE PATH ANGLE OF LANDING SITE (7.1.1.)
PUNBLI	PERTUBATION IN MASS UNBALANCE ALONG GYRO INPUT AXIS (13.1.2.)
PUNBLS	PERTUBATION IN MASS UNBALANCE ALONG GYRO SPIN AXIS (13.1.2.)
PW	PERTURBATIONS IN TOTAL SPACECRAFT WEIGHT (13.2.)
PWFR	PERTURBATIONS IN WEIGHT FLOW RATE (13.1.2.)
PX,PY,PZ	PERTURBATIONS IN ACTUAL POSITION (13.2.)
PXE,PYE,PZE	PERTURBATIONS IN NAVIGATED POSITION (13.2.)
QA1FD	PITCH ANGLE OF TOTAL ACCELERATION VECTOR FROM NEGATIVE LOCAL VERTICAL(7.1.5)
QP1FD	PITCH ANGLE OF THRUST VECTOR FROM LOCAL VERTICAL (7.1.5.)
QPOFD	PITCH ANGLE DESIRED AT END OF BRAKING PHASE MEASURED FROM LOCAL VERTICAL (7.1.5.)
QPOXD	PITCH ANGLE DESIRED AT IGNITION TARGET MEASURED FROM LOCAL VERTICAL (7.1.5.)
QUAD	SPECIFIES A QUADRATIC TABLE (14.1.)
R	RADIUS VECTOR MAGNITUDE (5.2.2.)
RA	RIGHT ASCENSION (5.2.2.)
RAAN	RIGHT ASCENSION OF ASCENDING NODE(5.2.8.,5.3.8.)
RAC	RANGE ANGLE CORRECTION CONSTANT (7.1.9.)
RADPRT	RADAR OUTPUT INDICATOR (11.2.)
RADAR	RADAR IDENTIFICATION (11.1.1.)
RAGR	RIGHT ASCENSION OR LONGITUDE INDICATOR (5.2.2-3.)
RAL	RIGHT ASCENSION (5.3.5.)
RALTFT	EARTH REENTRY ALTITUDE (10.1.5. AND 10.2.5.)
RAMP	RIGHT ASCENSION (5.2.5. AND 5.3.2.)
RANG	RANGE FROM VEHICLE TO LANDING SITE (21.3.18.)
RANGE	DESIRED TERMINAL RANGE (10.5.14.)
RAS	RIGHT ASCENSION OF A STAR (12.1.2.)
RAXIS1	COMPONENTS OF A UNIT VECTOR ALONG VEHICLE 1 X-DYNAMIC AXIS IN THE INERTIAL COORDINATE SYSTEM (8.7.2.)
RAXIS2	COMPONENTS OF A UNIT VECTOR ALONG VEHICLE 2 X-DYNAMIC AXIS IN THE INERTIAL COORDINATE SYSTEM (8.7.2.)
RAXIS3	COMPONENT OF A UNIT VECTOR ALONG THE FIRST

	VEHICLE IMU X-AXIS IN THE INERTIAL COORDINATE SYSTEM (8.6.2.)
RAXIS4	COMPONENTS OF A UNIT VECTOR ALONG THE SECOND VEHICLE IMU Z-AXIS IN THE INERTIAL (GEOCENTRIC OR SELENOCENTRIC) COORDINATE SYSTEM (8.6.2.)
RAXS1D	COMPONENTS OF A UNIT VECTER ALONG VEHICLE 1 DESIRED X-AXIS IN THE INERTIAL COORDINATE SYSTEM (8.5.8.)
RAXS2D	COMPONENTS OF A UNIT VECTOR ALONG VEHICLE 2 DESIRED X-DYNAMIC AXIS IN THE INERTIAL COORDINATE SYSTEM (8.5.8.)
RBE	RADIUS OF EARTH (ER) (9.)
RBKANG	RATE OF CHANGE OF BANK ANGLE (8.5.9.)
RBM	RADIUS OF THE MOON (ER) (9.)
RCON	RADIUS VECTOR ON DESIRED CUTOFF ELLIPSE(7.1.9.)
RCRK	NUMBER OF RUNGE-KUTTA INTEGRATION STEPS PER COWELL INTEGRATION STEP (6.)
RCUTOF	DESIRED DISTANCE CRITERION (VARIES WITH PHASE TERMINATION OPTION) (10.4.3.)
RDD	DESIRED BURNOUT RADIUS (7.1.7.)
RECTPT	RECTIFICATION OUTPUT INDICATOR (21.1.1.)
REF	THE INDICATOR FOR SPECIFYING IF THE LANDMARKS ARE LUNAR OR EARTH (12.2.3)
REFMAT	NUMBER OF PARTIAL DERIVATIVE MATRICES GENERATED IN THE REFINEMENT MODE OF THE ITERATOR
RL	RADIUS VECTOR MAGNITUDE (INERTIAL SELENOCENTRIC POLAR) (5.3.5)
RMAXE	MAXIMUM GEOCENTRIC RADIUS FROM EARTH (10.3.3)
RMAXL	MAXIMUM SELENOCENTRIC RADIUS FROM MOON (10.3.5)
RMINE	MINIMUM GEOCENTRIC RADIUS FROM EARTH (10.3.4)
RMINL	MINIMUM SELENOCENTRIC RADIUS FROM MOON (10.3.6)
RMINV	TERMINATION-TWO VEHICLE RADIAL SEPARATION DISTANCE (10.3.1)
RMP	RADIUS (EARTH-MOON PLANE POLAR) (5.2.5) (5.3.2)
RNOM	DISTANCE FROM THE CENTER OF THE EARTH AT NOMINAL IGNITION TIME (7.1.9)
ROLL(1)	DESIRED ANGLE BETWEEN THE FIRST VEHICLE X-AXIS AND-(1)THE VEHICLE-TO-SUN VECTOR, OR (2) THE VEHICLE-TO-VEHICLE VECTOR(8.7.4)(8.7.9.)(8.7.10.)
ROLL(2)	DESIRED ANGLE BETWEEN THE PROJECTION OF THE (1) FIRST VEHICLE-TO-SUN VECTOR, OR (2) THE VEHICLE 1 -TO-VEHICLE 2 VECTOR, INTO THE Y-Z PLANE AND THE VEHICLE 1 NEGATIVE Z-AXIS (8.7.9) (8.7.10)
ROLL(3)	1. INITIAL ROTATION ANGLE OF THE FIRST VEHICLE ABOUT THE SOLAR VECTOR (8.7.9) 2. INITIAL ROTATION ANGLE OF VEHICLE 1 ABOUT THE VEHICLE-TO-VEHICLE VECTOR (8.7.10.)
ROLL(4)	SAME AS IN ROLL(1), BUT WITH RESPECT TO VEHICLE 2 (8.7.4) (8.7.9) (8.7.10)
ROLL(5)	SAME AS ROLL(2), BUT WITH RESPECT TO VEHICLE 2 (8.7.9) (8.7.10)
ROLL(6)	SAME AS ROLL(3), BUT WITH RESPECT TO VEHICLE 2 (8.7.9) (8.7.10)

ROLL(7)	SAME AS ROLL(1), BUT WITH RESPECT TO VEHICLE 1 IMU X-AXIS(8.6.4) (8.6.9) (8.6.10)
ROLL(8)	SAME AS ROLL(2), BUT WITH RESPECT TO VEHICLE 1 IMU NEGATIVE Z-AXIS (8.6.9) (8.6.10)
ROLL(9)	SAME AS ROLL(3), BUT WITH RESPECT TO VEHICLE 1 IMU (8.6.9) (8.6.10)
ROLL(10)	SAME AS ROLL(1), BUT FOR VEHICLE 2 IMU X-AXIS (8.6.4) (8.6.9) (8.6.10)
ROLL(11)	SAME AS ROLL(2), BUT FOR VEHICLE 2 IMU NEGATIVE Z-AXIS (8.6.9) (8.6.10)
ROLL(12)	SAME AS ROLL(3), BUT FOR VEHICLE 2 IMU (8.6.9) (8.6.10)
RRATE	RANGE RATE (7.1.7) (10.5.14)
RRNE	REFERENCE REGION NEAR EARTH OR GEOCENTRIC RADIUS OF NEAR EARTH SPHERE (6.3)
RRNL	REFERENCE REGION NEAR MOCN OR SELENOCENTRIC RADIUS OF NEAR MOCN SPHERE (6.3)
RRNNL	REFERENCE REGION NOT NEAR MOCN OR SELENOCENTRIC RADIUS OF NOT NEAR MOON SPHERE (6.3)
RRRT	CUTOFF RADIUS (7.1.9)
RT	TARGET VECTOR (7.1.1)
RT2	REDESIGNATED LANDING SITE POSITION (7.1.5)
RTH	TARGET RADIUS (7.1.4)
RTOL	THE TOLERANCE ON RANGE USED FOR DETERMINING RADAR ACQUISITION AND TERMINATION EVENTS AS A RESULT OF THE RANGE OF THE VEHICLE FROM THE RADAR STATION BECOMING GREATER THAN OR LESS THAN THE MAXIMUM RANGE THE STATION CAN TRACK (11.1.4)
RXYZ,RDXYZ	X-,Y-, AND Z- COMPONENTS OF RESTART POSITION (5.2.7) (5.3.7)
SECS	LAUNCH SECONDS OF MINUTES (5.1)
SELMAT	NUMBER OF PARTIAL DERIVATIVE MATRICES GENERATED IN THE SELECTION MODE OF THE ITERATOR (20.1)
SERIES	FLAG TO CAUSE PRINCIPAL RESULTS TO BE SAVED AND PRINTED IN A SUMMARY TABLE (LM S-BAND) (16.4.1.1)
SHADOW	SUBROUTINE SHADOW INDICATOR AND SHADOW PRINT INDICATOR (21.1)
SIG	SPECIFIES THE ACCURACY DESIRED AT EACH STEP WHEN USING VARIABLE STEP SIZE INTEGRATION (6)
SIGHT	STAR OR LANDMARK INDICATOR (12.4)
SIGLS	THE MAXIMUM LANDMARK STAR ANGLE (12.2.3)
SIGMA	ANGLE BETWEEN PERIGEE AND UNIT AIM VECTOR (7.1.9)
SIGSS	THE MAXIMUM STAR-STAR ANGLE (12.1.3.)
SIGSV	THE MAXIMUM SUN-LANDMARK-VEHICLE (12.2.3.)
SIMPLE	SPECIFIES A SIMPLE TABLE (14.1.)
SITABL	SPECIFIC IMPULSE TABLE (14.8)
SLAPSE	TIME SINCE BEGINNING OF LAST SECONDARY PHASE(HR)-TABLE ARGUMENT (14.1.)
SLR	SEMI-LATUS RECTUM OF THE CUTOFF ELLIPSE (7.1.9.)
SPEEDS	SPEED OF SOUND (8.2.)
SPI	NOMINAL INITIAL STEADY STATE SPECIFIC IMPULSE (7.1.5.)
SRANGE	MAXIMUM RANGE THE STATICN CAN TRACK (11.1.2.)

STAR	STAR IDENTIFICATION (12.1.1.)
STEP	SPECIFIES A STEP FUNCTION TABLE (14.1.)
STOARG	INDICATES THAT TABLE ARGUMENTS ARE TO BE INPUT (14.1.)
T1D,T2D,...,T5D	PRINT TIME INCREMENT (21.1.)
T1E,T2E,...,T5E	ELAPSED TIME TO END PRINT (21.1.)
T1S,T2S,...,T5S	ELAPSED TIME TO START PRINT (21.1.)
TABC	LM ASCENT BURN TIME (10.4.2.)
TALN(1),TALN(2)	THRUST ALIGNMENT TIME BIAS (VEHICLE 1 AND 2) (13.1.1.)
TARGET	DESIRED VALUE OF THE DEPENDENT VARIABLE (20.3.)
TBNC	TIME TO GO WHEN BURNOUT RADIUS CONTROL IS ABANDONED (7.1.5. AND 7.1.7.)
TBURN	BURNING TIME OF EACH GUIDANCE STAGE (7.1.9.)
TCINT	THRUST PHASE INTEGRATION STEP-SIZE (6.2.)
TCST	COAST TIME BETWEEN GUIDANCE STAGES (7.1.9.)
TF1	DURATION OF TRANSITION TO FINAL APPROACH PHASE (7.1.5.)
TF2	DURATION OF FINAL APPROACH PHASE (7.1.5.)
TF3	DURATION OF TRANSITION TO VERTICAL DESCENT PHASE
TFX	NOMINAL TIME BETWEEN IGNITION TARGET AND END OF BRAKING PHASE (7.1.5.)
TGAM	DESIRED RIGHT ASCENSION OF ORBIT'S ASCENDING NODE (7.1.1.)
THB	HOHMANN DESCENT BURN TIME DURATION (10.4.2.)
THETAT	TERMINAL FLIGHT PATH ANGLE (7.1.9.)
THMOX	THRUST MAGNITUDE EXPECTED AT IGNITION TARGET (7.1.5.)
THMX	NOMINAL MAXIMUM THRUST MAGNITUDE (7.1.5.)
THRLNO	THROTTLE LIMIT ON THRUST (7.1.5.)
THRSW	THROTTLE SETTING - TABLE ARGUMENT (14.1.)
THRTHM	LIMIT ON THE THRUST MAGNITUDE (7.1.5.)
THRUST	THRUST OF EACH GUIDANCE STAGE (7.1.9.)
THST	THROTTLE SETTING TABLE (7.1.5.)
THTDB	ATTITUDE DEADBAND ANGLE (DEG). DIMENSIONED FOR 2 VEHICLES. (8.5.8.)
THTM	DURATION OF A TURNON THRUST TRANSIENT (7.1.4.)
TINC	DESIRED ORBIT INCLINATION IN THE INERTIAL COORDINATE SYSTEM (7.1.1.)
TITLE	INITIAL PRINT INDICATOR (21.1.)
TMAX	MAXIMUM FLIGHT TIME (10.3.2.)
TMDC	NOMINAL INITIAL STEADY STATE THRUST MAGNITUDE (7.1.5. AND 10.5.15.)
TMODE	OPTION INDICATOR DESIGNATING THE METHOD OF TRAJECTORY COMPUTATION (6.)
TMOON	TIME BIAS ON DETERMINING MOON POSITION (21.3.10.)
TMS	COAST TIME BETWEEN SEPARATION AND HOHMANN BURN (10.4.2.)
TOMAX	DESIRED TERMINAL VALUE OF TOTAL ORBIT COUNT (10.1.1.)
TOTALP	SETS PRINT GROUPS 1 THROUGH GROUP 'X' TO 2.0 FOR VEHICLE 1 AND GROUPS 1 THROUGH 'Y' FOR VEHICLE 2 (21.1.)

TPF	POWERED DESCENT BURN DURATION (7.1.5.)
TRGF	TURNING RATE GAIN FACTOR (8.5.1.)
TRMAX	MAXIMUM ALLOWABLE TURNING RATE (8.5.1.)
TRUDAT	TRUE OF DATE OPTION INDICATOR (8.6.5.)
TSCAN	ARRAY OF COMPUTATION INTERVAL SIZES (LM S-BAND) (16.4.1.2.)
TSTART	ELAPSED TIME FROM LAUNCH AT INITIATION (5.1.)
TSTOP	TERMINATION CONTROL INDICATOR (10.1.1.)
TT	TIME DURATION ESTIMATE TO IGNITION TARGET (7.1.5)
TTABLE	THRUST TABLE (14.8)
TTCL	DIFFERENCE BETWEEN INITIAL THRUST TIME AND TIME OF TARGET COMPUTATIONS (7.1.1.)
TTF	TERMINATION PARAMETER (WITH TSTOP=31)(10.5.20.)
TTR	DESIRED TERMINAL PHASE TIME LAPSE (10.4.1.)
TTV	REDESIGNATION TIME OR, IF IMDC=0, TARGET SWITCH (7.1.5.)
TVR	THRUST DURATION (7.1.6.)
UINX(I)	DESIRED DIRECTION COSINES OF OUTGOING ASYMPTOTE (I=1,2,3) (7.1.2.)
UNBLIA	MASS UNBALANCE COEFFICIENTS ABOUT THE INPUT AXIS (13.1.1.)
UNBLSA	MASS UNBALANCE COEFFICIENTS ABOUT THE SPIN AXIS (13.1.1.)
UNITS	INPUT UNITS INDICATOR (7.1.9.)
V	VELOCITY VECTOR MAGNITUDE (5.2.2.)
V1WND1,V1WND2, V2WND1,V2WND2	ANGLES DEFINING WINDOWS 1 AND 2 FOR VEHICLES 1 AND 2. (8.10.)
VCG	CENTER OF GRAVITY OF VEHICLE AT THE END OF A PHASE (8.3.2.2.)
VCON	VELOCITY VECTOR ON DESIRED CUTOFF ELLIPSE(7.1.9.)
VE	VELOCITY (5.2.3.)
VEHL(1), VEHL(4)	COORDINATES OF A UNIT VECTOR IN THE IMU COORDINATE SYSTEM FOR VEHICLES 1 AND 2 (8.6.4.)
VELRC	VELOCITY RECTIFICATION TOLERANCE (6.1.)
VID(1), VID(2)	IDENTIFICATION OF VEHICLES 1 AND 2 (CSM OR LM) (8.1.)
VINF	DESIRED VELOCITY OF THE LANDING SITE (7.1.2.)
VL	VELOCITY VECTOR MAGNITUDE (5.3.5.)
VLEN	THE VEHICLE LENGTH (8.3.2.2.)
VLIST1,VLIST2	SYMBOLS CORRESPONDING TO VEHICLES 1 AND 2 (15.1.)
VMP	VELOCITY VECTOR MAGNITUDE (5.3.2. AND 5.2.5.)
VPG	PROPELLANT CENTER OF GRAVITY OF VEHICLE AT THE END OF A PHASE (8.3.2.2.)
VRLS	RELATIVE VELOCITY OF THE LANDING SITE (7.1.1.)
VRS	VELOCITY VECTOR MAGNITUDE (5.3.3.)
VVVT	TERMINAL VELOCITY (7.1.9.)
WFACT	WEIGHT FACTOR ON THE DEPENDENT VARIABLE FOR PENALTY FUNCTION MINIMIZATION (20.4.)
WGHT	INITIAL WEIGHT OF EACH GUIDANCE STAGE (7.1.9.)
WINDAZ	WIND AZIMUTH MEASURED FROM NORTH (8.2.)
WINDE	WIND SPEED FROM EAST (8.2.)
WINDM	WIND SPEED (TO BE USED WITH WINDAZ) (8.2.)

WINDN	WIND SPEED FROM NORTH (8.2.)
WLEM	NOMINAL WEIGHT OF LM AT POWERED DESCENT INITIATION (7.1.5.)
WRTABL	WEIGHT FLOW RATE TABLE (14.8)
WTE	VEHICLE WEIGHT AT END OF A PHASE (8.3.2.2.)
WTOPT	WEIGHT FACTOR ON THE OPTIMIZATION VARIABLE IN THE OPTIMIZATION MODE (20.1.)
WTSEL	WEIGHT FACTOR ON THE OPTIMIZATION VARIABLE IN THE SELECTION MODE (20.1.)
X,Y,Z	INERTIAL GEOCENTRIC CARTESIAN COORDINATES(5.2.1.)
XISP	SPECIFIC IMPULSE OF EACH GUIDANCE STAGE (7.1.9.)
XL,YL,ZL	INERTIAL SELENOCENTRIC CARTESIAN COORDINATES (5.3.1.)
XMP,YMP,ZMP	CARTESIAN EARTH-MOON PLANE COORDINATES(5.2.4. AND 5.3.6)
XMTCV	INCREMENTAL VELOCITY MAGNITUDE (7.1.6.)
XPL,YPL,ZPL	COMPONENTS OF VEHICLE POSITION (5.2.6.)
XS,YS,ZS	ROTATIONAL SELENOGRAPHIC CARTESIAN COORDINATES (5.3.4.)
YAXIS1	COMPONENTS OF A UNIT VECTOR ALONG VEHICLE 1 Z-DYNAMIC AXIS IN THE INERTIAL COORDINATE SYSTEM (8.7.2.)
YAXIS2	COMPONENTS OF A UNIT VECTOR ALONG VEHICLE 2 Z-DYNAMIC AXIS IN THE INERTIAL COORDINATE SYSTEM (8.7.2.)
YAXIS3	COMPONENTS OF A UNIT VECTOR ALONG VEHICLE 1'S IMU X-AXIS IN THE INERTIAL (GEOCENTRIC OR SELENOCENTRIC) COORDINATE SYSTEM (8.6.2.)
YAXIS4	COMPONENTS OF A UNIT VECTOR ALONG THE SECOND VEHICLE IMU Z-AXIS IN THE INERTIAL (GEOCENTRIC OR SELENOCENTRIC) COORDINATE SYSTEM (8.6.2.)
YEAR	LAUNCH YEAR (5.1.)
ZETM	MINIMUM HORIZON ANGLE OF THE LANDMARK (12.2.3.)

4.5. PROGRAM CONSTANTS

THE FOLLOWING IS A LIST OF CONSTANTS THAT ARE USED IN THE PROGRAM. THE CONSTANTS ARE INITIALIZED TO THESE VALUES UNLESS OVERRIDDEN BY INPUT VALUES. AN ASTERISK (*) PRECEDING THE SYMBOL INDICATES THE VALUE OF THE CONSTANT CANNOT BE ALTERED THROUGH INPUT.

SYMBOL	NOMINAL VALUE	DEFINITION AND UNITS
AASA	0.043633231	
*ASQ	1.000000156	SQUARE OF SEMI-MAJOR AXIS OF EARTH REFERENCE ELLIPSOID (ER)
ATLL	-1000.0	
ATUL	400000.0	
*BSQ	0.996647826	SQUARE OF SEMI-MINOR AXIS OF

```
                                        EARTH REFERENCE ELLIPSOID (ER)
 CC          0.0 OR 1.0
 CINE        0.015625
 CINL        0.0625
 CINNE       0.5
 CINNL       0.25
*ECCSQ       0.006693421623     SQUARE OF ECCENTRICITY OF
                                EARTH REFERENCE ELLIPSOID (ND)
 EDT         0.010D0
 FRZCT      -1.0
 FRZEND      1.0E20
*GE          19.92644969        EARTH GRAVITATIONAL ACCELERA-
                                TICN (ER/HR**2)
*HMAX        25.0               MAXIMUM INTEGRATION STEP SIZE
                                (HR)
*HMIN        2384185791015625.D-22  MINIMUM INTEGRATICN
                                    STEP SIZE (HR)
 ISCALE      7
 ITYPE       0
 IWNV        0
 J2E         1082.30D-6
 J3E        -2.3D-6
 J4E        -1.8D-6
 J22E        1.9D-6
 J2M         207.108D-6
 J3M         0
 J4M         0
 J22M        207.160D-7
*KMTER       6378.165           CONVERSION FACTOR FOR KILO-
                                METERS PER EARTH RADII
 L22E       -0.3665191429188092 2D0
 LSTG        1
 MUE         19.909416 5D0
 MUM         0.244883757D0
 NDEG        3
 NSTG        1
 NTAPE       6
 NV          1
 NVEHT       1
*OMEGAM      .009582118118      SPIN RATE OF THE MOCN (RAD/HR)
 OSCALE      7
*PI          3.1415926536         PI (ND)
*PID         3.1415926535897932 PI IN DOUBLE PRECISION (ND)
 POSRC       0.01
*RADIAN      57.295779513082321 CONVERSICN FACTOR FOR
                                DEGEES PER RADIAN
*RADM        0.2725062773         MOON RADIUS (ER)
*RADS        109.125117           SUN RADIUS (ER)
 RBE         1.0D0
 RBM         0.27250627 73D0
 RCRK        4.0
 RMAXE       75.0
 RMAXL       25.0
```

RMINE	1.0	
RRNE	4.0	
RRNL	2.0	
RRNNL	9.0	
SIG	1.0E-9	
*SMU	6628865.68	SUN MASS PARAMETER (ER**3/HR**2)
TMAX	15.0D0	
TRGF	0.0	
TRMAX	628.31852	
TSTOP	0	
TTR	0.0	
*TWOPI	6.2831853071796	TWO PI
*USNTER	3443.933585	CONVERSION FACTOR FOR U.S. NAUTICAL MILES PER EARTH RADII
*USSTER	3963.207990530	CONVERSION FACTOR FOR U.S. STATUTE MILES PER EARTH RADII
VELRC	0.01	
VID(1)	CSM	
VID(2)	LM OR 0	
VLEN	0	
XMTOV	0.0	

4.6. INPUT FLOW CHART

DESCRIPTION

IN THIS SECTION THE ENTIRE INPUT OF THE PROGRAM IS PRESENTED IN FLOW CHART FORM. THERE ARE FOUR SETS OF INFORMATION IN EACH BLOCK OF THE FLOW CHART. THESE ARE,

1. BEGINNING IN THE UPPER LEFT CORNER OF EACH BLOCK IS A REPRESENTATIVE TITLE.
2. IN THE UPPER RIGHT CORNER IS THE PAGE NUMBER OF THE USER'S MANUAL ON WHICH FURTHER DISCUSSION CAN BE FOUND.
3. BELOW THE TITLE AND PAGE NUMBER ARE THE REQUIRED INPUT SYMBOLS.
4. BELOW THE INPUT SYMBOLS ARE THE NOMINAL VALUES OF THE INPUT SYMBOLS IF THEY APPLY.

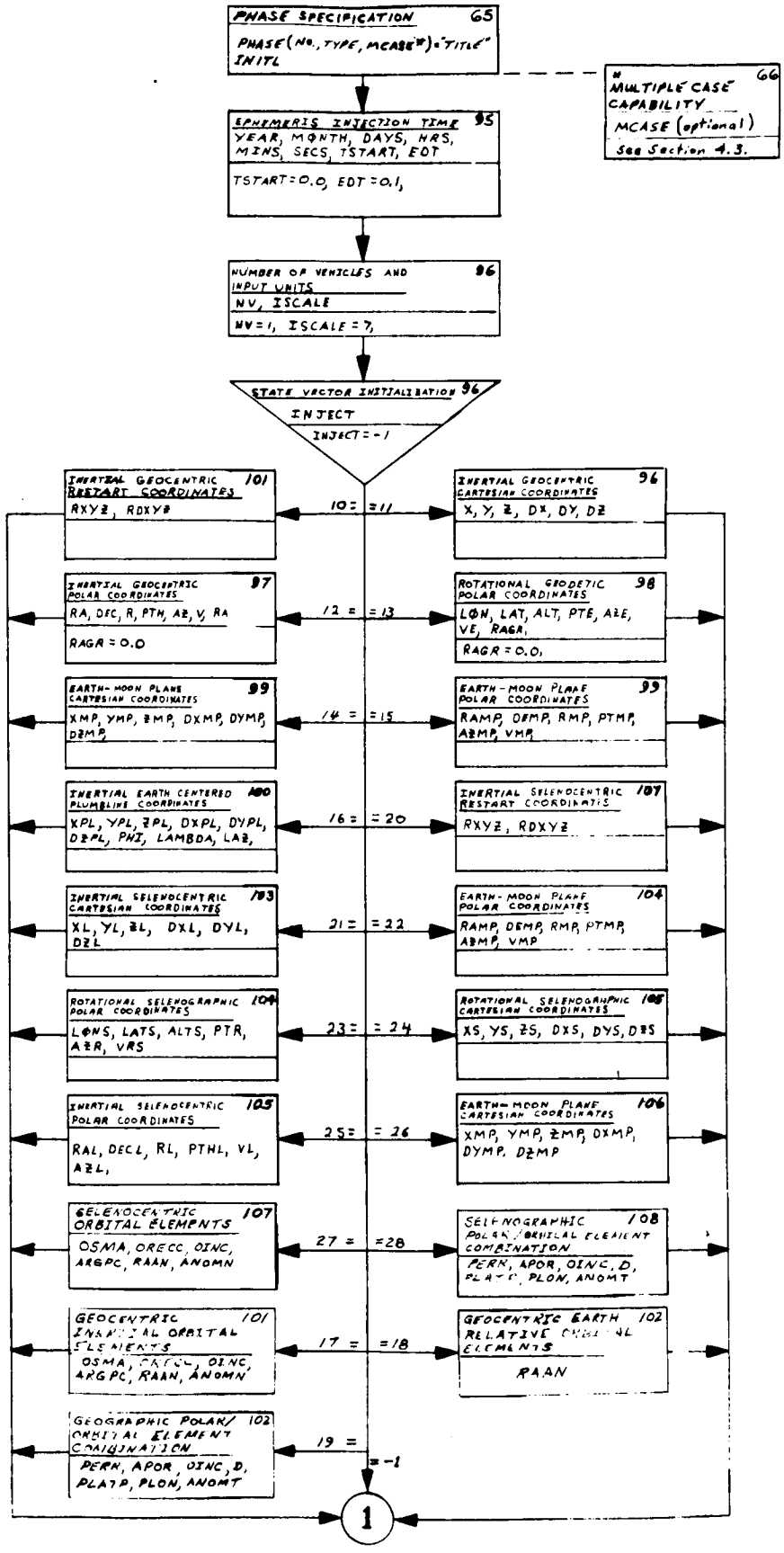
PHASE SPECIFICATION 65
PHASE(No., TYPE, MCASE*)="TITLE"
INITL
* MULTIPLE CASE CAPABILITY 66
MCASE (optional)
See Section 4.3.
EPHEMERIS INJECTION TIME 95
YEAR, MONTH, DAYS, HRS, MINS, SECS, TSTART, EDT
TSTART=0.0, EDT=0.1,
NUMBER OF VEHICLES AND INPUT UNITS 96
NV, ISCALE
NV=1, ISCALE=7,
STATE VECTOR INITIALIZATION 96
INJECT
INJECT=-1
INERTIAL GEOCENTRIC RESTART COORDINATES 101
RXYZ, RDXYZ
10 = = 11
INERTIAL GEOCENTRIC CARTESIAN COORDINATES 96
X, Y, Z, DX, DY, DZ
INERTIAL GEOCENTRIC POLAR COORDINATES 97
RA, DEC, R, PTH, AZ, V, RA
RAGR=0.0
12 = = 13
ROTATIONAL GEODETIC POLAR COORDINATES 98
LON, LAT, ALT, PTE, AZE, VE, RAGR,
RAGR=0.0,
EARTH-MOON PLANE CARTESIAN COORDINATES 99
XMP, YMP, ZMP, DXMP, DYMP, DZMP,
14 = = 15
EARTH-MOON PLANE POLAR COORDINATES 99
RAMP, DEMP, RMP, PTMP, AZMP, VMP,
INERTIAL EARTH CENTERED PLUMBLINE COORDINATES 100
XPL, YPL, ZPL, DXPL, DYPL, DZPL, PWI, LAMBDA, LAZ,
16 = = 20
INERTIAL SELENOCENTRIC RESTART COORDINATES 107
RXYZ, RDXYZ
INERTIAL SELENOCENTRIC CARTESIAN COORDINATES 103
XL, YL, ZL, DXL, DYL, DZL
21 = = 22
EARTH-MOON PLANE POLAR COORDINATES 104
RAMP, DEMP, RMP, PTMP, AZMP, VMP
ROTATIONAL SELENOGRAPHIC POLAR COORDINATES 104
LONS, LATS, ALTS, PTR, AZR, VRS
23 = = 24
ROTATIONAL SELENOGRAPHIC CARTESIAN COORDINATES 105
XS, YS, ZS, DXS, DYS, DZS
INERTIAL SELENOCENTRIC POLAR COORDINATES 105
RAL, DECL, RL, PTHL, VL, AZL,
25 = = 26
EARTH-MOON PLANE CARTESIAN COORDINATES 106
XMP, YMP, ZMP, DXMP, DYMP, DZMP
SELENOCENTRIC ORBITAL ELEMENTS 107
OSMA, ORECC, OINC, ARGPC, RAAN, ANOMN
27 = = 28
SELENOGRAPHIC POLAR/ORBITAL ELEMENT COMBINATION 108
PERR, APOR, OINC, D, PLATP, PLON, ANOMT
GEOCENTRIC INERTIAL ORBITAL ELEMENTS 101
OSMA, ORECC, OINC, ARGPC, RAAN, ANOMN
17 = = 18
GEOCENTRIC EARTH RELATIVE ORBITAL ELEMENTS 102
RAAN
GEOGRAPHIC POLAR/ORBITAL ELEMENT COMBINATION 102
PERR, APOR, OINC, D, PLATP, PLON, ANOMT
19 = = -1
1

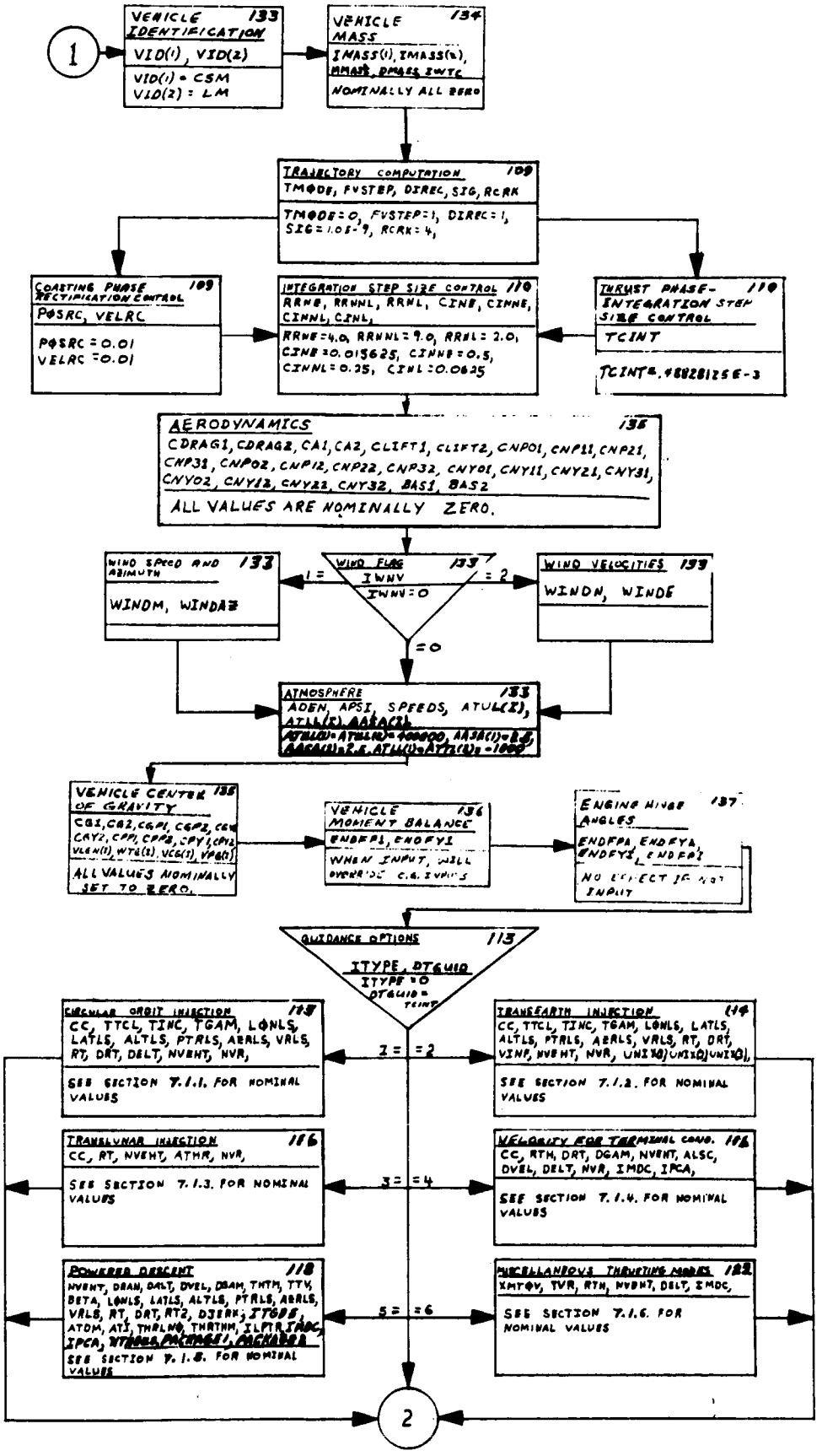
1
VEHICLE IDENTIFICATION 133
VID(1), VID(2)
VID(1) = CSM
VID(2) = LM
VEHICLE MASS 134
IMASS(1), IMASS(2), MMASS, DMASS, IWTC
NOMINALLY ALL ZERO
TRAJECTORY COMPUTATION 109
TMODE, FVSTEP, DIREC, SIG, RCRK
TMODE=0, FVSTEP=1, DIREC=1, SIG=1.0E-9, RCRK=4,
COASTING PHASE RECTIFICATION CONTROL 109
PØSRC, VELRC
PØSRC = 0.01
VELRC = 0.01
INTEGRATION STEP SIZE CONTROL 110
RRNE, RRNNL, RRNL, CINE, CINNE, CINNL, CINL,
RRNE=4.0, RRNNL=9.0, RRNL=2.0, CINE=0.015625, CINNE=0.5, CINNL=0.25, CINL=0.0625
THRUST PHASE-INTEGRATION STEP SIZE CONTROL 110
TCINT
TCINT=.48828125E-3
AERODYNAMICS 135
CDRAG1, CDRAG2, CA1, CA2, CLIFT1, CLIFT2, CNP01, CNP11, CNP21, CNP31, CNP02, CNP12, CNP22, CNP32, CNY01, CNY11, CNY21, CNY31, CNY02, CNY12, CNY22, CNY32, BAS1, BAS2
ALL VALUES ARE NOMINALLY ZERO.
WIND SPEED AND AZIMUTH 133
WINDM, WINDAZ
WIND FLAG 133
IWNV
IWNV=0
1 =
= 2
= 0
WIND VELOCITIES 133
WINDN, WINDE
ATMOSPHERE 133
ADEN, APSI, SPEEDS, ATUL(I), ATLL(I), AASA(I)
VEHICLE CENTER OF GRAVITY 135
CG1, CG2, CGP1, CGP2, CGY1, CGY2, CPP1, CPP2, CPY1, CPY2, VLEN(I), WTG(I), VCG(I), VPG(I)
ALL VALUES NOMINALLY SET TO ZERO.
VEHICLE MOMENT BALANCE 136
ENDFP1, ENDFY1
WHEN INPUT, WILL OVERRIDE C.G. INPUTS
ENGINE HINGE ANGLES 137
ENDFPA, ENDFYA, ENDFY1, ENDFP1
NO EFFECT IF NOT INPUT
GUIDANCE OPTIONS 113
ITYPE, DTGUID
ITYPE = 0
DTGUID = TCINT
CIRCULAR ORBIT INJECTION 113
CC, TTCL, TINC, TGAM, LØNLS, LATLS, ALTLS, PTRLS, AERLS, VRLS, RT, DRT, DELT, NVEHT, NVR,
SEE SECTION 7.1.1. FOR NOMINAL VALUES
1 = = 2
TRANSEARTH INJECTION 114
CC, TTCL, TINC, TGAM, LØNLS, LATLS, ALTLS, PTRLS, AERLS, VRLS, RT, DRT, VINF, NVEHT, NVR, UNIX(1), UNIX(2), UNIX(3),
SEE SECTION 7.1.2. FOR NOMINAL VALUES
TRANSLUNAR INJECTION 116
CC, RT, NVEHT, ATHR, NVR,
SEE SECTION 7.1.3. FOR NOMINAL VALUES
3 = = 4
VELOCITY FOR TERMINAL COND. 116
CC, RTH, DRT, DGAM, NVEHT, ALSC, DVEL, DELT, NVR, IMDC, IPCA,
SEE SECTION 7.1.4. FOR NOMINAL VALUES
POWERED DESCENT 118
NVEHT, DRAN, DALT, DVEL, DGAM, THTM, TTV, BETA, LØNLS, LATLS, ALTLS, PTRLS, AERLS, VRLS, RT, DRT, RT2, DJERK, ITGDE, ATDM, ATI, THRLNØ, THRTHM, ILPTR, IMDC, IPCA, NTHGDE, PACKAGE1, PACKAGE2
SEE SECTION 7.1.5. FOR NOMINAL VALUES
5 = = 6
MISCELLANEOUS THRUSTING MODES 122
XMTØV, TVR, RTH, NVEHT, DELT, IMDC,
SEE SECTION 7.1.6. FOR NOMINAL VALUES
2

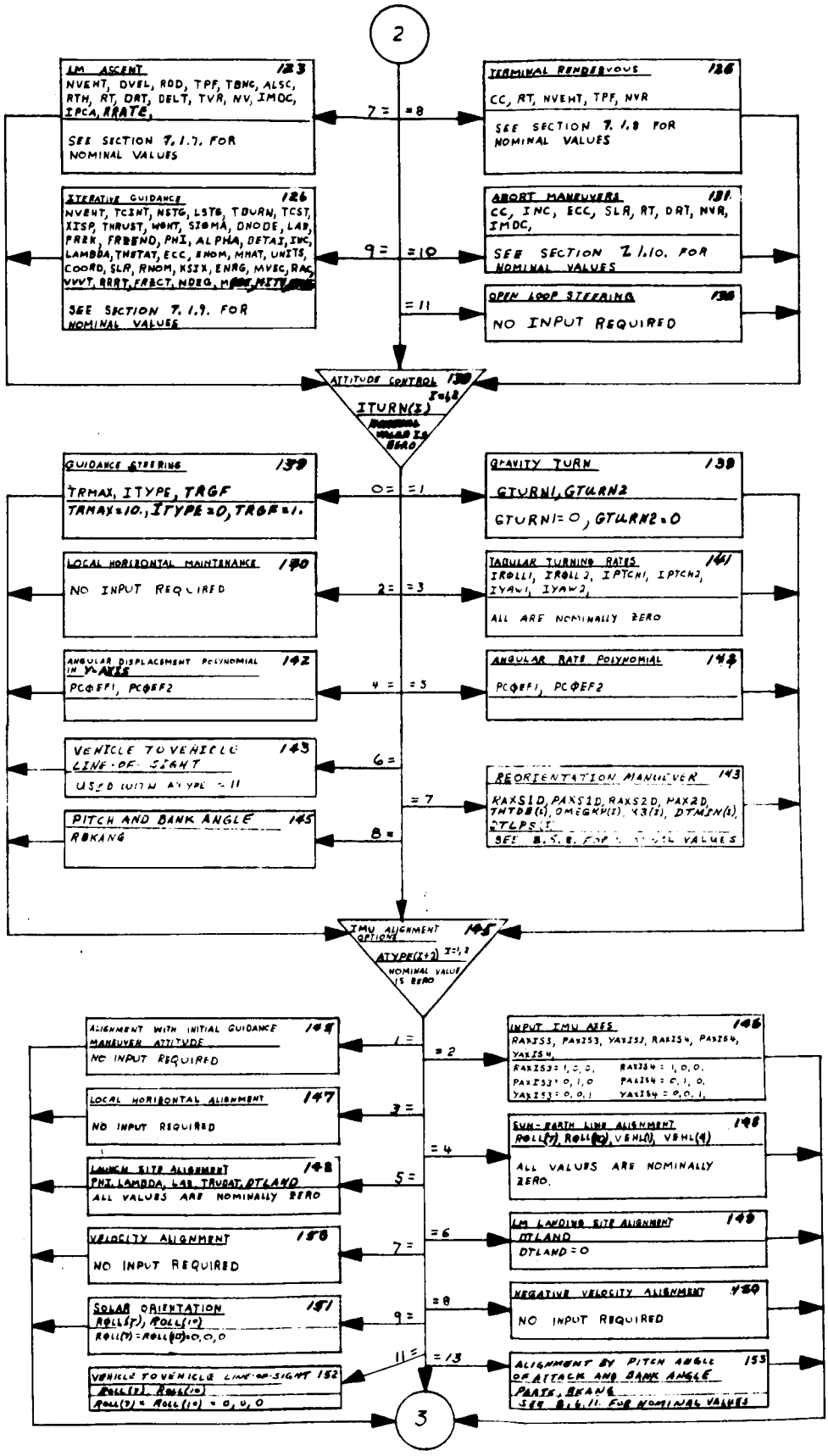
2
LM ASCENT 123
NVEHT, DVEL, ROD, TPF, TBNC, ALSC, RTH, RT, DRT, DELT, TVR, NV, IMOC, IPCA, RRATE,
SEE SECTION 7.1.7. FOR NOMINAL VALUES
7 = =8
TERMINAL RENDEZVOUS 126
CC, RT, NVEHT, TPF, NVR
SEE SECTION 7.1.8 FOR NOMINAL VALUES
ITERATIVE GUIDANCE 126
NVEHT, TCINT, NSTG, LSTG, TBURN, TCST, XISP, THRUST, WGHT, SIGMA, DNODE, LAB, FREK, FREEND, PHI, ALPHA, DETAI, INC, LAMBDA, THETAT, ECC, RNOM, MHAT, UNITS, COORD, SLR, RNOM, KSIX, ENRG, MVEC, RAC, VVVT, RRRT, FRECT, NDEG, M
SEE SECTION 7.1.9. FOR NOMINAL VALUES
9 = =10
ABORT MANEUVERS 131
CC, INC, ECC, SLR, RT, DRT, NVR, IMOC,
SEE SECTION 7.1.10. FOR NOMINAL VALUES
=11
OPEN LOOP STEERING
NO INPUT REQUIRED
ATTITUDE CONTROL
ITURN(I) I=1,2
NOMINAL VALUE IS ZERO
GUIDANCE STEERING 139
TRMAX, ITYPE, TRGF
TRMAX=10., ITYPE=0, TRGF=1.
0= =1
GRAVITY TURN 139
GTURN1, GTURN2
GTURN1=0, GTURN2=0
LOCAL HORIZONTAL MAINTENANCE 140
NO INPUT REQUIRED
2= =3
TABULAR TURNING RATES 141
IROLL1, IROLL2, IPTCH1, IPTCH2, IYAW1, IYAW2,
ALL ARE NOMINALLY ZERO
ANGULAR DISPLACEMENT POLYNOMIAL IN Y-AXIS 142
PCΦEF1, PCΦEF2
4 = =5
ANGULAR RATE POLYNOMIAL 142
PCΦEF1, PCΦEF2
VEHICLE TO VEHICLE LINE-OF-SIGHT 143
USED WITH ATYPE = 11
6=
REORIENTATION MANEUVER 143
RAXS1D, PAXS1D, RAXS2D, PAX2D, TNTDB(I), OMEGRP(I), X3(I), DTMIN(I), DTLPS(I)
SEE 8.5.8. FOR NOMINAL VALUES
=7
PITCH AND BANK ANGLE 145
RBKANG
8=
IMU ALIGNMENT OPTIONS 145
ATYPE(I+2) I=1,2
NOMINAL VALUE IS ZERO
ALIGNMENT WITH INITIAL GUIDANCE MANEUVER ATTITUDE 146
NO INPUT REQUIRED
1 =
=2
INPUT IMU AXES 146
RAXIS3, PAXIS3, YAXIS3, RAXIS4, PAXIS4, YAXIS4,
RAXIS3=1,0,0, RAXIS4=1,0,0.
PAXIS3=0,1,0 PAXIS4=0,1,0.
YAXIS3=0,0,1 YAXIS4=0,0,1,
LOCAL HORIZONTAL ALIGNMENT 147
NO INPUT REQUIRED
3 =
SUN-EARTH LINE ALIGNMENT 148
ROLL(7), ROLL(8), VEHL(1), VEHL(4)
ALL VALUES ARE NOMINALLY ZERO.
=4
LAUNCH SITE ALIGNMENT 148
PHI, LAMBDA, LAB, THETAT, DTLAND
ALL VALUES ARE NOMINALLY ZERO
5 =
LM LANDING SITE ALIGNMENT 149
DTLAND
DTLAND=0
=6
VELOCITY ALIGNMENT 150
NO INPUT REQUIRED
7 =
NEGATIVE VELOCITY ALIGNMENT 150
NO INPUT REQUIRED
=8
SOLAR ORIENTATION 151
ROLL(9), ROLL(10)
ROLL(9)=ROLL(10)=0,0,0
9 =
VEHICLE TO VEHICLE LINE-OF-SIGHT 152
ROLL(9), ROLL(10)
ROLL(9)=ROLL(10)=0,0,0
11 =
=13
ALIGNMENT BY PITCH ANGLE OF ATTACK AND BANK ANGLE 153
PARTK, BKANG
SEE 8.6.11. FOR NOMINAL VALUES
3

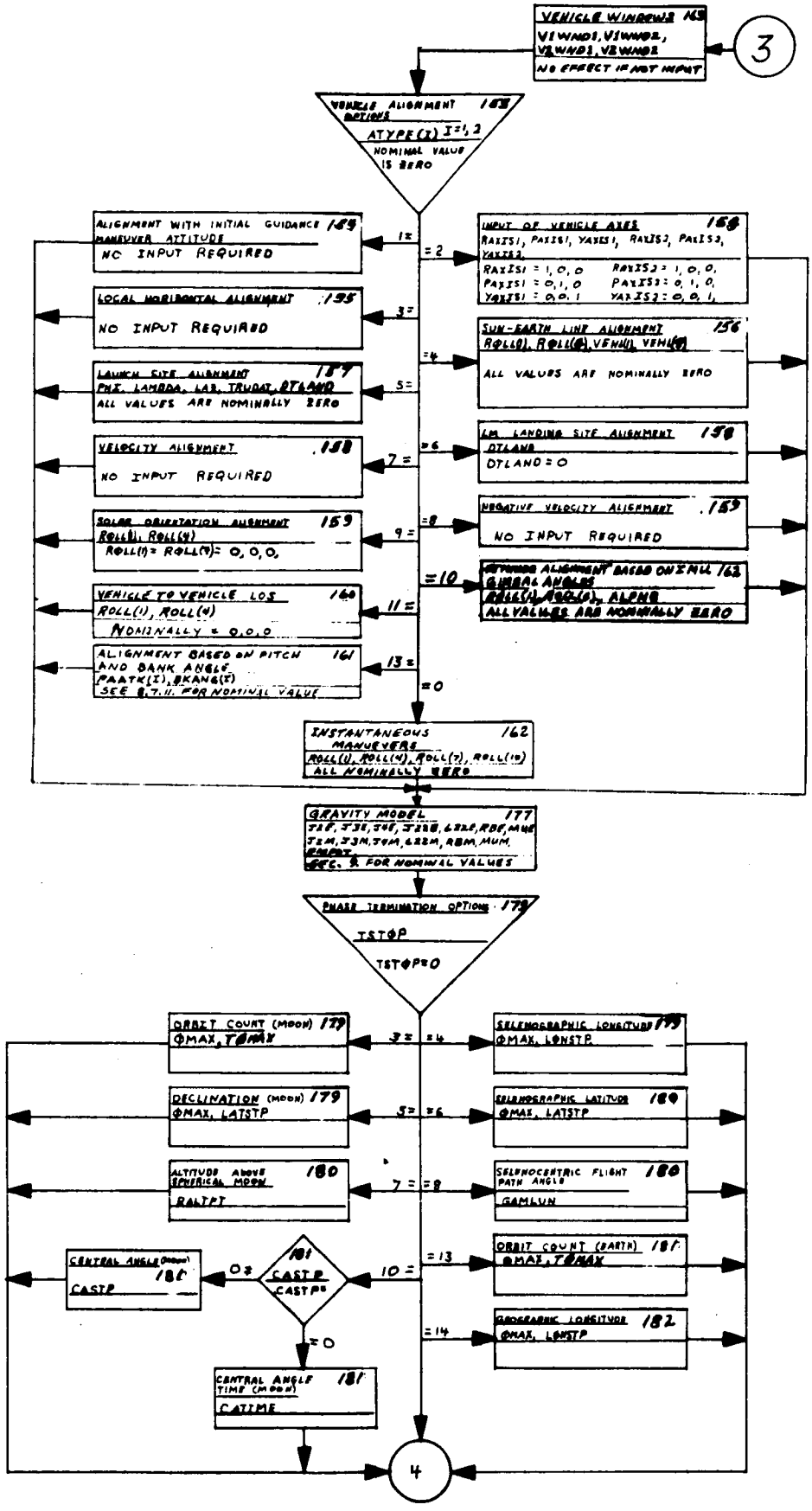
VEHICLE WINDOWS 165
V1WND1, V1WND2, V2WND1, V2WND2
NO EFFECT IF NOT INPUT
3
VEHICLE ALIGNMENT OPTIONS 153
ATYPE(I) I=1,2
NOMINAL VALUE IS ZERO
ALIGNMENT WITH INITIAL GUIDANCE MANEUVER ATTITUDE 155
NO INPUT REQUIRED
INPUT OF VEHICLE AXES 158
RAXIS1, PAXIS1, YAXIS1, RAXIS2, PAXIS2, YAXIS2
RAXIS1 = 1, 0, 0
PAXIS1 = 0, 1, 0
YAXIS1 = 0, 0, 1
RAXIS2 = 1, 0, 0,
PAXIS2 = 0, 1, 0,
YAXIS2 = 0, 0, 1,
LOCAL HORIZONTAL ALIGNMENT 155
NO INPUT REQUIRED
SUN-EARTH LINE ALIGNMENT 156
ROLL(1), ROLL(4), VEHL(1), VEHL(4)
ALL VALUES ARE NOMINALLY ZERO
LAUNCH SITE ALIGNMENT 157
PHI, LAMBDA, LAZ, TRUDAT, DTLAND
ALL VALUES ARE NOMINALLY ZERO
VELOCITY ALIGNMENT 158
NO INPUT REQUIRED
LM LANDING SITE ALIGNMENT 158
DTLAND = 0
SOLAR ORIENTATION ALIGNMENT 159
ROLL(1), ROLL(4)
ROLL(1) = ROLL(4) = 0, 0, 0,
NEGATIVE VELOCITY ALIGNMENT 159
NO INPUT REQUIRED
VEHICLE TO VEHICLE LOS 160
ROLL(1), ROLL(4)
NOMINALLY = 0, 0, 0
ALIGNMENT BASED ON IMU GIMBAL ANGLES 162
ROLL(1), ROLL(4), ALPHA
ALL VALUES ARE NOMINALLY ZERO
ALIGNMENT BASED ON PITCH AND BANK ANGLE 161
PAATK(I), BKANG(I)
SEE 8.7.11. FOR NOMINAL VALUE
INSTANTANEOUS MANUEVERS 162
ROLL(1), ROLL(4), ROLL(7), ROLL(10)
ALL NOMINALLY ZERO
GRAVITY MODEL 177
J2E, J3E, J4E, J22E, L22E, RBE, MUE
J2M, J3M, J4M, L22M, RBM, MUM
SEC. 9. FOR NOMINAL VALUES
PHASE TERMINATION OPTIONS 179
TSTØP
TSTØP=0
ORBIT COUNT (MOON) 179
ØMAX, TØMAX
SELENOGRAPHIC LONGITUDE 179
ØMAX, LØNSTP
DECLINATION (MOON) 179
ØMAX, LATSTP
SELENOGRAPHIC LATITUDE 180
ØMAX, LATSTP
ALTITUDE ABOVE SPHERICAL MOON 180
RALTPT
SELENOCENTRIC FLIGHT PATH ANGLE 180
GAMLUN
CENTRAL ANGLE (MOON) 181
CASTP
181
CASTP
CASTP=
ORBIT COUNT (EARTH) 181
ØMAX, TØMAX
GEOGRAPHIC LONGITUDE 182
ØMAX, LØNSTP
CENTRAL ANGLE TIME (MOON) 181
CATIME
4

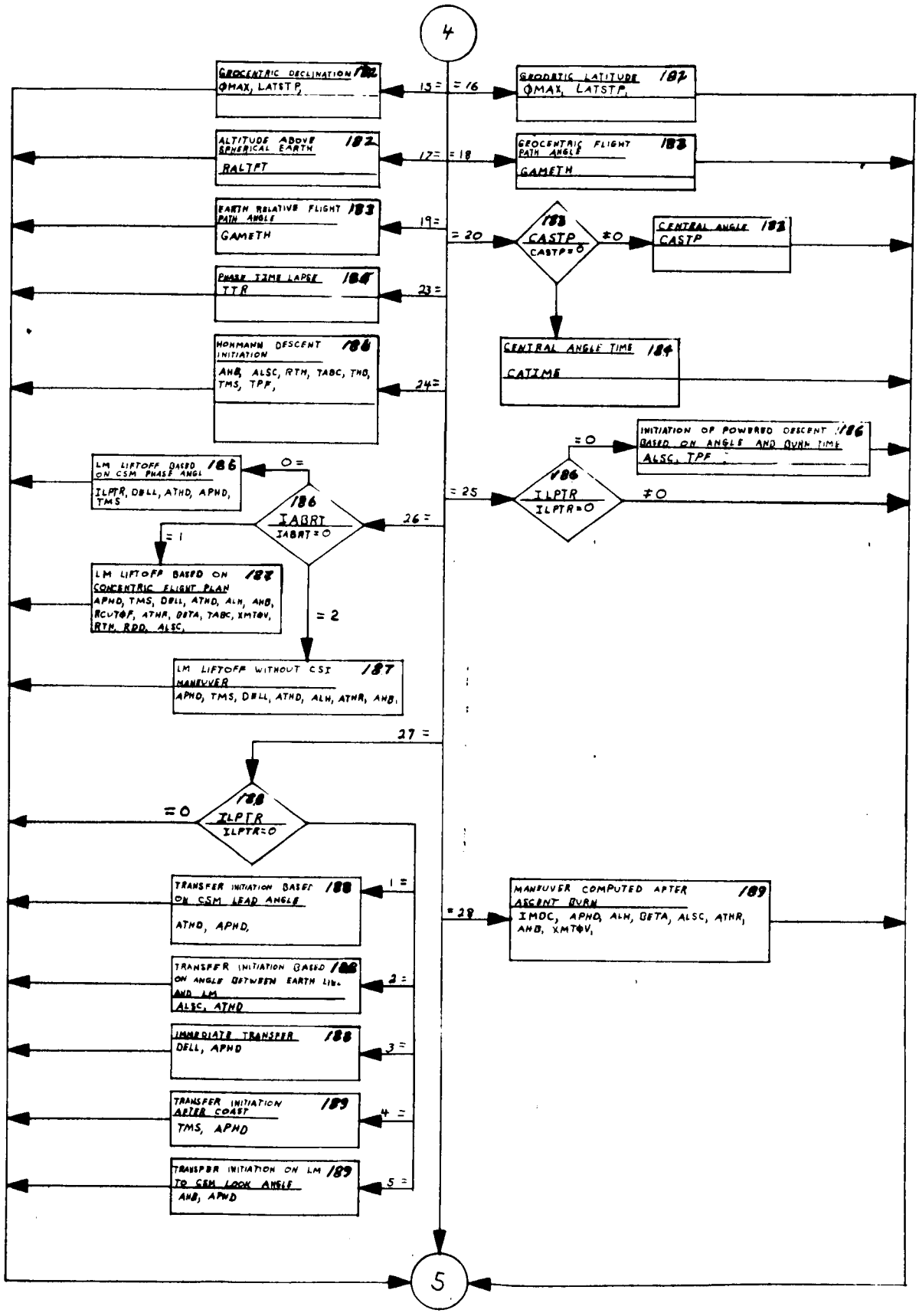
4
GEOCENTRIC DECLINATION
ΦMAX, LATSTP,
15 =
= 16
GEODETIC LATITUDE
ΦMAX, LATSTP,
ALTITUDE ABOVE SPHERICAL EARTH
RALTPT
17 =
= 18
GEOCENTRIC FLIGHT PATH ANGLE
GAMETH
EARTH RELATIVE FLIGHT PATH ANGLE
GAMETH
19 =
= 20
CASTP
CASTP=0
≠0
CENTRAL ANGLE
CASTP
PHASE TIME LAPSE
TTR
23 =
CENTRAL ANGLE TIME
CATIME
HOHMANN DESCENT INITIATION
ANB, ALSC, RTM, TABC, THD, TMS, TPF,
24 =
INITIATION OF POWERED DESCENT BASED ON ANGLE AND BURN TIME
ALSC, TPF
=0
LM LIFTOFF BASED ON CSM PHASE ANGL
ILPTR, DELL, ATHD, APHD, TMS
0 =
IABRT
IABRT=0
= 25
ILPTR
ILPTR=0
≠0
26 =
= 1
LM LIFTOFF BASED ON CONCENTRIC FLIGHT PLAN
APHD, TMS, DELL, ATHD, ALH, ANB, RCUTOF, ATHR, DETA, TABC, XMTOV, RTM, RDD, ALSC,
= 2
LM LIFTOFF WITHOUT CSI MANEUVER
APHD, TMS, DELL, ATHD, ALH, ATHR, ANB,
27 =
ILPTR
ILPTR=0
=0
TRANSFER INITIATION BASED ON CSM LEAD ANGLE
ATHD, APHD,
1 =
TRANSFER INITIATION BASED ON ANGLE BETWEEN EARTH LINE AND LM
ALSC, ATHD
2 =
IMMEDIATE TRANSFER
DELL, APHD
3 =
TRANSFER INITIATION AFTER COAST
TMS, APHD
4 =
TRANSFER INITIATION ON LM TO CSM LOOK ANGLE
ANB, APHD
5 =
= 28
MANEUVER COMPUTED AFTER ASCENT BURN
IMDC, APHD, ALH, DETA, ALSC, ATHR, ANB, XMTOV,
5

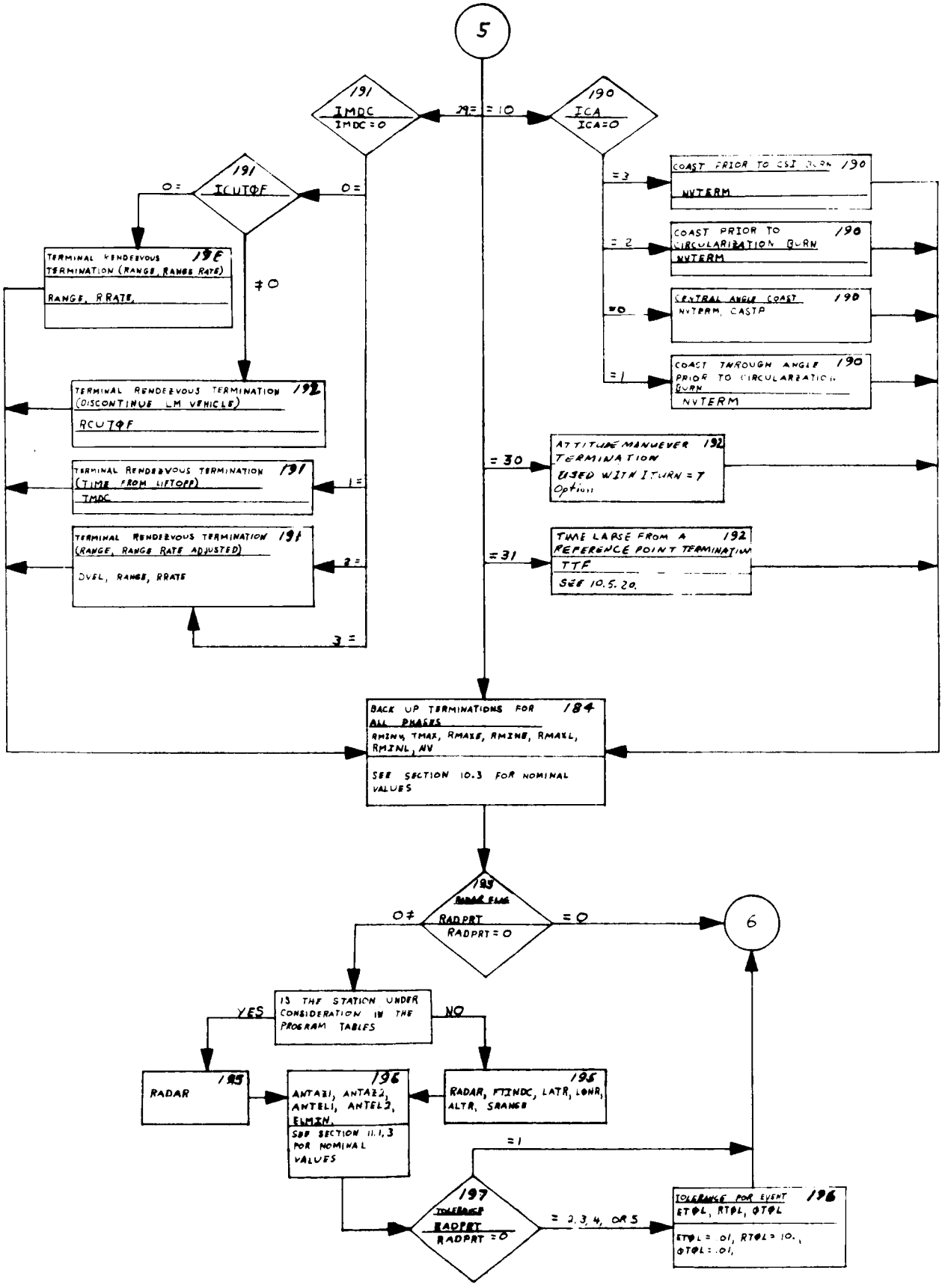
5
191
IMDC
IMDC = 0
29 = = 10
190
ICA
ICA = 0
191
ICUTOF
0 =
0 =
≠ 0
TERMINAL RENDEZVOUS TERMINATION (RANGE, RANGE RATE) 19E
RANGE, RRATE,
TERMINAL RENDEZVOUS TERMINATION (DISCONTINUE LM VEHICLE) 192
RCUTOF
TERMINAL RENDEZVOUS TERMINATION (TIME FROM LIFTOFF) 191
TMDC
1 =
TERMINAL RENDEZVOUS TERMINATION (RANGE, RANGE RATE ADJUSTED) 191
DVEL, RANGE, RRATE
2 =
3 =
= 3
COAST PRIOR TO CSI BURN 190
NVTERM
= 2
COAST PRIOR TO CIRCULARIZATION BURN 190
NVTERM
= 0
CENTRAL ANGLE COAST 190
NVTERM, CASTP
= 1
COAST THROUGH ANGLE PRIOR TO CIRCULARIZATION BURN 190
NVTERM
= 30
ATTITUDE MANUEVER TERMINATION 192
USED WITH ITURN = 7 Option
= 31
TIME LAPSE FROM A REFERENCE POINT TERMINATION 192
TTF
SEE 10.5.20.
BACK UP TERMINATIONS FOR ALL PHASES 184
RMINV, TMAX, RMAXE, RMINE, RMAXL, RMINL, NV
SEE SECTION 10.3 FOR NOMINAL VALUES
193
RADAR FLAG
RADPRT
RADPRT = 0
0 ≠
= 0
6
IS THE STATION UNDER CONSIDERATION IN THE PROGRAM TABLES
YES
NO
RADAR 195
196
ANTAZ1, ANTAZ2, ANTEL1, ANTEL2, ELMIN.
SEE SECTION 11.1.3 FOR NOMINAL VALUES
195
RADAR, FTINDC, LATR, LONR, ALTR, SRANGE
=1
197
TOLERANCE
RADPRT
RADPRT = 0
= 2, 3, 4, OR 5
TOLERANCE FOR EVENT 196
ETOL, RTOL, ΦTOL
ETOL = .01, RTOL = 10., ΦTOL = .01,

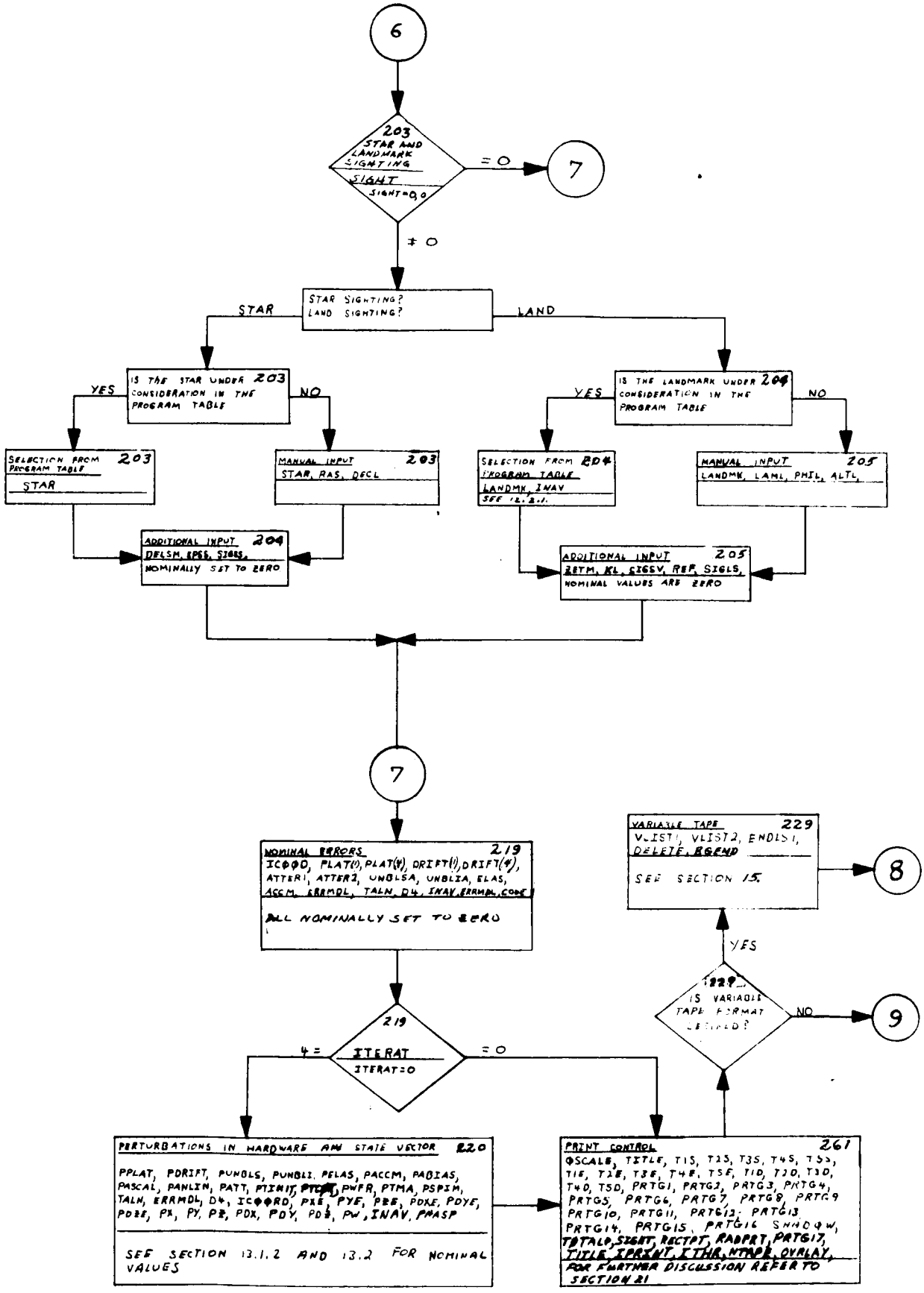
6
203
STAR AND LANDMARK SIGHTING
SIGHT
SIGHT=0,0
=0
7
≠0
STAR SIGHTING?
LAND SIGHTING?
STAR
LAND
IS THE STAR UNDER CONSIDERATION IN THE PROGRAM TABLE 203
YES
NO
IS THE LANDMARK UNDER CONSIDERATION IN THE PROGRAM TABLE 204
YES
NO
SELECTION FROM PROGRAM TABLE 203
STAR
MANUAL INPUT 203
STAR, RAS, DECL
SELECTION FROM PROGRAM TABLE 204
LANDMK, INAV
SEE 12.2.1.
MANUAL INPUT 205
LANDMK, LAML, PHIL, ALTL,
ADDITIONAL INPUT 204
DELSM, EPSS, SIGSS,
NOMINALLY SET TO ZERO
ADDITIONAL INPUT 205
ZETM, KL, CIGSV, REF, SIGLS,
NOMINAL VALUES ARE ZERO
7
NOMINAL ERRORS 219
ICØØD, PLAT(1), PLAT(4), DRIFT(1), DRIFT(4),
ATTER1, ATTER2, UNBLSA, UNBLIA, ELAS,
ASCM, ERRMDL, TALN, D4, INAV, ERRMDL, CODE
ALL NOMINALLY SET TO ZERO
VARIABLE TAPE 229
VLIST1, VLIST2, ENDLS1,
DELETE, BGEND
SEE SECTION 15.
8
YES
229
IS VARIABLE TAPE FORMAT DEFINED?
NO
9
219
ITERAT
ITERAT=0
4=
=0
PERTURBATIONS IN HARDWARE AND STATE VECTOR 220
PPLAT, PDRIFT, PUNBLS, PUNBLI, PELAS, PACCM, PABIAS,
PASCAL, PANLIN, PATT, PTINIT, PTCP, PWFR, PTMA, PSPIM,
TALN, ERRMDL, D4, ICØØRD, PXE, PYE, PZE, PDXE, PDYE,
PDZE, PX, PY, PZ, PDX, PDY, PDZ, PW, INAV, PMASP
SEE SECTION 13.1.2 AND 13.2 FOR NOMINAL VALUES
PRINT CONTROL 261
ØSCALE, TITLE, T1S, T2S, T3S, T4S, T5S,
T1E, T2E, T3E, T4E, T5E, T1D, T2D, T3D,
T4D, T5D, PRTG1, PRTG2, PRTG3, PRTG4,
PRTG5, PRTG6, PRTG7, PRTG8, PRTG9
PRTG10, PRTG11, PRTG12, PRTG13,
PRTG14, PRTG15, PRTG16 SHADOW,
TOTALP, SIGPT, RECPT, RADPRT, PRTG17,
TITLE, IPRINT, ITHR, NTAPE, OVRLAY,
FOR FURTHER DISCUSSION REFER TO SECTION 21

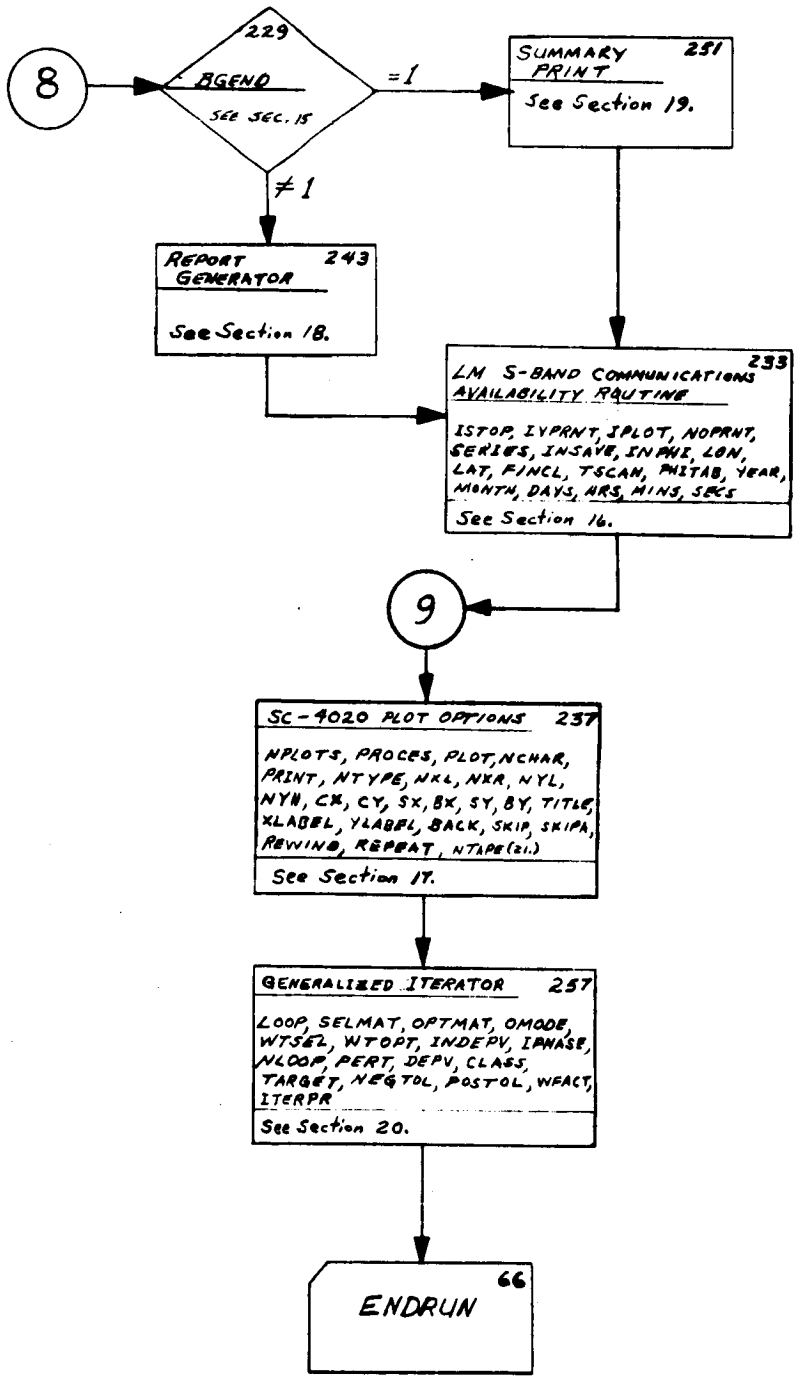
8
229
BGEND
SEE SEC. 15
=1
≠1
SUMMARY PRINT 251
See Section 19.
REPORT GENERATOR 243
See Section 18.
LM S-BAND COMMUNICATIONS AVAILABILITY ROUTINE 233
ISTOP, IVPRNT, IPLOT, NOPRNT, SERIES, INSAVE, INPHI, LON, LAT, FINCL, TSCAN, PHITAB, YEAR, MONTH, DAYS, HRS, MINS, SECS
See Section 16.
9
SC-4020 PLOT OPTIONS 237
NPLOTS, PROCES, PLOT, NCHAR, PRINT, NTYPE, NXL, NXR, NYL, NYH, CX, CY, SX, BX, SY, BY, TITLE, XLABEL, YLABEL, BACK, SKIP, SKIPA, REWIND, REPEAT, NTAPE(21.)
See Section 17.
GENERALIZED ITERATOR 257
LOOP, SELMAT, OPTMAT, OMODE, WTSEL, WTOPT, INDEPV, IPHASE, NLOOP, PERT, DEPV, CLASS, TARGET, NEGTOL, POSTOL, WFACT, ITERPR
See Section 20.
ENDRUN 66

5. STATE VECTOR INITIALIZATION

5.1. EPHEMERIS INJECTION TIME

*NOTE-THE DATES ALLOWABLE FOR STATE VECTOR INITIALIZATION EXTEND FROM 1 JUNE 1964 THRU 31 JULY 2000

INPUT

*NOTE-THE FOLLOWING FIVE INPUT VALUES (MONTH,DAYS,HRS, MINS,AND SECS) MAY BE INPUT INDIVIDUALLY OR IN ANY COMBINATION TO SPECIFY THE ELAPSED TIME FROM MIDNIGHT OF 1 JANUARY TO THE TIME OF EPHEMERIS INJECTION. HOWEVER, WHEN USING THE INPUT VALUE DAYS THE VALUE PRECEDING THE DECIMAL MUST SPECIFY THE DAY OF THE YEAR OR MONTH ON WHICH EPHEMERIS INJECTION OCCURS. THUS DAYS=1.5 IF INPUT ALONE WOULD INDICATE NOON OF 1 JANUARY. THE REFERENCE EPOCH FOR TRAJECTORY GENERATION IS ESTABLISHED AT THE START OF THE BEGINNING BESSELIAN YEAR NEAREST TO THE TIME SPECIFIED BY THE FIVE INPUTS. THE EPOCH CANNOT BE CHANGED DURING THE GENERATION OF A TRAJECTORY. THUS TRAJECTORIES FROM MARCH TO SEPTEMBER CANNOT BE COMPUTED IN ONE RUN. AN EPOCH WILL TERMINATE A MINIMUM OF 768 HOURS AFTER THE ONE-HUNDRED-EIGHTIETH DAY OF THE YEAR.

YEAR - YEAR OF STATE VECTOR INITIALIZATION
MONTH - MONTH
DAYS - DAY
HRS - HOURS
MINS - MINUTES
SECS - SECONDS
TSTART - ELAPSED TIME FROM THE ABOVE INPUT TIME TO THE TIME AT WHICH TRAJECTORY GENERATION IS TO BEGIN. THIS VALUE MAY BE INPUT IN DOUBLE PRECISION, AND THE DOUBLE PRECISION INPUT FORMAT SHOULD BE USED WHETHER OR NOT THIS DEGREE OF ACCURACY IS REQUIRED. THIS INPUT IS NOMINALLY SET TO 0.0D0. THE UNITS ARE HOURS.
EDT - EPHEMERIS DELTA TIME. VALUE REQUIRED TO CHANGE FROM EPHEMERIS TIME TO UNIVERSAL TIME. E.T.=U.T.+ EDT. EDT MUST BE INPUT IN HOURS AND IS NOMINALLY SET TO .01.

*EXAMPLE

```
YEAR=1968,      MONTH=7.0,      DAYS=18.0*
HRS=5.0,        MINS=35.0,      SECS=21.180*
TSTART=0.0D0,   EDT=0.0095*
```

5.1.1. EPHEMERIS ERRORS

CERTAIN ERRORS MAY OCCUR DURING EPHEMERIS TAPE INTERROGATION. THESE ARE INDICATED BY CODED ERROR MESSAGES IN THE OUTPUT. THEIR MEANINGS ARE DESCRIBED BELOW.

CODE		ERROR
1	-	INPUT YEAR IS OUTSIDE OF TAPE LIMITS
2	-	READ REDUNDANCY (MACHINE ERROR)
3	-	FAILED TO SKIP TO CORRECT FILE (MACHINE ERROR)
4	-	ATTEMPTING TO CHANGE EPOCHS
5	-	FAILED TO SKIP TO CORRECT RECORD (MACHINE ERROR)

5.2. EARTH REFERENCE OPTIONS

THE FOLLOWING INPUTS ARE REQUIRED FOR EACH OF THE OPTIONS DISCUSSED BELOW.

NV - INDICATOR DESIGNATING THE NUMBER OF VEHICLES. MAY BE EITHER 1 OR 2 AND IS SET NOMINALLY TO 1.

ISCALE - INDICATOR OF INPUT UNITS, NOMINALLY SET TO 7.

	DISTANCE	VELOCITY
ISCALE=1	KILOMETERS	KILOMETERS/SECOND
ISCALE=2	INTERNATIONAL STATUTE MILES	INTERNATIONAL STATUTE MILES/SECOND
ISCALE=3	U.S.NAUTICAL MILES	U.S.NAUTICAL MILES/SECOND
ISCALE=4	U.S.FEET	U.S.FEET/SECOND
ISCALE=5	EARTH RADII	EARTH RADII/HOUR
ISCALE=6	INTERNATIONAL STATUTE MILES	U.S.FEET/SECOND
ISCALE=7	U.S.NAUTICAL MILES	U.S.FEET/SECOND

5.2.1. INERTIAL GEOCENTRIC CARTESIAN COORDINATES

*COORDINATE SYSTEM DESCRIPTION

THE Z-AXIS IS DIRECTED ALONG THE EARTH'S ROTATIONAL AXIS, POSITIVE NORTH.
THE X-AXIS IS DIRECTED TOWARD THE VERNAL EQUINOX.
THE Y-AXIS COMPLETES THE STANDARD RIGHT-HANDED SYSTEM.

INPUT

INJECT - OPTION INDICATOR (=11 FOR THIS OPTION) NOMINALLY SET TO -1.

```
X - X-COMPONENT OF VEHICLE POSITION
Y - Y-COMPONENT OF VEHICLE POSITION
Z - Z-COMPONENT OF VEHICLE POSITION
DX - X-COMPONENT OF VEHICLE VELOCITY
DY - Y-COMPONENT OF VEHICLE VELOCITY
DZ - Z-COMPONENT OF VEHICLE VELOCITY

 *EXAMPLE 1
   X=18318590.,      Y=-10590968.,      Z=-5520009.2*
   DX=2.2735983E4,   DY=2.3913790E4,    DZ=1.3386777E4*
   ISCALE=4,         INJECT=11*

 *EXAMPLE 2
   NV=2,     ISCALE=4*
   X=18318590.,18318500.*
   Y=-10590968.,-10590900.*
   Z=-5520009.2,-5520000.0*
   DX=2.2735983E4,2.2736000E4*
   DY=2.3913790E4,2.3913800E4*
   DZ=1.3386777E4,1.3386825E4*
   INJECT=11,11*
```

5.2.2. INERTIAL GEOCENTRIC POLAR COORDINATES

```
*COORDINATE SYSTEM DESCRIPTION
  THE POINT OF INTEREST IS DEFINED BY A RADIUS,ITS
  RIGHT ASCENSION, AND DECLINATION. THE RADIUS IS THE
  RADIAL DISTANCE FROM THE CENTER OF THE EARTH TO THE
  POINT OF INTEREST. THE RIGHT ASCENSION IS THE ANGLE
  MEASURED FROM THE VERNAL EQUINOX, EASTWARD, ALONG THE
  EQUATOR, TO THE MERIDIAN WHICH PASSES THROUGH THE POINT
  OF INTEREST.THE DECLINATION IS THE ANGLE BETWEEN THE
  RADIUS VECTOR AND THE EQUATORIAL PLANE.

INPUT
  INJECT - OPTION INDICATOR (=12 FOR THIS OPTION) NOMINALLY
           SET TO -1.
  RA - RIGHT ASCENSION OR LONGITUDE (DEGREES)
  DEC - DECLINATION (DEGREES)
  R - RADIUS VECTOR MAGNITUDE
  PTH - FLIGHT PATH ANGLE MEASURED POSITIVE UP FROM THE
        HORIZONTAL PLANE (DEGREES)
  AZ - AZIMUTH MEASURED FROM NORTH TOWARD EAST (DEGREES)
  V - VELOCITY VECTOR MAGNITUDE
  RAGR - RIGHT ASCENSION OR LONGITUDE INDICATOR WHICH IS
         NOMINALLY EQUAL TO ZERO (SEE EXAMPLES FOR FURTHER
         EXPLANATION).

 *EXAMPLE 1
   R=21868009.,      DEC=-14.620993,      RA=-30.034530*
```

```
  PTH=6.5870045,    AZ=65.088023,        V=35608.987*
  INJECT=12,        ISCALE=4*
*EXPLANATION OF EXAMPLE 1
 THE NOMINAL VALUE OF RAGR IS USED AND RA IS ACCEPTED
 AS RIGHT ASCENSION.

*EXAMPLE 2
  R=21868009.,      DEC=-14.620993,      RA=-30.034530*
  PTH=6.5870045,    AZ=65.088023,        V=35608.987*
  INJECT=12,        RAGR=1,              ISCALE=4*
*EXPLANATION OF EXAMPLE 2
 THE PROGRAM COMPUTES THE LONGITUDE OF THE VERNAL
 EQUINOX AND RA IS ACCEPTED AS THE LONGITUDE.
```

5.2.3. ROTATIONAL GEODETIC POLAR COORDINATES

```
*COORDINATE SYSTEM DESCRIPTION
  THE ORIGIN OF THE COORDINATE SYSTEM IS LOCATED AT THE
  GEOCENTER. THE X-AXIS LIES IN THE EQUATORIAL PLANE AND
  IS DIRECTED THROUGH THE GREENWICH MERIDIAN.THE Z-AXIS
  IS DIRECTED ALONG THE EARTH'S ROTATIONAL AXIS, POSI-
  TIVE NORTH. THE Y-AXIS COMPLETES THE STANDARD RIGHT-
  HANDED SYSTEM. THE COORDINATE SYSTEM IS FIXED IN THE
  EARTH AND ROTATES WITH IT. THE SHAPE OF THE EARTH IS
  DEFINED BY A REFERENCE ELLIPSOID. THE POINT OF INTEREST
  IS DEFINED BY AN ALTITUDE, A LONGITUDE AND A LATITUDE.
  THE ALTITUDE IS MEASURED FROM THE POINT OF INTEREST
  PERPENDICULAR TO THE REFERENCE ELLIPSOID. THE
  LONGITUDE IS THE ANGLE MEASURED FROM THE GREENWICH
  MERIDIAN , EASTWARD, ALONG THE EQUATOR TO THE MERIDIAN
  WHICH PASSES THROUGH THE POINT OF INTEREST. THE
  LATITUDE IS THE ANGLE BETWEEN THE EQUATORIAL PLANE AND
  A LINE THROUGH THE POINT OF INTEREST NORMAL TO A
  TANGENT PLANE TOUCHING THE REFERENCE ELLIPSOID.

INPUT
  INJECT - OPTION INDICATOR (=13 FOR THIS OPTION) NOMINALLY
           SET TO -1.
  LON - LONGITUDE (DEGREES)
  LAT - GEODETIC LATITUDE (DEGREES)
  ALT - ALTITUDE MEASURED FROM GEODETIC SUB-VEHICLE POINT
  PTE - FLIGHT PATH ANGLE MEASURED POSITIVE UP FROM THE
        HORIZONTAL PLANE WHICH IS NORMAL TO THE GEODETIC
        ALTITUDE. (DEGREES)
  AZE - AZIMUTH MEASURED FROM NORTH TOWARD EAST (DEGREES)
  VE - VELOCITY VECTOR MAGNITUDE
  RAGR - RIGHT ASCENSION OR LONGITUDE INDICATOR WHICH IS
         NOMINALLY EQUAL TO ZERO (SEE EXAMPLES FOR FURTHER
         EXPLANATION).
```

```
*EXAMPLE 1
  ALT=946761.29,     LAT=-14.711151,     LCN=145.1C770*
  VE=34225.340,      PTE=6.8150133,      AZE=63.982347*
  INJECT=13,         RAGR=1,             ISCALE=4*
*EXPLANATION OF EXAMPLE 1
 THE INPUT LON IS ACCEPTED AS THE LONGITUDE.

*EXAMPLE 2
  ALT=946761.29,     LAT=-14.711151,     LCN=145.10770*
  VE=34225.340,      PTE=6.8150133,      AZE=63.982347*
  INJECT=13,         ISCALE=4*
*EXPLANATION OF EXAMPLE 2
 THE NOMINAL VALUE OF RAGR IS USED AND LON IS ACCEPTED
 AS RIGHT ASCENSION.
```

5.2.4. EARTH-MOON PLANE CARTESIAN COORDINATES

```
*COORDINATE SYSTEM DESCRIPTION
  THE EARTH-MOON PLANE COORDINATE SYSTEM IS DEFINED BY THE IN-
  STANTANEOUS RADIUS AND VELOCITY VECTORS OF THE MOON AT THE
  PARTICULAR TIME IN QUESTION. THE X-AXIS LIES ALONG THE EARTH
  -MOON LINE, POSITIVE AWAY FROM THE MOON. THE Z-AXIS IS NOR-
  MAL TO THE EARTH-MOON PLANE, PARALLEL TO THE MOON'S ANGULAR
  MOMENTUM VECTOR, POSITIVE IN A NORTHERLY DIRECTION. THE
  Y-AXIS COMPLETES THE STANDARD RIGHT-HANDED SYSTEM. THIS
  COORDINATE SYSTEM IS REDEFINED AT THE BEGINNING OF EACH
  COMPUTATIONAL CYCLE. IT IS AN INERTIAL SYSTEM FOR THE
  DURATION OF EACH CYCLE AND IS EARTH-CENTERED.

INPUT
  INJECT - OPTION INDICATOR (=14 FOR THIS OPTION) NOMINALLY
           SET TO -1.
  XMP - X-COMPONENT OF VEHICLE POSITION
  YMP - Y-COMPONENT OF VEHICLE POSITION
  ZMP - Z-COMPONENT OF VEHICLE POSITION
  DXMP - X-COMPONENT OF VEHICLE VELOCITY
  DYMP - Y-COMPONENT OF VEHICLE VELOCITY
  DZMP - Z-COMPONENT OF VEHICLE VELOCITY

 *EXAMPLE
  XMP=9012757.4,     YMP=19901988.,      ZMP=943864.00*
  DXMP=-30375.685,   DYMP=18030.971,     DZMP=4494.6430*
  INJECT=14,         ISCALE=4*
```

5.2.5. EARTH-MOON PLANE POLAR COORDINATES

```
*COORDINATE SYSTEM DESCRIPTION
```

THE RADIUS IS THE RADIAL DISTANCE FROM THE CENTER OF THE EARTH TO THE POINT OF INTEREST. THE RIGHT ASCENSICN IS THE ANGLE MEASURED IN THE EARTH-MOCN PLANE FROM THE EARTH-MOON PLANE CARTESIAN X-AXIS TO THE PROJECTION OF THE RADIUS VECTOR IN THE EARTH-MOON PLANE. THE POSITIVE DIRECTION IS DEFINED AS THAT OF POSITIVE ROTATION ABOUT THE EARTH-MOON PLANE CARTESIAN Z-AXIS. THE DECLINATION IS THE ANGLE BETWEEN THE RADILS VECTOR AND THE EARTH-MOON PLANE.

INPUT

INJECT - OPTION INDICATOR (=15 FOR THIS CPTICN) NOMINALLY SET TO -1.
RAMP - RIGHT ASCENSION (DEGREES)
DEMP - DECLINATIGN (DEGREES)
RMP - RADIUS VECTOR MAGNITUDE
PTMP - FLIGHT PATH ANGLE (DEGREES)
AZMP - AZIMUTH MEASURED FROM NORTH TOWARD EAST (DEG)
VMP - VELOCITY VECTOR MAGNITUDE

```
*EXAMPLE
  RAMP=65.636265,  DEMP=2.4737588,  RMP=21868009.*
  PTMP=6.5870037,  AZMP=82.981447,  VMP=35608.987*
  INJECT=15,     ISCALE=4*
```

5.2.6. INERTIAL CARTESIAN EARTH-CENTERED PLUMBLINE COORDINATES

*COORDINATE SYSTEM DESCRIPTION

THE Y-AXIS IS PARALLEL TO THE GRAVITY GRADIENT AT THE LAUNCH POINT BUT DOES NOT PASS THROUGH THE LAUNCH POINT. THE X-AXIS IS PARALLEL TO THE EARTH FIXED DIRECTION OF THE LAUNCH AZIMUTH. THE Z-AXIS COMPLETES THE RIGHT-HANDED COORDINATE SYSTEM.

INPUT

INJECT - OPTION INDICATOR (=16 FOR THIS OPTION) NOMINALLY SET TO -1.
XPL - X-CCMPCNENT OF VEHICLE PCSITICN
YPL - Y-COMPONENT OF VEHICLE POSITICN
ZPL - Z-COMPCNENT OF VEHICLE PCSITION
DXPL - X-COMPCNENT OF VEHICLE VELOCITY
DYPL - Y-COMPONENT OF VEHICLE VELOCITY
DZPL - Z-COMPONENT OF VEHICLE VELOCITY
PHI - GEODETIC LATITUDE OF THE LAUNCH SITE (DEGREES)
LAMBCA - LONGITUDE OF THE LAUNCH SITE, POSITIVE EAST (DEGREES)
LAZ - LAUNCH AZIMUTH (DEGREES)

```
*EXAMPLE
  XPL=5494.6869,    YPL=3575.C857,    ZPL=141.47713*
```

```
DXPL=4.2504175,    DYPL=-6.5370893,   DZPL=.076099384*
PHI=28.608,        LAMBDA=-80.604,    LAZ=72.598*
INJECT=16,         ISCALE=1*
```

5.2.7. INERTIAL GEOCENTRIC CARTESIAN RESTART COORDINATES

```
INPUT
  INJECT - OPTION INDICATOR (=10 FOR THIS OPTION) NOMINALLY
           SET TO -1.
  RXYZ - X-,Y-, AND Z-COMPONENTS OF RESTART POSITION.
         MUST BE INPUT IN DOUBLE PRECISION FORMAT AND IN
         UNITS OF EARTH RADII.
  RDXYZ - X-,Y-, AND Z-COMPONENTS OF RESTART VELOCITY.
          MUST BE INPUT IN DOUBLE PRECISION FORMAT AND
          IN UNITS OF EARTH RADII/HOUR.

  *EXAMPLE 1
    RXYZ = 54.2332344055175770D0,29.822035312652584D0*
           14.008967995643612D0*
    RDXYZ = .58124437183141708D0,.15517776273190975D0*
            .54292663931846619D-01*
    INJECT = 10*

  **NOTE- A VALUE OF ISCALE IS NOT INPUT SINCE THE
          UNITS OF EARTH RADII AND EARTH RADII/HOUR
          MUST BE USED.

  *EXAMPLE 2
    RXYZ = 54.2332344055175770D0,29.822035312652584D0*
           14.008967995643612D0*
    RXYZ(7) =54.2332549095153770D0,29.821985960006714D0*
             14.008967995643612D0*
    RDXYZ = .58124437183141708D0,.15517776273190975D0*
            .54292663931846619D0*
    RDXYZ(7)=.56546937674283981D0,.15957432612776756D0*
             .57396065443754196D0*
    NV=2,      INJECT=10,10*
```

5.2.8. GEOCENTRIC INERTIAL ORBITAL ELEMENTS

```
*COORDINATE SYSTEM DESCRIPTION
  THE VEHICLE STATE IS DEFINED BY THE OSCULATING ELEMENTS.
  REFERRED TO THE TRUE EQUATOR AND EQUINOX OF DATE.

INPUT
  INJECT - OPTION INDICATOR IS 17 FOR THIS OPTION
  OSMA   - ORBITAL SEMIMAJOR AXIS
```

```
ORECC  - ORBITAL ECCENTRICITY
OINC   - ORBITAL INCLINATION (DEGREES)
ARGPC  - ARGUMENT OF PERIGEE (DEGREES)
RAAN   - RIGHT ASCENSION OF ASCENDING NODE (DEGREES)
ANOMN  - MEAN ANOMALY (DEGREES)

 * EXAMPLE
    OSMA=112011.76,  ORECC=.968304528, OINC=28.154527*
    ARGPC=-43.29079, RAAN=-7.86461585, ANOMN=.0553516*
    INJECT=17,       ISCALE=7*
```

5.2.9. GEOCENTRIC EARTH RELATIVE ORBITAL ELEMENTS

```
INPUT
  INJECT- OPTION INDICATOR IS 18 FOR THIS OPTION
  RAAN  - LONGITUDE OF ASCENDING NODE (DEGREES) REPLACES
          RIGHT ASCENSION OF ASCENDING NODE IN SECTION 5.2.8.
          (ALL OTHER ELEMENTS ARE IDENTICAL TO OPTION 17)

 * EXAMPLE
   OSMA=112011.76,  ORECC=.968304528, OINC=28.154527*
   ARGPC=-43.29079, RAAN=153.628975,  ANOMN=.0553516*
   INJECT=18,       ISCALE=7*
```

5.2.10. GEOGRAPHIC POLAR COORDINATE / ORBITAL ELEMENT COMBINATION

```
INPUT
  INJECT - OPTION INDICATOR IS 19 FOR THIS OPTION
  PERR   - PERIGEE RADIUS
  APOR   - APOGEE  RADIUS
  OINC   - ORBITAL INCLINATION TO MEAN EQUATOR (DEGREES)
  PLATP  - GEODETIC LATITUDE OF VEHICLE POSITION (DEGREES)
  PLON   - LONGITUDE OF VEHICLE POSITION (DEGREES)
  ANOMT  - TRUE ANOMALY (DEGREES)
  D      - DIRECTIONAL FLAG TO INDICATE WHETHER VEHICLE VELOC-
           ITY HAS A NORTHERLY (D=1) OR SOUTHERLY (D=-1) HEAD-
           ING COMPONENT

 *EXAMPLE
   PERR=3550.26553, APOR=220473.248, OINC=28.1545268*
   PLATP=-13.58689, PLON=124.932941, ANOMT=13.6341243*
   INJECT=19,       ISCALE=7,        D=1.*
```

5.3. MOON REFERENCE OPTIONS

THE FOLLOWING INPUTS ARE REQUIRED FOR EACH OF THE OPTIONS DISCUSSED BELOW.

NV - INDICATOR DESIGNATING THE NUMBER OF VEHICLES. MAY BE EITHER 1 OR 2 AND IS SET NOMINALLY TO 1.

ISCALE - INDICATOR OF INPUT UNITS, NOMINALLY SET TO 7.

	DISTANCE	VELOCITY
ISCALE=1	KILOMETERS	KILOMETERS/SECOND
ISCALE=2	INTERNATIONAL STATUTE MILES	INTERNATIONAL STATUTE MILES/SECOND
ISCALE=3	U.S.NAUTICAL MILES	U.S.NAUTICAL MILES/SECOND
ISCALE=4	U.S.FEET	U.S.FEET/SECOND
ISCALE=5	EARTH RADII	EARTH RADII/HOUR
ISCALE=6	INTERNATIONAL STATUTE MILES	U.S.FEET/SECOND
ISCALE=7	U.S.NAUTICAL MILES	U.S.FEET/SECOND

5.3.1. INERTIAL SELENOCENTRIC CARTESIAN COORDINATES

*COORDINATE SYSTEM DESCRIPTION

THE AXES OF THIS COORDINATE SYSTEM ARE DIRECTED PARALLEL TO THOSE OF THE INERTIAL GEOCENTRIC SYSTEM.

INPUT

INJECT - OPTION INDICATOR (=21 FOR THIS OPTION) NOMINALLY SET TO -1.

XL - X-COMPONENT OF VEHICLE POSITION

YL - Y-COMPONENT OF VEHICLE POSITION

ZL - Z-COMPONENT OF VEHICLE POSITION

DXL - X-COMPONENT OF VEHICLE VELOCITY

DYL - Y-COMPONENT OF VEHICLE VELOCITY

DZL - Z-COMPONENT OF VEHICLE VELOCITY

*EXAMPLE 1

```
XL=-6113754.6,     YL=958043.23,     ZL=-36362.327*
DXL=1346.6427,     DYL=6225.4455,    DZL=4844.5832*
INJECT=21,         ISCALE=4*
```

*EXAMPLE 2

```
NV=2,      ISCALE=4*
XL=-6113754.6,-6113700.0*
YL=958043.23,958050.00*
ZL=-36362.327,-36350.300*
DXL=1346.6427,1.3500000E3*
DYL=6225.4455,6.2205000E3*
DZL=4844.5832,4.8445800E3*
```

```
INJECT=21,21,      ISCALE=4*
```

5.3.2. EARTH-MOON PLANE POLAR COORDINATES

```
*COORDINATE SYSTEM DESCRIPTION
  THE POINT OF INTEREST IS DEFINED BY A RADIUS, ITS RIGHT
  ASCENSION, AND DECLINATION. THE RADIUS IS THE RADIAL
  DISTANCE FROM THE CENTER OF THE MOON TO THE POINT. THE
  RIGHT ASCENSION IS THE ANGLE MEASURED IN THE EARTH-MOON
  PLANE FROM THE EARTH-MOON PLANE CARTESIAN X-AXIS TO THE
  PROJECTION OF THE RADIUS VECTOR IN THE EARTH-MOON
  PLANE. THE POSITIVE DIRECTION IS THAT OF POSITIVE
  ROTATION ABOUT THE EARTH-MOON PLANE CARTESIAN Z-AXIS.
  THE DECLINATION IS THE ANGLE BETWEEN THE RADIUS VECTOR
  AND THE EARTH-MOON PLANE.

INPUT
  INJECT - OPTION INDICATOR (=22 FOR THIS OPTION) NOMINALLY
           SET TO -1.
  RAMP - RIGHT ASCENSION (DEGREES)
  DEMP - DECLINATION (DEGREES)
  RMP - RADIUS VECTOR MAGNITUDE
  PTMP - FLIGHT PATH ANGLE (DEGREES)
  AZMP - AZIMUTH MEASURED FROM NORTH TOWARD EAST (DEG)
  VMP - VELOCITY VECTOR MAGNITUDE

   *EXAMPLE
     RAMP=-133.56425,  DEMP=-5.0899261, RMP=6188470.2*
     PTMP=-2.8298447,  AZMP=-80.797268, VMP=8002.4748*
     INJECT=22,        ISCALE=4*
```

5.3.3. ROTATIONAL SELENOGRAPHIC POLAR COORDINATES

```
*COORDINATE SYSTEM DESCRIPTION
  THE POINT OF INTEREST IS DEFINED BY AN ALTITUDE, A
  LONGITUDE, AND LATITUDE. THE ALTITUDE IS MEASURED FROM
  THE POINT PERPENDICULAR TO THE LUNAR SURFACE. THE LONG-
  ITUDE IS MEASURED FROM THE X-AXIS OF THE ROTATIONAL SE-
  LENOGRAPHIC CARTESIAN SYSTEM, EASTWARD, ALONG THE LUNAR
  EQUATOR TO THE MERIDIAN PASSING THROUGH THE POINT. THE
  LATITUDE IS THE ANGLE BETWEEN THE RADIUS VECTOR AND THE
  LUNAR EQUATORIAL PLANE.

INPUT
  INJECT - OPTION INDICATOR (=23 FOR THIS OPTION) NOMINALLY
           SET TO -1.
  LONS - LONGITUDE (DEGREES)
```

LATS - LATITUDE (DEGREES)
ALTS - ALTITUDE ABOVE LUNAR SURFACE
PTR - FLIGHT PATH ANGLE MEASURED POSITIVE UP FROM THE HORIZONTAL PLANE (DEGREES)
AZR - AZIMUTH MEASURED FROM NORTH TOWARD EAST (DEG)
VRS - VELOCITY VECTOR MAGNITUDE

```
*EXAMPLE
  LONS=-369.12919,  LATS=-3.4351292,  ALTS=486075.29*
  PTR=-2.8242542,   AZR=-74.427234,   VRS=8018.2992*
  INJECT=23,     ISCALE=4*
```

5.3.4. ROTATIONAL SELENOGRAPHIC CARTESIAN COORDINATES

*COORDINATE SYSTEM DESCRIPTION
THE SELENOGRAPHIC EQUATORIAL PLANE IS PERPENDICULAR TO THE LUNAR AXIS OF ROTATION. THE X-AXIS OF THE SYSTEM LIES IN THE EQUATORIAL PLANE AND IS DIRECTED THROUGH THE MOON'S PRIME MERIDIAN. THE Z-AXIS IS DIRECTED PERPENDICULAR TO THE EQUATORIAL PLANE ALONG THE LUNAR AXIS OF ROTATION. THE Y-AXIS COMPLETES THE STANDARD RIGHT-HANDED COORDINATE SYSTEM. THE SYSTEM IS FIXED IN THE MOON AND ROTATES WITH IT.

INPUT
INJECT - OPTION INDICATOR (=24 FOR THIS OPTION) NOMINALLY SET TO -1.
XS - X-COMPONENT OF POSITION
YS - Y-COMPONENT OF POSITION
ZS - Z-COMPONENT OF POSITION
DXS - X-COMPONENT OF VELOCITY
DYS - Y-COMPONENT OF VELOCITY
DZS - Z-COMPONENT OF VELOCITY

```
*EXAMPLE
  XS=-4671232.0,    YS=-4042184.9,    ZS=-370803.47*
  DXS=-4847.2672,   DYS=6007.4184,    DZS=2169.8034*
  INJECT=24,     ISCALE=4*
```

5.3.5. INERTIAL SELENOCENTRIC POLAR COORDINATES

*COORDINATE SYSTEM DESCRIPTION
THE POINT OF INTEREST IS DEFINED BY A RADIUS, ITS RIGHT ASCENSION, AND DECLINATION. THE RADIUS IS THE RADIAL DISTANCE FROM THE CENTER OF THE MOON TO THE POINT. THE RIGHT ASCENSION IS THE ANGLE MEASURED FROM THE X-AXIS OF THE SELENOCENTRIC CARTESIAN COORDINATE SYSTEM

ALCNG THE LUNAR EQUATOR TO THE MERIDIAN WHICH PASSES THROUGH THE POINT. THE DECLINATICN IS THE ANGLE BETWEEN THE RADIUS VECTOR AND THE LUNAR EQUATORIAL PLANE

INPUT

INJECT - OPTICN INDICATOR (=25 FOR THIS CPTICN) NOMINALLY SET TO -1.
RAL - RIGHT ASCENSION (DEGREES)
DECL - DECLINATION (DEGREES)
RL - RADIUS VECTOR MAGNITUDE
PTHL - FLIGHT PATH ANGLE MEASURED POSITIVE UP FROM THE HORIZONTAL PLANE (DEGREES)
AZL - AZIMUTH MEASURED FROM NORTH TOWARD EAST (DEG)
VL - VELOCITY VECTOR MAGNITUDE

```
*EXAMPLE
  RAL=171.09401,  DECL=-.33666002,  RL=6188470.2*
  PTHL=-2.8298438, AZL=-52.710342,  VL=8002.4749*
  INJECT=25,      ISCALE=4*
```

5.3.6. EARTH-MOON PLANE CARTESIAN COORDINATES

*COORDINATE SYSTEM DESCRIPTION

THE EARTH-MOON PLANE COORDINATE SYSTEM IS DEFINED BY THE INSTANTANEOUS RADIUS AND VELOCITY VECTORS OF THE MOON AT THE PARTICULAR TIME IN QUESTICN. THE X-AXIS LIES ALONG THE EARTH-MOON LINE, POSITIVE TOWARD THE EARTH AWAY FROM THE MOON. THE Z-AXIS IS NORMAL TO THE EARTH-MOON PLANE, AND PARALLEL TO THE MOON'S ANGULAR MOMENTUM VECTOR, POSITIVE IN A NORTHERLY DIRECTION. THE Y-AXIS COMPLETES THE STANDARD RIGHT-HANDED COORDINATE SYSTEM. THIS SYSTEM IS REDEFINED AT THE BEGINNING OF EACH COMPUTATIONAL CYCLE. IT IS AN INERTIAL SYSTEM FOR THE DURATION OF EACH CYCLE AND IS MCON-CENTERED.

INPUT

INJECT - OPTION INDICATOR (=26 FOR THIS OPTICN) NCMINALLY SET TO -1.
XMP - X-COMPONENT OF POSITICN
YMP - Y-COMPONENT OF POSITION
ZMP - Z-CCMPONENT OF POSITICN
DXMP - X-COMPONENT OF VELOCITY
DYMP - Y-COMPCNENT OF VELOCITY
DZMP - Z-COMPONENT OF VELOCITY

```
*EXAMPLE
  XMP=-4248075.5,    YMP=-4466494.9,    ZMP=-549036.00*
  DXMP=-5523.9441,   DYMP=5640.3962,    DZMP=1308.2719*
  INJECT=26,      ISCALE=4*
```

5.3.7. INERTIAL SELENOCENTRIC CARTESIAN RESTART COORDINATES

```
INPUT
  INJECT - OPTION INDICATOR (=20 FOR THIS OPTION) NOMINALLY
           SET TO -1.
  RXYZ - X-,Y-, AND Z-COMPONENTS OF RESTART POSITION.
         MUST BE INPUT IN DOUBLE PRECISION FORMAT AND IN
         UNITS OF EARTH RADII.
  RDXYZ - X-,Y-, AND Z-COMPONENTS OF RESTART VELOCITY.
          MUST BE INPUT IN DOUBLE PRECISION FORMAT AND
          IN UNITS OF EARTH RADII PER HOUR

 *EXAMPLE 1
   RXYZ = .10553897523740119D0,.25407422152757242D0*
          .10830665623677405D0*
   RDXYZ = .84827590751604920D0,-.27368607981199766D0*
           -.18381545148725814D0*
   INJECT = 20*

 *EXAMPLE 2
   NV=2,      INJECT=20,20*
   RXYZ = .10553897523740119D0,.25407422152757242D0*
          .10830665623677405D0*
   RXYZ(7) =.10545953819595510D0,.25405270650367839D0*
            .10830342170866736D0*
   RDXYZ = .84827590751604920D0,-.27368607981199766D0*
           -.18381545148725814D0*
   RDXYZ(7)=.83249981282725417D0,-.26929449712486736D0*
           -.18071430169847584D0*
```

5.3.8. SELENOCENTRIC ORBITAL ELEMENTS

```
*COORDINATE SYSTEM DESCRIPTION
  THE VEHICLE STATE IS DEFINED BY ELEMENTS REFERRED TO THE
  SELENOCENTRIC COORDINATE FRAME WHICH IS PARALLEL TO THE
  GEOCENTRIC FRAME DEFINED BY THE EARTH'S TRUE EQUATOR AND
  EQUINOX OF DATE.

INPUT
  INJECT - OPTION INDICATOR IS 27 FOR THIS OPTION
  OSMA   - ORBITAL SEMIMAJOR AXIS
  ORECC  - ORBITAL ECCENTRICITY
  OINC   - ORBITAL INCLINATION (DEGREES)
  ARGPC  - ARGUMENT OF PERICYNTHION (DEGREES)
  RAAN   - RIGHT ASCENSION OF ASCENDING NODE (DEGREES)
  ANOMN  - MEAN ANOMALY (DEGREES)
```

```
*EXAMPLE
  OSMA=-4983.95496,  ORECC=1.20438629, OINC=147.320869*
  ARGPC=-10.178669,  RAAN=175.562613,  ANOMN=-1.0716E-6*
  INJECT=27        ,  ISCALE=7*
```

5.3.9. SELENOGRAPHIC POLAR COORDINATE / ORBITAL ELEMENT COMBINATION

*COORDINATE SYSTEM DESCRIPTION
LONGITUDE IS POSITIVE EASTWARD FROM THE X-AXIS OF THE ROTATIONAL SELENOGRAPHIC REFERENCE FRAME. LATITUDE IS THE ANGLE BETWEEN THE POSITION VECTOR AND THE LUNAR EQUATOR.

INPUT

INJECT	- OPTION INDICATOR IS 28 FOR THIS OPTION.
PERR	- PERICYNTHION RADIUS
APOR	- APOCYNTHION RADIUS
OINC	- ORBITAL INCLINATION TO LUNAR EQUATOR (DEGREES)
PLATP	- SELENOGRAPHIC LATITUDE OF VEHICLE POSITION (DEGREES)
PLON	- SELENOGRAPHIC LONGITUDE OF VEHICLE POSITION (DEGREES
ANOMT	- TRUE ANOMALY (DEGREES)
D	- DIRECTIONAL FLAG TO INDICATE WHETHER VEHICLE VELOCITY HAS A NORTHERLY (D=1) OR SOUTHERLY (D=-1) HEADING COMPONENT.

```
*EXAMPLE
  PERR=1018.4926,  APOR=1018.4926,  OINC=173.272914*
  PLATP=3.3230557, PLON=27.998391,  ANOMT=177.96788*
  INJECT=28,       D=-1.,           ISCALE=7*
```

6. TRAJECTORY DETERMINATION

```
INPUT
  TMODE - OPTION INDICATOR DESIGNATING THE METHOD OF
          TRAJECTORY COMPUTATICN. NOMINALLY SET TO 0.
                  TMODE=0 - ENCKE TRAJECTORY
                  TMODE=1 - COWELL TRAJECTORY
                  TMODE=-1 - TWC-BODY TRAJECTORY
  FVSTEP - STEP SIZE INDICATOR. NOMINALLY SET TO 1.
                  FVSTEP=1 - FIXED STEP
                  FVSTEP=-1 - VARIABLE STEP
  DIREC - INDICATOR OF TRAJECTORY PROPAGATION DIRECTION.
     DIREC=POSITIVE NUMBER - PROPAGATION IS FORWARD
     DIREC=NEGATIVE NUMBER - PROPAGATION IS BACKWARD
                        (NOMINALLY SET TO +1.0)
          *NOTE-- DIREC IS USED AS A MULTIPLIER TO OBTAIN THE
                  DIRECTION AND MAGNITUDE OF THE STEP SIZE.
                  THEREFORE, THE MAGNITUDE,AS WELL AS THE
                  SIGN, OF DIREC IS RELAVENT.
  SIG - SPECIFIES THE ACCURACY DESIRED AT EACH STEP WHEN
        USING VARIABLE STEP SIZE INTEGRATICN. THE VALUE
        IS INPUT IN THE FORM CE-S. S IS THE NUMBER OF
        SIGNIFICANT FIGURES OF ACCURACY DESIRED AT EACH
        STEP. S MAY VARY FROM 1 TO 17. C MAY VARY FRCM
        1.0 TO 9.0 FOR A FINER CEGREE OF CCNTROL OVER
        ACCURACY TESTING. THE VALUE IS SET NCMINALLY TO
        1.0E-9.
  RCRK - NUMBER OF RUNGE-KUTTA INTEGRATICN STEPS PER
         COWELL INTEGRATION STEP. SET NOMINALLY EQUAL
         TO 4.

   *EXAMPLE
     TMODE=1,  FVSTEP=-1,  DIREC=-1.0,  SIG=1.0E-7*
     RCRK=8.0*
```

6.1. COASTING PHASE RECTIFICATICN CONTROL

```
INPUT
  POSRC - RECTIFICATICN TOLERANCE FOR POSITICN. THIS IS
          THE LIMIT CN THE RATIO OF DELTA R  OVER R, WHERE
          R IS THE INTEGRATED PCSITICN VECTOR AND DELTA R
          IS THE DIFFERENCE BETWEEN THE INTEGRATED
          POSITION VECTOR AND THE TWO-BODY POSITICN
          VECTOR. RECTIFICATION CCCURS WHEN THIS LIMIT IS
          EXCEEDED. THIS VALUE IS NOMINALLY SET TO 0.01.
  VELRC - RECTIFICATION TOLERANCE FOR VELOCITY. THIS IS
          THE LIMIT ON THE RATIO OF DELTA V OVER V, WHERE
          V IS THE INTEGRATED VELOCITY VECTOR AND DFLTA V
          IS THE DIFFERENCE BETWEEN THE INTEGRATED
```

VELOCITY VECTOR AND THE TWO-BODY VELOCITY VECTOR. RECTIFICATION OCCURS WHEN THIS LIMIT IS EXCEEDED. THIS VALUE IS NOMINALLY SET TO 0.01.

*EXAMPLE
POSRC=0.005, VELRC=0.02*

6.2. INTEGRATION STEP-SIZE CONTROL - THRUST PHASE

INPUT
TCINT - INTEGRATION STEP SIZE IN THRUSTING PHASES. IF A VALUE FOR TCINT IS NOT INPUT, IT IS SET EQUAL TO .48828125E-3 HRS. INPUT UNITS ARE HOURS.

EXAMPLE
TCINT=0.05*

EXPLANATION OF EXAMPLE
THE INTEGRATION STEP-SIZE IS SET TO .05 HOURS.

6.3. INTEGRATION STEP-SIZE CONTROL - COAST PHASE

INPUT
RRNE - GEOCENTRIC RADIUS OF THE NEAR EARTH SPHERE. MUST BE INPUT IN UNITS OF EARTH RADII. THIS VALUE IS SET BY THE PROGRAM TO 4.0 E.R.
RRNNL - SELENOCENTRIC RADIUS OF THE NOT NEAR MOON SPHERE. MUST BE INPUT IN UNITS OF EARTH RADII. THIS VALUE IS SET BY THE PROGRAM TO 9.0 E.R.
RRNL - SELENOCENTRIC RADIUS OF THE NEAR MOON SPHERE. MUST BE INPUT IN UNITS OF EARTH RADII. THIS VALUE IS SET BY THE PROGRAM TO 2.0 E.R.
CINE - INTEGRATION STEP SIZE IN THE NEAR EARTH REGION. MUST BE INPUT IN UNITS OF HOURS. SET BY THE PROGRAM TO 0.015625 HRS.
CINNE - INTEGRATION STEP SIZE IN THE NOT NEAR EARTH REGION. MUST BE INPUT IN UNITS OF HOURS. SET BY THE PROGRAM TO 0.5 HRS.
CINNL - INTEGRATION STEP SIZE IN THE NOT NEAR MOON REGION. MUST BE INPUT IN UNITS OF HOURS. SET BY THE PROGRAM TO 0.25 HRS.
CINL - INTEGRATION STEP SIZE IN THE NEAR MOON REGION. MUST BE INPUT IN UNITS OF HOURS. SET BY THE PROGRAM TO 0.0625 HRS.

*EXAMPLE
RRNE=6.0, RRNNL=20.0, RRNL=3.0*

CINE=.025, CINNE=1.0, CINNL=.5, CINL=.25*

7. GUIDANCE

7.1. GUIDANCE EQUATIONS OPTIONS

DTGUID - FREQUENCY AT WHICH GUIDANCE EQUATIONS ARE SOLVED. DOUBLE PRECISION (HR).

EXAMPLE
TCINT=0.01, DTGUID=0.05 *

EXPLANATION OF EXAMPLE
TCINT SPECIFIES AN INTEGRATION STEP OF .01 HOURS, BUT DTGUID ONLY PERMITS THE GUIDANCE EQUATIONS TO BE SOLVED EVERY .05 HOURS. IF DTGUID IS NOT INPUT, THE GUIDANCE EQUATIONS ARE SOLVED AT THE FREQUENCY OF TCINT.

*NOTE - IN THE FOLLOWING GUIDANCE INPUT VARIABLE DESCRIPTIONS THE WORD NOMINALLY INDICATES THE VALUE GIVEN THE VARIABLE BY THE PROGRAM WHEN NO VALUE IS INPUT.

7.1.1. GUID1 - CALCULATES THE VELOCITY REQUIRED TO INJECT A VEHICLE INTO A CIRCULAR ORBIT WHICH SATISFIES THE GIVEN CONSTRAINTS.

INPUT

ITYPE - GUIDANCE EQUATION INDICATOR (MUST BE EQUAL TO 1 FOR GUID1) NOMINALLY SET TO 0.

CC - GUIDANCE CONSTANT(THRUST MULTIPLIER). NOMINALLY SET TO ZERO.

TTCL - DIFFERENCE BETWEEN INITIAL THRUST TIME AND TIME OF TARGET COMPUTATION(HRS). NOMINALLY SET TO ZERO.

TINC - DESIRED ORBIT INCLINATION IN THE INERTIAL COORDINATE SYSTEM(DEGREES). NOMINALLY SET TO ZERO.

TGAM - DESIRED RIGHT ASCENSION OF ORBIT'S ASCENDING NODE(DEGREES). NOMINALLY SET TO ZERO.

LONLS - LONGITUDE OF THE LANDING SITE(DEG). NOMINALLY SET TO ZERO.

LATLS - LATITUDE OF THE LANDING SITE(DEG). NOMINALLY SET TO ZERO.

ALTLS - ALTITUDE OF THE LANDING SITE. UNITS CONTROLLED BY ISCALE. NOMINALLY SET TO ZERO.

PTRLS - RELATIVE PATH ANGLE OF THE LANDING SITE(DEG). NOMINALLY SET TO ZERO.

AZRLS - RELATIVE AZIMUTH OF THE LANDING SITE(DEG). NOMINALLY SET TO ZERO.

VRLS - RELATIVE VELOCITY OF THE LANDING SITE. UNITS CONTROLLED BY ISCALE. NOMINALLY SET TO ZERO.
RT - TARGET VECTOR. UNITS ARE GOVERNED BY ISCALE.
DRT - TARGET VELOCITY. UNITS ARE GOVERNED BY ISCALE.
DELT - CENTRAL BODY MASS PARAMETER BIAS(E.R.**3/HR**2). NOMINALLY SET TO ZERO.
NVEHT - THRUSTING VEHICLE INDICATOR. NOMINALLY SET TO 1 WHEN THE NUMBER OF VEHICLES IS 1 AND TO 2 WHEN THERE ARE 2 VEHICLES.
NVR - TERMINAL VELOCITY INDICATOR. WHEN SET EQUAL TO A NON-ZERO NUMBER IT PREVENTS THE SETTING OF THE ACTUAL VELOCITY EQUAL TO THE REQUIRED VELOCITY. NOMINALLY SET TO ZERO.

```
*EXAMPLE 1
  ITYPE = 1,      CC = 1.0,      TTCL = 0.0*
  TINC = 30.0,    TGAM = 45.0*
  NVR = 1,        NVEHT = 1,     DELT = .005*
*EXPLANATION OF EXAMPLE 1
  THE USE OF TINC AND TGAM IS RESTRICTED TO THOSE
  CASES IN WHICH TTCL IS SET TO ZERO.

*EXAMPLE 2
  ITYPE = 1,      CC = 1.0,      TTCL = 2.54*
  LATLS = .333,   LONLS = 24.83333, AZRLS = -85.17165*
  ALTLS = 79.8,   VRLS = 5300., PTRLS = 0.0*
  NVR = 1,        NVEHT = 2*
*EXPLANATION OF EXAMPLE 2
  WHEN OPERATING IN MOON REFERENCE AND WHEN TTCL IS
  GREATER THAN ZERO, LANDING SITE COORDINATES MUST
  BE INPUT IN ORDER TO DEFINE THE TARGET.
*EXAMPLE 3
  ITYPE = 1,      CC = 1.0,      TTCL = 2.54*
  RT = 7687.2142,1800.7218,976.40328*
  DRT = 337.68917,542.78108,932.64199*
  NVR = 1,        NVEHT = 1*
*EXPLANATION OF EXAMPLE 3
  WHEN OPERATING IN EARTH REFERENCE AND WHEN TTCL IS
  GREATER THAN ZERO, RT AND DRT MUST BE INPUT IN ORDER
  TO DEFINE THE TARGET.
```

7.1.2. GUID2 - CALCULATES THE VELOCITY REQUIRED TO INJECT ON A TRANSEARTH ORBIT SATISFYING THE GIVEN CONSTRAINTS.

INPUT

ITYPE - GUIDANCE EQUATION INDICATOR (MUST BE EQUAL TO 2 FOR GUID2) NOMINALLY SET TO 0.
CC - GUIDANCE CONSTANT(THRUST MULTIPLIER). NOMINALLY SET TO ZERO.
TTCL - DIFFERENCE BETWEEN INITIAL THRUST TIME AND TIME OF TARGET COMPUTATION(HRS). NOMINALLY SET TO

```
        ZERO.
TINC - DESIRED ORBIT INCLINATICN IN THE INERTIAL
       COORDINATE SYSTEM(DEG). NOMINALLY SET TO ZERO.
TGAM - DESIRED RIGHT ASCENSION OF ORBIT'S ASCENDING
       NODE(DEG). NOMINALLY SET TO ZERO.
LONLS - LONGITUDE OF THE LANDING SITE(DEG). NOMINALLY
        SET TO ZERO.
LATLS - LATITUDE OF THE LANDING SITE(DEG). NCMINALLY
        SET TO ZERO.
ALTLS - ALTITUDE OF THE LANCING SITE. UNITS CCNTROLLED
        BY ISCALE. NOMINALLY SET TC ZERO.
PTRLS - RELATIVE PATH ANGLE OF THE LANDING SITE(DEG).
        NOMINALLY SET TO ZERO.
AZRLS - RELATIVE AZIMUTH OF THE LANDING SITE(DEG).
        NOMINALLY SET TO ZERO.
VRLS - RELATIVE VELOCITY OF THE LANDING SITE. UNITS
       CONTROLLED BY ISCALE. NCMINALLY SET TO ZERO.
RT - TARGET VECTOR. UNITS ARE GOVERNED BY ISCALE.
DRT - TARGET VELOCITY. UNITS ARE GOVERNED BY ISCALE.
VINF - DESIRED VELOCITY AT INFINITY(E.R./HR). NCMINALLY
       SET TO ZERO.
NVEHT - THRUSTING VEHICLE INCICATOR. NOMINALLY SET TO 1
        WHEN THE NUMBER OF VEHICLES IS 1 AND TO 2
        WHEN THERE ARE 2 VEHICLES.
NVR - TERMINAL VELOCITY INDICATOR. WHEN SET EQUAL TO A
      NON-ZERO NUMBER IT PREVENTS THE SETTING OF THE
      ACTUAL VELOCITY EQUAL TC THE REQUIRED VELOCITY.
      NOMINALLY SET TO ZERO.
UINX(1,2,3) - DESIRED DIRECTICN COSINES OF OUTGOING
              ASYMPTOTE. NOMINALLY SET TO ZERO
 *EXAMPLE 1
   ITYPE = 2,      CC = 1.0,      TTCL = 0.0*
   TINC = 40.0,    TGAM = 30.0*
   VINF = .2138,   NVEHT = 1,     NVR = 1*
   UINX(1) = 1.0, UNIX(2) = 0.0,UNIX(3) = 0.0*
 *EXPLANATION OF EXAMPLE 1
   WHEN TTCL IS SET TO ZERO, TINC,TGAM,VINF, AND UINX
   MUST BE INPUT

 *EXAMPLE 2
   ITYPE = 2,      CC = 1.0,      TTCL = .062505*
   ALTLS = 75.402890,  LATLS = .36824913*
   LONLS = -177.79665, VRLS = 8226.2692*
   PTRLS = 4.0,    AZRLS =-83.0, NVEHT = 2*
 *EXPLANATION OF EXAMPLE 2
   WHEN OPERATING IN MOON REFERENCE ANC WHEN TTCL IS
   GREATER THAN ZERO, LANDING SITE COORDINATES MUST
   BE INPUT TO DEFINE TRANSEARTH REQUIREMENTS.

 *EXAMPLE 3
   ITYPE = 2,      CC = 1.0,      TTCL = .57245*
   RT = 7683.2981,1857.2132,2487.6122*
   DRT = 548.72162,754.70652,985.43121*
```

NVR = 1, NVEHT = 1*

*EXPLANATION OF EXAMPLE 3

WHEN OPERATING IN EARTH REFERENCE AND WHEN TTCL IS GREATER THAN ZERO, RT AND DRT MUST BE INPUT TO DEFINE TRANSEARTH REQUIREMENTS.

7.1.3. GUID3 - CALCULATES THE VELOCITY REQUIRED TO INJECT ON A TRANSLUNAR ORBIT SATISFYING THE GIVEN CONSTRAINTS.

INPUT

ITYPE - GUIDANCE EQUATION INDICATOR(MUST BE EQUAL TO 3 FOR GUID3) NOMINALLY SET TO 0.

CC - GUIDANCE CONSTANT(THRUST MULTIPLIER). NOMINALLY SET TO ZERO.

RT - TARGET VECTOR(E.R.).

NVEHT - THRUSTING VEHICLE INDICATOR. NOMINALLY SET TO 1 WHEN THE NUMBER OF VEHICLES IS 1 AND TO 2 WHEN THERE ARE 2 VEHICLES.

ATHR - DESIRED SEMI-MAJOR AXIS(E.R.). NOMINALLY SET TO 0.

NVR - TERMINAL VELOCITY INDICATOR. WHEN SET EQUAL TO A NON-ZERO NUMBER IT PREVENTS THE SETTING OF THE ACTUAL VELOCITY EQUAL TO THE REQUIRED VELOCITY. NOMINALLY SET TO ZERO.

*EXAMPLE

ITYPE = 3, CC = 1.0*

RT = 6423.7012,9871.2124,6452.6102*

ATHR = 39.109322, NVR = 1, NVEHT = 1*

7.1.4. GUID4- CALCULATES VELOCITY REQUIRED FOR SPECIFIED TERMINAL CONDITIONS

INPUT

ITYPE - GUIDANCE EQUATION INDICATOR(MUST BE EQUAL TO 4 FOR GUID4) NOMINALLY SET TO 0.

CC - GUIDANCE CONSTANT(THRUST MULTIPLIER). NOMINALLY SET TO ZERO.

RTH - TARGET DISTANCE (E.R.) NOMINALLY SET TO ZERO.

DRT - DESIRED CUTOFF VELOCITY. UNITS ARE GOVERNED BY ISCALE.

DGAM - DESIRED TRUE ANOMALY OR PATH ANGLE(DEG). NOMINALLY SET TO ZERO.

NVEHT - THRUSTING VEHICLE INDICATOR. NOMINALLY SET TO 1 WHEN THE NUMBER OF VEHICLES IS 1 AND TO 2 WHEN THERE ARE 2 VEHICLES.

ALSC - REFERENCE TRUE ANOMALY(DEG). NOMINALLY SET TO 0.

DVEL - DESIRED VELOCITY MAGNITUDE. UNITS ARE CONTROLLED

```
        BY ISCALE. NOMINALLY SET TO ZERC.
DELT - CENTRAL BODY MASS PARAMETER BIAS(E.R.**3/HR**2).
        NOMINALLY SET TO ZERO.
NVR - TERMINAL VELOCITY INDICATOR. WHEN SET EQUAL TO A
      NON-ZERO NUMBER IT PREVENTS THE SETTING OF THE
      ACTUAL VELOCITY EQUAL TC THE REQUIRED VELOCITY.
      NCMINALLY SET TO ZERO.
THTM - MINIMUM OR INITIAL THRUST TIME DURATICN (HR).
        NOMINALLY SET TO ZERO.
IMDC - OPTION INDICATOR, NOMINALLY SET TO 0.
        =0 OR LESS' CIRCULAR ORBIT.
        =1' ELLIPSE SPECIFIED BY TRUE ANCMALY AND
            ECCENTRICITY OF THE INACTIVE VEHICLE.
        =2' HOHMANN TRANSFER TO PERIAPSIS OF RTH.
        =3' ELLIPSE SPECIFIED BY CUTOFF TIME TRUE ANOMALY
            (DGAM) AND REFERENCE POINT TRUE ANOMALY
            AND DISTANCE(ALSC AND RTH).
        =4' APPLICATION OF AN EXTERNAL VELOCITY
            INCREMENT
            IPCA=0' VELOCITY INCREMENT APPLIED IN
                    INERTIAL VELOCITY COORDINATE SYSTEM.
            IPCA=1' VELOCITY INCREMENT APPLIED IN
                    LOCAL VERTICAL COORDINATE SYSTEM.
        =5' CUTOFF ON VELOCITY AND PATH ANGLE(DVEL AND
            DGAM).

*EXAMPLE 1
  ITYPE = 4,      CC = 1.0*
  NVEHT = 2,      NVR = 1,        IMDC = 0*
*EXPLANATION OF EXAMPLE 1
  ABOVE INPUTS ARE REQUIRED FOR CIRCULARIZATION OF
  THE ORBIT.

*EXAMPLE 2
  ITYPE = 4,      CC = 1.0*
  NVEHT = 2,      NVR = 1,        IMDC = 1*
*EXPLANATION OF EXAMPLE 2
  ABOVE INPUTS ARE REQUIRED TO OBTAIN AN ELLIPSE
  SPECIFIED BY TRUE ANCMALY AND ECCENTRICITY OF
  VEHICLE 1.

*EXAMPLE 3
  ITYPE = 4,      CC = 1.0*
  NVEHT = 2,      NVR = 1,        IMDC = 2*
  RTH = .27552*
*EXPLANATICN OF EXAMPLE 3
  THIS EXAMPLE PRESENTS INPUTS FOR A HOHMANN TRANSFER
  TO PERIAPSIS OF RTH.

*EXAMPLE 4
  ITYPE = 4,      CC = 1.0*
  NVEHT = 1,      NVR = 1,        IMDC = 3*
  ALSC = 30.0,    DGAM = 75.0,    RTH = .27552*
```

```
*EXPLANATION OF EXAMPLE 4
  THIS EXAMPLE DETERMINES AN ELLIPSE BASED ON
  RTH,ALSC, AND DGAM.

*EXAMPLE 5
  ITYPE = 4,      CC = 1.0*
  NVEHT = 2,      NVR = 1,        IMDC = 4*
  IPCA = 1,       DELT = .001,    DRT = 500.*
*EXPLANATION OF EXAMPLE 5
  THE ABOVE EXAMPLE APPLIES AN EXTERNAL VELOCITY
  INCREMENT(DRT) IN LOCAL VERTICAL COORDINATES.

*EXAMPLE 6
  ITYPE = 4,      CC = 1.0*
  IMDC = 5,       DVEL = 4257., DGAM = .2*
*EXPLANATION OF EXAMPLE 6
  THIS EXAMPLE TERMINATES WHEN THE DESIRED VELOCITY
  MAGNITUDE AND FLIGHT PATH ANGLE HAVE BEEN ACHIEVED.
```

7.1.5 GUID5 - CALCULATES THRUST ACCELERATION DURING A POWERED DESCENT PHASE.

```
INPUT
  ITYPE - GUIDANCE EQUATION INDICATOR(MUST BE EQUAL TO 5
          FOR GUID5) NOMINALLY SET TO 0.
  NVEHT - THRUSTING VEHICLE INDICATOR. NOMINALLY SET TO 1
          WHEN THE NUMBER OF VEHICLES IS 1 AND TO 2
          WHEN THERE ARE 2 VEHICLES.
  DRAN - SURFACE RANGE. UNITS CONTROLLED BY ISCALE.
         NOMINALLY SET TO ZERO. (ILPTR = 1)
  DALT - ALTITUDE ABOVE SURFACE. UNITS CONTROLLED BY
         ISCALE. NOMINALLY SET TO ZERO. (ILPTR = 1)
  DVEL - DESIRED VELOCITY MAGNITUDE.UNITS CONTROLLED BY
         ISCALE. NOMINALLY SET TO ZERO. (ILPTR = 1)
  DGAM - DESIRED FLIGHT PATH ANGLE(DEG). NOMINALLY SET
         TO ZERO. (ILPTR = 1)
  THTM - MINIMUM OR INITIAL THRUST TIME DURATION(HR).
         NOMINALLY SET TO ZERO.
  TTV - REDESIGNATION TIME OR, IF IMDC=0, TARGET SWITCH-
        OVER TIME(HR). NOMINALLY SET TO ZERO.
  BETA - DESIRED THRUST ACCELERATION ANGLE(DEG).
         NOMINALLY SET TO ZERO. (ILPTR = 0,1)
  LONLS - LONGITUDE OF THE LANDING SITE(DEG). NOMINALLY
          SET TO ZERO.
  LATLS - LATITUDE OF THE LANDING SITE(DEG). NOMINALLY
          SET TO ZERO.
  ALTLS - ALTITUDE OF THE LANDING SITE. UNITS CONTROLLED
          BY ISCALE. NOMINALLY SET TO ZERO.
  PTRLS - RELATIVE PATH ANGLE OF THE LANDING SITE(DEG).
          NOMINALLY SET TO ZERO.
```

AZRLS - RELATIVE AZIMUTH OF THE LANDING SITE(DEG).
NOMINALLY SET TO ZERO.
VRLS - RELATIVE VELOCITY OF THE LANDING SITE. UNITS CONTROLLED BY ISCALE. NOMINALLY SET TO ZERO.
RT - TARGET VECTOR. UNITS GOVERNED BY ISCALE.(ILPTR=0,2,3)
DRT- TARGET VELOCITY. UNITS GOVERNED BY ISCALE.(ILPTR=0,2,3)
RT2- REDESIGNATED LANDING SITE POSITION. (IPCA = 7)
DJERK - COMPONENTS OF RATE OF CHANGE OF ACCELERATION (E.R./HR**3). NOMINALLY SET TO ZERO. (ILPTR=0,1,2,3)
ATDM - DESIRED ACCELERATION MAGNITUDE. UNITS ARE GOVERNED BY ISCALE. NOMINALLY SET TO ZERO.(ILPTR=0,1)
ATI - DESIRED TARGET ACCELERATION VECTOR. UNITS ARE GOVERNED BY ISCALE. NOMINALLY SET TO ZERO. (ILPTR=2,3)
THRLNO - THROTTLE LIMIT ON THRUST(LBS). NOMINALLY SET TO ZERO.
THRTHM - LIMIT ON THE THRUST MAGNITUDE(LBS). NOMINALLY SET TO ZERO.
ITGD5 - COUNT SEARCH INDICATOR. WHEN SET TO 1 IT OPTIMIZES THE BRAKING PHASE WITH RESPECT TO TFX. NOMINALLY SET TO ZERO.
NTHRUS - NO-THRUST GUIDANCE INDICATOR. ALLOWS GUIDANCE TO BE USED DURING COAST TRAJECTORIES WHEN SET TO 1. NOMINALLY SET TO ZERO.
NAZBP - NUMBER OF AZIMUTH BLIPS WITH HAND CONTROLLER DOING REDESIGNATION. (IPCA = 6)
NELBP - NUMBER OF ELEVATION BLIPS WITH HAND CONTROLLER DOING REDESIGNATION. (IPCA = 6)
TBNC - NOMINAL LANDING TIME (HRS). NEED NOT BE INPUT IF DESCENT IS PRECEDED BY A TSTOP=24 PHASE.

*NOTE ' THE FOLLOWING 13 CARDS ARE DESIGNATED AS PACKAGE ONE.

IPCA - MUST BE SET EQUAL TO 0,1,2, OR 3.
TT - TIME DURATION ESTIMATE TO IGNITION TARGET(HRS)
TPF - POWERED DESCENT BURN DURATION(HRS)
TMDC - NOMINAL INITIAL STEADY STATE THRUST MAGNITUDE(LBS)
THMX - NOMINAL MAXIMUM THRUST MAGNITUDE(LBS)
THTM - DURATION OF TURNON THRUST TRANSIENT (HRS)
SPI - NOMINAL INITIAL STEADY STATE SPECIFIC IMPULSE(SEC)
THST - THROTTLE SETTING TABLE (DECIMAL PERCENT)
WLEM - NOMINAL WEIGHT OF LM AT POWERED DESCENT INITIATION (LB)
TFX - NOMINAL TIME BETWEEN IGNITION TARGET AND END OF BRAKING PHASE (HRS)
TF1 - DURATION OF TRANSITION TO FINAL APPROACH PHASE(HRS)
TF2 - DURATION OF FINAL APPROACH PHASE(HRS)
TF3 - DURATION OF TRANSITION TO VERTICAL DESCENT PHASE(HRS)

*NOTE ' THE FOLLOWING 15 CARDS ARE DESIGNATED AS PACKAGE TWO.

PCWOF - PERCENT OF WEIGHT REMAINING AT END OF BRAKING PHASE (DECIMAL PERCENT)
PCFOF - NOMINAL THRUST MAGNITUDE DURING THROTTLABLE PORTION

```
        OF BRAKING PHASE
QP1FD - PITCH ANGLE OF THRUST VECTOR FRCM LOCAL
        VERTICAL (DEG)
QA1FD - PITCH ANGLE OF TOTAL ACCELERATION VECTOR FROM
        NEGATIVE LOCAL VERTICAL (DEG)
QPOFD - PITCH ANGLE DESIRED AT END OF BRAKING PHASE
        MEASURED FROM LOCAL VERTICAL(DEG)
QPOXD - PITCH ANGLE DESIRED AT IGNITION TARGET MEASURED FROM
        LOCAL VERTICAL(DEG)
H3F - HEIGHT ABOVE LANDING SITE FOR START OF VERTICAL
      DESCENT (NAUTICAL MILES)
HDOT3 - DESIRED VELOCITY AT START OF VERTICAL DESCENT
        (FT/SEC)
HDOT4 - DESIRED DESCENT RATE(FT/SEC)
A2 - TARGET ACCELERATION VECTOR FOR FINAL APPROACH PHASE
     (FT/SEC**2)
CJ2F - JERK COEFFICIENT VECTOR FOR APPROACH PHASE
       (NON-DIMENSIONAL)
CJOX - JERK COEFFICIENT FOR IGNITION PHASE(NON-DIMENSIONAL)
CJOF - JERK COEFFICIENT FOR THROTTLABLE PORTION OF BRAKING
       PHASE(NON-DIMENSIONAL)
THMOX - THRUST MAGNITUDE EXPECTED AT IGNITION TARGET(LBS)
DISP - SPECIFIC IMPULSE ASSOCIATED WITH THMOX.


ILPTR - TARGET OPTION INDICATOR.
      =0' TARGETS INPUT IN 'CARTESIAN INERTIAL' (EARTH
          REFERENCE ONLY) (RT,DRT,DJERK,ATDM,BETA)
      =1' TARGETS INPUT IN 'POLAR' (EARTH OR MOON REFERENCE)
          (DRAN,DALT,DVEL,DGAM,DJERK,ATDM,BETA)
      =2' TARGETS INPUT IN THE 'GUIDANCE' REFERENCE SYSTEM,
          EXCEPT POSITION IS IN 'STANDARD' COORDINATES(SEE
          BELOW). (RT,DRT,ATI,DJERK) (IMDC=-2,0,1,3)
        **THE 'GUIDANCE' COORDINATE SYSTEM IS SELENOCENTRIC
          WITH THE X-AXIS PASSING THROUGH A TARGET POINT IN
          SPACE. THE Z-AXIS IS POSITIVE UP-RANGE IN THE
          ORBITAL PLANE, AND THE Y-AXIS COMPLETES THE RIGHT
          HAND SYSTEM.
      =3' TARGETS INPUT IN 'STANDARD' REFERENCE SYSTEM
          (RT,DRT,ATI,DJERK)
        **THE 'STANDARD' COORDINATE SYSTEM IS SELENOCENTRIC
          WITH THE X-AXIS POSITIVE THROUGH THE LANDING SITE.
          THE Z-AXIS IS POSITIVE UP-RANGE IN THE ORBITAL
          PLANE, AND THE Y-AXIS COMPLETES THE RIGHT HAND
          SYSTEM.
      =4' TARGETS COMPUTED IN FLIGHT PLAN (DFLPN)
      =5' ONE PHASE DESCENT WITH COUNT SEARCH OPTION.
          TARGETS COMPUTED IN DFLPN.
IMDC - POWERED DESCENT PHASE INDICATOR. NOMINALLY SET
       TO ZERO.
       =-2' IGNITION ALGORITHM (OPTIMUM TIME FOR THRUST
            INITIATION IS CHOSEN).
       =-1' TURN-ON TRANSIENT FOR LUNAR DESCENT.
```

LINEAR ACCELERATICN GUICANCE IS USED

=0' INITIAL PHASE OF BRAKING PORTION OF DESCENT. QUADRATIC GUIDANCE IS USED.

=1' FINAL PHASE OF BRAKING PORTICN OF DESCENT. QUADRATIC GUIDANCE IS USED.

=2' PHASE USED IN TRANSITION FRCM AN IMDC=1 PHASE TO AN IMDC=3 PHASE. LINEAR ACCLLERATION GUIDANCE IS USED.

=3' APPROACH PLANE IS ROTATED ABOUT DESIRED TERMINAL CONDITIONS. USES QUADRATIC GUIDANCE.

=4' PHASE USED FOR TRANSITICN PRICR TO FINAL VERTICAL DESCENT. VEHICLE IS PITCHED UP TO THE PROPER ATTITUCE. LINEAR ACCELERATION GUIDANCE IS USED.

=5' VERTICAL DESCENT PHASE. VELOCITY GUIDANCE IS USED.

IPCA - REDESIGNATION AND APPROACH AZIMUTH INDICATOR. TARGETS ARE EXPECTED TO BE IN AN INERTIAL SYSTEM. NOMINALLY SET TO ZERO.

=0,1,2, OR 3 -- NOMINAL CASE

=4' ESTABLISHES TARGET PLANE IN THE RANGE FREE CASE AS THE PLANE WHICH BISECTS THE ANGLE BETWEEN THE VEHICLE'S CURRENT PLANE OF MOTICN AND THE PLANE CONTAINING THE TARGET VECTOR AND THE VEHICLE POSITION VECTOR.

=5' LANDING SITE AUTOMATIC REDESIGNATION IN FINAL BRAKING PHASE WHEN ENGINE HAS NOT THROTTLED DOWN. (NO ADDITIONAL INPUTS REQUIRED)

=6' REDESIGNATION BY ROTATICNS OF PILOT'S CONTROLLER. (ELEVATION (NELBP) AND AZIMUTH (NAZBP) BLIPS, TTV = TIME FOR REDESIGNATION)

=7' REDESIGNATION BY CRCSS RANGE (RT2(2)) AND DOWN RANGE (RT2(3)) DISTANCES. (TTV AS IN =6)

*EXAMPLE

```
ITYPE = 5,      NVEHT = 2,     LONLS = 24.83333*
LATLS = .3333, AZRLS = -85.155, ALTLS = 79.25*
VRLS = 5300.,  PTRLS = 0.*
TT = .10638888*
```

*EXPLANATION OF THE EXAMPLE

THE ABOVE INPUTS ARE THOSE BASICALLY REQUIRED TO EXECUTE GUID5. A SUMMARY OF THE SPECIAL INPUTS REQUIRED FOR EACH OPTION INDICATOR ARE LISTED BELOW.

INDICATOR	REQUIRED INPUT
IMDC=-2	NTHRUS=1
IMDC=-1	THTM, TT IS NOT NEEDED
IMDC=0	THRLNO,THRTHM,TTV
IMDC=1	THRLNO,THRTHM
IMDC=2	NONE
IMDC=3	THRLNC,THRTHM
IMDC=4	NONE

```
IMDC=5                    NONE
ILPTR=0        RT,DRT,DJERK,ATDM,BETA
                 PACKAGE ONE OPTIONAL
ILPTR=1   DRAN,DALT,DVEL,DGAM,DJERK,ATDM,BETA
                   PACKAGE ONE
ILPTR=2          RT,DRT,ATI,DJERK
                   PACKAGE ONE
ILPTR=3          RT,DRT,ATI,DJERK
                   PACKAGE ONE
ILPTR=4          PACKAGES ONE AND TWO
ILPTR=5         IMDC=-2,NTHRUS=1,ITGD5=1
                 PACKAGES ONE AND TWO
IPCA=0                   NONE
IPCA=1                   NONE
IPCA=2                   NONE
IPCA=3                   NONE
IPCA=4                   NONE
IPCA=5                   NONE
IPCA=6           NELBP,NAZBP,TTV
IPCA=7                 RT2,TTV
IPCA=8        IMDC=-2,OMIT LANDING SITE INPUT
```

=8' ESTABLISHES A TRANSITION PHASE FOR GOING FROM A RANGE-FREE GUID7 PHASE TO A RANGE-FIXED LANDING (IMDC=3). USED WITH IMDC = 2 ONLY.

7.1.6. GUID6 - MISCELLANEOUS THRUSTING MODES.

INPUT

ITYPE - GUIDANCE EQUATION INDICATOR(MUST BE EQUAL TO 6 FOR GUID6) NOMINALLY SET TO 0.

XMTOV - INCREMENTAL VELOCITY MAGNITUDE. UNITS ARE CONTROLLED BY ISCALE. NOMINALLY SET TO ZERO.

TVR - THRUST DURATION(HR). NOMINALLY SET TO ZERO.

RTH - TARGET RADIUS(E.R.). NOMINALLY SET TO ZERO.

NVEHT - THRUSTING VEHICLE INDICATOR. NOMINALLY SET TO 1 WHEN THE NUMBER OF VEHICLES IS 1 AND TO 2 WHEN THERE ARE 2 VEHICLES.

DELT - CENTRAL BODY MASS PARAMETER BIAS(E.R.**3/HR**2).

IMDC - OPTION INDICATOR, NOMINALLY SET TO 0.

=0' THRUST ALONG LOCAL VERTICAL.

=1' THRUST TOWARD CENTER OF THE REFERENCE BODY.

=2' THRUST ALONG LOCAL HORIZONTAL.

=3' THRUST ALONG NEGATIVE ANGULAR MOMENTUM VECTOR.

=4' THRUST ALONG ANGULAR MOMENTUM VECTOR.

=5' HOHMANN TRANSFER TO RTH.

=6' THRUST ALONG LOCAL HORIZONTAL.

=7' THRUST OF CONSTANT MAGNITUDE ALONG THE NEGATIVE ANGULAR MOMENTUM VECTOR.

=8' THRUST OF CONSTANT MAGNITUDE ALONG NEGATIVE

```
            LOCAL HORIZONTAL.
        =9' THRUST ALONG INITIAL VELOCITY VECTOR.
        =10' THRUST ALONG INITIAL ANGULAR MOMENTUM
             VECTOR.
        =11' THRUST ALONG INITIAL POSITION VECTOR.

*EXAMPLE 1
  IMDC = 0,       TVR = .5,      NVEHT = 2*
  ITYPE = 6*
*EXPLANATION OF EXAMPLE 1
  THE ABOVE EXAMPLE GIVES A SAMPLE OF INPUTS FOR
  THOSE CASES OF GUID6 WHICH TERMINATE ON THRUST
  DURATION (TVR). THE OPTIONS OF GUID6 WHICH
  TERMINATE ON THRUST DURATION ARE THOSE WITH

  IMDC EQUAL TO 0,3,4, AND 7.

*EXAMPLE 2
  IMDC = 1,       XMTOV = 100., NVEHT = 1*
  ITYPE = 6*
*EXPLANATION OF EXAMPLE 2
  THIS EXAMPLE GIVES A SAMPLE OF INPUTS FOR THOSE
  CASES OF GUID6 WHICH TERMINATE WHEN AN IDEAL
  VELOCITY INCREMENT IS ATTAINED (XMTOV). THE OPTIONS
  OF GUID6 WHICH TERMINATE ON IDEAL VELOCITY INCREMENT
  ARE THOSE WITH IMDC EQUAL TO 1,2,6,8,9,10, AND 11.
*EXAMPLE 3
  ITYPE = 6,      IMDC = 5,      RTH = .52647*
*EXPLANATION OF EXAMPLE 3
  THE ABOVE INPUTS ARE REQUIRED FOR HOHMANN TRANSFER
  TO RTH.

*EXAMPLE 4
  IMDC=2 ,  ITYPE=6,  NVEHT=1 *
*EXPLANATION OF EXAMPLE 4
  THE ABOVE INPUT WILL GIVE PHASE TERMINATION WHEN A
  REQUIRED VELOCITY INCREMENT IS ATTAINED. THIS VELOCITY
  INCREMENT IS CALCULATED IN THE SUBROUTINE TS28,
  THEREFORE A PHASE IN WHICH TSTOP=28 MUST PRECEDE THE
  PHASE IN WHICH THIS OPTION IS USED.
```

7.1.7. GUID7 - ESTABLISHES DIRECTION AND MAGNITUDE OF THRUST ACCELERATION USING LM ASCENT GUIDANCE LOGIC.

```
INPUT
  ITYPE - GUIDANCE EQUATION INDICATOR(MUST BE EQUAL TO 7
          FOR GUID7) NOMINALLY SET TO 0.
  NVEHT - THRUSTING VEHICLE INDICATOR. NOMINALLY SET TO 1
          WHEN THE NUMBER OF VEHICLES IS 1 AND TO 2
          WHEN THERE ARE 2 VEHICLES.
```

DGAM - FLIGHT PATH ANGLE (IMDC = 5)
- DESIRED TRUE ANOMALY (IMDC = 3)

DVEL - DESIRED VELOCITY MAGNITUDE AT BURNOUT. UNITS ARE CONTROLLED BY ISCALE. NOMINALLY SET TO ZERO.

RDD - DESIRED BURNOUT RADIUS(E.R.). NOMINALLY SET TO 0.

TPF - TIME OF TARGET INTERCEPT MEASURED FROM LAUNCH(HR) NOMINALLY SET TO ZERO. (IMDC = 1)

TBNC - TIME TO GO WHEN BURNOUT RADIUS CONTROL IS ABANDONED(HR). NOMINALLY SET TO ZERO.

ALSC - TRUE ANOMALY TO INTERCEPT POSITION. NOMINALLY SET TO ZERO. (IMDC = 3)

RTH - HOHMANN TRANSFER PERIAPSIS(E.R.). NOMINALLY SET TO ZERO. (IMDC = 2,3)

RT - TARGET VECTOR. UNITS ARE CONTROLLED BY ISCALE. (NV = 1 OR IPCA = 3,4)

DRT - TARGET VELOCITY. UNITS ARE CONTROLLED BY ISCALE. (NV = 1 OR IPCA = 4)

DELT - CENTRAL BODY MASS PARAMETER BIAS(E.R.**3/HR**2). NOMINALLY SET TO ZERO.

TVR - VERTICAL RISE THRUST DURATION(HR). NOMINALLY SET TO ZERO.

RRATE - DESIRED RADIAL RATE AT BURNOUT (TVR MUST BE ZERO FOR THIS OPTION). UNITS ARE CONTROLLED BY ISCALE.

NV - NUMBER OF VEHICLES(1 OR 2). NOMINALLY SET TO 1.

IMDC - TARGET INDICATOR, NOMINALLY SET TO 0.

=0' THE TARGET IS THE ATTAINMENT OF CIRCULAR ORBIT SPEED AT THE BURNOUT POSITION (CIRCULAR ORBIT INSERTION).

=1' THE TARGET IS AN INTERCEPT WITH A DESIRED POSITION (LAMBERT'S SOLUTION).

=2' THE TARGET IS A BURNOUT INTO A HOHMANN TRANSFER ORBIT HAVING A PERIAPSIS RADIUS OF RTH.

=3' THE TARGET IS ESTABLISHED BY INPUT OF THE RADIAL DISTANCE OF THE DESIRED POSITION AND THE TRUE ANOMALY OF THE BURNOUT POSITION AND THE DESIRED POSITION.

=4' THE TARGET IS ESTABLISHED BY INPUT OF THE DESIRED VELOCITY VECTOR IN THE GUIDANCE COORDINATE SYSTEM.

=5' THE TARGET IS ESTABLISHED BY INPUT OF THE DESIRED VELOCITY MAGNITUDE AND FLIGHT PATH ANGLE.

IPCA - STEER INPLANE INDICATOR

=0' TARGET PLANE IS DEFINED BY LANDING SITE AND BY THE POSITION OF THE INACTIVE VEHICLE.

=1' TARGET PLANE IS DEFINED BY THE POSITION AND VELOCITY OF THE INACTIVE VEHICLE.

=2' TARGET PLANE IS DEFINED BY POSITION AND VELOCITY FROM THE BURN ARRAY(CSM AND DCSM).

=3' TARGET PLANE IS DEFINED BY THE INPUT POSITION AND THE CURRENT POSITION OF THE

ACTIVE VEHICLE.
=4' TARGET PLANE IS DEFINED BY THE INPUT POSITION AND VELOCITY.

*EXAMPLE
ITYPE = 7, NV = 2, NVEHT = 2*
TVR = .05, DELT = .001*
TBNC = .5, RDD = .285067*
*EXPLANATION OF EXAMPLE
THE ABOVE INPUTS ARE THOSE BASICALLY REQUIRED TO EXECUTE GUID7. ADDITIONAL INPUTS ARE REQUIRED ACCORDING TO THE INDICATORS USED. A SUMMARY OF THE INPUTS REQUIRED FOR EACH INDICATOR ARE GIVEN BELOW.

INDICATOR	REQUIRED INPUTS
NV=1	RT,DRT,TPF
IMDC=0	NONE
IMDC=1	TPF
IMDC=2	RTH
IMDC=3	DGAM,ALSC,RTH
IMDC=4	DRT
IMDC=5	DGAM,DVEL
IPCA=0	NONE
IPCA=1	NONE
IPCA=2	NONE
IPCA=3	RT
IPCA=4	RT,DRT

7.1.8. GUID8 - CALCULATES THE REQUIRED VELOCITY FOR TERMINAL RENDEZVOUS AND LAMBERT'S STEERING.

INPUT
ITYPE - GUIDANCE EQUATION INDICATOR(MUST BE EQUAL TO 8 FOR GUID8) NOMINALLY SET TO 0.
CC - GUIDANCE CONSTANT(THRUST MULTIPLIER). NOMINALLY SET TO ZERO.
RT - TARGET VECTOR. UNITS ARE CONTROLLED BY ISCALE.
NVEHT - THRUSTING VEHICLE INDICATOR. NOMINALLY SET TO 1 WHEN THE NUMBER OF VEHICLES IS 1 AND TO 2 WHEN THERE ARE 2 VEHICLES.
TPF - TIME FROM LIFT-OFF TO TARGET(HR). NOMINALLY SET TO ZERO.
NVR - TERMINAL VELOCITY INDICATOR. WHEN SET EQUAL TO A NON-ZERO NUMBER IT PREVENTS THE SETTING OF THE ACTUAL VELOCITY EQUAL TO THE REQUIRED VELOCITY. NOMINALLY SET TO ZERO.

*EXAMPLE 1
ITYPE = 8, CC = 1.0, NV = 1*
RT = 6784.7021,2732.6412,4175.6402*

```
  TPF = 1.7041319,NVR = 1*
*EXPLANATION OF EXAMPLE 1
  WHEN THE NUMBER OF VEHICLES BEING CONSIDERED IS ONE,
  A TARGET VECTOR (RT) MUST BE INPUT TO PROVIDE A
  RENDEZVOUS POINT.

*EXAMPLE 2
  ITYPE = 8,      CC = 1.0,      NV = 2*
  NVEHT = 2,      TPF = 1.7041319,  NVR = 1*
*EXPLANATION OF EXAMPLE 2
  WHEN TWO VEHICLES ARE BEING CONSIDERED, IT IS
  ASSUMED THAT ONE IS RENDEZVOUSING WITH THE OTHER.
  THE INPUT NVEHT DESIGNATES THE ACTIVE VEHICLE. THE
  PROGRAM UPDATES THE POSITION OF THE PASSIVE VEHICLE
  TO THE EXPECTED RENDEZVOUS TIME, THUS ESTABLISHING
  THE TARGET POINT.
```

7.1.9. GUID9 - ITERATIVE GUIDANCE

```
REFERENCE -- 'APOLLO REFERENCE MISSION PROGRAM ITERATIVE
              GUIDANCE SCHEME', F.D.COOPER, TRW 3838-H003-
              RU000, 15 DECEMBER 1965

INPUT
  ITYPE - GUIDANCE EQUATION INDICATOR (MUST BE EQUAL TO 9
          FOR IGM) NOMINALLY SET TO 0.
  NVEHT - THRUSTING VEHICLE INDICATOR. NOMINALLY SET TO 1
          WHEN THE NUMBER OF VEHICLES IS 1 AND TO 2
          WHEN THERE 2 VEHICLES.
  TCINT - THRUST PHASE INTEGRATION STEP-SIZE (HR)
  NSTG - NUMBER OF GUIDANCE STAGES, NOMINALLY SET TO 1.
  LSTG - NUMBER OF THE BURNING GUIDANCE STAGE, NOMINALLY
          SET TO 1.
  TBURN - BURNING TIME OF EACH GUIDANCE STAGE (SEC)
  TCST  - COAST TIME BETWEEN GUIDANCE STAGES (SEC)
  XISP  - SPECIFIC IMPULSE OF EACH GUIDANCE STAGE (SEC)
  THRUST- THRUST OF EACH GUIDANCE STAGE (LB)
  WGHT  - INITIAL WEIGHT OF EACH GUIDANCE STAGE (LB)
  SIGMA - ANGLE BETWEEN PERIGEE AND THE UNIT AIM VECTOR
          (DEG)
  DNODE - DESCENDING NODE OF THE CUTOFF PLANE FROM THE
          THE UNIT VECTOR ALONG THE NODE DEFINED BY THE
          IGNITION PLANE AT TIME OF LAUNCH AND THE CUTOFF
          PLANE (DEG)
  FRZK  - TIME BEFORE CUTOFF TO SET K1,K2,K3,K4 EQUAL TO ZERO
          (SEC)
  FRZEND- TIME BEFORE CUTOFF TO FREEZE CUTOFF CONDITIONS
          (SEC)
  LAZ   - LAUNCH AZIMUTH (DEG)
  PHI   - GEODETIC LATITUDE OF THE LAUNCH SITE (DEG)
  ALPHA - ANGLE FROM PERIGEE OF DESIRED CUTOFF ELLIPSE TO
```

```
          DESCENDING NODE (DNODE) (DEG)
BETAI - ANGLE BETWEEN THE IGNITICN RADIAL VECTOR AND
          S-VECTOR (DEG)
INC   - INCLINATION OF THE CUTCFF PLANE (DEG)
LAMBDA- LONGITUDE OF THE LAUNCH SITE, POSITIVE EAST
          (DEG)
THETAT - TERMINAL FLIGHT PATH ANGLE MEASURED POSITIVE FROM
          LOCAL HORIZONTAL (DEG)
ECC   - ECCENTRICITY OF THE CUTOFF ELLIPSE
ENCM  - NOMINAL ECCENTRICITY OF THE CUTOFF ELLIPSE
MHAT  - AIM VECTOR POINTING AWAY FRCM THE MOON BEHIND
          THE EARTH
MVEC  - UNIT AIM VECTOR TOWARC THE MOCN
RCON  - RADIUS VECTOR ON DESIRED CUTOFF ELLIPSE (LENGTH)
VCCN  - VELOCITY VECTOR ON DESIRED CUTOFF ELLIPSE (LENGTH
          /SEC.)
 *NOTE--INPUT UNITS AND COORDINATE SYSTEMS OF MHAT, MVEC,
          RCON, AND VCON ARE CONTROLLED BY UNITS AND COORD.
 *NOTE--EPHEMERIS INJECTION TIME MUST BE TIME OF LAUNCH
          IF MODE 6 OR 7 IS USED.
UNITS - INPUT UNITS INDICATCR, NCMINALLY SET TO 0.
                              DISTANCE     TIME
          =1 METRIC SYSTEM      KM          SEC
          =0 ENGLISH SYSTEM     FT          SEC
CCCRD - INPUT COORDINATE SYSTEM INDICATCR, NOMINALLY SET
          TO 0.
          =0 MHAT INPUT IN BESSELIAN COORCINATE SYSTEM
          =1 MHAT INPUT IN PLUMBLINE COORDINATE SYSTEM
SLR   - SEMI-LATUS RECTUM OF THE CUTOFF ELLIPSE
          (DISTANCE)
RNCM  - DISTANCE FROM THE CENTER OF THE EARTH AT
          NOMINAL IGNITION TIME (DISTANCE)
KSIX  - MISSION CONSTANT FOR GRAVITY COMPUTATION
          (DISTANCE**3/TIME**2)
ENRG  - CUTOFF ENERGY (DISTANCE**2/TIME**2)
MMAG  - AIM VECTOR MAGNITUDE (DISTANCE)
VVVT  - TERMINAL VELOCITY (DISTANCE/TIME)
RRRT  - CUTOFF RADIUS (DISTANCE)
FRZCT - TIME BEFORE CUTOFF TO FREEZE GUIDANCE COMMANDS (SEC)
          NOMINALLY SET TO -1.
RAC   - RANGE ANGLE CORRECTICN CONSTANT (NCMINALLY = 0)
NDEG  - NUMBER OF DEGREES OF FREEDOM (EITHER 2 OR 3)
          NOMINALLY SET TO 3.
MODE - MODE NUMBER, NCMINALLY SET TO 3.
MITV  - OPTION INDICATOR (NCMINALLY SET TO 0).
          =1 SIMPLIFIED PITCH STEERING EQUATIONS
          =0 EXPANDED PITCH STEERING EQUATIONS

*FIVE MODES OF SIMULATION ARE AVAILABLE IN THE IGM
  MODE 1 - TWO DEGREES OF FREEDCM, N GUIDANCE STAGE
           SIMULATION WITH FIXED END CONDITICN. IS
           SELECTED BY
           NDEG=2, MODE=1*
```

```
MODE 2 - THREE DEGREES OF FREEDOM, N GUIDANCE STAGE
         SIMULATION WITH FIXED END CONDITICN. IS
         SELECTED BY
         NDEG=3, MODE=2*
MODE 3 - TWO OR THREE DEGREES CF FREEDOM, N GUIDANCE
         STAGE SIMULATION WITH THE CUTOFF ELLIPSE
         SPECIFIED. THE TWO DEGREES OF FREEDOM IS
         SELECTED BY
         MODE=3,  NDEG=2*
         THE THREE DEGREES OF FREEDOM IS SELECTED BY
         MODE=3,  NDEG=3*
MODE 4 - TWO OR THREE DEGREES OF FREEDOM (DEFINED BY
         NDEG), N GUIDANCE STAGE SIMULATICN WITH
         TRANSLUNAR BURN HYPERSURFACE I EQUATIONS.
         THE TWO DEGREES OF FREEDOM IS SELECTED BY
         NDEG=2, MODE=4*
         THE THREE DEGREES OF FREEDCM IS SELECTED BY
         NDEG=3, MODE=4*
MODE 5 - TWO OR THREE DEGREES CF FREEDOM (DEFINED BY
         NDEG), N GUIDANCE STAGE SIMULATION WITH
         TRANSLUNAR BURN HYPERSURFACE II EQUATIONS.
         THE TWO DEGREES OF FREEDOM IS SELECTED BY
         NDEG=2, MODE=5*
         THE THREE DEGREES OF FREEDOM IS SELECTED BY
         NDEG=3, MODE=5*
MODE 6 - TWO OR THREE DEGREES OF FRFEDCM (DEFINED BY NDEG),
         N  GUIDANCE STAGE SIMULATION WITH FIXED END
         CONDITION (AS INPUT TO MODE2) COMPUTED FROM STATE
         ON DESIRED CUTOFF ELLIPSE
MODE 7 - TWO OR THREE DEGREES CF FREEDCM (DEFINED BY NDEG),
         N GUIDANCE STAGE SIMULATION WITH THE CUTOFF ELLIPSE
         COMPUTED (AS INPUT TC MODE 3) FROM STATE ON DESIRED
         CUTOFF ELLIPSE

* EXAMPLE 1
  ITYPE=9,     NSTG=1,      LSTG=1*
  UNITS=1.,    COORD=1.,    FRZK=15.*
  TBURN=311.9, TCST=0.,     XISP=426.*
  THRUST=200000., WGHT=275322.71,  RAC=0.*
  KSIX=.4E6,   TCINT=0.13888889E-2, ATYPE=0.*
  LAZ=72.,     PHI=28.627307, LAMBDA=279.37913*
  NVEHT=1,     FRZCT=0.,  MITV=0*

* EXPLANATION OF EXAMPLE 1
  THIS EXAMPLE PRESENTS THE INPUTS COMMCN TO ALL OF THE
  ABOVE MODES OR CASES. THE ADDITIONAL INPUTS REQUIRED
  FCR THE ABOVE MODES ARE PRESENTED IN EXAMPLES 2 THRU 6
  ITYPE=9 INDICATES THAT IGM IS SELECTED
  NSTG=1  ONLY ONE STAGE IS BEING SIMULATED
  LSTG=1  THE FIRST STAGE IS THE GUIDANCE STAGE BURNING
  UNITS=1 THE METRIC SYSTEM IS THE INPUT SYSTEM OF UNITS
  COORD=1 THE PLUMBLINE COORDINATE SYSTEM IS THE INPUT
          COORDINATE SYSTEM
```

```
   ATYPE=0 THE VEHICLE ATTITUDE SYSTEM IS NOT ALIGNED TO THE
           INITIALLY GUIDANCE COMPUTED DESIRED THRUST ATTITUDE
   NVEHT=1 VEHICLE NUMBER ONE IS THE THRUSTING VEHICLE
   MITV=0  THE IGM PITCH STEERING EQUATIONS ARE SIMULATED

*NOTE' BY INPUTTING ONLY ONE VALUE OF THE VEHICLE THRUST
       PARAMETERS, ONLY ONE STAGE CAN BE SIMULATED.

*EXAMPLE 2
   RRRT=6660.8898, NDEG=2, MODE=1*
   VVVT=10.87431*
   THETAT=6.3658877*

*EXPLANATION OF EXAMPLE 2
   THIS EXAMPLE PRESENTS THE INPUTS REQUIRED IN ADDITION
   TO THOSE PRESENTED IN EXAMPLE 1 FOR SIMULATING A MODE
   1 CASE. THE QUANTITIES RRRT, VVVT, AND THETAT DEFINE
   THE CUTOFF CONDITION FOR THE TWO DEGREES OF FREEDOM
   SIMULATION

*EXAMPLE 3
   MODE=2, NDEG=3*
   RRRT=6660.8898, VVVT=10.87431, THETAT=6.3658877*
   INC=32.591499, DNODE=122.14273*

*EXPLANATION OF EXAMPLE 3
   THIS EXAMPLE PRESENTS THE INPUTS IN ADDITION TO THOSE
   PRESENTED IN EXAMPLE 1 WHICH ARE REQUIRED FOR
   SIMULATING MODE 2. THE QUANTITIES RRRT, VVVT, THETAT,
   INC, AND DNODE SPECIFY THE CUTOFF CONDITION FOR THE
   THREE DEGREES OF FREEDOM SIMULATION.

*EXAMPLE 4
   NDEG=3, MODE=3, FRZEND=25.*
   RRRT=6660.8898, ECC=0.97633426, SLR=13000.345*
   ALPHA=48.898901, INC=32.591499, DNODE=122.14273*

*EXPLANATION OF EXAMPLE 4
   THIS EXAMPLE PRESENTS THE INPUTS IN ADDITION TO THOSE
   PRESENTED IN EXAMPLE 1 WHICH ARE REQUIRED FOR
   SIMULATING MODE 3 WITH THREE DEGREES OF FREEDOM. THE
   QUANTITIES RRRT, ECC, SLR, ALPHA, INC, AND DNODE
   SPECIFY THE CUTOFF ELLIPSE.
*NOTE' IF NO VALUES ARE INPUT FOR MODE AND NDEG, THE
       PROGRAM SETS MODE=3 AND NDEG=3.

*EXAMPLE 5
   NDEG=3, MODE=4, FRZEND=25.*
   RRRT=6660.8898, RNOM=6556.8923, ENCM=.97633432*
   ENGR=-1.4340571, MMAG=353305.96*
   MVEC=-0.86164378,-0.50703628,-0.21951403E-1*

*EXPLANATION OF EXAMPLE 5
```

THIS EXAMPLE PRESENTS THE INPUTS IN ADDITION TO THOSE PRESENTED IN EXAMPLE 1 WHICH ARE REQUIRED FOR SIMULATING MODE 4 WITH THREE DEGREES OF FREEDOM. THE QUANTITIES RRRT, RNOM, ENCM, ENGR, MMAG, AND MVEC ARE REQUIRED FOR THE TRANSLUNAR BURN HYPERSURFACE I EQUATIONS WHICH SPECIFY THE CUTOFF ELLIPSE. MVEC IS THE UNIT AIM VECTOR TOWARDS THE TARGET.

```
*EXAMPLE 6
   NDEG=3, MODE=5, FRZEND=25.*
   RRRT=6660.8898, RNOM=6556.8923, ENCM=.97633432*
   ENGR=-1.4340571, SIGMA=7.46, BETAI=15.*
   MHAT=-0.86164378,-0.50703628,-0.21951403E-1*
```

*EXPLANATION OF EXAMPLE 6

THIS EXAMPLE PRESENTS THE INPUTS IN ADDITION TO THOSE PRESENTED IN EXAMPLE 1 WHICH ARE REQUIRED FOR SIMULATING MODE 5 WITH THREE DEGREES OF FREEDOM. THE QUANTITIES RRRT, RNOM, ENCM, ENGR, SIGMA, BETAI, AND MHAT ARE REQUIRED FOR THE TRANSLUNAR BURN HYPERSURFACE II EQUATIONS WHICH SPECIFY THE CUTOFF ELLIPSE.

```
*EXAMPLE 7
   ITYPE=9, ATYPE=1, NDEG=3, MODE=2*
   MITV=0, UNITS=1.0, COORD=1, NVEHT=1*
   TCINT=0.13888889E-2, NSTG=4, LSTG=1*
   THRUST=1.1E6,1.1E6,0.91E6,0.2E6*
   TBURN=115.,112.86022,111.02472,163.85121*
   TCST=0,0,5.,0*
   XISP=421.,421.,428.,426.*
   WGHT=1286766.4,986291.35,691407.15,360212.0*
   LAZ=72., FRZK=15., PHI=28.627302*
   LAMBDA=-80.620872, KSIX=.3983103E6, RAC=0.*
   FRZCT=0., RRRT=6556.5114, VVVT=7.7963442*
   THETAT=0., INC=32.571577, DNODE=125.17255*
```

*EXPLANATION OF EXAMPLE 7

THIS EXAMPLE PRESENTS THE INPUTS REQUIRED FOR SIMULATING THE FIRST STAGE OF A FOUR STAGE VEHICLE WITH COAST PERIODS. IT IS A SIMULATION OF MODE 3 WITH THREE DEGREES OF FREEDOM.

```
ATYPE=1 ALIGNS THE VEHICLE ATTITUDE SYSTEM TO THE INITIALLY
        GUIDANCE COMPUTED DESIRED THRUST ATTITUDE
NSTG=4 FOUR STAGES ARE PRESENT, THEREFORE 4 VALUES ARE
       INPUT FOR THE VEHICLE PARAMETERS.
LSTG=1 THE FIRST STAGE IS THE BURNING STAGE.

THE FOLLOWING CHANGES ARE NEEDED--
TO SIMULATE THE SECOND STAGE,
LSTG=2*
TO SIMULATE THE THIRD STAGE,
LSTG=3*
TO SIMULATE THE FOURTH STAGE,
```

LSTG=4*

*EXAMPLE 8
AN EXAMPLE OF THE USE OF MODE 6 WOULD BE THE SAME AS EXAMPLE 3 ABOVE WITH RRRT, VVVT, THETAT, INC, AND DNODE OMITTED AND WITH RCON AND VCON ADDED.

*EXAMPLE 9
AN EXAMPLE OF THE USE OF MODE 7 WOULD BE THE SAME AS EXAMPLE 4 ABOVE WITH ECC, SLR, ALPHA, INC, AND DNODE OMITTED AND WITH RCON AND VCON ADDED.

*NOTE' AN EXAMPLE OF THE ENTIRE INPUT FROM ALL SECTIONS OF THE PROGRAM FOR SIMULATING A FOUR STAGE VEHICLE WITH COAST PERIODS IS PRESENTED IN THE SAMPLE TEST CASES SECTION.

7.1.10. GUID10 - CALCULATES THE VELOCITY REQUIRED FOR ABORT MANEUVERS.

INPUT
ITYPE - GUIDANCE EQUATION INDICATOR(MUST BE EQUAL TO 10 FOR GUID10) NOMINALLY SET TO 0.
CC - GUIDANCE CONSTANT(THRUST MULTIPLIER). NOMINALLY SET TO ZERO.
INC - INCLINATION OF THE CUTOFF PLANE(RADIANS). NOMINALLY SET TO ZERO.
ECC - ECCENTRICITY OF THE CUTOFF ELLIPSE. NOMINALLY SET TO ZERO.
SLR - SEMI-LATUS RECTUM OF CUTOFF ELLIPSE (UNITS OF ISCALE). NOMINALLY SET TO ZERO
RT - TARGET VECTOR. UNITS ARE CONTROLLED BY ISCALE.
DRT - DESIRED CUTOFF VELOCITY. UNITS ARE CONTROLLED BY ISCALE.
NVR - TERMINAL VELOCITY INDICATOR. WHEN SET EQUAL TO A NON-ZERO NUMBER IT PREVENTS THE SETTING OF THE ACTUAL VELOCITY EQUAL TO THE REQUIRED VELOCITY. NOMINALLY SET TO ZERO.
IMDC - TARGET INDICATOR
=0' VELOCITY REQUIREMENT DETERMINED FROM POSITION AND VELOCITY OF TARGET AND INC.
=1' VELOCITY REQUIREMENT DETERMINED FROM THE POSITION AND VELOCITY OF THE THRUSTING VEHICLE AND CHARACTERISTICS OF THE CUTOFF PLANE.
NV - NUMBER OF VEHICLES. NOMINALLY SET TO 1.

*EXAMPLE 1
ITYPE = 10, NVR = 1*
IMDC = 0, CC = 1.0, INC = .10*
RT = 434.65212,715.28041,98.72120*

```
  DRT = 25.432198,64.212047,10.721985*
 *EXPLANATION OF EXAMPLE 1
  IN THIS EXAMPLE THE REQUIRED VELOCITY IS DETERMINED
  FROM RT,DRT, AND INC.
 *EXAMPLE 2
  ITYPE = 10,     NVR = 1*
  IMDC = 1,       CC = 1.0,      ECC = .15*
  SLR = 4571.3,   INC = .05*
 *EXPLANATION OF EXAMPLE 2
  THE REQUIRED VELOCITY IS DETERMINED FROM THE
  POSITION AND VELOCITY OF THE ACTIVE VEHICLE
  AND ECC,SLR, AND INC.
```

7.1.11. OPEN LOOP STEERING

DESCRIPTION

THIS OPTION ALLOWS THE USER TO BY-PASS ANY OF THE ABOVE GUIDANCE STEERING OPTIONS. THIS OPTION IS REQUIRED SINCE THE PROGRAM ALWAYS REQUIRES A VALUE FOR ITYPE WHEN THE VEHICLE IS THRUSTING.

INPUT

ITYPE - OPTION INDICATOR (=11 FOR THIS OPTION) NOMINALLY SET TO 0.

8. ATMOSPHERE AND VEHICLE DESCRIPTION

8.1. VEHICLE IDENTIFICATION

```
VID OR VID(1),VID(2) - VEHICLE IDENTIFICATION. CAN BE SET TO CSM,
                       LM, OR LV. PRESET AS VID(1)=CSM AND
                       VID(2)=LM.
```

8.2. ATMOSPHERE

```
INPUT
  IWNV(I) - RELATIVE VELOCITY WIND FLAG FOR VEHICLE (I).
      =0  NO WINDS ARE INPUT. (INTERNALLY SET =0)
      =1  WINDM AND WINDAZ ARE INPUT.
      =2  WINDN AND WINDE ARE INPUT.
  WINDM - WIND SPEED, TO BE USED WITH WINDAZ (FT/SEC).
  WINDAZ - WIND AZIMUTH, MEASURED FROM NORTH (DEG).
  WINDN - WIND SPEED FROM NORTH (FT/SEC).
  WINDE - WIND SPEED FROM EAST (FT/SEC).
  ADEN - ATMOSPHERIC DENSITY (LB/FT**3)
  APSI - ATMOSPHERIC PRESSURE (LB/FT**2)
  SPEEDS - SPEED OF SOUND (FT/SEC)
  ATUL(I) - UPPER ALTITUDE LIMIT FOR WHICH AERODYNAMICS AND
            ATMOSPHERE WILL BE COMPUTED (FT). FOR VEHICLE (I).
            A VALUE OF 400000.0 FT. IS INTERNALLY STORED.
            COMPUTATIONS CAN BE MADE FOR VALUES OF ATUL(I) UP
            TO 2,296,581.0 FT. (700 KM), HOWEVER.
  ATLL(I) - LOWER ALTITUDE LIMIT FOR CALCULATION OF AERODYNAMICS
            AND ATMOSPHERE.  FOR VEHICLE  (I).  A VALUE OF
            -1000 FT. IS INTERNALLY STORED.
  AASA(I) - SMALL ANGLE APPROXIMATION FOR ANGLE OF ATTACK (DEG).
            FOR VEHICLE (I).  A VALUE OF 2.5 DEG. IS  INTERNALLY
            STORED.

   * IF THE INPUT FOR DENSITY, PRESSURE AND THE SPEED OF
     SOUND IS OMITTED, THE PROGRAM WILL USE THE ATMOS
     ROUTINE TO OBTAIN THESE DATA.
   * THESE DATA MAY BE EITHER TABULAR OR CONSTANT VALUE.

    THE FOLLOWING TWO EXAMPLES ILLUSTRATE THE INPUT OF
    ATMOSPHERIC TABLES FROM 'A REFERENCE ATMOSPHERE FOR PATRICK
    AFB, FLORIDA, ANNUAL (1963 REVISION)', TMX-53139.

    *EXAMPLE 1
     ADEN, SIMPLE, LINEAR, AMLT=3.28083, EQUINT, ERO=2,
     ARG=AALT, FMLT=.062428342, FUNCT=0.,250.,1.1835467,
```

```
1.1573534,1.1312045,1.1051789,1.0793462*
APSI=0.0*
SPEEDS=0.0*
ATUL(1)=400000, ATUL(2)=800000.*
```

EXPLANATION OF EXAMPLE 1
THE ATMOSPHERIC DENSITY (ADEN) IS OBTAINED FROM A SIMPLE TABLE WITH LINEAR INTERPOLATICN USED FOR THE FUNCTICN AT INTERMEDIATE POINTS OF THE ARGUMENT (ALTITUDE, THE INDEPENDENT VARIABLE). THE FUNCTION VALUES ARE INPUT AS INDICATED FOR THE ARGUMENT (ALTITUDE) FROM 0. TO 1000. METERS, AT EQUAL INTERVALS CF 250. METERS. AMLT, THE ARGUMENT MULTIPLIER, CONVERTS THE ALTITUDE FROM METERS TO FEET. FMLT, FUNCTION MULTIPLIER, CONVERTS DENSITY FRCM KG/M**3 TO LB/FT**3. ERO=2 ALLOWS EXTRAPOLATICN FOR FUNCTION VALUES AT ARGUMENT POINTS OUTSIDE THE RANGE OF THE TABLE. ATMOSPHERIC PRESSURE AND SPEED OF SOUND ARE ZERO FOR ALL ALTITUDES. AERODYNAMICS AND ATMOSPHERE WILL BE COMPUTED FOR VEHICLE 1 BELOW 400,000 FT. AND FOR VEHICLE 2 BELOW 800,000 FT.

```
*EXAMPLE 2
SPEEDS, SIMPLE, LINEAR, STOARG, ERO=1, AMLT=3.28083,
FMLT=3.28083, ARG=AALT, FUNCT=0.,3.4685752E02,16500.,
2.8544719E02,49000.,3.3054537E02,83250,2.6944122E02,
90000.,2.6944122E02,700000.,1.0417877E03*
```

EXPLANATION OF EXAMPLE 2
HERE THE SPEED OF SOUND IS THE FUNCTICN IN THE SIMPLE TABLE. THE INTERPOLATION WILL BE LINEAR FOR POINTS BETWEEN THE STORED ARGUMENTS. ERO=1 SPECIFIES BOUNDARY VALUES OF THE FUNCTION ARE TO BE USED FCR ARGUMENT POINTS OUTSIDE THE RANGE OF THE TABLE. FMLT CCNVERTS UNITS FROM M/SEC TO FT/SEC.

8.3. VEHICLE CHARACTERISTICS

8.3.1. VEHICLE MASS

IMASS(I) - MASS AT THRUST INITIATION OF VEHICLE (I) (LB).
IF IMASS IS A NEGATIVE VALUE THE CURRENT MASS IS DECREMENTED BY THE ABSOLUTE VALUE OF IMASS.
NOMINALLY SET TO ZERO.

MMASS - MINIMUM ALLOWABLE MASS DURING THRUST PHASE (LB).
NOMINALLY SET TO ZERO.

DMASS - MASS JETTISONED AT START OF A THRUST PHASE (LB).

IWTC - MASS INDICATOR (NOMINALLY SET TO ZERO).
= 0 MASS IS SET EQUAL TO THE INITIAL MASS AT THE START OF THE PHASE.
= 1 INITIAL MASS IS FIRST REDUCED BY DMASS THEN THE ROCKET EQUATION IS USED

=2 THE INITIAL MASS IS DEFINED BY THE ROCKET EQUATION.
=3 THE INITIAL MASS IS SET EQUAL TO THE PRESENT MASS OF THE VEHICLE LESS THE JETTISONED MASS.
=4 THE INITIAL MASS IS FIRST DEFINED BY THE ROCKET EQUATION AND IS THEN REDUCED BY THE AMOUNT OF THE JETTISONED MASS.

8.3.2. VEHICLE AERODYNAMICS AND CENTER OF GRAVITY CHARACTERISTICS

8.3.2.1. AERODYNAMICS

TWO VEHICLE CAPABILITY IS PROVIDED

INPUT

CDRAG1, CDRAG2 -- COEFFICIENT OF DRAG ALONG THE NEGATIVE RELATIVE VELOCITY VECTOR(VEHICLES 1,2)(ND)

CA1, CA2 -- AXIAL DRAG COEFFICIENT ALONG THE NEGATIVE X-BODY AXIS (VEHICLES 1 AND 2) (ND).

CLIFT1, CLIFT2 -- LIFT COEFFICIENT ALONG THE DIRECTION OF THE PROJECTION OF THE Z-BODY AXIS IN THE PLANE PERPENDICULAR TO THE RELATIVE VELOCITY VECTOR.

CNPO1,CNP11,CNP21,CNP31 - NORMAL FORCE COEFFICIENTS IN THE
CNPO2,CNP12,CNP22,CNP32 X-Z PLANE (ALONG THE Z-AXIS). THE INPUT UNITS ARE ND, 1/DEG, 1/DEG**2, 1/DEG**3

CNYO1,CNY11,CNY21,CNY31 - NORMAL FORCE COEFFICIENTS IN THE
CNYO2,CNY12,CNY22,CNY32 X-Y PLANE (ALONG THE Y-AXIS). THE INPUT UNITS ARE ND, 1/DEG, 1/DEG**2, 1/DEG**3.

BAS1, BAS2 - FORCE CAUSED BY THE BASE PRESSURE. VEHICLES 1 AND 2. CAN BE INPUT EITHER AS A TABLE OR AS A CONSTANT VALUE. (LB)

* A VALUE OF 0 WILL BE USED IF ANY OF THE ABOVE INPUT IS OMITTED.

*EXAMPLE'

```
CDRAG1=1.2,   CDRAG2=2.0,   CNPO1=0.6*
CNPO2=0.3,    CNYO1=0.3,    CNYO2=0.2*
```

8.3.2.2. CENTER OF GRAVITY CHARACTERISTICS

INPUT

CG1,CG2 - X-AXIS COMPONENT OF THE CENTER OF GRAVITY LOCATION, VEHICLES 1 AND 2. MEASURED FROM THE

GIMBAL POINT POSITIVE IN THE POSITIVE DIRECTION OF THE X-AXIS (FT).

CGP1, CGP2 - Y-AXIS COMPONENT OF THE CENTER OF GRAVITY FOR VEHICLES 1 AND 2. MEASURED POSITIVE IN THE POSITIVE DIRECTION OF THE Y-AXIS (FT).

CGY1, CGY2 - Z-AXIS COMPONENT OF THE CENTER OF GRAVITY FOR VEHICLES 1 AND 2. MEASURED POSITIVE IN THE POSITIVE DIRECTION OF THE Z-AXIS (FT).

CPP1, CPP2 - POINT OF APPLICATION OF THE AERODYNAMIC FORCE ALONG THE Z-AXIS FOR VEHICLES 1 AND 2, MEASURED ALONG THE X-AXIS FROM THE GIMBAL POINT (FT).

CPY1, CPY2 - POINT OF APPLICATION OF THE AERODYNAMIC FORCE ALONG THE Y-AXIS FOR VEHICLES 1 AND 2, MEASURED ALONG THE X-AXIS FROM THE GIMBAL POINT (FT).

VLEN(I) - THE VEHICLE LENGTH OF VEHICLE (I). TO BE USED ONLY WHEN THE NOSE OF THE VEHICLE IS THE REFERENCE POINT, INSTEAD OF THE GIMBAL POINT. (FT).

AREA(I) - AERODYNAMIC REFERENCE AREA OF VEHICLE (I). FT**2

WTE(I) - VEHICLE (I) WEIGHT AT END OF A PHASE, (LB). TO BE USED ONLY WHEN IT IS DESIRED TO HAVE THE PROGRAM CALCULATE THE CENTER OF GRAVITY.

VCG(I) - CENTER OF GRAVITY OF VEHICLE (I) AT THE END OF A PHASE (FT). TO BE USED ONLY IF WTE(I) IS INPUT.

VPG(I) - PROPELLANT CENTER OF GRAVITY OF VEHICLE (I) AT THE END OF A PHASE (FT). TO BE INPUT ONLY IF WTE(I) IS INPUT.

* A VALUE OF 0 WILL BE USED IF ANY OF THESE DATA ARE OMITTED.

*EXAMPLE'
CG1=60.0, CG2=30.0, CGP1=.5, CGP2=1.0*
CPP1=80.0, CPP2=60.0, VLEN=100.,75.*

* THE OPTION EXISTS OF INPUTTING A CG TABLE OR CONSTANT VALUE, OR INPUTTING WTE,VCG, AND VPG AND THE PROGRAM WILL CALCULATE THE CG.
* VLEN SHOULD ONLY BE INPUT WHEN CG, CPP, AND CPY ARE MEASURED FROM THE NOSE OF THE VEHICLE.

8.3.3. VEHICLE MOMENT BALANCE

THE FOLLOWING ENGINE HINGE ANGLES ARE USED IN THE VEHICLE MOMENT BALANCE EQUATIONS. THE ANGLES ARE USED TO DEFINE THE THRUST DIRECTION IN THE VEHICLE ATTITUDE SYSTEM. THESE ANGLES WILL OVERRIDE ANY INPUT OF THE VEHICLE C.G. POSITION.

INPUT

ENDFP1 - ENGINE DEFLECTION ANGLE ABOUT THE VEHICLE Y-AXIS (DEG). POSITIVE ANGLE DIRECTS THE THRUST VECTOR TOWARD THE NEGATIVE Z-AXIS.

ENDFY1 - ENGINE DEFLECTION ANGLE OUT OF THE VEHICLE X-Z PLANE (DEG). POSITIVE ANGLE MOVES THE THRUST VECTOR TOWARD THE VEHICLE Y-AXIS.

8.3.4. ENGINE HINGE ANGLES

WHEN THE FOLLOWING HINGE ANGLES ARE INPUT THE VEHICLE ATTITUDE SYSTEM IS ROTATED SO THAT THE THRUST VECTOR LIES ALONG THE X-AXIS DIRECTION OF THE INITIAL VEHICLE ALIGNMENT. FOR EXAMPLE, IF THE VEHICLE ATTITUDE IS ALIGNED ACCORDING TO ATYPE(1)=1, THE VEHICLE X-AXIS IS PLACED ALONG THE GUIDANCE COMPUTED THRUST DIRECTION. IF THE ENGINE HINGE ANGLES ARE INPUT, THE VEHICLE ATTITUDE SYSTEM IS ROTATED TO PLACE THE THRUST VECTOR, WHICH IS NO LONGER ALONG THE X-AXIS, ALONG THE GUIDANCE COMPUTED THRUST DIRECTION. THIS GIVES THE CAPABILITY OF COMPENSATING THE ATTITUDE ALIGNMENT FOR THRUST MISALIGNMENT DUE TO CENTER OF GRAVITY OR OTHER OFFSETS. A SIMILAR ALIGNMENT MODIFICATION CAN BE MADE FOR THE IMU SYSTEM.

INPUT

ENDFPA - ENGINE DEFLECTION ANGLE ABOUT THE VEHICLE Y-AXIS (DEG). POSITIVE ANGLE DIRECTS THE THRUST VECTOR TOWARD THE NEGATIVE Z-AXIS. VEHICLE ATTITUDE SYSTEM ADJUSTED ACCORDING TO THIS ANGLE.

ENDFYA - ENGINE DEFLECTION ANGLE OUT OF THE VEHICLE X-Z PLANE (DEG). POSITIVE ANGLE MOVES THE THRUST VECTOR TOWARD THE VEHICLE Y-AXIS. VEHICLE ATTITUDE SYSTEM ADJUSTED ACCORDING TO THIS ANGLE.

ENDFYI - SAME DEFINITION AS ENDFYA. IMU ALIGNMENT ADJUSTED ACCORDING TO THIS ANGLE.

ENDFPI - SAME DEFINITION AS ENDFPA. IMU ALIGNMENT ADJUSTED ACCORDING TO THIS ANGLE.

8.4. VEHICLE INITIALIZATION FOR DOCKING AND SEPARATION

8.4.1. VEHICLE DOCKING

THIS OPTION DISCONTINUES A VEHICLE AS A RESULT OF DOCKING OF THE TWO VEHICLES. THE OPTION INDICATOR IS INJECT(I), WHERE I INDICATES THE VEHICLE NUMBER. EITHER VEHICLE MAY BE DISCONTINUED WHEN DOCKING IS ACCOMPLISHED. IF IT IS DESIRED TO DISCONTINUE VEHICLE 1, THE POSITION, VELOCITY, ATTITUDE AND IMU OF VEHICLE 2 ARE STORED INTO THE COMPUTER LOCATIONS ALLOTTED FOR VEHICLE 1 FOR THESE QUANTITIES.

(FOR ONE VEHICLE THE PROGRAM ALWAYS USES VEHICLE 1 FOR COMPUTATIONS.) THE SUM OF THE MASSES OF THE VEHICLES BECOMES THE MASS OF THE DOCKED CONFIGURATION.

INPUT
INJECT(I) - OPTION INDICATOR (=30 FOR THIS OPTION).

EXAMPLE 1
INJECT=30
EXAMPLE 2
INJECT(1)=30

EXPLANATION OF EXAMPLES 1 AND 2
IN BOTH EXAMPLES VEHICLE 1 IS DISCONTINUED. SINCE ONLY ONE VEHICLE IS PRESENT AND THE VEHICLE MUST BE VEHICLE 1 IN THE PROGRAM, THE POSITION, VELOCITY, ATTITUDE AND IMU OF VEHICLE 2 ARE STORED INTO THE IDENTICAL LOCATIONS FOR VEHICLE 1. VEHICLE 1 BEFORE DOCKING WAS DISCONTINUED BUT AFTER DOCKING VEHICLE 2 IS RESTORED INTO VEHICLE 1.

EXAMPLE 3
INJECT(2)=30
EXAMPLE 4
INJECT=0,30

EXPLANATION OF EXAMPLES 3 AND 4
VEHICLE 2 WILL BE DISCONTINUED, WITH VEHICLE 1 BECOMING THE DOCKED VEHICLE CONFIGURATION.

8.4.2. VEHICLE SEPARATION

THIS OPTION INITIALIZES A NEW VEHICLE AS A RESULT OF SEPARATION OF TWO DOCKED VEHICLES. BOTH VEHICLES WILL HAVE THE SAME POSITION, VELOCITY, ATTITUDE AND IMU ALIGNMENTS AS THE DOCKED VEHICLES BEFORE SEPARATION OCCURRED. THE OPTION INDICATOR IS INJECT.

INPUT
INJECT - OPTION INDICATOR (=31 FOR THIS OPTION)
IMASS1 - MASS OF VEHICLE 1 (LBS)
IMASS2 - MASS OF VEHICLE 2 (LBS)

THE OPTIONS FOR INPUTTING THE MASSES OF THE VEHICLES ARE AS FOLLOWS--

1. IF IMASS1 AND IMASS2 ARE BOTH GREATER THAN ZERO, THEY DEFINE THE MASSES OF VEHICLE 1 AND VEHICLE 2.
2. IF EITHER IMASS1 OR IMASS2 IS ZERO, THE NON-ZERO MASS

IS THE MASS OF THE VEHICLE CORRESPONDING TO IT AND THE MASS OF THE OTHER VEHICLE IS OBTAINED FROM THE DIFFERENCE IN THE TOTAL MASS OF THE VEHICLES AND THE NON-ZERO MASS WHICH IS INPUT.

3. IF EITHER IMASS1 OR IMASS2 IS LESS THAN ZERO, THIS VALUE OF MASS IS TO BE DROPPED OR LOST UPON SEPARATION. THE INDIVIDUAL VEHICLE MASSES ARE THUS DETERMINED AS IN 2 ABOVE WITH THE VEHICLE SPECIFIED BY THE NEGATIVE MASS VALUE FURTHER DECREASED BY THE NEGATIVE AMOUNT.

EXAMPLE 1

```
INJECT=31, IMASS1=20000., IMASS2=5000.*
```

EXPLANATION OF EXAMPLE 1

THE MASS OF VEHICLE 1 IS 20000 LBS. AND THE MASS OF VEHICLE 2 IS 5000 LBS.

EXAMPLE 2

```
INJECT=31, IMASS1=15000.*
```

EXPLANATION OF EXAMPLE 2

THE MASS OF VEHICLE 1 IS 15000 LBS. AND THE MASS OF VEHICLE 2 IS THE TOTAL MASS BEFORE SEPARATION LESS IMASS1.

EXAMPLE 3

```
INJECT=31, IMASS1=-10., IMASS2=30000.*
```

EXPLANATION OF EXAMPLE 3

THE MASS OF VEHICLE 2 IS 30000 LBS., AND THE MASS OF VEHICLE 1 IS THE TOTAL MASS BEFORE SEPARATION LESS (IMASS2 + IMASS1) 30010 LBS. THIS EXAMPLE SHOWS HOW MASS CAN BE LOST OR DROPPED DURING SEPARATION

8.5. ATTITUDE CONTROL DURING PHASE EXECUTION

8.5.1. GUIDANCE STEERING

INPUT

TRMAX- MAXIMUM ALLOWABLE TURNING RATE(DEG/SEC)
(PRESET TO 10 DEG/SEC AT PHASE INITIATION)

ITYPE - GUIDANCE EQUATION INDICATOR

TRGF - TURNING RATE GAIN FACTOR, PRESET TO 1.

8.5.2. GRAVITY TURN

*NOTE - THIS OPTION WILL ALIGN THE X-AXIS OF THE VEHICLE ALONG THE DESIRED VELOCITY VECTOR AT THE INITIATION OF THE PHASE. THE RESULTING VEHICLE ATTITUDE WILL BE PRINTED OUT AT THE PHASE INITIATION PRINT POINT.

INPUT

ITURN(1)-OPTION INDICATOR FOR VEHICLE 1 (=1 FOR THIS OPTION)
ITURN(2)-OPTION INDICATOR FOR VEHICLE 2 (=1 FOR THIS OPTION)
GTURN(1)-RELATIVE VELOCITY OPTION INDICATOR, VEHICLE 1.
GTURN(2)-RELATIVE VELOCITY OPTION INDICATOR, VEHICLE 2.
=0 SELECTS THE OPTION TO MAINTAIN THE VEHICLE X-AXIS ALONG THE RELATIVE VELOCITY VECTOR
=1 SELECTS THE OPTION TO MAINTAIN THE VEHICLE X-AXIS ALONG THE INERTIAL VELOCITY VECTOR

* THE NOMINAL VALUES FOR ITURN AND GTURN ARE ZERO.

EXAMPLE 1

ITURN=1,1, GTURN=0,0*

EXPLANATION OF EXAMPLE 1

ITURN=1,1 SELECTS GRAVITY TURN OPTION FOR VEHICLE 1 AND VEHICLE 2
GTURN=0,0 SELECTS THE OPTION TO MAINTAIN THE VEHICLE X-AXIS ALONG THE RELATIVE VELOCITY VECTOR FOR BOTH VEHICLE 1 AND VEHICLE 2

EXAMPLE 2

ITURN=1,1, GTURN=1,1*

EXPLANATION OF EXAMPLE 2

ITURN=1,1 SELECTS THE GRAVITY TURN OPTION FOR BOTH VEHICLES
GTURN=1,1 SELECTS THE OPTION TO MAINTAIN THE VEHICLE X-AXIS ALONG THE INERTIAL VELOCITY VECTOR FOR BOTH VEHICLES

EXAMPLE 3

ITURN(2)=1, GTURN(2)=1*

EXPLANATION OF EXAMPLE 3

ITURN(2)=1 SELECTS GRAVITY TURN OPTION FOR VEHICLE 2
GTURN(2)=1 SELECTS OPTION TO MAINTAIN THE VEHICLE X-AXIS ALONG THE INERTIAL VELOCITY VECTOR FOR VEHICLE 2

8.5.3. LOCAL HORIZONTAL MAINTENANCE

TO USE THIS OPTION IT IS NECESSARY TO ALIGN THE VEHICLE WITH THE LOCAL HORIZONTAL.

INPUT

```
ITURN(1) - VEHICLE 1 OPTION INDICATOR (=2 FOR THIS OPTION),
           NOMINALLY SET TO ZERO
ITURN(2) - VEHICLE 2 OPTION INDICATOR (=2 FOR THIS OPTION),
           NOMINALLY SET TO ZERO.

     EXAMPLE 1

       ITURN(1)=2,2*

     EXPLANATION OF EXAMPLE 1
       THE EXAMPLE SELECTS LOCAL HORIZONTAL MAINTENANCE
       FOR VEHICLES 1 AND 2

     EXAMPLE 2
       ITURN(1)=2, ATYPE=3, ROLL(1)=10.,10.,10.,*

     EXPLANATION OF EXAMPLE 2
       ATYPE=3 ALIGNS THE VEHICLE ATTITUDE SYSTEM TO
               THE LOCAL HORIZONTAL SYSTEM AT PHASE
               INITIATION (SEE SECTION 8.7.3).
       ROLL(1) SELECTS A SERIES OF ROTATIONS AS FOLLOWS
         10. DEG ABOUT LOCAL HORIZONTAL Y-AXIS
         10. DEG ABOUT LOCAL HORIZONTAL Z-AXIS
         10. DEG ABOUT LOCAL HORIZONTAL X-AXIS
        (SEE SECTION 8.8)
       ITURN(1)=2 SELECTS THE OPTION TO MAINTAIN THE
                  RESULTING RELATIVE LOCAL HORIZONTAL
                  VEHICLE ATTITUDE ORIENTATION DURING
                  THE PHASE.
```

8.5.4. TABULAR INPUT FOR TURNING RATES

```
INPUT
  ITURN(1) - VEHICLE 1 OPTION INDICATOR (=3 FOR THIS OPTION),
             NOMINALLY SET TO ZERO
  ITURN(2) - VEHICLE 2 OPTION INDICATOR (=3 FOR THIS OPTION),
             NOMINALLY SET TO ZERO
  IROLL1 - TURNING RATE TABLE-VEHICLE 1 X-AXIS(DEG/SEC)
  IROLL2 - TURNING RATE TABLE-VEHICLE 2 X-AXIS(DEG/SEC)
  IPTCH1 - TURNING RATE TABLE-VEHICLE 1 Y-AXIS(DEG/SEC)
  IPTCH2 - TURNING RATE TABLE-VEHICLE 2 Y-AXIS(DEG/SEC)
  IYAW1 - TURNING RATE TABLE- VEHICLE 1 Z-AXIS(DEG/SEC)
  IYAW2 - TURNING RATE TABLE-VEHICLE 2 Z-AXIS(DEG/SEC)

EXAMPLE 1
  IROLL1,SIMPLE,STEP,ARG=T,STOARG,ERO=2*
  AMLT=3600.*
  FUNCT=0.,.5,10.,1.,100.*
  IPTCH1=1.0, ITURN=3*
```

EXPLANATION OF EXAMPLE
IROLL1 - SPECIFIES AN X-AXIS RATE TABLE FOR VEHICLE 1.
STEP - SPECIFIES A STEP FUNCTICN TABLE.
ARG=T, SPECIFIES THE TABLE ARGUMENT AS TIME (HRS).
AMLT - THE ARGUMENT MULTIPLIER USED TO CONVERT THE ARGUMENT (IN THIS CASE, FROM HRS TO SECS).
FUNCT - INPUTS THE STEP FUNCTION TABLE OF .5 DEG/SEC FROM ZERO TO 10 SEC AND ONE DEG/SEC FROM 10 TO 100 SECS.

8.5.5. ANGULAR DISPLACEMENT POLYNOMIAL FOR Y-AXIS

INPUT
ITURN - OPTION INDICATOR(4 FCR THIS OPTION)
PCOEF - COEFFICIENTS OF THE SIXTH DEGREE POLYNOMIAL WHICH DESCRIBES Y-AXIS ANGULAR DISPLACEMENT. THE INDEPENDENT VARIABLE IS PHASE TIME LAPSE. THF COEFFICIENTS ARE INPUT IN ASCENDING ORDER. THE UNITS OF THE COEFFICIENTS ARE- DEG,DEG/SEC, DEG/SEC**2,DEG/SEC**3,DEG/SEC**4,DEG/SEC**5, DEG/SEC**6

* PCOEF AND ITURN CAN ALSO BE INPUT AS PCOEF(1), PCOEF(8), ITURN(1), OR ITURN(2). THIS SPECIFIES VEHICLE 1 OR 2.

*EXAMPLE
ITURN = 4, PCOEF = 0.,1.,0.,0.,0.,0.,0.*

*EXPLANATION OF EXAMPLE
THE Y-AXIS ANGULAR DISPLACEMENT WILL BE A LINEAR FUNCTION OF PHASE TIME LAPSE E.G. THETAP=0. +1.*DT

8.5.6. ANGULAR RATE POLYNCMIAL

INPUT
ITURN - OPTION INDICATOR(5 FOR THIS OPTICN)
PCOEF - COEFFICIENTS OF THE SIXTH DEGREE POLYNOMIAL WHICH DESCRIBES Y-AXIS RATE. THE INDEPENDENT VARIABLE IS PHASE TIME LAPSE. THE COEFFICIENTS ARE INPUT IN ASCENDING ORDER. UNITS ARE- DEG/SEC,DEG/SEC**2, DEG/SEC**3,DEG/SEC**4,DEG/SEC**5

* PCOEF AND ITURN CAN ALSO BE INPUT AS PCOEF(1), PCOEF(8), ITURN(1), OR ITURN(2). THIS SPECIFIES VEHICLE 1 OR 2.

*EXAMPLE
ITURN = 5, PCOEF = 1.,0.,0.,0.,0.,0.,

*EXPLANATICN OF EXAMPLE
THIS PARTICULAR EXAMPLE INSERTS A CONSTANT Y-AXIS

RATE OF 1. DEG/SEC E.G. OMEGAP=1.

8.5.7. VEHICLE TO VEHICLE LINE-OF-SIGHT ATTITUDE MAINTENANCE
(TO BE USED WITH ATYPE = 11 OPTION, SEE SECTION 8.7.10.)

INPUT
ITURN(I) - BODY ATTITUDE TURN INDICATOR (=6 FOR THIS OPTION)
I=1 OR 2 FOR VEHICLE 1 OR VEHICLE 2.

EXAMPLE 1
ATYPE=11, ITURN=6*

EXPLANATION OF EXAMPLE 1
THE LONGITUDINAL AXIS OF VEHICLE 1 WILL BE MAINTAINED ALONG THE LINE-OF-SIGHT TO VEHICLE 2.

EXAMPLE 2
ATYPE=11,11, ITURN=6,6*
ROLL=5.0,45.0,10.0,15.0,10.0,65.0*

EXPLANATION OF EXAMPLE 2
THE UNIT VECTORS SPECIFIED WITH RESPECT TO THE VEHICLE BODY AXES BY ROLL WILL BE MAINTAINED ALONG THE LINE-OF-SIGHT BETWEEN VEHICLES.

ERROR MESSAGES

'ATTITUDE MAINTENANCE OPTION INPUT ERROR'- PRINTED IF NV=1. THE VALUE OF ITURN IS ALSO PRINTED AND THEN SET TO ZERO.

'VEHICLE SEPARATION TOO SMALL-OPTION TERMINATED'-PRINTED IF SEPARATION DISTANCE IS LESS THAN 1.0 X 10**-6. ITURN IS THEN SET TO ZERO.

8.5.8. ATTITUDE REORIENTATION MANUEVER

DESCRIPTION
IN THIS OPTION THE VEHICLE ATTITUDE SYSTEM IS ALIGNED USING A COMBINATION OF MANEUVERS INVOLVING A ROLL, PITCH AND/OR YAW, AND ROLL. THE INITIAL ROLL CAN BE EXCLUDED IF DESIRED. THESE MANEUVERS RESULT IN THE ATTAINMENT OF THE INPUT ATTITUDE. THE DIRECTION COSINES OF THE VEHICLE ROLL AND PITCH AXIS ARE INPUT.

INPUT

```
ITURN(I) - OPTION INDICATOR (=7 FOR THIS OPTION)
           I=1 OR 2 FOR VEHICLE 1 OR 2.
RAXS1D - COMPONENTS OF A UNIT VECTOR ALONG VEHICLE 1 DESIRED
         X-DYNAMIC AXIS IN THE INERTIAL COORDINATE SYSTEM.
PAXS1D - COMPONENTS OF A UNIT VECTOR ALONG VEHICLE 1 DESIRED
         Y-DYNAMIC AXIS IN THE INERTIAL COORDINATE SYSTEM.
RAXS2D - COMPONENTS OF A UNIT VECTOR ALONG VEHICLE 2 DESIRED
         X-DYNAMIC AXIS IN THE INERTIAL COORDINATE SYSTEM.
PAXS2D - COMPONENTS OF A UNIT VECTOR ALONG VEHICLE 2 DESIRED
         Y-DYNAMIC AXIS IN THE INERTIAL COORDINATE SYSTEM.
THTDB(I) - ATTITUDE DEADBAND ANGLE (DEG).
           I=1 OR 2 FOR VEHICLE 1 OR 2.
OMEGRP(I) - I=1 ROLL MANEUVER RATE FOR VEHICLE 1 (DEG/SEC).
            I=2 PITCH/YAW MANEUVER RATE FOR VEHICLE 1
                (DEG/SEC).
            I=3 ROLL MANEUVER RATE FOR VEHICLE 2 (DEG/SEC).
            I=4 PITCH/YAW MANEUVER RATE FOR VEHICLE 2
                (DEG/SEC).
K3(I) - INITIAL ROLL MANEUVER FLAG.
        I=1 OR 2 FOR VEHICLE 1 OR 2.
        =0.0  NO INITIAL ROLL.
        =1.0  DO INITIAL ROLL.
DTMIN(I) - MINIMUM ATTITUDE MANEUVER DURATION (SEC).
           I=1 OR 2 FOR VEHICLE 1 OR 2.
DTLPS(I) - TIME LAPSE BEFORE ATTITUDE MANEUVER INITIATION
           (SEC). I=1 OR 2 FOR VEHICLE 1 OR 2.

EXAMPLE 1
  ITURN=7*
  RAXS1D=1.,0.,0., PAXS1D=0.,1.,0. *
  THTDB=0., OMEGRP=1.0,1.0, K3=1.0, DTMIN=0., DTLPS=0.*

EXAMPLE 2
  ITURN(2)=7*
  RAXS2D=1.0,0.,0., PAXS2D=0.,1.,0. *
  THTDB(2)=0., OMEGRP=1.0,1.0, K3(2)=1.0, DTMIN(2)=0.*
  DTLPS(2)=0.*

EXAMPLE 3
  ITURN=7,7*
  RAXS1D=1.,0.,0., PAXS1D=0.,1.,0. *
  RAXS2D=0.,1.,0., PAXS2D=1.,0.,0. *
  THTDB=0.,0., K3=1.,1., DTMIN=0.,0., DTLPS=0.,0.*
  OMEGRP=1.,1.,1.,1.*


EXPLANATION OF EXAMPLES
  EXAMPLE 1 REORIENTS THE ATTITUDE SYSTEM OF VEHICLE 1.
  EXAMPLE 2 REORIENTS THE ATTITUDE SYSTEM OF VEHICLE 2.
  EXAMPLE 3 REORIENTS THE ATTITUDE SYSTEM OF BOTH VEHICLES.
```

8.5.9. ATTITUDE PITCH ANGLE OF ATTACK AND BANK ANGLE MAINTENANCE

DESCRIPTION

THE PITCH ANGLE OF ATTACK AND BANK ANGLE (AS COMPUTED OR AS SPECIFIED) WILL BE MAINTAINED WITH THIS OPTION. THE CAPABILITY ALSO EXISTS TO ALLOW THE BANK ANGLE TO CHANGE AT A SPECIFIED RATE WHILE MAINTAINING THE PITCH ANGLE OF ATTACK.

INPUT

ITURN(I) - OPTION INDICATOR (=8 FOR THIS OPTION)
RBKANG(I) - BANK ANGLE RATE OF CHANGE (DEG/SEC)
(WHERE I=1 OR 2 IN ABOVE DESIGNATES VEHICLE 1 OR 2)

EXAMPLE 1

ITURN(2)= 8, RBKANG(2)= 15.0*

EXPLANATION OF EXAMPLE 1

THE PITCH ANGLE OF ATTACK OF VEHICLE 2 WILL BE MAINTAINED. THE BANK ANGLE CHANGES AT THE RATE OF 15 DEG/SEC.

EXAMPLE 2

ATYPE =13, PAATK = 45., BKANG = 20., ITURN= 8, RBKANG= 10.*

EXPLANATION OF EXAMPLE 2

THE ATYPE 13 OPTION (SEE SECTION 8.7.12.) MAY BE USED IN CONJUNCTION WITH THIS ITURN OPTION TO ESTABLISH THE VEHICLE IN A SPECIFIC ATTITUDE AND THEN MAINTAIN THIS ORIENTATION. EXAMPLE 2 ALIGNS VEHICLE 1 TO A PITCH ANGLE OF ATTACK OF 45 DEGREES AND A BANK ANGLE OF 20 DEGREES. THE PITCH ANGLE OF ATTACK IS MAINTAINED THROUGHOUT THIS PHASE WHILE THE BANK ANGLE IS CHANGED AT THE RATE OF 10 DEG/SEC.

8.6. IMU ALIGNMENTS

THE IMU ALIGNMENT OPTIONS GIVEN BELOW WILL BE EXECUTED ONLY AT PHASE INITIATION. THE OPTION INDICATOR IS ATYPE(I+2), WHERE I IS EITHER 1 OR 2, CORRESPONDING TO VEHICLE 1 OR 2. THUS IF THE IMU OF VEHICLE 1 IS TO BE ALIGNED, THE OPTION INDICATOR WILL BE ATYPE(3), AND IF THE IMU OF VEHICLE 2 IS TO BE ALIGNED, THE OPTION INDICATOR WILL BE ATYPE(4).
THE NOMINAL VALUE FOR THE INDICATOR IS ZERO.

8.6.1. IMU ALIGNED WITH INITIAL GUIDANCE MANEUVER ATTITUDE

DESCRIPTION

IN THIS OPTION THE ATTITUDE SYSTEM IS ALIGNED SUCH THAT THE X-AXIS IS ALONG THE INITIAL GUIDANCE COMPUTED THRUST DIRECTION. THE Y-AXIS IS PERPENDICULAR TO THE DESIRED THRUST DIRECTICN VECTOR AND THE POSITICN VECTOR. THE Z-AXIS COMPLETES THE STANDARD RIGHT-HANDED SYSTEM. FOR VERTICAL ASCENT, THE Y-AXIS COINCIDES WITH THE NEGATIVE ANGULAR MOMENTUM VECTOR. (SEE FIGURE 8-1)

INPUT

ATYPE(I+2) - OPTICN INDICATOR (=1 FOR THIS OPTION).

EXAMPLE 1

ATYPE(3) =1*

EXAMPLE 2

ATYPE(4) =1*

EXAMPLE 3

ATYPE(3) =1,1*

EXPLANATION OF EXAMPLES

EXAMPLE 1 SETS UP THE IMU SYSTEM OF VEHICLE 1,
EXAMPLE 2 SETS UP THE IMU SYSTEM OF VEHICLE 2,
EXAMPLE 3 SETS UP THE IMU SYSTEM OF BOTH VEHICLES.

8.6.2. INPUT OF THE IMU AXES

DESCRIPTION

IN THIS OPTION THE IMU SYSTEM IS ALIGNED BY INPUT. THAT IS, THE DIRECTION COSINES OF EACH IMU AXIS ARE INPUT.

INPUT

ATYPE(I+2) - OPTICN INDICATOR (=2 FOR THIS OPTION).

RAXIS3 - COMPONENTS OF A UNIT VECTOR ALCNG THE FIRST VEHICLE IMU X-AXIS IN THE INERTIAL (GEOCENTRIC OR SELENOCENTRIC) COORDINATE SYSTEM.

PAXIS3 - COMPCNENTS OF A UNIT VECTOR ALONG THE FIRST VEHICLE IMU Y-AXIS IN THE INERTIAL (GEOCENTRIC OR SELENOCENTRIC) COORDINATE SYSTEM.

YAXIS3 - COMPONENTS OF A UNIT VECTOR ALCNG THE FIRST VEHICLE IMU Z-AXIS IN THE INERTIAL (GEOCENTRIC OR SELENOCENTRIC) CCORDINATE SYSTEM.

RAXIS4 - COMPONENTS OF A UNIT VECTOR ALCNG THE SECOND VEHICLE IMU X-AXIS IN THE INERTIAL (GEOCENTRIC OR SELENOCENTRIC) COORDINATE SYSTEM.

PAXIS4 - COMPCNENTS OF A UNIT VECTOR ALCNG THE

SECOND VEHICLE IMU Y-AXIS IN THE INERTIAL (GEOCENTRIC OR SELENOCENTRIC) COORDINATE SYSTEM.

YAXIS4 - COMPONENTS OF A UNIT VECTOR ALONG THE SECOND VEHICLE IMU Z-AXIS IN THE INERTIAL (GEOCENTRIC OR SELENOCENTRIC) COORDINATE SYSTEM.

EXAMPLE 1

```
ATYPE(3) =1*
RAXIS3=1.,0.,0., PAXIS3=0.,1.,0., YAXIS3=0.,0.,1.*
```

EXAMPLE 2

```
ATYPE(4) =1*
RAXIS4=1.,0.,0., PAXIS4=0.,1.,0., YAXIS4=0.,0.,1.*
```

EXAMPLE 3

```
ATYPE(3)=1,1*
RAXIS3=1.,0.,0., PAXIS3=0.,1.,0., YAXIS3=0.,0.,1.*
RAXIS4=1.,0.,0., PAXIS4=0.,1.,0., YAXIS4=0.,0.,1.*
```

EXPLANATION OF EXAMPLES

EXAMPLE 1 SETS UP THE IMU SYSTEM OF VEHICLE 1, EXAMPLE 2 SETS UP THE IMU SYSTEM OF VEHICLE 2, AND EXAMPLE 3 SETS UP THE IMU SYSTEM OF BOTH VEHICLES.

8.6.3. LOCAL HORIZONTAL ALIGNMENT

DESCRIPTION

IN THIS OPTION THE IMU IS ALIGNED SUCH THAT THE X-AXIS IS IN THE LOCAL HORIZONTAL PLANE AND IN THE DIRECTION OF MOTION, THE Z-AXIS IS DIRECTED TOWARD THE CENTER OF THE REFERENCE BODY AND THE Y-AXIS COMPLETES THE STANDARD RIGHT-HANDED SYSTEM. (SEE FIGURE 8-2)

INPUT

ATYPE(I+2) -- OPTION INDICATOR (=3 FOR THIS OPTION).

EXAMPLE 1

```
ATYPE(3) =3*
```

EXAMPLE 2

```
ATYPE(4) =3*
```

EXAMPLE 3

```
ATYPE(3) =3,3*
```

EXPLANATION OF EXAMPLES

EXAMPLE 1 SETS UP THE IMU OF VEHICLE 1, EXAMPLE 2 SETS UP THE IMU OF VEHICLE 2, AND EXAMPLE 3 SETS

UP THE IMU FOR BOTH SYSTEMS.

8.6.4. SUN-EARTH LINE ALIGNMENT

DESCRIPTION

IN THIS OPTION THE IMU AXIS SYSTEM WILL BE ALIGNED TO SATISFY A DESIRED ANGLE BETWEEN THE X-AXIS OF THE IMU AND THE SUN LINE-OF-SIGHT AND ALSO DIRECT A BODY-FIXED LINE AS CLOSELY AS POSSIBLE TO THE CENTER OF THE EARTH. (SEE FIGURE 8-3)

INPUT

ATYPE(I+2) -- OPTION INDICATOR (=4 FOR THIS OPTION)

ROLL(7) - DESIRED ANGLE BETWEEN VEHICLE 1 IMU X-AXIS AND THE VEHICLE-SUN LINE (DEG). DENOTED BY ALPHA IN FIGURE 8-3.

ROLL(10) - DESIRED ANGLE BETWEEN VEHICLE 2 IMU X-AXIS AND THE VEHICLE-SUN LINE (DEG). DENOTED BY ALPHA IN FIGURE 8-3.

VEHL(1) - COORDINATES OF A UNIT VECTOR IN THE FIRST VEHICLE IMU COORDINATE SYSTEM. DENOTED BY UNIT VECTOR 1L IN FIGURE 8-3.

VEHL(4) - COORDINATES OF A UNIT VECTOR IN THE SECOND VEHICLE IMU COORDINATE SYSTEM. DENOTED BY UNIT VECTOR 1L IN FIGURE 8-3.

EXAMPLE 1

```
ATYPE(3) =4,ROLL(7)=5,VEHL(1)=0.,0.,1.*
```

EXAMPLE 2

```
ATYPE(4) =4,ROLL(10)=5.,VEHL(1)=0.,0.,1.*
```

EXPLANATION OF EXAMPLES

EXAMPLE 1 SETS UP VEHICLE 1, EXAMPLE 2 SETS UP VEHICLE 2.

8.6.5. LAUNCH SITE ALIGNMENT

DESCRIPTION

IN THIS OPTION THE IMU SYSTEM IS ALIGNED SUCH THAT THE X-AXIS IS ALONG THE GEODETIC OR SELENOGRAPHIC VERTICAL. THE Z-AXIS WILL BE IN THE GEOGRAPHIC OR SELENOGRAPHIC HORIZONTAL PLANE AND DIRECTED ALONG THE LAUNCH AZIMUTH. THE Y-AXIS COMPLETES THE STANDARD RIGHT-HANDED SYSTEM. (SEE FIGURE 8-4)

INPUT

```
ATYPE(I+2)  - OPTION INDICATCR (=5 FOR THIS OPTION)
PHI - LAUNCH LATITUDE, GEODETIC OR SELENOGRAPHIC (DEG).
LAMBDA - LAUNCH LONGITUDE, GEOGRAPHIC OR
         SELENOGRAPHIC,(DEG).
LAZ - LAUNCH AZIMUTH FROM NORTH (DEG).
TRUDAT - TRUE OF DATE OPTICN INDICATOR. IF TRUDAT
         IS SET TO 1,3,5, OR 7, THE ORIENTATION
         OF THE AXES IS WITH RESPECT TC THE TRUE
         EQUATOR AND EQUINOX OF CATE, CTHERWISE
         ORIENTATION IS WITH RESPECT TO THE MEAN
         EQUATOR AND EQUINCX CF EPOCH.
 DTLAND - ELAPSED TIME SINCE LAUNCH (HR). INPUT OF A
          POSITIVE NUMBER WILL ALIGN THE VEHICLE ATTITUDE
          SYSTEM WITH THE POSITICN OF THE LAUNCH SITE
          DTLAND HOURS IN THE PAST.
```

EXAMPLE 1

```
ATYPE(3) =5,PHI=28.5,LAMBDA=80.,LAZ=75.*
TRUDAT=0.*
```

EXAMPLE 2

```
ATYPE(4) =5,PHI=28.5,LAMBDA=80.,LAZ=75.*
TRUDAT=0.*
```

EXAMPLE 3

```
ATYPE(3) =5,5,PHI=28.5,LAMBDA=80.,LAZ=75.*
TRUDAT=0.*
```

EXPLANATION OF EXAMPLES

```
EXAMPLE 1 SETS UP THE IMU SYSTEM OF VEHICLE 1,
EXAMPLE 2 SETS UP THE IMU SYSTEM OF VEHICLE 2,
EXAMPLE 3 SETS UP THE IMU SYSTEM OF BOTH VEHICLES.
```

8.6.6. LM LANDING SITE ALIGNMENT

DESCRIPTION

IN THIS OPTION THE IMU SYSTEM IS ALIGNED SUCH THAT THE X-AXIS WILL BE ALONG THE LANDING SITE VERTICAL AT T=T + DTLAND, THE Z-AXIS WILL BE PERPENDICULAR TO THE X-AXIS IN THE CSM ORBIT PLANE IN THE DIRECTICN OF CSM MOTION. THE Y-AXIS CCMPLETES THE STANDARD RIGHT-HANDED SYSTEM. (SEE FIGURE 8-5)

INPUT

```
ATYPE(I+2)  - OPTION INDICATOR (=6 FOR THIS CPTION)
DTLAND - TIME TO GO TO LANDING ON LUNAR SURFACE (HR)
```

EXAMPLE 1

```
ATYPE(3) =6,DTLAND=0.7*
```

EXAMPLE 2
ATYPE(4) =6,DTLAND=0.7*

EXAMPLE 3
ATYPE(3) =6,6,DTLAND=0.7*

EXPLANATION OF EXAMPLES
EXAMPLES 1,2, AND 3 SET UP THE IMU SYSTEM OF VEHICLES 1,2, AND 1 AND 2 RESPECTIVELY.

8.6.7. VELOCITY ALIGNMENT

DESCRIPTION
IN THIS OPTION THE IMU SYSTEM IS ALIGNED SUCH THAT THE X-AXIS IS ALIGNED ALONG THE VELOCITY VECTOR, THE Y-AXIS IS ALIGNED ALONG THE NEGATIVE ANGULAR MOMENTUM VECTOR. THE Z-AXIS COMPLETES THE STANDARD RIGHT-HANDED SYSTEM. (SEE FIGURE 8-6)

INPUT
ATYPE(I+2) - OPTION INDICATOR (=7 FOR THIS OPTION)

EXAMPLE 1
ATYPE(3) =7*

EXAMPLE 2
ATYPE(4) =7*

EXAMPLE 3
ATYPE(3) =7,7*

EXPLANATION OF EXAMPLES
EXAMPLE 1 SETS UP THE IMU SYSTEM OF VEHICLE 1,
EXAMPLE 2 SETS UP THE IMU SYSTEM OF VEHICLE 2,
EXAMPLE 3 SETS UP THE IMU SYSTEM OF BOTH VEHICLES.

8.6.8. NEGATIVE VELOCITY ALIGNMENT

DESCRIPTION
IN THIS OPTION THE IMU SYSTEM IS ALIGNED SUCH THAT THE X-AXIS IS ALONG THE NEGATIVE VELOCITY VECTOR, THE Y-AXIS IS ALONG THE NEGATIVE ANGULAR MOMENTUM VECTOR AND THE Z-AXIS COMPLETES THE STANDARD RIGHT-HANDED SYSTEM. (SEE FIGURE 8-7)

INPUT
ATYPE(I+2) - OPTION INDICATOR (=8 FOR THIS OPTION)

EXAMPLE 1
ATYPE(3) =8*

EXAMPLE 2
ATYPE(4) =8*

EXAMPLE 3
ATYPE(3) =8,8*

EXPLANATION OF EXAMPLES
EXAMPLE 1 SETS UP THE IMU SYSTEM OF VEHICLE 1,
EXAMPLE 2 SETS UP THE IMU SYSTEM OF VEHICLE 2,
EXAMPLE 3 SETS UP THE IMU SYSTEM OF BOTH VEHICLES.

8.6.9. SOLAR ORIENTATION ALIGNMENT

DESCRIPTION

IN THIS OPTION THE IMU SYSTEM IS ORIENTED SUCH THAT A DESIRED SET OF SOLAR LOCK ANGLES ARE OBTAINED. SINCE THIS OPTION HAS AN INFINITE NUMBER OF ORIENTATIONS TO SATISFY THE DESIRED LINE-OF-SIGHT DESCRIBED BY THE TWO DESIRED ANGLES, AN ANGLE WHICH SERVES AS A FREE PARAMETER TO GENERATE THE INFINITE SET OF SOLUTIONS IS DEFINED. GEOMETRICALLY THE ERECTION OF THE IMU AXIS SYSTEM IS DONE AS FOLLOWS--

THE X AND Z-AXES ARE INITIALLY ORIENTED IN THE PLANE DEFINED BY THE POSITION AND SOLAR VECTORS SUCH THAT THE DESIRED FIRST ANGLE IS ACHIEVED AND THE SECOND ANGLE IS ZERO. THE ENTIRE IMU AXIS SYSTEM IS THEN ROTATED ABOUT THE SOLAR VECTOR THROUGH THE ARBITRARY THIRD ANGLE. THE IMU AXIS SYSTEM IS THEN ROTATED ABOUT THE X-AXIS TO ACHIEVE THE DESIRED SECOND ANGLE.

(SEE FIGURE 8-8)

INPUT

ATYPE(I+2) - OPTION INDICATOR (=9 FOR THIS OPTION)

ROLL(7) -- DESIRED ANGLE BETWEEN THE FIRST VEHICLE IMU X-AXIS AND THE VEHICLE TO SUN VECTOR. DENOTED BY ALPHA IN FIGURE 8-8.

ROLL(8) -- DESIRED ANGLE BETWEEN THE PROJECTION OF THE VEHICLE TO SUN VECTOR INTO THE Y-Z PLANE AND THE NEGATIVE IMU Z-AXIS. THIS ANGLE IS POSITIVE IN THE COUNTERCLOCKWISE DIRECTION WHEN VIEWED IN THE POSITIVE X-AXIS DIRECTION. DENOTED BY BETA IN FIGURE 8-8.

ROLL(9) -- INITIAL ROTATION ANGLE ABOUT THE SOLAR VECTOR. THIS ANGLE SERVES AS A FREE PARAMETER IN MAKING THE ORIENTATION UNIQUE. THE INFINITE SET OF SOLUTIONS CAN BE GENERATED BY VARYING

THIS ANGLE. DENOTED BY GAMMA IN FIGURE 8-8.

ROLL(10) - DESIRED ANGLE BETWEEN THE SECOND VEHICLE IMU X-AXIS AND THE VEHICLE TO SUN VECTOR. DENOTED BY ALPHA IN FIGURE 8-8.

ROLL(11) - DESIRED ANGLE BETWEEN THE PROJECTION OF THE SECOND VEHICLE TO SUN VECTOR INTO THE Y-Z PLANE AND THE NEGATIVE IMU Z-AXIS. THIS ANGLE IS POSITIVE IN THE COUNTERCLOCKWISE DIRECTION WHEN VIEWED IN THE POSITIVE X-AXIS DIRECTION. DENOTED BY BETA IN FIGURE 8-8.

ROLL(12) - INITIAL ROTATION ANGLE ABOUT THE SOLAR VECTOR. THIS IS FOR THE SECOND VEHICLE. DENOTED BY GAMMA IN FIGURE 8-8.

EXAMPLE 1

```
ATYPE(3) =9,ROLL(7)=10.,5.,0.*
```

EXAMPLE 2

```
ATYPE (4)=9,ROLL(10)=10.,5.,0.*
```

EXAMPLE 3

```
ATYPE(3) =9,9,ROLL(7)=10.,5.,0.,ROLL(10)=10.,5.,0.*
```

EXPLANATION OF EXAMPLES

EXAMPLE 1 SETS UP THE IMU SYSTEM OF VEHICLE 1,
EXAMPLE 2 SETS UP THE IMU SYSTEM OF VEHICLE 2,
EXAMPLE 3 SETS UP THE IMU SYSTEM OF VEHICLE 3.

8.6.10. VEHICLE-TO-VEHICLE LINE-OF-SIGHT IMU ALIGNMENT

DESCRIPTION

THIS OPTION WILL ALIGN THE IMU MATRIX SUCH THAT A UNIT VECTOR FIXED IN THE SYSTEM COINCIDES WITH THE LINE-OF-SIGHT TO THE OTHER VEHICLE. THE DESIRED UNIT VECTOR IN THE SYSTEM IS SPECIFIED BY TWO INPUT ANGLES ALPHA AND BETA ALONG WITH A THIRD PARAMETRIC ANGLE GAMMA TO MAKE THE SOLUTION UNIQUE. GAMMA CAN BE VARIED TO GENERATE ALL POSSIBLE SOLUTIONS.

INPUT

ATYPE (I+2)-OPTION INDICATOR (=11 FOR THIS OPTION)

ROLL(7) - DESIRED ANGLE (ALPHA) BETWEEN VEHICLE 1 IMU X-AXIS AND THE VEHICLE-TO-VEHICLE LINE-OF-SIGHT VECTORS (MUST BE NON-ZERO)

ROLL(8) - DESIRED ANGLE (BETA) BETWEEN THE PROJECTION OF THE VEHICLE-TO-VEHICLE VECTOR INTO THE Y-Z PLANE AND THE NEGATIVE IMU Z-AXIS (FIRST VEHICLE)

ROLL(9) - INITIAL ROTATION ANGLE (GAMMA) OF VEHICLE 1 IMU ABOUT THE VEHICLE-TO-VEHICLE VECTOR

ROLL(10)- ALPHA, APPLYING TO VEHICLE 2 IMU (MUST BE NON-ZERO)

ROLL(11)- BETA, APPLYING TO VEHICLE 2 IMU

ROLL(12)- GAMMA, APPLYING TO VEHICLE 2 IMU

EXAMPLE

ATYPE(4)=11, ROLL(10)=5.0, ROLL(11)=15.0, ROLL(12)=20.0*

EXPLANATION OF EXAMPLE

VEHICLE 2 IMU IS ALIGNED WITH LINE-OF-SIGHT BETWEEN THE VEHICLES ACCORDING TO THE INPUT VALUES OF ALPHA, BETA, AND GAMMA.

ERROR MESSAGES

IF ATYPE OPTION 11 IS CALLED FOR AND 'NV'=1, THE MESSAGE 'ALIGNMENT OPTION INPUT ERROR' IS PRINTED, ATYPE IS SET TO ZERO, AND THE OPTION IS NOT ATTEMPTED.

8.6.11. IMU ALIGNMENT BASED ON PITCH ANGLE OF ATTACK AND BANK ANGLE

DESCRIPTION

THIS ALIGNMENT OPTION WILL ALIGN THE IMU SYSTEM TO A DESIRED PITCH ANGLE OF ATTACK AND BANK ANGLE.

INPUT

ATYPE(I+2)- OPTION INDICATOR (=13 FOR THIS OPTION)

PAATK(I+2)- DESIRED PITCH ANGLE OF ATTACK (DEG). THE PITCH ANGLE OF ATTACK IS DEFINED AS THE ANGLE WHOSE TANGENT IS THE NEGATIVE OF THE Z-COMPONENT OF RELATIVE VELOCITY DIVIDED BY THE X-COMPONENT OF RELATIVE VELOCITY IN THE BODY AXIS SYSTEM

BKANG(I+2)- DESIRED BANK ANGLE (DEG). THE BANK ANGLE IS THE ANGLE BETWEEN THE PROJECTION OF THE VEHICLE Z-AXIS INTO A PLANE PERPENDICULAR TO THE RELATIVE VELOCITY VECTOR AND THE POSITION VECTOR OF THE VEHICLE PROJECTED INTO THE SAME PLANE.

EXAMPLE

ATYPE(4)=13 ,PAATK(4)= 180.,BKANG(4)= 60.0*

EXPLANATION OF EXAMPLE

THE IMU OF VEHICLE 2 IS TO BE ALIGNED WITH THE X-BODY AXIS ALONG THE NEGATIVE RELATIVE VELOCITY VECTOR, AND THE SYSTEM ROTATED 60 DEG ABOUT THE RELATIVE VELOCITY VECTOR.

8.7. VEHICLE ATTITUDE SYSTEM

THE VEHICLE ATTITUDE ALIGNMENT OPTIONS GIVEN BELOW WILL

BE EXECUTED ONLY AT PHASE INITIATION. THE OPTION INDICATOR IS ATYPE(I), WHERE I IS EITHER 1 OR 2, CORRESPONDING TO VEHICLE 1 OR 2. THUS IF VEHICLE 1 IS TO BE ALIGNED, THE OPTION INDICATOR WILL BE ATYPE(1), AND FOR VEHICLE 2, THE INDICATOR WILL BE ATYPE(2).

8.7.1. VEHICLE ATTITUDE ALIGNED WITH INITIAL GUIDANCE MANEUVER ATTITUDE

DESCRIPTION

IN THIS OPTION THE VEHICLE ATTITUDE SYSTEM IS ALIGNED SUCH THAT THE X-AXIS IS ALONG THE INITIAL GUIDANCE COMPUTED THRUST DIRECTION, THE Y-AXIS IS PERPENDICULAR TO THE PLANE FORMED BY THE DESIRED THRUST DIRECTION VECTOR AND THE POSITION VECTOR. THE Z-AXIS COMPLETES THE STANDARD RIGHT-HANDED SYSTEM. FOR VERTICAL ASCENT, THE Y-AXIS COINCIDES WITH THE NEGATIVE ANGULAR MOMENTUM VECTOR. (SEE FIGURE 8-1)

INPUT

ATYPE(I) - OPTION INDICATOR (=1 FOR THIS OPTION).

EXAMPLE 1

```
ATYPE=1*
```

EXAMPLE 2

```
ATYPE(2) =1*
```

EXAMPLE 3

```
ATYPE=1,1*
```

EXPLANATION OF EXAMPLES

EXAMPLE 1 SETS UP THE ATTITUDE SYSTEM OF VEHICLE 1,
EXAMPLE 2 SETS UP THE ATTITUDE SYSTEM OF VEHICLE 2,
EXAMPLE 3 SETS UP THE ATTITUDE SYSTEM OF BOTH VEHICLES.

8.7.2. INPUT OF VEHICLE DYNAMIC AXES

DESCRIPTION

IN THIS OPTION THE VEHICLE ATTITUDE SYSTEM IS ALIGNED BY INPUT. THAT IS, THE DIRECTION COSINES OF EACH VEHICLE AXIS ARE INPUT.

INPUT

ATYPE(I) - OPTION INDICATOR (=2 FOR THIS OPTION)
RAXIS1 - COMPONENTS OF A UNIT VECTOR ALONG VEHICLE 1 X-DYNAMIC AXIS IN THE INERTIAL COORDINATE SYSTEM.

```
PAXIS1 - COMPONENTS OF A UNIT VECTOR ALONG VEHICLE
         1 Y-DYNAMIC AXIS IN THE INERTIAL
         COORDINATE SYSTEM.
YAXIS1 - COMPONENTS OF A UNIT VECTOR ALONG VEHICLE
         1 Z-DYNAMIC AXIS IN THE INERTIAL
         COORDINATE SYSTEM.
RAXIS2 - COMPONENTS OF A UNIT VECTOR ALONG VEHICLE
         2 X-DYNAMIC AXIS IN THE INERTIAL
         COORDINATE SYSTEM.
PAXIS2 - COMPONENTS OF A UNIT VECTOR ALONG VEHICLE
         2 Y-DYNAMIC AXIS IN THE INERTIAL
         COORDINATE SYSTEM.
YAXIS2 - COMPONENTS OF A UNIT VECTOR ALONG VEHICLE
         2 Z-DYNAMIC AXIS IN THE INERTIAL
         COORDINATE SYSTEM.

EXAMPLE 1
  ATYPE=2*
  RAXIS1=1.,0.,0., PAXIS1=0.,1.,0., YAXIS1=0.,0.,1.*

EXAMPLE 2
  ATYPE(2) =2*
  RAXIS2=1.,0.,0., PAXIS2=0.,1.,0., YAXIS2=0.,0.,1.*

EXAMPLE 3
  ATYPE=2,2*
  RAXIS1=1.,0.,0., PAXIS1=0.,1.,0., YAXIS1=0.,0.,1.*
  RAXIS2=1.,0.,0., PAXIS2=0.,1.,0., YAXIS2=0.,0.,1.*

EXPLANATION OF EXAMPLES
  EXAMPLE 1 SETS UP THE ATTITUDE SYSTEM OF VEHICLE 1,
  EXAMPLE 2 SETS UP THE ATTITUDE SYSTEM OF VEHICLE 2,
  EXAMPLE 3 SETS UP THE ATTITUDE SYSTEM OF BOTH VEHICLES.
```

8.7.3. LOCAL HORIZONTAL ALIGNMENT

```
DESCRIPTION
  IN THIS OPTION THE VEHICLE IS ALIGNED SUCH THAT
  THE X-AXIS IS IN THE LOCAL HORIZONTAL PLANE AND IS
  IN THE DIRECTION OF MOTION, THE Z-AXIS IS DIRECTED
  TOWARD THE CENTER OF THE REFERENCE BODY AND THE Y-
  AXIS COMPLETES THE STANDARD RIGHT-HANDED SYSTEM.
  (SEE FIGURE 8-2)

INPUT
  ATYPE(I)  - OPTION INDICATOR (=3 FOR THIS OPTION)

EXAMPLE 1
  ATYPE=3*
```

EXAMPLE 2
ATYPE(2) =3*

EXAMPLE 3
ATYPE=3,3*

EXPLANATION OF EXAMPLES
EXAMPLE 1 SETS UP THE ATTITUDE SYSTEM OF VEHICLE 1,
EXAMPLE 2 SETS UP THE ATTITUDE SYSTEM OF VEHICLE 2,
EXAMPLE 3 SETS UP THE ATTITUDE SYSTEM OF BOTH VEHICLES.

8.7.4. SUN-EARTH LINE ALIGNMENT

DESCRIPTION
IN THIS OPTION THE VEHICLE DYNAMIC AXIS SYSTEM WILL BE ALIGNED TO SATISFY A DESIRED ANGLE BETWEEN THE VEHICLE X-AXIS AND THE SUN LINE-OF-SIGHT AND ALSO DIRECT A BODY-FIXED LINE (ANTENNA LOS) AS CLOSELY AS POSSIBLE TO THE CENTER OF THE EARTH. THIS OPTION CAN BE USED TO ALIGN THE ATTITUDE SYSTEM FOR SOLAR ORIENTATION AND EARTH COMMUNICATIONS CONSTRAINTS. (SEE FIGURE 8-3)

INPUT
ATYPE(I) -- OPTION INDICATOR (=4 FOR THIS OPTION)
ROLL(1) - DESIRED ANGLE BETWEEN THE VEHICLE 1 X-AXIS AND THE VEHICLE-SUN LINE (DEG). DENOTED BY ALPHA IN FIGURE 8-3.
ROLL(4) - DESIRED ANGLE BETWEEN THE VEHICLE 2 X-AXIS AND THE VEHICLE-SUN LINE (DEG). DENOTED BY ALPHA IN FIGURE 8-3.
VEHL(1) - COORDINATES OF A UNIT VECTOR IN THE FIRST VEHICLE DYNAMIC COORDINATE SYSTEM. DENOTED BY UNIT VECTOR 1L IN FIGURE 8-3.
VEHL(4) - COORDINATES OF A UNIT VECTOR IN THE SECOND VEHICLE DYNAMIC COORDINATE SYSTEM.

EXAMPLE 1
ATYPE =4,ROLL(1)=5.,VEHL(1)=0.,0.,1.*

EXAMPLE 2
ATYPE(2) =4,ROLL(4)=5.,VEHL(4)=0.,0.,1.*

EXAMPLE 3
ATYPE =4,4,ROLL(1)=5.,ROLL(4)=5.,VEHL(1)=0.,0.,1.,
VEHL(4)=0.,0.,1.*

EXPLANATION OF EXAMPLES
EXAMPLE 1 SETS UP THE ATTITUDE SYSTEM OF VEHICLE 1,
EXAMPLE 2 SETS UP THE ATTITUDE SYSTEM OF VEHICLE 2,
EXAMPLE 3 SETS UP THE ATTITUDE SYSTEM OF BOTH VEHICLES.

8.7.5. LAUNCH SITE ALIGNMENT

DESCRIPTION

IN THIS OPTION THE VEHICLE ATTITUDE SYSTEM IS ALIGNED SUCH THAT THE X-AXIS IS ALONG THE GEODETIC OR SELENOGRAPHIC VERTICAL. THE Z-AXIS WILL BE IN THE GEOGRAPHIC OR SELENOGRAPHIC HORIZONTAL PLANE AND DIRECTED ALONG THE LAUNCH AZIMUTH. THE Y-AXIS COMPLETES THE STANDARD RIGHT-HANDED SYSTEM. (SEE FIGURE 8-4)

INPUT

ATYPE(I) - OPTION INDICATOR (=5 FOR THIS OPTION)

PHI - LAUNCH LATITUDE, GEODETIC OR SELENOGRAPHIC (DEG).

LAMBDA - LAUNCH LONGITUDE, GEOGRAPHIC OR SELENOCENTRIC (DEG).

LAZ - LAUNCH AZIMUTH FROM NORTH (DEG).

TRUDAT - TRUE OF DATE OPTION INDICATOR. IF TRUDAT IS SET TO 1,3,5, OR 7, THE ORIENTATION OF THE AXES IS WITH RESPECT TO THE TRUE EQUATOR AND EQUINOX OF DATE, OTHERWISE ORIENTATION IS WITH RESPECT TO THE MEAN EQUATOR AND EQUINOX OF EPOCH.

DTLAND - ELAPSED TIME SINCE LAUNCH (HR). INPUT OF A POSITIVE NUMBER WILL ALIGN THE IMU SYSTEM WITH THE POSITION OF THE LAUNCH SITE DTLAND HOURS IN THE PAST.

EXAMPLE 1

```
ATYPE=5,PHI=28.534,LAMBDA=-80.,LAZ=75.,TRUDAT=0.*
```

EXAMPLE 2

```
ATYPE(2)=5,PHI=28.534,LAMBDA=-80.,LAZ=75.,TRUDAT=0.*
```

EXAMPLE 3

```
ATYPE=5,5,PHI=28.534,LAMBDA=-80.,LAZ=75.,TRUDAT=0.*
```

EXAMPLE 4

```
ATYPE(3)=5,5,PHI=28.534,LAMBDA=-80.,LAZ=75.0*
TRUDAT = 0.,DTLAND = 1.*
```

EXPLANATION OF EXAMPLES

EXAMPLE 1 SETS UP THE ATTITUDE SYSTEM OF VEHICLE 1,
EXAMPLE 2 SETS UP THE ATTITUDE SYSTEM OF VEHICLE 2,
EXAMPLE 3 SETS UP THE ATTITUDE SYSTEM OF BOTH VEHICLES.
EXAMPLE 4 ALIGNS THE IMU OF EACH VEHICLE WITH THE POSITION OF THE LAUNCH SITE ONE HOUR PREVIOUSLY.

8.7.6. LM LANDING SITE ALIGNMENT

DESCRIPTION

IN THIS OPTION THE VEHICLE ATTITUDE ALIGNMENT IS SUCH THAT THE X-AXIS WILL BE ALONG THE LANDING SITE VERTICAL AT T=T + DTLAND, THE Z-AXIS WILL BE PERPENDICULAR TO THE X-AXIS IN THE CSM ORBIT PLANE IN THE DIRECTION OF THE CSM MOTION. THE Y-AXIS COMPLETES THE STANDARD RIGHT-HANDED SYSTEM. (SEE FIGURE 8-5)

INPUT

ATYPE(I) - OPTION INDICATOR (=6 FOR THIS OPTION)

DTLAND - TIME TO GO TO LANDING ON LUNAR SURFACE (HR).

EXAMPLE 1

ATYPE=6,DTLAND=0.7*

EXAMPLE 2

ATYPE(2) =6,DTLAND=0.7*

EXAMPLE 3

ATYPE=6,6,DTLAND=0.7*

EXPLANATION OF EXAMPLES

EXAMPLE 1 SETS UP THE ATTITUDE SYSTEM OF VEHICLE 1,
EXAMPLE 2 SETS UP THE ATTITUDE SYSTEM OF VEHICLE 2,
EXAMPLE 3 SETS UP THE ATTITUDE SYSTEM OF BOTH VEHICLES.

8.7.7. VELOCITY ALIGNMENT

DESCRIPTION

IN THIS OPTION THE VEHICLE ATTITUDE ALIGNMENT IS SUCH THAT THE X-AXIS IS ALONG THE VELOCITY VECTOR, THE Y-AXIS IS ALONG THE NEGATIVE ANGULAR MOMENTUM VECTOR, AND THE Z-AXIS COMPLETES THE STANDARD RIGHT-HANDED SYSTEM. (SEE FIGURE 8-6)

INPUT

ATYPE(I) - OPTION INDICATOR (=7 FOR THIS OPTION)

EXAMPLE 1

ATYPE=7*

EXAMPLE 2

ATYPE(2) =7*

EXAMPLE 3

ATYPE=7,7*

EXPLANATION OF EXAMPLES
EXAMPLE 1 SETS UP THE ATTITUDE SYSTEM OF VEHICLE 1,
EXAMPLE 2 SETS UP THE ATTITUDE SYSTEM OF VEHICLE 2,
EXAMPLE 3 SETS UP THE ATTITUDE SYSTEM OF BOTH VEHICLES.

8.7.8. NEGATIVE VELOCITY ALIGNMENT

DESCRIPTION
IN THIS OPTION THE VEHICLE ATTITUDE SYSTEM IS ALIGNED SUCH THAT THE X-AXIS IS ALONG THE NEGATIVE VELOCITY VECTOR, THE Y-AXIS IS ALONG THE NEGATIVE ANGULAR MOMENTUM VECTOR, AND THE Z-AXIS COMPLETES THE STANDARD RIGHT-HANDED SYSTEM. (SEE FIGURE 8-7)

INPUT
ATYPE(I) - OPTION INDICATOR (=8 FOR THIS OPTION)

EXAMPLE 1
ATYPE=8*

EXAMPLE 2
ATYPE(2) =8*

EXAMPLE 3
ATYPE=8,8*

EXPLANATION OF EXAMPLES
EXAMPLE 1 SETS UP THE ATTITUDE SYSTEM OF VEHICLE 1,
EXAMPLE 2 SETS UP THE ATTITUDE SYSTEM OF VEHICLE 2,
EXAMPLE 3 SETS UP THE ATTITUDE SYSTEM OF BOTH VEHICLES.

8.7.9. SOLAR ORIENTATION ALIGNMENT

DESCRIPTION
IN THIS OPTION THE VEHICLE ATTITUDE SYSTEM IS ORIENTED SUCH THAT A DESIRED SET OF SOLAR LOCK ANGLES ARE OBTAINED. SINCE THIS OPTION HAS AN INFINITE NUMBER OF ORIENTATIONS TO SATISFY THE DESIRED LINE-OF-SIGHT DESCRIBED BY THE TWO DESIRED ANGLES, AN ANGLE IS DEFINED WHICH SERVES AS A FREE PARAMETER TO GENERATE THE INFINITE SET OF SOLUTIONS. GEOMETRICALLY THE ERECTION OF THE ATTITUDE SYSTEM IS DONE AS FOLLOWS--
THE X AND Z-AXES ARE INITIALLY ORIENTED IN THE PLANE OF THE POSITION AND SOLAR VECTORS SUCH THAT THE DESIRED FIRST ANGLE IS ACHIEVED AND THE SECOND ANGLE IS ZERO. THE ENTIRE ATTITUDE SYSTEM IS THEN ROTATED ABOUT THE

SOLAR VECTOR THROUGH THE ARBITRARY THIRD ANGLE. THE ATTITUDE SYSTEM IS THEN ROTATED ABOUT THE X-AXIS TO ACHIEVE THE DESIRED SECOND ANGLE.
(SEE FIGURE 8-8)

INPUT

ATYPE(I) - OPTION INDICATOR (=9 FOR THIS OPTION)

ROLL(1) - DESIRED ANGLE BETWEEN THE FIRST VEHICLE X-AXIS AND THE VEHICLE TO SUN VECTOR. DENOTED BY ALPHA IN FIGURE 8-8.

ROLL(2) - DESIRED ANGLE BETWEEN THE PROJECTION OF THE FIRST VEHICLE TO SUN VECTOR INTO THE Y-Z PLANE AND THE VEHICLE NEGATIVE Z-AXIS. THIS ANGLE IS POSITIVE IN THE COUNTERCLOCKWISE DIRECTION WHEN VIEWED IN THE POSITIVE X DIRECTION. DENOTED BY BETA IN FIGURE 8-8.

ROLL(3) - INITIAL ROTATION ANGLE (FIRST VEHICLE) ABOUT THE SOLAR VECTOR. THIS ANGLE SERVES AS A FREE PARAMETER IN MAKING THE ORIENTATION UNIQUE. THE INFINITE SET OF SOLUTIONS CAN BE GENERATED BY VARYING THIS ANGLE. DENOTED BY GAMMA IN FIGURE 8-8.

ROLL(4) - DESIRED ANGLE BETWEEN THE SECOND VEHICLE X-AXIS AND THE VEHICLE TO SUN VECTOR. DENOTED BY ALPHA IN FIGURE 8-8

ROLL(5) - DESIRED ANGLE BETWEEN THE PROJECTION OF THE SECOND VEHICLE TO SUN VECTOR INTO THE Y-Z PLANE AND THE VEHICLE NEGATIVE Z-AXIS. THIS PLANE IS POSITIVE IN THE COUNTERCLOCKWISE DIRECTION WHEN VIEWED IN THE POSITIVE X DIRECTION. DENOTED BY BETA IN FIGURE 8-8.

ROLL(6) - INITIAL ROTATION ANGLE (SECOND VEHICLE) DENOTED BY GAMMA IN FIGURE 8-8.

EXAMPLE 1

```
ATYPE=9,ROLL(1)=10.,5.,0.*
```

EXAMPLE 2

```
ATYPE(2) =9,ROLL(4)=10.,5.,0.*
```

EXAMPLE 3

```
ATYPE=9,9,ROLL(1)=10.,5.,0.,ROLL(4)=10.,5.,0.*
```

EXPLANATION OF EXAMPLES

EXAMPLE 1 SETS UP THE ATTITUDE SYSTEM OF VEHICLE 1,
EXAMPLE 2 SETS UP THE ATTITUDE SYSTEM OF VEHICLE 2,
EXAMPLE 3 SETS UP THE ATTITUDE SYSTEM OF BOTH VEHICLES.

8.7.10. VEHICLE-TO-VEHICLE LINE-OF-SIGHT ATTITUDE ALIGNMENT

DESCRIPTION

THIS OPTION WILL ALIGN THE VEHICLE ATTITUDE MATRIX SUCH THAT A UNIT VECTOR FIXED IN THE SYSTEM COINCIDES WITH THE LINE-OF

SIGHT TO THE OTHER VEHICLE. THE DESIRED UNIT VECTOR IN THE SYSTEM IS SPECIFIED BY TWO INPUT ANGLES, ALPHA AND BETA, ALONG WITH A THIRD PARAMETRIC ANGLE, GAMMA, TO MAKE THE SOLUTION UNIQUE. GAMMA CAN BE VARIED TO GENERATE ALL POSSIBLE SOLUTIONS.

INPUT

ATYPE(I) - OPTION INDICATOR (=11 FOR THIS OPTION)
ROLL(1) - DESIRED ANGLE (ALPHA) BETWEEN THE FIRST VEHICLE X-AXIS AND THE VEHICLE 1-TO-VEHICLE 2 VECTOR.
*NOTE-ALPHA MUST BE NON-ZERO
ROLL(2) - DESIRED ANGLE BETWEEN THE PROJECTION OF THE VEHICLE 1-TO-VEHICLE 2 VECTOR INTO THE Y-Z PLANE AND THE FIRST VEHICLE NEGATIVE Z-AXIS.
ROLL(3) - INITIAL ROTATION ANGLE (GAMMA) OF VEHICLE 1 ABOUT THE VEHICLE-TO-VEHICLE VECTOR.
ROLL(4) - ALPHA,APPLYING TO SECOND VEHICLE
*NOTE-ALPHA MUST BE NON-ZERO
ROLL(5) - BETA, APPLYING TO SECOND VEHICLE
ROLL(6) - GAMMA, APPLYING TO SECOND VEHICLE

EXAMPLE

ATYPE=11, ROLL(1)=10.0, ROLL(2)=35.0, ROLL(3)=18.0*

EXPLANATION OF EXAMPLE

THE ATTITUDE OF VEHICLE 1 IS ALIGNED AS SPECIFIED BY THE ROLL(N) INPUTS.

ERROR MESSAGES

IF ATYPE OPTION 11 IS CALLED FOR AND 'NV'=1, THE MESSAGE 'ALIGNMENT OPTION INPUT ERROR' IS PRINTED, ATYPE IS SET TO ZERO, AND THE OPTION IS NOT ATTEMPTED.

8.7.11. VEHICLE ALIGNMENT BASED ON PITCH ANGLE OF ATTACK AND BANK ANGLE

DESCRIPTION

THIS ALIGNMENT OPTION WILL ALIGN THE VEHICLE ATTITUDE TO A DESIRED PITCH ANGLE OF ATTACK AND BANK ANGLE.

INPUT

ATYPE(I) -OPTION INDICATOR (=13 FOR THIS OPTION)
PAATK(I) -DESIRED PITCH ANGLE OF ATTACK (DEG)
BKANG(I) -DESIRED BANK ANGLE (DEG)

*NOTE - SEE SECTION 8.6.11 FOR DEFINITIONS OF PITCH ANGLE OF ATTACK AND BANK ANGLE

EXAMPLE

ATYPE = 13, PAATK = 180.0, BKANG = 60.0*

EXPLANATION OF EXAMPLE

THE ATTITUDE OF VEHICLE 1 WILL BE ALIGNED WITH THE X-BODY AXIS ALONG THE NEGATIVE RELATIVE VELOCITY VECTOR, AND THE SYSTEM ROTATED 60 DEG. ABOUT THE RELATIVE VELOCITY VECTOR.

8.8. INSTANTANEOUS MANEUVERS ABOUT THE VEHICLE AND IMU AXES

DESCRIPTION

THIS OPTION ALLOWS THE AXIS SYSTEM OF EITHER THE VEHICLE ATTITUDE OR IMU SYSTEM OR BOTH TO BE ROTATED INSTANTANEOUSLY THROUGH A SET OF INPUT ANGLES. THE VEHICLE ATTITUDE AND IMU SYSTEM ARE ROTATED FROM THE ALIGNMENT AT PHASE INITIATION AS SELECTED BY ATYPE(I) OR ATYPE(I+2). (SEE FIGURE 8-9)

INPUT

ROLL(1) - MANEUVER ANGLES TO BE PERFORMED ABOUT THE FIRST VEHICLE AXES (DEGREES). THE MANEUVERS ARE PERFORMED SEQUENTIALLY IN THE ORDER Y, Z, AND X. DENOTED BY ALPHA, BETA, AND GAMMA IN FIGURE 8-9.

ROLL(4) - MANEUVER ANGLES TO BE PERFORMED ABOUT THE SECOND VEHICLE AXES (DEGREES). THE MANEUVERS ARE PERFORMED SEQUENTIALLY IN THE ORDER Y, Z, AND X. DENOTED BY ALPHA, BETA, AND GAMMA IN FIGURE 8-9.

ROLL(7) - MANEUVER ANGLES TO BE PERFORMED ABOUT THE FIRST VEHICLE IMU AXES (DEGREES). THE MANEUVERS ARE PERFORMED SEQUENTIALLY IN THE ORDER Y, Z, X. DENOTED BY ALPHA, BETA, AND GAMMA IN FIGURE 8-9.

ROLL(10) MANEUVER ANGLE TO BE PERFORMED ABOUT THE SECOND VEHICLE IMU AXES (DEGREES). THE MANEUVERS ARE PERFORMED SEQUENTIALLY IN THE ORDER Y, Z, AND X. DENOTED BY ALPHA, BETA, AND GAMMA IN FIGURE 8-9.

EXAMPLE1

```
ROLL(1)=90.,0.,180.*
ROLL(4)=90.,0.,180.*
ROLL(7)=0.,90.,0.*
ROLL(10)=90.,0.,0.*
```

EXPLANATION OF EXAMPLE

ROLL(1) AND ROLL(7) WILL ROTATE BOTH THE VEHICLE ATTITUDE SYSTEM AND THE IMU SYSTEM 90 DEG. ABOUT THE Y-AXIS AND 180 DEG. ABOUT THE X-AXIS. ROLL(4) WILL ROTATE THE SECOND VEHICLE ATTITUDE SYSTEM 90 DEG. ABOUT THE Z-AXIS. ROLL(10) WILL ROTATE THE SECOND IMU SYSTEM 90 DEG. ABOUT THE Y-AXIS.

8.9. ATTITUDE ALIGNMENT BASED ON IMU GIMBAL ANGLES

DESCRIPTION

THIS OPTION ALIGNS THE ATTITUDE SYSTEM BASED ON THE IMU GIMBAL ANGLES. THE ATTITUDE SYSTEM IS EQUIVALENCED TO THE IMU SYSTEM (AFTER IMU ALIGNMENT) AND THE ATTITUDE SYSTEM IS THEN ROTATED INSTANTANEOUSLY THROUGH THE SET OF INPUT GIMBAL ANGLES. THIS ROTATION FORMS THE NAVIGATION BASE SYSTEM. IF THE VEHICLE IS THE 'CSM' A ROTATION ABOUT THE Y-AXIS THROUGH THE NEGATIVE OF THE INPUT ANGLE, ALPNB, IS MADE TO FORM THE VEHICLE SYSTEM. IF THE VEHICLE IS THE LM, NO ROTATION IS REQUIRED SINCE THE VEHICLE SYSTEM SYSTEM COINCIDES WITH THE NAVIGATION BASE SYSTEM. IF NO ALIGNMENT IS SELECTED FOR THE IMU SYSTEM AS DESCRIBED IN SECTION 8.6, THE LAST ALIGNMENT OF THE IMU SYSTEM PRIOR TO PHASE INITIATION WILL BE USED AS THE IMU SYSTEM. (SEE FIGURE 8-10)

INPUT

ATYPE(I) - OPTION INDICATOR (=10 FOR THIS OPTION)

ROLL(1) - IMU GIMBAL ANGLES WHICH ARE THE MANEUVER ANGLES TO BE PERFORMED ABOUT THE FIRST VEHICLE AXES (DEG.) THE MANEUVERS ARE PERFORMED SEQUENTIALLY IN THE ORDER Y, Z, AND X. THE IMU GIMBAL ANGLES ARE DENOTED BY ALPHA, BETA, AND GAMMA IN FIGURE 8-10.

ROLL(4) - IMU GIMBAL ANGLES WHICH ARE THE MANEUVER ANGLES TO BE PERFORMED ABOUT THE SECOND VEHICLE AXES (DEG). THE MANEUVERS ARE PERFORMED SEQUENTIALLY IN THE ORDER Y, Z, AND X. THE IMU GIMBAL ANGLES ARE DENOTED BY ALPHA, BETA, AND GAMMA IN FIGURE 8-10.

ALPNB -- ANGLE OF ROTATION ABOUT THE Y-AXIS REQUIRED TO TRANSFORM FROM THE VEHICLE AXIS SYSTEM TO THE NAVIGATION BASE SYSTEM (DEG).

EXAMPLE 1

```
ATYPE=10,0,3,      ALPNB=33.,    ROLL(1)=38.,5.,5.*
```

EXPLANATION OF EXAMPLE

THE VALUE OF ATYPE WILL ALIGN THE IMU SYSTEM TO THE LOCAL HORIZONTAL AND EQUIVALENCE THE ATTITUDE SYSTEM TO THE IMU SYSTEM. ROLL1 WILL ROTATE THE ATTITUDE SYSTEM 5 DEG. ABOUT THE Y-AXIS, 5 DEG. ABOUT THE Z-AXIS AND 5 DEG. ABOUT THE X-AXIS. IF THE VEHICLE IS THE 'CSM', ALPNB WILL ROTATE THE SYSTEM -33 DEG. ABOUT THE Y-AXIS.

8.10. VEHICLE WINDOWS

TWO WINDOWS CAN BE SPECIFIED FOR EACH VEHICLE. THE LINE-OF-SIGHT TO THE CENTER OF EACH WINDOW CAN BE SPECIFIED BY TWO ANGLES WITH REFERENCE TO VEHICLE OR IMU SYSTEM. THE FIRST ANGLE IS THE ANGLE BETWEEN THE LINE-OF-SIGHT TO

THE WINDOW AND THE X-AXIS. THE SECOND ANGLE IS THE ANGLE BETWEEN THE PROJECTION OF THE LINE-OF-SIGHT INTO THE Y-Z PLANE AND THE NEGATIVE Z-AXIS. THE SECOND ANGLE IS MEASURED POSITIVELY FROM THE NEGATIVE Z-AXIS TOWARD THE POSITIVE Y-AXIS.

INPUT

V1WND1 - TWO ANGLES WHICH DEFINE WINDOW 1 FOR VEHICLE 1 (DEG).

V1WND2 - TWO ANGLES WHICH DEFINE WINDOW 2 FOR VEHICLE 1 (DEG).

V2WND1 - TWO ANGLES WHICH DEFINE WINDOW 1 FOR VEHICLE 2 (DEG).

V2WND2 - TWO ANGLES WHICH DEFINE WINDOW 2 FOR VEHICLE 2 (DEG).

EXAMPLE

```
V1WND1=45.,0.0,    V1WND2=0.0,45. *
V2WND1=90.,45.,    V2WND2=45.,90. *
```

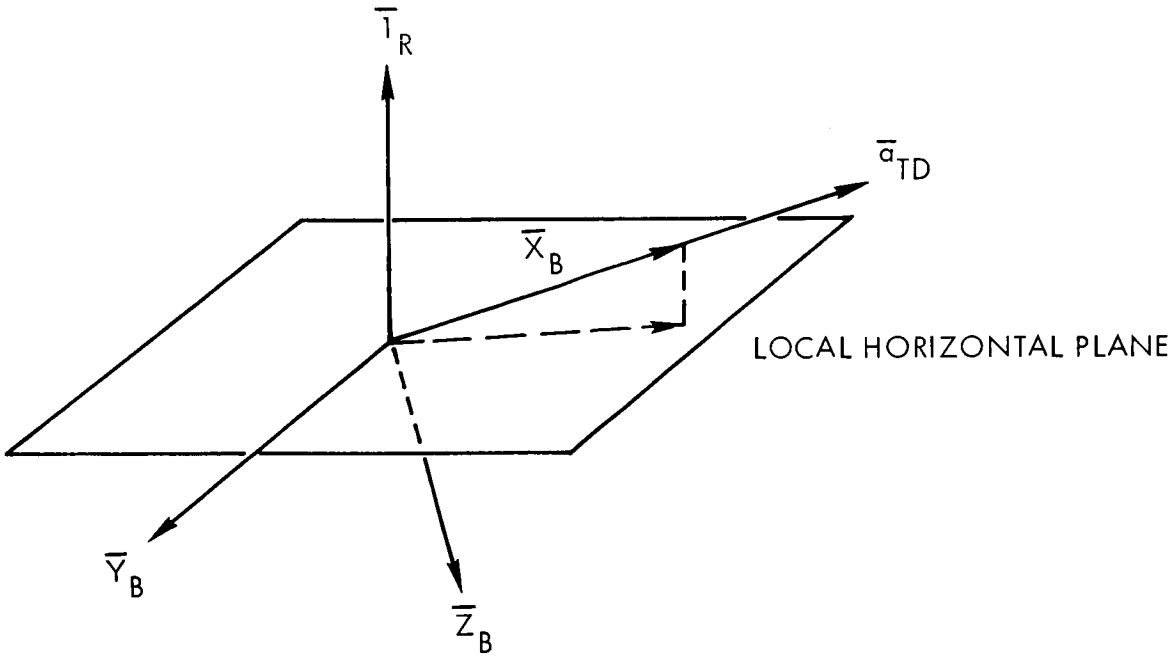

$\bar{I}_R$	-	Unit vector in direction of position vector
$\bar{a}_{TD}$	-	Guidance - computed desired thrust acceleration
$\bar{X}_B$	-	Vehicle or IMU X-Axis
$\bar{Y}_B$	-	Vehicle or IMU Y-Axis
$\bar{Z}_B$	-	Vehicle or IMU Z-Axis

Figure 8-1. Guidance Alignment
(See Section 8.6.1 or 8.7.1)

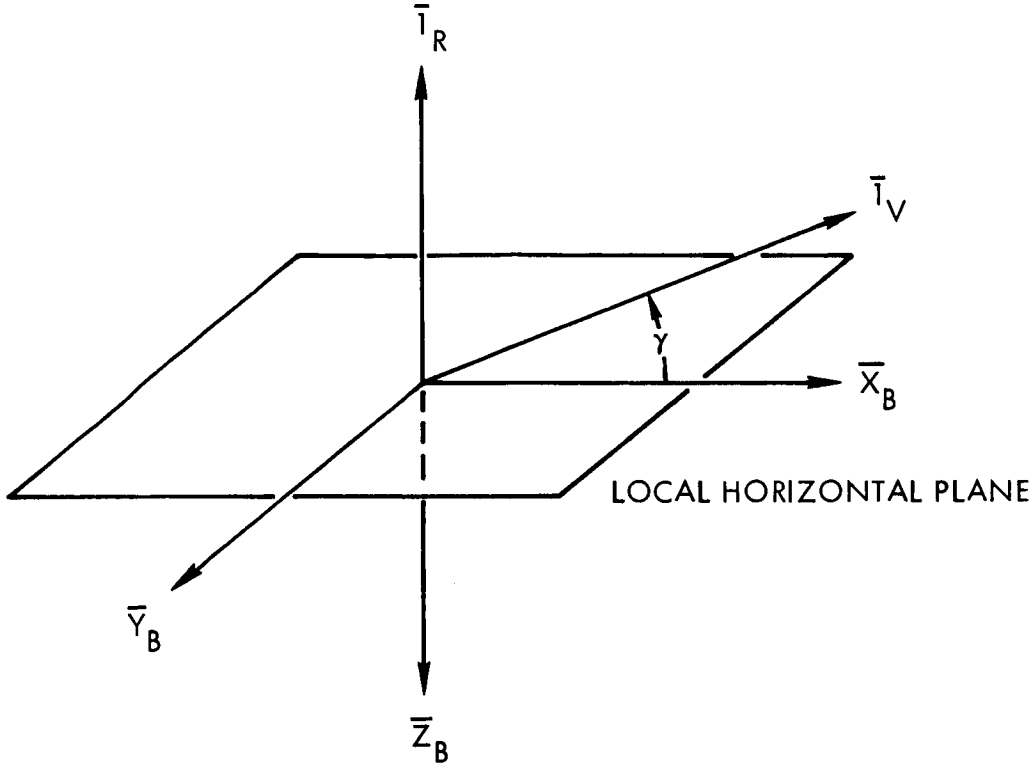

$\bar{1}_R$	-	Unit vector in direction of position vector
$\bar{1}_V$	-	Unit vector in direction of velocity vector
$\bar{X}_B$	-	Vehicle or IMU X-Axis
$\bar{Y}_B$	-	Vehicle or IMU Y-Axis
$\bar{Z}_B$	-	Vehicle or IMU Z-Axis
γ	-	Inertial flight-path angle

Figure 8-2. Local Horizontal Alignment
(See Section 8.6.3 or 8.7.3)

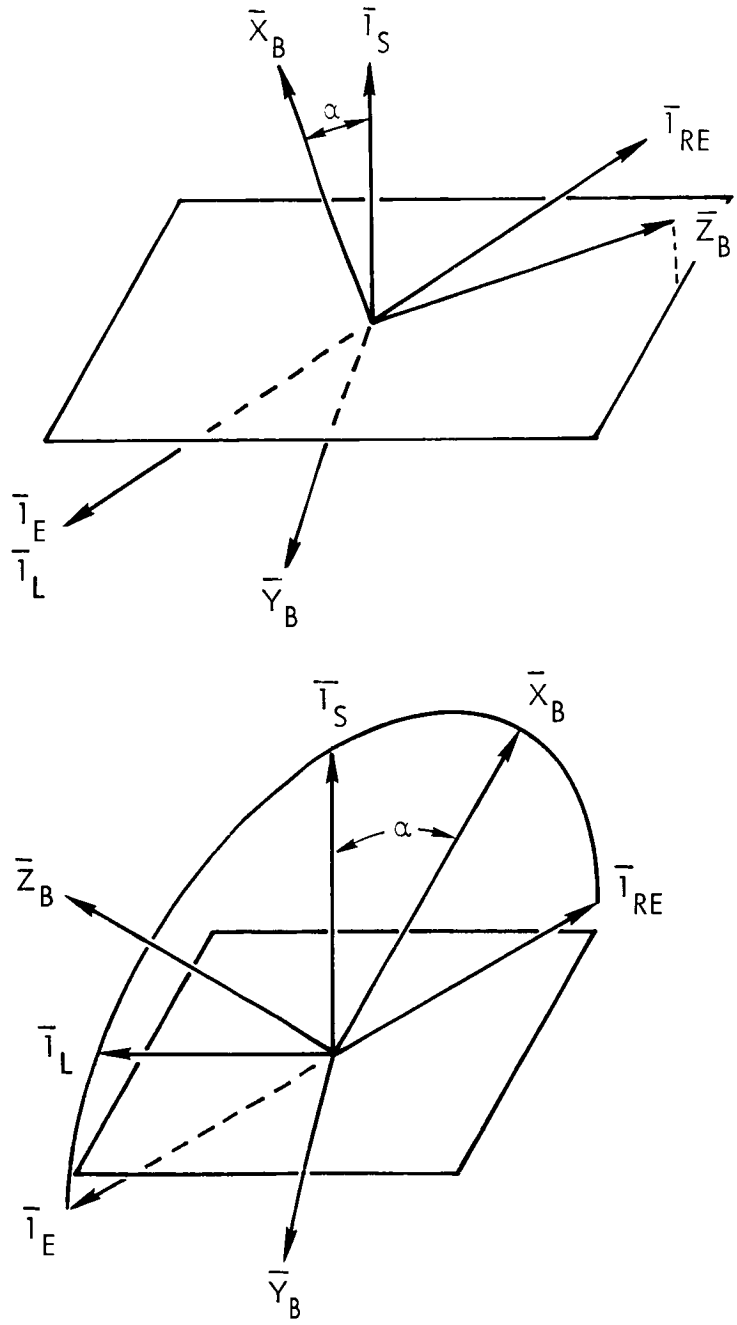

Figure 8-3. Sun-Earth Alignment
(See Section 8.6.4 or 8.7.4)

$\bar{1}_S$ - Unit vector in direction of sun

$\bar{1}_E$ - Unit vector in direction of earth center

$\bar{1}_{RE}$ - Unit vector in direction of geocentric radius vector

$\bar{1}_L$ - Unit vector in direction of vehicle-fixed line

$\bar{X}_B$ - Vehicle attitude or IMU X-Axis

$\bar{Y}_B$ - Vehicle attitude or IMU Y-Axis

$\bar{Z}_B$ - Vehicle attitude or IMU Z-Axis

α - Desired angle between sun vector and vehicle $\bar{X}_B$-Axis

The first figure illustrates the case in which it is possible to align the vehicle-fixed line to the earth direction while maintaining a desired angle, α. This situation is achievable only when the angle, α, plus the angle between X_B-axis and $\bar{1}_L$ is greater than the sun-vehicle-earth angle. The second figure illustrates the case in which this is not possible, so the vehicle-fixed line is placed in the plane defined by $\bar{1}_S$ and $\bar{1}_E$. This will yield the minimum angle solution.

Figure 8-3. Sun-Earth Alignment
(See Section 8.6.4 or 8.7.4)(Continued)

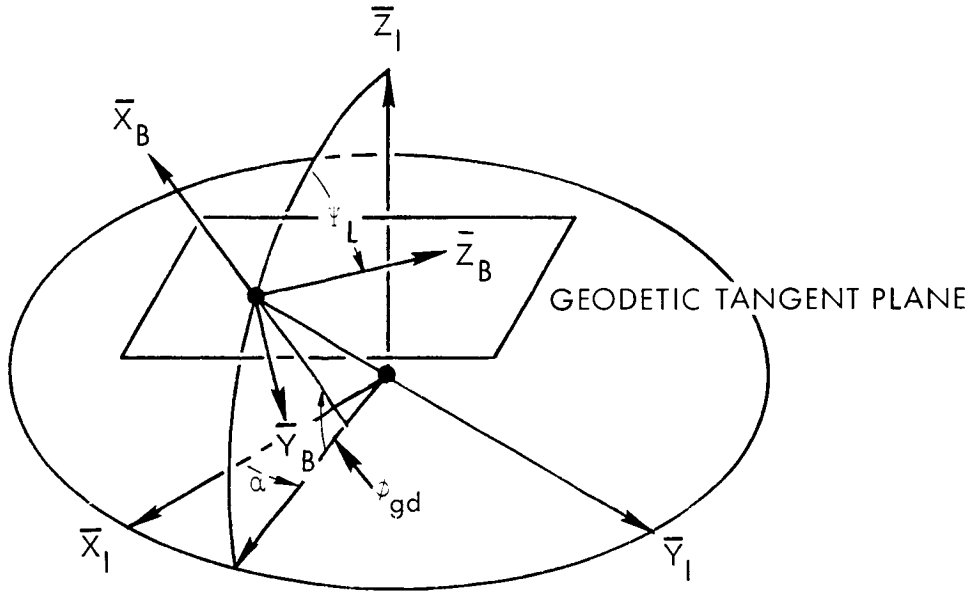

ϕ_{gd}	-	Geodetic latitude of launch site
Ψ_L	-	Launch azimuth
α	-	Right ascension of launch site
$\bar{X}_I$	-	Inertial X-Axis
$\bar{Y}_I$	-	Inertial Y-Axis
$\bar{Z}_I$	-	Inertial Z-Axis
$\bar{X}_B$	-	Vehicle or IMU X-Axis
$\bar{Y}_B$	-	Vehicle or IMU Y-Axis
$\bar{Z}_B$	-	Vehicle or IMU Z-Axis

Figure 8-4. Launch Alignment
(See Section 8.6.5 or 8.7.5)

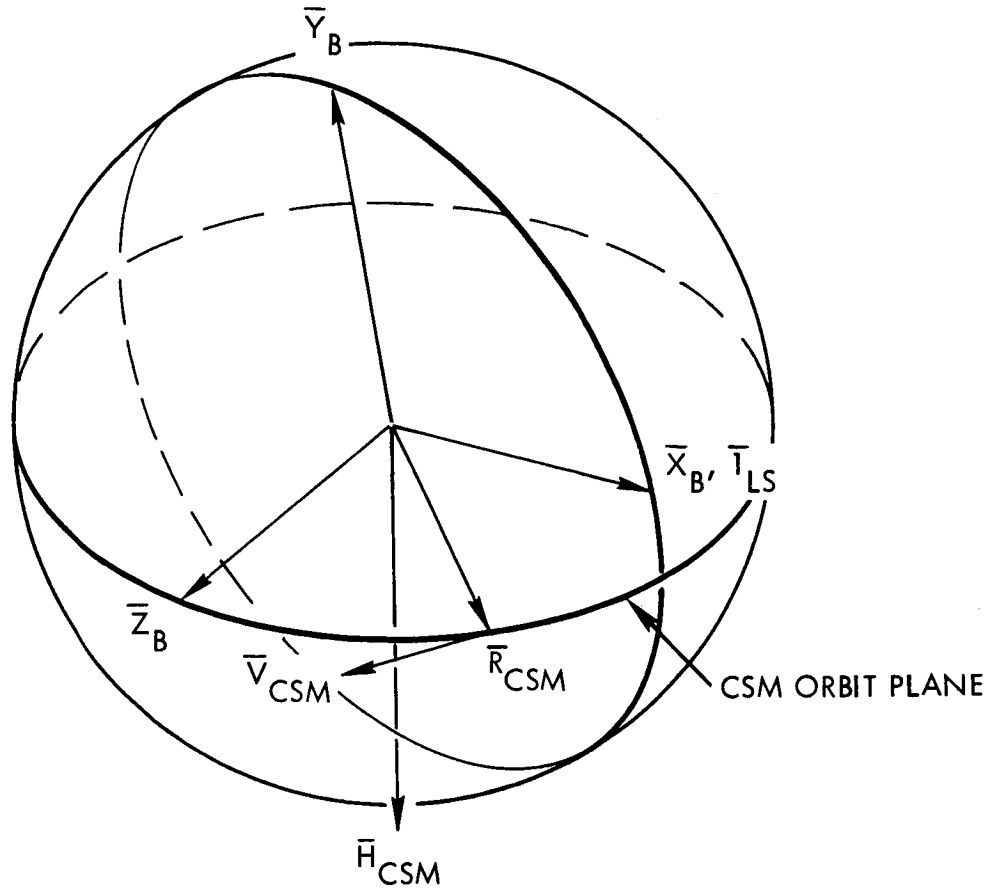

$\bar{1}_{LS}$	-	Unit vector in direction of landing site vertical
$\bar{H}_{CSM}$	-	CSM angular momentum vector
$\bar{R}_{CSM}$	-	CSM position vector
$\bar{V}_{CSM}$	-	CSM velocity vector
$\bar{X}_B$	-	Vehicle or IMU X-Axis
$\bar{Y}_B$	-	Vehicle or IMU Y-Axis
$\bar{Z}_B$	-	Vehicle or IMU Z-Axis

Figure 8-5. Landing Site Alignment
(See Section 8.6.6 or 8.7.6)

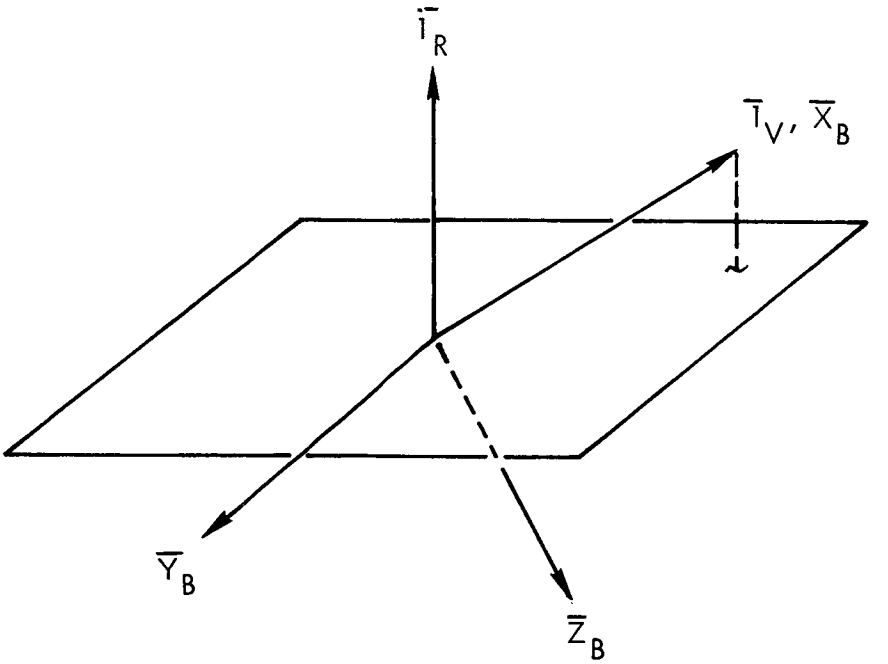

$\bar{i}_R$ - Unit vector in direction of position vector

$\bar{i}_V$ - Unit vector in direction of velocity vector

$\bar{X}_B$ - Vehicle or IMU X-Axis

$\bar{Y}_B$ - Vehicle or IMU Y-Axis

$\bar{Z}_B$ - Vehicle or IMU Z-Axis

Figure 8-6. Velocity Alignment
(See Section 8.6.7 or 8.7.7)

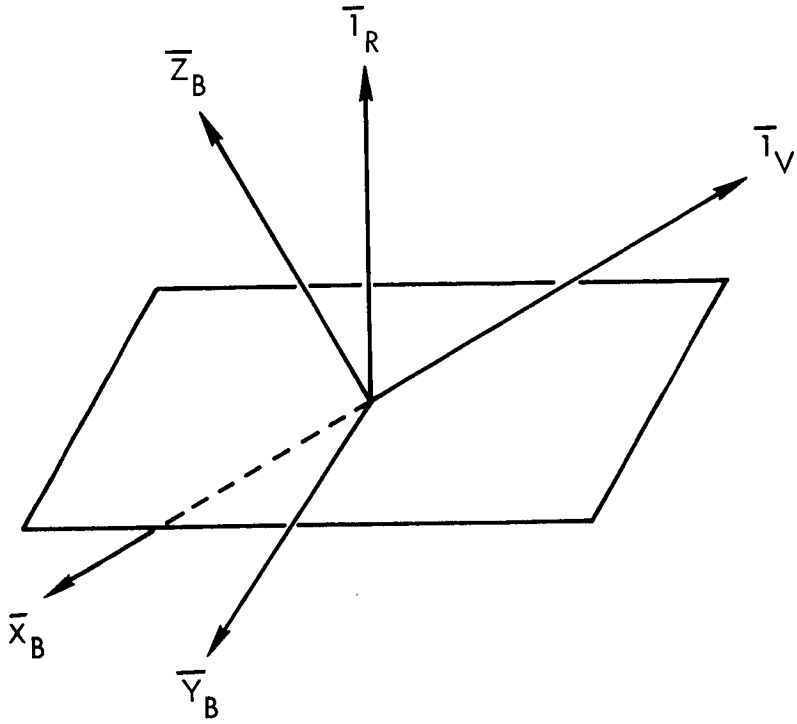

$\bar{1}_R$ - Unit vector in direction of position vector

$\bar{1}_V$ - Unit vector in direction of velocity vector

$\bar{X}_B$ - Vehicle or IMU X-Axis

$\bar{Y}_B$ - Vehicle or IMU Y-Axis

$\bar{Z}_B$ - Vehicle or IMU Z-Axis

Figure 8-7. Negative Velocity Alignment
(See Section 8.6.8 or 8.7.8)

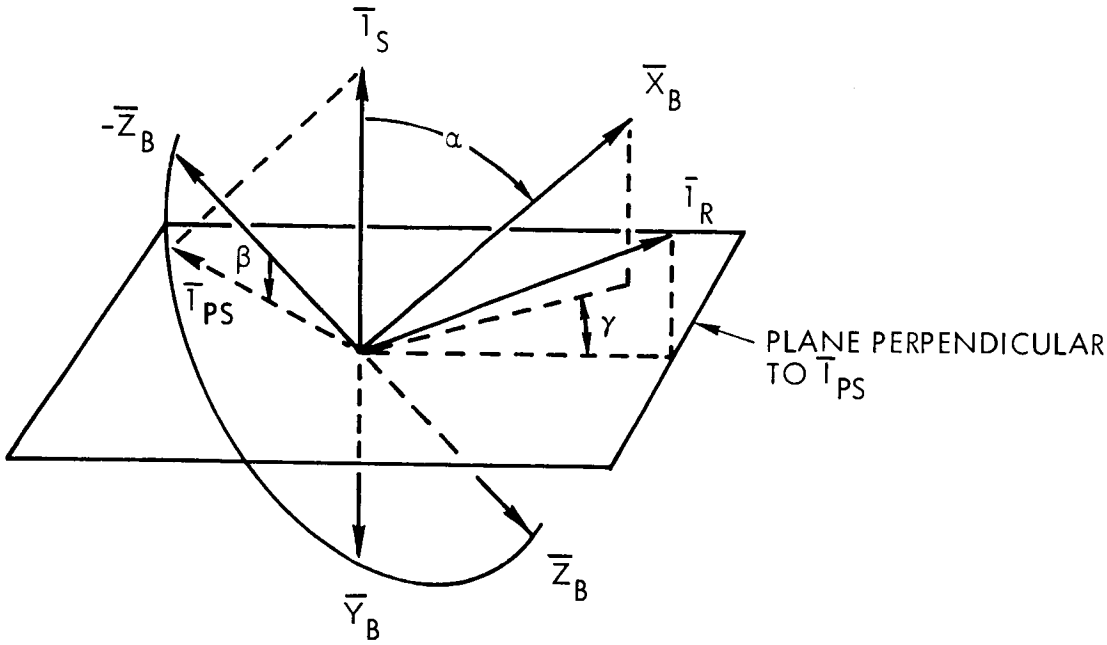

$\bar{1}_S$	-	Unit vector in direction of the sun
$\bar{1}_{PS}$	-	Unit vector in direction of the projection of $\bar{1}_S$ into the $\bar{Y}_B$ - $\bar{Z}_B$ plane
$\bar{1}_R$	-	Unit vector in direction of the position vector
$\bar{X}_B$	-	Vehicle or IMU X-Axis
$\bar{Y}_B$	-	Vehicle or IMU Y-Axis
$\bar{Z}_B$	-	Vehicle or IMU Z-Axis
α	-	Desired angle between $\bar{X}_B$-Axis and $\bar{1}_S$
β	-	Desired angle between projection of $\bar{1}_S$ into $\bar{Y}_B$ - $\bar{Z}_B$ plane and $-\bar{Z}_B$
γ	-	Desired angle between the projections of $\bar{1}_R$ and $\bar{X}_B$ into a plane perpendicular to $\bar{1}_S$

Figure 8-8. Solar Orientation Alignment
(See Section 8.6.9 or 8.7.9)

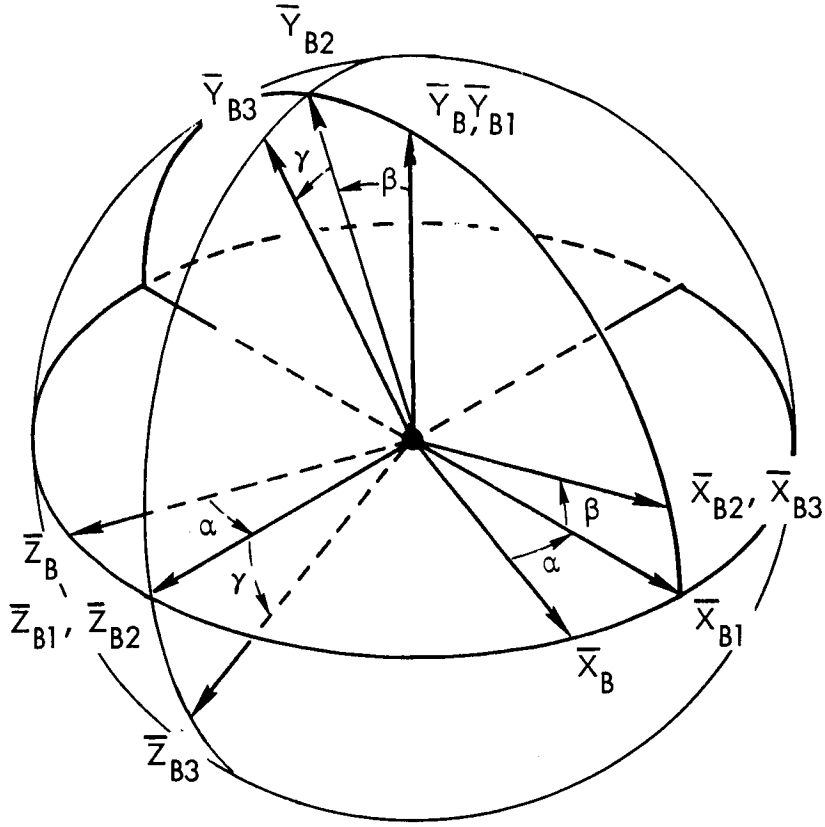

$\bar{X}_B$	-	Vehicle or IMU X-Axis
$\bar{Y}_B$	-	Vehicle or IMU Y-Axis
$\bar{Z}_B$	-	Vehicle or IMU Z-Axis
α, β, γ	-	Maneuver angles performed about $\bar{Y}$-Axis, $\bar{Z}$-Axis and $\bar{X}$-Axis
$\bar{X}_{B1}, \bar{Y}_{B1}, \bar{Z}_{B1}$	-	Alignment after rotating $\bar{X}_B$ and $\bar{Z}_B$ axes through α
$\bar{X}_{B2}, \bar{Y}_{B2}, \bar{Z}_{B2}$	-	Alignment after rotating $\bar{X}_{B1}$ and $\bar{Y}_{B1}$ axes through β
$\bar{X}_{B3}, \bar{Y}_{B3}, \bar{Z}_{B3}$	-	Final alignment after rotating $\bar{Y}_B$ and $\bar{Z}_B$ axes through γ

Figure 8-9. Instantaneous Maneuvers about the Vehicle and IMU Axes (See Section 8.8)

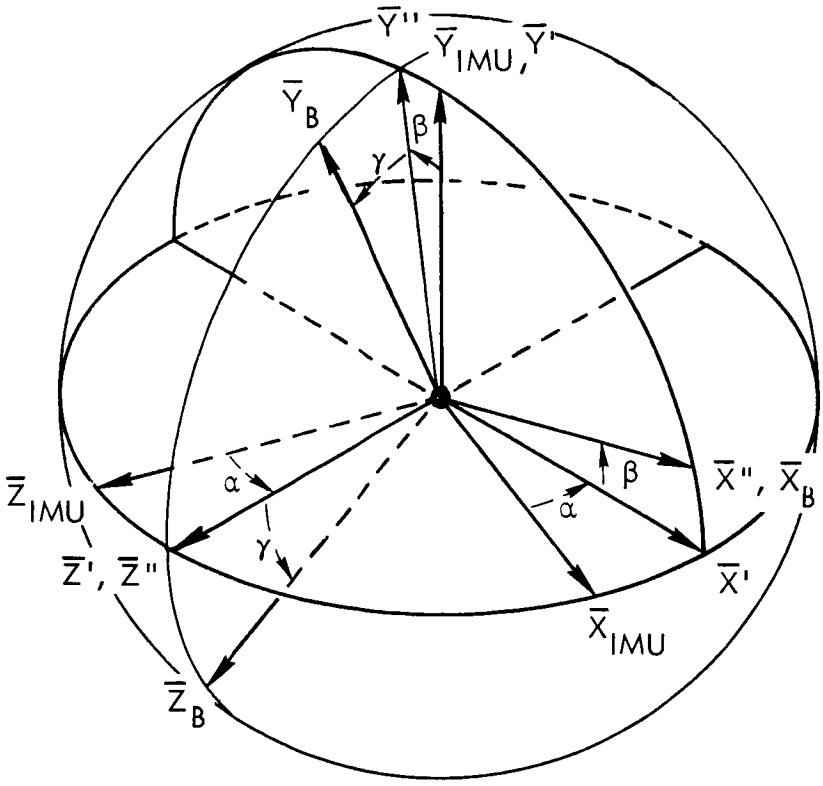

Figure 8-10. Attitude Alignment Based on IMU Gimbal Angles (See Section 8. 9)

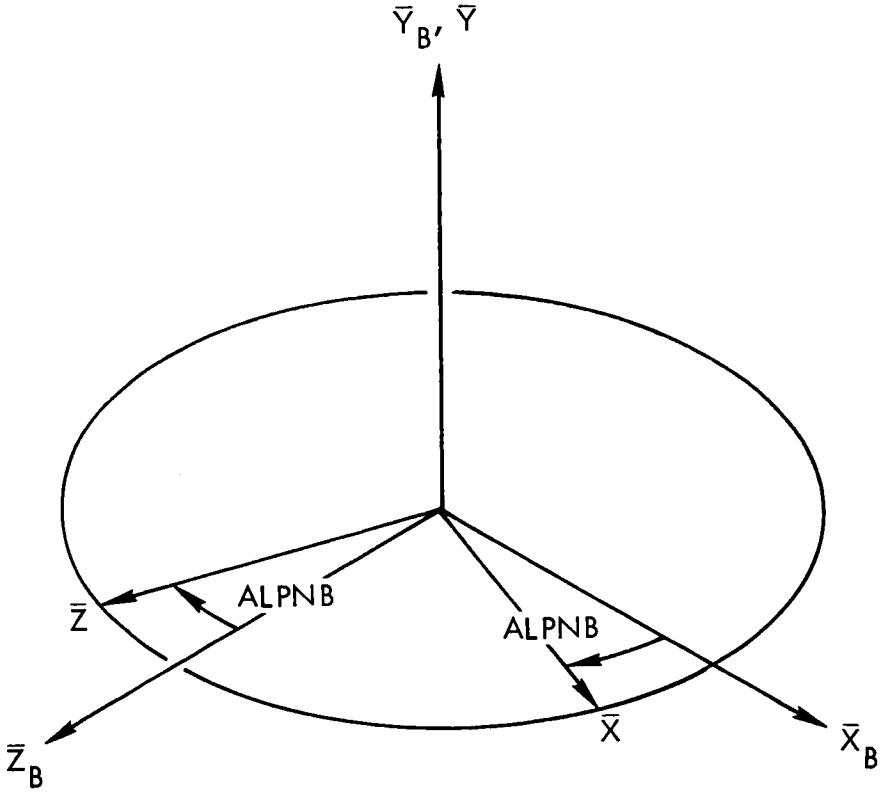

$\bar{X}_{IMU}$	-	IMU X-Axis
$\bar{Y}_{IMU}$	-	IMU Y-Axis
$\bar{Z}_{IMU}$	-	IMU Z-Axis
α, β, γ	-	Maneuver angles to be performed about the axes. The maneuvers are performed sequentially in the order α (about $\bar{Y}$-Axis), β (about $\bar{Z}$-Axis), and γ (about $\bar{X}$-Axis).
ALPNB	-	Angle of rotation about the $\bar{Y}$-Axis to transform from the vehicle axis system to the navigation base system
$\bar{X}', \bar{Y}', \bar{Z}'$	-	System obtained after rotation about the $\bar{Y}_{IMU}$-Axis through the angle α.
$\bar{X}'', \bar{Y}'', \bar{Z}''$	-	System obtained after rotation about the $\bar{Z}'$-Axis through the angle β.
$\bar{X}_B, \bar{Y}_B, \bar{Z}_B$	-	System obtained after rotation about the $\bar{X}''$-Axis through the angle γ. This system is the navigation base system of the vehicle is the 'CSM' and the vehicle system if the vehicle is the 'LM'. If the vehicle is the 'CSM', the rotation about the $\bar{Y}_B$-Axis through the negative of the angle, ALPNB, is made to obtain the vehicle system. This rotation is illustrated in the second figure.

Figure 8-10. Attitude Alignment Based on IMU Gimbal Angles (See Section 8.9) (Continued)

9. GRAVITY MODEL

```
INPUT
  J2E  - EARTH ZONAL HARMONIC COEFFICIENT, ND.
  J3E  - EARTH ZONAL HARMONIC COEFFICIENT, ND.
  J4E  - EARTH ZONAL HARMONIC COEFFICIENT, ND.
  J22E - EARTH SECTORIAL HARMONIC COEFFICIENT, ND.
  L22E - PHASE ANGLE FOR COMPUTING POSITION OF X-AXIS
         DIRECTED THROUGH EARTH'S EQUATOR, RADIAN.
  RBE  - RADIUS OF EARTH, ER.
  MUE  - EARTH'S GRAVITATIONAL PARAMETER, ER**3/HR**2.
  J2M  - MOON ZONAL HARMONIC COEFFICIENT, ND.
  J3M  - MOON ZONAL HARMONIC COEFFICIENT, ND.
  J4M  - MOON ZONAL HARMONIC COEFFICIENT, ND.
  J22M - MOON SECTORIAL HARMONIC COEFFICIENT, ND.
  L22M - PHASE ANGLE FOR COMPUTING POSITION OF X-AXIS
         DIRECTED THROUGH MOON'S EQUATOR, RADIAN.
  RBM  - RADIUS OF THE MOON, ER.
  MUM  - MOONS GRAVITATIONAL PARAMETER, ER**3/HR**2.
  EMPOT- FLAG TO EVALUATE ASPHERICAL ACCELERATION.
      =0., EVALUATE.
      =1., DO NOT EVALUATE FOR THE MOON.
      =2., DO NOT EVALUATE FOR EARTH.
      =3., DO NOT EVALUATE FOR EARTH OR MOON.

    NOMINAL VALUES
      THE VALUES GIVEN BELOW ARE THOSE WHICH ARE
      ASSEMBLED IN THE PROGRAM. IF INPUT IS OMITTED
      THE PROGRAM WILL USE THESE VALUES.

      J2E   =1082.30D-6
      J3E   =-2.3D-6
      J4E   =-1.8D-6
      J22E  =1.9D-6
      L22E  =-.3665191429188092 2D0
      RBE   =1.0D0
      MUE   =19.9094165D0
      J2M   =207.108D-6
      J3M   =0
      J4M   =0
      J22M  =207.160D-7
      L22M  =0
      RBM   =0.2725062773D0
      MUM   =.244883757D0
      EMPOT =0
```

10. PHASE TERMINATION

10.1. COAST PHASE TERMINATICN - MOON REFERENCE

10.1.1. ORBIT COUNT

```
INPUT
  TSTOP - TERMINATION OPTICN INDICATOR ( 3 FOR THIS OPTION)
  OMAX - DESIRED TERMINAL VALUE OF PHASE ORBIT COUNT
  TCMAX - DESIRED TERMINAL VALUE OF TOTAL ORBIT COUNT

*EXAMPLE 1
  TSTOP=3,  OMAX=1. *

*EXPLANATION OF EXAMPLE 1
  THE PHASE IS TERMINATED WHEN THE PHASE ORBIT COUNT
  REACHES ONE.

*EXAMPLE 2
  TSTOP=3, TOMAX=5. *

*EXPLANATION OF EXAMPLE 2
  THE PHASE IS TERMINATED WHEN THE TOTAL ORBIT COUNT
  REACHES FIVE.
```

10.1.2. SELENCGRAPHIC LONGITUDE

```
INPUT
  TSTOP - TERMINATICN OPTICN INDICATOR (=4 FOR THIS OPTION)
  OMAX  - ORBIT NUMBER DURING WHICH LONGITUDE TERMINATION
          OCCURS
  LCNSTP- DESIRED TERMINAL SELENCGRAPHIC LCNGITUDE(DEG)

  *EXAMPLE
    TSTOP = 4,  LONSTP = -50., OMAX = 3.*
```

10.1.3. DECLINATION

```
INPUT
  TSTOP-TERMINATION OPTION INDICATOR( 5 FOR THIS OPTION)
  LATSTP - DESIRED VALUE OF TERMINAL DECLINATICN(DEG)
  OMAX - THE ABSOLUTE VALUE OF CMAX IS THE ORBIT NUMBER
```

DURING WHICH TERMINATICN IS TO OCCUR. THE SIGN OF OMAX INDICATES THE ASCENDING DECLINATION (PLUS) OR DESCENDING (MINUS) DECLINATICN PCINT

*EXAMPLE
TSTOP = 5, LATSTP = 15., OMAX = -1.*

10.1.4. SELENOGRAPHIC LATITUDE

INPUT
TSTOP-TERMINATION OPTION INDICATOR(6 FOR THIS OPTION)
LATSTP - DESIRED TERMINAL SELENOGRAPHIC LATITUDE(DEG)
CMAX - ABSOLUTE VALUE IS ORBIT NUMBER FOR TERMINATION,SIGN INDICATES ASCENDING (PLUS) OR DESCENDING (MINUS)POINT

*EXAMPLE
TSTOP = 6, LATSTP = 10., CMAX = 2.*

10.1.5. ALTITUDE ABOVE SPHERICAL MOON

INPUT
TSTOP-TERMINATION OPTION INDICATOR(7 FOR THIS OPTION)
RALTFT-DESIRED TERMINAL ALTITUDE ABOVE SPHERICAL MOON (ISCALE)

*EXAMPLE
TSTOP = 7, RALTFT = 480000., ISCALE = 4*

10.1.6. SELENOCENTRIC FLIGHT PATH ANGLE

INPUT
TSTOP-TERMINATION OPTION INDICATOR(8 FOR THIS OPTION)
GAMLUN-DESIRED TERMINAL SELENOCENTRIC FLIGHT PATH ANGLE(DEG)

*EXAMPLE
TSTOP = 8, GAMLUN = 0.*

*IF TERMINATION IS DESIRED AT PERIAPSIS, SET TSTOP=8 AND GAMLUN=0.0. IF TERMINATICN IS DESIRED AT APOAPSIS, SET TSTOP=1 AND GAMLUN=0.0.

10.1.7. CENTRAL ANGLE

```
INPUT
  NVTERM - NUMBER OF THE VEHICLE TO BE TERMINATED
  TSTOP-TERMINATION OPTION INDICATOR(10 FOR THIS OPTION)
  CASTP - DESIRED TERMINAL ANGLE BETWEEN INITIAL AND TERMINAL
          POSITION VECTORS (DEG)

  *EXAMPLE
    TSTOP = 10,  CASTP = 5.*
    NVTERM = 2*
```

10.1.8. CENTRAL ANGLE TIME

```
INPUT
  NVTERM - NUMBER OF THE VEHICLE TO BE TERMINATED
  TSTOP-TERMINATION OPTION INDICATOR(10 FOR THIS OPTION)
  CASTP - MUST BE ZERO FOR THIS OPTION
  CATIME - DESIRED TIME LAPSE FROM TSTART AT TERMINATION(HRS)

  *EXAMPLE
    TSTOP = 10, TSTART = 3., CASTP = 0.,  CATIME = 1.*
    NVTERM = 2*
```

10.2. COAST PHASE TERMINATION - EARTH REFERENCE

10.2.1. ORBIT COUNT

```
INPUT
  TSTOP - TERMINATION OPTION INDICATOR (13 FOR THIS OPTION)
  OMAX - DESIRED TERMINAL VALUE OF PHASE ORBIT COUNT
  TOMAX - DESIRED TERMINAL VALUE OF TOTAL ORBIT COUNT

*EXAMPLE 1
  TSTOP=13,  OMAX=1. *

*EXPLANATION OF EXAMPLE 1
  THE PHASE IS TERMINATED WHEN THE PHASE ORBIT COUNT
  REACHES ONE.

*EXAMPLE 2
  TSTOP=13,  TOMAX=5. *

*EXPLANATION OF EXAMPLE 2
  THE PHASE IS TERMINATED WHEN THE TOTAL ORBIT COUNT
```

REACHES FIVE.

10.2.2. GEOGRAPHIC LONGITUDE

```
INPUT
  TSTOP-TERMINATION OPTION INDICATOR(14 FOR THIS OPTION)
  LONSTP - DESIRED TERMINAL GEOGRAPHIC LONGITUDE(DEG)
  OMAX - ORBIT NUMBER DURING WHICH TERMINATION IS TO OCCUR

  *EXAMPLE
    TSTOP = 14, OMAX = 1.,  LONSTP = 330.*
```

10.2.3. GEOCENTRIC DECLINATION

```
INPUT
  TSTOP-TERMINATION OPTION INDICATOR(15 FOR THIS OPTION)
  LATSTP - DESIRED TERMINAL DECLINATION(DEG)
  OMAX-ABSOLUTE VALUE IS ORBIT NUMBER DURING WHICH TERMINATION
         IS TO OCCUR, SIGN IS PLUS FOR ASCENDING DECLINATION
         POINT AND MINUS FOR DESCENDING DECLINATION POINT.

  *EXAMPLE
    TSTOP = 15,  OMAX = -1.,  LATSTP = 27.*
```

10.2.4. GEODETIC LATITUDE

```
INPUT
  TSTOP-TERMINATION OPTION INDICATOR(16 FOR THIS OPTION)
  LATSTP- DESIRED TERMINAL GEODETIC LATITUDE (DEG)
  OMAX - ABSOLUTE VALUE OF ORBIT NUMBER DURING WHICH TERMIN-
         ATION IS TO OCCUR. SIGN IS PLUS FOR ASCENDING LATI-
         TUDE POINT AND NEGATIVE FOR DESCENDING LATITUDE POINT

  *EXAMPLE
    TSTOP = 16,  OMAX = -1.,  LATSTP = 27.1*
```

10.2.5. ALTITUDE ABOVE OBLATE EARTH

```
INPUT
  TSTOP-TERMINATION OPTION INDICATOR(17 FOR THIS OPTION)
  RALTFT - DESIRED TERMINAL ALTITUDE ABOVE SPHERICAL EARTH
```

(ISCALE)

*EXAMPLE
TSTOP = 17, RALTFT = 400000., ISCALE = 4*

10.2.6. GEOCENTRIC FLIGHT PATH ANGLE

INPUT
TSTOP-TERMINATION OPTION INDICATOR(18 FOR THIS OPTION)
GAMETH - DESIRED TERMINAL GEOCENTRIC FLIGHT PATH ANGLE(DEG)

*EXAMPLE
TSTOP = 18, GAMETH = 0.*

*IT SHOULD BE NOTED THAT A ZERO VALUE WILL CAUSE TERMINATION TO OCCUR AT PERIAPSIS. TERMINATION WILL OCCUR AT APOAPSIS BY USING TSTOP=11 AND GAMETH=0.0.

10.2.7. EARTH RELATIVE FLIGHT PATH ANGLE

INPUT
TSTOP-TERMINATION OPTICN INDICATOR(19 FOR THIS OPTION)
GAMETH - DESIRED TERMINAL EARTH RELATIVE FLIGHT PATH ANGLE

*EXAMPLE
TSTOP = 19, GAMETH = 5.*

*TERMINATION WILL OCCUR AT PERIAPSIS BY SETTING TSTOP=19 AND GAMETH=0.0. IF TERMINATICN AT APOAPSIS IS DESIRED SET TSTOP=12 AND GAMETH=0.0.

1C.2.8. CENTRAL ANGLE

INPUT
NVTERM - NUMBER OF THE VEHICLE TO BE TERMINATED
TSTOP-TERMINATION OPTION INDICATOR(20 FOR THIS OPTION)
CASTP - DESIRED TERMINAL ANGLE BETWEEN INITIAL AND TERMINAL POSITION VECTORS

*EXAMPLE
TSTOP = 20, CASTP = -10.*
NVTERM = 2*

10.2.9. CENTRAL ANGLE TIME

```
INPUT
  NVTERM - NUMBER OF THE VEHICLE TO BE TERMINATED
  TSTOP-TERMINATION OPTION INDICATOR(20 FOR THIS OPTION)
  CASTP - MUST BE ZERO FOR THIS OPTION
  CATIME - TIME LAPSE FROM TSTART AT TERMINATION(HRS)

  *EXAMPLE
    TSTOP = 20,  CASTP = 0.,  TSTART = 3.,  CATIME = 1.*
    NVTERM = 2*
```

10.3. BACK UP TERMINATIONS FOR ALL PHASES

10.3.1. TWO VEHICLE MINIMUM RADIUS DIFFERENCE

```
INPUT
  RMINV - DESIRED TERMINAL RADIAL DISTANCE DIFFERENCE BETWEEN
          THE TWO VEHICLES(ISCALE)
  NV    - MUST BE TWO FOR THIS OPTION

*EXAMPLE
  NV = 2,  RMINV = 1000.,  ISCALE = 4*
```

10.3.2. TIME

```
INPUT
  TMAX -MAXIMUM ALLOWABLE VALUE OF TIME(HRS)
        (NOMINALLY =15.0D0)

  *EXAMPLE
    TMAX = .10D3
```

10.3.3. MAXIMUM DISTANCE FROM EARTH

```
INPUT
  RMAXE - MAXIMUM ALLOWABLE DISTANCE FROM EARTH(EARTH RADII)
          (NOMINALLY =75.)
```

```
*EXAMPLE
  RMAXE = 117.*
```

10.3.4. MINIMUM DISTANCE FROM EARTH

```
INPUT
  RMINE - MINIMUM ALLOWABLE DISTANCE FROM EARTH(EARTH RADII)
          (NOMINALLY =1.)

*EXAMPLE
  RMINE = 1.*
```

10.3.5. MAXIMUM ALLOWABLE DISTANCE FROM MOON

```
INPUT
  RMAXL - MAXIMUM ALLOWABLE DISTANCE FROM MOON(EARTH RADII)
          (NOMINALLY =25.)

*EXAMPLE
  RMAXL = 25.*
```

10.3.6. MINIMUM ALLOWABLE DISTANCE FROM MOON

```
INPUT
  RMINL - MINIMUM ALLOWABLE DISTANCE FROM MOON (EARTH RADII)
          (NOMINALLY = 0)

*EXAMPLE
  RMINL = 0.27
```

10.4. DESCENT PHASE TERMINATION OPTIONS

10.4.1. PHASE TIME LAPSE

```
INPUT
  TSTOP-TERMINATION OPTION INDICATOR(23 FOR THIS OPTION)
  TTR   - DESIRED TERMINAL PHASE TIME LAPSE(HOURS)

*EXAMPLE
```

```
TSTOP = 23,  TTR = .00277777777*
```

10.4.2. HOHMANN DESCENT INITIATION

```
INPUT
  TSTOP-TERMINATION OPTION INDICATOR(24 FOR THIS OPTION)
  AHB - HOHMANN BURN CENTRAL ANGLE(DEG)
  ALSC - POWERED DESCENT CENTRAL ANGLE(DEG)
  RTH - DESIRED PERIAPSIS DISTANCE(EARTH RADII)
  TABC - INITIAL ELAPSED TIME COAST(HRS)
  THB - HOHMANN DESCENT BURN TIME DURATION(HRS)
  TMS - COAST TIME BETWEEN SEPARATION AND HOHMANN BURN(HRS)
  TPF - POWERED DESCENT BURN TIME(HRS)
  * LANDING SITE COORDINATES MUST BE INPUT.

*EXAMPLE
 TSTOP=24,  AHB=1.746,  ALSC=15.2,  RTH=.27488,  TABC=0.*
 THB=.0009921,  TMS=.5,  TPF=.18283333*
*EXPLANATION OF EXAMPLE
THIS EXAMPLE DETERMINES THE SEPARATION TIME BASED ON THE
ANGLES AND TIME DURATIONS GIVEN ABOVE
```

10.4.3. HOHMANN INITIATION TIME FOR NON-PERICYNTHION INITIATION OF POWERED DESCENT

```
INPUT
  TSTOP-TERMINATION OPTION INDICATOR(25 FOR THIS OPTION)
  ILPTR - MUST BE ZERO FOR THIS OPTION
  ALSC  - POWERED DESCENT CENTRAL ANGLE(DEG)
  TPF   - POWERED DESCENT BURN DURATION(HRS)
  RCUTOF - RADIUS DIFFERENCE BETWEEN DESIRED PERICYNTHION
           RADIUS AND DESIRED DESCENT INITIATION RADIUS.
           (NOMINALLY = 0)(UNITS CONTROLLED BY ISCALE)

*EXAMPLE
  TSTOP = 25,  ILPTR = 0,  ALSC = 15.2,  TPF = .1735*
```

10.5. ASCENT PHASE TERMINATION OPTIONS

10.5.1. LM LIFTOFF BASED ON CSM PHASE ANGLE

```
INPUT
```

```
TSTOP-TERMINATION OPTION INDICATOR(26 FOR THIS OPTION)
ILPTR - MUST BE ZERO FOR THIS OPTION
IABRT - MUST BE ZERO FOR THIS OPTION
DELL - OUT OF PLANE LIMIT (DEG)
ATHD - DESIRED CSM PHASE ANGLE AT LIFTOFF(DEG)
APHD - LM RENDEZVOUS TRANSFER ANGLE (DEG)
TMS  - COAST TIME DURATION UNTIL CSM IS WITHIN ONE ORBIT OF
       LIFTOFF(HRS)

*EXAMPLE
  TSTOP = 26,  ILPTR = 0.  IABRT = 0., TMS = 2.3,  ATHD = 0.
  APHD = 200.,  DELL = 1.3*
```

10.5.2.LM LIFTOFF BASED ON CONCENTRIC FLIGHT PLAN

```
INPUT
  TSTOP-TERMINATION OPTION INDICATOR
  IABRT - MUST BE ONE FOR THIS OPTION
  APHD  - MUST BE ONE FOR THIS OPTION
  TMS - ELAPSED TIME COAST UNTIL CSM IS WITHIN ONE ORBIT OF
        LIFTOFF
  DELL - OUT OF PLANE LIMIT(DEG)
  ATHD - DESIRED CSM PHASE ANGLE AT LIFTOFF(DEG)
  ALH - COAST ANGLE PRIOR TO CSI MANEUVER(DEG)
  RCUTOF - DESIRED LM  CONCENTRIC RADIAL DISTANCE(EARTH RADII)
  ATHR- IF LESS THAN 90. IS DESIRED CSM LEAD ANGLE AT TRANSFER
         INITIATION(DEG)
  AHB  - FOR ATHR GREATER THAN 90. IS DESIRED LM TO CSM LOOK
         ANGLE AT TRANSFER INITIATION(DEG)
  BETA - LM ASCENT BURN ARC (DEG)
  TABC - LM ASCENT BURN TIME(HRS)
  XMTOV - CSI MANEUVER DELTA VELOCITY ESTIMATE(FT/SEC)
  RTH - HOHMANN APOAPSIS DISTANCE(EARTH RADII)
  RDD - HOHMANN PERIAPSIS DISTANCE(EARTH RADII)
  ALSC - LM PHASE ANGLE AT TRANSFER INITIATION (DEG)

  *EXAMPLE (SAME DATA AS IN PREVIOUS OPTION PLUS)
    APHD = 1., IABRT = 1, ALH = 90., RCUTOF = .29138002*
    ATHR = 1.86,  BETA = 9.545,  TABC = .11495815, XMTOV = 100
    RTH = .2813556,  RDD = .27515039,  ALSC = 25.2 *
```

10.5.3.LM LIFTOFF WITHOUT CSI MANEUVER

```
INPUT
  TSTOP-TERMINATION OPTION INDICATOR(26 FOR THIS OPTION)
  IABRT - MUST BE  2  FOR THIS OPTION
  APHD -  MUST BE 1. FOR THIS OPTION
```

```
TMS - COAST TIME DURATION UNTIL CSM IS WITHIN ONE ORBIT OF
      LIFTOFF(HRS)
DELL - OUT OF PLANE LIMIT(DEG)
ATHD - DESIRED CSM PHASE ANGLE AT LIFTOFF(DEG)
ALH  - COAST ANGLE PRIOR TO CSI MANEUVER(DEG)
ATHR- IF LESS THAN 90. IS DESIRED CSM LEAD ANGLE AT TRANSFER
       INITIATION(DEG)
AHB - FOR ATHR GREATER THAN 90. IS DESIRED LM-TO-CSM LOOK
      ANGLE AT TRANSFER INITIATICN (DEG)

*EXAMPLE
  TSTOP = 26,  IABRT = 2,  APHD = 1.,  TMS = 2.3,  DELL = 1.3*
  ATHD = 0., ALH = 90.,  ATHR = 100.,  AHB = 60.,  BETA = 9.54
  TABC =.115,  RTH = .2813556,   RDD =.27515039, ALSC = 25.2*
```

10.5.4.TRANSFER INITIATION BASED ON CSM LEAD ANGLE

```
INPUT
TSTOP - TERMINATION OPTION INDICATOR(27 FOR THIS OPTION)
ILPTR - MUST BE 1 FOR THIS OPTICN
ATHD - DESIRED TERMINAL CSM LEAD ANGLE(DEG)
APHD - RENDEZVOUS TRANSFER ANGLE(DEG)

* EXAMPLE
  TSTOP = 27,  ILPTR = 1,  ATHD = 1.5,  APHD = 140.*
```

10.5.5. TRANSFER INITIATION BASED ON ANGLE BETWEEN EARTH LINE AND LM

```
INPUT
  TSTOP-TERMINATION OPTION INDICATOR(27 FOR THIS OPTION)
  ALSC - DESIRED TERMINAL ANGLE BETWEEN LM AND PROJECTION OF
         EARTH LINE INTO  LM ORBITAL PLANE (DEG)
  ATHD - RENDEZVOUS TRANSFER ANGLE(DEG)
  ILPTR - MUST BE 2 FOR THIS OPTION

* EXAMPLE
  TSTOP = 27,  ILPTR = 2,  APHP = 140., ALSC = 70.*
```

10.5.6.IMMEDIATE TRANSFER

```
INPUT
  TSTOP-TERMINATION OPTICN INDICATOR(27 FOR THIS OPTION)
  ILPTR - MUST BE 3 FOR THIS OPTION
  DELL - OUT OF PLANE LIMIT(DEG)
```

```
      APHD - RENDEZVOUS TRANSFER ANGLE(DEG)

    * EXAMPLE
      TSTOP = 27,  ILPTR = 3,  DELL = 1.3,  APHD = 140.*
```

10.5.7.TRANSFER INITIATION AFTER COAST

```
    INPUT
      TSTOP-TERMINATION OPTION INDICATOR(27 FOR THIS OPTION)
      ILPTR - MUST BE 4 FOR THIS OPTION
      TMS - DESIRED PHASE TIME LAPSE(HRS)
      APHD - RENDEZVOUS TRANSFER ANGLE(DEG)

    *EXAMPLE
      TSTOP = 27,  ILPTR = 4,  TMS = .75,  APHD = 140.*
```

10.5.8.TRANSFER INITIATION ON LM TO CSM LOOK ANGLE

```
    INPUT
      TSTOP-TERMINATION OPTION INDICATOR(27 FOR THIS OPTION)
      ILPTR - MUST BE 5 FOR THIS OPTION
      AHB- DESIRED TERMINAL LM TO CSM LOOK ANGLE MEASURED POSITIVE
            ABOVE LM HORIZONTAL PLANE(DEG)
      APHD- RENDEZVOUS TRANSFER ANGLE(DEG)

    *EXAMPLE
      TSTOP = 27,  ILPTR = 5,  AHB = 60.,  APHD = 140.*
```

10.5.9.CSI MANEUVER COMPUTED AFTER ASCENT BURN

```
    INPUT
      TSTOP-TERMINATION OPTION INDICATOR(28 FOR THIS OPTION)
      IMDC  - MUST BE 1 FOR THIS OPTION
      APHD - MUST BE 1 FOR THIS OPTION
      ALH  - COAST ANGLE PRIOR TO CSI MANEUVER(DEG)
      BETA - ASCENT BURN ARC(DEG)
      ALSC - LM PHASE ANGLE AT TRANSFER INITIATION(DEG)
      ATHR - DESIRED CSM LEAD ANGLE AT TRANSFER INITIATION(DEG)
      AHB - FOR ATHR GREATER THAN 90. IS DESIRED LM TO CSM LOOK
            ANGLE AT TRANSFER INITIATION(DEG)
      XMTOV - ESTIMATE FOR CSI VELOCITY INCREMENT(FT/SEC)

    * EXAMPLE
      TSTOP = 28,   IMDC = 1,   APHD = 1,   ALH = 90.*
```

BETA = 9.545,ALSC = 25.2, ATHR = 1.5, XMTOV = 100.*

10.5.10.COAST PRIOR TO CSI BURN

```
INPUT
  TSTOP-TERMINATION OPTION INDICATOR(10 FOR THIS OPTION)
  NVTERM - NUMBER OF VEHICLE TO BE TERMINATED
  ICA -MUST BE 3 FOR THIS OPTION

* EXAMPLE
  TSTOP = 10,    ICA = 3*
  NVTERM = 2*

*THIS OPTION MUST BE PRECEDED BY ONE WHICH COMPUTES THE CSI
 MANEUVER (TSTOP = 26, IABRT =1 OR TSTOP = 28)
```

10.5.11.COAST PRIOR TO CIRCULARIZATION BURN (COAST THROUGH TIME)

```
INPUT
  TSTOP-TERMINATION OPTION INDICATOR(10 FOR THIS OPTION)
  ICA - MUST BE 2 FOR THIS OPTION
  NVTERM - NUMBER OF VEHICLE TO BE TERMINATED

*EXAMPLE
  TSTOP = 10,    ICA = 2*
  NVTERM = 2*
```

10.5.12.COAST PRIOR TO CIRCULARIZATION BURN (COAST THROUGH ANGLE)

```
INPUT
  TSTOP-TERMINATION OPTION INDICATOR(10 FOR THIS OPTION)
  ICA - MUST BE 1 FOR THIS OPTION. COASTS THROUGH THE
        ANGLE DETERMINED BY CSI COMPUTATION OPTIONS
        (TSTOP = 26, IABRT =1 OR TSTOP = 28).
  NVTERM - NUMBER OF VEHICLE TO BE TERMINATED

* EXAMPLE
  TSTOP = 10,    ICA = 1*
  NVTERM = 2*
```

10.5.13.CENTRAL ANGLE COAST

```
INPUT
  TSTOP-TERMINATION OPTION INDICATOR(10 FOR THIS OPTION)
  NVTERM - NUMBER OF VEHICLE TO BE TERMINATED
  ICA - MUST BE 0 FOR THIS OPTICN
  CASTP - DESIRED COAST ANGLE(DEG)
*EXAMPLE
  TSTOP = 10,    ICA = 0,    CASTP = 30.*
  NVTERM = 2*
```

10.5.14.TERMINAL RENDEZVOUS TERMINATION(RANGE, RANGE RATE)

```
INPUT
  TSTOP - OPTION INDICATOR(MUST BE 29 FOR THIS OPTION)
  IMDC  - MUST BE ZERO FOR THIS OPTICN
  ICUTOF - MUST BE ZERO FOR THIS OPTICN
  RANGE  - DESIRED TERMINAL RANGE(IN INPUT DISTANCE UNITS)
  RRATE  - RANGE RATE(IN INPUT VELOCITY UNITS)
           *TERMINATION WILL OCCUR WHEN THE RANGE IS EQUAL
            THE DESIRED RANGE AND THE RANGE RATE IS GREATER
            IN ABSOLUTE VALUE THAN RRATE. IF AT THE TERMINAL
            POINT, THE RANGE RATE IS LESS THAN RRATE, THE
            SUBSEQUENT PHASE WILL BE SKIPPED.
```

10.5.15.TERMINAL RENDEZVOUS TERMINATION(TIME FROM LIFTOFF)

```
INPUT
  TSTOP - OPTION INDICATOR(MUST BE 29 FOR THIS OPTICN)
  IMDC  - MUST BE 1 FOR THIS OPTION
  TMDC  - DESIRED TIME FROM LUNAR LIFTOFF AT TERMINATION(HRS
```

10.5.16.TERMINAL RENDEZVOUS TERMINATICN(RANGE,RANGE RATE ADJUSTED)

```
INPUT
  TSTOP - OPTION INDICATOR(MUST BE 29 FOR THIS OPTION)
  DVEL  - TOLERANCE FOR PREDICTED INTERCEPT RANGE RATE (IN
          VELOCITY UNITS)
  RANGE - DESIRED TERMINAL RANGE(IN INPUT DISTANCE UNITS)
  RRATE - RANGE RATE(IN INPUT VELOCITY UNITS)
          * IF THE PREDICTED INTERCEPT RANGE RATE IS LESS IN
            ABSOLUTE VALUE THAN DVEL THIS OPTION IS IDENTI-
            CAL TO THE RANGE,RANGE RATE OPTION ABOVE. IF THE
            INTERCEPT RANGE RATE IS OUT OF TOLERANCE, THE
            DESIRED VALUES OF RANGE  AND RANGE RATE ARE
```

ADJUSTED BY THE FACTOR DVEL DIVIDED BY THE PREDICTED INTERCEPT RANGE RATE.

IMDC - MUST BE 2 FOR THIS OPTION

10.5.17. TERMINAL RENDEZVOUS TERMINATION (CONTINUATION OF PREVIOUS OPTION)

INPUT

IMDC - MUST BE 3 FOR THIS OPTION

*REMAINDER OF INPUT IDENTICAL WITH IMDC = 2 OPTION ABOVE

*THIS OPTION WILL CONTINUE THE ADJUSTMENT OF THE DESIRED TERMINAL VALUES USING THE FACTOR COMPUTED BY THE PREVIOUS OPTION ABOVE

10.5.18.TERMINAL RENDEZVOUS TERMINATION(DISCONTINUE LM VEHICLE)

INPUT

TSTOP - OPTION INDICATOR(MUST BE 29 FOR THIS OPTION)

IMDC - CAN BE ANY VALUE EXCEPT 1 FOR THIS OPTION

ICUTOF - MUST BE 1 FOR THIS OPTION

RCUTOF - TERMINAL RENDEZVOUS RANGE(IN INPUT DISTANCE UNITS

10.5.19. ATTITUDE MANEUVER TERMINATION

INPUT

TSTOP - TERMINATION OPTION INDICATOR (30 FOR THIS OPTION)

EXAMPLE

TSTOP = 30 , ITURN = 7

EXPLANATION OF EXAMPLE

WHEN THE ATTITUDE MANEUVER DEFINED BY ITURN OPTION 7 IS COMPLETE THE PHASE WILL BE TERMINATED.

10.5.20. TIME LAPSE FROM A REFERENCE POINT TERMINATION

INPUT

TTF = -1.0

WHEN INPUT IN A PARTICULAR PHASE THIS VALUE ESTABLISHES THE INITIAL TIME POINT OF THAT PHASE AS THE REFERENCE TIME.

TSTOP - TERMINATION OPTION INDICATOR (31 FOR THIS OPTION)

TTF - TIME FROM REFERENCE TIME TO CUTOFF (HRS)
THESE TWO INPUTS ARE MADE IN A PHASE SUBSEQUENT TO THAT IN WHICH TTF=-1.0 IS INPUT. THIS LATER PHASE WILL BE ENDED AT A TIME TTF FROM THE START OF THE FIRST PHASE

11. RADAR

THE RADAR COMPUTATIONS ARE EXECUTED IF THE INDICATOR, RADPRT, IS NON-ZERO. TWO METHODS OF INPUTTING RADAR DATA ARE AVAILABLE IN THE PROGRAM, SELECTION OF THE RADAR STATION FROM THE TABLE OF RADAR STATIONS (SECTION 11.1.1.), OR MANUAL INPUT OF THE RADAR STATION (SECTION 11.1.2.). BOTH METHODS OF INPUTTING RADAR STATIONS MAY BE USED.

11.1. INPUT

11.1.1. SELECTION OF THE RADAR STATION FROM THE TABLE OF RADAR STATIONS

```
RADAR=X,Y,Z
  WHERE X,Y,Z ARE EITHER FIXED OR FLOATING INTEGERS DESIG-
  NATING INCLUSION OF RADAR STATIONS X,Y,Z FROM THE TABLE
  OF RADAR STATION DATA (SEE SECTION 11.4.).

   *EXAMPLE
     RADAR=4,7,8.,9.,14,38  *
```

11.1.2. MANUAL INPUT OF THE RADAR STATION

```
RADAR=BCD IDENTIFICATION,LATR=A,LONR=B,ALTR=C,SRANGE=D,
FTINDC=E
  WHERE THE BCD IDENTIFICATION OF THE RADAR STATION CON-
  SISTS OF AT LEAST 7 CHARACTERS AND NO MORE THAN 18
  CHARACTERS. THE IDENTIFICATION MUST CONTAIN NO COMMAS
  AND NO ASTERISKS.
  LATR--STATION LATITUDE IN DEGREES
  LONR--STATION LONGITUDE IN DEGREES
  ALTR--STATION ALTITUDE IN FEET
  SRANGE--MAXIMUM RANGE THE STATION CAN TRACK IN NAUTICAL
          MILES
  FTINDC--INDICATOR FOR SPECIFYING THE KEYHOLE CONSTRAINT
          =0. NO KEYHOLE CONSTRAINT
          =1. KEYHOLE CONSTRAINT FOR THE 30 FT. ANTENNA
              (THE VEHICLE IS IN THE KEYHOLE IF THE ELEVA-
              TION IS BETWEEN THE LIMITS OF 0 AND 10 DEG.,
              AND THE AZIMUTH IS BETWEEN THE LIMITS OF -10
              AND 10 DEG. OR BETWEEN THE LIMITS OF 170 AND
              -170 DEG.)
          =2. KEYHOLE CONSTRAINT FOR THE 85 FT. ANTENNA
              (THE VEHICLE IS IN THE KEYHOLE IF THE ELEVA-
              TION IS BETWEEN THE LIMITS OF 0 AND 10 DEG.,
```

AND THE AZIMUTH IS BETWEEN THE LIMITS OF 80
AND 100 DEG. OR BETWEEN THE LIMITS OF -80
AND -100 DEG.)

```
*EXAMPLE
  RADAR=P.ARGUELLO CAL.-CB,LATR=34.582902,LONR=-120.5611,
  ALTR=2119.43,SRANGE=225000.,FTINDC=1. *
```

11.1.3. ADDITIONAL RADAR INPUT

THE FOLLOWING QUANTITIES ARE INPUT INDEPENDENT OF THE METHOD OF INPUTTING RADAR STATIONS.

ELMIN=X
ANTAZ1=Y1
ANTEL1=Z1
ANTAZ2=Y2
ANTEL2=Z2

ELMIN--MINIMUM ELEVATION THRESHOLD (DEGREES)

ANTAZ1, ANTAZ2 ARE ANTENNA AZIMUTH ANGLES OF VEHICLE 1 AND VEHICLE 2--THE AZIMUTH ANGLE OF THE ANTENNA DIRECTION IN THE Y-Z PLANE WITH RESPECT TO THE Z-AXIS OF THE VEHICLE ATTITUDE COORDINATE SYSTEM. FROM THE REAR OF THE VEHICLE, THE ANGLE IS MEASURED COUNTERCLOCKWISE FROM THE Z-AXIS (DEG). (SEE FIGURE 11-1)

ANTEL1, ANTEL2 ARE THE ANTENNA ELEVATION ANGLES OF VEHICLE 1 AND VEHICLE 2--THE ANGLE BETWEEN THE ANTENNA DIRECTION AND THE Y-Z PLANE OF THE VEHICLE ATTITUDE COORDINATE SYSTEM (DEG). (SEE FIGURE 11-1)

IF NO VALUES ARE ENTERED FOR ELMIN, ANTAZ1, ANTAZ2, ANTEL1, ANTEL2, THEY ARE ALL SET TO 0.

```
*EXAMPLE
  ELMIN=5., ANTAZ1=90., ANTAZ2=90., ANTEL1=-90., ANTEL2=-90.*
```

11.1.4. TOLERANCE INPUTS FOR EVENT DETERMINATION

THE FOLLOWING QUANTITIES SHOULD BE INPUT ONLY WHEN THE INDICATOR, RADPRT, IS 2,3,4, OR 5 (SEE SECTION 11.2.).

ETOL=X
RTOL=Y
OTOL=Z

ETOL IS THE TOLERANCE ON ELEVATION ANGLE USED FOR DETERMINING RADAR ACQUISITION AND TERMINATION EVENTS AS A RESULT OF THE ELEVATION PASSING THROUGH THE MINIMUM ELEVATION THRESHOLD. (DEGREES)

RTOL IS THE TOLERANCE ON RANGE USED FOR DETERMINING RADAR ACQUISITION AND TERMINATION EVENTS AS A RESULT

OF THE RANGE OF THE VEHICLE FROM THE RADAR STATICN BECOMING GREATER THAN OR LESS THAN THE MAXIMUM RANGE THE STATION CAN TRACK. (NAUTICAL MILES)

OTOL IS THE TOLERANCE CN THE MCCN OCCULTATICN ANGLE FOR DETERMINING RADAR ACQUISITICN AND TERMINATICN EVENTS AS A RESULT OF THE VEHICLE BECCMING OCCULTED OR UN-OCCULTED BY THE MOCN. (DEGREES)

IF NO VALUES ARE ENTERED FOR ETOL, RTOL, OTOL,THEY ARE SET AS FOLLOWS

ETOL=.01
RTOL=10.
OTCL=.01

*EXAMPLE
ETOL=.001, RTOL=1., OTOL=.1 *

ALL RADAR INPUTS ARE CARRIED OVER TO ALL NON-ZERO TYPE PHASES

11.2. OUTPUT SELECTION

RADPRT=X,Y

WHERE THE FIRST VALUE OF RADPRT IS THE OUTPUT INDICATOR FOR VEHICLE 1 AND THE SECOND VALUE IS THE OUTPUT INDI-CATOR FOR VEHICLE 2.

=1. NORMAL RACAR OUTPUT--RACAR TRACKING DATA FOR ALL VISIBLE STATIONS AT PRINT POINTS.

=2. RACAR EVENT OUTPUT--RADAR ACQUISITICN AND TERMINATICN EVENTS AND TIME OF OCCURRENCE OF THE EVENT

=3. NORMAL RACAR OUTPUT AND RACAR EVENT OUTPUT (1 AND 2)

=4. RACAR EVENT OUTPUT WITH RACAR TRACKING DATA AND THE VEHICLE STATE VECTOR AT THE POINT OF OCCURRENCE EVENT.

=5. NORMAL RADAR OUTPUT AT PRINT POINTS PLUS RADAR EVENT OUTPUT WITH RADAR TRACKING DATA AND THE VEHICLE STATE VECTOR AT THE POINT OF CCCURRENCE OF THE EVENT (1 AND4)

*EXAMPLE
RACPRT=0.,3. *

*EXPLANATION OF EXAMPLE
THE FIRST VALUE OF RADPRT INCICATES NO RACAR OUTPUT IS DESIRED FOR VEHICLE 1. THE SECOND VALUE INDICATES THAT THE RADAR TRACKING CATA AT PRINT POINTS PLUS RADAR ACQUISITION AND TERMINATICN EVENTS AND THE TIME OF OCCURRENCE OF THE EVENT IS DESIRED.

*NOTE -IT SHOULD BE NOTED THAT WHEN RADPRT IS 3. OR 5., THE AMOUNT OF COMPUTER TIME FOR A RUN IS ALMOST DCUBLED. IT IS RECOMMENDED THAT THE STEPSIZE NOT

EXCEED THE STANDARD STEPSIZE VALUE WHEN RADPRT IS
2., 3., 4., OR 5.

11.3. ERROR MESSAGES

11.3.1. INPUT ERROR MESSAGES

BUCKET FILLED BEFORE RADAR DATA ENTERED

EXPECTED SYMBOL NOT FOUND IN RADAR DATA

EXPECTED VALUE FOR RADR(JJ)NOT FOUND
FOR JJ=26 NO VALUE FOR ELMIN FOLLOWED THE SYMBOL
FOR JJ=27 NO VALUE FOR ANTELV FOLLOWED THE SYMBOL
FOR JJ=28 NO VALUE FOR ANTAZ FOLLOWED THE SYMBOL

EXPECTED VALUE FOR(SYMBOL) NOT FOUND
SYMBOL IS LATR,LONR,ALTR,SRANGE, OR FTINDC. NO VALUE FOLLOWED THE SYMBOL.

REAL NUMBER ENCOUNTERED WHERE INTEGER VALUE FOR RADAR STATION ID EXPECTED

A NON-INTEGER WAS ENTERED IN A LIST OF RADAR STATION ID NUMBERS.

ERROR ENCOUNTERED IN LIST OF RADAR STATIONS
A CARD OF THE FORM RADAR=X,Y,Z CONTAINS NONNUMERIC CHARACTERS TO THE RIGHT OF THE EQUAL SIGN.

ERROR IN RADAR STATION INPUT
A CARD OF THE FORM RADAR= IS FOLLOWED ON THE RIGHT OF THE EQUAL SIGN BY CHARACTERS WHICH ARE NEITHER ACCEPTABLE RADAR STATION ID NUMBERS NOR ACCEPTABLE RADAR STATION BCD IDENTIFICATION

11.3.2. INITIALIZATION ERROR MESSAGES

NO RADAR STATIONS ARE ON
SOME RADAR DATA HAVE BEEN ENTERED, BUT NO STATIONS HAVE BEEN TURNED ON

11.3.3. EVENT ERROR MESSAGES

BUCKET OVERFLOW IN RHRADR--WILL USE ONLY 'XXX' STATIONS.

OVERFLOW IN EVENT COMMCN--NO MORE EVENTS WILL BE CALCULATED.

STEPSIZE TOO LARGE FOR ACQUISITION-TERMINATION LOGIC

11.4. TABLE OF RADAR STATIONS

ID NO.	STATION IDENTIFICATION	LATITUDE (DEG)	LONGITUDE (DEG)*	ALTITUDE (FT.)**	RANGE LI. (N.MI.)	KEYH IND
1	CAPE KENNEDY-CB	28.481766	-80.576513	45.93	32000.	0
2	MERRITT ISLAND-CB	28.424861	-80.664404	39.40	32000.	0
3	PATRICK AFB-CB	28.226552	-80.599291	49.21	32000.	0
4	GRAND BAHAMA-CB	26.615786	-78.347849	45.93	1000.	0
6	GRAND TURK-CB	21.462908	-71.132044	82.02	32000.	0
7	ANTIGUA ISLAND-CB	17.143797	-61.792683	85.31	32000.	0
8	BERMUDA-CB	32.348102	-64.653800	59.06	32000.	0
9	GRAND CANARY-CB	27.742797	-15.598102	114.83	2500.	0
10	ASCENSION-CB-1	-7.9727611	-14.401694	469.16	32000.	0
11	ASCENSION-CB-2	-7.9515138	-14.412605	360.90	1000.	0
12	PRETORIA S.AFR.-CB	-25.943722	28.358500	5308.40	1000.	0
13	CARNARVON-CB	-24.857355	113.71606	209.97	32000.	0
14	HAWAII-CB	22.125266	-159.66761	3746.72	32000.	0
15	P. ARGUELLO CAL-CB	34.582902	-120.56115	2119.43	500.	0
16	WHITE SANDS-CB	32.358222	-106.36956	4042.00	32000.	0
17	EGLIN AFB-CB	30.421766	-86.798113	91.86	1000.	0
18	MERITT ISLAND-USBS	28.508272	-80.526746	40.88	225000.	1
19	GRAND BAHAMA-USBS	26.654166	-78.152777	0.0	225000.	1
20	ANTIGUA ISLE-USBS	17.019444	-61.750000	0.0	225000.	1
21	BERMUDA-USBS	32.351286	-64.658181	68.90	225000.	1
22	GRAND CANARY-USBS	27.740277	-15.604166	0.0	225000.	1
23	ASCENSION-USBS	-7.9552341	-14.327578	1841.21	225000.	1
24	CARNARVON-USBS	-24.907562	113.72424	188.32	225000.	1
25	GUAM-USBS	13.308235	144.73441	420.28	225000.	1
26	HAWAII-USBS	22.128072	-159.66722	3730.02	225000.	1
27	GUAYMAS MEX.-USBS	27.963206	-110.72084	63.71	225000.	1
28	CORPUS TEXAS-USBS	27.653611	-97.378333	0.0	225000.	1
29	MADRID-USBS	40.455358	-4.1673955	2707.51	225000.	2
30	CANBERRA-USBS	-35.597222	148.97916	0.0	225000.	2
35	GOLDSTONE-DS	35.341695	-116.87329	3168.44	225000.	2
37	TANANARIVE-TLM	-19.018055	47.304444	36.09	1500.	0
38	KANO NIGERIA-TLM	11.969722	8.4644444	1629.27	1500.	0

*EAST IS POSITIVE
**HEIGHT ABOVE REFERENCE ELLIPSOID

LABELS

CB-C-BAND STATIONS
USBS-UNIFIED S-BAND STATIONS
DS-DEEP SPACE STATIONS
TLM-TELEMETRY STATIONS

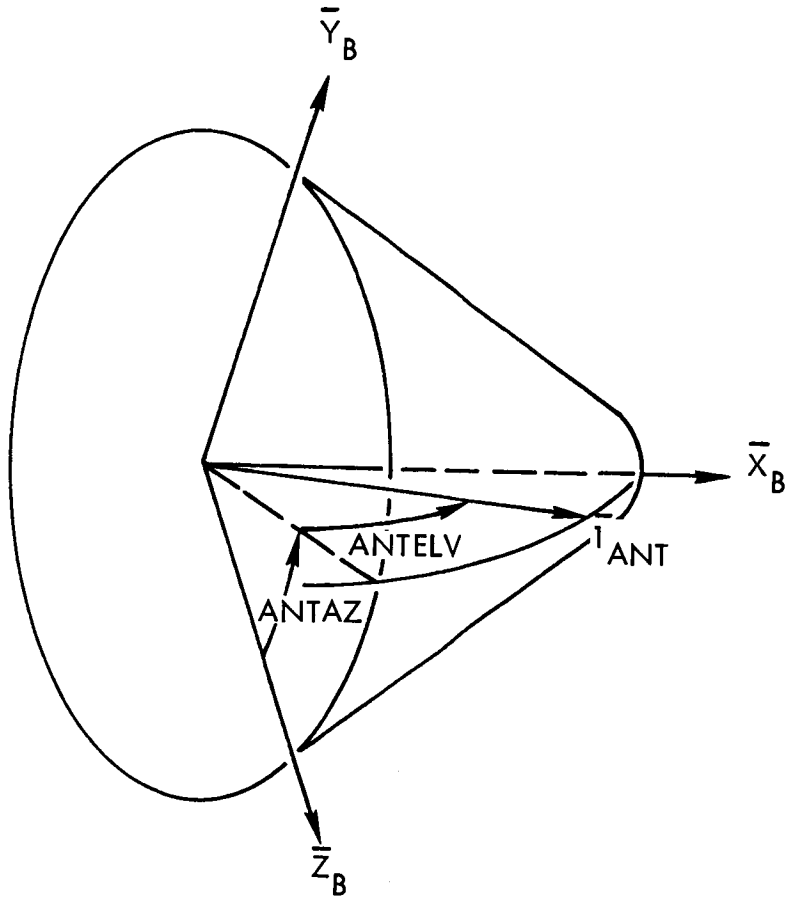

$\bar{X}_B$	-	Vehicle X-Axis
$\bar{Y}_B$	-	Vehicle Y-Axis
$\bar{Z}_B$	-	Vehicle Z-Axis
$\bar{1}_{ANT}$	-	Unit vector along direction of antenna
ANTELV	-	Antenna elevation angle. Positive toward the $\bar{X}_B$ axis from the $\bar{Y}_B$ - $\bar{Z}_B$ plane
ANTAZ	-	Antenna azimuth direction. From seat of the vehicle, positive counterclockwise from $\bar{Z}_B$-axis.

Figure 11-1. Antenna Azimuth and Elevation Angles (See Section 11.1.3)

12. STAR AND LANDMARK SIGHTING

THE SIGHT COMPUTATIONS ARE EXECUTED IF THE INDICATOR, SIGHT, IS NON-ZERO. IF ONLY STAR SIGHTINGS ARE DESIRED, ONLY STAR DATA SHOULD BE INPUT. TWO METHODS OF INPUTTING STAR DATA ARE AVAILABLE, SELECTION OF THE STAR FROM THE TABLE OF STAR DATA CONTAINED IN THE PROGRAM (SECTION 12.1.1.), OR MANUAL INPUT OF THE STAR (SECTION 12.1.2.). IF ONLY LANDMARK SIGHTINGS ARE DESIRED, ONLY LANDMARK DATA SHOULD BE INPUT. TWO METHODS OF INPUTTING LANDMARK DATA ARE AVAILABLE IN THE PROGRAM, SELECTION OF THE LANDMARK FROM THE TABLE OF LANDMARK DATA CONTAINED IN THE PROGRAM (SECTION 12.2.1.), OR MANUAL INPUT OF THE LANDMARK (SECTION 12.2.2). IT SHOULD BE NOTED THAT BOTH METHODS OF INPUTTING STAR OR LANDMARK DATA MAY BE USED. IF BOTH STAR AND LANDMARK SIGHTINGS ARE DESIRED, STAR AND LANDMARK DATA SHOULD BE INPUT.

12.1. STAR INPUT

12.1.1. SELECTION OF THE STAR FROM THE TABLE OF STAR DATA

STAR=X,Y,Z

WHERE X,Y,Z ARE FIXED INTEGERS DESIGNATING INCLUSION OF STARS X,Y,Z FROM THE TABLE OF STAR DATA (SEE TABLE I). IT SHOULD BE NOTED THE DATA IN TABLE I CONTAIN THE COMPLETE NAME OF THE STAR WHEREAS THE DATA IN THE PROGRAM CONTAIN AN ABBREVIATION OF THE STAR NAME. TABLE I IS PRESENTED TO PERMIT THE USER TO HAVE REFERENCE TO THE STAR DATA CONTAINED IN THE PROGRAM, BUT IN THE UNITS CONTAINED IN THE 1966 AMERICAN EPHEMERIS AND NAUTICAL ALMANAC. THE STAR DATA ARE REFERENCED TO THE MEAN EQUATOR AND EQUINOX OF THE BEGINNING OF THE BESSELIAN YEAR 1966, AND IS UPDATED IN THE PROGRAM FOR ANY YEAR AFTER THE YEAR 1966.

```
*EXAMPLE
  STAR=1,7,13,14,23 *
```

12.1.2. MANUAL INPUT OF THE STAR

STAR=BCD IDENTIFICATION,RAS=A,DECL=B

WHERE THE BCD IDENTIFICATION OF THE STAR IS RESTRICTED TO BE LESS THAN 12 CHARACTERS, WHICH ARE LIMITED TO ALPHABETIC CHARACTERS AND NUMBERS.

RAS—RIGHT ASCENSION OF THE STAR IN DEGREES.

DECL--DECLINATION OF THE STAR IN DEGREES.

*EXAMPLE
STAR=ALP HYA,RAS=141.47916,DECL=-8.5102776 *

*EXPLANATION OF EXAMPLE
THE ABOVE INPUT SHOWS HOW STAR 13 IN TABLE I IS INPUT MANUALLY. IT SHOULD BE NOTED THAT THE UNITS OF RIGHT ASCENSION AND DECLINATION MUST BE IN DEGREES. THE STAR DATA INPUT MANUALLY SHOULC BE REFERENCED TO THE MEAN EQUATOR AND EQUINOX OF THE OF THE BEGINNING OF THE BESSELIAN YEAR 1966.

12.1.3. ADDITIONAL STAR INPUT

THE FOLLOWING QUANTITIES ARE INPUT INDEPENDENT OF THE ABOVE METHODS OF INPUTTING STAR DATA.
DELSM=X
EPSS=Y*
SIGSS=Z

DELSM IS THE MINIMUM SUNLIGHT INTERFERENCE ANGLE--THE MINIMUM PERMISSIBLE ANGLE BETWEEN THE LINES-OF-SIGHT FROM THE VEHICLE TO THE STAR AND FRCM THE VEHICLE TO THE SUN. (DEGREES)

EPSS IS THE MINIMUM STAR-STAR ANGLE--THE MINIMUM PERMISSIBLE ANGLE BETWEEN THE LINES-OF-SIGHT FROM THE VEHICLE TO TWO VISIBLE STARS FOR STAR-STAR SIGHTING. (DEGREES)

SIGSS IS THE MAXIMUM STAR-STAR ANGLE--THE MAXIMUM PERMISSIBLE ANGLE BETWEEN THE LINES-OF-SIGHT FROM THE VEHICLE TO TWO VISIBLE STARS FOR STAR-STAR SIGHTING. (DEGREES)

*EXAMPLE
DELSM=20., EPSS=20., SIGSS=110. *

IF NO VALUES ARE ENTERED FOR DELSM, EPSS, OR SIGSS, THEN THEY ARE SET TO 0.

*NOTE--IT SHOULD BE NOTED THAT ALL STAR INPUT IS CARRIED OVER TO ALL NON-ZERO TYPE PHASES.

12.2. LANDMARK INPUT

12.2.1. SELECTION OF THE LANDMARK FROM THE TABLE OF LANDMARK DATA.

LANDMK=X,Y,Z
WHERE X,Y,Z ARE FIXED INTEGERS DESIGNATING INCLUSION OF LANDMARKS X,Y,Z FROM THE TABLE OF LANDMARK DATA (SEE TABLE II). IT SHOULD BE NOTED THAT THE DATA IN TABLE II CONTAIN THE COMPLETE DESCRIPTIVE NAME OF THE LANDMARK WHEREAS THE DATA IN THE PROGRAM CONTAIN AN ABBREVIATION OF THE LANDMARK NAME. NEITHER TABLE II NOR THE TABLE OF LANDMARKS IN THE PROGRAM CONTAIN ANY LUNAR LANDMARKS.

INAV - NAVIGATION SELECTOR (=1 FOR THIS OPTION)
LANDMK=1,3,9,324,330,342 *

12.2.2. MANUAL INPUT OF THE LANDMARK

LANDMK=BCD IDENTIFICATION,LAML=A,PHIL=B,ALTL=C
WHERE THE BCD IDENTIFICATION OF THE LANDMARK CONSISTS OF NOT MORE THAN 18 CHARACTERS. THIS IS THE REASON FOR THE ABBREVIATED NAMES OF LANDMARKS IN THE PROGRAM.
LAML--LONGITUDE OF THE LANDMARK IN DEGREES.
PHIL--GEODETIC LATITUDE OF THE LANDMARK IN DEGREES.
ALTL--ALTITUDE OF THE LANDMARK (HEIGHT ABOVE THE REFERENCE ELLIPSOID) IN METERS.
IT SHOULD BE NOTED THAT LUNAR LANDMARKS WILL HAVE TO BE INPUT MANUALLY.

*EXAMPLE
LANDMK=KEY BIS FLA,LAML=-80.158108,PHIL=25.665555, ALTL=2. *

*EXPLANATION OF EXAMPLE
THE ABOVE EXAMPLE SHOWS HOW LANDMARK 3 IN TABLE II IS INPUT MANUALLY. IT SHOULD BE NOTED THAT THE BCD IDENTIFICATION CONTAINS ONLY ALPHABETIC CHARACTERS OR NUMBERS. THE LONGITUDE AND LATITUDE HAVE THE UNITS OF DEGREES AND THE UNITS OF ALTITUDE IS METERS. ALL LUNAR LANDMARKS WILL HAVE TO BE INPUT BY THIS METHOD.

12.2.3. ADDITIONAL LANDMARK INPUT

THE FOLLOWING QUANTITIES ARE INPUT INDEPENDENT OF THE ABOVE METHODS OF INPUTTING LANDMARK DATA.
ZETM=U
KL=V
SIGSV=W
REF=X

SIGLS=Y

ZETM IS THE MINIMUM HORIZON ANGLE OF THE LANDMARK--THE MINIMUM ANGLE BETWEEN THE LINE-OF-SIGHT FROM THE VEHICLE TO THE LANDMARK AND THE HORIZONTAL PLANE OF THE LANDMARK. (DEGREES)

KL IS ONE-HALF OF THE TOTAL WIDTH OF THE OPTICS BLIND ZONE ALONG THE GROUND TRACK. (NAUTICAL MILES)

SIGSV IS THE MAXIMUM SUN-LANDMARK-VEHICLE ANGLE--THE MAXIMUM ANGLE BETWEEN THE LINES-OF-SIGHT FROM THE LANDMARK TO THE SUN AND FROM THE LANDMARK TO THE VEHICLE. (DEGREES)

REF IS THE INDICATOR FOR SPECIFYING IF THE LANDMARKS ARE LUNAR OR EARTH.

=0. LANDMARKS ARE EARTH LANDMARKS AND CAN BE CONSIDERED ONLY FOR EARTH PHASES OF A MISSION.

=1. LANDMARKS ARE LUNAR LANDMARKS AND CAN BE CONSIDERED ONLY FOR LUNAR PHASES OF A MISSION.

SIGLS IS THE MAXIMUM LANDMARK STAR ANGLE--THE MAXIMUM ANGLE BETWEEN THE LINES-OF-SIGHT FROM THE VEHICLE TO THE LANDMARK AND FROM THE VEHICLE TO THE STAR FOR STAR-LANDMARK SIGHTING. (DEGREES)

*EXAMPLE
ZETM=5., KL=5., REF=0., SIGSV=179., SIGLS=90. *

IF NO VALUES ARE ENTERED FOR ZETM, KL, REF, SIGSV, AND SIGLS, THEY ARE SET TO ZERO.

*NOTE--IT SHOULD BE NOTED THAT ALL LANDMARK INPUT IS CARRIED OVER TO ALL NON-ZERO TYPE PHASES.

12.3. ERROR MESSAGES

12.3.1. INPUT ERROR MESSAGES FOR STAR DATA

OVERFLOWS BUCKET

BCI STRING TOO LONG. SPROC TAKING FIRST 12 CHARACTERS PRINTED WHEN STAR NAME EXCEEDS 12 CHARACTERS.

BAC CARD FORMAT
PRINTED WHEN STAR DATA ARE INPUT INCORRECTLY. A LISTING OF THE BUCKET IS ALSO PRINTED.

STAR NUMBERS MUST BE INTEGER

12.3.2. INPUT ERROR MESSAGES FOR LANDMARK DATA

THIS IS NOT LANDMARK DATA ... CHECK KRBF(X)
PRINTED WHEN THERE IS AN ERROR IN THE LANDMARK DATA.
X IS THE LOCATION IN THE BUCKET CONTAINING BAD DATA.

THIS IS NOT A TOLERANCE NAME ... CHECK KRBF(X)
PRINTED WHEN LANDMARK TOLERANCE NAME IS INCORRECTLY INPUT.
X IS THE LOCATION IN THE BUCKET CONTAINING BAD DATA.

BUCKET DUMP FOLLOWS...
PRINTED WHEN ERROR OCCURS IN PROCESSING LANDMARK DATA.
A LISTING OF THE CONTENTS OF THE BUCKET IS ALSO PRINTED.
MAX. LENGTH OF NON-TABLE LANDMARK NAME IS 3 WORDS...
PRINTED WHEN LANDMARK NAME EXCEEDS 18 CHARACTERS.
ERROR IN PROCESSING NON-TABLE LANDMARKS
PRINTED WHEN LANDMARK DATA INPUT INCORRECTLY. A LISTING OF THE BUCKET IS ALSO PRINTED.

NON-TABLE LANDMARK DATA INCOMPLETE ..... LAML PHIL OR ALTL IS MISSING

OVERFLOWS BUCKET

12.3.3. INITIALIZATION ERROR MESSAGES

BUCKET DIMENSION EXCEEDED *** ONLY XXX SETS OF YYY DATA WERE INPUT
PRINTED WHEN THERE IS NOT ENOUGH ROOM IN THE BUCKET FOR ALL THE INITIALIZED DATA. XXX IS THE NUMBER OF STARS OR LANDMARKS INPUT WHICH IS IDENTIFIED BY YYY.

12.4. OUTPUT SELECTION

SIGHT=X,Y
WHERE X IS OUTPUT INDICATOR FOR VEHICLE 1 AND Y FOR VEHICLE 2.
=2. SIGHT OUTPUT WHICH IS STAR OUTPUT IF ANY STARS ARE INPUT AND LANDMARK OUTPUT IF ANY LANDMARKS ARE INPUT.

*EXAMPLE
SIGHT=2.,

*EXPLANATION OF EXAMPLE
SIGHT OUTPUT IS DESIRED FOR VEHICLE 1 BUT NOT FOR VEHICLE 2.

Table I. Star Data*

AGC Catalogue Number	Star Name	Right Ascension Hr.	Min.	Sec.	Declination Dg.	Min.	Sec.
01	α Andromedae	00	06	37.5	+ 28	54	10
02	β Ceti	00	41	53.0	- 18	10	23
03	α Eridani (Achernar)	01	36	27.0	- 57	24	33
04	α Ursae Minoris (Polaris)	02	00	10.2	+ 89	06	25
05	α Arietis	02	05	15.1	+ 23	18	09
06	α Fornacis	03	10	37.5	- 29	07	13
07	α Persei	03	21	53.1	+ 49	44	30
08	α Tauri (Aldebaran)	04	33	58.0	+ 16	26	33
09	α Canis Majoris (Sirius)	06	43	39.0	- 16	40	05
10	β Geminorum (Pollus)	07	43	14.3	+ 28	06	35
11	γ Velorum	08	08	29.0	- 47	14	08
12	β Carinae	09	12	50.1	- 69	34	37
13	α Hydrae	09	25	55.0	- 08	30	37
14	α Leonis (Regulus)	10	06	33.8	+ 12	08	03
15	α Ursae Majoris	11	01	38.7	+ 61	56	05
16	γ Centauri	12	39	37.9	- 48	46	24
17	α Virginis (Spica)	13	23	23.9	- 10	59	04
18	η Ursae Majoris	13	46	12.1	+ 49	28	57
19	α Bootis (Arcturus)	14	14	06.6	+ 19	21	31
20	α Centauri	14	37	16.6	- 60	41	46
21	α Scorpii (Antares)	16	27	19.1	- 26	21	30
22	α Ophiuchi	17	33	21.3	+ 12	35	00
23	α Lyrae (Vega)	18	35	47.2	+ 38	45	03
24	β Capricorni	20	19	06.1	- 14	53	24
25	α Pavonis	20	22	58.1	- 56	50	45
26	α Cygni (Deneb)	20	40	16.3	+ 45	09	29
27	ε Pegasi	21	42	30.9	+ 09	43	06
28	α Piscis Austrini (Fomalhaut)	22	55	46.5	- 29	48	11

* Referenced to Mean Equator and Equinox of the beginning of the Besselian year 1966

Table II. Landmark Data

Landmark Number	Landmark Name	Longitude	* Latitude	**Altitude
1	Patrick A.F.B. Cape Kennedy, Florida	80° 36' 26".7 W	28° 14' 22".5 N	+ 3 meters
2	Bahia de Caraques, Ecuador	80° 25' 37" W	00° 35' 37" S	+ 14 meters
3	Cape Florida, Key Biscayne, Florida	80° 09' 29".2 W	25° 39' 56".0 N	+ 2 meters
4	Punta Chame, Panama	79° 41' 35".8 W	08° 39' 29".2 N	+ 31 meters
5	Airport, Esmeraldas, Ecuador	79° 37' 30" W	00° 57' 40" N	+ 23 meters
6	Airport, Trujillo, Peru	79° 06' 17".8 W	08° 04' 21".0 S	+ 30 meters
7	Grand Bahama Island, Bahamas	78° 58' 38".4 W	26° 41' 36".2 N	+ 4 meters
8	Tumaco, Columbia	78° 46' 43" W	01° 48' 07" N	+ 30 meters
9	Punta Filomena, Peru	78° 31' 50".9 W	09° 16' 20".8 S	0 meters
10	South Negril Point, Jamaica	78° 22' 04".6 W	18° 15' 56".2 N	0 meters
11	North Negril Point, Jamaica	78° 20' 37".2 W	18° 21' 12".8 N	0 meters
12	Isla Gorgonilla, Colombia	78° 14' 11" W	02° 56' 06" N	+ 20 meters
13	Cape Fear, North Carolina	77° 57' 43".5 W	33° 50' 22".3 N	- 6 meters
14	Cabo Marzo, Colombia	77° 41' 21".5 W	06° 50' 08".4 N	+ 30 meters
15	Punta Lachay, Peru	77° 39' 42". W	11° 17' 29". S	0 meters
16	New Providence Island, Bahamas	77° 33' 13".8 W	25° 01' 47".1 N	+ 7 meters
17	Cabo Corrientes, Colombia	77° 33' 06" W	05° 29' 12" N	+ 30 meters
18	Punta de Solano, Colombia	77° 28' 03" W	06° 17' 11" N	+ 30 meters
19	Lima, Peru	77° 10' 04".3 W	12° 04' 20".7 S	0 meters
20	Airport, Kingston, Jamaica	76° 46' 29".1 W	17° 56' 23".4 N	+ 3 meters
21	Eleuthra Island, Bahamas	76° 37' 35".8 W	25° 28' 29".3 N	+ 4 meters
22	Cap Lookout, North Carolina	76° 32' 00".6 W	34° 34' 55".7 N	- 5 meters
23	Isla San Gallan, Peru	76° 27' 34".6 W	13° 49' 25".6 S	0 meters
24	Powell Point, Eleuthra Island, Bahamas	76° 20' 41".0 W	24° 50' 25".9 N	+ 5 meters
25	Isla Baru, Colombia	75° 41' 13".2 W	10° 09' 21".4 N	+ 16 meters
26	Cartagena, Colombia	75° 33' 19".0 W	10° 25' 28".4 N	+ 10 meters
27	Punta Parada, Peru	75° 11' 44".0 W	15° 22' 32".2 S	0 meters
28	Cat Island, Bahamas	75° 16' 19" W	24° 08' 04" N	- 5 meters
29	Guantanamo, Cuba	75° 11' 23".4 W	19° 54' 38".6 N	- 5 meters
30	Airport, Guantanamo, Cuba	75° 09' 56".0 W	19° 54' 40".6 N	+ 5 meters
31	Long Island, Bahamas	74° 51' 41" W	22° 50' 43" N	- 6 meters
32	Castle Island, Bahamas	74° 19' 49".0 W	22° 07' 17".0 N	- 7 meters
33	El Dorado Airport, Bogota, Colombia	74° 08' 18".5 W	04° 42' 11".2 N	+ 2577 meters

* Geodetic
**Height above Reference ellipsoid

Table II. Landmark Data (Continued)

Landmark Number	Landmark Name	Longitude	Latitude	Altitude
34	Isla Aparanada, Peru	73° 42' 11".7 W	16° 14' 20".7 S	0 meters
35	Great Inagua Island, Bahamas	73° 40' 31". W	21° 06' 28". N	- 8 meters
36	Mayaguana Island, Bahamas	73° 10' 16".8 W	22° 21' 52".2 N	- 10 meters
37	Ile de la Torture, Haiti	72° 58' 15".1 W	20° 03' 52".7 N	- 10 meters
38	Cabo de la Vela, Colombia	72° 10' 49".2 W	12° 12' 25".6 N	+ 10 meters
39	Punta Islay, Peru	72° 06' 45".7 W	17° 00' 53".5 S	0 meters
40	Punta Chimanche, Dominican Republic	71° 39' 13".0 W	17° 48' 42".8 N	- 10 meters
41	Bridge, Maracaibo, Venezuela	71° 32' 14".7 W	10° 34' 33".8 N	+ 24 meters
42	Punta Negra, Peru	71° 22' 56".0 W	17° 42' 24".0 S	0 meters
43	Grand Turk Island, Bahamas	71° 08' 34".7 W	21° 25' 21".7 N	- 10 meters
44	Aruba, Netherlands Antillies	70° 03' 34".5 W	12° 37' 00".8 N	+ 10 meters
45	Cabo, Cabron, Dominican Republic	69° 13' 20".2 W	19° 20' 59".5 N	- 13 meters
46	Lake Titicaca, Bolivia	68° 57' 28".3 W	16° 28' 11".2 S	+ 3,800 meters
47	Guarico Dam, Venezuela	67° 24' 20" W	08° 56' 30" N	+ 140 meters
48	Lago de Poopo, Bolivia	67° 12' 10".5 W	18° 42' 31".0 S	+ 3694 meters
49	Punta Jiguera, Puerto Rico	67° 16' 17".0 W	18° 21' 47".9 N	- 18 meters
50	Punta Aguila, Puerto Rico	67° 12' 53".0 W	17° 57' 07".2 N	- 18 meters
51	Maiquetia Airport, Venezuela	66° 59' 01".7 W	10° 36' 01".0 N	+ 40 meters
52	San Juan, Puerto Rico	66° 08' 01".2 W	18° 28' 19".8 N	- 19 meters
53	Punta La Vaca, Venezuela	66° 03' 16".7 W	10° 35' 03".3 N	0 meters
54	Anguilla Island, British Leewards	63° 10' 18".5 W	18° 09' 39".9 N	- 15 meters
55	Nevis Island, British Leeward Islands	62° 34' 57".9 W	17° 09' 02".6 N	+ 976 meters
56	Guadeloupe Island, French W.I.	61° 10' 38".6 W	16° 14' 47".7 N	- 10 meters
57	Galera Point, Trinidad	60° 54' 30".2 W	10° 50' 08".7 N	- 10 meters
58	Galeota Point, Trinidad	60° 59' 20".2 W	10° 08' 22".0 N	- 10 meters
59	Martinique Island, French W.I.	60° 53' 30". W	14° 46' 43". N	- 10 meters
60	Leguan Island, British Guiana	58° 20' 08" W	06° 56' 46" N	- 10 meters
61	Montevideo, Uruguay	56° 09' 32".2 W	34° 56' 18".1 S	0 meters
62	Punta del Este, Uruguay	54° 57' 01".3 W	34° 58' 39".2 S	0 meters
63	Canal Sao Goncalo, Brazil	52° 13' 10" W	31° 47' 22" S	0 meters
64	Pontal da Barra, Brazil	52° 04' 31".5 W	32° 11' 06".2 S	0 meters
65	Point Montague d'Argent, French Guiana	51° 41' 46".0 W	04° 22' 57".5 N	0 meters
66	Ponta das Desertas, Brazil	50° 54' 17" W	30° 26' 25" S	0 meters
67	Lagoa Imarui, Brazil	48° 50' 04".4 W	28° 25' 16".3 S	0 meters

Table II. Landmark Data (Continued)

Landmark Number	Landmark Name	Longitude	Latitude	Altitude
68	Val de Caes Airport, Belem, Brazil	48° 28' 33".2 S	01° 22' 44".9 S	+ 16 meters
69	Ilha de Sao Sebastiao, Brazil	45° 15' 08".0 W	23° 58' 01".2 S	0 meters
70	Tirirical Airport, Sao Luis, Brazil	44° 14' 10".3 W	02° 35' 13".3 S	+ 53 meters
71	Rio de Janeiro, Brazil	43° 08' 07".7 W	22° 56' 13".1 S	0 meters
72	Ilha de Cabo Frio, Brazil	42° 00' 12".7 W	23° 00' 51".7 S	0 meters
73	Atafona, Brazil	41° 00' 35".0 W	21° 36' 49".3 S	0 meters
74	Espirito Santo, Brazil	39° 16' 28".4 W	20° 19' 12".0 S	0 meters
75	Ponta da Baleia, Brazil	39° 07' 24" W	17° 41' 03" S	0 meters
76	Salvador, Brazil	38° 32' 11".4 W	13° 00' 30".0 S	0 meters
77	Ponta do Mucuripe, Brazil	38° 28' 56".0 W	03° 41' 56".0 S	0 meters
78	Ponta Manguinho, Brazil	36° 25' 07" W	10° 30' 23" S	0 meters
79	Augusto Severo Airport, Parnamirim, Brazil	35° 14' 42".2 W	05° 54' 36".1 S	+ 49 meters
80	Recife, Brazil	34° 51' 30".0 W	08° 02' 53".2 S	0 meters
81	Cabedelo, Brazil	34° 50' 33".0 W	06° 57' 57".0 S	0 meters
82	Ilha Fernando de Noronha, Brazil	32° 28' 39".3 W	03° 52' 31".5 S	0 meters
83	Fogo, Cape Verde Islands	24° 21' 10".1 W	14° 56' 50".2 N	+ 2839 meters
84	Punta de Fuencaliente, Canary Islands	17° 50' 00".2 W	28° 26' 48".9 N	0 meters
85	Pointe des Almadies, Senegal	17° 32' 00".3 W	14° 44' 18".5 N	0 meters
86	Cap Blanc, Mauritania	17° 03' 09".0 W	20° 46' 11".3 N	0 meters
87	Punta de Teno, Canary Islands	16° 54' 50".8 W	28° 20' 01".4 N	0 meters
88	Banjul Point, Gambia	16° 34' 23".4 W	13° 27' 21".6 N	0 meters
89	East Tenerife Island, Canary Islands	16° 07' 34".8 W	28° 32' 58".0 N	0 meters
90	Punta Dunford, Spanish Sahara	15° 59' 06".6 W	23° 37' 01".2 N	0 meters
91	Muelle del Generalisimo, Canary Islands	15° 24' 57".8 W	28° 07' 36".6 N	0 meters
92	Punta de Jandia, Canary Islands	14° 30' 18".1 W	28° 03' 32".9 N	0 meters
93	Point du Hunier, Guinea	13° 49' 52".3 W	09° 27' 01".8 N	0 meters
94	Cape Sierra Leone, Sierra Leone	13° 17' 45".7 W	08° 30' 13".2 N	0 meters
95	Cape St. Ann, Sierra Leone	12° 57' 29".7 W	07° 34' 27".6 N	0 meters
96	Cap Rhir, Morocco	09° 53' 28".0 W	30° 37' 56".8 N	0 meters
97	Benue and Miger Rivers, Nigeria	06° 45' 25" E	07° 47' 10" N	+ 40 meters
98	Pointe Odden, Gabon	08° 42' 58".6 E	00° 37' 10".8 S	0 meters
99	Mt. Cameroons, Cameroons	09° 10' 22".8 E	04° 11' 56".4 N	+ 4069 meters
100	Pointe Pongara, Gabon	09° 21' 16".8 E	00° 21' 23".2 N	0 meters
101	Mayoumba, Gabon	10° 39' 44".8 E	03° 23' 21".7 S	0 meters

Table II. Landmark Data (Continued)

Landmark Number	Landmark Name	Longitude	Latitude	Altitude
102	Ponta da Marca, Angola	11° 43' 00".7 E	16° 30' 41".4 S	0 meters
103	Pointe Noire, French Congo	11° 49' 24".6 E	04° 46' 16".2 S	0 meters
104	Santa Antonio Da Zaire, Angola	12° 19' 45" E	06° 04' 13" S	0 meters
105	Ponta da Ilha, Angola	13° 15' 57".0 E	08° 45' 29".8 S	0 meters
106	Pelican Point, Southwest Africa	14° 26' 42".5 E	22° 52' 53".7 S	0 meters
107	Luderitz Bay, Southwest Africa	15° 05' 30" E	26° 37' 50" S	0 meters
108	N'Duili Airport, Leopoldville, Republic of Congo	15° 25' 35".1 E	04° 23' 51".3 S	+ 312 meters
109	Orange River - Alexander Bay, Union of South Africa	16° 27' 35".9 E	28° 38' 14".1 S	0 meters
110	Stompneus Point, Union of South Africa	17° 59' 00".1 E	32° 42' 06".4 S	0 meters
111	Cape of Good Hope, Union of South Africa	18° 28' 22".4 E	34° 21' 25".3 S	0 meters
112	Cape Agulhas, Union of South Africa	20° 00' 53".7 E	34° 49' 53".0 S	0 meters
113	Cape St. Francis, Union of South Africa	24° 52' 18".1 E	34° 11' 48".7 S	+ 38 meters
114	Lake Kolwezi Dam, Republic of the Congo	25° 28' 01".5 E	10° 29' 55".2 S	+ 1400 meters
115	Cape Recife, Union of South Africa	25° 42' 21".8 E	34° 01' 46".1 S	+ 37 meters
116	Kilwa Island, Northern Rhodesia	28° 23' 17".0 E	09° 14' 55".6 S	+ 914 meters
117	Kariba Dam, Northern Rhodesia	28° 45' 48".9 E	16° 31' 19".6 S	+ 488 meters
118	Pweto, Republic of the Congo	28° 53' 08".9 E	08° 28' 48".9 S	+ 921 meters
119	Ruzizi River, Republic of the Congo	29° 16' 52".2 E	03° 21' 41".8 S	+ 781 meters
120	Cap Banza, Republic of the Congo	29° 14' 25".6 E	04° 03' 02".4 S	+ 780 meters
121	Goba Island, Republic of Tanzania	29° 53' 49".4 E	06° 22' 00".2 S	+ 786 meters
122	Cave Rock, Union of South Africa	31° 03' 43".7 E	29° 52' 24".7 S	+ 42 meters
123	Richards Bay, Union of South Africa	32° 05' 00".9 E	28° 48' 45".0 S	+ 44 meters
124	Omdurman, Sudan	32° 29' 43".7 E	15° 36' 53".4 N	+ 380 meters
125	Ponta de Macaneta, Mozambique	32° 45' 05".8 E	25° 52' 07".5 S	+ 35 meters
126	Ukerewe Island, Republic of Tanzania	33° 11' 49".5 E	02° 06' 55".0 S	+ 1144 meters
127	Fuawi Point, Malawi (Nyasaland)	34° 19' 42".6 E	12° 55' 05".6 S	+ 483 meters
128	Uyoma Point, Kenya	34° 18' 23".7 E	00° 24' 12".8 S	+ 1144 meters
129	Ponta Gea, Mozambique	34° 50' 14".7 E	19° 50' 55".0 S	+ 27 meters
130	Boadzulu Island, Malawi (Nyasaland)	35° 08' 27".9 E	14° 15' 16".1 S	+ 482 meters
131	Ponta de Linga - Linga, Mozambique	35° 24' 07".3 E	23° 44' 17".0 S	+ 34 meters
132	Ponta D. Carlos, Mozambique	35° 28' 40".6 E	21° 30' 44".7 S	+ 30 meters
133	Blue Nile and Dadessa Rivers, Ethiopia	35° 39' 26".3 E	10° 05' 41".8 N	+ 805 meters
134	North Island, Kenya	36° 02' 52".4 E	04° 04' 13".3 N	+ 382 meters
135	South Island, Kenya	36° 35' 23".9 E	02° 41' 16".9 N	+ 385 meters

Table II. Landmark Data (Continued)

Landmark Number	Landmark Name	Longitude	Latitude	Altitude
136	Daga Island, Ethiopia	37° 20' 39".6 E	11° 52' 06".0 N	+ 1837 meters
137	T. Guddu, Ethiopia	38° 51' 51".0 E	07° 57' 29".2 N	+ 1627 meters
138	Ras Nungwi, Republic of Tanzania	39° 28' 57".4 E	05° 43' 21".6 S	+ 5 meters
139	Pemba Island, Republic of Tanzania	39° 40' 42".2 E	04° 51' 50".0 S	+ 5 meters
140	Mafia Island, Republic of Tanzania	39° 54' 23".3 E	07° 38' 15".2 S	0 meters
141	Karthala, Comoro Islands	43° 21' 32".2 E	11° 45' 19".5 S	+ 2361 meters
142	Pointe Fenambosy, Malagasy Republic	44° 20' 59".2 E	25° 15' 45".8 S	0 meters
143	Anjouan, Comoro Islands	44° 31' 01".7 E	12° 22' 52".4 S	0 meters
144	Nosy Mangabe, Malagasy Republic	49° 45' 35".8 E	15° 30' 38".2 S	0 meters
145	Ile Sainte-Marie, Malagasy Republic	49° 09' 07".1 E	17° 06' 14".4 S	0 meters
146	Carducci Point, Somali Republic	51° 11' 17".8 E	10° 32' 17".2 N	0 meters
147	Pulau (Island) Samosir, Danau (Lake) Toba, Sumatra	98° 41' 23".2 E	02° 36' 43".4 N	+ 925 meters
148	Udjung (peninsula) Batu Mamak, Sumatra	98° 42' 54".5 E	01° 34' 08".6 N	0 meters
149	Laem Chao, Ko Yai Island, Thailand	100° 17' 19".5 E	07° 35' 41".7 N	0 meters
150	Tandjung (Cape) Pagar, Singapore	103° 50' 47".3 E	01° 15' 47".4 N	0 meters
151	Ile de Phu Quoc, Vietnam	103° 50' 10".5 E	10° 22' 38".3 N	0 meters
152	Lighthouse, Southern Sumatra	104° 33' 21".8 E	05° 55' 31".9 S	+ 63 meters
153	Pulau (Island) Lingga, Indonesia	104° 59' 47".0 E	00° 16' 55".3 S	0 meters
154	Tandjung Gede, Java, Indonesia	105° 12' 30".1 E	06° 45' 55".1 S	0 meters
155	Northeast Point, Christmas Island	104° 44' 53".8 E	10° 24' 26".0 S	0 meters
156	Tandjung (Cape) Berikat, Indonesia	106° 50' 48".5 E	02° 34' 19".0 S	+ 32 meters
157	Lighthouse, Djakarta, Indonesia	106° 48' 14".0 E	06° 06' 19".2 S	+ 3 meters
158	Cap Saint Jacques, South Vietnam	107° 04' 40".6 E	10° 20' 00".6 N	+ 168 meters
159	Mui Ganh, South Vietnam	109° 25' 59".4 E	12° 33' 42".9 N	0 meters
160	Tandjung (Cape) Datu, Borneo, Indonesia	109° 38' 35".2 E	02° 05' 04".8 N	0 meters
161	Dorre Island, Australia	113° 04' 27".0 E	25° 17' 47".3 S	0 meters
162	Cape Peron, Australia	113° 28' 49".3 E	25° 31' 32".1 S	0 meters
163	Tanjong (Cape) Baram, Sarawak	113° 58' 01".3 E	04° 35' 18".4 N	0 meters
164	Point Murat, Australia	114° 11' 14".3 E	21° 48' 55".5 S	0 meters
165	Tandjung Purwa, Java, Indonesia	114° 20' 29".1 E	08° 44' 16".3 S	0 meters
166	Tandjung Sombulangan, Java, Indonesia	114° 23' 08".5 E	08° 26' 47".9 S	0 meters
167	Cape Naturaliste, Australia	115° 00' 05".3 E	33° 31' 52".9 S	0 meters
168	Cape Leeuwin, Australia	115° 07' 59".5 E	34° 22' 20".3 S	+ 22 meters
169	Pasco Island, Australia	115° 21' 21".3 E	20° 59' 25".7 S	0 meters

Table II. Landmark Data (Continued)

Landmark Number	Landmark Name	Longitude	Latitude	Altitude
170	Swan River, Fremantle, Australia	115° 43' 16".3 E	32° 03' 13".5 S	+ 17 meters
171	Lombok Island, Indonesia	116° 26' 13".7 E	08° 24' 57".3 S	+ 2008 meters
172	Tanjong Sempang, Mangayau, North Borneo, Malasia	116° 44' 26".4 E	07° 02' 16".6 N	0 meters
173	Legendre Island, Australia	116° 50' 09".4 E	20° 21' 08".0 S	0 meters
174	Possession Point, Albany, Australia	117° 54' 52".7 E	35° 02' 35".4 S	+ 46 meters
175	Kaap (Cape) William, Celebes, Indonesia	118° 48' 44".1 E	02° 37' 07".6 S	+ 81 meters
176	Cape Van Mandar, Cebebes, Indonesia	118° 56' 17".9 E	03° 34' 20".8 S	0 meters
177	Popodi Town, Celebes, Indonesia	119° 40' 15.7 E	00° 01' 02".1 S	+ 8 meters
178	Tandjung (Cape) Karang, Celebes, Indonesia	119° 43' 51".3 E	00° 38' 32".8 S	+ 50 meters
179	Sumba Island, Indonesia	119° 56' 19".4 E	09° 16' 35".4 S	0 meters
180	Tabutule (Liukangloe) Island, Celebes	120° 25' 35".1 E	05° 38' 26".4 S	0 meters
181	Salajar Island, Celebes	120° 28' 59".5 E	06° 29' 35".8 S	0 meters
182	Sangley Point, Manila Bay, Phillippines	120° 55' 05".8 E	14° 29' 55".2 N	+ 33 meters
183	Pucio Point (Panay Island) Phillippines	121° 50' 31".0 E	11° 45' 52".7 N	0 meters
184	Cape San Tldefonso (Luzon Island) Phillippines	121° 59' 24".3 E	16° 01' 45".7 N	0 meters
185	Cape Le Grand, Australia	122° 06' 09".9 E	34° 00' 44".1 S	0 meters
186	Gantheaume Point, Australia	122° 10' 27".5 E	17° 58' 31".2 S	0 meters
187	Cape Arid, Australia	123° 08' 23".6 E	34° 01' 10".3 S	0 meters
188	Oisana, Timor Island, Indonesia	123° 27' 32".4 E	10° 21' 08".3 S	+ 25 meters
189	Catanduanes Island, Phillippines	124° 11' 24".3 E	13° 31' 12".8 N	0 meters
190	Pulau (Island) Lembeh, Celebes	125° 17' 20".7 E	01° 32' 41".7 N	+ 61 meters
191	Mount Balut, Balut Island, Phillippines	125° 22' 28".8 E	05° 23' 54".5 N	+ 862 meters
192	Cape St. Agustin, Phillippines	126° 11' 29".1 E	06° 16' 15".7 N	+ 10 meters
193	Pulau (Island) Jaco, Portugese Timor	127° 19' 01".2 E	08° 25' 33".8 S	+ 81 meters
194	Tandjung (Cape) Sial, Ceram Island, Indonesia	127° 54' 29".9 E	03° 34' 01".0 S	+ 29 meters
195	Tandjung (Cape) Bisoa, Halmahara Island, Indonesia	127° 57' 19".7 E	02° 13' 09".0 N	0 meters
196	Tandjung (Cape) Ngolopopo, Halmahera Island, Indonesia	128° 54' 20".9 E	00° 12' 23".4 N	0 meters
197	Pearce Point, Australia	129° 21' 20".1 E	14° 25' 39".0 S	+ 26 meters
198	Cape Ford, Australia	129° 53' 26".1 E	13° 26' 38".5 S	0 meters
199	Stokes Hill, Darwin, Australia	130° 50' 56".9 E	12° 28' 03".2 S	0 meters
200	Tandjung (Cape) Fatagar, New Guinea	131° 57' 02".0 E	02° 46' 04".8 S	0 meters
201	Croker Island, Australia	132° 35' 19".4 E	11° 21' 29".3 S	0 meters
202	Palau (Island) Adi (West), New Guinea, Indonesia	133° 38' 31".5 E	04° 18' 48".8 S	+ 75 meters

Table II. Landmark Data (Continued)

Landmark Number	Landmark Name	Longitude	Latitude	Altitude
203	Tandjung (Cape) Menori, West New Guinea, Indonesia	134° 08' 09".8 E	00° 52' 02".8 S	0 meters
204	Konlei, Babelthuap Island, Caroline Group	134° 37' 20".8 E	07° 42' 55".4 N	+ 20 meters
205	Point Whidbey, South Australia	135° 06' 54".4 E	34° 35' 34".6 S	0 meters
206	Tandjung (Cape) Woka, West New Guinea, Indonesia	135° 24' 49".3 E	01° 36' 13".2 S	0 meters
207	Maria Island, Australia	135° 40' 58".3 E	14° 54' 23".1 S	0 meters
208	Cape du Couedie, Kangaroo Island, Australia	136° 41' 21".6 E	36° 04' 05".5 S	+ 78 meters
209	Corny Point, Australia	137° 00' 39".8 E	34° 53' 52".4 S	+ 25 meters
210	Wardang Island, Australia	137° 21' 44".8 E	34° 27' 48".7 S	+ 4 meters
211	Point Marsden, Kangaroo Island, Australia	137° 37' 52".3 E	35° 34' 22".6 S	+ 46 meters
212	Curlew Point, Port Agusta, Australia	137° 46' 54".2 E	32° 32' 27".2 S	+ 6 meters
213	Yap Island, Caroline Group	138° 03' 07".3 E	09° 26' 23".7 N	0 meters
214	Duifken Point, Australia	141° 36' 00".4 E	12° 34' 13".4 S	+ 22 meters
215	Cullen Point, Australia	141° 54' 38".9 E	11° 55' 52".4 S	0 meters
216	Cape Direction, Australia	143° 32' 46".4 E	12° 50' 33".1 S	+ 10 meters
217	Apra Harbor, Guam	144° 37' 17".9 E	13° 27' 09".6 N	0 meters
218	Southeast Cape, Great Palm Island, Australia	146° 42' 32".1 E	18° 45' 51".2 S	0 meters
219	Lake Wisdom, Long Island, Indonesia	147° 06' 47".8 E	05° 20' 02".0 S	+ 274 meters
220	Cape Bowling Green, Australia	147° 25' 59".0 E	19° 20' 00".5 S	+ 5 meters
221	Lake Dakataua, New Britain, Solomon Group	150° 05' 59" E	04° 59' 56" S	+ 73 meters
222	South Island, Australia	150° 22' 43".0 E	21° 42' 57".0 S	0 meters
223	Cape Banks, Sydney, Australia	151° 14' 57".4 E	34° 00' 13".5 S	+ 53 meters
224	Lighthouse, Sugarloaf Point, Australia	152° 32' 22".1 E	32° 26' 34".2 S	+ 70 meters
225	Cape St. George, New Ireland, Solomons	152° 53' 03".8 E	04° 51' 06".9 S	0 meters
226	Double Island Point, Australia	153° 11' 28".6 E	25° 56' 00".8 S	+ 61 meters
227	Sandy Cape, Fraser Island, Australia	153° 15' 29".1 E	24° 41' 49".0 S	0 meters
228	Cape Moreton, Australia	153° 27' 58".7 E	27° 02' 00".5 S	+ 91 meters
229	Point Lookout, Australia	153° 32' 50".5 E	27° 26' 12".7 S	+ 15 meters
230	Ballina, Australia	153° 35' 33".0 E	28° 52' 06".9 S	+ 23 meters
231	Cape Kumukahi, Hawaii	154° 48' 34".1 W	19° 31' 10".8 N	0 meters
232	Motupena Point, Bougainville Island, Solomons	155° 09' 40".0 E	06° 30' 53".0 S	0 meters
233	Ka Lae Light, Hawaii Island	155° 41' 04".7 W	18° 54' 55".0 N	+ 5 meters
234	Cape Halawa, Hawaii	156° 42' 45".6 W	21° 09' 40".8 N	0 meters
235	Kaena Point, Oahu, Hawaii	158° 17' 00".7 W	21° 34' 41".0 N	0 meters
236	Cape Zelee, Maramasiki Island, Solomons	161° 33' 29".5 E	09° 43' 34".5 S	0 meters

Table II. Landmark Data (Continued)

Landmark Number	Landmark Name	Longitude	Latitude	Altitude
237	Cape Cumberland, Espiritu Santo Island	166° 37' 02".3 E	14° 37' 51".5 S	0 meters
238	Pointe Lefevre, Lifou Island, Loyalty Group	167° 00' 50".8 E	20° 54' 53".6 S	0 meters
239	Cap Wabao, Mare Island, Loyalty Group	167° 50' 47".6 E	21° 35' 50".1 S	0 meters
240	North Point, The Aurore, New Hebrides	168° 05' 24".2 E	14° 54' 51".7 S	0 meters
300	Land's End, Santa Catalina Island, California	118° 36' 21".5 W	33° 28' 45".5 N	- 25 meters
301	Point Loma Lighthouse, San Diego, California	117° 14' 32".33 W	32° 39' 54".86 N	- 16 meters
302	Punta Santa Eugenia, Mexico	115° 04' 52" W	27° 51' 07" N	- 5 meters
303	Parker Dam, California - Arizona	114° 08' 10".7 W	34° 18' 03".6 N	128 meters
304	Punta Abreojos, Mexico	113° 34' 49" W	26° 43' 46" N	- 5 meters
305	Isla Tiburon, Punta Yayahmeko, Mexico	112° 35' 05".4 W	28° 52' 33".3 N	- 5 meters
306	Punta Tosca, Mexico	111° 43' 18" W	24° 19' 00" N	- 3 meters
307	Cabo Haro, Guayamas, Mexico	110° 53' 06".4 W	27° 50' 21".3 N	- 5 meters
308	Punta Mogote, Mexico	110° 18' 00" W	24° 10' 48" N	- 2 meters
309	Cabo San Lucas, Mexico	109° 53' 29" W	22° 52' 14" N	0 meters
310	Airport, Mazatlan, Mexico	106° 25' 47" W	23° 13' 56" N	+ 6 meters
311	Creston Island, Mazatlan, Mexico	106° 25' 48".0 W	23° 10' 29".8 N	0 meters
312	Cabo Corrientes, Mexico	105° 42' 10".1 W	20° 24' 22".8 N	+ 2 meters
313	La Boquilla Dam, Lago de Toronto, Mexico	105° 24' 54".4 W	27° 32' 43".6 N	+ 1302 meters
314	Central Airport, Mexico City, Mexico	99° 04' 13".6 W	19° 26' 09".7 N	+ 2242 meters
315	Rio Panuco, Tampico, Mexico	97° 46' 55".2 W	22° 15' 36".3 N	+ 3 meters
316	Corpus Christi, Texas	97° 14' 34".9 W	27° 41' 20".8 N	- 2 meters
317	Scholes Field, Galveston, Texas	94° 51' 33".2 W	29° 15' 48".0 N	+ 1 meters
318	Airport, Isla de Carmen, Mexico	91° 48' 20" W	18° 39' 20" N	+ 8 meters
319	Airport, Merida, Mexico	89° 39' 31" W	20° 56' 14" N	+ 14 meters
320	Cabo Tres Puntas, Guatemala	88° 37' 25".0 W	15° 57' 47".6 N	+ 7 meters
321	Airport, Isla Cozumel, Mexico	86° 56' 23" W	20° 31' 23" N	+ 10 meters
322	Tipitapa, Nicaragua	86° 05' 48".2 W	12° 12' 11".6 N	+ 65 meters
323	Cabo Santo Helena, Costa Rica	85° 57' 08" W	10° 53' 30" N	+ 20 meters
324	Cabo Velas, Costa Rica	85° 52' 31".6 W	10° 21' 21".2 N	+ 20 meters
325	Volcan Conception, Nicaragua	85° 37' 20".3 W	11° 32' 20".7 N	+ 1630 meters
326	Tyndal Air Force Base, Florida	85° 34' 49".9 W	30° 04' 37".4 N	+ 5 meters
327	Cabo Blanco, Costa Rica	85° 06' 36".9 W	09° 33' 17".9 N	+ 27 meters
328	Airport, Puerto Cabazas, Nicaragua	83° 23' 00".3 W	14° 02' 47".5 N	+ 30 meters
329	Punta Burica, Panama	82° 52' 14".9 W	08° 01' 54".5 N	+ 23 meters
330	Mullet Key, Florida	82° 44' 04".9 W	27° 36' 41".9 N	+ 9 meters

Table II. Landmark Data (Continued)

Landmark Number	Landmark Name	Longitude	Latitude	Altitude
331	Bay Bridge, St. Petersburg, Florida	82° 37' 48".6 W	27° 35' 33".4 N	+ 7 meters
332	Key West, Florida	81° 48' 38".0 W	24° 32' 53".7 N	+ 8 meters
333	Isla Jicarita, Panama	81° 47' 56".61 W	07° 12' 19".70 N	+ 101 meters
334	Airport, Mayport, Florida	81° 25' 09".8 W	30° 23' 43".6 N	+ 6 meters
335	Mc Kinnon Airport, Georgia	81° 23' 43".2 W	31° 08' 59".5 N	+ 5 meters
336	Punta Parinas, Peru	81° 19' 39".0 W	04° 40' 05".1 S	0 meters
337	Grand Cayman Island, Jamaica	81° 16' 19".3 W	19° 22' 25".0 N	0 meters
338	Punta Aguja, Peru	81° 06' 24".0 W	05° 48' 33".5 S	0 meters
339	Isla Cebaco, Panama	81° 02' 15".1 W	07° 34' 20".6 N	+ 28 meters
340	General Ulpiano Paez Airport, Ecuador	80° 59' 33".8 W	02° 12' 12".6 S	+ 10 meters
341	Airport, New Smyrna Beach, Florida	80° 56' 52".6 W	29° 03' 16".4 N	+ 3 meters
342	Parris Island, South Carolina	80° 40' 01".6 W	32° 17' 51".7 N	- 2 meters

13. ERROR ANALYSIS

13.1. HARDWARE ERRORS

DESCRIPTION

THIS OPTION ALLOWS TWO TYPES OF ERRORS TO BE INPUT. ONE OF THE OPTIONS ACCEPTS THE ERRORS AND DOES NOT GENERATE PARTIALS. THIS OPTION IS REFERRED TO AS NOMINAL ERRORS. THE REMAINING OPTION USES THE INPUT ERRORS AS PERTURBATIONS AND GENERATES PARTIALS. THIS OPTION IS REFERRED TO AS HARDWARE PERTURBATIONS.

13.1.1. NOMINAL ERRORS

INPUT

```
ICOORD - INPUT COORDINATES FLAG (NOMINALLY =0).
       =0 INPUT IS IN ORBIT PLANE COORDINATES.
       =1 INPUT IS IN INERTIAL COORDINATES.
PLAT(1) - FIRST VEHICLE PLATFORM MISALIGNMENT ANGLES(DEG).
          MUST BE ACCOMPANIED BY ATYPE(3)=1 INPUT.
PLAT(4) - SECOND VEHICLE PLATFORM MISALIGNMENT ANGLES(DEG).
          MUST BE ACCOMPANIED BY ATYPE(4)=1 INPUT.
DRIFT(1) - FIRST VEHICLE PLATFORM DRIFT RATES (DEG/SEC).
DRIFT(4) - SECOND VEHICLE PLATFORM DRIFT RATES (DEG/SEC).
ATTER1 - FIRST VEHICLE ATTITUDE MISALIGNMENT ANGLES ABOUT
         VEHICLE Y AND Z AXES(DEG). MUST BE ACCOMPANIED BY
         ATYPE(1)=1 INPUT.
ATTER2 - SECOND VEHICLE ATTITUDE MISALIGNMENT ANGLES ABOUT
         VEHICLE Y AND Z AXES(DEG). MUST BE ACCOMPANIED BY
         ATYPE(2)=1 INPUT.
```

* NOTE

ON THE FOLLOWING CARDS OF THIS SECTION THE NUMBER IN PARENTHESES INDICATES THE DIMENSION.

```
UNBLSA (3) - MASS UNBALANCE COEFFICIENTS ABOUT THE
             SPIN AXIS (DEG-SEC/FT).
UNBLIA (3) - MASS UNBALANCE COEFFICIENTS ABOUT THE
             INPUT AXIS (DEG-SEC/FT).
ELAS (3) - ANISOELASTIC EFFECTS (DEG-SEC**2/FT**2).
ACCM (6) - ACCELEROMETER MISALIGNMENTS (DEG).
ERRMDL - ERROR MODEL FLAG (=1 FOR THIS OPTION).
TALN   - PLATFORM ALIGNMENT TIME (HRS).
ITERAT - PERTURBATION FLAG (=4 FOR THIS OPTION).
D4(I) - IMU ALIGNMENT FLAG (I=1 OR 2 FOR VEHICLE 1 OR 2)
      =0 IMU SYSTEM IS NOT MISALIGNED
      =1 IMU SYSTEM IS MISALIGNED
INAV - NAVIGATION SELECTOR (=1 FOR THIS OPTION)
```

CODE - 6 CHARACTERS TO BE USED IN CARD COLUMNS 73-78 OF PUNCHED PARTIALS OUTPUT FOR IDENTIFICATION.

NOMINAL VALUES

ALL OF THE ABOVE DESCRIBED INPUT IS NOMINALLY SET TO ZERO.

EXAMPLE 1

```
PLAT(1)=.5,0.,0.,  PLAT(4)=0.,.5,0., DRIFT(1)=.1,0.,0.
ATTER1=10.,5., D4(1)=1,ERRMDL=1,ITERAT=4*
```

EXPLANATION OF EXAMPLE

PLAT(1) MISALIGNS THE FIRST VEHICLE PLATFORM BY .5 DEG ABOUT THE X-AXIS AND 0. DEG ABOUT THE Y AND Z AXES.
PLAT(4) MISALIGNS THE SECOND VEHICLE PLATFORM BY .5 DEG ABOUT THE Y-AXIS AND 0. DEG ABOUT THE X AND Z AXES.
DRIFT(1) CAUSES THE FIRST VEHICLE IMU TO DRIFT .1 DEG/SEC ABOUT THE X-AXIS. ATTER1 MISALIGNS THE FIRST VEHICLE ATTITUDE 10 DEG ABOUT THE VEHICLE Y-AXIS AND 5 DEG ABOUT THE VEHICLE Z-AXIS.
ATTER1 MISALIGNS THE FIRST VEHICLE ATTITUDE 10 DEG ABOUT THE Y-AXIS AND AND 5 DEG ABOUT THE Z-AXIS.

13.1.2. HARDWARE PERTURBATIONS

INPUT

```
PPLAT (3) - PERTURBATION IN PLATFORM ALIGNMENT (DEG)
PDRIFT (3) - PERTURBATION IN GYRO BIAS DRIFT (DEG/SEC)
PUNBLS (3) - PERTURBATION IN MASS UNBALANCE ALONG
             GYRO SPIN AXIS.
PUNBLI (3) - PERTURBATION IN MASS UNBALANCE ALONG
             GYRO INPUT AXIS.
PELAS (3) - PERTURBATION IN GYRO ANISOELASTIC EFFECT
            (DEG-SEC**3/FT**2).
PACCM (6) - PERTURBATION IN ACCELEROMETER MISALIGNMENT(DEG)
PABIAS (3) - PERTURBATION IN ACCELEROMETER BIAS (FT/SEC**2)
PASCAL (3) - PERTURBATION IN ACCELERCMETER SCALE FACTOR
PANLIN (3) - PERTURBATION IN ACCELEROMETER NONLINEARITY
             (SEC**2/FT).
PATT (2) - PERTURBATION IN VEHICLE ATTITUDE MISALIGNMENT
           (DEG).
INAV - NAVIGATION SELECTOR (=1 FOR THIS OPTION)
PTINIT - PERTURBATION IN THRUST INITIATION TIME (SEC)
PTCOT - PERTURBATION IN THRLST CUTOFF TIME (SEC).
PWFR - PERTURBATION IN WEIGHT FLOW RATE (LBM/SEC)
PTMA - PERTURBATION IN THRUST MAGNITUDE (LBF).
PSPIM - PERTURBATION IN SPECIFIC IMPULSE (SEC).
TALN - PLATFORM ALIGNMENT TIME (HR).
ERRMDL - ERROR MODEL FLAG (=1 FOR THIS OPTION)
```

ITERAT - PERTURBATICN FLAG (=4 FOR THIS OPTION).
D4(I)- IMU ALIGNMENT FLAG (I=1 OR 2 FOR VEHICLE 1 OR 2)
=0 IMU SYSTEM IS NOT MISALIGNED
=1 IMU SYSTEM IS MISALIGNED
ICOORD - INPUT COORDINATES FLAG (NCMINALLY =0).
=0 INPUT IS IN ORBIT PLANE COORDINATES.
=1 INPUT IS IN INERTIAL COORDINATES.
CODE - 6 CHARACTERS TO BE USED IN CARD COLUMNS 73-78 OF PUNCHED PARTIALS OUTPUT FOR IDENTIFICATION.
PHASP - FLAG TO COMPUTE AND OUTPUT CN PUNCHED CARDS INTERMEDIATE PARTIALS. (MUST BE INPUT IN EVERY PHASE IN WHICH PARTIALS ARE DESIRED EXCEPT LAST PHASE. INTERMEDIATE PARTIALS ARE ALWAYS OUTPUT ON PUNCHED CARDS IN THE LAST PHASE.)

NOMINAL VALUES
ALL OF THE ABOVE DESCRIBED INPUT IS NCMINALLY SET SUCH THAT NO PERTURBATIONS WILL BE OBTAINED IF THE USER DOES NOT INPUT VALUES.

13.2. PERTURBATION OF STATE VECTORS AND SPACECRAFT WEIGHT.

* NCTE
PERTURBATIONS INPUT IN THIS SECTION WILL BE CONSIDERED PRIOR TO THOSE IN THE TWO SECTIONS ABCVE.

INPUT
PXE, PYE, PZE, - PERTURBATIONS IN NAVIGATED POSITION
PDXE, PDYE, PDZE, - PERTURBATIONS IN NAVIGATED VELOCITY
PX, PY, PZ, - PERTURBATIONS IN ACTUAL POSITION
PDX, PDY, PDZ, - PERTURBATIONS IN ACTUAL VELOCITY.
**NCTE - THE ABOVE INPUTS MUST BE IN UNITS OF ISCALE.
PW - PERTURBATIONS IN TOTAL SPACECRAFT WEIGHT.
ITERAT - PERTURBATION FLAG (=4 FOR THIS OPTION).
INAV - NAVIGATICN SELECTOR (=1 FOR THIS OPTION).
ICOORD - INPUT COORDINATES FLAG (NOMINALLY =0).
=0 INPUT IS IN ORBIT PLANE COORDINATES.
=1 INPUT IS IN INERTIAL CCORDINATES.
PHASP - FLAG TO COMPUTE AND OUTPUT ON PUNCHED CARDS INTERMEDIATE PARTIALS. (SEE NOTE TO DEFINITION OF PHASP IN SECTION 13.1.2. ABOVE.)

NOMINAL VALUES
ALL OF THE ABOVE DESCRIBED INPUT IS NOMINALLY SET TO ZERO.

EXAMPLE 1
ITERAT=4,PW=100.,PX=10.,PY=5.,PZ=5.,PDX=10.*
INAV=1 *

14. TABLES

14.1 SYMBOLS FOR TABLE DESCRIPTION

SYMBOL	DESCRIPTION
SIMPLE	SIMPLE TABLE
MASTER	MASTER TABLE
POLYEX=	POLYNOMIAL EXPANSION TABLE-FOLLOWED BY ORDER + 20
CONVAL	CONSTANT VALUE TABLE

THE FOLLOWING SEVEN OPTIONS ARE APPLICABLE ONLY FOR SIMPLE AND MASTER TABLES.

STEP	STEP INTERPOLATION
LINEAR	LINEAR INTERPOLATION
QUAD	QUADRATIC INTERPOLATION
STOARG	STORED ARGUMENT FUNCTION
EQINT	EQUAL INTERVAL FUNCTION
ERO=	EXTENDED RANGE OPTION
ARG=	INDEPENDENT VARIABLE-ANY VARIABLE CONTAINED IN THE SYMBOL TABLE (SEE SECTION 4.4) MAY BE USED PROVIDED THIS VARIABLE IS BEING CONTINUALLY UPDATED IN THE PROGRAM COMPUTATION LINK. SOME OF THE MOST WIDELY USED ARGUMENTS ARE LISTED BELOW-- T - TIME SINCE LAUNCH(HRS) AAP - PITCH ANGLE OF ATTACK(DEG) AAY - YAW ANGLE OF ATTACK(DEG) AAT - TOTAL ANGLE OF ATTACK(DEG) MACH - MACH NUMBER(ND) PLAPSE - TIME SINCE START OF A PRIMARY PHASE(HRS) SLAPSE - TIME SINCE START OF A SECONDARY PHASE(HRS) AALT - COMPUTED ALTITUDE(FT) THRSW - THROTTLE SWITCH SETTING(ND)

THE FOLLOWING FOUR OPTIONS ARE APPLICABLE ONLY FOR SIMPLE, MASTER AND POLYNOMIAL EXPANSION TABLES.

AMLT=	ARGUMENT MULTIPLIER
FMLT=	FUNCTION MULTIPLIER
ADD=	ADDITIVE TERM
FUNCT=	ARGUMENT VS. FUNCTION IN SIMPLE AND MASTER TABLES ---OR--- COEFFICIENTS IN ASCENDING ORDER FOR POLYNOMIAL EXPANSION TABLES

14.1.1 SIMPLE TABLE

```
REQUIRED INPUT
  TABLE NAME
  TABLE TYPE(SIMPLE)
  INTERPOLATION TYPE(STEP, LINEAR OR QUAD)
  FUNCTION TYPE(EQINT OR STOARG)
  ARGUMENT(ARG=PROGRAM SYMBOL)
  FUNCTION(FUNCT=VALUES)

EXAMPLE
 TTABLE,SIMPLE,LINEAR,STOARG,ARG=T,FUNCT=5.67,8.25,6.0,9.69*
```

14.1.2 MASTER TABLE

```
REQUIRED INPUT
  SAME AS SIMPLE EXCEPT THE FOLLOWING
  TABLE TYPE(MASTER)
  FUNCTION(FUNCT=X(0),TABLE NO.,X(1),TABLE NO.,...,X(N),TABLE

  THESE MAY BE USED FOR ONE OF TWO REASONS
    1) TO SELECT AN APPROPRIATE LOWER LEVEL TABLE
    2) TO DEFINE A VALUE AS A FUNCTION OF ONE OR MORE
       VARIABLES

  MASTER TABLES MAY HAVE STEP, LINEAR, OR QUADRATIC
    INTERPOLATION AND MUST BE EITHER STORED ARGUMENT
    OR EQUAL INTERVAL. THE LEVEL OF A TABLE IS DEFINED
    AS THE NUMBER OF TABLES (INCLUDING THE MAIN TABLE
    AND THE SPECIFIC TABLE ITSELF) THAT MUST BE ENTERED
    IN REACHING THE SPECIFIED TABLE. NO MORE THAN 5 LEVELS
    MAY BE ENTERED.

  EXAMPLE OF 1)
    LET DENSITY = F(ALTITUDE) AND THE TABLE MIGHT BE
      ENTERED AS FOLLOWS - -
   ADEN,MASTER,STOARG,STEP,ERO=2,ARG=AALT*
      FUNCT=0.,1,500.,2,800.,3,1000.*
   ADEN(1),SIMPLE,EQINT,LINEAR,ERO=2,ARG=AALT*
      FUNCT=0.,100.,3000.,2075.,2045.,2000.,1080.*
   ADEN(2),SIMPLE,EQINT,LINEAR,ERO=2,ARG=AALT*
      FUNCT=500.,50.,1050.,1005.,1000.,950.,940.,930.,900.*
   ADEN(3),SIMPLE,EQINT,LINEAR,ERO=1,ARG=AALT*
      FUNCT=800.,50.,800.,700.,600.,500.,450.*
```

EXPLANATION OF EXAMPLE

IF THE ALTITUDE IS LESS THAN 500.0, THE TABLE WILL FIND DENSITY FROM ADEN(1), FROM 500. TO 800. DENSITY WILL BE COMPUTED FROM ADEN(2), AND ABOVE 800. FROM ADEN(3). IF THE MAIN TABLE HAD USED LINEAR INTERPOLATION A VALUE OF DENSITY FROM TWO DIFFERENT TABLES WOULD HAVE BEEN USED FOR INTERPOLATION IN THE MAIN TABLE.

EXAMPLE OF 2)

```
LET CDRAG1 = F(MACH,ALPHA)
CDRAG1,MASTER,STOARG,ERO=2,STEP,ARG=MACH*
  FUNCT=1.6,1,1.73,2,1.8,3*
CDRAG1(1),SIMPLE,STOARG,ERO=1,LINEAR,ARG=ALPHA*
  FUNCT=15.0,30.6,15.5,40.0,17.0,16.2*
CDRAG1(2),SIMPLE,STOARG,ERO=2,STEP,ARG=ALPHA*
  FUNCT=17.2,18.8,18.3,19.0,16.5*
CDRAG1(3),SIMPLE,EQINT,ERO=1,QUAD,ARG=ALPHA*
  FUNCT=19.6,.5,20.,25.,31.*
```

EXPLANATION OF EXAMPLE

IN THE PRIME TABLE CDRAG1 = F(MACH) AND CDRAG1 IS A TABLE NUMBER. IN THE SLAVE TABLES CDRAG1 = F(ALPHA) FOR A FIXED MACH, THAT IS - CDRAG1(1) IS A TABLE OF CDRAG1/ALPHA ONLY FOR MACH BETWEEN 1.6 AND 1.7, ETC. IF CDRAG1=F(MACH,ALTITUDE,ALPHA) THE CDRAG1/ALPHA TABLE WOULD BE APPLICABLE ONLY FOR A PARTICULAR MACH AND ALTITUDE AND THE CDRAG1/ALPHA TABLE WOULD BE ONE MORE LEVEL REMOVED FROM THE PRIME TABLE.

14.1.3 CONSTANT VALUE TABLE

REQUIRED INPUT

TABLE NAME
TABLE TYPE(CONVAL-OPTIONAL)
FUNCTION VALUE

EXAMPLE

TTABLE=2500.953 OR TTABLE,CONVAL=2500.953

14.1.4 POLYNOMIAL EXPANSION TABLE

REQUIRED INPUT

TABLE NAME
TABLE TYPE AND DEGREE(POLYEX=DEGREE)
ARGUMENT(ARG=PROGRAM SYMBOL)
POLYNOMIAL COEFFICIENTS(FUNCT=VALUES)
COEFFICIENTS MUST BE ENTERED IN ASCENDING ORDER.

```
EXAMPLE
  TTABLE,POLYEX=5,ARG=T,FUNCT=1.5,2.3,7.6,5.0,2.5
```

14.2 INTERPOLATION TYPES - APPLICABLE FOR MASTER AND SIMPLE TABLES ONLY

```
STEP          INPUT AS STEP
LINEAR        INPUT AS LINEAR
QUADRATIC     INPUT AS QUAD
```

14.3 TABULAR DATA FORMAT - APPLICABLE FOR MASTER AND SIMPLE TABLES ONLY

```
STORED ARGUMENT     INPUT AS STOARG
  EXAMPLE FOR SIMPLE TABLE
    FUNCT=X(0),Y(0),X(1),Y(1),...,X(N),Y(N) (X(N+1) - STEP TABLE)
EQUAL INTERVAL      INPUT AS EQINT
  EXAMPLE FOR SIMPLE TABLE
    FUNCT=X(0),X-INCREMENT,Y(0),Y(1),...,Y(N)
MASTER TABLES HAVE THE SAME FORMAT EXCEPT THAT THE Y'S ARE
  REPLACED BY TABLE NUMBERS.
```

14.4 EXTENDED RANGE OPTION INPUT AS ERO=VALUE

```
GOVERNS ACTION TO BE TAKEN IF ARG .LT. X(0) OR ARG .GT. X(N)
 ERO = 0                      CALLS EXIT
 ERO = 1 AND ARG .LT. X(0)    F = Y(0)
         AND ARG .GT. X(N)    F = Y(N)
 ERO = 2                      LINEAR EXTRAPOLATION
VALUE FOR ERO MUST BE INTEGER
```

14.5 MULTIPLIERS AND ADDED TERM

```
ARGUMENT MULTIPLIER     INPUT AS AMLT=VALUE
  SETS ARG = ARG * AMLT
FUNCTION MULTIPLIER     INPUT AS FMLT=VALUE
  SETS F = F * FMLT
ADDED TERM              INPUT AS ADD=VALUE
  SETS F = F + ADD
IF ALL THREE ARE USED F = F(ARG*AMLT) * FMLT + ADD
VALUES FOR FMLT, AMLT AND ADD MUST BE REAL.
```

14.6 RESTRICTIONS

THE TABLE NAME MUST BE THE FIRST ENTRY IN EACH TABLE.
THE LAST ENTRY INTO A TABLE MUST BE FUNCT=VALUES.

14.7 CORE AVAILABLE

THE BUCKET WILL CONTAIN 2000 CELLS. THE CELLS REQUIRED FOR EACH TABLE ARE AS FOLLOWS---

SIMPLE, MASTER OR POLYNOMIAL EXPANSION TABLES --
18 CELLS + 1 CELL FOR EACH VALUE AFTER FUNCT=.
THE EXAMPLE IN 15.1.1 WOULD REQUIRE 22 CELLS.

CONSTANT VALUE TABLE -- 7 CELLS TOTAL.

14.8 INPUT TABLES

TABLE NAME	DESCRIPTION OF OUTPUT
TTABLE	THRUST MAGNITUDE (LB)
SITABL	SPECIFIC IMPULSE (SEC)
WRTABL	MASS FLOW (LB/SEC)
WINDM	WIND SPEED - USED WITH WINDAZ(FT/SEC)
WINDAZ	WIND AZIMUTH MEASURED FROM NORTH(DEG)
WINDN	WIND SPEED FROM NORTH(FT/SEC)
WINDE	WIND SPEED FROM EAST(FT/SEC)
ADEN	ATMOSPHERIC DENSITY(LB/FT**3)
APSI	ATMOSPHERIC PRESSURE(LB/FT**2)
SPEEDS	SPEED OF SOUND (FT/SEC)
CDRAG1	COEFFICIENT OF DRAG FOR VEHICLE 1(ND)
CDRAG2	COEFFICIENT OF DRAG FOR VEHICLE 2(ND)
BAS1	FORCE FROM BASE PRESSURE-VEH. 1(LB)
BAS2	FORCE FROM BASE PRESSURE-VEH. 2(LB)
CG1	CENTER OF GRAVITY-X COMP.-VEH. 1 (FT)
CG2	CENTER OF GRAVITY-X COMP.-VEH. 2 (FT)
CGP1	CENTER OF GRAVITY-Y COMP.-VEH. 1 (FT)
CGP2	CENTER OF GRAVITY-Y COMP.-VEH. 2 (FT)
CGY1	CENTER OF GRAVITY-Z COMP.-VEH. 1 (FT)
CGY2	CENTER OF GRAVITY-Z COMP.-VEH. 2 (FT)
IROLL1	TURNING RATE-VEH. 1 X AXIS (DEG/SEC)
IROLL2	TURNING RATE-VEH. 2 X AXIS (DEG/SEC)
IPTCH1	TURNING RATE-VEH. 1 Y AXIS (DEG/SEC)
IPTCH2	TURNING RATE-VEH. 2 Y AXIS (DEG/SEC)
IYAW1	TURNING RATE-VEH. 1 Z AXIS (DEG/SEC)
IYAW2	TURNING RATE-VEH. 2 Z AXIS (DEG/SEC)

CPP1	POINT OF FORCE APPLICATION (SEE 8.3)
CPP2	POINT OF FORCE APPLICATION (SEE 8.3)
CPY1	POINT OF FORCE APPLICATION (SEE 8.3)
CPY2	POINT OF FORCE APPLICATION (SEE 8.3)
CNP01	NORMAL FORCE COEFFICIENTS (SEE 8.3)
CNP02	NORMAL FORCE COEFFICIENTS (SEE 8.3)
CNP11	NORMAL FORCE COEFFICIENTS (SEE 8.3)
CNP12	NORMAL FORCE COEFFICIENTS (SEE 8.3)
CNP21	NORMAL FORCE COEFFICIENTS (SEE 8.3)
CNP22	NORMAL FORCE COEFFICIENTS (SEE 8.3)
CNP31	NORMAL FORCE COEFFICIENTS (SEE 8.3)
CNP32	NORMAL FORCE COEFFICIENTS (SEE 8.3)
CNY01	NORMAL FORCE COEFFICIENTS (SEE 8.3)
CNY02	NORMAL FORCE COEFFICIENTS (SEE 8.3)
CNY11	NORMAL FORCE COEFFICIENTS (SEE 8.3)
CNY12	NORMAL FORCE COEFFICIENTS (SEE 8.3)
CNY21	NORMAL FORCE COEFFICIENTS (SEE 8.3)
CNY22	NORMAL FORCE COEFFICIENTS (SEE 8.3)
CNY31	NORMAL FORCE COEFFICIENTS (SEE 8.3)
CNY32	NORMAL FORCE COEFFICIENTS (SEE 8.3)
ENDFY1	ENGINE DEFLECTION ANGLE(SEE 8.3.4.)
ENDFP1	ENGINE DEFLECTION ANGLE(SEE 8.3.4.)
CLIFT1	LIFT COEFFICIENT-VEHICLE 1(8.3.2.1.)
CLIFT2	LIFT COEFFICIENT-VEHICLE 2(8.3.2.1.)
CA1	AXIAL COEFFICIENT- VEH. 1 (8.3.2.1.)
CA2	AXIAL COEFFICIENT- VEH. 2 (8.3.2.1.)

15. VARIABLE TAPE FORMAT

15.1. INPUT INDICATORS

A. VLIST1 - SYMBOLS CORRESPCND TO VEHICLE 1.
B. VLIST2 - SYMBOLS CORRESPOND TO VEHICLE 2.
C. ENDLST - END OF INPUT SYMBOLS
D. DELETE - THE VLIST OPTICNS ARE DELETED FOR A PARTICULAR PHASE. THE VLIST OPTIONS ARE RESTORED WITH THE INSERTION OF A NEW VLIST TABLE.
E. BGEND-THE BGEND OPTION IS USED IN CONJUNCTION WITH THE VLIST OPTIONS. HOWEVER, OUTPUT IS PROVIDED FOR ONLY THE FIRST AND LAST TIME POINTS OF A PARTICULAR PHASE. THE BGEND OPTION IS TRIGGERED BY THE INPUT CARD BGEND=1. IF THE BGEND OPTION IS NOT UTLILIZED, THE DATA FOR ALL TIME POINTS WILL BE OUTPUT AS PROVIDED BY THE STANDARD VLIST CPTIONS.

15.2. TAPE FORMAT

A. THE FIRST CATA RECORD OF EACH PHASE CONTAINS THE FOLLOWING FORMAT'
   (1) WORD 1 THRU WORD 12 - TITLE BLOCK FOR PHASE.
   (2) WORD 13 - PHASE TYPE.
   (3) WORD 14 - PHASE NUMBER.
   (4) WORD 15 - NEXT PHASE TYPE. IF WORD 15 IS ZERO, THIS INDICATES END OF DATA FOR A PARTICULAR CASE. IF WORD 15 IS MINUS, THIS INDICATES END OF DATA FOR ALL CASES.
   (5) WORD 16 - NUMBER OF WORDS FOR VEHICLE 1.
   (6) WORD 17 - NUMBER OF WORDS FOR VEHICLE 2.
   (7) WORD 18 - TOTAL NUMBER OF WORDS FOR VEHICLES 1 AND 2.
   (8) WORD 19 - ISTOP FLAG
   (9) WORD 20 - WORD N - SYMBOLS CORRESPONDING TO VEHICLES 1 AND 2.
B. THE VALUES CORRESPONDING TO THE SYMBOLS APPEAR IN SUBSEQUENT RECORDS. IF TWO VEHICLES ARE UTILIZED, THE FIRST DATA RECORD CORRESPONDS TO VEHICLE 1 AND THE SECCND CATA RECORD TO VEHICLE 2. THE NUMBER OF DATA RECORDS IS DEPENDENT UPON THE NUMBER OF TIME POINTS AT WHICH INDIVIDUAL CALCULATICNS ARE MADE. FCR THE TWO VEHICLE CASE, IT IS IMPORTANT TO REMEMBER THAT THE DATA RECORDS OCCUR IN SEQUENCES CF TWO. THE FIRST WORD OF EACH DATA RECORD IS A FLAG WHICH INDICATES IF ALL

TIME POINTS HAVE BEEN ANALYZED.IF THE WORD IS SET NEGATIVE,AN END OF PHASE IS INDICATED.THE FIRST WORD IS AN INTEGER NUMBER.

THE CATA RECORDS CONTAINING VALUES CORRESPCNDING TO THE SYMBOLS HAVE THE FOLLOWING FORMAT.

(1)WORD 1-INTEGER NO. WHICH,IF SET TO -1,INDICATES END OF PHASE.

(2) WORD 2 - WORD N - VALUES CORRESPONDING TO SYMBOLS SPECIFIED BY VLIST OPTION.

15.3. EXAMPLE PROBLEMS

A. CNE VEHICLE CASE (2 TIME POINTS,CNE PHASE)

```
PHASE(1,0)= PHASE1 *
VLIST1=X,Y,Z,ENDLST  *
ASSUME COMPUTED VALUES FOR X,Y,Z ARE
1.0,2.0,3.0 FOR THE FIRST TIME POINT AND
2.0,4.0,6.0 FOR THE SECOND TIME POINT.
```

A.1 TAPE FORMAT

```
                RECORD 1
(1) WORD 1-WORD12= PHASE1
(2) WORD 13=0
(3) WORD 14=1
(4) WORD 15=-1
(5) WORD 16=3
(6) WORD 17=0
(7) WORD 18=3
(8) WORD 19=-1
(9) WORD 20-WORD 22 = X,Y,Z
               RECORD 2
(1)WORD1=0
(2)WORD 2 - WORD4 =1.0,2.0,3.0
                RECORD 3
(1)WORD1=-1
(2)WORD 2 -WORD4 = 2.0,4.0,6.0
             END OF FILE MARK
```

B. TWO VEHICLE CASE (2 TIME POINTS,THREE PHASES)

```
PHASE(1,0)=PHASE1   *
VLIST1=X,Y,Z,ENDLST  *
VLIST2=DX,DY,DZ,ENDLST *
PHASE(2,2)=PHASE2   *
PHASE(3,1)=PHASE3   *
VLIST1=DELETE *
VLIST2=DELETE *
```

THE FOLLOWING ASSUMPTIONS ARE MADE FOR THE INPUT'

(1)TAPE OUTPUT IS REQUIRED FOR PHASES 1 AND 2 BUT IS NOT REQUIRED FOR PHASE 3.

```
(2)DATA ARE CARRIED FROM PHASE TO PHASE, IF NO DELETE
   OPTION IS SPECIFIED
(3)X,Y,Z=1.0,2.0,3.0 IN PHASE1 (TIME POINT1,VEHICLE1)
(4)X,Y,Z=2.0,4.0,6.0 IN PHASE1 (TIME POINT2,VEHICLE1)
(5)DX=5.0,DY=6.0,DZ=7.0  IN PHASE 1 (TIME 1,VEHICLE2)
(6)DX=10.0,DY=7.0,DZ=8.0 IN PHASE 1 (TIME 2,VEHICLE2)
(7)X,Y,Z=1.5,2.5,3.5 IN PHASE2 (TIME1,VEHICLE1)
(8)X,Y,Z=3.0,5.0,7.0 IN PHASE2 (TIME2,VEHICLE1)
(9)DX=1.5,DY=2.5,DZ=3.5 IN PHASE2(TIME1,VEHICLE2)
(10)DX=3.0,DY=5.0,DZ=7.0 IN PHASE2(TIME 2,VEHICLE2)
```

8.1 TAPE FORMAT

```
                    RECORD 1
(1) WORD1-WORD 12=PHASE1
(2) WORD 13=0
(3) WORD 14=1
(4) WORD 15=2
(5) WORD 16=3
(6) WORD 17=3
(7) WORD 18=6
(8) WORD 19=-1
(9) WORD 20-WORD 25=X,Y,Z,DX,DY,DZ
            RECORD 2
(1) WORD 1 =0
(2) WORD 2- WORD 4 =1.0,2.0,3.0  (VEHICLE 1,TIME 1)
            RECORD 3
(1) WORD 1=0
(2) WORD 2- WORD 4=5.0,6.0,7.0   (VEHICLE 2,TIME 1)
            RECORD 4
(1) WORD 1=-1
(2) WORD 2 - WORD 4=2.0,4.0,6.0   (VEHICLE 1,TIME 2)
            RECORD 5
(1) WORD 1=-1
(2) WORD 2 -WORD4 =10.0,7.0,8.0  (VEHICLE 2,TIME 2)
          END OF FILE MARK
            RECORD 6
(1) WORD1-WORD12=PHASE2
(2) WORD 13=2
(3) WORD 14=2
(4) WORD 15=1
(5) WORD 16=3
(6) WORD 17=3
(7) WORD 18=6
(8) WORD 19=-1
(9) WORD 20 - WORD 25=X,Y,Z,DX,DY,DZ
            RECORD 7
(1) WORD 1=0
(2) WORD 2 - WORD 4=1.5,2.5,3.5      (VEHICLE1,TIME1)
            RECORD 8
(1) WORD 1=0
    WORD 2 - WORD 4=1.5,2.5,3.5      (VEHICLE2,TIME1)
            RECORD 9
(1) WORD 1=-1
```

```
    WORD 2 - WORD 4=3.0,5.0,7.0        (VEHICLE1,TIME2)
             RECORD 10
(1) WORD 1=-1
(2) WORD 2 - WORD 4=3.0,5.0,7.0        (VEHICLE2,TIME2)
         END OF FILE MARK
```

16. LM S-BAND COMMUNICATIONS AVAILABILITY ROUTINE (LSCAR)

REFERENCE - 'INVESTIGATION OF LEM TRAJECTORY AND ATTITUDE CONSTRAINTS DUE TO S-BAND STEERABLE ANTENNA LIMITATIONS', W. F. DOBSON, TRW 3812-H006-R0-000, 30 MARCH 1966.

16.1. INTRODUCTION

THE PROGRAM DESCRIBED IN THE ABOVE REFERENCE HAS BEEN MODIFIED TO ACCEPT INPUT FROM A VARIABLE FORMAT TAPE PREPARED BY THE ARM PROGRAM. USER INSTRUCTIONS FOR THE LSCAR PROGRAM ARE PRESENTED BELOW.

ALSO, MODIFICATIONS HAVE BEEN MADE TO ACQUIRE THE INERTIAL GEOCENTRIC POSITION OF THE MOON AND THE PRECESSION-NUTATION-LIBRATION MATRIX FROM AN EPHEMERIS TAPE.

16.2. ARM VARIABLE FORMAT TAPE REQUIREMENTS

IF VARIABLE FORMAT TAPE INPUT IS DESIRED, THE TAPE MUST FIRST BE WRITTEN DURING THE EXECUTION OF THE DESIRED ARM RUN. LISTED BELOW ARE THE PARAMETERS WHICH MUST BE PLACED ON THE TAPE FOR LATER INPUT TO LSCAR. THESE PARAMETERS ARE SELECTED THROUGH USE OF THE ARM VLISTX INPUT, WHERE X WILL BE 1 OR 2 CORRESPONDING TO THE VEHICLE NUMBER. THE VLISTX INPUT IS DESCRIBED IN THE VARIABLE TAPE FORMAT SECTION OF THIS MANUAL.

PARAMETERS REQUIRED FOR LM

SYMBOL	DEFINITION
ALTS	LM ALTITUDE
SRANG	LUNAR SURFACE RANGE
IGA	LM IMU INNER GIMBAL ANGLE
MGA	LM IMU MIDDLE GIMBAL ANGLE
OGA	LM IMU OUTER GIMBAL ANGLE
T	TRAJECTORY TIME
DXS	LM SELENOGRAPHIC VELOCITY COMPONENTS
DYS	(3 INDIVIDUAL PARAMETERS)
DZS	
TM	LM THRUST MAGNITUDE

WHEN REQUESTED, THESE PARAMETERS WILL BE PLACED ON TAPE AT EACH OUTPUT POINT. LSCAR HAS THE CAPACITY TO ACCEPT UP TO 60 POINTS PER PHASE AND UP TO 30 PHASES.

*EXAMPLE OF ARMP INPUT TO MAKE VARIABLE FORMAT INTERFACE TAPE.
VLIST2=ALTS,SRANG,IGA,MGA,OGA,T,DXS,DYS,DZS,TM,ENDLIST*

*CAUTION
IF THE ARMP SIMULATION EXCLUDES THE CSM, VLIST2 IS REPLACED BY VLIST1. IT IS ADVISABLE TO DELETE THE VLIST FOR THE LM DURING LUNAR STAY PHASES AND RESTORE IT FOR THE LM ASCENT PHASES.

*CAUTION- OSCALE MUST EQUAL 7 FOR THE VARIABLE TAPE TO BE COMPATIBLE WITH LSCAR.

16.3. LSCAR CARD INPUT RULES

A) NUMERIC DATA ARE ENTERED IN FLOATING POINT FORMAT WHEN A DECIMAL IS SUPPLIED AND, CONVERSELY, IN FIXED POINT WHEN IT IS ABSENT.

B) THE SPECIAL CHARACTER * TERMINATES READING OF A DATA CARD. WHEN NO * IS PRESENT, THE FIRST 72 COLUMNS ARE SCANNED.

C) AN 'ENDCAS' IN COLUMNS 1 TO 6 IS REQUIRED BETWEEN EACH GROUP OF DATA CARDS DEFINING A PROBLEM CASE.

D) AN EQUAL SIGN (=) MUST BE PLACED BETWEEN THE NAME AND THE DATA INPUT.

16.4. DETAILED LSCAR INPUT INSTRUCTIONS

16.4.1. INPUT FLAGS AND DATA

16.4.1.1. FIXED POINT

ISTOP 1, INDICATES END OF RUN.

IVPRNT 1, CAUSES INPUT FROM VARIABLE TAPE TO BE PRINTED.

IPLOT 1, CAUSES THE PROGRAM TO SCAN AND PLOT COMMUNICATIONS AVAILABILITY AT 4 DEGREE INTERVALS OVER THE ENTIRE RANGE OF POSSIBLE LM YAW ANGLES FROM -180 TO 180 DEGREES.

NOPRNT 1, CAUSES TRAJECTORY AND S-BAND LOOK ANGLE TIME HISTORY PRINT-OUT TO BE DELETED.

SERIES 1, CAUSES PRINCIPAL RESULTS TO BE SAVED AND PRINTED IN A CONVENIENT SUMMARY TABLE.

INSAVE 1, CAUSES ALL INPUT DATA EXCEPT ITER AND IPLOT TO BE SAVED FOR POSSIBLE USE WITH SUBSEQUENT PROBLEM CASES. ITER AND IPLOT ARE ALWAYS CLEARED TO ZERO AFTER EACH CASE.

INPHI 1, CAUSES CARD INPUT OF PHITAB TO BE USED INSTEAD OF OGA VALUES FROM THE VARIABLE TAPE.

16.4.1.2. FLOATING-POINT DATA

LONG SELENOGRAPHIC LONGITUDE OF THE LM LUNAR LANDING SITE IN DEGREES.

LAT SELENOGRAPHIC LATITUDE OF THE LM LUNAR LANDING SITE IN DEGREES.

FINCL INCLINATION IN DEGREES OF THE LM-CSM ORBIT. IF 180-FINCL IS LESS THAN OR EQUAL TO /LAT/, THE ROUTINE USES FINCL = 180 - /LAT/ - 0.000057 DEGREE.

*NOTE - A MINUS SIGN ON THE INPUT VALUE OF FINCL CAUSES THE TRAJECTORY TO APPROACH THE SITE IN THE SOUTH TO NORTH DIRECTION. OTHERWISE, A NORTH TO SOUTH APPROACH TO THE LANDING SITE IS ASSUMED.

TSCAN ARRAY OF COMPUTATION INTERVAL SIZES IN SECONDS, ONE PER TRAJECTORY PHASE.

PHITAB /60/ (I,J) ARRAY OF LM IMU OUTER GIMBAL ANGLES FOR POINT I, PHASE J. 'INPHI' MUST BE INPUT.

16.4.1.3. LUNAR LANDING TIME

YEAR LUNAR LANDING CALENDAR YEAR IN FIXED POINT.

MONTH LUNAR LANDING MONTH NUMBER IN FIXED POINT.

DAYS LUNAR LANDING DAY OF THE MONTH IN FIXED POINT.

HRS LUNAR LANDING HOUR GMT IN FIXED POINT.

MINS LUNAR LANDING MINUTES PAST THE HOUR IN FIXED POINT.

SECS LUNAR LANDING SECONDS PAST THE MIN. IN FLOATING POINT

16.4.2. EXAMPLE INPUTS

```
*EXAMPLE OF LSCAR INPUT TO USE THE INTERFACE TAPE.
  YEAR=1968, MONTH=2, DAYS=5, HRS=5, MINS=37, SECS=6.126
  TSCAN=20.,10.,5.,5.,5.,5.,20.*
  LAT=5., LONG=40., FINCL=176, INSAVE=1, IVPRNT=1, INPHI=1*
  PHITAB /60/ (8,5) 40.,40.,40.*
```

*EXPLANATION OF LSCAR INPUT EXAMPLE
SPECIFICATION OF INPHI=1, CAUSES ALL OUTER GIMBAL ANGLE (OGA) VALUES FROM TAPE TO BE IGNORED. THE PHITAB CARD PLACES OGA VALUES OF 40 DEGREES INTO THE EIGHTH THROUGH TENTH POINTS OF PHASE 5. PHASE 5 IN LSCAR IS THE FIFTH PHASE FOR WHICH VLISTX CARDS WERE INCLUDED FOR THE ARMP INTERFACE TAPE CONSTRUCTION. WHEN INPHI=1, ANY OGA VALUES NOT RESET IN LSCAR WILL BE ZERO. LUNAR LANDING IS ON 5 FEB. 1968, AT 5 HRS. 37 MIN. 6.126 SECS GMT. NOTE THAT THIS IS LUNAR LANDING TIME , NOT TRAJECTORY TIME.

16.5. TAPE SETUP

THE FOLLOWING TAPES ARE REQUIRED.

ARM PCF TAPE - UNIT NO. IS UP TO USER,USUALLY A OR S.
VARIABLE FORMAT INTERFACE TAPE - UNIT F.
EPHEMERIS TAPE (TRW65E) - UNIT I.

16.6. MULTIPLE CASE CAPABILITY

THE CAPABILITY EXISTS TO EXECUTE MULTIPLE CASES WITHIN ONE RUN. THIS IS ACCOMPLISHED THROUGH USE OF ENDCAS AND ISTOP. A CARD WITH ENDCAS IN CARD COLUMNS 1-6 INDICATES END OF INPUT FOR A CASE AND CAUSES EXECUTION OF THAT CASE. PREVIOUS INPUTS MAY BE RETAINED, THUS, THE NEXT CASE NEED INPUT ONLY THE CHANGES FROM THE PRECEDING CASES THAT ARE REQUIRED. VARIABLE TAPE INPUT IS ACCEPTED FOR THE FIRST TIME REQUESTED ONLY. IF ISTOP HAS BEEN INPUT AS 1 WHEN AN ENDCAS IS ENCOUNTERED, THE RUN TERMINATES.

17. SC - 4020 PLOT OPTIONS

17.1 GROUP A INPUTS

```
NPLOTS - INTEGER VALUE OF THE NUMBER OF PLOTS FOR THE PRESENT
         PHASE OR SET OF PHASES.
PROCES - INTEGER VALUE OF THE NUMBER OF PHASES TO BE PLOTTED ON
         THE SAME GRAPH. IF NOT INPUT, PROCES = 1.
         THIS GROUP MUST BE TERMINATED BY AN ENDCAS CARD.
```

17.2 GROUP B INPUTS

```
PLOT   - VARIABLES TO BE PLOTTED.
       = X1(I11),Y1(I12),X2(I21),Y2(I22),...,XN(IN1),YN(IN2)*
         WHERE X1,Y1,X2,Y2,...,XN,YN ARE VARIABLE NAMES, AND
         I11,I12,...,IN1,IN2 DENOTE THE VEHICLE(1 OR 2) TO WHICH
         THE CORRESPONDING VARIABLE NAME REFERS.
         THIS WILL PRODUCE N PLOTS ON THE SAME GRAPH, WITH
         X1 VS. Y1, X2 VS. Y2,..., XN VS. YN.
         THE SUBSCRIPT DENOTING THE VEHICLE MUST BE ENCLOSED IN
         PARENTHESES.
NCHAR  = K1,K2,K3,...,KN
         WHERE K1,...,KN DENOTE THE INTEGER VALUE OF THE PLOTTING
         SYMBOL FOR EACH OF THE N PLOTS ON THIS FRAME(N=25 MAX).
         IF VALUE IS NEGATIVE, POINTS WILL NOT BE CONNECTED.
         IF NOT INPUT, NCHAR=0. NCHAR MAY HAVE A SEPARATE
         VALUE FOR EACH PLOT
PRINT    INITIALIZED TO 0.0. IF SET TO 1.0, THE TITLES AND
         POINTS FOR THE PLOT ARE WRITTEN ON THE NORMAL OUTPUT
         TAPE.
NTYPE  - INTEGER VALUE OF TYPE OF GRAPH DESIRED.
       = 0  CARTESIAN GRAPH WITH GRID LINES.
       = 1  CARTESIAN GRAPH WITHOUT GRID LINES.
       = 2  X-AXIS LOGARITHMIC, WITH GRID LINES.
       = 3  Y-AXIS LOGARITHMIC, WITH GRID LINES.
       = 4  X,Y AXES LOGARITHMIC, WITH GRID LINES.
       = 5  HORIZONTAL BAR CHART WITHOUT HORIZONTAL GRID LINES.
       = 6  VERTICAL BAR CHART WITHOUT VERTICAL GRID LINES.
         IF NOT INPUT, NTYPE=0
NXL    - LEFT MARGIN ----
NXR    - RIGHT MARGIN   -  PLOT MARGIN WIDTHS, IN RASTER COUNTS.
NYL    - BOTTOM MARGIN - IF NOT INPUT NXL=24,NXR=0,NYL=24,NYH=24
NYH    - TOP MARGIN  ----
CX     - MULTIPLICATION FACTOR FOR ABSCISSA POINTS.
         IF NOT INPUT, CX=1.0
CY     - MULTIPLICATION FACTOR FOR ORDINATE POINTS.
         IF NOT INPUT, CY=1.0
```

```
SX     - VALUE AT LEFT EXTREME X-AXIS ----  IF NOT INPUT, MAXIMA
BX     - VALUE AT RIGHT EXTREME X-AXIS   -  AND MINIMA OF POINTS
SY     - VALUE AT BOTTOM EXTREME Y-AXIS  -  TO BE PLOTTED WILL
BY     - VALUE AT TOP EXTREME Y-AXIS  ----  BE USED.
TITLE  - GRAPH TITLE.
XLABEL - X-AXIS TITLE.
YLABEL - Y-AXIS TITLE.
         THIS GROUP MUST BE TERMINATED BY AN ENDCAS CARD.
```

17.3 OTHER INPUTS

```
BACK   - INTEGER VALUE OF THE NUMBER OF PHASES THE INPUT TAPE
         WILL BE BACKSPACED.
SKIP   - INTEGER VALUE OF THE NUMBER OF PHASES TO BE SKIPPED.
SKIPCA - CAUSES EXECUTICN TO SKIP TO THE NEXT CASE.
REWIND - CAUSES THE INPUT TAPE TO BE REWOUND.
REPEAT - CAUSES EXECUTION TO PROCESS THE NEXT PHASE WITH THE
         SAME INPUTS USED IN THE PRECEDING PHASE.

         THIS GROUP DOES NOT REQUIRE AN ENDCAS CARD FOR
         TERMINATION.
```

17.4 NOTES

17.4.1

EACH BLOCK OF GROUP A INPUTS ARE FOLLOWED BY N BLOCKS OF GROUP B INPUTS, WHERE N IS THE NUMBER OF GRAPHS FOR THE PHASE OR SET OF PHASES. EACH BLOCK OF DATA IS TERMINATED BY AN ENDCAS CARD.

17.4.2

THE USER SHOULD NOTE THAT IF THERE IS MORE THAN ONE PLOT PER GRAPH AND SX,BX,SY,BY ARE NOT INPUT, THE BOUNDS OF THE GRAPH WILL BE SET FROM THE MAXIMA AND MINIMA OF THE POINTS OF THE FIRST PLOT. THE POINTS OF THE FOLLCWING PLOTS WILL NOT BE CONSIDERED.

17.4.3

ALL INPUTS ARE RESET TO THEIR PREVICUS VALUE IF NOT INPUT.

17.5 ERROR MESSAGES

17.5.1

IF THE PLOT EXCEEDS THE BOUNDS OF THE GRAPH, A SCALE ERROR MESSAGE IS PRINTED AT THE UPPER RIGHT CORNER OF THE FRAME.

17.5.2

IF THERE ARE LESS THAN FOUR POINTS, A MESSAGE WILL BE PRINTED AND THE POINTS WILL NOT BE PLOTTED.

17.5.3

IF THE NUMBER OF VARIABLES FOR PLOT OR NCHAR REQUIRE MORE THAN ONE INPUT CARD, THE MNEMONIC PLOT OR NCHAR MUST REAPPEAR ON THE SUCCEEDING CARDS. A MAXIMUM OF 25 VARIABLES PER CARD IS ALLOWED.

17.6 VALUES OF NCHAR - PLOTTING SYMBOLS

NCHAR	SYMBOL	NCHAR	SYMBOL
0	ZERO	32	MINUS
1	1	33	J
2	2	34	K
3	3	35	L
4	4	36	M
5	5	37	N
6	6	38	O
7	7	39	P
8	8	40	Q
9	9	41	R
10	PARTIAL DERIVATIVE	42	DOT
11	=	43	DOLLAR SIGN
12	QUOTE	44	ASTERISK
13	PRIME	45	GAMMA
14	DELTA	46	TILDE
15	ALPHA	47	DIFFERENTIAL
16	+	48	BLANK
17	A	49	SLASH
18	B	50	S
19	C	51	T
20	D	52	U
21	E	53	V
22	F	54	W
23	G	55	X
24	H	56	Y
25	I	57	Z
26	PI	58	DEGREE
27	PERIOD	59	COMMA
28	PARENTHESIS(RIGHT)	60	PARENTHESIS(LEFT)
29	BETA	61	INTEGRAL SIGN
30	PLUS OR MINUS	62	SIGMA
31	QUESTION MARK	63	ALIGNMENT FRAME

17.7 EXAMPLE OF SC - 4020 PLOT CASE

```
NPLOTS=4*          FOUR PLOTS FOR FIRST PHASE.
ENDCAS             TERMINATES GROUP A INPUTS.
NTYPE=1*           CARTESIAN GRAPH WITHOUT GRID LINES.
PLOT=X(1),X(2)*    FIRST FRAME PLOTS X(1) VS. X(2)
CX=1.E-6*          EACH ABSCISSA POINT IS MULTIPLIED BY 10**-6
CY=1.E-6*          EACH ORDINATE POINT IS MULTIPLIED BY 10**-6
TITLE= CASE 1      GRAPH TITLE
XLABEL= X - VEH1   X-AXIS TITLE
YLABEL= X - VEH2   Y-AXIS TITLE
ENDCAS             TERMINATES GROUP B INPUTS.
NTYPE=0*           CARTESIAN GRAPH WITH GRID LINES.
PLOT=X(1),Y(1),    SECOND FRAME CONSISTS OF THREE PLOTS,
PLOT=X(1),Y(2),    X(1) VS. Y(1), X(1) VS. Y(2), AND
PLOT=Y(1),Y(2)*    Y(1) VS. Y(2).
NCHAR=55,42,16*    PLOT SYMBOL IS X,.,+ FOR THE THREE PLOTS
                   RESPECTIVELY.
XLABEL=X1,X1,Y1    X-AXIS TITLE
YLABEL=Y1,Y2,Y2    Y-AXIS TITLE
ENDCAS             TERMINATES GROUP B INPUTS.
SKIP=2*            SKIP THE SECOND AND THIRD PHASES.
REPEAT             PLOT ON THE THIRD AND FOURTH FRAMES THE SAME
                   VARIABLES FOR THE FOURTH PHASE AS FOR THE
                   FIRST PHASE.
BACK=1*            BACKSPACE TO BEGINNING OF THE FOURTH PHASE.
PROCES=3*          PLOT DATA FOR THE FOURTH, FIFTH, AND SIXTH
                   PHASES ON THE SAME FRAME.
REPEAT             PLOT ON THE FIFTH AND SIXTH FRAME THE SAME
                   VARIABLES FOR THE NEXT THREE PHASES AS FOR
                   THE LAST PHASE.
REWIND             REWIND INPUT PLOT TAPE AND POSITION TO THE
                   FIRST PHASE.
NPLOTS=1*          ONE PLOT FOR THE FIRST PHASE.
PROCES=1*          PLOT DATA FOR ONLY ONE PHASE PER FRAME.
ENDCAS             TERMINATES GROUP A INPUTS.
PLOT=Z(2),Z(1)*    SEVENTH FRAME - Z(2) VS. Z(1)
TITLE= CASE 1,2    GRAPH TITLE
XLABEL= Z2         X-AXIS TITLE
YLABEL= Z1         Y-AXIS TITLE
ENDCAS             TERMINATES GROUP B INPUTS.
SKIPCA             SKIP TO THE SECOND CASE(PHASE TYPE 0.).
REPEAT             PLOT ON THE EIGHTH FRAME THE SAME VARIABLES
                   FOR THE FIRST PHASE OF THE SECOND CASE AS FOR
                   THE LAST PHASE.
```

17.8.

17.8.1.

CX AND CY CARRY OVER AND APPLY TO EVERY POINT PLOTTED IN THE EXAMPLE.

17.8.2.

THE FIRST FRAME USES A CARTESIAN GRAPH WITHOUT GRID LINES, WHILE ALL REMAINING FRAMES USE A CARTESIAN GRAPH WITH GRID LINES.

17.8.3.

THE PLOTTING SYMBOL FOR THE SEVENTH AND EIGHTH FRAMES IS AN X (NCHAR=55).

18. REPORT GENERATOR FOR VARIABLE TAPE FORMAT

18.1. DESCRIPTION

THE FOLLOWING PROGRAM IS A MODIFICATION OF THE NASA MSC PROGRAM NUMBER E144 WHICH WAS DESIGNED TO GENERATE TABULAR DATA FOR SG-GEM PROGRAM USERS.MINOR MODIFICATIONS HAVE BEEN MADE TO THE INPUT DECK SO THAT THE VARIABLE TAPE CREATED BY ARM05 MAY BE UTILIZED. THE USER MAY REFER TO THE NASA DOCUMENT (PROGRAM NO. E144) FOR ADDITIONAL INFORMATION.

18.2. EXTERNAL DEVICES

A.INPUT - FORTRAN LOGICAL UNIT 8 IS UTILIZED AS INPUT IN THE REPORT GENERATOR PROGRAM.
B.OUTPUT - OUTPUT MAY BE PLACED ON THE S-C 4020 PLOTTER OR THE PRINTER.

18.3. PROGRAM DECKS

A.RGEN
B.FORM
C.CONVT
D.COND

18.4. DATA CARD INPUT

A. CARD 1	COL. 1-3	NUMBER OF CASES (INTEGER)
B. CARD 2	COL. 1-3	NUMBER OF TABLES FOR CURRENT CASE.(INTEGER)
	COL. 4-6	TOTAL NO. OF PHASES.(INTEGER) IF THE NO. IS PLUS,INDIVIDUAL PHASES ARE SELECTED FROM COL. 2-72 OF CARD 3. IF THE NUMBER IS PRECEDED BY A MINUS SIGN, THE PHASES DESIGNATED BY C(COL 2) THRU (C(COL.2) PLUS THE TOTAL NO. OF PHASES) ARE PROCESSED FROM CARD 3.
C. CARD 3	COL. 1-2 3-4	PHASES TO BE PROCESSED.

```
                                5-6
                                ETC
            EXAMPLE   OF  CARD'S  2 AND 3
CARD 2  COL. 2-3       COL.4-6
              1            -3
CARD 3       COL 1-2
                  3
      FOR THE ABOVE EXAMPLE, PHASES 3,4,5  WILL BE  PROCESSED. THE
      MINUS SIGN IN CARD 2(COL.5) DESIGNATES THAT THE PHASES ARE TO
      BE PROCESSED IN SEQUENCE BEGINNING WITH PHASE 3.
CARD 2       COL.3   COL. 6
              1       4
CARD 3       COL.2   COL.4    COL.6   CCL. 8
              2       4       7       9
      FOR THE ABOVE  EXAMPLE, PHASES  2, 4, 7, AND  9  WILL BE
      PROCESSED AS CARD 2  CONTAINS A  +4  IN COLUMN  6  SPECIFYING
      THE  PROCESSING  OF  FOUR  NON-CCNSECUTIVE  PHASES.
      D. CARD 4        COL. 1-3          DATA RECORD TO BE USED
                                         FOR FIRST PHASE PROCESSED.
                                         IF THE NUMBER IS NEGATIVE,
                                         SAME CATA RECORD OPTION WILL
                                         BE UTILIZED FOR ALL PHASES.
                                         IF THE NUMBER IS POSITIVE
                                         OR ZERO,THE DATA RECORD TO
                                         BE USED FOR ADDITIONAL PHASES
                                         MUST BE SPECIFIED IN COLUMNS
                                         4-73.
                                         CPTIONS'
                                          0,CNLY  DATA RECORDS
                                            CONTAINING SELECTED VALUES
                                            OF THE CRITICAL VARIABLE
                                            WILL BE ENTERED IN THE
                                            TABLE.
                                          1,EVERY DATA RECORD WILL BE
                                            USED AS TABLE DATA.
                                          2,3,4,ETC.,EVERY 2NC,3RD,4TH,
                                            ETC.,DATA RECORD WILL BE
                                            USED AS TABLE DATA WITH
                                            ALL SELECTED VALUES OF
                                            THE CRITICAL VARIABLE
                        COL. 4-5            DATA RECORD TO BE USED.
                                          **NOTE' NOT INPUT IF THE
                                            INTEGER NO. IN  COLUMN
                                            1-3 IS  A NON-ZERO
                                            NEGATIVE NUMBER. THE
                                            OPTIONS ARE IDENTICAL
                                            TO THOSE SPECIFIED FOR
                                            COLUMNS 1-3.
                        COL. 5-6            ETC.
                        ETC.                ETC.
              EXAMPLE OF  CARD 4
      (1) COL. 2-3
              -10
```

EVERY 10TH DATA RECORD WILL BE USED AS TABLE DATA
FOR ALL PHASES

(2) COL. 3 5 7 9 11
0 4 2 1 3

CNLY DATA RECORDS CONTAINING SELECTED VALUES OF
THE CRITICAL VARIABLE WILL BE ENTERED IN THE TABLE
FOR THE FIRST PHASE.
EVERY 4TH DATA RECORD WILL BE USED AS TABLE DATA
FOR THE SECOND PHASE.
EVERY 2ND CATA RECORD WILL BE USED AS TABLE CATA
FOR THE THIRD PHASE.
EVERY DATA RECORD WILL BE USED AS TABLE CATA FOR
THE FOURTH PHASE.
EVERY 3RD CATA RECORD WILL BE USED AS TABLE DATA
FOR THE FIFTH PHASE.

E. CARD 5

COL. 1-10	CUTPUT OPTICN' 6,NORMAL OUTPUT 17,SC-4020 OUTPUT
COL. 11-20	VARIABLE LINE SPACING BETWEEN CATA LINES' 0, NO LINE SPACING 1,2,3,ETC.,SKIPS 1,2,3 LINES
COL. 21-30	PAGE NUMBER DELETICN OPTICN' 0,WILL NOT DELETE 1,WILL DELETE **NOTE' COL. 31-40 AND COL. 41 ARE NOT INPUT IF THE ABCVE OPTION IS A 1.
COL. 31-40	INITIAL PAGE NUMBER FOR CURRENT TABLE(IF BLANK NUMBERING WILL BE CONTINUED FROM PREVIOUS TABLE)
COL. 41	ALPHABETIC CHARACTER TO BE A SUFFIX TO THE PAGE NUMBERS.
COL. 42-50	BLOCK RECORD SKIP OPTION' -1,USE PREVIOUS TABLE'S BLOCK RECORD SKIP 0,NO BLOCK RECORD SKIP 1,2,3,ETC.,BLCCK RECORD SKIPS
COL. 51-60	CPTION TO WRITE PHASE TITLE HEADING BENEATH TABLE HEADING. 0,DO NOT WRITE PHASE TITLE 1,WRITE PHASE TITLE HEADING

**NOTE' ALL BLOCK RECORD SKIP OPTIONS ARE CARRIED
OVER FROM PHASE TO PHASE.CARDS 6-26 ARE
NOT INPUT IF THE BLOCK RECORD SKIP CPTION
IS 0 OR -1.

F. CARC 6-26

COL. 1-16	VARIABLE VALUE TO BEGIN BLOCK RECORD SKIP.
COL. 17-32	VARIABLE VALUE TC TERMINATE BLOCK RECORD.
COL. 33-48	VARIABLE VALUE TO BEGIN BLOCK RECORD SKIP.

	COL. 49-64	VARIABLE VALUE TC TERMINATE BLOCK RECORD SKIP. (40 BLCCK RECORD SKIPS ARE ALLOWED)
CARC 27	COL. 1	NUMBER OF LINES IN TABLE HEADING (LIMITED TO 5)
	COL. 13-72	FIRST HALF (PRINT WHFELS 6-65) OF FIRST LINE OF TABLE HEADING
CARC 28	COL. 13-72	SECOND HALF (PRINT WHEELS 66-125) OF FIRST LINE OF TABLE HEADING.
CARD 29-36	COL. 13-72	FIRST AND SECOND HALVES OF SECOND THROUGH FIFTH LINES (IF DESIRED) OF TABLE HEADINGS.
CARC 37	COL. 1-3	NUMBER OF VARIABLES IN TABLE (LIMITED TO MAXIMUM OF 13 IF FIELD WIDTHS ALLOW)
CARD 38	COL. 1-6	SYMBOL NAME IN BCD WHICH IS TO BE FIRST IN CATA TABLE.(LEFT JUSTIFIED)
	COL. 7-12	SYMBOL NAME IN BCD WHICH IS TO BE SECOND IN CATA TABLE (LEFT JUSTIFIED)
	ETC.	THIRD,FOURTH,----,THIRTFEN SYMBOL (IF ALLOWED BY FIELD WIDTHS AND DESIRED)
CARD 39	COL. 1-6	VEHICLE NUMBER FOR 1ST SYMBOL.(INTEGER RT. ADJ.) 1 INDICATES VEHICLE 1. 2 INDICATES VEHICLE 2.
	COL. 7-12	VEHICLE NUMBER FCR SECOND SYMBOL IN TABLE.
	ETC.	THIRD,FOURTH,---,THIRTEEN IF DESIRED.
CARD 40	COL. 1-6	CCNVERSICN OPTICN FOR THE FIRST VARIABLE.
	COL. 7-12	CCNVERSICN OPTICN FOR THE SECOND VARIABLE.
	ETC.	THIRD,FOURTH,---,THIRTEEN (IF DESIRED)' 0,NO CONVERSICN 1,TIME IN HOURS TO , HCURS,MINUTES,SECONDS 2,DEGREES TO DEGREES,MINUTES, SECCNDS 3,RADIANS TO DEGREES,MINUTES, SECONDS 4,DIVIDES BY 32.176 5,FEET TO METERS 6,FEET TO NAUTICAL MILES (APOLLO STD.) 7,POUNDS OF THRUST TO NEWTONS

8,NAUTICAL MILES TO KILO.
**NOTE' IN USING THESE OPTIONS, THE USER MUST REMEMBER TO INCLUDE COLUMN HEADINGS OF HOURS,MINUTES,AND SECONDS (OPTION 1) AND DEGREES,MINUTES,AND SECONDS (OPTIONS 2 AND 3) WHILE ALSO ALLOWING SPACING FOR THESE OUPUT QUANTITIES. IN ADDITION TO THE FIELD WIDTH INPUT BY THE USER FOR OPTION 1,FIFTEEN MORE SPACES ARE REQUIRED FOR OUTPUT,FOR OPTION 2,NINE MORE SPACES ARE REQUIRED FOR OUTPUT,AND FOR OPTION 3,NINE MORE SPACES ARE REQUIRED FOR OUTPUT.

CARD 41 COL. 1-72 THIS CARD CONTAINS INFORMATION PERTINENT TO A FORMAT IN WHICH THE OUTPUT VARIABLES ARE TO BE OUTPUT. SINCE A VARIABLE FORMAT STATEMENT IS EMPLOYED, CONTENTS OF THIS CARD MAY BE EXTREMELY FLEXIBLE AS TO FORMAT EMPLOYED.

EXAMPLE 1

COL.1-26
1E13.7,2X,1F15.6,2X,1E14.5
THE FIRST ELEMENT OCCUPIES 13 SPACES OF A PRINTED PAGE WITH AN E FORMAT,THE SECOND 15 SPACES WITH AN F FORMAT AND THE THIRD 14 SPACES WITH AN E FORMAT. EACH ELEMENT IS SEPARATED BY TWO SPACES.

EXAMPLE 2

COL.1-14
(8(2X,1E15.7))
IN THE EXAMPLE 8 ELEMENTS WOULD BE OUTPUT WITH A 1E15.7 FORMAT. EACH ELEMENT WOULD BE SEPARATED BY 2 SPACES AS INDICATED BY 2X.

EXAMPLE 3

COL. 1-24
(3(2X,1E15.7),2X,1F10.3)
IN EXAMPLE 3 THE FIRST 3 ELEMENTS WOULD BE OUTPUT WITH A 1E15.7 FORMAT AND EACH ELEMENT WOULD BE SEPARATED BY 2 SPACES. THE LAST ELEMENT WOULD BE SEPARATED FROM THE PRECEDING ELEMENT BY 2 SPACES AND THE FORMAT WOULD BE F10.3.

NOTE'
IT IS RECOMMENDED THAT THE USER ESTABLISH GUIDELINES FOR COLUMN HEADINGS BY FIRST SETTING UP A FORMAT AND

CENTERING THE COLUMN HEADINGS CN THE BASIS OF THE ESTABLISHED FORMAT FOR ALL ELEMENTS.

CARD 42	COL. 1	NUMBER OF LINES IN COLUMN HEADING (LIMITED TO 6)
	COL. 7-72	FIRST HALF(PRINT WHEELS 2-67) OF FIRST LINE OF CCLUMN HEADING.
CARD 43	COL. 7-72	SECCND HALF (PRINT WHEELS 68-132) OF FIRST LINE OF COLUMN HEADING.
CARD 44-53	COL. 1-3	FIRST AND SECOND HALVES OF SECOND THROUGH SIXTH LINES (IF DESIRED) OF CCLUMN HEADINGS.
CARD 54	COL. 1-3	NUMBER OF VALUES OF CRITICAL VARIABLE (IF DESIRED) IN THIS TABLE (LIMITED TO 99 PER TABLE) COLUMN 6 IS SET TO 0 AND CARDS 52-249 ARE NOT INPUT IF THERE ARE NO CRITICAL VARIABLES.
	COL. 4-6	CRITICAL VARIABLE TABLE CPTION' 0,CRITICAL TIMES AND CCMMENTS WILL BE INPUT THIS TABLE 1,USE CRITICAL TIMES AND COMMENTS FRCM PREVIOUS TABLE **NOTE' CARDS 55-252 ARE NOT INPUT IF THE ABOVE OPTICN IS A 1.
CARD 55	COL. 1-12	FIRST VALUE OF CRITICAL VARIABLE.
	COL. 13-72	FIRST HALF OF CRITICAL VARIABLE COMMENT.
CARD 56	COL. 13-72	SECCND HALF OF CRITICAL VARIABLE COMMENT.
CARD 57	COL. 1-12	SECCND VALUE OF CRITICAL VARIABLE.
	COL. 13-72	FIRST HALF OF SECOND CRITICAL VARIABLE COMMENT.
CARC 58	COL. 13-72	SECCND HALF OF SECOND CRITICAL VARIABLE CCMMENT.
------		-------
------		-------
------		-------
CARD 251	COL. 1-12	NINETY-NINTH VALUE

		OF CRITICAL VARIABLE.
	COL. 13-72	FIRST HALF OF NINETY-NINTH CRITICAL VARIABLE COMMENT.
CARD 252	COL. 13-72	SECOND HALF OF NINETY-NINTH CRITICAL VARIABLE COMMENT.

18.5. ERROR MESSAGES

(1) ILLEGAL CARD IN DATA OR BAD FORMAT
THIS MESSAGE IMPLIES THAT THE INPUT DATA DOES NOT CORRESPOND TO THE FORMAT IN THE PROGRAM. THE USER'S DATA MAY EITHER BE OUT OF SEQUENCE, I.E.,COLUMN HEADINGS BEFORE TABLE HEADING OR DATA LOCATIONS BEFORE NUMBER OF DATA VARIABLES, ETC., OR THE NUMBER OF INPUT CARDS MAY NOT CORRESPOND WITH THE NUMBER OF CARDS EXPECTED BY THE PROGRAM I.E., SPECIFYING THREE LINES OF TABLE HEADING WHEN INPUTTING TWO LINES OF TABLE HEADING AND FORGETTING TO INPUT THE BLANK CARDS FOR THE BLANK LINES.

(2) REDUNDANCY IN READING FORTRAN UNIT 10
DEFECTIVE TAPE.

(3) PHASE ****** IS NOT ON THIS REEL,PROCEED TO NEXT PHASE.
THE PHASE NUMBER INDICATED BY THE USER IS NOT AVAILABLE. THE ABOVE ERROR MAY RESULT FROM THE FOLLOWING CONDITIONS'

(A) THE PHASE NO. INPUT BY THE USER DOES NOT EXIST ON THE TAPE.

(B) THE MINUS OPTION IS USED AND THE PHASES ARE NOT IN SEQUENTIAL ORDER ON THE TAPE, SUCH AS 4,8,7,6. IN THIS CASE,THE INDIVIDUAL PHASE SELECTION OPTION SHOULD BE UTILIZED FOR CARD 3.
INPUT VARIABLE ***** NOT ON THIS TAPE.
THE CAUSE OF THE ABOVE ERROR MAY BE ATTRIBUTED TO INPUT SYMBOLS WHICH ARE NOT LEFT JUSTIFIED OR INPUT SYMBOLS WHICH DO NOT CORRESPOND TO THE SYMBOLS ON TAPE.

18.6. RESTRICTIONS

(A) A MAXIMUM OF FIVE(5) LINES OF TABLE HEADING OF 120 CHARACTERS PER LINE.

(B) A MAXIMUM OF SIX (6) LINES OF COLUMN HEADING OF 131 CHARACTERS PER LINE.
(C) A MAXIMUM OF THREE(3) DIGIT PAGE NUMBER.
(D) A MAXIMUM OF ONE(1) ALPHANUMERIC CHARACTER FOR THE PAGE NUMBER SUFFIX.
(E) A MAXIMUM OF THIRTEEN(13) VARIABLES PER TABLE ONE OPTION PER VARIABLE.
(F) A MAXIMUM OF NINE (9) PLACES TO THE RIGHT OF THE DECIMAL IN FORMATS.
(G) RELATIVE LOCATION OF THE CRITICAL VARIABLE AND/OR THE BLOCK RECORD SKIP VARIABLE ON THE BINARY TAPE MUST BE FIRST IN THE LIST OF THIRTEEN (13) SYMBOLS.
(H) NINETY-NINE (99) CRITICAL VARIABLES WITH CORRESPONDING COMMENTS ONE COMMENT PER LINE OF 120 CHARACTERS.
(I) FORTY (40) BLOCK RECORD SKIPS WITH A START AND STOP VALUE FOR EACH BLOCK RECORD SKIP.
(J) DATA LINE OF TABLE,INCLUDING OPTIONS,MUST NOT EXCEED 131 SPACES (SIMPLE CHECK IS TO ADD THE INPUT DATA FIELD WIDTHS AND THE EXTRA SPACES FOR OPTIONS, WHERE APPLICABLE).
(K) A MAXIMUM OF 100 PHASES MAY BE PROCESSED USING THE MINUS OPTION OF CARD 3. A MAXIMUM OF 35 PHASES MAY BE PROCESSED USING THE INDIVIDUAL PHASE SELECTION OPTION OF CARD 3.
(L) THE SAME RESTRICTIONS THAT APPLY TO (K) ABOVE ALSO ARE TRUE FOR THE DATA SELECT OPTION(CARD 4).
(M) NO CONSECUTIVE CASES ARE PROCESSED.

19. SUMMARY PRINT
(REPORT GENERATOR FOR VARIABLE TAPE FORMAT WITH BGEND OPTION)

19.1. DESCRIPTION

THE FOLLOWING PROGRAM IS DESIGNED TO LIST CASE DATA BY PHASE AND TO PERFORM CERTAIN ARITHMETIC OPERATIONS FOR SPECIFIC PHASES IN A CASE. DIFFERENCES IN TIME,MASS,ETC. BETWEEN DIFFERENT PHASES MAY BE TABULATED FOR ALL CASES.

19.2. EXTERNAL DEVICES

A.INPUT - FORTRAN LOGICAL UNIT 8 IS UTILIZED AS INPUT IN THE REPORT GENERATOR PROGRAM.
B.OUTPUT - OUTPUT MAY BE PLACED ON THE S-C 4020 PLOTTER OR THE PRINTER.

19.3. PROGRAM DECKS

A.RGEN1
B.FORM
C.CONVT
D.COND
E.HEADER
F.CODAT

19.4. DATA CARD INPUT

A. CARD 1	COL. 1-10	NUMBER OF CASES (INTEGER RT. ADJUSTED)
	COL. 11-20	NUMBER OF TABLES (INTEGER RT. ADJUSTED)
B. CARD 2	COL. 1-10	OUTPUT OPTION (INTEGER RT. ADJUSTED) 6,PRINTER 17,SC-4020 OUTPUT
	COL. 11-20	LINE SPACING (INTEGER RT.ADJUSTED) 0, NO LINE SPACING 1,2,3,ETC.,SKIPS 1,2,3 LINES
	COL. 21-30	PAGE NUMBER DELETION OPTION

		0,WILL NOT DELETE 1,WILL DELETE *NOTE' NO PAGE NO. WILL BE PLACED ON OUTPUT IF DATA FOR ONE PHASE OCCUPY LESS THAN ONE PAGE.
	COL. 31-40	INITIAL PAGE NUMBER FOR CURRENT TABLE.
	COL. 41	ALPHABETIC CHARACTER TO BE A SUFFIX TO THE PAGE NUMBERS.
	COL. 50	NUMBER OF VARIABLES IN COLUMN HEADINGS
C. CARD 3	COL. 1	NUMBER OF LINES IN TABLE HEADING (LIMITED TO 5)
	COL. 13-72	FIRST HALF (PRINT WHEELS 6-65) OF FIRST LINE OF TABLE HEADING.
CARD 4	COL. 13-72	SECOND HALF (PRINT WHEELS 66-125) OF FIRST LINE OF TABLE HEADING.
CARD 5-12 C	COL. 13-72	FIRST AND SECOND HALVES OF SECOND THROUGH FIFTH LINES (IF DESIRED) OF TABLE HEADINGS.
D. CARD 13	COL. 1-6	CONVERSION OPTICN FOR THE FIRST VARIABLE IN COLUMN HEADING (INTEGER RT. ADJUSTED)
	COL. 7-12	CONVERSION OPTION FOR THE SECOND VARIABLE IN COLUMN HEADING (INTEGER RT. ADJUSTED)
	COL. 13-18	ETC. OPTIONS' 0,NO CONVERSION 1,TIME IN HOURS TO HOURS, MINUTES, SECCNDS 2, DEGREES TO DEGREES, MINUTES, SECCNDS 3, RADIANS TO DEGREES, MINUTES, SECCNDS 4,HOURS TO SECCNDS 5,FEET TO METERS 6, FEET TO NAUTICAL MILES (APOLLO STD.) 7,POUNDS OF THRUST TO NEWTONS 8,NAUTICAL MILES TO KILO. *NOTE'IN USING THE CONVERSION OPTIONS, THE USER MUST REMEMBER TO INCLUDE COLUMN HEADINGS OF DAYS, HOURS, MINUTES, AND SECONDS (OPTION 1) AND DEGREES, MINUTES, AND SECCNDS (OPTIONS 2 AND 3) WHILE

		ALSO ALLOWING SPACING FOR THESE OUTPUT QUANTITIES. IN ADDITION TO THE FIELD WIDTH INPUT BY THE USER FOR OPTION1, FIFTEEN MORE SPACES ARE REQUIRED FOR OUTPUT. OPTION 2 REQUIRES NINE MORE SPACES FOR OUTPUT AND OPTION 3 NINE SPACES.
E. CARD 14	COL. 1-72	OUTPUT FORMAT FOR EACH VARIABLE IN COLUMN HEADING. EXAMPLE' (2X,1E14.7,2X,1E14.7,2X, 1E10.3) EACH ITEM IN THE COLUMN HEADING IS SEPARATED BY TWO BLANKS. THE FIRST TWO ITEMS ARE WRITTEN WITH A 1E14.7 FORMAT AND THE THIRD ITEM WITH A 1F10.3 FORMAT.
F CARD 15	COL. 1	NO. LINES IN COLUMN HEADING (INTEGER RT. JUSTIFIED) LIMITED TO SIX LINES OF COLUMN HEADINGS.
	COL. 7-72	FIRST HALF (PRINT WHEELS 2-67)OF FIRST LINE OF COLUMN HEADING.
CARD 16	COL. 7-72	SECOND HALF (PRINT WHEELS 68-132) OF FIRST LINE OF COLUMN HEADING.
CARD 17-26	COL. 7-72	FIRST AND SECOND HALVES OF SECOND THROUGH SIXTH LINES (IF DESIRED) OF COLUMN HEADINGS. *NOTE'THE NO. OF COLUMNS SHOULD CORRESPOND TO THE NUMBER OF VARIABLES IN COLUMN HEADINGS AS SPECIFIED IN CARD 2 (COL. 50.). THE NO. OF VARIABLES IS LIMITED TO 13 OR 13 TABULATED COLUMNS ACROSS THE PAGE. THE NUMBER OF SPACES IS RESTRICTED TO 132 IN THE FORMAT STATEMENT.
E. CARD 27- N		VARIABLE DATA INDICATING HOW THE VARIABLES ARE TO BE PLACED UNDER A SPECIFIC COLUMN HEADING AND ANY ARITHMETIC OPERATIONS THAT ARE TO BE PERFORMED

SUBSCRIPT NOTATION

A. THE FIRST SUBSCRIPT REFERS TO VEHICLE NUMBER. THE NUMBER MAY BE EITHER A 1 OR 2.
B. THE SECOND SUBSCRIPT REFERS TO A PARTICULAR PHASE.
C. THE ABSENCE OF A THIRD SUBSCRIPT IMPLIES THE LAST TIME POINT OF A PHASE.
D. THE THIRD SUBSCRIPT, IF PRESENT, MUST BE THE ALPHABETIC CHARACTER BEG DENOTING THE FIRST TIME POINT OF A PHASE.

ARITHMETIC OPERATIONS

A.MINUS - SIGNIFIES A MINUS OPERATION
B.PLUS - ADDITION
C.MULT - MULTIPLICATION
D.DIVIDE -DIVISION

SEQUENCE OF ARITHMETIC OPERATIONS

A. THE ABSENCE OF AN ARITHMETIC OPERATOR FOLLOWING A SUBSCRIPTED VARIABLE INDICATES THE END OF CALCULATING A CERTAIN PARAMETER.
EG.T(1,3,),MINUS,T(1,1),MULT,T(1,1)
(T(3)-T(1))*T(1)
THE RESULT OF THE ABCVE ARITHMETIC OPERATION WILL BE PLACED UNDER ONE COLUMN HEADING.

B. IF A SUBSCRIPTED VARIABLE IS NOT FOLLOWED BY AN ARITHMETC OPERATOR, ONLY THE VARIABLE WILL BE PLACED BENEATH THE COLUMN HEADING UNDER THE ASSUMPTION THAT THE VARIABLE DOES NOT FOLLOW AN ARITHMETIC OPERATICN.

C. THE ARITHMETIC OPERATIONS ARE PERFORMED IN SEQUENCE AS THE CARD IS SCANNED.

INPUT RESTRICTICNS

A. THERE ARE NO RESTRICTIONS ON THE NUMBER OF ITEMS INPUT. HOWEVER, THE NUMBER OF VARIABLES TO BE WRITTEN ACROSS THE PAGE IS RESTRICTED TO 13 AND THE TOTAL NO. OF SPACES IS 132.

B. DATA IS TERMINATED BY ENDLST

EXAMPLE' CARD 27 COL 1-72

T(1,3),MINUS,T(1,1),T(1,5),T(1,6),PLUS,T(1,3),ENDLST *

EXPLANATION OF EXAMPLE
THE DIFFERENCE IN TIME BETWEEN TIME (VEHICLE 1, PHASE 3) AND TIME (VEHICLE 1, PHASE 1) IS PLACED UNDER COLUMN HEADING 1.
TIME FOR VEHICLE 1,PHASE 5 IS PLACED UNDER COLUMN HEADING 2.
THE TIME FOR VEHICLE 1,PHASE 6 IS ADDED TO TIME(VEHICLE 1,PHASE 3) AND THE RESULT PLACED UNDER COLUMN HEADING 3.

NOTE'ALL OF THE ABOVE INPUTS REFER TO THE LAST TIME POINT OF A PHASE.TC OBTAIN THE FIRST TIME POINT OF A PHASE THE USER MUST ADD A THIRD SUBSCRIPT BEG. EXAMPLE T(1,7,BEG) REFERS TO VEHICLE 1, PHASE 7, FIRST TIME POINT.

19.5. CONSECUTIVE TABLES

A. CONSECUTIVE TABLES MAY BE RUN BY RETURNING TO CARD 2 CF THE INPUT FORM AND REPEATING THE INPUT PROCEDURE AS OUTLINED IN THE DATA CARD INPUT SECTION.

19.6. SAMPLE TEST CASE

```
        A. ASSUME THE FOLLOWING PARAMETERS ARE ON THE VARIABLE FORMAT
           TAPE' T,XS,YS,ZS,DXS,DYS,DZS,MASS FOR VEHICLES 1 AND 2.
           SUPPOSE TWO TABLES ARE INPUT WITH THE FOLLOWING COLUMN
           HEADINGS'
           TABLE 1   T,XS,YS,ZS,DXS,DYS,DELT21,DELMASS21
           TABLE 2   T,XS,YS,ZS,DXS,DYS,DELT21,DELMASS21
           ASSUME ALL POINTS FOR TABLE 1 ARE FROM VEHICLE 1 (LAST TIME
           PT.)
           ALL     POINTS FOR TABLE 2 ARE FROM VEHICLE 2 AND ARE TAKEN
           FROM FIRST TIME POINT
           OUTPUT ON PRINTER 8 VARIABLES, 3 CASES, 2 TABLES.
                  **********  CARD   INPUT 1  **********
        3         2
                  ******** CARD INPUT 2 ********
        6         0         0         1A        8
                  ******** CARD INPUT 3 - 12 ********
5          ***********************************************************
           ***********************************************************


                                                                  PHASE
           1


           ***********************************************************
           ***********************************************************
                  ******* CARD INPUT 13 *******
    0     0     0     0     0     0     0     0
                  ******* CARD INPUT 14 *******
 (6X,8(1E12.5,2X))
                  ******* CARD INPUT 15 *******
1                T              XS             YS             ZS
                  ******* CARD INPUT 16 *******
       DXS            DYS          DELT21         DELMASS21
                  ******* CARD INPUT 17 *******
 T(1,1)  *
                  ******* CARD INPUT 18 *******
XS(1,1),YS(1,1),ZS(1,1),DXS(1,1),DYS(1,1), *
                  ******* CARD INPUT 19 *******
T(1,2),MINUS,T(1,1),MASS(1,2),MINUS,MASS(1,1),ENDLST  *
                  ******* CARD INPUT 20 *******
         6        0         0         1A        8
                  ******* CARD INPUT 21 - 30  *******
           ***********************************************************
           ***********************************************************


                                                                  PHASE
```

```
          2

          ***************************************************************
          ***************************************************************
                  ******* CARD INPUT 31 *******
   C     0     0     0     0     0     0     0
                  ******* CARD INPUT 32 *******
 (6X,8(1E12.5,2X))
                  ******* CARD INPUT 33 *******
1                T                XS              YS              ZS
      DXS            DYS           DELT21          DELMASS21
                  ******* CARD INPUT 34 *******
 T(2,2,BEG) *
                  ******* CARD INPUT 35 *******
XS(2,2,BEG),YS(2,2,BEG),ZS(2,2,BEG),DXS(1,2,BEG),DYS(2,2,BEG) *
                  ******* CARD INPUT 36 *******
T(2,2,BEG),MINUS,T(2,1,BEG),MASS(2,2,BEG),MINUS,MASS(2,1,BEG),ENDLST *
```

19.7. SAMPLE OUTPUT FROM TEST CASE

ALTHOUGH THE FOLLOWING OUTPUT IS NOT EXACTLY THE SAME AS IT WOULD APPEAR ON THE PRINTER, IT PROVIDES SOME INSIGHT ABOUT DATA OUTPUT.

```
   ***************************************************************

                                PHASE  1

   ***************************************************************

  T        XS       YS       ZS       DXS      DYS      DELT21     DELMASS21
  CATA     DATA     DATA     DATA     DATA     DATA        DATA       DATA
  DATA     CATA     DATA     CATA     DATA     DATA        CATA       DATA
  CATA     DATA     DATA     DATA     DATA     DATA        DATA       DATA



   ***************************************************************

                                PHASE  2

   ***************************************************************

  T        XS       YS       ZS       DXS      DYS      DELT21     DELMASS21
   DATA     DATA     DATA     DATA     DATA     DATA        DATA        DATA
   CATA     DATA     DATA     CATA     DATA     DATA        DATA        DATA
```

20. GENERALIZED ITERATOR

THE GENERALIZED ITERATOR IS CAPABLE OF SOLVING A 20 X 20 MATRIX USING INPUT AND OUTPUT VALUES AS INDEPENDENT AND DEPENDENT VARIABLES RESPECTIVELY. INDEPENDENT AND DEPENDENT VARIABLES MAY BE DEFINED FOR EITHER VEHICLE. CERTAIN INPUT VALUES MAY NOT BE DEFINED AS INDEPENDENT VARIABLES UNTIL FURTHER DEVELOPMENT OF THE ITERATOR. FOR EXAMPLE, TABLE VALUES OR AN ELEMENT OF A STATE VECTOR NOT INPUT IN THE SAME PHASE THAT PERTURBATIONS ARE TO BE APPLIED TO IT. DEPENDENT VARIABLES MAY BE SELECTED FROM THE ELEMENTS OF THE OSET ARRAY WITH THE STIPULATION THAT THE CORRESPONDING PRINT FLAG IS SET. FOR A DEFINITION OF THE OSET ARRAY SEE SUBROUTINE 'BLOSET' IN THE PROGRAM LISTING. A 'LOOP' IS DEFINED AS A PORTION OF A TRAJECTORY OVER WHICH AN ITERATION IS MADE. THE BEGINNING OF THE LOOP IS THE FIRST PHASE WHICH CONTAINS AN INDEPENDENT VARIABLE BELONGING TO THAT LOOP. THE END OF THE LOOP IS THE LAST PHASE WHICH CONTAINS A DEPENDENT VARIABLE BELONGING TO THAT LOOP. AT THE PRESENT TIME NESTED OR OVERLAPPING LOOPS ARE ILLEGAL, BUT SERIES OF LOOPS MAY BE RUN. THERE ARE THREE CLASSES OF DEPENDENT VARIABLES,

1. POINT CONSTRAINT (EQUALITY)
2. INTERVAL CONSTRAINT (INEQUALITY)
3. VARIABLE TO BE OPTIMIZED.

THE ITERATOR HAS TWO MODES, SELECTION AND OPTIMIZATION. IN THE SELECTION MODE THE ITERATOR IS SEARCHING FOR A TRAJECTORY THAT WILL SATISFY THE EQUALITY AND INEQUALITY CONSTRAINTS. IN THE OPTIMIZATION MODE, THE OPTIMIZED VARIABLE'S WEIGHT IS INCREASED SO THAT THE ITERATOR CONSIDERS THE OPTIMIZED VARIABLE OVER THE OTHER DEPENDENT VARIABLES IN ORDER TO SEEK AN OPTIMUM.

REFERENCE--
THE ITERATION ALGORITHM IS DESCRIBED IN 'MODIFIED MSC FORWARD ITERATOR-VOLUME II', TRW 05952-H073-R0-00, 9 NOV 1966.

20.1. INPUT FOR EACH ITERATION LOOP

LOOP - THE NUMBER OF THE ITERATION LOOP, NOMINALLY SET TO 1.
*NOTE - THE PRESENT STATUS OF ITERATOR DEVELOPMENT LIMITS MULIT-LOOP CAPABILITY TO LOOPS IN SERIES WITH NO OVERLAPPING PHASES.

SELMAT,OPTMAT - NUMBER OF PARTIAL DERIVATIVE MATRICES GENERATED IN SELECTION AND OPTIMIZATION MODES RESPECTIVELY. NOMINAL VALUES ARE 10 AND 15 .

OMODE - IF NON-ZERO, THE ITERATOR BEGINS IN THE OPTIMIZATION MODE.

WTSEL - WEIGHT ON THE OPTIMIZED VARIABLE IN THE SELECTION MODE. IF NOT INPUT, THE ITERATOR COMPUTES WTSEL.

WTOPT - WEIGHT ON THE OPTIMIZED VARIABLE IN THE OPTIMIZATION MODE, AN OPTIONAL INPUT LIKE WTSEL.

**NOTE ON WTSEL AND WTOPT-- THESE WEIGHTS ARE APPLICABLE ONLY

FOR CLASS=3. TYPE DEPENDENT VARIABLES. IT IS RECOMMENDED THAT THE ITERATOR BE ALLOWED TO COMPUTE THESE WEIGHTS ON THE FIRST RUN. IF SATISFACTORY CONVERGENCE DOES NOT RESULT, THEY SHOULD THEN BE INPUT.

*EXAMPLE OF RESULTS REQUIRING INPUT OF WTSEL AND WTOPT-- INPUT OF A LOWER WEIGHT WOULD BE REQUIRED IF THE ITERATOR IS FOUND TO BE RELAXING THE CONSTRAINTS. A LARGER WEIGHT WOULD BE REQUIRED IF THE WEIGHTED RESIDUAL FOR THE OPTIMIZED VARIABLE IS NOT LARGE COMPARED TO THE WEIGHTED CONSTRAINED VARIABLE RESIDUALS.

20.2. INPUT FOR EACH INDEPENDENT VARIABLE

INDEPV - BCD NAME OF THE INDEPENDENT VARIABLE, SUBSCRIPTED WITH 1 OR 2 ACCORDING TO THE VEHICLE NUMBER. IF THE BCD NAME HAS NO SUBSCRIPT, A 1 IS ASSUMED.
IPHASE - PHASE WHERE INDEPV IS VARIED.
NLOOP - LOOP WHERE INDEPV ACTS. NOMINALLY SET TO 1.
PERT - PERTURBATION INCREMENT TO OBTAIN PARTIAL DERIVATIVES.

*NOTE - INDEPV, IPHASE, PERT ARE REQUIRED INPUTS FOR EACH INDEPENDENT VARIABLE.

20.3. INPUT FOR EACH DEPENDENT VARIABLE

DEPV - BCD NAME OF THE DEPENDENT VARIABLE, SUBSCRIPTED WITH 1 OR 2 ACCORDING TO THE VEHICLE NUMBER. IF THE BCD NAME HAS NO SUBSCRIPT, A 1 IS ASSUMED.
IPHASE - PHASE WHERE DEPV IS COMPUTED FOR COMPARISON. THE LAST VALUE OF DEPV COMPUTED IN A PHASE IS THE VALUE USED FOR COMPARISON.
NLOOP - LOOP WHERE DEPV IS BOUNDED.
CLASS - TYPE OF DEPV
=1. --POINT CONSTRAINTS
=2. --INTERVAL CONSTRAINTS (WIDER THAN CLASS =1.)
=3. --DEPENDENT VARIABLE IS TO BE OPTIMIZED
TARGET - DESIRED VALUE OF DEPV. (IN UNITS OF 'OSCALE')
NEGTOL - INPUT WHOSE ABSOLUTE VALUE IS SUBTRACTED FROM TARGET TO OBTAIN THE LOWER BOUND ON DEPV. (IN UNITS OF 'OSCALE')
POSTOL - INPUT WHOSE ABSOLUTE VALUE IS ADDED TO TARGET TO OBTAIN THE UPPER BOUND ON DEPV. (IN UNITS OF 'OSCALE')

*NOTE - DEPV,IPHASE,CLASS,TARGET,NEGTOL, AND POSTOL ARE REQUIRED INPUTS FOR EACH DEPENDENT VARIABLE.

20.4. INPUT FOR EACH CLASS 2 VARIABLE

WFACT - WEIGHT FACTOR FOR PENALTY FUNCTION MINIMIZATION. MUST BE INPUT. A NOMINAL FIRST GUESS IS WFACT=1.0. THE PENALTY FUNCTION IS THE SUM OF THE SQUARES OF THE WEIGHTS TIMES THE RESIDUALS.

20.5. PHASE RESTRICTIONS

1. ALL PHASE NUMBERS MUST BE GREATER THAN ZERO.
2. ONLY THE FIRST PHASE OF A LOOP MAY BE TYPE ZERO.
3. PHASE NUMBERING MUST BE MONOTONICALLY INCREASING.
4. ALL ITERATION DATA MUST APPEAR IN THE FIRST PHASE OF THE ITERATION LOOP.

20.6. INDEPENDENT VARIABLE RESTRICTIONS

1. TABLE VALUES MAY NOT BE INDEPENDENT VARIABLES.
2. AN ELEMENT OF A STATE VECTOR MUST BE INPUT IN THE SAME PHASE WHERE IT IS VARIED IN THE ITERATION.
3. ONLY THE FIRST MEMBER OF A DIMENSIONED ARRAY MAY BE AN INDEPENDENT VARIABLE.

20.7. PRINT OPTIONS TO MONITOR THE ITERATION

* IN THE FOLLOWING PRINT OPTION SUMMARY CONTROLLED BY THE INPUT 'ITERPR', 'Y' INDICATES YES THE PRINT IS OBTAINED AND 'N', CONVERSELY.

ITERPR	0	1	2	3	4	5	6	7
SUMMARY PRINT OF THE ITERATION LOOP	N	N	Y	N	Y	Y	N	Y
INDEPV AND DEPV AFTER EACH TRAJECTORY	N	Y	N	N	Y	N	Y	Y
PARTIAL DERIVATIVES	N	N	N	Y	N	Y	Y	Y

20.8. ITERATOR SYMBOL TYPES

```
CLASS  - SINGLE PRECISION
DEPV   - ALPHANUMERIC
INDEPV - ALPHANUMERIC
IPHASE - INTEGER
ITERPR - INTEGER
LOOP   - INTEGER
NEGTOL - SINGLE PRECISION
NLOOP  - INTEGER
CMODE  - INTEGER
OPTMAT - INTEGER
PERT   - SINGLE PRECISION
POSTOL - SINGLE PRECISION
SELMAT - INTEGER
TARGET - SINGLE PRECISION
WFACT  - SINGLE PRECISION
WTOPT  - SINGLE PRECISION
WTSEL  - SINGLE PRECISION
```

20.9. EXAMPLE ITERATOR INPUT

```
LOOP = 2 , SELMAT = 2  , ITERPR = 7  *
 INDEPV(1) = V, IPHASE = 10, NLOOP = 2, PERT = 10.0  *
 INDEPV  = PTH, IPHASE = 10, NLOOP = 2, PERT =-0.05  *
 DEPV(1) = RA, IPHASE = 40, NLOOP = 2,  CLASS = 1.0      *
               TARGET = 56.0, NEGTOL =-.01, POSTOL =.01  *
 DEPV(2) = DEC, IPHASE = 40, NLOOP = 2, CLASS = 1.0      *
               TARGET = 0.0, NEGTOL = .01, POSTOL =-.01  *

EXPLANATION OF EXAMPLE
  'V' AND 'PTH' ARE BEING VARIED IN PHASE 10 TO DRIVE 'RA' TO 56.0
  DEGREES AND 'DEC' TO 0.0 DEGREES IN PHASE 40.
```

21. OUTPUT

21.1. PRINT CONTROL

INPUT

OSCALE - CONTROLS THE UNITS OF OUTPUT QUANTITIES. DISTANCE IS MEASURED IN THE UNITS BELOW, AND VELOCITY IN THOSE UNITS PER SECCND.

=1 KILOMETERS
=2 INTERNATICNAL STATUTE MILES
=3 U.S. NAUTICAL MILES
=4 U.S. FEET
=5 DISTANCE IS MEASURED IN EARTH RADII AND VELOCITY IN EARTH RADII PER HOUR
=6 DISTANCE IS MEASURED IN INTERNATIONAL STATUTE MILES AND VELOCITY IN FEET PER SECOND
=7 DISTANCE IS MEASURED IN U.S. NAUTICAL MILES AND VELOCITY IN FEET PER SECCND

NTAPE

SELECTS THE DESIRED OUTPUT UNITS TO BE USED. BOTH THE PRINTER AND THE SC-4020 MICROFILM UNIT MAY BE USED FOR PRCGRAM OUTPUT. 'NTAPE' HAS A PRESET VALUE OF 6.

NTAPE = 0	SUPPRESSES ALL OUTPUT
NTAPE = 6	THE PRINTER WILL BE SELECTED FOR PROGRAM OUTPUT
NTAPE = 17	THE SC-4020 MICRCFILM UNIT WILL BE SELECTED FOR PROGRAM OUTPUT
NTAPE = 617	BOTH THE PRINTER AND THE SC-4020 MICROFILM UNIT WILL BE SELECTED FOR PROGRAM OUTPUT

OVRLAY

PHASES THAT REQUEST BOTH NORMAL TRAJECTORY PRINT AND ACQUISITION-TERMINATICN PRINT REQUIRE A SUBSTANTIAL AMOUNT OF EXTRA EXECUTION TIME WHEN CCMPARED WITH NORMAL RUNS DUE TO THE EXTENSIVE OVERLAY REQUIRED. IN ORDER TO DECREASE THIS EXTRA TIME OR TO OBTAIN ONLY NORMAL TRAJECTORY PRINT OR ONLY ACQUISITION-TERMINATION PRINT,'OVRLAY' SHCULD BE USED. 'OVRLAY' IS PRESET TO 0.0. IF 'OVRLAY' IS SET NON-ZERO IT WILL SUPPRESS ANY PRINT FLAGS THAT ARE IN CCNFLICT WITH IT. THIS ALLOWS A CATA DECK TO BE SET UP ONCE WITH ALL DESIRED FLAGS SET AND THEN OBTAIN 3 DIFFERENT SETS OF OUTPUT BY CHANGING ONE DATA CARD.

OVRLAY = 0.0	NORMAL TRAJECTORY PRINT AND ACQUISTICN-TERMINATION PRINT AS SPECIFIED BY PRINT FLAGS.
OVRLAY = 1.0	NORMAL TRAJECTORY PRINT AS SPECIFIED BY PRINT FLAGS WITHOUT ANY ACQUISITION-

```
                    TERMINATION PRINT EVEN THOUGH ACQUISTION-
                    TERMINATION PRINT FLAGS MAY BE SET.
  OVRLAY = 2.0      ACQUISITION-TERMINATICN PRINT AS SPECIFIED
                    BY PRINT FLAGS WITHOUT ANY NORMAL TRAJECTORY
                    PRINT EVEN THOUGH NORMAL TRAJECTORY PRINT
                    FLAGS MAY BE SET.

TITLE -INITIAL PRINT INDICATOR
       =1.0 PRINTS CASE LABEL AND INITIALIZATION PRINT
            (INPUT CONSTANTS ANC THRUST INPUT). THE
            IMU AXIS SYSTEM AND THE VEHICLE AND IMU
            MANEUVER ANGLES ARE ALSO PRINTED.
       =0.0 SUPPRESSES PRINT

THE ELAPSED TIME TO START PRINT IS INPUT BY
  T1S -FIRST VALUE (HR)
  T2S -SECOND VALUE (HR)
  T3S -THIRD VALUE (HR)
  T4S -FOURTH VALUE (HR)
  T5S -FIFTH VALUE (HR)

*NOTE' T1S,T2S,..., AND T1E,T2E,... TIMES ARE RELATIVE TO
       TIME ZERO (AT LAUNCH) OF THE SIMULATED TRAJECTORY --
       NOT RELATIVE TO A 'TSTART' INPUT TIME. IF T1S IS NOT
       INPUT, T1S IS SET TO 0.0, THEREFORE T1S IS NOT A
       REQUIRED INPUT. UP TO FIVE VALUES CAN BE INPUT.

THE ELAPSED TIME TO END PRINT IS A REQUIRED INPUT (AT
LEAST ONE VALUE) AND IS INPUT BY
  T1E -FIRST VALUE (HR)
  T2E -SECOND VALUE (HR)
  T3E -THIRD VALUE (HR)
  T4E -FOURTH VALUE (HR)
  T5E -FIFTH VALUE (HR)

THE PRINT TIME INCREMENT IS A REQUIRED INPUT (ONE VALUE
FOR EVERY VALUE OF T1E) AND IS INPUT BY
  T1D -FIRST VALUE (HR)
  T2D -SECOND VALUE (HR)
  T3D -THIRD VALUE (HR)
  T4D -FOURTH VALUE (HR)
  T5D -FIFTH VALUE (HR)

*EXAMPLE OF PRINT TIMES
  T1D=.5, T1E=12., T2S=12., T2D=5., T2E=141.*
  TSTART=6., T1S=6., T1D=5., T1E=18., T2S=18.*
  T2D=5., T2E=147.*

* THESE EXAMPLES SELECT THE PRINT TO START AT TRAJECTORY
  INITIATION. PRINTOUT OCCURS EVERY HALF HOUR FOR 12 HOURS.
  FOR THE NEXT 141 HOURS, PRINTOUT OCCURS EVERY 5 HOURS.

IPRINT-INDICATOR WHICH CONTROLS PRINT FREQUENCY DURING
```

A COAST PHASE.

*EXAMPLE
IPRINT=3 *

*EXPLANATION OF EXAMPLE
THE PRINT FREQUENCY WILL BE EVERY THIRD INTEGRATION STEP.

ITHPR-INDICATOR WHICH CONTROLS PRINT FREQUENCY DURING A THRUST PHASE

*EXAMPLE
ITHPR=10 *

*EXPLANATION OF EXAMPLE
THE PRINT FREQUENCY WILL BE EVERY TENTH INTEGRATION STEP.

THE PRINT GROUPS ARE CONTROLLED BY

PRTG1=2. PRINTS THRUST OUTPUT
PRTG2=2. PRINTS SELENOCENTRIC REFERENCE OUTPUT WHEN VEHICLE IS IN MOON REFERENCE
PRTG2=3. PRINTS SELENOCENTRIC REFERENCE OUTPUT WHEN VEHICLE IS IN MOON OR EARTH REFERENCE
PRTG3=2. PRINTS SELENOGRAPHIC REFERENCE OUTPUT WHEN VEHICLE IS IN MOON REFERENCE
PRTG3=3. PRINTS SELENOGRAPHIC REFERENCE OUTPUT WHEN VEHICLE IS IN MOON OR EARTH REFERENCE
PRTG4=2. PRINTS GEOCENTRIC REFERENCE OUTPUT
PRTG5=2. PRINTS EARTH-MOON PLANE OUTPUT
PRTG6=2. PRINTS PLANETARY COORDINATES OUTPUT
PRTG7=2. OR 4. PRINTS KEPLERIAN OSCULATING ELEMENTS OUTPUT
PRTG7=3. OR 4. PRINTS SELENOCENTRIC OSCULATING ELEMENTS OUTPUT
PRTG8=2. PRINTS UNIT VECTORS OUTPUT
PRTG9=2. PRINTS TWO-BODY AND XI TERMS OUTPUT
PRTG10=2. PRINTS PERTURBATIVE ACCELERATIONS OUTPUT
PRTG11=2. WITH ADDITIONAL CONSTRAINTS SATISFIED (NV=2, RANGE BETWEEN TWO VEHICLES GREATER THAN .001) PRINTS TOPOCENTRIC SIGHTING ANGLES OUTPUT. IF IN ADDITION TO THE ABOVE, THE VEHICLE ID IS TWO, PRINTS RENDEZVOUS PARAMETERS OUTPUT.
PRTG12=2. PRINTS LANDING SITE COORDINATES OUTUT. (WHEN VEHICLE IS IN MOON REFERENCE)
PRTG13=2. PRINTS BODY ATTITUDE AND FORCES
PRTG14=2. PRINTS RESTART COORDINATES OUTPUT
PRTG15=2. PRINTS COMPUTATION IDENTIFICATION OUTPUT
PRTG16=2. AND ITYPE=9 PRINTS ITERATIVE GUIDANCE OUTPUT
PRTG17=2. PRINTS GEOGRAPHIC REFERENCE OUTPUT

NOTE - SEPARATE PRINT FLAGS ARE PROVIDED FOR EACH VEHICLE FOR ALL PRINT GROUPS EXCEPT THE RECTIFICATION PRINT GROUP. SEPARATE PRINT TIMES ARE NOT AVAILABLE FOR TWO VEHICLES.

*EXAMPLE
NV=2, PRTG1=2.0,0.0, PRTG2=2.0, PRTG3=0.0,2.0, PRTG4=2.0,2.0

*EXPLANATION - VEHICLE 1 WILL HAVE PRINT GROUPS 1, 2, AND 4 TURNED ON AND VEHICLE 2 WILL HAVE PRINT GROUPS 3 AND 4 TURNED CN.

*NOTE IF THE PRTGN=1.0 (N=1,2,...17), THE PRINT GROUP IS ONLY CCMPUTED.

SHADOW - LIGHTING CONDITION PRINT CONTROL.

=1. VEHICLE'S LIGHTING CCNDITION IS GIVEN AT EACH PRINT POINT.

=2. THE POINTS AT WHICH LIGHTING CCNDITION CHANGES OCCUR ARE DETERMINED. THE TIME AND TYPE OF CHANGE ARE PRINTED.

=3. THE INFORMATION FOR BOTH OF THE ABOVE SELECTIONS IS PRINTED.

=4. THE POINTS AT WHICH LIGHTING CONDITION CHANGES OCCUR ARE DETERMINED. THE TIME AND TYPE OF CHANGE ARE PRINTED. IN ADDITION THE POSITION OF THE VEHICLE WITH RESPECT TO THE REFERENCE BODY AS CONTAINED IN PRTG2 AND PRTG3 OR PRTG4 AND PRTG17.

=5. THE INFORMATION OF SHADOW=1. AND SHADOW=4. IS PRINTED.

*EXAMPLE 1
SHADOW=1., NV=1*

*EXAMPLE 2
SHADOW=3.,2., NV=2*

*EXPLANATION OF THE EXAMPLES
THE FIRST EXAMPLE GIVES THE INPUT FOR ONE VEHICLE.
THE SECOND EXAMPLE GIVES THE INPUT FOR TWO VEHICLES.

*NOTE - IF THE VALUE OF SHADCW IS 3. OR 5., THE AMOUNT OF COMPUTER TIME FOR A RUN IS ALMOST DOUBLED. IT IS RECOMMENDED THAT THE STEPSIZE NOT EXCEED THE STANDARD STEPSIZE VALUE WHEN SHADOW IS 2., 3., 4., OR 5.

RECTPT=2. SPECIAL PRINT AT RECTIFICATION POINTS OF GROUPS SELECTED BY PRTGN=2.0

TCTALP=X,Y - SETS PRINT GROUPS 1 THROUGH PRINT GROUP 'X'

TO 2.0 FOR VEHICLE 1 AND GROUPS 1 THROUGH 'Y' FOR VEHICLE 2.

*EXAMPLE 1
TOTALP = 15.0*
*EXAMPLE 2
TOTALP = 15.0, 17.0, NV = 2*

RADPRT=X,Y
WHERE X IS THE OUTPUT INDICATOR FOR VEHICLE 1 AND Y IS THE OUTPUT INDICATOR FOR VEHICLE 2.
=1. NORMAL RADAR OUTPUT (RADAR TRACKING DATA) FOR ALL VISIBLE STATIONS AT PRINT POINTS.
=2. RADAR EVENT OUTPUT (TIME AND EVENT) AT TIME OF OCCURRENCE OF AN EVENT
=3. 1 AND 2 ABOVE
=4. RADAR EVENT OUTPUT PLUS VEHICLE STATE VECTOR AND RADAR TRACKING DATA AT TIME OF OCCURRENCE OF AN EVENT.
=5. 1 AND 4 ABOVE

*NOTE - IT SHOULD BE NOTED THAT WHEN RADPRT IS 3. OR 5., THE AMOUNT OF COMPUTER TIME FOR A RUN IS ALMOST DOUBLED. IT IS RECOMMENDED THAT THE STEPSIZE NOT EXCEED THE STANDARD STEPSIZE VALUE WHEN RADPRT IS 2., 3., 4., OR 5.

SIGHT = X,Y
WHERE X IS THE OUTPUT INDICATOR FOR VEHICLE 1 AND Y FOR VEHICE 2.
= 2. SIGHT OUTPUT

21.2. OUTPUT DESCRIPTION

21.2.1. OUTPUT AT BEGINNING OF EACH PHASE

PHASE IDENTIFICATION
INPUT DATA ARRAY
INPUT THRUST DATA
CONSTANT ARRAY
POTENTIAL CONSTANTS
THE IMU SYSTEM AND THE VEHICLE ATTITUDE AND IMU MANEUVER ANGLES ARE PRINTED IF TITLE=1.

FORMAT

VEHICLE 'ID' INERTIAL MEASUREMENT UNIT

XIMUX	YIMUX	ZIMUX
XIMUY	YIMUY	ZIMUY
XIMUZ	YIMUZ	ZIMUZ

VEHICLE 'ID' ATTITUDE MANEUVER ANGLES
ALPHA BETA GAMMA

VEHICLE 'ID' IMU MANEUVER ANGLES
ALPHA BETA GAMMA

SYMBOL DEFINITIONS

XIMUX, XIMUY, XIMUZ - INERTIAL COORDINATES OF THE X-AXIS (LONGITUDINAL AXIS) OF THE IMU SYSTEM.

YIMUX, YIMUY, YIMUZ - INERTIAL COORDINATES OF THE Y-AXIS OF THE IMU SYSTEM.

ZIMUX, ZIMUY, ZIMUZ - INERTIAL COORDINATES OF THE Z-AXIS OF THE IMU SYSTEM.

ALPHA, BETA, GAMMA - EULER MANEUVER ANGLES OF THE ATTITUDE AND IMU ORIENTATION AT PHASE INITIATION (ATYPE OPTIONS HAVE BEEN EXECUTED) WITH RESPECT TO ORIENTATION AT THE END OF THE PREVIOUS PHASE. (DEG)

21.2.2. OUTPUT AT EACH PRINT POINT

VEHICLE IDENTIFICATION
PHASE NUMBER
REFERENCE BODY
PAGE NUMBER
COORDINATE REFERENCE GREENWICH MEAN TIME OUTPUT UNITS
TIME SINCE LAUNCH(HRS) GROUND ELAPSED TIME GREENWICH RT. ASCENSION
PHASE ELAPSED TIME PHASE ORBIT COUNT TOTAL ORBIT COUNT
(ELAPSED TIME CONTINUOUS
ACRCSS PHASES IN POWERED
DESCENT)

21.3. PRINT GROUPS

21.3.1. SHADOW PRINT

ONE OF THE FOLLOWING LIGHTING CONDITION STATEMENTS IS OUTPUT.

IN SUNLIGHT
IN EARTH PENUMBRA
IN MOON PENUMBRA
IN EARTH UMBRA
IN MOON UMBRA
ENTERING SUNLIGHT PLUS THE TIME

ENTERING EARTH PENUMBRA PLUS THE TIME
ENTERING MOON PENUMBRA PLUS THE TIME
ENTERING EARTH UMBRA PLUS THE TIME
ENTERING MOON UMBRA PLUS THE TIME

21.3.2. COMPUTATION IDENTIFICATION (OUTPUT IF PRTG15=2.0)

```
TYPE OF TRAJECTORY-ENCKE,COWELL OR TWO BODY
       (IF RECTPT=2 AND    RECTIFICATION ID
        RECTIFICATION OC-        OR
        CURRED)            REFERENCE SWITCH ID
       (IF IVSFS=1) FIXED STEP
       (IF IVSFS=-1)VARIABLE STEP
                NO. RUNGE-KUTTA STEPS   NO. INTEGRATION STEPS

DIREC.              H                    HRK                OSCALE
```

SYMBOL DEFINITIONS
DIREC.-INTEGRATION STEPSIZE MULTIPLIER
H-COWELL INTEGRATION STEPSIZE
HRK-RUNGE-KUTTA STEPSIZE
OSCALE-OUTPUT SCALAR-DEFINES OUTPUT UNITS
=1 DISTANCE IN KILOMETERS AND VELOCITY IN KILOMETERS/SEC.
=2 DISTANCE IN INTERNATIONAL STATUTE MILES AND VELOCITY IN INTERNATIONAL STATUTE MILES/SEC.
=3 DISTANCE IN U.S. NAUTICAL MILES AND VELOCITY IN U.S. NAUTICAL MILES/SEC.
=4 DISTANCE IN U.S. FEET AND VELOCITY IN FT./SEC.
=5 DISTANCE IS MEASURED IN EARTH RADII AND VELOCITY IN EARTH RADII PER HOUR.
=6 DISTANCE IN INTERNATIONAL STATUTE MILES AND VELOCITY IN FT./SEC.
=7 DISTANCE IN U.S. NAUTICAL MILES AND VELOCITY IN FT./SEC.

21.3.3. RESTART COORDINATES (OUTPUT IF PRTG14=2.0)

FORMAT

```
RESTART COORDINATES(ER AND ER/HR)
              RXYZ
              RDXYZ
```

SYMBOL DEFINITIONS
RXYZ-POSITION COORDINATES(ER)
RDXYZ-VELOCITY COORDINATES(ER/HR)

21.3.4. THRUST OUTPUT

(OUTPUT IF ITYPE=5)

X,Y,Z,DX,DY,DZ - VEHICLE STATE VECTOR IN DESCENT GUIDANCE COORDINATE SYSTEM (SEE SECTION 2)

(OUTPUT IF ITYPE=5 AND THIS IS FIRST POINT OF THE PHASE)

RTX,RTY,RTZ,DRTX,DRTY,DRTZ,ATIX,ATIY,ATIZ,JERKX,JERKY, JERKZ - TARGET STATE VECTOR, ACCELERATION OF TARGET VECTOR AND RATE OF CHANGE OF ACCELERATION

(OUTPUT IF ITYPE=7)

X,Y,Z,DX,DY,DZ - VEHICLE STATE VECTOR IN ASCENT GUIDANCE COORDINATE SYSTEM (SEE SECTION 2)

(OUTPUT IF ITYPE=8)

X,Y,Z,DX,DY,DZ - VEHICLE STATE VECTOR IN RENDEZVOUS GUIDANCE COORDINATE SYSTEM

* NOTE - ALL THE ABOVE ARE IN UNITS OF OSCALE

(OUTPUT IF VEHICLE IS THRUSTING AND PRTG1=2.0)

FORMAT

TYPE OF THRUST
ENGINE IGNITION OR
ENGINE CUTOFF IF APPROPRIATE

(AT IGNITION POINT WHEN USING GD1)

TI	LATSI	LONSI	ALTSI	DTS	TAI
THETA	BETA	FUEL	TM	VELG	TACC
BARC	DELV	MASS	MSFL	SPI	VEX
VRX	VRY	VRZ	VDX	VDY	VDZ
TGO	FC	GMLP	GMLY	PLCHNG	TDELV

SYMBOL DEFINITIONS

TI-TIME OF INTERSECTION (HRS)
LATSI-SELENOGRAPHIC LATITUDE OF INTERSECTION (DEG)
LONSI-SELENOGRAPHIC LONGITUDE OF INTERSECTION (DEG)
ALTSI-SELENOGRAPHIC ALTITUDE OF INTERSECTION (UNITS OF OSCALE)
DTS-TIME OF INTERSECTION FROM PERICYNTHION(SEC)
TAI-TRUE ANAMOLY OF INTERSECTION FROM PERICYNTHION(DEG)
THETA-ANGLE BETWEEN THE THRUST ACCELERATION VECTOR AND LOCAL HORIZONTAL (DEG)
BETA-AZIMUTH OF THE THRUST ACCELERATION WITH RESPECT TO THE PROJECTION OF THE VELOCITY INTO THE LOCAL HORIZONTAL(DEG)
FUEL-FUEL CONSUMED(LB)
TM-THRUST MAGNITUDE(LBF)
VELG-VELOCITY TO BE GAINED TO ACHIEVE THE MAGNITUDE OF THE REQUIRED VELOCITY (UNITS OF OSCALE)
TACC-THRUST ACCELERATION(UNITS OF OSCALE)
BARC-RANGE ANGLE(DEG)

DELV-VELOCITY GAINED DURING THRUST PERIOD(UNITS OF OSCALE)
MASS-INSTANTANEOUS MASS OF THE VEHICLE(LB)
MSFL-MASS FLOW RATE(LBM/SEC)
SPI-SPECIFIC IMPULSE (SEC)
VEX-EXHAUST VELOCITY (UNITS OF OSCALE)
VRX,VRY,VRZ-COMPONENTS OF THE VELOCITY REQUIRED IN THE INERTIAL SYSTEM (UNITS OF OSCALE)
VDX,VDY,VDZ-COMPONENTS OF THE VELOCITY TO BE GAINED (VELG) IN THE INERTIAL SYSTEM (UNITS OF OSCALE)
TGO-TIME TO GO TO THRUST CUTOFF (SEC)
FC-COMMANDED THRUST (LBF)
GMLP-GIMBAL ANGLE ABOUT Y-AXIS (DEG)
GMLY-GIMBAL ANGLE ABOUT Z-AXIS (DEG)
PLCHNG-TOTAL ORBITAL PLANE CHANGE SINCE THRUST INITIATION (DEG)
TDELV-TOTAL VELOCITY INCREMENT APPLIED SINCE THE BEGINNING OF THE CASE.

21.3.5. SELENOCENTRIC REFERENCE (OUTPUT IF VEHICLE IN MOON REFERENCE AND PRTG2=2.0, OUTPUT IF VEHICLE IN MOON OR EARTH REFERENCE AND PRTG2=3.0)

FORMAT

```
SELENOCENTRIC
   XL      YL      ZL     DXL      DYL     DZL
   RL    DECL     RAL      VL     PTHL     AZL
(IF VEHICLE ID =NVEHT AND INAV IS NOT 0)
  RNX     RNY     RNZ     VNX     VNY     VNZ
```

SYMBOL DEFINITIONS
XL,YL,ZL,DXL,DYL,DZL-INERTIAL SELENOCENTRIC CARTESIAN COORDINATES (POSITION AND VELOCITY IN UNITS OF OSCALE)
RL,DECL,RAL,VL,PTHL,AZL-INERTIAL SELENOCENTRIC POLAR COORDINATES (DISTANCE AND VELOCITY IN OSCALE UNITS, ANGLES IN DEGREES)
RL-RADIUS VECTOR MAGNITUDE
DECL-DECLINATION
RAL-RIGHT ASCENSION
VL-VELOCITY VECTOR MAGNITUDE
PTHL-FLIGHT PATH ANGLE
AZL-AZIMUTH
RNX,RNY,RNZ-NAVIGATED POSITION(UNITS OF OSCALE)
VNX,VNY,VNZ-NAVIGATED VELOCITY(UNITS OF OSCALE)

21.3.6 SELENOGRAPHIC REFERENCE (OUTPUT IF VEHICLE IN MOON REFERENCE AND PRTG3=2.0, OUTPUT IF VEHICLE IN MOON OR EARTH REFERENCE

AND PRTG3=3.0)

FORMAT

SELENOGRAPHIC

XS	YS	ZS	DXS	DYS	DZS
ALTS	LATS	LONS	VRS	PTR	AZR
LTS	LNS	LTE	LNE	DSMP	RSMP
LIN	LAN	LAP	DR	VT	

SYMBOL DEFINITIONS

XS,YS,ZS,DXS,DYS,DZS-ROTATIONAL SELENOGRAPHIC CARTESIAN COORDINATES (POSITION AND VELOCITY IN OSCALE UNITS)

ALTS,LATS,LONS,VRS,PTR,AZR-ROTATIONAL SELENOGRAPHIC POLAR COORDINATES (DISTANCE AND VELOCITY IN OSCALE UNITS, ANGLES IN DEGREES)

ALTS-ALTITUDE
LATS-LATITUDE
LONS-LONGITUDE
VRS-VELOCITY VECTOR MAGNITUDE
PTR-FLIGHT PATH ANGLE
AZR-AZIMUTH
LTS-SELENOGRAPHIC LATITUDE OF THE SUN (DEG)
LNS-SELENOGRAPHIC LONGITUDE OF THE SUN (DEG)
LTE-SELENOGRAPHIC LATITUDE OF THE EARTH (DEG)
LNE-SELENOGRAPHIC LONGITUDE OF THE EARTH (DEG)
DSMP-DECLINATION OF THE SUN WITH RESPECT TO THE MOON ORBIT PLANE COORDINATE SYSTEM (DEG)
RSMP-RIGHT ASCENSION OF SUN WITH RESPECT TO THE MOON ORBIT PLANE COORDINATE SYSTEM (DEG)
LIN-SELENOGRAPHIC INCLINATION OF THE FLIGHT PLANE OF THE VEHICLE (DEG)
LAN-LONGITUDE OF THE ASCENDING NODE (DEG)
LAP-SELENOGRAPHIC ARGUMENT OF PERIAPSIS (DEG)
DR-RADIAL COMPONENT OF VELOCITY (UNITS OF OSCALE)
VT-TANGENTIAL COMPONENT OF VELOCITY (UNITS OF OSCALE)

21.3.7. GEOCENTRIC REFERENCE (OUTPUT IF PRTG4=2.0)

FORMAT

GEOCENTRIC

X	Y	Z	DX	DY	DZ
R	DEC	RA	V	PTH	AZ

(IF VEHICLE IS IN EARTH REFERENCE AND INAV IS NOT 0)

RNX	RNY	RNZ	VNX	VNY	VNZ

SYMBOL DEFINITIONS

X,Y,Z,DX,DY,DZ-INERTIAL GEOCENTRIC CARTESIAN COORDINATES (POSITION AND VELOCITY IN UNITS OF OSCALE)

R,DEC,RA,V,PTH,AZ-INERTIAL GEOCENTRIC POLAR COORDINATES(DISTANCE AND VELOCITY IN UNITS OF OSCALE,ANGLES IN DEGREES)

R-RADIUS VECTOR MAGNITUDE

DEC-DECLINATION

RA-RIGHT ASCENSION

V-VELOCITY VECTOR MAGNITUDE

PTH-FLIGHT PATH ANGLE

AZ-AZIMUTH

RNX,RNY,RNZ,VNX,VNY,VNZ-NAVIGATED POSITION AND VELOCITY (UNITS OF OSCALE)

21.3.8. EARTH-MOON PLANE (OUTPUT IF PRTG5=2.0)

FORMAT

EARTH-MOON PLANE

XMP	YMP	ZMP	DXMP	DYMP	DZMP
RMP	DEMP	RAMP	VMP	PTMP	AZMP
XME	YME	ZME	DXME	DYME	DZME

(IF A (THE SEMI-MAJOR AXIS) IS NEGATIVE, THE CONIC IS A HYPERBOLA AND THE FOLLOWING LINE IS PRINTED OUT.

DIA	LIA	DOA	LOA	DRP	LRP

SYMBOL DEFINITIONS

DISTANCES AND VELOCITIES ARE IN OSCALE UNITS AND ANGLES ARE IN DEGREES.

XMP,YMP,ZMP,DXMP,DYMP,DZMP-CARTESIAN EARTH-MOON PLANE COORDINATES (POSITION AND VELOCITY) OF VEHICLE WITH RESPECT TO CURRENT REFERENCE BODY

RMP,DEMP,RAMP,VMP,PTMP,AZMP-POLAR EARTH-MOON PLANE COORDINATES WITH RESPECT TO CURRENT REFERENCE BODY

XME,YME,ZME,DXME,DYME,DZME-CARTESIAN EARTH-MOON PLANE COORDINATES OF THE VEHICLE WITH RESPECT TO THE EARTH

DIA-DECLINATION OF INCOMING ASYMPTOTE

LIA-RIGHT ASCENSION OF INCOMING ASYMPTOTE

DOA-DECLINATION OF OUTGOING ASYMPTOTE

LOA-RIGHT ASCENSION OF OUTGOING ASYMPTOTE

DRP-DECLINATION OF THE PERIAPSIS VECTOR

LRP-RIGHT ASCENSION OF THE PERIAPSIS VECTOR

21.3.9. PLANETARY COORDINATES (OUTPUT IF PRTG6=2.0)

FORMAT

PLANETARY COORDINATES

XM	YM	ZM	DXM	DYM	DZM
RM	DEM	RAM	LOM	VM	ARGM
XSUN	YSUN	ZSUN	RAS	LOS	DES

SYMBOL DEFINITIONS

DISTANCES AND VELOCITIES ARE IN UNITS OF OSCALE AND ANGLES ARE IN DEGREES.

XM,YM,ZM,DXM,DYM,DZM-INERTIAL GEOCENTRIC POSITION AND VELOCITY OF THE MOON

RM,DEM,RAM,LOM,VM,ARGM-INERTIAL GEOCENTRIC POLAR COORDINATES THE MOON

XSUN,YSUN,ZSUN-POSITION OF THE SUN IN INERTIAL GEOCENTRIC CARTESIAN COORDINATES

RAS,LOS,DES-GEOCENTRIC INERTIAL POLAR COORDINATES OF THE SUN

21.3.10. KEPLERIAN OSCULATING ELEMENTS (OUTPUT IN EARTH REFERENCE ONLY IF PRTG7=2.0. OUTPUT IN BOTH EARTH AND MOON REFERENCE IF PRTG7=4.0.

FORMAT

GEOCENTRIC

OSCULATING ELEMENTS

SMA	ECC	INC	RAN	APF	RP
VH	RNMP	APMP	INMP	APO	TFP
TA	EA	MA	SLR	PER	MTA

(IF TMOON IS POSITIVE)

XC	YC

SYMBOL DEFINITIONS

SMA-SEMI-MAJOR AXIS (UNITS OF OSCALE)

ECC-ECCENTRICITY(DEG)

INC-INCLINATION OF VEHICLE FLIGHT PLANE TO THE EARTH EQUATORIAL PLANE (DEG)

RAN-RIGHT ASCENSION OF THE ASCENDING NODE (DEG)

APF-ARGUMENT OF THE PERIAPSIS VECTOR (DEG)

RP-RADIUS AT PERIAPSIS (UNITS OF OSCALE)

VH-EXCESS HYPERBOLIC VELOCITY FOR HYPERBOLA OR PRESENT ESCAPE VELOCITY DEFICIT FOR ELLIPSE (UNITS OF OSCALE)

RNMP-RIGHT ASCENSION OF ASCENDING NODE IN EARTH-MOON PLANE COORDINATES (DEG)

APMP-ARGUMENT OF PERIAPSIS VECTOR IN EARTH-MOON PLANE COORDINATES (DEG)

INMP-INCLINATION OF VEHICLE IN EARTH-MOON PLANE COORDINATES

(DEG)
APO-APOAPSIS RADIUS (UNITS OF OSCALE)
TFP-TIME AT WHICH PERIAPSIS PASSAGE OCCURS (HR)
TA-TRUE ANOMALY (DEG)
EA-ECCENTRIC ANOMALY (DEG)
MA-MEAN ANOMALY (DEG)
SLR--SEMI-LATUS RECTUM (UNITS OF OSCALE)
PER-PERIOD (HR.)
MTA-MAXIMUM TRUE ANOMALY(360 DEGREES IN ELLIPSE,CALCULATED VALUE IN HYPERBOLA (RAD)
XC-PROJECTION ON THE POSITION VECTOR OF THE VEHICLE WITH RESPECT TO THE EARTH OF THE PROJECTION OF THE POSITION OF THE MOON AT TIME=T+TMOON INTO THE VEHICLE FLIGHT PLANE(UNITS OF OSCALE)
YC-PROJECTION ON THE POSITION VECTOR OF THE VEHICLE WITH RESPECT TO THE EARTH OF A VECTOR DEFINED BY CROSSING THE VEHICLE'S ANGULAR MOMENTUM VECTOR WITH THE POSITION OF THE MOON AT TIME=T+TMOON (UNITS OF OSCALE)

21.3.11. SELENOCENTRIC OSCULATING ELEMENTS (OUTPUT IF PRTG7=3.0 OR PRTG7=4.0)

FORMAT

SELENOCENTRIC

OSCULATING ELEMENTS

SMAS	ECCS	INCS	RANS	APFS	RPS
VHS	RNMPS	APMPS	INMPS	APOS	TPFS
TAS	EAS	MAS	SLRS	PERS	MTAS

SYMBOL DEFINITIONS
*ALL SYMBOLS AND THEIR UNITS ARE AS DEFINED ABOVE IN GEOCENTRIC OSCULATING ELEMENTS-EXCEPT REFERENCE IS SELENOCENTRIC.

21.3.12. UNIT VECTORS (OUTPUT IF PRTG8=2.0)

FORMAT

SELENOCENTRIC OR GEOCENTRIC

UNIT VECTORS

WX	WY	WZ	PX	PY	PZ
QX	QY	QZ	SXO	SYO	SZO

SYMBOL DEFINITIONS
WX,WY,WZ-COMPONENTS OF UNIT MOMENTUM VECTOR

PX,PY,PZ-COMPONENTS OF UNIT PERI-APSIS VECTOR
QX,QY,QZ-COMPONENTS OF THE UNIT VECTOR IN ORBIT PLANE NORMAL TO THE PERIGEE VECTOR DIRECTION
SXO,SYO,SZO-COMPONENTS OF THE UNIT VECTOR OF THE OUTGOING ASYMPTOTE

21.3.13. BODY ATTIUDE AND FORCES (OUTPUT IF PRTG13=2.0)

FORMAT

BODY ATTITUDE AND FORCES

VA	MACH	Q	ADEN	AAAP	AAAY
AAAT	AXIAL	FNORM	FYAW	AALT	APSI
FXI	FET	FZE	DRAG	FLIFT	BKANG
RRAT	PRAT	YRAT	IGA	MGA	OGA
XIX	ETX	ZTX	ALO	ALLV	ALLI
XIY	ETY	ZTY	BTO	BLTV	BTLI
XIZ	ETZ	ZTZ	GMO	GMLV	GMLI
ALS	BTS	ALE	BTE	ALM	BTM
ALEI	BTEI	ESB	ASB		

THE FIRST 3 ROWS IN THIS BLOCK ARE PRINTED ONLY WHEN THE VEHICLE IS IN THE EARTH PHASE

SYMBOL DEFINITIONS

VA-RELATIVE VELOCITY (UNITS OF OSCALE)
MACH-MACH NUMBER
Q-DYNAMIC PRESSURE (LBF/IN**2)
ADEN-ATMOSPHERIC DENSITY (LBS./IN.**3)
AAAP-ANGLE OF ATTACK ABOUT THE Y-AXIS (DEG)
AAAY-ANGLE OF ATTACK ABOUT THE Z-AXIS (DEG)

AAAT-TOTAL ANGLE OF ATTACK (DEG)
AXIAL-AERODYNAMIC AXIAL FORCE ALONG NEGATIVE X-AXIS (LBF) (CORRESPONDS TO INPUT COEFFICIENT OF CA)
FNORM-AERODYNAMIC NORMAL FORCE ALONG Y-AXIS (LBF)
FYAW-AERODYNAMIC NORMAL FORCE ALONG Z-AXIS (LBF)
AALT-ALTITUDE (UNITS OF OSCALE)
APSI-ATMOSPHERIC PRESSURE (LBF/FT**2)

FXI-RESULTANT FORCE ALONG X-AXIS (INCLUDES THRUST AND AXIAL FORCE EFFECTS (LBF)
FET-RESULTANT FORCE ALONG Y-AXIS (INCLUDES THRUST AND FNORM FORCE EFFECTS (LBF)
FZE-RESULTANT FORCE ALONG Z-AXIS (INCLUDES THRUST AND FYAW FORCE EFFECTS (LBF)
DRAG-DRAG FORCE ALONG NEGATIVE RELATIVE VELOCITY VECTOR(LBF) (CORRESPONDS TO INPUT COEFFICIENT CDRAG)
FLIFT-LIFT FORCE (LBF) (CORRESPONDS TO INPUT COEFFICIENT CLIFT)

BKANG-BANK ANGLE (DEG)

RRAT,PRAT,YRAT-VEHICLE TURNING RATES (DEG/SEC)
IGA-VEHICLE INNER GIMBAL ANGLE(DEG)
MGA-VEHICLE MIDDLE GIMBAL ANGLE(DEG)
OGA-VEHICLE OUTER GIMBAL ANGLE(DEG)

XIX,XIY,XIZ-INERTIAL COORDINATES OF A UNIT VECTOR ALONG THE VEHICLE X-AXIS OR LONGITUDINAL AXIS (ND).
ETX,ETY,ETZ-INERTIAL COORDINATES OF A UNIT VECTOR ALONG THE VEHICLE Y-AXIS (ND)
ZTX,ZTY,ZTZ-INERTIAL COORDINATES OF A UNIT VECTOR ALONG THE VEHICLE Z-AXIS (ND)
ALO,BTO,GMO-EULER ANGLES OF VEHICLE ORIENTATION WITH RESPECT TO ITS INITIAL ATTITUDE (DEG)
ALLV,BTLV,GMLV-EULER ANGLES OF THE VEHICLE ORIENTATION WITH RESPECT TO THE LOCAL VERTICAL COORDINATE SYSTEM (DEG)
ALS,ALE,ALM-ANGLES BETWEEN THE X-AXIS (LONGITUDINAL AXIS) AND THE SUN, EARTH, AND MOON LINES (DEG).
ALLI,BTLI,GMLI-EULER ANGLES OF THE VEHICLE ORIENTATION WITH RESPECT TO THE LAUNCH INERTIAL ATTITUDE.
BTS,BTE,BTM-ANGLES BETWEEN PROJECTION OF THE SUN, EARTH, AND MOON LINE INTO VEHICLE Y-Z PLANE AND THE NEGATIVE Z-AXIS. (POSITIVE FROM NEGATIVE Z-AXIS TOWARD THE Y-AXIS)
ALEI,BTEI-ANGLES BETWEEN THE X-AXIS (LONGITUDINAL AXIS) AND THE EARTH LINE IN THE IMU SYSTEM
ESB- LM S-BAND EVALUATION ANGLE (SEE FIGURE 21-1)
ASB- LM S-BAND AZIMUTH ANGLE (SEE FIGURE 21-1)

21.3.14. TWO-BODY AND XI TERMS (OUTPUT IF PRTG9=2.0)

FORMAT

TWO-BODY AND XI TERMS

XTB	YTB	ZTB	DXTB	DYTB	DZTB
XI	YI	ZI	DXI	DYI	DZI
DDXI	DDYI	DDZI	RTB	RDTB	ACC

SYMBOL DEFINITIONS
(THE FOLLOWING QUANTITIES ARE IN UNITS OF OSCALE)
XTB,YTB,ZTB-COMPONENTS OF POSITION ON REFERENCE CONIC
DXTB,DYTB,DZTB-COMPONENTS OF VELOCITY ON REFERENCE CONIC
XI,YI,ZI,DXI,DYI,DZI-INTEGRATED POSITION AND VELOCITY COMPONENTS
DDXI,DDYI,DDZI-ACCELERATION COMPONENTS
RTB-TWO-BODY RADIUS VECTOR MAGNITUDE
RDTB-TWO-BODY VELOCITY VECTOR MAGNITUDE
ACC-VECTOR MAGNITUDE OF THE ACCELERATION COMPONENTS

21.3.15. PERTURBATIVE ACCELERATIONS (OUTPUT IF PRTG10=2.0)

FORMAT

```
PERTURBATIVE ACCELERATIONS
  SPX     SPY     SPZ     ENX     ENY     ENZ
  DGX     DGY     DGZ     ATX     ATY     ATZ
  TRX     TRY     TRZ     OBX     OBY     OBZ
```

SYMBOL DEFINITIONS

THE FOLLOWING ACCELERATION COMPONENTS ARE REFERENCED TO THE INERTIAL SYSTEM AND HAVE THE UNITS OF OSCALE

SPX,SPY,SPZ-COMPONENTS OF ACCELERATION DUE TO PRESENCE OF OTHER BODIES

ENX,ENY,ENZ-CENTRAL BODY ACCELERATION (COWELL) OR ENCKE ACCELERATION COMPONENTS

DGX,DGY,DGZ-COMPONENTS OF ACCELERATION DUE TO ATMOSPHERIC DRAG AND LIFT (DRAG AND FLIFT)

ATX,ATY,ATZ-COMPONENTS OF ACCELERATION DUE TO THRUST AND ATMOSPHERIC BODY FORCES (AXIAL,FNORM,FYAW)

TRX,TRY,TRZ-NON-SPHERICAL POTENTIAL ACCELERATION COMPONENTS WITH THE MOON AS REFERENCE BODY

OBX,OBY,OBZ-NON-SPHERICAL POTENTIAL ACCELERATION COMPONENTS WITH THE EARTH AS REFERENCE BODY

21.3.16. TOPOCENTRIC SIGHTING ANGLES

(OUTPUT IF THE NUMBER OF VEHICLES IS TWO, THE RANGE BETWEEN THE TWO VEHICLES IS GREATER THAN .03E-6 AND PRTG11=2.0)

FORMAT

```
TOPOCENTRIC SIGHTING ANGLES
  ALLH    BTLH    ALDLH   BTDLH   ALSC    BTSC
  ALDSC   BTDSC   ALIMU   BTIMU   ALDIMU  BTDIMU
  ALWD1   ALWD2   ALELH   BTELH   ALEDLH  BTEDLH
```

*IF THE VEHICLE IS IN EARTH PHASE, THE QUANTITIES ALELH, BTELH, ALEDLH, AND BTEDLH ARE PRINTED.

*IF THE VEHICLE ID=CSM AND THE OTHER VEHICLE ID=LM, THE LINE BELOW IS PRINTED.

```
  PHI     ALLMS   BTLMT
```

*IF THE VEHICLE NUMBER IS 1, PHI IS SET TO 0.

SYMBOL DEFINITIONS

ALLH-ANGLE BETWEEN THE X-AXIS AND THE OTHER VEHICLE LINE-OF-SIGHT IN THE LOCAL HORIZONTAL COORDINATE SYSTEM. (DEGREES)

BTLH-ANGLE BETWEEN THE PROJECTION OF THE OTHER VEHICLE LINE-OF-SIGHT INTO THE Y-Z PLANE AND THE NEGATIVE Z-AXIS IN THE LOCAL HORIZONTAL COORDINATE SYSTEM. THE ANGLE MEASURED POSITIVELY FROM THE NEGATIVE Z-AXIS TOWARD THE POSITIVE Y-AXIS. (DEGREES)

ALDLH-TIME DERIVATIVE OF ALLH. (DEG/SEC)

BTDLH-TIME DERIVATIVE OF BTLH. (DEG/SEC)

ALSC-ANGLE BETWEEN THE X-AXIS AND THE OTHER VEHICLE LINE-OF-SIGHT IN THE VEHICLE ATTITUDE COORDINATE SYSTEM. (DEGREES)

BTSC-ANGLE BETWEEN THE PROJECTION OF THE OTHER VEHICLE LINE-OF-SIGHT INTO THE Y-Z PLANE AND THE NEGATIVE Z-AXIS IN THE VEHICLE ATTITUDE COORDINATE SYSTEM. THE ANGLE IS MEASURED POSITIVELY FROM THE NEGATIVE Z-AXIS TOWARD THE POSITIVE Y-AXIS. (DEGREES)

ALDSC-TIME DERIVATIVE OF ALSC. (DEG/SEC)

BTDSC-TIME DERIVATIVE OF BTSC. (DEG/SEC)

ALIMU-ANGLE BETWEEN THE X-AXIS AND THE OTHER VEHICLE LINE-OF-SIGHT IN THE IMU COORDINATE SYSTEM.(DEGREES)

BTIMU-ANGLE BETWEEN THE PROJECTION OF THE OTHER VEHICLE LINE-OF-SIGHT INTO THE Y-Z PLANE AND THE NEGATIVE Z-AXIS IN THE IMU COORDINATE SYSTEM. THE ANGLE IS MEASURED POSITIVELY FROM THE NEGATIVE Z-AXIS TOWARD THE POSITIVE Y-AXIS. (DEGREES)

ALDIMU-TIME DERIVATIVE OF ALIMU. (DEG/SEC)

BTDIMU-TIME DERIVATIVE OF BTIMU. (DEG/SEC)

ALWD1-ANGLE BETWEEN THE CENTER OF WINDOW 1 AND THE OTHER VEHICLE LINE-OF-SIGHT. (DEGREES)

ALWD2-ANGLE BETWEEN THE CENTER OF WINDOW 2 AND THE OTHER VEHICLE LINE-OF-SIGHT. (DEGREES)

ALELH-ANGLE BETWEEN THE X-AXIS AND THE EARTH LINE-OF-SIGHT IN THE LOCAL HORIZONTAL COORDINATE SYSTEM. (DEGREES)

BTELH-ANGLE BETWEEN THE PROJECTION OF THE EARTH LINE-OF-SIGHT INTO THE Y-Z PLANE AND THE NEGATIVE Z-AXIS IN THE LOCAL HORIZONTAL COORDINATE SYSTEM. THE ANGLE IS MEASURED POSITIVELY FROM THE NEGATIVE Z-AXIS TOWARD THE POSITIVE Y-AXIS. (DEGREES)

ALEDLH-TIME DERIVATIVE OF ALELH. (DEG/SEC)

BTEDLH-TIME DERIVATIVE OF BTELH. (DEG/SEC)

PHI-CENTRAL ANGLE BETWEEN THE TWO VEHICLES. (DEGREES)

ALLMS-CSM OPTICS SHAFT ANGLE FOR THE LM LINE-OF-SIGHT. (DEGREES)

BTLMT-CSM OPTICS TRUNNION ANGLE FOR THE LM LINE-OF-SIGHT. (DEGREES)

21.3.17. RENDEVOUS PARAMETERS
(OUTPUT IF THE NUMBER OF VEHICLES IS TWO, EITHER VEHICLE IS THE ACTIVE VEHICLE, THE RANGE BETWEEN THE TWO VEHICLES IS GREATER THAN .03E-6, AND PRTG11=2.0)

FORMAT

RENDEZVOUS PARAMETERS

ACLS	ACLE	ARBD	ACLV	ATH	DEL
RANGE	RRATE	ALDCK	BTDCK	GMDCK	ERR
ARR	MODE	RCX	RCY	RCZ	

(IF TSTOP=29 I.E.TERREN TERMINATION)

DRANG	DRATE	RMSD	VELI	DVEL

(IF IRTR=1 (WHERE IRTR IS THE INDICATOR FOR COMPUTING THE RENDEZVOUS COORDINATE SYSTEM) AND TSTOP IS 26,27,28 OR 29 (LIFTOF,PHASTR,LANGLE OR TERREN TERMINATION))

XLR	YLR	ZLR	XDLR	YDLR	ZDLR

SYMBOL DEFINITIONS

ACLS-THE ANGLE BETWEEN THE SUN-ACTIVE VEHICLE VECTOR AND THE ACTIVE VEHICLE-PASSIVE VEHICLE VECTOR (DEG)

ACLE-THE ANGLE BETWEEN THE LINES-OF-SIGHT FROM THE ACTIVE VEHICLE TO THE NON-REFERENCE BODY AND TO THE PASSIVE VEHICLE

ARBD-THE ANGLE BETWEEN THE REFERENCE BODY-NON REFERENCE BODY VECTOR AND THE REFERENCE BODY-ACTIVE VEHICLE VECTOR

ACLV-ANGLE BETWEEN THE ACTIVE VEHICLE LOCAL VERTICAL AND THE LINE-OF-SIGHT TO THE PASSIVE VEHICLE (DEG)

ATH -ANGLE BETWEEN THE PROJECTION OF THE ACTIVE VEHICLE'S POSITION VECTOR INTO THE FLIGHT PLANE OF THE PASSIVE VEHICLE AND THE POSITION VECTOR OF THE PASSIVE VEHICLE (DEG). THE ANGLE IS POSITIVE WHEN THE COASTING VEHICLE IS AHEAD.

DEL- THE ANGLE BETWEEN THE POSITION VECTOR OF THE ACTIVE VEHICLE AND THE FLIGHT PLANE OF THE PASSIVE VEHICLE (DEG). THE ANGLE IS POSITIVE WHEN THE ACTIVE VEHICLE IS TO THE RIGHT OF THE FLIGHT PLANE OF THE PASSIVE VEHICLE WHEN VIEWED IN THE DIRECTION OF MOTION.

RANGE-DISTANCE BETWEEN THE ACTIVE AND PASSIVE VEHICLES (OSCALE)

RRATE-THE TIME RATE OF CHANGE OF RANGE (OSCALE)

ALDCK-THE ROTATION ANGLE ABOUT THE Y-BODY AXIS FOR THE ACTIVE VEHICLE TO DOCK WITH THE PASSIVE VEHICLE (DEG)

BTDCK-THE ROTATION ANGLE ABOUT THE RESULTING Z-BODY AXIS FOR THE ACTIVE VEHICLE TO DOCK WITH THE PASSIVE VEHICLE (DEG)

GMDCK-THE ROTATION ANGLE ABOUT THE RESULTING X-BODY AXIS FOR THE ACTIVE VEHICLE TO DOCK WITH THE PASSIVE VEHICLE

ERR - THE ANGLE BETWEEN THE LM RENDEZVOUS RADAR SHAFT AXIS AND THE X-BODY AXIS OF THE LM. THE ANGLE IS MEASURED POSITIVELY WHEN THE SHAFT ROTATES TOWARD THE -Z BODY AXIS OF THE LM (DEG).

ARR-LM RENDEZVOUS RADAR AZIMUTH ANGLE. A POSITIVE AZIMUTH ANGLE OCCURS WHEN THE RADAR LINE-OF-SIGHT IS ROTATED TOWARD THE POSITIVE Y-AXIS. (DEGREES)

MODE-LM RENDEZVOUS RADAR MODE INDICATOR.

=1 ERR MUST BE BETWEEN +60 AND -70 DEGREES FOR TRACKING.

=2 ERR MUST BE BETWEEN +40 AND +155 DEGREES FOR TRACKING.

ARR MUST BE BETWEEN +55 AND -55 DEGREES FOR TRACKING.

RCX -THIS SET OF COORDINATES YIELD THE DISTANCES REQUIRED
RCY FOR THE ACTIVE VEHICLE TO RENDEZVOUS WITH THE PASSIVE
RCZ VEHICLE. FOR POSITIVE COORDINATES, THE SEQUENCE IS AS FOLLOWS- THROUGH THE ARC RCX TO BRING THE ACTIVE VEHICLE INTO THE PASSIVE VEHICLE FLIGHT PLANE, VERTICALLY THROUGH RCY TO GAIN THE REQUIRED ALTITUDE, THEN DOWNRANGE THROUGH THE ARC RCZ TO THE POSITION VECTOR OF THE PASSIVE VEHICLE (OSCALE)

DRANG-DESIRED RENDEZVOUS RANGE (UNITS OF OSCALE)

DRATE-DESIRED RENDEZVOUS RANGE RATE (UNITS OF OSCALE)

RMSD-PREDICTED TWO-BODY MISS DISTANCE NEGLECTING TRAJECTORY PERTURBATIONS (UNITS OF OSCALE)

VELI-INTERCEPT VELOCITY (UNITS OF OSCALE)

DVEL-LIMITER FOR SCALING THE RANGE AND RANGE RATE

XLR,YLR,ZLR,XDLR,YDLR,ZDLR-POSITION AND VELOCITY COMPONENTS THE RENDEZVOUS COORDINATE SYSTEM (UNITS OF OSCALE). THE RENDEZVOUS COORDINATE SYSTEM IS CENTERED IN THE INACTIVE VEHICLE. THE Y-AXIS IS ALONG THIS VEHICLE'S NEGATIVE ANGULAR MOMENTUM VECTOR, THE Z-AXIS ALONG THE NEGATIVE OF THE PROJECTION OF THE INACTIVE VEHICLE'S POSITION INTO THE INACTIVE FLIGHT PLANE, AND THE X-AXIS COMPLETES THE RIGHT-HANDED SYSTEM.

21.3.18. LANDING SITE COORDINATES (OUTPUT IF VEHICLE IS IN MOON REFERENCE AND PRTG12=2.0)

FORMAT

LANDING SITE COORDINATES

```
  ALLS      BTLS      ALLSW1    ALLSW2 ALLSS    BTLST
*THE LAST TWO ITEMS ARE PRINTED ONLY WHEN THE VEHICLE ID
 IS EQUAL TO CSM
  LATLS     LONLS     RANG      ELV     AZM      DRNL
*IF THE VEHICLE IS THE ACTIVE VEHICLE, THE FOLLOWING LINE
 IS PRINTED
  TANG      SRANG
```

SYMBOL DEFINITIONS

ALLS-ANGLE BETWEEN THE LINE-OF-SIGHT TO THE LANDING SITE AND THE X-AXIS OF THE VEHICLE(DEG).

BTLS-ANGLE BETWEEN THE PROJECTION OF THE LINE-OF-SIGHT TO THE LANDING SITE INTO THE Y-Z PLANE AND THE NEGATIVE Z-AXIS OF THE VEHICLE. ANGLE IS MEASURED POSITIVELY FROM THE NEGATIVE Z-AXIS TOWARD THE POSITIVE Y-AXIS(DEG).

ALLSW1-ANGLE BETWEEN THE CENTERLINE OF WINDOW NUMBER ONE AND THE LINE-OF-SIGHT TO THE LANDING SITE (DEG).

ALLSW2-ANGLE BETWEEN THE CENTERLINE OF WINDOW NUMBER TWO AND THE LINE-OF-SIGHT TO THE LANDING SITE (DEG).

ALLSS-CSM SHAFT ANGLE TO DIRECT THE LINE-OF-SIGHT TO THE LANDING SITE(DEG).

BTLST-CSM TRUNNION ANGLE TO DIRECT THE LINE-OF-SIGHT TO THE LANDING SITE(DEG).

LATLS-LATITUDE OF THE LANDING SITE(DEG)

LONLS-LONGITUDE OF THE LANDING SITE(DEG)

RANG-RANGE FROM VEHICLE TO LANDING SITE (UNITS OF OSCALE)

ELV-ELEVATION ANGLE OF VEHICLE MEASURED FROM A PLANE TANGENT TO THE TARGET BODY AT THE LANDING SITE (DEG).

DRNL-RANGE RATE(DEG)

TANG-THRUST ATTITUDE OF VEHICLE 2 WITH REFERENCE TO LINE-OF-SIGHT (DEG)

SRANG -SURFACE RANGE (UNITS OF OSCALE)

21.3.19. ITERATIVE GUIDANCE PRINT (OUTPUT IF ITYPE=9, THE VEHICLE ID= NVEHT, THE ABSOLUTE VALUE OF ITHRST IS ONE AND PRTG16=2.0)

FORMAT

ITERATIVE GUIDANCE PARAMETERS

XP	XDP	XDDG	XDDP	CHITY	CHITP
YP	YDP	YDDG	YDDP	K11	K21
ZP	ZDP	ZDDG	ZDDP	K31	K41
RRR	VVV	THTA	WLBS	CHIPY	CHIPP
XXI	XXID	XXIDD	DXID	ATTY	ATTP
ETA	ETAD	ETADD	DETAD	DELT	PHIT

ZETA	ZETAD	ZETDD	DZETD	TT	CHYPL
AYY	BYY	CYY	DYY	EYY	CHPPL
APP	BPP	CPP	DPP	EPP	PPHI
RT	VT	THETT	XIDT	ETADT	EDDGT
INCL	DNODE	TIME	SLR	ALPHA	

SYMBOL DEFINITIONS

XP,YP,ZP-POSITION VECTOR IN THE PLUMBLINE SYSTEM (UNITS OF OSCALE)

XDP,YDP,ZDP-VELOCITY VECTOR IN PLUMBLINE SYSTEM (UNITS OF OSCALE)

XDDG,YDDG,ZDDG-GRAVITATIONAL ACCELERATION VECTOR IN PLUMBLINE SYSTEM (UNITS OF OSCALE)

XDDP,YDDP,ZDDP-INERTIAL ACCELERATION VECTOR IN THE PLUMBLINE SYSTEM (UNITS OF OSCALE)

CHITY-YAW ATTITUDE TO ENFORCE ONLY VELOCITY END CONDITION (DEG)

CHITP-PITCH ATTITUDE TO ENFORCE ONLY VELOCITY END CONDITION (DEG)

K11-COMPONENT OF PITCH ATTITUDE (DEG)

K21-PITCH ATTITUDE RATE (DEG/SEC)

K31-COMPONENT OF YAW ATTITUDE (DEG)

K41-YAW ATTITUDE RATE (DEG/SEC)

RRR-DISTANCE FROM CENTER OF THE EARTH TO THE VEHICLE (UNITS OF OSCALE)

VVV-VEHICLE INERTIAL VELOCITY MAGNITUDE (UNITS OF OSCALE)

THTA-INERTIAL PATH ANGLE (DEG)

WLBS-CURRENT MASS OF THE VEHICLE (LBS)

CHIPY-YAW ATTITUDE IN THE GUIDANCE REFERENCE SYSTEM (DEG)

CHIPP-PITCH ATTITUDE IN THE GUIDANCE REFERENCE SYSTEM (DEG)

XXI,ETA,ZETA-POSITION VECTOR IN GUIDANCE REFERENCE SYSTEM (UNITS OF OSCALE)

XXID,ETAD,ZETAD-VELOCITY VECTOR IN GUIDANCE REFERENCE SYSTEM (UNITS OF OSCALE)

XXIDD,ETADD,ZETDD-GRAVITATIONAL ACCELERATION VECTOR IN THE GUIDANCE REFERENCE SYSTEM (UNITS OF OSCALE)

DXID,DETAD,DZETD-CORRECTED VELOCITIES-TO-BE-GAINED IN GUIDANCE REFERENCE SYSTEM (UNITS OF OSCALE)

ATTY-YAW ATTITUDE IN THE PROGRAM INTEGRATING SYSTEM (DEG)

ATTP-PITCH ATTITUDE IN THE PROGRAM INTEGRATING SYSTEM (DEG)

DELT-TIME-TO-GO CORRECTION FOR LAST STAGE BURNING TIME(SEC)

PHIT-RANGE ANGLE FROM DESCENDING NODE TO CUTOFF (DEG)

TT-TIME-TO-GO BEFORE LAST STAGE BURNOUT (SEC)

CHYPL-YAW ATTITUDE IN THE PLUMBLINE SYSTEM (DEG)

AYY,BYY,CYY,DYY,EYY-COMPUTED VARIABLES USED TO COMPUTE K3 AND K4

CHPPL-PITCH ATTITUDE IN THE PLUMBLINE SYSTEM

APP,BPP,CPP,DPP,EPP-COMPUTED VARIABLES USED TO COMPUTE K1 AND K2

PPHI-CENTRAL ANGLE FROM THE DESCENDING NODE TO THE VEHICLE (DEG)
RT-CUTOFF RADIUS (UNITS OF OSCALE)
VT-TERMINAL VELOCITY (UNITS OF OSCALE)
THETT-CUTOFF PATH ANGLE (DEG)
XIDT-CUTOFF VELOCITY COMPONENT ALONG XI AXIS IN THE GUIDANCE REFERENCE SYSTEM (UNITS OF OSCALE)
ETADT-CUTOFF VELOCITY COMPONENT ALONG THE ETA AXIS IN THE GUIDANCE REFERENCE SYSTEM (UNITS OF OSCALE)
EDDGT-TERMINAL GRAVITATIONAL ACCELERATION MAGNITUDE ALONG THE ETA AXIS IN THE GUIDANCE REFERENCE SYSTEM (UNITS OF OSCALE)
INCL-INSTANTANEOUS INCLINATION OF THE FLIGHT PLANE (DEG)
DNODE-INSTANEOUS DESCENDING NODE (DEG)
TIME-ELAPSED TIME FROM THE START OF GUIDANCE (SEC)
SLR-INSTANTANEOUS SEMI-LATUS RECTUM (UNITS OF OSCALE)
ALPHA- INSTANTANEOUS ANGLE FROM PERIGEE TO THE DECENDING NODE MEASURED POSITIVE COUNTER-CLOCKWISE ABOUT THE ANGULAR MOMENTUM VECTOR (DEG)

21.3.20. RADAR OUTPUT

RADAR OUTPUT IS OBTAINED IF IN RADPRT=X,Y ,BOTH X AND Y ARE NOT ZERO. X IS THE VALUE FOR DETERMINING THE TYPE OF RADAR OUTPUT DESIRED FOR VEHICLE 1 AND Y FOR VEHICLE 2.
FOR X AND/OR Y --
=1. OUTPUT AS DESCRIBED IN SECTION 21.3.20.1 AT PRINT POINTS
=2. OUTPUT AS DESCRIBED IN SECTION 21.3.20.2 AT EVENT POINTS
=3. OUTPUT AS DESCRIBED IN SECTION 21.3.20.1 AT PRINT POINTS AND SECTION 21.3.20.2 AT EVENT POINTS
=4. OUTPUT AS DESCRIBED IN SECTION 21.3.20.3.AT EVENT POINTS
=5. OUTPUT AS DESCRIBED IN SECTION 21.3.20.1 AT PRINT POINTS AND SECTION 21.3.20.3 AT EVENT POINTS

21.3.20.1. RADAR TRACKING DATA OUTPUT

RADAR STATION LABEL	RA	DECL	RLA1	RLA2	RLAA
AZI	AZIR	ELV	ELVR	RANGE	RRATE

ALL ANGULAR OUTPUT IS IN DEGREES
RA-TOPOCENTRIC RIGHT ASCENSION
DECL-TOPOCENTRIC DECLINATION
RLA1-RADAR LOOK ANGLE-ANGLE BETWEEN THE VEHICLE X-AXIS AND THE RADAR LINE-OF-SIGHT
RLA2-RADAR LOOK ANGLE-THE ANGLE BETWEEN THE NEGATIVE Z-AXIS AND RADAR LINE-OF-SIGHT PROJECTED ON A PLANE PERPENDICULAR TO THE VEHICLE X-AXIS. FROM THE REAR OF THE VE-

HICLE THE ANGLE IS MEASURED CLOCKWISE FROM THE NEGATIVE Z-AXIS.

RLAA-THE ANGLE BETWEEN THE ANTENNA DIRECTION AND THE LINE-OF SIGHT FROM THE VEHICLE TO RADAR STATION I

AZI-AZIMUTH ANGLE OF THE VEHICLE WITH RESPECT TO THE RADAR STATION

AZIR-AZIMUTH RATE(DEG/SEC)

ELV-ELEVATION ANGLE OF THE VEHICLE WITH RESPECT TO THE RADAR STATION

ELVR-ELEVATION RATE (DEG/SEC)

RANGE-SLANT RANGE (UNITS OF OSCALE)

RRATE-SLANT RANGE RATE (UNITS OF OSCALE)

*NOTE. IF NO RADAR STATIONS ARE VISIBLE, THE COMMENT **NO RADAR STATIONS VISIBLE** IS PRINTED.

21.3.20.2. RADAR EVENT OUTPUT

```
T        VEHICLE (IV)      **EVENT**
ELAPSED TIME SINCE LAUNCH   DAYS   HRS   MINS SECS
```

T IS THE TIME OF OCCURRENCE OF THE EVENT (HOURS)

IV IS THE VEHICLE IDENTIFICATION, EITHER *CSM*, *LM*, OR *LV*.

THE EVENT WHICH MIGHT HAVE OCCURRED IS ONE OF THE FOLLOWING-

ACQUIRED BY 'STATION ID' ON ELEVATION

TERMINATED BY 'STATION ID' ON ELEVATION

ACQUIRED BY 'STATION ID' ON RANGE

TERMINATED BY 'STATION ID' ON RANGE

ACQUIRED BY 'STATION ID' ON OCCULTATION

TERMINATED BY 'STATION ID' ON OCCULTATION

*EXAMPLE OF COMMENT
'TERMINATED BY BERMUDA-USBS ON ELEVATION'

21.3.20.3. RADAR EVENT OUTPUT WITH VEHICLE STATE VECTOR AND RADAR TRACKING DATA CONTAINING THE OUTPUT FROM THE FOLLOWING SECTIONS--

1) RADAR EVENT OUTPUT (21.3.20.2.)
2) GEOCENTRIC (21.3.7.) AND GEOGRAPHIC (21.3.22.) STATE VECTOR, OR SELENOCENTRIC (21.3.5.) OR SELENOGRAPHIC (21.3.6.) STATE VECTOR.
3) RADAR TRACKING DATA OUTPUT (21.3.20.1.)

21.3.20.4. RADAR AND SHADOW SUMMARY PRINT

PRRAD=1.0
RECORDS WILL BE WRITTEN FOR RADAR STATIONS THAT ARE TRACKING THE VEHICLE AT THE START OF EACH PHASE IN THE CASE. RECORDS WILL ALSO BE WRITTEN FOR RADAR STATIONS THAT ARE ACQUIRED OR TERMINATED.

EXAMPLE

RADAR STA. NAME, NUMBER, ACQUISITION TIME, TERMINATION TIME, DURATION TIME, MAXIMUM ELEVATION, MINIMUM RANGE AND ACQUISITION RANGE
(TIME GIVEN IN HRS, MINS, SECS)

PRRAD=2.0
SAME AS PRRAD=1.0,EXCEPT RECORDS WILL BE WRITTEN FOR RADAR STATIONS THAT ARE TRACKING AT EVERY POINT IN THE PHASE.

PRSHAD=1.0
RECORDS WILL BE WRITTEN AT THE INITIAL POINT OF EACH PHASE AND EACH TIME THE LIGHTING CONDITION OF THE VEHICLE CHANGES.

EXAMPLE

TIME OF VEHICLE IN UMBRA (DAYS, HRS, MINS, SECS), TIME OF VEHICLE IN PENUMBRA (DAYS, HRS, MINS, SECS), AND REVOLUTUION COUNT

OUTPUT PRINT OCCURS AT THE END OF EACH PHASE IN THE FOLLOWING ORDER

1. RADAR STATIONS ACQUIRED AND TERMINATED (ACCORDING TO ACQUISITION TIME) FOR VEHICLE NUMBER ONE.
2. SHADOW PRINT(UMBRA OR PENUMBRA) FOR VEHICLE NUMBER ONE.
3. SAME AS 1.,EXCEPT VEHICLE NUMBER IS TWO.
4. SAME AS 2.,EXCEPT VEHICLE NUMBER IS TWO.

21.3.21. SIGHT OUTPUT

21.3.21.1. STAR OUTPUT

IF THE VEHICLE IS THE CSM

STAR-LABEL DELR DELN DELS ELEV AZ PHIS PHIT

ALL ANGULAR OUTPUT IS IN DEGREES
STAR-LABEL IS THE STAR NUMBER AND ABBREVIATED IDENTIFICATION.
DELR IS THE REFERENCE BODY-VEHICLE-STAR ANGLE--ANGLE BETWEEN THE LINES-OF-SIGHT FROM THE VEHICLE TO THE STAR AND FROM THE VEHICLE TO THE REFERENCE BODY.
DELN IS THE NON-REFERENCE BODY-VEHICLE-STAR ANGLE--ANGLE BETWEEN THE LINES-OF-SIGHT FROM THE VEHICLE TO THE STAR, AND FROM THE VEHICLE TO THE NON-REFERENCE BODY. IF THE NON-REFERENCE BODY IS OCCULTED BY THE REFERENCE BODY, THE COMMENT **OCCULTED** IS PRINTED FOR THE VALUE OF DELN.
DELS IS THE SUN-VEHICLE-STAR ANGLE--ANGLE BETWEEN THE LINES-OF-SIGHT FROM THE VEHICLE TO THE SUN AND FROM THE VEHICLE TO THE STAR. IF THE SUN IS OCCULTED BY THE REFERENCE BODY, THE COMMENT **OCCULTED** IS PRINTED FOR THE VALUE OF DELS.
ELEV IS THE ELEVATION ANGLE OF THE STAR-- ANGLE BETWEEN THE X-Y PLANE AND THE LINE-OF-SIGHT TO THE STAR. (POSITIVE TOWARD THE +Z-AXIS)
AZ IS THE AZIMUTH ANGLE OF THE STAR-- ANGLE BETWEEN THE X-AXIS AND THE PROJECTION OF THE LINE-OF-SIGHT TO THE STAR INTO THE X-Y PLANE. (POSITIVE TOWARD THE +Y-AXIS)
PHIS IS THE SHAFT ANGLE
PHIT IS THE TRUNNION ANGLE

*NOTE--THE TRUNNION ANGLE AND SHAFT ANGLES ARE THE ANGLES OF ROTATION FROM THE SHAFT DRIVE AXIS (SDA) TO THE STAR LOS. THE TRUNNION ANGLE IS THE ANGLE OF ROTATION IN THE X-Z PLANE OF THE VEHICLE ATTITUDE COORDINATE SYSTEM. THE SHAFT ANGLE IS THE ANGLE OF ROTATION ABOUT THE SDA.

*NOTE--IF THE STAR CANNOT BE SEEN DUE TO SUNLIGHT INTERFERENCE, THE STAR-LABEL AND THE COMMENT **SUNLIGHT INTERFERENCE TEST FAILED** ARE PRINTED.

IF THE VEHICLE IS THE LM, THE SHAFT (PHIS) AND TRUNNION (PHIT) ANGLES ARE NOT COMPUTED.

21.3.21.2. STAR-STAR OUTPUT

IF THE VEHICLE IS THE CSM

STAR-LABEL STAR-LABEL DELSS APITCH BYAW GROLL

STAR LABEL IS THE STAR NUMBER AND ABBREVIATED NAME.
DELSS IS THE STAR-STAR ANGLE--ANGLE BETWEEN THE LINES-OF-SIGHT FROM THE VEHICLE TO THE TWO VISIBLE STARS (DEGREES).
APITCH IS THE MANEUVER ANGLE ABOUT THE Y-AXIS FOR ALIGNMENT OF THE SDA (DEGREES).
BPITCH IS THE MANEUVER ANGLE ABOUT THE Z-AXIS FOR ALIGNMENT OF THE SDA (DEGREES).
GROLL IS THE MANEUVER ANGLE ABOUT THE X-AXIS FOR ALIGNMENT OF THE SDA (DEGREES).

*NOTE--THE SDA IS ALIGNED SUCH THAT THE SDA, X-AXIS AND Y-AXIS OF THE VEHICLE ATTITUDE COORDINATE SYSTEM ALL LIE IN THE PLANE FORMED BY THE LINES-OF-SIGHT FROM THE VEHICLE TO THE STARS. THE SDA LIES HALF-WAY BETWEEN THE LINES-OF-SIGHT FROM THE VEHICLE TO THE STARS. THE Y-AXIS OF THE VEHICLE IS PERPENDICULAR TO THE STAR-STAR PLANE. AS A RESULT OF THIS ALIGNMENT OF THE SDA, THE SHAFT AND TRUNNION ANGLES ARE NOT PRINTED SINCE PHIS=0 FOR THE FIRST STAR AND PHIS=180 FOR THE SECOND STAR. PHIT=DELSS/2 FOR THE FIRST STAR AND PHIT=-DELSS/2 FOR THE SECOND STAR.

IF THE VEHICLE IS THE LM, THE MANEUVER ANGLES (APITCH, BYAW, GROLL) ARE NOT COMPUTED.

21.3.21.3. LANDMARK OUTPUT

IF THE VEHICLE IS THE CSM

LANDMARK-LABEL ZETH ELEV AZ BETA DELSV SLR SRDOT PHIS PHI

ALL ANGULAR OUTPUT IS IN DEGREES
LANDMARK-LABEL IS THE LANDMARK IDENTIFICATION
ZETH IS THE HORIZON ANGLE OF THE LANDMARK--ANGLE BETWEEN THE LINE-OF-SIGHT FROM THE LANDMARK TO THE VEHICLE AND THE HORIZONTAL PLANE OF THE LANDMARK.
ELEV IS THE ELEVATION ANGLE OF THE LANDMARK-- ANGLE BETWEEN THE X-Y PLANE OF THE VEHICLE ATTITUDE COORDINATE SYSTEM AND THE LINE-OF-SIGHT FROM THE VEHICLE TO THE LANDMARK.(POSITIVE TOWARD +Z-AXIS)
AZ IS THE AZIMUTH ANGLE OF THE LANDMARK-- ANGLE BETWEEN THE X-AXIS AND THE PROJECTION INTO THE X-Y PLANE OF THE LINE-OF-SIGHT FROM THE VEHICLE TO THE LANDMARK. (POSITIVE TOWARD THE +Y-AXIS)
BETA IS THE OUT-OF-PLANE ANGLE--ANGLE BETWEEN THE FLIGHT PLANE AND THE LINE-OF-SIGHT FROM THE VEHICLE TO THE LANDMARK.
DELSV IS THE SUN-LANDMARK-VEHICLE ANGLE--ANGLE BETWEEN

THE LINES-OF-SIGHT FROM LANDMARK TO THE VEHICLE AND FROM THE LANDMARK TO THE SUN.

SLR IS THE SLANT RANGE FROM THE VEHICLE TO THE LANDMARK (OSCALE).

SRDOT IS THE SLANT RANGE RATE (OSCALE/TIME).

PHIS IS THE SHAFT ANGLE (FOR DEFINITION SEE *NOTE IN 'STAR OUTPUT' SECTION).

PHIT IS THE TRUNNION ANGLE (FOR DEFINITION SEE *NOTE IN 'STAR OUTPUT' SECTION).

IF THE VEHICLE IS THE LM PHIS AND PHIT ARE NOT COMPUTED.

*NOTE--IF THE LANDMARK LIES IN THE OPTICS BLIND ZONE, THE LANDMARK-LABEL AND THE COMMENT **OPTICS BLIND ZONE RESTRICTION FAILED** ARE PRINTED.

21.3.21.4. STAR-LANDMARK OUTPUT

IF THE VEHICLE IS THE CSM

STAR-LABEL LANDMARK-LABEL DELSL APITCH BYAW GROLL

ALL ANGULAR OUTPUT IS IN DEGREES.

STAR-LABEL IS THE STAR IDENTIFICATION.

LANDMARK-LABEL IS THE LANDMARK IDENTIFICATION.

DELSL IS THE STAR-VEHICLE-LANDMARK ANGLE--ANGLE BETWEEN THE LINES-OF-SIGHT FROM THE VEHICLE TO THE STAR AND FROM THE VEHICLE TO THE LANDMARK.

APITCH IS THE MANEUVER ANGLE ABOUT THE Y-AXIS FOR ALIGNMENT OF THE SDA.

BYAW IS THE MANEUVER ANGLE ABOUT THE Z-AXIS FOR ALIGNMENT OF THE SDA.

GROLL IS THE MANEUVER ANGLE ABOUT THE X-AXIS FOR ALIGNMENT OF THE SDA.

*NOTE--THE SDA IS ALIGNED ALONG THE VEHICLE-LANDMARK LOS SUCH THAT THE X AND Z AXES OF THE VEHICLE ATTITUDE COORDINATE SYSTEM LIE IN THE STAR-LANDMARK PLANE WITH THE Y-AXIS PERPENDICULAR TO THE PLANE. THE SHAFT, PHIS, AND TRUNNION, PHIT, ANGLES ARE NOT COMPUTED SINCE PHIS=0 FOR THE LANDMARK AND PHIS=180 FOR THE STAR. PHIT=0 FOR THE LANDMARK AND PHIT=-DELSL FOR THE STAR.

IF THE VEHICLE IS THE LM, THE MANEUVER ANGLES (APITCH, BYAW, GROLL) ARE NOT COMPUTED.

21.3.22. GEOGRAPHIC OUTPUT (OUTPUT IF PRTG17=2.0)

FORMAT

GEOGRAPHIC

XG	YG	ZG	XDG	YDG	ZDG
ALT	LAT	LON	VE	PTE	AZE

SYMBOL DEFINITIONS

XG,YG,ZG,XDG,YGD,ZDG - ROTATIONAL GEOGRAPHIC CARTESIAN COORDINATES (POSITION AND VELOCITY IN UNITS OF OSCALE). THE GEOGRAPHIC SYSTEM IS THE GEOCENTRIC ROTATING COORDINATE SYSTEM DESCRIBED IN SECTION 2.

ALT,LAT,LON,VE,PTE,AZE - ROTATIONAL GEOGRAPHIC POLAR COORDINATES (DISTANCE AND VELOCITY IN UNITS OF OSCALE, ANGLES IN DEG.)

ALT - ALTITUDE
LAT - LATITUDE
LON - LONGTITUDE
VE - VELOCITY
PTE - FLIGHT PATH ANGLE
AZE - AZIMUTH

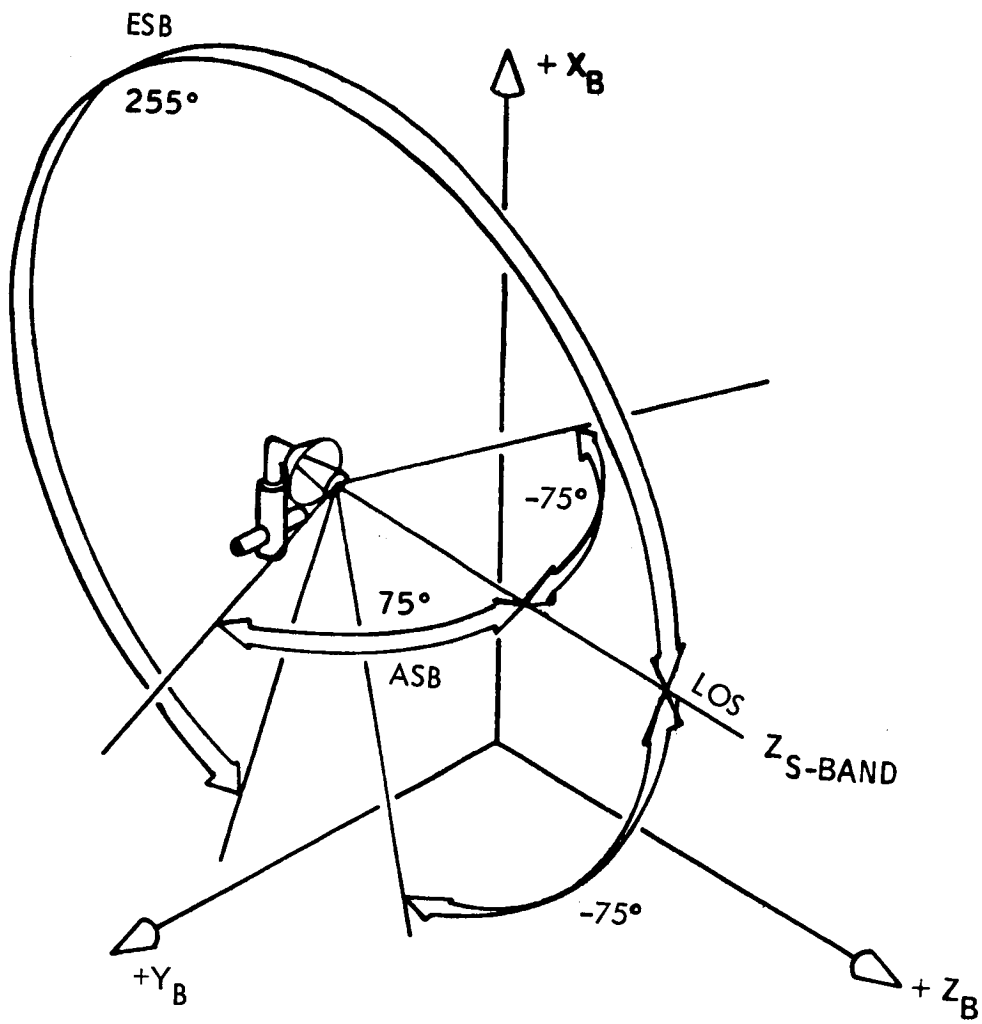

ESB - Elevation S-Band

ASB - Azimuth S-Band

LOS - Antenna Line of Site

Figure 21-1. LM S-band Steerable Antenna Gimbal Limits

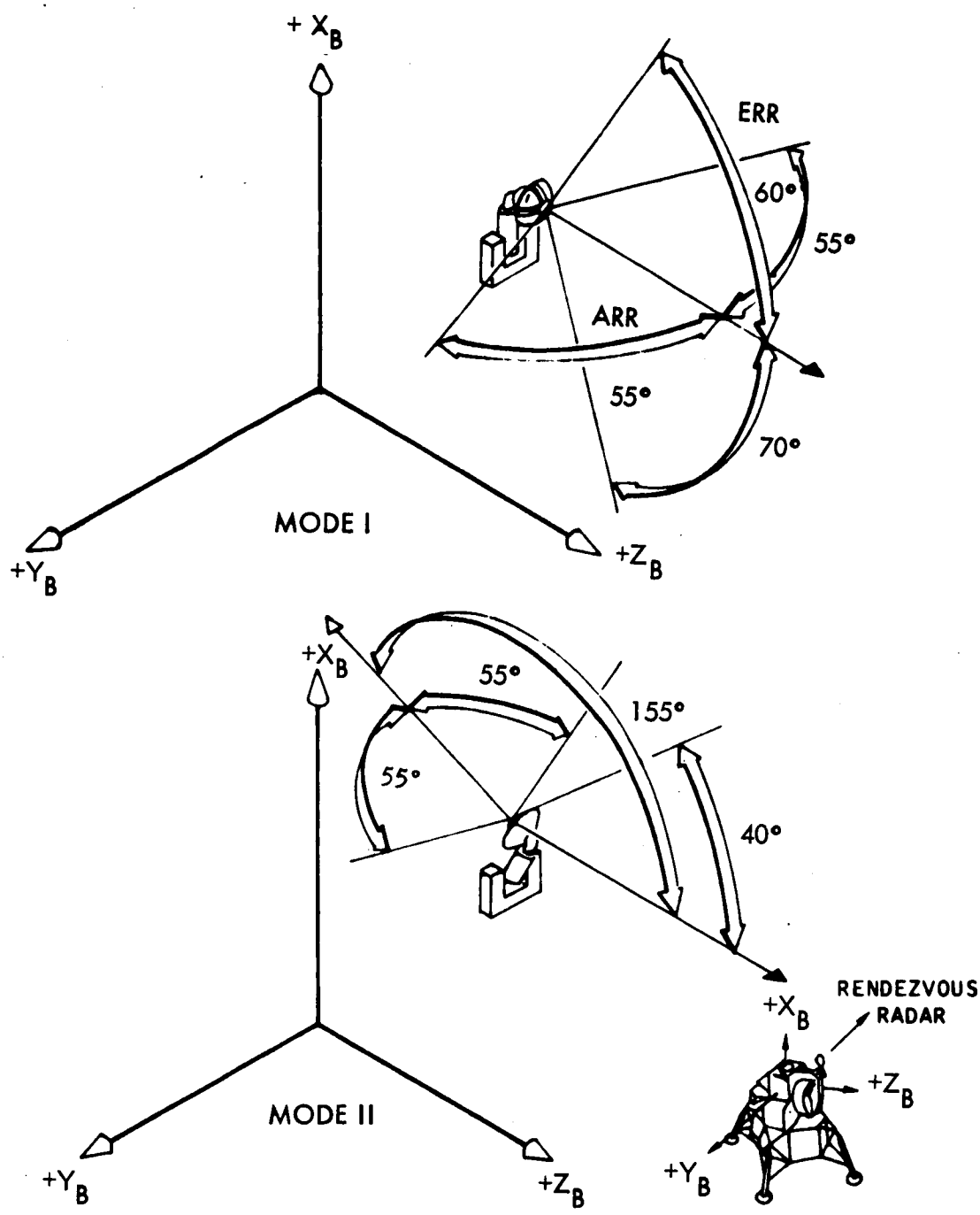

Figure 21-2. LM Rendezvous Radar

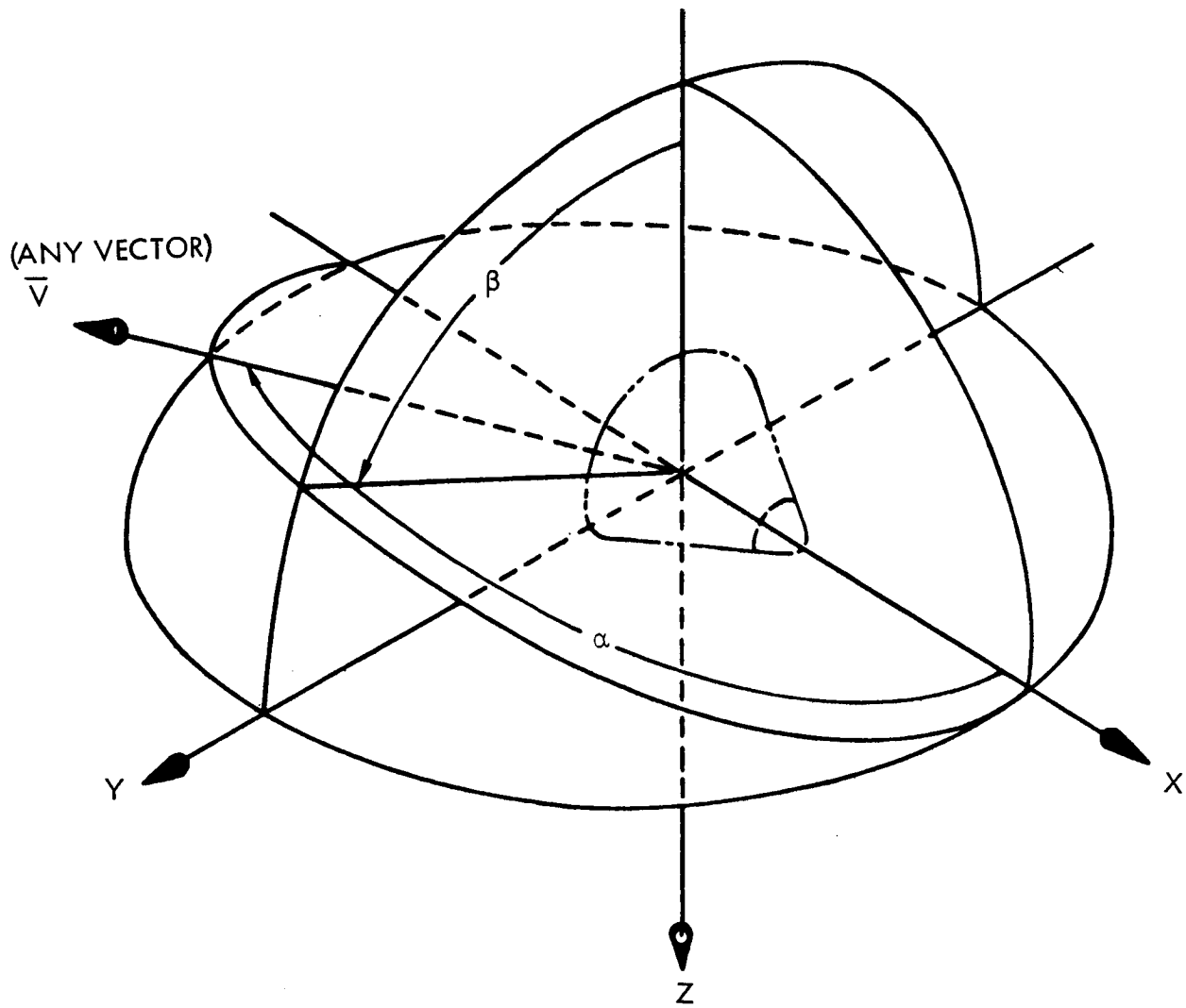

β - Measured from -Z body axis positively about X body axis to vector projection in YZ plane

α - Smallest angle from X body axis to vector

Figure 21-3. Body Coordinate System

22. SAMPLE TEST CASES

```
PHASE(0,0) = IMU ALIGNMENT PHASE
TSTART = 0.0D0 , TMAX = 0.0D0 , T1E = 500.0
PRTG1  = 2.0,2.0
PRTG2  = 2.0,2.0
PRTG3  = 2.0,2.0
PRTG4  = 2.0,2.0
PRTG5  = 2.0,2.0
PRTG6  = 2.0,2.0
PRTG7  = 4.0,4.0
PRTG10=2.0,2.0*
PRTG11 = 2.0,2.0
PRTG12 = 2.0,2.0
PRTG13 = 2.0,2.0
PRTG17 = 2.0
RADPRT = 0.0,0.0
SHADCW = 0.0,0.0
ATYPE3 = 5 , PHI = 28.64747 , LAMBDA = -80.63558 , LAZ = 72.0
YEAR   =  1968                          *
DAYS   =  32.                           *
HRS    =  15.                           *
MINS   =  35.                           *
SECS   =  21.18                         *
R      =  3543.9329                     *
DEC    =  32.465                        *
RA     =  -55.053                       *
V      =  25573.996                     *
PTH    =  -.001                         *
AZ     =  87.406                        *
INJECT =  12                            *
ISCALE =  7                             *
OSCALE =  7                             *
INITL = 1
TITLE  =  1.                            *
PHASE(1,1) = EARTH PARKING ORBIT CASE A
YEAR   =  1968                          *
DAYS   =  32.                           *
HRS    =  15.                           *
MINS   =  35.                           *
SECS   =  21.18                         *
R      =  3543.9329                     *
DEC    =  32.465                        *
RA     =  -55.053                       *
V      =  25573.996                     *
PTH    =  -.001                         *
AZ     =  87.406                        *
INJECT =  12                            *
RAGR   =  18
ITURN = 2
ATYPE1 = 3
ANTEL1 = 0.0
ANTEL2 = 0.0
ANTAZ1 = 0.0
ANTAZ2 = 0.0
```

```
RADAR = 18,19,20,21,22,23,24,25,26,27,28,29,30,35
ELMIN = 3.0
TSTART =  .18717777D0                    *
T1E = 500.0
TMAX   =  2.661999158721470D0            *
T1D = 0.5
PHASE(2,1) =   TRANSLUNAR COAST TO T AND D PITCH MANUEVER CASE A
ITURN = 2
ATYPE1 = 3
YEAR   =  1968                           *
DAYS   =  32.                            *
HRS    =  15.                            *
MINS   =  35.                            *
SECS   =  21.18                          *
X      =  -2537.6295                     *
Y      =  -2557.8338                     *
Z      =  -118.09878                     *
DX     =  18737.483                      *
DY     =  -25146.609                     *
DZ     =  16949.291                      *
INJECT =  11                             *
TSTART =  2.75199914D0                   *
TMAX = 3.00199914D0
T1D = 0.0625
PHASE(3,1) = PITCH DOWN 41 DEG CASE A
ITURN = 5
PCCEF1 = -0.3
TMAX = 3.03996296296D0
T1D = 0.0625
PHASE(4,1) = ATTITUDE HOLD CASE A
ITURN = 5
PCOEF1 = 0.0,0.0,0.0,0.0,0.0,0.0
TMAX = 4.75199914D0
T1D = 1.0
PHASE(5,1) = TRANS LUNAR COAST TO LOI INITIATION CASE A
YEAR   =  1968                           *
DAYS   =  32.                            *
HRS    =  15.                            *
MINS   =  35.                            *
SECS   =  21.18                          *
X = 9980.6427
Y = -5557.3700
Z = 6162.3700
DX = 17218.359
DY = 1611.6743
DZ = 6541.1802
INJECT = 11
TSTART = 3.75199914D0
TMAX =   4.75199914D0
T1D = 0.25
PHASE(5,1) = TRANS LUNAR COAST TO LOI INITIATION CASE A
TITLE =1.0*
TSTART = 4.75199914D0
```

```
TMAX    =  76.90621536970140D0          *
TSTOP   =  0                            *
T1D = 1.0
ATYPE1 = 9
ITURN = 3
ROLL1   = 90.0,0.0,0.0
IROLL1 = 0.2
INITL = 1
PHASE(6,1) = LUNAR ORBIT INSERTION THRUST  CASE A
INJECT =  -1                            *
ITYPE   =  1                            *
CC     = 1.0
ATYPE1 = 1,0,1
IMASS   =  89667.793                    *
SITABL =  319.                          *
TTABLE=20000.*
MMASS   =  50000.                       *
ISCALE =  7                             *
LATLS   =  .3333                        *
LONLS   =  24.83333                     *
AZRLS   =  -85.155                      *
ALTLS   =  79.25                        *
VRLS    =  5300.                        *
PTRLS   =  0.                           *
TTOL    =  9.                           *
TMAX    =  200.D0                       *
TOINT   =  .13888889E-3                 *
ITHPR = 60
PHASE(7,1) = LPO TO LEM MANUEVER INITIATION CASE A
ITURN = 2
ATYPE1 = 3,0,0
ROLL1   = 0.0,0.0,0.0
TSTOP   =  4                            *
CMAX    =  4.                           *
LONSTP =  -30.                          *
T1D = 1.0
PHASE(8,1) =   INITIALIZE LEM DESCENT CASE A *
ITURN = 2
ATYPE1 = 3
ROLL1 = 0.0,0.0,0.0
LONLS   =  24.83333                     *
LATLS   =  .3333                        *
ALTLS   =  -.75                         *
PTRLS   =  0.                           *
AZRLS   =  90.                          *
VRLS    =  0.                           *
RMINL   =  0.
ISCALE =  7                             *
INJECT = -1
TSTOP   =  24
TMS     =  .5                           *
TABC    =  0.                           *
ALSC    =  15.20                        *
```

```
TPF     =  .18283333                    *
THB     =  .9921E-2                     *
AHB     =  1.746
RTH     =  .27488                       *
TMAX    =  100.DO                       *
T1D = 0.5
PHASE(9,1) = LEM CSM SEPARATION
ATYPE2 = 1,0,6
DTLAND = 1.148
ROLL1 = -90.0,0.0,0.0
CC     = 1.0
ITYPE   =  6                            *
IMDC    =  1                            *
XMTOV =.75*
IMASS2=32568.5*
MMASS   =  12000.                       *
TTABLE=    200.
SITABL     =273.       *
TCINT   =  .27777777E-3                 *
ITHPR   =  20                           *
PHASE(10,1) =  COAST TO HOHMANN TRANSFER CASE A *
ITURN1 = 2,2
ATYPE1 = 3,3
TSTOP   =  23                           *
TTR     =  .5                           *
T1D = 0.5
PHASE(11,1) =   HOHMANN TRANSFER BURN CASE A *
ATYPE = 3,1
ITURN = 2
ITYPE   =  4                            *
IMDC    =  2                            *
TTABLE, SIMPLE, LINEAR, STOARG, ARG=PLAPSE
FUNCT = 0.0            ,  1050.00, 0.83333333E-3,  1050.00 *
        0.83333333E-3,  1050.00, 0.72233333E-2,  1050.00 *
        0.72233333E-2,  9713.00, 1.0           , 13984.35 *
SITABL, SIMPLE, LINEAR, STOARG, ARG=PLAPSE
FUNCT = 0.0            ,   285.00, 0.83333333E-3,   285.00 *
        0.83333333E-3,   285.00, 0.72233333E-2,   285.00 *
        0.72233333E-2,   302.00, 1.0           , 326.26268*
ITHPR = 10
PHASE(12,1) = DESCENT HOHMAN COAST
ITURN1 = 2,2
ATYPE1 = 3,3
ICA = 0
CASTP = 175.0
NVTERM = 2
TSTOP = 10
T1D = 0.25
PHASE(13,1)= IGNITION ALGORITHM (DESCENT)
IWTC    =  3                            *
ATYPE1 = 3,1 *
ITURN1 = 2,0 *
OSCALE=4 *
```

```
TMDC   =        9713.          *
IPCA   =        1              *
THMX   =        10500.         *
DISP = 303.15
THST   =.1,.2,.3,.4,.5,.6  *
TCINT =         .27777777E-3   *
SPI    =306.0 *
IMASS2=32180. *
MMASS =         15260.         *
THTM   =.72222222E-2 *
TABC   =        0.            *
TT     =.114 *
WLEM   =32180.  *
TF1    =.11111111E-2  *
TF2    =0.0375 *
TF3    =.11111111E-2  *
CP1FD =40.0 *
CA1FD =107.0   *
CPCFC =65.0    *
CPCXC =65.0    *
PCFOF =.50 *
CJ2F   =0.0,0.0,+2.0      *
THMOX =9878. *
H3F    =115. *
CJOF   =1.2  *
TPF    =.17351109     *
TFX    =.32777777E-1 *
CJOX   =0.49309263, PCWOF =0.58400786*
HDOT3 =-5.0 *
HDOT4 =-5.0 *
A2     =0.70,0.0,1.25     *
ATHD   =0.0      *
ILPTR =4         *
ITYPE=5 , NTHRUS=1 , IMDC=-2 *
TTABLE , MASTER , STEP , STOARG , ARG=THRSW *
FUNCT=0.0 , 1 , 1.0 , 2 , 2.0 *
TTABLE(2,1) = SIMPLE , LINEAR , STOARG , ARG=PLAPSE *
FUNCT=0.0 , 1050.0 , 0.72222222E-2 , 1050.0 , 0.72222222E-2 *
            9713.0 , 1.0,11418.7 *
TTABLE(2,2)= SIMPLE , LINEAR , STOARG , ARG=THRM , ERO=1 *
FUNCT=0.0 , 1050.0 ,1050.0 , 1050.0 , 6300.0 , 6300.0 *
SITABL , MASTER , STEP , STOARG , ARG=THRSW *
FUNCT=0.0 , 1 , 1.0 , 2 , 2.0 *
SITABL(2,1) = SIMPLE , LINEAR , STOARG , ARG=PLAPSE *
FUNCT=0.0 , 285.0 , 0.72222222E-2 , 285.0 , 0.72222222E-2 *
            326.0 , 1.0 , 281.0 *
SITABL(2,2)= SIMPLE , LINEAR, STOARG , ARG=THRM , ERO=1 *
FUNCT=0.0 , 285.0 , 1050.0 , 285.0 , 2100.0 , 298.6 , 3150.0 *
            301.0 , 4200.0 , 302.0 , 5250.0 , 302.6 *
PHASE(14,1) = TRIM PHASE OF DESCENT  *
ATYPE = 3,1 , ITURN = 2,0
RCLL2 = 0.,0.,180.*
TTABLE,MASTER,STEP,STOARG,ARG=THRSW,FUNCT=0.0,1,1.0,2,2.0*
```

```
TTABLE(2,1),SIMPLE,LINEAR,STOARG,ARG=PLAPSE,FUNCT=0.0,1050.0 *
0.72222222E-2,1050.0,0.72222222E-2,9713.0,1.0,11418.7 *
TTABLE(2,2),SIMPLE,LINEAR,STOARG,ARG=THRM,ERO=1,FUNCT=0.0*
1050.,1050.,1050.,6300.,6300.*
SITABL,MASTER,STEP,STOARG,ARG=THRSW,FUNCT=0.0,1,1.0,2,2.0*
SITABL(2,1),SIMPLE,LINEAR,STOARG,ARG=PLAPSE,FUNCT=0.0,280.3 *
0.72222222E-2,280.3,0.72222222E-2,306.0,1.0,280.98 *
SITABL(2,2),SIMPLE,LINEAR,STOARG,ARG=THRM,ERO=1,FUNCT=0.0,*
285.,1050.,285.,2100.,298.6,3150.,301.,4200.,302.,*
5250.,302.6*
THRTHM=5460. , THRLNO=6090. *
ITYPE =5 *
ILPTR =4 *
IPCA  =1 *
IMDC  =-1 *
PHASE(15,2)=NOMINAL FIRST BRAKING PHASE
IMDC  =0 , ITYPE =5 *
ITURN = 2*
PHASE(16,2)=NOMINAL FINAL BRAKING PHASE
IMDC  =1 , ITYPE =5 *
ITURN = 2
PHASE(17,2)=NOMINAL PITCH TO HIGATE
IMDC  =2 , ITYPE =5 *
ITURN = 2
PHASE(18,2)=NOMINAL FINAL APPROACH PHASE
ITURN = 2
IMDC  =3 , ITYPE =5*
PHASE(19,2)=NOMINAL PITCH TO VERTICAL DECSENT
ITURN = 2
IMDC  =4 , ITYPE =5 *
PHASE(20,2) =  VERTICAL DESCENT CASE A *
ITURN = 2
IMDC  =5 , ITYPE = 5*
PHASE(21,1) =  COAST TO PLANE CHANGE CASE A *
OSCALE = 7
ISCALE = 7
ITURN1 = 2
ATYPE1 = 3
NV     =  1                          *
NVEHT  =  1                          *
TSTOP  =  4                          *
CMAX   =  11.                        *
LONSTP =  114.83333                  *
TMAX   =  200.                       *
PHASE(22,1) =  CSM DELTA AZ CASE A *
ITYPE  =  1                          *
CC     = 1.0
ATYPE1 = 1,0,1
TTCL   =  2.54                       *
LATLS  =  .333                       *
LONLS  =  24.83333                   *
AZRLS  =  -85.17165                  *
ALTLS  =  79.8                       *
```

```
VRLS    =  5300.                    *
PTRLS   =  0.                       *
IMASS   =  32722.924                *
MMASS   =  20000.                   *
TTABLE = 20000.*
SITABL = 313.*
ITHPR = 1
PHASE(23,1) =  INITIALIZE LEM ASCENT CASE A *
ITURN1 = 2 , ATYPE1 = 3
LATLS   =  .3333                    *
LCNLS   =  24.83333                 *
ALTLS   =  -.75                     *
PTRLS   =  0.                       *
AZRLS   =  90.                      *
VRLS    =  0.                       *
CINL    =  .015625                  *
NV      =  1                        *
NVEHT   =  1                        *
TSTOP   =  26                       *
TMAX    =  130.D0                   *
TMS     =  2.3                      *
APHD    =  200.                     *
ATHD    =  0.                       *
RDD     =  .27515039                *
ALSC    =  25.2                     *
RTH     =  .2813556                 *
ALH     =  90.                      *
RCUTOF  =  .29138002                *
ATHR    =  1.86                     *
BETA = 9.0202665
TABC=0.108962937483
XMTOV   =  100.                     *
IABRT   =  1                        *
DELL    =  1.3                      *
PHASE(24,1) =  MAIN ASCENT CASE A *
IMASS2=10213.1*
MMASS   =  4500.                    *
TTABLE  =  3636.                    *
SITABL=     304.3      *
TVR     =  .33333333E-2             *
CC     = 1.0
ITYPE =         7              *
ATYPE = 3,6,0,6
DTLAND = 0.0
TBNC   =        0.0            *
IMDC = 2 *
ITURN = 2
TCINT   =  .27777777E-3             *
ITHPR   =       10                  *
PHASE(25,1) =  COAST IN LOWER HOHMANN AND CSI OPT CASE A *
ITURN1 = 2,2 , ATYPE1 = 3,3
T1D    =        .3             *
TSTOP = 28
```

```
XMTOV  =  100.                          *
IMDC   =  1                             *
PHASE(26,1) =  CSI MANUEVER CASE A *
DMASS =11.*
IWTC   =  3                             *
ITYPE  =  6                             *
CC     = 1.0
ATYPE2 = 1 , ITURN = 2
IMDC   =  2                             *
TTABLE=200.*
SITABL=    273.       *
PHASE(27,2) =  COAST IN UPPER HOHMANN CASE A *
TSTOP = 10 , ICA = 2 , NVTERM = 2
ITURN1 = 2,2 , ATYPE1 = 3,3
IMDC   =  2                             *
CASTP = 0.0
PHASE(28,2) =  CIRCULARIZATION MANUEVER CASE A *
DMASS =12.*
IWTC   =  3                             *
CC     = 0.0
ITYPE  =  4                             *
ATYPE2 = 1 , ITURN = 2
IMDC   =  0                             *
ITHPR =        10              *
PHASE(29,2) =  COAST TO TRANSFER CASE A *
ITURN1 = 2,2 , ATYPE1 = 3,3
IMDC   =  1                             *
TSTOP  =  27                            *
ILPTR  =  1                             *
ATHD   =        1.86            *
APHD   =  140.                          *
PHASE(30,2) =  TRANSFER INITIATION CASE A *
IWTC   =  3                             *
DMASS =6.*
CC     = 0.0
ITYPE  =  8                             *
ATYPE1 = 3,1 , ITURN = 2
TMDC   =  500.                          *
RCUTOF =  .02                           *
PHASE(31,2) =  TERMINAL RENDEZVOUS COAST CASE A *
ITURN1 = 2,2 , ATYPE1 = 3,3
IMDC   =  0                             *
TSTOP  =  29                            *
RRATE  =  100.                          *
RANGE  =  5.                            *
PHASE(32,2) =  TERMINAL RENDEZVOUS THRUST CASE A *
CC     = 0.0 *
ITYPE  =  8                             *
ATYPE1 = 3,1 , ITURN2 = 2,1
IWTC   =  4                             *
DELL   =  75.                           *
DMASS =6.2*
PHASE(33,2) =  1ST TERMINAL RENDEZVOUS COAST CASE A *
```

```
ITURN = 2,2 , ATYPE = 3,3
TSTOP  =  29                          *
RANGE  =  3.                          *
RRATE  =  20.                         *
PHASE(34,2) =  1ST TERMINAL RENDEZVOUS THRUST CASE A *
CC     = 0.0 *
ITYPE  =  8                           *
ATYPE = 3,1 , ITURN = 2
PHASE(35,2) =  2ND TERMINAL RENDEZVOUS COAST CASE A *
ITURN = 2,2
ATYPE = 3,3
TSTOP  =  29                          *
RANGE  =  1.                          *
RRATE  =  10.                         *
PHASE(36,2) =  2ND TERMINAL RENDEZVOUS THRUST CASE A *
CC     = 0.0 *
ITYPE =8*
ATYPE = 3,1 , ITURN = 2
PHASE(37,2) =  3RD TERMINAL RENDEZVOUS COAST CASE A *
ITURN = 2,2 , ATYPE = 3,3
RRATE  =  5.                          *
TSTOP  =  29                          *
RANGE  =  .0823                       *
PHASE(38,2) =  3RD TERMINAL RENDEZVOUS THRUST CASE A *
CC     = 0.0 *
ITYPE  =  8                           *
ATYPE = 3,1 , ITURN = 2
PHASE(39,2) =  4TH TERMINAL RENDEZVOUS COAST CASE A *
ITURN = 2,2 , ATYPE = 3,3
TSTOP  =  29                          *
ICUTOF =  1                           *
PHASE(40,1) = LUNAR PARKING ORBIT COAST FROM CSM-LEM RENDEZVOUS TO TEI
ITURN = 2
ATYPE = 3
NV     =  1                           *
NVEHT  =  1                           *
TSTOP  =  0                           *
T1D = 1.0
TMAX   =  119.50177162777 2D0         *
PHASE(41,1) =  TRANSEARTH THRUST CASE A *
ITYPE  =  2                           *
CC     = 1.0
ATYPE = 1,0,1
IMASS  =  32959.                      *
MMASS  =  20000.                      *
TTABLE=20000.*
SITABL =       319.                   *
TMAX   =  250.D0                      *
LATLS  =  .24609599                   *
LONLS  =  -152.88122                  *
AZRLS  =  -95.991852                  *
ALTLS  =  79.595496                   *
VRLS   =  7957.5482                   *
```

```
PTRLS   =  2.3                          *
TTCL    =  .04                          *
ITHPR = 10
PHASE(42,1) =  TRANSEARTH COAST TO REENTRY CASE A *
ATYPE = 9
ITURN = 3
ROLL1 = 90.0,0.0,0.0
IROLL1 = 0.2
TSTOP   =  18                           *
T1D = 1.0
PHASE(43,1) = BACKUP TO REENTRY ALTITUDE
TSTOP = 17*
RALTFT =  65.8315334
ENDRUN
```

```
PHASE(1,0) = LEM ACTIVE RENDEZVOUS
RADPRT = 5.0 *
SHADOW = 5.0 *
IWTC = 3 *
PRTG7=2.0*
PRTG4=2.0*
PRTG17 = 2.0 *
INITL =    1                    *
YEAR  =    1967                 *
DAYS  =    273.                 *
HRS   =    21.                  *
MINS  =    0.                   *
SECS  =    0.                   *
ISCALE=    7                    *
INJECT=  11,11                      * SEPARATION BURN(EVENT 16) STATE 1
 X     = -3189.3651, -3189.3651    *
 Y     = -1262.5270, -1262.5270    *
 Z     =  1170.3984,  1170.3984    *
DX     = 11874.6230, 11874.6230    *
DY     =-20052.2140,-20052.2140    *
DZ     =  9764.1872,  9764.1872    *
NV     =    2                    *
NVEHT  =    2                    *
CINE = 0.015625     * BUILT IN TIME
T1S = 120.5
T1D = 0.031250      * TWICE BUILT IN TIME
T1E    =    130.                 *
RADAR  =  18,19,20,21,22,23,24,26,27,28,29,30,35
RADAR  =  GUAM-USBS,LATR=13.308235,LONR=144.73441
ALTR   =  420.28, SRANGE=225000.
RADAR  =  MERCURY-USBS,LATR=20.0,LONR=-135.0
ALTR   =  100., SRANGE=225000.
RADAR  =  VANGUARD-USBS,LATR=25.0,LONR=-50.0
ALTR   =  100., SRANGE=225000.
RADAR=INJ SHIP 2-USB L10,LATR=-16.,LONR=10.,ALTR=53.,SRANGE=32000.
RADAR=INJ SHIP 2-USB L34,LATR=-27.,LONR=34.,ALTR=53.,SRANGE=32000.
TSTART=    120.5000000000000D *
TMAX   =    130.D               *
ITYPE  =    4                   *
IMDC   =    4                   *
IPCA   =    1                   *
ATYPE  =  0,1                   *
DISP   =    279.                *
THMX   =    400.                *
IMASS,(2)= 16097.  * 2ND SC MASS
MMASS  =    6000.               *
TTABLE=     400.                *
SITABL=     279.                *
ITHPR  =    2                   *
TCINT  =    .277777777E-3       *
DRT    =    -1.0,0.0,0.0        *
PHASE(2,1) = COAST TO FIFTH APS BURN
ATYPE2 =  3                     *
```

```
ITURN2 =  2                          *
TTR    =    .20661                   *
TSTOP  =    23                       *
DMASS  =  8.2*
PHASE(3,1) = FITH APS BURN
TSTART = 120.706957371037D            *
INJECT=  11,11                        * FITH BURN(EVENT 17) STATE 2
 X     = -798.89627, -798.93631       *
 Y     = -2989.1360, -2989.0368       *
 Z     =  1816.5563,  1816.5053       *
DX     =  24733.241,  24733.184       *
DY     = -6277.1832, -6276.2118       *
DZ     =  65.040643,  64.493682       *
ITHPR=2 *
ITYPE =    4                         *
IMDC  =    4                         *
IPCA  =    1                         *
ATYPE  =  0,1                        *
IMASS,(2)= 10945.   * 2ND SC MASS
DISP  =    306.                      *
THMX  =    3500.                     *
TTABLE=    3500.                     *
SITABL=    306.                      *
DRT   =    105.1777,0.0,199.9018 *
CC    =    0.                        *
PHASE(4,2) = COAST TO CSI APS BURN
ATYPE2 =  3                          *
ITURN2 =  2                          *
TSTOP =    23                        *
TTR    =  1.186932
DMASS  =  20.2*
PHASE(41,2)= REORIENT FOR RENDEZVOUS RADAR*
IWTC = 3 *
ATYPE2 =  3                          *
ITURN2 =  2                          *
ROLL2  =  90.,0.,0.                  *
TSTOP  =  23*
TTR    =  .542228*
PHASE(5,2) = CSI APS BURN
TSTART=  122.442143280862D            *
INJECT=  11,11                        * CSI APS BURN(EVENT 18) STATE 3
 X     =  2305.7702,  2087.4332       *
 Y     = -2503.3621, -2628.7080       *
 Z     =  1083.6397,  1187.4010       *
DX     =  19314.879,  20665.978       *
DY     =  13268.247,  11948.845       *
DZ     = -10401.104, -9846.7213       *
ITHPR=2 *
ITYPE =    4                         *
IMDC  =    4                         *
IPCA  =    1                         *
ATYPE  =  0,1                        *
DRT   =    -164.4,0.0,0.0            *
```

```
CC      =    0.                          *
PHASE(6,1) = COAST TO COH RCS BURN
IWTC = 3 *
ATYPE2 = 3*
ITURN2 =  2                               *
ROLL2   =  90.,0.,0.                     *
TSTOP =    23                             *
TTR     =    1.48583                     *
DMASS   =  15.3*
ENDRUN
```

```
PHASE(1,0) = COAST FROM TLI TO FIRST PERIGEE
INITL =     1                    *
YEAR  =     1967                 *
DAYS  =     273.                 *
HRS   =     21.                  *
MINS  =     0.                   *
SECS  =     0.                   *
INJECT=     12                   *
RAGR  =     1                    *
ISCALE=     7                    *
CSCALE=     7                    *
TITLE =     1.                   *
R     =     3553.8019            *
DEC   =     23.199926            *
RA    =     -50.419              *
V     =     29679.897            *
PTH   =     1.577                *
AZ    =     113.527              *
TSTART=     3.314589160000D0     *
NVEHT =     1                    *
CDRAG1=     3.1                  *
AREA  =     129.4                *
ATUL  =     23356586.            *
IMASS =     91245.0              *
RADPRT =  3.*
SHADCW =   3.*
RADAR  =  18,19,20,21,22,23,24,25,26,27,28,29,30,35
ELMIN  =  5.0
RADAR  =  VANGUARD-USBS,LATR=25.0,LONR=-50.0
ALTR   =  100., SRANGE=225000.
RADAR  =  REDSTONE-USBS,LATR=-27.0,LONR=34.0
ALTR   =  100., SRANGE=225000.
RADAR  =  MERCURY-USBS,LATR=25.0,LONR=127.0
ALTR   =  100., SRANGE=225000.
CINE  =     .015625              *
T1S   =     0.                   *
T1D   =     .125                 *
T1E   =     100.                 *
TMAX  =     25.D0                *
TSTOP =     18                   *
PRTG1 =     2.       *   THRUST
PRTG4 =     2.       *   GEOCENTRIC
PRTG7 =     2.       *   KEPLERIAN ELEMENTS
PRTG9 =     2.       *   TWO-BODY AND XI TERMS
PRTG10=     2.       *   PERTURBATIVE ACCLERATIONS
PRTG14 = 2.0                     *
PRTG17=     2.       *   GEOGRAPHIC
PHASE(2,1) = COAST TO 1ST SPS BURN AT APOGEE
TSTOP =     11                   *
CDRAG1=     3.1                  *
AREA  =     129.4                *
ATUL  =     23356586.            *
PHASE(3,1) = 1ST SPS BURN SIMULATING MIDCOURSE CORRECTION
```

```
ITYPE =     4                    *
IMDC  =     4                    *
IPCA  =     1                    *
ATYPE =     1                    *
IMASS =     91245.0              *
MMASS =     50C00.0              *
TCINT =     .27777777E-3         *
ITHPR =     20                   *
TTABLE=     20000.               *
THMX  =     20000.               *
SITABL=     314.9                *
DISP  =     314.9                *
DRT   =     34.0,0.0,0.0         *
CC    =     0.                   *
IWTC  =     3                    *
CMASS =     85.0                 *
PHASE(4,1) = COAST FROM 1ST SPS BURN TO 2ND SPS BURN (LOI)
TSTOP =     0                    *
TMAX  =     14.54183D            *
CDRAG1=     3.1                  *
AREA  =     129.4                *
ATUL  =     23356586.            *
PHASE(5,1) = 2ND SPS BURN SIMULATING LOI
INITL =     1                    *
TMAX  =     30.328064D           *
ITYPE =     8                    *
ATYPE =     1                    *
ISCALE=     4                    *
RT    =     -17806860.,-11920973.,7133575.7 *
TPF   =     1.242114             *
CC    =     .5                   *
TTABLE=     20000.               *
SITABL=     314.9                *
CDRAG1=     3.1                  *
AREA  =     129.4                *
ATUL  =     23356586.            *
PHASE(6,1) = COAST TO 3RD SPS BURN
TSTOP =     0                    *
CDRAG1=     3.1                  *
AREA  =     129.4                *
ATUL  =     23356586.            *
PHASE(7,1)= CIRCULARIZE AT 130 NM
INITL =     1                    *
TMAX  =     70.2D                *
ITYPE =     8                    *
ATYPE =     1                    *
RT    =     -15372727.,-12777322.,8529452.3 *
TPF   =     1.123836             *
CC    =     .5                   *
TTABLE=     20000.               *
SITABL=     314.9                *
CDRAG1=     3.1                  *
AREA  =     129.4                *
```

```
ATUL  =     23356586.          *
ENDRUN
```

```
PHASE( 1, 0)=TEST RADAR
TSTART=119.534994587321
YEAR =1968
DAYS =32.
HRS  =15.
MINS =35.
SECS =21.18
INJECT=24
X     =-907.28422
Y     =-465.71575
Z     =2.8474676
DX    =-3889.2505
DY    =6884.0646
DZ    =-842.77982
ISCALE=7
OSCALE=7
CINE =0.125
CINNE=0.125
PRTG4=2.0
CINL =0.125
CINNL=0.125
PRTG2=2.0
PRTG3=2.0
PRTG5=2.0
PRTG6=2.0
PRTG7=2.0
PRTG8=2.0
PRTG9=2.0
PRTG14=2.0
PRTG13=1.0
PRTG15=2.0
RECTPT=2.0
IPRINT=4
RADPRT = 5.0                                  *
SHADOW=2.0
TMAX =140.0D0
ANTEL1 = 0.0
ANTAZ1= 180.0                        *
RADAR=2B,9B
RADAR=GUAYMAS-MEX-USBS,LATR=27.963206,LONR=-110.72084
ALTR=63.71,SRANGE=300000.
RADAR=33B,38B
RADAR=CARNARVON-USBS,LATR=-24.907562,LONR=113.72424
ALTR=188.32,SRANGE=300000.
RADAR=18,19
22.
ENDRUN
```

```
PHASE(1B,1B) = TEST CASE FOR L.H. SHADOW   EARTH ORBIT *
      TSTART = 0.000                                   *
        YEAR = 1968B                                   *
        DAYS = 32.0                                    *
         HRS = 16.0                                    *
        MINS = 13.0                                    *
        SECS = 55.908                                  *
      INJECT = 12B                                     *
          RA = 62.266914                               *
         DEC = -9.4291427                              *
           R = 3544.3881                               *
         PTH = -.00541634                              *
          AZ = 121.34453                               *
           V = 25581.005                               *
         T1S = 0.0                                     *
         T1D = 0.83333333E-3                           *
         T1E = 0.41666666E-2                           *
         T2S = 0.41666666E-2                           *
         T2D = 0.05                                    *
         T2E = 0.55                                    *
         T3S = 0.55                                    *
         T3D = .83333333E-3                            *
         T3E = .55416665                               *
        TMAX = .55416665                               *
      TOTALP = 16.0                                    *
SHADOW = 5.0                          *
ENDRUN
```

```
PHASE(1,0) = EVENT ACQ.-TERM. TEST CASE * EARTH ORBIT * TWO VEHICLES
      YEAR = 1968       , INJECT =  11          ,  11           *
      DAYS = 32.0       ,       X =  708.88481  ,  1514.8040    *
       HRS = 17.0       ,       Y = -3078.9001  , -2636.3240    *
      MINS = 20.0       ,       Z =  1605.6744  ,  1820.6623    *
      SECS = 54.117     ,      DX =  22711.806  ,  20556.855    *
      TMAX = 1.5        ,      DY =  9111.0502  ,  14649.823    *
       T1S = 0.0        ,      DZ =  7436.5466  ,  4105.8028    *
       T1D = 0.15       , TOTALP = 17.0         , 17.0          *
       T1E = 1.5        , SHADOW =  5.0         ,  5.0          *
              NV = 2          ,  SIGHT =  2.0         ,  2.0          *
     TITLE = 1.0        , RADPRT =  5.0         ,  5.0          *
ATYPE(1) = 3 , ITURN(1) = 2 , ANTEL1 = 90. , ANTAZ1 = 90.0*
ATYPE(2) = 3 , ITURN(2) = 2 , ANTEL2 = 90. , ANTAZ2 = 90.0*
     ELMIN = 5.0 , SIGSS = 110.0 , EPSS = 20.0 , ZETM = 5.0 *
     SIGSV = 179.0 , REF = 0.0 , DELSM = 20.0 , KL = 5.0    *
LANDMK = 1, 3, 7, 318, 320, 321, 327, 329, 330, 331, 332, 333, 334, 342*
LANDMK = TYN AFB FLORIDA , LAML=-85.580527, PHIL=30.077055, ALTL=5.0   *
LANDMK = GALVESTON TEXAS , LAML=-94.859221, PHIL=29.263333, ALTL=1.0   *
LANDMK = AP MERIDA MEXICO, LAML=-89.658610, PHIL=20.937221, ALTL=14.0  *
STAR = 14, 16, 17, 18, 19, 20, 21, 22, 23              *
STAR = ALP HYA  , RAS = 141.47916 , DECL = -8.5102776 *
STAR = ALP U MA , RAS = 165.41124 , DECL = 61.9347210 *
RADAR = 1,2,3,4,7,8,9,10,11,12,13,14,15,16,17,18,19,21,28,29*
TMAX = 3.0
ETCL=.001*
OTCL=.001*
RTCL=5.0*
TSTART = 1.53940603638468
ENDRUN
```

```
PHASE(1B,1B) = LUNAR ORBIT INSERTION THRUST
       TITLE = 1.0*
        YEAR = 1968B*
        DAYS = 130.0*
         HRS = 17.551591*
        MINS = 0.0*
        SECS = 0.0*
      TSTART = 0.0D0*
      INJECT = 21B*
           X = -893.6946*
           Y = -496.69956*
           Z = -231.15415*
          DX = -3070.4869*
          DY = 6810.4658*
          DZ = 3498.9694*
ATYPE = 1B*
CC    = 0.5
       ITYPE = 1B*
       INITL = 1B*
       NVEHT = 1B*
       MMASS = 100.0*
TTABLE = 21900.0*
WRTABL = 69.96*
ITHPR  =  10                          *
       TCINT = 0.13888889E-03*
       IMASS = 89976.605*
        TTCL   = 8.6     *
       PRTG1 = 2.0*
       PRTG2 = 2.0*
       PRTG3 = 2.0*
       PRTG4 = 2.0*
       PRTG5 = 2.0*
       PRTG6 = 2.0*
       PRTG7 = 2.0*
       PRTG8 = 2.0*
       PRTG9 = 2.0*
      PRTG10 = 2.0*
      PRTG11 = 2.0*
      PRTG12 = 2.0*
      PRTG13 = 2.0*
      PRTG14 = 2.0*
      PRTG15 = 2.0*
       LATLS = 0.0*
       LONLS = 90.0*
        ALTLS  = 80.0    *
       AZRLS = -90.0*
        VRLS   = 5300.0 *
       PTRLS = 0.0*
        TMAX = 2568910114951213.D-16*
PHASE(1B,1B) = LUNAR ORBIT COAST PHASE 2 SET D*
          T1S = 0.0*
          T1D = 0.40*
          T1E = 0.80*
```

```
ENDRUN
```

```
PHASE(1B,0B) = TRANSEARTH INJECT THRUST
TITLE  =  1.0                          *
YEAR   =  1968                         *
DAYS   =  132.0                        *
HRS    =  .10715                       *
MINS   =  0.0                          *
SECS   =  0.0                          *
TSTART =  0.D0                         *
INJECT =  21                           *
X      =  -710.41961                   *
Y      =  -670.77659                   *
Z      =  -270.56590                   *
DX     =  -3783.3553                   *
DY     =  3450.3409                    *
DZ     =  1374.7725                    *
ITYPE  =  2                            *
ATYPE  =  1                            *
ITHPR  =  10                           *
INITL  =  1                            *
NVEHT  =  1                            *
CC     =  0.5                          *
IMASS  =  31827.158                    *
MMASS  =  20000.                       *
SITABL =  313.C                        *
TTABLE =  21900.0                      *
TCINT  =  .13888889E-03                *
TTCL   =  .062505                      *
PRTG1  =  2.0                          *
PRTG2  =  2.0                          *
PRTG3  =  2.0                          *
PRTG4  =  2.0                          *
PRTG5  =  2.0                          *
PRTG6  =  2.0                          *
PRTG7  =  2.0                          *
PRTG8  =  2.0                          *
PRTG9  =  2.0                          *
PRTG10 =  2.0                          *
PRTG11 =  2.0                          *
PRTG12 =  2.0                          *
PRTG13 =  2.0                          *
PRTG14 =  2.0                          *
PRTG15 =  2.0                          *
ALTLS  =  75.402890                    *
LATLS  =  .36824913                    *
LCNLS  =  -177.79665                   *
VRLS   =  8226.2692                    *
PTRLS  =  4.0                          *
AZRLS  =  -83.0                        *
TMAX   =  .5D0*
ENDRUN
```

```
PHASE(1B,0B) = TRANSLUNAR INJECT
TITLE  =  1.0                                  *
YEAR   =  1968                                 *
DAYS   =  127.0                                *
HRS    =  21.0                                 *
MINS   =  18.0                                 *
SECS   =  19.827                               *
TSTART =  0.D0                                 *
INJECT =  11                                   *
X      =  3515.1642                            *
Y      =  393.12230                            *
Z      =  74.695305                            *
DX     =  -2665.2756                           *
DY     =  21433.345                            *
DZ     =  13752.494                            *
ISCALE =  7                                    *
OSCALE =  7                                    *
INITL  =  1                                    *
NVEHT  =  1                                    *
ITYPE  =  3                                    *
CC     =  1.0                                  *
IMASS  =  278118.81                            *
MMASS  =  100000.                              *
SITABL =  426.0                                *
TTABLE =  200000.0                             *
RT     =  -18.573725, 1.2922314, 1.7447940 *
ATHR   =  39.109322                            *
ITHPR  =  10                                   *
TCINT  =  .13889889E-03
ATYPE  =  1                                    *
PRTG1  =  2.0                                  *
PRTG2  =  2.0                                  *
PRTG3  =  2.0                                  *
PRTG4  =  2.0                                  *
PRTG5  =  2.0                                  *
PRTG6  =  2.0                                  *
PRTG7  =  2.0                                  *
PRTG8  =  2.0                                  *
PRTG9  =  2.0                                  *
PRTG10 =  2.0                                  *
PRTG11 =  2.0                                  *
PRTG12 =  2.0                                  *
PRTG13 =  2.0                                  *
PRTG14 =  2.0                                  *
PRTG15 =  2.0                                  *
TMAX   =  .5                                   *
ENDRUN
```

```
PHASE(1B,0B) = HOHMANN TEST
TITLE  =  1.                          *
INITL  =  1                           *
TSTART =  69.3151407972727D0          *
YEAR   =  1969                        *
DAYS   =  260.                        *
HRS    =  11.                         *
MINS   =  35.                         *
SECS   =  12.5047                     *
ISCALE =  7                           *
INJECT =  21                          *
X      =  8.9547713E+2                *
Y      =  -4.7112408E+2               *
Z      =  -1.2946606E+2               *
DX     =  -2.521331E+3                *
DY     =  -4.3369424E+3               *
DZ     =  -1.6637964E+3               *
LCNLS  =  .33                         *
LATLS  =  -2.85                       *
ALTLS  =  1.4642                      *
PTRLS  =  0.                          *
AZRLS  =  90.                         *
VRLS   =  0.                          *
ATYPE  =  1      *
ITYPE  =  4                           *
NV     =  1                           *
NVEHT  =  1                           *
RTH    =  .27552                      *
IMASS  =  32549.752                   *
MMASS  =  15260.                      *
TCINT  =  .2777777E-3                 *
IMDC   =  2                           *
TTABLE, STOARG, LINEAR, ARG = PLAPSE
FUNCT = 0.0, 3150.0 *
0.83333333E-3,  3150.0*
0.833333333E-3, 1050.0*
0.72233333E-2,  1050.0*
0.722333333E-2, 9713.0*
1.00722333333 ,13984.35*
SITABL, STOARG, LINEAR, ARG = PLAPSE
FUNCT = 0.0, 291.5 *
0.83333333E-3, 291.5 *
0.833333333E-3,285.0 *
0.72233333E-2 , 302.0*
1.0072233333  , 326.263121
PRTG1  =  2.0                         *
PRTG2  =  2.0                         *
TMAX   =  71.500                      *
ITHPR  =  5                           *
RMINL  =  .2725                       *
ENDRUN
```

```
PHASE(1,0) =   LUNAR PARKING ORBIT TO LEM MANUEVER INITIATION *
TITLE  =  1.                                  *
INITL  =  1                                   *
YEAR   =  1968                                *
DAYS   =  32.                                 *
HRS    =  15.                                 *
MINS   =  35.                                 *
SECS   =  21.18                               *
TSTART = 77.01262512470470D0  *
INJECT = 24   *
XS     =  -1012.0492  *
YS     =  101.34626  *
ZS     =  -55.39637  *
DXS    =  546.30224  *
DYS    =  5265.8885  *
DZS    =  -346.71297  *
ISCALE =  7                                   *
OSCALE =  7                                   *
TMAX   =  100.00                              *
T1E   =90.*
T1D        =    .2            *
PRTG1  =  2.,2.  *
PRTG3  =  2.,2.  *
PRTG11 =  2.,2.  *
PRTG12 =  2.,2.  *
TSTOP  =  4                                   *
CMAX   =  4.                                  *
LCNSTP =  -30.                                *
T1D    =  0.                                  *
PHASE(2,1)  =  INITIALIZE LEM DESCENT *
LONLS  =  24.83333                            *
LATLS  =  .3333                               *
ALTLS  =  -.75                                *
PTRLS  =  0.                                  *
AZRLS  =  90.                                 *
VRLS   =  0.                                  *
RMINL  =  0.
ISCALE =  7                                   *
TSTOP  =  24
TMS    =  .5                                  *
TABC   =  0.                                  *
ALSC   =  15.20                               *
TPF    =  .18283333                           *
THB    =  .9921E-2                            *
AHB    =  1.746
RTH    =  .27488                              *
PHASE(3,1)  =  LEM SEPARATION  *
ATYPE  =  0,1,0,0  *
ITYPE  =  6                                   *
IMDC   =  1                                   *
XMTOV =.75*
ITHPR  =  20                                  *
IMASS2=32568.5*
```

```
MMASS  =  12000.                    *
TTABLE=   200.
SITABL    =273.      *
TCINT  =  .27777777E-3              *
PHASE(4,1)  =  COAST TO HOHMANN TRANSFER CASE A *
TSTOP  =  23                        *
TTR    =  .5                        *
PHASE(4,1)  =   HOHMANN TRANSFER BURN CASE A *
ATYPE  =  0,1,0,0  *
CC     =  1.                        *
ITYPE  =  4                         *
IMDC   =  2                         *
TTABLE, SIMPLE, LINEAR, STOARG, ARG=PLAPSE
FUNCT = 0.0           ,  1050.00, 0.83333333E-3,  1050.00 *
        0.83333333E-3,  1050.00, 0.72233333E-2,  1050.00 *
        0.72233333E-2,  9713.00, 1.0           , 13984.35 *
SITABL, SIMPLE, LINEAR, STOARG, ARG=PLAPSE
FUNCT = 0.0           ,   285.00, 0.83333333E-3,   285.00 *
        0.83333333E-3,   285.00, 0.72233333E-2,   285.00 *
        0.72233333E-2,   302.00, 1.0           , 326.26268*
PHASE(5,1)  = DESCENT HOHMAN COAST              *
NVTERM = 2  *
CASTP  = 175.  *
ICA    =  0  *
TSTOP  =  10  *
PHASE(3,1) = IGNITION ALGORITHM (DESCENT)
ATYPE = 0,1,0,0
OSCALE=4 *
PRTG1 =0.,2.  *
PRTG3 =0.,2.  *
PRTG7 =0.,3.  *
PRTG12 = 2.0, 2.0 *
ITHPR  =20 *
TMDC   =        9713.           *
IPCA   =        1               *
THMX   =        10500.          *
DISP = 303.15 *
THST   =.1,.2,.3,.4,.5,.6  *
TCINT  =        .27777777E-3    *
SPI    =306.0 *
IMASS2=32180. *
MMASS  =        15260.          *
THTM   =.72222222E-2 *
TABC   =        0.            *
TT     =.114 *
WLEM   =32180.  *
TF1    =.11111111E-2  *
TF2    =.39444444E-1  *
TF3    =.11111111E-2  *
QP1FD =42.5    *
QA1FD =105.0   *
QPOFD =65.0    *
QPOXD =65.0    *
```

```
PCFOF =.56 *
CJ2F  =0.0,0.0,+2.0      *
THMOX =9878. *
H3F   =115. *
CJOF  =1.2  *
TPF   =.17351109      *
TFX   =.32777777E-1 *
CJOX  =.54867595 , PCWOF =.59023578 *
HDOT3 =-5.0 *
HDOT4 =-5.0 *
A2    =0.70,0.0,1.25      *
ATHD  =0.0      *
ILPTR =4        *
ITYPE=5 , NTHRUS=1 , IMDC=-2 *
TTABLE , MASTER , STEP , STOARG , ARG=THRSW *
FUNCT=0.0 , 1 , 1.0 , 2 , 2.0 *
TTABLE(2,1) = SIMPLE , LINEAR , STOARG , ARG=PLAPSE *
FUNCT=0.0 , 1050.0 , 0.72222222E-2 , 1050.0 , 0.72222222E-2 *
            9713.0 , 1.0,11418.7 *
TTABLE(2,2)= SIMPLE , LINEAR , STOARG , ARG=THRM , ERO=1 *
FUNCT=0.0 , 1050.0 ,1050.0 , 1050.0 , 6300.0 , 6300.0 *
SITABL , MASTER , STEP , STOARG , ARG=THRSW *
FUNCT=0.0 , 1 , 1.0 , 2 , 2.0 *
SITABL(2,1) = SIMPLE , LINEAR , STOARG , ARG=PLAPSE *
FUNCT=0.0 , 285.0 , 0.72222222E-2 , 285.0 , 0.72222222E-2 *
            326.0 , 1.0 , 281.0 *
SITABL(2,2)= SIMPLE , LINEAR, STOARG , ARG=THRM , ERO=1 *
FUNCT=0.0 , 285.0 , 1050.0 , 285.0 , 2100.0 , 298.6 , 3150.0 *
            301.0 , 4200.0 , 302.0 , 5250.0 , 302.6 *
PHASE(3,1)=TRIM PHASE DESCENT
TCINT =.1388888E-3 , TRGF =7200. , ITHPR =20 *
ATYPE  =  0,1,0,0  *
TTABLE,MASTER,STEP,STOARG,ARG=THRSW,FUNCT=0.0,1,1.0,2,2.0*
TTABLE(2,1),SIMPLE,LINEAR,STOARG,ARG=PLAPSE,FUNCT=0.0,1050.0 *
0.72222222E-2,1050.0,0.72222222E-2,9713.0,1.0,11418.7 *
TTABLE(2,2),SIMPLE,LINEAR,STOARG,ARG=THRM,ERO=1,FUNCT=0.0*
1050.,1050.,1050.,6300.,6300.*
SITABL,MASTER,STEP,STOARG,ARG=THRSW,FUNCT=0.0,1,1.0,2,2.0*
SITABL(2,1),SIMPLE,LINEAR,STOARG,ARG=PLAPSE,FUNCT=0.0,280.3 *
0.72222222E-2,280.3,0.72222222E-2,306.0,1.0,280.98 *
SITABL(2,2),SIMPLE,LINEAR,STOARG,ARG=THRM,ERO=1,FUNCT=0.0,*
285.,1050.,285.,2100.,298.6,3150.,301.,4200.,302.,*
5250.,302.6*
THRTHM=5460. , THRLNO=6090. *
ITYPE =5 *
ILPTR =4 *
IPCA  =1 *
IMDC  =-1 *
THRM = 0.
PHASE(4,2)= NOMINAL FIRST BRAKING PHASE
IMDC  =0 , ITYPE =5 *
PHASE(5,2)= NOMINAL FINAL BRAKING PHASE
IMDC  =1 , ITYPE =5 *
```

```
PHASE(6,2)= NOMINAL PITCH TO HIGATE
IMDC  =2 , ITYPE =5 *
PHASE(7,2)= NOMINAL FINAL APPROACH PHASE
IMDC  =3 , ITYPE =5*
PHASE(8,2)= NOMINAL PITCH TO VERTICAL DECSENT
IMDC  =4 , ITYPE =5 *
PHASE(9,2)= NOMINAL VERTICAL DESCENT
IMDC  =5 , ITYPE = 5*
ENDRUN
```

```
PHASE(1,0)=DESCENT NOMINAL WITH ALOGORITHM ( COUNT SEARCH )
VID=LM
CSCALE=4 *
TITLE =1. *
INITL =1*
YEAR  =1968*
DAYS  =127. *
HRS   =115.*
MINS  =0.0 *
SECS  =0.0 *
LCNLS =0.0*
LATLS =0.0*
ALTLS =0.0*
PTRLS =0.0*
AZRLS =90.0*
VRLS  =0.0*
RMINL =0.0*
PRTG1 =2.0*
PRTG3 =2.0*
PRTG7 =3.0*
PRTG12=2.0*
IPRINT=4*
TMAX  =10.0D0
INJECT=23 *
ISCALE=4 *
ALTS  =481313.45 *
LATS  =0.0 *
LCNS  =-164.28591 *
VRS   =5212.4077 *
PTR   =0.0 *
AZR   =-90.0 *
TSTART=.98489949881315 5D0 *
NVTERM=1 , CASTP=175.0 , ICA=0 , TSTOP=10 *
PHASE(3,1) = IGNITION ALGORITHM (DESCENT)
TBNC  = 2.12699
ITGD5 =1
ATYPE =1 *
ITHPR  =20 *
TMDC  =        9713.          *
IPCA  =        1              *
THMX  =        10500.         *
DISP  =303.15 *
THST  =.1,.2,.3,.4,.5,.6  *
TCINT =.13888888E-3 *
SPI   =306.0 *
IMASS =32180. *
MMASS =        15260.         *
THTM  =.72222222E-2 *
TABC  =        0.           *
TT    =.114 *
WLEM  =32180.  *
TF1   =.11111111E-2  *
QP1FD =40. , QA1FD =107.5 *
```

```
CJOX  =0.43759557 , PCWOF =0.59897995 *
TF2   =.0375 *
TF3   =.11111111E-2  *
QPOFD =65.0    *
QPOXD =65.0    *
PCFOF =0.50 *
CJ2F  =0.0,0.0,+2.0      *
THMOX =9878. *
H3F   =115. *
CJOF  =1.2  *
TPF   =.17351109     *
TFX   =.32777777E-1 *
HDOT3 =-5.0 *
HDOT4 =-5.0 *
A2    =0.70,0.0,1.25     *
ATHD  =0.0     *
ILPTR =5 *
ITYPE=5 , NTHRUS=1 , IMDC=-2 *
TTABLE , MASTER , STEP , STOARG , ARG=THRSW *
FUNCT=0.0 , 1 , 1.0 , 2 , 2.0 *
TTABLE(2,1) = SIMPLE , LINEAR , STOARG , ARG=PLAPSE *
FUNCT=0.0 , 1050.0 , 0.72222222E-2 , 1050.0 , 0.72222222E-2 *
            9713.0 , 1.0,11418.7 *
TTABLE(2,2)= SIMPLE , LINEAR , STOARG , ARG=THRM , ERO=1 *
FUNCT=0.0 , 1050.0 ,1050.0 , 1050.0 , 6300.0 , 6300.0 *
SITABL , MASTER , STEP , STOARG , ARG=THRSW *
FUNCT=0.0 , 1 , 1.0 , 2 , 2.0 *
SITABL(2,1) = SIMPLE , LINEAR , STOARG , ARG=PLAPSE *
FUNCT=0.0 , 285.0 , 0.72222222E-2 , 285.0 , 0.72222222E-2 *
            326.0 , 1.0 , 281.0 *
SITABL(2,2)= SIMPLE , LINEAR, STOARG , ARG=THRM , ERO=1 *
FUNCT=0.0 , 285.0 , 1050.0 , 285.0 , 2100.0 , 298.6 , 3150.0 *
            301.0 , 4200.0 , 302.0 , 5250.0 , 302.6 *
THRTHM=5460. , THRLNO=6090. *
ENDRUN
```

```
PHASE(7B,1B)=   NITIALIZE LEM DESCENT
TITLE = 1.0*
INITL = 1B*
YEAR = 1968B*
DAYS = 32.0*
HRS = 15.0*
MINS = 35.0*
SECS = 21.18*
INJECT = 24*
X=8.7894047E+2,Y=-5.0745653E+2,Z=7.5197217E+1
DX=-2.6662858E+3,DY=-4.5861623E+3,DZ=2.2333548E+2
LONLS   =  24.83333                    *
LATLS   =  .3333                       *
ALTLS   =  -.75                        *
PTRLS   =  0.                          *
AZRLS   =  90.                         *
VRLS    =  0.                          *
RMINL   =  0.
ISCALE  =  7                           *
TSTOP   =  24
TSTART  = 84.2688668189478D0*
TMS     =  .5                          *
TABC    =  0.                          *
ALSC    =  15.20                       *
TPF     =  .18283333                   *
THB     =  .9921E-2                    *
AHB     =  1.746
RTH     =  .27488                      *
TOTALP  = 16.,16.                      *
T1E    =90.*
T1D        =     .2              *
TMAX    =  100.D0                      *
PHASE(8B,1B)=  LEM-CSM SEPARA
ATYPE2=  3,0,6                         *
ROLL2 = -90.,0.,0.                     *
ITYPE   =  6                           *
IMDC    =  1                           *
XMTOV =.75*
ITHPR   =  20                          *
IMASS =0.0,32568.5*
MMASS   =0.0,12000.0
TTABLE=   200.
SITABL    =273.       *
TCINT   =  .27777777E-3                *
PHASE(9B,1B)=  COAST TO HOHMANN TRANSFER CASE A *
TSTOP   =  23                          *
TTR     =  .5                          *
PHASE(1B,1B)=   HOHMANN TRANSFER BURN CASE A *
ATYPE2 = 1                             *
CC      =  1.                          *
ITYPE   =  4                           *
TTABLE, SIMPLE, LINEAR, STOARG, ARG=PLAPSE
FUNCT = 0.0            ,  3150.00, 0.83333333E-3,  3150.00 *
```

```
        0.83333333E-3,  1050.00, 0.72233333E-2,  1050.00 *
        0.72233333E-2,  9713.00, 1.0           , 13984.35 *
SITABL, SIMPLE, LINEAR, STOARG, ARG=PLAPSE
FUNCT = 0.0           ,   301.00, 0.83333333E-3,   301.00 *
        0.83333333E-3,   285.00, 0.72233333E-2,   285.00 *
        0.72233333E-2,   302.00, 1.0           , 326.26268*
IMDC    =  2                          *
ENDRUN
```

```
PHASE(1,0) = MAIN ASCENT  *
TITLE  =  1.                          *
TSTART =  105.30399867892 1D0         *
YEAR   =  1969                        *
DAYS   =  260.                        *
HRS    =  11.                         *
HRS    =  11.                         *
MINS   =  35.                         *
SECS   =  12.5047                     *
INJECT =  23,23
ALT    =  81.01112,0.   *
LAT    =  0., 0.   *
LON    =  -7., 0.  *
VR     =  5305.1535,0.                *
PTR    =  -2.0704011E-3,0.            *
AZR    =  -90., 0.  *
ISCALE =  7                           *
LCNLS  =  0.  *
LATLS  =  0.  *
ALTLS  =  0.  *
PTRLS  =  0.                          *
AZRLS  =   0.                         *
VRLS   =  0.                          *
NVEHT  =  2                           *
NV     =  2                           *
INITL  =  1                           *
TMAX   =  108.D0                      *
PRTG1  =  2.0,2.0                     *
PRTG2  =  2.0,2.0                     *
PRTG3  =  2.0,2.0                     *
PRTG8  =  2.0,2.0                     *
PRTG10 =  2.0,2.0                     *
PRTG11 =  2.0,2.0                     *
PRTG12 =  2.0,2.0                     *
ATYPE2 = 1                            *
ITHPR  =  10                          *
IMASS2 =  10290.  *
MMASS  =  4500.                       *
TTABLE=3500. *
SITABL = 304.7 *
TCINT  =  .27777777E-3                *
TVR    =  .33333333E-2                *
ITYPE  =  7                           *
RDC    =  .27537356    *
IPCA   =  1                           *
RTH  =   .28121724  *
TBNC   =  0.0                         *
IMDC   =  2                           *
ENDRUN
```

```
PHASE(1B,0B) = TRANSFER INITIATION CASE J *
LONLS   =  .33                          *
LATLS   =  -2.85                        *
ALTLS   =  1.4642                       *
PTRLS   =  0.                           *
AZRLS   =  90.                          *
VRLS    =  0.                           *
YEAR    =  1969                         *
DAYS    =  260.                         *
HRS     =  11.                          *
MINS    =  35.                          *
SECS    =  12.5047                      *
INJECT  =  21,21                        *
X       =  -1.0104341E+3, -9.9408882E+2 *
Y       =  1.3081599E+2, 9.6548876E+1 *
Z       =  2.2202726, -9.3903725 *
DX      =  6.4390141E+2, 4.728668E+2 *
DY      =  4.9307775E+3, 4.999067E+3 *
DZ      =  1.8034078E+3, 1.8204047E+3*
ISCALE  =  7                            *
NVEHT   =  2                            *
NV      =  2                            *
CINL    =  .0625                        *
INITL   =  1                            *
TMAX    =  108.D0                       *
PRTG1   = 2.0,2.0                       *
PRTG2   = 2.0,2.0                       *
PRTG3   = 2.0,2.0
PRTG11  = 2.0,2.0
TSTART  =  104.9456771598 26D0          *
MMASS = 0.0,4500.
IMASS = 0.0,5549.6947
TCINT   =  .2777777E-3                  *
ITHPR   =  10                           *
ITYPE   =  8                            *
CC = 0.0
TPF     =  .78436148                    *
TTABLE  =  200.        *
SITABL  =  273.0                        *
ATYPE2   = 1                            *
PHASE(2B,2B) = TRANSFER COAST   *
IPRINT = 4      *
IMDC    =  0                            *
TSTOP   =  29                           *
RCUTOF  =  .02                          *
RRATE   =  80.                          *
RANGE   =  5.                           *
PHASE(3B,2B) = 1ST TERMINAL RENDEZVOUS THRUST CASE J *
ATYPE2  =  1      *
ITYPE   =  8                            *
CC = 0.0
PHASE(4B,2B) = 1ST TERMINAL RENDEZVOUS COAST CASE J *
TSTOP   =  29                           *
```

```
RANGE   =  3.                                  *
RRATE   =  20.                                 *
PHASE(5B,2B) = 2ND TERMINAL RENDEZVOUS THRUST CASE J *
ATYPE2 =  1      *
ITYPE   =  8                                   *
CC = 0.0
PHASE(6B,2B) = 2ND TERMINAL RENDEZVOUS COAST CASE J *
RANGE   =  1.                                  *
RRATE   =  10.                                 *
TSTOP   =  29                                  *
PHASE(7B,2B) = 3RD TERMINAL RENDEZVOUS THRUST CASE J *
ATYPE2 =  1      *
ITYPE   =  8                                   *
CC = 0.0
PHASE(8B,2B) = 4TH TERMINAL RENDEZVOUS COAST CASE J *
TSTOP   =  29                                  *
RANGE   =  .0823                               *
RRATE   =  5.                                  *
PHASE(9B,2B) = RENDEZVOUS THRUST CASE J *
ATYPE2 =  1      *
ITYPE   =  8                                   *
CC = 0.0
PHASE(10B,2B)= RENDEZVOUS COAST PHASE CASE J *
TSTOP   =  29                                  *
ICUTOF =  1                                    *
ENDRUN
```

```
PHASE(1B,0B) = LUNAR ORBIT INSERTION THRUST PHASE 1 CASE N
TITLE =   1.0*
YEAR  =   1966B*
DAYS  =   290.
HRS   =   6.0
MINS  =   24.0
SECS  =   46.448
TSTART=   3.25108D0
INJECT=   16B*
X     =   5494.6869
Y     =   3575.0857
Z     =   141.47713
DX    =   4.2504175
DY    =   -6.5370893
DZ    =   7.6099384E-2
ISCALE=   1B*
OSCALE=   1B*
ITYPE =   9B*
ATYPE = 1*
IMASS =   275322.71*
CC    =    1.0
MMASS =    100000.
WRTABL = 469.475222*
TTABLE,CONVAL=200000.0*
ITHPR =   10B*
TCINT =    .13888889E-02
T1S   =    0.0
T1D   =   1.0
T1E   =    200.
LSTG  =   1B*
NSTG  =    1B*
THRUST=    200000.0*
WGHT  =    275322.71*
XISP  =    426.0*
TBURN =    311.*
CONVF =   9.80665E-3*
LAZ   =   72.0
FRZK  =   15.0*
ENRG  =   -1.4340571*
FRZEND=   25.*
PHI   =   28.627307
LAMBDA=   279.37913
COORD =   1.0
UNITS =   1.0
ENOM  =   0.97633432*
RRRT  =   6659.2199*
RNOM  =   6556.8927*
KSIX  =   0.4E6*
MU    =   398603.2*
MVEC  =   -0.86164378,-0.50703628,-0.21951403E-1
MMAG  =   353305.96*
NDEG  =   3B*
MODE  =   4B*
```

```
TOTALP=      16.0*
PRTG17 = 2.0
RRRT   =   6661.5686*
RAC    =   0.0*
TMAX   =   80.D0*
ENDRUN
```

```
PHASE(1B,0B) = GD10 TEST PHASE 1 CASE 0
TITLE   =  1.0                          *
INITL   =  1                            *
TMAX    =  100.D+0                      *
RMINE   =  1.01911521                   *
YEAR    =  1968                         *
DAYS    =  127.0                        *
HRS     =  32.715291111                 *
MINS    =  0.0
SECS    =  0.0
INJECT  =  11                           *
X       =  -69378.507                   *
Y       =  3440.4514                    *
Z       =  5594.9811                    *
DX      =  -6866.8434                   *
DY      =  -1209.2711                   *
DZ      =  -430.94621                   *
ISCALE  =  7                            *
OSCALE  =  7                            *
NVEHT   =  1                            *
T1S     =  0.0                          *
T1D     =  3.0                          *
T1E     =  10.0                         *
PRTG1   =  2.0                          *
PRTG2   =  2.0                          *
PRTG3   =  2.0                          *
PRTG4   =  2.0                          *
PRTG8   =  2.0                          *
TSTART  =  0.0D+0                       *
RT      =  -69752.412, 3374.4478, 5571.4154 *
DRT     =  3119.8302, -1653.6097, -1203.9776 *
ITYPE   =  10                           *
ITHPR   =  1000                         *
IMASS   =  57500.0                      *
MMASS   =  10000.0                      *
TTABLE  =  20000.0                      *
SITABL  =  313.                         *
TCINT   =  .27777777E-3                 *
CC      =  0.0                          *
ATYPE   =  1                            *
ENDRUN
```

```
PHASE(1B,0B) = LEM LIFTOFF ATTITUDE INITIALIZATION TEST CASE
YEAR = 1968,              DAYS = 32.,              HRS = 15.*
TOTALP=17.,17.*
MINS = 35.,               SECS = 21.18,            TITLE = 1.*
INITL = 1B,               LONLS= 24.83333,         LATLS = .3333*
ALTLS = 0.,               PTRLS= 0.,               AZRLS = 90.*
VRLS  = 0.,               RMINL= 0.,               INJECT =24B*
XS    = 991.54508,        YS   =227.98317,         ZS = 24.430901*
DXS   = 1174.9991,        DYS  =-5159.9553,        DZS= 432.03009*
TSTART= 86.06023485346960,                         ISCALE = 7B*
OSCALE = 7,               NVEHT = 1,               TSTOP = 4*
CMAX = 11.,               NV = 1B,                 LONSTP = 114.83333*
TMAX = 200.*
ATYPE  = 0,6,             TSTOP = 23*
TTR    = 0.*
NV=2B,                    LATLS=.3333,             LONLS=24.83333*
ALTLS=0.,                 PTRLS=0.,                AZRLS=90.*
NVEHT = 2B*
VRLS     = 0.,            INJECT(2)= 23,             LONS(2) = 24.83333*
LATS(2)  = .3333,         ALTS(2)  = 0.,             PTR(2)  = 0.*
AZR(2)  = 90.,            VR(2)    = 0.*
IPRINT=1B,                CINL=.000277777777*
PHASE(2B,1B) = LUNAR LAUNCH ATTITUDE INITIALIZATION TEST CASF
ATYPE  =  0,5     ,       LAZ    = 90.,             LAMBDA = 24.83333*
PHI=.3333,                TSTOP=23B*
PHASE(3B,1B) = LUNAR VELOCITY ATTITUDE  INITIALIZATION TEST CASE
YEAR = 1968,              DAYS = 32.,              HRS = 15.*
MINS = 35.,               SECS = 21.18,            TITLE = 1.*
INITL = 1B,               LONLS= 24.83333,         LATLS = .3333*
ALTLS = 0.,               PTRLS= 0.,               AZRLS = 90.*
VRLS  = 0.,               RMINL= 0.,               INJECT =24B*
XS    = 991.54508,        YS   =227.98317,         ZS = 24.430901*
DXS   = 1174.9991,        DYS  =-5159.9553,        DZS= 432.03009*
TSTART= 86.06023485346960,                         ISCALE = 7B*
OSCALE = 7,               NVEHT = 1,               TSTOP = 4*
CMAX = 11.,               NV = 1B,                 LONSTP = 114.83333*
TMAX = 200.*
TSTOP  =  23,             ATYPE = 7*
PHASE(4B,1B) = LUNAR NEGATIVE VELOCITY  INITIALIZATION TEST CASE
YEAR = 1968,              DAYS = 32.,              HRS = 15.*
MINS = 35.,               SECS = 21.18,            TITLE = 1.*
INITL = 1B,               LONLS= 24.83333,         LATLS = .3333*
ALTLS = 0.,               PTRLS= 0.,               AZRLS = 90.*
VRLS  = 0.,               RMINL= 0.,               INJECT =24B*
XS    = 991.54508,        YS   =227.98317,         ZS = 24.430901*
DXS   = 1174.9991,        DYS  =-5159.9553,        DZS= 432.03009*
TSTART= 86.06023485346960,                         ISCALE = 7B*
OSCALE = 7,               NVEHT = 1,               TSTOP = 4*
OMAX = 11.,               NV = 1B,                 LONSTP = 114.83333*
TMAX = 200.*
TSTOP  =  23,             ATYPE = 8*
PHASE(5B,1B) = EXTRA PHASE TO ESTABLISH  LOCAL VERTICAL
ATYPE = 3,                TSTOP = 23*
```

```
PHASE(5B,1B) = LUNAR INSTANTANEOUS ROTATION
ROLL = 5.,5.,5.,          TSTOP = 23,              ATYPE = 2*
ITYPE = 11B,              TTABLE = 1000.,         WRTABL = 3.*
IMASS = 1000.,            MMASS = 1000.*
PHASE(6B,1B) = LUNAR LOCAL VERTICAL CHECK CASE
ATYPE = 3,                TSTOP = 23,              ROLL = 5.,5.,5.*
ITYPE = 11B*
TTABLE = 1000.,           WRTABL = 3.*
TMAX = 86.08523486D0
PHASE(7B,1B) = LUNAR SUN ORIENTATION TEST CASE
ATYPE = 4,                TSTOP = 23,              ROLL = 5.,0.,0.*
VEHL   = 0.,0.,1.*
PHASE(8B,1B) = LUNAR INERTIAL GRAVITY TURN ORBIT COUNT TERMINATION
ITURN = 1,                                         TTR = .00277777777*
TSTOP = 3B,               OMAX = .001*
PHASE(9B,1B) = LUNAR RELATIVE GRAVITY TURN SELENOG LONG. TERMINATION
ITURN = 1,                GTURN = 1*
TTR=.00555555555*
TSTOP = 4B,               LONSTP = 11.967811,     OMAX = 0.*
PHASE(10B,1B) = LUNAR LOCAL VERTICAL MODE SELENOC LAT. TERMINATION
ITURN = 2,                TTR = .00833333333,      ATYPE = 3*
TSTOP = 5B,               LATSTP = -13.442467,    OMAX = .00001*
PHASE(11B,1B) = TABLE LOOK UP ROLL RATE SELENOG LAT. TERMINATION
ITURN = 3,                ATYPE = 3,               IROLL1 = 1.0*
TSTOP = 6B,              LATSTP = 1.5348929,      OMAX = .001*
TMAX = 86.08523486D0*
PHASE(12B,1B) = TABLE LOOK UP PITCH RATE SELENOC PATH ANGLE TERMINATION
ITURN = 3,                IPTCH1 = 1.,             TSTOP = 8*
GAMLUN = -.0073894109,  ATYPE  = 3*
PHASE(13B,1B) = TABLE LOOK UP YAW RATE   CENTRAL ANGLE TERMINATION
ITURN = 3,                IYAW1 = 1.,              TSTOP = 10*
CASTP = .489587962,       ATYPE = 3*
PHASE(14B,1B) = LINEAR PITCH TABLE CENTRAL ANGLE TIME  TERMINATION
ITURN = 3,                TTR = .01944444444,      TSTOP = 10*
CASTP = 0.0,              ATYPE = 3*
CATIME = .0027777777770*
IPTCH1,SIMPLE,LINEAR,EQINT,ARG=PLAPSE,FMLT=1.,ERO=2,FUNCT=0.,
.0027777777,1.*
PHASE(15B,1B) = LUNAR POLYNOMIAL PITCH ANGLE
ITURN = 4,                TSTOP = 23,              TTR = .00277777777*
PCOEF = 0.,1.,            ATYPE = 3*
PHASE(16B,1B) = LUNAR POLYNOMIAL PITCH RATE
ITURN = 5,                TSTOP = 23,              TTR = .00277777777*
PCOEF1 = 1.,0.,0.,0.,0., ATYPE= 3*
PHASE(1B,1B) = LEM LIFTOFF ATTITUDE INITIALIZATION TEST CASE
YEAR = 1968,              DAYS = 32.,             HRS = 15.*
MINS = 35.,               SECS = 21.18,           TITLE = 1.*
INITL = 1B,               LONLS= 24.83333,        LATLS = .3333*
ALTLS = 0.,               PTRLS= 0.,              AZRLS = 90.*
VRLS   = 0.,              RMINL= 0.,              INJECT =24B*
TSTART= 85.9602348534696D0,                       ISCALE = 7B*
OSCALE = 7,               NVEHT = 1,              TSTOP = 4*
CMAX = 11.,               NV = 1B,                LONSTP = 114.83333*
```

```
TMAX = 200.*
ATYPE  = 6,3,6,3,        TSTOP = 23*
TTR    = 0.*
NV=2B,                   LATLS=.3333,            LONLS=24.83333*
IPRINT=1B,               CINL=.000277777777*
VRLS = 0.,               INJECT = 23,24,      ALPNB = 33.*
ATYPE = 6,3,6,3,         LONS = 24.83334,     LATS  = .3333*
ALTS  = 0.,              PTR  = 0.,           AZR   = 90.*
VR      = 0.,            XS(2)   = 991.54508,      YS(2)   = 227.98317*
ZS(2)   = 24.43090,      DXS(2)  = 1174.9991,      DYS(2)  = -5159.9553*
DZS(2)  = 432.03009,     TSTART  = 85.9602348534696D0*
DTLANC  = .1,           NVEHT  = 1*
PHASE(2B,1B) = LUNAR LAUNCH ATTITUDE INITIALIZATION TEST CASE
ATYPE=5,0,               LAZ=90.,                LAMBDA=24.83333*
PHI=.3333,               TSTOP=23B*
TSTART = 86.0602348534696D0,    INJECT = 23,24,     NV = 2*
PHASE(3B,1B) = LUNAR VELOCITY ATTITUDE  INITIALIZATICN TEST CASE
YEAR = 1968,             DAYS = 32.,             HRS = 15.*
MINS = 35.,              SECS = 21.18,           TITLE = 1.*
INITL = 1B,              LONLS= 24.83333,        LATLS = .3333*
ALTLS = 0.,              PTRLS= 0.,              AZRLS = 90.*
VRLS  = 0.,              RMINL= 0.,              INJECT =24B*
XS    = 991.54508,       YS   =227.98317,        ZS = 24.430901*
DXS   = 1174.9991,       DYS  =-5159.9553,       DZS= 432.03009*
TSTART= 86.0602348534696D0,                      ISCALE = 7B*
OSCALE = 7*
DMAX   = 11.,            LONSTP= 114.83333*
TMAX = 200.*
TSTOP = 23,              ATYPE = 0,7*
INJECT = -1,-1,         NV    = 2,            NVEHT = 2*
NVTERM = 2*
PHASE(4B,1B) = LUNAR NEGATIVE VELOCITY  INITIALIZATION TEST CASE
YEAR = 1968,             DAYS = 32.,             HRS = 15.*
MINS = 35.,              SECS = 21.18,           TITLE = 1.*
INITL = 1B,              LONLS= 24.83333,        LATLS = .3333*
ALTLS = 0.,              PTRLS= 0.,              AZRLS = 90.*
VRLS  = 0.,              RMINL= 0.,              INJECT =24B*
XS    = 991.54508,       YS   =227.98317,        ZS = 24.430901*
DXS   = 1174.9991,       DYS  =-5159.9553,       DZS= 432.03009*
TSTART= 86.0602348534696D0,                      ISCALE = 7B*
OSCALE = 7B*
DMAX   = 11.,            LONSTP= 114.83333*
TMAX = 200.*
TSTOP = 23,              ATYPE = 0,8*
INJECT = -1,-1,         NV    = 2,            NVEHT = 2*
NVTERM = 2*
PHASE(5B,1B) = EXTRA PHASE TO ESTABLISH  LOCAL VERTICAL
ATYPE = 0,3,             TSTOP = 23*
ROLL(4) = 5.,5.,5.*
INJECT = -1,-1,    NV=2,      NVEHT = 2,      NVTERM = 2*
PHASE(7B,1B) = LUNAR SUN ORIENTATION TEST CASE
ATYPE   = 0,4,           TSTOP   = 23,           ROLL(4) = 5.,0.,0.*
VEHL(4) = 0.,0.,1.*
```

```
PHASE(8B,1B) = LUNAR INERTIAL GRAVITY TURN ORBIT COUNT TERMINATICN
ITURN=0,1,                TSTOP=23B,                TTR=.00277777777*
TSTOP = 3B,               CMAX = .001*
INJECT = 24,             XS = 981.54508*
PHASE(9B,1B) = LUNAR RELATIVE GRAVITY TURN SELENOG LONG. TERMINATION
ITURN = 0,1,              GTURN = 0,1*
TTR=.00555555555*
TSTOP = 4B,               LONSTP = 11.967811,       OMAX = 0.*
PHASE(10B,1B) = LUNAR LOCAL VERTICAL MODE SELENOC LAT. TERMINATICN
ITURN=0,2,                ATYPE=0,3,            TTR=.00833333333*
TSTOP = 5B,               LATSTP = -13.442467,      OMAX = .00001*
PHASE(11B,1B) = TABLE LOOK UP ROLL RATE SELENOG LAT. TERMINATION
ITURN = 0,3,              ATYPE = 0,3,          IROLL2 = 1.*
TSTOP = 6B,              LATSTP = 1.5348929,        OMAX = .001*
TMAX = 86.08523486D0*
PHASE(12B,1B) = TABLE LOOK UP PITCH RATE SELENOC PATH ANGLE TERMINATION
ITURN = 0,3,              TSTOP = 8,            ATYPE  = 0,3*
GAMLUN =-.0073894109,     IPTCH2 = 1.*
PHASE(13B,1B) = TABLE LOOK UP YAW RATE   CENTRAL ANGLE TERMINATION
IYAW2 = 1.,               TSTOP  = 10,          CASTP = .489587962*
ITURN = 0,3,              ATYPE  = 0,3*
PHASE(14B,1B) = LINEAR PITCH TABLE CENTRAL ANGLE TIME  TERMINATION
ITURN = 0,3,              ATYPE  = 0,3,         CASTP = 0.0*
CATIME = .019444444D*
TTR  = .01944444444,      TSTOP  = 10*
IPTCH2,SIMPLE,LINEAR,EQINT,ARG=PLAPSE,FMLT=1.,ERO=2B*
FUNCT = 0.,.0027777777,1.*
PHASE(15B,1B) = LUNAR POLYNOMIAL PITCH ANGLE
ITURN = 4,4,              TSTOP  = 23,          TTR  = .00277777778*
ATYPE = 3,3,              PCOEF1 = 0.,5.,       PCOEF2 = 0.,1.*
PHASE(16B,1B) = LUNAR POLYNOMIAL PITCH RATE
ITURN = 0,5,              PCOEF2 = 1.,0.,0.,    ATYPE = 0,3*
TSTOP = 23,               TTR = .00277777778*
PHASE(1,1) = ATTITUDE ALIGNMENT BASED ON IMU GIMBAL ANGLES
  TSTOP=23,               TTR=0.,               ATYPE=10,10,3,3 *
ALPNB   = 33.,            ROLL(1) = 38.,5.,5.,      ROLL(4) = 5.,5.,5.*
PHASE(2,1) = ATTITUDE ALIGNMENT BASED ON IMU GIMBAL ANGLES
  TSTOP=23,               TTR=0.,               ATYPE=10,10  *
ALPNB = 33.,       ROLL(1) = 38.,5.,5.,         ROLL(4) = 5.,5.,5.*
PHASE(23B,0B) = EARTH LAUNCH ATTITUDE GEODETIC POLAR TEST
TITLE = 1.0, TOTALP = 17.0*
YEAR=1967B,               MONTH=4.,                 DAYS=1.*
HRS=13.,                  MINS=0.,                  SECS=0.*
CINE=.000277777777,       ISCALE=4B,                INJECT=13B*
TTR    = 0.,              OSCALE = 4*
LCN=-80.56495285,         LAT=28.53185653,          ALT=0.*
AZE=90.,                  VE=0.,                    PTE=0.*
RAGR=1B,                  TSTOP=23B,                INITL=1B*
ATYPE = 5,0,1,            PHI = 28.53185653,         LAZ = 72.26*
RMINE = .5*
LAMBDA=-80.56495285,      ITYPE=1B*
TTABLE = 1000.,           WRTABL = 3.*
TSTART = 0.*
```

```
IMASS = 1000.,            MMASS = 1000.*
PHASE(24B,1B) = SOLAR ORIENTATION INERTIAL CARTESIAN TEST
INJECT = 11B,             ISCALE = 4B,            TSTOP  = 4B*
X = 10190467.,            Y = -15318454.,         Z = 9935805.6*
DX = 1117.0392,           DY = 743.10058,         DZ = 0.*
ATYPE   = 4,              TSTOP   = 23,            ROLL(1) = 5.,0.,0.*
VEHL(1) = 0.,0.,1.*
PHASE(25B,1B)= EM PLANE CARTESIAN TEST  VELOCITY ORIENTATION
ATYPE(1)= 7*
INJECT = 14B,             ISCALE = 4B,            OSCALE = 4B*
X = -10043018.,           Y = -8120788.9,         Z = 16444192.*
DX = 513.66207,           DY = -1206.8343,        DZ = -282.27167*
TSTOP =  23B*
PHASE(26B,1B) = EM PLANE POLAR NEG. VELOCITY ORIENTATION TEST
ATYPE(1)= 8*
INJECT = 15B,             ISCALE = 4B,            TSTOP = 23B*
RAMP =-141.04098,         DEMP = 51.853468,       RMP = 20909827.*
PTMP = 0.,                AZMP = 109.91485,       VMP = 1341.6315*
PHASE(27B,1B) = INERTIAL CARTESIAN PLUMBLINE LOCAL VERTICAL TEST
ATYPE(1)= 3,              ROLL(1) = 0.,0.,0.*
INJECT = 16B,             ISCALE = 4B,            TSTOP  = 23B*
X = -19028.789,           Y = 20909744.,          Z = 55670.476*
DX = 1277.8232,           DY = .074349604,        DZ = 408.83103*
LAZ  = 72.26,             PHI = 28.53185653,      LAMBDA = -80.56495285*
PHASE(19B,1B) = EARTH LOCAL VERTICAL TEST CASE
ATYPE(1)= 3,              TSTOP   = 23,            ROLL(1) = 5.,0.,0.*
TTR=.00277777777,         INJECT=12B,             RAGR=0B*
RA=-27.507172,            DEC=27.268209,          R=22848032.*
PTH=15.577129,            AZ=103.38822,           V=30653.067*
ITURN(1)= 2*
CINE = .277777777E-3,     IPRINT = 1B*
PHASE(3,1) = ATTITUDE ALIGNMENT BASED ON IMU GIMBAL ANGLES
ATYPE   = 10,0,3,         ROLL(1) = 180.,90.,90.,  ALPNB   = 90.*
ITURN(1)= 2,              IPRINT  = 1,             CINE    = .27777777E-3*
TSTOP = 23,               TTR = .0027777777 *
PHASE(28B,1B) = GEOCENTRIC POLAR INSTANTANEOUS ROTATION TEST
ROLL(1) = 5.,5.,5.,       TSTOP   = 23,            ATYPE(1)= 2*
PHASE(29B,1B) = GEOCENTRIC POLAR LONGITUDE OPTION TEST
RAGR = 1B,                RA = -51.705612*
TSTOP = 23B,             INJECT = 12B*
TSTOP = 14B,              LONSTP =309.05882 ,     OMAX = 0.*
PHASE(30B,1B) = ORBIT COUNT  TERM INERTIAL GRAVITY TURN
ATYPE(1)= 3,              ITURN(1)= 1,             GTURN(1)= 1*
TSTOP = 13B,              CMAX = 0.,              DIREC =-1.*
PHASE(31B,1B) = DECLINATION TERMINATION RELATIVE GRAVITY TURN
ITURN(1)= 1,              ATYPE(1)= 3,             GTURN(1)= 0*
TSTOP = 15B,              CMAX = -.00001,         LATSTP = 27.095064*
DIREC = 1.*
PHASE(32,1) = LATITUDE TERMINATION  TEST CASE                      *
INJECT = 12,              TSTOP = 16,             LATSTP = 27.237578*
PHASE(33,1) = GEOCENTRIC PATH ANGLE TERMINATION TEST               *
INJECT = 12,              TSTOP = 18,             GAMETH = 15.830597*
PHASE(34,1) = ALTITUDE  TERMINATION TEST CASE                      *
```

```
INJECT = 12,              TSTOP = 17,              RALTFT = 1839596.*
PTH= -15.577129,          IPRINT = 0,              T1E = 100.*
T1D = .000277777777*
PHASE(35B,1B) = GEODETIC PATH ANGLE TERMINATION                    *
INJECT = 12,              PTH = 15.577129*
TSTOP = 19B,              GAMETH = 16.567854,      DIREC = 1.*
PHASE(36B,1B) = GUIDANCE STEERING TEST CASE XMTOV TEST
ITYPE = 6B,              ITHPR = 1B,               TVR = .005*
ATYPE(3) = 2,             MMASS  = 900.*
XMTOV = 310.,            TTABLE = 1000.,           WRTABL = 3.*
TCINT = .000277777777*
ENDRUN
```

```
PHASE(1,0)  = SATURN 1B LIFTOFF BEGIN VERTICAL RISE
AASA  = 2.5*
VID=CSM,LM*
EMPOT =3.0*
YEAR = 1967 ,            MONTH = 4.,              DAYS = 1.*
HRS  = 13.,              CINE  = .2777777777E-03,ISCALE = 4B*
INJECT = 13B,   LON = -80.56495285,   LAT = 28.53185653
ALT    = -8.89, AZE = 90.,            PHI = 28.53185653*
LAZ    = 72.26, LAMBDA = -80.56495285, AREA = 100.0*
RAGR = 1B , TITLE = 1.0*
TCINT  = .2777777777E-03, TTR = .2777777777E-02*
ITYPE  = 11B,   OSCALE = 4B,  TMAX = .2777777777D-2*
TOTALP = 16.,   ITHPR = 1B,   IMASS = 1297236.*
RMINE  =.5*
CG1 = 60.0*
CGY1 = .25*
CGP1 = .5*
CPP1 = 80.0*
CPY1 = 85.0*
CNPO1 = .6*
CNYO1 = .3*
CA1 = 1.2*
WRTABL,ARG=T,LINEAR,STOARG,ERO=2B,AMLT=3600.0,
FUNCT=0.0,6302.200012,5.0,6328.340026,10.0,6264.460021,15.0,6318.700012,
20.0,6331.460021,25.0,6333.520019,30.0,6334.119995,35.0,6329.583984,
40.0,6334.119995,45.0,6332.520019,50.0,6326.341979,55.0,6322.573974,
150.0,6250.981994,
TTABLE,SIMPLE,ARG=T,STOARG,LINEAR,ERO=2B,AMLT=3600.,
FUNCT=0.,1613286.0,5.0,1646875.296,135.0,1815410.703,137.1000003*
1811276.906,137.5599994,1810913.296,1000.,1810913.296*
ATYPE(1) = 5*
TCINT = .2777777777E-03,TTR = .2777777777E-02*
PHASE(2B,2B)= INITIATE PITCH MANEUVER
ITURN=3B*
IPTCH1,SIMPLE,LINEAR,ARG=T,ERO=2B,EQINT,FMLT=-1.,AMLT=3600.,
FUNCT=10.,5.,.098859,.1568237003,.2573219985,.3558232002,.4565722011,
.5400547012,.6138511002,.6665555984,.6740439981,.7083858028,
.7178876027,.7192678004,.7055118009,.6779517978,.6478291973,
.6132709980,.5735284015,.5339334011,.4932399988,.4549465999,.4169640019,
.3806560002,.3457858003,.3135216012,.2166798003,.000,
ITYPE = 11B*
TMAX=.0375
ENDRUN
```

```
PHASE(1,0)=STAR-LANDMARK TEST CASE
ATYPE(1) = 3*
ATYPE(2) = 3*
PRTG13=2.0,2.0*
YEAR = 1967*
DAYS = 306.*
HRS  = 12.*
MINS = 48.*
SECS = 34.8*
INITL=1*
NV   = 2*
INJECT=13,13*
LON   =-97.,-96.*
LAT   =28.5,28.5*
ALT  = 612000.,612000.*
PTE  = .55,.55*
AZE  = 90.,90.*
VE   = 23980.,23980.*
RAGR  =1,1*
TMAX = 3.4420249*
TSTART=3.3170249*
ISCALE=4*
OSCALE=4*
T1S  = 3.3170249*
T1E  = 4.8170249*
T1D  = .016666667*
PRTG4=2.0,2.0*
PRTG6=2.0,2.0*
LANDMK=TYN AFB FLORIDA, LAML=-85.580527, PHIL=30.077055, ALTL=5.0*
PRTG17=2.0,2.0*
SIGHT=2.0,2.0*
SIGSS=110.*
LANDMK=1,3,7,318,320,321,327,329,330,331,332,333,334,342*
EPSS =20.*
ZETM =5.*
SIGSV=179.*
LANDMK=GALVSTON TEXAS, LAML=-94.859221, PHIL=29.263333, ALTL=1.0*
LANDMK=AP MERIDA MEXICO, LAML=-89.658610, PHIL=20.937221, ALTL=14.0*
REF  =0.*
DELSM=20.*
KL   =5.*
STAR= ALP HYA  , RAS=141.47916 , DECL=-8.5102776*
SIGLS=90.*
STAR=14,16,17,18,19,20,21,22,23*
TSTOP=    14*
LONSTP=275.0*
STAR= ALP U MA , RAS=165.41124 , DECL=61.934721*
TITLE=    1.0*
CMAX=0.*
PHASE(2,1)=PHASE NUMBER 2
LANDMK=1,3,7,319,321,326,329,330,331,332,334,342*
DELSM =20.*
EPSS  =20.*
```

```
SIGSS =110.*
KL    =5.
REF   =0.
SIGLS =90.
SIGSV =179.
ZETM  =5.*
STAR  =13,15,17,19,21*
ENDRUN
```

```
PHASE(1,0) =     RT SPEC 98 2ND OPP  +4
TITLE =    1.0 *
YEAR  =    1968
DAYS  =    32.0
HRS   =    23.0
MINS  =    14.0
SECS  =    45.717
TSTART=    0.D0
INJECT=    12
V     =    35650.239
R     =    3604.4723
PTH   =  6.5625669
AZ  =   62.5625669
DEC   =    -3.4224848
RA    =    -132.19766
RAGR  =    0
ISCALE=    7
OSCALE=    7
TSTOP =    8
GAMLUN=    0.
CINE  =    .015625
CINNE =    1.
CINNL =    0.25
CINL  =    .015625
RRNE  =    6.0
RMINE =    1.0
RMAXE =    60.0
PRTG1 =   2.0 *
PRTG2 =   2.0 *
PRTG3 =   2.0 *
PRTG4 =   2.0 *
PRTG5 =   2.0 *
PRTG7 =    4.0 *
PRTG14 = 2.0
PRTG15 = 2.0
TMAX   = 80.D0
IPRINT = 1
PHASE(1,1) =     RT SPEC 98 2ND OPP  +4
DIREC = 8.0
ENDRUN
```

```
PHASE(1,0) =    LOI
TITLE   =1.0*
YEAR    =1968*
DAYS    =32.*
HRS     =15.*
MINS    =35.*
SECS    =21.18*
INJECT  =21*
XL      =768.97138*
YL      =659.16198*
ZL      =292.06839*
DXL     =4237.7221*
DYL     =-5575.0025*
DZL     =-4234.2529*
TSTART  =76.906215369701 4D0*
ISCALE  =7*
OSCALE  =7*
NVEHT   =1*
T1D     =0.*
T1E     =77.*
PRTG1   =2.*
PRTG2   =2.*
PRTG3   =2.*
PRTG4   =2.*
PRTG7   =3.*
PRTG13  =2.*
ITYPE   =1*
IMASS   =89667.792
SITABL  =319.*
CC      =1.*
ATYPE   =1,0,1*
TTABLE  =20000.*
MMASS   =50000.*
LATLS   =.3333*
LCNLS   =24.8333*
AZRLS   =-85.155*
ALTLS   =79.25*
VRLS    =5300.*
PTRLS   =0.*
ITHPR   =20*
TCINT   =.13888889E-3*
TTCL    =9.*
INAV    =1*
ERRMDL=1*
DRIFT1  =-.2,0.,0.*
ITERAT  = 4
TMAX    =200.*
ENDRUN
```

```
PHASE(1,0)=TWO VEHICLE COAST
YEAR=1968,     DAYS=32.,       HRS=15.,        MINS=35.,       SECS=21.18*
AREA=100.0,100.0*
NV=2,          INJECT=12,12*
RA=-55.053,-55.053*
DEC=32.465,32.465*
R=3543.9329,3543.9329*
PTH=-.001,-.001*
AZ=87.406,87.406*
V=25573.996,25573.996*
RAGR=1,1*
CDRAG1=1.2,          CDRAG2=2.0*
ATUL =1.0E15,1.0E15*
CG1=60.,             CG2=30.*
CGP1=.5,             CGP2=1.0*
CGY1=.25,            CGY2=1.0*
CPP1=80.,            CPP2=40.0*
CPY1=70.,            CPY2=50.0*
TMAX=.25* =15.0 MIN
TOTALP=17.0,17.0*
RRNE=10.*
CINE=.016666666*    =1.0 MIN
IPRINT=1* PRINT AT STEP SIZE
TITLE=1.*
INITL=1*
PHASE(1,0)=ONE COAST ONE THRUST, NO.2
YEAR=1968,     DAYS=32.,       HRS=15.,        MINS=35.,       SECS=21.18*
AREA=100.0,100.0*
NV=2,          INJECT=12,12*
RA=-55.053,-55.053*
DEC=32.465,32.465*
R=3543.9329,3543.9329*
PTH=-.001,-.001*
AZ=87.406,87.406*
V=25573.996,25573.996*
RAGR=1,1*
CA1 = 1.2,       CA2 = 2.0*
CNPO1=.4*
CNYO1=.8*
ATUL =1.0E15,1.0E15*
CG1=60.,             CG2=30.*
CGP1=.5,             CGP2=1.0*
CGY1=.25,            CGY2=1.0*
CPP1=80.,            CPP2=40.0*
CPY1=70.,            CPY2=50.0*
TMAX=.25* =15.0 MIN
TOTALP=17.0,17.0*
RRNE=10.*
TITLE=1.*
INITL=1*
IMASS1=80000.,       IMASS2=90000.*
TTABLE=100.*
SITABL=4.0*
```

```
TCINT=.016666666*
ITHPR=1*
ITYPE=11*
ENDRUN
```

```
PHASE(1,0)= SIMPLE EARTH ORBIT CASE*******
YEAR   = 1968
DAYS   = 32.
HRS   = 15.0
MINS    = 59.0
SECS    = 57.112
PRTG17 = 2.0
INJECT = 11
X      = 2.1656236E03
Y      =-2.0605658E03
Z      = 1.9035789E04
DX     = 1.7218597E04
DY     = 1.8889442E04
DZ     = 8.5752007E02
T1D     = 1.0
T1E     = 5.0
TMAX   = 5.0
TOTALP = 15.0
VLIST1 = ELTH,LON,ALT,R,V,PTH,DX,DY,DZ,
TA,EA,AZ,LAT,X,Y,Z,T,ENDLST*
ENDRUN
  EOF
        XQT      CUR
        ERS
        TRW      A
        IN       A
        IN       B
        XQT      PLOT
NPLOTS = 4*
NTYPE  = 0*
PROCES = 1*
ENDCAS
PLOT   = LAT(1),LON(1)
NCHAR  = 16*
TITLE  = LAT VS LON
XLABEL = LAT
YLABEL = LON
ENDCAS
PLOT   = AZ(1),LAT(1)
NCHAR  = 16*
TITLE  = AZ VS LAT
XLABEL = AZ
YLABEL = LAT
ENDCAS
PLOT   = V(1),PTH(1)
NCHAR  = 16*
TITLE  = V VS PTH
XLABEL = V
YLABEL = PTH
ENDCAS
PLOT   = X(1),DX(1)
NCHAR  = 16*
TITLE  = X VS DX
```

```
XLABEL = X
YLABEL = DX
ENDCAS
REWIND
NPLOTS = 2*
NTYPE  = 0*
PROCES = 1*
ENDCAS
PLOT   = Y(1),DY(1)
NCHAR  = 11*
TITLE  = Y VS DY
XLABEL = Y
YLABEL = DY
ENDCAS
PLOT   = Z(1),DZ(1)
NCHAR  = 43*
TITLE  = Z VS DZ
XLABEL = Z
YLABEL = DZ
ENDCAS
```

```
PHASE(1,1) = LEM ACTIVE RENDEZVOUS
IPRINT=2  *
INITL =    1                    *
YEAR  =    1967                 *
DAYS  =    273.                 *
HRS   =    21.                  *
MINS  =    0.                   *
SECS  =    0.                   *
ISCALE=    7                    *
INJECT=  11,11                      * SEPARATION BURN(EVENT 16) STATE 1
 X     = -3189.3651, -3189.3651    *
 Y     = -1262.5270, -1262.5270    *
 Z     =  1170.3984,  1170.3984    *
DX     = 11874.6230, 11874.6230    *
DY     =-20052.2140,-20052.2140    *
DZ     =  9764.1872,  9764.1872    *
NV     =    2                    *
NVEHT  =    2                    *
CINE = 0.015625     * BUILT IN TIME
RADPRT = 5.0,5.0
RADAR  =  18,19,20,21,22,23,24,26,27,28,29,30,35
RADAR  =  GUAM-USBS,LATR=13.308235,LONR=144.73441
ALTR   =  420.28, SRANGE=225000.
RADAR  =  MERCURY-USBS,LATR=20.0,LONR=-135.0
ALTR   =  100., SRANGE=225000.
RADAR  =  VANGUARD-USBS,LATR=25.0,LONR=-50.0
ALTR   =  100., SRANGE=225000.
RADAR=INJ SHIP 2-USB L10,LATR=-16.,LONR=10.,ALTR=53.,SRANGE=32000.
RADAR=INJ SHIP 2-USB L34,LATR=-27.,LONR=34.,ALTR=53.,SRANGE=32000.
TSTART=    120.5000000000000D *
TMAX  =    130.D                *
ITYPE =    4                    *
IMDC  =    4                    *
IPCA  =    1                    *
ATYPE  =  0,1                   *
DISP  =    279.                 *
THMX  =    400.                 *
IMASS,(2)= 16097.   * 2ND SC MASS
MMASS =    6000.                *
TTABLE=    400.                 *
SITABL=    279.                 *
ITHPR =    2                    *
TCINT =    .277777777E-3        *
DRT   =    -1.0,0.0,0.0         *
PHASE(2,1) = COAST TO FITH APS BURN
ATYPE2 =  3                     *
ITURN2 =  2                     *
TSTOP =    23                   *
TTR   =    .20661               *
PHASE(3,1) = FITH APS BURN
IWTC = 3 *
DMASS  =  8.2*
TSTART = 120.706957371037D        *
```

```
INJECT=  11,11                                  * FITH BURN(EVENT 17) STATE 2
 X     = -798.89627, -798.93631                 *
 Y     = -2989.1360, -2989.0368                 *
 Z     =  1816.5563,  1816.5053                 *
DX     =  24733.241,  24733.184                 *
DY     = -6277.1832, -6276.2118                 *
DZ     =  65.040643,  64.493682                 *
ITHPR=2 *
ITYPE =    4                                    *
IMDC  =    4                                    *
IPCA  =    1                                    *
ATYPE  =  0,1                                   *
IMASS,(2)= 10945.   * 2ND SC MASS
DISP  =    306.                                 *
THMX  =    3500.                                *
TTABLE=    3500.                                *
SITABL=    306.                                 *
DRT   =    105.1777,0.0,199.9018 *
CC    =    0.                                   *
PHASE(4,2) = COAST TO CSI APS BURN
ATYPE2 =  3                                     *
ITURN2 =  2                                     *
TSTOP =    23                                   *
TTR    =  1.186932
PHASE(41,2)= REORIENT FOR RENDEZVOUS RADAR*
ATYPE2 =  3                                     *
ITURN2 =  2                                     *
ROLL2  =  90.,0.,0.                             *
TSTOP  =  23*
TTR    =  .542228*
PHASE(5,2) = CSI APS BURN
IWTC = 3 *
DMASS  =  20.2*
TSTART=  122.442143280862D                      *
INJECT=  11,11                                  * CSI APS BURN(EVENT 18) STATE 3
 X     =  2305.7702,  2087.4332                 *
 Y     = -2503.3621, -2628.7080                 *
 Z     =  1083.6397,  1187.4010                 *
DX     =  19314.879,  20665.978                 *
DY     =  13268.247,  11948.845                 *
DZ     = -10401.104, -9846.7213                 *
ITHPR=2 *
ITYPE =    4                                    *
IMDC  =    4                                    *
IPCA  =    1                                    *
ATYPE  =  0,1                                   *
DRT   =    -164.4,0.0,0.0                       *
CC    =    0.                                   *
PHASE(6,1) = COAST TO CDH RCS BURN
ATYPE2 = 3*
ITURN2 =  2                                     *
ROLL2  =  90.,0.,0.                             *
TSTOP =    23                                   *
```

```
TTR    =    1.48583              *
PHASE(7,1) = CDH RCS BURN
IWTC = 3 *
DMASS  =  15.3*
TSTART=  123.932272890472D        *
INJECT=  11,11                    * CDH RCS BURN(EVENT 19) STATE 4
 X     =  2012.1346,  1913.8256   *
 Y     = -2687.4666, -2726.7125   *
 Z     =  1219.4194,  1256.7421   *
DX     =  20901.380,  21370.706   *
DY     =  11318.143,  10706.518   *
DZ     = -9604.4462, -9327.0894   *
ITHPR= 3 *
ITYPE =    4                      *
IMDC  =    4                      *
IPCA  =    1                      *
ATYPE  =  0,1                     *
DISP  =    279.                   *
THMX  =    400.                   *
TTABLE=    400.                   *
SITABL=    279.                   *
DRT   =    19.0,0.0,25.8          *
CC    =    0.                     *
PHASE(8,1) = COAST TO TPI RCS BURN*
ATYPE2 =  3                       *
ITURN2 =  2                       *
ROLL2  =  90.,0.,0.              *
TSTOP =    23                     *
TTR    =  .910221
PHASE(91,1) = CONTINOUS PITCH TO MAINTAIN RENDEZVOUS RADAR LOCKON*
ITURN2 =  3                       *
ROLL2  =  90.,0.,0.              *
IPTCH2,SIMPLE,STEP,ARG = PLAPSE,STOARG,ERO = 1 *
FUNCT  =  0.,-.042762,.322169,0.,.4*
TSTOP  =  23*
TTR    =  .322169*
PHASE(9,1) = TPI RCS BURN         *
IWTC = 3 *
DMASS  =  5.0*
TSTART=  125.171924672654D        *
INJECT=  11,11                    * TPI RCS BURN(EVENT 20) STATE 5
 X     = -1889.1589, -1901.4531   *
 Y     = -2532.9271, -2513.8940   *
Z      =  1727.7364,  1718.8254   *
DX     =  21531.103,  21485.259   *
DY     = -12920.900, -13047.672   *
DZ     =  3978.5975,  4058.1228   *
ITHPR= 3 *
SITABL =  279.                    *
TTABLE =  400.                    *
THMX   =  400.*
DISP   =  279.*
ITYPE =    4                      *
```

```
IMDC   =    4                    *
IPCA   =    1                    *
ATYPE  =  0,1                    *
DRT    =  20.5,0.4,-13.3*
CC     =    0.                   *
PHASE(10,1) = COAST TO TPF RCS BURN*
ITURN2 =  3                      *
IPTCH2,SIMPLE,STEP,ARG = PLAPSE,STOARG,ERO = 1 *
FUNCT  =  .0,-.0104382,.518472,0.,.52*
ATYPE2 =  3                      *
ROLL2  =  117.113,0.,0.          *
TSTOP = 29                     *
IMDC = 0                       *
RCUTOF = .05                   *
RANGE = 1.0                    *
RRATE = 10.0
TMAX = 125.699998653727D
PHASE(11,1) = FIRST TPF BURN *
IWTC = 3 *
DMASS  =  7.2*
TSTART = 125.699998653727D
INJECT=  11,11                       * 1ST TPF BURN(EVENT 21) STATE 6
 X     =  3538.7307,  3537.8989      *
 Y     =  92.611315,  93.185500      *
 Z     = -607.76563, -607.97180      *
DX     = -2418.3245, -2397.0352      *
DY     =  22245.990,  22233.947      *
DZ     = -12225.753, -12222.008      *
SITABL =  279.                       *
TTABLE =  400.                       *
ITYPE  =    8                        *
ATYPE  =  0,1                        *
CC     =    0.                       *
TMAX = 125.7029336D
PHASE(12,1) = COAST TO SECOND TPF
ATYPE2 =  3                          *
ROLL2  =  -135.4994,0.,0.            *
ITURN2 =  3                          *
IPTCH2,SIMPLE,STEP,ARG = PLAPSE,STOARG,ERO = 1*
FUNCT  =  0.,.0586233,.150978,0.,.2*
TSTOP = 0
TMAX = 125.840673893D
PHASE(13,1) = SECOND TPF BURN*
IWTC = 3 *
DMASS  =  6.0*
TSTART=  125.840673893994D           *
INJECT=  11,11                       * 2ND TPF BURN(EVENT 21) STATE 7
 X     =  2754.6797,  2754.6430      *
 Y     =  1826.6711,  1826.7316      *
 Z     = -1466.8382, -1466.8801      *
DX     = -15805.286, -15796.147      *
DY     =  18178.428,  18171.607      *
DZ     = -7807.7574, -7805.3275      *
```

```
ITHPR =     1                    *
SITABL =   279.                  *
TTABLE =   400.                  *
ITYPE =     8                    *
ATYPE  =   0,1                   *
CC     =    0.                   *
TMAX = 125.842448788D
PHASE(14,2) = COAST TO CUTOFF
ATYPE2 =   3                     *
ITURN2 =   2                     *
TSTOP =     29                   *
ICUTOF=     1                    *
TMAX = 125.85134498D
ENDRUN
```

```
PHASE(1,0) = REENTRY TEST CASE
  YEAR   = 1966,          MONTH  = 12.,              DAYS   = 1.*
  HRS    = 17.,           ISCALE = 4,                OSCALE = 4*
  TOTALP = 17.,           TITLE  = 1.,               RMINE  = 0.*
  IMASS  = 12074.,        AREA   = 129.9,            TSTOP  = 17*
  RALTFT = 300000.,       CINE   = .27777777E-3,     IPRINT = 10*
  INJECT = 11,            TSTART = 330.6133908959 04D0,  TMAX = 331.*
  X      = -17716836.,    Y      = 3539209.9,        Z      = 11292991.*
  DX     = -3048.5131,    DY     = -25404.656,       DZ     = 1741.3908*
  CDRAG1,SIMPLE,LINEAR,STOARG,ERO=1,ARG=MACH,FUNCT=.4,.89535*
    .7,.96529,.9,1.0409,1.1,1.1225,1.2,1.0807,1.35,1.3134,1.65*
    1.3282,2.0,1.3242,2.4,1.323,3.0,1.2997,4.0,1.256,6.0,1.3316*
    25.0,1.3316*
  CLIFT1,SIMPLE,LINEAR,STOARG,ERO=1,ARG=MACH,FUNCT=.4,.31295,.7*
    .34045,.9,.4193,1.1,.60264,1.2,.63109,1.35,.54996,1.65,.53385*
    2.0,.52342,2.4,.49167,3.0,.45973,4.0,.42814,6.0,.37254,25.0,.37254*
  ATUL   = 800000.,       ITURN  = 8,                RBKANG = 0.0*
  ATYPE  = 13,0,13,0,     PAATK  = 0.0,0.0,180.0,0.0*
  BKANG  = 60.0,0.0,60.0,0.0,
PHASE(2,2) = COAST TO REVERSE BANK
  TSTOP  = 23,            TTR    = .0535026,         ITURN  = 8*
PHASE(3,2) = REVERSE BANK AT 15 DEG PER SEC
  TSTOP  = 23,            TTR    = .0022222222,      IPRINT = 1*
  ITURN  = 8,             RBKANG = -15.0*
PHASE(4,2) = COAST TO 25K
  TSTOP  = 17,            RALTFT = 25000.,           IPRINT = 10*
  ITURN  = 8*
ENDRUN
```

```
PHASE(10,0) = ARB. ORIGIN FOR REOR.
YEAR    =  1966                  *
DAYS    =  1.0                   *
PRTG4   =  2.                    *
PRTG7   =  2.                    *
PRTG13  =  2.                    *
PRTG17  =  2.                    *
NV      =  1                     *
TMAX    =  2.0                   *
    TSTOP   =  23          *
TTR = 1.0E-21    *
ATYPE = 3                        *
INJECT =  12                     *
RA      =  179.99981             *
DEC     =  81.924605             *
R       =  3538.9449             *
PTH     =  -6.4052027E-04        *
V       =  25560.467             *
AZ      =  179.99889             *
  PHASE(20,1) = THIRD TEST CASE  45 YAW, -135 PITCH
  RAXS1D = .56526877, .70711461,-.42480598
  PAXS1D =-.56529127, .70709894, .42480213
   TSTOP=30
K3     = 1.0                     *
ITURN = 7                        *
TTR     =  .1                    *
CINE    =  .00055556             *
THTDB = 1.0                      *
DTMIN = 0.0                      *
OMEGRP = 1.0,1.0*
ENDRUN
PHASE(10,0) = MULTIVEHICLE  REOR. DATA FROM TEST CASE 4
    YEAR    =  1966        *
    DAYS    =  1.0         *
    PRTG4   =  2.,2.       *
    PRTG13  =  2.,2.       *
    TMAX    =  2.0         *
    TSTOP   =  23          *
    TTR     =  1.0E-21     *
    ATYPE   =  3,3         *
    INJECT  =  12,12       *
    RA      =  179.99981,179.99981*
    DEC     =  81.924605,81.924605*
    R       =  3538.9449,3538.9449*
    PTH     =  -6.4052027E-04,-6.4052027E-04*
    V       =  25560.467,25560.467*
    AZ      =  179.99889,179.99889*
    NV      =  2           *
PHASE(20,1) =  VEH1 DOES 3 MVRS, VEH2 DOES 2 MVRS TO SAME TARGET
ITURN = 7,7                      *
    TSTOP   =  23          *
    TTR     =  .2          *
THTDB = 1.,2.                    *
```

```
DTMIN = 0.,1.                    *
OMEGRP = 1.,1.,.5,.5             *
    RAXS1D =  -.56529129,.70709894,.42480213*
    PAXS1D =   .56526878,.70711462,-.42480596*
K3     = 1.,0.                   *
    RAXS2D =  -.56529129,.70709894,.42480213*
    PAXS2D =   .56526878,.70711462,-.42480596*
    ENDRUN
```

```
PHASE(1,0) = SEPARATION TEST CASE
  TITLE=1.,                INITL=1,                YEAR=1968 *
  DAYS=32.,                HRS=15.,                MINS=35. *
  SECS=21.18,       TSTART=77.9126251247047,  INJECT=24 *
  XS=-1012.0492,           YS=101.34626,           ZS=-55.39637 *
  DXS=546.30224,           DYS=5265.8885,          DZS=-346.71297 *
  ISCALE=7,                OSCALE=7,               TMAX=100. *
  IPRINT=10,               PRTG1=2.,2.,            PRTG3=2.,2. *
PRTG13=2.,2.,        TSTOP = 4*
  OMAX=4.,                 LONSTP=-30.,            ATYPE=3,0,3 *
PHASE(2,1) = INTERMEDIATE PHASE
   TSTOP = 23,     IMASS = 278118.81,      TTR = .1076762750745*
PHASE(3,1) = LM SEPARATION POSITIVE IMASS1
   INJECT = 31,    IMASS = 245550.31,      TTR = 0.000*
TSTOP = 23*
ENDRUN
```

```
PHASE(1,0) = RENDEZVOUS TEST CASE
LONLS  =  .33                          *
LATLS  =  -2.85                        *
ALTLS  =  1.4642                       *
PTRLS  =  0.                           *
AZRLS  =  90.                          *
VRLS   =  0.                           *
YEAR   =  1969                         *
DAYS   =  260.                         *
HRS    =  11.                          *
MINS   =  35.                          *
SECS   =  12.5047                      *
INJECT =  21,21                        *
X      =  -1.0104341E+3, -9.9408882E+2 *
Y      =  1.3081599E+2, 9.6548876E+1 *
Z      =  2.2202726, -9.3903725 *
DX     =  6.4390141E+2, 4.728668E+2 *
DY     =  4.9307775E+3, 4.999067E+3 *
DZ     =  1.8034078E+3, 1.8204047E+3*
ISCALE =  7                            *
NVEHT  =  2                            *
NV     =  2                            *
CINL   =  .0625                        *
INITL  =  1                            *
TMAX   =  108.D0                       *
PRTG1  =2.0,2.0*
PRTG2  = 2.0,2.0*
PRTG3  =2.0,2.0*
PRTG13=2.0,2.0,      TITLE = 1.0*
PRTG11 = 2.0,2.0*
TSTART =  104.9456771598 26D0          *
IMASS = 270000.,5549.6947*
MMASS   =  4500.       *
TCINT  =  .2777777E-3                  *
ITHPR  =  10                           *
ITYPE  =  8                            *
CC = 0.0
TPF    =  .78436148                    *
TTABLE =  200.        *
SITABL =  273.0                        *
ATYPE(2) = 1,0,1*
PHASE(2B,2B) = TRANSFER COAST  *
IPRINT = 4      *
IMDC   =  0                            *
TSTOP  =  29                           *
RCUTOF =  .02                          *
RRATE  =  80.                          *
RANGE  =  5.                           *
PHASE(3B,2B) = 1ST TERMINAL RENDEZVOUS THRUST CASE J *
ATYPE(2) = 1,0,1*
ITYPE  =  8                            *
CC = 0.0
PHASE(4B,2B) = 1ST TERMINAL RENDEZVOUS COAST CASE J *
```

```
TSTOP  =  29                          *
RANGE  =  3.                          *
RRATE  =  20.                         *
PHASE(5B,2B) = 2ND TERMINAL RENDEZVOUS THRUST CASE J *
ATYPE(2) = 1,0,1*
ITYPE  =  8                           *
CC = 0.0
PHASE(6B,2B) = 2ND TERMINAL RENDEZVOUS COAST CASE J *
RANGE  =  1.                          *
RRATE  =  10.                         *
TSTOP  =  29                          *
PHASE(7B,2B) = 3RD TERMINAL RENDEZVOUS THRUST CASE J *
ATYPE(2) = 1,0,1*
ITYPE  =  8                           *
CC = 0.0
PHASE(8B,2B) = 4TH TERMINAL RENDEZVOUS COAST CASE J *
TSTOP  =  29                          *
RANGE  =  .0823                       *
RRATE  =  5.                          *
PHASE(9B,2B) = RENDEZVOUS THRUST CASE J *
ATYPE(2) = 1,0,1*
ITYPE  =  8                           *
CC = 0.0
PHASE(10,2) = DISCONTINUE VEHICLE 2 WITH MASS GIVEN
INJECT = 30,0,       TSTOP = 23*
TTR = 0.0*
ENDRUN
```

```
PHASE(1,0) = RADAR SUMMARY PRINT TEST CASE
       YEAR = 1968   , INJECT =  11          ,  11                 *
      MONTH = 2.0    ,       X =  2020.6769 ,  2950.9970          *
       DAYS = 1.0    ,       Y = -2203.9679 ,  1879.0913          *
        HRS = 15.0   ,       Z =  1902.3275 ,  568.61736          *
       MINS = 46.0   ,      DX =  18410.951 , -9922.9822          *
       SECS = 35.02  ,      DY =  17723.231 ,  19567.499          *
         NV = 2      ,      DZ =  976.31330 , -13154.265          *
      CASTP = 360.0  , SHADOW =  3.0                               *
TSTOP=20,RADPRT=5.0,5.0,SHADOW = 5.0,5.0,TOTALP=17.0,17.0,IPRINT=20
ATYPE = 3,     ATYPE(2) = 3,    ITURN = 2,2*
ANTEL1 = 90.,   ANTEL2 = 90.,     ANTAZ1 = 90.,    ANTAZ2 = 90.*
RADAR = 1,2,3,4,7,8,9,10,11,12,13,14,15,16,17,18,19,21,28,29 *
   PRRAD = 2.0, PRSHAD = 1.0
 PHASE(20,1) = TEST CASE CONTINUED
       CASTP = 180.0 , TSTOP = 20  *
       PRRAD = 1.0                 *
PHASE(10,0) = RADAR ACQ - TERM TEST CASE FOR EPO
  YEAR=1968,              INJECT= 11        , 11
  MONTH=2.,                     X=-3167.8623, -1471.4903 *
  DAYS=1.,                      Y= 215.49027, -3150.5252 *
  HRS=15.,                      Z=-1574.2633,  686.50086 *
  MINS=46.,                    DX=-5483.6816,  20979.565 *
  SECS=35.02,                  DY=-23740.970, -6994.4782 *
  NV=2,                        DZ= 7776.8889,  12857.299 *
  TSTART=.890625,              TSTOP=23 *
  TTR=1.,                      ATYPE=3,3 *
ANTEL1 = 90.,   ANTEL2 = 90.,     ANTAZ1 = 90.,    ANTAZ2 = 90.*
RADPRT = 5.,5.,       ITURN = 2,2,       TOTALP = 17.,17.*
  PRRAD=2.,                    IPRINT=1 *
  RADAR=1,2,3,4,7,8,9,10,11,12,13,14,15,16,17,18,19,21,28,29 *
ENDRUN
```

```
PHASE(1,0,2) = MULTI-CASE TEST CASE
  ATYPE=7,7,                YEAR=1967,              DAYS=306. *
  HRS=12.,                  MINS=48.,               SECS=34.8 *
  INJECT=13,                LON=-97.,               LAT=28.5 *
  ALT=612000.,              PTE=.55,                AZE=90. *
  VE=23980.,                RAGR=1,                 TSTART=3.3170249 *
  ISCALE=4,                 OSCALE=4,               ITHPR=1  *
  TOTALP=17.,               TITLE=1.,               ITYPE=11 *
  TTABLE,SIMPLE,STEP,STOARG,ARG=PLAPSE,ADD=.1E-10,FUNCT=0.0,0.0 *
  0.27777777E-4,0.0,.5E-4,0.0,.55555555E-4,175.,.625E-4,300. *
  .66666666E-4,450.,.69444444E-4,900.,.72222222E-4,1000.  *
  .77777777E-4,1200.,.80555555E-4,1400.,.83333333E-4,2000.,.86111111E-4*
  3000.,.88888888E-4,3750.,.93055555E-4,3825.,.97222222E-4,3760.*
  .10694444E-3,3850.,.11666666E-3,3750.,.125E-3,3600.,.13333333E-3 *
  3525.,.13888888E-3,3500.,.16666666E-3,3500.,1.0,3500. *
  IMASS=20000.,             MMASS=4000.,            SITABL=304.3 *
  TTR=.2E-3, TSTOP=23,      TCINT=.27777777E-4,     TMAX=3.4420249 *
PHASE(2,1) = CONSTANT THRUST
  ITYPE=11, TSTOP=23,       TTABLE=3500.,           SITABL=304.3 *
  ITHPR=1,                  TCINT=.27777777E-3,     TTR=.27777777E-2 *
PHASE(3,1) = DECAY THRUST
  ITHPR=1,                  TTR=.5E-4,              TSTOP=23 *
  ITYPE=11,                 SITABL=304.3,           TCINT=.27777777E-5 *
  TTABLE,SIMPLE,STEP,STOARG,ARG=PLAPSE,ADD=.1E-10,FUNCT=0.0,3500.*
  .27777777E-5,3350.,.55555555E-5,2800.,.83333333E-5,2200.  *
  .11111111E-4,1650.,.16666666E-4,850.,.22222222E-4,550. *
  .27777777E-4,350.,.33333333E-4,240.,.38888888E-4,150.,.41666666E-4*
  100.,.44444444E-4,60.,.47222222E-4,30.,.5E-4,0.0,.1E-3,0.0 *
PHASE(1,1,3) = THRUST TABLE TEST CASE - 2
  TTABLE,SIMPLE,STEP,STOARG,ARG=PLAPSE,ADD=.1E-10,FUNCT=0.0,0.0 *
  .27777777E-4,0.0,.5E-4,0.0,.55555555E-4,350.,.625E-4,600. *
  .66666666E-4,900.,.69444444E-4,1800.,.72222222E-4,2000. *
  .77777777E-4,2400.,.80555555E-4,2800.,.83333333E-4,4000. *
  .86111111E-4,3500.,1.0,3500. *
PHASE(3,1,3) = DECAY THRUST - 3
  TTABLE,SIMPLE,STEP,STOARG,ARG=PLAPSE,ADD=.1E-10,FUNCT=0.0,3500.*
  .27777777E-5,1675.,.55555555E-5,1400.,.83333333E-5,1100.,.11111111E-4*
  825.,.16666666E-4,425.,.22222222E-4,275.,.27777777E-4,175.,
  .33333333E-4,120.,.38888888E-4,75.,.41666666E-4,50.,.44444444E-4,30.*
  .47222222E-4,15.,.5E-4,0.0,.1E-3,0.0 *
ENDRUN
```

```
PHASE(0,0) = IMU ALIGNMENT PHASE
TSTART = 0.0D0 , TMAX = 0.0D0 , TLE = 500.0
PRTG1  = 2.0,2.0
PRTG2  = 2.0,2.0
PRTG3  = 2.0,2.0
PRTG4  = 2.0,2.0
PRTG5  = 2.0,2.0
PRTG6  = 2.0,2.0
PRTG7  = 4.0,4.0
PRTG10=2.0,2.0*
PRTG11 = 2.0,2.0
PRTG12 = 2.0,2.0
PRTG13 = 2.0,2.0
PRTG17 = 2.0
RADPRT = 0.0,0.0
SHADOW = 0.0,0.0
ATYPE3 = 5 , PHI = 28.64747 , LAMBDA = -80.63558 , LAZ = 72.0
YEAR   =  1968                          *
DAYS   =  32.                           *
HRS    =  15.                           *
MINS   =  35.                           *
SECS   =  21.18                         *
R      =  3543.9329                     *
DEC    =  32.465                        *
RA     =  -55.053                       *
V      =  25573.996                     *
PTH    =  -.001                         *
AZ     =  87.406                        *
INJECT =  12                            *
ISCALE =  7                             *
OSCALE =  7                             *
INITL = 1
TITLE  =  1.                            *
PHASE(1,1) = EARTH PARKING ORBIT CASE A
YEAR   =  1968                          *
DAYS   =  32.                           *
HRS    =  15.                           *
MINS   =  35.                           *
SECS   =  21.18                         *
R      =  3543.9329                     *
DEC    =  32.465                        *
RA     =  -55.053                       *
V      =  25573.996                     *
PTH    =  -.001                         *
AZ     =  87.406                        *
INJECT =  12                            *
RAGR   =  18
ITURN = 2
ATYPE1 = 3
ANTEL1 = 0.0
ANTEL2 = 0.0
ANTAZ1 = 0.0
ANTAZ2 = 0.0
```

```
RADAR = 18,19,20,21,22,23,24,25,26,27,28,29,30,35
ELMIN = 3.0
TSTART =  .18717777D0                    *
T1E = 500.0
TMAX   =  2.661999158721470D0            *
T1D = 0.5
PHASE(2,1) =   TRANSLUNAR COAST TO T AND D PITCH MANUEVER CASE A
ITURN = 2
ATYPE1 = 3
YEAR   =  1968                           *
DAYS   =  32.                            *
HRS    =  15.                            *
MINS   =  35.                            *
SECS   =  21.18                          *
X      =  -2537.6295                     *
Y      =  -2557.8338                     *
Z      =  -118.09878                     *
DX     =  18737.483                      *
DY     =  -25146.609                     *
DZ     =  16949.291                      *
INJECT =  11                             *
TSTART =  2.751999140D0                  *
TMAX = 3.001999140D0
T1D = 0.0625
PHASE(3,1) = PITCH DOWN 41 DEG CASE A
ITURN = 5
PCOEF1 = -0.3
TMAX = 3.039962962960D0
T1D = 0.0625
PHASE(4,1) = ATTITUDE HOLD CASE A
ITURN = 5
PCOEF1 = 0.0,0.0,0.0,0.0,0.0,0.0
TMAX = 4.751999140D0
T1D = 1.0
PHASE(5,1) = TRANS LUNAR COAST TO LOI INITIATION CASE A
YEAR   =  1968                           *
DAYS   =  32.                            *
HRS    =  15.                            *
MINS   =  35.                            *
SECS   =  21.18                          *
X = 9980.6427
Y = -5557.3700
Z = 6162.3700
DX = 17218.359
DY = 1611.6743
DZ = 6541.1802
INJECT = 11
TSTART = 3.751999140D0
TMAX =   4.751999140D0
T1D = 0.25
PHASE(5,1) = TRANS LUNAR COAST TO LOI INITIATION CASE A
TITLE =1.0*
TSTART = 4.751999140D0
```

```
TMAX    =  76.9062153697014D0        *
TSTOP   =  0                         *
T1D = 1.0
ATYPE1 = 9
ITURN = 3
ROLL1   = 90.0,0.0,0.0
IROLL1 = 0.2
INITL = 1
PHASE(6,1) = LUNAR ORBIT INSERTION THRUST  CASE A
INJECT =  -1                         *
ITYPE   =  1                         *
CC     = 1.0
ATYPE1 = 1,0,1
IMASS   =  89667.793                 *
SITABL =  319.                       *
TTABLE=20000.*
MMASS   =  50000.                    *
ISCALE =  7                          *
LATLS   =  .3333                     *
LONLS   =  24.83333                  *
AZRLS   =  -85.155                   *
ALTLS   =  79.25                     *
VRLS    =  5300.                     *
PTRLS   =  0.                        *
TTCL    =  9.                        *
TMAX    =  200.D0                    *
TCINT   =  .13888889E-3              *
ITHPR = 60
PHASE(7,1) = LPO TO LEM MANUEVER INITIATION CASE A
ITURN = 2
ATYPE1 = 3,0,0
ROLL1   = 0.0,0.0,0.0
TSTOP   =  4                         *
OMAX    =  4.                        *
LONSTP =  -30.                       *
T1D = 1.0
PHASE(8,1) =   INITIALIZE LEM DESCENT CASE A *
ITURN = 2
ATYPE1 = 3
ROLL1 = 0.0,0.0,0.0
LONLS   =  24.83333                  *
LATLS   =  .3333                     *
ALTLS   =  -.75                      *
PTRLS   =  0.                        *
AZRLS   =  90.                       *
VRLS    =  0.                        *
RMINL   =  0.
ISCALE =  7                          *
INJECT = -1
TSTOP   =  24
TMS     =  .5                        *
TABC    =  0.                        *
ALSC    =  15.20                     *
```

```
TPF     =  .18283333                    *
THB     =  .9921E-2                     *
AHB     =  1.746
RTH     =  .27488                       *
TMAX    =  100.D0                       *
T1D = 0.5
PHASE(9,1) = LEM CSM SEPARATION
ATYPE2 = 3,0,6
DTLAND = 1.148
ROLL1 = -90.0,0.0,0.0
CC     = 1.0
ITYPE   =  6                            *
IMDC    =  1                            *
XMTOV =.75*
IMASS2=32568.5*
MMASS   =  12000.                       *
TTABLE=    200.
SITABL     =273.       *
TCINT   =  .27777777E-3                 *
ITHPR   =  20                           *
PHASE(10,1) =  COAST TO HOHMANN TRANSFER CASE A *
VLIST1=ALTS,SRANG,IGA,MGA,OGA,T,DXS,DYS,DZS,TM,ENDLST*
VLIST2=ALTS,SRANG,IGA,MGA,OGA,T,DXS,DYS,DZS,TM,ENDLST*
ITURN1 = 2,2
ATYPE1 = 3,3
TSTOP   =  23                           *
TTR     =  .5                           *
T1D = 0.5
PHASE(11,1) =   HOHMANN TRANSFER BURN CASE A *
ATYPE = 3,1
ITURN = 2
ITYPE   =  4                            *
IMDC    =  2                            *
TTABLE, SIMPLE, LINEAR, STOARG, ARG=PLAPSE
FUNCT = 0.0            ,  1050.00, 0.83333333E-3,  1050.00 *
        0.83333333E-3,  1050.00, 0.72233333E-2,  1050.00 *
        0.72233333E-2,  9713.00, 1.0           , 13984.35 *
SITABL, SIMPLE, LINEAR, STOARG, ARG=PLAPSE
FUNCT = 0.0            ,   285.00, 0.83333333E-3,   285.00 *
        0.83333333E-3,   285.00, 0.72233333E-2,   285.00 *
        0.72233333E-2,   302.00, 1.0           , 326.26268*
ITHPR = 10
PHASE(12,1) = DESCENT HOHMAN COAST
ITURN1 = 2,2
ATYPE1 = 3,3
ICA = 0
CASTP = 175.0
NVTERM = 2
TSTOP = 10
T1D = 0.25
PHASE(13,1)= IGNITION ALGORITHM (DESCENT)
IWTC    =  3                            *
ATYPE1 = 3,1 *
```

```
ITURN1 = 2,0 *
TMDC   =        9713.            *
IPCA   =        1                *
THMX   =        10500.           *
DISP = 303.15
THST  =.1,.2,.3,.4,.5,.6  *
TCINT =         .27777777E-3     *
SPI    =306.0 *
IMASS2=32180. *
MMASS =         15260.           *
THTM   =.72222222E-2 *
TABC   =        0.             *
TT     =.114 *
WLEM   =32180.  *
TF1    =.11111111E-2  *
TF2    =0.0375 *
TF3    =.11111111E-2  *
QP1FD =40.0 *
QA1FD =107.0    *
QPOFD =65.0     *
QPOXD =65.0     *
PCFOF =.50 *
CJ2F   =0.0,0.0,+2.0       *
THMOX =9878. *
H3F    =115. *
CJOF   =1.2  *
TPF    =.17351109      *
TFX    =.32777777E-1 *
CJOX   =0.49309263, PCWOF =0.58400786*
HDOT3 =-5.0 *
HDOT4 =-5.0 *
A2     =0.70,0.0,1.25      *
ATHD   =0.0      *
ILPTR =4         *
ITYPE=5 , NTHRUS=1 , IMDC=-2 *
TTABLE , MASTER , STEP , STOARG , ARG=THRSW *
FUNCT=0.0 , 1 , 1.0 , 2 , 2.0 *
TTABLE(2,1) = SIMPLE , LINEAR , STOARG , ARG=PLAPSE *
FUNCT=0.0 , 1050.0 , 0.72222222E-2 , 1050.0 , 0.72222222E-2 *
            9713.0 , 1.0,11418.7 *
TTABLE(2,2)= SIMPLE , LINEAR , STOARG , ARG=THRM , ERO=1 *
FUNCT=0.0 , 1050.0 ,1050.0 , 1050.0 , 6300.0 , 6300.0 *
SITABL , MASTER , STEP , STOARG , ARG=THRSW *
FUNCT=0.0 , 1 , 1.0 , 2 , 2.0 *
SITABL(2,1) = SIMPLE , LINEAR , STOARG , ARG=PLAPSE *
FUNCT=0.0 , 285.0 , 0.72222222E-2 , 285.0 , 0.72222222E-2 *
            326.0 , 1.0 , 281.0 *
SITABL(2,2)= SIMPLE , LINEAR, STOARG , ARG=THRM , ERO=1 *
FUNCT=0.0 , 285.0 , 1050.0 , 285.0 , 2100.0 , 298.6 , 3150.0 *
            301.0 , 4200.0 , 302.0 , 5250.0 , 302.6 *
PHASE(14,1) = TRIM PHASE OF DESCENT  *
ATYPE = 3,1 , ITURN = 2,0
ROLL2 = 0.,0.,180.*
```

```
TTABLE,MASTER,STEP,STOARG,ARG=THRSW,FUNCT=0.0,1,1.0,2,2.0*
TTABLE(2,1),SIMPLE,LINEAR,STOARG,ARG=PLAPSE,FUNCT=0.0,1050.0 *
0.72222222E-2,1050.0,0.72222222E-2,9713.0,1.0,11418.7 *
TTABLE(2,2),SIMPLE,LINEAR,STOARG,ARG=THRM,ERO=1,FUNCT=0.0*
1050.,1050.,1050.,6300.,6300.*
SITABL,MASTER,STEP,STOARG,ARG=THRSW,FUNCT=0.0,1,1.0,2,2.0*
SITABL(2,1),SIMPLE,LINEAR,STOARG,ARG=PLAPSE,FUNCT=0.0,280.3 *
0.72222222E-2,280.3,0.72222222E-2,306.0,1.0,280.98 *
SITABL(2,2),SIMPLE,LINEAR,STOARG,ARG=THRM,ERO=1,FUNCT=0.0,*
285.,1050.,285.,2100.,298.6,3150.,301.,4200.,302.,*
5250.,302.6*
THRTHM=5460. , THRLNO=6090. *
ITYPE =5 *
ILPTR =4 *
IPCA  =1 *
IMDC  =-1 *
PHASE(15,2)=NOMINAL FIRST BRAKING PHASE
IMDC  =0 , ITYPE =5 *
ITURN = 2*
PHASE(16,2)=NOMINAL FINAL BRAKING PHASE
IMDC  =1 , ITYPE =5 *
ITURN = 2
PHASE(17,2)=NOMINAL PITCH TO HIGATE
IMDC  =2 , ITYPE =5 *
ITURN = 2
PHASE(18,2)=NOMINAL FINAL APPROACH PHASE
ITURN = 2
IMDC  =3 , ITYPE =5*
PHASE(19,2)=NOMINAL PITCH TO VERTICAL DECSENT
ITURN = 2
IMDC  =4 , ITYPE =5 *
PHASE(20,2) =  VERTICAL DESCENT CASE A *
ITURN = 2
IMDC  =5 , ITYPE = 5*
PHASE(21,1) =  COAST TO PLANE CHANGE CASE A *
VLIST1=DELETE*
VLIST2=DELETE*
OSCALE = 7
ISCALE = 7
ITURN1 = 2
ATYPE1 = 3
NV     =  1                          *
NVEHT  =  1                          *
TSTOP  =  4                          *
OMAX   =  11.                        *
LONSTP =  114.83333                  *
TMAX   =  200.                       *
PHASE(22,1) =  CSM DELTA AZ CASE A *
ITYPE  =  1                          *
CC     = 1.0
ATYPE1 = 1,0,1
TTCL   =  2.54                       *
LATLS  =  .333                       *
```

```
LONLS   =  24.83333                    *
AZRLS   =  -85.17165                   *
ALTLS   =  79.8                        *
VRLS    =  5300.                       *
PTRLS   =  0.                          *
IMASS   =  32722.924                   *
MMASS   =  20000.                      *
TTABLE = 20000.*
SITABL = 313.*
ITHPR = 1
PHASE(23,1) =  INITIALIZE LEM ASCENT CASE A *
ITURN1 = 2 , ATYPE1 = 3
LATLS   =  .3333                       *
LONLS   =  24.83333                    *
ALTLS   =  -.75                        *
PTRLS   =  0.                          *
AZRLS   =  90.                         *
VRLS    =  0.                          *
CINL    =  .015625                     *
NV      =  1                           *
NVEHT   =  1                           *
TSTOP   =  26                          *
TMAX    =  130.D0                      *
TMS     =  2.3                         *
APHD    =  200.                        *
ATHD    =  0.                          *
RDD     =  .27515039                   *
ALSC    =  25.2                        *
RTH     =  .2813556                    *
ALH     =  90.                         *
RCUTOF  =  .29138002                   *
ATHR    =  1.86                        *
BETA = 9.0202665
TABC=0.108962937483
XMTOV   =  100.                        *
IABRT   =  1                           *
DELL    =  1.3                         *
PHASE(24,1) =  MAIN ASCENT CASE A *
VLIST1=ALTS,SRANG,IGA,MGA,OGA,T,DXS,DYS,DZS,TM,ENDLST*
VLIST2=ALTS,SRANG,IGA,MGA,OGA,T,DXS,DYS,DZS,TM,ENDLST*
IMASS2=10213.1*
MMASS   =  4500.                       *
TTABLE  =  3636.                       *
SITABL=    304.3      *
TVR     =  .33333333E-2                *
CC      = 1.0
ITYPE  =        7              *
ATYPE = 3,6,0,6
DTLAND = 0.0
TBNC   =        0.0            *
IMDC = 2 *
ITURN = 2
TCINT   =  .27777777E-3                *
```

```
ITHPR  =        10                    *
PHASE(25,1) =  COAST IN LOWER HOHMANN AND CSI OPT CASE A *
ITURN1 = 2,2 , ATYPE1 = 3,3
T1D    =        .3              *
TSTOP = 28
XMTOV  =  100.                       *
IMDC   =  1                          *
ENDRUN
   EOF
  XQT CUR
   ERS
  TRW A
  IN A
  TRI A
  XQT LSCAR
YEAR = 1968 ,        MONTH = 2. ,          DAYS = 5. *
HRS  = 5. ,          MINS  = 37. ,         SECS = 6.126 *
TSCAN = 300.,300.,300.,300.,300.,300.,300.,300.,300.,300.,300.,300.,*
TSCAN,(13) = 300.,300.,300.,300.,300.,300.,300.,300.*
LAT    = .333,            LONG  = 24.8333,          FINCL = -175.3*
INSAVE= 1,                IVPRNT= 1*
INPHI = 1 *
PHITAB /60/ (1,1)  0., 0., 0. *
PHITAB /60/ (9,6)  -10.,-10.,-10.,-10. *
PHITAB /60/ (20,7) -120., -120., -120., -120., -120., -120., -120. *
                   -120., -120., -120., -120., -120., -120. *
ENDCAS
IPLOT = 1 *
ENDCAS
ISTOP = 1*
ENDCAS
```

```
PHASE(1,0) = ORBITAL ELEMENTS INPUT TEST CASE
        OSMA=112011.757,ORECC=.968304528,OINC=28.1545268,
        ARGPC=-43.2907986,RAAN=151.593668 ,ANOMN=.0553515922,
 YEAR=1971,DAYS=31.0,HRS=0.85351563,MONTH=3.0,SECS=0.0,INITL=1
 TSTART=0.0D0,TMAX=.066667  ,T1E=.002777,T1D=.000555
      PRTG2=2.0 ,PRTG3=2.0 ,PRTG4=2.0 ,PRTG17=2.0
       INJECT=18,ISCALE=7,MINS=0.0,OSCALE=7 *
PHASE(2,0)
 OSMA=-4983.95496,ORECC=1.20438629,OINC=147.320869,ARGPC=-10.178669,
      YEAR=1968 ,DAYS=32.0 ,HRS=15.0  ,MINS=35.0,SECS=21.18 ,INITL=1
      TSTART=2.75199914D0  ,TMAX=2.82199914D0    ,T1D=.0005 ,T1E=.002777
      PRTG2=2.0 ,PRTG3=2.0 ,PRTG4=2.0 ,PRTG17=2.0
 RAAN=175.562613,ANOMN=-1.0716E-6,INJECT=27,ISCALE=7,OSCALE=7 *
PHASE(3,0)
       APOR=1018.49257,PERR=1018.49257,OINC=173.273885,PLATP=4.50326704*
 YEAR=1971,DAYS=4.0,MONTH=4.0,HRS=14.85351563,MINS=0.0,SECS=0.0
      TSTART=0.0D0          ,TMAX=.066667,        ,T1D=.0005 ,T1E=.002777
             PLON=139.187920,ANOMT=90.,D=1.
      PRTG2=2.0 ,PRTG3=2.0 ,PRTG4=2.0 ,PRTG17=2.0
      INJECT=28,ISCALE=7,OSCALE=7*
PHASE(4,0)
       APOR=1018.49257,PERR=1018.49257,OINC=173.272914,PLATP=3.32305576*
      PLON=27.9983909,ANOMT=177.967882,D=-1.
 YEAR=1971,DAYS=4.0,MONTH=4.0,HRS=19.55148315,MINS=0.0,SECS=0.0
      TSTART=0.0D0          ,TMAX=.066667    ,     T1D=.0005 ,T1E=.002777
      PRTG2=2.0 ,PRTG3=2.0 ,PRTG4=2.0 ,PRTG17=2.0
               INJECT=28,ISCALE=7,OSCALE=7 *
ENDRUN
```

```
PHASE(1,0) = ITERATOR TEST CASE(REENTRY COAST PHASE)    PHASE 1
   YEAR=1966,            MONTH=12.,            DAYS=1.,    HRS=17. *
  TITLE=1.,              IPRINT=1000000*
ISCALE = 4,      OSCALE = 4,     CINE = .0016666666*
PRTG1  = 2.0            ,PRTG4  = 2.0                ,PRTG7  = 2.0*
                         PRTG13 = 2.0                ,PRTG17 = 2.0*
   TSTART=329.55,        RMINE=0.,             IMASS =23204. *
   AREA=129.9,           INJECT=12,            RAGR=1 *
   RA=31.421547,         DEC=-2.3442014,       R=21487064.01 *
   PTH=.49757854,        AZ=122.41578,         V=25705.493 *
ATUL=1.0E10,             CDRAG1=2.,            ATYPE=7,0,7*
  TMAX=331.,             TSTOP=23,             TTR=.852 *
PHASE(2,1) = COAST ITERATION TO HIT LONG                          PHASE 2
   LOOP =1 ,ITERPR= 7  *
  PRTG1=2.0,  *
  PRTG4=2.0   *
  PRTG7=2.0   *
  PRTG13 =2.0 *
  PRTG17 =2.0 *
  IPRINT =10  *
  INDEPV(1)=TTR,IPHASE=2,NLOOP=1,PERT= .0005*
  INDEPV(1)=TTR,IPHASE=7,NLOOP=1,PERT=-.0005*
   DEPV(1)=LON , IPHASE=9, NLOOP=1, TARGET=300., NEGTOL=.001,POSTOL=.001
         CLASS=1.0 ,WFACT=1.0 *
   DEPV(1)=LAT , IPHASE=9, NLOOP=1, TARGET=31.0,NEGTOL=.001,POSTOL=.001
         CLASS=1.0 ,WFACT=1.0 *
  TSTOP=23,              TTR=.078894,          CDRAG1=2. *
PHASE(3,1) = 15 SEC ULLAGE BURN                                   PHASE 3
   ATYPE=3,0,3,          ROLL =-133.6157,      ITURN=2 *
   ITYPE=11,             TTABLE=384.4,         WRTABL=1.4 *
   TCINT=.27777777E-3,   CDRAG1=2.,            ITHPR=100000*
  TSTOP=23,              TTR=.41666666E-2 *
PHASE(4,1) = SPS DEORBIT BURN                                     PHASE 4
   ATYPE=3,0,3,          ROLL =-133.670116,    ITURN=2,*
   ITYPE=11,             TTABLE=21254.,        WRTABL=68.078155 *
   TCINT=.13888888E-3,   CDRAG1=2.*
  TSTOP=23,              TTR=.357204888E-2 *
PHASE(5,1) = COAST TO 400K FT                                     PHASE 5
   TSTOP=17,             RALTFT=400000.,       ATYPE=7, *
ATYPE=13,      ITURN=8,      CDRAG1=2.0*
  IMASS =12074.,
PHASE(6,1) = COAST TO 300K FT                                     PHASE 6
   TSTOP=17,             RALTFT=300000.*
ATYPE=13,      ITURN=8,      BKANG=60.0*
CNY01 = 0.,     CINE = .0016666666*
   CDRAG1,SIMPLE,LINEAR,STOARG,ERO=1,ARG=MACH,FUNCT=.4,.89535 *
   .7,.96529,.9,1.0409,1.1,1.1225,1.2,1.0807,1.35,1.3134,1.65 *
   1.3282,2.0,1.3242,2.4,1.3230,3.0,1.2997,4.0,1.256,6.0,1.3316 *
   25.0,1.3316 *
   CNP01,SIMPLE,LINEAR,STOARG,ERO=1,ARG=MACH,FUNCT=.4,.31295 *
   .7,.34045,.9,.41930,1.1,.60264,1.2,.63109,1.35,.54996,1.65 *
   .53385,2.0,.52342,2.4,.49167,3.0,.45973,4.0,.42814,6.0,.37254 *
   25.0,.37254 *
```

```
   CG1=1.,                CPP1=1.,              RMINE=0. *
PHASE(7,2) = COAST ITERATION TO REVERSE BANK FOR LAT                    PHASE 7
ITURN=8,      CG1=1.0,      CPP1=1.0*
  TSTOP=23,               TTR=.055114 *
 ATYPE = 13, BKANG = 60.0*
PHASE(8,2)= REVERSE BANK AT 15 DEG PER SEC                              PHASE 8
  TSTOP=23,               TTR=.0022222222*
ITURN=8,      RBKANG=-15.0,      CINE=.27777777E-3*
PHASE(9,2)= COAST TO 25K FT                                             PHASE 9
  TSTOP=17,               RALTFT=25000.,       ITURN=8*
CINE = .0016666666*
  ENDRUN
```

```
PHASE( 1,0) = ARM-05 GENERALIZED ITERATOR TEST CASE * P-1  P+E GUIDANCE
       YEAR = 1968   , INJECT = 12
      MONTH = 2.0    ,      R = 80947058.0
       DAYS = 1.0    ,     RA = 104.8752
        HRS = 15.0   ,    DEC = -28.660666
       MINS = 35.0   ,      V = 8409.76867
       SECS = 21.18  ,     AZ = 99.70327
     ISCALE = 4      ,    PTH = 0.0
     OSCALE = 4      ,  TSTOP = 23
     TOTALP = 17.0   ,    TTR = 2.4
       LOOP = 1    , SELMAT = 10 , ITERPR = 7
  INDEPV(1) = TTR , IPHASE = 1  ,  NLOOP = 1 ,  PERT = 0.001
  INDEPV(1) = ECC , IPHASE = 2  ,  NLOOP = 1 ,  PERT = 0.001
  INDEPV(1) = SLR , IPHASE = 2  ,  NLOOP = 1 ,  PERT = 100000.0
    DEPV(1) = ALT , IPHASE = 3  ,  NLOOP = 1 , CLASS = 1.0
                    TARGET = 4.0E5   , NEGTOL = 1.0E3 , POSTOL = 1.0E3
    DEPV(1) = PTH , IPHASE = 3  ,  NLOOP = 1 , CLASS = 1.0
                    TARGET = -7.13   , NEGTOL = 0.01  , POSTOL = 0.01
    DEPV(1) = V   , IPHASE = 3  ,  NLOOP = 1 , CLASS = 1.0
                    TARGET = 36333.0 , NEGTOL = 5.0   , POSTOL = 5.0
PHASE( 2,1) = ARM-05 GENERALIZED ITERATOR TEST CASE * P-2  P+E GUIDANCE
      ITYPE = 10     , TTABLE = 21500.0
       IMDC = 1      , SITABL = 311.4137
         CC = 0.5    ,  MMASS = 1000.0
        ECC = 0.90   , IMASS1 = 50016.82
        SLR = 4.1E7
PHASE( 3,1) = ARM-05 GENERALIZED ITERATOR TEST CASE * P-3  P+E GUIDANCE
      TSTOP = 23     ,    TTR = 0.66666667E-1
PHASE(10,0) = ARM-05 GENERALIZED ITERATOR TEST CASE * P-10 ONE VEHICLE
       YEAR = 1968   , INJECT = 12
      MONTH = 2.0    ,      R = 3543.9327
       DAYS = 1.0    ,     RA = -50.29963
        HRS = 15.0   ,    DEC = 32.465
       MINS = 35.0   ,      V = 25573.994
       SECS = 21.18  ,     AZ = 87.406
       TMAX = 0.1D0  ,    PTH = -0.001
      TITLE = 1.0    ,   RAGR = 1
         NV = 1      , TOTALP = 17.0
       LOOP = 2    , SELMAT = 2  , ITERPR = 1
  INDEPV(1) = V   , IPHASE = 10 ,  NLOOP = 2   ,  PERT = 10.0
  INDEPV(1) = PTH , IPHASE = 10 ,  NLOOP = 2   ,  PERT = 0.05
  INDEPV(1) = AZ  , IPHASE = 10 ,  NLOOP = 2   ,  PERT = 0.05
    DEPV(1) = R   , IPHASE = 40 ,  NLOOP = 2   , CLASS = 1.0
                    TARGET = 3750.0 , NEGTOL = 50.0 , POSTOL = 50.0
    DEPV(1) = RA  , IPHASE = 40 ,  NLOOP = 2   , CLASS = 1.0
                    TARGET = 56.0 , NEGTOL = .01 , POSTOL = .010
    DEPV(1) = DEC , IPHASE = 40 ,  NLOOP = 2   , CLASS = 1.0
                    TARGET = 0.0 , NEGTOL = .01 , POSTOL = 0.01
PHASE(20,1) = ARM-05 GENERALIZED ITERATOR TEST CASE * P-20 ONE VEHICLE
       TMAX = 0.2D0
PHASE(30,1) = ARM-05 GENERALIZED ITERATOR TEST CASE * P-30 ONE VEHICLE
       TMAX = 0.3D0
PHASE(40,1) = ARM-05 GENERALIZED ITERATOR TEST CASE * P-40 ONE VEHICLE
```

```
        TMAX = 0.4D0
ENDRUN
```

```
PHASE(50,0) = ARM-05 GENERALIZED ITERATOR TEST CASE * P-50 TWO VEHICLES
       YEAR = 1968   , INJECT = 12          , 12
      MONTH = 2.0    ,      R = 3543.9327   , 3543.9951
       DAYS = 1.0    ,     RA = -50.29963   , -16.88325
        HRS = 15.0   ,    DEC = 32.465      , 30.277778
       MINS = 35.0   ,      V = 25573.994   , 25574.925
       SECS = 21.18  ,     AZ = 87.406      , 102.59456
       TMAX = 0.1D0  ,    PTH = -0.001      , 0.0054425
      TITLE = 1.0    ,   RAGR = 1           , 1
         NV = 2      , TOTALP = 17.0        , 17.0
      RMINE = 0.25   ,   ATLL = -2.0E8      , -2.0E8
       LOOP = 3    , SELMAT = 10 , ITERPR = 7
  INDEPV(1) = V    , IPHASE = 50 ,  NLOOP = 3 ,   PERT = +0.2
  INDEPV(1) = AZ   , IPHASE = 50 ,  NLOOP = 3 ,   PERT = +0.01
  INDEPV(1) = PTH  , IPHASE = 50 ,  NLOOP = 3 ,   PERT = +0.01
  INDEPV(2) = V    , IPHASE = 50 ,  NLOOP = 3 ,   PERT = -0.2
  INDEPV(2) = AZ   , IPHASE = 50 ,  NLOOP = 3 ,   PERT = +0.01
  INDEPV(2) = PTH  , IPHASE = 50 ,  NLOOP = 3 ,   PERT = +0.01
    DEPV(1) = R    , IPHASE = 60 ,  NLOOP = 3 , TARGET = 3544.2700
                     NEGTOL = 1.0E-3 , POSTOL = 1.0E-3 , CLASS = 1.0
    DEPV(1) = RA   , IPHASE = 60 ,  NLOOP = 3 , TARGET = 22.7
                     NEGTOL = 1.0E-5 , POSTOL = 1.0E-5 , CLASS = 1.0
    DEPV(1) = DEC  , IPHASE = 60 ,  NLOOP = 3 , TARGET = 20.0
                     NEGTOL = 1.0E-5 , POSTOL = 1.0E-5 , CLASS = 1.0
    DEPV(2) = R    , IPHASE = 60 ,  NLOOP = 3 , TARGET = 3544.2700
                     NEGTOL = 1.0E-3 , POSTOL = 1.0E-3 , CLASS = 1.0
    DEPV(2) = RA   , IPHASE = 60 ,  NLOOP = 3 , TARGET = 22.7
                     NEGTOL = 1.0E-5 , POSTOL = 1.0E-5 , CLASS = 1.0
    DEPV(2) = DEC  , IPHASE = 60 ,  NLOOP = 3 , TARGET = 20.0
                     NEGTOL = 1.0E-5 , POSTOL = 1.0E-5 , CLASS = 1.0
PHASE(60,1) = ARM-05 GENERALIZED ITERATOR TEST CASE * P-60 TWO VEHICLES
       TMAX = 0.2D0
PHASE(70,1) = ARM-05 GENERALIZED ITERATOR TEST CASE * P-70 TWO VEHICLES
       TMAX = 0.3D0
PHASE(80,1) = ARM-05 GENERALIZED ITERATOR TEST CASE * P-80 TWO VEHICLES
       TMAX = 0.4D0
ENDRUN
```

```
PHASE(0,0)=TWO VEHICLE COAST CASE NO. 1*
YEAR=1968,     DAYS=32.,       HRS=15.,        MINS=35.,       SECS=21.18*
AREA=100.0,100.0*
NV=2,          INJECT=12,12*
RA=-55.053,-55.053*
DEC=32.465,32.465*
R=3543.9329,3543.9329*
PTH=-.001,-.001*
AZ=87.406,87.406*
V=25573.996,25573.996*
RAGR=1,1*
CDRAG1=1.2,          CDRAG2=2.0*
ATUL =1.0E15,1.0E15*
CG1=60.,             CG2=30.*
CGP1=.5,             CGP2=1.0*
CGY1=.25,            CGY2=1.0*
CPP1=80.,            CPP2=40.0*
CPY1=70.,            CPY2=50.0*
TMAX=.25* =15.0 MIN
TOTALP=17.0,17.0*
RRNE=10.*
CINE=.016666666*    =1.0 MIN
IPRINT=1* PRINT AT STEP SIZE
TITLE=1.*
INITL=1*
VLIST1 = X,Y,Z,DX,DY,DZ,RA,DEC,ENDLST*
VLIST2 = X,Y,Z,DX,DY,DZ,RA,DEC,ENDLST*
ENDRUN
  EOF
  XQT CUR
   ERS
  TRW A
  IN  A
  XQT REPORT
  1
  2  1
 0
  1
         6          0          0          1A         0          1
5            ***********************************************************
X            ***********************************************************
X
X
X                                                                SAMPLE  TEST
X            CASE A
X
X
X            ***********************************************************
X            ***********************************************************
  8
X      Y      Z      DX     DY     DZ     RA     DEC
     1      2      1      1      1      1      1      1
     0      0      0      0      0      0      0      0
```

```
(10(2X,1E10.4))
1              X              Y              Z              DX             DY
                   DZ             RA             DEC
  0  0
```

```
PHASE(1,0)= CALL LAUNCH FOR EPOI CONDITIONS
ISKIP =0*
CASE  =201072.1*
YEAR  =1968*
MONTH =2.*
DAYS  =1.*
HRS   =15.*
MINS  =37.*
SECS  =17.040*
LAZM  =72.*
C3TLI =-.432612*
SIGTLI=7.694850*
DELTLI=.590504*
DIREC = 1.*
TITLE =0.*
PRTG1 =1.*
PRTG2 =0.*
PRTG3 =1.*
PRTG4 =1.*
PRTG5 =0.*
PRTG6 =0.*
PRTG7 =1.*
PRTG13=0.*
PRTG17=1.*
CINE  =.015625*
CINNE =.5*
CINNL =.25*
CINL  =.015625*
ISCALE=    7          *
OSCALE=    7
RMINE =    0.0
RMINL =    0.
GAMLUN=    0.
ITERAT=(1) 11*
PHASE(1,1)= EARTH PARKING ORBIT
VLIST1=CASE*
KDAY,MTH,YEAR,HRS,MINS,SECS*
CASE*
KDAY,MTH,YEAR,KHRS,KMIN,SEC*
T*
X,Y,Z,DX,DY,DZ*
ALT,LAT,LON,V,PTH,AZ*
R,DEC,RA,DEM*
RAS,RAM,RAN,INC*
C3TLI,DAZTLI,ENDLST*
BGEND =1*
INJECT=-1*
ISCALE=7*
OSCALE=7*
IPRINT=50000*
T1E   =10.*
TMAX  =2.665071748D0*
TOTALP=15.*
```

```
PRTG17=2.*
ITERAT=(1) 0*
ITERAT=(2) 0*
PHASE(2,1)= CALL TLIS FOR TLI STATE
ITERAT=(1) 12*
PHASE(2,1)= TLI STATE TO PERICYNTHION
VLIST1=CASE*
KDAY,MTH,YEAR,KHRS,KMIN,SEC*
T*
X,Y,Z,DX,DY,DZ*
ALT,LAT,LON,V,PTH,AZ*
R,DEC,RA,DEM,RAS,RAM*
RAN,INC,ECC,SMA,RP,APF,INMP,ENDLST*
BGEND =1*
INJECT=-1*
TSTOP =8*
TMAX  =200.D0*
ITERAT=(1) 0*
ITERAT=(2) 0*
PHASE(3,1)= PERICYNTHION TO EARTH ENTRY
VLIST1=CASE*
KDAY,MTH,YEAR,KHRS,KMIN,SEC*
T*
ALT,LAT,LON,V,PTH,AZ*
XL,YL,ZL,DXL,DYL,DZL*
ALTS,LATS,LONS,VRS,PTR,AZR*
R,DEC,RA,DEM,RAS,RAM*
LIN,LAN,RAN,INC,INMP,DEMP,RAMP,ENDLST*
BGEND =1*
TSTOP =17*
RALTFT=65.832*
PHASE(4,1)= CIRCUMLUNAR EARTH LANDING
VLIST1=DELETE*
ITERAT=(1) 15*
ITERAT=(3) 6*
ENTRGE=2000.*
PHASE(4,1)= EARTH STATE TO LUNAR REFERENCE POINT
INJECT=12*
VLIST1=DELETE*
IPRINT=50000*
TMAX  =77.D0*
ITERAT=(1) 0*
ITERAT=(2) 0*
PHASE(4,2)= LPOI ITERATION PHASE
VLIST1=DELETE*
TOTALP=0.*
PRTG17=0.*
ATYPE=  1*
DMASS =838.3* 116.5, 370.8, 50.9, 184.7, 115.4
DELL  =0.*          DELTA V TL MIDCOURSE
IMASS =94150.*
MMASS =22730.*
TTABLE=20000.*    THRUST MAG. OF CSM
```

```
SITABL= 314.9*      SPECIFIC IMPULSE OF SPS ENGINE
SPI    =314.9*                    ISP OF SPS
PCBR   =-1.              * 0.=PERI-BRAKE,-1.=PRE-PC,AND 1.=PO/ -P 080
PCBR   =1.               * 0.=PERI-BRAKE,-1.=PRE-PC,AND 1.=PO/ -P 090
PCBR   =0.0               * 0.=PERI-BRAKE,-1.=PRE-PC,AND 1.=PO/ -P 100
DELT   =0.*
DELT   =224.102* DT(SECS) FROM PC FOR LOII *+ = BEFORE AND - = AFTER
DELT   =209.08*
HLPO   =79.25*MUST BE INPUT *DESIRED ALTITUDE OF LPO
TOLLI  =    2.                          * LONGITUDE AND INCLINATION TOLERANC
TTCL   =19.198*
TCINT  =.27777777E-3*
ITHPR  =2000*
LATLS  =.3333*
LONLS  =24.8333*
AZRLS  =-80.732*
ALTLS  =79.25*
VRLS   =5300.*
PTRLS  =    0.
TSTOP  =8*
TMAX   =80.D0*
ITERAT=(1) 13*
ITERAT=(3) 1*
PHASE(4,2)= LUNAR REFERENCE POINT TO LPOI INITIATION
VLIST1=DELETE*
TOTALP=15.*
PRTG17=2.*
ITERAT=(1) 0*
ITERAT=(2) 0*
PHASE(4,2)= LUNAR PARKING ORBIT INSERTION THRUST
VLIST18+ASE*
KDAY,MTH,YEAR,KHRS,KMIN,SEC*
T*
XL,YL,ZL,DXL,DYL,DZL*
ALTS,LATS,LONS,VRS,PTR,AZR*
MASS,FUEL,DELV*
TI,LATSI,LONSI,ALTSI,DTS,TAI*
LIN,LAN,ECCS,TAS,RPS,SMAS,APFS,INCS,RANS,ENDLST*
BGEND  =1*
ITYPE  =1*
ATYPE  =1*
CC     =1.*
TTCL   =19.198*
IWTC   =1*        DMASS 1ST AND DELL  2ND
DMASS  =838.3* 116.5, 370.8, 50.9, 184.7, 115.4
DELL   =0.*          DELTA V TL MIDCOURSE
IMASS  =94150.*
MMASS  =22730.*
TTABLE=20000.*
SITABL=314.9*
SPI    =314.9*
ITHPR  =2000*
TCINT  =.27777777E-3*
```

```
TMAX   =250.D0*
PHASE(5,2)= LPO COAST TO 1ST PASS OVER LLS
VLIST1=CASE*
KDAY,MTH,YEAR,KHRS,KMIN,SEC*
T*
XL,YL,ZL,DXL,DYL,DZL*
ALTS,LATS,LONS,VRS,PTR,AZR*
LIN,LAN,ENDLST*
BGEND =1*
TSTOP =4   *
OMAX   =10.*
LONSTP=24.83333*
TMAX   =300.D0*
PHASE(5,2)= LPO COAST TO CSM PLANE CHANGE
VLIST1=DELETE*
TSTOP =4   *
OMAX   =9.*
LONSTP=114.8333*
TMAX   =300.D0*
ITERAT=(1) 0*
ITERAT=(2) 0*
PHASE(6,2)=  CSM PLANE CHANGE BURN ITERATION
VLIST1=DELETE*
ITERAT=(1) 14*
ITERAT=(3) 1*
PHASE(6,2)=  CSM PLANE CHANGE BURN
VLIST1=CASE*
KDAY,MTH,YEAR,KHRS,KMIN,SEC*
T*
XL,YL,ZL,DXL,DYL,DZL*
ALTS,LATS,LONS,VRS,PTR,AZR*
MASS,FUEL,DELV*
LIN,LAN,ECCS,TAS,RPS,SMAS,APFS,INCS,RANS,ENDLST*
BGEND =1*
ITYPE =1*
ATYPE =1*
IWTC   =3*        DMASS ONLY
DMASS =32787.8* 32000 LM + 600 MEN + 187.8 RCS
CC     =1.*
MMASS =22730.*
TTABLE=20000.*
SITABL=314.9*
SPI    =314.9*
TTCL   =4.58*
ITHPR =1000*
TCINT =.27777777E-3*
PHASE(7,2)=  CSM LPO COAST TO 2ND PASS OVER LLS
VLIST1=CASE*
KDAY,MTH,YEAR,KHRS,KMIN,SEC*
T*
XL,YL,ZL,DXL,DYL,DZL*
ALTS,LATS,LONS,VRS,PTR,AZR*
LIN,LAN,ENDLST*
```

```
BGEND =1*
TSTOP =4*
OMAX  =3.*
LONSTP=24.8333*
PHASE(8,2)=  CSM LPO COAST TO INST TE INJECTION
VLIST1=DELETE*
TSTOP =4
OMAX  =9.*
LONSTP=-145.18*       LON OF 1ST INST TE TRAJ
TMAX  =250.D0*
ITERAT=(1) 0*
ITERAT=(2) 0*
PHASE(8,2)=  TRANSEARTH ITERATION PHASE
VLIST1=DELETE*
TOTALP=0.*
PRTG17=0.*
ATLL  =-20925738.*    -RADIUS OF EARTH IN FEET
HRPE  =21.*          *  DESIRED VACUUM PERIGEE ALTITUDE
TEST  =1.*
LONELS=-171.0*       *  EARTH LANDING SITE LONGITUDE
TEVEL =7929.*     1ST GUESS ON TEI INST VELOCITY
AZTRIG=0.*           *  1. TO USE TEAZ AND 0. TO NOT
AZTRIG=1.*           *  1. TO USE TEAZ AND 0. TO NOT
TEAZ  =-96.0*        *  1ST GUESS FOR AZ AT TEI
TEAZ  =-98.38*       *  1ST GUESS FOR AZ AT TEI
TOLLI =2.*           *  TOLERANCE ON EARTH LONGITUDE AND INCLINATION
TOLLI =.5*           *  TOLERANCE ON EARTH LONGITUDE AND INCLINATION
RALTFT=65.832*
ENTRGE=2000.*        *  DESIRED EARTH REENTRY RANGE
PTHTEI=2.3*          *  INST. TE GAMMA
EQINC =38.*          *  DESIRED EARTH RETURN INCLINATION
FTMAX =110.0    *    MAXIMUM TRANSEARTH FLIGHT TIME
TMAX  =300.D0*
DELL  =0.*           DELTA V OF LEM PICK-UP
DMASS =-540.7*   -600. MEN + 59.3 RCS
ITERAT=(1) 15*
ITERAT=(3) 1*
PHASE(8,2)=  CA BACKUP TO TE THRUST INITIATION
VLIST1=DELETE*
TOTALP=15.*
PRTG17=2.*
TSTOP =10*
CASTP =-7.3*         *  CA BACKUP FROM INST. POINT TO TI POINT
ITERAT=(1) 0*
ITERAT=(2) 0*
ITERAT=(3) 0*
PHASE(8,2)=  TRANSEARTH THRUST
VLIST1=CASE*
KDAY,MTH,YEAR,KHRS,KMIN,SEC*
T*
XL,YL,ZL,DXL,DYL,DZL*
ALTS,LATS,LONS,VRS,PTR,AZR*
MASS,FUEL,DELV*
```

```
DEM,RAS,RAM*
LIN,LAN,ECCS,TAS,RPS,SMAS,APFS,INCS,RANS,ENDLST*
BGEND =1*
TITLE =1.*
ITYPE =2*           *  TRANSEARTH THRUST
ATYPE =1*
IWTC  =4*
DELL  =0.*               DELTA V LEM PICKUP
DMASS =-540.7*  -600. MEN + 59.3 RCS
CC    =.5*
MMASS =22730.*
TTABLE=20000.*      *  THRUST MAGNITUDE OF SPS ENGINE
SITABL= 314.9*      SPECIFIC IMPULSE OF SPS ENGINE
TTCL  =.04*         *  TIME IN HRS FROM TE IGNITION POINT TO INST. POINT
TCINT =.27777777E-3*
ITHPR =2000*
ITERAT=(1) 0*
ITERAT=(2) 0*
PHASE(9,1)=  TRANSEARTH COAST TO EARTH ENTRY
VLIST1=CASE*
KDAY,MTH,YEAR,KHRS,KMIN,SEC*
T*
X,Y,Z,DX,DY,DZ*
ALT,LAT,LON,V,PTH,AZ*
R,DEC,RA,DEM,RAS,RAM,RAN,INC,ENDLST*
BGEND =1*
TITLE =0.*
TSTOP = 17*         *  CONVERGE ON EARTH PERIGEE AND RALTFT
RALTFT=65.832*         ALTITUDE OF REENTRY
TMAX  =300.D0*
RRNE  = 6.0  *
ITERAT=(1) 0*
ITERAT=(2) 0*
ITERAT=(3) 0*
PHASE(9,1)=  POWER RETURN EARTH LANDING
VLIST1=DELETE*
ITERAT=(1) 15*
ITERAT=(2) 1*
ITERAT=(3) 4*
DELL  =0.*               TE MIDCOURSE
DMASS =0.*        TE RCS
PHASE(10,1)=
VLIST1=T,ENDLST*
BGEND =1*
TSTOP =17*
TOTALP=0.*
PRTG17=0.*
ITERAT=(1) 0*
ITERAT=(2) 0*
ITERAT=(3) 0*
ENDRUN
  EOF
  XQT CUR
```

```
    ERS
   TRW A
   IN A
  XQT SUMPRT
          2         10
          6          0          0          1A         6
5            ************************************************************
             ************************************************************
             ************************************************************
             ************************************************************


               CASE(LAUNCH AZIMUTH.OPPORTUNITY) AND TIME OF LAUNCH(GMT)

               ************************************************************

     0     0     0     0     0     0
F10.1,5X,I5,3(4X,F4.0),4X,F6.3
1          CASE         YEAR    DAYS     HRS    MINS     SECS

CASE(1,1,BEG)*
YEAR(1,1,BEG),DAYS(1,1,BEG),HRS(1,1,BEG)*
MINS(1,1,BEG),SECS(1,1,BEG),ENDLST*
          6          0          0          1A         7
5            ************************************************************
             ************************************************************
             ************************************************************
             ************************************************************
X
X
                                                          EARTH ORBIT INSE
             RTION CONDITIONS (1)
                                                          ****************
             ********************
     0     0     0     0     0     0     0
F10.1,2X,I3,1X,A6,2X,I4,1X,I4,1X,I4,F8.3
2                 ***    GREENWICH MEAN TIME       ***

          CASE     DAY  MTH   YEAR  HRS  MINS  SECS

CASE(1,1,BEG)*
KDAY(1,1,BEG),MTH(1,1,BEG),YEAR(1,1,BEG)*
KHRS(1,1,BEG),KMIN(1,1,BEG),SEC(1,1,BEG),ENDLST*
          6          0          0          2A         8
3

X                                                         EARTH ORBIT INSE
X            RTION CONDITIONS (2)
                                                          ****************
             ********************
     0     1     0     0     0     0     0     0
F10.1,6(1PE14.7,1X)
2                ***    G.E.T.   ***     ***                    GEOCENTRI
```

```
      C CARTESIAN COORDINATES                                  ***
          CASE     HRS  MINS  SECS          X                  Y
      Z                DX                DY                DZ
CASE(1,1,BEG),T(1,1,BEG)*
X(1,1,BEG),Y(1,1,BEG),Z(1,1,BEG)*
DX(1,1,BEG),DY(1,1,BEG),DZ(1,1,BEG),ENDLST*
         6          0          0          3A         8
3
X
X                                                          EARTH ORBIT INSE
X            RTION CONDITIONS (3)
                                                           ****************
             ********************
     0     0     0     0     0     0     0     0
F10.1,7(1PE14.7,1X)
1          CASE          ALT              LAT              LON              V
                 PTH              AZ              INC
CASE(1,1,BEG)*
ALT(1,1,BEG),LAT(1,1,BEG),LON(1,1,BEG),V(1,1,BEG)*
PTH(1,1,BEG),AZ(1,1,BEG)*
INC(1,1,BEG),ENDLST*
         6          0          0          4A         8
5            ***************************************************************
             ***************************************************************
             ***************************************************************
             ***************************************************************
X
X
                                                     TRANSLUNAR INJECTION IN
             ITIATION CONDITIONS (1)
                                                     ***********************
             ***********************
     0     1     0     0     0     0     0     0
F10.1,6(1PE14.7,1X)
2                ***    G.E.T.    ***     ***                    GEOCENTRI
      C CARTESIAN COORDINATES                                  ***
          CASE     HRS  MINS  SECS          X                  Y
      Z                DX                DY                DZ
CASE(1,1),T(1,1)*
X(1,1),Y(1,1),Z(1,1),DX(1,1),DY(1,1),DZ(1,1),ENDLST*
         6          0          0          5A         9
3
X
                                                     TRANSLUNAR INJECTION IN
             ITIATION CONDITIONS (2)
                                                     ***********************
             ***********************
     0     0     0     0     0     0     0     0     0
F10.1,8(1PE14.7,1X)
1          CASE          ALT              LAT              LON              V
                 PTH              AZ              INC              DTEPO
CASE(1,1)*
ALT(1,1),LAT(1,1),LON(1,1),V(1,1),PTH(1,1),AZ(1,1)*
```

```
INC(1,1)*
T(1,1),MINUS,T(1,1,BEG),ENDLST*
         6         0         0         8A        10
5            ***********************************************************
             ***********************************************************
             ***********************************************************
             ***********************************************************


                                                  TRANSLUNAR INJECTION TAR
             GETING AT SIV-B IGNITION


     0     0     0     0     0     0     0     0     0     0
F10.1,2X,I3,1X,A6,1X,I4,1X,I4,1X,I4,1X,F7.3,1X,3(1PE14.7,1X)
1          CASE      DAY  MTH  YEAR  HRS  MINS  SECS          C3
       SIGMA           DELTA
CASE(1,1)*
KDAY(1,1),MTH(1,1),YEAR(1,1)*
KHRS(1,1),KMIN(1,1),SEC(1,1)*
C3TLI(1,1),SIGTLI(1,1),DELTLI(1,1),ENDLST*
         6         0         0        11A        7
5            ***********************************************************
             ***********************************************************
             ***********************************************************
             ***********************************************************


                                                        TRANSLUNAR MIDC
             OURSE TARGETING


     0     0     0     0     0     0     0
F10.1,6(1PE14.7,1X)
1          CASE          TI            LATSI          LONSI          ALTSI
                 DTS            TAI
CASE(1,4,BEG)*
TI(1,4,BEG),LATSI(1,4,BEG),LONSI(1,4,BEG)*
ALTSI(1,4,BEG),DTS(1,4,BEG),TAI(1,4,BEG),ENDLST*
         6         0         0        14A        12
5            ***********************************************************
             ***********************************************************
             ***********************************************************
             ***********************************************************


                                              LUNAR PARKING ORBIT INSERTI
             ON INITIATION CONDITIONS (1)


     0     0     0     0     0     0     0     0     0     0     0     0
F10.1,1X,I3,1X,A6,1X,I3,1X,I3,2X,F6.3,1X,6(1PE14.7,1X)
2              ***     G.M.T. 1968      ***   ***                    SEL
```

```
      ENOCENTRIC CARTESIAN COORDINATES                                  ***
          CASE     DAY  MTH  HRS MINS  SECS          XL                 YL
                ZL              DXL              DYL              DZL
CASE(1,4,BEG)*
KDAY(1,4,BEG),MTH(1,4,BEG),KHRS(1,4,BEG)*
KMIN(1,4,BEG),SEC(1,4,BEG)*
XL(1,4,BEG),YL(1,4,BEG),ZL(1,4,BEG)*
DXL(1,4,BEG),DYL(1,4,BEG),DZL(1,4,BEG),ENDLST
         6          0          0          15A         8
3
                                                  LUNAR PARKING ORBIT INSERTI
            ON INITIATION CONDITIONS (2)


     0     1     0     0     0     0     0     0
F10.1,6(1PE14.7,1X)
2                ***    G.E.T.   ***     ***                        SELENOGRA
      PHIC POLAR COORDINATES                              ***
          CASE     HRS  MINS  SECS          ALTS            LATS            L
      ONS            VRS              PTR              AZR
CASE(1,4,BEG)*
T(1,4,BEG)*
ALTS(1,4,BEG),LATS(1,4,BEG),LONS(1,4,BEG)*
VRS(1,4,BEG),PTR(1,4,BEG),AZR(1,4,BEG),ENDLST*
```

```
PHASE(1,0) = CENTRAL ANGLE AND ORBIT COUNT TEST CASE
TOTALP = 17.0, 17.0, RECTPT = 2.0 , TITLE = 1.0, ISCALE=7, OSCALE = 7
YEAR = 1968, DAYS = 32.0, HRS = 15.0, MINS = 35.0, SECS = 21.18,
TSTART = .1871777700
DEC=32.465, RA = -55.053, AZ = 87.406, R = 3543.9329, V=25573.996
PTH = -.001, RAGR = 1, INJECT = 12
NVTERM = 1, TSTOP = 20, CASTP = -719.0 , IPRINT = 20
PHASE(2,1) = TEST CONT.
NV = 2, DEC,(2) = 32.465, RA,(2) = 55.053, AZ,(2)= 87.06
R,(2) = 3543.9329, V,(2) = 25573.996, PTH,(2) = -.001,INJECT,(2)=12
NVTERM = 1, TSTOP = 20, CASTP = +361.0
PHASE(3,1) = TEST CONT.
NVTERM = 1, TSTOP = 20, CASTP = -182.
PHASE(4,1) = PHASE 4
NVTERM = 1, TSTOP = 13, TOMAX = 4.
PHASE(5,1) = PHASE 5
NVTERM = 2, TSTOP = 13, TOMAX = 4.25
ENDRUN
```

```
PHASE(1,0)= APOGEE TERMINATION TEST CASE
YEAR=1967,                MONTH=2.,                DAYS=15.*
HRS=17.,                        MINS=5.*
TSTART=4.083333318121730D0 ,  INJECT=11,               ISCALE=4*
X=29819322.,                    Y=44129409.,           Z=-11066352.*
DX=-4784.434,                   DY=12634.587,          DZ=-7610.0936*
OSCALE=4,                 T1E=100.,                T1D=.0166666666*
CINE=.00833333333,        TITLE=1.,                INITL=1*
PRTG1=2.,                 PRTG4=2.,                PRTG7=2.*
PRTG8=2.,                 PRTG10=2.,               PRTG13=2.*
TSTOP=11,                 GAMETH=0.0*
ENDRUN
```