AIRESEARCH MFG. COMPANY

METABOLIC RESEARCH METHODS AND RESULTS

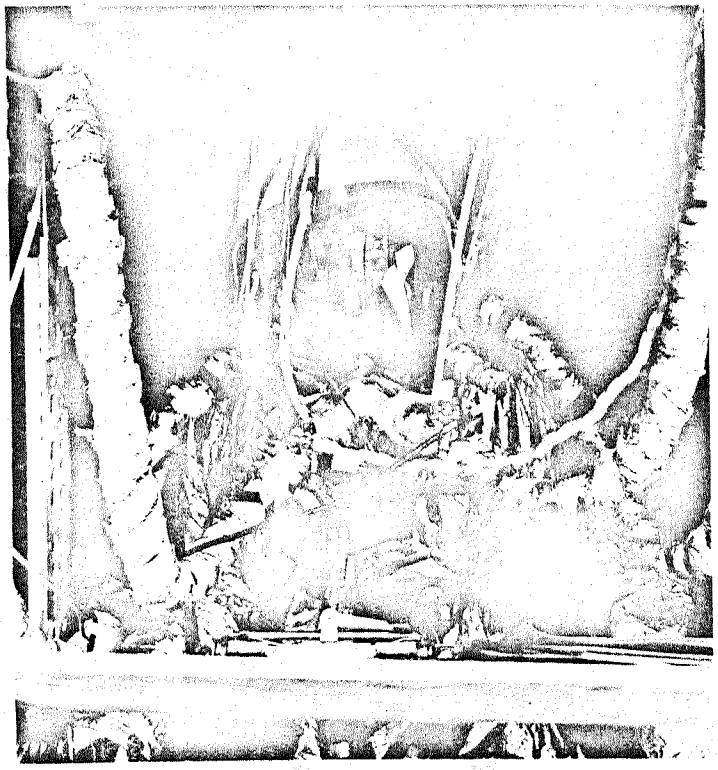

LIBRARY COPY
NOV 22 1976
LANGLEY RESEARCH CENTER
LIBRARY, NASA
HAMPTON, VIRGINIA

(NASA-CR-152766) METABOLIC RESEARCH METHODS AND RESULTS (Airesearch Mfg. Co., Los Angeles, Calif.) 19 p
N77-77315
Unclas
00/54 25258

APR 1977
RECEIVED
NASA STI FACILITY
25-1
CORPORATION 1960
25258

PROGRAM SUMMARY

PRESSURE SUIT TEST PROGRAMS WITH METABOLIC RATE DETERMINATION

PRESSURE SUIT	ALTITUDE	SUIT PRESSURE	N SUBJECTS	N CONDITIONS	SOURCE OF FUNDS	REPORT NUMBER	YEAR
MARK IV	19,000′ 34,000′	3.5 PSI ΔP AND U.P.	8	67	COMPANY SPONSORED	LS 108 LS 108 REV1	1962 1963
I.L.C. S.O.A.	34,000′ AND S.L.	3.5 PSI ΔP	4	4	NAS9-1639	SS952	1963
G2C	34,000′	3.5 PSI ΔP	2	8+ (VAR.)	NAS9-2412	SS3135	1964
G2C	34,000′	3.5 PSI ΔP	10	4	NAS9-2886	LS 140	1965
G2C	34,000′	3.5 PSI ΔP	5	25+ (VAR.)	NAS9-3668	SS3949	1965
G2C	S.L.	U.P.	10	16	NAS9-5032	IN PROGRESS	1966
TO BE SUPPLIED	S.L. AND −20′	3.5 PSI ΔP			NAS1-5875		1966

ALL PROGRAMS AT 1G. SUIT INLET O_2 AND H_2 REFLECTIVE MULTILAYER OVER GARMENT FOR CONTROL OF HEAT TRANSFER, AMBIENT AND WALL TEMPERATURE MAINTAINED AT 98 °F

MS-AP-1125-2

© THE GARRETT CORPORATION 1966

DATA COLLECTED DURING A TYPICAL TEST

N = 57

- SUBJECT N = 13
  - E.C.G.
  - RESPIRATION RATE
  - RECTAL TEMPERATURE
  - 8 SKIN TEMPERATURES
  - BLOOD PRESSURE

- APPARATUS N = 23
  - CHAMBER TEMPERATURE
  - CHAMBER PRESSURE
  - CHAMBER WALL TEMPERATURE
  - GAS ANALYSIS INST. FLOW (4)
  - GAS ANALYSIS INST. PRESSURE (4)
  - GAS ANALYSIS INST. D.B. TEMP. (4)
  - FLOW METER TEMPERATURE (4)
  - FLOW METER PRESSURE (4)

- INSPIRED AND EXPIRED GASES N = 12
  - pCO_2
  - pO_2
  - DEWPOINT TEMPERATURE (pH_2O)
  - D.B. TEMPERATURE
  - ABSOLUTE PRESSURE
  - VOLUME (OR MASS FLOW)

- PRESSURE SUIT VENTILATION N = 9
  - D.B. TEMPERATURE
  - DEWPOINT TEMPERATURE
  - ABSOLUTE PRESSURE
  - FLOW RATE
  - ΔP

- COMPUTER PROGRAM CALCULATES
  - MINUTE VOLUME
  - Q_M, Q_{TR}, Q_{RL}, Q_{RS}, Q_{RT}, Q_S,
  - Q_{NR}, Q_{LR}, Q_{SR}

MS-AP-1125-5

© THE GARRETT CORPORATION 1966

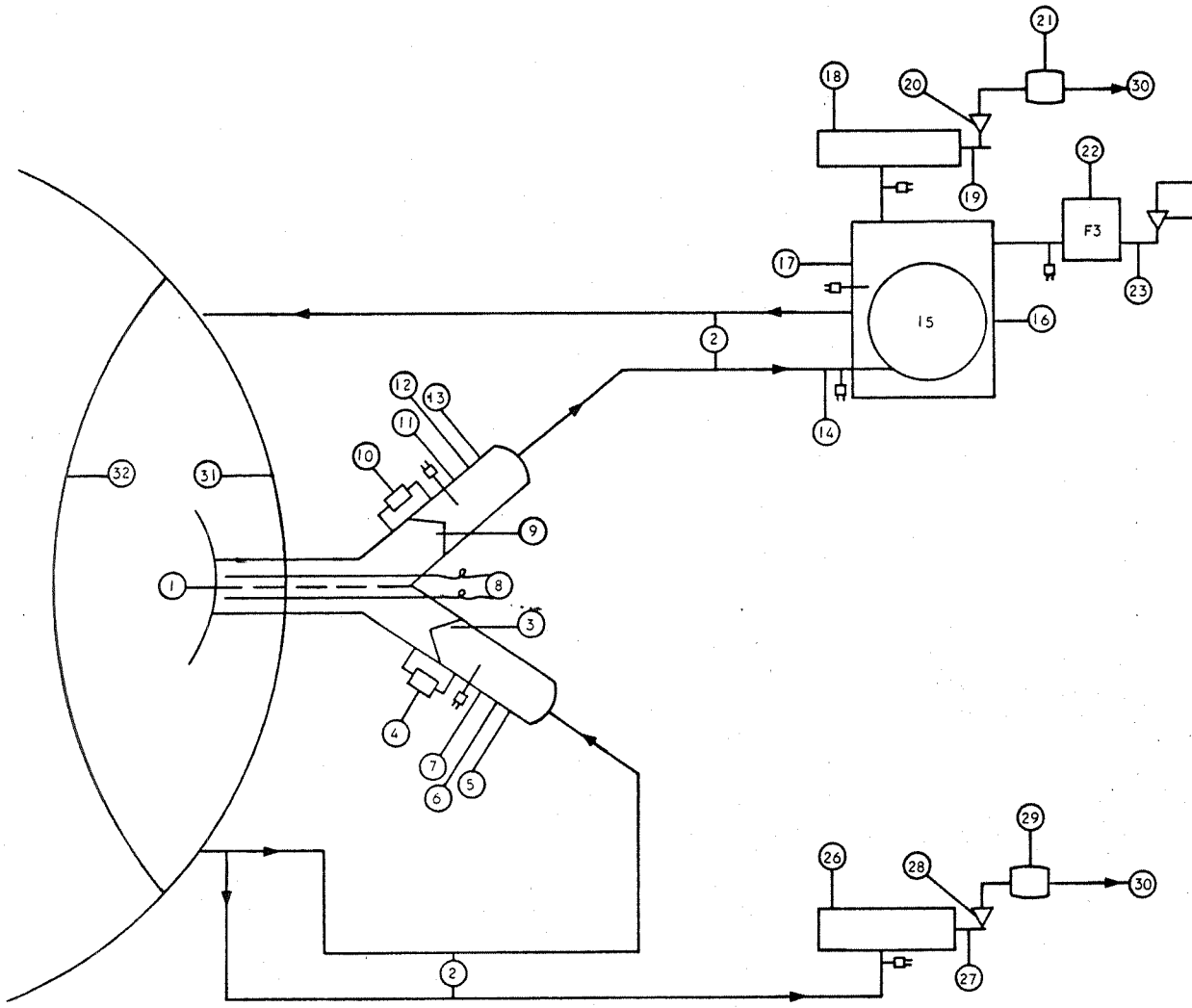

1 BIFURCATED MOUTHPIECE
2 TEMPERATURE CONTROLLED HOSES
3 INSPIRATION CHECK VALVE
4 ΔP TRANSDUCER
5 ABSOLUTE PRESSURE
6 ΔP PRESSURE
7 INSPIRATION DEW POINT
8 FAST RESPONSE THERMOCOUPLES
9 EXPIRATION CHECK VALVE
10 ΔP TRANSDUCER
11 EXPIRATION DEW POINT
12 ΔP PRESSURE
13 ABSOLUTE PRESSURE
14 ABSOLUTE PRESSURE
15 RESPIRATION METER
16 ABSOLUTE PRESSURE
17 EXPIRATION DEW POINT
18 EXPIRATION CO_2 ANALYZER
19 ABSOLUTE PRESSURE
20 FLOWMETER
21 DIA-PUMP
22 EXPIRATION O_2 ANALYZER
23 ABSOLUTE PRESSURE
24 FLOWMETER
25 DIA-PUMP
26 INSPIRATION CO_2 ANALYZER
27 ABSOLUTE PRESSURE
28 FLOWMETER
29 DIA-PUMP
30 RETURN TO SUIT EXHAUST SYSTEM
31 HELMET VISOR
32 HELMET
DRY-BULB TEMPERATURE

Respiratory and Gas Analysis System Schematic

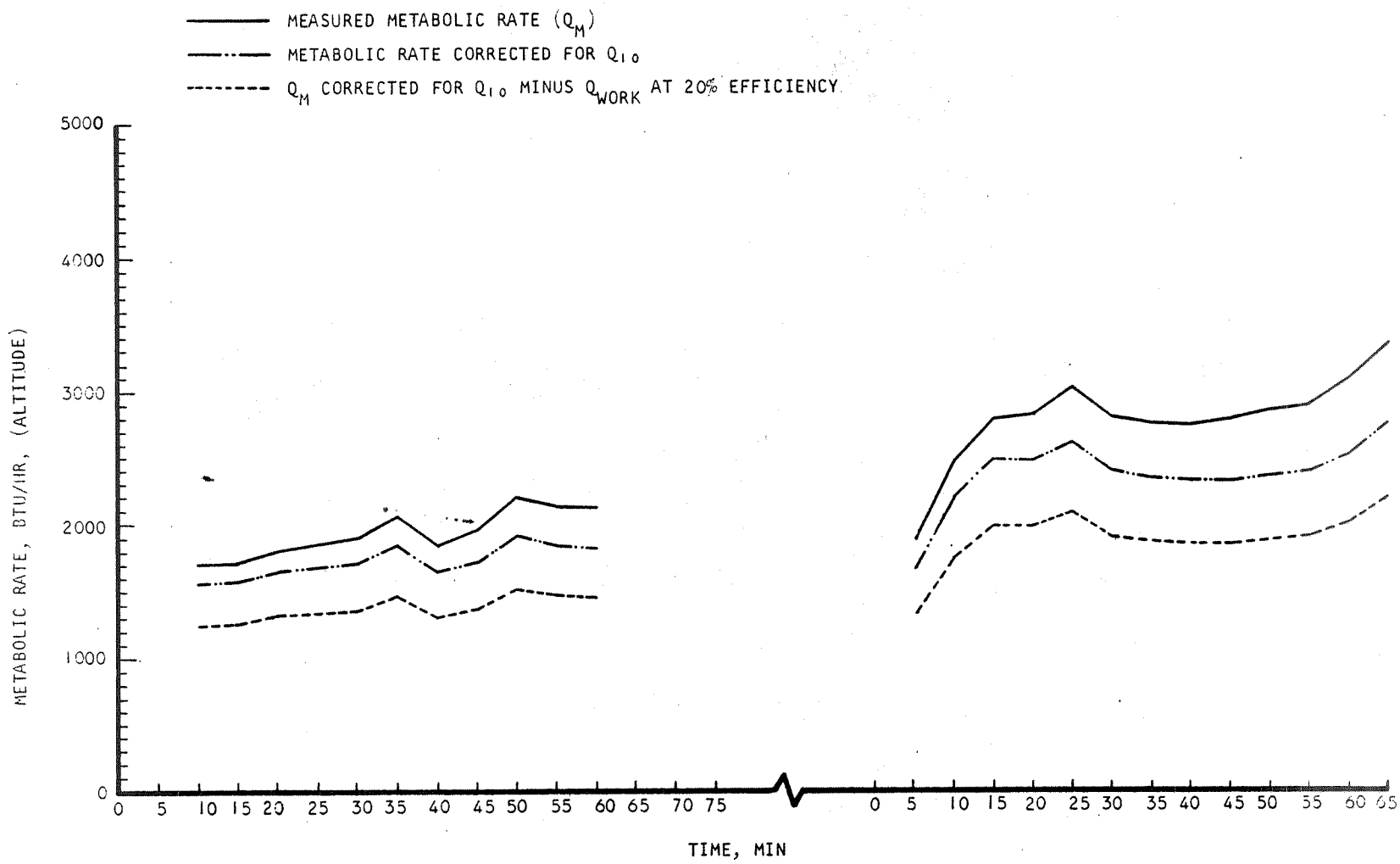

Metabolic Rate (Altitude)

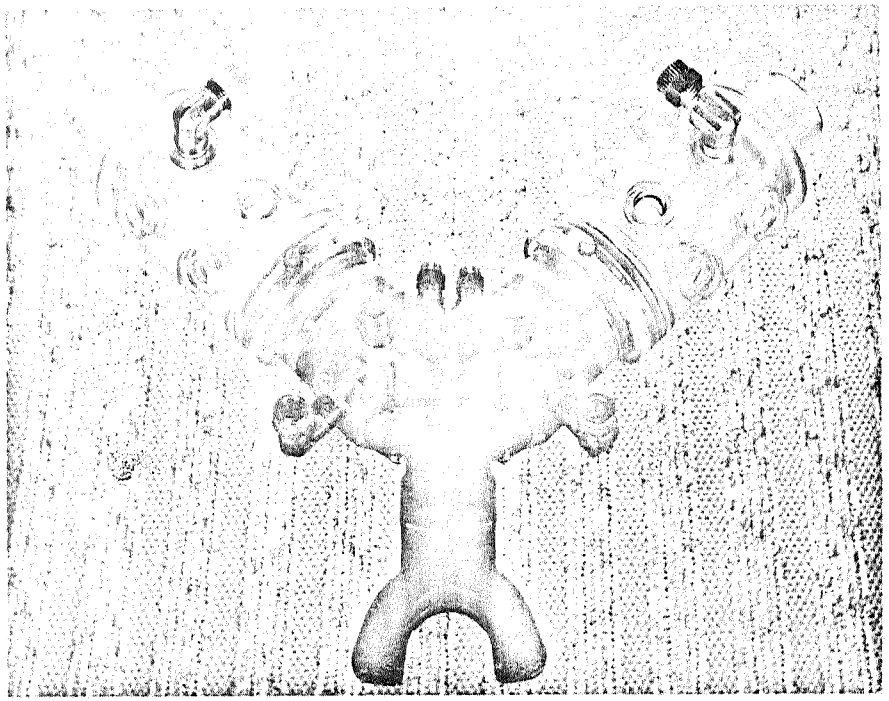

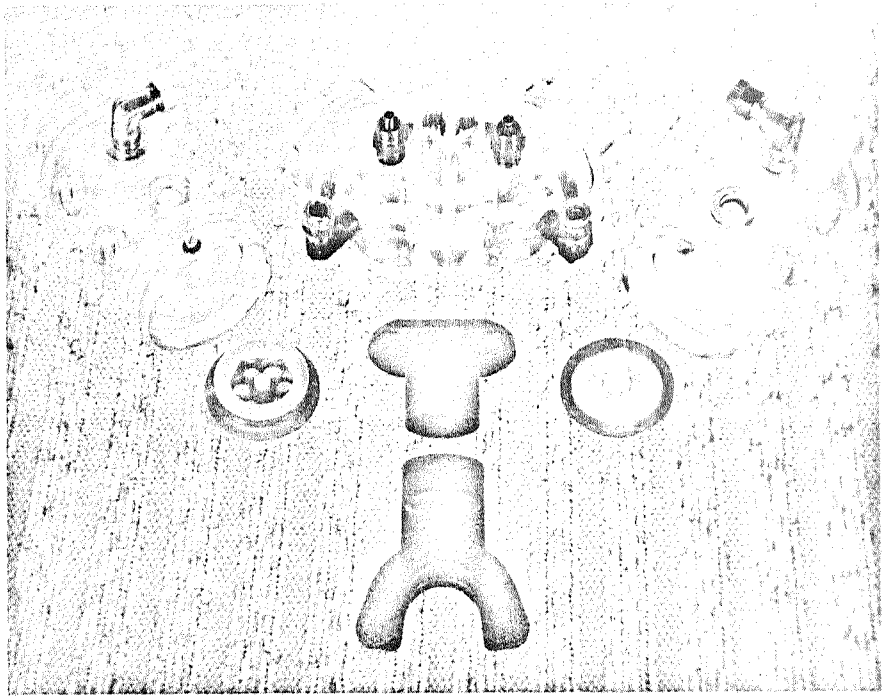

Mouthpiece for Breathing

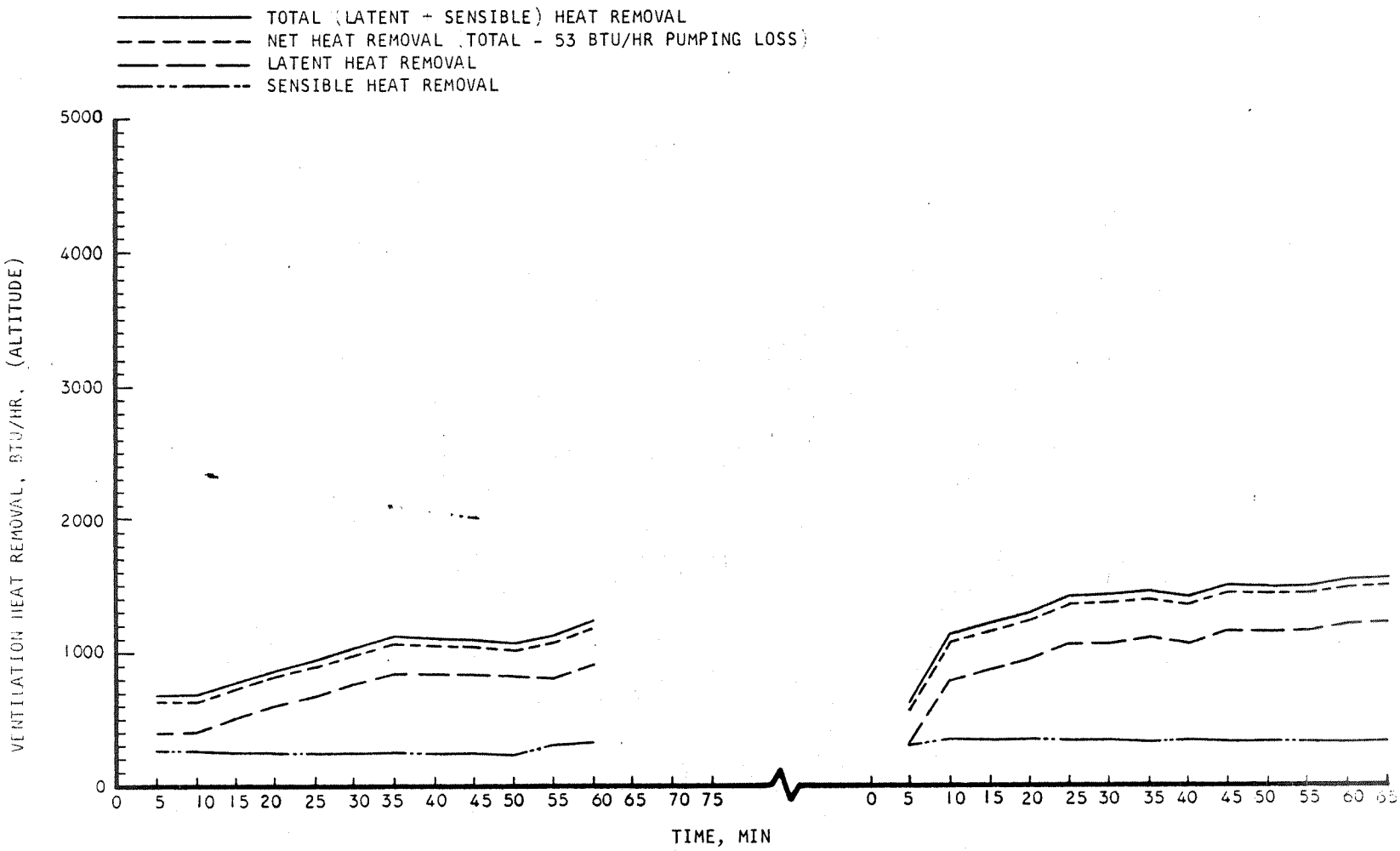

Ventilation Heat Removal (Altitude)

TYPICAL DATA

MEAN FINAL METABOLIC RATE, BTU/HR

	WORK RATE	
PRESSURE	1.4 MPH	2.0 MPH
SEA LEVEL	2047	2347
ALTITUDE	2092	2703

MEAN FINAL NET HEAT REMOVED, BTU/HR

	WORK RATE	
PRESSURE	1.4 MPH	2.0 MPH
SEA LEVEL	1331	1342
ALTITUDE	1186	1407

RATIO MEAN FINAL NET HEAT REMOVED / MEAN FINAL METABOLIC RATE

	WORK RATE	
PRESSURE	1.4 MPH	2.0 MPH
SEA LEVEL	0.65	0.57
ALTITUDE	0.57	0.52

MEAN FINAL LATENT HEAT REMOVED FROM SUIT, BTU/HR

	WORK RATE	
PRESSURE	1.4	2.0 MPH
SEA LEVEL	1141	1196
ALTITUDE	920	1182

MS-AP-1125-10

© THE GARRETT CORPORATION 1966

PROBLEMS WITH ESTABLISHING HEAT BALANCES

$$Q_M = Q_N + Q_S + Q_\omega$$

- EFFICIENCY OF WORK PERFORMED IN A PRESSURE SUIT IS UNKNOWN — Q_ω?

- BODY HEAT STORAGE INDETERMINATE DURING HEAVY WORK LOADS — Q_S?

MS-AP-1125-6
©THE GARRETT CORPORATION 1966

COMPUTATION OF Q_S

$Q_S = WC_p \Delta T$ BTU

W = BODY WEIGHT

C_p = SPECIFIC HEAT : 0.83 AVERAGE
0.86 SPECIFIC HEAT OF MUSCLE

ΔT = AVERAGE TEMPERATURE CHANGE OF BODY MASS

ΔT IS NORMALLY A WEIGHTED FUNCTION $0.67 \Delta T_R$ AND $.33(\bar{x}\ \Delta T_S)$ BUT ΔT_M DURING HEAVY EXERCISE IS 2-4 TIMES ΔT_R* AND MUSCLE MASS IS 42-50% OF TOTAL BODY WEIGHT

$$Q_S = W_M C_{p_M} \Delta T_M + W_N C_{p_N} \Delta T_N$$

* MEEHAN, DUBOIS, AIKAS

MS-AP-1125-7
©THE GARRETT CORPORATION 1966

HEAT STORAGE IN MUSCLE

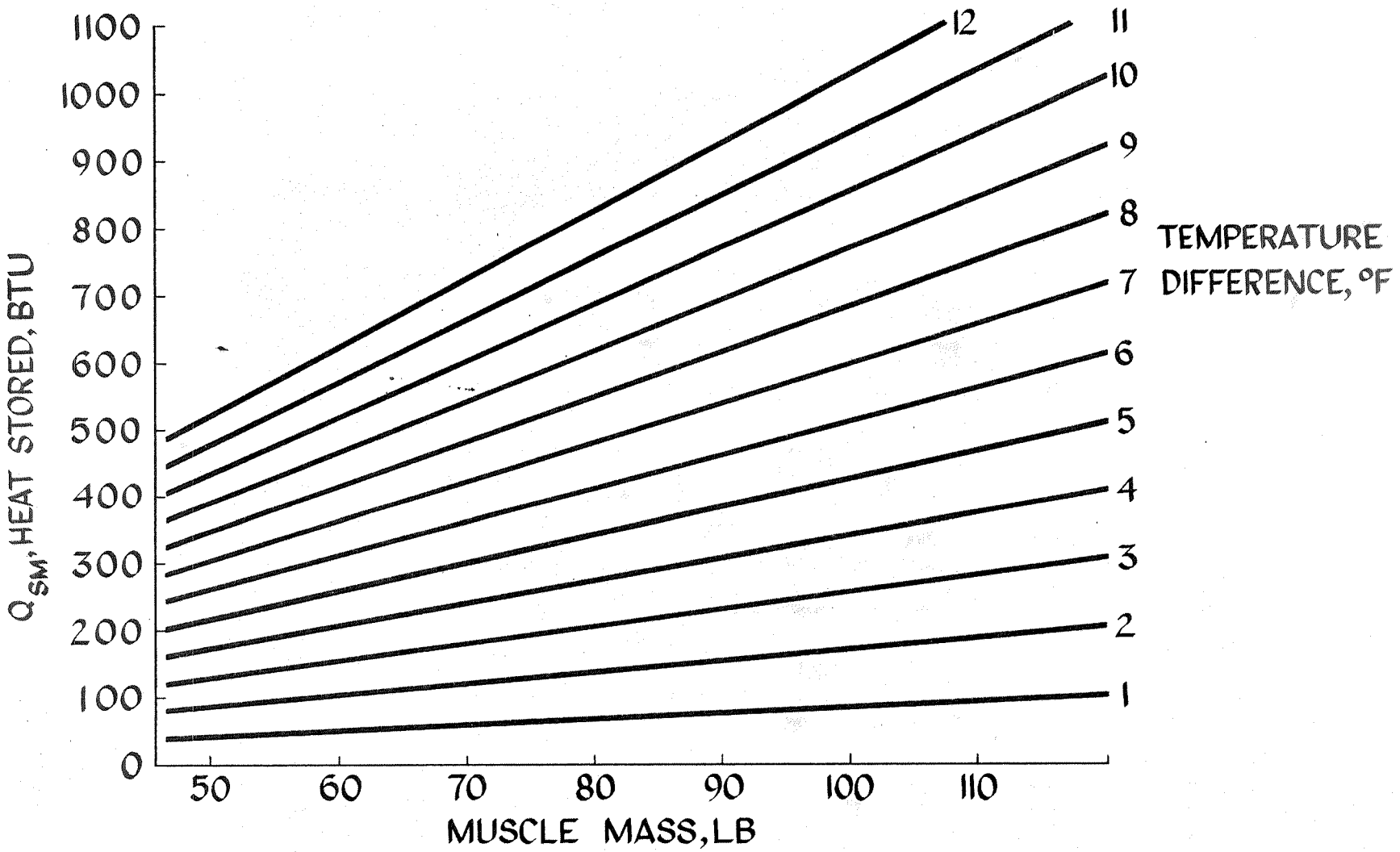

MS-AP-1125-15

© THE GARRETT CORPORATION 1966

RESOLUTION OF HEAT BALANCE

	WORK RATE	
	1.4 MPH	2.0 MPH
MEAN FINAL METABOLIC RATE, BTU/HR (Q_M)	2092	2703
MEAN FINAL NET HEAT REMOVED, BTU/HR (Q_N)	1186	1047
HEAT TO BE ACCOUNTED FOR, BTU/HR	906	1296

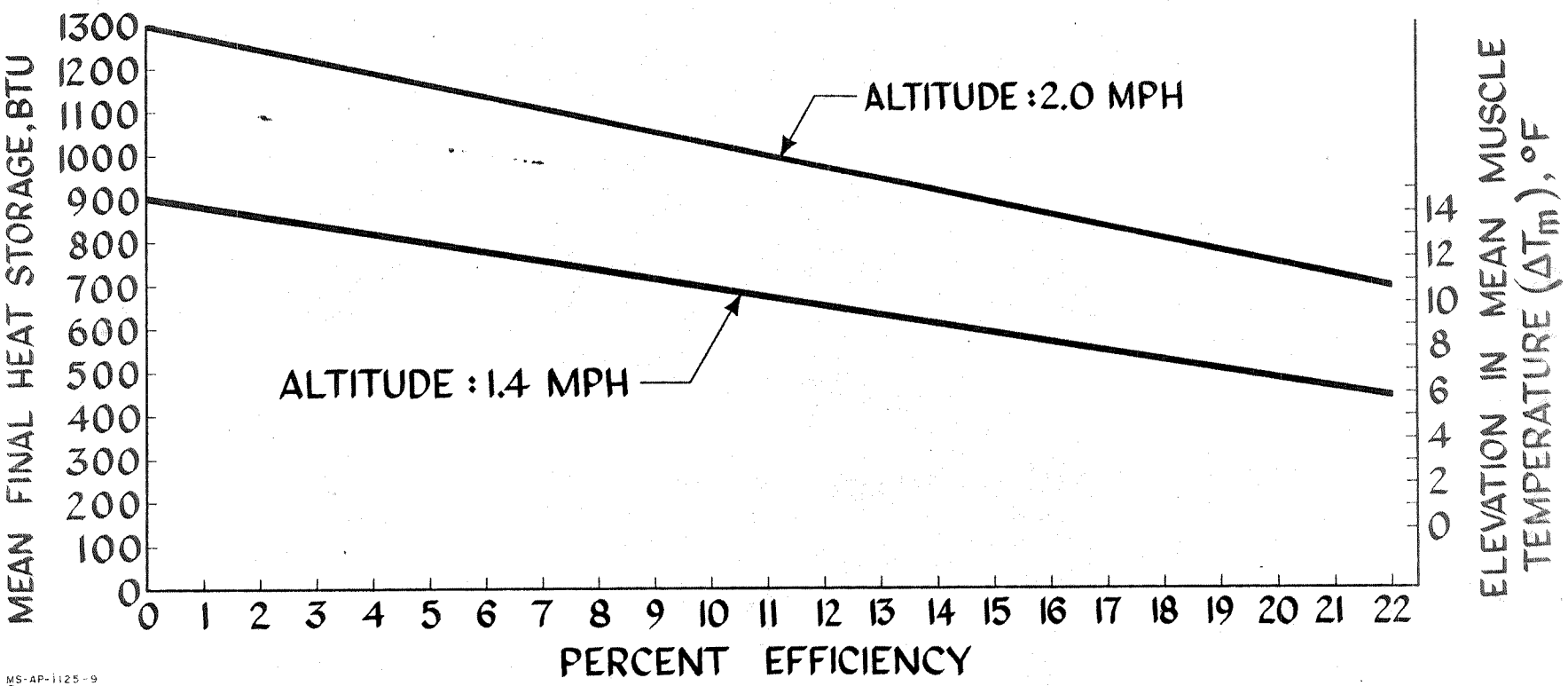

MS-AP-1125-9
©THE GARRETT CORPORATION 1966

METHODS OF NORMALIZATION

- Q_M/BSA
- Q_M/WT 3/4
- $Q_M / 71.2 \times W^{3/4} \left[1 + 0.004(30 - a) + 0.010(S - 43.4)\right]$
- REDUCE VARIANCE
- POOR FOR ENGINEERING DATA

MS-AP-1125-8
©THE GARRETT CORPORATION 1966

TYPICAL SUBJECT DATA

SUBJECT	AGE YEARS	HEIGHT Cm	WEIGHT Kg	BSA M^2
MG	22	178	68	1.84
WS	43	183	90	2.11
LR	24	168	73	1.82
CR	45	180	101	2.20
GR	43	170	81	1.90
FS	22	173	69	1.82
RD	33	172	71	1.81
WGS	33	175	80	1.95
TH	29	188	93	2.19
JB	43	183	103	2.25
WGS	33	175	80	1.94

MS-AP-1125-4
©THE GARRETT CORPORATION 1966

TYPICAL EXPERIMENTAL DESIGN

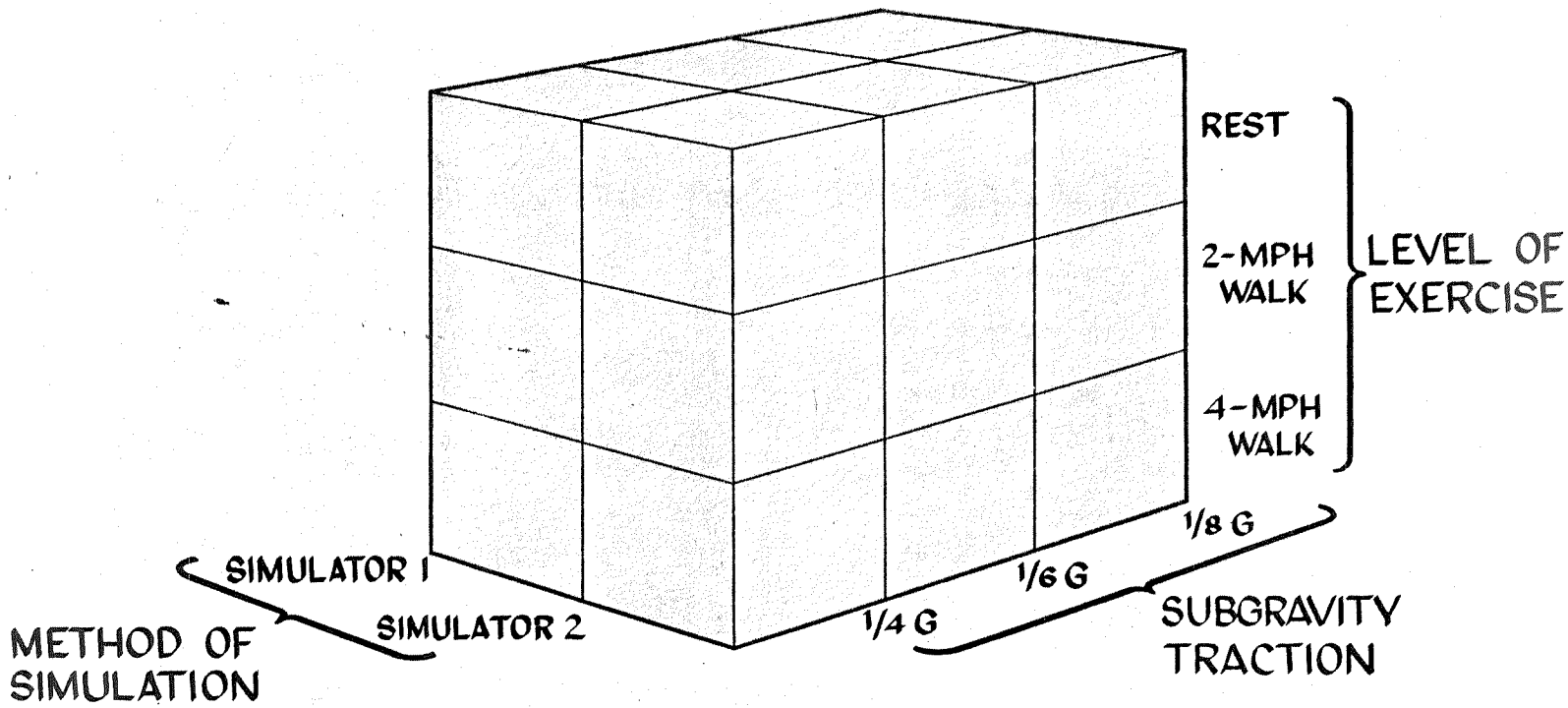

MS-AP-1125-14
© THE GARRETT CORPORATION 1968

RESULTS OF ANALYSIS OF VARIANCE

METABOLIC RATE, BTU/HR/M^2
ANALYSIS OF VARIANCE SUMMARY TABLE

SOURCE OF VARIANCE	dF	MS	F	P
SIMULATOR (A)	1	36852	10.97	<0.010
TRACTION (B)	2	25915	7.59	<0.010
EXERCISE LEVEL (C)	3	542415	158.92	<0.010
AB INTERACTION	2	2899	0.85	NS
AC INTERACTION	3	1713	0.50	NS
BC INTERACTION	6	9810	2.87	<0.025
ABC INTERACTION	6	867	0.25	NS
WITHIN CELLS	168	3413		
TOTAL	191			

MS-AP-1125-13
© THE GARRETT CORPORATION 1966

SUBGRAVITY TRACTION APPARATUS

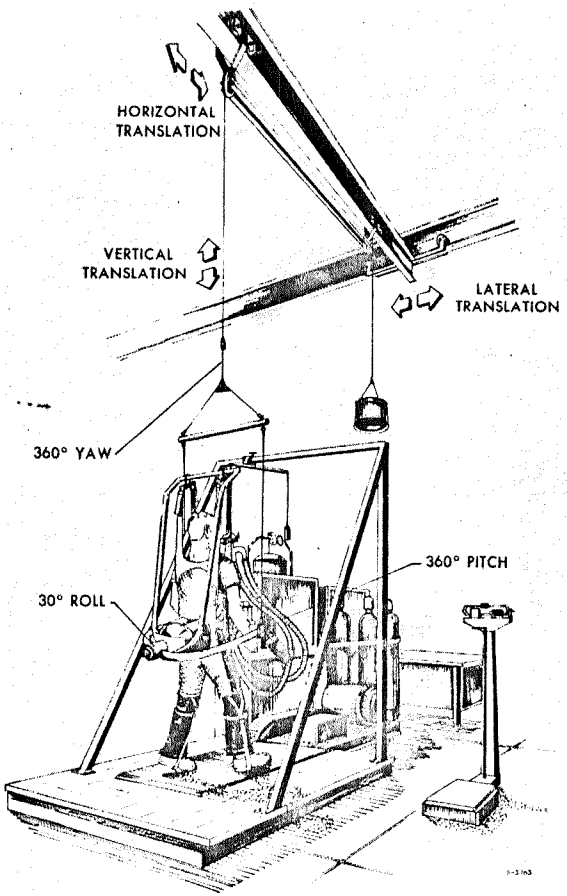

MS-AP-1125-3
© THE GARRETT CORPORATION 1966

WALKING UNDER SUBGRAVITY CONDITIONS

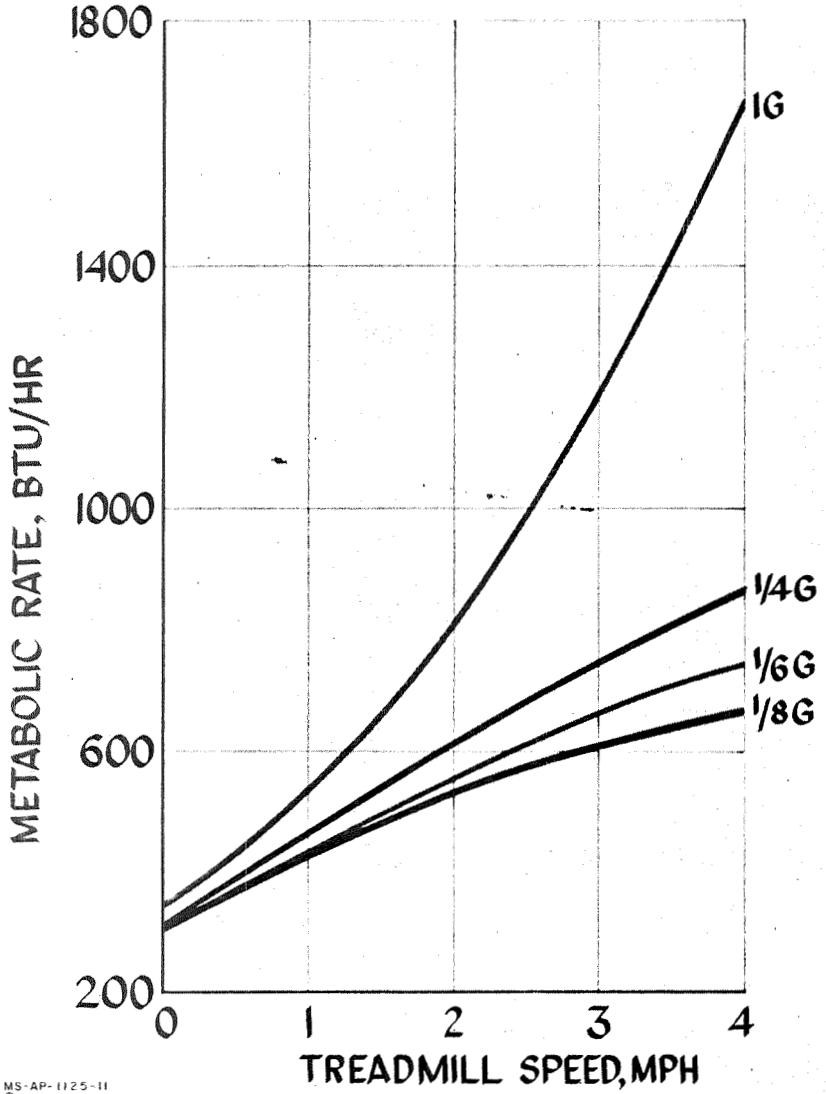

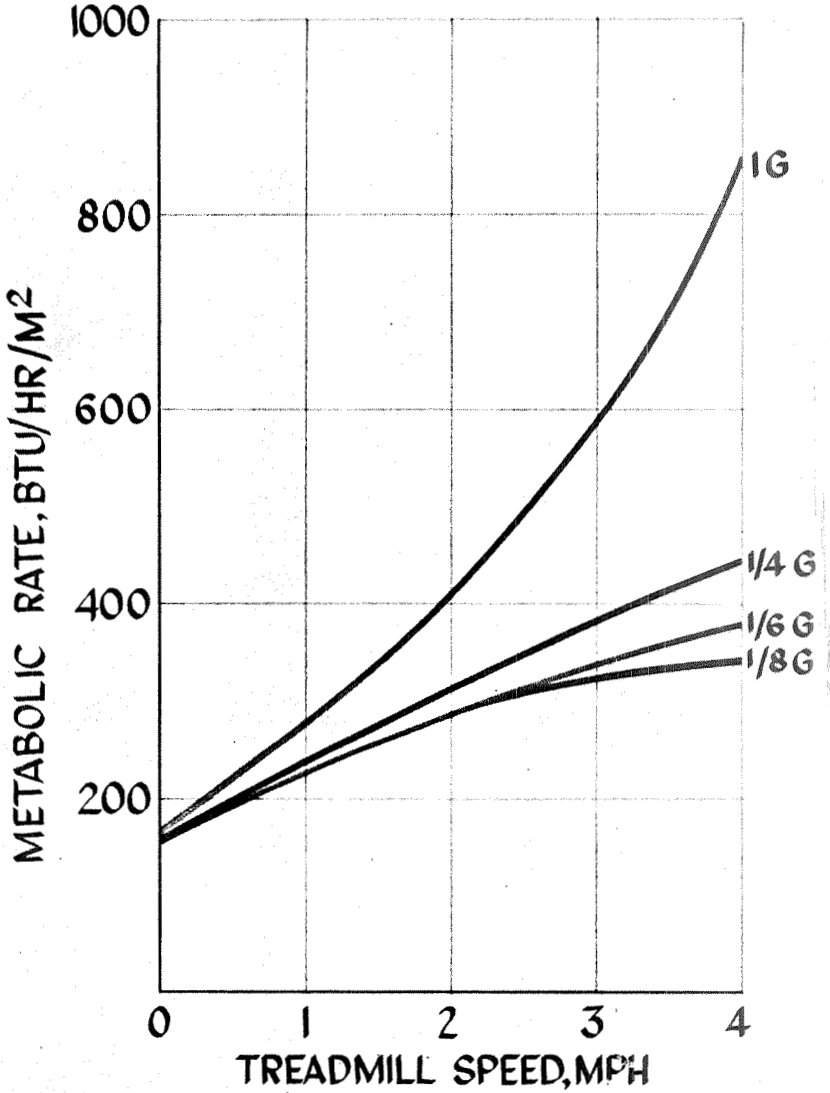

MS-AP-1125-11
© THE GARRETT CORPORATION 1966

SUMMARY OF SUBGRAVITY TRACTION DATA

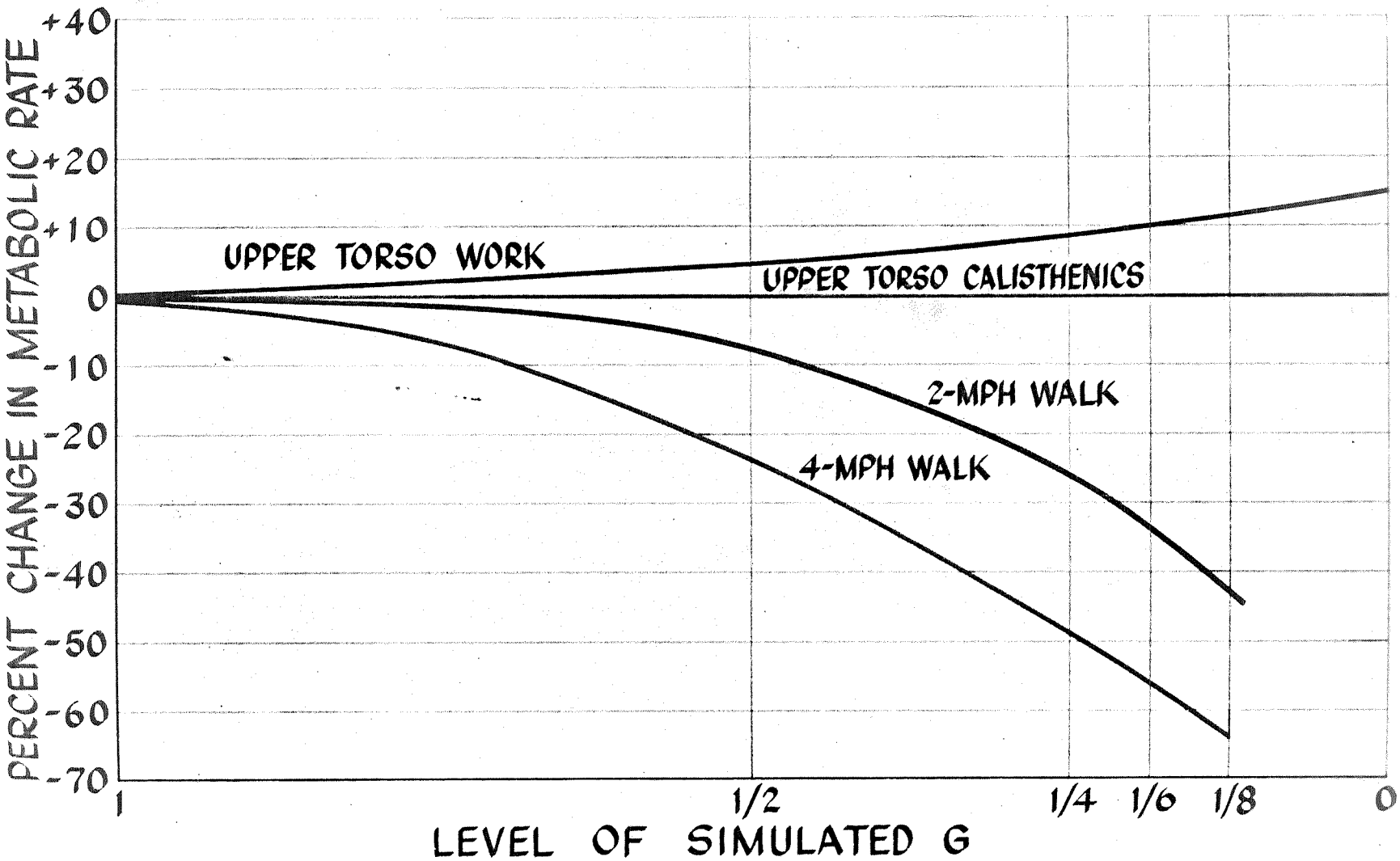

THE GARRETT CORPORATION ENGINEERING AND SALES OFFICES

ATLANTA, GEORGIA · 3272 Peachtree Road, N.E., Atlanta, Georgia 30305—CEdar 3-7157

BOSTON, MASSACHUSETTS · 235 Bear Hill Road, Waltham, Massachusetts 02154—TWinbrook 4-5328

CHICAGO, ILLINOIS · 5544 St. Charles Road, Berkeley, Illinois 60162—Telephone: 921-7015

COCOA BEACH, FLORIDA · 1325 Atlantic Avenue, Cocoa Beach, Florida 32931—Telephone: 783-9003

COLUMBUS, OHIO · Room 212A, Port Columbus, 4600 East 17th St., Columbus, Ohio 43227—BElmont 7-4273

DAYTON, OHIO · 333 West 1st Street, Dayton, Ohio 45402—BAldwin 4-0728

DETROIT, MICHIGAN · 15823 West McNichols Road, Detroit, Michigan 48235—Telephone: 273-7238

FORT WORTH, TEXAS · 100 North University Drive, Room 285, Fort Worth, Texas 76101—EDison 5-4626

HAMPTON, VIRGINIA · 1120 Mercury Boulevard, Suite 303, Hampton, Virginia 23366—Telephone: 838-0020

HOUSTON, TEXAS · 1211 Prudential Bldg., Houston, Texas 77025—RIverside 7-6076

HUNTSVILLE, ALABAMA · Sahara Office Park, Suite 114, 3313 South Memorial Parkway, Huntsville, Alabama 35801—Telephone: 881-2181

LOS ANGELES, CALIFORNIA · 2230 Michigan Avenue, Santa Monica, California 90404—Telephones: 451-5711—871-0520

PLAINVIEW, NEW YORK · One Dupont St., Plainview, New York 11803—Telephone 681-8877

OKLAHOMA CITY, OKLAHOMA · Universe Building, 6401 Tinker Diagonal, Midwest City, Oklahoma 73110—PErshing 7-3461

SAN DIEGO, CALIFORNIA · 5555 Mildred Street, San Diego, California 92110—CYprus 5-4119

SAN FRANCISCO, CALIFORNIA · 2439 Birch Street, Palo Alto, California 94306—DAvenport 1-1820

SEATTLE, WASHINGTON · 825 - 106th Avenue, N.E., Bellevue, Washington 98004—GLencourt 4-4941

ST. LOUIS, MISSOURI · Post Office Box 6247, Lambert Field, St. Louis, Missouri 63145—PErshing 1-0983

WASHINGTON, D. C. · 515-519 Cafritz Building, 1625 Eye Street N.W., Washington, D. C. 20006—EXecutive 3-0873

WICHITA, KANSAS · Post Office Box 18188, Wichita, Kansas 67218—MUrray 2-5518

CANADIAN OFFICES

MONTREAL, QUEBEC · GARRETT MANUFACTURING, LTD. · 1255 Laird Boulevard, Montreal 16, Quebec, Canada—Telephone: 738-4708

OTTAWA, ONTARIO · GARRETT MANUFACTURING, LTD. · 75 Albert Street, Ottawa, Ontario, Canada—CEntral 6-0441

TORONTO, ONTARIO · GARRETT MANUFACTURING, LTD. · Toronto International Airport, Malton, Ontario, Canada—Telephone: 677-2540

INTERNATIONAL OFFICES

ENGLAND · GARRETT AIRESEARCH LTD., 302 High Street, Slough, Bucks, England—Telephone: 27681

FRANCE · GARRETT INTERNATIONAL S.A., 36 Rue des Plantes, Paris 14e, France—Telephone: SEGur 32.56

GERMANY · GARRETT GMBH, 15 Grosse Gallus Strasse, 6 Frankfurt/Main, Germany—Telphone 284-773

JAPAN · GARRETT (JAPAN) LTD., Daini Goto Bldg., 9 Roppongi, Minatoku, Tokyo, Japan—Telephone: 401-9713

SWITZERLAND · GARRETT INTERNATIONAL, S.A., Rue des Pierres-du-Niton 17, 1207 Geneva, Switzerland—Telephone: 35.73.50

AIRESEARCH MANUFACTURING COMPANY, 9851 SEPULVEDA BLVD., LOS ANGELES 9, CALIFORNIA