(51)

T72-13273

CR 151315

MICROFICHED

MAY 1 1972

(NASA-CR-151315) INTEGRATED MEDICAL AND BEHAVIORAL LABORATORY MEASUREMENT SYSTEM. PHASE B, VOLUME 1: TECHNICAL Final Report (General Electric Co.) 489 p

N77-78294

Unclas

00/12 28851

BEST AVAILABLE COPY

MAY 1977
RECEIVED
NASA STI FACILITY
INPUT BRANCH

F72-13273
C1

DOCUMENT NO. 67SD8207

TECHNICAL LIBRARY
BUILDING 45

APR 21 1972

Manned Spacecraft Center
Houston, Texas 77058

INTEGRATED MEDICAL AND BEHAVIORAL LABORATORY MEASUREMENT SYSTEM

PHASE B FINAL REPORT
VOLUME I - TECHNICAL

CONTRACT NASW-1630

PREPARED FOR THE

NATIONAL AERONAUTICS AND SPACE ADMINISTRATION

BY THE

MANNED ORBITING LABORATORY DEPARTMENT

GENERAL ELECTRIC

MISSILE AND SPACE DIVISION
Valley Forge Space Technology Center
P.O. Box 8555 • Philadelphia 1, Penna.

TABLE OF CONTENTS

Section		Page
1	SUMMARY	I.1-1
2	INTRODUCTION	I.2-1
3	MEASUREMENT ANALYSIS AND REFINEMENT	I.3-1
	3.1 Introduction	I.3-1
	3.2 Measurement Definition	I.3-1
	3.3 Equipment Definition	I.3-4
	3.4 Measurement/Equipment Critique	I.3-4
	3.4.1 Cardiovascular Measurements	I.3-7
	3.4.2 Respiratory Measurements	I.3-18
	3.4.3 Metabolic and Nutritional Measurements	I.3-27
	3.4.4 Musculoskeletal Measurements	I.3-29
	3.4.5 Biological, Cytological, and Microbiological Measurements: On-Board vs Postflight Specimen Analysis Trade-off	I.3-33
	3.4.6 Behavior	I.3-92
	3.4.7 Crew Time Availability	I.3-99
	3.4.8 On-Board Displays and Controls	I.3-111
4	SYSTEM CONCEPT	I.4-1
	4.1 System Approach	I.4-1
	4.1.1 Introduction	I.4-1
	4.1.2 System Design Requirements	I.4-1
	4.1.3 System Design Approach	I.4-5
	4.2 Data Management	I.4-31
	4.2.1 Criteria for IMBLMS Data Management	I.4-32
	4.2.2 Communications Network	I.4-33
	4.2.3 Measurements and The Data Load	I.4-44
	4.2.4 Data Compression	I.4-54
	4.2.5 Functional Requirements	I.4-63
	4.2.6 DMS Description	I.4-73
	4.2.7 Summary	I.4-112
	4.3 Modular Design and Packaging Approach	I.4-113
	4.3.1 General	I.4-113
	4.3.2 Packaging and Modularization	I.4-117
	4.3.3 Identification of Modules	I.4-122
	4.3.4 Packaging Design Criteria	I.4-124
	4.3.5 Internal Module Design Considerations and Approaches - Electronic Components	I.4-133
	4.3.6 Modular Segment System Approach	I.4-135
	4.3.7 Carrier Vehicle Applications and Installation Considerations	I.4-140

TABLE OF CONTENTS (Cont)

Section		Page
	4.3.8 System Installation - Design Analysis	I.4-152
	4.3.9 In-Orbit Maintenance, Repair and Replacement of IMBLM System Equipment	I.4-153
	4.3.10 Summary	I.4-158
5	CANDIDATE EQUIPMENT	I.5-1
	5.1 Introduction	I.5-1
	5.2 Status of Vendor Survey	I.5-2
	5.3 Vendor Selection	I.5-19
	5.4 Advantages to IMBLMS of the GE Vendor Approach	I.5-23
	5.5 IMBLMS Equipment Classification and Matrix	I.5-25
	5.6 Summary	I.5-25
APPENDICES		
APPENDIX A	MEASUREMENT DEFINITION	I.A-1
APPENDIX B	EQUIPMENT DEFINITION	I.B-1
APPENDIX C	EXCERPTS FROM PRESERVATION OF BIOLOGICAL SPECIMENS STUDY FINAL REPORT	I.C-1

LIST OF ILLUSTRATIONS

Figure	Title	Page
2-1	General Electric Approach to IMBLMS	I.2-1
3-1	Vectorcardiogram Functional Flow Diagram	I.3-6
3-2	North American Aviation Respiratory Analyzer	I.3-20
3-3	Mass-Spectrometer Configuration and Ion Path in X-Y Plane	I.3-22
3-4	Atomic Mass Units	I.3-23
3-5	Interruptor Function Flow Diagram	I.3-26
3-6	Interruptor: Gas Flow Permitted	I.3-26
3-7	Interruptor: Gas Flow Interrupted	I.3-27
3-8	Cinematography Approach	I.3-32
3-9	Analog Approach	I.3-32
3-10	Telescoping Handle	I.3-32
3-11	Relation of Experiment Protocol to Engineering Design Criteria	I.3-60
4-1	IMBLMS Design Considerations	I.4-2
4-2	Artist's Concept of IMBLMS and Associated Experiment Hardware as Installed in the S-IVB OWS	I.4-3
4-3	Basic Minimum System	I.4-13
4-4	Augmented Minimum System	I.4-15
4-5	Measurement Functional Flow Diagram	I.4-27
4-6	Communication Subsystem Block Diagram for Orbital Cluster	I.4-35
4-7	Telemetry Coverage for 14 USB Sites	I.4-36
4-8	Typical Apollo Communications Network Configuration	I.4-39
4-9	IMBLMS Related Summary - Block Diagram of Communication Network	I.4-43
4-10	Data Accumulation and Transmission Time for Exercise Tolerance Experiments	I.4-53
4-11	Summary of Data Compression Categories	I.4-54A
4-12	Zero or First Order Interpolator	I.4-57
4-13	Zero Order Predictor	I.4-58
4-14	Design Goal for Bandpass Filters	I.4-61

LIST OF ILLUSTRATIONS (Cont)

Figure	Title	Page
4-15	Spectrogram Results	I.4-62
4-16	ECG Characteristics of Interest	I.4-62D
4-17	Data Management Involvement	I.4-64
4-18	Interplay Between Experimenter and Data Management System	I.4-64A
4-19	Control and Display Unit Currently Being Developed	I.4-74
4-20	Aerospace Computer Interface Unit	I.4-76
4-21	Circuit Modules Comprising Logic Elements in the CIV	I.4-77
4-22	Circuit Modules Comprising Logic Elements in the CIV	I.4-78
4-23	DMS Functional Requirements	I.4-80
4-24	DMS Functional Flow Diagram	I.4-81
4-25	Block Diagram of Data Management System	I.4-84
4-26	Projected Computer Reliability Improvement	I.4-91
4-27	DICU Block Diagram	I.4-93
4-28	Data Aquisition Unit (DAU)	I.4-96
4-29	Frequency Multiplexer Signal Conditioner (FM Receiver)	I.4-97
4-30	A/D Converter	I.4-100
4-31	Stimulus Generator and Switching Function	I.4-103
4-32	Tentative Display Panel Layout	I.4-109
4-33	Spacecraft for IMBLMS	I.4-114
4-34	Currently Planned AAP Flights	I.4-114A
4-35	Typical Lead Times Required	I.4-116
4-36	Modular Identification Chart	I.4-117
4-37	Electrical/Electronic Interconnection Levels	I.4-127
4-38	Electronic Component Packaging Example	I.4-136
4-39	Modular Segment System Schematic	I.4-137
4-40	Modular Segment Configurations	I.4-138
4-41	Spacecraft and IMBLMS Volumetric Considerations	I.4-142
4-42	Orbital Workshop and MDA IMBLMS Application - Total System	I.4-143

LIST OF ILLUSTRATIONS (Cont)

Figure	Title	Page
4-43	MDA Interior Arrangement (IMBLMS Application)	I.4-145
4-44	OWS Interior Arrangement (IMBLMS Application)	I.4-146
4-45	Refurbished Command Module (IMBLMS Application - Total System)	I.4-147
4-46	Refurbished Command Module (IMBLMS Application - Partial System)	I.4-148
4-47	Lunar Module (IMBLMS Application - Total System)	I.4-150
4-48	Lunar Module (IMBLMS Application - Partial System)	I.4-151
4-49	Approach to In-Orbit Maintenance	I.4-155
4-50	Example of Failure Modes Analysis Format	I.4-156
4-51	Manned Maintenance Feasibility Analysis Diagram	I.4-157
4-52	In-Orbit Maintenance Analysis Summary	I.4-159
4-53	200,000 Gallon Underwater Facility	I.4-160
4-54	Subsystem Repair in 200,000 Gallon Underwater Facility	I.4-160
4-55	Handling and Assembly of Large Structure	I.4-160
4-56	Test Subject Entering Airlock at Forward End of S-IVB Spent State Simulator at Virgin Island Facility	I.4-160
4-57	Subject Performing Console Transfer Task in S-IVB Spent Stage Simulator	I.4-160
5-1	Location of Vendors Contacted	I.5-3

LIST OF TABLES

Number	Title	Page
3-1	Measurement Definition - Cardiovascular Evaluation	I.3-2
3-2	Equipment Definition - Vectorcardiogram	I.3-5
3-3	Venous Pressure Measurement Methods	I.3-11
3-4	Venous Pressure/IMBLMS Requirements	I.3-12
3-5	Physical Fitness Variables, Means, and Standard Deviations	I.3-15
3-6	Comparison of Breathing Gas Analyzers	I.3-24
3-7	Clinical Analyses - Group I	I.3-34
3-8	Clinical Analyses - Group II	I.3-39
3-9	Clinical Analyses - Group III	I.3-45
3-10	Clinical Analyses - Group IV	I.3-51
3-11	IMBLMS Measurements (On-Board Versus Post-Flight Tradeoff)	I.3-72
3-12	Sampling Regimen for Each Astronaut, 7-Day Rotating Schedule	I.3-76
3-13	Total Number of Samples for 3-Man Crew on 56-Day Mission	I.3-77
3-14	Expendables Required for Sampling and On-Board Analyses (3-Man Crew, 56-Day Mission)	I.3-78
3-15	Expendables Required for Sampling and Preservation (3-Man Crew, 56-Day Mission)	I.3-78
3-16	Test Suggested for Omission from IMBLMS Program	I.3-80
3-17	Minimum Crew Time Requirements for Biological Functions (Multiply by Number of Crew for Full Value)	I.3-101
3-18	Minimum Crew Time Requirements for Survival-Critical Checkout and Monitoring	I.3-104
3-19	Exercise Tolerance (Including Pulmonary Functions)	I.3-107
3-20	LBNP Provocative Testing	I.3-109
4-1	Design Environment Parameters (Guideline: MIL-STD-810A)	I.4-6
4-2	Applicable Documents	I.4-7
4-3	Safety and Performance Standards	I.4-9
4-4	Examples of Multipurpose Modules	I.4-17
4-5	Computer Functions for Various Measurement Capabilities	I.4-20

LIST OF TABLES (Cont)

Number	Title	Page
4-6	Computer Functions in Behavioral Measurements	I.4-21
4-6A	IMBLMS Capabilities	I.4-25
4-7	Communication Network Capability	I.4-41
4-8	Data Management Experiment Measurement List	I.4-46
4-9	10-Bit Word Accumulation for Exercise Tolerance Experiments (Including Pulmonary Function)	I.4-51
4-10	Data Compression as Applied to Two Biomedical Measurements	I.4-59
4-11	Compression Ratios for Varying Peak Error Tolerance for ECG and EEG	I.4-60
4-12	EEG Wave Frequency Content Interpretation	I.4-62
4-13	10-Bit Data Word Reduction as a Result of Data Compression	I.4-62B
4-14	Microelectronic Computers Comparison	I.4-87
4-15	Personal Telemetry Systems in Current Use	I.4-98
4-16	Summary of Digital Tape Recorders	I.4-105
4-17	Characteristics of Some Display Devices	I.4-108
4-18	Representative DMS Physical Parameters	I.4-111
4-19	Packaging Integration Considerations	I.4-124
4-20	Packaging Design Criteria	I.4-125
4-21	System Modular Packaging Design Guidelines	I.4-125
4-22	Installation Interface Data Required	I.4-131
4-23	Advantages of Modular Segment Approach	I.4-141
4-24	Block II. Command Module Equipment Removed	I.4-149
4-25	Lunar Module Aft Bay Equipment Removed	I.4-152
5-1	Companies Interested in IMBLMS	I.5-4
5-2	Companies Not Interested or Have No Capabilities for IMBLMS	I.5-17
5-3	Companies Not Responding	I.5-18
5-4	Vendor Visit Summary	I.5-20
5-5	Non-IMBLMS Equipment (GFE)	I.5-26
5-6	IMBLMS Equipment (GFE)	I.5-26
5-7	Major IMBLMS Equipment Matrix Requirements (Preliminary)	I.5-27

SECTION 1

SUMMARY

SECTION 1

SUMMARY

The final report on the Phase B Project Definition Study for an Integrated Medical and Behavioral Laboratory Measurement System (IMBLMS) represents the results of an analysis and conceptual design study performed by General Electric under NASA Contract NASw-1630.

During the study, major emphasis was placed on measurement selection, analysis and refinement. Measurement descriptions have been prepared to provide baseline definitions of requirements. Individual experiments, measurements, and related equipments and/or procedures have been critiqued. Relationships between measurement components, service equipment, crew operations, safety, and data management are described by means of function flow block diagrams. Recommendations for exclusion or inclusion of specific measurements as part of IMBLMS are included together with supporting rationale. This rationale is largely based on the use of safe, non-invasive methods (excepting allowed venipunctures) which are compatible with reasonable crew training and projected flight schedules.

In the medical measurement area, General Electric recommends inclusion of all specified measurements with the exception of central venous blood flow. Non-invasive techniques for determining central venous blood flow are not now available. The use of ultrasonic echo measurements to assess muscle mass, heart size, and arterial elasticity, and ultrasonic doppler measurements to determine cardiac output and peripheral blood flow are recommended.

In the biochemical area, General Electric recommends omitting from further consideration some 23 measurements (approximately 9% of those surveyed). A further recommendation applying to all but a few of the remaining measurements is to obtain and preserve samples for post-flight analysis. Other than for analyses requiring only rudimentary equipment, the availability of suitable equipment for conducting in-flight analyses is not compatible with the proposed IMBLMS flight schedule.

Behavioral measurements provide one of the major challenges to the IMBLMS program. At least nine discreet measurement techniques are recommended in answer to the desired needs, including assessment of muscle, visual, auditory and vestibular function. GE also recommends the integration of behavioral measurements into the physiological and biochemical experiment protocols. This approach to behavioral assessment has the advantage of providing certain desired behavioral information without requiring additional test time or crew attention.

The IMBLMS system concept, as defined by General Electric, is based on the requirement for common measurement and service functions needed to support medical, biochemical, and behavioral experiments in space. By this definition, unique experiment hardware is not included as part of IMBLMS. During the study, system analysis and conceptual design were persued in three general areas: 1) system approach, 2) data management, and 3) modular design and packaging. The IMBLMS system concept features a minimal system capability to which additional standardized functional modules are added to meet specific mission requirements. Integration of the on-board computer capability into the system concept to eliminate

or supplement potential IMBLM system elements is an important feature. Commonality of function, semi-automatic operation, modular design, future growth capability, and spacecraft installation compatibility are emphasized.

General Electric's approach to IMBLMS equipment selection is based on the competitive solicitation and ultimate incorporation of the latest and most advanced equipment developments, concepts, methods, and techniques available in the entire bio-engineering community. This multiple vendor approach was implemented by an extensive vendor briefing held at GE - Valley Forge Space Technology Center, by written and telephone solicitations, by individual meetings at GE, and by visits to vendors by GE (almost 200 contacts and discussions). The vendor contacts revealed that in general medical measurement equipment development is the furtherest advanced, chemical analysis equipments need additional development for space application, and behavioral measurement techniques are the least perfected.

SECTION 2

INTRODUCTION

SECTION 2

INTRODUCTION

General Electric recognizes four major elements of the medical and behavioral research program contemplated by NASA in the Apollo Applications Program (Figure 2-1). The selection of experimenters, the structuring of experiments, and the implementation of experimental protocols lies primarily in the province of NASA. For the performance of these experiments, two types of hardware and equipments can be identified: first, unique, single-purpose experiment equipments which in general represent major separate procurements by NASA; and second, a group of equipments, highly flexible in application, which represent measurements and services common to many experiments. As shown in Figure 2-1, a fourth function is the integration and operation of the resulting experiment system.

IMBLMS, as conceived by General Electric, provides the common measurement and services function. It must accommodate all present and envisioned experiment requirements. It thus provides flexibility in program planning and establishes a common interface for future experiment hardware.

This definition of IMBLMS (the common measurement and services function) has been pursued by an analysis of the experiments and measurements, provided in Annex A and B of our contract, as well as approved experiment plans for AAP in order to identify unique experiment equipment, measurement equipment and the required service functions.

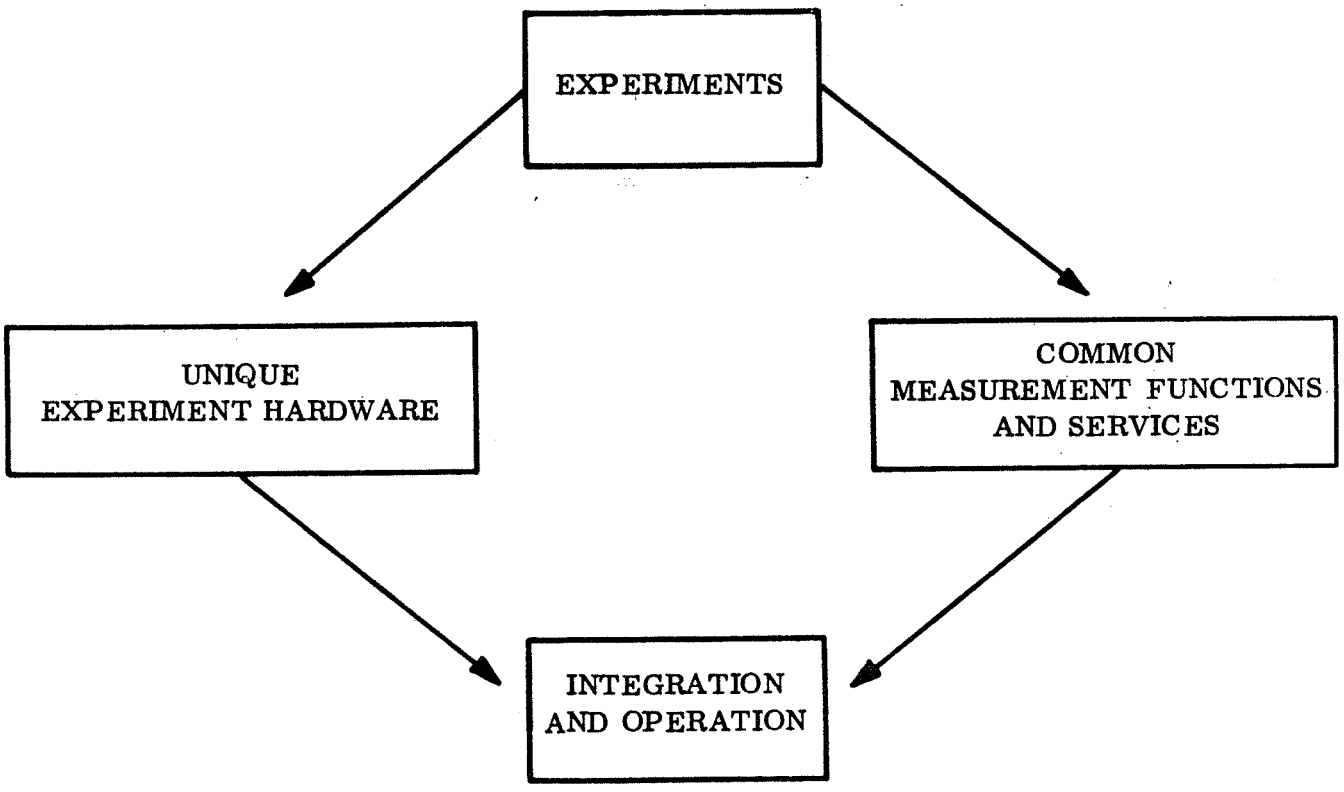

Figure 2-1. General Electric Company Approach to IMBLMS

Thus, IMBLMS is not the highly unique experiment hardware of the AAP medical and behavioral laboratory. Examples of what is meant by unique experiment hardware are:

a. Ballistocardiogram

b. Bicycle Ergometer

c. Whole Body Exerciser

d. Lower Body Negative Pressure Device

e. Water-Cooled Suit

f. Anti-G Suit

g. Elastic Leotard

h. Rotating Litter Chair

i. Fiber Optics System

j. Gamma Gauge (Bone Densitometry)

k. Endoradiosonde

l. Food and Water Dispensing

m. Waste Sample Collection

n. Small Radius Human Centrifuge.

Some of these equipments are the subject of current NASA procurements and others are contemplated. Food and water dispensing and waste sample collection, although critical to proposed metabolic and nutritional experiments, are clearly not IMBLMS equipment, but probably a part of the crew support equipment. The ballistocardiogram, the small radius human centrifuge and the endoradiosonde pill itself are not IMBLMS by virtue of their specialized nature. Each, however, requires a biotelemetry receiving system which is an IMBLMS candidate, by virtue of the commonality of the requirement. While a versatile cinematographic capability is an IMBLMS function, unique and special fiber optics are not by this definition. The presence of the lower body negative pressure device serves to identify a pneumatics capability for IMBLMS and the water-cooled suit an IMBLMS capability to handle fluids, including gas-liquid phase separation and liquid temperature control.

IMBLMS is thus not the complete medical and behavioral laboratory. The GE philosophy and approach has been to identify certain major single purpose items for separate procurement by NASA and to supply common and support measurement capabilities, services and interfaces for experiment performance.

IMBLM is the multipurpose sensors and hardware which support and sub-serve major segments of the overall experimental program. It is regulated power, pneumatics, thermal control, displays and controls, and data management. It is the laboratory stockroom. It is the space-equivalent of the string, adhesive tape, sealing wax, bunsen burners and ring stands. It is all those things that are required to make an experimental laboratory functional.

This definition of IMBLMS was reached as the result of several influences: (1) the desire to utilize to the maximum extent possible NASA hardware developments already underway or iminent, (2) the requirement to accommodate new experiments and the reprogramming of others, and (3) schedule pressure for a flight capability in 1970.

General Electric believes this approach to IMBLMS has many advantages. For example:

a. It provides a circumscribed area of work for the IMBLMS contractor which can be defined without being unduly open-ended.

b. It accommodates NASA's management perogatives to control the program and make experiment modifications as the program progresses.

c. It accommodates the desired measurements as expressed in Annex B of our contract.

SECTION 3

MEASUREMENT ANALYSIS AND REFINEMENT

SECTION 3

MEASUREMENT ANALYSIS AND REFINEMENT

3.1 INTRODUCTION

The work of this area has consisted of measurement definition, equipment definition, measurement/equipment critique and considerations with respect to crew operations including displays and controls philosophy and crew time availability.

3.2 MEASUREMENT DEFINITION

The work was begun by the tabulation of the description or interpretation of the intent of each measurement listed in Annex B. This served several purposes. The physiologists and psychologists were required to state in lay language, where possible, the meaning of the simple phrases provided. An exact statement of this type is of great value to the biological and behavioral scientist in the avoidance of ambiguity. Despite reference to the literature, ambiguities and uncertainties are present in the list.

The engineers have profited by a clear statement of what is required in language he can understand. Because of the breadth of coverage of the measurements these descriptions have served as an educational tool inasmuch as most individual bioengineers and life scientists have had a more restricted experience as compared to the scope of the measurement list.

As measurements were described, preliminary statements of possible approaches, methods and procedures were noted. In particular, where no non-invasive or safe method was known, this was indicated. References to the literature were appended depending on the experience of the individual compiling the definitions. The measurement list has undergone one iteration based on information accumulated during the contract period.

The measurement name, its definition, suggested methods and procedures and investigator remarks for each measurement are given in the format and example of Table 3-1. Detailed tables are given in Appendix A.

Table 3-1. Measurement Definition - Cardiovascular Evaluation

Measurement (Annex B)	Description	Methods and Procedures	Remarks
CLINICAL CARDIOVASCULAR EXAMINATION			
H_x and P_x	These are standardized checklists for verbal report of physical condition and routine physical observations by an astronaut physician if present (GFE)	Written log Taped Keyboard punch Verbal communication	Physical exam/ diagnostic equipment should be included in NASA Medical Kit.
CARDIAC DYNAMICS EVALUATION			
Electrocardiagram	A time-variant record of the electrical activity of the heart measured by means of skin electrodes. Not a measure of the mechanical behavior of the heart	Standard leads Frank leads (VCG) Wilson central terminal	See NASA EPI M051
Phonoelectrocardiogram	A time-variant record of the audible sound at the chest wall	Microphone at heart apex	See NASA Tech. Requirement
Ballistocardiogram	A time-variant record of the displacement of the whole body which results from ejection of blood from the heart and the ensuing distribution of blood flow	Recording is usually in terms of accelerometers (for zero g this should be triaxial and angular)	For detailed description see Hixon & Beischer

Table 3-1. Measurement Definition - Cardiovascular Evaluation (Cont)

Measurement (Annex B)	Description	Methods and Procedures	Remarks
Cardiac Output (Non-Invasive)	The product of the blood volume ejected per stroke and the heart rate (ECG) or the average output per unit time. The latter requires stable conditions for the period to allow equilibrium of gas concentrations	Invasive Methods include Fick (mixed venous sample), dye dilution (cuvette), thermal, electrolyte and non-electrolyte (polarograph), EM flow meter, etc. Non-Invasive (Gases) Douglas-Haldane CO_2, Acetylene, N_2O, C_2H_2I, Fe22 Transthoracic Impedance. Pulse wave analysis. Ultrasonics	

3.3 EQUIPMENT DEFINITION

From NASA experiment implementation plans, work statements and specifications, and relevant literature for equipments as they have been identified, tables were prepared providing the following information:

a. Equipment name and reference material used

b. Equipment major components

c. Support and service equipment

d. Function flow block diagrams indicating relations between components, service equipment, crew operations and data management

Service equipments generally include controls and displays and data management items as well as ancillary sensors required to support relevant experiment designs.

Not all equipment has been converted to this form, because of late receipt of vendor information. Those which have been completed are given in Appendix B. The format and an example are shown in Table 3-2.

The sections related to behavioral measurements represent somewhat expanded versions of the basic format. Time will permit a similar expansion in the case of the medical measurements.

3.4 MEASUREMENT/EQUIPMENT CRITIQUE

The critique of both equipment and measurement methods and procedures has been conducted.

The measurement/equipment critique was related to the following criteria:

a. Relevance of the measurement to manned space flight

b. Precision and accuracy

c. Crew training and baseline studies required

d. Crew safety

e. Hardware development problems and feasibility for space flight implementation.

Table 3-2. Equipment Definition - Vectorcardiagram

Equipment Item	Components	Support Equipment
(See Figure 3-1) Ref: NASA Tech. Req. Project Apollo (up-dated 1/15/67, Mod No. 10 Paragraph 3.2.1 : DB-53-M051 4/28/67 : DB-50-67-M018 3/31/67	Standard Apollo Block II Signal Conditioners (9) Electrode Harness Assembly (3) (Quick Don-Doff) Electrodes (Spacelabs, Inc. Part No. 102761) (3 sets of 7) Frank Resistor Network (3) Automatic Calibration (1) Calibration Signal Switching DC to DC Power Converter (1)	Cardiotachometer (10 second intervals) Display Heart Rate ECG Trace (Strip Chart per M015 and CRT) Calibration Skin Preparation Electrode Paste Applicators Wipes (Post Test Cleaning) Cabling Tape Recording (Dump and Return) Subject Identity Mission Elapsed Time

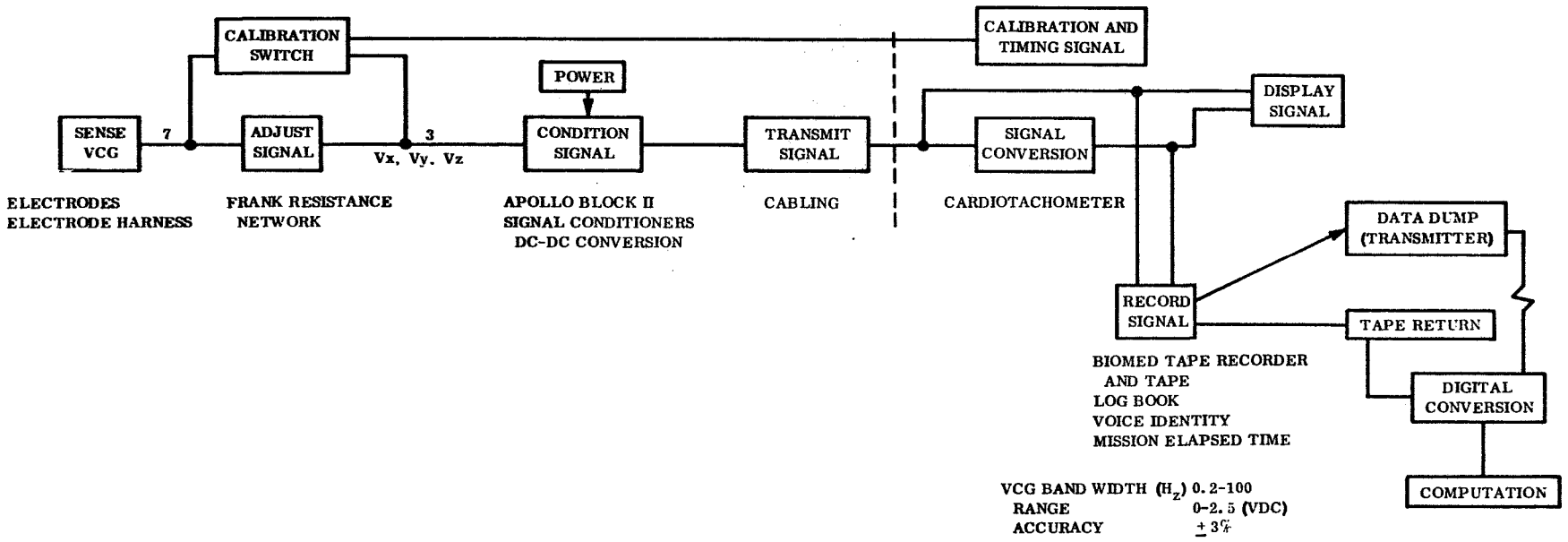

Figure 3-1. Vectorcardiogram Functional Flow Diagram

For purposes of discussion, measurements have been grouped as follows:

Cardiovascular
Respiratory
Metabolic and Nutritional
Musculoskeletal
Behavioral, Neurological and Sensory
Biochemical, Cytological and Microbiological

Such groupings are not mutually exclusive but are rather interdependent. No grouping of measurements has proved really satisfactory; all overlap to some degree.

3.4.1 CARDIOVASCULAR MEASUREMENTS

Perhaps the most critical measurements to be made in the Apollo Applications Program are those related to the cardiovascular system and its adaptation to weightlessness. We believe that Annex B has provided a balanced set of measurements in this area.

3.4.1.1 Electrocardiogram

The electrocardiogram will be included, of course. We propose an ECG capability consisting of three channels to be used either separately (as single channel ECG's), simultaneously (a single channel for each astronaut) or as the VCG on a single astronaut. For use at a fixed experiment station such as the ergometer or lower body negative pressure device, junction boxes for "active" electrodes will be used. These electrodes are provided with thin film circuits so that the inputs or electrode impedance of two megohms or greater is converted to an output of 100 ohms so that the low impedance line that runs from the junction box may be 25 to 50 feet or more. We believe that such a system will meet the requirements imposed by such situations. In addition, the IMBLMS will provide a versatile biotelemetry receiver that will accommodate the transmissions from a personal biotelemetry system. Such a personal biotelemetry transmitter, we believe, should be GFE if required by specific experimental protocols.

For the VCG application, the use of active electrodes may require modification of the values of the Frank resistor network.

The vectorcardiogram currently proposed as Experiment No. DB-53-M051 is designed as a vest system. Such a design would be appropriate for the ballistocardiogram application. We would propose, however, that the basic capability be repackaged in the IMBLMS to permit the realization of the multipurpose use of the associated electronics.

Although the state-of-the-art will permit the digitalization of the ECG signal directly from the electrode, we believe common mode rejection will be required prior to such signal treatment in order to preserve signal integrity.

3.4.1.2 Phonocardiogram

The phonocardiogram microphone is included for the study of heart sounds, for use with the automatic blood pressure measuring device, and for data analysis with the ballistocardiogram. The device covers the frequency band 30-100 Hz. The interpretation of the phonocardiographic trace for heart sounds requires the simultaneous recording of the ECG.

The same amplifier type is used for the phonocardiogram and the ECG. However, because the VCG and the phonocardiogram are used simultaneously, an additional signal conditioner will be required and available for other sensors in other experiments.

The microphone will be GFE. On-board quantitative calibration is being studied utilizing either the auditory measurement equipment or the computer.

3.4.1.3 Ballistocardiogram

The ballistocardiogram in six degrees of freedom is a logical experiment in itself. Requirements on IMBLMS have followed Nixon and Beischer's published work. These include a body-mounted VCG, the phonocardiogram, and a nares air flow sensor. The BCG constraint platform should logically include these plus the linear and angular accelerometers, a calibration system, amplifiers, and a biotelemetry transmitter.

For this experiment, IMBLMS should provide the biotelemetry receiver, displays, and data management. Calibration services could be provided by hardware before and after the test from the IMBLMS.

3.4.1.4 Cardiac Output

During the Phase B Study we have considered three methods for the measurement of cardiac output: (1) the impedance method; (2) the ultrasonic method; and (3) the rebreathing method.

3.4.1.4.1 Impedance Methods

General Electric has reservations with respect to the use of impedance measurements generally and their calibration problems. We have studied the problems during this contract and discussed it with knowledgeable individuals. We are persuaded to include in IMBLMS a general purpose impedance system capable of use in the following modes:

(1) Transthoracic impedance using neck, sternal and abdominal electrodes as in the Kubicek system;

(2) Extremity impedance (arm, leg and finger) for the measurement of

   (a) Segment volume and thus venous compliance.

   (b) Regional blood flow in the extremities.

   (c) As an alternate detector for blood pressure measurement.

Our reservations related to impedance arises from two sources: First, Kubicek et al have recently published their study of the development and evaluation of an impedance cardiac output measurement system developed under NASA contract. They report that the system apparently monitors right ventricular output based on comparisons with simultaneous values obtained by the dye dilution technique. Their observations indicate a large subject-to-subject variation.

For NASA there are two implications. The first is that individual astronauts may have to be studied by dye dilution in order to determine the impedance proportionality constant which is unique to the individual. The second approach is the use of ratios of cardiac outputs obtained under ground-based and space flight conditions, or ratios as a function of residence time in space.

A recent report by Hill and his associates throws considerable doubt on the impedance method generally. An extensive mathematical and laboratory analysis has led them to the belief that impedance devices cannot be calibrated because of artifacts at the electrodes.

To quote from their paper: "Any further search for such an elusive signal should be carried out as a separate academic study." They indicate that "the least sophisticated instruments get the best pseudosignals."

While the impedance method appeared to offer hope of a single system measuring not only cardiac output but respiratory volume exchange and regional blood flow, there now appear to be severe restrictions with respect to individual-to-individual variation and calibration.

The final inclusion of the impedance system in IMBLMS must await further ground-based studies. The allocation of weight, space, and power for the system will permit the substitution of alternate methods for either cardiac output, regional blood flow, or limb volume if desirable, i.e., the capacitance cage developed by Carlson.

Certain proprietary impedance methods have been brought to our attention during the Phase B study. These have not been communicated because of our current contractual relations.

3.4.1.4.2 Ultrasonic Methods

Perhaps the most promising method for the measurement of cardiac output and regional blood flow makes use of current advances in ultrasonic technology pioneered by Rushmer. As with the impedance devices, quantitation presents a problem but the electronics are simple. Transducers present a design problem because sending and receiving crystals must be angled exactly for the specific blood vessel under study. The electronics will be included in IMBLMS and the transducer selection and configuration determined at a later date. Both the impedance and the ultrasonic device satisfy the requirement for pulse contour in Annex B.

Echo-ultrasonography will be useful for a variety of measurements in the IMBLMS program including muscle size, mass and density measurements, size and reactivity of the heart, motion of heart valves, and arterial size, compliance, and reactivity.

3.4.1.4.3 Rebreathing Methods

Because we recommend the inclusion in IMBLMS of a mass spectrometer with single breath capability, the use of rebreathing techniques for cardiac output employing Freon 22 or carbon dioxide are also recommended for inclusion. Sampling systems will be required for respiratory measurements and can be adapted for the cardiac output determination.

The use of Freon 22 is not a widely publicized technique. Given a versatile gas analyzer with the subject breathing room air (in our case a mixed gas cabin atmosphere), rebreathing is begun at expiration from a mixture of Freon 22 and oxygen. Equilibrium occurs in 3 or 4 breaths and the freon is removed from the rebreathing system at a rate determined by the solubility of freon (0.71) and the blood flow. Measurements include the initial and final concentration of the diluent (N_2 or He) to provide the volume of the circuit and the plot of the freon concentration. While errors occur for marked changes in cardiac output from the normal, the method has much to recommend it. For space application, we must recognize that freon is converted into a toxic gas in a catalytic burner, and such a safety hazard must be considered before recommending the method.

3.4.1.5 Blood Pressure

General Electric recommends the inclusion in IMBLMS of a manual blood pressure measurement capability as well as an automated capability for use during special procedures such as exercise. Requirements for the automatic system have followed the Design Requirements for the Gemini Biomedical Instrumentation System.

We are currently investigating a Smith Kline Instrument Company automatic system which is said to resolve problems related to fit of the cuff and employs a specially designed microphone. The data is displayed or recorded as voltages related to appearance and disappearance of the Korotkoff sounds so that systolic and diastolic pressures are read directly and independently.

3.4.1.6 Venous Pressure/Compliance

Venous pressure is difficult to measure with a needle and manometer at the bed side. Further, the interpretation is most difficult in the presence of valves in the veins and venous collapse at the thorax with the respiratory cycle. Venous distension due to elevated pressure is usually readily apparent in pathological conditions related to the heart, but the clinical measurement usually makes use of gravity.

In space flight, the measurement of interest is really the venous compliance, the $\Delta P/\Delta V$ relationship. Weightlessness is thought to alter the elasticity or "tone" of the venous system, and thus the $\Delta P/\Delta V$ relation. In practice, this can be obtained by exposing the extremity to negative pressure and measuring the volume or circumference of the limb.

A study of venous pressure per se has been conducted by Biosystems, Inc under NASA contract which they have made available to us as the result of the GE IMBLMS vendor solicitation. Their study of venous pressure has proved valuable to us in defining IMBLMS service requirements.

In the course of their study they investigated 16 potential methods for the measurement of venous pressure as shown in Table 3-3. This effort is appropriate because alterations in the venous system are probably central in any study of the cardiovascular effects of weightlessness. If we assume that any one of these methods might at some time be flown on the AAP, what service facilities would be required to support their accommodation and integration?

Omitting thermography, we find the distribution of requirements shown in Table 3-4. Note that number 13 is unique, requiring a totally manual manipulation; in this case, the measurement of ocular pressure with a tonometer under local anesthesia and the relation of the measurement to a nomogram. The only on-board data processing is required by number 10 (P-A Delay) involving a cross correlation technique. Notice the frequent use of force generators, both mechanical and thermal.

Table 3-3. Venous Pressure Measurement Methods

1.	Air Displacement Plethysmograph
2.	Water Displacement Plethysmograph
3.	Capacitance Displacement Plethysmograph
4.	Impedance Displacement Plethysmograph
5.	Photoplethysmography
6.	Circumference Measurement
7.	Thermal Flow
8.	Doppler Shift
9.	Pulse Wave Velocity
10.	P-A Delay
11.	Standing Wave Resonance
12.	Superficial Vein Pressure Chamber Balance
13.	Ocular Method
14.	Peripheral "A" Wave Detector
15.	Venous Run-off
16.	Thermography

Table 3-4. Venous Pressure/IMBLMS Requirements

Service Facilities	*1	2	3	4	5	6	7	8	9	10	11	12	13	14	15
Electrodes				x						x					
Sensors	x	x	x		x	x	x	x	x	x	x	x	x	x	x
Electronic circuitry	x	x	x	x	x	x	x	x	x	x	x	x		x	x
Light source					x							x			
Force generators						x	x	x	x		x	x			
Pneumatics	x		x	x	x	x	x		x			x		x	x
Fluids		x													
Calibration and timing			x						x						
Storage	x	x	x	x	x	x	x	x	x	x	x	x	x	x	x
Data processing										x					
Data display	x	x	x	x	x	x	x	x	x	x	x	x		x	x
Data storage	x	x	x	x	x	x	x	x	x	x	x	x	x	x	x
Reference data													x		
Drugs													x		
Cabling, hoses, etc.	x	x	x	x	x	x	x	x	x	x	x	x		x	x

*Refer to Table 3-3

We have reviewed the state-of-the-art in plethysmography as reflected in the Biosystems report and find the air, water, and perhaps photoplethysmography techniques largely unacceptable for IMBLMS. Each represents a significant technical problem in itself, and although IMBLMS could support all approaches, we do not recommend them. We have also made provision to incorporate the capacitance cage technique of Carlson.

The assessment of venous pressure by the superficial collapse method devised by Biosystems can easily be accommodated as a manual item by the allocation of storage space. It appears to us more relevant to the manned space program to concentrate on the measurement of venous compliance. We have the firm view that the culprit in cardiovascular adaptation to weightlessness is the venous wall, and that cardiac changes, if they occur, will be appropriately adaptive with no tendency toward failure.

3.4.1.7 Regional Blood Flow

Regional blood flow methods (ultrasonics and impedance) have been considered. Alterations in skin temperature, as measured by the thermistor harness system (considered below), represents an additional technique.

All of the methods considered have been non-invasive. We know of no techniques for organ blood flow which can be used which do not require invasion. We have interpreted regional blood flow as extremity and skin blood flow and have not pursued this area further.

3.4.1.8 Arterial Oxygen Saturation

The ear oximeter is a non-invasive, indirect or bloodless technique for evaluating the oxyhemoglobin content of blood. It is painless and convenient and has been widely used despite the inherent variability of the method.

In response to our solicitation, American Electronics Laboratory, a neighbor in Colmar, Pa., has provided us with a mathematical analysis of ear oximetry and a number of suggested improvements. This firm has had considerable experience in this general class of instrumentation and has produced such devices since 1960.

The principle problems of ear oximetry relate to the necessity of individual calibration and the difficulty of determining absolute values of oxygen saturation of the blood, problems which now appear amenable to design correction.

Precision and accuracy of the ear oximeter is significant because of its potential usefulness in manned space flight. McIlroy, at the University of California at San Francisco, has described a single breath respiratory method utilizing the ear oximeter which leads to an estimate of circulation time and the time constant for the clearance of gas by the blood from the dominant mixing chamber. The time constant is a ratio of gas volume to blood flow. Given either an estimate of blood flow or of the relevant gas volumes, cardiorespiratory relations may be studied. The determination provides measures relevant to the study of the cardiovascular effects of weightlessness.

Rather than a measure of mean hemoglobin saturation, equipment modification can permit a measure of the oxygen saturation of arterial inflow, the physiologically important value.

The ear oximeter appears in the NASA measurement list (Annex B) only in relation to certain respiratory variables of somewhat limited interest. This raises an important element of the IMBLMS concept: the utilization of a simple sensor for a variety of measurements, alone or in association with other equipment.

We are aware of the developments in ear oximetry at the Aerospace Medical Division of the USAF at San Antonio, and have read Dr. Earl Wood's paper of the detection of dyes at the ear piece in the assessment of cardiovascular function, another example of the imaginative use of this sensor. The ear oximeter will be included in IMBLMS.

3.4.1.9 Cardiovascular Procedures

Annex B calls out a series of procedures which will utilize the IMBLMS battery of measurements. The ballistocardiogram has been considered. Other procedures include:

a. Inflight Exercise

b. Inflight LBNP

c. Elastic Leotard

d. Carotid Sinus Stimulation

e. Response to Occlusive Cuffs

3.4.1.9.1 Inflight Exercise

We regard the inflight use of exercise and the LBNP as forcing functions on the cardiovascular system as potent methods for the study of cardiovascular adaptation and countermeasures for weightlessness. The variables having a potential relation to the response to exercise during zero G are shown in Table 3-5. They number 53 of which 35 appear relevant. Both respiratory and cardiovascular variables are involved. In the cardiovascular area, pulse rate appears to be a unique criterion for exercise tolerance, and IMBLMS will include a cardiotachometer.

IMBLMS will provide support to the GFE ergometer in terms of power recording, work rate and time with appropriate displays.

3.4.1.9.2 Inflight LBNP

This technique which simulates the hydrostatic load on the vascular system has been under intensive investigation. Potentially, the following IMBLMS measurement equipment may be involved.

Table 3-5. Physical Fitness Variables, Means, and Standard Deviations

		Mean	SD
1.	Max O_2 intake, liters/min	3.126	.541
2.	Max O_2 intake, ml/kg body wt/min	39.460	7.550
3.	Max O_2 intake, ml/kg lean body mass/min	54.310	8.260
4.	Max min vol, vent/liter	94.160	21.480
5.	Forced VC/liter	4.960	.680
6.	Ht, cm/FVC per liter	36.090	4.500
7.	FVC/body surface area	2.560	.310
8.	MBC/liter per min	141.120	20.250
9.	Forced expiratory $vol_{1.0}$ (% of VC)	74.390	7.560
10.	Submax resp rate/min	23.530	6.350
11.	Max resp rate/min	33.420	8.440
12.	3-Min recovery pulse count after submax exer	336.020	42.080
13.	Pulse increase from rest to submax	88.350	15.670
14.	Duration bicycle ride, in min	9.600	1.440
15.	Mod Schneider index	18.870	9.100
16.	Resting systolic blood press, mm Hg	119.250	10.530
17.	Postexercise systolic blood press	165.190	17.830
18.	Recovery systolic blood press	126.420	11.460
19.	Resting diastolic blood press	80.560	8.330
20.	Postexercise diastolic blood press	74.820	9.020
21.	Recovery diastolic blood press	80.190	8.600
22.	Resting pulse press	38.630	8.000
23.	Postexercise pulse press	90.430	15.240
24.	Recovery pulse press	46.170	9.400
25.	Max heart rate/min	176.700	13.170
26.	Lying heart rate/min	68.180	9.520

Table 3-5. Physical Fitness Variables, Means, and Standard Deviations (Continued)

	Mean	SD
27. Age, in years	36.900	7.750
28. Height, in cm	176.403	6.604
29. Weight, in kg	80.155	10.295
30. Vent equiv (vent liters/liters O_2 used during max effort)	30.140	4.120
31. O_2 pulse, ml/min (max exer)	17.810	2.810
32. Body temp increase during submax exer	.440	.150
33. Pull-ups	3.760	2.950
34. Sit-ups	33.430	10.390
35. Standing broad jump	79.870	8.670
36. 50-yd dash	7.590	.680
37. Shuttle run	10.520	.880
38. Medicine ball put	31.740	4.250
39. Dips	3.630	2.930
40. 600-yd run-walk	146.480	26.790
41. Drop-off index	55.650	21.420
42. Force platform-vertical	1261.000	516.000
43. Force platform-frontal	298.000	157.000
44. Force platform-vertical/kg body wt	16.300	7.270
45. Force platform-frontal/kg body wt	3.650	1.720
46. Submax exer heart rate/min	157.180	14.870
47. Submax min vol vent/liter	59.500	10.960
48. Submax O_2 intake, liter/min	2.917	.411
49. Standing heart rate/min	80.610	10.400
50. RQ (submax exer)	.971	.067
51. Lean body mass, kg	127.210	13.270
52. Percent lean body mass	72.720	6.730
53. Submax min vol vent/kg body wt	.755	.171

VC = vital capacity; FVC = forced vital capacity; MBC = maximum breathing capacity.
(J. APPLIED PHYSICAL. 20:991-999, 1965)

a. Leg volume as a function of LBNP. The resulting volume-pressure curve is a measurement of venous compliance.

b. Alteration in arm blood flow reflexly induced by LBNP (see Shepard).

c. Alterations in cardiac output and blood pressure with LBNP.

d. Effects of an elastic leotard on these variables during LBNP exposure.

We see no convenient way to utilize the anti-G suit in NASA's experimental program. Its use for re-entry protection is possible, but the air supply and G-value (appropriate for re-entry) has not been included in IMBLMS. A test of its protective effects by the use of the LBNP device does not seem warranted or practical.

IMBLMS will provide a programmable source of negative pressure for the LBNP. Pressure sensors will be integral with the GFE LBNP but electronics and data management available in IMBLMS will support the LBNP device.

3.4.1.9.3 LBNP and Exercise as Countermeasures

We recognize an interaction between the use of LBNP and exercise as dynamic tests of cardiovascular function and the use of these techniques as weightlessness countermeasures. This, however, is a matter of experiment design. NASA must determine whether the intent is to observe the adaptation process as it occurs, or to provide repetitive exposures sufficient to prevent such adaptation. We believe the latter course is to be preferred and that minimal change in tolerance to these stresses is the desired response.

3.4.1.9.4 Carotid Sinus Stimulation

We hold the view that such a basic reflex mechanism as the carotid sinus response is unlikely to be modified by zero G. Available human data and the Soviet 22-day dog experiment do not suggest such changes. The data seem to point to the preservation of the arterial status by deterioration in the venous integrity. While the response to carotid sinus stimulation is both arterial and venous, the measurements included in IMBLMS will not be sufficiently sophisticated to provide a definitive answer to this problem.

3.4.1.9.5 Response to Occlusive Cuffs

Periodic occulusion of the venous system of the extremities exerts a protective effect on the deconditioning of this system. Underwater studies suggest that an intensive schedule approaching one minute on - one minute off and four cuffs are required for protection. As a test, occlusive cuffs have less to offer as compared to LBNP. Cycling of the volume of the segment could be observed by appropriate instrumentation, but no measurement of venous pressure could be made, and thus compliance cannot be determined.

3.4.1.10 Cardiovascular Summary

We believe that the measurements provided by IMBLMS are adequate to provide an operational evaluation of the cardiovascular status of the astronaut. Detailed and highly quantitative data can be provided only by invasive methods involving venous catheterization and arterial puncture. Studies related to the biochemical and hematological correlates of cardiovascular function will be considered later in this presentation.

3.4.2 RESPIRATORY MEASUREMENTS

IMBLMS will incorporate the following measurements in relation to respiration: (1) measures of lung capacity; (2) measures of metabolic exchange; and (3) measures of pulmonary function including the mechanics of ventilation, perfusion, and diffusion.

3.4.2.1 Lung Capacity

NASA has under development a dry gas volume meter which can be used to assess lung capacities. The Melpar equipment for M-19 can be used directly, or gas volumes collected in an inflatable Douglas-type bag can be expelled through the meter as in M-20. Both devices have been flight qualified.

3.4.2.2 Respiratory/Metabolic Exchange

At the mid-term review, our discussions evolved a tentative requirement for two distinctly different types of gas measuring systems: (1) a slow response system for metabolic measurements including pO_2 and pCO_2, and (2) a fast response system capable of single breath analysis.

Response time in gas measuring systems relate not only to the sensors themselves but to the sampling system utilized. Because metabolic measurements are characteristically average rates per minute or per hour, detailed moment-to-moment fluctions in oxygen consumption and CO_2 production are not desired. Sampling systems can therefore be metabolic hoods through which ambient air is drawn at a rate sufficient to maintain the CO_2 concentration at the desired level. Such hoods provide the subject with freedom of motion and are comfortable over prolonged periods.

Oxygen consumption and CO_2 production are measured by concentration differences with respect to ambient air at a fixed flow rate. Because of the variable nature of the cabin ambient gas concentrations, these must be continuously measured during the procedure.

3.4.2.2.1 O_2 and CO_2 Sensors

During the course of this study, GE has reviewed the current state-of-the-art of gas sensors. This review has included:

a. High-speed ambient temperature gas chromatography (Melpar).

b. Lion Research Corporation pCO_2 and pO_2 detectors which utilize a radiological method.

c. CO_2 and O_2 detectors based on the polarographic principle (Beckman).

d. Ultraviolet and infrared techniques for oxygen and carbon dioxide respectively (Perkin-Elmer).

e. Mass spectroscopy (Perkin-Elmer and GE).

We believe the commonality principle of IMBLMS dictates the selection of a single versatile multipurpose piece of equipment, and that the IMBLMS requirements are best met by the mass spectrometer approach.

3.4.2.2.2 Gas Sensor Trade-off

The requirements for breath-by-breath analysis of pulmonary gas are the capabilities of simultaneously measuring the concentrations of the several gases and vapor which constitute pulmonary gas, and of being able to follow changes in their concentration at least as fast as the changes occur. Also important is the capability of making the measurements with sufficient accuracy to assure that the results are significant. Several instruments have been or are now being developed into flight type gas analyzers under NASA contracts. These instruments offer several choices of equipment for pulmonary gas analysis.

NASA Contractor Report 741, The Design, Fabrication and Feasibility Testing of a Prototype Airborne Respiration Analyzer, describes a respiration analyzer incorporating a separate mass flowmeter, oxygen analyzer, CO_2 analyzer, and total pressure sensor. The difference between the O_2 and CO_2 analyzers and the total pressure sensor were compared to generate a signal corresponding to diluent gas partial pressure. The total internal volume of this arrangement was so large as to prevent a breath-by-breath analysis with the volume of gas available in a single respiration. The approach adapted by North American Aviation who did this study was to use a sampling system which mixed the gases from a number of expirations to obtain an average value. Although this approach would be satisfactory for a basal metabolism study, the necessity for averaging many respirations to obtain a constant composition gas sufficient to operate the separate analyzers rules out breath-by-breath pulmonary gas analysis, as well as measurement of the pulmonary diffusion coefficient. (See Figure 3-2.)

A similar, but more closely integrated system, has been developed by Perkin-Elmer under NASA Contract No. NAS 9-6810. This unit uses infrared (IR) absorption for the measurement of CO_2 and ultraviolet (UV) absorption for measurement of O_2 and water vapor. The three detectors are integrated in a single unit with considerable commonality in electrical circuits, plumbing, and optics. The weight of the unit is 5 pounds, the volume is 100 cubic inches, the power requirement is 6 watts and the accuracy is $\pm 2\%$. Although the price for a fully flight qualified model has not yet been exactly determined, it will probably be near the price of a flight qualified mass spectrometer. The main disadvantage the UV-IR analyzer

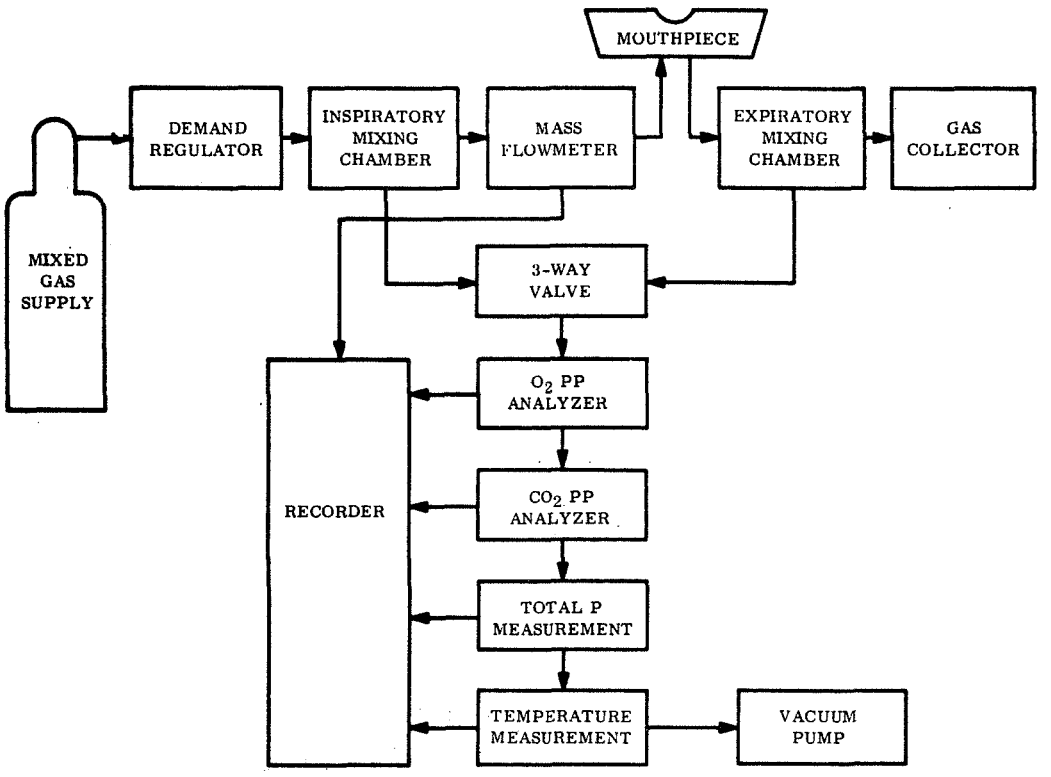

Figure 3-2. North American Aviation Respiratory Analyzer

suffers in relation to a mass spectrometer is that it requires a large flow rate in order to sweep new gas into the optical cells rapidly enough to change the gas in the cells as fast as the instrument electronics are capable of responding. Perkin-Elmer has solved this problem by passing the entire inhalation and exhalation through the UV-IR analyzer. This provides a response time of 20 milliseconds to give a 63% response to a step change in input gas composition. A disadvantage of passing all of the respiratory gas through the analyzer is that the analyzer must be connected to the mouth through a minimum volume, as any tubing connecting the mouth to the analyzer is added in effect to the volume of the bronchial tree. However, since the mass of the UV-IR analyzer is only 5 pounds, it could be mounted directly on a mouthpiece and held by the mouth. Although this is too heavy a weight to be comfortable in a 1-G field, in space the analyzer would only be felt by its inertia, and a five-pound mass attached by a mouthpiece would not be objectionable if no rapid movements were made.

One measurement that the UV-IR analyzer would not be able to make is the measurement of the pulmonary diffusion coefficient. Carbon monoxide of heavier molecular weight than 28 could be measured by a mass spectrometer to obtain the pulmonary diffusion coefficient; but since the presence of heavier isotopes does not change the optical absorption spectrum of a gas appreciably, the UV-IR analyzer, in its present form, would not measure either normal or heavy carbon monoxide.

There are two mass spectrometers which are being developed into flight prototypes or flight instruments under NASA contracts. The one which is more advanced toward flight qualification is the magnetic sector mass spectrometer developed by the Aerospace Systems Division of the Perkin-Elmer Corporation in Pomona, California. This instrument is capable of measuring the partial pressures of six gases or vapors with a response time of 50 ms using a 2-meter sampling line and a gas consumption of 0.215 gms per hour. However, unlike the UV-IR analyzer, this small amount of sample gas is lost overboard, as the mass spectrometer would be vented to space to avoid the weight and power penalties of a vacuum pump. This magnetic sector mass spectrometer in flight configuration weighs 6.5 pounds, requires 3.7 watts of power, and occupies 172 cubic inches. Its accuracy measuring the pulmonary gases and vapor is ±2% of the amount of each component, and the sensitivity in flight will be 100 ppm or better (it has achieved detection of 3 ppm in the laboratory). The resolution is better than one atomic mass unit (amu) up to mass 50, and the maximum amu which may be measured is 100, but with less than one amu resolution. This spectrometer is completely packaged but not flight qualified. Figure 3-3 shows the inlet, ion source, and analyzer section of this mass spectrometer, Figure 3-4 the complete instrument. Perkin-Elmer has given an estimated cost of $30,000 per unit in small lots exclusive of flight qualification for this mass spectrometer. The instrument is easily capable of doing a breath-by-breath respiratory analysis, determining respiratory quotient and measuring the pulmonary diffusion coefficient for carbon monoxide.

The General Electric monopole mass spectrometer is currently being developed into an engineering feasibility prototype under NASA Contract NAS 8-21217. The estimates for weight, power, and volume for a final flight instrument are considerably higher than the values achieved by the flight model of the Perkin-Elmer magnetic sector mass spectrometer. However, the GE monopole instrument has a range of 0 to 600 amu with unit resolution throughout this range. It can thus be used to measure many trace contaminants of higher molecular weight if such a dual role provides sufficient advantages to offset the added weight and power requirements. The weight of a flight qualified monopole mass spectrometer is estimated at 9 pounds; the power requirement is 15 watts average, 30 watts peak (when at 300 amu); and the volume is 504 cubic inches. The accuracy is ±2%, and the sensitivity in the laboratory 3 ppm, both the same as in the Perkin-Elmer instrument. However, due to the ten dynode electron multiplier built into the monopole mass spectrometer tube, it is believed that the flight model will be able to detect atmospheric components present at concentrations as low as 10 ppm. The price of flight type monopole mass spectrometer is estimated at $40,000 each in small lots, exclusive of flight qualification. The speed of response of the monopole is 10 milliseconds for each component measured, which for a breath-by-breath analysis would be 50 milliseconds. Higher speeds may be achieved, but with some loss in accuracy.

To compare the three candidate instruments, their important characteristics have been tabulated in Table 3-6. The first five lines of the table have been previously covered. The

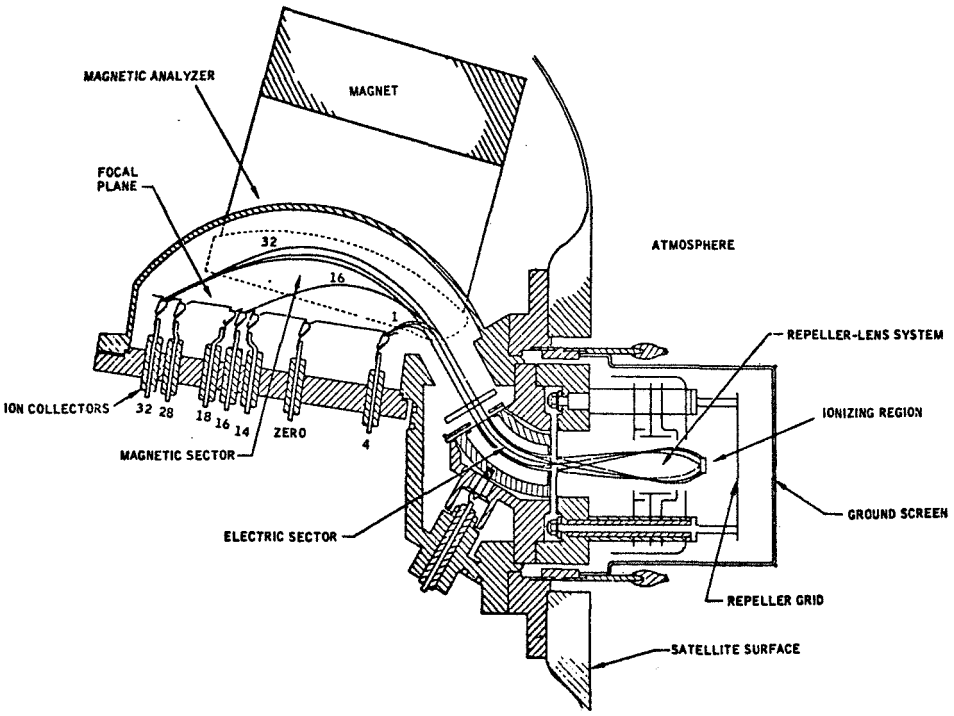

Figure 3-3. Mass Spectrometer Configuration and Ion Path in X-Y Plane

meaning of range applies differently to the UV-IR analyzer and the mass spectrometers. The UV-IR analyzer analyzes only for O_2, CO_2 and H_2O, while the magnetic sector mass spectrometer can be built to analyze for any six compounds (where there is no mass reference) up to mass 100. The monopole mass spectrometer may be programmed to analyze for any number of compounds (again assuming no mass interference) up to mass 600, but requires about 10 milliseconds for every compound analyzed.

The estimate of reliability is based on conversations with the project managers of the Perkin-Elmer instruments, and the performance of the commercial instrument in the case of the GE monopole mass spectrometer. The higher rating assigned to the UV-IR analyzer is because it has no filament exposed to the gas being analyzed.

In summary, it is believed that the Perkin-Elmer magnetic sector mass spectrometer offers the capability of making the desired measurements with the minimum penalties for weight, power and volume. The GE monopole mass spectrometer could be justified if considerable importance was attached to the measurement of trace contaminants, or if the small stray magnetic field of the Perkin-Elmer mass spectrometer could neither be corrected nor tolerated.

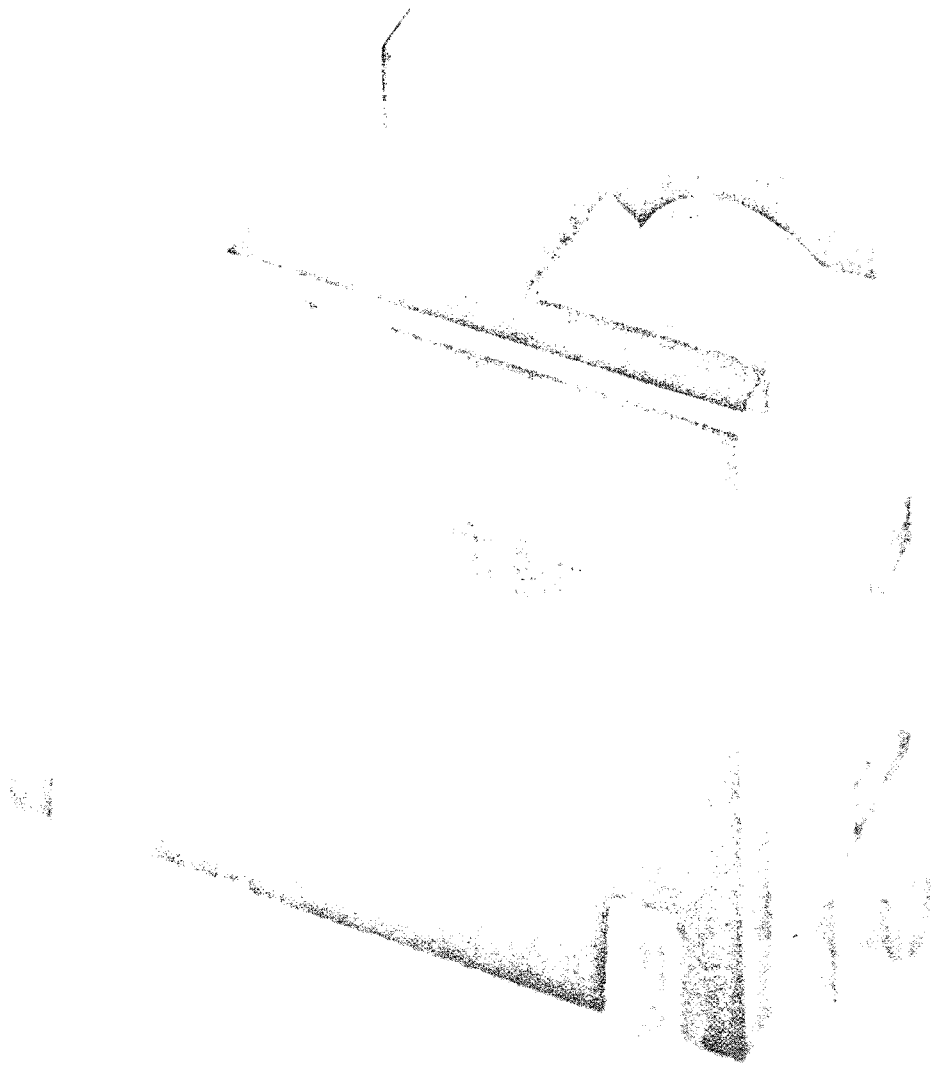

Figure 3-4. Perkin-Elmer Magnetic Sector Mass Spectrometer

Table 3-6. Comparison of Breathing Gas Analyzers

	Perkin-Elmer UV-IR Analyzer	Perkin-Elmer Magnetic Sector Mass Spectrometer	General Electric Monopole Mass Spectrometer
Weight	5 pounds	6.5 pounds	9 pounds
Power required	6 watts	3.7 watts	15 watts
Volume	100 inches^3	172 inches^3	504 inches^3
Speed of Response	20 milliseconds	50 milliseconds	50 milliseconds
Sample Required	requires entire inhalation and exhalation	2.15 gm/hr*	2.3 gm/hr*
Range	O_2, CO_2, and H_2O	1-100 amu (6 gases only)	1-600 amu
Accuracy	±2%	±2%	±2%
Sensitivity	6,600 ppm	100 ppm	10 ppm
Estimated Reliability	very high	high	high
Capable of Measuring the Pulmonary Diffusion Coefficient for Carbon monoxide	no	yes	yes
Magnet Required	no	yes	no
Radio Frequency Required	no	no	yes
Estimated Cost Excluding Flight Qualification	$25,000	$30,000	$40,000

*Lost to space

Our studies have indicated that the present capabilities for atmospheric sensing in the S-IVB, MDA, LM and RCM are inadequate for experimental purposes. We believe that NASA must consider an overall environmental assessment, probably including the presence of trace contaminants, either as a part of IMBLMS, or separately, with the data formatted in common with the experimental data in the IMBLMS data management subsystem.

3.4.2.2.4 Mass Flow Meter

Perhaps the least satisfactory equipment area in the study of pulmonary function is related to mass flow measurement and sampling systems for the mass spectrometer. Significant problems are the phase relation between mass flow and gas concentration.

Technology, Inc, MFG-16 mass flow meter is perhaps typical of those in use for respiratory measurements. It has a time constant of less than 0.07 sec, is linearly within 1 percent and has an accuracy of ±2 percent of full scale. For this type of response, gas sensors with time constants of around 5 seconds are clearly inappropriate. With appropriate sampling line length, reasonable phase relations could be established with such a mass flow meter and the mass spectrometer.

3.4.2.2.5 Pressure/Flow/Resistance

The measurement of pressure-flow relations during pulmonary ventilation requires a measure of intraplural pressure. If non-invasive methods only are to be used, needling of the intraplural space and esophageal balloons cannot be employed. Access to the intraplural space must be via the airway. Airway resistance can be estimated by repetitive interruption of the airstream which represents an adequate method for IMBLMS. The measure of resistance obtained is a composite of airway and tissue resistance and has been included as the only identified piece of equipment meeting this generalized requirement.

For field use, the method has much to recommend it. In general, it overestimates the total resistance by about 10 percent in normal subjects and underestimates resistance by about 10 percent in subjects with airway obstruction.

The repetitive interrupter consists of two concentric metal tubes having radial slots 90° apart (Figures 3-6 and 3-7). As the inner tube rotates, airflow is switched on and off ten times per second. A third concentric tube restricts egress of gas and forms the flow meter channel. As the subject breathes through the interrupter, pressure and flow rapidly equilibrate in the open and closed intervals so that pressure measured at the mouth exhibits "square waves!" the lower plateau in the tracing measures the pressure drop in the flowmeter during flow. The upper plateau gives alveolar pressure at "equilibrium" when flow is stopped. The difference between the pressure plateaus is taken as a measure of the nonelastic pressure drop in the lungs and airways. Since pulmonary inertance can be negotiated; the pressure change at the mouth is equal to the pulmonary resistive pressure neglected, provided intrapleural pressure does not change as a result of interruption.

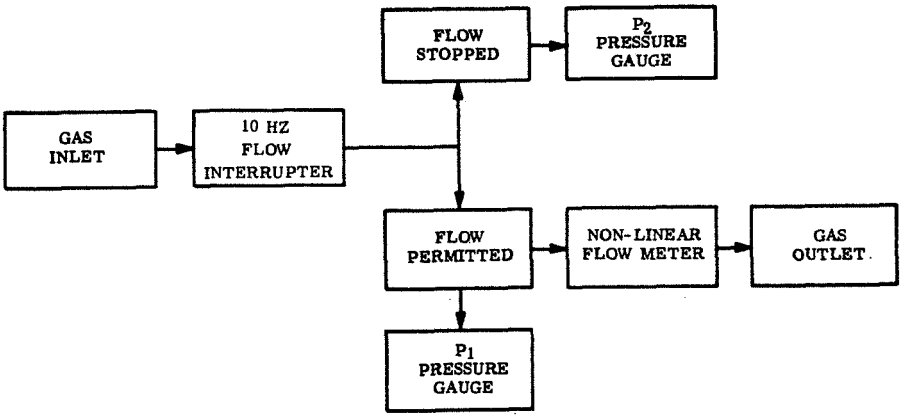

Figure 3-5. Interrupter Function Flow Diagram

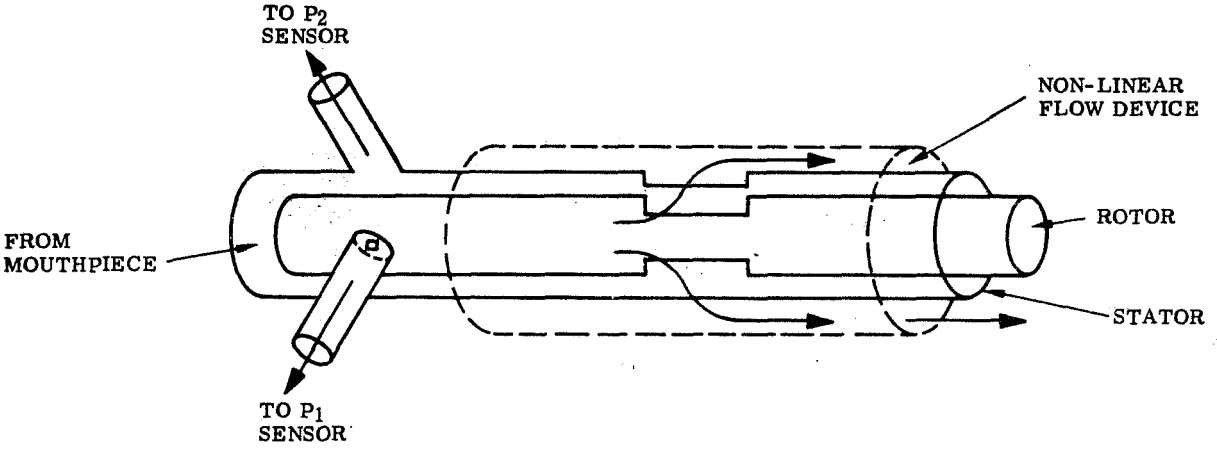

Figure 3-6. Interrupter: Gas Flow Permitted

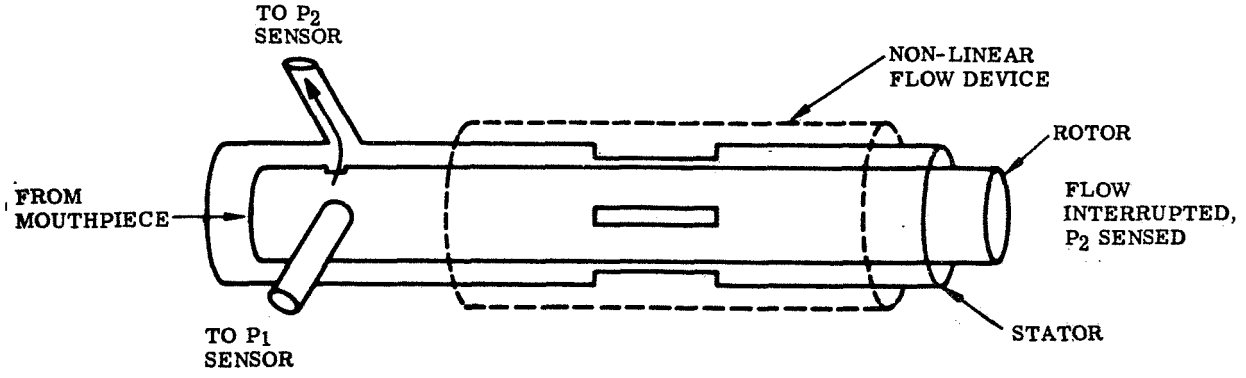

Figure 3-7. Interrupter: Gas Flow Interrupted

Because the motion of air and tissues is made up of viscous tissue, laminar (viscous) airflow and turbulent airflow the resistive pressure gradient $BP = R_p \times F^{1.6}$ where R_p is the coefficient of pulmonary resistance and flow (F) is to the 1.6 power. In Clement's design (J. Clin. Invest; 38: 1262, 1959) the flow meter channel is constructed with nonlinear characteristics matching the respiratory tract.

3.4.2.3 Respiratory Summary

The selection of IMBLMS equipment for respiratory measurement has taken into account the experimental procedures involving its use. These procedures involve metabolic exchange at rest and during exercise, single breath analysis of pulmonary ventilation, and cardiopulmonary relations.

For metabolic measurements a space suit helmet may be modified for gas sampling both at rest and during exercise. For single breath analysis, a mouthpiece - flow meter-sampling assembly will be required. For cardiopulmonary relations, the relation of oximeter tracings to inspired gas concentrations deserves further evaluation.

We have reviewed the utilization of the body plethysmograph as an IMBLMS device to satisfy a variety of requirements. In particular we have investigated an inflatable plethysmograph for space application. Such a device does not appear feasible. A major requirement is stability of volume to 1/100 of one percent. In view of the uncertain thermal environment, such stability cannot be assured.

A plastic bag for the estimate of body volume by He dilution may also suffer from the same problem.

3.4.3 METABOLIC AND NUTRITIONAL MEASUREMENTS

The conduct of metabolic and nutritional studies in space depend upon an accurate estimate of input-output relations. Food and water intake measurement is logically a function of the feeding system and its design. The measurement of food and water waste and the record keeping function logically fall within IMBLMS.

Urine and fecal measurement and sampling are logically a part of the waste management system. Sample preservation, storage, recording and/or analysis should be supplied by IMBLMS. We do not underestimate the difficulty of conducting these studies, and IMBLMS design should accommodate the somewhat awkward interfaces. Biochemical measures are considered in another section of this report.

3.4.3.1 Mass Measurement

IMBLMS will incorporate the means for assessing body mass and the means for conversion to lean body mass. In addition, specimen mass measuring equipment will be needed and provided for metabolic balance studies.

3.4.3.1.1 Body Mass

A basic metabolic and nutritional measurement is body mass. Its basic nature and commonality dictate that the capability should be a part of IMBLMS. The device under development for NASA by AMD will be included.

3.4.3.1.2 Lean Body Mass

For the reduction and analysis of metabolic and nutritional data, an estimate of lean body mass is required. We propose the use of the skinfold thickness measurement, body mass, and an appropriate nomogram. Anthropomorphic measures to localize fat deposit or atrophic changes should be considered.

3.4.3.1.3 Specimen Mass

In IMBLMS there are multiple requirements for massing samples in the metabolism and nutrition area. For instance, measurement of the amounts of hydrated food which are not eaten will be a requirement. Wet and dry weights of fecal waste may be required. For biochemical studies tared filter paper might be used. The specimen mass measuring device currently under development by NASA will be incorporated, therefore, as a part of IMBLMS.

3.4.3.2 Thermal Stress Responses

Measurement of metabolic rate and CO_2 production provided in the respiratory section will permit the calculation of the respiratory quotient. Further studies of metabolic responsiveness and metabolic-environmental relations will be required under conditions of a thermal stress such as exercise or thermal heating. For this purpose, equipment for the measurement of skin and core temperature and sweat collection will be provided.

3.4.3.2.1 Skin and Core Temperature

IMBLMS will incorporate a thermistor harness providing 12 skin temperatures. Core temperature is provided by a thermistor in the external auditory canal.

3.4.3.2.2 Sweat

Provision for the collection of sweat either as a result of exercise or thermal stress has been discussed in our recent study on collection and preservation (NASW 1562). It should be borne in mind that in addition to water losses, electrolytes, notably calcium, are lost in sweat. Consolazio has proved correction factors for calcium balance studies based on the average environmental conditions.

3.4.3.2.3 Environmental Variables

Although IMBLMS contains equipment to assess gas composition and support equipment for pressure measurement of the ambient environment, measurements characterizing the thermal environment in the neighborhood of the experimental stations are not specifically included. Measurements of air and wall temperature and air flow velocity may subsequently be required when more detail related to the space vehicle capability is known and the work stations configured. Electronics to accommodate such sensors are already present.

3.4.3.3 Gastrointestinal Function

3.4.3.3.1 Endoradiosonde

Gastrointestinal motility and pH can be assessed by means of an endoradiosonde. IMBLMS will support such measurements by the provision of a biotelemetry receiver compatible with such a device.

3.4.4 MUSCULOSKELETAL MEASUREMENTS

The evaluation of musculoskeletal status will become of increasing importance as mission duration is extended. We have amplified the NASA Annex B list in order to assess and assure the IMBLMS capability to meet NASA's ultimate requirements.

3.4.4.1 Muscle Mass

Provision will be made to assess cross section or girth at selected areas of the extremities by means of constant pressure calipers, tape measures, or ultrasonics. Body mass will also be assessed as previously discussed. Measurements of skin fold thickness and lean body mass by means of calipers and a nomogram will also be accomplished to establish alterations in lean muscle mass to fat ratios.

3.4.4.2 Muscle Strength

Both impulsive and sustained muscle strength will be assessed by either a mechanical, electronic, or pneumatic dynamometer. For the sustained measurement, the force present at the end of a four-second period will be measured. Hand dynamometry cannot be interpreted strictly in terms of strength. In a GE study involving 30 days of confinement, subjects showed a significant continued increase in mean force emission during the period. Competitiveness (i.e., who scored highest today) may have played a role. Alterations in motivation were thought to be related to fluctuations, reversals and narrowing of the differential force emission levels between dominant and non-dominant hands.

3.4.4.3 Muscle Endurance

Endurance is a measure of the total time during which the subject is able to maintain a specific level of work output. When using the ergometer or the whole body exerciser,

cardiovascular criteria may be used to establish endurance, i.e., at constant work rate, work time to criterion pulse rate.

3.4.4.4 Neuromuscular Integrity

A series of measurements are proposed to assess the various facets of neuromuscular integrity. For quantitative data rather extensive manipulanda and displays are required.

3.4.4.4.1 Voluntary Contractility

Photogrametry, as utilized in DB-39-66-055 to study voluntary motor activity and general coordination during task performance, is recommended. IMBLMS will contain a general cinematographic capability designed to accommodate anticipated requirements.

3.4.4.4.2 Reaction Time

A simple device with visual or auditory stimulus, timer, and motor response is proposed. GE underwater studies indicate a delayed simple reaction time during neutral bouyancy independent of water drag.

3.4.4.4.3 Coordination

General coordination can be assessed by performance of experiments within IMBLMS. Quantitative measures of fine coordination will require a two-dimensional tracking task which will force coordination of force emission and displacement. Gross coordination requires major body movements. The precision placement of a stylus within a three-dimensional volume can be used for quantitative data. Psychomotor behavior measures are discussed below.

3.4.4.4.4 Kinesthetics/Proprioception

In order to assess the crewman's psychomotor function, it is necessary to study both gross (whole body) and fine (extremity) motor movement.

As an aid to the study of fine motor movements, it is necessary to analyze motion in three dimensions. The least sophisticated system consists of two movie cameras which orthogonally view the test field (Figure 3-8). Data reduction, however, is tedious, since the three coordinates of hand position must be measured and plotted frame by frame. We are aware of the Stanford Institute computer program designed to facilitate this analysis.

A concept presently under consideration at GE is a system which will measure hand position in spherical coordinates. The three coordinates will be recorded as electrical analog signals ideal for both computation and recording. This activity was originally intended as a means for studying cerebral palsy patients, but it deserves some consideration as an IMBLMS equipment.

The equipment consists of a modified "joy-stick" with an expandable handle (Figure 3-9). The joy-stick will control two pots which give an output signal proportional to the two angular coordinates of stick position.

The telescoping handle contains a wire attached to a take-up spool which applies enough tension to keep the wire taut. This spool is connected through a gear train to a precision pot (Figure 3-10). The pot's reading is directly proportional to the length of the handle.

With the two angular components from the joy-stick and the radial component from the handle, any position in the box of Figure 3-9 may be precisely described in spherical coordinates.

There also exists the possibility of servo-driving this equipment. With the crewman grasping the handle, his hand may be led through a three-dimensional path. This could be an aid in studying proprioception.

3.4.4.4.5 Tonus

Muscle tone will be assessed by the EMG. We would recommend an approach involving integration of the EMG signal rather than recording of the analog signal.

3.4.4.4.6 Reflexes

Standard equipment such as a reflex hammer, tuning fork, two-point discrimination device, etc, will be included.

3.4.4.4.7 Range of Motion

Range of motion studies can be performed quite simply with a goniometer. The device is lightweight and follows and records the range of voluntary movement at the selected joint.

3.4.4.5 Bone Integrity

The inflight assessment of bone density by means of a gamma gauge or x-ray device, we believe, should be classified as an experimental procedure, and the equipment be provided by a separate procurement. Provision for the assessment of calcium balance is presented below.

3.4.4.6 Musculoskeletal Measurements Summary

The proposed musculoskeletal measurements by and large overlap those found in the section on behavior and the gross evaluation of muscular status primarily revealed by the performance of complex tasks within the IMBLMS itself. Assessment of the biochemical status of both bone and muscle is discussed below.

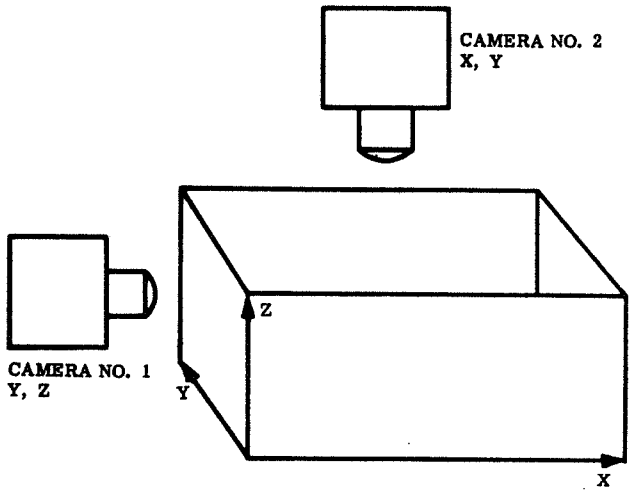

Figure 3-8. Cinematography Approach

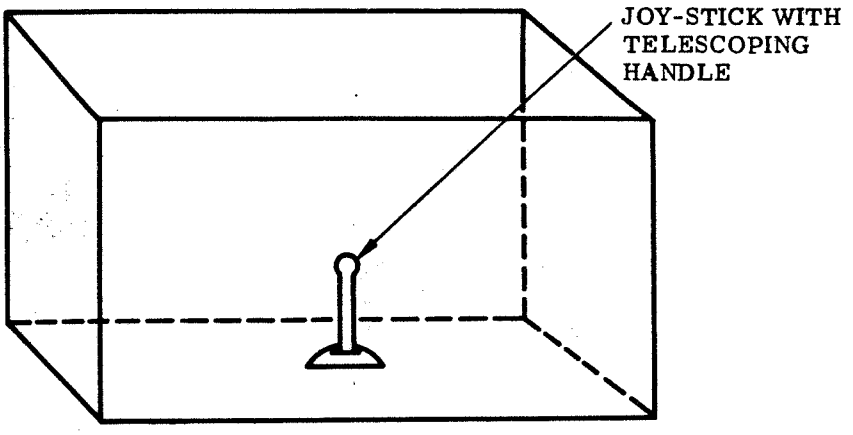

Figure 3-9. Analog Approach

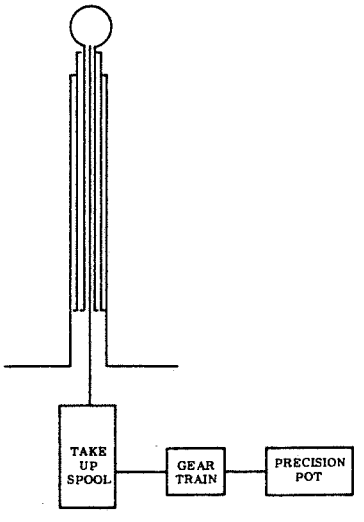

Figure 3-10. Telescoping Handle

3.4.5 BIOCHEMICAL, CYTOLOGICAL, AND MICROBIOLOGICAL MEASUREMENTS; ON-BOARD VS. POST-FLIGHT SPECIMEN ANALYSIS TRADE-OFF

3.4.5.1 General

In our proposal for IMBLMS Phase B, we stated "the resolution of the dilemma of on-board vs. post-flight analysis of biological specimens appears critical to the development of a real space laboratory capability." Dilemma is synonymous with predicament or quandry, i.e., a situation from which one extricates oneself with difficulty. This difficulty was compounded by the plethora of biochemical tests which have been suggested or recommended directly or by implication. Our approach to eventual extrication and problem solution is based on the concept of an evolving IMBLMS, which can be adapted to and include newly-developed analytical methods and equipment for on-board performance of measurements and/or new methods for sample preservation.

A large number (over 200) of biochemical and hematological measurements has been considered during Phase B for "servicing" by some version of an IMBLMS. The microbiological and immunological measurements are treated separately in a later section of this report. The measurements discussed here were obtained from four sources: (1) An in-house GE study (this list is included in a proposal to NASA, GE-MSD #7005, dated August 19, 1966); (2) Appendix A to NASA Contract No. NASW 1562, Collection and Preservation of Biological Specimens; (3) Annex B of the IMBLMS Statement of Work; and (4) Tentative Priorities for Areas of Medical Experiments, Space Medicine Ad Hoc Consultant Group, dated September 15, 1967. In Tables 3-7 through 3-10 these lists have been combined and the "popularity" of individual measurements noted. Virtually every known clinical test has been specified in the first three sources mentioned or alluded to in the fourth.

Each measurement has been evaluated first from the standpoint of physiological significance. All tests are not of equal importance. It is, unfortunately, impossible at this time to rank the various clinical assays on a completely objective basis. However, the hematological and biochemical measurements of interest can be grouped and the groups ranked according to their relative physiological importance.

The measurements in Tables 3-7 through 3-10 range from common clinical tests, which are done by the thousands each day, to relatively esoteric methods which are performed by specially trained research technicians in a small number of institutions. While each measurement aids in depicting the physiological state of an individual, the contribution of about 1/5 of the tests outweighs the data derived from the other 4/5. Much of the information derived from the larger group would be essentially corroborative in nature. For the purposes of the AAP missions, the tests which could be included in the experiments can be divided into four categories:

GROUP I - Feasible; require small sample; most important in light of present theory or experience related to possible physiological problems in space.

GROUP II - Feasible; important; should be done if at all possible.

Table 3-7. Clinical Analyses - Group I

Plasma or Serum	Quantity Required	On-Board Analysis Feasible	Leadtime*	Anal. Method In-Flt/Ground	Comments	Possible Clinical Significance		Contained in Lists No.
						Increase	Decrease	
Calcium	0.1-0.5 ml	Yes	3 (colorimeter) 1 (Atomic Absorp.)	Colorimetric or Titrimetric - Grid Colorimetric-Fit - Atomic Absorp. Spect.		Bone Dissolution, Atrophy Hyperfunction of Thyroid or Parathyroid HypervitaminosisD	Hypofunction of Parathyroid Diarrhea Nephrosis	1, 2, 3, 4
Hemoglobin, Hematocrit	0.5-2.0 ml Whole Blood	Yes	2	Hemoglobin-Colorimetric Hematocrit-Packed Cell Volume-Centrifuge	Must be done immediately after drawing blood. Method very simple.	Dehydration Diarrhea Polycythemia	Anemia Infection Hemolytic Jaundice	1, 2, 3, 4
Potassium	0.1 ml	Yes	2	Flame Photometer or Ionelectrode or Colorimetry	Avoid hemolysis	Acute Infections Uremia	Adrenocortical Hyperfunction	1, 2, 3, 4
Sodium	Same	Yes	2	Flame Photometer or Ionelectrode or Colorimetry	Avoid hemolysis	Extracellular Fluid Over-Concentrated	Extracellular Fluid Over-Diluted	1, 2, 3, 4
Clotting Time	0.5-1 ml Whole Blood	Yes	4	Capillary Tube Method	In-flight or not at all	Decreased Prothrombin (e.g. Vit K deficiency). Decreased Fibrinogen or decreased Calcium. (Also decreased other factors such as PTA, PTC, AHG theoretically)		2, 3, 4

*Leadtime for on-board method/equipment development

0-6 mos. = 4
6-12 mos. = 3
1 yr.-2 yrs. = 2
>2 yrs. = 1

LISTS NUMBER LEGEND:

1. In-House GE study (included in a proposal to NASA, GE-MSD #7005, dated August 19, 1966).
2. Appendix A to NASA Contract No. NASW 1562, Collection and Preservation of Biological Specimens, Jan. 1967.
3. Annex B of the IMBLMS Statement of Work, June, 1967.
4. Tentative Priorities for Areas of Medical Experiments, Space Medicine Ad Hoc Consultant Group, September 15, 1967.

Table 3-7. Clinical Analyses - Group 1 (Cont)

Plasma or Serum	Quantity Required	On-Board Analysis Feasible	Leadtime*	Anal. Method In-Flt/Ground	Comments	Possible Clinical Significance		Contained in Lists No.
						Increase	Decrease	
Plasma Volume ($RISA^{125}$)	1ml Serum or Plasma	Yes	4	Isotopic Labeling of Plasma and Radioactivity Measurement	Requires Hematocrit Determination	(Measure of distribution of fluid and electrolyte between intra- and extracellular compartments)		2, 3, 4
						Redistribution ICF → ECF	Redistribution ECF → ICF and/or Plasma → Interstitial Fluid	
RBC Cell Mass	1 ml Whole Blood	Yes	2	Isotopic Labeling (Cr 51 and/or $RISA^{125}$) and radioactivity measuring method	Requires hematocrit at time sample is withdrawn.	Decreased pO_2	Increased pO_2	2, 3, 4
RBC Survival	1 ml Whole Blood	Yes	2	Isotopic Labeling (Cr^{51} or Fe^{59}) and radioactivity measuring method			Abnormal erythrocytes. Increased hemolysis.	2, 3, 4
WBC Differential	0.1 ml Whole Blood	Yes	2	Counting of Air-Dried Blood Smear	Microscopy required. Staining may be required. Storage for post-flight analysis is feasible.	Infection, inflammation, e.g. especially neutrophils in pyogenic infection, pneumonia, etc. e.g. eosinophil in allergic response, skin diseases.		2, 3, 4
Blood Volume	1 ml Whole Blood	Yes	3	Isotopic Labeling and Radioactivity Measurement	Same as Plasma Volume. No Hematocrit required.	(Volume depends on plasma volume and erythrocyte volume)		1, 3, 4

Table 3-7. Clinical Analyses - Group I (Cont)

Urine	Quantity Required	On-Board Analysis Feasible	Leadtime*	Anal. Method In-Flt/Ground	Comments	Possible Clinical Significance		Contained in Lists No.
						Increase	Decrease	
Calcium	0.1-1 ml	Yes	3 (colorimeter) 1 (Atomic Absorp.)	Colorimetric or Ppt w/ Oxalate and Titration-grnd; Colorimetric - In-Flight; Atomic Absorption Spectro.	Mg interference made less by pptn. method.	Osteomalacia Bone Atrophy, Dissolution; Hyperfunction of Parathyroid; Hypervitaminosis D	Low Calcium Diet	1, 2, 3, 4
Creatinine	Same	Yes	2	Colorimetric	Picric acid reagent is explosive when dry.	Increased Muscle Activity; Severe Infection	Anemia, Leukemia Muscle Atrophy	1, 2, 4
Potassium	Same	Yes	2	Flame Photometer or Ionelectrode or colorimetry.	Recalibration of electrode during flight may be required.	Acute Fever Tissue Breakdown	Hypofunction of Adrenal; Cortex	1, 2, 3, 4
Phosphorus (Inorganic)	Same	Yes	2	Colorimetric		Fever Osteomalacia Tissue Breakdown Hyperfunction of Parathyroid	Acute Infection Kidney Disease Hypofunction of Parathyroid	1, 3, 4
Urine Volume		Yes	3	NASA developing hardware for automatic volume determination.		Action of Diuretics; Kidney Disease	Vomiting, Diarrhea Dehydration, Fever Stress, Shock Kidney Disease Cardiopulmonary Disease; Decreased Renal Blood Flow	1, 2, 3, 4
Specific Gravity		Yes	3	Mass measurement or refractive index measurement.	No storage technique is satisfactory.	Measures concentrating ability of kidney; increased in dehydration, early renal damage. Lack of Fluid Intake.	Excess fluid intake; may be increased in chronic renal disease.	2, 3
Turbidity	1 ml	Yes	3	Nephelometry				2, 3

Table 3-7. Clinical Analyses - Group I (Cont)

Feces	Quantity Required	On-Board Analysis Feasible	Leadtime*	Anal. Method In-Flt/Ground	Comments	Possible Clinical Significance		Contained in Lists No.
						Increase	Decrease	
Calcium	1 gm	Yes	3 (Redox) 1 (Atomic Absorp.)	Redox Titration, Atomic Absorption Spectro.		Increased Oral Intake of Ca; Decreased Gut Absorption of Ca	Reverse	1, 2, 3, 4
Sodium	1 gm	Yes	2	Colorimetric or Flame (after digestion) Photometer		Diarrhea	Vomiting	1, 2, 3, 4
Potassium	1 gm	Yes	2	Colorimetric or Flame (after digestion) Photometer		Diarrhea	Vomiting	1, 2, 3, 4
Color		Yes	4	Visual-Compare with Color Chart	Simple; gross appearance of clinical interest.			1
Chloride	0.1 gm	Yes	1	Conductimetric Titration		Diarrhea Increased Chloride ingestion in food.	Vomiting Decreased chloride ingestion in food	2, 4

Table 3-7. Clinical Analyses - Group I (Cont)

Sweat	Quantity Required	On-Board Analysis Feasible	Leadtime*	Anal. Method In-Flt/Ground	Comments	Possible Clinical Significance		Contained in Lists No.
						Increase	Decrease	
Sodium	0.1 ml	Yes	2	Flame Photometer or Ionelectrode or Colorimetric	Wash out underwear in distilled HOH - use wash water for elemental analyses.	Increased Sweat Loss	Decreased Sweat Loss	1, 2, 3, 4
Potassium	0.1 ml	Yes	2	Flame Photometer or Ionelectrode or Colorimetric	Same	Same	Same	1, 2, 3, 4
Chloride	1.0 ml	Yes	1	Conductimetric Titration	Same	Same	Same	1, 2, 4
Calcium	0.1-1.0 ml	Yes	3 (Colorimeter) 1 (Atomic Absorp.)	Colorimetric-Flight Titrimetric-ground or Colorimetric or Atomic Absorption	Same	Same	Same	1, 2, 3, 4

Table 3-8. Clinical Analyses - Group II

Plasma or Serum	Quantity Required	On-Board Analysis Feasible	Leadtime*	Anal. Method In-Flt/Ground	Comments	Possible Clinical Significance		Contained in Lists No.
						Increase	Decrease	
Bilirubin Total Partition	0.1-0.2 ml	No	2	Colorimetric	Diazotize; with ETOH get indirect, i.e. bilirubin; aniline dye, HNO_2 pose a hazard; fresh reagents required	Biliary obstruction; Hemolytic anemia; Liver disease; Cardiac failure	Aplastic anemia; Anemia due to decreased erythrocyte formation	1, 2, 3, 4
Glucose	0.1 ml	Yes	3	Colorimetric Titration	Procedure has several steps unless done automatically	Hypofunction of pancreas; Kidney disease; Infections; Stress	Hyperfunction of pancreas	1, 2, 3, 4
Proteins-Total	0.5 ml	Yes	2	Colorimetric	Biuret method preferable, but all are empirical	Dehydration	Anemia; Edema; Kidney disease with proteinuria; Liver disease	1, 4
Protein Fractions-Albumins	0.01 ml	Yes	2	Electrophoresis	Plasma required if fibrinogen assay desired; data interpretation and/or recording requires additional equipment	Dehydration	Anemia; Edema; Kidney disease with protein uria; Liver disease	1, 2, 3, 4
Protein Fractions-Globulins	0.01 ml	Yes	2	Electrophoresis	Same	Increased muscle activity		1, 2, 3, 4
Protein Fractions-Gamma Globulin	0.01 ml	Yes	2	Electrophoresis	Same	Liver Disease		1, 2, 3, 4
Chloride	0.01-1 ml	Yes	1	Colorimetric Conductimetric Titration	Simple Circuit	Anemia; Cardiac failure; Nephritis; Prostatic obstruction	Diarrhea; Vomiting; Fever; Excessive Sweat Loss Intestinal Obstruction; Polycythemia; Pneumonia	1, 2, 4

Table 3-8. Clinical Analyses - Group II (Cont)

Plasma or Serum	Quantity Required	On-Board Analysis Feasible	Leadtime*	Anal. Method In-Flt/Ground	Comments	Possible Clinical Significance		Contained in Lists No.
						Increase	Decrease	
Creatine	0.2-0.5 ml	Yes	2	Colorimetric	Hydrolyze w/HCl then do creatinine analysis	Muscle trauma; Bilary obstruction; Kidney disease		1, 2, 4
Creatinine	0.2-0.5 ml	Yes	2	Colorimetric	Picric acid reagent may be safety hazard	Kidney disease; Intestinal obstruction; Prostate obstruction		1, 3, 4
Phosphorus	0.1-0.2 ml	Yes	2	Colorimetric	Deproteinize, use PO_4 method; requires incubation for 10-15 minutes	Kidney disease; Hyperfunction of pancreas; Hypofunction of parathyroid; Rapid Bone Deposition; Hypervitaminosis D	Osteomalacia	1, 2, 4
Cholesterol	0.1-1.0 ml	No	1	Colorimetric	Differential solvent extraction and ppt required before color determination	Biliary obstruction; Kidney disease; Liver disease; Aplastic anemia; Hemorrhagic anemia; Hypofunction of thyroid	Hemolytic jaundice Acute infection Hyperfunction of thyroid	1
Cholesterol Ester (proportion of total cholesterol)	0.1-1.0 ml	No	1	Colorimetric	Differential solvent extraction and ppt required before color determination		Acute infection Liver disease	1
SUN (Serum urea nitrogen)(in place of BUN)	0.1-0.3 ml	Yes	2	Colorimetric	Digest w/urease, deproteinize Nesslerize	Kidney disease; Intestinal obstruction	Liver disease	1, 2, 3, 4

Table 3-8. Clinical Analyses - Group II (Cont)

Plasma or Serum	Quantity Required	On-Board Analysis Possible	Leadtime*	Anal. Method In-Flt/Ground	Comments	Possible Clinical Significance		Contained in Lists No.
						Increase	Decrease	
Lactic Dehydrogenase	0.1 ml	Yes	2	Colorimetric Electrophoresis for Isozymes	Storage life questionable (DPN-DPNH portion measured)	Pulmonary embolism; Edema; Infarction or infection; Myocardial infarction		1, 2, 4
Bicarbonate	0. 1-1.5 ml Serum	Yes	2	Titration Method		Alkalosis	Acidosis	2, 4
Fat Tolerance	0.1 ml Serum	Yes	3	Photometric Turbidimetry	Phenol Reagent Hazardous		Stress; Defective fat metabolism	2, 4
Fibrinogen	0.1-1 ml Plasma	Yes	2	Biuret Colorimetric Method	Some reagents are toxic. Centrifugation and incubation may be required.	Acute infections Tissue injury	Intravascular coagulation; Liver deficiency	2, 3, 4
Karyotyping	0.1-0.2 ml Whole Blood	Yes	2	Phytohemagglutinin Incubation	Storage for post-flight analysis is not feasible. Technique is complicated and difficult.	Study of chromosome abnormalities induced by spaceflight and/or drugs and/or radiation		2, 3, 4
Methemoglobin	0.1 ml Whole Blood	Yes	2	Colorimetry	Requires use of cyanide which is very toxic, but in small quantities	Poisoning e.g. by nitrite, nitrate, aniline derivatives, decrease, e.g. cyanosis.		2
Mucoproteins and Related Biocolloids	0.8 ml Serum	Yes	2	Colorimetric Method	Some reagents are toxic	Massive breakdown of organic bone matrix		2, 4

Table 3-8. Clinical Analyses - Group II (Cont)

Plasma or Serum	Quantity Required	On-Board Analysis Possible	Leadtime*	Anal. Method In-Flt/Ground	Comments	Possible Clinical Significance		Contained in Lists No.
						Increase	Decrease	
Prothrombin Activity	0.2 ml Plasma	No	2	Owren Method	Centrifugation and incubation required. Stability of human and/or bovine plasma standards is undetermined. Procedures are complex. Storage for post-flight analysis is feasible.		Liver damage; Biliary obstruction; Vit K deficiency	2, 3, 4
WBC (Total)	0.1 ml Whole Blood	Yes	3	Hemacytometer Counting	Microscopy required. No method of storage for post-flight determination is completely satisfactory.	Infection; inflammation	Leucopenia	2, 3, 4
Lipids	2 ml - Serum Plasma	No	1	Gravimetric Method	Reagents are toxic and hazardous. Technique calls for weighing.	Increased fat intake, mobilization or failure to clear fats		3, 4
Urine								
Chloride	0.5-1 ml	Yes	1	Conductimetric Titration	Thiocyanate not required as in volumetric titration.	Increased water intake; Increased Chloride intake.	Acute infection; Decreased chloride intake; Edema	1, 2, 4
Creatine	0.1 ml	Yes, if creatinine done on board	2	Hydrolze w/HCl then analyze for creatinine. Colorimetry	Not found in normal urine; present in fever	Increased water intake and output; Fever		1, 2, 3, 4
Urobilinogen	1-5 ml	Yes	2	Colorimetric	Ehrlich's reagent plus alkaline Na acetate	Hemolytic jaundice; Liver disease	Oral antibiotics; Diarrhea; Biliary obstruction; Anemia; Kidney disease.	1, 4

Table 3-8. Clinical Analyses - Group II (Cont)

Urine	Quantity Required	On-Board Analysis Possible	Leadtime*	Anal. Method In-Flt/Ground	Comments	Possible Clinical Significance		Contained in Lists No.
						Increase	Decrease	
Hydroxyproline	1-5 ml	No	1	Colorimetric	Must be done at 4-5°C involves oxidation, reduction and incubation w/color agent	Organic matrix of bone dissolution		1, 3, 4
Indican	1-2 ml	Yes	2	Colorimetric	Measure of indole production from protein breakdown	High protein diet Prolonged constipation; Intestinal obstruction; Abscesses		1
pH	1-2 ml	Yes	4		Use pH paper	Vomiting Alkali ingestion	Increased and prolonged muscle activity; Acids or meat ingestion, fever.	1, 2, 3
Color		Yes	4		Color chart needed.	Affected by drugs, jaundice	Hemorrhage, etc.,	1
Urea Nitrogen	1-2 ml	Yes	2	Colorimetric		Tissue breakdown; Leukemia, plus (same as volume decrease)	Kidney disease Liver disease	1, 4
Nitrogen (Total)	0.2-1 ml	Possible but difficult	1	Colorimetric; Acid digestion	Boiling acid digestion feasible but may be undesirable from safety standpoint	High protein diet	Low protein diet Convalescence	1, 2, 4
Sodium	0.1-0.5 ml	Yes; electrode method preferable if feasibility proved	2	Flame photometer or ion electrode or colorimetric	Ion-selective electrodes presently undergoing evaluation - commercially available.	Hyperfunction of adrenal cortex		1, 2, 3, 4

Table 3-8. Clinical Analyses - Group II (Cont)

Urine	Quantity Required	On-Board Analysis Possible	Leadtime*	Anal. Method In-Flt/Ground	Comments	Possible Clinical Significance		Contained in Lists No.
						Increase	Decrease	
Protein - Albumin	1-2 ml	Yes	3	Colorimetric		Excessive muscle activity; Fever; Kidney disease;		1, 2, 3, 4
Protein - Mucin	5-10 ml	Yes	2	Colorimetric	Fractional precipitation preceding color development (bluret)	Irritation of urinary tract		1
Acetone Bodies	0.2-0.5 ml	Yes	2	Fluorimetric Method	Stability of some reagents undetermined	Abnormal catabolism of fats (i.e. increased breakdown of body fat because of diabetes, starvation, etc.)		2, 3, 4
Antidiuretic Hormone (ADH, Vasopressin)	0.2-1 ml	No	1	Bioassay Method		Excess secretory activity of neurohypophysis or physiological response to an increased osmotic pressure of blood	Diabetes insipidus; or physiological response to decreased osmotic pressure of blood.	2, 3, 4
Microscopy	1 ml	Yes	3	Microscopic Examination		Look for casts, calculi, bacteria, cells, etc., indicating renal disease, stasis, infection, inflammation, etc.		2, 3
Feces								
Total N	0.3 gm	No	1	Colorimetric	Kjeldahl digestion a problem	Tissue breakdown (N-balance)		1, 4

Table 3-9. Clinical Analyses - Group III

Plasma or Serum	Quantity Required	On-Board Analysis Feasible	Leadtime*	Anal. Method In-Flt/Ground	Comments	Possible Clinical Significance		Contained in Lists No.
						Increase	Decrease	
Amylase	0.1 ml	Yes	2	Colorimetric	Enyzmatic action on starch	Acute Pancreatitis; Intestinal obstruction; Perforated peptic ulcer (posterior)	Liver disease; Pancreatic atrophy; Perforated peptic ulcer (anterior)	1, 4
Lipase	0.1 ml	Yes	1	Titration	Incubate w/olive oil 37°C for 4 hours and 24 hours before titration for digestion information	Acute pancreatitis; Liver disease		1, 4
Mg	0.1-0.2 ml	Yes	2	Colorimetric	Titan yellow dye	Hypofunction of parathyroid	Tetany	1, 2
Alkaline Phosphatase	0.1-0.4 ml	Yes	2	Colorimetric	Incubate serum w/ phosphate cpd for approx. 15 min. at 37°C	Chronic osteomalacia Biliary obstruction	Liver Disease	1, 2, 4
Phospholipids	1.0 ml	No	1	Colorimetric	Lipid extraction, dry, digest w/boiling H_2SO_4 before color determination	Hypofunction of pancreas; Kidney disease	Anemia	1, 3, 4
Protein-bound Iodine	0.5-2.0 ml	Yes, but difficult	2	Colorimetric	ppt protein, ash, collect and titrate iodide. Hazardous	Hyperfunction of thyroid	Hypofunction of thyroid	1, 2, 3, 4
Lactate-Pyruvate	1-3 ml	No	2	Ground only	Whole blood must be deproteinized immediately	Hypoxia; Increased muscle activity	Hyper-respiration	1, 2, 3, 4
Uric Acid	0.2-0.4 ml	Yes	2	Colorimetric	Deproteinize, oxidize to color; requires cyanide as color developer (may be safety hazard)	Kidney disease; Leukemia		1, 4

Table 3-9. Clinical Analyses - Group III (Cont)

Plasma or Serum	Quantity Required	On-Board Analysis Feasible	Leadtime*	Anal. Method In-Flt/Ground	Comments	Possible Clinical Significance		Contained in Lists No.
						Increase	Decrease	
Uric Acid (cont.)			1	UV spectrophotometer	Use uricase digestion			1, 4
Serum glutamic oxaloacetic Transaminase	0.2 ml	Yes	2 (Color.) 1 (U.V. spectro)	Spectrophotometer or Colorimeter	U.V. Spectrophotometer required (DPN-DPNH reaction measured) or can use colorimetric method	Liver disease		1, 4
Serum Glutamic Pyruvic Transaminase	0.2 ml.	Yes	2 (Color.) 1 (U.V. spectro)	Same	Particular care required to avoid hemolysis while preparing serum sample	Biliary obstruction		1, 4
Iron	0.2 ml	Yes	3	Colorimetric	Same	Aplastic anemia Hemolytic anemia		1
Fatty Acids	2-3.0 ml oxalated plasma preferred; serum may be unsuitable	No	1	Titration-grnd. only	Must be done in duplicate or triplicate; oxalated plasma required; differential solvent extraction before titration	Anemia; Kidney disease; Hypofunction of pancreas or thyroid	Hyperfunction of thryoid	1, 3, 4
Clot Reaction Time	2-3 ml Whole Blood	Yes	1	Observation of clot retraction	Requires 37°C water bath. Inflight or not at all	Thrombocytopenia (i.e. platelets decreased)		2, 4
α Amino Nitrogen	1 ml Plasma	Yes	2	Colorimetric Method	Freezing of plasma necessary for preservation	Liver damage		2, 3, 4
Immunoglobulins	5-10 ml	Yes	1	Paper electrophoresis	Determination of immunoglobulins is still in the experimental stage			2, 3, 4

Table 3-9. Clinical Analyses - Group III (Cont)

Plasma or Serum	Quantity Required	On-Board Analysis Feasible	Leadtime*	Anal. Method In-Flt/Ground	Comments	Possible Clinical Significance		Contained in Lists No.
						Increase	Decrease	
Non-protein Nitrogen	0.1-1.0 ml Serum	No	2	Colorimetric Method	Some reagents are toxic and technique calls for use of H_2O_2 and open flame which constitute Flash/Explosion hazards	Decreased protein catabolism e.g. fever, stress, excess protein intake	Severe liver damage	2, 3, 4
Platelet Count	0.1 ml Whole Blood	Yes	2	Rees-Ecker Direct Counting Method	Requires microscopy		Decreased number of platelets for any reason	2, 3, 4
Platelet Estimate					Same as Platelet Count		Same	2
RBC (Total)	0.1 ml Whole Blood	Yes	3	Hemacytometer Counting	Requires microscope. No method of preservation is completely satisfactory	Polycythemia	Induced anemia by increased pO_2	2, 3, 4
Reticulocyte Count	0.1 ml Whole Blood	Yes	2	Counting of stained blood smear	Storage for post-flight analysis is feasible	Acute anemia, e.g. by hemorrhage, hemolysis Decreased pO_2 (as at high altitudes)		2, 4
Bleeding Time		Yes	4	Duke Method	Storage for post-flight determination is not feasible	Lack of fibrinogen (q.v.); prothrombin (q.v.) Vit C, Vit K	Hypercoagulability of blood	3, 4
RBC Fragility	0.18 ml Heparinized Whole Blood	Yes	3	Method of Dacie (Colorimetric)	Requires centrifugation. Storage for post-flight determination is not feasible	Abnormal red cells, hemolytic anemias	Pernicious Anemia	3, 4

Table 3-9. Clinical Analyses - Group III (Cont)

Plasma or Serum	Quantity Required	On-Board Analysis Feasible	Leadtime*	Anal. Method In-Flt/Ground	Comments	Possible Clinical Significance		Contained in Lists No.
						Increase	Decrease	
Acid-Base Balance	5 ml Serum 10 ml Urine	No	1		Several measurements required			4
Liver Function Tests	10 ml Serum 20 ml Urine	No	1		Several measurements required	(Measure liver function and may reveal defects such as damage to liver cells, bile duct obstruction, cancer, etc., e.g. Bromsulphalein excretion, serum proteins, enzyme levels, Prothrombin levels, Detoxification, Bilirubin and Urobilinogen)		4
Urine								
Amylase	10-30 ml	Qual. possible; Qual. not feasible	2	Colorimetric	Little expected normally; found in proteinuria; if present in appreciable quantities, indicates renal function impaired	Proteinuria; Kidney disease		1, 4
Uric Acid	1-5 ml	Possible	2	UV Spectrophotometer	Uricase digestion	High purine diet Leukemia	Anemia Severe muscle strophy	1, 4
Amino Acids (qual. & quan.)	1 ml or less for approx. empirical assay 10 ml for more precise assay of individual a. a.'s	Rough quantitative - yes; individual a. a. - no	2 (Color.) 1 (Chromat.)	Chromatographic separation; Colorimetric	2 dimensional paper chromatography; can be done only in properly equipped lab.	Abnormal metabolism; Leukemia		1

Table 3-9. Clinical Analyses - Group III (Cont)

Urine	Quantity Required	On-Board Analysis Feasible	Leadtime*	Anal. Method In-Flt/Ground	Comments	Possible Clinical Significance		Contained in Lists No.
						Increase	Decrease	
Magnesium	At least 2 ml required for conventional techniques	Yes	2	Colorimetric	Not usually measured since little excreted		Bone dissolution?	1, 2
Bile	5 ml	Quant. - may not be desired; Qual. - color for bilirubin	3	Fouchet's Method	Urine greenish yellow	Biliary obstruction		1
17-OH-Corticosteroids	50-100 ml	No	1	Chromatographic or Colorimetric	Tedious analysis even in well equipped laboratory	Increased adrenal cortical secretion	Decreased adrenal cortical secretion	1, 2, 3, 4
Lipase	10-30 ml	Same	1	Same	Same	Proteinuria Kidney disease		1, 4
Tetrahydro-aldosterone	10-30 ml	No	1	Double isotope assay	Can be done in one day; extremely complex	Adrenal cortical secretion (e.g. due to insufficient Na)		1
Aldosterone	Same	Same	1	Same	Same			1, 2, 3, 4
Serotonin (5-HIAA)	100 ml	No	1	Enzymatic-Fluorimetric method	Complex procedure; large values affected by diet, bananas etc.	Increased Serotonin release; Bananas, etc., in diet		1, 2, 3, 4
Ca^{45}	Same	Yes; but no advantage if doing total Ca?	2	Counter β-emitter No γ	152d half-life do on ground if total Ca not done			1, 4

Table 3-9. Clinical Analyses - Group III (Cont)

Urine	Quantity Required	On-Board Analysis Feasible	Leadtime*	Anal. Method In-Flt/Ground	Comments	Possible Clinical Significance		Contained in Lists No.
						Increase	Decrease	
17-ketosteroids	5-50 ml	No	1	Chromatographic or Colorimetric	Tedious analysis even in well equipped laboratory	Increased adrenal (+/or Testicular) secretion of androgens	Decreased adrenal secretion of androgens	1, 3, 4
Proteins (Total)	0.2-1.0 ml	No	1	Kjeldahl Assay (Colorimetric)	Same reagents are toxic - Procedures may present flash hazard. Storage for post-flight analysis is feasible.	Proteinuria - renal damage, abnormal proteins in the serum, hypertension		2, 4

Table 3-10. Clinical Analyses - Group IV

Plasma or Serum	Quantity Required	On-Board Analysis Feasible	Leadtime*	Anal. Method In-Flt/Ground	Comments	Possible Clinical Significance: Increase	Possible Clinical Significance: Decrease	Contained in Lists No.
5-nucleotidase		Yes		Colorimetric	Enzymatic release of PO_4 by incubation at controlled temp. prior to color development; specific nucleotidases should be measured separately, ATP and AMP would have to be stocked in freezer in flight.			1, 4
AMPase	0.1-0.5 ml		1					
ATPase	0.1-0.5 ml		1					
Parathyroid peptides	25 ml	No	1		Rare research method; no standardized test	Of limited interest and/or difficult to perform except for specific special study.		1, 3, 4
Insulin	5 ml	No	1	Immunoradiochemical	Isotopic dilution and antibody - antigen reaction			1, 3, 4
Cortisol C^{14}-Cortisol	Heparinized plasma 5-10 ml (10-20 ml, whole blood)	No	1	Fluorimetric or isotopic dilution w/C^{14} control	Precipitation			1
Circulating ACTH	0.5 ml plasma	Yes	1	Immuno chemical (turbidity measurement)	Analysis should be done immediately, but never > 12 hours after blood is drawn			1, 2, 3, 4
Corticosteroids		No	1		Of dubious value on blood; better data derived from urine samples			1
Catecholamines	10-20 cc plasma (i.e., 20-40 cc whole blood)	No	1	Fluorimetric - ground only	Method much less reliable for blood than for urine; urine levels more significant			1, 2, 4

Table 3-10. Clinical Analysis - Group IV (Cont)

Plasma or Serum	Quantity Required	On-Board Analysis Feasible	Leadtime*	Anal. Method In-Flt/Ground	Comments	Possible Clinical Significance		Contained in Lists No.
						Increase	Decrease	
Thyroxine binding prealbumin	2 ml	No	2	Starch Gel Electrophoresis or protein assay	Rare research method no standardized test	Of limited interest and/or difficult to perform except for specific special study.		1, 2, 3, 4
Triglycerides	1.0 ml	No	1	Back titration - ground only	Saponify w/alkali during approx. 30 min. incubation			1, 3, 4
Calcium^{45}	0.1-0.3 ml	Yes	2	Counter-soft β emitter	Need not consume sample - could be done prior to other determinations			1, 4
pH	0.1-0.3 ml whole blood	Yes with difficulty	2	pH electrode	Need fresh, anaerobically drawn blood			1
Antihemophilic Globulin (AHG)	0.1 ml plasma	No	2	Jung method	Stability of human and/or bovine plasma standard is undetermined		Hemophilia	2, 3, 4
Autidiuretic Hormone (ADH)	10 ml plasma	No	1	Bioassay method	Freezing of plasma necessary for preservation	Plasma osmotic pressure; acute stress		2
Immune Bodies	1 ml serum	Yes	1	Immuno electrophoresis, agglutination, precipitin test, complement fixation test	Frozen storage preserves immune bodies indefinitely	Infectious		
Manganese	0.1-0.5 ml serum	No	1	Atomic absorption spectrophotometry	Flash hazard may exist in use of this technique. Storage for post-flight analysis is feasible.			2

Table 3-10. Clinical Analyses - Group IV (Cont)

Plasma or Serum	Quantity Required	On-Board Analysis Feasible	Leadtime*	Anal. Method In-Flt/Ground	Comments	Possible Clinical Significance		Contained in Lists No.
						Increase	Decrease	
Platelet Adhesiveness	16 ml whole blood	Yes	2	Comparative counting	Complex procedure including platelet counting	Measures functional ability of platelets to initiate clotting (irrespective of numbers)		2, 3, 4
Plasma Thromboplastic Component (PTC)	1 ml plasma	No	2	Assay for factor IX	See Prothrombin		Induced Christmas factor disease	2, 3, 4
Sulfates	1 ml serum	Yes	2	Colorimetric method	Some reagents required are toxic	Increase protein metabolic acidosis		2
Thyroxine	2-3 ml	No	1	Column chromatography + colorimetry	Requires chromatography alkaline incineration, and colorimetric reaction.. Hazardous and toxic.	Increase thyroid activity such as response to stress	Decrease thyroid activity	2, 4
WBC Motility and Phagocytic Activity	20 ml whole blood	Yes	2	Microscopic Observation	Storage for post-flight determination is not feasible	Measures "healthiness" of polymorphonuclear lymphocytes and monocytes		2, 3, 4
Transferrins	0.5-1.0 ml	Yes	2	Determination of iron binding capacity colorimetry	Some reagents are toxic	Of limited interest and difficult to perform except for specific special study		2
Zinc	0.1-0.5 ml	No	1	Atomic absorption Spectrophotometry	Apparatus may contain flash hazard. Storage for post-flight analysis is feasible.	Essential metal for carbonic anhydrase activity		2
Leukocyte Mobilization	10-20 ml whole blood	No	1	Opsonic Index determination	Requires fresh cultures of bacteria	Change in Opsonic Index is of doubtful significance		3, 4

Table 3-10. Clinical Analyses - Group IV (Cont)

Plasma or Serum	Quantity Required	On-Board Analysis Feasible	Leadtime*	Anal. Method In-Flt/Ground	Comments	Possible Clinical Significance: Increase	Possible Clinical Significance: Decrease	Contained in Lists No.
ACTH Stimulation of 17-OH-Corticosteroids	See corticosteroids		1			(Measures ability of adrenal cortex to secrete active steroids irrespective of pituitary function) Hyperactive adrenal cortex	Hypoactive adrenal cortex	4
Butanol Extractable Iodine (refinement of P.B.I. test)	0.5-1.0 ml serum	Yes	2	Colorimetric method	BEI is redundant if PBI performed	Increased thyroid activity	Decreased thyroid activity	4
Calcium Infusion			1			(Measures response of parathyroid to changed Ca levels by urine phosphate assay)		4
Glucagon	10-20 ml	No	1		No standard procedure available	(Released from α-cells of pancreas; insulin antagonist)		4
Somatotrophic or Growth Hormone	10 ml serum	No	1	Bioassay	Little or no significance of assay in adult	(Probably controlled by hypothalamus)		4
Histamine	1.0 ml	Yes	2	Fluorometric	No highly accurate test available; test of dubious significance	Histamine released by immediate allergic reactions, causes increased gastric secretion, so sudden increased gastric juice would reflect histamine release		4
Hypothalamus					Hypothalamic activity cannot be measured directly by chemical means			4
Epinephrine	25 ml	No	1	Differential fluorescent method (acid)	Vasodilator, prod. by adrenal cortex	Cold, stress, hypersecretion by adrenal medulla		4

Table 3-10. Clinical Analyses - Group IV (Cont)

Plasma or Serum	Quantity Required	On-Board Analysis Feasible	Leadtime*	Anal. Method In-Flt/Ground	Comments	Possible Clinical Significance		Contained in Lists No.
						Increase	Decrease	
Follicle Stimulating Hormone (FSH) (Gonadotropin)	25 ml	No	1	Bioassay		Levels probably controlled by feedback mechanism of hormone - hypothalamus - anterior pituitary		4
Norepinephrine	25 ml	No	1	Diff. fluroescent method (alk)	Vasocontrictor prod. by sympathetic NS	Stress, type secretion by adrenal medulla, release from sympathetic nerve endings		4
Parathyroid Hormone	25 ml	No	1	Bioassay	Extremely tedious analysis	PT Hormone responds to Ca levels (inversely proportional) and probably to (PO_4) levels (directly proportional)		4
Radiation Effects on Hemopoetic Nucleated cells						Radiation damage to bone marrow		
Bone Marrow Aspiration	0.5-3 ml bone marrow	Yes	2	Differential staining and counting of bone marrow touch and smear preparations	Requires sterile technique to obtain bone marrow. Extremely painful, difficult and hazardous			4
Spermatozoa	1.5 ml semen	Yes	2	Counting in hemacytometer and staining of smear		Increased spermatogenesis	Decreased spermatogenesis	4
TBG (Thyroxine Binding Globulin)	2-3 ml	No	2	Starch Gel Electrophoresis or protein assay	Rare research method; no standardized test		Decreased protein e.g. proteinuria; Generalized globulin deficiency	4

Table 3-10. Clinical Analysis - Group IV (Cont)

Plasma or Serum	Quantity Required	On-Board Analysis Feasible	Leadtime*	Anal. Method In-Flt/Ground	Comments	Possible Clinical Significance: Increase	Possible Clinical Significance: Decrease	Contained in Lists No.
Testicular Biopsy	Biopsy of testicle	No	1	Fixation, imbedding, microtomy, staining and microscopic examination of tissue obtained	Would require anaesthesia, restraint and sterile operating room technique	Of limited interest and difficult to perform except for specific special study.		4
Thyroid Stimulating Hormone (TSH)	10 ml	No	1	Bioassay	Rare research technique	Cold, Stress, Decreased thyroxine	Increase ACTH, Increased thyroxine	4
Throcalcitonin	25 ml	No	1	Bioassay	Acts directly on Ca level	Increased Ca levels in blood	Decreased Ca levels in blood	4
Urine								
Catecholamines	25 ml	Yes but difficult	1	Fluorimetric (quantity on order of 10^{-9} gms)	Adsorption, elution, alkaline oxidation, fluorimetry tedious, slow, difficult	Of limited special interest		1, 2, 4
Testosterone	300-500 ml	No	1	Chromatographic or colorimetric	Tedious analysis even in well equipped lab			1
Uropepsin		No	1		Not in common clinical use; of dubious import			1, 4
Mn	5 ml	No	1	Atomic absorption Spectrophotometry	Go-no go for presence of Mn			1, 2

Table 3-10. Clinical Analyses - Group IV (Cont)

Urine	Quantity Required	On-Board Analysis Feasible	Leadtime*	Anal. Method In-Flt/Ground	Comments	Possible Clinical Significance		Contained in Lists No.
						Increase	Decrease	
Pyrophosphate	1-5 ml	Yes	3	Colorimetric	Enzymatic breakdown, then do PO_4 assay	Of limited interest and/or difficult to perform except for specific special study		1, 4
Zn	5 ml	No	1	Atomic absorption spectrophotometry				1, 2
Glucose	1 ml	Yes	2	Enzymatic-colorimetric method	Incubation required. Change in frozen storage may occur.	Renal glycosuria diabetes mellitus		2, 3, 4
Mucoproteins and related Biocolloids	0.2 ml	Yes	2	Colorimetric method	Some reagents are toxic			2, 4
Sulfates	0.1 ml	Yes	2	Colorimetric method	Some reagents required are toxic	Increase protein metabolism acidosis		2
Renal Clearances	30 ml	No	1	Various techniques used.	Requires in-flight injection of clearing agent		Measures kidney function e.g. decreased inulin clearance = decreased glomerular filtration, decreased diodrast clearance = decreased renal blood flow	4
Tubular Reabsorption Phosphate	Serum & Urine see Phosphorus	Yes	2	See phosphorus	Measure serum PO_4 and urine PO_4 after ingestion of phosphate		Renal tubular damage	4

Table 3-10. Clinical Analyses - Group IV (Cont)

Feces	Quantity Required	On-Board Analysis Feasible	Leadtime*	Anal. Method In-Flt/Ground	Comments	Possible Clinical Significance		Contained in Lists No.
						Increase	Decrease	
Mg	0.5 gm	Yes	2	Colorimetric (after digestion)	Interference from Ca, Na, K; ppt. Mg selectively	Of limited interest and/or difficult to perform except for specific special study		1
Cr (assume $Cr^{51}\gamma$)	0.5 gm	Yes	2	Counter				1
Trypsin	0.2 gm	Yes	1	Liquify gelatin				1, 4

GROUP III - Of interest; but because of size of sample, difficulty of test, smaller likelihood of change in the value, or because test(s) in (1) and (2) might give the same information, these tests are accorded lower priority.

GROUP IV - Of limited interest; require large sample; difficult to perform, require a specific special study.

Although various clinicians and physiologists may differ on some details of the categorization, the priority decision made by the Space Medicine Ad Hoc Consultant Group is a step in the right direction. Not only the areas of experimentation, but the specific experiments and the measurements called for in the experimental protocols must be ranked so that the relative importance of any given test can be determined in the light of three criteria: 1. The physiological significance of the test per se. 2. The physiological significance of any given test complemented by a small number (2-4) other tests. 3. The priority assigned to the experiment(s) which may include a given test in a protocol based upon a rigorously developed rationale.

The final priority assignment should result from a trade-off between two factors: an original priority assignment based solely on scientific merit; and a feasibility ranking, based on flight schedules, flight qualified hardware lead time and crew skills required.

It should be noted that experiment protocols are cited because measurements alone, regardless of number or kind, will neither define the requirements for, nor justify the need for an orbiting laboratory.

During the AAP mission the biomedical community hopes to obtain information regarding the effects of long-term exposure to weightlessness on the physiology of man. To obtain such information experiments are required in order to ascertain effects upon the various bodily functions and systems. When an investigator embarks upon a research project, he poses a question: e.g., what happens to circulating electrolyte levels during exposure to weightlessness. An experiment is designed to answer the question. Included in this experimental design are a protocol, what will be done when and the methods, how the what will be done. The experimental design may be modified to reflect the difficulties with equipment, funding, schedule and the like. The "what" and "how" required to obtain data are then examined to determine what measurements and thus what equipment will be needed. (See Figure 3-11.)

During Phase B of the IMBLMS Program, assumptions have been made because the protocols for individual experiments and an overall mission experiment plan were not available. These assumptions have been used as the basis for IMBLMS design criteria. The pieces of information, critical to the IMBLMS program, which are directly affected by experiment protocols are:

a. Expendables
   1. Weight
   2. Volume

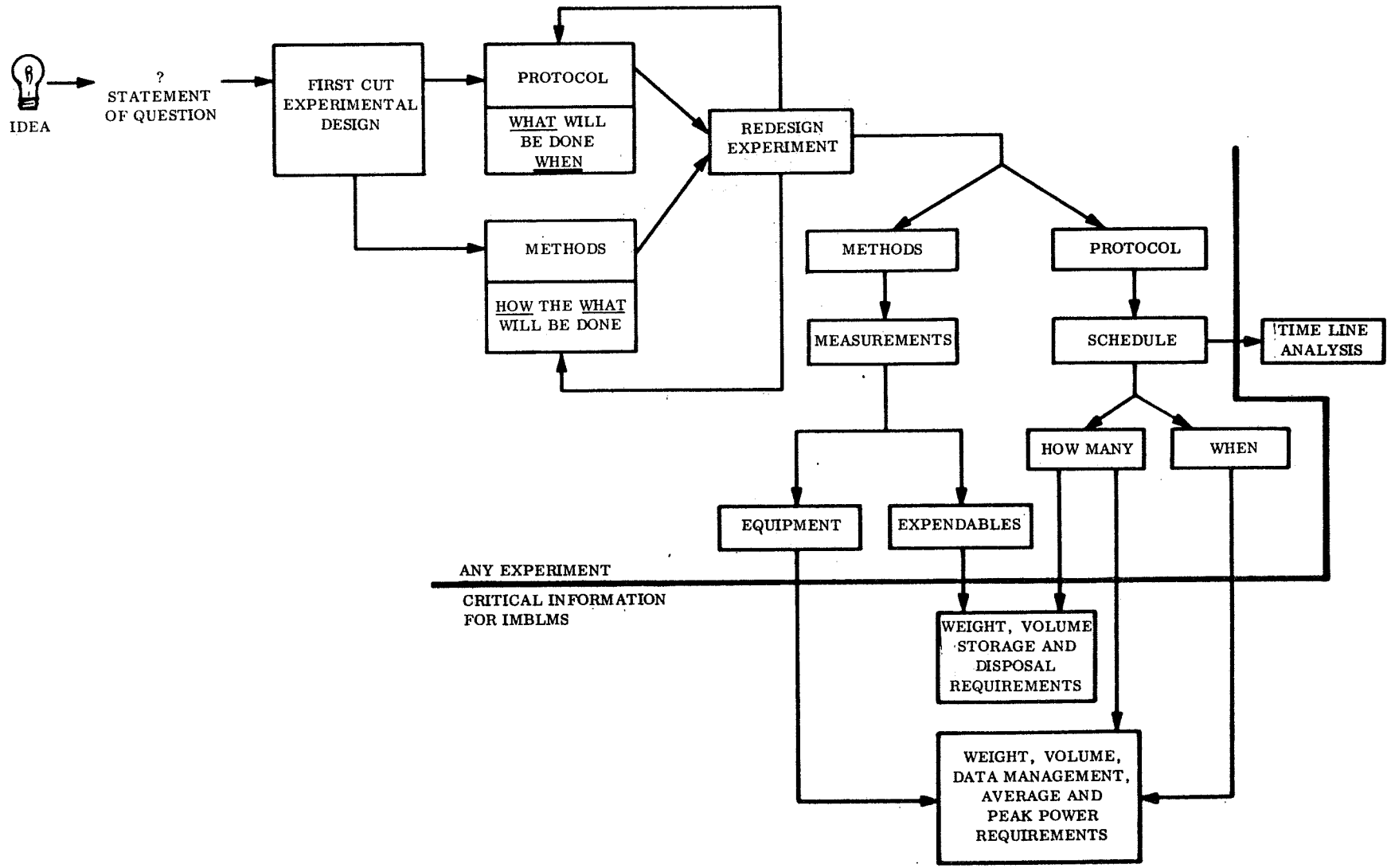

Figure 3-11. Relation of Experiment Protocol to Engineering Design Criteria

3. Storage Requirements

4. Disposal Requirements

b. Equipment

1. Weight

2. Volume

3. Power - Average/Peak

c. Data Management Requirements

While values have been assigned to the above in arriving at a design concept, it must be emphasized that these values are assumptions, or have been calculated from assumptions. While the approach to solution of the problems of the design of IMBLMS can be defined with the information at hand, such approaches to problem solutions fall short of the requirement. For actual hardware design and fabrication firm numbers are needed, numbers which can be obtained only from specific detailed experiment protocols.

3.4.5.2 Measurement Analysis

The major guidance for this report has been the Tentative Priorities for Areas of Medical Experiments set forth by the Space Medicine Ad Hoc Consultant Group. Discussion of certain measurements is in order simply to define our approach to the problem of: (1) what measurements should be included in the flight experiments; and (2) which measurements should be performed on-board and which post-flight on preserved samples.

3.4.5.2.1 Blood Volume

One group of physiological parameters of man in space which has elicited a great deal of interest are blood volume, plasma volume and red cell mass. During the Gemini flights, it was noted that post-flight red cell mass was significantly reduced from pre-flight values in both astronauts on all flights where it was measured. In the Gemini IV and V flights, plasma volume was also reduced with a resulting decrease in total blood volume. In the Gemini VII flight, however, plasma volume increased with the result that total blood volume did not change significantly. These findings make tests of these parameters likely candidates for flights of longer duration. It is not clear at this point whether the observed changes are due to the pure oxygen atmosphere of the spacecraft, "zero" gravity or a combination of these factors. Adequate ground-based control studies employing oxygen atmospheres at reduced pressure would distinguish between these alternatives.

Testing for these three parameters in-flight may cause certain complications to the protocol for these and other experiments. First of all, labeling of plasma with $RISA^{125}$ is required for plasma and blood volume determinations unless a dye is used. For the most accurate determinations of red cell mass, additional labeling with Cr^{51} is also required. This latter isotopic labeling is also useful in determining red cell survival, a measure which may throw light on the mechanism of reduction of red cell mass. These isotopes in and of themselves

do not interfere with each other because the energy of their characteristic gamma emissions are different enough that they can be separated by pulse height analysis using scintillation detectors (I^{125} - 35 KEV; Cr^{51} - 320 KEV). These isotopes may, however, interfere with isotopic studies of other biochemical parameters.

Another consideration is that a dose of the two isotopes large enough to be measurable throughout the period of study would have to be given the astronaut in one or more injections. Such a total dose might present a health hazard. The actual measurement of the radioactivity of a sample is not a complicated procedure so that, if this is performed in-flight, little training of the responsible astronaut(s) would be required, although power, weight and volume of associated instrumentation may produce significant penalties. But, to determine plasma volume and red cell mass, a hematocrit measured at the time of sampling is required. This necessitates on-board centrifugation and measurement which complicates the total procedure. Despite these drawbacks, however, these parameters are known to change under the conditions of space flight so that every effort should be made to facilitate their measurement in the IMBLMS system. Because of the short times required for changes to appear, measurement of these parameters every two or three days would be optimum.

3.4.5.2.2 Coagulation

The Space Medicine Ad Hoc Consultant Group has given "Coagulation" (a subheading of "Hematology") a priority of II or III (II-Desirable; III-Of Interest). Some of the parameters involved in coagulation were spelled out in NASA Contract No. NASW-1562 "Collection and Preservation of Biological Specimens During Space Flight for Post-Flight Analysis," as Platelet Count, Platelet Estimate, Platelet Adhesiveness, Fibrinogen, Fibrinolytic Activity, Prothrombin Activity, Plasma Thromboplastic Component (PTC), Antihemophilic Globulin (AHG), Clotting Time, and Clot Retraction. No evidence as yet exists, however, that space flight will have any effect on any of these parameters. It would seem logical first to determine on early flights whether clotting time and bleeding time vary significantly from ground-based controls and from preflight levels. These parameters can be measured simply, in-flight, with a minimum of expendables and complication. Should they vary, a plan which would have already been implemented as a possible eventuality could be put into effect for measurement of some of the more esoteric coagulation factors on later missions. Many of the parameters involved require preserved samples because of the difficulty in performing the assays in-flight. This approach has the advantage of permitting real-time appraisal of the coagulation function as opposed to post-flight measurements on preserved samples. A similar protocol might be worked out for other groups of parameters which measure different aspects of a single behavioral or physiological function. This protocol would call for "quick and dirty" gross measurements of the function of interest during an early flight followed by (1) no further measurements on later flights if non-significant variation is observed or (2) detailed measurements of specific parameters involved in the physiological function of interest on later flights if significant variation is encountered.

Such an approach would permit more detailed study on later flights of physiological and behavioral functions which are observed to vary, simplification of the tasks required of the astronauts on any one flight, reduction in the sampling protocols, power, weight and

volume penalties, a more flexible overall protocol which could be modified as the AAP progresses, and possibly reduction in the total number of missions required as answers to the question of how space flight affects man's physiology and behavior are found.

3.4.5.2.3 Leucocyte Functions

Leucocyte functions are rated as I, Essential, by the Space Medicine Ad Hoc Consultant Group. The two tests which this category seems to imply are (1) leucocyte motility and phagocytic activity, and (2) leucocyte mobilization. Both of these tests require in-flight analysis as opposed to evaluation of preserved samples. They are also difficult to perform and require a great deal of care and meticulousness on the part of the technician. The difficulty involved is further increased by the absence of appreciable gravity. Even an experienced technician would find them hard to perform under such conditions. It may take an inordinate length of time to train an astronaut to the necessary level of technical competence. The question arises in view of these problems whether these tests are indeed essential or whether the inherent difficulties outweigh their desirability. On what basis was leucocyte functions given an essential priority? Is there reason to believe that they will change? Are there simpler tests which could be substituted during early flights which could determine the essentiality of doing these more complicated tests on later flights? These questions point up a possible shortcoming to the approach which has been taken for selecting measurements for IMBLMS. The attitude seems to be, "We must cover every bet before any result is in." This is diametrically opposed to the approach taken by most biological and physical scientists who alter, subtract from, or add on to their experimental protocols empirically as early results point the way to the necessity of performing and the detailed approach required for further experiments.

3.4.5.2.4 Hormones

Practically every hormone known to be produced by the human body has been suggested by NASA on one of its lists as a parameter to be studied in manned space flight. Clinical chemical procedures for assaying these hormones are extremely difficult and complex for the most part; many require bioassay techniques. Measuring them during space flight is, with the present state-of-the-art, out of the question. Many would require the maintenance of unique animal colonies on the spacecraft which could not be used for measurement of other hormones. If these assays are to be done at all, they must thus be performed on preserved samples of blood and urine.

An additional difficulty in the measurement of hormone concentrations in blood and urine is that often large samples are required. If provision is made to measure all parameters in duplicate to increase precision, these large samples must be doubled in volume. Power, weight and volume penalties for adequate storage techniques or for expendables for measurement in flight may become prohibitive.

A more fundamental question can be raised concerning hormone measurements: is there any reason to believe that some of these will change? An empirical approach could be taken to this problem. Initial flights could compare pre- and post-flight measurements of the hormones of interest with the possible addition of one mid-flight measurement either in space or on preserved samples on the ground. These measurements could also be compared to

ground-based controls which would spend the duration of the flight in a hypobaric chamber supplied with the same atmosphere as the spacecraft. If no change is noted between pre-, mid- and post-flight hormone levels, no further study of the hormones which are not altered, is needed. If changes are noted, but no differences appear between flight values and ground-based controls, the same data can be obtained by more intensive study of the hypobaric subjects with more frequent sampling for the hormones involved. This approach could greatly reduce the expense and complexity of later flights even though the eventuality that zero-gravity affects hormone levels differently with consequent requirement for more intensive sampling and study during flight would have to be prepared for.

There are a number of hormone studies in the NASA lists which are redundant or insignificant for one reason or another. In NASA Contract No. NASW-1562, serum catecholamines is one of the parameters noted. The level of catecholamines in the blood represent transitory phenomena only; it would be more valuable to study the excreted levels in the urine over 24-hour periods which would indicate average blood levels for the period. Antidiuretic hormone in the same list calls for measurement in both the blood and the urine. One or the other might give the desired information by itself. All of the hormones produced by the anterior pituitary (ACTH, FSH, TSH, and Growth Hormone) are listed by the Space Medicine Ad Hoc Consultant Group with a priority of III-Desirable. Changes in the levels of excreted steroids may measure ACTH and FSH levels indirectly; if these change during initial flights, provision could be made for sampling the stimulating hormones during later flights. For TSH, PBI yields an indirect measure and the same approach could be taken with this hormone.

The Ad Hoc Group lists the following thyroid gland secretions as "Of Interest:" PBI, TBG, BEI, and Thyroxine. NASA Contract No. NASW-1562 also lists TBPA. These separate measurements are redundant unless an abnormality is observed in the easiest to measure, i.e., PBI. The same approach suggested above could be taken with these. For the parathyroid ("Of Interest") the Ad Hoc Group lists serum calcium, tubular readsorption phosphate, calcium infusion, parathyroid hormone, parathyroid (?), and thyrocalcitonin. The hormones are extremely difficult to measure; calcium infusion requires a difficult and possibly hazardous procedure. Serum calcium, however, is relatively easy to measure. This could be assayed on early flights and, if changes not observed in confined, hypobaric, spacecraft atmosphere, ground controls occur, the other parameters could be studied in later flights. As for pancreatic islet tissue ("Of Interest"), the Ad Hoc Group lists insulin and glucagon. Both hormones are very difficult to assay. Serum glucose, however, reflects the activity of this gland and, if early flight (not control) data on serum glucose shows significant changes in its level, previously planned implementation could be put into effect to study the hormones on later flights.

For the adrenal cortex (given a priority of II-Desirable), the Ad Hoc Group recommends study of 17-ketosteroids, 17-OH corticosteroids, (ACTH Stim.) (?) and aldosterone. Excreted levels of these hormones in preserved urine samples could be studied with only moderate difficulty. Because of their significance with respect to stress and electrolyte balance, they should probably be studied on early flights. Again, however, if no significant change is observed (including comparison to ground controls), measurement on later flights could be omitted. The Ad Hoc Group lists the following neurohumeral hormones with a

priority of II-Desirable, also: serotonin, histamine, catecholamines, epinephrine and norepinephrine. To simplify sampling and measuring protocols, it would be well to study only serotonin and catecholamines excreted in the urine on early flights. If significant changes are observed, provision could be made for additional studies on later flights. (In all of the above, it is assumed that early flight protocols will call for sampling for the indicated hormone constituents only once a week at most; later flights would require more frequent sampling and measurement or preservation if significant changes are observed.)

The gonads are given a priority of III-Of Interest by the Ad Hoc Group. The listed measurements are 17-ketosteroids, spermatozoa and testicular biopsy. 17-ketosteroids are being measured already for other purposes (adrenal cortex). Specific provision could be made for measurement of urinary testosterone. This, however, would require a urine sample of 300 to 500 milliliters. Because of this, and the nature of the other two measurements (one of which would require anesthesia, restraint and sterile operating room technique), it would seem better to make the gonads the subject of a separate experiment rather than a part of the IMBLM system.

Testicular biopsies should be omitted based on the fact that the procedure is too complex for on-board performance and because of the pain and risk involved.

3.4.5.2.5 Nitrogen Balance

Under "Metabolism and Nutrition, 2. Neuromuscular" on the priorities list of the Space Medicine Ad Hoc Consultant Group is found Nitrogen Balance and Creatine Metabolism. These are accorded a priority of II-Desirable.

Nitrogen balance superficially appears to be a simple thing to measure. Total nitrogen ingested less nitrogen excreted represents the balance. In practice, however, it is extremely difficult to do this. One must measure the total nitrogen content of food ingested. Careful measurement of food intake throughout a given IMBLMS flight plus pre-flight determination of nitrogen concentration of various foods used would be required. In addition, total nitrogen determination in all excreted urine and feces as well as sweat would be required.

This would necessitate pooling of 24-hour urine outputs, measurement of total volume excreted, sampling and nitrogen measurement of this total output; pooling of 24-hour feces excretion, measurement of total mass excreted and sampling and nitrogen measurement of this total. Even with this degree of complexity, errors can occur. Excretion of ammonia and other volatile nitrogenous compounds from the lungs is not measured. In the case of diarrhea, flushing out of the microflora of the intestines would lead to excreted values which would be spuriously elevated, implying a negative balance. It may be considered most advantageous from a trade-off to store samples of feces and urine for total nitrogen determination. In this eventuality, possible loss of volatile nitrogenous compounds might indicate a positive balance.

Because of the complexity and inherent inaccuracies in this approach to studying nitrogen balance, it would seem logical to use a simpler approach on early flights. We are dealing with subjects who are in the top tenth of the population with respect to health and physical condition. Little change if any would be expected in nitrogen balance given ad-libitum

feeding of a balanced diet during space flight. Pre- and post-flight determination of lean body mass on early flights will indicate whether there is any gross change in the total protein of the subjects' bodies. If a change is seen to occur, provision can be made for determining total nitrogen balance on later flights.

Creatine metabolism can be studied at a variety of levels. The simplest is to measure the creatine and creatinine contents of serum and urine. These by themselves are indicators of the rate of muscular activity. If it is seen that they vary in some unusual way in astronauts in a spacecraft as compared to ground controls, an attempt might be made on later flights to study the intermediates of creatine anabolism in blood and urine including creatine phosphate which is the energy carrying form of this compound.

3.4.5.2.6 Water and Electrolyte Balance

The Space Medicine Ad Hoc Consultant Group has accorded water and electrolyte (Na, K, Cl) balances a priority of I-Essential as areas of medical experiments in manned space flight. Since dehydration occurred in the astronauts on some Gemini flights, these measures deserve this high priority.

Water balance is not an easy thing to measure. Gross, inevitably inaccurate estimates can be made from water ingested and total urine outputs, but this does not take into account the water content of foods ingested and of feces and sweat excreted. These latter three measures are difficult at best and may be impossible to do in space. Water content of foods could be determined pre-flight and, if accurate accounts of the total food mass ingested were kept, an estimate of water ingested in this form could be made. Feces moisture content can be determined by dry weight determinations using a moisture balance. This could not be done easily in space and would have to be determined on feces preserved in tightly sealed containers for post-flight analysis. This would mean that all feces excreted during flight would have to be preserved for accurate post-flight determination. Sweat output presents a tremendous problem at the present state-of-the-art and could represent a significant water loss in case of severe temperature excursions in flight suits.

Electrolyte balances present problems similar to those of water balance. Total Na, K, Ca and Cl ingested in foods and excreted in urine, feces and sweat would have to be determined. Both electrolyte and water balance should be determined if possible on-board because of their importance to the health and well being of the astronauts in the event of diuresis, water retention, diarrhea, vomiting or dehydration. A quick measure of the state of electrolyte balance can be obtained by estimating the Na, K, Ca and Cl concentrations of serum. If these are seen to vary significantly during early flights, more exhaustive procedures can be used in later ones. In the case of electrolytes, also, loss through sweating presents the most difficult measurement to make. It is possible, however, which is not the case in the output of water volume as sweat. Regular washing of astronauts underwear in distilled water plus pooling with water used to rinse the body surface can give a fairly accurate measure of electrolyte loss via this route. A conceptual design for an on-board washing machine is described in the final report on contract No. NASW-1562, Collection and Preservation of Biological Specimens.

3.4.5.2.7 Radioactive Isotopes

On-board analysis of radioactive isotopes used for plasma volume (I^{125}) and red cell mass, survival (Cr^{51}) plus isotopes used for other physiological measures would probably require equipment which would produce significant power, volume and weight penalties. The measurement of a single isotope would produce less of a problem. Simple Geiger counting apparatus with adequate shielding against space radiation would be sufficient. But when more than one isotope is used in a single subject, pulse height analysis using scintillation counters or proportional counters would be required. This would necessitate more complex, heavier and larger equipment and manpower. In addition, digital computer data handling techniques would be required to analyze the radiation emission spectra of the elements involved in order to determine the quantity of each isotope present in a sample. This would be true regardless of the type of emission (α, β, γ, position).

Preservation for post-flight analysis greatly simplifies this whole problem. Power, weight, volume and data complexity could all be handled with ease on the ground and the radioactivity of samples is stable in the face of any technique of preservation; decay occurring with time can be readily calculated.

Radiation effects on hemopoetic nucleated cells are accorded a priority of II-Desirable--by the Space Medicine Ad Hoc Consultant Group. This would require bone marrow aspirations with consequent necessities of sterile equipment, aseptic technique, local anaesthesia, immobilization of the subject, etc. Not only are repetitive marrow biopsies out of the question, even one is too many. The procedure is excruciatingly painful, the risk involved is very high and the taking of such a biopsy is, by no stretch of the imagination, routine.

3.4.5.2.8 Energy Metabolism

One of the areas of human physiology where changes may occur due to the virtual absence of gravity in space flight is energy metabolism. There are some indirect, non-invasive techniques for studying metabolism, but a thorough appraisal necessitates blood and urine samples for analysis of some of the intermediates and end-products. The Space Medicine Ad Hoc Consultant Group lists the subdivisions of Metabolism (Energy) with the following priorities:

a. Total - I

b. Carbohydrate - I

c. Fat - II

d. Enzymes - II

e. Protein - II

f. Total Body Mass - I

g. Lean Body Mass - III

I = Essential; II - Desirable; III - Of Interest

As a minimum, the biochemical tests which such a study of energy metabolism would require, follow: dynamic carbohydrate (glucose tolerance test), blood lactate/pyruvate, urine ketone bodies, fat tolerance test, serum lipids, phospholipids, fatty acids, serum and urine proteins, α - amino nitrogen, non-protein nitrogen, urea nitrogen, uric acid, and inorganic phosphate. It is not clear what is meant by "enzymes" in the Ad Hoc Group list. Does this mean enzyme metabolism or the enzymes involved in metabolism? If the latter, an enormous list of circulating enzymes could be generated among them, amylase, lipase, alkaline phosphatase, glutamic oxaloacetic transaminase, glutamic pyruvic transaminase, AMPase, ATPase, etc. For the sake of simplicity and logic, it would seem reasonable to assay blood and urine for the constituents of the previous list of factors on early flights and go to more detailed tests on later flights if abnormalities different from ground controls are noted in these. Provision for this type of eventuality must be made, of course, from the outset.

The question can be asked, are there still simpler and fewer measurements which could be used on early flights for a general evaluation of energy metabolism. As it is, our basic list includes twenty measurements of varying complexity some of which could be done in flight but most of which must be done on preserved samples with the consequent possibility of change in the concentrations of substances of interest. If a still simpler list of measurements could be generated, the experimental and sampling protocols for early flights could be further reduced in size and complexity with resulting reduction in power, weight and volume penalties. A graduated approach could then be taken so that additional parameters for measurement could be added stepwise to later flight plans with elimination of entire aspects of metabolism that show no change or a change which is insignificant when compared to ground controls.

3.4.5.3 On-Board Versus Post-Flight Measurement Trade-off

Due to the nebulous nature of (a) the "experiments" to be supported by an IMBLMS, (b) the missions on which an IMBLMS may be flown and (c) the flight schedule to which we are working, a number of assumptions and definitions were made and are discussed below. It is anticipated that subsequent iterations of this trade-off will be performed during Phase C, as experiments are refined and a better picture obtained of what measurements will be made during each experiment.

Several factors were used in the trade-off and were weighted from an operational viewpoint, i.e., what can be done during the available time before a mid-1970 launch using state-of-the-art technology.

These factors, their weights and definitions are:

a. Safety — 10 - Safest
1 - Most Hazardous

This is the most important factor and, hence, a safe, on-board analysis was accorded a value of 10.

The term safety, in this trade-off, encompasses:

1. The amount of volatile materials (e.g., ether) used and/or added to the spacecraft atmosphere.

2. The presence and mounts of hazardous compounds (e.g., sulfuric acid, cyanide salts) used.

3. The chemical stability of the mixtures of compounds.

4. The handling of toxic and/or hazardous chemicals.

5. The reduced pressure and oxygen-enriched atmosphere of the vehicle.

b. Complexity — 8 = Least Complex
1 = Most Complex

Included in complexity are the:

1. Number and type of manipulations

2. Dexterity and facility required

3. Number of different pieces of equipment

4. Time of performance

c. Skill/Training Requirements — 6 = Least Skill/Training Requirements
1 = Most Skill/Training Requirements

This factor assumes individuals with an engineering degree and test pilot experience. At this time, there is no way to determine the laboratory expertise of the new crop astronauts with scientific or medical training. Available information indicates that the values assigned in the trade-off will not be significantly changed; the training times assume astronaut cooperation. The skill/training requirements were assessed on the following bases:

1. Idiot proof, 10 hours of training

2. 50 hours of training

3. 50-200 hours of training

4. 200 hours of training

5. 200 hours plus prior training and experience

The training times include that needed for sampling and operation of several pieces of equipment common of analyses.

d. Physiological Significance 4 = Most Significant
1 = Least Significant

The analyses listed were categorized by the following descriptions:

1. Most important in the light of present theory or experience related to possible physiological problems in space. Feasible to do analysis on-board, requires small sample.

2. Should be done if at all possible, important, feasible to do analysis on-board.

3. Of interest, but because of sample size, difficulty of test, smaller likelihood of change in value, or, because test(s) in (1) or (2) might give the same information, these tests are accorded lower priority.

4. Of limited interest, require large sample, difficult to perform analysis, requires specific special study.

e. Lead Time for modified and/or simplified methods and hardware development.

Estimated Lead Time

0-6 months
6-12 months
12-24 months
24 months

N.B. - No objective criteria are known to be available: therefore, all factor weights are subjective, i.e., best judgment.

The weights accorded to the factors reflect an operational point of view; therefore, safety becomes the overriding consideration. Complexity and skill/training requirements are measures of crew involvement, both prior to and during flight. While not as important as safety, these two factors are very real operational constraints. Although physiological significance is of prime importance, it is not given the highest weight because we are taking a pragmatic view, i.e., what can be done within the known operational constraints. Lead time for development of on-board methods and equipment has been included because analytical procedures and apparatus suitable for on-board use are not off-the shelf items.

Table 3-11 shows the weightings assigned for those measurements derived from the IMBLMS Statement of Work. The weightings were multiplied in an effort to obtain a distribution curve and natural break-points, but the inherent procedural difficulties, as well as the safety problem, relegate most of the measurements to later flights as far as on-board analyses are concerned. Within the limitations imposed by a mid-1970 launch, most samples will be preserved. Evaluation of the other measurements in Tables 3-7 through 3-10 corroborates our opinion that all biochemical measurements will be done on the ground on preserved samples. A limited number of hematological measurements can be done on board, not because the equipment is available but because development time will be short, i.e., less than one year.

Table 3-12 shows the sampling regimen for each astronaut based on a 7-day rotating schedule previously described to NASA in the final report of contract NASA 1562, Collection and Preservation of Biological Specimens. The total number of samples for a 3-man crew on a 56 day mission is shown in Table 3-13. The expendables used for on-board analyses, including collecting samples, are listed in Table 3-14 and the expendables needed for sampling and preservation are listed in Table 3-15.

Both the sample volumes and expendable requirements are based on the aforementioned 7-day rotating schedule.

3.4.5.4 Trade-Off Conclusions

The measurements to be performed on-board are:

a. Total RBC

b. Total WBC

c. Urine pH

d. Hematocrit

e. Clotting time

f. Bleeding time

Unfortunately, with the exception of urine pH, none of these measurements is accurate and precision is usually poor; all of the measurements have a low order of physiological significance.

Under study now are analytical methods with simplified procedures and equipment. Dr. Samuel Natelson, of the Michael Reese Hospital in Chicago, has, under NASA Contract, developed simplified methods for BUN, glucose, total protein and albumin, and blood calcium. However, the precisions and accuracies of these methods are not yet as good as those obtained with conventional wet chemistry and the estimated lead time for development of acceptable procedures and hardware is about 2-1/2 years. Therefore, they would be available for later IMBLMS flights but not for the first one which is scheduled for mid-1970.

Table 3-11. IMBLMS Measurements (On-Board Versus Post-Flight Tradeoff)

	Safety	Complexity	Skill/ Training Requirements	Physiological Significance	Lead Time For Development Of On-Board Methods	Rating	Decision: On-Board Or Preserve	Comments
Energy Metabolism								
Serum Lipids	1	5	4	2	1	40	Preserve	
Phospholipids (Serum)	1	4	4	2	1	32	Preserve	
Fatty Acids (Serum)	1	5	4	2	1	40	Preserve	
Dynamic Carbohydrate (Glucose Tolerance Test)	5	1	4	1	3	60	Omit Test	Multiple Venipunctures and Fasting can cause Experiment Schedule Problems. Single Glucose Determination Feasible.
Protein Metabolism								
Serum Proteins	3	3	4	3	2	216	Preserve	
α Amino Acid Nitrogen (Plasma)	7	4	4	2	2	448	Preserve	
Non-Protein Nitrogen (Serum)	2	5	4	2	2	160	Preserve	
Blood Urea Nitrogen (Serum)	3	5	4	2	2	240	Preserve	
Blood Uric Acid (Serum)	7	5	4	2	2	560	Preserve	
Standard Urinalysis								
Volume	-	-	-	-	-	-	-	NASA developing hardware for automatic volume determination.
pH (paper tape)	10	8	6	3	4	5760	On-Board	Must be done on-board or not at all.
Glucose	8	5	4	2	2	640	Preserve	
Acetone Bodies	7	5	4	1	2	280	Preserve	
Microscopy	9	4	2	2	3	432	On-Board	Must be done on-board or not at all.
Specific Gravity	9	6	4	2	3	1296	On-Board	Must be done on-board or not at all.
Albumin	8	3	3	2	3	288	Preserve	
Turbidity	9	6	4	2	3	1296	On-Board	Must be done on-board or not at all.
	10 = Safest 1 = Most Hazardous	8 = Simplest 1 = Most Complex	6 = Least Skill/ Training 1 = Most Skill/ Training	4 = Most Significant 1 = Least Significant	Lead Time 0-6 mos. = 4 6-12 mos. = 3 1 yr. - 2 yr. = 2 > 2 yr. = 1			

Table 3-11. IMBLMS Measurements (On-Board Versus Post-Flight Tradeoff) (Cont)

	Safety	Complexity	Skill/ Training Requirements	Physiological Significance	Lead Time For Development Of On-Board Methods	Rating	Decision: On-Board Or Preserve	Comments
Endocrine								
Urinary Antidiuretic Hormone	10	1	1	1	1	10	Preserve	On-board technique may be feasible in late '70's.
Protein Bound Iodine	7	4	4	2	2	448	Preserve	
Thyroxine Binding Prealbumin	7	4	3	2	2	336	Preserve	
Parathyroid Activity	10	1	1	2	1	20	Preserve	Bioassay
Pancreatic Islet Tissue	6	1	1	1	1	6	Preserve	
Insulin	7	1	1	1	1	7	Preserve	
Pituitary Activity	(Later)							No standard method known.
Adrenocorticotropic Hormone	9	1	1	2	1	18	Preserve	Bioassay technique on-board may be feasible in late 70's.
Adrenal Cortical Activity: Urinary 17-OH-Corticosteroids	1	3	3	1	1	9	Preserve	
Adrenal Cortical Activity: Urinary 17-Keto-steroids	1	3	3	1	1	9	Preserve	
Adrenal Cortical Activity: Urinary Aldosterone	1	1	1	1	1	1	Preserve	
Activity: Urinary Catecholamines	1	3	3	1	1	9	Preserve	
Activity: Urinary Serotonin	4	3	3	2	1	72	Preserve	
Hematological								
Cell Counts & Morphology								
RBC (Total)	7	5	3	2	3	630	On-Board	No method of preservation is satisfactory.
WBC (Total)	7	5	3	2	3	630	On-Board	
WBC Differential	6	6	4	2	2	576	Preserve	
RBC Survival	9	5	3	1	2	270	Preserve	
RBC Fragility	8	5	3	1	3	360	On-Board or Omit	Cannot be done on stored samples.

Table 3-11. IMBLMS Measurements (On-Board Versus Post-Flight Tradeoff) (Cont)

	Safety	Complexity	Skill/ Training Requirements	Physiological Significance	Lead Time For Development Of On-Board Methods	Rating	Decision: On-Board Or Preserve	Comments
Direct Bilinubin	2	5	3	2	2	120		
Karyotyping	7	1	1	1	1	70	On-Board or Omit	Storage problems if not done on-board, more properly considered an experiment per se
Cellular Body Defenses								
Leucocyte Motility and Phagocytosis	9	3	2	1	2	108	On-Board Or Omit	Storage of sample is difficult.
Leucocyte Mobilization	10	2	1	1	2	40	On-Board or Omit	Cannot be done on stored samples.
Hemostasis								
Platelet Count	9	4	2	1	2	144	Preserve	
Platelet Adhesiveness	9	4	2	1	1	72	On-Board or Omit	Must be done in flight or not at all.
Humeral Component of Coagulation, Serotonin	See Endocrine							
Bleeding Time	9	7	4	1	4	1008	On-board or Omit	
Clotting Time	9	7	4	1	4	1008	On-board or Omit	
Assay of Elements of Clotting								
Fibrinogen	5	4	3	1	2	120	Preserve	
Fibrinolytic Activity	9	5	4	1	2	360	Preserve	
Prothrombin Activity	8	2	3	1	2	96	Preserve	
PTO	8	2	3	1	2	96	Preserve	
AHG	8	2	3	1	2	96	Preserve	

Table 3-11. IMBLMS Measurements (On-Board Versus Post-Flight Tradeoff) (Cont)

	Safety	Complexity	Skill/ Training Requirements	Physiological Significance	Lead Time For Development Of On-Board Methods	Rating	Decision: On-Board Or Preserve	Comments
Clinical Metabolic and Nutritional Evaluation								
Muscular Status Evaluation								
Blood Lactic Acid	2	4	3	2	2	96	Preserve	Accurate Assay on preserved sample difficult.
Urinary Creatine/ Creatinine	2	4	3	3	2	144	Preserve	
Mineral Metabolism and Skeletal Status Evaluation								
Urine, Serum, Sweat and Feces Calcium	6	4	3	4	3 (Spectro) 1 (Atomic Ab)	864 288	Preserve	Colorimetric method not as accurate as atomic absorption
Urine Phosphates	5	4	3	4	2	480	Preserve	
Urine Hydroxyproline	5	4	3	4	2	480	Preserve	
Fluid Volume Distribution and Evaluation								
Serum, Urine, Sweat and Feces								
Sodium	5	5	3	4	2	600	Preserve	
Potassium	5	5	3	4	2	600	Preserve	
Microbiological and Immunological Evaluation	1	1	1	3	1	3	—	Procedures themselves should be considered an experiment.

Table 3-12. Sampling Regimen for Each Astronaut, 7-Day Rotating Schedule

	Day 1	Day 2	Day 3	Day 4	Day 5	Day 6	Day 7	Preservation Method
Serum	15 ml (1)	10 ml	10 ml	15 ml				Freeze (-20°C)
Citrated Plasma					10 ml			Freeze (-20°C)
Oxalated Plasma						5 ml		Freeze (-20°C)
Deprotenized Blood			3 ml					Freeze (-20°C)
Hemolyzed Diluted Blood		1.0 ml						Freeze (-20°C)
Whole Blood	Slides(2)	Slides(3) 4 ml	Slides	Slides	Slides	Slides	Slides	Slides - Ambient Temp. Blood - Freeze
Urine	70 ml	70 ml	70 ml	70 ml	70 ml	70 ml	70 ml	Freeze (-20°C)
Sweat	4.5ml(1)	4.5 ml	4.5 ml	4.5 ml	4.5 ml	4.5 ml	4.5 ml	Chemical(3)
Feces	10 gm(1)	10 gm	10 gm	10 gm	10 gm	10 gm	10 gm	Chemical(3)

(1) Assumption: 1 gm = 1 ml

(2) Slides will be air dried and stored at cabin ambient temperature. Staining of the slides may take place on board, but because the stains (cresyl blue, methylene blue and Wright's) are dissolved in alcohol, it may be simpler to defer staining until the slides are returned to ground.

(3) These samples may be frozen if advantageous from an engineering standpoint.

Table 3-13. Total Number of Samples for 3-Man Crew on 56-Day Mission

Sample	Sample Size	Number of Samples	Total Sample Volume/Weight	Method of Preservation
Serum	15 ml	48	720 ml	Freeze (-20°C)
Serum	10 ml	48	720 ml	Freeze (-20°C)
Citrated Plasma	10 ml	24	240 ml	Freeze (-20°C)
Oxalated Plasma	5 ml	24	120 ml	Freeze (-20°C)
Deproteinized Blood	3 ml	24	72 ml	Freeze (-20°C)
Hemolyzed Diluted Blood	1 ml	24	24 ml	Freeze (-20°C)
Whole Blood	4 ml	24	96 ml	Freeze (-20°C)
Urine	70 ml	168	11760 ml	Freeze (-20°C)
Sweat	4.5 ml	168	756 ml	Chemical
Feces	10 gm (1)	168	1680 gm	Chemical
Slides	Standard Glass Slide (2)	33 (2)	---(2)	Ambient

(1) Assumption: 1 gm = 1 ml

(2) A standard glass slide weighs approximately 5 gms and is 7.5 cm x 2.6 cm (3" x 1"). Commercially available slide boxes (Bakelite or Styrene) holding 100 slides are 8-3/4" x 6-1/2" x 1-3/8" and weigh approximately 0.75 lbs. or 350 grams.

Table 3-14. Expendables Required for Sampling and On-board Analyses (3-Man Crew , 56-Day Mission)

Item	Used to Collect Perform	No./Amt.
Blood Diluting Pipette	Total RBC	168
Blood Diluting Pipette	Total WBC	168
Sterile Lancet	Capillary Blood Analyses	168
Sterile Lintless Swabs	Disinfect Fingers	168
Disinfectant Ampules	Disinfect Fingers	168
Red Cell Diluent	RBC Count	450
White Cell Diluent	WBC Count	450
Water	Flush of Hemocytometer	1800
Capillary Tubing	Hematocrit, Clotting Time	45 feet
pH Paper	Urine pH	5 rolls

Table 3-15. Expendables Required for Sampling and Preservation (3-Man Crew, 56-Day Mission)

Item	Used to Collect	Sample Used for Analyses Requiring	No.
35 ml Syringe	Blood	Serum; whole blood; hemolyzed, diluted blood	72
30 ml Syringe	Blood	Serum; deproteinized blood	24
25 ml Syringe	Blood	Citrated Plasma	24
15 ml Syringe	Blood	Oxalated plasma	24
Sterile Lintless Swabs		Disinfection of veni puncture site	144
Disinfectant Ampoules		Disinfection of veni puncture site	144
Feces Transfer Tube	Feces	Feces	168
Sweat - Collection bag used for storage, no expendables			
Urine - Direct transfer from WMS to storage container			

Natelson's methods, the basis of which are briefly outlined in the SPAMAG Report, can probably be adapted to a number of the biochemical tests under consideration. However, the sensitivity required for numerous assays, such as 17-Ketosteroids, and the specificity required for assays such as electrolytes are factors that may preclude many analyses from this approach to simplification.

It is most probable that the preservation function will always be a part of the IMBLMS concept. More analyses may be performed on-board as methods and equipment become available, but it is highly unlikely that during the Apollo Applications Program a sufficient number of methods with the requisite sensitivity, precision and accuracy will be developed to permit all analyses to be performed on-board. Furthermore, even for those analyses which can be done in orbit, it would be advisable to preserve samples for corroborative assays to be performed on the ground.

3.4.5.5 Omission Of Measurements

With the multitude of clinical tests suggested, it would seem that a reduction of this array is definitely in order. Tables 3-12 through 3-15 categorize these tests in terms of physiological significance. Not only should measurements of greatest significance be done first, if possible, but other measurements which are redundant or do not yield worthwhile information should be omitted from further consideration. Measurement criteria are discussed in the final report, NASW 1562, Collection and Preservation of Biological Specimens. Table 3-16 lists tests suggested for omission from further consideration during the IMBLMS program.

3.4.5.6 Training

Regardless of how many tests are performed on-board and how many analyses are scheduled to be done post-flight on preserved samples, a certain minimum amount of training will be necessary for simple collection and preservation in addition to schooling in the analytical procedures to be used. For the first generation IMBLMS, a minimum of 150 clock hours of training is predicted for sample collection and preservation with an additional 80 clock hours needed for the simpler hemotological techniques. The most important element of a successful course of training in collection and preservation methods and on-board analytical techniques will be the selection of astronauts who are strongly motivated to assist the scientific and medical communities to obtain meaningful data during orbital flight concerning the various physiological changes which may occur with time.

Overall crew training requirements will be governed by the presence or absence of a crew member with prior experience in clinical laboratory procedures. With the present crew selection criteria, the most likely astronaut candidates who would have some applicable experience would be Flight Surgeons. These individuals, though, will still need some measure of training because most of the blood-letting, urine and feces sample taking, sweat collecting and bacteria swabbing is, in practice, done by paramedical personnel, e.g., nurses, technicians. Familiarity with the procedures and the background necessary to appreciate their use are assumed to be implicit in the title Flight Surgeon.

Table 3-16. Test Suggested for Omission From IMBLMS Program

Test	Reason for Omission
Glucose Tolerance) Fat Tolerance)	Too many samples within a short period of time
Blood Lactic Acid	Overly susceptible to major technical error
Blood Catecholamines	Represent transitory phenomena only
Thyroxine - BEI, TBG, and TBPA	Difficult to measure; PBI probably sufficient
Platelet Adhesiveness	Requires prohibitively large volume of blood, highly variable results, of doubtful significance
Clot Retraction	Inaccurate and imprecise
WBC Motility, Mobilization, and Phagocytic Activity	Of dubious clinical significance
AHG) PTC)	Unlikely to change in healthy adult
Calcium Infusion	Not suitable for in-flight performance
Glucagon	Pancreatic α-cell changes unlikely
Growth Hormone	Assay of little significance in adult
Histamine	Test of dubious significance
Hypothalamus	No direct chemical means available for measuring hypothalamic activity
FSH (Gonadotropin)	Significant changes highly unlikely in adult
Testicular Biopsy	Too complicated for on-board performance; painful, some risk involved
TSH	Only done if significant change in PBI
Thyrocalcitonin	Of dubious import
Bone Marrow Biopsy	Excruciatingly painful procedure, definitely not routine, considerable risk involved.

Case 1. Flight Surgeon a Crew Member - The flight Surgeon should be assigned prime responsibility for all collection, preservation and analytical procedures. His training would be essentially the same as that of other crew members, but during the training sessions he would act as a "laboratory instructor;" thus by assuming a teaching role, he would improve his own performance. The more facile of the other two crew members should be assigned as back-up man.

Case 2. No Crew Member With Prior Clinical Laboratory Experience - The same training course would be used. However, a crewman assigned as back-up man in one crew, would be assigned prime responsibility in another crew. He would, therefore, go through the training twice. During the second time around, he would act as "laboratory instructor" and another crew member would become the back-up man. A training regimen need not involve separate, formal classroom and laboratory sessions because of the small number of students. It is recommended that the classes be kept small and restricted to not more than two flight events. An outline of the training program follows:

Subject	Clock Hours
Orientation	
1. Results of Pre- and Post-Flight Physiological and Biochemical Measurements on Astronauts.	3
2. Demonstrations of equipment and procedures used (e.g., EGG, urine sampling, tilt table, etc.)	6
3. Discussion of biological and medical experiments in which crew members will serve as subjects (why experiments are being performed, experimental design, etc.)	6
4. Demonstrations of equipment and procedures to be used by or on crew members.	12
Laboratory Procedures Training	
1. General (need for care, attention to detail definitions, e.g., cleanliness vs. sterility, etc.)	3
2. Sterile Technic (what it is and why it is important)	3
3. Microbiological Sampling	6
Microbiological Sampling Review	2
4. Microbiological Culturing	4

Subject	Clock Hours
Laboratory Procedures Training (Continued)	
5. Microbiological Sample Handling	6
Microbiological Sampling and Handling Review	3
6. Collection of blood (venipuncture, lancet)	3
7. Handling of blood (preparation of serum, plasma, storage preservation)	3
Review of blood collection and handling	3
8. Urine Collection and Handling, Urine pH	(2
Review of Blood Collection and Handling	(1
9. Sweat Collection and Handling	3
10. Feces Collection and Handling	2
Review of Blood Collection and Handling	1
11. Clotting time, bleeding time and hematocrit determinations	3
12. Total red and white counts, use of microscope	32
13. Preparation of blood slides	2
14. Review of Hemotologocal procedures	3
Flight Simulation	
1. Experiment Protocol Discussion	3
2. Run-thru of sample collection and handling required by flight experiment plan	6
3. Familiarization with flight experiment prototype equipment	3
4. Review of sample collection and handling procedures using prototype flight equipment	6
5. Review, in lab module mockup, of sample collection and handling procedures, using prototype collection, handling and preservation equipment and on-board analytical equipment	40

Subject	Clock Hours
Flight Simulation (Continued)	
6. Review in flight simulator, of sample collection and handling procedures and on-board hemotology using flight-type equipment	50
TOTAL	230 Hours

The microbiological aspects of the training are listed early in the course because this is a logical place to discuss sterile techniques and the consequences of a breach of sterility. It should then be easier for the student to grasp the reaons for aseptic collection of blood and to understand the reasons for the extreme care in obtaining samples of urine, feces and sweat.

Insofar as possible, all samples collected should be subjected to analysis. The samples obtained during training can be used as controls and to establish a preflight baseline for each man. Likewise, the hemotological assays performed can be used as part of the baseline.

3.4.5.7 Measurements Which Should Be Experiments

After evaluation of the more than 200 biochemical, hematological, cytological, microbiological and immunological measurements suggested for the AAP and IMBLMS flights, a few, which pose special problems are hereby proposed for consideration as experiments per se rather than measurements. These are:

a. Chromosomal Integrity (Karyotyping)

b. Immunological Evaluation

c. Microbiological Evaluation/Microecology Variations

3.4.5.7.1 Chromosomal Integrity (Karyotyping)

The culture of leucocytes is required for examination of chromosomal aberrations in the white cells. Tissue culture of any kind requires extreme care, manual dexterity and meticulous attention to detail. Culture of leucocytes or any other cells, is routine only in laboratories properly equipped for this endeavor. To take a sample of blood and start a leukocyte culture in orbit would be quite an accomplishment, particularly in view of the reagent needs, such as fetal calf serum, phytohemagglutinin and an incubation requirement that 5% CO_2 in air be bubbled through the medium. The solution to the problem of performance during flight, even with a thoroughly trained individual could be approached by use of an integral unit, designed around a glove box which would be required for

transfer of cells. Simplified methodology and culture vessels adapted to the weightless environment would be required. To take a complex procedure and make it idiot-proof in one fell swoop, is highly unlikely. The necessity of additional training for the astronaut-experiment over and above the 230 hours needed for simple hematological procedures, sample collection, and preservation must be taken into account. If culture maintenance is the only on-board task, approximately 80 hours of additional training would be sufficient. But, if any interpretation of mitotic competence or chromosomal change is desired, the amount of additional training, needed, over and above the 80 hours, increases sharply to approximately 250 hours.

Before such a complex procedure is planned for in-orbital performance, all of the steps needed to make the procedure work should be tested in flight. First, the means to keep cultures viable for 30, 50 or 100 days must be found, then the procedures developed to initiate cultures during flight. Next the pieces can be put together and the method and equipment tested. Finally, experiments can be performed. But to try to develop and test methods at the same time an experiment is in progress would cost more time, in the long run, than a stepwise approach spread over several flights.

3.4.5.7.2 Immunological Evaluation

The change with time, in titer of an antibody against a specific antigen has been observed. Thus, booster shots for tetanus, smallpox, and the like are given routinely. Subclinical infections also trigger anamnestic reactions and aid in keeping titers high against those organisms, both bacterial and viral, that are normally encountered. When a man, removed from the normal world filled with its multitude of antigens, is confined within an ecosystem, limited in its viral and bacterial components to those present at the start of a mission, it is reasonable to ask about maintenance of antibody titers. However, the assessment of antibody titers can only be done in terms of specific antigens. An array of antigens (viruses and bacteria) will have to be chosen against which titers can determined. The initial array is factored into the experimental design, but changes can and should be made as flight experience is gained. Before on-board titration can be attempted, suitable equipment must be developed. Micro-methods and capillary tube procedures are available which could be adapted to flight use, but antigen preparations pose a safety hazard. If lyophilized organisms, which can be stored with a high degree of safety, are used, then precautionary measures must be taken to insure that handling and disposal of the reconstituted antigenic organisms can be accomplished without danger to the crew. It is recommended that preliminary assessment of antibody titers be performed on preserved serum. The first on-board determinations can either be a few (2-4) complete titers or a number (15-20) "Yes" or "No" type determinations, i.e., has a titer for a given antigen fallen below a set level. Only after in-flight experience is gained, and preliminary results evaluated and factored into experimental design, can full-fledged titrations be done in orbit. It is further recommended that the number of titers of interest be limited, e.g. 4-6, for the first one or two missions unless considerable improvements in methods and equipment are forthcoming in the near future; otherwise, the information obtained will represent a number of gross determinations rather than precise data.

3.4.5.8 Microbiological Evaluation/Microecology Variations

Unfortunately, there are no "normal" or "standard" values for numbers of genera of the microflora indigenous to man. The collection, preservation and assay techniques are not as well defined as those for blood, urine, feces and sweat, and are so closely interrelated that the discussion on microorganisms has been kept as a whole.

Each individual has both on and within him his own personal indigenous population of microorganisms. Within, and on, a healthy person, the microfloral population is maintained in a state of dynamic equilibrium. Differences in genera, species and/or serotypes of the members of this population occur between individuals and on the same individual when a change in environmental conditions occurs. These changes appear relevant to a consideration of the closed ecology found during long-term manned space flight.

The "normal" microbial population of a variety of individuals has been examined in the context of everyday life. The constitution of the microbial population of a given individual is the result of numerous interactions with the flora of other individuals, airborne microorganisms, and those found in or on food, water, clothing and the myriad of inanimate objects with which one comes into contact during daily routines.

Isolation and confinement of a group of individuals changes the microbiological parameters quantitavely but not necessarily qualitatively. These changes, however, are of such magnitude, that significant effects primarily related to fecal flora changes have been demonstrated in the few group isolation studies already performed. No clearly defined cause-effect relationships or methods of controlling these changes have been established. The available data from ground-based studies, which have shown the occurrence of significant changes in the flora of confined groups of men, indicate a need for the assessment of any ecological changes during extended manned space missions. The constituent organisms of the type of closed ecological system under consideration will be men and microorganisms.

Instrumentation for physiological measurements is available and equipment for clinical evaluations will be available. Thus, many of the biological phenomena exhibited in the ecosystem by the men during adaptation and/or reaction to long-term space flight will be measurable. Changes in the microbial portion of the ecosystem can also be measured. A number of factors must be considered in making this determination and are discussed below.

3.4.5.8.1 Sampling

An extremely important facet of the analytical protocol, regardless of whether the analyses are performed in flight or post-flight, is sampling or recovery of microorganisms from the man and the spacecraft.

3.4.5.8.1.1 - Sampling Sites - Recent work has shown that for bacterial sampling, "the scalp, ear, eye, nose, throat, axilla, umbilicus, forearm and anal area....can be sampled less frequently or eliminated from the monitoring schedule..." On a current GE contract, rhesus monkeys are being studied during long-term confinement. Microbiological sampling

of the ear, nose, throat, mouth, axilla, groin, toes (hindfoot), scalp and feces is required. No reduction in the number of body sites sampled is planned for the present phase of the work. However, after sufficient data has been obtained, the significance of the data from each body site will be determined. During several studies on confined groups of men, Enterobacteriaceae appeared on the glans penis and groin, and various fungi appeared on the glans penis, groin and feet. Thus, these body sites should be included in a sampling regimen.

In addition to the men, sampling of the spacecraft will be required. During ground-based studies, beds, floors, communications equipment, refrigerator handle, transfer lock handle and eating, recreation and personal hygiene areas were sampled. Other possible sampling sites are clothing (including pressure suits) and all knobs and surfaces which are expected to be in frequent contact with the skin or clothing of the crew members.

3.4.5.8.1.2 Sampling Methods - With hypo-gravity as an environmental condition, settling plates cannot be used. Furthermore, the use of swabs in normal fashion is questionable because usually, after a sample is taken, a swab is immersed in a medium to insure that organisms in the interstices of the swab material will be recovered. Semi-solid agar is a possibility, but modification of present laboratory techniques will be needed to adapt swab techniques for in-flight use. Cotton and calcium alginate wool swabs are commonly used; it would be advantageous to include currently available synthetic materials such as polypropylene "wool" in a laboratory study of methods.

The impression method, using Rodac plates, has been widely accepted for surfaces. However, for sampling feces, and most body sites, Rodac plates are unsuitable. Sterile sticky tape has been used for skin-surface sampling and could probably be adapted for swabbing the nostrils, ear canal, umbilicus and groin by wrapping tape around an applicator stick or coating the applicator with an adhesive.

The technique for obtaining fecal samples will depend on the method of collecting feces. A prototype urine and feces collector with provision for sampling feces and urine has been built by General Electric. An aliquot of fecal slurry can be obtained via a sampling port. Handling of this slurry for plating would require equipment modified for use in weightlessness. However, since the sample is homogenized, the odds are in favor of getting a more representative sample. A serious drawback does exist, unfortunately, in that certain fecal organisms, especially anaerobes, may not withstand the time lag between defecation and culture of the sample, because of exposure to enriched oxygen atmosphere at less than atmospheric pressure, lowering of temperature, or both; thus organisms of importance in the ecology of the space vehicle would either not be recovered at all or in numbers resulting from the survivors of an unknown original population. Here again, a laboratory study will be required to determine the better approach.

Plastic bags have been used on Gemini and may be used on other vehicles. Devices for holding air permeable bags inside a molded toilet seat, have been proposed, but the problem of pO_2 and ambient pressure effects on microorganisms must be weighed against the convenience. If plastic bags are to be used, a modified construction, permitting samples to be taken without contaminating the cabin is certainly feasible.

the convenience. If plastic bags are to be used, a modified construction, permitting samples to be taken without contaminating the cabin is certainly feasible.

Of great import in microbiological sampling are the media on which the samples will be grown. In all studies of the microflora of confined groups of men, several media have been used for each sample in order to increase the probability that all organisms recovered from a given sampling site will grow. In those tests where groups of four men were confined for periods of approximately four weeks, with a week each for pre-test and post-test sampling, the total time being six weeks, approximately 2500 cultures per man were made during sampling and an additional 50,000 per man were used during identification procedures. The volume of plates could be reduced by a factor of four simply by using quadrant type petri plates which allow plating of four different media at one time. However, what portion of the cultures were made on plates and what portion in tubes is not known. Since a full gamut of media would be extremely difficult to use during space flight, a minimum complement of differential media is required.

No attempt has yet been made to include the viruses, and rickettsiae in studies on confined and isolated groups of men or animals and for good reason. The men who have served as subjects in ground-based studies and the men chosen to be astronauts were, are, and will be subjected to a thorough medical examination. These men are all in that small portion of the population which could be said to be in excellent health. The only viruses that a space vehicle crew may harbor are probably contained within the cells of one or more species of bacteria, are most probably not pathogenic to man and are extremely difficult to sample, culture and identify.

The rickettsiae are not known to occur amphibiotically in man as they do in arthropods. Since the crew members are healthy, and will be replaced prior to flight if any overt signs of an infection occur, there is little possibility that a rickettsial pathogen will be present.

It is suggested that culturing for viruses and rickettsiae be excluded from any on-board procedures for the first series of AAP flights. Post-flight analyses could conceivably show the presence of phages, but their importance to man and his indigenous flora is unknown.

Protozoa, while appearing quite often in the mouth, intestine and genitourinary tract of man, are likewise not recommended for inclusion in an on-board culture routine at this time. A more knowledge of the non-pathogenic protozoa indigenous to man becomes available, sampling, culture and identification methods, with emphasis on the latter two, may become less complex. At present, culture and identification of protozoa is hardly a simple matter, with separation of genera often requiring a greater knowledge of morphology than of culture techniques. For the shorter missions, provision can be made to bring back cultures for post-flight analyses, but for flights on the order of one hundred days, culture maintenance should be carefully worked out well in advance of any missions where protozoa culture return is planned.

3.4.5.8.2 Analysis

In the manned studies to date, approximately 50 genera of bacteria, including aerobes and anaerobes, have been isolated, as well as representatives of at least 16 genera of fungi and several genera of protozoa. It is quite probable that this number of different genera will be encountered during a manned flight.

Since this is the era of automation, there is considerable interest in the automatic identification of bacteria. However, while the counting of microorganisms can be done automatically, there is, as yet, no way to differentiate among bacteria, protozoa and fungi, much less tell one species or genus from another in a mixed culture. Several techniques, which are under development and may be of use in the future are briefly discussed below.

3.4.5.8.2.1 Gas Chromatography - Detection and identification of bacteria by gas chromatography involves use of the gas chromatograph with highly sensitive detectors for the examination of bacteria products which are either volatile or can be converted to volatile derivatives. Many volatile compounds are synthesized by microorganisms during their growth and the sensitive detectors might be useful in determining the presence of small numbers of bacteria by detecting the formation of specific products. In view of the vast array of products which microorganisms can form, no one method for the extraction or chromatography on a single column of all the metabolites is possible.

Because of the sensitivity of the method, standardized culture techniques are mandatory. In addition, unless the population of bacteria obtained from a specimen is known to be homogenous, or the distinctive chromatographic pattern is known not to be obscured by interfacing organisms, pure culture techniques must first be employed. Furthermore, the number of bacterial signatures presently available for comparison with unknowns is insufficient to permit the use of the gas chromatograph as a laboratory tool. These factors mitigate against inclusion of gas chromatography for use at this time. However, because the methodology is still in the developmental stage, it is possible, and perhaps probable, that the development of the technique will continue to progress to the point where it could be used for long-term missions, either for post-flight analysis or for on-board use.

3.4.5.8.2.2 Mass Spectrometry - Several groups have been investigating the identification of bacteria by mass spectrometry of their metabolic and pyrolysis products. The latter is an outgrowth of experiments on the relationship between structure and thermal stability of high temperature polymers. The limitations of gas chromatography are also applicable to mass spectrometry.

3.4.5.8.2.3 Infrared Spectroscopy - Identification of microorganisms by means of infrared spectra has been attempted by several investigators. However, samples must be prepared with extreme care, from the same type of culture as the reference curve was prepared. The drawbacks of gas chromatography and mass spectrometry apply to infrared spectroscopy as well as the limitations inherent in an extremely sensitive procedure which is incompletely worked out.

None of the instrumental methods of analysis is sufficiently far along to be considered for laboratory use within the next two to three years. However, these approaches may well be developed into useful laboratory methods and should be taken into consideration during longer range planning.

3.4.5.8.2.4 Fluorescent Antibody Technique - This technique is mentioned because of its possible use both for in-flight and post-flight assays. A fluorescent compound (usually fluorescein isocyanate) is coupled to the specific gamma globulin with minimal loss in activity of the gamma globulin produced as response to a specific antigen. In this case, the antigen is a given species of bacteria. When the fluorescent antibody solution comes into contact with the antigenic bacterium, even in mixed cultures, the antigen is stained with fluorescent material visible in a microscope suitably modified for this purpose. The method has been found most useful for particulate antigens, such as bacteria. It is useful for identification of bacteria when a group of reference sera are available. With cells larger than bacteria, specific antigens within a cell may be localized.

Both microscope and staining equipment can be adapted for use in weightlessness. Major limitations of this method are: (1) it is primarily qualitative; (2) considerable a priori information must be available even if qualitative results are satisfactory; (3) cross reactions may occur. In clinical situations, fluorescent antibodies are used to check for the presence or absence of a limited number of pathogens.

If the appropriate sera can be prepared, the fluorescent antibody technique could be used for detection of marker and indicator organisms. Although the data would be qualitative, this method which has the sensitivity inherent in serological work, could be used to check for transfer of marker organisms among crew members and to note the time appearance or disappearance of a given organism from a sampling site. Automated equipment is under development, but will not be available for mid-1970.

3.4.5.8.2.5 Modification of Conventional Methods - In view of the present status of instrumental methods of analysis, it is most likely that, for missions two or three years hence, conventional laboratory techniques, modified for use during weightlessnes, will be used for assessment of ecological changes occurring during long-term space flights.

It is probable that major modifications will center around the use of liquid media. Feasibility studies performed by General Electric show that proper choice of culture tube geometry will keep broth within a conical section of the tube. However, the insertion of a swab into the tube must be done with extreme care to prevent escape of liquid media to the cabin. Several concepts which would prevent escape of liquid during manipulations have been considered during an in-house study of sampling, analysis and preservation of biological materials, including microorganisms. If liquid media are used, transfer of aliquots to other solid or liquid media for subculturing can be accomplished with syringes. As stated in the section on sampling, though, a conventional protocol utilizing large numbers of culture vessels and different media is too unwieldy for use during flight.

3.4.5.8.3 Media

A variety of media will be required for on-board sampling and preservation of cultures. One of the problems that will become greater as missions become longer and/or involve a greater extent of on-board analysis is media storage. By using small, quadrant-type petri plates the number of plates and the volume needed for storage can be decreased. For missions of up to 4 to 6 weeks, refrigerated storage of plates and tubes will suffice. For longer missions, hermetically sealed sterile containers should be considered for maintenance of sterility and moisture content. New media should also be developed for missions of 45-135 days. Solubilized, sterile dry media already placed in tubes and sterile agar "sponges" in petri plates to which sterile water could be added aseptically, are possibilities which are already feasible from an equipment standpoint.

In addition, new formulations should be considered. A "transport" medium has been developed and is being field tested. This medium was developed specifically for Mycobacteria but will also support Shigella, Slamonella and Vibrio for extended periods of time at 20° - 31°C. The development of media which could be used for the support of microorganisms during "storage" and which would insure a known percent recovery seems a fruitful area for further study.

3.4.5.8.4 Preservation of Samples for Post-Flight Analysis

Initial cultures of certain samples, i.e., swabs and feces, can be made in liquid media during flight. However, for both in-flight and post-flight analyses, subcultures must be made. For those samples to be returned, the subcultures, which will be identified in a laboratory on the ground should be made in liquid and solid media in order to enhance the recovery of microorganisms in the sample.

It is recommended that cultures to be returned be made in duplicate for both incubation and refrigeration, Lyophilization of samples is not recommended for preservation of microbiological samples. Although recovery of organisms from lyophilized pure cultures is on the order of 70-95%, an assessment of the microbial ecology of a spacecraft would be incomplete because those organisms labile to lyophilization will not survive.

3.4.5.8.4.1 Incubation - For the majority of the microorganisms anticipated, an incubation temperature of 37°C will suffice. Few, if any, thermophils are expected, but will probably grow, though at a slower rate, at 37°C. The organisms recovered from the cabin, other than those from the astronauts or ground crew, will probably be common airborne contaminants which will also grow at 37°C, but it may be desirable to include a 30°C incubator to enhance the recovery of those organisms with optimum growth temperatures closer to 30°C than to 37°C.

3.4.5.8.4.2 Refrigeration - The transport medium mentioned above shows promise in keeping certain microorganisms viable at 4°C. Further work is necessary, of course, but this avenue should be explored further. Since refrigeration equipment will be required for maintaining frozen and/or cooled samples of serum and urine, it may be simpler to refrigerate at least a major fraction of the microfloral cultures than to incubate them.

3.4.5.9 Safety

In all elementary microbiology courses, the statement is made "Any bacteria, under the right circumstances, can be pathogenic." This simple fact is often forgotten by biologists who are dealing with organisms not commonly considered to be pathogens. For detailed analyses of the microbial ecology in a manned space vehicle, cultures must be made and handled many times during the course of the flight. Organisms indigenous to one or more of the crew members at the start of a mission may become pathogenic to one or more of the astronauts after 30, 50 or more days. The experiment protocol(s) for Microbial Evaluation must be drawn so as to minimize the hazards inherent in dealing with potential pathogens.

3.4.5.10 Recommendations

A stepwise procedure is again suggested. Marker organisms, peculiar to each crew member can be determined during pre-flight studies. Those markers which can be most easily preserved, whether by incubation or refrigeration, should be determined, and initially the appearance and disappearance of each marker from each sampling site could be followed in samples returned from orbit. In orbit efforts should initially be used to check-out sampling procedures, transfer and culture methods.

Several "quick-look" devices have recently appeared on the market and there is a reasonable chance that such equipment could be adapted for orbital use in microbiological sampling and analysis. Because a safety problem does indeed exist, hazard avoidance must be factored into the experimental design.

3.4.6 BEHAVIOR

Behavior may be described as those externally manifested physical or communicative outputs generated either voluntarily or unconsciously by a viable organism. Ideally, IMBLMS should supply those measurement techniques necessary for: a) the continuous assessment and quantification of man's real time behavior, as well as b) an ability to project and predict his probable behavioral trends for the reasonable future.

Such measures should be provided in psycho-sensory, psycho-motor, cognitive and emotional adjustment areas. In addition real task-related performance, re-entry simulation and the neurophysiological correlates of behavior have been considered.

Unfortunately at the present time techniques capable of the extended collection of clear cut, quantifiable measures in the areas of cognitive function and emotional adjustment are not available. This is not to say that none exist, rather that there is a great profusion of complex multiparameter subjective analyses, each with limited advantage and advocates, but no single approach having general wide spread acceptance. As a result measurement and procedures in this area have been left open.

Weight is given to measures of the adequacy with which the crew can carry out its assigned responsibilities as well as the effectiveness and appropriateness of behavioral interactions within the group. At the present time the specification of such "real situations measurements" is not feasible in other than gross generic terms. This problem is primarily due to the diversity of crew size, and composition as well as differences in the routine or available "on going" mission task repertoire or hardware interfaces that will be available in the various mission/vehicle systems currently under consideration.

3.4.6.1 Task-Related Performance

The most potent method for the study of performance is measurement and observation during mission-related tasks. In this situation motivation is reasonably controlled and maintained.

General Electric recognizes that behavioral measures might be constructed in relation to the crew performance requirements of IMBLMS operations. For instance, the Soviets report that the manual measurement of blood pressure by means of arm cuff, sphygmomanometer and stethoscope required fifty percent more time in space than on the ground.

Performance in space however is uniquely related to the restraint system utilized. The GE underwater simulation studies have repeatedly demonstrated the specificity of the restraint system for the task to be performed. A critical element of the Phase C and D work will be the configuration of the IMBLMS restraints, tethers and locomotion aids so that the experimental measurements can be performed.

Because of the repetitive nature of the medical experiment program and given a fixed constraint configuration, performance data as a function of time can be obtained within IMBLMS. Such real complex task performance measures have many apparent advantages over relatively artificial test batteries.

3.4.6.2 Re-entry Simulation

As mission duration is progressively extended, a requirement will ultimately arise for the maintenance of crew proficiency in the re-entry piloting task. Whether such a procedure should be a simulation (computer-driven) of the actual re-entry task (and perhaps performed in the Command Module), or should be a more sophisticated and sensitivity tracking task cannot be determined at present.

Two complex tracking programs have been reviewed. We believe that such a requirement is a mission-related skills maintenance technique rather than a measure and not therefore a part of IMBLMS. This is not to say that eye/hand tracking tasks cannot be utilized for evaluating general visual/motor and coordinative functions as well as arousal and motivation levels, but rather that the data can be derived at the levels necessary with considerably simpler instrumentation. As a matter of fact, should software capabilities be available for the instrumentation of a simulated re-entry program utilizing the actual "on-board" flight controls and displays, quantitative measures of this task during the practice sessions would be of great value as an ancillary IMBLMS measure. The presence of such capabilities are not known at the present time and therefore, the capability cannot be considered as a formal IMBLMS function.

3.4.6.3 Neurophysiological Correlates of Behavior; The Electroencephalogram

Provision will be made in IMBLMS for the EEG. The present IMBLMS capability is 9 electrode pairs. We plan a junction box at the sleep station and another in a work area following Adey's experiments relating performance and sleep to the EEG. In the sleep station provision could also be made for the EOG if eye movement measurements are desired.

We have not configured a task performance station of the complexity suggested by Adey involving visual and auditory stimuli of considerable diversity. Nor have we considered the problem of quick don-doff electrodes using a helmet device such as that under development. We have considered but not resolved the problem of EEG data management, particularly with respect to spectral analysis techniques using the on-board computer capability.

In summary IMBLMS will provide the electronic capability for the EEG and junction boxes at two locations pending further definition.

3.4.6.4 Psycho-Sensory Phenomena

3.4.6.4.1 Visual Perception

It is recommended that the following visual phenomena be measured.

3.4.6.4.1.1 Visual Acuity - In spite of the absence of any modification in visual acuity during any of the American or Russian flights to date, it seems reasonable to include measures of acuity as part of any evaluation of overall visual function. It is also recommended that acuity measures be evolved in at least two parameters, namely: minimal detectable stimulus and two-point separation thresholds. While other measures could be

added with little or no additional mass, there will be minimal gains in information. The measures recommended are dependent on the physical and metabolic integrity of the eye and its associated sensory pathways. Equipment for the quantitative assessment is readily available in the form of a flight-modified orthorater concept.

3.4.6.4.1.2 Depth Perception - Measures of depth perception can provide us with information concerning not only the physical integrity of the eye and its associated neural pathways, but data regarding neuro-muscular integrity of the extraocular musculature as well as insights into the perceptual status of the cortex. The flight-modified orthorater equipment seems adequate for this measurement.

3.4.6.4.1.3 Phorias - Visual phorias (both near and far) might be categorized as depth perception measurements. Their inclusion as a separate measure is a function of the fact that the perceptual content, mainly image fusion processes, is a different perceptual data bit in spite of the fact that essentially identical systems are involved. Simple modifications in orthorater-type instrumentation may be utilized to develop this measure.

3.4.6.4.1.4 Dark Adaptation - The measurement of the intensity/time course of the brightness threshold of the eye provides information regarding the functional effectiveness of the iris and the general physical and metabolic health of the retina. Modifications in either portion of the system could be reflected in the time course of the dark adaptation response. The Hecht-Schlaer adaptometer may be utilized for data collection. This capability may be incorporated into an orthorater device by simply providing a precise variable light source which can be calibrated and recorded.

3.4.6.4.1.5 Absolute Brightness Thresholds - The measurement of absolute brightness threshold across the retinal fields provide a good index of retinal function. While dark adaptation measures provide information on the dynamics of brightness sensitivity alterations, brightness sensitivity measures across the retina provide the capability to map the static functional status of the retinal field. The same equipment utilized for dark adaptation measures can be utilized for this measurement.

3.4.6.4.1.6 Color Perception - While the mechanism for color perception is unknown, man's capability to utilize color information is assumed in the preparation of his instrumentation and work tasks. As a result, information regarding the integrity, sensitivity and fidelity of this capability should be considered in any complete visual assessment. The standard orthorater with appropriate stimulus material can accomplish this measure.

3.4.6.4.1.7 Movement Detection Threshold - Man's capability to detect and/or track moving stimuli are of critical import during several phases of space flight. While man's capability to detect movement is a direct function of not only the speed of movement but the physical characteristics, size and brightness, of the stimulus, instrumentation in this area requires precision calibration and measurement. While several techniques are currently existing for this measurement, it is recommended that a unique display be evolved wherein those stimulus characteristics deemed most pertinent to space flight considerations may be incorporated. This device may be either mechanical or electronic in nature. Moderate

sophistication shall be provided for the programming and measurement of movement of the stimuli. It is considered that this device is essentially state-of-the-art in that no novel or complex engineering design is required.

3.4.6.4.1.8 Reading - While reading procedures are frequently utilized as measurements of general ocular motility, there is ample evidence to demonstrate that modifications in reading capability are frequently due to parameters other than visual function. Since this confounding inference cannot be separated from the data, it is recommended that reading measurements be excluded from consideration as an IMBLMS measurement technique.

3.4.6.4.1.9 Eye Movement - The final major parameter of visual function is the evaluation of the eye's capability to track dynamically. Measures in this area may be concerned either with the eye's ability to follow relatively rapidly moving stimuli across a two-dimensional area, or with the eye's capability to move across static material in a prescribed fashion.

The Honeywell Oculometer, developed under NASA Contract, was submitted for our considerations for the IMBLMS Program by the Honeywell Radiation Center. The original intent of the device was to provide a man/machine control link actuated and controlled by eye movement. The device uses a photo-optic electronic technique to locate the eye and then to locate and differentiate the pupillary-iris border and the corneal reflection. With a somewhat complex but straight-forward time-shared electronic comparator, the device can determine the point of focus of the optic axis of the eye with respect to an external referent. The device can accomplish this without any physical contact with the subject and the sensors can be theoretically located as much as 6 feet from the subject's eyes. The procedure, in its current configuration, accomplishes its task by locating and tracking the pupil while simultaneously locating the corneal reflection and determining its position relative to the pupillary surface area. If the eye is moved, the corneal/pupillary displacement relationship is modified and the system is capable of both sensing and interpreting the modification in terms of eye movement.

In its present mode of operation, such a device can be used for at least the following measures:

a. By tracking monocular and/or binocular eye movements, the coordination of the extra-ocular musculature may be established permitting data on phorias as well as convergence and general ocular motility. The extent and duration of the nystagmus can be measured during vestibular function tests.

b. Accurate eye movement tracking can also be utilized to assess vigilance, arousal level, and the time/motion effectiveness in the use of the displays and controls. Data regarding arousal level could be collected by the measurement of "blink rate".

c. Since the device accurately tracks the actual perimeter of the pupil continuously, the oculometer may be utilized in the evaluation of pupillary accommodation during dark adaptation.

The Honeywell Company, in a recent proposal, has evolved a modification of its basic system that would permit the measurement of the focal length or power of the eye. With additional modification in the sensor, it is conceivable that the oculometer might be capable of detecting the emissivity of the retina, and, therefore, data related to retinal vascularity, blood oxygenation levels, or other pertinent indicators of retinal health.

Unfortunately the device, while demonstrated in prototype form, is not in that level of development which could be described as state-of-the-art. As a result, while further consideration of this instrumentation must be encouraged, the technique of choice for the measurement of eye movement is the electro-oculogram (EOG).

3.4.6.5 Auditory Function

There is no data available that would predict modification of human auditory function due to residence in the space environment. Nonetheless, it seems reasonable to include measurements in this area in order to be capable of extending information in this regard as a function of prolonged residence or in respect to changes in the composition of cabin and space suit atmospheres. The measurements of paragraphs 3.4.6.5.1 through 3.4.6.5.4 are considered.

3.4.6.5.1 Measurement of Absolute Intensity Thresholds

The measurement of this parameter provides insight regarding the physical status of the tympanum, ossicles and cochlear mechanisms as well as information regarding the functional capability of the neural mechanisms as well as the perceptual status of the auditory cortex. It is assumed that information may be obtained by the use of equipment permitting the generation of precise frequency and intensity outputs to the individual ear. Two approaches have been evaluated for the IMBLMS Program: one, utilizing high fidelity magnetic tape recordings carried as on-board stimulus material; and a second technique utilizing a computer software program and associated signal generator to generate stimulus material on board.

3.4.6.5.2 Pitch Discrimination

Essentially the same mechanisms and instrumentation can be involved in pitch discrimination measures. The inclusion of this second parameter is based on its greater utilization of perceptual mechanisms, and as such justifies inclusion.

3.4.6.5.3 Sound Localization

This phenomenon permits the evaluation of not only the physical and perceptual functions of the auditory system, but permits the evaluation of the cortex's capability to sense and interpret time of arrival and intensity variations between the two ears. In this measurement, essentially the same approach may be utilized with the exception that binaural stereophonic information be supplied in the stimulus and transmitted binaurally to the subject via stereophonic earphones.

3.4.6.5.4 Speech

While the detection and discrimination of speech material is frequently included as a measure of auditory function, just as in the case of reading, many secondary considerations unrelated to auditory function play critical roles in this measure. As a result, speech perception capabilities are not recommended as an IMBLMS measure.

3.4.6.6 Kinesthetic Function

At least two major areas of kinesthetic function must be considered. In the first area questions regarding the man's capability to voluntarily or unconsciously locate himself and his extremities properly in three-dimensions, either in respect to dynamic procedures, or to attain a static orientation. In the second consideration, kinesthetics in a broad sense could include considerations of somatic or cutaneous sensations of touch. It is recommended that the following measures be considered.

3.4.6.6.1 Proprioception

The subject shall be instructed to locate an extremity at a specific location in space and maintain that condition for a minimal period of time. Data in this regard may be collected via photogrametric cameras as in M055. Under the second or dynamic circumstance, the subject would be requested to carry out a gross full body movement. Once again, data in the form of photogrametry may be collected. It is also suggested that a fine dynamic evaluation requiring precision displacement and rate of movement be measured as previously discussed.

3.4.6.6.2 Cutaneous Touch Measurements

While kinesthetic and proprioceptive information relies on tendon and muscular stress phenomena, some information is derived from the cutaneous sensors. Measurements are therefore recommended in respect to touch thresholds, touch localizations and two-point discriminations. These measures may be accomplished by a simple standard mechanical device capable of being calibrated for precision pressure and area of contact.

3.4.6.7 Vestibular Function

As the AAP mission time is extended in an incremental manner, the means for assessment of vestibular function will be a continuing requirement. Whether or not adaptation occurs in the vestibular system due to weightlessness is not known and NASA must continue to seek data on which ultimately to base a "G-decision", e.g., whether artificial G will be required for long-term manned space flight.

IMBLMS will provide storage space and interface connections for the Otolithic Goggles, the Rod/Sphere Device, the Neurokit and the Rotating Litter Chair of M053.

As we pointed out at the midterm, the use of highly specialized fiber optics for the purpose of the measurement of nystagmus or ocular counterolling are not considered IMBLMS

equipment. Provision in IMBLMS will be made for the EOG which makes use of a common signal conditioning capability.

3.4.6.8 Psychomotor Functions

Man's capability to perform precise voluntary psychomotor tasks is of critical import. Measures regarding the crewman's capability to move through three-dimensional space is considered under kinesthetic considerations. Problems relating to fine motor movement in respect to manipulation, reaction time, controlled force emission functions and complex eye/hand coordination activities should be measured. Measures in these areas may be interpreted as representing the integrity of the overall neural, muscular, and skeletal systems involved. In spite of the relatively clear-cut measurement techniques available, no finite equipment description or package has been prepared for the accomplishment of these measures at the present time. It is hoped that as a result of further analysis, a single integrated package may be evolved for the accomplishment of all the preceding psychomotor characteristics. There is reason to believe that the three-dimensional manipulanda device, discussed under kinesthetic parameters, may be redesigned to permit the preceding measures.

3.4.6.9 Cognitive Function

In the introduction for the section, the problem related to the delineation of measures in respect to real time quantification of cognitive function was discussed. At the present time there is reason to believe that measures of arithmetic computational capability, arousal/vigilance levels, problem solving and memory span measures would provide a basic repertoire of data collection procedures adequate for establishing cognitive status. Since, in most instances, the instrumentation for evolving these values have been custom designed for the system in which they were used, no formal equipment package is obtainable. It is our recommendation that further studies be initiated to establish optimal approaches and instrumentation for the collection of such information in order that designs specifically appropriate for the IMBLMS modular packaging concept be evolved.

Cornell Aeronautical Laboratories have suggested a formal experimental program for the specific delineation of requirements and instrumentation in this area. It is recommended that some consideration for limited experimental validation of an IMBLMS unique psychomotor test package be considered. While it is recognized that the ideal measurement of behavior would be accomplished during "real task" operations, because of the diversity and lack of definition of all the possible permutations of systems in which IMBLMS equipments might be utilized, we cannot at present advocate specific equipment for real time, real task measures.

3.4.6.10 Emotional Adjustment

The pertinence of measurements of emotional adjustment is self-evident. Unfortunately, instrumentation to gather this information in real time is nonexistent. While combinations of measures such as polygraphic techniques have been utilized to measure changes in

emotional levels, no formal equipment has been devised to quantify such changes. It is true that anxiety levels can be correlated to some extent with GSR activities and that similar reflections of anxiety will become apparent in several of the currently contemplated bio-assay procedures. Historically, emotional measurements have been primarily accomplished by either continuous visual/acoustic monitoring of the individual and his interaction to the environment, or by direct interface by an accomplished psychiatrist familiar with the individual. While these procedures could be utilized for IMBLMS, it is suggested that such a decision not be finalized at this phase of the program.

3.4.6.11 Summary

The behavioral area is likely to be the major area in IMBLMS for evolution and change. In the course of this IMBLMS contract General Electric has received a number of proposals for the development of sophisticated behavioral equipment. It is clear - and this has been pointed out by Cornell Aeronautical Labs Stanford Research Institute, and others - that during Phase C, additional effort will be required to further define the behavioral package for IMBLMS.

Sophisticated equipment such as the non-contacting eye motion sensor of Biosystems, Inc. and the oculometers of Honeywell, Bausch and Lomb or Smith Kline Instrument Co. require consideration because of their multi-purpose nature. The IMBLMS must be capable of accommodating these devices when they reach an operational status.

3.4.7 CREW TIME AVAILABILITY

3.4.7.1 General

The man hours available on a space station are finite . As a result it is essential that every effort be expended to achieve their efficient utilization.

In the allocation of available man hours for nominal mission operations, provision for the satisfaction of the basic biological needs of man must receive the highest priority.

There is ample evidence that many of man's routine biological functions and needs involve circadian periods. In addition, most of the anticipated orbits require approximately 90 minutes which would provide a convenient demarcation of 16 orbits per 24 hours. Therefore, programming for both biological and orbitally-based requirements may be conveniently established on a 24-hour cycle based on Cape Kennedy time.

While biological needs require critical priority in the allocation of orbital man hours, the precise chronological location of this time along the mission profile is of considerably less importance than that for orbitally-based mission functions. Under nominal conditions, requirements must be satisfied at some time during any given 24-hour cycle. Under ideal conditions their dispersion over time can be specified for optimal efficiency. .

The following tabulation suggests criteria for the optimal locations of various activities during a typical 24-hour cycle:

a. Sleep - Scheduled sleep periods, whenever feasible, shall be no less than six hours or more than eight hours in length. They shall be programmed so as to occur once during every 24-hour period. Under no circumstances, other than "extreme emergency" shall more than 48 hours pass without a scheduled sleep period.

b. Rest and Relaxation - At least one continuous hour of rest (recreation) should be provided per 24-hour period.

c. Nutrition - Eating periods should be organized into at least three sessions, one of which should occur shortly upon awakening from the longest assigned sleep period, one at the mid-point of the longest "waking" period and one at least one hour prior to the beginning of the longest sleep period.

d. Elimination - While it is not always possible to elicit eliminative functions at specific, predetermined times, this frequently can be accomplished in the case of voluntary defecation. In order to optimize scheduling operations, it is recommended that a fixed time slot in the 24-hour cycle be held constant for defecation (once per day).

   No formal urination scheduling seems necessary due to the brevity of the operation and the time delay which can be effected after the first sensation or urgency.

e. Zero-g Countermeasure Procedures - Since the exact dosage of countermeasure procedures is primarily based on conjecture rather than direct evidence, the best current position simply states that the exercise procedures should be carried out once per 24 hours. For hygienic and programming convenience, it is advocated that these procedures be utilized prior to the presleep personal sanitation procedures.

f. Biomedical Monitoring - Biomedical procedures are directed at the current status of various viability functions. It is, therefore, recommended that, when feasible, formal biomedical measures be instituted following postsleep rest periods and prior to eating procedures in order that strenuous or other transient mission activities do not bias the measures. Such safety measures could be performed during CM duty.

g. No specific times for personal sanitation are advocated other than following the post-sleep/rest period and/or following the exercise program, prior to eating. Some provision for limited sanitation shall be provided following toilet activities.

Table 3-17 represents the estimated duration and frequency requirements for a minimal list of biologically critical functions which must be considered in designing for a long range mission. It should be emphasized that these functions may be severely disrupted during emergencies occurring in any single 24-hour cycle with no irreversible alterations or significant loss in performance.

Table 3-17. Minimum Crew Time Requirements for Biological Functions (Multiply by Number of Crew for Full Value)

Estimated Man-Hour Allocation For The Satisfaction of Biological Needs	Man Hours Per Task Completion		Task Frequency				Total Time Consumed Per Mission				Task Description Comments
							24-Hours		30-Days		
	Hour	Minute	Per Hour	Per 24-Hours	Per Week	Per Mission (30 Days)	Hour	Minute	Hour	Minute	
Sleep											
Hours per man per 24-hour period	6-8	0		1	7	30	6-8		180-240	0	
Rest											
Hours per man per 24-hour period	1	0		1-2	7-14	30-60	1-2		30-60	0	
Nutrition											
Selection of food		1		3	21	90		3	1	30	Times will depend on precision required for the nutritional studies
Food Preparation		5		3	21	90		15	7	30	
Food Consumption		15		3	21	90		45	22	30	
Disposal of Unconsumed Food		5		3	21	90		15	7	30	
Clean Up		5		3	21	90		15	7	30	
								1 hr 33 min	46 hr	30 min	
Elimination											
Urination		1		3	21	90		3	1	30	Times will depend on sampling and preservation procedure and degree of automation
Defecation		10		1	7	30		10	5	0	
								13 min	6 hr	30 min	
Personal Sanitation											
Cleanse Hand and Face		3		3		90		9	4	30	
Cleanse Feet-Under Arms		3		1		30		3	1	30	Includes use of deodorant when indicated
Cleanse Full Body		10			1	4		10	0	40	
Teeth		2		3		90		6	0	00	
								28 min	6 hr	40 min	
Hair	0	0	0	0	0	0					
Nails	0	0	0	0	0	0					
Change Clothing	0	5		1/2		15		2.5	1	15	
Shave		10		1/2		15		5.0	2	30	
								7.5 min	3 hr	45 min	
Zero-g Counter Measures											
Exercise		30		1		30		30	15	0	Alternate Days. This is minimum and could vary a factor of six.
Cuffs		30		1		30		30	15		
								1 hr	30 hr		
Biomedical Monitor		15		1/2		15		7.5 min	3	45	Does not include experiment monitoring
							Total 10 hr 9 min-13 hr 9 min				

Reference to Table 3-17 indicates man/hour requirements for the satisfaction of basic Biological needs.

This estimate, however, does not include:

a. Extensive measurement and logging related to nutrition required by the nutrition experiments.

b. Sampling and preservation time related to elimination.

c. Zero-g countermeasures which are included at only 30 minutes per day. This could be exceeded by a factor of six (3 g-hours) depending on experiment purposes.

d. Times are generally related to the adequately restrained subject and do not include locomotion times, i.e., OWS to CM, etc.

e. Biomedical monitoring time is included as a safety measure. It is not experiment-related and could be performed in the CM.

f. We assume that all system monitoring will be performed in the CM by the crewman on duty.

g. Routine ground/voice communication, also a CM duty function.

h. Safety drill, on-board skill maintenance procedures as well as routine checkout of crew support equipment.

Summarizing Table 3-17 we find that under nominal circumstances approximately 10 to 13 man hours per man per 24 hours will be devoted to the satisfaction of personal biomedical needs. In addition, if we assume that the system is fully automated and that critical displays relating to survival critical measures only are to be read, less than 10 minutes per 24 hours of system monitor time will be indicated. (See Table 3-17.) As a result, the fully automated system approximately 11-14 man hours per man per 24 hours will be available for mission and/or vehicle unique tasks.

If, as has been indicated, the command module must be continuously manned by at least one crewman (or 8 hours per crewman per 24 hours) we find that the man hour availability at the laboratory area will be limited to from 3 to 6 hours per man per 24 hours. While some limited experimental tasks could be accomplished in the Command Module by a single crewman, the procedures would of necessity have to be kept single and have no safety hazard implication whatsoever. Since such testing would be in the form of expediency measures, their efficiency in respect to task/time density packaging would leave a great deal to be desired.

If, in addition, we include locomotion times, multiply all times by 1.2 to take into account performance variables related to the zero-g environment (both factors which have appeared

in our underwater studies), expand the requirement for zero-g countermeasures and increase nutrition and elimination times to accommodate experimental activities such as sampling, etc., we have consumed all the available time in the maintenance of the vehicle and the astronaut.

The solution to this dilemma is automation of the housekeeping function, remote monitoring in the OWS, a remote warning and alarm system in the OWS, or an enlarged crew by rendezvous and docking. Considering the duration of the missions involved there appears a real probability of fatigue and performance decrement for a OWS system involving only three crewmen.

Table 3-18 represents an example of the minimal amount of manual checkout and monitoring referred to above that must be done by the crewman even in the maximally automated system. It is assumed that the items listed are survival-critical; and, therefore, the redundancy indicated is justified.

3.4.7.2 Experiment Time Lines

For engineering purposes we have defined two experimental protocols: one involving the bicycle ergometer, the other involving the LBNP device. These protocols will be used to define maximal electrical, thermal and data management loads on the AAP system. Table 3-19 gives a procedure for exercise tolerance and Table 3-20 for LBNP operation.

Beyond these engineering purposes these protocols represent our bias with respect to medical and behavioral experiments in space. Experiments take time - not time arithmetically summed, but consecutive elapsed time and astronaut application.

In the exercise tolerance test, involving the bicycle ergometer, a variety of measurements are made both before and after the stress. Data was drawn from available NASA reports, where the procedures were treated as individual measurements. The total experiment time was six hours. Combination packaging results in a reduction of elapsed time requirements to two and one-half hours and includes a 30-minute period of subject rest to reach a baseline condition.

A major time-consuming activity in space experimentation is don-and-doff, or set-up and take-down time. While individual measurements might be taken often in order to study circadian rhythm phenomena, the long-term changes related to weightlessness require much less frequent measurement and have priority.

Crew time, as well as equipment, must be modularized and packaged for IMBLMS. The optimum time module will vary, of course, with the experimental purpose. Crew time also must be viewed from the point of view of commonality. For instance, a rest period that allows the metabolic rate to approach basal conditions can also be used for dark adaptation prior to visual experiments without any compromise to the attainment of the basal state.

Table 3-18. Minimum Crew Time Requirements for Survival-Critical Checkout and Monitoring

Nominal Housekeeping Task	Man Hours Per Task Completion			Frequency				Total Time Consumed/Mission				Task Description Comments
	Hour	Minute	Second	Per Hour	Per 24-Hours	Per Week	Per Mission (30 Days)	24-Hours (Seconds)	30-Days Hour	30-Days Minute	30-Days Second	
Monitor:												
A. Existing Supplies:												
1 Oxygen			2		2	14	60	4	0	2	0	1-Dial readout
2 Nitrogen/Belium			2		2	14	60	4	0	2	0	2-Dial readout
3 Water			2		2	14	60	4	0	2	0	3-Dial readout
4 Food			10		3	21	90	30	0	15	0	4-Inventory check list-delete as used-residual readout
5 Fuel (Attitude Control)			15		1	7	30	15	0	7	30	5-Multiple dial readout-*-
6 Power			15		3	21	90	30	0	22	30	5a-*Periods of high maneuvering will require more frequent readout, but this must be considered as a mission rather than a housekeeping function. 6-Multiple dial readout
B. Rates of Consumption												
1 Oxygen			10		1	7	30	20	0	5	0	1-Requires computer input-readout in hours remaining
2 Fuel (Fuel cell/Propulsion/ Attitude Control)			10		1	7	30	150	0	5	0	2-Requires computer input-See 5a above
3 Power			10		3	21	90	30	0	15	0	3-Dial readout-watts per hour(?) for any system utilized
C. Rates of Production												
1 Water												1-No rate
2 Power (electric)			2		2	14	60	4	0	2	0	2-Dial readout
D. Operational Status Cooling Systems												
1 Cabin Atmosphere			2		2	14		4	0	2	0	1-Dial readout
2 Suit Atmosphere			2									2-Dial readout at suit prior to, during wear
3 Cold Plates			2		2	14			0	2	0	3-Dial readout
Radiation Detection System												
1 Interior Excessive Dosage			2		1	7		2	0	1	0	1-Pilot light checkout (and dial readout 0.1)
Emergency Beacons												
1 Functional radio			20			1		2	0	1	20	1-2 Activate-verify function via voice command with ground
radar			20			1		2	0	1	20	
Clocks and Timers												
1 Clock			10		1	7		10	0	5	0	1-Readout correlate with ground signal
2 Electronic Timing Devices			10		1	7		10	0	5	0	2-Readout correlate with ground signal

Table 3-18. Minimum Crew Time Requirements for Survival-Critical Checkout and Monitoring (Cont)

Nominal Housekeeping Task	Man Hours Per Task Completion			Frequency				Total Time Consumed/Mission				Task Description Comments
	Hour	Minute	Second	Per Hour	Per 24-Hours	Per Week	Per Mission (30-Days)	24-Hours Second	30-Days Hour	30-Days Minute	30-Days Second	
Hatch Seals (Intracabin)												
1 Condition of "0" rings			30			1		4	0	2	0	1-Visual inspection
Emergency Systems												
1 Respiratory 0_2, N_2			4			1					16	1-Dial readouts
2 Cooling systems			30			1		2		2	0	2-Activate/verify function
3 Power sources			10			1		1			40	3-Activate/verify function
4 Alarm systems			30			1		2		2	0	4-Activate/verify function
E. Function Level ECS System												
1 Absolute atmospheric pressure			2		2	14	60	4	0	2	0	1-Dial readout
2 0_2 partial pressure			2		2	14	60	4	0	2	0	2-Dial readout
3 Contaminants (Percent)			2		2	14	60	4	0	2	0	3-Dial readout
4 Relative humidity			2		1	7	30	2	0	1	0	4-Dial readout
5 Atmospheric temperature			2		1	7	30	2	0	1	0	5-Dial readout
6 Radiation level												
A-skin			30		1	7	30	30	0	15	0	6a-Develop and assess film strip exposure meter
B-cabin interior			2		2	14	60	4	0	2	0	

Total Elapsed Time	0	10	20	30	40	
Sequence Time	85	80	70	60	50	40
Measurement Area	M037				M035	
Equipment On Line	A	B			C, D	C, E
Procedure	1	2	3		4	5

Equipment on Line

A. Body Mass Measuring System
Body Volume Measuring System

B. Blood, Urine, Sweat, Parotid — Sampling Device
Blood, Urine, Sweat, Parotid — Processing Material
Blood, Urine, Sweat, Parotid — Storage De

C. VKG
ZKG
EMG
Impedance Pneumograph

D. Dynamometer
Tape Measure

E. Phonocardiogram
Blood Pressure Cuffs
Digital Plethysmograph
Ear Oximeter
Thermistors (Ear and Axillary)
Venous Pressure

F. Gas Meters
1) O_2 Partial Pressure
2) CO_2 Partial Pressure
3) Gas Flow Meter

G. Spirometer (or Integral of Flow)
N_2 Analyser
Ear Oximeter
Timer

H. Ergometer

Table 3-19. Exercise Tolerance (Including Pulmonary Function)

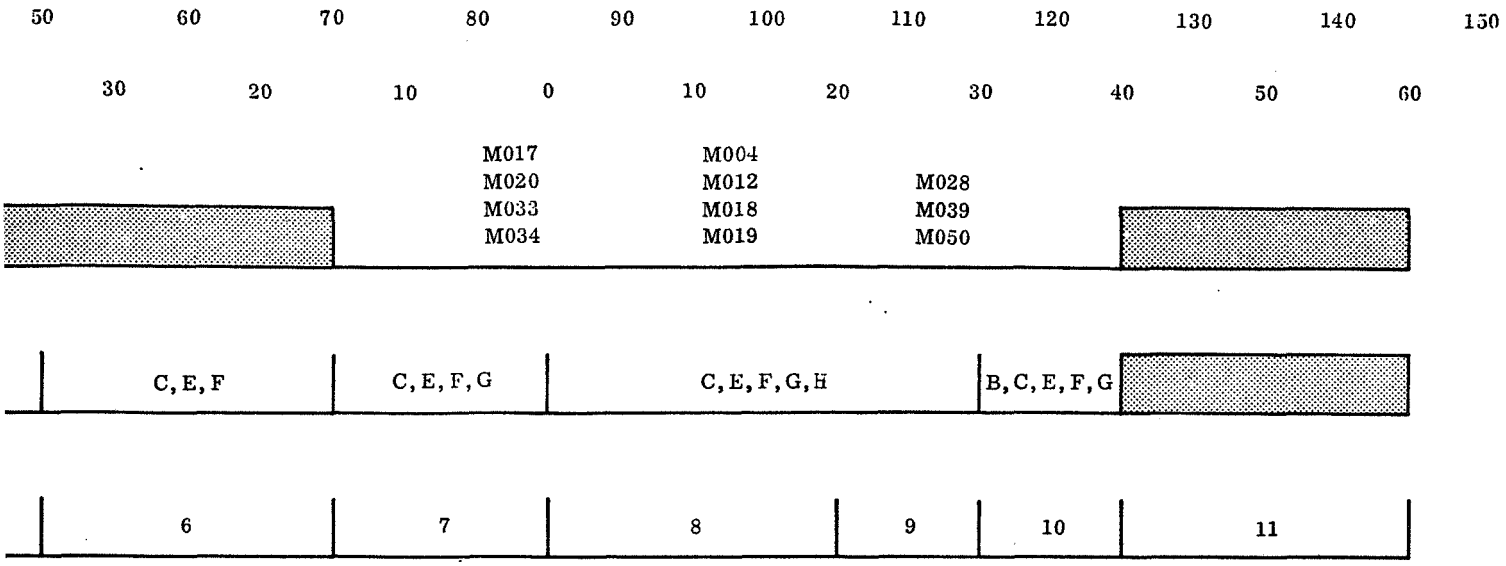

Procedures

1. Measure body mass and volume
2. Collect blood urine, sweat, and parotid samples
3. Attach VCG, EMG, ZCG, impedance pneumograph electrodes
4. Perform muscle assessment
5. Attach phonocardiogram, B.P. cuffs, digital plethysmograph, ear oximeter, thermistors
6. Subject rests for 15 to 30 minutes; assemble and calibrate ergometer, gas meters and accessories. Measure cabin environment (pO_2, pCO_2, total pressure, air and wall temperature)
7. Take baseline measurements: - VCG, phonocardiogram, resting metabolic rate, blood pressure, heart rate, thoracic blood flow, venous pressure, body temperatures, and oximeter readings. These are followed by pulmonary volumes and dynamics.
8. Subject mounts bicycle and exercises (with timer)
9. Subject dismounts bicycle and rests while recording recovery
10. Repeat measurements in No. 2 and No. 9 as required
11. Tear down and stow

Total Elapsed Time	0	10	20	30	40
Sequence Time	60	50	40	30	20

Measurement Area	M037			
Equipment on Line	A	B	C	
Procedure	1	2	3	4

Equipment on Line

A. Body Mass Measuring System
Body Volume Measuring System

B. Blood, Urine, Sweat, Parotid — Samp
Blood, Urine, Sweat, Parotid — Proc
Blood, Urine, Sweat, Parotid — Stor

C. VKG
ZKG
Impedance Pneumograph
Leg Plethysmographs (2)
Thermistors (Ear and Axillary)
Blood Pressure Cuff
Carotid Sinus Cuff
Phonocardiogram

D. LBNP (Active)

Table 3-20. LBNP Provocative Testing

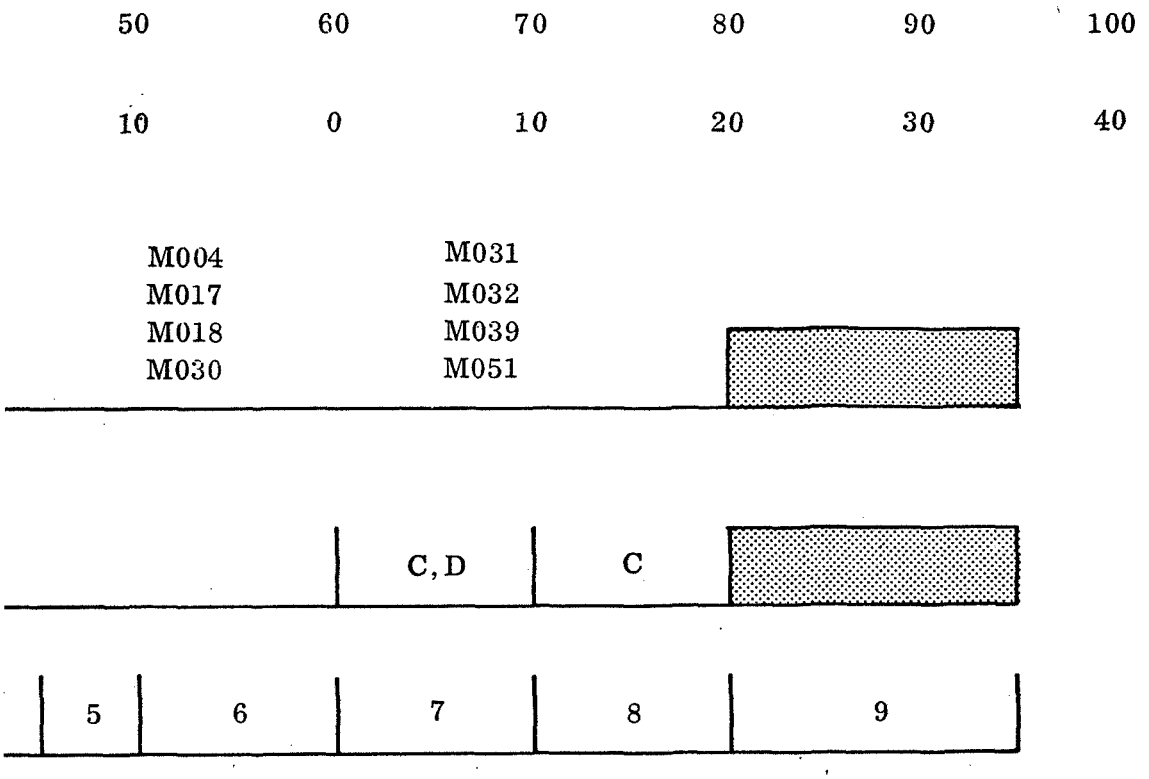

ıpling Device
ıcessing Materials
rage Device

Procedure

1. Measure body mass, and volume
2. Collect blood, urine, sweat, and parotid samples
3. Attach ECG, pneumogram, plethysmograms, thermistors, blood pressure cuff, neck cuff, phonocardiogram
4. Subject rests in LBNP, record baseline
5. Measure circulation time
6. Perform carotid sinus massage
7. Expose to LBNP cycle
8. Rest and record recovery
9. Tear down

We recognize that the time requirements for the conduct of the proposed optimum experimental procedures such as illustrated here are in conflict with crew time availability generally as well as the availability of two crewmen simultaneously in view of the CM duty requirement. These charts have been constructed primarily for engineering purposes as indicated above.

3.4.8 ON-BOARD DISPLAYS AND CONTROLS PHILOSOPHY

3.4.8.1 Unique Considerations

Since the IMBLMS will be packaged in many configurations and with many combinations of instrumentation, it is essential that packaging and interfaces with the hardware system and the man be so configured as to provide maximum flexibility. A unique requirement of the system is the fact that the measurements to be conducted may not necessarily take place at a single site, or in the vicinity of a basic display console site. In addition, there are the ever present needs for minimizing mass, volume, and power requirements for space-borne instrumentation while increasing its utility, reliability, operational life, and functional flexibility.

3.4.8.2 General Approach

Three basic requirements for displays and controls are apparent for such a modularized medical-behavioral measurement system. Displays and/or controls must be provided for:

a. Information on the status, function and calibration of the basic measurement hardware devices utilized.

b. The real time display of data being generated as a function of the measurement procedure involved.

c. Information regarding the status of the test environment in which the measures are being conducted.

In addition, direct visual monitoring of the subject during the test procedure may be required. Continuous monitoring and data collection procedures can be required for all three display requirements. However, in most instances, once experimental equipment calibration has been established (a), it is usually assumed that the settings will hold to the end of the test procedure when, if necessary, calibration may be verified. The same is essentially correct in considering measures of the environmental status. However, during certain dynamic motor activity, simultaneous corrections may have to be manually supported (c). In both instances it may be assumed that the display sites would be fairly fixed, i.e., in the immediate proximity of the controls. In (b) however, either the subject or the test conductor must have immediate access to the information display while maintaining direct observation or program control of an event remote from the console and primary control areas. Therefore, the possibility of plug-in remote display capabilities for certain test operations should be considered. Under ideal circumstances it would be highly desirable to be able to quick-disconnect certain displays or groups of displays for plug-in at the remote sites.

Two approaches are possible: one would utilize movable displays coupled via shielded leads of sufficient length to permit their location to the work site, while another approach would make junction boxes available at the work site. Such approaches would permit the use of a single instrument or package of instruments for the display of several information parameters on a time-shared basis at several sites with associated weight and volume savings (assuming that simultaneous operations are not required). For maximal flexibility in application, time-sharing, either via manual selective switching or, as in the case of CRT or television tube displays, a simultaneous area-shared display capability is essential.

3.4.8.3 Types of Display

While a great many medical-behavioral measurements can be expressed in digital form, some experiments require time/intensity analogs or profiles to be developed. As a result, at least these two forms of instrumentation must be considered.

In some cases, the instrumentation selected for a given measure must provide not only the digital value itself, but such factors as direction of change, rate of change, and/or the locus of the measure with respect to the total range. As a result of this, it is evident that a varied series of displays must be provided. Finally, the consideration of the presentation of simultaneous information must be pursued. Time-sharing of common instrumentation should not preclude the possibility of display layout configuration in which information-related materials may be located in close physical proximity to one another.

SECTION 4

SYSTEM CONCEPT

SECTION 4

SYSTEM CONCEPT

Figure 4-1 illustrates system, subsystem, and operational considerations associated with the IMBLM system design. System Considerations include such items as mission objective, schedule, costs, availability required, launch vehicle and facilities existing, approaches planned for data management, measurements required, and actual equipments which can be obtained. Operational Considerations include constraints imposed by the carrier spacecraft, their operational constraints with respect to orientation, stabilization, zero-g conditions, etc., plus the crew access and human factors constraints, and reliability, maintainability, and safety constraints, electromagnetic interference suppression provisions, plus the flexibility and adaptability for use on different missions and growth provisions for the future. Subsystem Considerations include such items as subsystem support constraints for the structural mounting, mechanical, electrical, and thermal interconnections, the electrical power sources, data management interfaces, environmental control requirements.

The General Electric IMBLM system concept approach, guided by the above and other considerations, features a minimal system capability to which additional standardized functional modules are added to meet specific mission requirements. Commonality of function, semi-automatic operation, capability to minimize experiment time and crew training, provision for future growth, modular design of equipments, and installation compatability with present (and future) spacecraft are emphasized. A most important consideration in the system concept is the use of the spacecraft on-board computer, via appropriate software, to supplement and in some cases eliminate the need for, potential elements of the IMBLM system.

Discussion of the IMBLM system concept has been arbitrarily divided into three general subject areas as follows:

Section 4.1 - System Approach

Section 4.2 - Data Management

Section 4.3 - Modular Design and Packaging

Figure 4-2 shows an artists concept of how the IMBLMS and associated experiment hardware might appear as installed in the S-IVB OWS.

4.1 SYSTEM APPROACH

4.1.1 INTRODUCTION

The purpose of IMBLMS as conceived by General Electric is to provide, in a modular packaging arrangement, the common measurement and service functions needed to support planned and anticipated medical and behavioral experiments in space. By this definition, IMBLMS represents the spacecraft equivalent of the laboratory equipment and storeroom; that is, IMBLMS is the multipurpose sensors and associated hardware which enable, support, and subserve measurement and procedural functions for the medical and behavioral experiments.

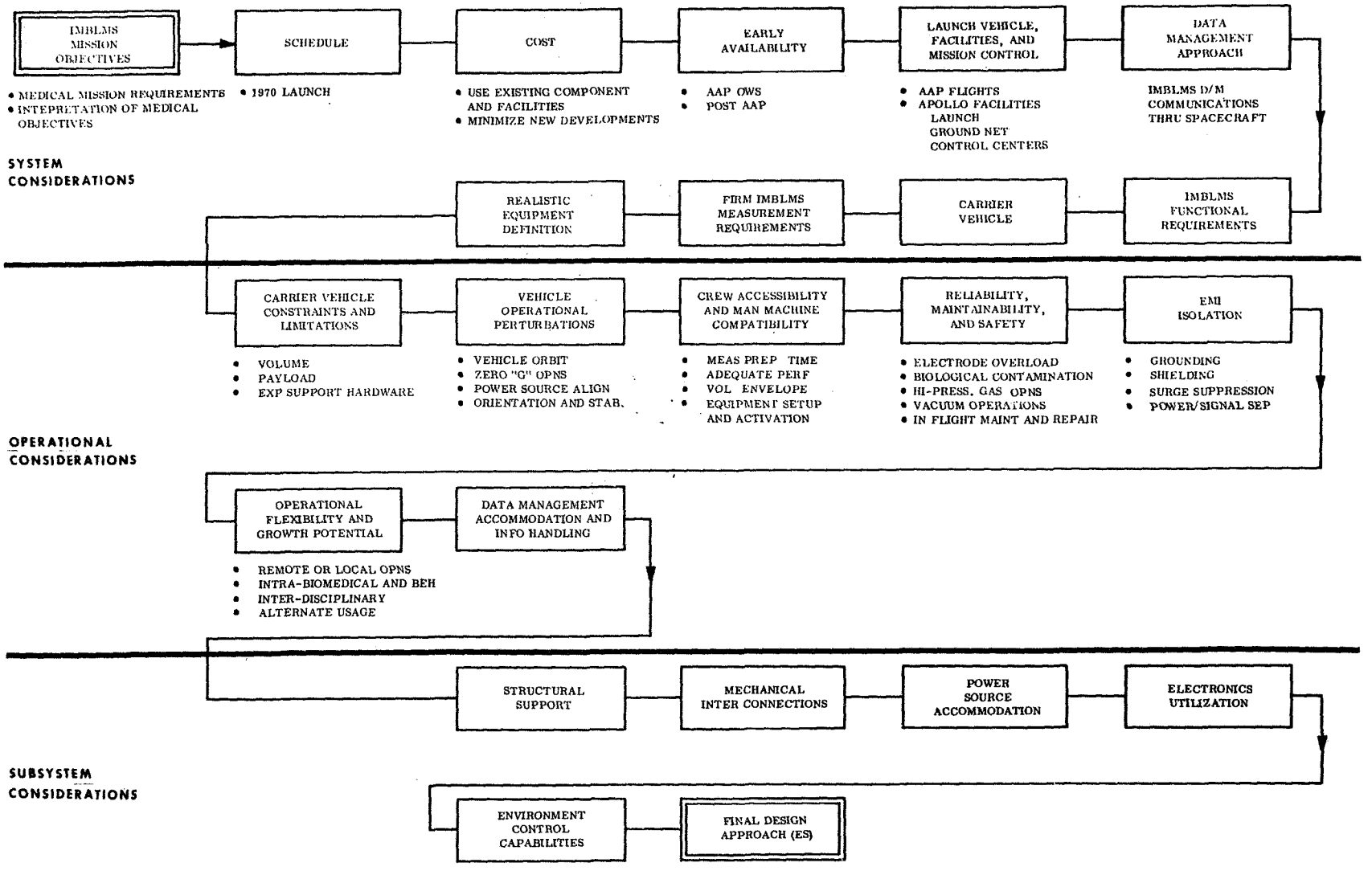

Figure 4-1. IMBLMS Design Considerations

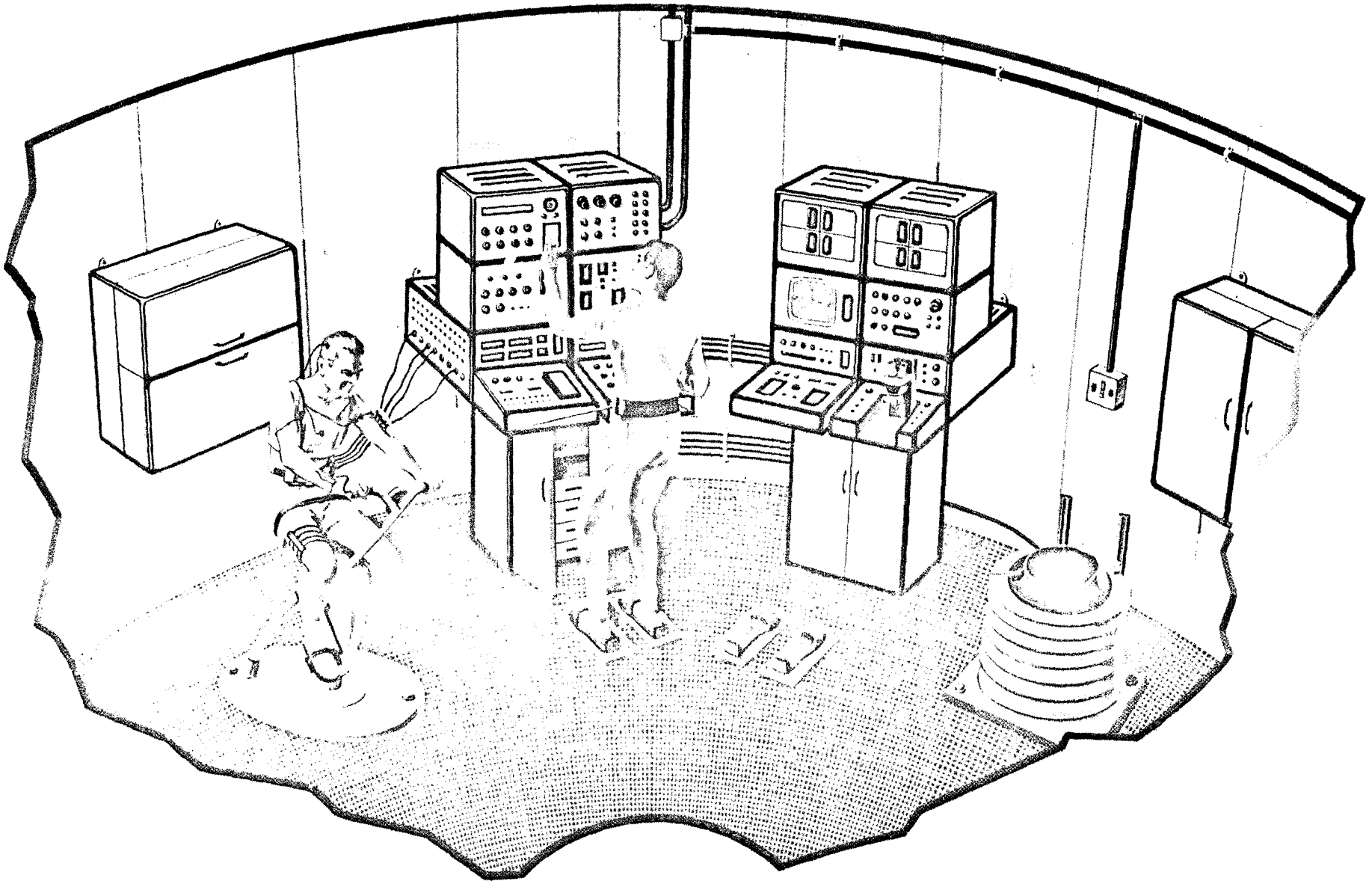

Figure 4-2. Artists Concept of IMBLMS and Associated Experiment Hardware as Installed in the S-IVB OWS

IMBLMS is also the regulated power supply and conversion equipment, pneumatic capability, thermal control and data management equipments necessary to that support. IMBLMS is any and all items which can be shown to be common to multiple experiment requirements.

General Electric believes the IMBLMS concept must meet the following general requirements:

a. IMBLMS must provide the necessary equipment to perform measurement and service functions in support of medical and behavioral space experiments.

b. IMBLMS must be simplified and automated to the maximum degree consistent with astronaut skills and training and the available experiment test time.

c. IMBLMS must be compatible with current and future spacecraft hardware interfaces.

d. IMBLMS must accommodate presently designed space experiments in the medical and behavioral areas with sufficient "overdesign" performance capability to accommodate future experiments.

e. Although IMBLMS is initially determined by planned NASA experiments, experiment hardware must be designed in the future to interface with IMBLMS, not vice versa. Every effort should be made to minimize this design constraint on future experiments.

f. IMBLMS packaging must provide flexibility and interchangeability so that specific IMBLMS hardware elements can be combined to meet specific experiment service and measurement support requirements for a particular mission. It is anticipated that a different IMBLMS assembly may be required for each mission and module replacement and maintainability in orbit may be required.

g. IMBLMS must emphasize hardware design solutions and selections which are compatible with the projected flight date requirements and schedules and which have growth capability to accommodate future module additions.

h. IMBLM design must emphasize safety, both for the astronaut and for the spacecraft.

i. IMBLMS should make maximum use of proven hardware (either as is or modified) provided such use does not compromise the IMBLMS objectives.

j. The data generated by IMBLMS must be processed in a manner consistent with the Apollo Applications Program data management system.

k. IMBLMS must be capable of growth to accommodate the presently undefined measurements which lie largely in the biochemical, cytological and microbiological areas.

l. IMBLMS must exhibit electromagnet compatibility with the total spacecraft environment.

m. IMBLMS must be "human-engineered" to aid crew performance.

The design of IMBLMS is proceeding within the framework of these guidelines. At this stage of the IMBLMS study, it is premature to discuss how well the General Electric design meets the above requirements. Changes, deletions, and additions will occur as the IMBLMS objectives are further defined and developed during the Phase C program.

4.1.2 SYSTEM DESIGN REQUIREMENTS

General Electric studies have lead to a definition of IMBLMS as the instrumentation of common measurement and services functions rather than instrumentation of the total experiment function. It is believed that this rationale will enable a much broader and more flexible and cost-effective support base not only to accommodate variations in currently-contemplated experimental protocols, but also to accommodate future experiment support requirements.

Table 4-1 is a preliminary compilation of environmental limits which provide design requirements for IMBLMS. It has been compiled from the data provided by NASA in connection with this contract and from other sources available to GE. This table is intended to show, primarily, the upper and lower limits of the major environmental parameters which affect the IMBLMS design.

Table 4-2 lists the principal reference documents which affect the design of the IMBLMS equipment. These include military specifications and standards, basic NASA documents, applicable NASA Center Documents, and NASA Bulletins such as NPC 200-2, 250-1, 500-1, etc. These documents provide specific technical and administrative direction to assure that the design of this equipment will be compatible with the requirements of the Apollo and Apollo Applications Program.

Safety of the subject is a primary requirement of the IMBLMS system. To our knowledge there are no generally accepted safety and performance standards for medical equipments, even for hospitals. Table 4-3 describes Safety and Performance Standards used by AEL, Inc. for the design of medical equipment for the commercial market. These and other standards will be reviewed for application to the design of the IMBLM system.

4.1.3 SYSTEM DESIGN APPROACH

4.1.3.1 General Considerations

To effect a spacecraft-installed general laboratory measurement support facility, the system design approach is based on commonality of function, universality of application, adaptability to various configurations, effectiveness in any application, and minimum weight/volume. These factors are significant in the trade-off areas of degree of automation, automated calibration, performance range (to accommodate future measurements), and spacecraft interfaces.

Table 4-1. Design Environment Parameters (Guideline: MIL-STD-810A)

Environment	Parameter
Temperature	
Operation (^{o}F)	0 to + 120
Non-Operating (^{o}F)	-60 to + 160
Pressure	1×10^{-6}mm Hg to 23.5 psia (at 68 ± 18°F)
Atmosphere	
O_2	0 - 100% at 19.7 psia
N_2	0 - 100% at 20.5 psia
Relative Humidity Operating	50% R. H. at 99°F, 100% R. H. at 76°F, 5 cycles 15% to 100% R. H.
Acceleration	
Longitudinal	10g
Lateral	3g
Vibration, Random	
Operating	2.5 minutes on each of three axes Frequency (cps) — Spectral Density (g^2/cps) 0 - 200 — 0.12 200 - 500 — 0.20 500 - 800 — 0.09 800 - 2000 — 0.05
Acoustic Noise	137 dB above reference of 0.0002 dynes/cm^2 at 45 to 90 Hz
Operating	0 to 9600 Hz, 30 minutes total, 10 minutes each of three directions
EMI	MIL-I-26600
Shock	
Operable After	30g, six times, once in each direction
Non-Operating After	40g, six times, once in each direction
Rain	MIL-E-5272 Para. 4.10
Salt Fog	Method 509.1 of MIL-STD-810A
Fungus, Sand and Dust	MIL-E-5272, Procedure I
Cleanliness	Class II
Explosive Atmosphere	Procedure I, Method 511.1 of MIL-STD-810A
Radiation	4 mr/ft^2/day

Table 4-2. Applicable Documents

SPECIFICATIONS	
Military	
MIL-E-8189B (1) October 22, 1958	Electronic Equipment, Guided Missiles, General Specification for
MIL-I-26600 (2) May 9, 1960	Interference Control Requirements Aeronautical Equipment
MIL-P-69096 (1) January 5, 1963	Plates, Information, and Identification
MIL-E-5272(c) 1 January 20, 1960	Environmental Testing, Aero and Associated Equipment, General Specification for
NASA	
Contract NASW-1630	Statement of Work, IMBLMS
MSC-SPEC-C-8 September 1966	Spacecraft On-Board Equipment, Cleanliness Specification for
STANDARDS	
Military	
MS-33586A December 16, 1958	Metals; Definition of Dissimilar
MIL-STD-130B	Identification Marking of U. S. Military Property
MIL-STD-143A May 14, 1965	Specifications and Standards, Order of Precedence for the Selection of
MIL-STD-810A June 23, 1964	Environmental Test Method for Aerospace and Ground Equipment
MIL-R-27542	Reliability Program for Systems, Subsystems, and Equipment
NASA	
CSD-A-119	Certification Test Requirements for Apollo Crew Provisions
MSD-AD-66-3	Procedures and Requirements for the Evaluation of Apollo Crew Bay Materials

Table 4-2. Applicable Documents (Cont)

DRAWINGS	
MIL-D-1000 March 1, 1965	Military Specification, Drawings, Engineering and Associated Lists
MIL-STD-100 March 1, 1965	Military Standard, Engineering Drawing Practices
BULLETINS	
NASA	
NPC 200-2 April 1962	Quality Program Provisions for Space System Contractors (Paragraphs 4.2, 4.3, 7.4.2.1, 7.4.2.2, 7.4.2.4, and Section 11.0)
NPC 200-3 April 1962	Inspection Systems Provisions for Suppliers of Space Materials, Parts, Components and Services (All paragraphs except 3.11); plus "Inspection System Notes" (MSC)
NPC 200-4	Quality Control Requirements for Hand Soldering of Electrical Connectors
NPC 250-1	Reliability Provisions for Space Systems Contractors
NPC 500-1	Apollo Configuration Management Manual
NPC 500-6	Guide to Documentation Planning
DS-33 November 12, 1965	Toxity of Materials Used in Crew Compartments
PS-14 September 1, 1965	Toxicity - Requirements for Non-Metallic Materials Proposed for use with Crew Compartments
PR2/M66-26U	NASA Approved Materials List ("Crewbay Non-Metallic Materials Status Report," Revision dated August 3, 1966)
NHB S300.5	AAP Reliability and Quality Assurance Plan

Table 4-3. Safety and Performance Standards*

SAFETY
I Primary Power (115 Volts rms, 60 Hz)
A. Components will all be; approved by, -- meet the specifications of, -- or be listed by, -- Underwriters' Lab. Inc.
B. In addition, three-wire line cords and plugs will be used, color-coded as follows; black-115V, white-neutral (current carrier), green-ground (no current).
C. Power transformers coupling to the line shall be capable of withstanding "Hi Pot" of 2500 Volts rms -- secondary to frame and secondary to primary.
D. The high side of the line (black) will be fused for not greater than 200 percent of design current. Power Switch will be on the high (black) side, or both, but never on neutral (white) only.
E. All devices that break line-voltage circuits will be sealed or enclosed in silicon rubber in such a manner as to prevent accumulation of gasses in the contact area, whenever there is a possibility of equipment use in an ignitable atmosphere.
II Patient and Operator Protection
A. Monitoring Equipment requiring low impedance connection to the patient, shall have all leads fused with 5-milliampere fuses or the fastest type available. (This does not remove obligation of II-D.)
B. Monitoring Equipment will have provision for complete automatic disconnection of all patient leads during cardiac depolarization. Transducers are not exempt, particularly when contacting electrolytic solutions contacting the blood.
C. All Cardiac Resuscitation Equipment (External and Internal) will have both electrodes dc isolated from the ground. Artificial Pacemaker electrodes will be ac isolated as well with a maximum of 100 picofarads of capacitive coupling permitted. (These requirements may not be violated for clinical equipment due to the number of extraneous ground circuits that may be present in the patient's body due to monitoring attachments, anesthesia equipment; etc.)

*Prepared by Biomedical Engineering Division, American Electronic Laboratories, Inc. for the commercial market.

Table 4-3. Safety and Performance Standards (Cont)

D. Modular Combination of subsystems on a single patient should, whenever practical, be made through a junction box which includes ground current monitoring, alarm, and disconnect circuitry. Leads or other patient ground wires are monitored by OR gates for each wire. The current monitoring circuitry must operate on 0.5 milliampere and requires disconnection of all leads in less than 1 millisecond. Reset or reconnection is manual.

III Hazardous Gases and Fluids

Protection is not included in standard equipment. However, all equipment will utilize sealed contacts for all circuits that can possibly spark. Power supply voltages of less than plus eight and minus eight Volts are recommended. Exception must be made in Cathode-ray Tube Displays or other Displays substituted.

PERFORMANCE

I Electrocardiographic

A. Frequency Response (minimum) - 6 dB points 0.05 Hz and 200 Hz (graphic recording only, 0.05 Hz and 125 Hz)

B. Dynamic Range (minimum) - 0.1 mV to 10 mV

C. Electrode Impedance to Skin (minimum), Preamplifier Input: - 2 megohms; "Active Electrodes", 500 kilohms; conventional

II Phonocardiographic - Frequency Response (minimum) - 6 dB points 20 Hz and 2000 Hz

III General

A. Signal to Noise Ratio (minimum) - 42 dB

B. Interface Analog Data

1. Level ±1 V = full scale
2. Impedance (maximum) = 500 ohms

C. Interface Digital Data - Binary Coded Decimal Preferred 0 and + 1.5 V

D. A/D Converters must accept the ±1 V analog signal as full scale (with maximum of ±2.5 V) and make the conversion to numerical values required for the parameter measured.

E. Calibration of transducers and preamplifiers will be accomplished by front-end signal insertion, so that entire signal chain is calibrated. When practical this should be done automatically or at command of attendant.

As discussed elsewhere, IMBLMS hardware are those common equipments which may be used in support of multiple experiment requirements. To optimize system design, these elements are integrated with each other and the spacecraft to provide a minimum weight/volume package. For example, similar functions are combined into one multipurpose device rather than a number of single-purpose devices.

An important system design consideration is electrical power and signal (sensor output) distribution, because cross-talk interference can significantly reduce the quality of output measurement signals. Similarly, because of the low level of many biological signals, grounding practices are extremely important in reliably obtaining signals. Biotelemetry has been extremely useful in eliminating grounding problems in physiological data acquisition systems. Potential biotelemetry receiver requirements were collated in the expectation that within the large volume of the S-IVB, requirements for biotelemetry within the vehicle will arise. Three such potential requirements are:

a. Ballistocardiography

b. Endoradiosonde

c. A small radius human centrifuge

One of the classic problems in the detection and monitoring of biopotentials is the interface between the transducer and the subject. Problems of changing skin electrode impedance call for a high-impedance system. The high-impedance system creates further problems because of lead length to the monitoring or recording equipment and associated design problems regarding the inputs stages of the equipment.

A so-called "Active Electrode" has been developed by AEL, Inc., as a solution to the classic problem. It consists of a micro-miniature circuit built directly into the conventional skin electrode. A gain of one is provided with an input or electrode impedance of greater than 2 megohms and an output impedance of less than 100 ohms. The low impedance line which runs from the active electrode to the monitoring equipment may be 25 to 50 feet or more. Motion artifact, alternating current interface, and many other problems associated with electrode use are appreciably reduced. If the AEL "Active Electrode" concept is used, then lead length is not a problem. As a result, the constraint of vest-mounted electronics also disappears and more conventional and versatile fabrication can be considered.

4.1.3.2 Basic Minimum Capability

The complete IMBLMS is being designed to support a program involving any of the tentatively-identified measurements, and yet be sufficiently flexible to enable as-yet undefined future support. The selection of measurements for any particular mission will be determined by several variables, such as priority of experiment, time available, characteristics and identity of the experiment site. The General Electric approach to accommodating such diverse experimental measurement requirements is to define a basic and minimal measurement capability which would be essential in any experiment combination, and to which standardized IMBLMS modules would be added as required to support any particular selected group of experiments.

Consistent with this approach, it has been assumed that each experimenter will want to measure the general environment in which his experiment is being performed. Acquisition of atmospheric parameters of temperature, total pressure, gross composition (i.e., oxygen, carbon dioxide, diluents, water vapor partial pressure) plus, perhaps, the g-level are desirable. Other environmental factors such as light level, trace contaminant concentration, may be required. None of the presently-identified experiment performance areas (LM, MDA, CM, OWS) provide a complete readout of the environment. In the LM system, although oxygen concentration is available, neither water vapor concentration nor g-level is available, and the accuracy of the data that is available may not be compatible with the experiments' needs.

Selection of the measurement of environment parameters for a minimal IMBLMS capability is arbitrary. A companion selection could be a measurement such as heart rate. Heart rate can be monitored directly, or extracted from other measurements as a by-product. The phonocardiogram and electrocardiogram are examples of two such measurements.

Assuming that an electrocardiogram was selected, a corresponding minimum system schematic is shown in Figure 4-3. Note that this minimum system capability inherently provides more than heart rate. Also, this minimum IMBLMS capability can be used to monitor crew viability, an important non-experiment function for IMBLMS. Actually, heart rate is a by-product of the electrocardiogram.

As shown in Figure 4-3, the feasible basic measurement capability would be made up of the modules to sense ECG and a minimum of environmental parameters, plus power conditioning, signal conditioning, and the data-management modules to provide the necessary programming, measurements and outputs.

Individual modules for this basic system capability may be identified as follows:

a. Single Purpose Modules

   1. Experiment Measurement Sensor (ECG)

   2. Atm Temperature Sensor

   3. Atm Total Pressure Sensor

   4. g-Level Sensor

   5. Atm - Partial Pressure Sensors (may be individual or combined)

   6. Programmer

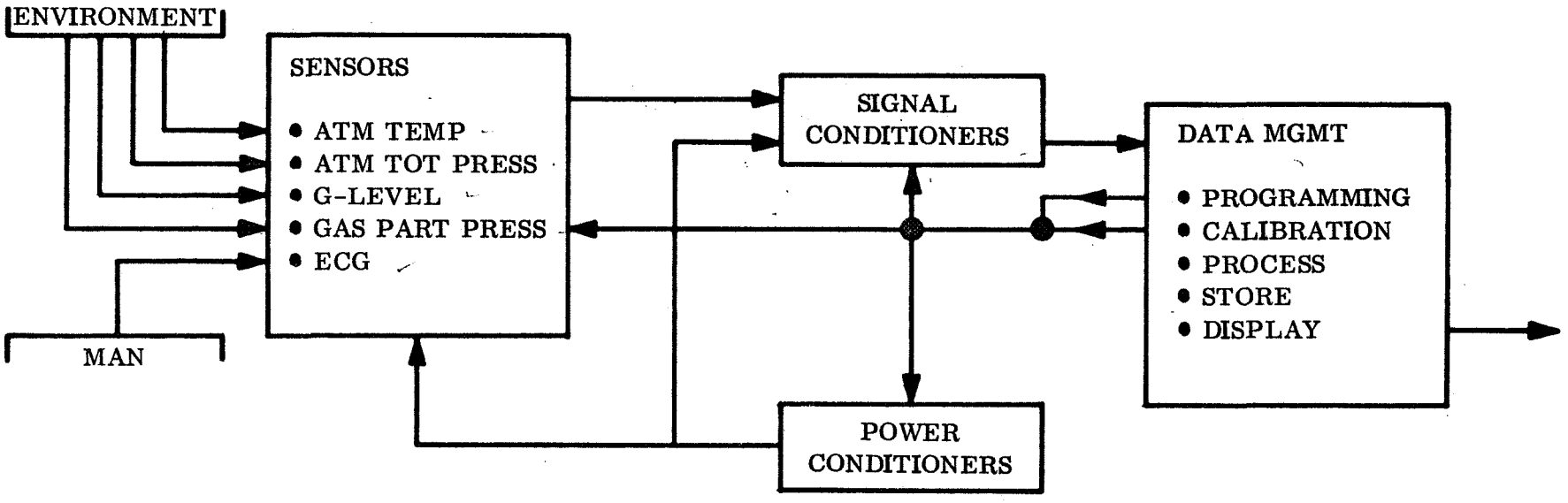

Figure 4-3. Basic Minimum System

b. Potential Multiple Purpose Modules

1. Display

2. Recorder

3. Power Conditioner

4. Signal Conditioners

5. Calibration

Because IMBLMS hardware is multiple-purpose wherever possible and thus capable of supporting more than one sensor, both single-purpose and potential multiple-purpose modules are identified.

The basic minimum system can be augmented to any degree dependent on the selected protocols. Figure 4-4 illustrates the basic minimum capability, augmented, for example, by respiratory measurements in conjunction with ergometer exercise. As indicated on Figure 4-4, the input to the atmospheric partial pressure sensor has been switched from the environmental input to the input from the human subject, and the ergometer output has been added to the system input.

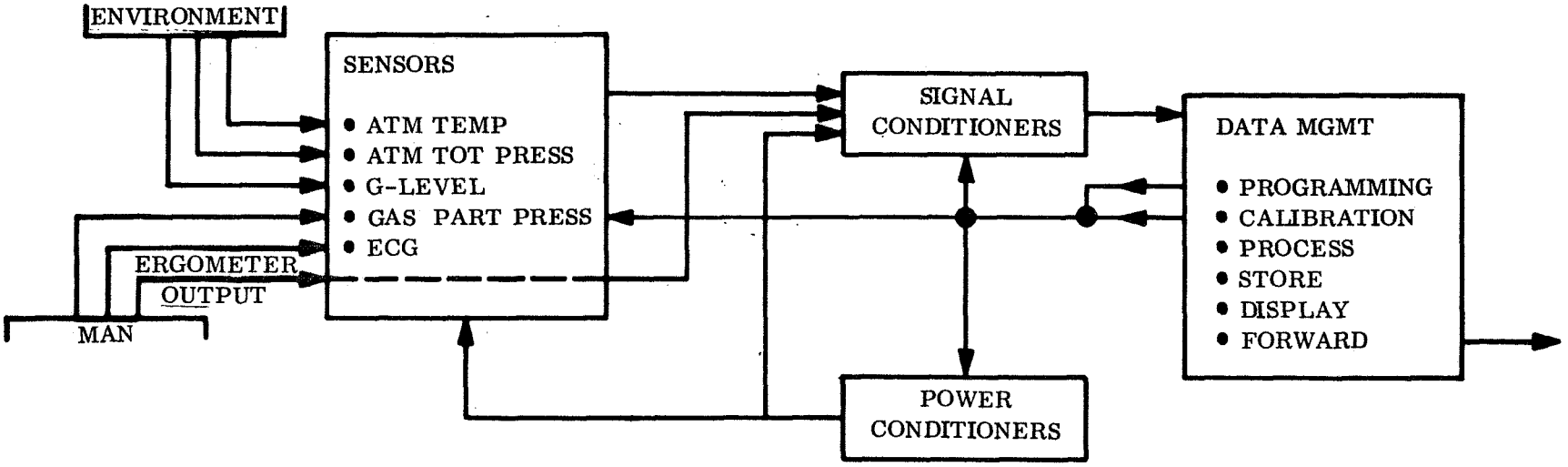

Figure 4-4. Augmented Minimum System

4.1.3.3 Module Definition

Inherent in the GE IMBLM system concept is the definition of a module as a system element which performs a specific system function. Dividing the IMBLMS into "standard" functional modules offers flexibility in meeting specific mission experiment requirements. Only those modules which are required are used, thus reducing size, weight, and cost for that particular mission. Whether a specific system function should be provided by several identical modules or one single module will depend primarily on the range of performance required and the effect of this performance range on physical size and weight. If the performance range is narrow or can be accommodated without significant effect on the size and weight, only a single module per function should be used.

The performance capability of each module must be based on the requirements of the entire IMBLMS assembly. One approach is to make each multipurpose module capable of supporting all foreseeable measurements. In some instances, this may be desirable. In others, the resulting physical size and weight or other complexity may warrant two or more submodules having the same system function, either identical in capability, or each having a different range of capability. For example, the power conditioning function for the total IMBLMS could be provided by three identical (or similar) power conditioning submodules. If only a few measurements are required for a specific mission, only one of the power conditioning submodules would be used.

In general, the system is amenable to the various possible combinations of experimental measurements by additions of appropriate modules, or by appropriate changes in computer software. Table 4-4 is an IMBLMS equipment list, formulated to show the multiple measurement and functional capabilities of the multipurpose modules. The emphasis on commonality is illustrated on Table 4-4 by the bio-potential amplifier which, for example, with suitable computer-programmed or manual control of gain and bandwidth, is used for ECG, EMG, EEG, PCG, Nystagmograph or Ear Oximeter measurements. In the same sense, of course, the Microscope module is used for RBC, NBC, differential white count, urine, and (possibly at a later date) examination of bacteria.

Table 4-4 does not include the multipurpose Data Management modules. These are covered by discussions contained in the Data Management section of this report. Also excluded from the table are the modules used for storage of sensors, biochemical reagents and processing paraphernalia, and interface connection leads, tubing, etc.

From current investigations, it appears that space-qualified methodologies and hardware, for carrying out most of the currently-planned on-board biological and chemical measurements, may not be available for mid-1970 operations. For early flights, and for those measurements where sample-freezing is feasible, storage of frozen samples would be necessary, with subsequent return of samples to the ground. Analyses for worst-case conditions indicate that a sufficient freezer capacity for on-board storage would entail a serious weight/size penalty. For such conditions, consideration is being given to the provision of small, modular, independent freezers: These would permit sizing the freezer capability to particular missions and as an additional advantage would permit the use of the small and independent freezer modules in

transporting to the ground during crew change-over operations. In this latter mode, the freezer modules may be used either without their associated modular refrigerant equipment, or with this low-powered equipment energized from the re-entry vehicle. It should be noted further, however, that freezer-sizing analysis, for sample-storage recommended elsewhere in this report, indicates a freezer of some 2.7 cubic foot volume, weighing 15 lbs., and consuming 13 watts. These figures are of the same order of magnitude as those for the above-mentioned modular independent freezers.

Table 4-4. Examples of Multipurpose Modules

Module	Measurement Function Served
Biopotential Amplifier	EEG EMG EKG Nystagmogram PKG Ear Oximeter
Δ Z Detector Amplifier	ZKG ZPN
Positive and Negative Pressure Control	Blood Pressure LBNP Carotid Neck Cuff Anti-G Suit
Thermistor Bridge Amplifier	Deep-Body Temperature Skin Temperature Nares/Mouthpiece Respiratory Sensor Other Temperatures
Strain Gauge Amplifier	Pressure Gauges Accelerometers Chest-Band Respiration Sensor Strain Gauge Plethysmograph
Capacitance Plethysmograph	Venous Compliance Limb Volume
Gas Flow Meter	Respiratory Rate Tidal Volume Lung Capacities

Table 4-4. Examples of Multipurpose Modules (Cont)

Module	Measurement Function Served
Gas Partial Pressure Analyzer	PO_2 PCO_2 PH_2O Respiration Measures Metabolic Measures
Centrifuge	Serum Plasma Urine (possible for microscopy)
Freezer	Blood Serum Plasma Urine Feces
Microscope	RBC WBC Differential White Count Urine Bacteria (Possible)
Waste Bailer	Disposal Waste
Add-ons for Later	
Spectrophotometer Fluorimeter Nephelometer Densitometer Radiation Counter	Incubator Refrigerator Thin-layer Chromatograph Temperature Bath

Because of the design approach featuring commonality and multipurpose modules, a minimal group of IMBLMS modules will have the inherent ability to perform all of the measurements for which several separate government-furnished equipments are suggested in paragraph B2 of Article II, Statement of Work, NASA-RFP-10-1243. Significant savings may accrue by waiving use of some of the proposed, separate government-furnished equipments which perform single-measurement functions, such as the electrocardiograph, vectorcardiograph, phonocardiograph, impedance pneumograph, electroencephalograph, body care temperature measurement system, and possible the egocentric visual location of horizon measurement system. (Items b, c, d, g, j, l, and m, of the referenced paragraph.)

In most of these instances it may be feasible to use only some elements of the GFE systems, such as the sensors. The functions of the remaining elements, i.e., displays, signal conditioners, controls, etc., are available from the multipurpose amplifiers, signal conditioners, display elements, etc., inherent to the IMBLMS equipment. As an example, multipurpose modules and elements of IMBLMS perform as a vector-cardiograph or electroencephalograph, etc., merely by appropriate software programming and interface connection with appropriate body-mounted sensors elements.

It is important to note that the IMBLM system does not contain, for example, an electroencephalograph module per se, but rather an electroencephalograph measurement capability. This measurement capability is achieved by an appropriate functional combination of standardized single and multipurpose modules.

4.1.3.4 Computer Capability

The computer capability, whose operation is more fully described in the data-management section, is a central factor that enables multiple-function performance of the modules in many of the measurement operations.

For various operational configuration levels, the IMBLM system performs its various measurement functions by modifying software and the programming of the data management sub-system, and not be the addition of single-purpose measurement complexes. This is in accord with the General Electric approach of designing multipurpose modules for optimum flexibility. The use of the on-board computer, along with the IMBLMS data management subsystem, further reduces the number of separate equipments which IMBLMS must provide.

The data management subsystem is designed with essentially the same modularized flexibility applicable to the IMBLMS as a whole. The flexibility of IMBLMS in meeting the various mission-oriented combinations of measurements is matched, to a considerable degree, by the flexibility of the data management subsystem to meet the operational requirements of the experiment protocols. These varying requirements may result from trade-off studies involving total-mission-oriented time-line analyses, desired degree of IMBLMS automation, operator skills and training, mission-payload weight/volume restrictions, etc.

Table 4-5 shows the breakdown of signal processing requirements between IMBLMS modules and the on-board computer, for some of the measurement capabilities.

The advantages of maximum use of the computer and data management capabilities are most apparent in the behavioral area. GE has had a considerable amount of experience in behavioral testing, e.g. 15-day and 30-day space cabin simulation experiments, and has developed several computer-controlled measures of performance.

The presence of an extensive data management system as an integral part of IMBLMS enables the system designer to take full advantage of the commonality principle. By judicious use of the displays, controls, and data management facilities inherent in IMBLMS, together with the on-board computer, a comprehensive behavioral testing battery may be constructed. As an example, Table 4-6 shows the behavioral measurements, along with the equipments necessary to make these measurements.

Table 4-5. Computer Functions for Various Measurement Capabilities

Measurement Capability	Modules Function	Bio-Med Computer Functions
EKG	AMP, Frank Network	Calibration, Heart Rate
Nystagmogram	AMP	Calibration, Rate Amplitude
EMG	AMP	Calibration, Integration
EEG	AMP	Calibration, Spectral Analysis
PKG	AMP and Microphone	
ZKG	AMP	Stimulus Generation, Calculation of ΔZ, Calibration
ZPN	AMP	Stimulus Generation, Calculation of ΔZ, Calibration
Capacitance Plethysmogram	AMP	Stimulus Generation, Calculation of ΔC, Calculation of Body Volume, etc.
Thermistor Measurement	AMP	Calculation of ΔT, Respiration Rate, Tidal Volume
Strain Gauge Measurements	AMP	Calculation of Physiological Parameters
Gas Partial Pressures	Detection, AMP	Calculation of Metabolic and Respiratory Parameters
Behavioral Tasks	Utilization of Displays and Controls, Keyboard Entry	Generation of Stimuli, Calculation of Responses

Table 4-6. Computer Functions in Behavioral Measurements

Measurement Group	Measurements Taken	IMBLMS Equipment	Computer Functions
Visual Function	Acuity, Depth Perception, Phorias, Pattern and Form Recognition	Modified Orthorater	Programming, Data Entry
	Reading	Modified Orthorater, Oculometer	Programming, Data Entry
	Dark Time Adaption	Hecht-Schlaer Adaptometer in Orthorater, Oculometer	Programming, Data Engry
Auditory Function	Pitch, Intensity, Localization, Patterns, Motion	Stereo Earphones	Stimulus Generation, Programming, Data Entry
Kinesthetic Function	Positional, Dynamic	Cinematography, Force Measurement	Stimulus Generation, Programming
Vestibular Function	Vestibular Mechanisms	Rotating Litter Chair, Modified Otolith Test Goggle and Rod/Sphere Device Mounted in Orthorater	Programming, Data Entry
Orientation Ability	Temporal	Stereo Earphones	Stimulus Generation, Data Entry
	Positional	Modified Otolith Test Goggle in Orthorater	Stimulus Generation, Data Entry
	Localization	Two-Point Discrimination Calipers	Data Entry

Table 4-6. Computer Functions in Behavioral Measurements (Cont)

Measurement Group	Measurements Taken	IMBLMS Equipment	Computer Function
Psychomotor Function	Manipulation, Dexterity, Positioning, Steadiness	General Purpose Controls and Displays Associated with Other IMBLMS Measuring Equipment	Stimulus Generation, Scoring, Programming, Data Entry
Gross Motor Movement	Locomotion, Dexterity	Cinematography	Programming
Continuous Processes	Pursuit Tracking, Compensatory Tracking	Modified Rod/Sphere Device and/or CRT with Control Stick	Programming, Error Analysis, Data Entry
Discrete Processes	Simple and Complex Reaction Time	IMBLMS Warning Lights, Dials and Other Displays and Controls	Programming, Timer, Data Analysis
Cognitive Processes	Target Identification, Code-Lock Solving, Arithmetic Computation	IMBLMS Displays and Controls	Programming, Scoring, Data Entry

In Table 4-6, the modified orthorater is a significant addition to the equipment complex. Orthoraters are clinically used to measure all of the parameters listed under Visual Function. The orthorater may also be modified, however, to allow its use as a substitute for the otolith test goggle and the rod/sphere device. The flight-qualified test goggle, for example, depends upon cinematography for data recording. If the orthorater were used in conjunction with the biomedical computer, a more accurate measure of apparent horizonality and vertical position could be obtained. Both of these devices may also be controlled by the computer, permitting their use as tracking testers.

The power of the computer as a stimulus generator is manifested in the measurements of Auditory Function. A stereophonic earphone set, in conjunction with the computer, makes an extremely versatile audiometric system. The system's designer, however, must be cognizant of the importance of stray noises. It would not be feasible to build a soundproof chamber as a part of IMBLMS, and bone conduction might make all of these measurements useless.

For such tasks as warning-light monitoring and arithmetic computation, the advantages of computer control are obvious. The displays which are an integral part of the biomedical monitoring system, together with their controls, software, and a keyboard entry device permit a multitude of such measurements. Their efficiency and complexity is limited primarily by the ingenuity of the system designer.

General Electric has received a number of proposals for the development of sophisticated behavioral equipment. Examples of these are the noncontacting eye motion sensor developed by Bio-Systems and the oculometers made by both Honeywell and Bausch & Lomb. While these instruments can be very useful in determining ocular parameters, they are still not sufficiently developed to be currently considered for IMBLMS. The IMBLMS system, however, must and does supply the support functions necessary for their inclusion at a later time. For the present, an electro-oculogram, taken with the general purpose biopotential amplifier and EEG electrodes placed bi-temporally will adequately describe eye motion.

4.1.3.5 Degree of Automation

Many of the factors which would determine the optimum degree of automation designed into the IMBLM system operation are as yet indefinite. Among these is the relation between subject motivation and the measurement protocols.

However, some basic points have evolved which can provide initial direction. The time-line analyses indicate that available experiment time is at a premium. Since there are many periods during which only one astronaut is available for measurement procedures, the astronaut's activities with respect to the measurements should consist of only what is necessary for setting up the experimental gear and establishing the measurement interface connections. The remaining actions should then be automated to the greatest possible and feasible extent. This would include automatic scheduling and alerting, with manual override. In addition, procedural instructions for setting up modular interfaces and performing the measurements should be stored, and displayed via automatic (or manual) call-up. The conduct of repetitive groups of procedures involving sequenced, multiple measurements, especially from

electronic-output sensors and behavioral protocols, should be completely automated if possible. Computer software can program and route input stimuli, timing, and sensor outputs via appropriate, automatically-selected signal channels from computer to sensor and back to sensor and back to data termination points (i.e., display, transmit, or store). Feedback of calibration measurement output information, via display to the operator for comparison with stored/instructions, should be automatic. Similar feedback of measurement information should be accomplished automatically if meaningful and feasible for procedural purposes.

4.1.3.6 Overall System

The capabilities of the complete IMBLMS system are illustrated on Table 4-6A. Column 1, "Measurement group," identifies the generic class of measurements. Column 2, "Measurements," indicates the types of measurements which are anticipated and enabled in each class. Column 3, "Sensors," points out the type of sensor used for the respective measurements. Where no clearly identified sensor is mentioned, particularly in some behavioral and specimen-sampling protocols, the phrase "keyboard entry" is used to identify that the observer registers data in the data management unit via keyboard punch. Column 4, "Sensor Support," identifies ancillary support equipment or material used in conjunction with the sensors. Column 5, "Computer stimulation needed," indicates computer function outputs to the measurement procedure, as differentiated from computer functions that process data for ultimate delivery to the principle investigator. Column 6, "Signal Conditioner," contains entries for only those electrical measurements which require processing prior to input to the data management unit: The entries identify the signal conditioner type. Column 7, "Computation performed by computer," identifies the measurement parameter of which an analog or digital version is fed to the data system storage, display, or transmission elements.

Essentially, Table 4-6A illustrates the equipment/elements and their functions, within IMBLMS that would correspond to any particular measurement. However, the functions and elements within the data management subsystem are not identified on Table 4-6A, since these are described in the data management section of this report.

Similarly, Figure 4-5 illustrates the flow of the various measurement functions of which the IMBLMS is capable. However, the performance of measurements on, and processing of, sampled specimens such as blood, urine, etc., is not included, because these operations are essentially manual.

The measurements identified and classified in the left-hand columns of Table 4-6A, are detected or generated by the respective sensors identified in the "sensor" block. After conditioning of the resulting outputs, by the elements in the "signal conditioner" block, the measurement analog is fed to the "Data Management Subsystem," where the values indicated in that letter block are computed. Dotted lines across the "signal conditioner" block imply that the signal conditioning function is not used, but is by-passed. The functioning within the data management subsystem is not shown, since this aspect is discussed in the data management section of this report.

Table 4-6A. IMBLMS Capabilities

1 Measurement Group	2 Measurements	3 Sensors	4 Sensor Support	5 Computer Stimulation Needed	6 Signal Cond.	7 Computation Performed by Computer
Bio-Potential	EEG, EKG, EMG, Nystagmogram (EOG)	Active electrodes	Frank network electrode application kit junction box, fusing, cabling	Calibration	General purpose diff'l ampl- adjustable bandwidth and gain selected by (software or manually)	Heart rate Integrated EMG
Temperature	Skin temp, core temp. nares air flow, cabin air and wall temp.	Thermistors	Bridge circuit cabling	Calibration	General purpose diff'l ampl- adjustable bandwidth and gain selected by (software or manually)	Resp. rate
Strain Gauge	Pressure (blood), press, LBNP, respiratory, environmental), accelerometers, dynamometers, etc.	Strain gauge transducers	Cabling	Calibration	General purpose diff'l ampl - adjustable bandwidth and gain selected by (software or manually)	Pressures, accelerations, forces applied, their derivatives, etc. control functions may also be required
Body Impedance	ZKG, ZPN venous pressure, regional blood flow	2 passive electrodes (stimulation), 2 active electrodes (pick-up)	Electrode application kit, junction box, fusing, cabling	Generation of high frequency constant current source	High freq. amplifier	Base impedance, impedance change, rate of impedance change, cardiac output, respiration rate, tidal volume
Respiratory	Lung capacities, O_2 consumption, CO_2 production, pulmonary ventilation, pressure/flow/ resistance	Gas flowmeter, mass spectometer, pressure gauges	Face mask, metabolic hood, hoses, valving, flow interrupter (for intrapleural pressure), calibration gases		General purpose differential amplifier	Calculation of metabolic and pulmonary measures, e.g. O_2 consumption, CO_2 production, R.Q., perfusion and diffusion, etc.
Cardiac Microphone	PKG Blood pressure	Chest microphone Pressure gauge, Karotkoff sound microphone	Adhesive, cabling Cuff, programmed pressure source	Cuff pressure Programming	(For PKG) General purpose differential amplifier (for blood pressure). General purpose differential amplifier, plus tuned amplifier for Karotkoff sounds	Calculation of systolic + diastolic pressure

Table 4-6A. IMBLMS Capabilities (Cont)

1 Measurement Group	2 Measurement	3 Sensors	4 Sensor Support	5 Computer Stimulation Needed	6 Signal Cond.	7 Computation Performed by Computer
Ultrasonic	Cardiac output, venous pressure, regional blood flow, limb volume, gastric motility, many others	Crystal	Pulse generator, adhesive	Control of pulse generation	Receiver-comparator	Evaluation of echo or doppler effect
Plethysmograph	Limb volume, response to occluding cuffs, venous pressure, others	Mesh cuffs	Cabling, fusing, oscillator circuit		High frequency amplifier	Calc. of ΔC, Δ volume
Orthorater	Dark time adaption, visual acuity, depth perception, phorias, pattern discrimination, reading, modified otolith test goggle, rod sphere device, etc.	Keyboard entry	Microfilm projector, lenses, controls, light meter	Programming of tests, light intensity control etc.		Response analysis
Tracking, Motor Movement	Two and three dimensional, kinesthetic function, psychomotor function	Control stick, control stick with telescoping handle	Modified rod/sphere, oscilloscope screen, three dimensional course	Generation of signal to be tracked		Calculation of position, errors, steadiness, etc.
Auditory	Pitch, intensity, localization, patterns, motion	Keyboard or switch entry	Stereo earphones	Generation of all auditory stimuli		Response analysis
Discrete Process	Reaction time, alertness, cognitive	Keyboard entry	Displays and controls	Generation of arithmetic problems, warning light control, etc.		Calculation of response time and accuracy
Specimen Sampling	On-board: Hematocrit, RBC, WBC, blood clotting time, urine pH Post-flight: Feces, serum, plasma	Keyboard entry for on-board measure Possible keyboard entry for accounting, time	Biochemical storage centrifuge, freezer microscope, waste baler			

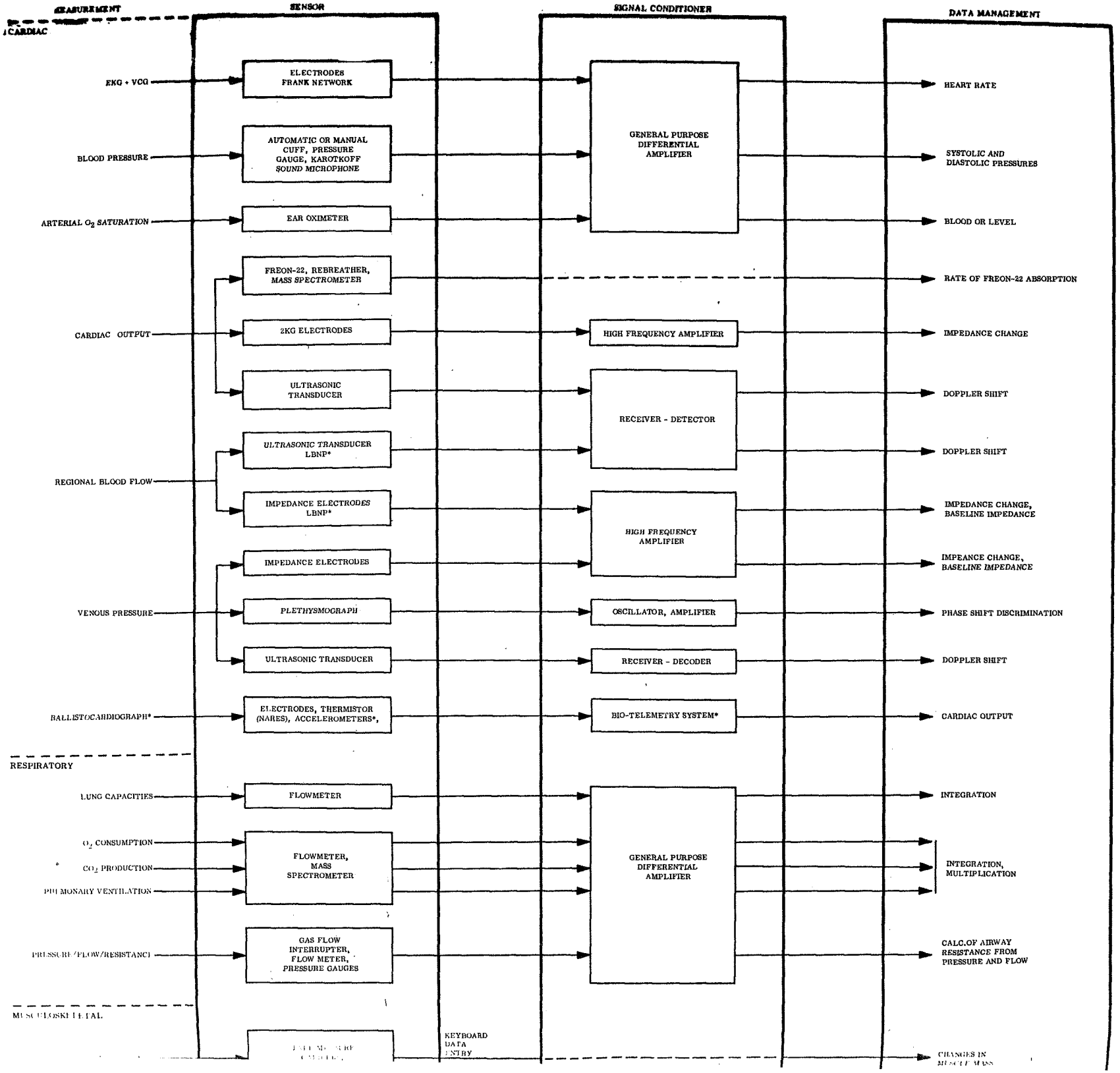
MEASUREMENT
SENSOR
SIGNAL CONDITIONER
DATA MANAGEMENT
CARDIAC
EKG + VCG
ELECTRODES FRANK NETWORK
HEART RATE
BLOOD PRESSURE
AUTOMATIC OR MANUAL CUFF, PRESSURE GAUGE, KAROTKOFF SOUND MICROPHONE
GENERAL PURPOSE DIFFERENTIAL AMPLIFIER
SYSTOLIC AND DIASTOLIC PRESSURES
ARTERIAL O2 SATURATION
EAR OXIMETER
BLOOD OR LEVEL
FREON-22, REBREATHER, MASS SPECTROMETER
RATE OF FREON-22 ABSORPTION
CARDIAC OUTPUT
2KG ELECTRODES
HIGH FREQUENCY AMPLIFIER
IMPEDANCE CHANGE
ULTRASONIC TRANSDUCER
RECEIVER - DETECTOR
DOPPLER SHIFT
ULTRASONIC TRANSDUCER LBNP*
DOPPLER SHIFT
REGIONAL BLOOD FLOW
IMPEDANCE ELECTRODES LBNP*
HIGH FREQUENCY AMPLIFIER
IMPEDANCE CHANGE, BASELINE IMPEDANCE
IMPEDANCE ELECTRODES
IMPEANCE CHANGE, BASELINE IMPEDANCE
VENOUS PRESSURE
PLETHYSMOGRAPH
OSCILLATOR, AMPLIFIER
PHASE SHIFT DISCRIMINATION
ULTRASONIC TRANSDUCER
RECEIVER - DECODER
DOPPLER SHIFT
BALLISTOCARDIOGRAPH*
ELECTRODES, THERMISTOR (NARES), ACCELEROMETERS*,
BIO-TELEMETRY SYSTEM*
CARDIAC OUTPUT
RESPIRATORY
LUNG CAPACITIES
FLOWMETER
INTEGRATION
O2 CONSUMPTION
CO2 PRODUCTION
PULMONARY VENTILATION
FLOWMETER, MASS SPECTROMETER
GENERAL PURPOSE DIFFERENTIAL AMPLIFIER
INTEGRATION, MULTIPLICATION
PRESSURE/FLOW/RESISTANCE
GAS FLOW INTERRUPTER, FLOW METER, PRESSURE GAUGES
CALC.OF AIRWAY RESISTANCE FROM PRESSURE AND FLOW
MUSCULOSKELETAL
KEYBOARD DATA ENTRY
CHANGES IN MUSCLE MASS

1.4-27/14-28

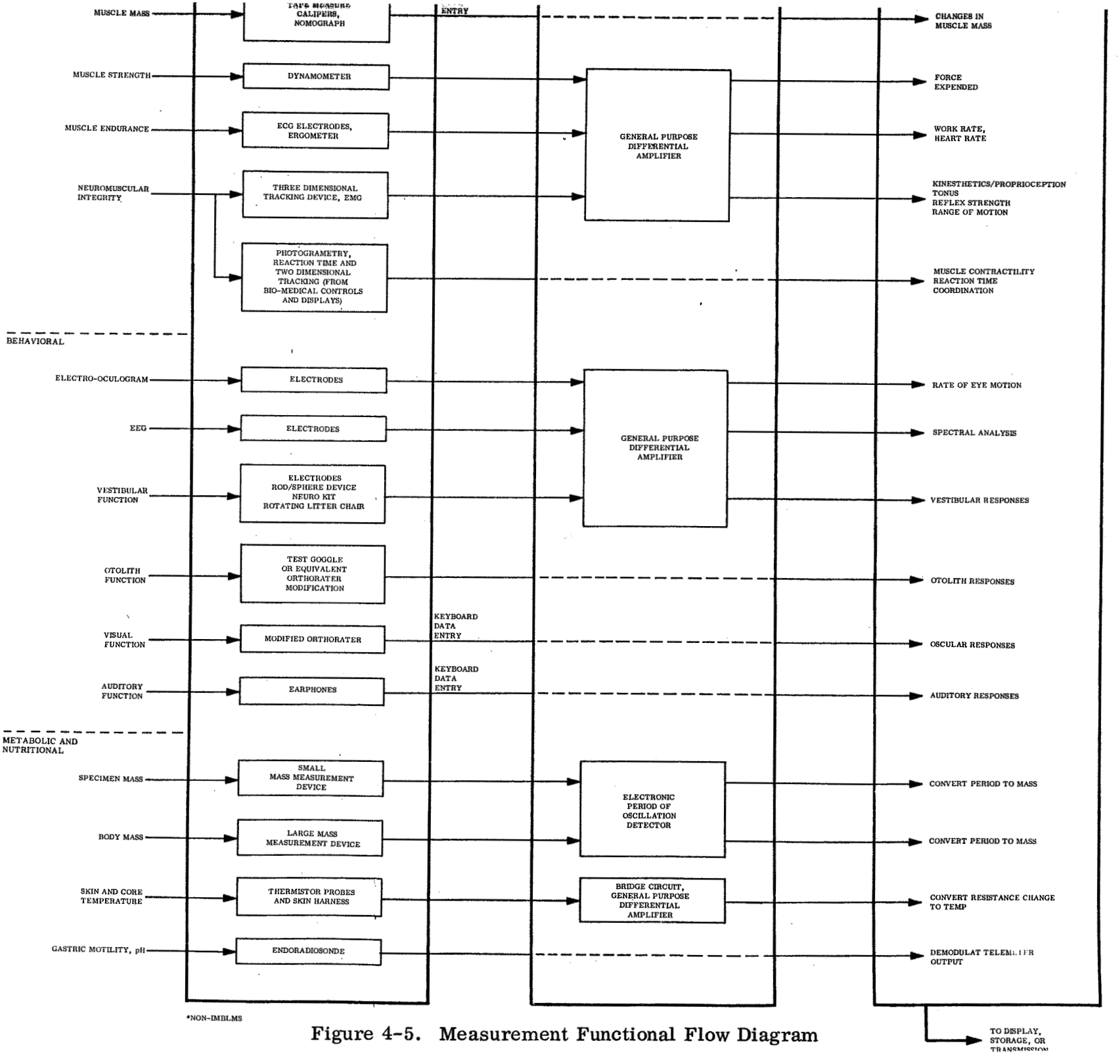

Figure 4-5. Measurement Functional Flow Diagram

4.1.3.7 System Weight, Volume, and Power Consumption

The estimated weight, volume, and power consumption of the complete IMBLMS, excluding an allowance for expendables, are calculated to be:

Weight	277 lbs.
Volume	19 cubic feet
Power consumption	501 watts

A detailed breakdown of these figures is provided in the equipment section of this report.

Calculation of these parameters for a minimum basic capability is affected significantly by the degree to which the data management subsystem is utilized, and the particular selection of measurements to be made. In general, however, the parameters appear to be of approximately the following values:

Weight	70 lbs.
Volume	2.8 cubic feet
Power consumption	250 watts

4.1.3.8 Summary

The Integrated Medical and Behavioral Laboratory Measurement System (IMBLMS) as conceived by General Electric will provide, in a modular packaging arrangement, the common measurement and service functions for in-orbit support of planned and anticipated aerospace medical and behavioral experiments. IMBLMS is essentially the spacecraft equivalent of a ground-based laboratory facility. The equipment is designed to meet rigid space-oriented requirements including safety of astronauts and vehicle, spacecraft interfaces, operational simplicity, mission-support flexibility, and growth potential.

The design approach features functional modules with multiple applications to a variety of measurement protocols, thus avoiding a multiplicity of separate, individual-measurement equipments. Selected functional modules would comprise a basic minimum capability which would perform measurements necessary in conjunction with essentially any planned experiment protocol. This minimum capability would measure selected environment parameters and a basic subject parameter such as heart rate. The IMBLM system can then be sized for any mission-oriented experiment support, by inclusion of a minimum number of appropriate additional standardized multi-functional modules.

The IMBLMS data management subsystem and the on-board computer capability provide the multiple functions that enable automation of significant portions of the measurement procedures. Use of these facilities is of special value in behavioral and physiological measurement protocols. For measurements associated with specimen processing, the data management subsystem serves primarily for scheduling and data recording.

An overriding consideration in system design has been, and must continue to be, the safety of the astronauts and spacecraft. Emphasis is placed on all measures necessary to assure the elimination of potential hazards from fire, electric shock, structural factors (sharp edges, wear and pinch points, etc.) and faulty measurement results.

4.2 DATA MANAGEMENT

The Phase B IMBLMS Data Management Study has resulted in the following:

a. Establishment of criteria which the data management subsystem should satisfy.

b. Analysis of the on-board and ground communications network to a degree sufficient to:

   1. Identify constraints which will affect the data management concept;

   2. Identify areas where modifications in data handling techniques or equipment may be required.

c. Identification of measurement requirements in sufficient depth to estimate maximum system requirements and operating ranges.

d. Preliminary analysis of the data accumulation and transmission load and analysis of the effects of data compression.

e. Functional requirements for the data management design.

f. Definition of the preliminary data management subsystem design concept.

The design concept required some assumptions as to probable advances in the state-of-the-art, but these assumptions are based on core developments already under way and with high probability of success for use in 1970 hardware. The more significant aspects of concept evolution to the current design stage are:

a. Software revision is chosen in preference to hardware modification to accommodate high variability in experiment requirements.

b. A variable programmed data acquisition concept is chosen because of varying measurement requirements and considerable variation of amount of data required among the measurements.

c. The concept of digitizing data close to the sensor source is chosen because of the need to reduce the volume of data transmitted, the requirement for multi-purpose processing, and the necessity for high accuracy and consistent reproducibility.

d. The use of an on-board computer is incorporated in the design concept because of the necessity to perform considerable on-board processing for experiment control, data analysis, data acquisition, data compression, data display, etc.

It is intended that the common hardware of the data management system will fulfill multi-purpose functions thereby eliminating portions of the special purpose hardware. In the

early IMBLM systems, communication between the experimenter and the DM (Data Management) subsystem will be via a display and control keyboard interface. In subsequent IMBLM system evolution, verbal communication or instruction by the DM subsystem to the experimenter is deemed practical.

The IMBLMS Data Management Phase B Study results are discussed in the following order:

a. Definition of IMBLMS Data Management Design Criteria

b. Communications Network

c. Measurements and Measurement Load

d. Data Compression and Effects on Measurement Load

e. Functional Design Requirements

f. Preliminary Design Description

g. Summary

4.2.1 CRITERIA FOR IMBLMS DATA MANAGEMENT

The following criteria was established as basic guidelines for the conceptual design of the IMBLMS Data Management subsystem. The criteria are self explanatory and it is intended that the subsystem concept will demonstrate compliance.

4.2.1.1 Criteria Related To On-Board Usage

The following items comprise the criteria for on-board use of the IMBLMS:

a. Provide automatic safety and hazard indication

b. Provide a universal control, entry and display capability

c. Provide remote control and display capability

d. Accommodate special case unique control and display requirements

e. Provide for storage and recall of data

f. Provide on-board data work bench capability

g. Permit astronaut assessment of experiment progress

h. Permit simple operating procedures

i. Provide experiment procedure and operating instructions display

4.2.1.2 Criteria For Hardware Design

The following items comprise the criteria for the design of IMBLMS hardware:

a. Provide for flexibility and modular expansion

b. Provide standardized digital and analog interfaces

c. Demonstrate good integration with spacecraft communications hardware

d. Demonstrate optimum design tradeoffs for effectiveness versus power, volume, weight, etc.

e. Comply with space envelopes of the Orbital Cluster, LM and Refurbished Command Module

4.2.1.3 Criteria For Operational Aspects

The following items comprise the criteria for operational aspects of the IMBLMS;

a. Satisfy the requirements of the principal investigators

b. Satisfy the requirements of the mission operation functions

c. Provide well integrated time sharing with on-board systems and the communication networks

d. Reduce data handling and transmission to a practical minimum which will accomplish objectives desired

e. Hold data in storage on-board for durations sufficient to permit assessment by ground personnel

f. Provide a consistent and integrated checkout interface that accommodates AAP pre-launch and post-launch checkout procedure and policy

4.2.2 COMMUNICATIONS NETWORK

The primary purpose of the IMBLMS is the support of the medical and behavioral experiments, therefore, it is essential that required experiment results are not compromised as a result of constraints introduced by either the DM subsystem or the communication network. It is incumbent upon the data management subsystem designer to design the

optimum subsystem by specifying data collection and transmission techniques compatible with existing and planned ground receiving capability. This section indicates GE's understanding of the Apollo Communication Network inasmuch as it would affect the IMBLMS Data Management problem.

It must be noted that the final configuration of the communications system for the orbital cluster and the ground systems has not been finalized and that there are some conflicts in indicated capabilities. This in part results from the fact that the support requirements for Gemini, Apollo Missions and Apollo Applications missions are not identical and that the capabilities are currently being modified and updated. Communications personnel of the AAP Payload Integration Contractor (Martin-Denver) were contacted with an end result of better understanding and some clarification.

4.2.2.1 On-Board Communications System

The on-board communications system can be dividided into two major categories. One concerns IMBLMS on-board data handling and the other concerns the on-board transmitters. On-board data handling is discussed later. This section will consider the transmission capabilities.

Figure 4-6 illustrates the potential on-board transmission capabilities. Potentially, there will be nine carriers used to transmit the entire AAP "cluster" data. The two VHF transmitters identified in the S-IVB may not be included. Of these nine only three are presently under consideration as real time links, one USB in the CM, one VHF in the AM and one VHF in the ATM. Thus, transmission over the other six will require recording at the ground station prior to transmission to MCC-H. It is currently intended that the total PCM capability of one of the nine transmitters will be assigned for the exclusive use by IMBLMS when IMBLMS data is to be transmitted. The probable candidates for IMBLMS assignment, in most probable to least probable order are:

a. The VHF playback transmitter in the airlock.

b. The FM-USB, in PCM mode, in the Command Module.

c. One of the two VHF transmitters in the S-IVB if included in the system.

d. The PM-USB in PCM mode in the command module.

e. The housekeeping VHF transmitter in the airlock.

The USB PCM rate is currently 51.2 kilobits/sec as contrasted to 112 kilobit/sec rate indicated for the VHF transmitters.

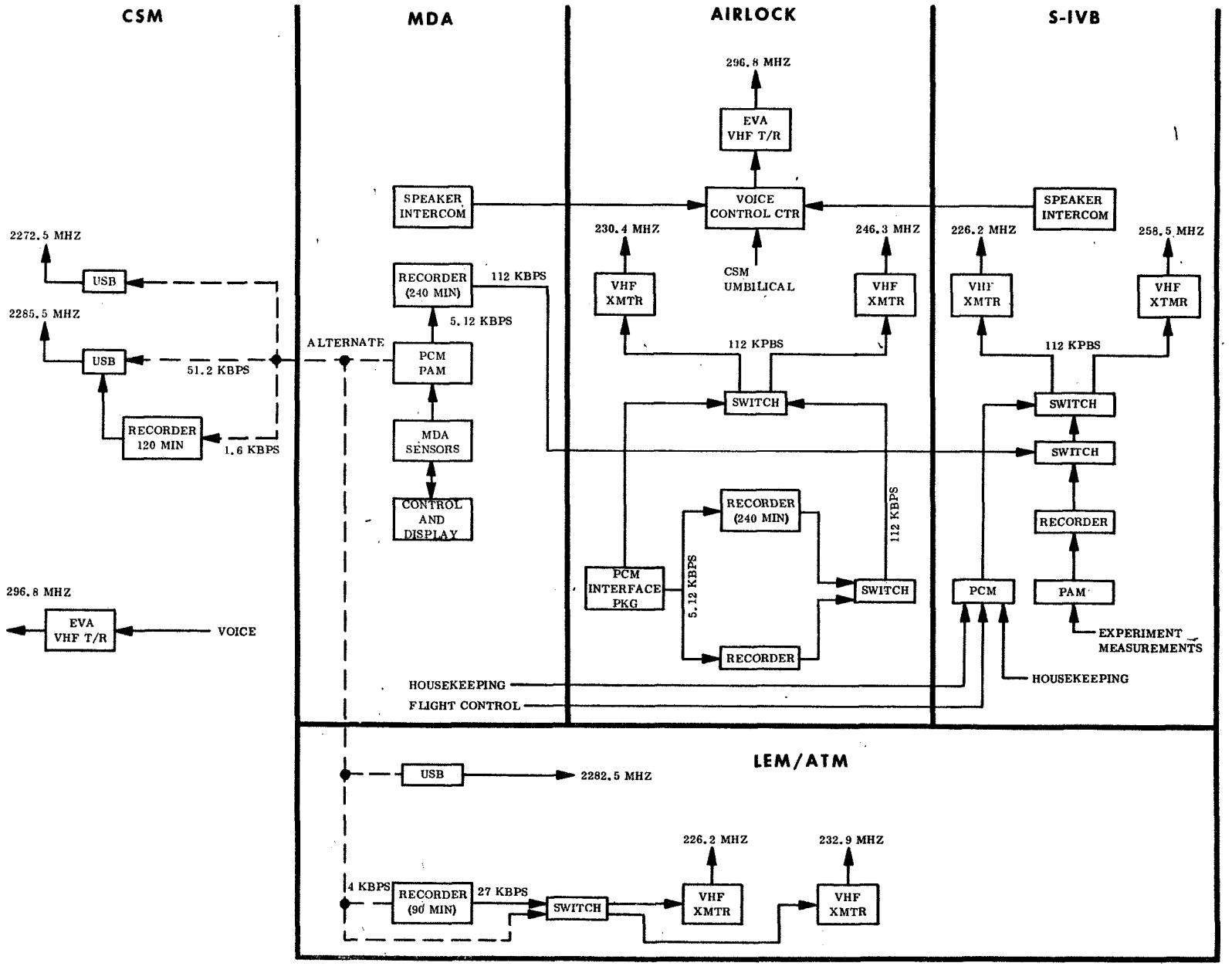

Figure 4-6. Communication Subsystem Block Diagram for Orbital Cluster

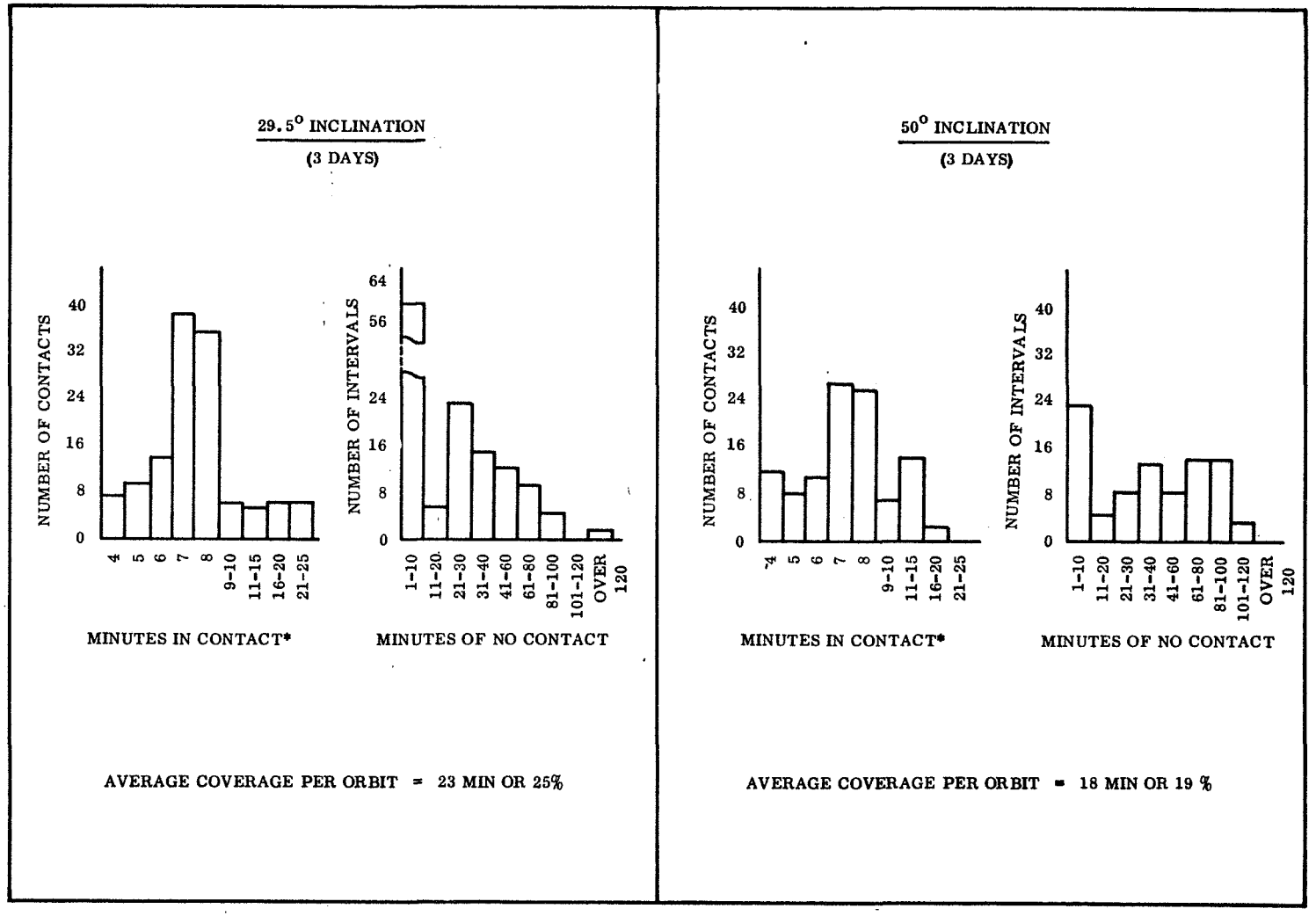

*CONTACTS OF LESS THAN 4 MINUTES ARE NOT CONSIDERED

Figure 4-7. Telemetry Coverage for 14 USB Sites

The airlock playback transmitter currently has three operating options:

a. Playback tape from MDA and AM.

b. FM data out of Work Shop (S-IVB)

c. Voice

A fourth option for IMBLMS PCM data could be added.

The 112.5 kilobit data rate capability for the A/M VHF transmitter may not be firm in that the current carrier bandwidth of 125 KHz is not compatible with the desired 112 KHz X 1.5 = 168 KHz bandwidth. McDonnel Aircraft is currently considering expanding the bandwidth. The 300 KHz bandwidth of the ground station is compatible.

Two PCM data rates have been identified for the S-IVB workshop transmitters, i.e. 72 kilobits/sec. and 112 kilobits/sec. The 72 kilobit/sec. data rate was indicated as most probable.

In summary, data from all 9 transmitters aboard the cluster can be transmitted, and one of these data rates, 51.2, 72 or 112.5 kilobits/sec. will be assigned to IMBLMS.

If it were assumed that all transmitters were to transmit in PCM mode, a total data rate from the space station (orbital cluster) could exceed 600 kilobits/sec. when over a ground station.

4.2.2.2 Space To Ground Interface

Consideration must be given to the fact that spacecraft-to-ground contact is not continuous.

Figure 4-7 indicates a statistical distribution of telemetry (T/M) time durations of rf contacts between the spacecraft and ground stations, and T/M time durations of no rf contact, for 3 typical mission days for a spacecraft in a 28½-degree and a 50-degree inclined orbit. An orbital inclination of 50 to 60 degrees may be used for the second orbital cluster.

It should be noted that Figure 4-7 assumes usage of all 14 MSFN USB sites and perfect circle interceptions between the spacecraft and the ground station receiving range cones, which is probably optimistic. The average coverages per orbit are also indicated for orbit inclinations of 28.5 and 50 degrees and are 25% and 19% respectively. With use of 11 sites and accounting for time-line problems, the 25% can reduce to 10%. It is evident that T/M contacts of 7 to 8 minutes are the most common and that intervals of no T/M contact of 20 to 40 minutes are not uncommon. Some periods of no T/M contact extend to over two hours. This indicates that it may not be practical, or may even be impossible, to transmit IMBLMS associated experiment data in real time during total time of an IMBLMS monitored experiment. The assumption is made that, generally, the experiment will take more than seven to eight minutes and, unless tightly scheduled, would be unlikely to coincide, start-to-finish,

with the time period during which the spacecraft passes through a ground station communication cone. Barring a continuous air-to-ground communication capability, which would be accomplished with communication satellites, it will be necessary to accumulate the experiment data into a pre-addressed coherent data package and then transmit the data to the ground when the spacecraft next passes in range of a ground station. However for maximum flexibility, provision will be made in IMBLMS for real time and playback transmission.

4.2.2.3 Apollo Communications Network (NASCOM)

Figure 4-8 illustrates a typical Apollo communications network. Of immediate interest to the data management task are the 11 ground station sites (see sites marked with asterisk) shown in upper left corner, identified tentatively as the minimum requirement for ground station support for the early AAP Orbital Workshop Cluster in a $28\frac{1}{2}$-degree inclined orbit. Generally, the ground sites can process 3 or 4 spacecraft links in real time. Each of these ground sites are requested to provide at least 6 High Speed Data Channels (2 to 2.4 kilobits/sec) to GSFC. NASCOM must be capable of routing data simultaneously from six sites to MCC-H. These channels are tentatively allocated as follows:

a. One for High Speed Tracking.

b. One for A/G voice.

c. Two for T/M data.

d. One for T/M data or A/G voice.

e. One of Aeromed Data, Telemetry Data or Site Coordination Voice.

Of the six channels, the number of lines assigned to T/M data are not to exceed three. Depending upon the interpretation of aeromed data, this implies 7.2 to 9.6 kilobits per second of data. The wide band data rate out of GSFC is 2 channels of 40.8 kilobits/second. There is also two wide band lines out of KSC to MCC-H. Considering the nature of the experiments for AAP and general housekeeping requirements, the orbital cluster transmission capability, and the effects of other missions such as Apollo, a second cluster, etc., the data transmission capacity will be heavily loaded. It becomes obligatory that the IMBLMS data management subsystem achieve required results with minimum additional data transmission.

It should be noted that other available sites could be used for IMBLMS missions and that the USB Aircraft would have considerable effects in getting additional data to the ground. Intelsat could also provide relief to the remote ground transmission capability. However, a one-year mission imposes a strong requirement for reduction in total data volume and processing.

As the AAP "cluster" passes over an MSFN station, all nine carriers will be received and recorded. However, at present, only three or four (single or dual USB site) of the carriers

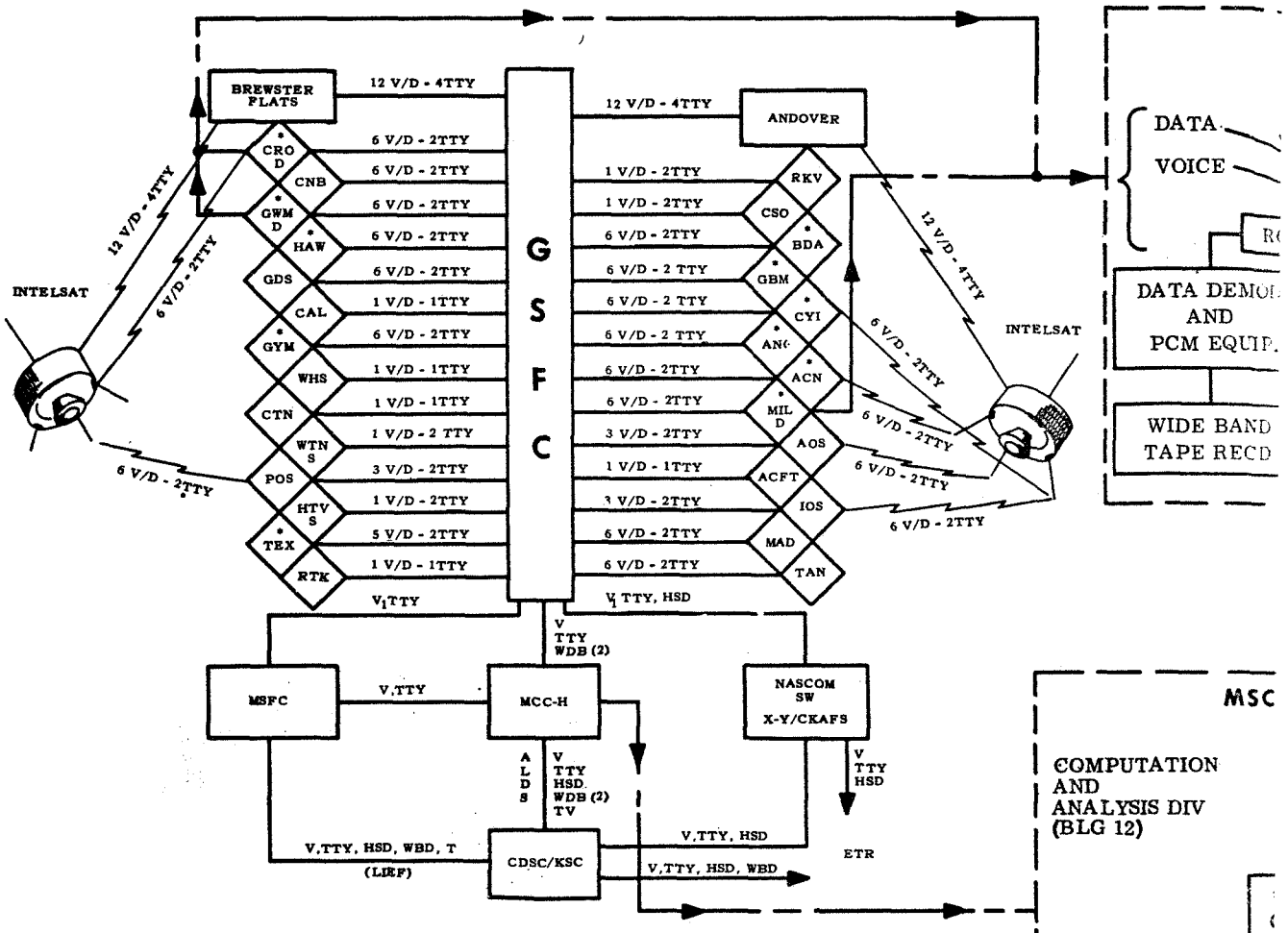

LEGEND

V = VOICE
V/D = VOICE DATA
HSD = HIGH SPEED DATA (2.0 TO 2.4 KILOBITS/SEC)
WBD = WIDE BAND DATA (40.8 KILOBITS/SEC)
TV = TELEVISION
AOS = ATLANTIC OCEAN SHIPS
IOS = INDIAN OCEAN SHIPS
POS = PACIFIC OCEAN SHIPS
6 V/D = 1 HIGH SPEED TRACKING
1 A/G VOICE
2 T/M DATA
1 T/M DATA OR A/G VOICE
1 AEROMED DATA OR SITE COORDINATION VOICE

*MINIMUM SITE ASSIGNMENT TO AAP

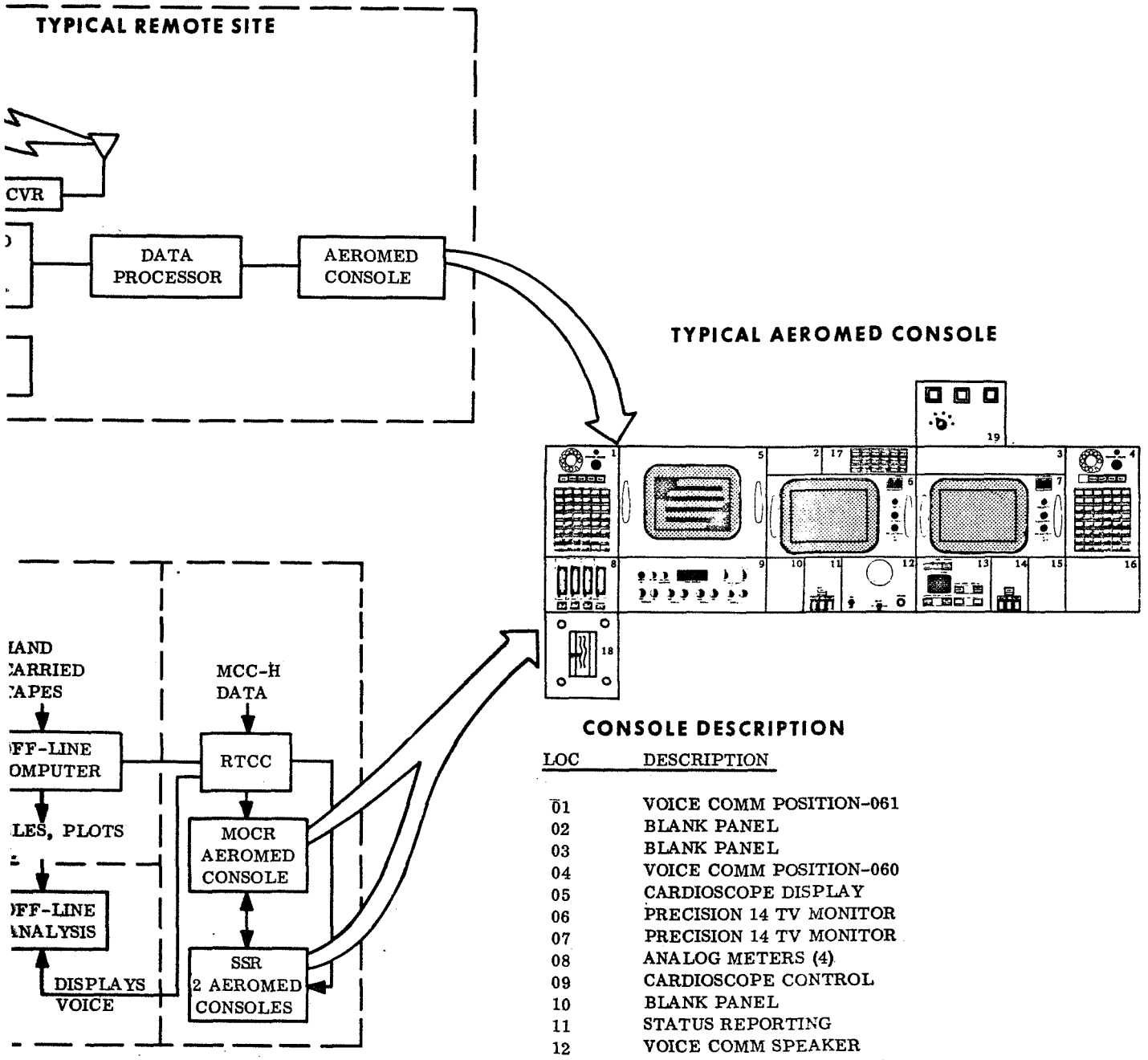

CONSOLE DESCRIPTION

LOC	DESCRIPTION
01	VOICE COMM POSITION-061
02	BLANK PANEL
03	BLANK PANEL
04	VOICE COMM POSITION-060
05	CARDIOSCOPE DISPLAY
06	PRECISION 14 TV MONITOR
07	PRECISION 14 TV MONITOR
08	ANALOG METERS (4)
09	CARDIOSCOPE CONTROL
10	BLANK PANEL
11	STATUS REPORTING
12	VOICE COMM SPEAKER
13	MANUAL SELECT KEYBOARD
14	STATUS REPORTING
15	BLANK PANEL
16	BLANK PANEL
17	EVENT INDICATOR
18	8 CHANNEL STYLUS RECORDER
19	HEART TACHOMETER

Figure 4-8. Typical Apollo Communications Network Configuration

can be used to carry "real time" data for transmission to MCC-H. Thus, a decision must be made which defines the data which is to be transmitted in real time and that which will be recorded at the ground station and transmitted in the post pass mode.

It is necessary to also note that the three decoms at newest remote receiving sites are programmable. At old sites, there are two patch decoms and one programmable decom. This has an impact on the compatibility of the Data Management data format with ground decom stripping capability. Generally speaking, programmable variable sampling of measurements implies the need for a programmable decom.

Present aeromedical data will be transmitted at a 2.4 kbs rate via circuit routing to MCC-H from each of the ground stations. To augment this limited data transmission capability, there are aeromed consoles presently planned to be located at three primary sites and on three ships.

This implies a base line capability with possible potential for ground display of IMBLMS data at CRO, GWM, MILA, MCC-H, and the three ships. At MSC there is currently one aeromed console in the mission control room, and two aeromed consoles in the Life Systems Support Room.

It is anticipated that as future missions become more experiment-oriented the display and control aspects may be either expanded or oriented so as to place greater emphasis on the experiments. There is a good potential that much of the housekeeping function will be accomplished through on-board checkout with only status reports sent to the ground. Typical remote site and MSC inputs to the Aeromed Console are shown and the console is depicted in the upper right quarter of Figure 4-8.

4.2.2.4 Communication Network Summary

Figure 4-9 IMBLMS Related Summary Block Diagram of Communication Network indicates the communication links, approximate potential data rates, and the possible Aeromed Data Rates. In essence the capability is summarized as shown in Table 4-7

Table 4-7. Communication Network Capability

Segment of Communication Link	Potential Total Data Rate	Probable IMBLMS Data Rate
Orbital Cluster to Ground Site	$\approx$ 600 KBS	51.2 to 112.5 KBS
Single Ground Site to MSFC Hard Line	7.2 to 9.6 KBS	2.4 to 3.6 KBS
Single Ground Site + Intelsat to MSFC	14.4 to 19.2 KBS	2.4 to 4.8 KBS

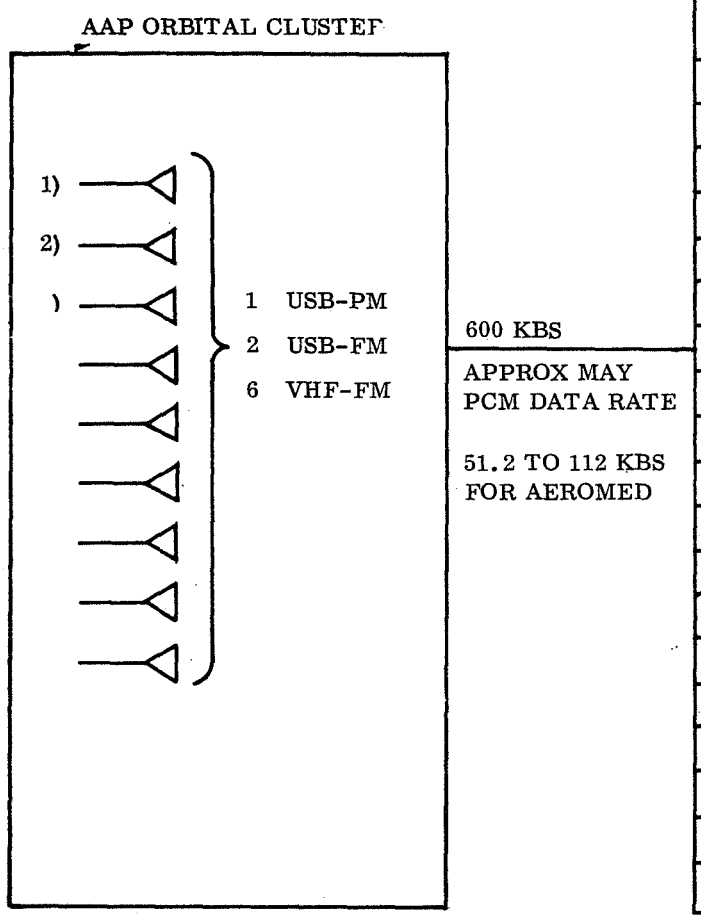

SITE/SHIP	AEROMED CONSOLES	LINKS		DECOMS	
		LINES		PGMD	PATCHED
GBM*		6	2	3	
ANG*		6	2		
MER (SH)	+	6	2	2	
RED (SH)	+	6	2	2	
VAN (SH)	+	6	2	2	
ACN*		6	2	3	
GWM*	+	6	2	3	
HAW*		6	2	1	2
MIL*	+	6	2	3	
TEX*		5	2	1	2
GYM*	+	5	2	1	2
CYI*		6	2	1	2
BDA*		6	2	2	2
CRO*	+	6	2	1	2
WTN (SH)		6	2	1	
CNB (85')		6	2	3	
GDS (85')		6	2	3	
MAD (85')		6	2	3	
TAN**		6	2		

*11 SITES FOR MINIMUM AAP SUPPORT
**NOT USB BUT POTENTIAL BECAUSE OF VHF AND FILL IN ON TIME LINE. REQUIRED FOR 30' USB, POSSIBLY PORTABLE

NOTE: SITES WITH AEROMED FM FOR APOLLO LUNAR MISSION ARE BDA, GWM, HAW, TEX, ASC, CYI, CRO, GYM, INS, 2 INJECTION SHIPS.

SITES WITH AEROMED DIGITAL FOR APOLLO LUNAR MISSION ARE KSC, GBI, ANT.

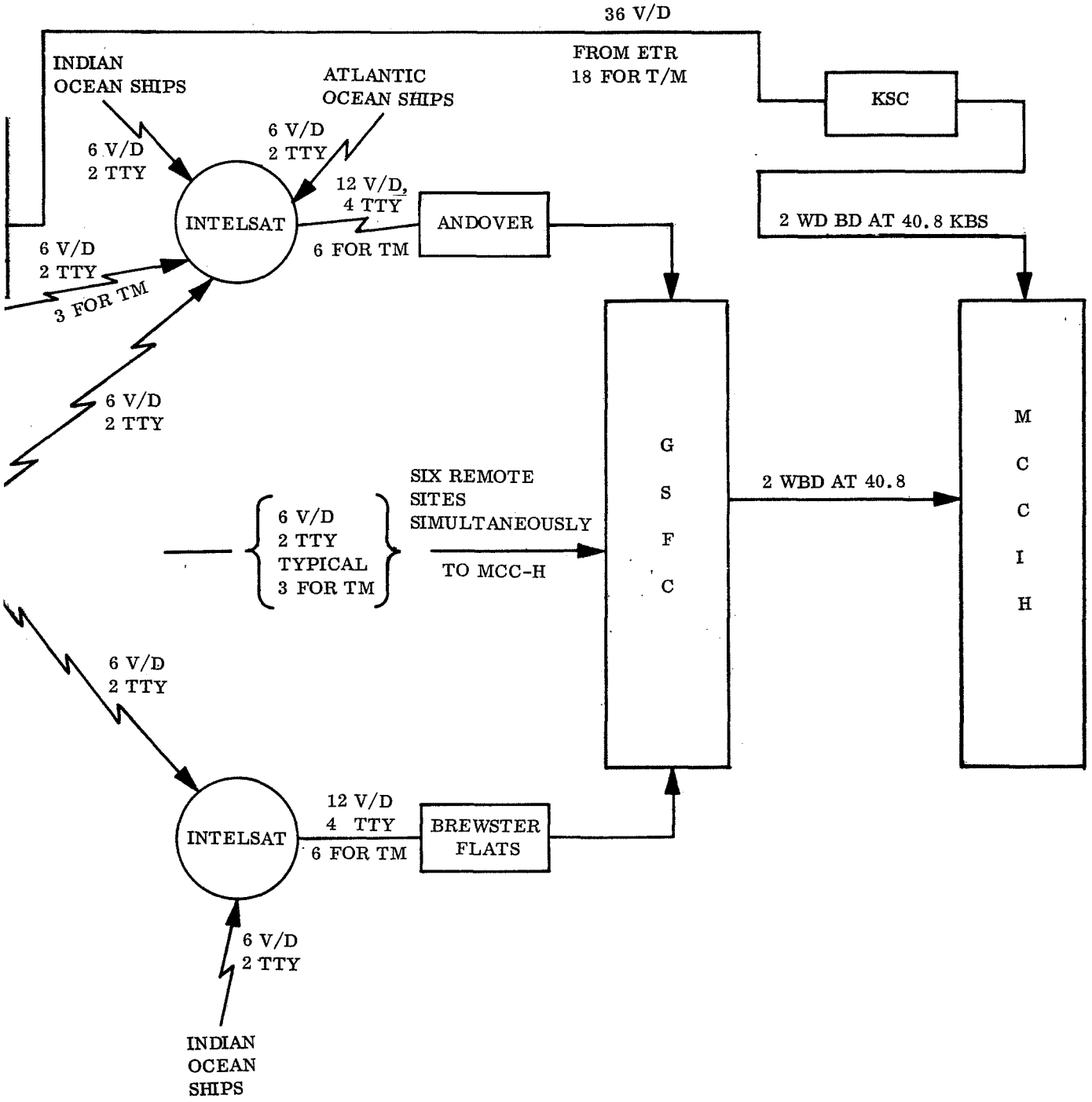

Figure 4-9. IMBLMS Related Summary - Block Diagram of Communication Network

Table 4-7. Communication Network Capability (Continued)

Segment Communication Link	Potential Total Date Rate	Probable IMBLMS Data Rate
MSFC to MCC-H	81.6 KBS	As allocated. Probably 2.4 to 3.6 KBS
KSC to MCC-H	81.6 KBS	As allocated. Probably 2.4 to 3.6 KBS

A review of the data rates quickly indicates that the ground link data rates are limiting. It may be optimistic but it will be assumed that a 2.4 KBS voice data line from the remote site can be assigned to IMBLMS experimental data, thus the restricting data rate will be 2.4 KBS.

To overcome this squeeze in data rates, current plans are to send medical monitors to some of the remote sites. The target is therefore set for data management, data processing and design concept to accommodate getting IMBLMS experimental data to MCC-H on a 2.4 KBS line in near real time, within one to three hours after transmission to the ground. It is also targeted to accomplish getting required data to MCC-H in short enough time to preclude deployment of medical monitors to the remote sites. To accomplish this, sophisticated data management equipment and data processing concepts, including data compression will probably be required. The use of these concepts will require programmed Decoms at the ground sites. The availability of Decoms at the ground sites is indicated on Figure 4-9.

4.2.3 MEASUREMENTS AND THE DATA LOAD

This section will briefly discuss the measurements as related to the DM subsystem. Table 4-8 is a preliminary summary of the measurement characteristics necessary for design of the DM subsystem. Additional stimuli and computer processing requirements have been identified previously in Tables 4-5 and 4-6 and in Figure 4-5 in the system approach subsection (4.1).

The data to be sampled has a range of bandwidths from DC to 400 Hz. There are devices in which higher frequencies are of interest, but generally the interest is in the amplitude or energy content of the constituent frequencies or frequency bands.

Analysis thus far indicates that a sampling rate of 5:1, using 10 Bit binary words for each sample, is sufficient to yield desired accuracy and reproducibility. A number of the analogs indicate a bandwidth requirement with an amplitude tolerance of ± 3 db. This would imply range of 0.707 to 1.4 of value reproduction requirement. The DM subsystem will provide

Table 4-8. Data Management Experiment Measurement List

Measurement	No. of Sigs. Measured	Bandwidth	Sensor Output	Sig. Cond. Output	Sensor Impedance	Signal Cond. Output Impedance	Remarks
Electrocardiogram (vector-cardiogram)	3	0.2-100 Hz	1 mv p-p bipolar	0-5V biased @ 2.5V (Typical)	5-10 K electrode impedance	1K (typical)	
Cardiotachometer	1	0-10 Hz	taken directly from EKG output 0-5V	0-5V	1K	1K	
Phonocardiogram	1	30-100 Hz	taken from microphone	0-5V		1K	
Ballistocardiogram	8						To properly perform the ballisto-cardiogram expt, it is very important that the subject be unconstrained ∴ D.M. Interface is receiver decoder or hardwire.
a) EKG (above)	3						
b) Nostril air flow X-ducer	1	0-10 Hz	Δ R of therm.	0-5V		1K	
c) Linear accelerometer	3	100Hz = nat'l freq.	$\pm$.25g	0-5V			
d) Angular accelerometer	1	39 Hz = nat'l freq.	$\pm$5 radians/sec^2	0-5V			
Impedance Cardiogram	1	0.2-10 Hz	$\Delta Z = \frac{1}{4}\ \Omega$	0-5V		1K	
Blood Pressure (arterial)	1	0-50 Hz		0-5V		1K	In this expt, it is necessary to sum cuff pressure and Karotkoff's sounds.
Venous Compliance							
a) cuff pressure	1	0-5 Hz		Analog outputs	?	?	This equipment has not been flight qualified.
b) limb volume	1	0-5 Hz					
Venous Pressure	?	?		?	?	?	There are many suggested approaches, from completely automatic to 100% manual.
Cardiac Output / Peripheral blood flow		400 to 6000 Hz					Use of ultrasonics via piezodetector Partial spectrum analysis. Plot energy vs. time for several frequency bands.

Table 4-8. Data Management Experiment Measurement List (Cont)

Measurement	No. of Sigs. Measured	Bandwidth	Sensor Output	Sig. Cond. Output	Sensor Impedance	Signal Cond. Output Impedance	Remarks
Thermal Change							
a) body temp	13	0-1 Hz	ΔR of thermistor	0-5V	R of thermistor	1K	Includes a 12 skin thermistor harness and a deep body temp. probe.
b) environmental variables (TP, air and wall temps, air velocity, RH, $p^{0}2$, $p^{CO}2$, etc.)	7 min.						Must be on same time-line as body temps.
Inflight Exercise							
a) Pneumotachometer	1	0-2 Hz		0-5V			Not flt. qual. yet.
b) Ergometer RPM	1	0-5 Hz		not defined			May be integral to ergometer.
c) Ergometer output (Watts)	1	0-5 Hz		not defined			Output type uncertain.
d) body temp	1	same as before					
e) Vectorcardiogram	3	same as before					
f) O_2 partial pressure	1	0-5 Hz					
g) CO_2 partial pressure	1	0-5 Hz		0-5V			
h) gas flowmeter	1	0-5 Hz					
Inflight LBNP							
a) Neg. pressure	1	0-2 Hz					
b) LBNP device temp	1						
c) leg volume	2	0-20 Hz	ΔR of Whitney type mercury-in-rubber strain gauge.	0-5V		1K	The same type of signal may be generated by capacitance plethoraography.
d) Vectorcardiogram	3	as before					
e) Blood pressure	1	as before					
f) Body temp (ear canal)	1	as before					
Elastic Leotard and Anti-G Suit							
a) suit pressure	1	0-1 Hz	Pressure gauge	0-5V		1K	
b) cardiotachometer	1	as before					
c) pulse pressure	1						Still in development stage.
Lung Capacities							
a) gas vol. meter	1	DNA	Digital readout				Possible to convert to low frequency analog signal.

Table 4-8. Data Management Experiment Measurement List (Cont)

Measurement	No. of Sigs. Measured	Bandwidth	Sensor Output	Sig. Cond. Output	Sensor Impedance	Signal Cond. Output Impedance	Remarks
Respiratory/Metabolic Exchange							
a) p^{O_2}	1	as before					
b) p^{CO_2}	1	as before					
c) flowmeter	1	as before					
Pressure/Volume/Resistance							
a) flowmeter	1	as before					
b) pressure	1	0-5 Hz		0-5V		1K	
Arterial O_2 Saturation							
a) oximeter	1	0-1 Hz		0-5V		1K	To be developed
Muscle Size, Strength, and Power							
a) electromyograph (EMG)	1	0.2-400 Hz		0-5V		1K	
b) integrated EMG	1	0.2-400 Hz		0-5V		1K	
General Metabolism and Nutrition							
a) body weight	1	DNA	Digital readout on instrument				
b) specimen weight	1	DNA	Digital readout on instrument				
Gastric Motility							
a) endoradiosonde	? (3 = max)	0-5 Hz					The endoradiosonde is a small capsule which is swallowed. It transmits biomedical signals to a receiver which is IMBIMS equipment.
Eye Movement							
a) nystagmogram	1	0.2-100 Hz		0-5V		1K	Vertical and horizontal components of
b) optical eye movement transducer (Honeywell)	2 Note: there might be 2 or 3 additional signals from this device. All are of the same freq. range. range.	0-20 Hz					
Electroencephalogram (EEG)	1	0.2-100 Hz		0-5V		1K	
Other Behavioral Data							Most of this data is observational in nature. Data compression will probably be handled by crewmen. Further details to follow.
Sampling, preserving and chemical analysis							Primarily keyboard entries. Potential computer functions exist.

A/D resolution to approximately 0.1% and should have repeatability better than 1% of the total range of scale. Evaluation of percent of full scale error is being evaluated and results should be better than the nominal 5% of full scale for FM modulation techniques.

Because of the variable number of IMBLMS measurement requirements, an anticipated DM worst case experiment protocol has been identified so as to determine probable total system upper limit data rates and also to determine the transmission load. The experiment protocols used for analysis are those described in Figure 3-19, Exercise Tolerance Including Pulmonary Function) in Section 3. The measurements required were identified, sampling rates established, and data word generation was determined for each of the time periods identified in the group of experiments. The detailed results are shown in Table 4-9.

The significant results of this analysis are as follows:

- Worst Case Word Rate = 6,141 Words per Second
- Worst Case Accumulation of Measurements for Simultaneous Sampling = 42
- Worst Case Word Accumulation for Measurement Sequence = 1,092,824 Words
- Total Word Accumulation = 3,402,156 Words

Taking into account that there are 10 bits in each word and that 20% increase is required for control functions the following system requirements evolve:

- System Sampling Rate Must Be ≥ 6,141 Samples/Sec
- Data Rate For Measurement Data Must Be ≥ 73.8 KBS
- Without Data Compression, a Probable Worst Case IMBLMS Transmission Load Is 41 Megabits.

Figure 4-10 graphically presents the word accumulations (including 20% for control) for the time periods of the experiment in the upper graph. The lower graph indicates the time required to transmit the data for each period and also the time to transmit the total data accumulated as the experiment progress through successive time periods. The transmission times are indicated for three spacecraft transmission rates, 51.1 KBS, 72 KBS and 112.5 KBS. The time to transmit the data from a remote ground site to MSFC via a

Measurement	Notes	Computer Function	1 Measure Body Mass and Vol.			2 Collect Samples			3 Attach Electrodes And Calibrate			4 [illegible] Assess Time	
			Time 15 Mins.			Time 10 Mins.			Time 10 Mins.			Time	
			Time-Elapsed		15	Time-Elapsed		25	Time-Elapsed		35	Time 5	
			Words/ Sec.	Duration (Sec.)	Total Words	Words/ Sec.	Duration (Sec.)	Total Words	Words/ Sec.	Duration (Sec.)	Total Words	Words/ Sec.	[illegible]
A. Body Mass	Computer Count @ Megabit Rate of Osc.	Yes			2								
Body Volume	Period Bag System, Partial He Count and Volume Computation	Yes			2								
B. Blood	Sampling, Processing and Labeling							20					
Urine	Sampling, Processing and Labeling							20					
Sweat	Sampling, Processing and Labeling							20					
Parotid	Sampling, Processing and Labeling							20					
C. VKG	3 @ 100 cps Signal	Yes							1,500	10	15,000	1,500	[illegible]
ZKG	1 @ 10 cps Signal	Yes							50	10	500	50	[illegible]
EMG (Muscle Potentials)	2 @ 400 cps Signal	Maybe							4,000	10	40,000	4,000	[illegible]
Impedance Pneumograph	1 @ 10 cps Signal	Yes							50	10	500	500	[illegible]
D. Dynamometer	1 @ 100 cps Signal	Yes										500	[illegible]
Tape Measure	30 Measurements											60	[illegible]
E. Phonocardiogram	1 @ 70 cps Signal												
Blood Pressure Cuffs	1 @ 10 cps Signal	Yes											
Digital Plethysmograph	1 @ 10 Sec.												
Ear Oximeter	1 @ 10 Sec.												
Thermistors	14 Each @ 10 Sec.												
Venous Pressure	1 @ 20 cps Signal												
F. Breath-Gas Analyzer	2 Samples/Sec., 10 Sec/Min.												
O_2 Partial Pressure	2 Samples/Sec., 10 Sec/Min. Incremented with Breathing Rate												
CO_2 Partial Pressure	0.5 cps	Yes											
Gas Flow Rate	Compute	Yes											
N_2 Partial Pressure	2 Samples/Sec., 10 Sec/Min.												
H_2O Partial Pressure	2 Samples/Sec., 10 Sec/Min.												
Total $P = O_2+CO_2+H_2O+N_2$	2 Samples/Sec., 10 Sec/Min.	Yes											
Intra Pleural Pressure													
G. Tidal Volume	Integrate Gas Flow Meter Signal -	Yes											
Timer	ON/OFF												
H. Ergometer	RPM, 2 RPS, Band Tension; Compute Work	Yes											
I. Experiment Area Ambients													
Ambient O_2	4 Fixed Words												
Ambient CO_2	4 Fixed Words												
Ambient N_2	4 Fixed Words												
Ambient H_2O	4 Fixed Words												
Wall Temperature	4 Fixed Words												
Air Temperature	4 Fixed Words												
			Total Word Rate (Words/Sec)						5,600			6,100	
			Total Fixed Words*										
			Total Words		4			80			56,000		
			Accumulated Total		4			84			56,084		

1.4-51/1.4-52

Table 4-9. 10-Bit Word Accumulation Analysis for Exercise Tolerance Experiments (Including Pulmonary Function)

4 Muscle sessment		5 Attach Measurement Equipment			6 Rest—Calibrate Equip. —Meas. —Envir.			7 Baseline Measurements			8 Exercise			9 and 10 Repeat Measurements			Accumulated Total Words
e 5 Mins.		Time 10 Mins.			Time 20 Mins.			Time 15 Mins.			Time 20 Mins.			Time 20 Mins.			
-Elapsed	40	Time-Elapsed		50	Time-Elapsed		70	Time-Elapsed		85	Time-Elapsed		105	Time-Elapsed		125	
Duration (Sec.)	Total Words	Words/ Sec.	Duration (Sec.)	Total Words	Words/ Sec.	Duration (Sec.)	Total Words	Words/ Sec.	Duration (Sec.)	Total Words	Words/ Sec.	Duration (Sec.)	Total Words	Words/ Sec.	Duration (Sec.)	Total Words	
																	2
																	2
																	20
																	20
																	20
																	20
300	450,000							1,500	180	270,000	1,500	400	600,000	1,500	300	450,000	1,785,000
300	15,000							50	180	9,000	50	400	20,000	50	300	15,000	59,500
60	240,000							4,000	60	120,000	4,000	60	240,000	4,000	60	240,000	880,000
300	15,000							50	180	9,000	50	400	20,000	50	300	15,000	59,500
300	150,000																150,000
N/A	60																60
								350	180	63,000	350	400	140,000	350	300	105,000	308,000
								50	180	9,000	50	400	20,000	50	300	15,000	44,000
		14	10	140				1	180	180	1	400	400	1	300	300	1,020
								1	180	180	1	400	400	1	300	300	880
								14	180	2,520	14	400	5,600	14	300	4,200	12,320
								100	180	18,000	100	400	40,000	100	300	30,000	88,000
								2	180	360	2	400	800	2	300	600	1,760
								2	180	360	2	400	800	2	300	600	1,760
								2	180	360	2	400	800	2	300	600	1,760
								2	180	360	2	400	800	2	300	600	1,760
								2	180	360	2	400	800	2	300	600	1,760
								2	180	360	2	400	800	2	300	600	1,760
								2	180	360	2	400	800	2	300	600	1,760
								1			1	400	400	1	300	300	700
								1			10	400	400	10	300	300	700
							4						4			4	12
							4						4			4	12
							4						4			4	12
							4						4			4	12
							4						4			4	12
							4						4			4	12
		14						6,130			6,141			6,141			
							24						24			24	
	870,060			140			24			503,400			1,092,824			879,624	
	926,144			926,284			926,308			1,429,708			2,522,556			3,402,156	

Case #1 - Largest Single Period Accumulation (1.3×10^6 Words)

At Transmission Rates of	Time to Transmit
51.2 KBS	4.3 Minutes
72 KBS	3.0 Minutes
112.5 KBS	2.0 Minutes
2.4 KBS	1 Hour 32 Minutes

Case #2 - Total Experiment Accumulation (4.08×10^6 Words)

51.2 KBS	13.3 Minutes
72. KBS	9.4 Minutes
112.5 KBS	6.1 Minutes
2.4 KBS	4 Hours 44 Minutes

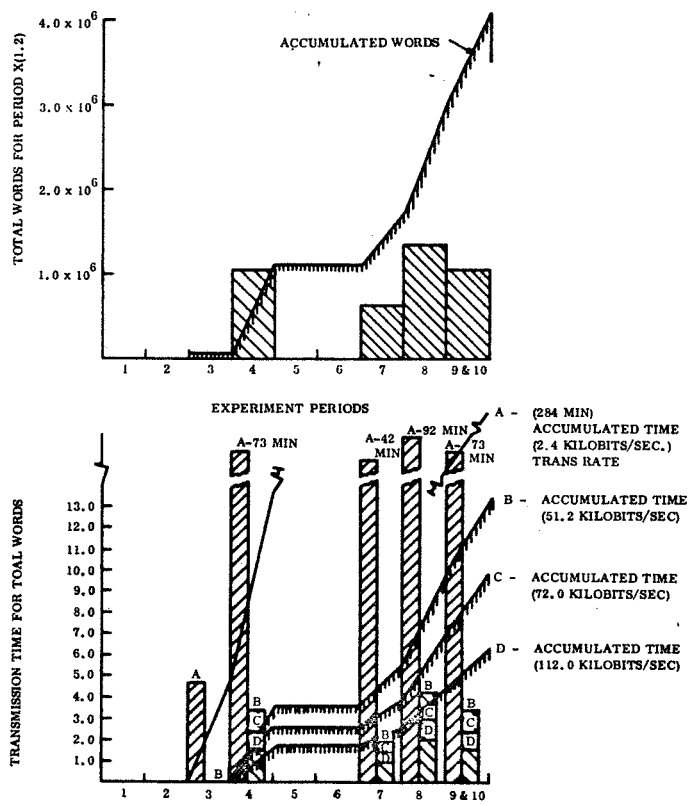

Figure 4-10. Data Accumulation and Transmission Time for Exercise Tolerance Experiments

It can be concluded that with nominal transmission times of 7 to 8 minutes (See Figure 4-7), getting the data to the ground does not appear to be a major problem at present. The time to get the data to MSFC and MCC-H via the 2.4 KBS link becomes fairly extensive, especially for the total accumulation. Herein lies the requirement for data compression. Pending analysis of the total orbital cluster transmission load, it does not appear that IMBLMS on-board data compression, above and beyond that achieved by variable and programmed measurement sampling, would be mandatory. Data compression at the remote site would also tend to solve the problem. However, there are recent economic indications that reduction of data generated at the source is warranted, even though some additional hardware is required (or computer capability), in view of increasing complexity and size of ground stations and the manning required. In addition, more meaningful data is often presented to the experimenter. On-board data compression will be considered.

Provision can be included to perform astronaut viability checks. It is anticipated that these measurements will be made via an IMBLMS T/M receiver interface. The personal T/M is considered to be GFE or part of the astronaut's nominal flight instrumentation. In the Command Module these viability measurements will probably be monitored as part of the housekeeping T/M function performed by the Command Module telemetry system. However, IMBLMS can perform this function in other sections of the space station. The viability monitoring can be periodically performed on the basis of preprogrammed system timed commands to the IMBLMS-DM subsystem.

These measurements would probably include:

- Heart Rate
- Respiration Rate
- TEMP
- ECG Wave Analysis

The computer would check the data against norms and signal the on-board personnel and/or ground personnel if limits are approached or exceeded, or an abnormal condition is detected. A program of this type would be performed 30 seconds of every 5 minutes or for more suitable durations at time increments that would be defined as the IMBLMS program commences.

4.2.4 DATA COMPRESSION

The four basic categories of data compression are parameter extraction, adaptive sampling, redundancy reduction and encoding. These are generically illustrated in Figure 4-11.

The goal of data compression is to eliminate all parts of the data which are not essential to the recognition and/or interpretation (within specified tolerance limits) of the data. As the state-of-the-art advances in both the data compression field and the biomedical data interpretation field, more and more information can be obtained with less and less transmission from the spacecraft to the ground and from ground to ground locations. The natural limit on

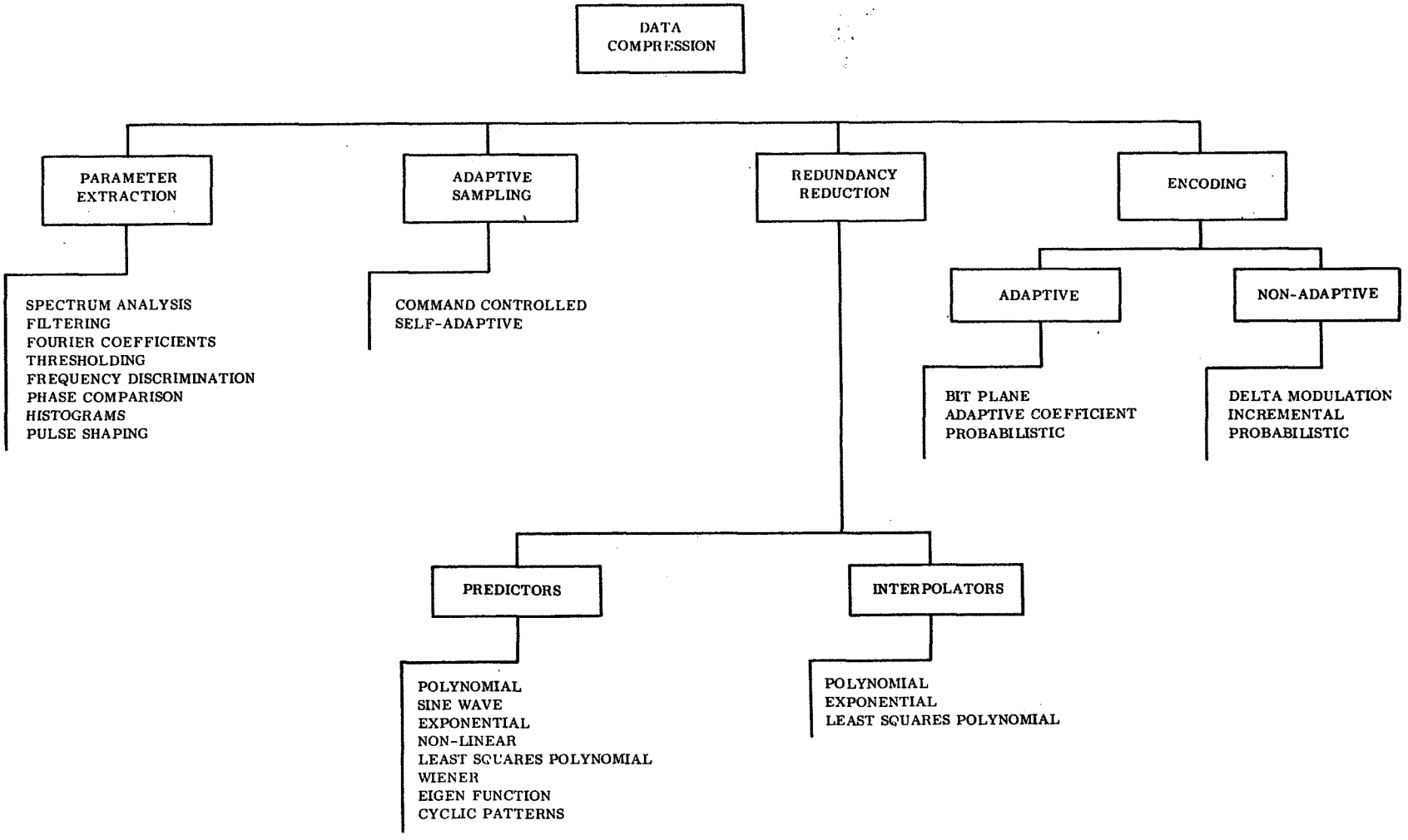

Figure 4-11. Summary of Data Compression Categories

compression is reached when biomedical science can account for and predict the responses to all space travel encountered stimuli. Data compression can gain the experimenter much meaningful data without compromising quality, and while effecting a reduction in the total volume of data.

Of the many techniques presented in Figure 4-11 the areas that indicated promise during the study were adaptive sampling, which is somewhat inherent in the DM subsystem by nature of adaptively programming data acquisition when information is known to be of interest, and the "predictors" and the "interpolators", both of the redundancy reduction category, filtering, some coding and finally cycle to cycle compression. The reasons for this choice were three fold:

a. Appropriate to the application

b. Preservation of wave form where required

c. Commonality of application

The predictor technique presented in this study is the "zero order predictor". This technique predicts that the next sample(s) will be redundant and fall within a plus or minus K% tolerance of the last transmitted sample. If a new sample is not in tolerance, it is not redundant; its values are transmitted; and it then becomes the last transmitted sample.

The interpolator technique works in somewhat a reverse manner. It obtains a new sample and looks backwards to see if all the previous samples fall within the plus or minus K% limits. If any prior sample is out of tolerance the technique drops back to the sample just before the new one and transmits that value. In the case of the zero order interpolator technique, the tunnel looked backward through is horizontal. The first order interpolator calculates a straight line between the new sample and the oldest stored sample. This line is the axis of the tunnel through which the technique sees the redundant data points.

4.2.4.1 Zero/First Order Interpolator

The Zero or First Order Interpolator, Figure 4-12, can be either a separate piece of hardware or a software subroutine for the on-board computer. The configuration will allow either a zero or first order curve fit on the data and the adjustment of the tolerance by the on board and/or ground based operator. This technique can be used on EKG, EEG, and other data generated on board. It is expected that in most cases the data will be reduced by an order of magnitude. The memory involved could be self-contained, or shared with the on-board computer, if the interpolator is to be a discrete piece of hardware. If the interpolator is to be a software item, it can be designed for use by several simultaneous data inputs. The number of different inputs which can be handled is a function of the data rate of each input signal and the computer speed, and memory size.

The output from the interpolator in the case of the EKG could be routed to a pattern recognization routine which could further compress the data from an EKG by several order of magnitude.

4.2.4.2 Zero Order Predictor

A zero order predictor can compress EKG data by nearly an order of magnitude. Even the simple device will reduce the quantity of data sent to the ground from an EEG or EKG without significant reduction in quality. Figure 4-13 is a flow chart indicating the major steps involved with the zero order predictor.

The data on the output could also be sent to a pattern recognizer as mentioned for the output of the zero/first order interpolator.

4.2.4.3 Application Of Data Compression To ECG and EEG

Table 4-10 gives a summary of two biomed measurements and applicable data compression techniques along with compression ratios and the impact on the IMBLMS hardware.

Table 4-11 allows observation into the trade-offs involved with three different compression techniques.

4.2.4.4 Spectral Analysis

The EEG output can be subjected to a spectral analysis. There are basically two methods by which this analysis may be accomplished. One, by means of the auto-correlation function of the data which is a prelude to determining the Fourier transform. This method requires an amount of computation which would all but prohibit real time analysis. A second and

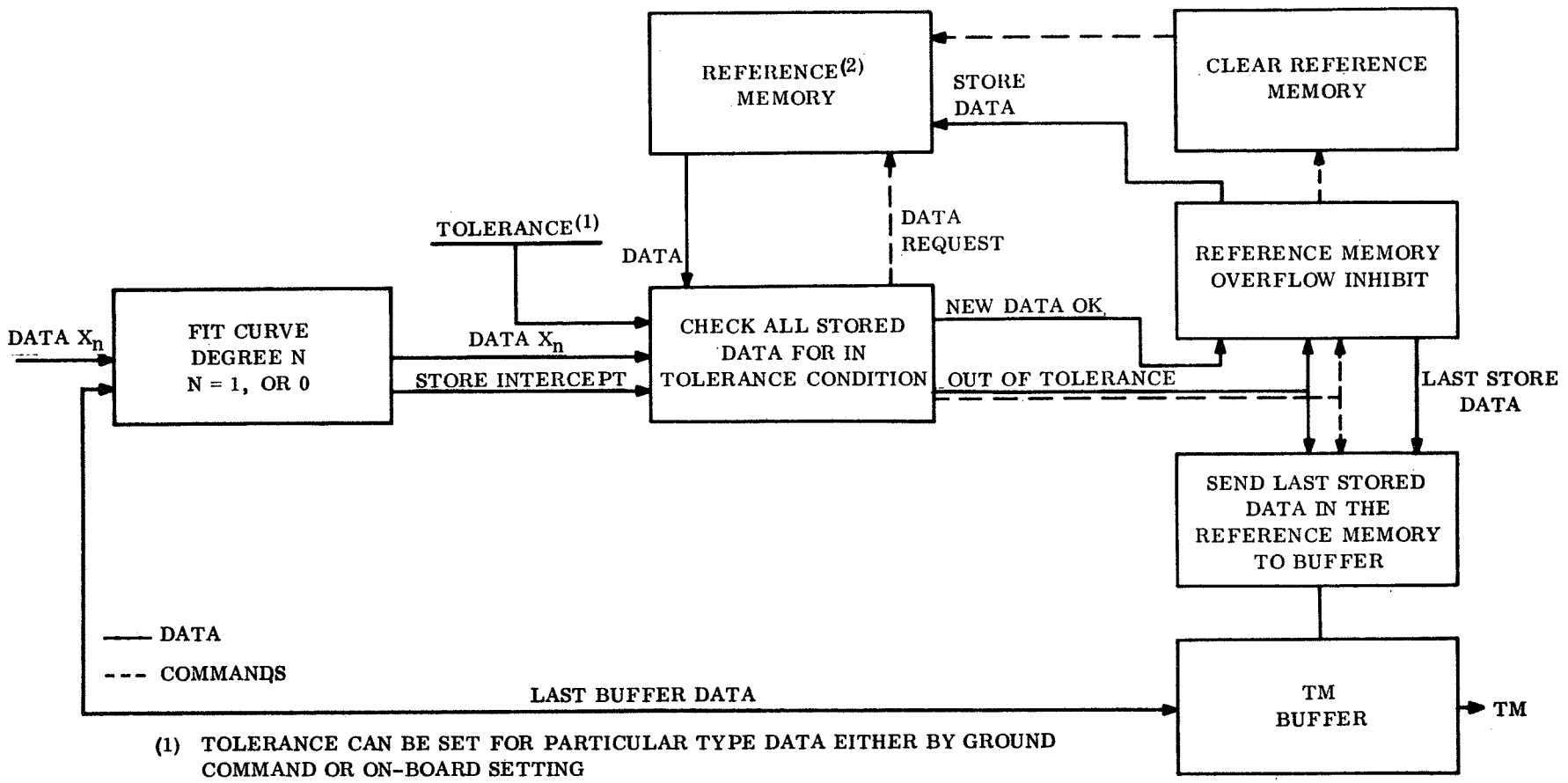

(1) TOLERANCE CAN BE SET FOR PARTICULAR TYPE DATA EITHER BY GROUND COMMAND OR ON-BOARD SETTING

(2) MEMORY SIZE VARIABLE (MINIMUM SIZE ≈ ≥(2X EXPECTED COMPRESSION RATIO))

Figure 4-12. Zero or First Order Interpolater

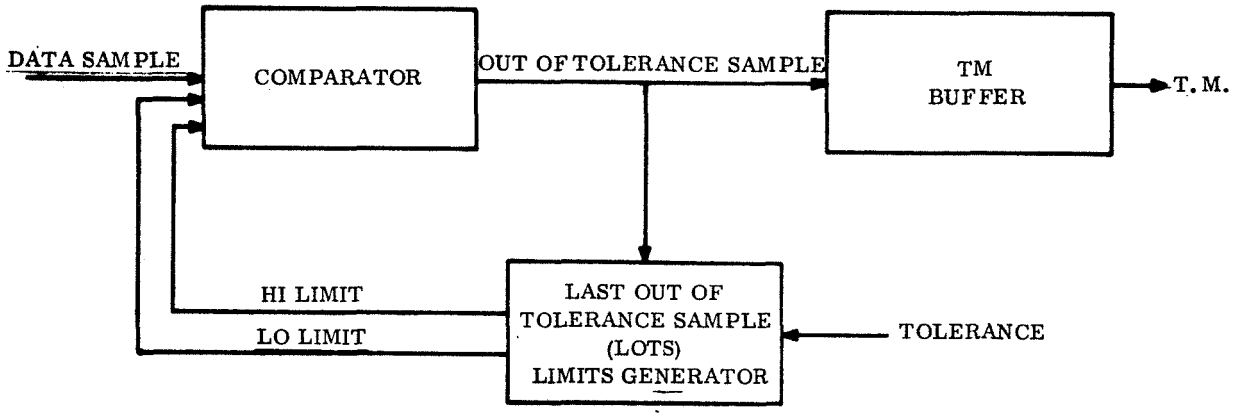

Figure 4-13. Zero Order Predictor

more economical method is to pass the EEG data in parallel through 4-band pass filters and one high pass filter. (See Figure 4-14 for filter design characteristics for each EEG wave component.) Table 4-12 gives the commonly accepted interpretation of the frequency content of an EEG wave.

Figure 4-15 gives some spectrogram results.

4.2.4.5 Computer Program For Cycle-to-Cycle Reduction

To develop a computer program for cycle to cycle reduction of EKG data, the following wave form characteristics must be recognized and/or determined (Refer to Figure 4-16 for notation.)

a. A starting point or cycle identifier

b. The amplitudes of

1. The P wave peak

2. The QRS peaks

Table 4-10. Data Compression as Applied to Two Biomedical Measurements

Biomed Measurement and Description	Applicable Methods of Compression	Compression Ratio	System Effects and Hardware Inputs and Implications
1. ELECTROCARDIOGRAM (ECG) a recording of signals generated by the heart muscle functioning	Non-Cyclic Reductions Zero Order Predictor	with .6 - 1.2% peak error 5.8 - 8.8:1	The data quantity can be reduced with only a small impact on the hardware using a new hardware module or simply a tie-in with on-board computer.
	Zero Order Interpolator	with 0.6 - 1.2% peak error 7.2 - 12.8:1	Reduction of data is slightly greater than the ZOP technique. Hardware and/or software is required.
	First Order Interpolator	with 0.6 - 1.2% peak error 12.5 - 30:1	Reduction by a factor of 2 or 3 over the ZOI technique. Basically the same as above.
	Cyclic Reduction (2)	≈ 1.6% peak error 1800:1	Possible but will require a computer to process data. On-board computer is required.
2. ELECTROENCEPHALOGRAM (Brain Waves) the wave is composed of sum of sinusoidal waves 0.5 to 26 HZ	First Order Interpolator	with 2 to 4% peak error 6.1 - 9.7:1	EEG data - Can be compressed but has no readily definable cycle, thus eliminating any cyclic technique. A series of filters can be used to perform an analysis of the frequency content of the wave. This would require use of an on-board computer. (NOTE: The wave shape would not be available for study if this method would be used.)
	Spectral Analysis (1)		

(1) See Appendix A
(2) See Appendix B

Table 4-11. Compression Ratios for Varying Peak Error Tolerance for ECG and EEG

		Compression Ratios ECG Sampled at 600 SPS			EEG Sampled at 214 SPS
Permissible Peak Error	RMS Error	Zero Order Predictor	Zero Order Interpolator	First Order Interpolator	First Order Interpolator
±0.6%	.32	5.8:1		12.5:1	
	.36		7.2:1		
±0.9%	.45	6.9:1		20:1	
	.5		10:1		
±1.2%	.58	8.8:1		30:1	
	.62		12.8:1		
±2%	.34				6:1
±3%	.44				8.2:1
±4%	.54				9.7:1

3. The T wave peak

4. The average wave level (approximately the average PR segment value)

c. The time duration of

1. The P wave

2. PR segment

3. ST segment

4. QT interval

5. The T wave

6. The cycle

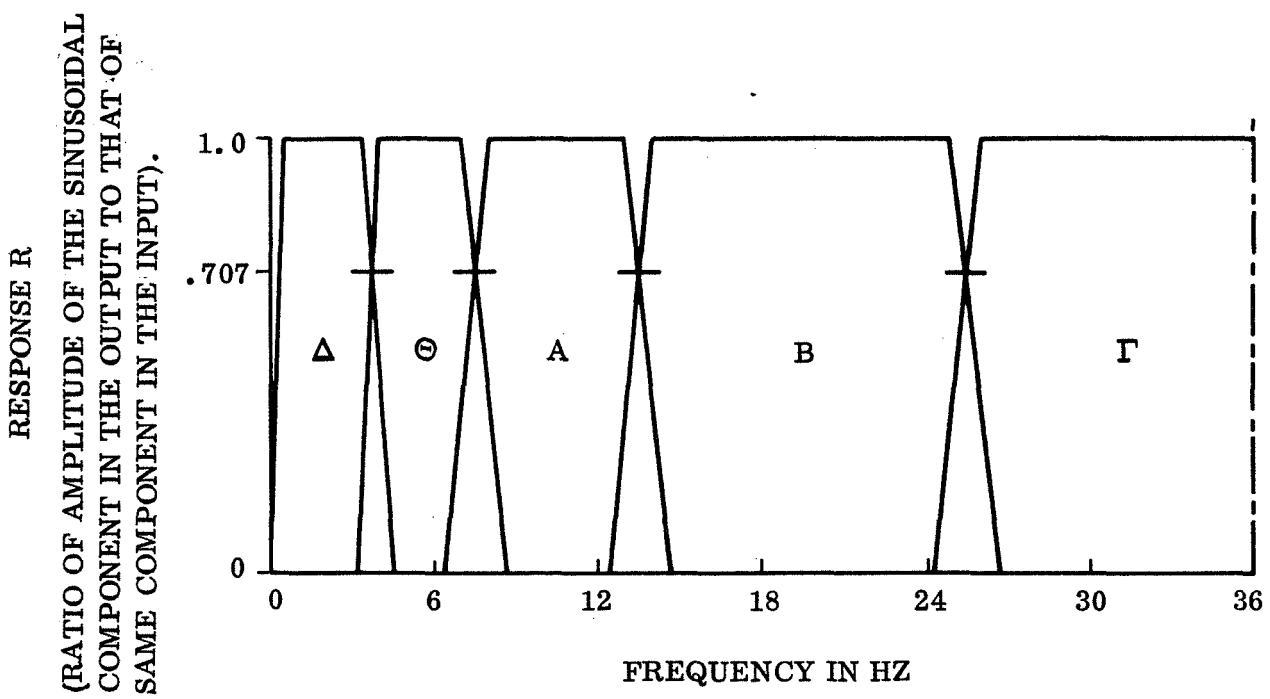

Figure 4-14. Design Goal for Bandpass Filters

Table 4-12. EEG Wave Frequency Content Interpretation

Name of Wave	Frequency Limits	3db Cut-Off Limits	Wave Use
Delta	0.5 - 3.5	0.35 - 3.75	Dominant in unconsciousness
Theta	4 - 7	3.75 - 7.5	Early stages of sleep
Alpha	8 - 13	7.5 - 13.5	Present when alert
Beta	14 - 25	13.5 - 25.5	Anxiety
Gamma	26 →		Undefined

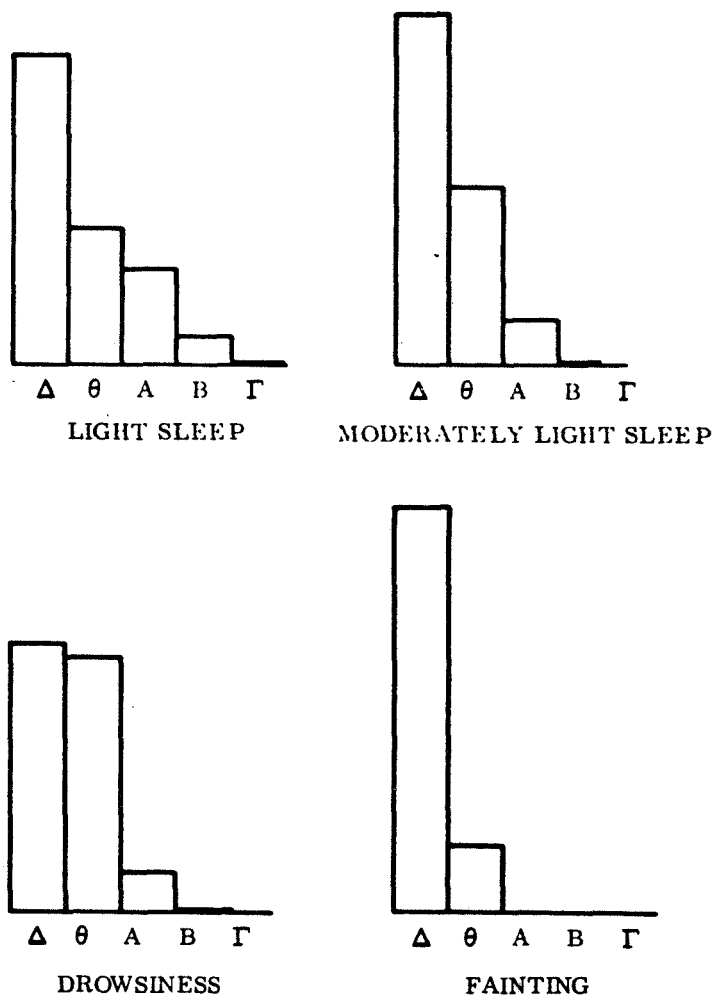

Figure 4-15. Spectrogram Results

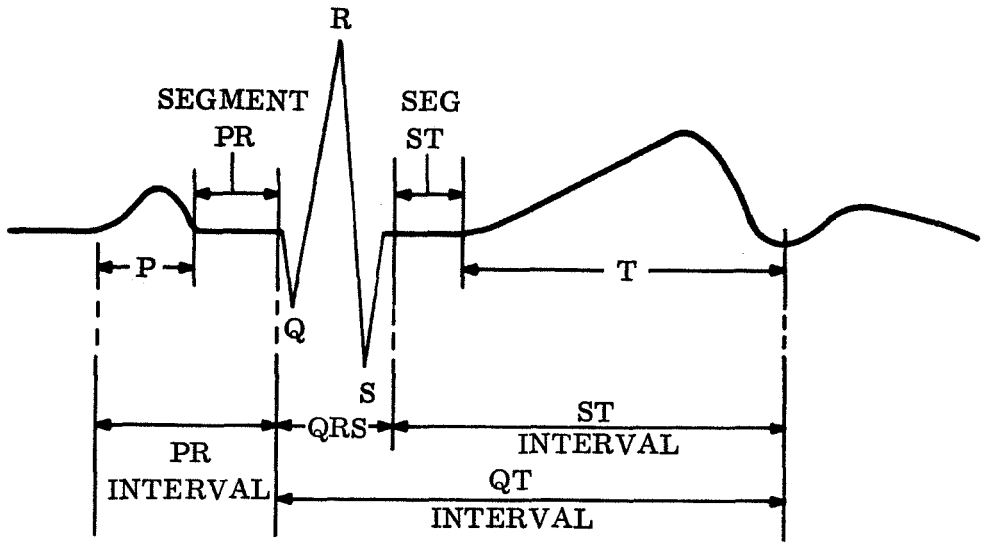

Figure 4-16. ECG Characteristics of Interest

4.2.4.6 Effects of Data Compression on Measurement Load

Table 4-13, "10 Bit Data Word Reduction as a Result of Data Compression" indicates possible reductions in the total number of data words accumulated for each measurement in the Exercise Tolerance Experiments. (Table 4-9.) Several methods were used to reduce the volume of data and these are indicated in Table 4-13. As an example and with reference to VKG, data compression ratios of 30:1, 1000:1, 30:1 and 100:1 were used for experiment time periods 4, 7, 8 and 9 & 10 respectively. The compression ratios were varied so as to accommodate the changing experiment conditions and the anticipated variation in the heart action. For several of the measurements, such as those resulting from the breath gas analyzer, the data was sampled at a rate sufficient to gather data for computer analysis, coding and reporting. For example if 55 reports were desired, over the 55 minutes during which breath analyses are made, the computer would file a report to the T/M system indicating the following:

Measurement ID # _____	2 words
System Time First Measurement	3 words
Time Interval Between Measurements	2 words
Duration of Measurement Period	2 words
List of Values Determined	55 words
Total Words	64 words

Actually there would be code numbers for common labels such as "System Time First Measurement," Time Interval Between Measurements," etc.

On the ground this data could be reproduced in a printed report or on graphs of the partial gas pressures plotted. The same graph could be displayed on board. The use of 100 ten bit words to file this type of report is a rounded out estimate but it is sufficient for rough estimating the potential compression capability.

For analogs such as ZKG, EMG, etc., a compression ratio of 12.5 to 1 was used. If the biomed analog is somewhat repeatable, and the time variant amplitude somewhat smooth, this number should be achievable. Sprectial filtering of the phonocardiogram data might yield more useable information and far less data words than indicated in the table.

This analyses could hardly be considered final or refined but it is an index. Repeating the transmission times previously derived and determining the times required with data compression as per Table 4-13 results in the following:

Case	Transmission Rate	Transmission Time		
		Without Data Compression (4.08×10^6 Words)	With Data Compression (0.23×10^6 Words)	
Case 2	51.2 KBS	13.3 min	0.75 min	1.31*min
Total Experiment	72 KBS	9.4 min	0.54 min	0.91*min
Accumulation	112.5 KBS	6.1 min	0.34 min	0.30*min
	2.4 KBS	4 hrs 44 min	16.2 min	30.0*min

*The asterisked numbers show the effect of not using cycle to cycle comparisons for EKC, but redundancy reduction of 10:1.

Table 4-13. 10 Bit Data Word Reduction As A Result Of Data Compression

Measurement	Total Word Accumulation	Total Words After Compression	Compression Technique Used
A. Body Mass	2	2	Keyboard Entry
Body Volume	2	2	
B. Blood	20	20	Keyboard Entry
Urine	20	20	Keyboard Entry
Sweat	20	20	Keyboard Entry
Parotid	20	20	Keyboard Entry
C. VKG	1,785,000	80,270	Interpolator and Cycle Comparison
ZKG	59,500	4,770	Interpolator
EMG (Muscle Potentials)	880,000	70,300	Interpolator
Impedance Pneumograph	59,500	4,777	Interpolator
D. Dynamometer	150,000	180	Compute Work Amplitude and Time Each 20 Sec.
Tape Measure	60	60	Keyboard Entry
E. Phonocardiogram	308,000	24,600	Interpolator
Blood Pressure Cuffs	44,000	100	Compute Blood Pressure Reports
Digital Plethysmograph	1,020	100	Compute Report
Ear Oximeter	880	100	Compute Report
Thermistors	12,320	1,540	Compute Temp. Vs. Time Report
Venous Pressure	88,000	7,000	Interpolator
F. Breath-Gas Analyzer			
O_2 Partial Pressure	1,760	100	Compute Report
CO_2 Partial Pressure	1,760	100	Compute Report
Gas Flow Rate	1,760	100	Compute Report
N_2 Partial Pressure	1,760	100	Compute Report
H_2O Partial Pressure	1,760	100	Compute Report
Total P-O_2+CO_2+H_2O+N_2	1,760	100	Compute Report
Intra Pleural Press.	1,760	100	Compute Report

Table 4-13. 10 Bit Data Word Reduction As A Result Of Data Compression (Cont)

Measurement	Total Word Accumulation	Total Words After Compression	Compression Technique Used
G. Tidal Volume	700	100	Compute Report
Timer	700	100	Compute Report
H. Ergometer	700	100	Compute Report
I. Experiment Area Ambients			
Ambient O_2	12	12	None
Ambient CO_2	12	12	None
Ambient N_2	12	12	None
Ambient H_2O	12	12	None
Wall Temperature	12	12	None
Air Temperature	12	12	None
	3,402,260	194,853	
	x 1.2	x 1.2	
	4,082,120	233,824	

4.2.5 FUNCTIONAL REQUIREMENTS

The functional requirements for the DM subsystem were derived by analysis of overall IMBLMS experiment management problem. The exercise tolerance regimen shown on Table 3-19 is used as a basis for discussion. Thirteen experiments are combined and executed over a lapsed time interval of approximately 2 hours and 25 minutes. A wide gamut of data management tasks evolved. These plus others are generically indicated in Figure 4-17, IMBLMS Data Management Involvement. The first experiment regimen identified in the exercise tolerance chart, Table 3-19, is M037, Body Mass Measurement. Functions which will involve the data management system can be readily identified. Several are shown in Figure 4-18 which illustrates the interplay between the experimenter and the data management system. The functional requirements developed below resulted from analysis of this type.

The on-board DMS will support the IMBLMS mission requirements by providing for the implementation of the following basic functions:

a. Command and Control

b. Data Acquisition

c. Data Processing

d. Data Display

e. Data Recording, Storage, and Retrieval

f. Data Transmission

g. Stimuli Generation

h. Equipment and Subsystem Interface

i. Subsystem Modularity, Expandability, and Flexibility.

In addition to the direct command and control of the IMBLMS experiments, these basic functions are necessary to the associated calibration and checkout of the total IMBLMS equipment.

The functional requirements defined in the following paragraphs are preliminary and further evolution, definition, and expansion of these requirements would follow in the continuing phase of the IMBLMS program.

4.2.5.1 Command and Control

The DMS must enable a system operator to exercise direct or supervisory command and control over the conduct of all IMBLMS experiments and of all IMBLMS equipment calibration and checkout operations in one of the three modes of operation below.

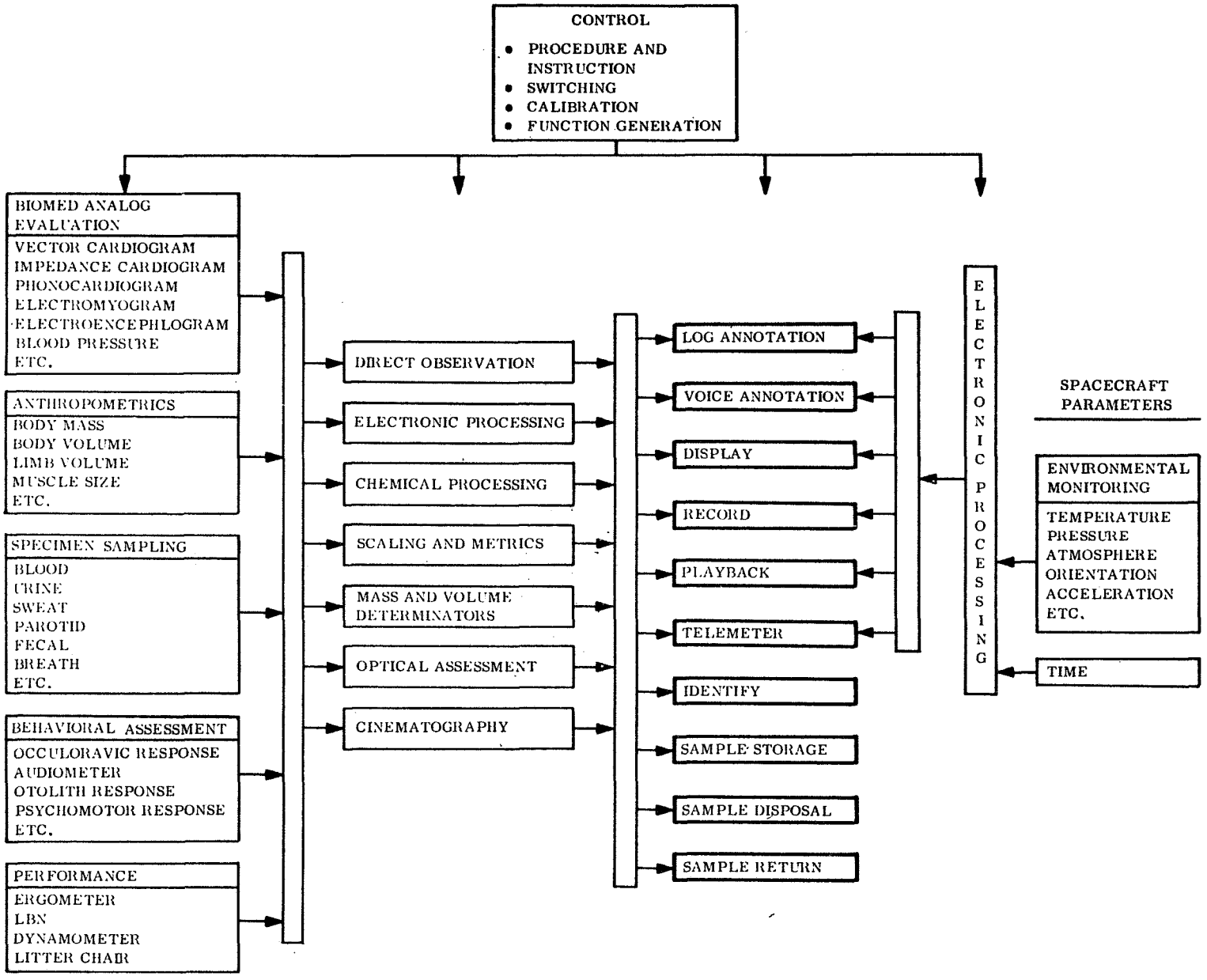

Figure 4-17. Data Management Involvement

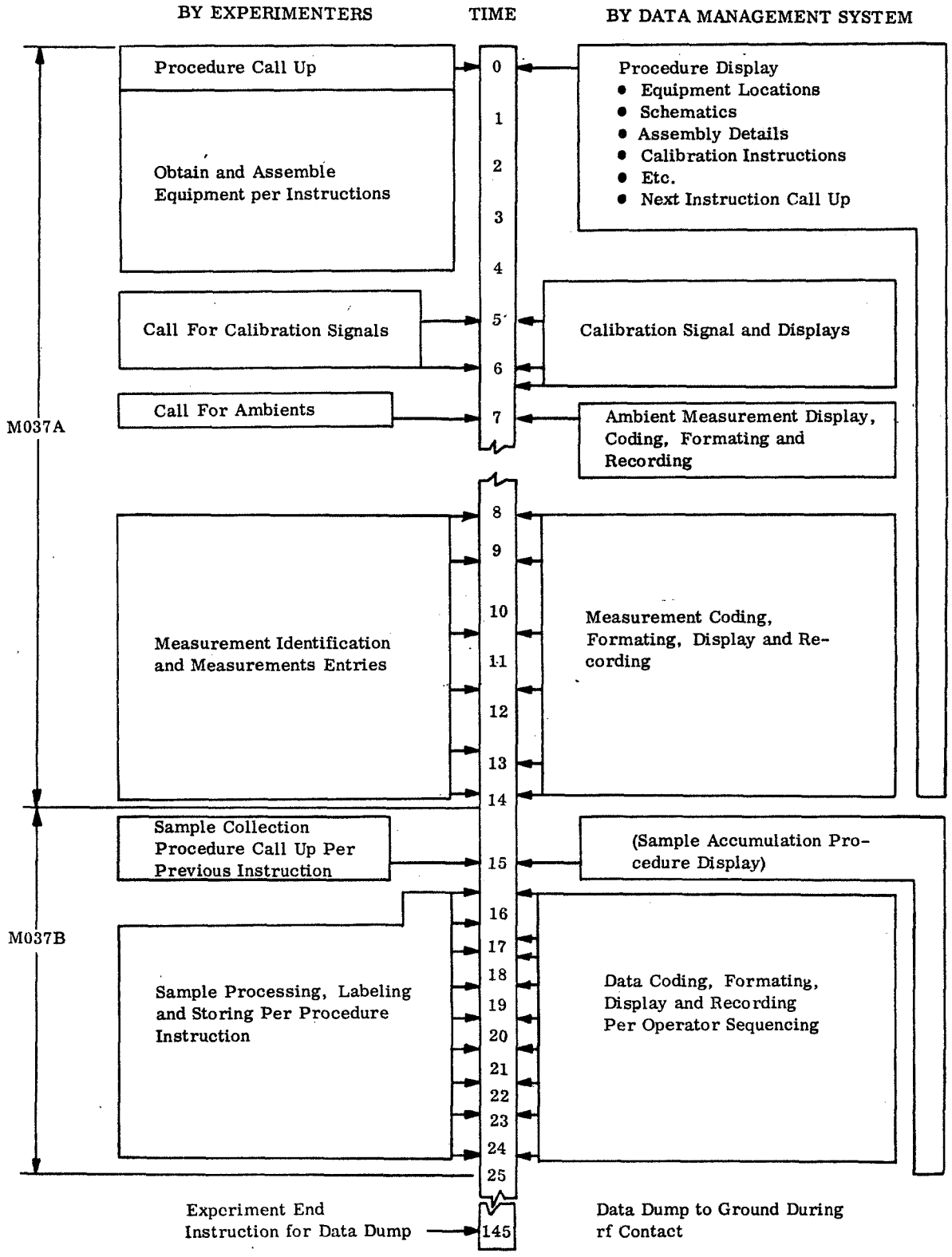

Figure 4-18. Interplay Between Experimenter and Data Management System

a. Automatic Mode - The DMS must perform complete sequence of tests or measurements without interruption. This sequence of operation will be controlled automatically by a stored test program. Any safety and hazardous condition affecting the well-being of the test subject must be displayed immediately to the test monitor (system operator) by visual and/or aural means. The test sequence will automatically halt when this condition arises and monitor only those data channels which provided indication of the hazardous condition. A manual override must be used to restart the test sequence at the discretion of the test monitor. This override control will cause the program to restart at the beginning of the test sequence during which the initial hazard indication was first detected.

b. Semi-Automatic Mode - The DMS must perform as in the automatic mode but will stop after each test or specified sequence of tests. Operator action is required to continue to the next test. Automatic safety and hazard indication must be provided as described in the automatic mode.

c. Manual Mode - The DMS must provide for manual inputs into the system which will allow the operator to address or command any stored test program, or any selectable test or stimuli points. Automatic safety and hazard indication must be provided as previously discussed.

The experiment, calibration, and/or checkout test and monitor sequences may be a result of stored programs or by manual entry by a system operator.

A simple system/operator interface must be provided which allows the operator to exercise manual control over the IMBLM system either from a central control area or remote area.

The minimum control functions required are to:

a. Remove or put the DMS into the operational state.

b. Apply and remove power to displays and other indicators.

c. Clear all displays and prior commands.

d. Continue checkout after a measurement has been stopped because of an inhibit function.

e. Enter commands and requests for data.

f. Advance one test at a time in a sequence of tests.

g. Identify a test, test subject, and other relative data which must be stored as part of the test data.

h. Select data desired to be presented on displays.

i. Control discharge of stored data to ground stations.

j. Control data storage device operation such as start, stop, speed, rewind, erase, etc.

k. Provide controls for system and selected experiment test and calibration.

l. Provide switching from local to remote and vice versa for remote control and display operation.

m. Provide for recall of stored data.

n. Provide for storage of selected display data.

4.2.5.2 Data Acquisition

The DMS must be capable of acquiring data upon programmed or manual command from the following sources:

a. IMBLMS experiment sensors.

b. Applicable spacecraft sensors providing signals such as environment measurements, timing information, status conditions, etc.

c. Command and control inputs from spacecraft crew or from spacecraft/ground up-link communication or tape unit.

4.2.5.2.1 Sensor Signals

In the conduct of IMBLMS mission experiments, the DMS must be capable of accepting preconditioned or non-conditioned signals related to any medical or behavioral test or experiment in process. The data may be presented to the system as:

a. Analog signals.

b. Discrete signals.

c. Digital words.

d. RF signals.

Since some of the experiment sensors have low-voltage, high source impedance outputs, signal conditioning will be provided as close to the signal source as possible. The output of these signal conditioners will be normalized 0 to 5 VDC. Other signals which are not preconditioned must be conditioned by the data acquisition portion of DMS. Also, the DMS must be capable of accepting manual entries of data which result from analytical type experiments (blood count, for example) or oral comments transmitted through a communications

link. Experiments, such as the ballistocardiogram, require that no physical constraints (hardwire link) be attached to the test subject. Data sampled during the conduct of these types of experiments will be transmitted to the DMS via an RF transmitter attached to the test subject. The DMS must be capable of interrogating a personal telemetry system.

Experiments may be conducted in any module of the orbital cluster and may be physically remote from the location of the DMS central control. Therefore, the DMS must have the capability of accepting data from these remote areas.

In addition, the DMS must be capable of accepting those pre-conditioned or non-conditioned signals necessary to conduct calibration and checkout operations on the IMBLMS equipment and to verify system status with regard to safety and hazards.

The DMS must provide the capability of digitizing analog signals to a resolution of 10 binary bits. Individual discrete signals may be acquired in groups of 10. Other types of signals must be conditioned and acquired in an appropriate manner.

4.2.5.2.2 Data Channel Capacity

Approximately 100 channels of analog data are planned to be sampled during the course of orbital biomedical experiments. This number includes some provision for equipment calibration and checkout data points. Because of planned staggered experiments, not all of these data sources will be sampled during any one test sequence.

The capability must be provided in the DMS to implement data source selection by any sequence or combination of data channels.

Since the requirements of the IMBLMS experiments are still evolutionary, a criteria for system flexibility and expandability dictates a provision for greater data channel capability. Therefore, the DMS should be capable of sampling at least 256 channels with an ultimate expansion capability to 1024 channels.

4.2.5.2.3 Data Sampling Rate

The system must be capable of sampling experiment data at sampling rates which provide for adequate reproduction of data waveforms for both on-board and ground data analysis. In addition, the sampling rate must be high enough to include interspersed sampling of safety and hazard sensors and, as applicable, associated calibration and checkout data points. The basic DM subsystem must be able to sample in any given experiment sequence at least 512 measurement addresses at a 10 Bit word rate of not less than 10,000 words/sec. This sampling sequence shall be variable and programmable in that total sampling capability can be allocated to one measurement channel or any sequence of measurement channels, but with allowance that the periods between samples of the same measurement address can be equal, unless a program update is introduced. The 512 measurement addresses to be sampled in any 1 experiment sequence shall be anyone of 1024 experiment addresses.

4.2.5.3 Data Processing

The data processing requirements of the IMBLMS experiments may be serviced by a spacecraft computer external to the IMBLMS system or by a computer dedicated to the IMBLMS mission.

When using an external (to IMBLMS) spacecraft computer, the data processing functions of the DMS will become the following:

a. Extracting desired data samples for on-board display from the stream of IMBLMS experiment data.

b. Converting these samples, as well as other IMBLMS information, into a form compatible with the display devices.

c. Converting data into a form compatible with the chosen telemetry format.

d. Maintaining priorities in the handling of operational and stimulus commands.

e. Converting stimulus commands from codes that may be peculiar to their sources into codes applicable to DMS stimulus generators.

f. Formatting of data for on-board recording.

g. Processing discrete commands to experiment and personal T/M XMTR.

Additionally, an external spacecraft computer or an IMBLMS-dedicated computer will provide for the following data processing capability:

a. Generating data measurement and stimuli command sequences as necessary to conduct IMBLMS equipment checkout.

b. Processing experiment data for on-board analysis and display.

c. Compression of experiment data to facilitate its on-board recording and transmission to earth by telemetry.

d. Conversion of experiment data and checkout data into biomedical and/or engineering units to facilitate interpretation by the system operator.

e. Testing of unprocessed and processed safety, hazard, and checkout sensor data against limits to verify system status and performance.

f. Checking command entries for legality before acting upon them.

g. Automatic isolation of faults, to a replacement level, in the IMBLMS equipment.

h. Sequencing of viability checks based on preprogrammed system time interrupts.

4.2.5.4 Data Display

The DMS must provide the capability for human-factored IMBLMS displays giving the following basic information:

a. Instructional Displays

b. Status Indications

c. Experiment displays of the form:

   1. Alpha-numerics

   2. Analog

d. Calibration and Checkout Displays.

e. Hazard and Safety Override Displays

The capability also must be provided for central area display and/or for remote area display monitoring.

4.2.5.4.1 Instructional Displays

These displays will provide pre-stored instructional material to the system operator which may be addressable either by preprogrammed commands or by manual operator request. Presented information will be considered as permanent type or static instructions in that they will not change once they have been developed and incorporated into the system.

Instruction material will consist of, but will not be limited to, the following categories:

a. Experiment Information

   1. IMBLMS equipment location for each experiment

   2. Schematics

   3. Assembly details

   4. Calibration and operational instructions

5. Sample output information expected from experiments such as analog waveforms of heart beat, brain waves, temperature changes, etc.

6. Experiment procedure instructions.

b. DMS System Information

1. Schematics of DMS

2. Descriptive details of DMS

3. Operational instructions

4. Calibration procedures

5. Malfunction test procedures.

4.2.5.4.2 Status Displays

The DMS must provide system status displays which indicate, but will not be limited to, the following:

a. Test in progress

b. System and/or component confidence status (normal or malfunction)

c. System operating mode (Automatic, semiautomatic, and manual)

d. System power

e. Calibration and test mode

f. Override control status

g. Halt status

h. System and/or component operating status

i. External timing signal input status

j. Approach limits or exceed limits for Viability Norms.

4.2.5.4.3 Experiment Data Displays

The DMS must provide for the dynamic, alpha-numeric display of experiment data under programmed control. The display will provide at least eight lines of 15 to 20 alphanumeric characters per line. This information will contain the necessary data to identify

the experiment or test parameter as well as limit values for measurements. Representative information might be the following:

a. Crewman identification

b. Experiment identification

c. Measurement identification (e.g., heart beat, respiration, temperature, etc.)

d. Upper limit

e. Lower limit

f. Units

g. Magnitude.

The capability must be provided for the real time analog and/or digital stored-to-analog reconstructed data signal display. The displays will be directly related to experiment or test data output and will be capable of displaying eight amplitude-time analog channels simultaneously. Frequency response will be 0 to 400 Hertz. Integral calibration marks or recticle overlays will be used to indicate relative amplitude and time measurements. Synchronizing time marks will appear in the display(s) which can be used to correlate time-phased information.

4.2.5.4.4 Calibration and Checkout Data Display

The alpha-numeric display capability provided for experiment data must be capable of being used for the presentation of calibration and checkout data under programmed control.

4.2.5.5 Data Recording Storage and Retrieval

Data recording capability must exist for both stored programs and collected test and experiment data.

4.2.5.5.1 Programmed Data Recording and Storage

This data will consist of preprogrammed instructions which are used for automatic or semiautomatic control of the DMS. Provisions for recording and storing any instructions emanating from ground stations via the telemetry link or on-line instructions generated by the system operator must be provided. Playback and recall capability must exist for program selection.

4.2.5.5.2 Test and Experiment Data Recording and Storage

Automatic recording capability must be provided for data collected during the conduct of any experiment or test. Data may be presented as a continuous stream or incrementally,

depending on test or experiment requirements. Storage capability must be provided for the maximum amount of experiment data to be "dumped" during a single transmission period. Recording and playback rates must be compatible with data acquisition and transmission rates. Categories of data to be stored include:

a. Experiment data and other related data required for transmission to ground stations.

b. Selected display data which the test operator desires to record.

c. Vocal comments by the test subject or system operator during the conduct of any test or experiment and which must be later transmitted to ground stations.

Data which is transmitted to ground stations must be retained on-board the spacecraft until transmission is verified by the ground stations. Selected display data will be used only on-board the vehicle and may be destroyed at the discretion of the system operator. Capability of recall and display of this data must be provided.

4.2.5.6 Data Transmission

The DMS must provide for interfacing with either the spacecraft unified S-band or VHF telemetry links and for the assembly and formatting of experiment data for transmission to ground stations over these links. The requirements for processing and storage of data by the DMS will be determined by further consideration of ground/air communication link and ground station capacities and of total mission operational requirements.

4.2.5.7 Stimuli Generation

The DMS must provide the capability of controlling and generating appropriate stimulus signals in order to support biomedical experiments and to support IMBLMS equipment calibration and checkout. Representative stimulus signal would be the following:

a. Sine waves

b. Square waves

c. DC voltage levels

d. Discrete signal functions

e. Time variant amplitude modulation of the above.

4.2.5.8 Equipment and Subsystem Interface

The DMS must provide for interfacing with the following IMBLMS and vehicle equipment and subsystems which are not considered part of the DMS:

a. Spacecraft Intercommunication System Uplink

b. Spacecraft Intercommunication System Downlink

c. Spacecraft Timing Signals

d. Experiment Test Subject Hardwire Link

e. Experiment Test Subject RF Link

f. Non-IMBLMS Dedicated Spacecraft Computer (as applicable)

g. Spacecraft Power System

h. Spacecraft Intercommunication System

i. Other IMBLMS hardware.

4.2.5.9 System Modularity, Expandability, and Flexibility

The DMS must be modular, expandable, and flexible to allow for expansion and/or reconfiguration in order to accommodate changes in experiment data handling requirements as the IMBLMS program progresses. Modularity must be provided to permit ready fault isolation to a replaceable module and to permit a reasonable amount of in-flight repair by replacement of plug-in modules.

4.2.6 DMS Description

The tentative design approach for the IMBLMS Data Management Subsystem is an outgrowth of two development programs currently underway. These are the On-Board Checkout Systems being developed by the Checkout Systems Branch of the Information Systems Division at MSC (Engineering unit design subcontracted to Martin Company - Denver) and Digital Command and Data Acquisition Systems being developed under the Contractors Independent Research Program at GE's Apollo Support Department in Daytona Beach, Florida.

The On-Board Checkout System development is oriented toward automatic checkout and simple format status reporting. Failures are flagged and test subroutines can be executed by semiautomatic and manual sequencing. Test results (See Figure 4-19) are displayed by go/no-go status lights or by digital numeric displays which indicate upper and lower limits and test values. Operating procedures and drawings can be called up on either of two of the microfilm projection displays. The significant technological aspects of the Checkout System Branch OCS development programs as related to IMBLMS are:

a. An Engineering Control and Display Unit and a Digital Interface Unit have been built.

b. GE-ASD is under contract to NASA-MSC for the evaluation and development of advanced checkout systems.

c. The man/machine interface is already under evaluation and will be optimized at an early date.

d. Basic computer software programs are already developed.

e. Checkout computer software programs currently provided by GE can be extended to include on-board programs.

f. On-board computer interfacing is already being evaluated by use of a Gemini computer. (It is not planned to use the Gemini Computer in the final system.)

g. Other on-board computer simulation programs are being conducted by GE-ASD with CDC 160 series computers.

h. The projected On-Board Checkout System development at MSC matches the IMBLMS requirements in the 1970 - 1972 time frame.

The GE-ASD Digital Command and Data Acquisition System development is primarily oriented toward variable programming of data acquisition for telemetry. The system utilizes a party-line concept and uniquely executes analog to digital conversions via voltage differential for detection of sensor analog outputs. Sampling rates of up to 25,000 analogs, or sets of 10 discrete events per second can be variably programmed to monitor any 1 or sequence combination of channels. The acquisition sequence can be hard-wire-programmed for several sequence variations, or it can be real time programmed by ground to spacecraft

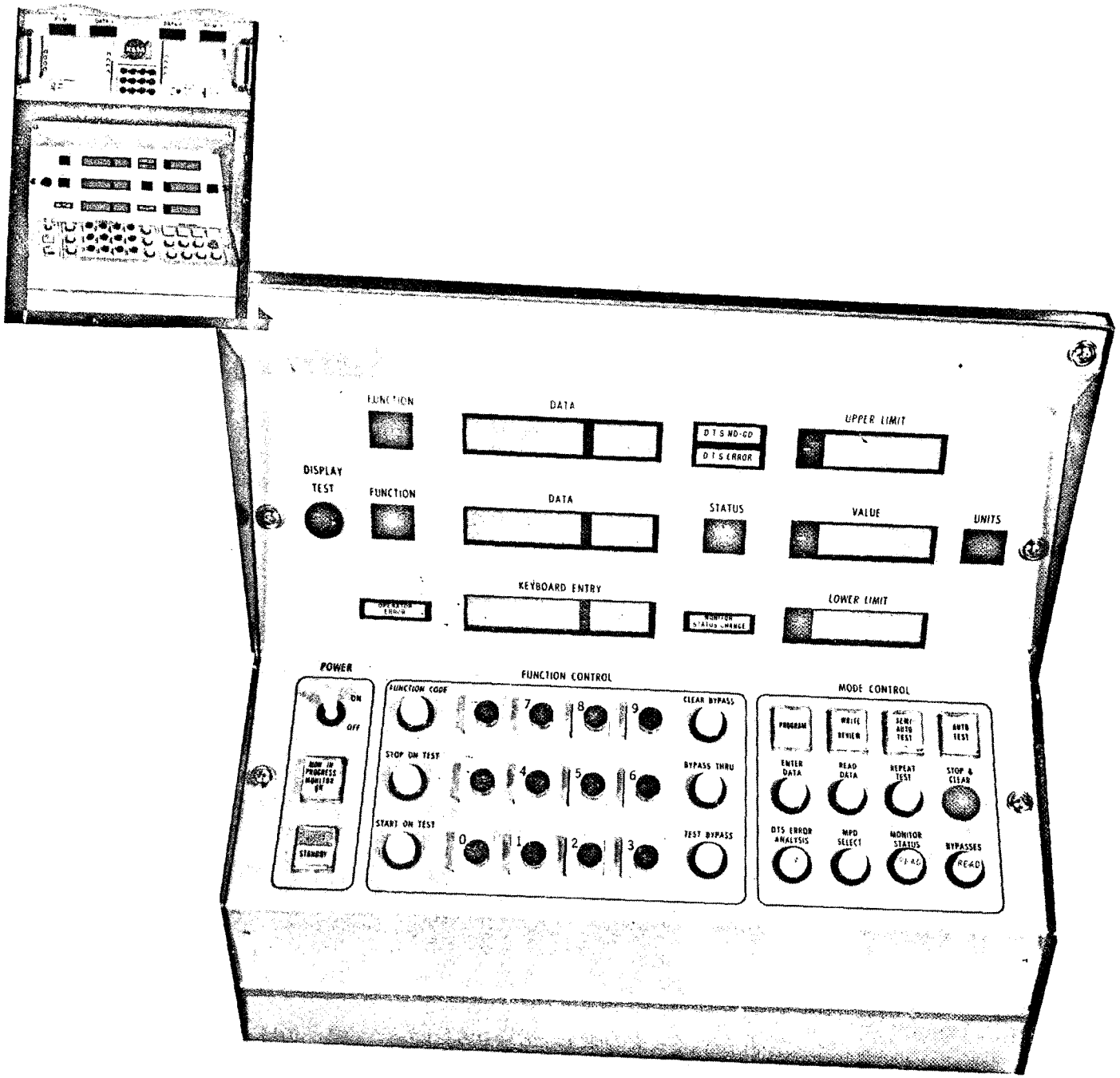

Figure 4-19. Control and Display Unit Currently Being Developed

up-link data, an on-board computer, digital tapes or by manual entries from a keyboard. A command structure can be imposed on the address lines for driving switches or function generators. The system can be expanded modularly by adding base plates and attaching modules which accommodate 8 analog channels or 80 discrete events. The significant aspects of the GE Digital Data Acquisition development program as related to IMBLMS are:

a. Breadboards and prototypes have been built and tested.

b. GE Company and NASA have already expended a considerable portion of the development effort through the Contractors Independent Research Program (CIRP) and also GE Company direct funding.

c. Design interfaces with planned on-board checkout systems have been assessed for compatibility and are feasible.

d. The development program has progressed to the point of subminiaturizing components. (An 8-channel analog module or an 80-channel event module is less than a cubic inch in volume.)

e. The projected development program readily fits the IMBLMS hardware requirements for 1970 to 1972.

Figure 4-20 shows a model of the aerospace Computer Interface Unit being developed by GE-ASD under CIRP funds as part of a generic aerospace on-board data management system. This unit is similar to the DICU described subsequently. The actual cannister is shown with dummy circuit modules and power supply modules.

The other two photographs, Figures 4-21 and 4-22, show actual fabricated circuit modules comprising logic elements in the CIU. The circuit board physical designs shown in Figure 4-21 have been environmentally tested to 50 g's. For modules or circuit boards of one or two quantity usage, the above layouts are used. Multi-layer techniques and large scale integration may be adopted for these designs for large quantity usage.

The DMS must effectively support the medical laboratory in two areas. One area includes the support of those unique experiments that require special data management resources. The other area includes those experiments that can be supported by sharing system resources. The former experiment dictates a growth requirement for the DMS in that special packages can be easily added to the existing system in a logical manner. The latter, that of support of experiments by sharing system resources, dictates an inherent flexibility requirement in the basic system design. Both types of experiments must be carefully considered in the basic design to implement a DM subsystem that can effectively support both the planned and potential experiments.

The requirements of the DMS can be stated as the distribution of data to diverse locations. In addition, the data must be distributed at the proper time and in a usable form.

-board computer, digital tapes or by manual entries from a keyboard.
re can be imposed on the address lines for driving switches or function
ystem can be expanded modularly by adding base plates and attaching
mmodate 8 analog channels or 80 discrete events. The significant
igital Data Acquisition development program as related to IMBLMS are:

ds and prototypes have been built and tested.

ny and NASA have already expended a considerable portion of the develop-
t through the Contractors Independent Research Program (CIRP) and also
ny direct funding.

erfaces with planned on-board checkout systems have been assessed for
ity and are feasible.

pment program has progressed to the point of subminiaturizing compo-
n 8-channel analog module or an 80-channel event module is less than a
in volume.)

ted development program readily fits the IMBLMS hardware require-
1970 to 1972.

a model of the aerospace Computer Interface Unit being developed by GE-
nds as part of a generic aerospace on-board data management system.
r to the DICU described subsequently. The actual cannister is shown with
lules and power supply modules.

graphs, Figures 4-21 and 4-22, show actual fabricated circuit modules
lements in the CIU. The circuit board physical designs shown in Figure
ironmentally tested to 50 g's. For modules or circuit boards of one or
the above layouts are used. Multi-layer techniques and large scale
e adopted for these designs for large quantity usage.

ctively support the medical laboratory in two areas. One area includes
e unique experiments that require special data management resources.
ludes those experiments that can be supported by sharing system re-
ner experiment dictates a growth requirement for the DMS in that special
sily added to the existing system in a logical manner. The latter, that
iments by sharing system resources, dictates an inherent flexibility re-
asic system design. Both types of experiments must be carefully con-
c design to implement a DM subsystem that can effectively support both
tential experiments.

of the DMS can be stated as the distribution of data to diverse locations.
ta must be distributed at the proper time and in a usable form.

Bad Copy

Supplement
For Pg 1.4-75

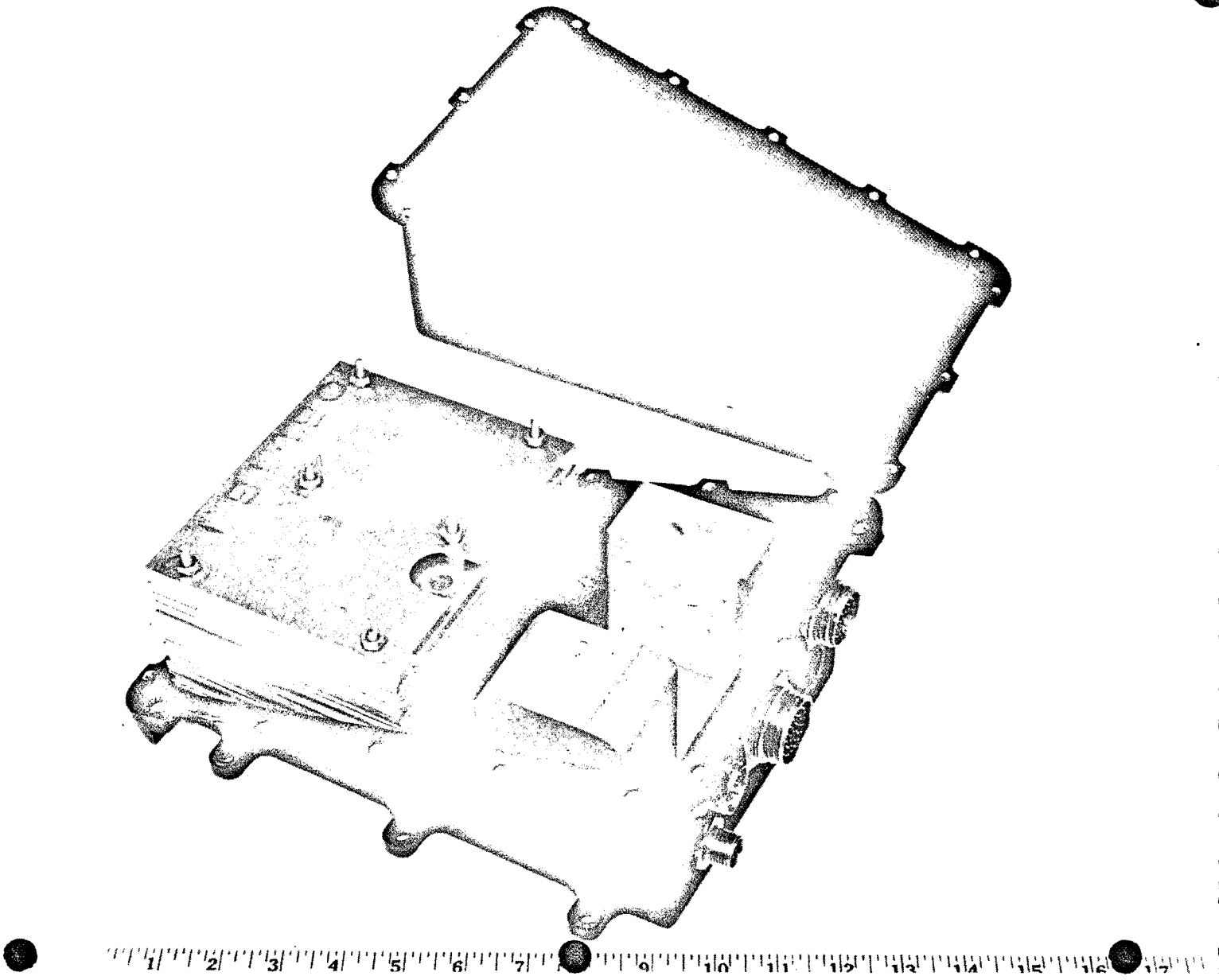

Figure 4-20. Aerospace Computer Interface Unit

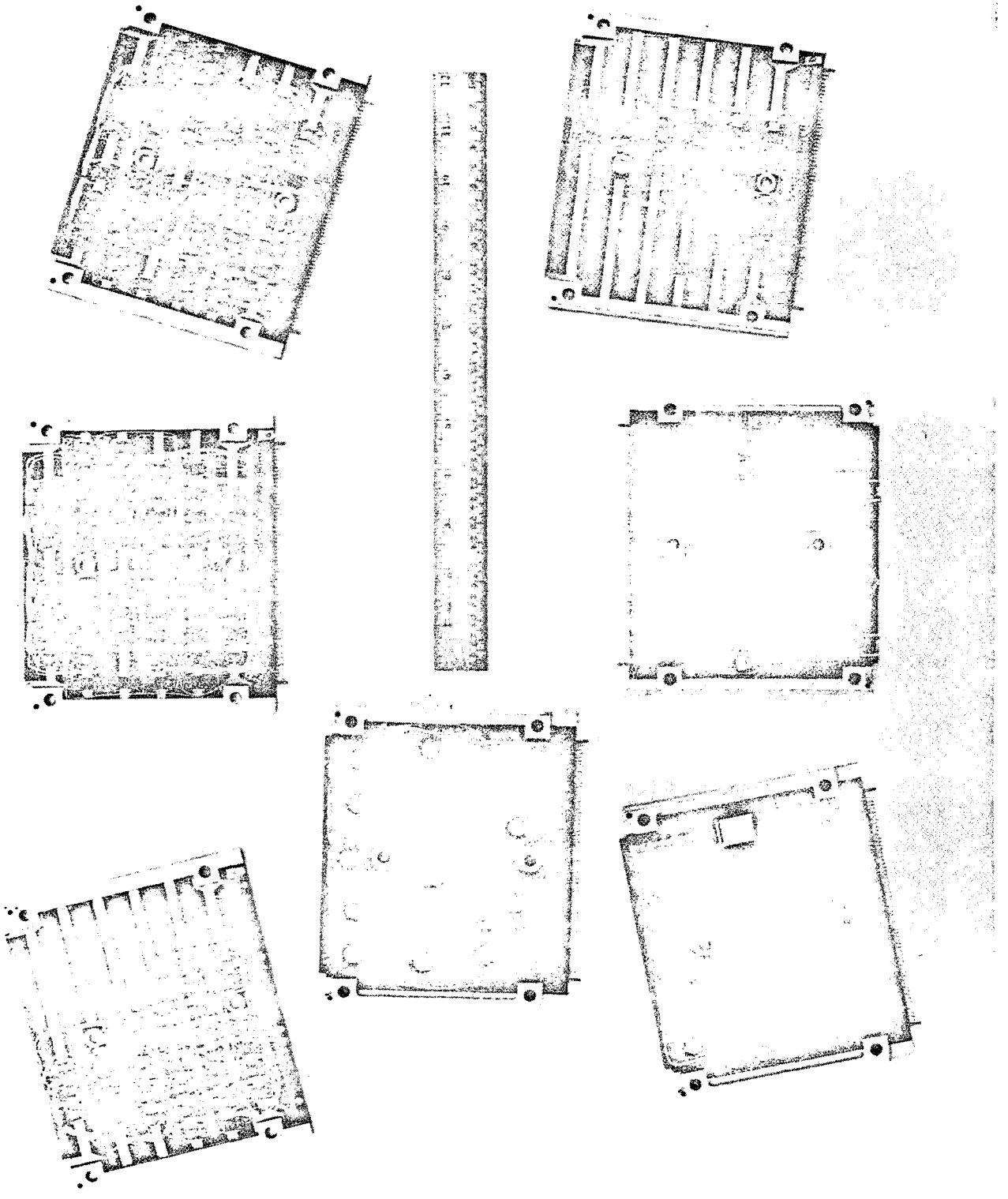

Figure 4-21. Circuit Modules Comprising Logic Elements in the CIV

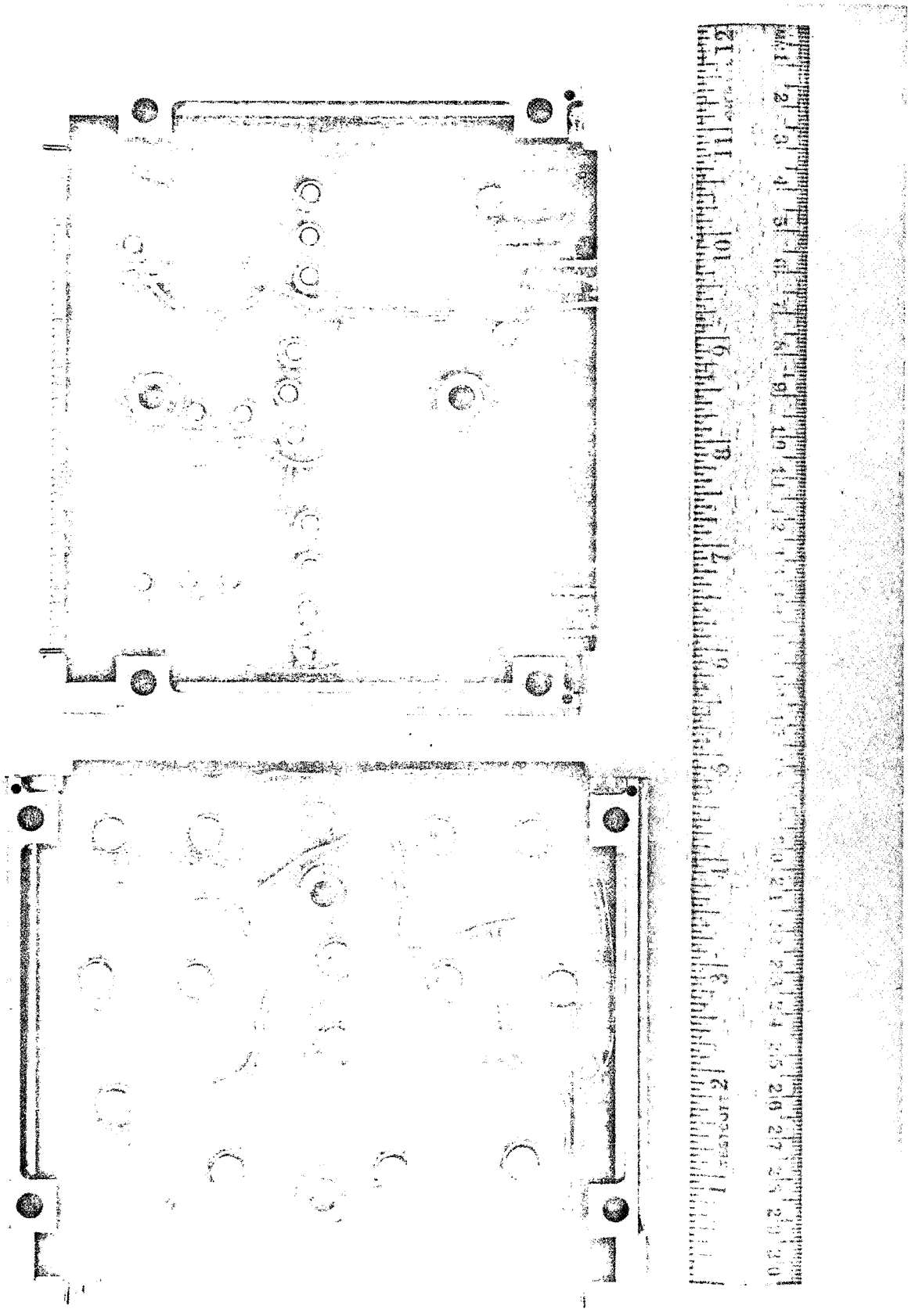

Figure 4-22. Circuit Modules Comprising Logic Elements in the CIU

In the DMS, the timely distribution of data is of paramount importance because of the number of experiments to be controlled, monitored, and recorded, and the restrictions of the space ground communication for dumping the data.

The ability of the DMS to produce the data in usable form requires not only format and conversion but, in some cases, the compression of the data to achieve feasible storage and transmission time.

The functional requirements of the DMS are illustrated in Figure 4-23. This shows that a total data management subsystem is implied in that control, computation, and memory are included. The key to implementation, however, is the integration of these functions into a concept that satisfies the on-board experiment requirements as well as the ground communication constraints.

4.2.6.1 Implementation Considerations

One approach to the use of the DMS is to permit an unrestricted data management resource on board the laboratory and essentially ignore any one specific mission requirement. This concept could probably provide adequate flexibility and growth, but at an impractical size, weight, and cost penalty.

A second approach involves tailoring the hardware around each experiment and ignoring the developmental aspects of the system. This concept would permit careful design as close to a minimum resource as possible. This technique would likely minimize size and weight and, if careful study is applied, would reduce redundant design and implementation of similar devices.

Another approach attempts to provide a compromise between the highly flexible and restricted concepts. In this approach, the basic elements of a data management system, that of distributing and processing the data, are improvised by a flexible approach, with specially designed hardware for handling unique experiment requirements. This approach is discussed further in the following paragraphs.

4.2.6.2 Conceptual Approach

A functional block diagram of a candidate DMS is shown in Figure 4-24. This system illustrates a centralized data flow that permits data generated by an experiment, astronaut, or from the ground to be coverted, compressed, stored, displayed, etc. at a destination controlled by the central control unit. The control function along with the computation capability must be designed with a flexible approach to handle the gamut of planned and potential experiments. Thus, when revised experiments or laboratory requirements dictate revised sampling rates or a need for display format changes, flexibility is available in the central control function to perform the desired functions. In addition, data collection or stimulus generation functions can be added as required.

DATA MANAGEMENT SUBSYSTEM

COMMUNICATE	PROCESS	CONTROL	RECORD	DISPLAY
GROUND-S/C • UPLINK/DOWN-LINK SELECT • RECEIVE/XMIT DATA • FORMAT DATA • VERIFY DATA EXPERIMENTS • SELECT • SAMPLE • FORMAT OPERATOR	• DATA CHECK • DATA CONVERT • DATA COMPRESS • SELF TEST • FAULT ISOLATE • CALIBRATION	• INTERFACE COMPATIBILITY • SEQUENCE ON EVENT • TIMING • STIMULI GENERATION	EXPERIMENT DATA • ANALOG • DIGITAL • VOICE	EXPERIMENT DISPLAY • ANALOG • A/N INSTRUCTIONAL DISPLAY STATUS DISPLAYS • DISCRETE • A/N

Figure 4-23. DMS Functional Requirements

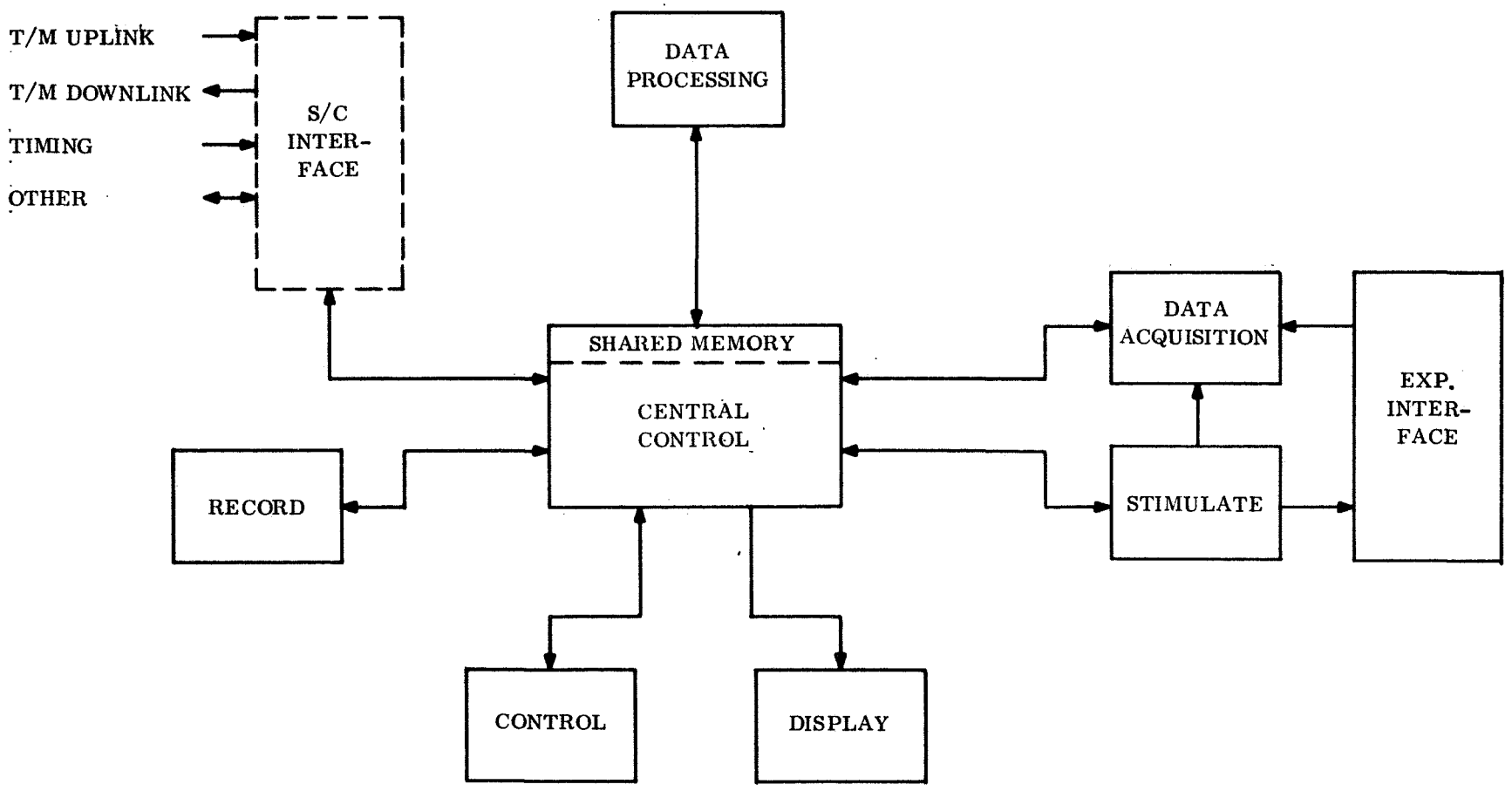

Figure 4-24. DMS Functional Flow Diagram

The central control function is not to be construed in a physical sense, but only in a data management sense. As such, distributed control can be utilized throughout the laboratory as dictated by weight requirements, but proper communication would be maintained between the control areas to preserve the concept.

4.2.6.3 Implementation Approach

Implementation of the centralized data flow concept could utilize a shared memory for data storage. Since data stored in the shared memory has access to a data processor, manipulation of selected data can be achieved. Thus, data can be deposited in the shared memory, processed as required, and distributed to the required destination in a timely and usable form.

Special hardware devices required by experiment packages are connected to the shared memory as required, with provision for handling the revised data management requirements by additional memory capacity and control program modification.

Each of the data management system functions will be discussed in terms of the proposed implementation of Figure 4-24.

Communication functions are handled in the DMS by reading data into or out of the shared memory at a rate compatible with the terminal device. Thus, during communication with the ground, data will be received and transmitted at a rate compatible with the ground-air link by dumping or storing the data in the shared memory at the proper rate.

A similar technique is used for collecting experiment data. Here, an acquisition measurements list is stored in the shared memory and dictates the sequence of measurement points and the desired sampling rate. Reading the sequence from the shared memory, the data acquisition portion of the system will acquire the experiment measurements and deposit the results into the shared memory.

Computation is handled by the DMS by transferring data stored in the shared memory to the data processor which uses a series of instructions stored in the shared memory to reformat, compress, etc., the data and then restore the processed data into the shared memory.

Preprogrammed or manual instructions establish the control function. These are implemented in the DMS by modular devices capable of performing elementary data conversion. Conversion functions include parallel-to-serial conversion as well as data transfer select and control functions.

The record function in the DMS includes both digital and analog capability. During data collection cycles, data recording will be initiated and a block of data stored in the shared memory will be recorded. This technique permits storing data at one rate and recording data at a rate compatible with the recording device. Playback of data will be accommodated by reading blocks of data into the shared memory as requested by the DMS. In this case, the data could be transmitted to the ground at a rate different from both the collection and recorded rate, with shared memory control providing the speed ratio conversion.

All experiment and status data available for display is stored in the shared memory. Data can be addressed manually or automatically for transfer to any display device. Instructional data is fixed and need be only accessible to the display. Independent memory devices other than the shared memory, such as microfilm, may be used for the instructional data.

A timing source will be used to provide a time reference to the DMS for executing control sequences, as well as indicating ground acquisition periods and experiment turn ON/OFF control.

4.2.6.4 Representative DMS System Organization

The conceptual DMS consists of the following components:

a. Data Processing Unit.

b. Digital Interface Control Unit (DICU) (including the shared memory).

c. Data Acquisition Unit (DAU) or Units.

d. Recording/Playback Unit (RPU) or Units.

e. Control and Display Unit (CADU).

f. Stimulus Generation Unit (SGU) or Units.

These components are interconnected as shown in Figure 4-25 to form a Data Management Subsystem. A flexible modular approach has been taken to allow the subsystem to be configured to the requirements of each specific mission. The data acquisition portion of the DMS can be physically distributed and modular plug-in signal conditioners permit tailoring the system to a specific parameter list. The basic subsystem includes two DAUs which will handle up to 128 data points. The system is expandable to 1024 data points (16 DAUs).

The DAUs provide the principal interface between the DMS and the experiment data sensors. EAch DAU will receive, signal condition as required, multiplex, and digitize up to 64 measurement points under control of a measurement list in the shared memory.

The SGU's can be programmed with control words from the DICU to provide various analog test signals. These test signals can be connected to one of 32 points for verification of DAU signal conditioners, multiplexer inputs, and selected experiment sensors.

Tradeoff studies should be performed to decide if it may be more desirable to use instrumentation tape recorders and different operating schemes for data playback. However, the mode of operation presently described seems to have flexibility without an undue amount of hardware and should be given every consideration.

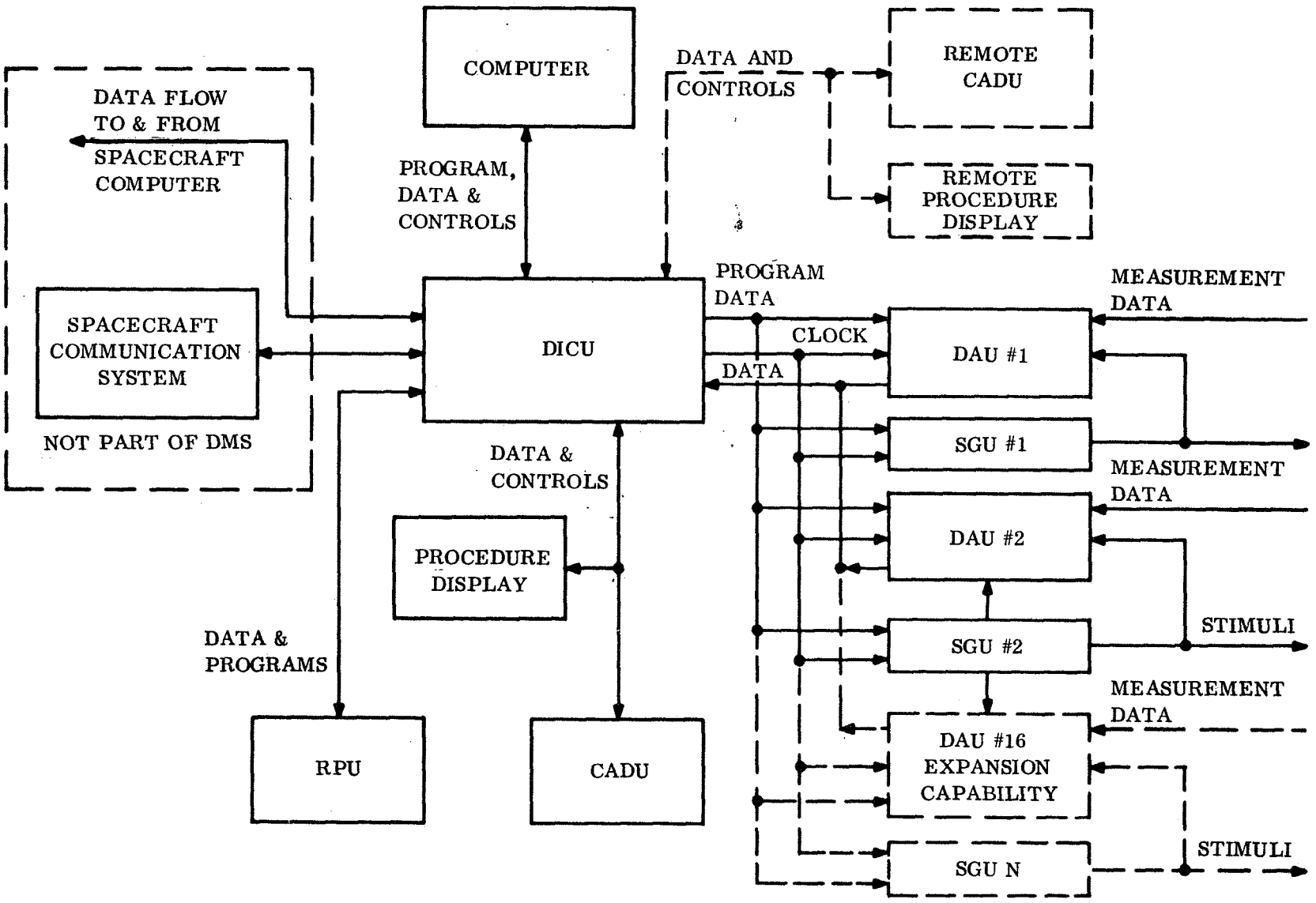

Figure I-25. Block Diagram of Data Management System

A personal telemetry receiver is included as part of the data acquisition portion of the DMS. The receiver accepts radiated energy from a personal telemetry transmitter and separates it into eight channels of information for input to a DAU multiplexer.

The Control and Display Unit (CADU) will interface with the DICU. Manually generated central information consisting of coded messages and interrupts will be routed to the DICU. All display data will be formatted by the DICU and routed to the display. Remote control and display capability can be provided by physically relocating the CADU to the remote area with a hardwire connection to the DICU. Serial data transmission will reduce cabling requirements.

Recorders are provided for the storage of programs, experiment data, and voice comments.

A data processing unit will also interface with the DICU. Since the DICU contains a shared memory, part of which stores a program dictating the data processing activities, a general-purpose digital computer application is possible. The general-purpose computer would provide the basic data processing function, while providing memory function. Further study is required to define the computer characteristics, since flexibility for handling a wide range of experiment requirements, of major concern in this data management function, must be adequately considered.

The DICU also provides control for data routing, parity generation and checking, and timing control for the following interface:

a. Data requests (address) to the DAUs.

b. Data and verification from the DAUs.

c. Command interrupts and control words from the manual display panel.

d. Display data to the analog and digital displays.

e. Data and commands to/from a Spacecraft computer.

f. Data to/from the digital tape recorders.

g. Playback data from the digital tape recorder to the spacecraft-ground communication link.

4.2.6.5 Representative DMS Equipment Implementation

A more detailed description of equipment elements to implement on IMBLMS DMS follow.

4.2.6.5.1 Computers

The DMS can operate with either an on board general purposes computer or an integrated IMBLMS computer. The DMS can also function without a computer, but with some penalty in flexible data formatting, data analysis and data compression. GE is not currently aware of the identification of a specific general purpose computer for the orbital cluster on the AAP program. Therefore a somewhat comprehensive discussion of computers and the application to IMBLMS is presented here. It should be noted that elimination of the computer introduces the requirement for special purpose components and circuits which may ultimately offset the cost of a computer and still not provide equivalent capability. Extensive tradeoffs in this area will be made in the Phase C IMBLMS program.

The airborne computer designs of the past few years have yielded many machines of very sophisticated designs. These devices are usually general-purpose, parallel organized computers that utilize random access memories. Instruction execution times compare favorably with those of their larger ground-based counterparts. The weight and power requirements are generally quite low when their capabilities and environmental requirements are considered. Table 4-14 contains a tabulation of the salient features of some of the more significant present-day airborne machines.

a. Computer Equipment Description. A summary of the computer characteristics that must be considered in the IMBLMS Data Management System follows:

1. Instruction Repertoire - The instruction repertoire is typically 50 basic instructions that can be classified as follows:

Arithmetic	10
Transfers	8
Jump, Branch	10
Input/Output	6
Logical	6
Shift	6
Misc.	4

2. Number System - Generally, the number system is fixed point, binary (sign plus magnitude). Negative numbers are represented in two's complement, primarily to eliminate the "end around carry" on arithmetic operations. This number system is adequate.

3. Word Format - It is in this area that a large number of variations are found. The dual word format for both instructions and data offers some advantage. Dual word is here defined as a half word utilization. For example, a full work of 24 bits that can be utilized as either two instructions or two data words would be a dual word format.

Table 4-14. Microelectronic Computers Comparison

Computer Characteristics \ Model		IBM CP	Autonetics D26-S	Autonetics D26-J	Autonetics D26-C	Univac 1816	Univac 1818	Univac 1824	Univac 1830	Honeywell ALERT	Litton 1304	Litton L3040	Burroughs D-84	Librascope L-90	Nortronics NDC-1060	GE A-212	GE A-224	GE A-605
Organization	Parallel	X	X	X	X	X	X	X	X	X	X	X	X	–	X	X	X	X
	Serial	–	–	–	–	–	–	–	–	–	–	–	–	X	–	–	–	–
Number System		2's Compl.	2's Compl.	2's Compl.	2's Compl.	2's Compl.	2's Compl.	2's Compl.	2's Compl.	2's Compl.	Sign and Magn.	Sign and Magn.	Sign and Magn.	2's Compl.	2's Compl.	2's Com.	2's Com.	2's Compl.
Clock Frequency			1.33 MHz	–	1 MHz	1.536 MHz		1.536 MHz		3 MHz	8.3 MHz	8.3 MHz	1 MHz	5 MHz	500 kHz	2 MHz	2 MHz	2 MHz
Instruction Word Length (Bits)		16 and 32	12 - 16	12/16	30	16	18	26	30	24	32	32	24	15	14/28	24	24	36
Operand Word Length (Bits)		16 and 32	12 - 16	12/16	30	16	18	24	30	24	16	16/32	24	28	14/28	12	24	36
Available Memory Types	NDRO					Thin Film	Wired Core-Rope	Thin Film	Thin Film	μ Biax	–	–	Various Types	–	–	μ Biax Option	μ Biax Option	μ Biax Option
	DRO (CORE Unless Specified)	X	X	X	X	Thin Film	X	Thin Film	X	X	X	X	X	X	X	X	X	X
Memory Capacity (Words)	Minimum	8192	2048	1024	8192 (DRO)	4096 (NDRO)	4096 (NDRO)	8192 (NDRO)	4096 (NDRO)	4096	4096	4096	2048	4096	4096	1024	4096	4096
	Maximum	+8192 increments	16,384	16,284	512 (1 μsec DRO)	512 (DRO)	32,768 any mix 1024	512 (DRO)	26,672 (DRO)	32,768	131,072	131,072	>32,768	32,768	16,384	16,384	32,768	262,144
Memory Cycle Time (Microseconds)		2.5	6	6	6 (1μsec Scratchpad)	5	2 (DRO) 2 (NDRO)	4	4	1 (NDRO) 2 (DRO)	1.6 (or 1.8)	1.6 (or 1.8)	2	4.6	2	3	3	3
Memory Transfer Rate (Maximum)		260 kHz			27.6 kHz		250 kHz (word rate)		125 kHz	500 kHz	345 kHz		200 kHz		500 kHz	333 kHz	333 kHz	333 kHz
Separate Memory Control		–	–	–	–	–	Optional	–	–	–	–	–	–	–	–	Optional	Optional	–
Direct Addressing Capability (Number of Words)		65K	8K		32K	256	–	256	32K	32K	32K (32 Bits)	32K (32 Bits)	4K	512	16K	4K	4K	262K
Parity (Memory)		2 Bits	–	–	–	–	–	–	–	–	–	–	–	–	–	Optional	–	–
Typical Instruction Execution Times	Add-Subtract	3.8	12	12	6 - 12	10	4	8	8	4	7	2	4	5.6	6/8	6	6	6
	Multiply	11.5	24	54 (ave.)	18 - 45	90	22	64 (ave.)	32 - 48	14	28 - 38	9	25	84	26/78	11	17	23
	Divide	46.3	42	84	91 - 112	90	22	128 (ave.)	48	32	38	17	50	163	50/138	12	18	24
	Transfer	5.4	6		6 - 8	10	2 - 4	4	8	3	2	2	3	5.6	6	3	3	3
	Indexing	3.3 - 5.0	–			5	+2	4	4		4	2	2	0		0	0	0
Number of Instructions		61	20	32	87 (Basic)	40	29	45	64 (Basic)	89	62 (Basic)	500	62 (Basic)	35 (Basic) (150)	42	60	68	133 (Basic)
Instruction Types	Arithmetic	X	X	X	X	X	X	X	X	X	X	X	X	X	X	X	X	X
	Logical	X	AND only		X	–	X	X (2 Instr)	X	X	X	X	X	–	X	X	X	X
	Character Handling	–			–	–	–	–	–	X	–	–	–	–	–	–	–	X
	Special	Insert Storage Protect Bit			B→BCD BCD→B Sum of Products Repeat	Square Root	Square Root	Square Root			Compare with Limits	Block Transfer						Repeat B→BCD Gray Binary
Index Registers	Number	3	–		7	3	–	3	7	6	8	7	Program Determining	2	7 per Program Level	1 - 3	1 - 3	8
	Wired-In	X	–		X (1)	–	–	–	X	X	–	X	–	X	–	X	X	X
	Stored In Memory		–		X (6)	X	X	X	–	–	X	–	X	–	X	–	–	–
Address Modification Method	Register	X	–		X	X	X	–	X	X	X	X	X	X	X	X	X	X
	Indirect	X	–		X	–		–	X		X	X	X	–	X	X	X	X
Interrupt Facility	Memory		–			–	X	–	X	X	X	X		X		X	X	X
	Program	X	–			–	X	–	X	X	X	X	X	X	X	X	X	X

Table 4-14. Microelectronic Computers Comparison (Cont)

Computer Characteristics / Model		IBM CP	Autonetics D26-S	Autonetics D26-J	Autonetics D26-C	Univac 1816	Univac 1818	Univac 1824	Univac 1830	Honeywell ALERT	Litton L304	Litton L3040	Burroughs D-84	Librascope L-90	Nortronics NDC-1060	GE A-212	GE A-224	GE A-605
Interrupt Capacity (Standard)	Number of Cells	32	–		8 External	–	6 External 3 Internal	–	10		8	8		8 (64 Max)		Custom-ized	Custom-ized	27
	Number of Levels	32	–			–	–	–		24	64	64		2		1	1	8
Multi-Processor Capability			–	–	–	–	–	–		–	X	X	X	–	–	–	–	X
Floating Point			–	–	–	–	Optional	–	–	Optional	–	–	–	–	–	–	–	Optional
Double Precision		X	X	–	–	X	X	X	–	–	–	–	–	X	X	–	–	–
Internal Clock			–	–	X (9)	X	X	X	X	–	X	X	–	–	X	–	–	X
Methods of Indirect Data Transfer	Direct		–			–	–	–	No					–	–			
	Indirect		–			–	–	–	–						–	–	–	–
	Program Control	X					–								X			
Input/Output Conversion	DC A/D D/A	–	–				–		–	–	–	–	–	–	–	–	–	–
	Synchro to Digital	–	–						–	–	–	–	–	–	–	–	–	–
Input/Output Character Handling Capability		X (On Some Channels)	–		X	–	–	–	–	X	X	X	–	–	–	–	–	X
Number of Input/Output Channels (Typical)		6	Custom-ized		45		6	20	32		8 Basic (64 Max)	8 Basic (64 Max)		64		Custom-ized	Custom-ized	30
Other Organizational Features					1) Block Processing 2) Separate I/O Processor						1) 8 Process Registers 2) Program Relocation & Memory Protect	1) 8 Process Registers 2) Program Relocation & Memory Protect	Functional Modularity	High-Speed Serial Registers	1) Half Word Memory Utilization 2) Roll Table	Direct Mod.	Direct Mod. List Proc. Option	1) List Processing 2) Block Transfers 3) Types of Address Modification
Basic Circuit Type		TTL				DTL	DTL	DTL		TTL	LINC (TFX Type)	LINC (TFX Type)	RTL	TTL	DTL	MECL	MECL	MECL
Basic Construction Method		Multilayer Interconnection Boards	Minuteman & Plugable Multilayer Boards	Multilayer Boards	Multilayer Boards	Multilayer Boards (Non-Plug-In)		Multilayer Boards (Non-Plug-In)	Plug-In Single Layer Boards	Multilayer Boards	Multi-layer Boards	Multi-layer Boards	Flexible Strip Modules	Multilayer Boards with Striplines	Two-Sided Boards	Plug-In Sticks & Multi-layer Boards	Plug-In Sticks & Multi-layer Boards	Plug-In Sticks & Multilayer Boards
Software	Compilers					X (CS-1)	X (CS-1)	X (CS-1)	X (CS-1)	–			–	X (Neliac)		–	–	–
	Assembler	X				X (CS-1)	X	X (CS-1)	X (CS-1)	X			X	X	X	X	X	X
	Simulator	X				X	X	X	X	X			X		X	X	X	X
	Diagnostics	X					X		X	X			X	X	X	–	–	X
	Operating Supervisor						Utilities			X			X					X
Program Compatibility With		8K Memory				Univac 1206	Univac 1824, 1830	Univac 1206	Univac 1830	H-800 IBM-360				–		GE 600 Line	GE 600 Line	GE 600 Line
Size	Based On	8K Memory	Inertial Navigation	1K Memory	8K Memory	4K Thin Film & 512 Words Core Memory	4K Core & 4024 Word Wired Core-Rope	8K Thin Film & 512 Words Core Memory	4K Memory Film & 28K Core Memory	16K Memory	Includes 8K Memory & Power Supply	8K Memory & Power Supply	4K Memory	4K Memory	16K Memory & Power Supply	1K Memory & Power Supply	4K Memory & Power Supply	4K Memory & Power Supply
Size	Cubic Feet	0.86		0.15	0.65	0.3	1.2+	0.5	About 8.0	1.26	3.3	0.28	1.4	0.535	0.84	0.7	0.8	1.0
Weight (Pounds)		50	19	13	40	19	36	32.15	400	90	95	38	100	32	42	25	27	60
Power (Watts)		250	100	50	192	55	145	100	800	226	432	110	110	100	180	80	1000	130
Environment		MIL-E-5400 Class 2					MIL-E-5400 Class II		MIL-E-5400F MIL-STD-704	MIL-E-5400 MIL-I-26600	MIL-E-5400F MIL-STD-169 MIL-S-901C	MIL-E-5400F MIL-STD-169 MIL-S-901C		MIL-E-5400F MIL-I-26600	MIL-E-5400F	MIL-E-5400	MIL-E-5400	MIL-E-5400

(a) Data Word - Half word arithemtic operands require less memory storage. Hardware savings are realized with only slight increases in execution times.

(b) Instruction Words - Half word instruction work format yields the same advantages as those stated for Data Words.

(c) Full/Half Word - This structure is the most efficient. A machine organized in this fashion allows efficient memory storage utilization with the added advantage of being able to extend the Instruction Word when necessary for greater addressing capability. Full word data allows the greater precision that will sometimes be required.

4. Execution Times - Typical executions for parallel machines are as follows:

Add	2 to 12 microseconds
Multiply	9 to 90 microseconds
Divide	12 to 163 microseconds

The execution times for DMS would have to be in the lower ranges to accomplish the stimuli generation, fast sampling rates, and transmissions that are required.

5. Input/Output - Precise requirements for the processor input/output section are not defined. The following preliminary requirements may, however, be considered typical:

(a) One 24 to 28 bit input channel

(b) One 7 bit input channel

(c) One 24 to 28 bit output channel

(d) One 7 bit output channel

(e) Block transfer capability

(f) Internal and external I/O control

(g) Multiple priority interrupts

(h) Multiple discrete inputs and outputs

6. Memory - The machines listed in Table 4-14 utilize magnetic memory that is considered state-of-the-art. A low power, monolithic memory of 8192 words, expandable to 16,384 words, should be considered. Bulk storage would be accomplished via the magnetic tape unit. A monolithic memory offers advantages in weight, size, speed, and reliability. No discrete circuits, high current switches, low level sense amplifiers, and high voltage power supplies would be required. These components are the prime factors in the low MTBF's of current airborne processors. Should core or plated wire memories be developed that do not require discrete, high current drive, they would deserve consideration, since such memories offer non-violatile storage.

b. Computer Construction - The mechanical design should be a lightweight structure that utilizes cold plate cooling. No cooling air should be required.

c. Computer Reliability - Most computers that were developed during the period of 1958 to 1964 were serially organized machines that utilized discrete component circuitry and rotating memory devices. The construction of the electronics varied from two-sided printed circuit boards to welded cordwood modules. Computers typical of this group (Group A - Figure 4-26) are the Autonetics Verdan I and the Honeywell Mark I. The performance of this type of machine was very restrictive, due largely to the slow execution rates and minimum input/output capacity.

The Group B machines are representative of present-day technology. The logic elements utilized are monolithic integrated circuits. The impact of size reduction of monolithic integrated circuitry was distorted by increasing capacity, flexibility and, therefore, complexity of this group of machines. These machines are general-purpose, parallel units with instruction repertoire, and execution rates that approach those of ground-based processors. A few of the later members of this group utilize a limited number of large-scale integration (LSI) arrays. The rotating memory devices were still utilized in early models of this group. The later computers: Honeywell ALERT, Nortronics 1060, Litton 304, IBM 4 Pi, and Univac 1800 Series, all use non-rotating memories. Discrete components are still widely used in the memory of the computer with some effort to apply integrated circuits in the low-power areas. The memory area is the prime contributor to the computer system MTBF. In one system that was analyzed (stress at 25°C) the central processor MTBF was 12,000 hours and the memory unit MTBF was 3000 hours.

The Group C machine MTBF prediction is based largely on an examination of the impact of LSI and batch process memory systems. LSI in the logic areas of the central processor should improve the MTBF by at least a factor of three. Two factors are considered here: the reliability of the chip itself and the reduction in mechanical connections that will be required between logic elements. The batch process memories (plated wire being one) require fewer mechanical connections, have better high temperature characteristics, and require lower current drive. The latter factor will allow wider utilization of monolithic integrated circuits, thin-film hybrid circuits, and LSI arrays. A completely monolithic memory would allow the elimination of the thin-film hybrid circuits and greater reduced temperature limitations due to core characteristics, thus eliminating temperature-compensated power supplies. These factors, all combined, should allow construction of airborne computers with conservative MTBF figures of 12,000 to 14,000 hours for new designs in the post-1967 era.

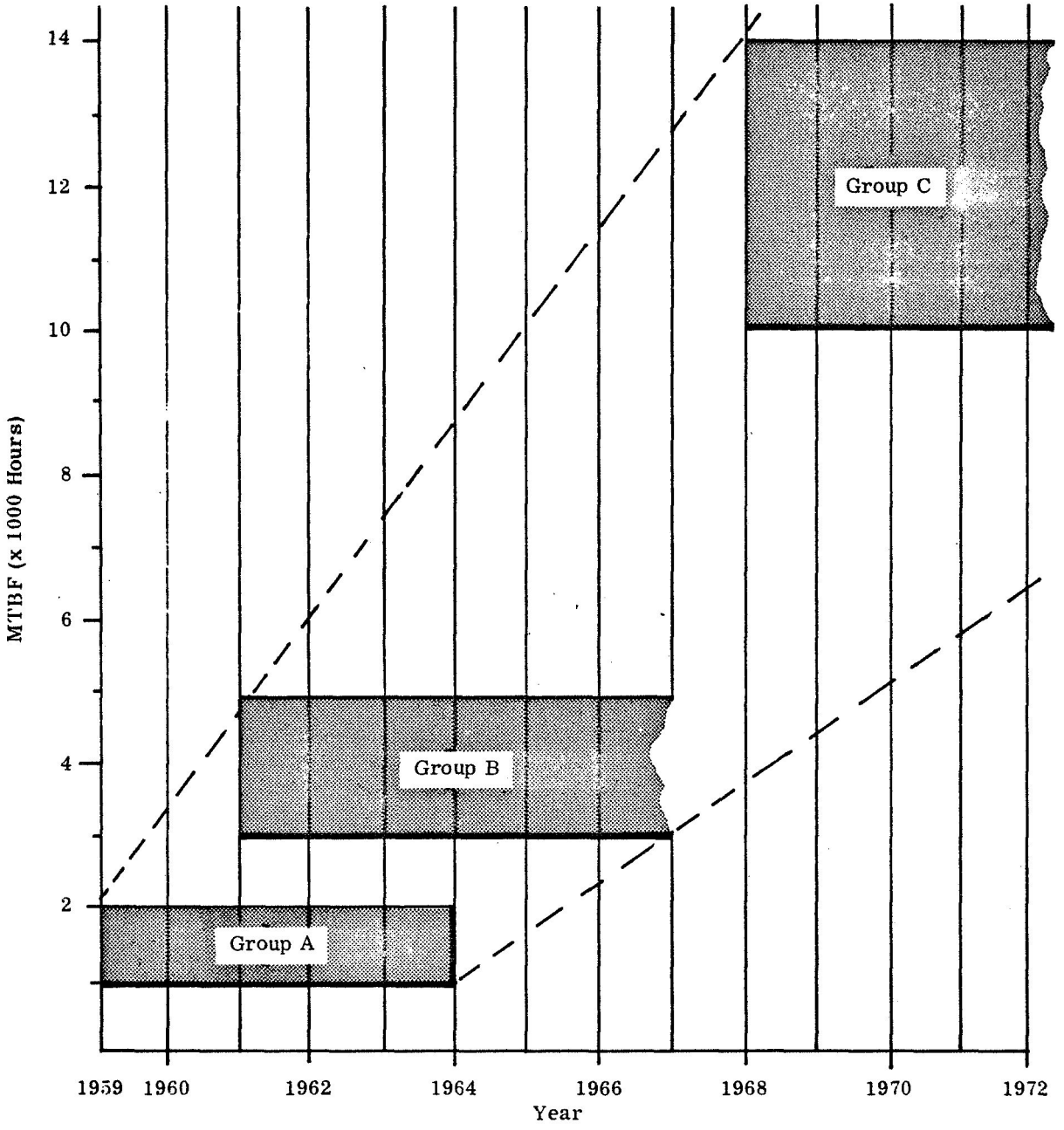

Figure 4-26. Projected Computer Reliability Improvement

4.2.6.5.2 Digital Interface and Control Unit (DICU)

The Digital Interface and Control Unit provides the necessary logic and controls to integrate the Data Management Subsystem into a functionally operating system. It must interface with and transmit/receive data and control signals to/from the DAU, CADU, RPU, DMS computer, spacecraft computer, and the spacecraft communication systems. It also contains the logic necessary for limited raw data accessibility using a fixed format sequence for data acquisition in case of computer failure. Figure 4-27 shows an implementation of this type of system concept.

a. DAU Interface - The DAU Interface logic accepts computer formatted address and command data from the DMS computer in parallel, converts it to serial, and transmits this information to the DMS Data Acquisition Units. Serial data from the DAU's are accepted and transformed into parallel data for transmission to the DMS computer. Under normal operating conditions computer-generated type of information is the only DICU communication with the DAU's. However, in case of computer failure limited operation is possible via the man-machine interface. The limited operation is envisioned as a fixed scan of data points with operator selection of one parameter at a time for quick-look capability only. However, there are some alternates such as tape unit control, etc., which can be investigated during the detail design phase.

   As alternatives, special-purpose hardware could be considered to replace the computer and the DICU. However, with requirements now envisioned, higher cost, power, size, and weight, along with reduced capability would probably result.

b. Control and Display Interface - This interface primarily consists of an interim format change from serial-to-parallel and parallel-to-serial in order to interface the DMS computer with the display and control devices which is the channel through which the operator controls selection of data for display, programs the experiments, and in general exercises complete control of the DMS. The operator's job is greatly simplified when it is considered that he need only call up a program subroutine, prepared pre-flight, or uplink modified to achieve measurement, recording, and display that would otherwise consume considerable time.

c. Recorder Interface - Interface logic between the RPU and the computer primarily consists of character storage and drivers/receivers for interfacing the RPU with the DMS computer. Data formatting, parity generation, and reformatting on playback are accomplished by the DMS computer.

   Tradeoff studies should weigh the advantages of computer controlled tape units with respect to savings in cost, weight, power, and size compared to the increase should special-purpose logic for formatting, playback, and reformatting of data for transmission be required.

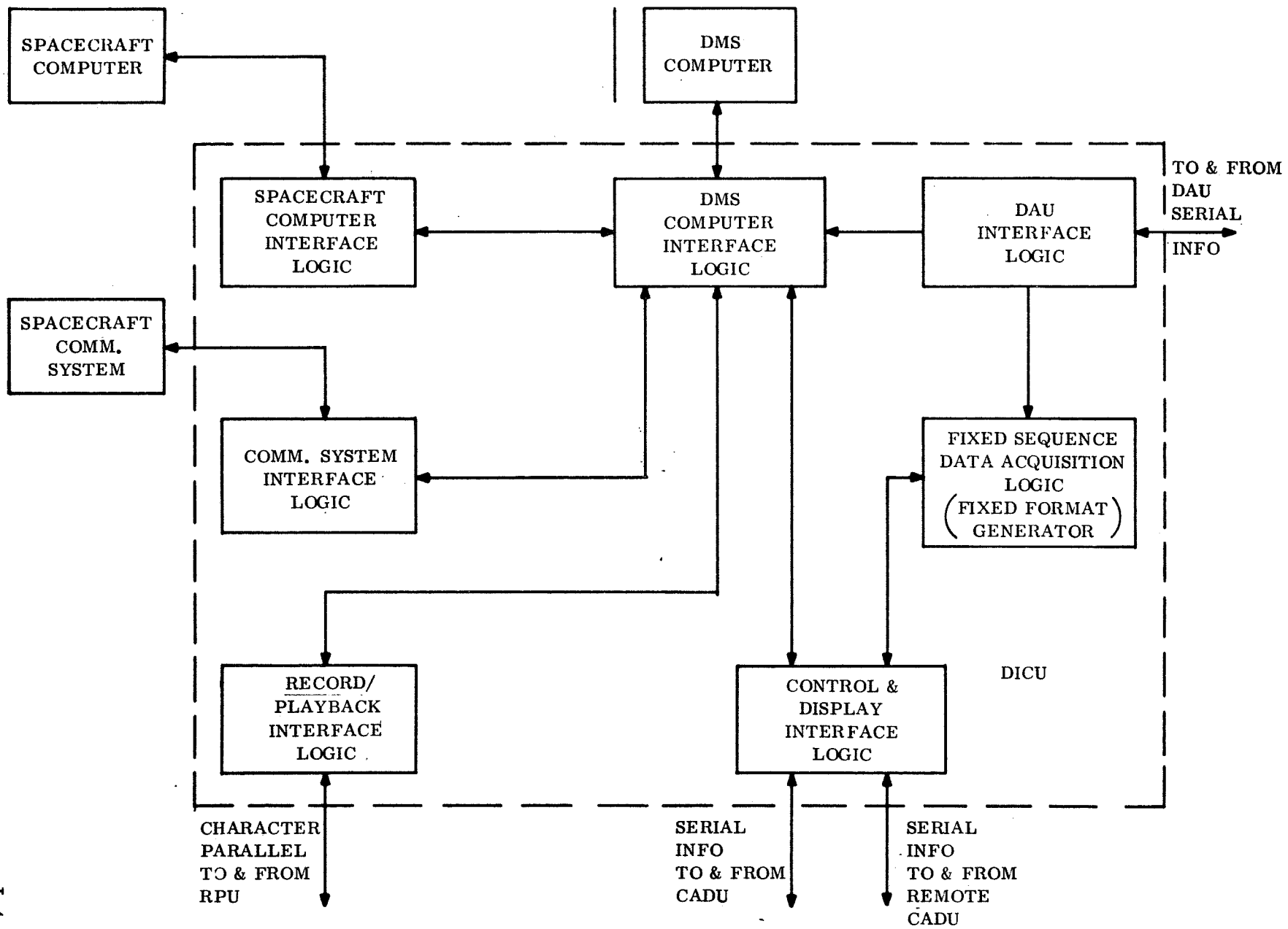

Figure 4-27. DICU Block Diagram

d. Communications Link Interface - Data are received from the spacecraft communications subsystem in serial fashion and is converted to parallel by the communication link interface logic. After conversion to parallel, the received data is routed to the DMS computer for program interpretation and action, if required, is initiated by the DMS computer. The types of received data expected are program data, instructional data for crew, and requests for specific medical data or experiments. Since data could have an effect on present programming, it is presumed that error detection and correction techniques will be employed to protect the integrity of the incoming data. It is further assumed that the error detection/correction will take place before the data are received by the DMS.

Experiment data are to be transmitted to ground stations via the spacecraft telemetry links. This is accomplished by playing data back into the DMS computer, record at a time, from the bulk storage data tape. The DMS computer formats the unprocessed data into a PCM telemetry format and outputs to the Communications Link Interface Logic. The data are then transferred serially to the spacecraft communication subsystem for transmission to ground equipment. The communication link interface logic is preprogrammed by the DMS computer for the bit rate required for the telemetry links. In this fashion, it is possible to meet any reasonable transmission data rate and telemetry format without hardware redesign of the DMS.

Tradeoff studies should be performed to decide if it may be more desirable to use instrumentation tape recorders and different operating schemes for data playback. However, the mode of operation presently described seems to have flexibility without an undue amount of hardware and should be given every consideration.

e. Spacecraft Computer Interface - Logic in the DICU allows the spacecraft computer to communicate, either serially or parallel, with DMS computer. It also has the capability to replace the DMS computer and allow the spacecraft computer to control the DMS. This type of operation would allow operation of the DMS in case of DMS computer failure and could, if proper interface is made in other spacecraft systems, perform certain functions for other systems in case of spacecraft computer failure. Normally, provision for this interface would allow a spacecraft computer to serve in a supervisory role if deemed necessary. Although some extra hardware is required for this extensive interface, other considerations such as reliability and equipment backup should make it well worth while. Furthermore, if the space and weight factors were limiting and if there is available capacity in the spacecraft computer to support IMBLMS, the IMBLMS computer could be omitted.

Tradeoff studies should be made to determine the extent to which an interface of this type should be implemented and results of the studies incorporated in the system and thence the equipment design.

4.2.6.5.3 Data Acquisition Unit (DAU)

The Data Acquisition Unit (DAU) provides the function of acquisition and transmittal of digitized data to the DICU on demand from the DICU. Performance of these functions require signal conditioning, multiplexing, A/D conversion, and address and control logic. Figure 4-28 represents one way of combining the previously mentioned items into a functioning DAU. A brief functional description of the DAU is given in the following paragraphs.

Command data and clock are received at the DAU in the remote terminal logic. The address portion of the command word is routed to the address command and routing control logic. The address is decoded and sent to the 64-channel multiplexer in order to select the desired signal conditioned data point. This selected signal is switched through the multiplexer to the A/D converter. The A/D converter converts the analog signal to a 10-bit digital word and routes the converted data to the remote terminal logic where message protection is added and the data transmitted to the DICU.

It should be noted that the equipment arrangement within the DAU is only one system flow concept. Further tradeoff studies, additional functions, and exact hardware implementation will be considered during later phases of the IMBLMS program. One such tradeoff study that should be performed would be the time sharing of signal conditioners. Time sharing of signal conditioners becomes attractive if a large number of signals to be converted are within reasonable amplitude and frequency ranges of one another and crosstalk, feedthrough, and isolation problems do not become prohibitive. Reliability, equipment complexity, and computer loading are still other factors that would enter into the tradeoff studies for different equipment configurations other than the one described herein.

a. Signal Conditioning - Signal conditioning within the DAU can take many forms, depending on the system selected for hardware implementation and the range of signal parameters and the measurements to be accomplished. Complexity of the signal conditioning will vary with isolation, accuracy, programmability, and repeatability requirements. At the present time, the following input signals, which must be signal conditioned have been defined:

1. Low level signals:

Voltage Range	0 to 50 mv
Frequency Range	0 to 500 Hz

2. High Level Signals:

Voltage	0 to n volts (n is to be defined)
Frequency	0 to 400 Hz

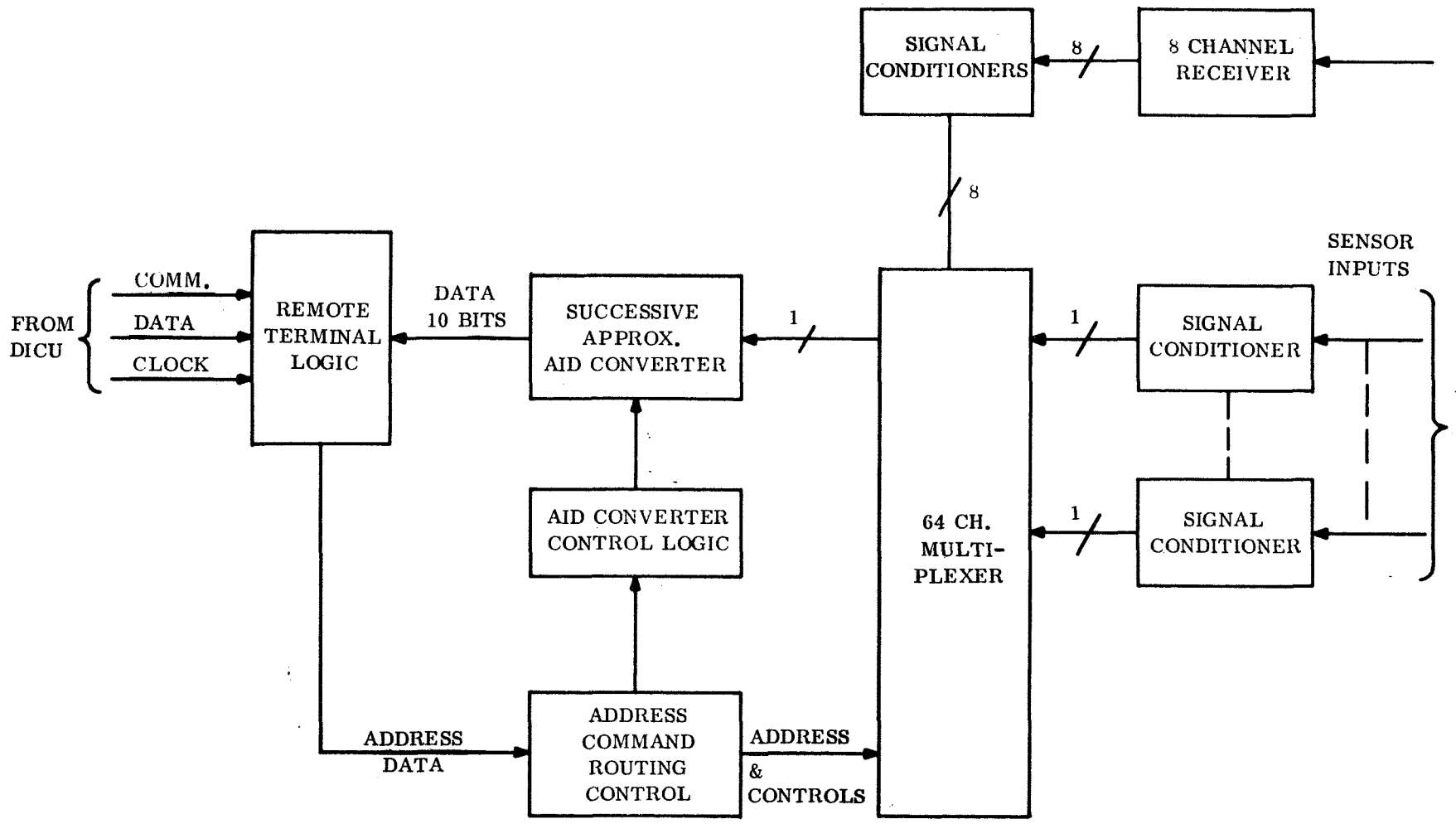

Figure 4-28. Data Acquisition Unit (DAU)

3. Frequency Multiplex:

Type	FM 8 channels
Voltage	Variable (from transmitter) dynamic range - 10 mv to 5 volts
Frequency	To be determined

Item 3 specifies a requirement to accept a multiplexed FM signal from a personal transmitter associated with the test subject. Since the output of this device (FM receiver - 8 channel) must be converted to digital signals, it is considered as part of the signal conditioning and is packaged within the DAU. Figure 4-29 depicts the required items for the receiver. A small antenna receives the multiplexed FM signal, it is amplified and fed to bandpass filters and thence to discriminators. The outputs of the discriminators are thence signal conditioned and sent to the multiplexer and are ready for conversion to digital data when selected by the computer via the DICU and DAU logic. A tradeoff study should be performed to consider time sharing the discriminators and bandpass filters by computer programming of the required receiver parameters. Should such a concept prove practical, a savings in power, weight, and size should result. Consideration will also be given to DMS controlled personal TM which includes multiplexing and A/D conversion within the miniature T/M device. Table 4-15 indicates general characteristics of several personal T/M concepts.

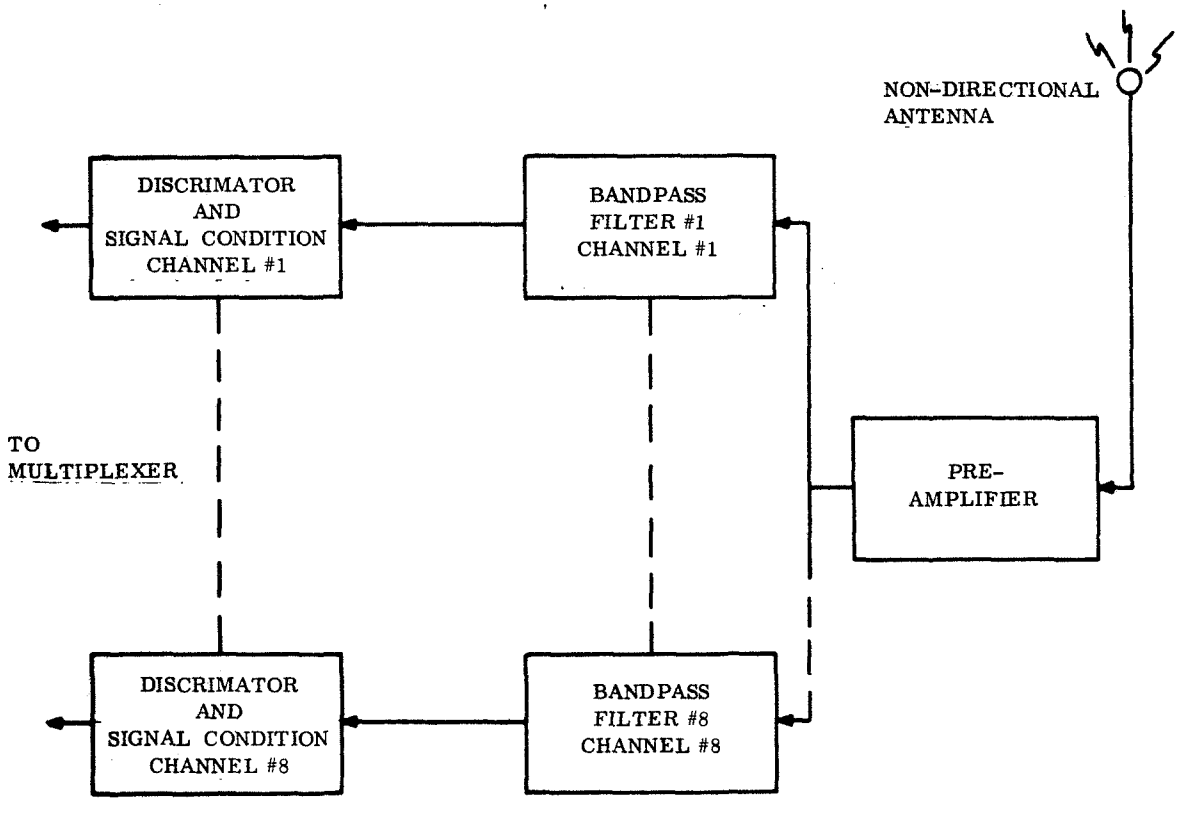

Figure 4-29. Frequency Multiplexer Signal Conditioner (FM Receiver)

Table 4-15. Personal Telemetry Systems In Current Use

	Description	Advantages	Disadvantages
Single Channel	FM SYSTEM • Crystal Controlled Single RF Carrier Oscillator • Carrier Frequency Modulated by Physiological Input Signal — Varies Voltage Across Reversed Biased Diode Associated With Oscillator Frequency Determining Elements • Single Channel Receiver Required • For Crystal Controlled Transmitter No AFC Loop Required in Receiver	• Receiver & Transmitter Simplicity • Accurate DC Information Transmission	• More Power Required for Continuous Wave Transmission
	PULSE WIDTH MODULATION • Low Frequency Pulse Generator Pulse Width Modulated by Physiological Input Signal • Generator Output Turns RF Oscillator On & Off • Receiver Demodulates Information By Detecting RF Pulses and Determining DC Component of the Limited Detected Pulses	• Transmitter Power Conserved (RF Oscillator Used Only Portion of Time) • Receiver and Transmitter Simplicity • Carrier Frequency Not Significant (Contains No Information) • Crystal Control Not Essential	• Unmodulated Pulse Width of Low Frequency Pulse Generator Difficult To Maintain (Compromises DC Accuracy of System)
	PULSE FREQUENCY MODULATION • Low Frequency Pulse Generator Operation Rate Modulated By Physiological Input Signal • Generator Output Turns RF Frequency Carrier On & Off • Receiver Demodulates Information By Detecting RF Pulses & Determining Their Frequency	• Transmitter Power Conserved (RF Oscillator Used Only Portion of Time) • Receiver & Transmitter Simplicity • Carrier Frequency Not Significant (Contains No Information) • Crystal Control Not Essential	• Unmodulated Frequency of the Transmitter Pulse Generator Difficult to Maintain (Comprises DC Accuracy of System)
	DIGITAL SYSTEM • Physiological Analog Signal Converted to Digital Signal By A to D Converter • Digital Signal Turns RF Frequency Oscillator On & Off • Receiver Requires D to A Conversion	• Transmitter Power Conserved (RF Oscillator Used Only Portion of Time) • Physiological Signal Sample Rate Further Reduces Power Required	• Complex Transmitter & Receiver • Signal Accuracy Dependent on Number of Bits • Receiver and Transmitter Synchronization Required
Multiple Channel	FREQUENCY MULTIPLEXING — FM-FM System • Several Low Frequency Subcarrier Oscillators Are Modulated by Physiological Signals • Subcarrier Oscillators In Turn Modulate Frequency of RF Carrier Oscillator	• Subcarrier Oscillator Assemblies Currently Available	• Continuous RF Transmission Generally Required (Intermittent Transmission Possible But Not Generally Done)
	TIME MULTIPLEXING — Pulse Width Time Multiplexing • Each Physiological Channel Sequentially Sampled • Low Frequency Pulse Generator Pulse Width Modulated By Physiological Input Signal • Generator Output Turns RF Carrier Oscillator On & Off	• Low Transmitter Power Usage (Due to RF Carrier Oscillator Duty Cycle) • Less Frequent Channel Sampling Further Reduces Power Usage	• Receiver and Transmitter Synchronization Required • DC Accuracy Determined By Unmodulated Pulse Width Stability of Pulse Generator
	— Pulse Amplitude Modulation - FM • Each Physiological Channel Sequentially Sampled • Low Frequency Pulse Generator Pulse Amplitude Modulated by Physiological Input Signal • Frequency of RF Carrier Oscillator Modulated by Pulse Generation Output	• Low Transmitter Power Usage (Due to RF Carrier Oscillator Duty Cycle) • Less Frequent Channel Sampling Further Reduces	• Receiver and Transmitter Synchronization Required
	— Digital Time Multiplexing • Each Physiological Channel Sequentially Sampled • Physiological Signals Converted to Digital Format by A to D Converter • Digital Signal Turns RF Carrier Oscillator On & Off	• Low Transmitter Power Usage (Due to RF Carrier Oscillator Duty Cycle)	• Receiver & Transmitter Synchronization Required • Signal Accuracy Dependent On Number of Bits Employed in A to D Conversion Process • Complex Transmitter & Receiver

As requirements and signal interfaces with the DAU become further defined, additional types of signal conditioning will be required. These may include AC signals, DC discretes, AC discretes, frequency, and resistance type of measurements.

b. Multiplexing - The multiplexer consists of all solid-state devices addressed from the DAU address control logic. Tradeoff studies may show that large scale integrated circuits with addressing logic as well as the switches on one chip may be more practical. Decisions of this type will also depend on system tradeoff studies involving time shared signal conditioners since switching of unconditioned signals might require relay switching; or divide down and amplification before switching in order to protect the MOS-FET devices.

The multiplexer consists of 64 MOS-FET switches. Switching can be single or double ended and requires addressing from the DAU address control logic to switch any one of 64 data points to the A/D converter.

c. Analog-to-Digital Conversion - The proposed DAU indicates a single shared A/D converter for 64 data points. Other configuration, such as a converter per test point, offer increased reliability and may become feasible with the use of Large Scale Integration. The choice of conversion techniques is effected by system sampling rate requirements.

One conversion technique which fits the proposed configuration is a successive approximation converter. An implementation of this technique, shown in Figure 4-30, could operate up to 25,000 samples/second. The converter consists of a sample and hold circuit, resistor ladder, comparator, digital switches, reference power supplies, and the necessary digital logic to control its operation. Receipt of a start conversion signal allows a sample of the voltage applied via the multiplexer to be held in capacitor storage. The controls then open the digital switches successively from most significant to least significant bit in that order. As each digital switch is opened, a comparison is made and the result is a zero or one in the bit of the digital word which corresponds to the digital switch which is open at that time. The sequence continues until the conversion is complete, and the resulting digital word presented to the computer via the DAU common logic and the DICU.

d. Addressing and Control - The DAU receives addressing and command data from the DICU, decodes, and routes the incoming information to the measurement address and control logic. All data returning to the DICU is routed through the addressing and control logic. The logic would be designed using a low power integrated circuit line and packaged within the DAU.

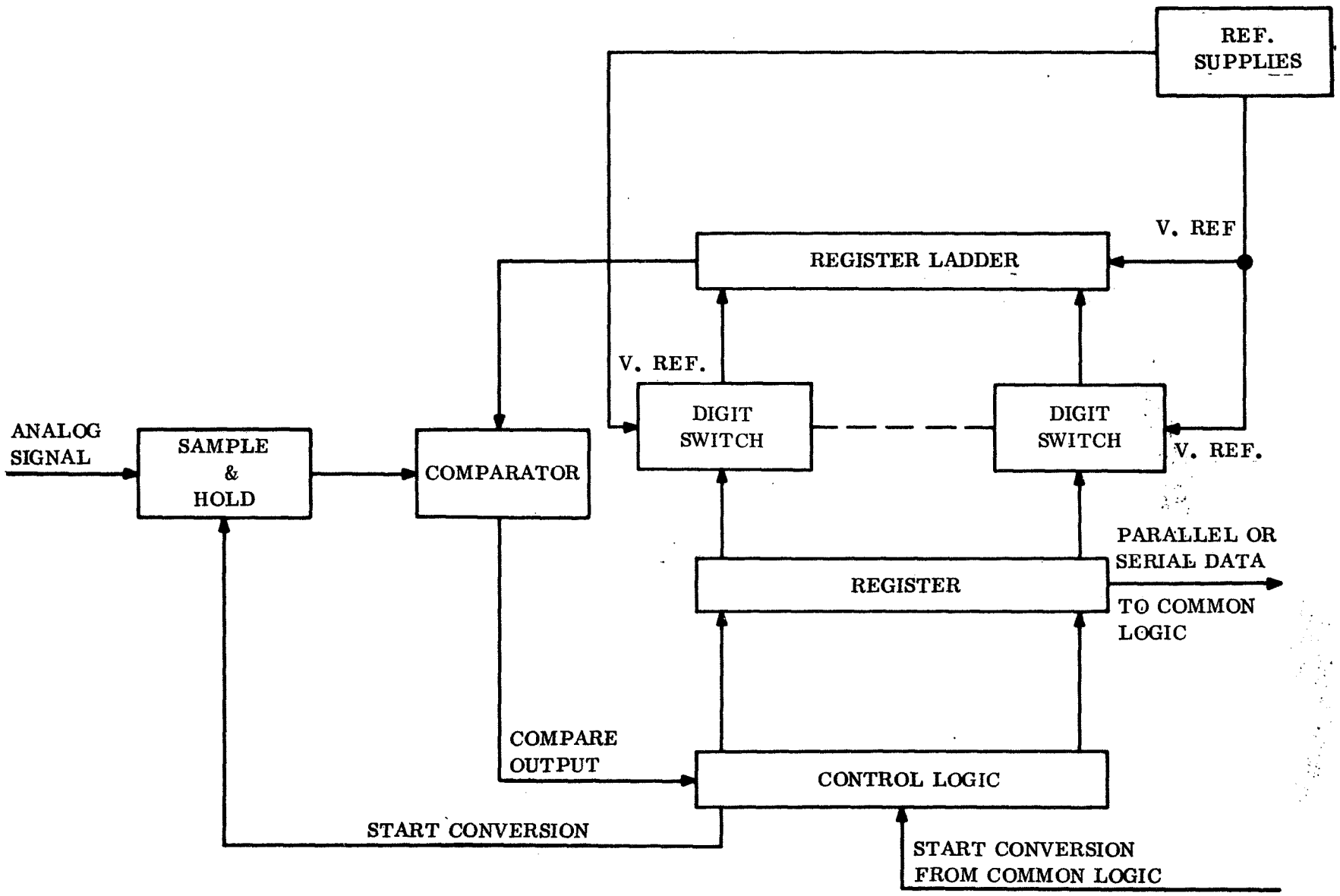

Figure 4-30. A/D Converter

4.2.6.5.4 Stimulus Generation Unit (SGU)

The SGU is programmed from the DMS computer via the DICU and the address control logic of the SGU to generate frequencies and analog voltages of sine, triangular, square, and DC voltage type waveforms. It may also be used to generate non-cyclic type waveforms, but would require more computer participation. Figure 4-31 depicts the stimuli generator and switching functions. The command data is routed to the stimuli control logic. These data are then decoded or transferred to the time base register, D/A holding register, clock selection, gain control circuitry, function selection, and switch point selection logic. The result of programming all of these points within the stimuli generator is an analog signal, discrete, or voltage level being generated and applied to the selected switch point completely determined by the computer program.

For example, the computer loads data to determine frequency of the square wave which is processed into an amplitude stabilized square wave, triangular, and sine wave. These are used as the reference to the D/A converter whose output amplitude is determined by a computer word.

This output is then routed to a variable gain voltage amplifier and a voltage-to-current circuit. A voltage or current output is selected by computer addressing and routed to a switching matrix. The switching matrix, which consists of latching relays or solid-state switches, as necessary, is addressable from the computer and either switches the stimuli output to the measurement signal conditioning for self-test or to the experiments where signals are needed.

4.2.6.5.5 Recorder and Playback Units (RPU)

Tape recording and playback capability will be provided in the DMS to handle computer program storage, to record experiment and IMBLMS checkout data, and to record voiced comments of an experiment investigator.

Digital and instrumentation tape recorders are being considered for these functions. A parallel-digital tape is generally required to handle computer-to-core transfers. However, instrumentation tape recorders available as 14-track units have been used for both serial-data and voice recording. These can be used for recording ground transmission data to avoid the use of separate recorders for experiment data and astronaut comments (where one track is allocated to voice). Where the possibility exists for the transfer of recorded tapes back to the ground, digital tape recording in computer-compatible formats would be desired. Table 4-16 gives a summary of some digital tape recorders which might be considered.

Further resolution of data recording and storage requirements for the IMBLMS mission must be accomplished to define a specific implementation of recorders. It is noteworthy that Saunders Associates has a flight packaged computer compatible recorder with a tape cossette that can be exchanged in approximately 10 seconds.

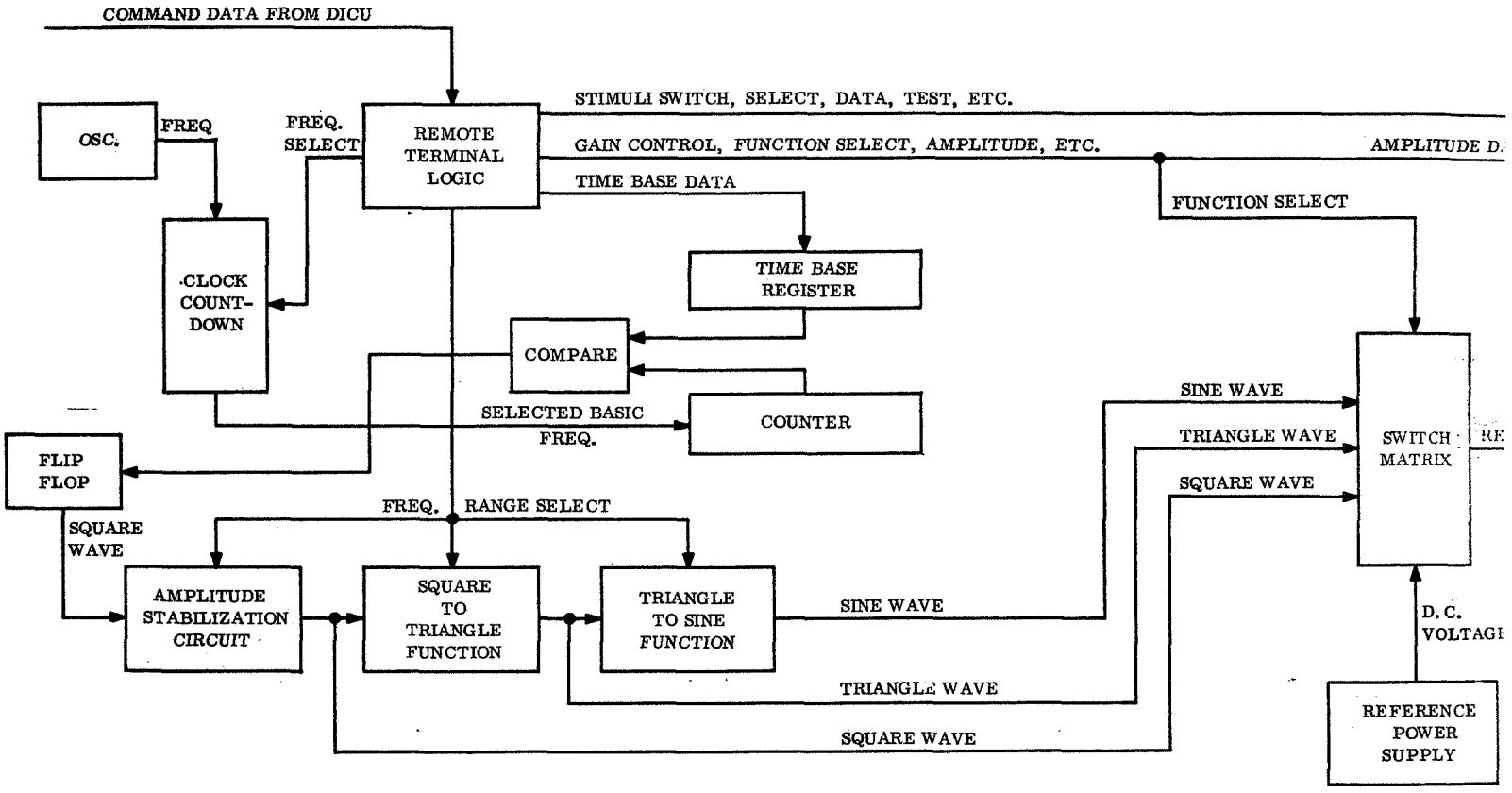
COMMAND DATA FROM DICU
OSC.
FREQ
FREQ. SELECT
REMOTE TERMINAL LOGIC
STIMULI SWITCH, SELECT, DATA, TEST, ETC.
GAIN CONTROL, FUNCTION SELECT, AMPLITUDE, ETC.
AMPLITUDE D.
TIME BASE DATA
FUNCTION SELECT
CLOCK COUNT-DOWN
TIME BASE REGISTER
COMPARE
COUNTER
SELECTED BASIC FREQ.
FLIP FLOP
SQUARE WAVE
FREQ.
RANGE SELECT
AMPLITUDE STABILIZATION CIRCUIT
SQUARE TO TRIANGLE FUNCTION
TRIANGLE TO SINE FUNCTION
SINE WAVE
TRIANGLE WAVE
SQUARE WAVE
SWITCH MATRIX
D. C. VOLTAGE
REFERENCE POWER SUPPLY

1.4-103/1.4-104

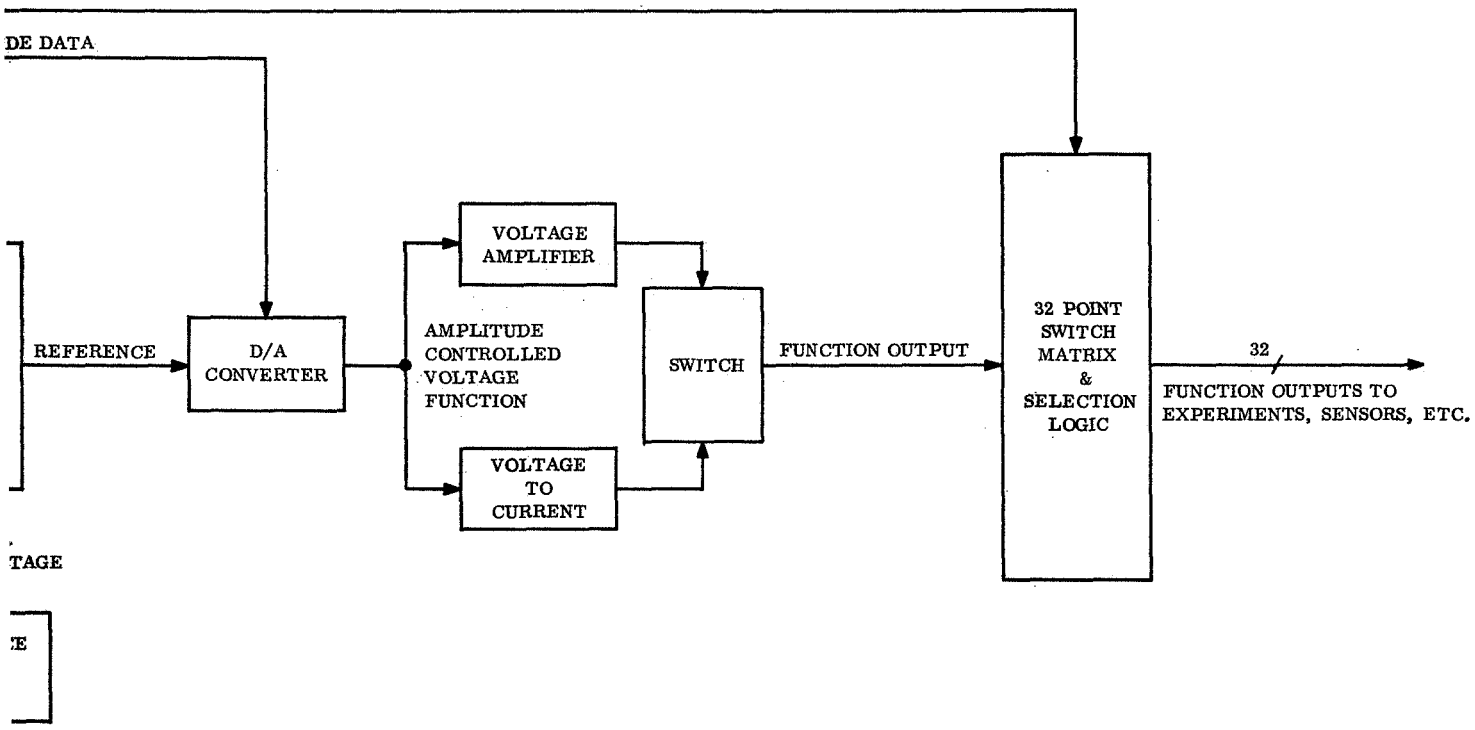

Figure 4-31. Stimulus Generator and Switching Function

Table 4-16. Summary of Digital Tape Recorders

Characteristics	VENDOR					
	Parsons	Honeywell	General Time	Kennedy	Saunders	Litton
Record Mode	Incremental	Incremental	Continuous	Incremental	Fast Start/ Stop	Fast Start
Magazine Load	Yes	No	Yes	Yes	Yes	No
Tape Length	1100	1350	2400	300	1000	610
Recording Density	556 BPI	200 BPI	556 BPI	200 BPI	556 BPI	556 BPI
Start/Stop Time	N/A	N/A	?	N/A	50 msec	30 msec start 300 msec stop
Steps/Second	600	100	N/A	500	N/A	N/A
Tape Speed	N/A	N/A	?	N/A	Variable to Match Data	20 IPS
Size (inches)	9.5x7.66 x3.87	13x10 x11-5/8	11x11 x5	19x8-3/4 x8	6x7 x13	9.8x5.9 x15.5
Weight (lbs.)	15	25	19	25	16	34
Tape Speed Variation	N/A	N/A	?	N/A	0.5%	?
Increment Accuracy	+15%	?	N/A	?	N/A	N/A
Reel and Hub Type	Special	7" IBM	IBM	Special	6" IBM	Special
Operating Temperature	-40°C to +120°C	60°F to 120°F	-54°C to +75°C	-	-54°C to 71°C	-40°C to +95°C
RFI Specification	MIL-I-6181D	-	MIL-I-26600	-	MIL-I-6181D	MIL-I-6181D
Environmental Spec.	MIL-E-5400H	-	MIL-E-5400	MIL-E-16400	MIL-E-5400H	MIL-T-5422F
Power Requirements	115vac 400Hz or 28vdc	+12vdc @ 0.5A -12vdc @ 0.5A	28vac 34 watts	?	115vac, 400 Hz 50 watts	115vac, 400 Hz or 28vdc

4.2.6.5.6 Control and Display Unit (CADU)

The Control and Display Unit (CADU) will provide the operator with controls and displays to effectively manage the operation of the Data Management Subsystem.

a. Controls - The required system controls may be integrated into a single physical unit with the system displays. In the conceptual system, the controls will be simplified to provide ease of operation and will be consistent with accepted human factors considerations.

The operator will be provided with keyboard call-up and entry capability that will allow the generation of new tests, test, and monitor sequences and their storage in the computer repertoire. Also experiment observations can be entered into store for transmittal to ground with the measurement data or held for later review. All keyboard entries will be displayed for operator verification prior to enabling. Exact details of the control panel have not been fully developed but will evolve in the Phase C effort as system requirements are more definitive.

b. Displays - Three types of highly flexible displays that will present measurement and monitoring services common to many experiments are envisoned as being required to perform the man-machine interface requirements of the IMBLMS study. These three types of displays are alpha-numeric (A/N), analog, and slide or micro-film.

The alpha-numeric display will provide the operator with experiment measurement and system checkout data in decimal numbers and engineering units. Suitable function and page identification will also be provided. The analog display will be an amplitude-time display that will provide wave-shape display for operator analysis. The slide or film display will provide the operator with valuable reference data ranging from operating procedures to malfunction diagnostics.

Display data falls into two functional categories, experimental data and instructional data. The experiment data display function will require only a small portion of the total available control and display time but will be given priority control.

During the normal data management function, the system will periodically be subjected to a self-test. During this self-test, any malfunctioning channel will be detected and the location and address of the channel will be presented on the A/N display. Diagnostic procedures for all predictable malfunctions are available as part of the micro-film store. With the self-test and micro-film viewer under computer control, the stored diagnostic procedure corresponding to the detected malfunction will be positioned for operator viewing simultaneously with the identification of the malfunction on the A/N display. It should not be difficult to include the micro-film frame number or numbers with the A/N display to permit manual call-up if desired. The DMS will be subjected to a self-test just prior to and just after an experiment to validate the experiment measurement data.

Monitoring of critical parameters will be continued during all phases of operation. The detection of a system malfunction, safety or hazard affecting the test in progress, or test subject will result in an interruption of the test to cause the malfunction location and address to be presented on the A/N display as previously described. However, the operator will be provided with an override capability to return the system to test use.

c. Experiment Data Display - Several tentative approaches have been considered to provide display capability to enable the system operator to view and analyze experiment data. These approaches have ranged from the exotic to the impractical. In between these two extremes the utilization of multi-channel analog recorders, segmented read-out display modules, gas discharge matrix displays, cathode ray tubes, etc., have been considered. Table 4-17 indicates characteristics of some display devices. The cathode ray tube has considerable flexibility and minimum logistic requirements. It will be used here to illustrate one approach to the display problem. Other display concepts are being evaluated and trade off studies will be performed in Phase C.

In the following approach, a basic assumption has been made that the operator would be best served by having both alpha-numeric and analog display of the experiment parameters. The simultaneous viewing of these two displays should maximize the operator's ability to analyze the experiment parameters.

A tentative display panel layout for an experiment data display is shown in Figure 4-32. From this figure it can be seen that two cathode ray tubes are proposed. One will display the analog characteristics of the experiment parameters, and the second will display the pertinent alpha-numeric data of the parameter. In this case both displays utilize 5-inch square, flat-face, cathode ray tubes. The alpha-numeric display contains 8 lines with 20 characters per line. This capability should permit as much information as would be required for any single experiment parameter. However, this capability can be expanded. A comparison capability has been provided as a second display on the amplitude-time display by using sweep time-sharing or a two-gun cathode ray tube. The operation of the experiment data display may be as follows: index frames containing the measurements being made appear on the alpha-numeric display when the index control is depressed. The index of the measurements could be contained in the film display - further study will be required. If more than one frame or page of index is required, successive actuations of an index control will step through each page and back through page 1. The operator selects the measurement he desires and enters its associated three digit code. Actuation of an associated display control causes this measurement parameter to be displayed on the upper trace of the amplitude-time control and simultaneously causes the alpha-numeric data information for this measurement parameter to be displayed on the A/N Display. To enter a control or previous or new experiment parameter, the operator enters the three-digit code for this parameter. Actuation of its associated display control causes the control or previous parameter to be displayed on the lower trace of the

Table 4-17. Characteristics Of Some Display Devices

Display		Resolution Elements Or Lines Per Inch	Update Rate	Inherent Memory	Brightness Ft. Lamberts	Contrast Ratio	Viewing Angle	Remarks
PSIN/Electroluminescence - PC	GE	50 to 200	1μ sec/Diode	Yes	15-25	25:1	Wide	One square inch 400 element feasibility display developed and delivered to the U.S. Army Electronic Command, Ft. Monmouth, New Jersey. High Voltage is 100V, Power = 100 mw per sq. in.
Magneto Optics (Thin Film Memory)	GE	20 to 100	1μ sec/Element	Yes	25-100	20:1	Narrow	One square inch 1600 element display under development. Power = 100 to 1000 millwatts/sq. inch.
Light Emitting Diodes	GE	TBD	1μ sec/Element	Yes	25	25:1	Wide	500 x 500 line diode matrix under development. Has been demonstrated. Power = 100 to 200 millwatts/sq. inch.
Electroluminescence	Sylvania	25 to 50	.033 sec/Frame	No	20	20:1	Wide	Under development. Has been demonstrated. High voltage is 50 to 400 VDS. Power = 5 to 50 millwatts/sq. inch.
Plasma Display	CDC	Up to 40	< .02 sec/Frame	Yes	Est. 25	20:1	Wide	40 x 40 element demonstrated by CDC. Larger sizes are also under development. Power proposed to be very low. High Voltage is 100 Volts.
Kelvar Dry Film With Charactron Projection	ITT	100 Line Projected Display	15 sec/Frame	Yes	40	35:1	Wide	Near Real Time Processing. Resolution is 1000 lines per display. Used on 465L-SAC-C&C.
Electro Static Storage Tube	IBM	Projected Display	3 to 4-1/2 sec/Frame	Yes	20-40	50:1	Wide	2000 Line Projected Display under development. Model has been demonstrated.
Thermoplastic Film	GE	3000 x 3000 Line Projection	0.5 sec/Frame	Yes	30	10:1 Est.	Wide	Demonstrated, under development.
Thermoplastic Matrix	GE	2000 x 2000 Elements	5 sec/Frame	Yes	50	10:1	Wide	Demonstrated, under development.
Photochromics (CRT Fiber Optics Image Transfer)	ITT	> 500 Line Projection Equivalent	1sec/Frame	Yes	25	10:1	Wide	Demonstrated, under development. There may be Air Force applications of similar concept in Operation
Cathode Ray Tube		100 Lines/Inch	1/30 sec/Frame	No	20	20:1	Wide	Proven capability, 10 or 12" diagonal screen used on a Gemini mission. Unit built by GE.
Controlled Electroluminescence Utilizes UV Fibre Optics Image Transfer	GPI	300 Lines/Display	< 10 millisec	Yes	750	20:1	Wide	Demonstrated. Less than 10 millwatts/sq. inch.
Stylus Electrostatic Type Recorders Chart	Brush Minneapolis Honeywell Midwestern Etc.	150 cps to 15 KHz	Continuous or Keyed	Yes	Not Applicable	High	Variable	Numberous options. A flight qualified unit has not been identified yet. Tentative solution to paper accumulation is to use controlled life trace which will permit reuse of paper.

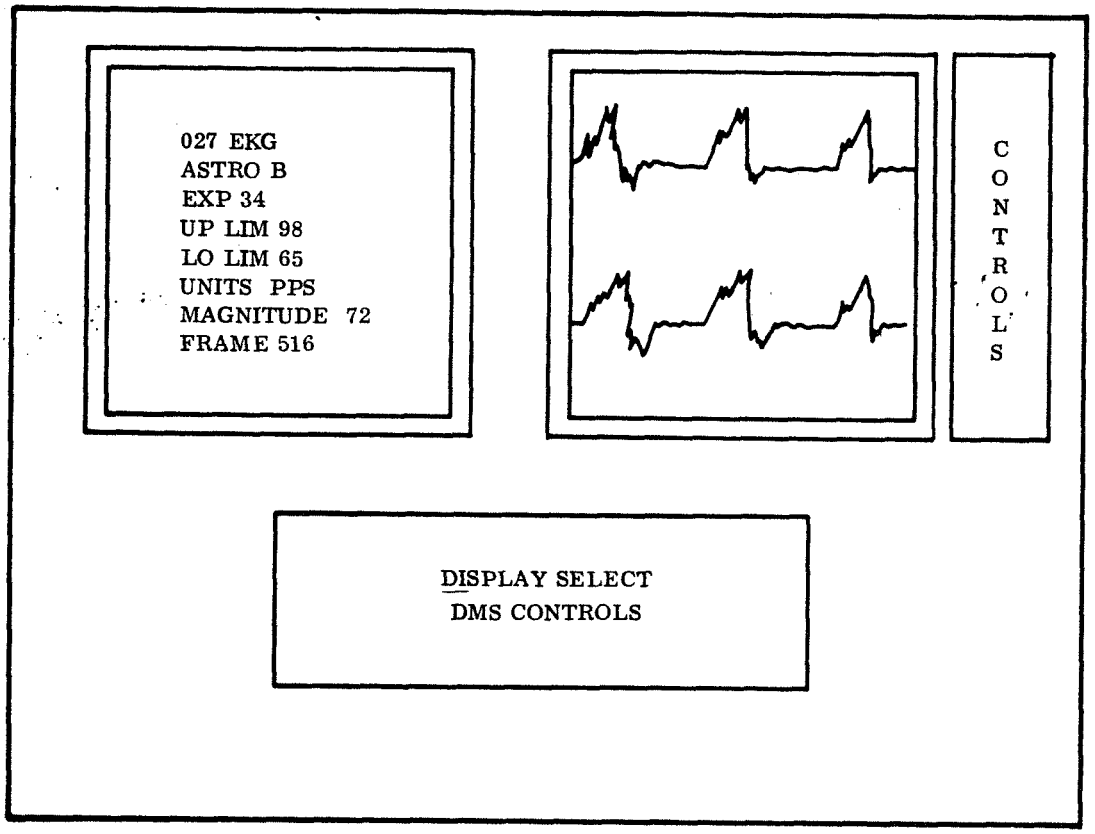

Figure 4-32. Tentative Display Panel Layout

amplitude-time display. Position control permits the operator to move the second display over the first display for more accurate comparison. The operator has been provided with an erase capability should he decide that the data information is unchanged or of no value. The erase control when actuated causes this data information to be dumped from memory.

The normal input to the amplitude-time display is the output of a D/A converter; the sensor data having been digitized further upstream. Further study is required to determine the effect digitizing might have on the experiment parameter. It may be possible to provide conditioned analog inputs directly to the amplitude-time display through a selector switch.

Although the approach has been described in some detail, it is not intended as final. Other approaches, such as those shown in Table 4-17, will be considered and evaluated.

If additional experiment measurements are required for simultaneous viewing, a display format for the A/N Display could be as follows:

	1	2	3	4
Code	027	116	011	003
Astro	B	B	A	A
Experiment	EKG	EKG	PR	ZC
Upper Limit	98	85	97	100
Units	PPS	PPS	PPS	PSI
Magnitude	72	68	73	71
Frame	516	203	131	011

This would, of course, require a greater computer load and either an abbreviation of the functions description or more characters perline. Also to match the analog display to the A/N would require a display of a minimum of four functions. Four of the functions would be the same as shown on the A/N display, and the functions would have to be selected by some means at the discretion of the operator.

d. Instructional Data Display - Categories of information usually contained in operational instructions, calibration procedures, trouble-shooting order, etc., as well as experiment procedure instructions and conversion charts will be stored on microfilm or microfilm chips. The microfilm will be contained on reels or cards and will have each frame addressable manually or by computer, thus permitting ready access to these types of data. It is expected that malfunctions will be diagnosed by the computer, and the film display positioned by computer control to the frame containing the computer diagnosis and recommended corrective action.

The use of the film display could also contain the index to the experiment measurements and thereby relieve the computer of having to store this information in memory and provide refresh output to the A/N display.

In fact, almost all non-real time information could be stored on microfilm and be made available for operator use either through manual or computer control.

e. Remote Control and Display - In the present concept, a remote control and display capability can be provided by physically relocating the CADU with hardwire connection to the DICU. Duplicate control and display capability of the same or lesser degree can be implemented by parallel CADU interfaces at the DICU.

4.2.6.6 Representative DMS Physical Parameters

Table 4-18 gives representative weight, power, and volume for the major units of an IMBLMS DMS. The following comments support entries to this table:

a. The DAU provides for signal conditioning, digitizing, multiplexing, and stimulus generation. Provision for 512 data channels would utilize eight of these units in a system, and modular implementation would allow tradeoffs in the stimuli generation capability included per DAU for the system.

b. The Computer entry assumes typical aerospace computer parameters for the use of an IMBLMS dedicated computer.

c. The CADU assumes the use of two five-inch CRT's for A/N and analog data presentation combined with a DMS control panel. Remote CADU's of reduced capability would provide lower weight, volume, and power requirements.

d. The Digital Recorder provides a part of the recording and playback function and represents a typical aerospace seven-channel digital tape recorder. Extension to 14 channel has good potential. The voice recorder represents a typical aerospace unit for recording astronaut comments.

e. The parameters specified for a microfilm projection display are somewhat variable as governed by final requirements for viewing area and brightness.

Table 4-18. Representative DMS Physical Parameters

Unit	Qty.	Avg. Power (watts)	Weight (lbs.)	Volme (inches^3)
Data Acquisition Unit (DCAU)	1*	10	10	600
Stimulus Generation Unit (SGU)	1*	8	9	400
Digital Interface Control Unit (DICU)	1	40	10	340
Computer	1	200	50	1500
Control and Display Unit (CADU)	1*	150	25	3400
Digital Recorder	1*	50	16	550
Voice Recorder	1	5	2	50
Microfilm Projection Display	1*	150	25	2000

*DMS may consist of more than one of these units.

4.2.7 SUMMARY

The vehicle's on-board Data Management Subsystem (DMS) is an integral part of IMBLMS and provides the means for managing the biomedical data generated during the mission. The subsystem will be used for controlling, monitoring, filtering, and organizing IMBLMS data into coherent and useful data packages for on-board use and for ground station use. In addition, the subsystem will provide for calibration and checkout of experiment equipment and for self-test.

The DMS, as part of IMBLMS, will be operated in various portions of the space vehicle such as the Command and Service Module (CSM), the S-IVB Orbital Workshop (OWS), the Multiple Docking Adapter (MDA), and the Lunar Module (LM).

The DMS is designed for packaging within the IMBLMS volume and will be inactive until the AAP vehicles have achieved orbital station and have been assembled into the orbital cluster.

After assembly of the cluster, the DMS, as a part of the IMBLMS, is physically transported and deployed into two areas - a central control area and a remote experimental area. These areas may be located in different vehicles; the interconnecting link being made by cable.

After deployment, the DMS will be capable of managing the functions of the IMBLMS. This will consist of providing the crew with the equipment and techniques which will enable the experimenter to set up and verify biomedical experiments; to collect experiment data; to process the acquired data for on-board recording, display, and analysis; and to transmit the data or processed data to ground stations through spacecraft/ground communication links.

The more significant aspects of IMBLMS data management study are as follows:

- The subsystem can provide for both experiment management and viability monitoring and analysis.
- Data will be analog to digital converted as close to the measurement source as is practicable. This will allow for multi-purpose processing, consistent reproducibility and high accuracy.
- The data acquisition will be variably programmed to suit the requirements of the experiment.
- The data management subsystem capabilities for direct production of useable and meaningful data are significantly enhanced by use of an on-board computer.
- The on-board computer can be either the space station general purpose digital computer or a computer integral to IMBLMS.
- More limited and less flexible experiment management can be performed without a computer.

- Software revision as contrasted to hardware revision will allow for greater IMBLMS flexibility.

- A probable worst case accumulation of experiment measurements to be sampled simultaneously will not exceed 50.

- On basis of experiment measurement analysis performed thus far, using ratios of sampling rate to measurement bandwidth of 5:1, the worst case 10-Bit data word sampling rate won't exceed 10,000 words/sec or 100 kilobits/second.

- A probable worst case data accumulation for combination of experiments performed during approximately a 2-1/4 hour experiment sequence will be about 4.1×10^6 ten bit data words or 41 megabits.

- The probable kilobit per second S/C to ground data transmission rates are 51.2 KBS, 72 KBS or 112.5 KBS.

- The limiting data transmission rate for getting data from a ground site to MCC-H will probably be 2.4 kilobits/sec.

- Based on anticipated worst case experiment measurement load, the transmission times can range as follows:

Transmission Link	Transmission Rate	Transmission Time	
		Without Data Compression	With Extensive Data Compression
S/C to Ground	51.2 KBS	13.3 min	0.75 min
	72.0 KBS	9.4 min	0.54 min
	112.5 KBS	6.1 min	0.34 min
Remote Site to GSFC	2.4 KBS	4 hrs 44 min	16.2 min

Several areas have been identified where additional study and tradeoffs are required before a firm approach to the DMS can be established. These study areas are as follows:

a. Computer storage and processing requirements.

b. Availability of existing S/C data processing capabilities.

c. Airborne computer evaluation.

d. State-of-the-art and advanced display techniques.

e. Direct DMS control and monitoring of experiment biomed and behavioral experiment equipment (audiometer, etc.).

f. Data compression.

g. Data compression rates, formats, and synchronization methods.

h. Data acquisition system configuration (shared signal conditioning, etc.).

i. Personal telemetry receiver requirement and design tradeoffs.

j. Application of LSI to hardware requirements.

k. Application of existing signal conditioners.

l. Integration of calibration requirements of instrumentation sensors with DMS stimuli capability.

m. Simultaneous analog display requirements.

n. Experiment data storage requirements.

o. Data acquisition rate requirement.

4.3 MODULAR DESIGN AND PACKAGING APPROACH

4.3.1 GENERAL

4.3.1.1 Introduction

The IMBLMS packaging, modularization, and vehicle installation task is concerned with the establishment of a uniform approach to the medical and behavioral laboratory measurement equipment design and installation considerations. The objective is a flexible system capable of being utilized in many measurement combinations and on various carrier vehicles to provide a multi-measurement-multi-vehicle capability. The uniform approach to measurement equipment physical design permits the grouping of experiment measurement hardware in various "building block" arrangements, thus providing a multi-purpose measurement capability. The consistency of hardware design philosophy with respect to modularization, equipment interchangeability, assembly compatibility and commonality is the key element to IMBLMS flexibility.

The design approach to modular packaging of the IMBLMS is based upon consideration of the existing spacecraft constraints, their flight schedules, and the potential availability of the IMBLMS equipments to meet these schedules. The guidelines for this design emphasize the modular approach to provide maximum flexibility for use on the three basic vehicles and for ease of modification for different flights. This is accomplished by designing to facilitate interchangeability of modules in the assembly, interchangeability of use of common components for different measurements, and by provision of basic modular elements for essential services such as display and control, data management, electrical power, and mounting and interconnection racks.

4.3.1.2 Carrier Vehicles and Schedules

The carrier vehicles presently scheduled for IMBLMS usage are the refurbished command module (RCM), a Lunar Module (LM) derivative, and the Orbital Cluster (MDA and Orbital Workshop). These vehicles impose a variety of operational limitations both physical and environmental. The physical limitations of volume, shape and weight, and power vary significantly among the three proposed carriers. Figure 4-33 shows the three vehicles in their presently used Apollo configurations. The earliest usage, probably in 1970, would be in the Orbital Workshop shown on the left. The IMBLMS equipment would be installed inside the liquid hydrogen tank in the Saturn S-IVB Spent Stage Orbital Workshop, after the spacecraft is in orbit. If the Orbital Workshop is already in orbit, the IMBLMS equipment would have to be launched with the resupply CSM and transferred into the Orbital Workshop. The command service module and lunar module are shown on the right in their lunar mission configuration. For AAP, for which IMBLMS is a prime candidate, the refurbished command module and various LM derivatives are contemplated. These vehicles will be discussed and evaluated for IMBLMS use later in this report. The third category of carrier vehicles is the Orbital Cluster. Figure 4-34 defines the cluster program as currently understood by General Electric.

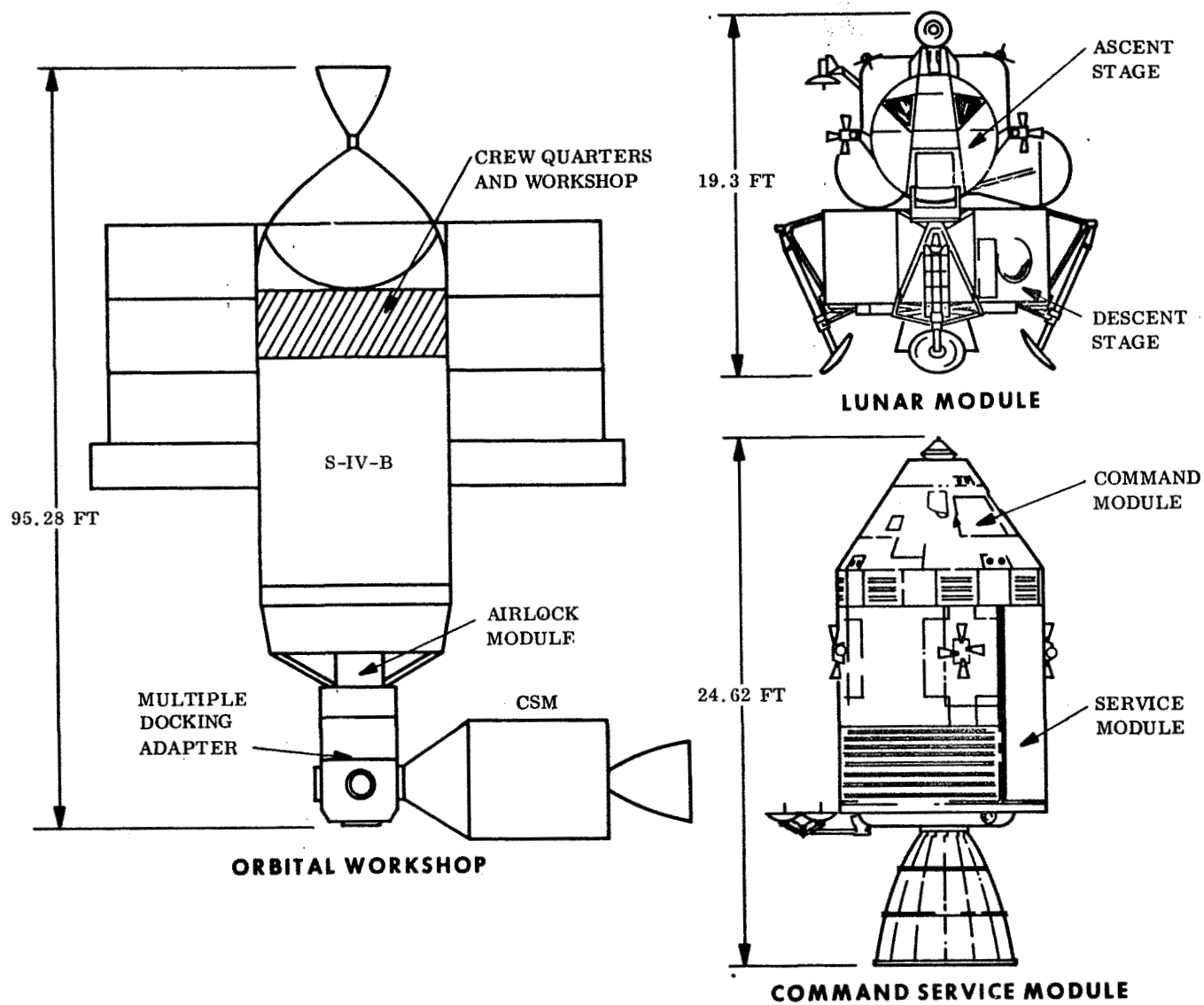

Figure 4-33. Spacecraft for IMBLMS

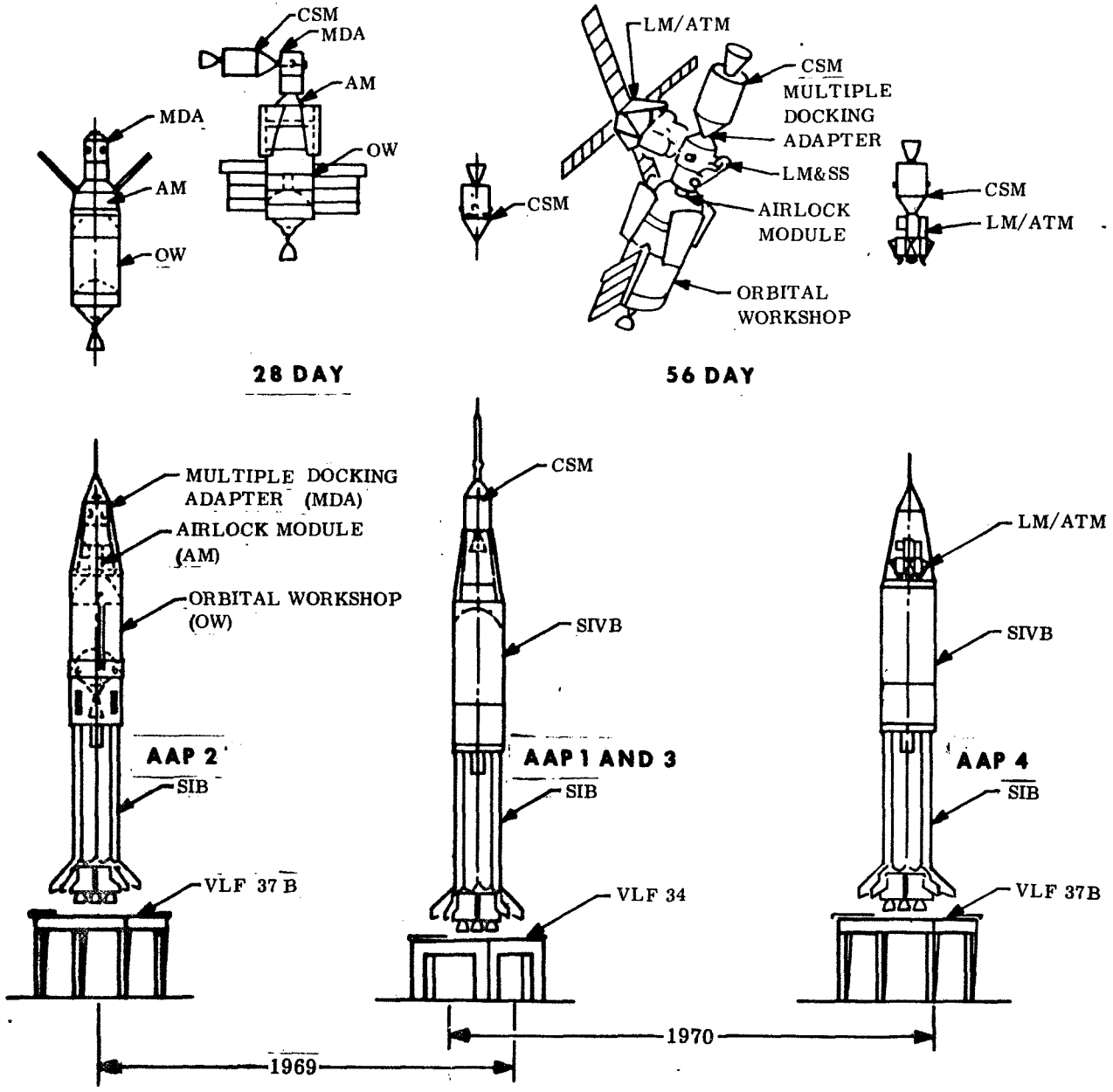

Figure 4-34. Currently Planned AAP Flights

Figure 4-34 shows the current configuration for the four flights on the Orbital Workshop Cluster for the Apollo Applications Program (AAP). The first Orbital Workshop flight is tentatively planned for a 28-day mission in 1969. The men will be launched in a CSM on AAP Flight 1 and will rendezvous and dock with the Orbital Workshop (AAP 2). At the end of this mission, the Orbital Workshop will be deactivated and left in orbit. Approximately 6 months later, in 1970, the AAP 3 flight will launch a CSM with 3 men and supplies to reactivate the Orbital Workshop for a 56-day mission. This flight would possibly include the IMBLMS equipment. The ATM (Apollo Telescope Mount) would be the AAP 4 flight in 1970, and it would be used in conjunction with the Orbital Workshop.

4.3.1.3 Installation Constraints

The desire to have IMBLMS equipment capable of being used economically on all three vehicles will impose an installation problem, due to the system and subsystem differences of the three categories of carrier vehicles. In recognition of this, IMBLMS equipment will be designed to be self-contained as far as practical and interface with these vehicles in the most elementary manner. Vehicle installation interfaces are as follows:

- Structural Support
- Electrical Power
- Services (as required)
  - Vacuum
  - H_2O
  - Etc.
- Data
- Astronaut
- Unique Experiment and GFE Input Devices

4.3.1.4 Mission Operation Characteristics

The IMBLMS equipment will be packaged so that various measurement capabilities can be obtained by selectively grouping modular-type equipment. This will permit IMBLMS equipment to be used with various combinations of unique experiment and GFE devices to satisfy a varying number of mission requirements. For example, once a "minimum capability" IMBLMS System has been identified, it can be escalated to satisfy special measurement and carrier requirements for specific missions. This capability will be discussed in later sections.

4.3.1.5 Development Schedules

To meet the projected IMBLMS flight schedule, it is helpful to examine the normal lead times for equipment deliveries necessary in such a flight program. Figure 4-35 shows typical lead times required for a flight program and indicates the lead time and quantities required for various types of equipment needed to meet such a schedule. In addition, there are other earlier equipment needs which are required to satisfy the experimenters and the development and test program requirements prior to final design of flight hardware. Figure 4-35 illustrates the need for completion of qualification hardware testing in early 1969 to meet a mid-1970 launch date. The IMBLM system design implementation must meet such a schedule. However, if our understanding of requirements is correct, PDR on the IMBLMS cannot be reached until mid-1968. An early version of IMBLMS could be available in late 1969, an updated version in 1970 and full IMBLMS in 1971.

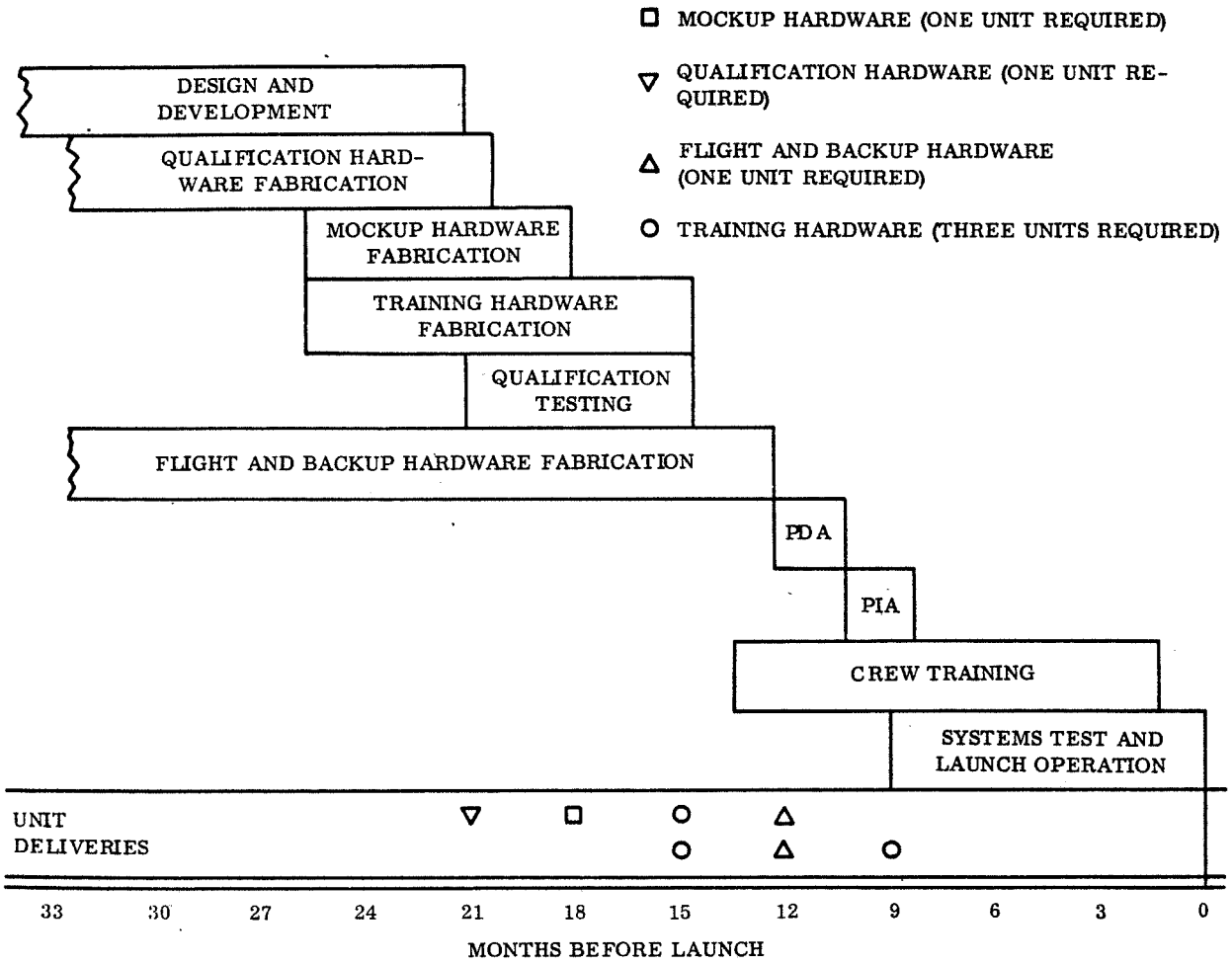

Figure 4-35. Typical Lead Times Required

4.3.2 PACKAGING AND MODULARIZATION

4.3.2.1 IMBLMS Modularization

Modularization for IMBLMS as envisioned by General Electric can be defined as a philosophy of standardization. Standardization must include not only the measurement equipment packaging techniques but also the measurement equipment used and vehicle installation philosophy.

4.3.2.1.1 Standardization of Measurement Equipment Design Philosophy

To enable interchangeability and alternate grouping of equipments, a uniform approach to packaging must be followed. One aspect of this uniformity is the establishment of geometric shape continuity. This will be required so that all modular elements will be physically compatible. All modules, modular elements, and components will obviously not be the same size and shape, but they will, however, be designed to be used together. Early in Phase C, a design approach will be established that will dictate the following:

- Uniform module mounting, housing and structural element design
- Uniform electronic signal and power connection design
- Uniform approach to data management equipment integration with measurement equipment
- Uniform approach to thermal and environment control
- Uniform approach to pneumatic and hydraulic control and distribution

4.3.2.1.2 Standardization of Measurement Equipment Use and Vehicle Installation Philosophy

To provide flexibility for multiple measurement and multiple vehicle use, a standard approach to vehicle installation is required. It will be necessary to install various groupings of equipment in the three different vehicles. This will require the identification of the Installation Support Equipment for each vehicle necessary to accommodate the measurement hardware. The Installation Support Equipment category will include all equipment such as mounting brackets, vehicle cabling provisions, special modular interconnections, structural support housings, etc., required to provide an operational capability depending on the number of measurements flown. The Installation Support Equipment for a minimum installation could consist of mounting "adapter kits" and inter-module harnesses. For a total IMBLMS measurement capability, the installation support equipment could consist of three modular segment structures, electronics interfaces, an active thermal control system, and all ancillary equipment necessary to provide a complete measurement system.

The key aspect then, of this standardization task is the ability to install the standardized module and modular elements efficiently in the alternate vehicles.

More detailed descriptions of General Electric's approach to the "System Installation" and "Installation Support Equipment" will be discussed in later sections.

4.3.2.2 Functional Groupings

4.3.2.2.1 Modular Identification

Figure 4-36 shows General Electric's interpretation of the modularization concept. On the left side are depicted the individual modules or modular elements. As currently defined there are three categories:

a. Measurement Modular Elements - The measurement modular elements are such items as signal conditioners, sensor leads, microphone, or any identifiable hardware element that is required to perform a measurement function. This category includes all special items required for a specific measurement capability.

b. Multi-purpose Modules - A second category of equipments consists of items identified as multi-purpose modules. This lot would include such items as data management equipment, power conditioning equipment, displays and controls, etc. These modules will be capable of operationally accommodating many different measurement requirements. In addition, these multi-purpose modules may consist of one or more modular items that conform to the precepts of modular standardization discussed in paragraph 4.3.2.1.1.

c. Special Purpose, Multi-use Support Modules - This grouping would consist of special purpose items that would be required to support many different measurements. They would include such items as a refrigerator, centrifuge, freezer, etc., which are single purpose in nature and operation but each of which support a whole host of measurement activities. These modules would also be standardized along the guidelines discussed in paragraph 4.3.2.1.1.

4.3.2.2.2 Functional Modular Groupings

To utilize the modular items defined in paragraph 4.3.2.2.1 in a useful manner it is necessary to organize the measurement equipments into functional modular groupings (FMG). An example of a FMG would be the phoniocardiagram measurement grouping. This grouping would consist of all equipments necessary to perform the phoniocardiagram measurement. This consists of:

a. Microphone

b. Signal Conditioning

c. Power Conditioning Equipment

d. Data Management Equipment

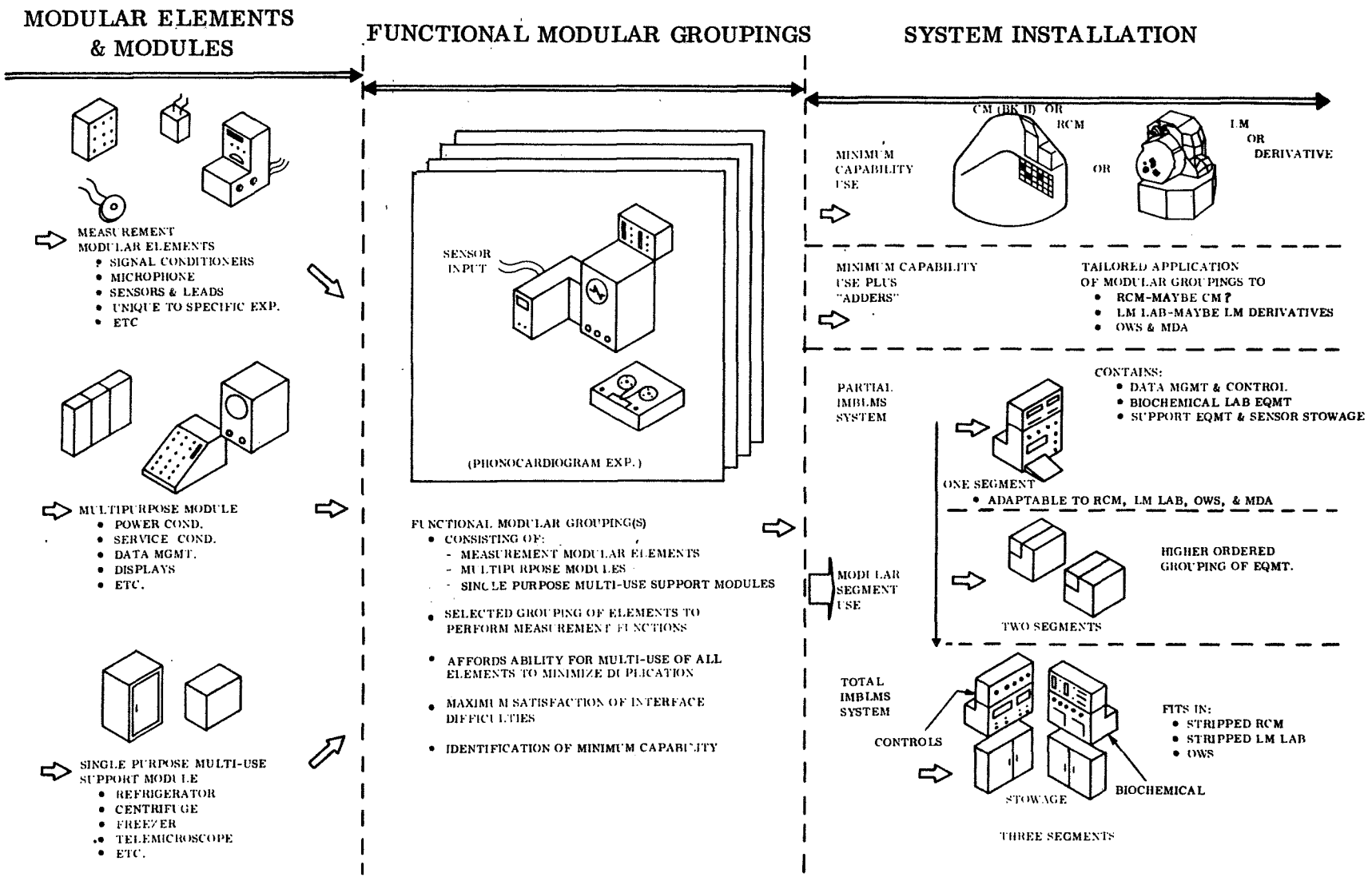

Figure 4-36. Modular Identification Chart

For each identifiable measurement a functional modular grouping of necessary equipments must be defined, and when completed and analyzed, a minimum capability can be established.

As functional modular groupings are identified, modular duplication can be identified and eliminated. Further discussions of measurement equipment groupings can be found in both the system and data management sections of this report.

4.3.2.2.3 System Installation

The right side of Figure 4-36 shows the next step in the modular identification and utilization process, that of system installation. As previously discussed, the system installation task concerns itself with the activities and support equipment required to install the measurement system, whether it be partial or total, in a carrier vehicle. As presently conceived, the modular items, whether they be modular elements, multi-purpose, or special purpose modules, will be so designed so that they can be used in varying combinations from the most fundamental grouping up to the complete sophisticated system. To satisfy the requirements for installations more complex than the elementary-use groupings, the concept of modular segments is proposed. This basic concept consists of a general geometric shape, such as a rectangular segment, that is physically compatible with all three vehicles and that will provide the functional modular groupings with a structural enclosure, a controllable environment, and that can be installed with a minimum number of easily controlled vehicle interfaces.

A concept such as the modular segment can permit the first level of modular installations to be accomplished within the segment structural housing so that such items as module electronic interconnections and other operational intra-modular interfaces can be accomplished in a pre-determined manner.

Depending on the application, one, two, three or even four modular segments could be employed to provide the total IMBLMS capability. This concept is discussed at greater length in successive sections.

4.3.2.3 Modular Commonality, Flexibility and Transportability

Another key element of the General Electric's IMBLMS modular approach is that of modular interchangeability. With a consistent philosophy of equipment design, it will be possible to alter, within reason, the modular composition of a modular segment to permit different measurement requirement emphasis to be placed on different missions.

This overall physical and functional commonality of equipments will provide a system that will have the optimum degree of flexibility within the realistic limitations of cost, schedule and utilization of existing developed medical and behavioral equipments with a minimum of repackaging. It is recognized that General Electric will probably not be wholly compliant with the requirements of RFP, Paragraph B2, Article II, which indicates that 14 medical equipment items should be used for the Phase C design. Certain latitude is being taken with respect to the equipments selected and their required modifications for IMBLMS use (Refer to measurements in Section 3).

With a concept such as General Electric is proposing, in-flight intra-vehicular transfer of IMBLMS equipment both at the module and modular-segment level is possible. The modular segment concept with its approximate dimensions of 20 X 20 X 30 inches is compatible with the experiment packaging approaches currently contemplated for the OWS Flights AAP 1 and 2. For the cluster configuration certain experiment packages are launch-mounted in an non-operational mode in the Multiple Docking Adapter (MDA) and then physically transported to the OWS set up in the Spent S-IVB LH_2 Tank.

As previously stated the contents of the modular segment will encompass the first level of installation packaging and as such, vehicle interfaces or the second level of installation will be simplified and minimized.

4.3.2.4 IMBLMS Modularization Concept, Advantages and Disadvantages

It is necessary to describe and discuss some of the advantages and disadvantages to get the proper prospective of modularization. Some of the more obvious advantages are as follows:

- Flexibility of desired measurement groupings
- Multiple vehicle usage
- Simplicity of installation and operational flexibility
- Establishes design approach for future undefined measurements
- Minimum involvement with the carrier vehicle's operational specifications and documentation

Some of the potential disadvantages that must be considered are as follows:

- Potentially more costly
  - Repackaging
  - Requalifying
- Must be used (partially or totally) on many missions to "amortize" initial design costs
- Assembly flexibility implies:

  ΔWeight Increment
  ΔVolume Increment

It should be recognized that if IMBLMS equipment can be identified for use on numerous missions over a sufficiently long time span, then the first two disadvantages can be off-set by the "cost-effectivity" of the advantages.

With respect to the third disadvantage it is apparent that flexibility of modular use will impose a volume and weight penalty. With, however, a "standardized" approach to modular use this can be minimized. Additionally, with the advent of the OWS and Cluster Vehicle Concepts space and weight constraints appear to become more negotiable.

4.3.3 IDENTIFICATION OF MODULES

4.3.3.1 General

For purposes of identification and to facilitate the discussion of packaging, the modules for IMBLMS have been defined in a generic fashion. Referring back to Figure 4-36 there are three general categories of modules:

- Modular Elements
- Multi-Purpose Modules
- Special Purpose Multi-Use Modules

From a generic equipment standpoint the IMBLMS System can be viewed as follows:

a. Measurement Oriented

   1. Body-Mounted Type Sensors and Associated Loads - This category includes all measurement input devices; from the packaging standpoint, this equipment poses primarily a stowage problem, but they have been identified separately due to the nature of their input interface characteristics.

   2. Special Purpose Medical-Monitoring Type Equipment Modules - This would include specialized components such as breath analyzer, etc.

   3. Special Purpose Behavioral-Monitoring Type Equipment Modules.

b. "Black Box Oriented"

   Electronic "Black Box" Type Equipment Modules - This category would include power conditioning, signal conditioning, calibration, etc., type equipments.

c. Data Management Oriented

   1. Data Management Equipment such as recorders, data acquisition units, etc. (This category is also obviously electronic black box oriented.)

   2. Displays and Controls Equipment - These are closely tied in with the data management equipment - Display panels and supporting electronics.

d. "Services" Oriented

Hydraulic and Pneumatic Service Supply and Conditioning and Monitoring Equipment.

e. Support Oriented

Support Equipment as required to perform all the medical and behavioral measurements - Primarily equipment that is loosely stored in stowage areas.

For the measurement, monitoring, and analysis of biological specimens the following items can be identified:

a. Collection and Handling Equipment

b. Analytical Equipment

c. Preservation Equipment

d. Specimen Storage Equipment

4.3.3.2 Inter-Modular Relationships

4.3.3.2.1 Operational

The packaging task is perhaps best described as the ability to efficiently assemble and utilize the modules previously defined. For the generic modules this problem of optimum modular arrangement is straightforward and will be considered in the crew/system design. However, the question of the modular inter-relationships for the biological specimen module types have been identified as a special area requiring special attention. As the sample collection regimen is established in Phase C, studies will be conducted to define optimum design approach. (Ref: Section 6, Final Report, Contract No. NASw1562, A Study of the Collection and Preservation of Biological Specimens during Space Flight for Post-Flight Analysis.) Considerations required to provide an orbital "Biochem Lab," such as sample container handling and storage procedures, reagent use, accessibility to storage containers, adequate laboratory "Table Top" area, provisions for logging, etc., will be assessed to establish optimum packaging densities.

4.3.3.2.2 Functional

The functional relationships of the different generic modular groupings are defined as the physical aspects of module integration. Packaging integration considerations are shown for each grouping in Table 4-19.

Table 4-19. Packaging Integration Considerations

- Environmental Control
- Structural Support
- Mechanical Interconnections
- Power Interconnections
- Electronic Interconnections
- Data Management Equipment Accommodation
- Display and Control Accommodation
- Unique and GFE Equipment Interface

The concept of two levels of modular installation is again pointed out to emphasize the above list. For minimal IMBLMS use, the modular integration and assembly task becomes one of integrating the modular items into the vehicle directly, utilizing all available space as efficiently as possible. For more complex IMBLMS arrangements, the integration and installation will be conducted at two levels, the first being that of integrating the modular elements within the modular segments, and the second that of integrating the modular segments into the vehicles. The second level will be primarily physical installation, input-service coupling and measurement system activation.

4.3.4 PACKAGING DESIGN CRITERIA

4.3.4.1 General

The packaging design criteria that General Electric is considering, so that ease of modular assembly and use can be provided, are shown in Table 4-20.

To insure that all modules will be compatible from both an installation and operational viewpoint it will be necessary to establish formal Design Guidelines for all IMBLMS equipment design to insure a uniform standardized approach. These design guidelines will basically embody the elements of Tables 4-19 and 4-20. Table 4-21 shows typical types of information that will be contained in the Design Guidelines.

Of the 10 items defined in Table 4-21, items 4, 9 and 10 will be elaborated on at greater depth in the following sections. The electronic and power interconnections areas will undoubtedly pose some of the more difficult design problems. A discussion of the system design approach for this can be found in paragraph 4.3.4.3. The design criteria for crew accessibility, operability and maintainability considers the man/machine relationships and will be discussed in paragraph 4.3.4.4. The activity associated with defining, maintaining, and controlling the physical interfaces between modules, modular segments, and the vehicle is discussed in paragraph 4.3.4.5.

4.3.4.2 GE-Vendor Design Relationships

The Design Guidelines when established in final form will be the key design document for vendor use. With this information vendor packaging and design of their equipment can proceed along uniform lines. In addition, all vendors will be subjected to a consistent scheme for packaging.

Table 4-20. Packaging Design Criteria

- Flexibility for installation in different modular arrangements and spacecraft
- Transportability through LM, CSM, MDA and S-IVB Hatches
- Commonality of mounting provisions
- Commonality of interfaces and connectors used
- Accessibility for operation, repair, and maintenance
- Ease of deployment and interconnections
- Human engineering to aid crew performance

Table 4-21. System Modular Packaging Design Guidelines

1.0 Physical and Dimensional Continuity
- Module Housing Interconnection Compatibility
- Volume and Shape, Space Allocation
- Alternate Modular Grouping Mounting Provisions (within modular segment)
- Ease of Fastening
- Self-Alignment Type Installation for Electronic Pin Connections

2.0 Module and Modular Segment Structural Support Considerations
- Frame and Component Approach

3.0 Operational Environments
- Natural
- Induced

4.0 Electronic Interconnection Design Compatibility
- Low Volume, Multi-Purpose, Pin-Wireboard Connections
- Harness Interchangeability for Partial Installations
- EMI Compatibility

Table 4-21. System Modular Packaging Design Guidelines (Cont)

5.0	Power Supply Compatibility
	• Conditioned Power Branch Distribution
6.0	Environmental Control System
	• Active Cold Plates, Circulators, etc.
	• Passive Thermal Coatings
7.0	Input Device Interface Compatibility
	• Input Adapter Modules to accommodate various input devices
8.0	Data Management, Displays and Control - Measurement Module Compatibility Guidelines
9.0	Accessibility, Operability, Maintainability
10.0	Modular Segment and Vehicle Installation Interfaces
	• Structural
	• Power
	• Signal
	• Hydraulic
	• Pneumatic
	• Etc.

4.3.4.3 Electronic/Electrical Interconnection Compatibility

4.3.4.3.1 General

The following levels of interfaces and interconnections exist in the IMBLM system (See Figure 4-37).

- Level A - Electrical interconnections between the IMBLMS and the carrier vehicle - the system interface
- Level B - Electrical interconnections between IMBMLS modular segments - subsystem/system interfaces
- Level C - Intra-modular connections within each segment between modular elements - system/subsystem interfaces.

  Connections to remote devices - subsystem interfaces
- Level D - Inter-modular connections within each module/modular element - subsystem interfaces

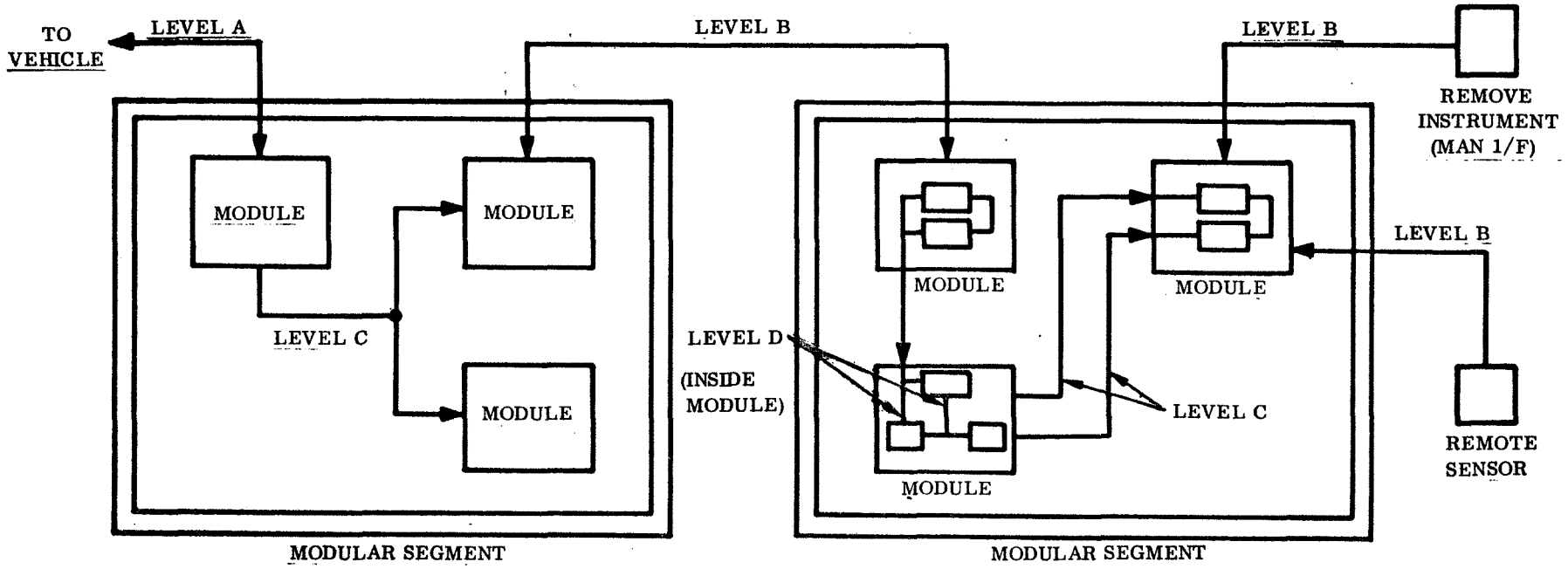

Figure 4-37. Electrical/Electronic Interconnection Levels

4.3.4.3.2 Level A

These electrical connections to the carrier vehicle include the primary electrical power interface as well as all control, monitoring and reference sensing interfaces to the on-board data and command systems. The interfaces must be compatible with the carrier vehicle.

4.3.4.3.3 Level B

These consist of IMBLMS "housekeeping" functions, i.e., power and control, with provisions for routed signals where required. Interfaces are to be compatible on a segment level.

Additionally, connections from the modular segment to any physically remote device, such as a sensor, include power, control and signal interfaces. These connections represent the man interface with respect to actual measurements made on the man.

4.3.4.3.4 Level C

Connections between modular elements within the modular segment includes all "housekeeping," power distribution, control and signal distribution interfaces. These must be compatible between individual control, management, and measurement modules which represent individual subsystems.

4.3.4.3.5 Level D

Inter-modular connections inside each module or subsystem include all power distribution, signal and control routing between functional circuit groupings (such as the standard electronic assemblies) and between circuits assemblies and other major subassemblies which comprise the modular element, i.e., power converter, display and control panel, etc. No requirement may be necessary at this level for system interface compatibility.

System interfaces may exist where the major function of the module is to handle and interconnect interfaces between subsystems.

4.3.4.4 Crew Accessibility and Operability - Human Factors Considerations

4.3.4.4.1 General

For a system such as IMBLMS where the astronaut interface is of significant importance it is necessary to insure that the man-machine relationships have been thoroughly evaluated with respect to displays and controls operability.

4.3.4.4.2 Crew/IMBLM System Evaluation

During Phase C, studies must be conducted to determine the optimum relationships of IMBLMS displays and controls design. Since the system concept is committed to a modular packaging approach, the displays and controls will also, by definition, have to conform to the

interchangeability and alternate grouping philosophy previously discussed. For the various vehicle operational configurations considered, it will be necessary to identify, integrate and document the different applicable generic-type module display and control requirements.

4.3.4.4.3 Display and Control Design Criteria

The more important display and control design considerations that must be evaluated during Phase C include the following:

a. Display and control operational requirements complementing the equipment functional characteristics

b. Satisfactory operational environment

   1. Illumination
   2. Crew restraint
   3. Limb movement
   4. Viewing capability and limitations, etc.

c. Display design criteria

   1. Symbolic
   2. Pictorial
   3. Presence on other displays
   4. Compatibility with controls
   5. Warning devices
   6. Indicators
   7. Display identification, etc.

d. Control design criteria

   1. Physical characteristics, shape, color, size, etc.
   2. Operating characteristics
   3. Accidental activation prevention
   4. Control grouping, etc.

4.3.4.4.4 Mockups

A key activity that must be pursued during the preliminary design phase will be that of mockup development. Mockups will be required to establish:

- Feasibility of modular installation concepts
- Modular assembly feasibility
- Accessibility and interconnection characteristics
- Display and control preferred relationships
- Alternative modular arrangements

4.3.4.5 Installation Interface Considerations

Table 4-22 lists specific interface data required for each module or modular assembly to physically integrate it into the IMBLMS equipment assemblies. It is divided into sections as follows:

I. Mechanical Interfaces
II. Thermal Characteristics and Interfaces
III. Electrical Interfaces
IV. Data Management, Instrumentation and Telemetry
V. Environments Constraints
VI. Test Constraints
VII. Equipment Definition and Mission Utilization
VIII. Material, Functional, and Operational Constraints
IX. Crew Systems Considerations

Table 4-22. Installation Interface Data Required

The following information is required for each module or modular assembly in order to physically incorporate and install them into an integrated medical/behavioral laboratory measurement system.

I. MECHANICAL INTERFACES

A. Mechanical Operation Diagram with sequences, operations, etc.

B. Envelope Drawing

C. Mounting Surface(s)

D. External Connections Layout

E. Mounting Orientation

F. Special Mounting or alignment Instructions

G. Weight and Center of Gravity

II. THERMAL CHARACTERISTICS AND INTERFACES

A. Operating temperature limits

B. Minimum and maximum non-operating temperatures

C. Heat generated during operation mode

D. Heat generated during stand-by mode

E. Cooling provisions; active refrigeration: coolant flow, temperature in and out; Passive emission; and conduction paths and temperatures expected.

F. Heaters required

G. Insulation and/or thermal conduction paths required between package and mounting structure or heat sinks.

III. ELECTRICAL INTERFACES

A. Electrical Schematic Diagram

B. Electrical Interconnection Diagram

C. Electrical Operation Sequences

D. Electrical Power Requirements

E. Means for Energizing or Disconnecting Circuits

F. EMI Suppression Provisions

G. Signal Output

H. Continuity Checkout Provisions

Table 4-22. Installation Interface Data Required (Cont)

I. Special Electrical Instructions

J. Special Cabling Requirements

IV. DATA MANAGEMENT, INSTRUMENTATION AND TELEMETRY

A. Measurements

B. Resolution and Accuracy Required

C. Recording, Playback, and Transmission

D. Display and Controls

E. On-Board Checkout and Calibration

V. ENVIRONMENT CONSTRAINTS - MAXIMUM AND MINIMUM LIMITS

A. Transportation and Storage on Earth

B. Launch (Powered Flight)

C. Orbital Operations

D. Orbital Storage

VI. TEST CONSTRAINTS

A. Pre-Qualification

B. Qualification

C. System Qualification

D. Flight Acceptance

E. AGE Requirements (Storage or Operating cycles limitations)

F. Field Procedures Documentation Lists

VII. EQUIPMENT DEFINITION AND MISSION UTILIZATION

A. Number and Identification of Experiment Components and Assemblies per Flight for:

1. Refurbished Command Module

2. Lunar Module

3. Orbital Workshop

Table 4-22. Installation Interface Data Required (Cont)

VIII. MATERIAL, FUNCTIONAL AND OPERATIONAL CONSTRAINTS
A. Special Material Selection Criteria
B. Safety Considerations
C. Contingency Provisions
IX. CREW SYSTEMS CONSIDERATIONS
A. Access Required
B. Restraints Required
C. Repair and Maintenance Provisions
D. Human Factors Provisions
1. Shirt-sleeve
2. Pressure-suited
E. EVA Required

Obviously all of these categories will not be required for all modules and the list presented is meant to show the types of interface data that will ultimately be required to effect a controllable, systematic approach to modular segment and vehicle installation interface control. Since the packaging task will include the utilization of many vendor supplied modules, modular elements, and even sub-modular components, it will be necessary for General Electric to implement and maintain design control over the vendors. Documentation such as Table 4-22 is required.

4.3.5 INTERNAL MODULE DESIGN CONSIDERATIONS AND APPROACHES - ELECTRICAL COMPONENTS

4.3.5.1 General

To provide an insight to the types of techniques that GE is considering for electronic packaging at the component or subassembly level the following discussion is presented. The basic approach to the design and development of the electronic components or "black boxes" that make up the modules previously identified will be to incorporate, wherever possible, previously qualified parts and components, circuit designs, packaging techniques, and off-the-shelf items to minimize design and development time and to maximize reliability.

The requirement for commonality imposes strict reliability requirements which will be reflected in the product design criteria. The basic design will be in accordance with the system requirements for equipment which is to be extremely flexible to handle technical requirement changes and the adaptability to different spacecraft and mission requirements. Individual

components or functional assemblies will be light-weight with high volumetric efficiency and capable of meeting the worst combinations of the environmental requirements.

4.3.5.2 Standard Assembly

To satisfy the requirement for flexibility and modularization, individual components will be designed into standard profile boxes or assemblies. Each will contain a complete component or functional groups of circuits and have standardized electrical, mechanical and thermal interfaces.

For example, a standard module/frame/patch concept can be developed to furnish the desired flexibility in order to add, subtract and replace circuits to obtain different configurations for different missions. Standard electronic assemblies, standardized with respect to dimension, electrical connection interface, shielding effectiveness and thermal and mounting interface, can be plugged into frame in a most general and unrestricted manner. The frame provides electrical power, mechanical support, thermal heat-sinking and basic monitoring and control capability. Signal inputs and outputs must be capable of being interconnected in any manner required. The standard assemblies contain those components or groups of circuits likely to be replaced or interchanged during a reconfiguration. Circuits and housekeeping components not likely to be replaced such as front panel controls, displays, distribution, etc., can be designed into the main frame. Though not likely to be reconfigured, these should be designed to be easily replaced to facilitate system development.

To obtain the desired flexibility, signal interfaces are brought to a patch panel or interconnection assembly which is designed peculiar to each system configuration. This provides the desired signal interconnections on system/subsystem levels and can be readily interchanged to vary subsystem interconnections during developments as well as for reconfiguration to meet new, future mission requirements.

4.3.5.3 Internal Packaging Concepts

Circuits within the standard assembly will be packaged using the following design concepts, either singly or in combination:

- Printed wiring
- Potted welded cordwood subassemblies
- Microelectronics - Integrated circuits
  - Thin film depositions
- Hybrid combinations with individual parts

Combination design includes individual conventional parts together with microelectronic elements assembled on to printed wiring boards or into potted welded cordwood subassemblies which in turn are assembled onto a "mother" printed wiring board. This main or "mother

board" provides interconnection between the subassemblies and the connector and forms the structural and thermal tie to the standard assembly housings.

Where high thermal dissipating circuit elements are involved, (such as in power converters) these will be mounted directly to the structural housing to provide a low thermal impedance and limit the temperature rise to the intermediate heat sink. Intermediate power parts can be mounted to the heat sink side of a printed wiring board which in turn is thermally and mechanically tied to the "wrap around" structure or housing.

Examples of components using these packaging approaches can be seen in Figure 4-38. Note that within the desired standard assembly, various packaging approaches can be used each consistent with the electrical/thermal circuit requirements. Thus logic circuitry using microelectronic elements mounted on printed wiring boards may be used in one assembly whereas the power converter or regulator or both may be differently packaged within a similar sized housing.

4.3.6 MODULAR SEGMENT - SYSTEM CONCEPT

4.3.6.1 System Approach

One approach that has been considered for IMBLMS is that of the use of modular segments. The concept of modular segments considers the two levels of installation approach previously discussed and is shown schematically on Figure 4-39 and pictorially in Figure 4-40. This approach considers the assembly of the modular elements into modular segments which then have a single operational purpose. The three major segments are as follows:

a. Control Segment

   1. Data Management, Displays and Controls

   2. Power and Signal Conditioning Equipment

   3. Services Support Equipment

   4. Medical and Behavioral Special Purpose Measurement Equipment.

b. Biochemical Segment

   1. Biological Specimen Collection and Handling Equipment

   2. Analysis Equipment

   3. Preservation and Storage Equipment.

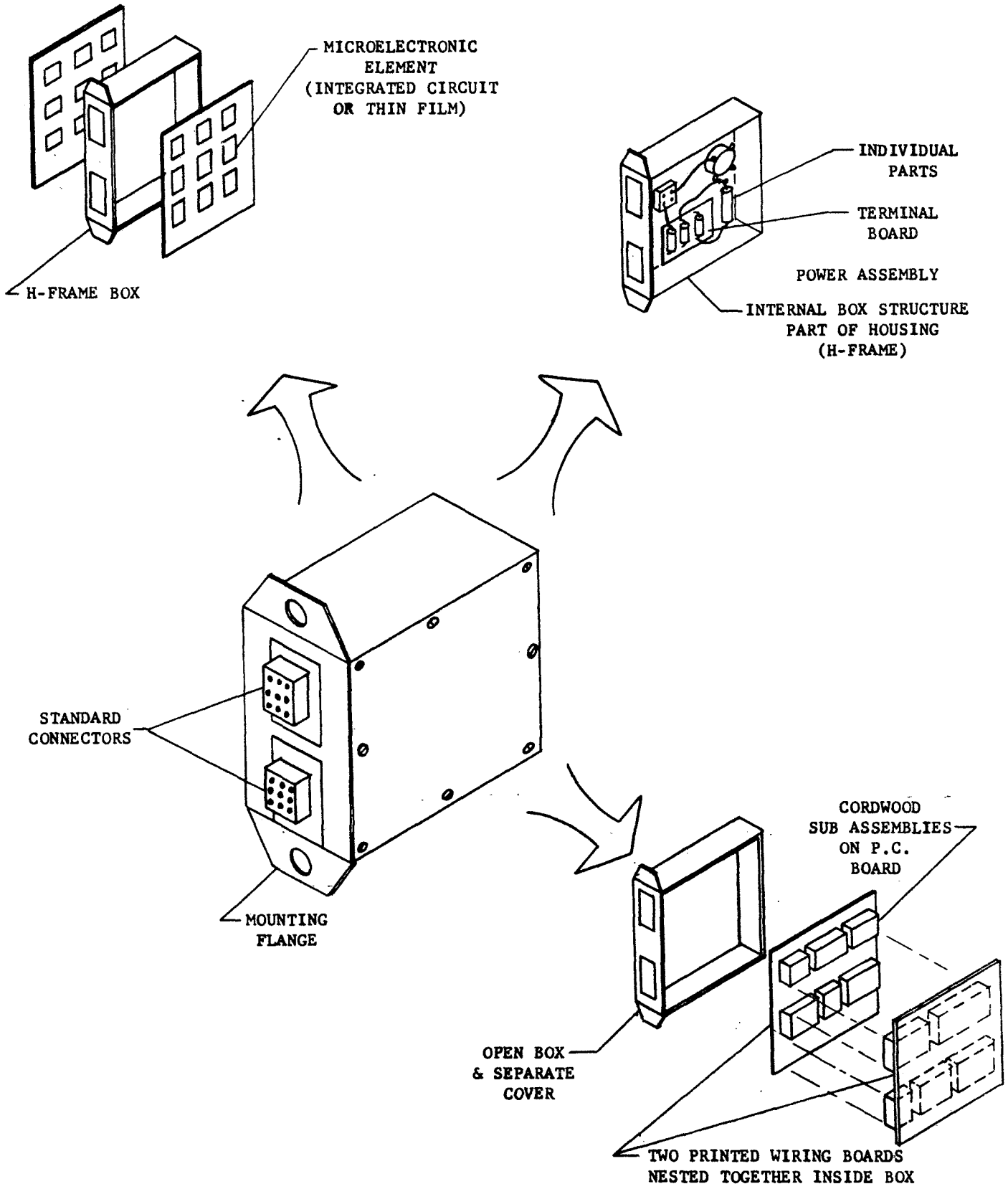

Figure 4-38. Electronic Component Packaging Example

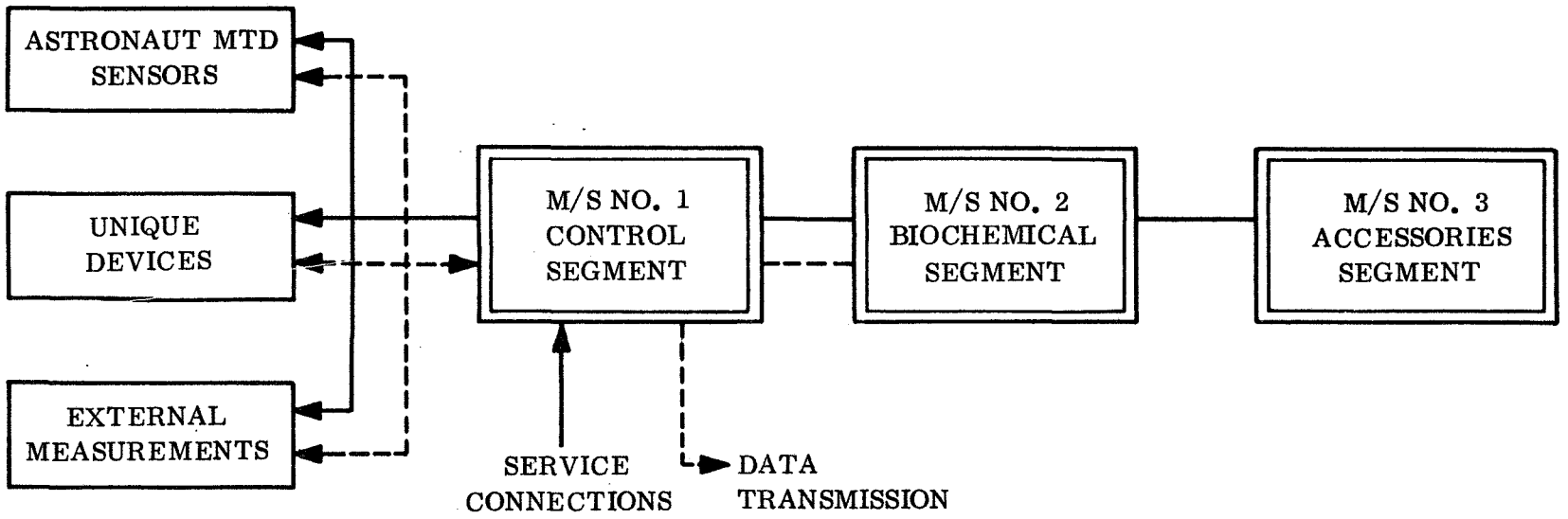

Figure 4-39. Modular Segment System Schematic

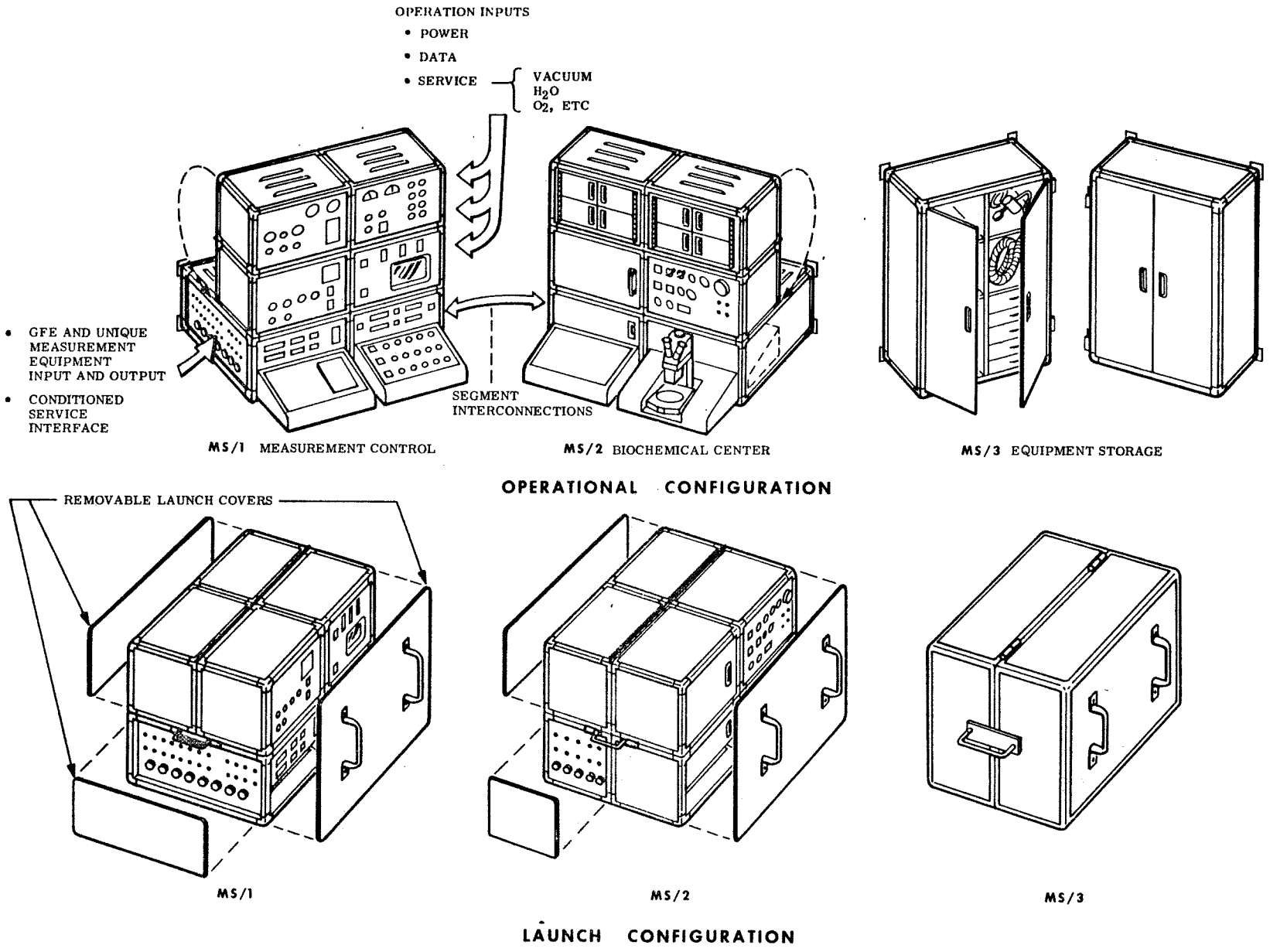

Figure 4-40. Modular Segment - Configurations

c. Accessories Segment

1. Support Equipment for Measurement Requirements Sensors, Leads, etc.

2. Medical Kit.

A more detailed breakdown of the types of equipment in these modular segments can be found in Section 3 of this report. The operational sequence would be as follows.

The unique medical devices such as the lower body negative pressure boot (LBNP), the ergometer (ERG), the rotating litter chair (RLC), etc., are deployed near the IMBLMS equipment. Support services are provided to these devices from the IMBLMS equipment and data from them are collected, displayed, and recorded by IMBLMS. The three modular segments which contain the IMBLMS equipment are functional groupings of related equipments. Each of the modular segments can be folded into a compact rectangular package for storage during launch and for transporting into the operational area. Once in the operational laboratory area, they unfold and are interconnected into an integrated operational console. The modular segment approach provides the structural element to house the IMBLMS equipment. The modular segment concept that General Electric has evaluated is compatible with all three carrier vehicles. As shown in Figure 4-40, it consists of basically three rectangular packages, each 20 X 20 X 30 inches when stored for launch. Pending further definition of equipment weight and volume requirements perhaps additional modular segments would be required. The carrier vehicle/IMBLMS installations are discussed in paragraph 4.3.7.

When deployed, the control segment would be hinged as shown to fold out into a console with data displays, controls, electrical power and services connection panel, signal conditioners and external measurement and services connection panel. A control surface unfolds from the bottom of this segment with data input and control keyboard.

The biochemical segment is a similar package when stored, and it also unfolds as shown to form a biochemical and biophysical work section. It is interconnected with the control segment for necessary electrical power and other services. It is also interconnected for data measurements, recording, and some control functions.

Modular Segment No. 3 is the Accessories Segment. It unfolds along one hinge line only, as shown. This hinge is a lift-off type so that the two halves of this segment can be separated. This is desirable in some cases, when half of it may be used with the control segment and the other half with the biochemical segment.

Other modular segment-type approaches could include segment structural support housings that would be specifically tailored to the carrier vehicles. These concepts would perhaps make better utilization of the available stowage and operational volume but would not have the singular capability of use in all vehicles.

To satisfy a requirement for a vehicle installation that would not require an IMBLMS transportable by the crew, a pre-installed modular segment structural rack concept could be employed.

Some of the advantages of the modular segment approach, as currently envisioned by General Electric are listed in Table 4-23.

4.3.7 CARRIER VEHICLE APPLICATIONS AND INSTALLATION CONSIDERATIONS

4.3.7.1 General

To determine the feasibility of using IMBLMS type modular equipment, it is necessary to examine the volume that is available, or could potentially be made available within the three potential carrier vehicles. Figure 4-41 depicts the volumetric considerations for the spacecraft to be considered.

This figure compares the RCM, the LM, and the OWS and MDA volumes available for stowed equipment and for crew operations. It also shows a comparison of the current AAP biomedical experiment volumes for storage and operation of the experiment in the spacecraft. The last column indicates the carrier potential for the three spacecraft on which IMBLMS may be installed. From this chart it is obvious that both the LM derivative and RCM will be space limited for use of the IMBLMS equipment. The OWS and MDA, however, appear to have ample volume for storage and operation of the IMBLMS equipment.

The most significant aspect of the large volume available for the OWS operation is that it is not shape constrained. Thus the modular segment approach with its launch storage mode, is optimally suited for MDA storage during launch and transportation into the OWS for operation. The actual application of the IMBLMS equipment for the various carrier vehicles is discussed in the following paragraphs.

4.3.7.2 Orbital Workshop Operation

4.3.7.2.1 General

Figure 4-42 schematically illustrates the IMBLMS Modular Segments installed in the MDA for launch and deployed in the OWS for operation. Volume and configuration do not appear to be limiting on this spacecraft. The size and shape of the Modular Segments have been selected to allow passage through the Airlock and S-IVB hatches. The three Modular Segments may weigh in excess of 70 pounds each, a figure which was at one time a desirable limit on boxes which the astronauts would have to move from the MDA into the OWS. GE funded test of astronauts moving mass under weightless conditions, simulated by underwater neutral buoyancy activities in a pressurized space suit, indicate that packages of this approximate size and mass will be no great problem provided that the necessary hand holds, tethers, and mobility aids are provided where needed. This can be determined by underwater neutral buoyancy simulation of the astronaut's activities in a mock-up of the orbital cluster in time to provide adequate design data as to the type and location of such astronaut aids. These would be installed in the spacecraft prior to launch.

Table 4-23. Advantages of Modular Segment Approach

- Modular segments in launch configurations are compatible with MDA and OWS experiment equipment design concepts
- Transportable through smallest AAP hatch opening
- Adaptable to all vehicles with minimum penalties and maximum flexibility
- Vehicle interfaces minimized
  - Modular segments structurally and functionally self supporting
  - Interfaces consist of mechanical, electrical, data and external services
- Basic modular segment outer structure provides considerable latitude in the alternate packaging for different sub-modular groupings of measurement equipment
- IMBLMS modular segment concept will permit singular flight qualification testing program

		Vehicle Total Volume (Ft^3)	Available Exp. Volume Envelope (Ft^3)		Current Biomedical Exp. Approved for AAP(4) Vol. (Ft^3)		Potential Carrier
			Stowed	Crew Op.	Stowed (5)	Crew Op.(5)	
Command Module	Block II CM	366	3	245	45/27	250/60	Impossible
	Refurbished(1)	366	≈50(3)	245	45/27	250/60	Possible with Limited Exp. Prog.
Lunar Module	Lunar Lander	250	≈3	160	45/27	200/60	Impossible
	LM Lab(2)	250	≈50	160	45/27	250/60	Possible with Limited Exp. Prog.
Orbital Cluster	Orbital Workshop	10,610	_____	Unlim.	_____	20/60	Most Probable
	MDA/Airlock	3,800	Large	_____	45/27	_____	Most Probable

(1) Assuming RCM is primary Medical and Behavioral Laboratory Vehicle with only Life Support, Environmental Control, and Power Subsystems On-board

(2) Assuming LM Laboratory is primarily Medical and Behavioral Laboratory Vehicle with only Life Support, Environmental Control, and Power Subsystems On-board

(3) Dependent on Mission Subsystem Requirements

(4) M018, M050, M051, MO52, M053, M055 (IMBLMS when ultimately defined will be of equal or greater volume both stowed and operational)

(5) ≈ Volume of Total Exp. Package (with and without M053-Human Vestibular Function)

Figure 4-41. Spacecraft and IMBLMS Volumetric Considerations

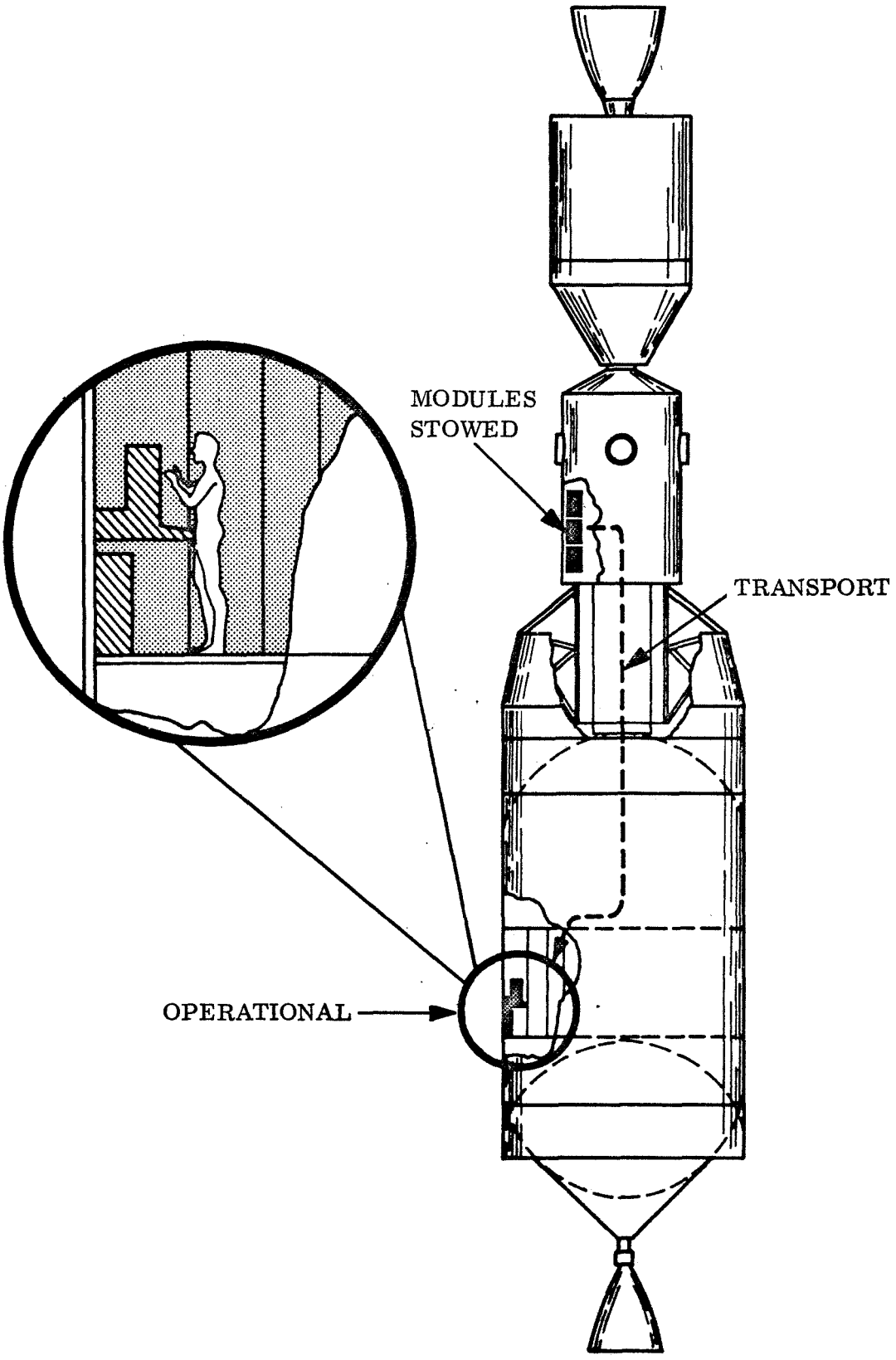

Figure 4-42. Orbital Workshop and MDA IMBLMS Application - Total System

4.3.7.2.2 MDA

Figure 4-43 shows the current experiment package internal arrangement of the MDA for AAP Flight 2 and how the IMBLMS equipment might be installed for a similar flight. The current IMBLMS modular segment dimensions 20 X 20 X 30 inches are well within the limits of the largest box currently being considered (20 X 25 X 40 inches).

These "boxes" are launch mounted in the MDA with quick-disconnect type fasteners so that they can be easily detached from their MDA location and transported through the airlock modules and into the OWS experiment operation area.

4.3.7.2.3 OWS

Figure 4-44 shows the AAP 2 experiment operation area in the LH_2 tank modified to show how the IMBLMS modular segments could be deployed. Once the IMBLMS type boxes are brought to the OWS they are then mounted to the workshop wall in pre-defined areas, and re-utilizing the quick disconnect type fasteners. Once installed in the OWS the appropriate deployment would be accomplished and the power data and service couplings would be made. Pending deployment of the required supporting measuring input devices, the IMBLMS System would be ready for operation.

4.3.7.3 Refurbished Command Module (RCM) Application

For the application of IMBLMS equipment to the refurbished command module, several problems exist. As currently designed the command module is not easily amenable to removing and relocating subsystem equipment, due to the lack of existing design flexibility. However, if considerable latitude in removing existing equipment is provided, an installation such as shown on Figure 4-45 could be obtained. In this configuration the IMBLMS installation of three slightly modified modular segments mentioned in paragraph 4.3.6 are shown. Modular Segments 1 and 2 are shown in the RCM forward bay area mounted to the ring frame structure at Station X_C 42.665. Modular Segment 3 is shown mounted vertically to the aft side wall in the lower equipment bay aft section. To accommodate these segments in the forward and aft sections of the lower equipment bay, it will be necessary to remove some existing equipment and secondary support structure. This area encompasses a volume of approximately 30 cu. ft. and currently consists of such items as shown in Table 4-24.

For an RCM application where a less extensive modification is desired, it would be possible to mount a somewhat smaller IMBLMS modular segment in the forward section of the lower equipment bay as shown on Figure 4-46. This installation would utilize the existing secondary support structure for the G&N equipment. Areas shown cross-hatched would be available for other experiment packages or perhaps individual IMBLMS modules within the existing shape constraints.

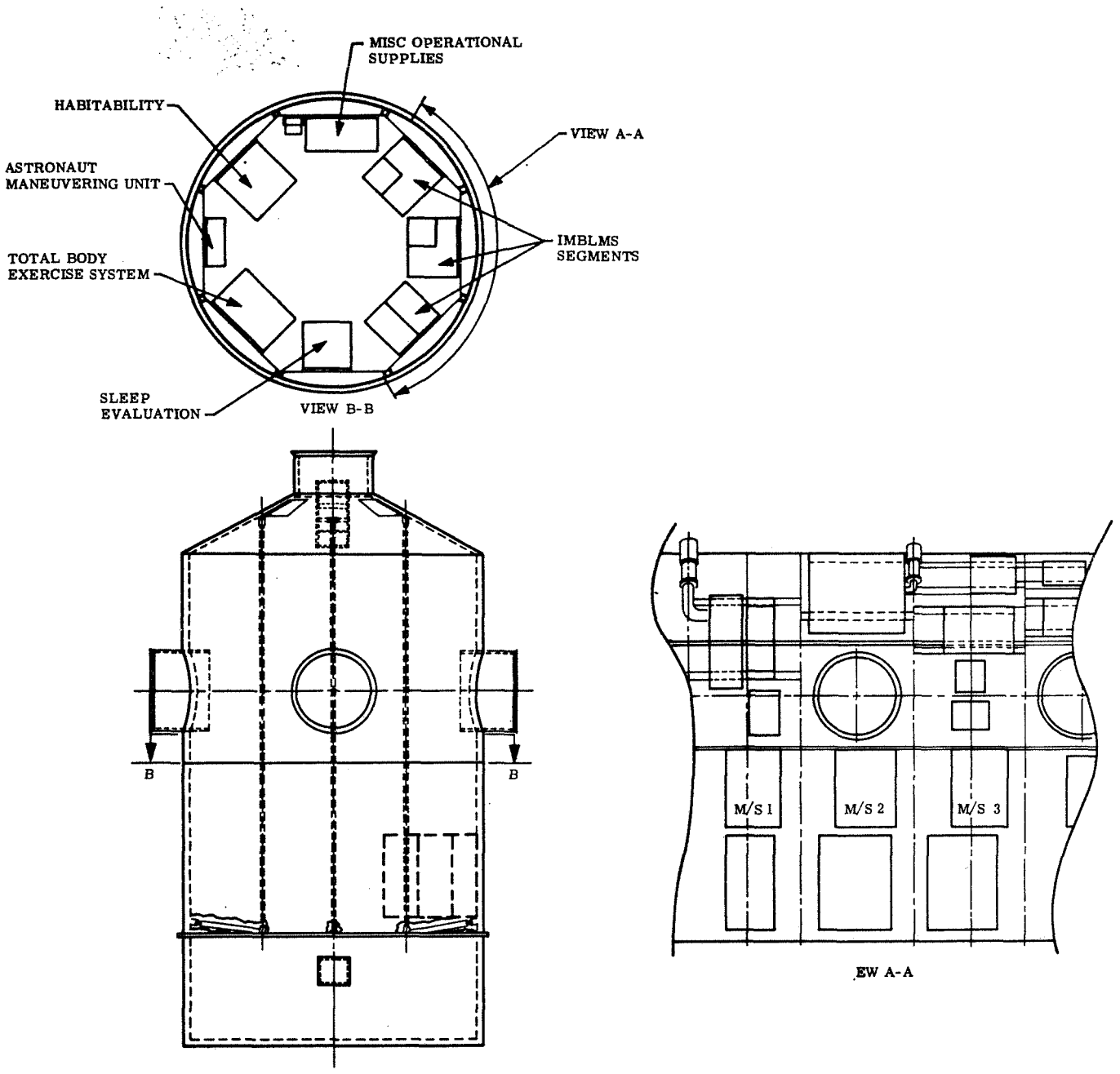

Figure 4-43. MDA Interior Arrangement (IMBLMS Application)

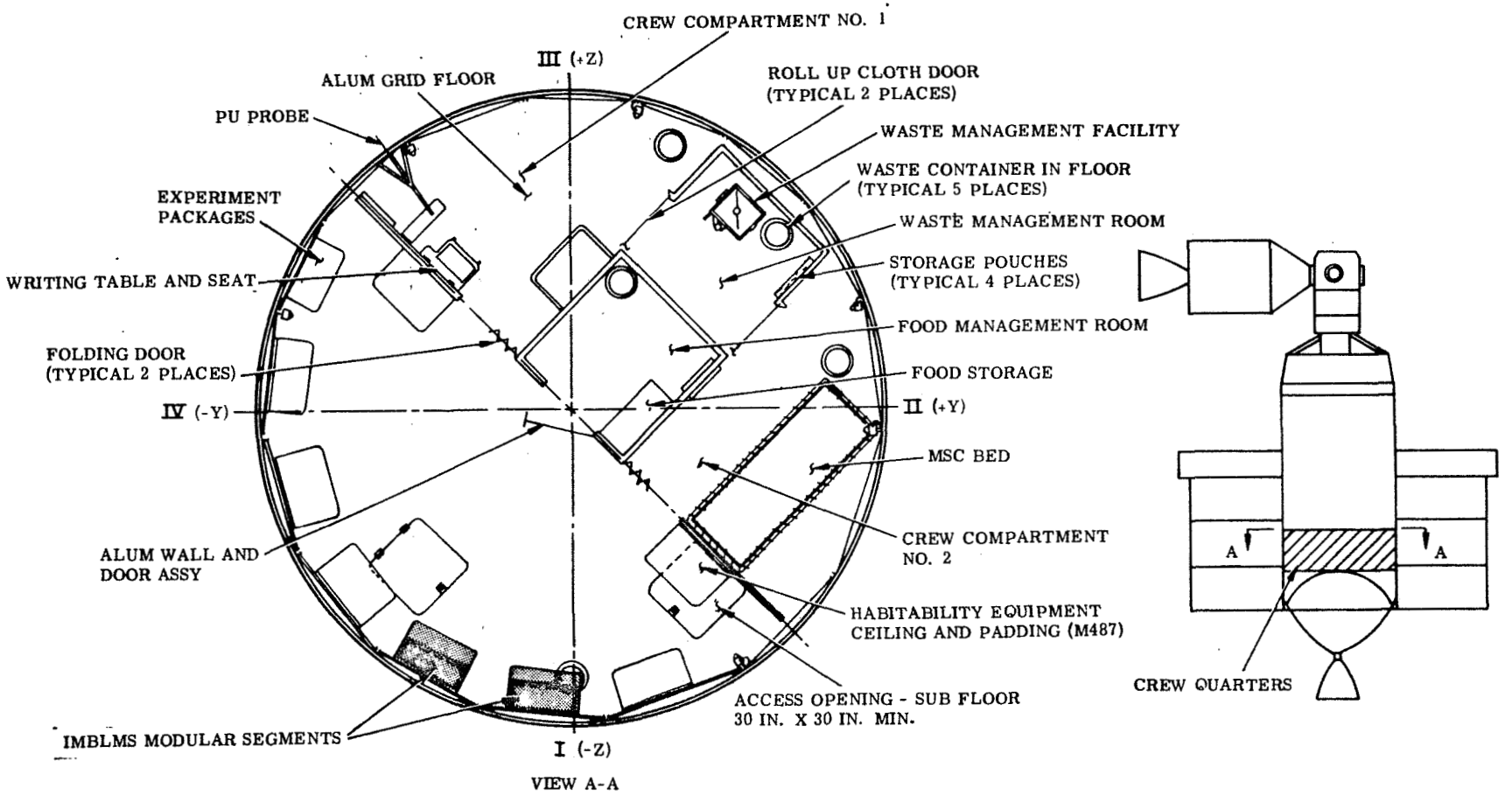

Figure 4-44. OWS Interior Arrangement (IMBLMS Application)

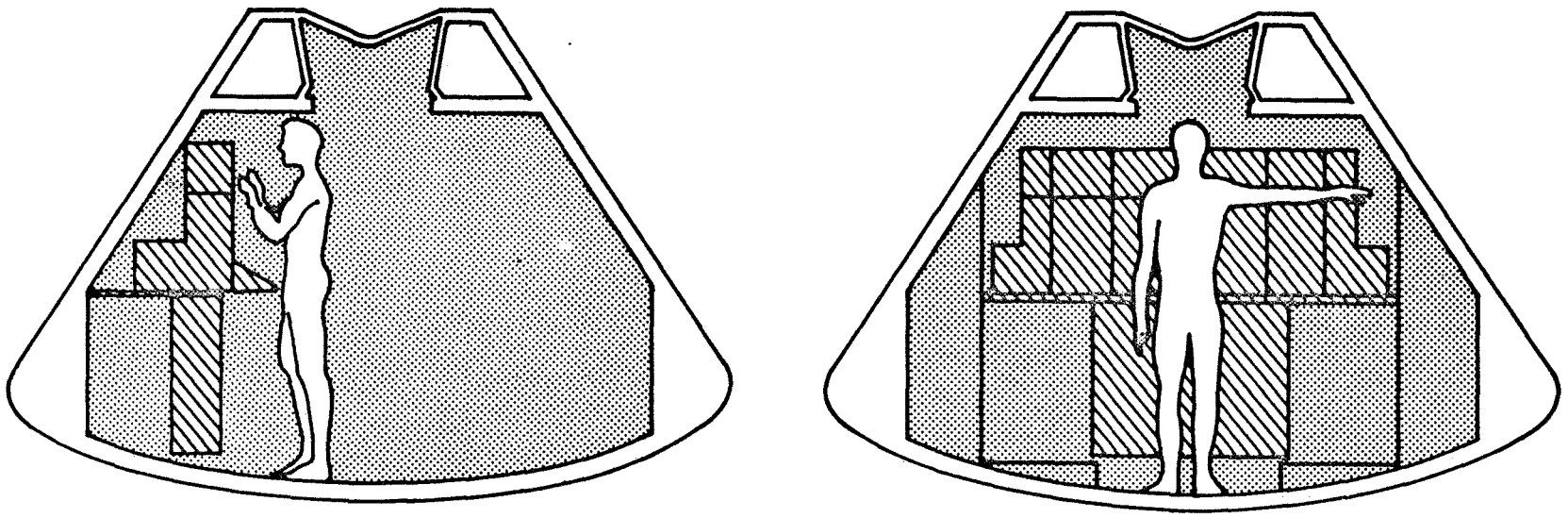

Figure 4-45. Refurbished Command Module (IMBLMS Application - Total System)

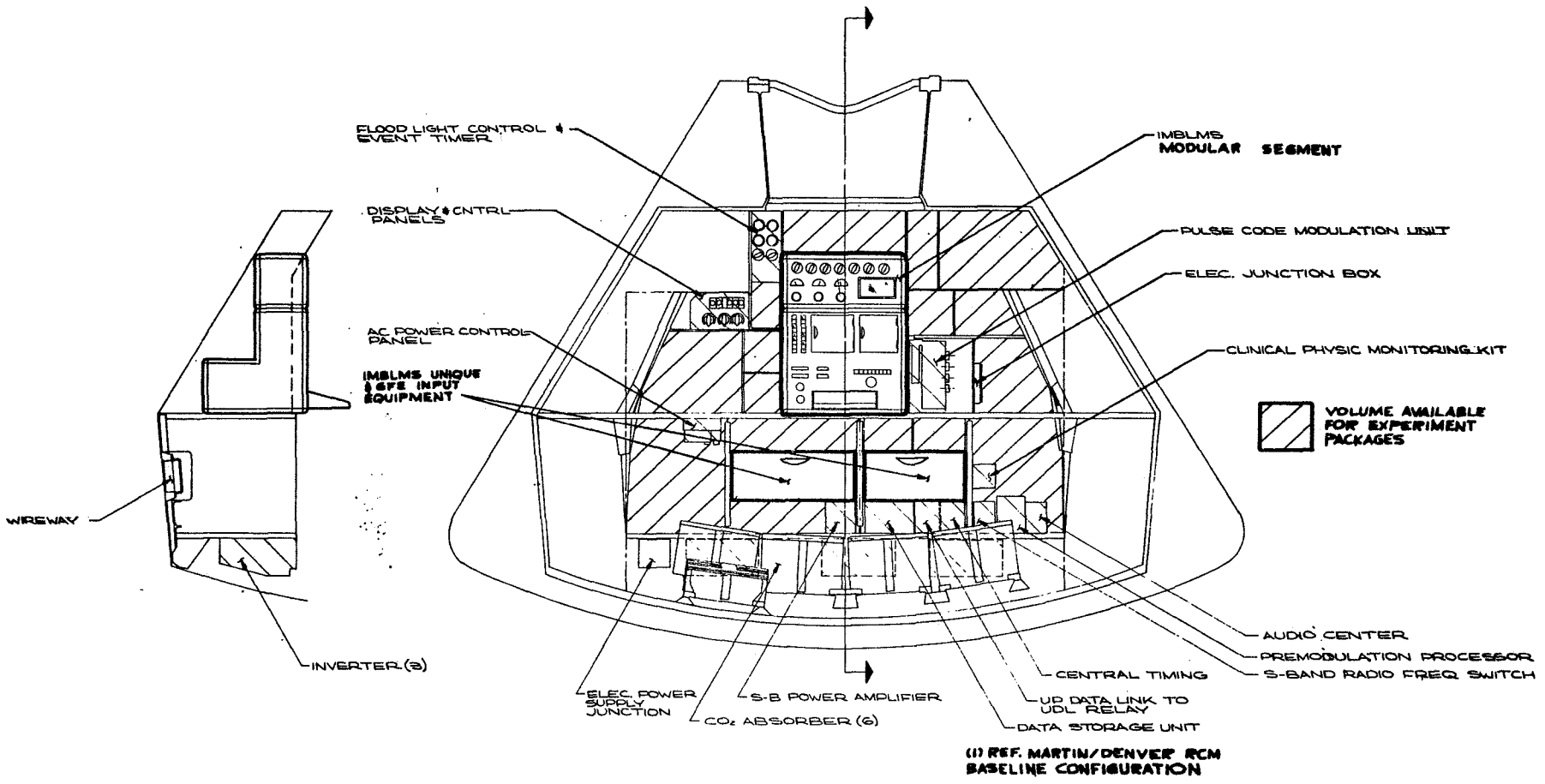

Figure 4-46. Refurbished Command Module (IMBLMS Application - Partial System)

Table 4-24. Block II. Command Module Equipment Removed

-LOWER EQUIPMENT BAY (FORWARD SECTION)

- Guidance and Navigation System
- Food Compartments (A, B, C, D, E)
- Gyro Assembly
- Medical Compartment
- Towel Compartment

-LOWER EQUIPMENT BAY (AFT SECTION)

- Stabilization and Control
- Tool/Table Drawer
- Scientific Experiment Compartments
- Tape Recorder and TLM

4.3.7.4 Lunar Module (LM) Application

The LM vehicle imposes an even more difficult problem than the RCM to adaptability of IMBLMS equipment. Mainly, this is because of the fact that it is only approximately 70% of the total volume of the command module and its geometric shape is confining with respect to retaining a reasonable volume for the crew to operate experiment support equipment. If considerable equipment can be removed, primarily in the areas of the commander's and the system engineer's side consoles, an IMBLMS installation such as shown on Figure 4-47 can be obtained. The same modular segment shape that was shown in the OWS and RCM applications is again used. In this configuration, however, only a minimal area is provided for actual experiment operation in the main cabin area. The majority of available experiment operational area is located in the aft equipment bay, which unfortunately has a ceiling height limitation of approximately 5 feet.

One operational possibility that could be considered for this configuration would be a remote-type of measurement activity. With appropriate length sensor leads and a remote data management control unit, unique experiment and GFE input devices such as the ergometer or rotating litter chair could be located elsewhere (such as in the MDA where ample operational space is available).

Another concept that has been considered is an application where only one IMBLMS modular segment would be used. Figure 4-48 shows a conceptual layout of this type of operation. In this approach the main cabin is left basically unchanged and is used for actual experiment operation. The slightly modified modular segment is mounted in the aft equipment bay in the

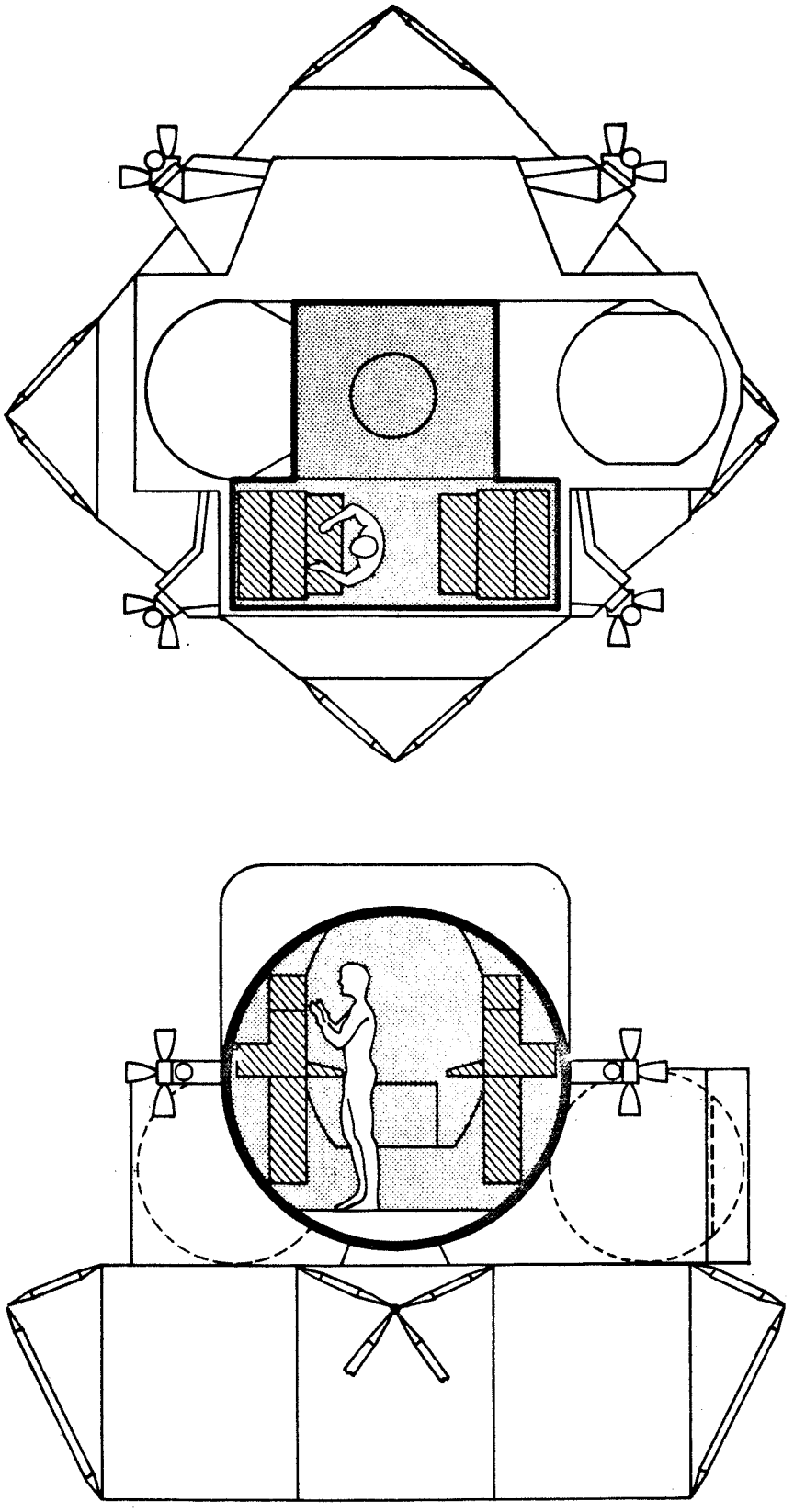

Figure 4-47. Lunar Module (IMBLMS Application - Total System)

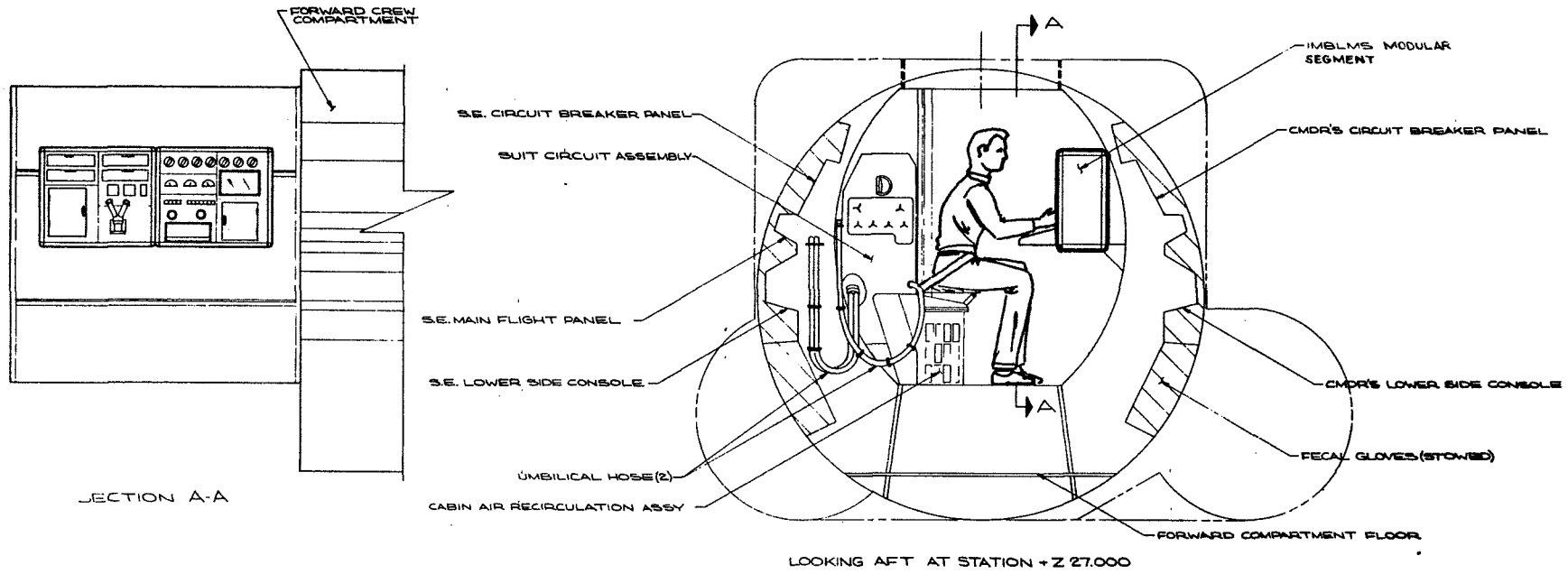

Figure 4-48. Lunar Module (IMBLMS Application - Partial System)

area previously occupied by the equipment shown in Table 4-25. To operate the modular segment console equipment the crew members sit as shown. Note, in this concept the ascent stage engine cover and engine are also removed providing a smooth floor area.

Table 4-25. LM Aft Bay Equipment Removed

- Food Containers
- Lunar Equipment
- E.V. Visors
- LiOH Cartridges (6)
- LM Guidance Computer
- Coupling Display Unit
- Power Servo/Signal Conditioner Assembly

4.3.8 SYSTEM INSTALLATION - DESIGN ANALYSIS

4.3.8.1 General

To affect the carrier vehicle system installation it is necessary to conduct engineering analyses to assure:

- IMBLMS and vehicle structural integrity both statistically and dynamically
- System thermal control and carrier vehicle thermal compatibility
- EMI compatibility
- Weight and balance control

4.3.8.2 Structural Analyses

Structural analyses must be conducted both at the module and modular segment installation level to determine the structural adequacy of the module housings, modular interconnections, modular segment structures, and vehicle mountings, for both static and dynamic loading conditions. Loading environments considered will include pre-launch and storage, launch and orbital operation. The dynamic environments will include equipment operational and vehicle-induced vibratory and impulse loads. Analytical procedures and practices employed by GE are consistent with current aerospace industry-wide techniques. The procedures for the calculation of factors and margins of safety conform to NASA standards.

4.3.8.3 Thermal Control and Vehicle Thermal Compatibility

Analyses must be computed to analyze and evaluate the thermal generation characteristics of the various "Black-Box" modules and modular components. If cooling is required to maintain the proper modular segment thermal balance, appropriate design solutions will be prepared. The use of passive, active, or hybrid thermal control systems should be considered during Phase C.

4.3.8.4 EMI Compatibility

It is estimated that considerable problems will exist in the area of electromagnetic interference due to the electronic component nature of the majority of the IMBLMS system equipments. The various electronic and power modular interconnection schemes must be evaluated during Phase C to assure that acceptable EMI hardware design practices are being employed.

4.3.8.5 Weight and Balance

During Phase C it would be necessary to maintain an effective control over the IMBLM System equipment and installation support equipment weights. This must be continuously tabulated and updated to insure that carrier vehicle experiment payload weight targets can be met.

4.3.9 IN-ORBIT MAINTENANCE, REPAIR AND REPLACEMENT OF IMBLM SYSTEM EQUIPMENT

4.3.9.1 General

The successful completion of future long term missions where medical and behavioral equipment is used will require extremely reliable operation. Presently available components do not have inherent reliabilities of sufficient magnitude to completely satisfy the overall requirement for long duration space flight. Thus, a major effort toward the IMBLM System reliability is required. This effort can take one or more of at least three courses: module/component redundancy, module/component reliability improvement, or in-flight repair/replacement by crewman. As a practical matter, efforts in all three areas are usually required and expended. Some redundancy in the form of parallel units for critical elements affecting system success is unavoidable. However, weight and volume restrictions dictate a limit to complete subsystem redundancy and complementary actions must be undertaken. Module component reliability improvement programs can be developed and conducted with resultant benefits. The practical limitation here is that the benefits are paced by the advancement of the state-of-the-art which is neither linear nor totally predictable and thus is not subject to scheduling. Finally, the repairman is called into the system to repair or replace the failed or inoperable module to return the system to operational status. The characteristics of the spaceflight environment may impose severe limitations on the ability of repairmen to perform effective IMBLM system maintenance.

4.3.9.2 Approach

The systems approach to the evolution of in-orbit maintenance capability for IMBLMS is directed toward a consideration of all factors that affect the effectiveness and efficiency with which maintenance can be performed. This approach is illustrated in the functional flow presented in Figure 4-49.

The approach begins with the accumulation of the basic system data. This entails careful study of all measurement objectives, requirements, study guidelines, assumptions, preliminary modular configurations, and alternatives. The next step is to identify the IMBLMS modules and components in terms of functions, configurations, and interfaces and then perform a failure modes analysis. The analysis is followed by determining the maintenance performance requirements. The requirements are specified in terms of the personnel and equipments necessary to affect maintenance of the potential failures previously identified. The maintenance performance requirements will be analyzed with respect to the feasibility of their accomplishment by manned maintenance activity.

The analysis considers such items as:

- Basic human performance data
- Effects of gravitational environment, pressure suit, and supplementary life support systems
- Requirements for mobility aids, restraint, and maneuvering units
- Penalties, schedule impact and complexity of automatic maintenance equipment

The final step is to provide maintenance and repair recommendations for the IMBLMS Phase C design. These recommendations are: first, establish the maintenance philosophy; and second, proceed with the specific design, procedural, and support recommendations required within the framework of the maintenance concept selected.

4.3.9.3 Identification of In-Orbit Maintenance Requirements

4.3.9.3.1 System Components

The IMBLMS System consists of basically five main generic categories of modules, with a total of twelve general classifications. (See paragraph 4.3.3) Since modularization and interchangeability are key elements in the General Electric IMBLMS concept, the system has a built-in capability for repair by replacement. Thus all modules are removable from the modular segments with varying degrees of ease.

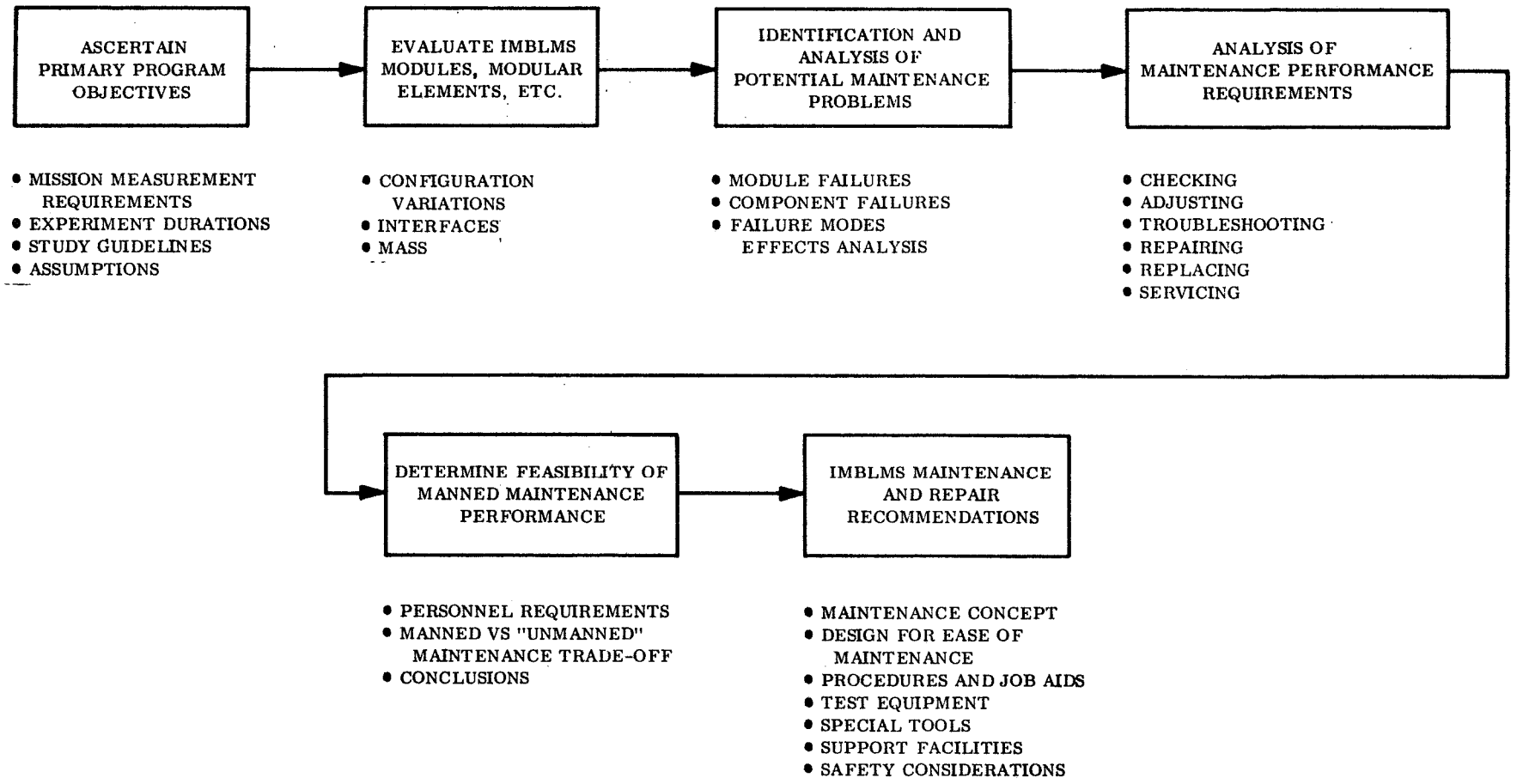

Figure 4-49. Approach to In-Orbit Maintenance

4.3.9.3.2 Failure Mode Analysis

A significant factor in the approach to the investigation of in-orbit maintenance is the failure modes analysis. An analysis of the IMBLMS failure modes must be conducted to delineate the effect on the concepts for redundancy, maintenance, repair and replacement, and the influence on the IMBLMS design or integration with the carrier vehicle configuration. Module component failures can be identified and their effects on the system operation determined. A simplified example of a failure modes analysis format is shown in Figure 4-50.

MODULE	COMPONENT	FAILURE	EFFECT ON	
			SYSTEM	MODULE
Power Module	Power Supply	Short Circuit	Total loss of power	Nonoperable
	Power Controller			

Figure 4-50. Example of Failure Modes Analysis Format

4.3.9.4 Maintenance Performance Requirements

The relevant crew maintenance performance requirements will be defined by an assessment of the manpower and equipment needed for the IMBLM System. Accomplishment of this task will be by the construction of gross level functional flow diagrams.

The functional flow diagrams will detail the significant failure modes as applicable to maintenance, repair and replacement functions.

4.3.9.5 Determine Feasibility of Manned Maintenance Performance

The maintenance performance requirements generated above will be translated into specific crew functions and tasks. These tasks will provide the basic data for generating the detailed maintenance procedures. The procedures will include all the requirements imposed upon the crew and carrier vehicle for maintaining the operational status of the IMBLM System.

The crewman's capability to perform the above procedures is determined by a thorough analysis of the factors that will have an effect on the crewman's behavior. The analysis begins with a consideration of the basic human performance data relevant to ground maintenance and repair activities. This will include such items as anthropometric data, strength capability, reach envelopes, access requirements, tool gross and fine manipulative data, and so on. This basic data will be considered the optimum performance level the man is capable of generating.

The basic performance data list is refined and modified with respect to the known effects of operating in the space environment.

The other major factor which subtracts from man's total performance capability in space is the zero-gravity environment. The strength of a man is influenced to a certain extent by the energy sinks available to the man. On earth, gravity provides the man with an energy sink at least comparable to his weight. This situation does not exist in space and, therefore, man's effective strength capability is greatly reduced.

Where the comparison between requirements and capabilities is made and the crewman has come up lacking, certain possible answers present themselves. First would be to determine the improvement in capability afforded by various types of support equipment such as mobility aids, tethering and restraint devices, zero-reaction or space qualified tools.

Finally the analysis of man's ability to perform in-orbit maintenance is three-fold. A first analysis is to determine the disparity between the performance requirements and man's capabilities. Secondly, the capability to remove this disparity by providing performance aids must be specified. Thirdly, these results must be evaluated and a specific set of conclusions generated from which to make the recommendations pertinent to the overall study effort. This type analysis is presented graphically in Figure 4-51.

4.3.9.6 Analysis Outputs and Recommendations

It can be expected that the results of the investigation of man's role in the accomplishment of in-orbit maintenance will provide data for evaluation as illustrated in Figure 4-52.

The following factors will be considered in generating the recommended solutions:

a. Crew operational safety requirements

b. Operational procedures replacement

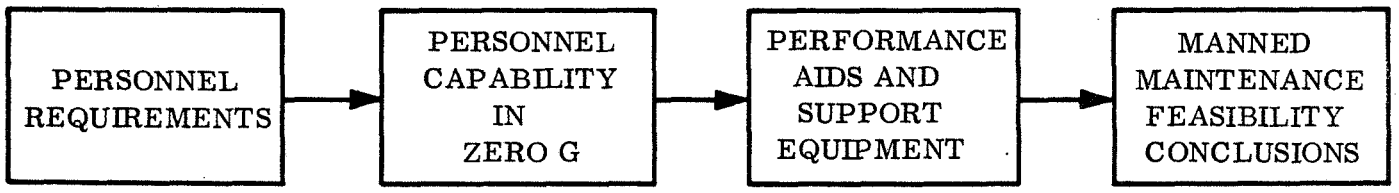

Figure 4-51. Manned Maintenance Feasibility Analysis Diagram

c. Support requirements for both ground based and orbital equipment or facilities

d. Development of maintenance concepts

e. Design considerations for ease of maintenance

f. Personnel and human factors requirements and constraints

g. Verification of orbital maintenance operations utilizing ground simulation techniques

h. Failure modes

4.3.9.7 Simulation Test Program

Many of the performance capabilities of space suited and unsuited crewmen in a zero-gravity environment are, at present, undetermined. This is especially true concerning the capability of crewmen to manipulate, transport and maneuver large objects.

Zero-gravity is simulated by the utilization of neutral buoyancy submersion techniques developed and refined by a General Electric Company-funded program initiated in 1964. The program was initially conducted in a test facility located at the Philadelphia Aquarama and shown in Figure 4-53. It is a 200,000 gallon water tank with glass sides which provided the capability to investigate subsystem repair (Figure 4-54), and the handling and assembly of large structure (Figure 4-55).

In 1966, a full-scale mock-up of the S-IVB stage of the Saturn vehicle, including the Spent Stage Experiment airlock, was constructed in a protected cove in the Virgin Islands. (Figure 4-56) This facility has been used to investigate human performance criteria for station habitability, object manipulation and transport, mobility, usage, and to validate zero-gravity time line analyses. Figure 4-57 presents an example of an evaluation of object manipulation in zero-gravity.

The results obtained from these company initiated programs will be factored strongly into the considerations of maintenance and repair to provide realistic evaluations.

4.3.10 SUMMARY

For the IMBLMS packaging, modularization, and vehicle installation task, General Electric has established a uniform approach to the medical and behavioral laboratory measurement equipment design and installation considerations. The system is capable of being utilized in many measurement combinations and on various carrier vehicles to provide a multi-measurement-multi-vehicle capability. The uniform approach to measurement equipment physical design employed by General Electric permits the grouping of experiment measurement hardware in various "building block" arrangements, thus providing a multi-purpose

MODULE	COMPONENT	FAILURE	INDICATION	EFFECT ON		MAINTENANCE REQUIREMENTS	SPARES REQUIREMENTS	SUPPORT REQUIREMENTS TOOLS & OTHER AIDS	PERSONNEL REQUIREMENTS			TIME REQUIRED	MANNED MAINTENANCE FEASIBILITY
				SYSTEM	MODULE				TASKS	SKILLS	NO.		
POWER MODULE	POWER SUPPLY	SHORT CIRCUIT	FAIL TO ACTIVATE	TOTAL LOSS OF POWER	NONOPERABLE	TBD	TBD	MOBILITY AID, WORK SITE RE-STRAINT, TOOLS	DIAGNOSIS, CORRECTION, RE-ESTABLISH OPERATION	DECISION MAKING PSYCHOM-OTOR PER-FORMANCE	TBD	TBD	TBD
	POWER CONTROLLER	— — —	— — —	— — — —	— — — —	— —	— —	— — — — —	— — — —	— — —	— —	— —	— —

Figure 4-52. In-Orbit Maintenance Analysis Summary

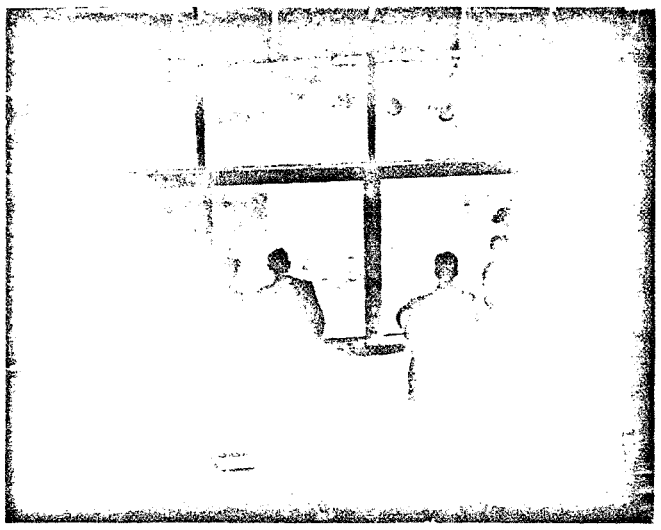

Figure 4-53. 200,000 Gallon Underwater Facility

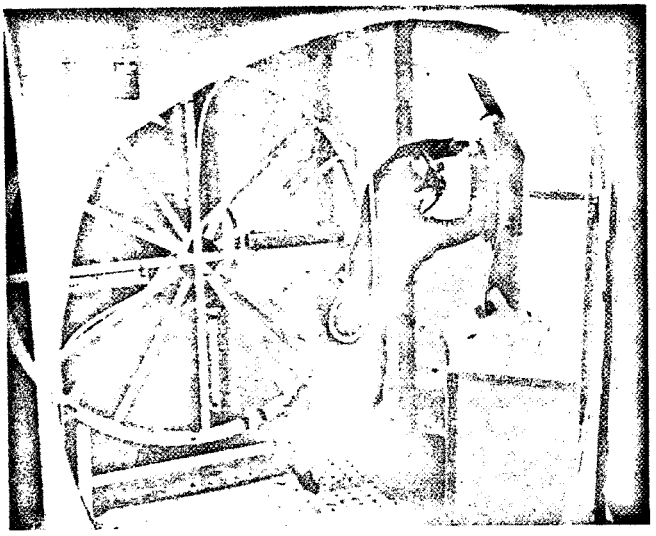

Figure 4-54. Subsystem Repair in 200,000 Gallon Underwater Facility

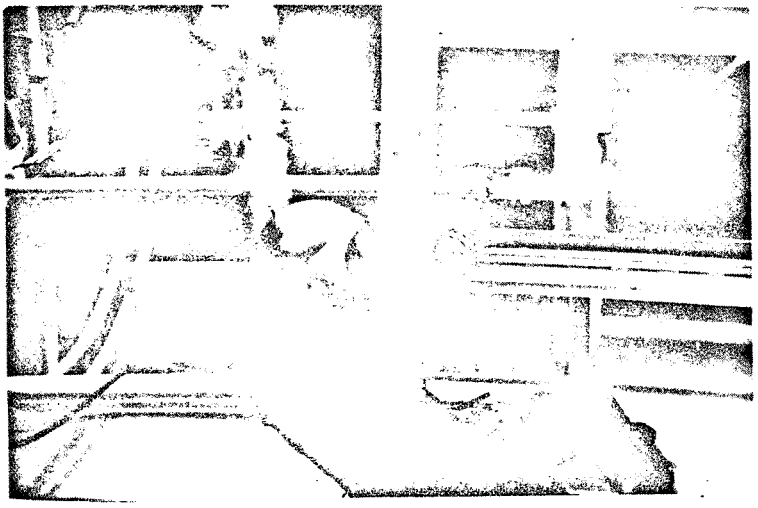

Figure 4-55. Handling and Assembly of Large Structures

Figure 4-56. Test Subject Entering Airlock at Forward End of SIV-B Spent Stage Simulator at Virgin Island Facility

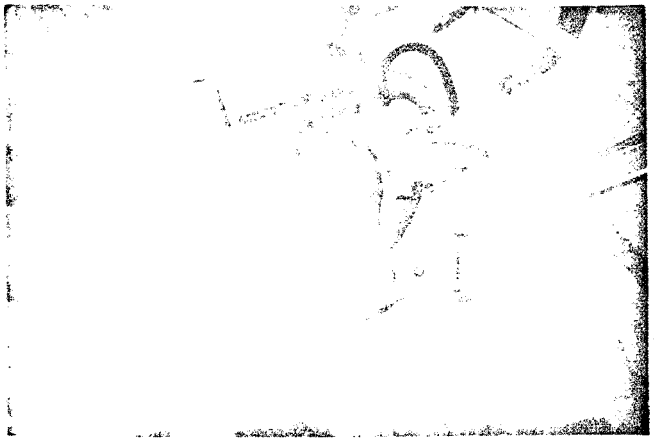

Figure 4-57. Subject Performing Console Transfer Task in SIV-B Spent Stage Simulator

measurement capability. The key element to IMBLMS flexibility is the consistency of hardware design philosophy with respect to modularization, equipment interchangeability, assembly compatibility, and commonality.

The design approach established during Phase B to modular packaging of the IMBLMS is based upon consideration of the existing spacecraft constraints, their flight schedules, and the potential availability of the IMBLMS equipments to meet these schedules. The design guidelines for this approach emphasize the modular approach to provide maximum flexibility for use on the three basic vehicles and for ease of modification for different flights. This is accomplished by:

- Interchangeability of modules in the assembly
- Interchangeability of use of common components for different measurements
- Provision of basic modular elements for essential services such as display and control, data management, electrical power, and mounting and interconnection racks

A preliminary estimate of the IMBLMS measurement equipment necessary to satisfy the measurement requirements has also been established earlier in this report.

SECTION 5

CANDIDATE EQUIPMENT

SECTION 5

CANDIDATE EQUIPMENT

5.1 INTRODUCTION

The General Electric approach to IMBLMS is based in considerable measure on the solicitation and ultimate incorporation in IMBLMS of the best equipments, concepts, methods and procedures available in the whole of the bio-engineering community. In the biomedical and behavioral areas, with the exception of some work at NIH and the National Laboratories at Brookhaven, Argonne and Oak Ridge, developments of the past have been centered on equipment for the commercial marketplace. Such developments are often proprietary, have loose equipment specifications, scanty documentation and rudimentary safety precautions. The usual commercial vendors, in many cases, cannot afford nor do they wish to become involved in the elaborate documentation and testing programs inherent in aerospace developments.

Various aerospace companies have made the first moves into this gap, but with only varying degrees of expertise. Aerospace engineers are generally not abreast of the state-of-the-art in all the varied specialties in medical and behavioral instrumentation while the individual vendors are engaged in highly specialized areas of work and instrumentation. How to combine the innovations and the expertise of these individual vendors with the system competence, hardware quality assurance, and documentation capability of the aerospace firm represents a real challenge.

We believe it is in NASA's interest to employ, to the degree possible, the whole of the existing university/industry effort and association in the medical and behavioral instrumentation field. Where single suppliers are selected and facilitized at considerable expense to conduct design and qualification of multiple equipments, the government incurs the risk of buying designs not reflecting the best in the state-of-the-art. Despite a conscientious attempt, the "not-invented here" philosophy colors the concepts and products. Where a single supplier philosophy has been used, competition has waned and the transfer of current developments to the aerospace field and, perhaps more importantly, the transfer of aerospace technology to the public domain has been small. This latter transfer, which has been emphasized in NASA statements and documents, relates directly to the breadth of involvement of manufacturers at all levels in the aerospace endeavor.

Rather than select a team with one or more of the current medical equipment suppliers, GE has elected to first survey the commercial community in order to identify potential equipments and concepts meeting IMBLMS needs and to stimulate and encourage the participation of this bio-engineering community on the broadest possible base. Many of these potential suppliers have never dealt with a large system procurement by government; few if any have government contracts, and their accounting practices may or may not conform to government requirements.

The vendor survey results to date have impressed us, however, with the extensive pool of knowledge available and the depth and breadth of technical competence and company-funded

programs. Based on results of the survey, we believe that GE will be in a position during the Phase C IMBLMS Program to make strong recommendations on equipment and manufacturers which can be supported by a rigorous evaluation record and "proof of principal" operating equipment.

The assurance that this "laboratory" equipment can be furnished in reliable, flight-qualified form is a task which GE has accomplished many times over the past ten years. A variety of approaches are available which range from educating the subcontractor to the task of furnishing fully qualified flight articles to the acceptance of lab components for flight packaging and qualification.

5.2 STATUS OF VENDOR SURVEY

During IMBLMS Phase B, General Electric undertook a survey of industrial organizations known to be associated with the design, manufacture and marketing of biomedical equipment, medical instrumentation, and other equipments related to IMBLMS. These firms were identified by personal knowledge and contacts, advertising in the medical literature, government reports and NASA suggestions. A total of 86 companies were contacted by letter inviting them to attend an IMBLMS briefing held at GE's Valley Forge Space Technology Center on July 24, 1967. Twenty one companies were represented at the briefing. The briefing covered the introduction of the principals in the GE effort, general AAP background information, specific IMBLMS information including the concept, program schedules, equipments sought, and GE/vendor working relationships.

Subsequent to the vendor briefing, seventy-four additional firms, plus twenty from the first list, were sent letters soliciting data on their biomedical hardware. Also, telephone conversations were carried on with seventy companies by different General Electric individuals. As a result, ten companies visited General Electric for separate and individual discussions.

As a result of the solicitation, a wide variety of materials and documents have been received, e.g. commercial catalogues, capability brochures, reports, and proposals. The vendor response is summarized in Tables 5-1 through 5-3. The vendor matrix is divided into three sections.

1. Companies that responded by submitting proposals or providing data on their equipment (Table 5-1).

2. Companies that responded by stating that they are not interested in IMBLMS or that they do not have the required capabilities (Table 5-2).

3. Companies that did not respond to our correspondence (Table 5-3).

Figure 5-1 shows the general location of vendors contacted. The eastern vendors are, in the main, commercial medical equipment firms or small aerospace companies. The companies in the far west are the large aerospace companies in the biomedical equipment field and in the supporting technologies, such as tape recorders and computers. The western group includes Beckman Instruments and Space Laboratories, two companies who have been

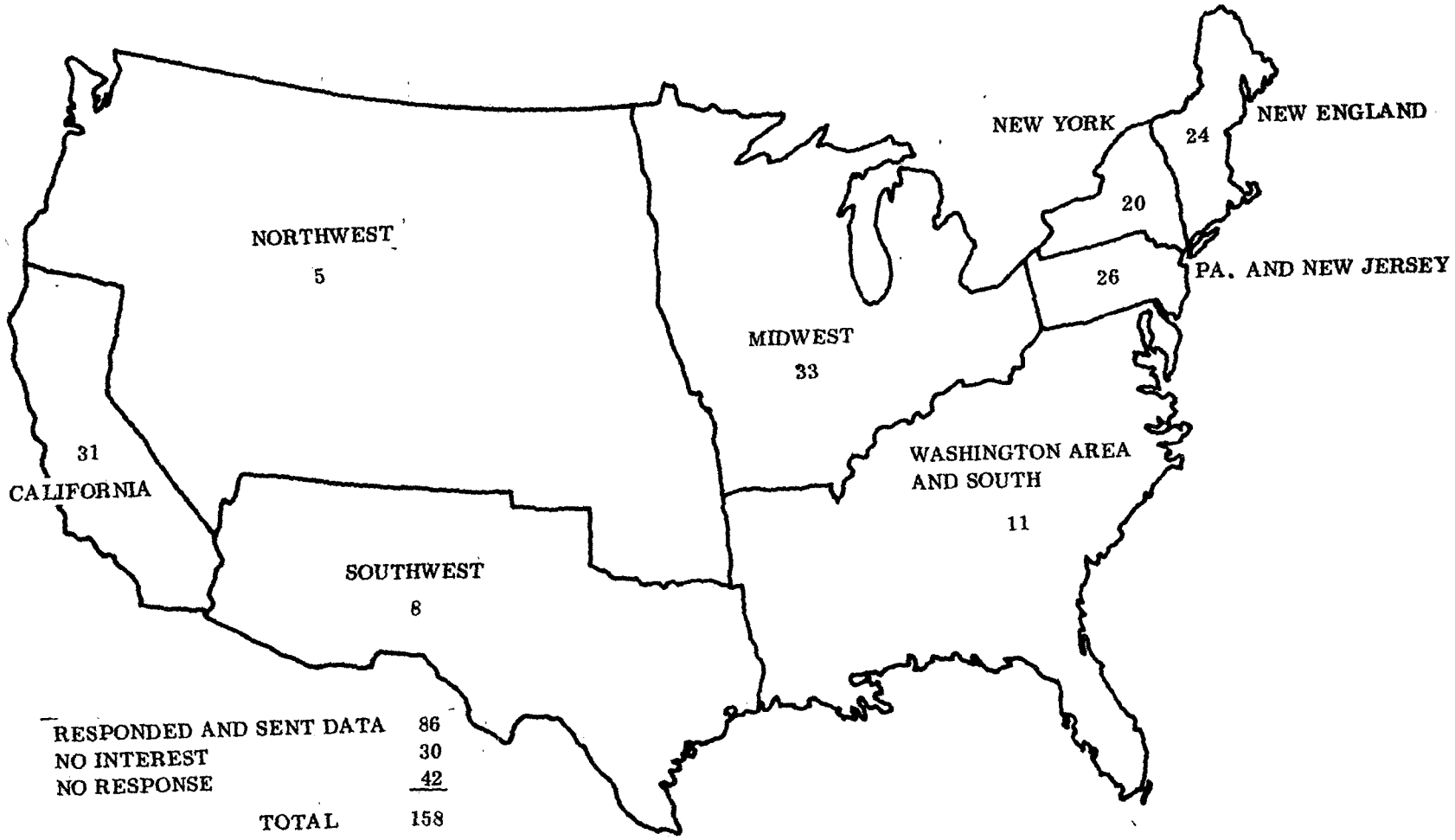

Figure 5-1. Location of Vendors Contacted

Table 5-1. Companies Interested in IMBLMS

Company Name	Representative at Briefing	Information Provided	Status
1. Gulton Labs Willow Grove, Pa.	R.M. Berman B. Schwartz	None	Telephoned. Promised Proposal, none submitted
2. TRW Redondo Beach, Calif	Dr. H. Suer	TRW's participation in several medical systems programs.	TRW has capabilities in monitoring systems and diagnostic aids. Is interested in IMBLMS.
3. Univac Philadelphia, Pa.	H.E. Hill		Telephoned. They are investigating how they can fit.
4. American Optical Southbridge, Mass.	S. Aronow P.R. Brooks, Jr.	None	Contacted by phone. Agreed to submit data on vision testers.
5. Webb Associates Yellow Springs, Ohio	Dr. P. Webb	Concept for: 1) Measurement of venous compliance 2) Continuous metabolic monitoring system 3) Vector impedance cardiogram system 4) Approach for metabolic rate monitor (8/17/67)	Submitted proposals
6. Cook Electric Chicago, Ill.	W. Hines H.W. Wiant	None	Telephoned. They promised to provide data.
7. GE E-Lab Schenectady, N.Y.	L.D. Wechsler	None	Wechsler provides technical support in some scientific areas.

Table 5-1. Companies Interested in IMBLMS (Cont)

Company Name	Representative at Briefing	Information Provided	Status
8. Cornell Aeronautical Lab Buffalo, N.Y.	Francis A. Giori M.H. Rudov	1) Brochure on General capabilities and interests 2) Specification on non-contacting cardio-pulmonary monitor	Telephoned and visited their plant. They have submitted proposals.
9. IBM Bethesda, Md.	E.B. Greene J.M. Peters	Submitted letters Interest in behavioral, micro-biological equipment/procedures. Preliminary descript: 1) Performance measurement system. 2) Oculometer 3) TV Camera 4) Psychiatric form 5) Rotating chair/mass measurement 6) Microbiological module. Report on microbiological test requirements for manned flight	Telephoned. They have submitted proposals in the behavioral areas.
10. Statham Instruments Los Angeles, Calif.	N.T. MacKenzie	1) Brochure on General capabilities	Telephoned. Gorsuch, V.P., visited GE. We visited their plant.
11. Systems Technology, Inc. Dayton, Ohio	L.G. Hofmann	Submitted at briefing: Brochures of capabilities in measuring human operator dynamics	

Table 5-1. Companies Interested in IMBLMS (Cont)

Company Name	Representative at Briefing	Information Provided	Status
12. Hamilton Standard Windsor Locks, Connecticut	L.G. Cotnoir	1) Report on Biotelemetry 2) Cardiac monitor system	
13. Perkin Elmer Norwalk, Conn.	L.A. Nigro	Vendor letter attachment B for: Mass spectrometer, O_2 partial pressure transducer, CO_2 sensor, metabolic sensor, partial pressure sensor.	Submitted proposals
14. Honeywell, Inc. Boston, Mass.	C.L. Dage	Submitted Descriptive brochure on Oculometer	Telephoned. They visited GE. Honeywell submitted proposal for an oculometer.
15. Biosystems Cambridge, Mass.	J. Nowicki	1) Brochure on general capabilities 2) Report "feasibility study non-invasive venus pressure measurement 3) Venous occlusion plethysmography 4) Venous occuluding chamber 5) Cardio-activity monitor 6) Eye movement monitor	Interested in broad support of the IMBLMS effort and submitted proposals.

Table 5-1. Companies Interested in IMBLMS (Cont)

Company Name	Representative at Briefing	Information Provided	Status
16. Consolidated Electronics Pasadena, Calif.	J.W. Ashley	None	
17. Brush, Instrument Cleveland, Ohio	J.I. Mehrholz	None	Telephoned. Promised to send data, none submitted.
18. AiResearch (Garrett Corp) Los Angeles, Calif.	T.J. Harrington	None	Telephoned. They are interested in a team member support of the IMBLMS effort only.
19. Melpar Falls Church, Virginia	J.E. Chaney P. McCabe J.R. Finkel	Vendor letter Attachment B for: Pulmonary gas collection assembly, volume meter, LBN PD, tracking task for psychometer functions, speech analysis, protein analyzer, metabolic measurement system, ergometer, USVMS, gas chromatograph, chemical tapes.	Submitted proposals
20. The London Co. West Lake, Ohio	R.E. Keaslise	Material submitted at briefing	
21. Applied Psychological Serv. Wayne, Penna.	M.A. Fischl	Submitted Brochure on capabilities on operator loading in man-machine systems.	

Table 5-1. Companies Interested in IMBLMS (Cont)

Company Name	Representative at Briefing	Information Provided	Status
22. American Elect. Lab Colmar, Penna.	None	1) NIH proposal-earpiece oximetry improvement 2) Brochure on General capabilities 3) Report on IMBLMS capabilities	D. Kilpatrick visited GE. We visited AEL. They are submitting proposals.
23. Rodana Research Bethesda, Md.	None		Contacted by phone. Interested in future work. Currently no IMBLMS capabilities.
24. Applied Electronics Monrovia, Calif.	None	General Information on their product	Indicated would attend briefing, but did not. Contacted by phone. Submitted data.
25. Telemedics/United Aircraft Southampton, Pa.	None	Submitted: on radio-EKG, brochure on series of signal condition, brochure on heart rate indicators.	
26. Technology System Dayton, Ohio	None	Submitted data on: 1) Mass flow meters (pneumonotachometer) 2) Brochure on oxygen consumption computer 3) Report on application of (2)	
27. Bausch & Lomb Rochester, N.Y.	None	None	Contacted by phone. Agreed to send data on vision testers.

Table 5-1. Companies Interested in IMBLMS (Cont)

Company Name	Representative at Briefing	Information Provided	Status
28. Titmus Optical Petersburg, Va.	None-notified after briefing	Submitted data on vision testers.	Interested in submitting an IMBLMS proposal in their field.
29. Carolina Medical Electronics Winston-Salem, N.C.	None-notified after briefing		Contacted by phone. Agreed to send data.
30. Jobst Institute Toledo, Ohio	None-notified after briefing	Submitted data on anti-g leotards	Telephoned
31. General Dynamics, Convair San Diego, Calif.	None	Submitted vendor letter attachment B on: Data on response analysis tester for behavioral experiment (psychomotor functioning)	
32. Sierra Engineering Sierra Madre, Calif.	None	Submitted data on oxygen masks and associated equipment	Submitted letter and data after briefing-interested in respiratory mechanics, lung ventilation evaluations, pulmonary gas exchange.
33. Southwest Research San Antonio, Texas	None	1) Report "Design concepts for mass measurement instrument for use in outer space"	Indicated interest to be on program in the future
34. Space Laboratories Van Nuys, Calif.	None	Letter: Provided standard brochures on temperature probes, microphone, signal conditioners, blood pulse sensor, blood pressure sensor, pulse wave velocity system.	Contacted by phone. Sent letter explaining arrangement with Lockheed on IMBLMS

Table 5-1. Companies Interested in IMBLMS (Cont)

Company Name	Representative at Briefing	Information Provided	Status
35. Mine Safety Appliances Co. Pittsburgh, Pa.	None	Submitted data on gas analyzers and monitors	
36. Electronics Assoc. W. Long Branch, New Jersey	None	Report on development and operation of clinical Lab Data Requisition System	Telephoned. Asked them specific questions about thier computer software, no answer.
37. Beckman Instrument Fullerton, Calif.	None	Report on: 1) Impedance pneumography 2) Oculometer Specification on: 1) Impedance Pneumograph 2) Biopotential Ampl. 3) Phonocardiograph 4) EEG	Working as a team member with Lockheed.
38. Dunlap Associates Darien, Conn.	None	Report on: 1) Long-term flight effects on pilot skill 2) Adaptive simulation 3) MOL tracking task	No capabilities directly applicable to IMBLMS.
39. Lion Research Boston, Mass.	None	Submitted vendor letter attachment B for CO_2 detectors, gas flowmeter, pressure meter.	Interested in supplying components to IMBLMS

Table 5-1. Companies Interested in IMBLMS (Cont)

Company Name	Representative at Briefing	Information Provided	Status
40. Burron Medical Instruments, Inc. Bethlehem, Pa.	Contacted after vendor briefing	Product Literature	Commercial Products Only
41. Electronics for Medicine, Inc. White Plains, N.Y.	Contacted after vendor briefing	Brochure on Biomedical Equipment	Will visit GE
42. Hoffrel Instrument Inc. Norwalk, Conn.	Contacted after vendor briefing	Brochure on Equipment Line	
43. Technical Measurement Corp. North Haven, Conn.	Contacted after vendor briefing	Product Literature	
44. Coleman Instrument Corp. Maywood, Ill.	Contacted after vendor briefing	Sent Product Catalog	
45. Gilford Instrument Lab., Inc. Oberlin, Ohio	Contacted after vendor briefing	Material on physiological and spectrophotometric instruments.	
46. The Dann Co. Cleveland, Ohio	Contacted after vendor briefing	Literature on Medical Products	
47. Conductron-Missouri St. Charles, Missouri	Contacted after vendor briefing	None	No resources or equipment available for IMBLMS.

Table 5-1. Companies Interested in IMBLMS (Cont)

Company Name	Representative at Briefing	Information Provided	Status
48. Data Device Corp. Hicksville, N.Y.	Contacted after vendor briefing	Literature on amplifiers for Biomedical Application	Have amplifiers only for IMBLMS.
49. Park Products Engr'g. Co., Inc. Tinley Park, Ill.	Contacted after vendor briefing	Literature on Stroboscope	
50. Borg-Warner Controls Corp. Santa Ana, Calif.	Contacted after vendor briefing	Bulletins on Spaceborne Tape Recorders	Support technologies only, none medical
51. Scientific Advances Inc., Sensor Tech. and Instrument Div. Columbus, Ohio	Contacted after vendor briefing	Brochure on Transducers for medical application	Manufacture Transducers designed for medical researchers
52. Medec, Division of Fluid Dynamics Morristown, N.J.	Contacted after vendor briefing	Information on their product	
53. Yellow Springs Instrument Co. Inc. Yellow Springs, Ohio	Contacted after vendor briefing	Information on dermohm-meter and thermistor	Interested physiological monitoring work
54. Barber-Colman Co. Rockford, Ill.	Contacted after vendor briefing	None	Have no equipment for IMBLMS
55. EM Instrument Co. Houston, Texas	Contacted after vendor briefing	Data on Research instru-ments and biotelemetry	

Table 5-1. Companies Interested in IMBLMS (Cont)

Company Name	Representative at Briefing	Information Provided	Status
56. Instrumentation Specialties Co. Lincoln, Neb.	Contacted after vendor briefing	Instrument Catalog	Have capabilities in chemical and biological sciences.
57. Nuclear Data Inc. Palatine, Ill.	Contacted after vendor briefing	Data on channel analyzer digital computer	Have capabilities for the data management package.
58. Thiokol Chemical Corp. Humetrics Div. Los Angeles, Calif.	Contacted after vendor briefing	Brochure on their product	
59. Photo Optical Instrumentation Stoneham, Mass.	Contacted after vendor briefing	General Brochure	Provide cameras to record blood flow
60. Electro-Med Instrum. Inc. Houston, Texas	Contacted after vendor briefing	Information on cardio-pulmonary equipment	
61. Houston Ominmographic Corp. Bellair, Texas	Contacted after vendor briefing	Catalog on graphic recorders	
62. Gulf Aerospace Corp Houston, Texas	Contacted after vendor briefing	General capabilities Brochure	Have behavioral sciences capability.
63. Med-Science Electronics St. Louis, Miss.	Contacted after vendor briefing	Literature on Pulmonary function testing instrumentation	Interested in IMBLMS program.

Table 5-1. Companies Interested in IMBLMS (Cont)

Company Name	Representative at Briefing	Information Provided	Status
64. Medtronic, Inc. Minneapolis, Minn.	Contacted after vendor briefing	Cardiovascular and surgical equipment	Products are for space application.
65. Brookline Instrument Co. White Plains, N.Y.	Contacted after vendor briefing	Data on metabolic weighing system	
66. Aero-Vac Corp. Troy, N.Y.	Contacted after vendor briefing	Literature on process control analyzer	
67. Astro-Sciences Corp subsidiary of Tracor, Inc. S. El Monte, Calif.	Contacted after vendor briefing	Information on tape recorders	No medical capabilities
68. Genisco Tech. Corp. Compton, Calif.	Contacted after vendor briefing	Data on miniature tape recorders	
69. Kinelogic Corp. Pasadena, Calif.	Contacted after vendor briefing	Material on space tape recorders.	
70. Latady Development Co. Phila., Penna.	Contacted after vendor briefing	General Brochure	
71. Raymond Engr'g Lab. Inc. Middletown, Conn.	Contacted after vendor briefing	Information on tape recorders capability	
72. Schwarzer Corp. Framingham, Mass.	Contacted after vendor briefing	Data on physiopoly graphs.	

Table 5-1. Companies Interested in IMBLMS (Cont)

Company Name	Representative at Briefing	Information Provided	Status
73. Bourns, Inc. Riverside, Calif.	Contacted after vendor briefing	Information on respiratory equipment	
74. General Precision Binghampton, N.Y.	Contacted after vendor briefing	None	Phoned. Are investigating how to participate on IMBLMS.
75. Litton Space Science Lab. Beverly Hill, Calif.	Contacted after vendor briefing	Brochure on two models of air sampler	
76. Hewlett-Packard Sanborn, Div. Waltham, Mass.	Contacted after vendor briefing	Sent data on variety of Biomedical equipment	
77. Ivan Sorvall, Inc. Norwalk, Conn.	Contacted after vendor briefing	Information on biomedical equipment	
78. Oxy-Catalyst Wayne, Penna.	Contacted after vendor briefing	Brochure on gas disposal capability	
79. The Decker Corp. Bala Cynwyd, Pa.	Contacted after vendor briefing	Data on transducers	President of Decker visited GE. We inspected their plant.
80. Hewlett-Packard Palo-Alto, Calif.	Contacted after vendor briefing	Data on monitoring equipment	Visited their research labs. Discussed advanced projects.
81. Stanford Research Institute Palo-Alto, Calif.	Contacted after vendor briefing	General institutional brochures	Visited them to discuss advanced biomedical projects.

Table 5-1. Companies Interested in IMBLMS (Cont)

Company Name	Representative at Briefing	Information Provided	Status
82. Cal-Biochem Los Angeles, Calif.	Contacted after vendor briefing	Data on chemical compounds	Visited them to evaluate their chemical analyses capabilities.
83. Varian Recorder Div. Palo-Alto, Calif.	Contacted after vendor briefing	Catalog on their product	
84. Branson Instrum. Inc. Stamford, Conn.	Contacted after vendor briefing	None	Has capabilities in biomedical instrumentation.
85. Corbin Farnsworth Inc. Palo-Alto, Calif.	Contacted after vendor briefing	Catalog on biomedical instrumentation	Visited their plant to evaluate their hardware capabilities.
86. Tracelab Waltham, Mass.	Contacted after vendor briefing	Information on paper recorders	

Table 5-2. Companies Not Interested or Have No Capabilities for IMBLMS

1. Philco-Ford
   Blue Bell, Penna.

2. Martin-Marietta
   Denver, Colorado

3. Bell Laboratories
   Whipanny, N.J.

4. Gilson Medical
   Middleton, Wisc.

5. RCA
   Princeton, N.J.

6. Douglas Aircraft
   Los Angeles, Calif.

7. Mennen Great Batch
   Clarence, N.Y.

8. American Institute
   Pittsburgh, Penna.

9. Keithley Instruments Co.
   Cleveland, Ohio

10. McDonnell
    St. Louis, Missouri

11. Fischer Scientific
    Pittsburgh, Penna.

12. Airborne Research & Development Corp.
    Suix Valley, Calif.

13. Battele Memorial Institute
    Columbus, Ohio

14. Lear Siegler
    Grand Rapids, Mich.

15. North American - Autonetics
    Anaheim, Calif.

16. Brown & Root and Northrop
    Houston, Texas

17. Ames Chemical Company
    Subsidiary of Miles Laboratory
    Elkhart, Indiana

18. Consolidated Systems Corp.
    Pomona, Calif.

19. Bendix
    Davenport, Iowa

20. Boeing Co.
    Seattle, Wash.

21. Raytheon
    Boston, Mass.

22. Tektronix, Inc.
    Seattle, Wash.

23. Phoenix Precision
    Instruments,
    Phila., Penna.

24. Sage Equipment
    Buffalo, N.Y.

25. GE-XRAY Dept.
    Milwaukee, Wisc.

26. Northrop-Space Laboratories
    Hawthorn, Calif.

27. Cutler-Hammer
    Airborne Instruments, Lab.
    Deer Park, N.Y.

28. Richie's Associates
    Dayton, Ohio

29. Honeywell Test Instrument Division
    Denver, Colorado

30. Scientific Equipment Mfg. Corp.
    Lodi, N.J.

Table 5-3. Companies Not Responding

1. Coulter Electronics
   Hialeah, Florida
2. Farrand Controls
   Valhalla, New York
3. Ling-Temco-Vought, Inc.
   Dallas, Texas
4. ITT
   Nutley, New York
5. Lovelace Foundation
   Albuquerque, New Mexico
6. Republic-Fairchild
   Farmingdale, L.I., New York
7. Scott Aviation
   Lancaster, New York
8. Phipps and Bird
   Richmond, Virginia
9. The Waters Corp.
   Rochester, Minnesota
10. Harvard Apparatus Co., Inc.
    Dover, Massachusetts
11. Biotronex Laboratories, Inc.
    Silver Spring, Maryland
12. Worcester Foundation for
    Experimental Biology, Inc.
    Shrewsbury, Massachusetts
13. A. R. Vetter Co.
    Rebersburg, Pennsylvania
14. BRS Electronics
    Beltsville, Maryland
15. Park-Products Engineering Co., Inc.
    Tinley Park, Illinois
16. Raytheon Company
    Norwalk, Connecticut
17. Consolidated ElectroDynamics
    Pasadenna, California
18. Technicon Instrument Corp.
    Ardsley, New York
19. National Instrument Co.
    Baltimore, Maryland
20. Spear, Inc.
    Waltham, Massachusetts
21. Brinkham Instruments
    Westbury, New York
22. Microtek, Inc.
    Baton Rouge, Louisiana
23. Nuclear-Chicago Corp.
    Des Plaines, Illinois
24. U. L. E.
    Stoneham, Massachusetts
25. Sanders Associates
    Nashua, New Hampshire
26. Leach Controls
    Azusa, California
27. Lockheed Electronics
    Plainfield, New Jersey
28. Parsons Electronics Co.
    Pasadena, California
29. Ward Associates
    San Diego, California
30. Cardiac Electronics
    Clarence, New York
31. Lexington Instrument Corp.
    Waltham, Massachusetts
32. Biomedical Instrument Co.
    New Berry, Ohio
33. Medical Strems Corp.
    Great Neck, New York
34. Warner-Chilcott Laboratories
    Richmond, California
35. Cargille R. P. Laboratories, Inc.
    Cedar Grove, New Jersey
36. Avionics Research Products Corp.
    Los Angeles, California
37. Gaymar Industries, Inc.
    Buffalo, New York
38. Fairchild Dumont Laboratories
    Clifton, New Jersey
39. Kenelco, Inc.
    Santa Monica, California
40. Fiske Associates
    Bethel, Connecticut
41. Grass Instruments Co.
    Quincy, Massachusetts
42. Biological Research, Inc.
    St. Louis, Missouri

unable to participate actively in General Electric's IMBLMS program----because of their team arrangement for IMBLMS Phase B with Lockheed Company----but who have provided information on their standard equipments.

A General Electric team, consisting of a medical and a technical man, visited eight companies (each representing a distinct type organization: i.e. small firm, non profit corporation, commercial medical research lab, advanced research lab, commercial medical equipment firm, medical instruments company with a strong engineering capabilities and a chemical company) to inspect their plants and to assess their hardware capabilities. Table 5-4 summarizes these visits.

5.3 VENDOR SELECTION

During the Phase C program, General Electric plans to continue and expand the vendor associations developed during Phase B. Where appropriate, these relationships will be formalized during Phase C on a competitive basis to assure maximum benefit to the IMBLMS program as the primary consideration, with back diffusion of space technology into the public domain as an inherent and desirable result of GE's multiple vendor approach.

General Electric recognizes, as does NASA, that much of the IMBLMS equipment is not at this time in a fully flight-qualified state, and that many of the equipment vendors may not be able to establish the necessary capabilities to produce reliable, quality-controlled equipment. Consequently, a plan for carrying out the detailed design, development and qualification of these vendor-supplied items will be established during the Phase C effort, and will be shaped using the following guidelines:

a. Where practical, General Electric will assist vendors to qualify for aerospace work by showing them how to set up required organizations and institute the reliability, quality control, testing and management control functions.

b. If a company is strong technically and produces an excellent product, but cannot or will not set up aerospace programs in house, General Electric will arrange for the qualification and acceptance testing to be performed by General Electric or other qualified companies.

c. In those instances where neither of the above two approaches seems feasible, General Electric will establish joint relationships with the vendors with General Electric providing the necessary detailed development and qualification effort.

An important aspect of subcontracting portions of complex systems, like IMBLMS, is to determine how the system should be divided so that each participating company could perform work undertaken by it effectively. From General Electric's experience and other observations, it is evident that American industries are geared to perform economically, to produce on time and to deliver quality hardware only if the work assigned to them is representative of what they have done in the past or if it lies in the area of their main capabilities. The decisions establishing the subcontract "package" must be made by looking at the package from the subcontractors point of view and not merely being guided by what is considered a logical system break.

Table 5-4. Vendor Visit Summary

Company Name and Location	Type of Company	Main Product	Potential Contribution	Remarks
Calbiochem Los Angeles, Calif.	Small, commercial chemical, no capabilities of Aerospace manufacturing or testing.	Pure, stable, chemical, compounds. Biochemical and diagnostic reagents; a photometer instrument for composition analysis using enzymes; prime source for radioactive reagents.	Specific reagents and equipment for chemical analysis (prepacked, stabilized).	Small, qualified staff, capable of developing chemical analysis systems for possible space use.
Cornell Aeronautical Laboratory Buffalo, New York	Large non-profit institution. Does no manufacturing except for prototypes.	Various military equipment; design development projects and applied research.	Development of behavioral measurement procedures, selection of equipment for same.	Designed sophisticated weapon systems. Worked out mechanics of assigning designs to manufacturers of flight hardware.
American Electronics Laboratory Colmar, Penna.	Medium size, military production oriented, small biomedical group.	Radar antennas; microwave equipment; special military hardware; physiological sensors and signal processing equipment, displays and controls.	Across the board physiological monitoring; need some design development to produce operational hardware.	Modest biomedical but strong general engineering capabilities. Would perform repackaging or manufacture and test on equipment designed or developed by others.

Table 5-4. Vendor Visit Summary (Cont)

Company Name and Location	Type of Company	Main Product	Potential Contribution	Remarks
The Decker Corporation Bala Cynwyd, Penna.	Small with modest background in biomedical instrumentation.	Transducers, made to order other devices.	Production of prototype components.	Too small to produce qualified hardware or complex components.
Stanford Research Institute Palo Alto, California	Non-profit large research organization working in many disciplines.	Of interest to IMBLMS: Basic research in behavioral sciences (with animals, using movie cameras, computer analyzed correlations). General physiological and chemical capabilities to perform advanced development.	New, basic concepts in behavioral measurements, prototypes of special, new equipment, research projects.	Capability to develop new behavioral measurements based on original research; broad staff to verify behavioral procedures by experimentation. Biochemical and physiological measurement techniques experience.
Statham Instruments Los Angeles, Calif.	Medium size, Aerospace, with good biomedical organization and background.	Specializes in highly precise sensor techniques. Produces large cardiovascular monitoring systems.	Pressure and force sensing devices and subsystems for signal processing.	Possesses technical staff for space qualified hardware. Would accept manufacturing and qualification of projects designed by others.

Table 5-4. Vendor Visit Summary (Cont)

Company Name and Location	Type of Company	Main Product	Potential Contribution	Remarks
Corbin Farnsworth, Inc. Palo Alto, California	Small, commercial biomedical equipment; design development and manufacturing of same.	Cardiovascular instrumentation and monitoring.	Supplier of cardiovascular monitoring equipment. Production of operational hardware for engineering tests.	Not set up for Aerospace work. Would pass designs to other firms for manufacture and test of flight hardware. Company is expanding and is interested in Government business.
Hewlett-Packard Palo Alto, California	Large, commercial measurements and biomedical equipment firm. Large research lab in biomedical instrumentation.	Separate divisions produce diversified biomedical equipment. Research lab is developing a new line of sensors using crystals, with frequency output and optical devices.	Time frequency analysis equipment devices to measure displacement, velocity and acceleration, and strength. Provider of new ideas and novel approaches to instrumentation	Could supply instruments superior to those on the market; has highly competent staff to undertake development of new concepts. Overall one of the best organizations in biomedical research.

For example, the interfaces for the subcontractor "package" must be at the hardware that he is designing. The subcontractor should not be responsible for interconnecting harnesses. In addition, the subcontractor should be given other interface data on specific parameters (vibration and acceleration level, type of mounting surface, temperature and other environmental conditions as seen by his component). He should not have to calculate these parameters from the data pertaining to the rest of the system.

Some subsystem elements should not be subcontracted when the particular hardware performs a central function for many pieces of equipment (many interconnections and integrating and processing functions). The performance specifications for this type of equipment are traditionally the last one to be finalized; changes can start a chain reaction in other subsystems.

From General Electric's experience, for example, it is best to assign the following functions to the subcontractor in the design of electronics hardware.

a. The prime system contractor supplies raw (typical for a given vehicle), fused power and a spec on radiative and conductive interference. The subcontractor, in turn, designs the power conditioners to the requirements of his hardware; his ground must be isolated from the rest of the system.

b. The subcontractor must meet the performance and qualification requirements described in the purchase specification, but he may exercise limited freedom in selecting, for example, the sensors, in designing the signal conditioners and in mechanization of hardware functions peculiar to a given equipment (servo mechanisms, drive motors, optics, fail safe circuitry and other safety aspects). The subcontractor is solely responsible for the stress, thermal and EMI analyses on his equipment and the qualification tests.

c. If the output signal from the subcontracted component is in a digital form, the impedance load into which the signal will operate and the noise level and length of the cable will be specified. The prime contractor will also specify the signal voltage and the use of differential amplifiers, if necessary, so that the electrical interface would be compatible with the rest of the system.

In summary, subcontractor interests must be considered in the preliminary system design and his interfaces must be delineated early in the program to assure an efficient use of program funds and the deliveries of hardware on time. The determination of an optimum subcontract "package" is a vital step in establishing effective subcontract management.

5.4 ADVANTAGES TO IMBLMS OF THE GENERAL ELECTRIC VENDOR APPROACH

IMBLMS is not a typical aerospace program. The equipment technologies in existence in biomedical, behavioral, and chemical analyses fields have generally not been developed for, or funded by the government. However, these commercial equipments, currently operational or in advanced stages of development, can be used as is, modified or repackaged for use in IMBLMS.

General Electric has approached equipment selection with the objective of utilizing as much as possible these developed technologies and to thus take advantage of these privately sponsored research and development projects.

The companies contacted responded to General Electric's solicitation to participate with material contribution (proposals, technical data) and an interest to be involved in a program of IMBLMS's magnitude and complexity. Several companies have presented General Electric with proposals describing advanced designs of equipments which have not been commercially produced because the companies involved felt that there was no large commercial market for these devices.

One of the reasons different companies frequently mentioned as to why they would like to be contributors to IMBLMS is that this would be a means of their keeping informed in the advanced biomedical instrumentation field.

A few companies have indicated that they would like to participate in IMBLMS for the sake of the prestige value that would accrue to them. These companies recognize that there is no volume market in government for biomedical instrumentation. However, they do point out that IMBLMS participation would be a scientific stimuli and a morale booster for their technical staffs and a good source for marketing publicity material. During the General Electric survey, it was somewhat surprising to find that many commercial firms had only an elementary knowledge about NASA's projects and how NASA conducts its activities. General Electric's role in Phase B was to inform and stimulate these firms to voluntarily contribute technical data and consultation. The possible general and specific benefits of the IMBLMS program were continually stressed. Such items as uniform safety specifications for medical instrumentation, equipment performance standards, software and computer techniques and development of large systems made of different monitoring equipment, may very well contribute to the advancement of the commercial industry.

Some of the direct and indirect benefits to NASA stemming from the General Electric's IMBLMS vendor policy are as follows:

a. Competitive bidding on subcontracted system elements. This will assure the lowest cost, and strong support from the performing company's technical and management echellon to stay within the contract funds and to deliver on time.

b. Uncover advanced equipment designs and techniques developed by private funds. This will decrease the need for NASA to fund research and development projects.

c. Help additional small companies participate in NASA business. General Electric has had an extensive experience in introducing new companies to government work in many different technologies.

d. Facilitate NASA channels of communication to the physiological, behavioral and chemical analyses industries. Beneficial information would flow in both directions with benefit to both NASA and the participating companies.

5.5 IMBLMS EQUIPMENT CLASSIFICATION AND MATRIX

General Electric has reviewed the measurement list of Annex B to the NASA work statement, the experiment protocols provided by NASA, and other appropriate literature, and from this activity a grouping of equipments into the following three categories has evolved:

a. Unique, single-purpose experiment equipments which in general represent major separate procurements by NASA. These are shown in Table 5-5. These equipments are considered by General Electric to be outside the scope of IMBLMS.

b. IMBLMS equipment, which because of previous NASA procurements, may be considered to be GFE. This equipment is tabulated in Table 5-6.

c. IMBLMS equipment for which qualified vendors will be required. These are shown in Table 5-7. This listing is based on the measurement requirements discussed elsewhere in this report. Note also that availability of an on-board computer is assumed (together with appropriate software). In the General Electric approach, the computer (and software) are used to eliminate the need for a number of conventional hardware items, e.g. a programmer, and thus simplify and reduce size and weight of the overall system.

It is recognized that GFE equipment (item b) may require repackaging to meet the overall IMBLMS system design. Also, in most instances, only a portion of a GFE system may be needed for IMBLMS. For example, to provide an electrocardiogram or phonocardiogram capability for IMBLMS, only the transducer portion (and possibly signal conditioners) of the GFE developments will be needed for IMBLMS. The remainder of each of these two GFE developments (e.g. displays, controls, power conditioner) will be replaced by new, multipurpose IMBLMS equipment.

5.6 SUMMARY

General Electric's approach to the selection of equipment for IMBLMS is largely based on the solicitation and ultimate incorporation in IMBLMS of the latest and best equipments, concepts, methods and procedures available in the whole of the bioengineering community. This multiple vendor approach was implemented by holding a vendor briefing (25 attended), by writing and soliciting equipment data (158 companies), by following up with information exchange through telephone conversations (80 companies), by meeting separately with vendors at General Electric (ten firms), and by visiting eight vendors at their plant locations.

Judging by the vendor responses, General Electric's vendor policy may be considered a success. The vendors submitted technical data and proposals on their equipments; advance developments not commercially available were uncovered. As a part of the vendor activity, General Electric emphasized to vendors the importance of IMBLMS and the benefits that can accrue to the participants. As a consequence, many companies have expressed interest in IMBLMS, even when realizing that their contribution will be small and monetary reward nominal.

Table 5-5. Non-IMBLMS Equipment (GFE)

Rotating Litter Chair	Ballistocardiogram
Fiber Optics System	Bicycle Ergometer
Gamma Gauge (Bone Densitometry)	Whole Body Exerciser
Endoradiosonde	Lower Body Negative Pressure Device
Food and Water Dispensing System	Water-Cooled Suit
Waste Sample Collection Device	Anti-g Suit
Small Radius Human Centrifuge	Elastic Leotard

Table 5-6. IMBLMS Equipment (GFE)

Electrocardiogram	Neuro Kit (Rod and Sphere)
Phonocardiogram	EEG
Impedance Cardiogram	Body Mass
Single Breath Gas Analyzer	Thermocouple Harness
Medical Kit	Hx and Px Forms
Automatic Blood Pressure Device	

Table 5-7. Major IMBLMS Equipment Matrix (Preliminary)

MAJOR SYSTEM ELEMENTS	Application	Vendor	Size cu in.	Weight pounds	Power watts	Status
PRIMARY EQUIPMENT						
General Purpose Diff'l Amplifier (14) Adj. Gain and Band Width a. Biopotential Amplifier b. Strain gauge Amplifier c. Thermistor Bridge Amplifier	EEG, EMG, EKG, Nystagmogram, Phono, microphone Ear Oximeter Pressure Gages a. BP b. LBNP c. Venous Accelerometers Chest Band Resp Sensor Deep Body Temp Skin Temp Nares/Mouthpiece Resp Sensor	Many	1.5 each	0.15 each	0.05 each	Flight qualified available
Δ Z Detector Amplifier (3)	Impedance Cardiogram Impedance Pneumogram	Many	1.5 each	0.12 each	0.05 each	Flight qualified available
Plethysmograph Amplifier and Oscillator (3)	Venous Compliance, Limb Volume		1.5 each	0.12 each	0.05 each	Flight qualified available
Mass Spectrometer (1) (pO_2, pCO_2, pH_2O, trace gases)	Resp Measure and Metabolic Meas a. O_2 b. CO_2 c. R.Q. d. Pulmonary Gas Exchange	Perkin-Elmer Corp., GE	175	6.5	3.7	Available, must be flight qualified
Gas Flowmeter (1)	Resp Rate Tidal Volume Lung Capacities	Technology, Inc. Model Mfg-16	15	1.0	0.5	Comm Available
Resp Flow Interrupter (1)	Intra Pleural Pressure	GE	15	1.5	12	Lab Model Developed
Mass Measurement Devices (2)	1. Specimen Wt 2. Body Wt	Southwest Research Inst	3500 total	40.0 total	2.0 total	Conceptual design
Camera (1)	Cinematography	J.A. Maurer, Inc.	55	3.0	16	Flight Design needs qualified
Centrifuge (1)	Bio-Medical Analysis	GE; IBM; Beckman	400	2	25	Conceptual design
Microscope (1)	Bio-Medical Analysis	AO, Spenser, B&L	800	5	10	Comm parts re-design for min wt

Table 5-7. Major IMBLMS Equipment Matrix (Preliminary) (Cont)

MAJOR SYSTEM ELEMENTS	Application	Vendor	Size cu in.	Weight pounds	Power watts	Status
Freezer (1)	Sample Preservation	Tecomseh Prop. Co.	4700	14.3	13	Similar Units used on aircraft
Modified Orthorator (1)	Visual Acuity Dark Adaptation Reading Nystagmogram Otolith Func (test goggle) Rod-Sphere (localization & tracking)	Many	5200	5.0	1.0	Clinical Designs needs modification
Trash Baler (1)	Waste Management	GE	400	10	None	Conceptual design
Pulse Generator, Crystal Receiver, Comparator (1)	Ultrasonic Measurement	Smith, Kline, Instruments Hewlett Packard	3	0.5	0.5	Must be flight qualified
Three dimensional tracking testing (1)	Neurological Investigation	GE	100	2.5	0.1	Conceptual needs development
Data Management Equipments						
Control and Display Unit (1)	Data Management	NASA/MSC Martin-Denver	3400	25	150	Under Development
Microfilm Projection Display (1)	Data Management	NASA/MSC Martin-Denver	2000	25	150	Under Development
Digital Interface and Control Unit (1)	Data Management	GE-ASD	340	10	40	Under Development
Data Acquisition Unit (1)	Data Management	GE-ASD	600	10	10	Under Development
Stimuli Generator Unit (1)	Data Management	GE-ASD	400	9	8	Under Development
Voice Recorder (1)	Data Management	GE-ASD	50	2	5	Under Development
Digital Recorder (1)	Data Management	Sanders Assoc	550	16	50	Modify 7 Track to 14 Track
Support Equipment						
Electrodes, Harness (1)	Biopotential and impedance measurements	Active Electrodes and Passive Electrodes - Many	25	0.5	None	Active electrodes need flight qualification
Thermistor Probes, (15) 12 Thermistor Harness, Bridge Circuits	Temperatures, Respiration Rate	Yellow Springs Velo, AEL	20	0.5	None	Flight qualified available

Table 5-7. Major IMBLMS Equipment Matrix (Preliminary) (Cont)

MAJOR SYSTEM ELEMENTS	Application	Vendor	Size cu in.	Weight pounds	Power watts	Status
Karotkoff Sound Microphone (1)	Blood Pressure		0.5	0.03	None	Flight qualified available (improved prototype needs qualification
Chest Microphone (3)	PKG	Spacelabs, Beckman, AEL	0.5	0.03	None	Flight qualified available
Junction Boxes and Fusing (10)	All sensors attached to body	AEL	1.0	0.2	None	Needs flight qualification
Skin Preparation and Application Kit (1)	Electrode, microphone, other sensors	Many	5	0.3	None	Flight qualified available
Ear Oximeter (2)	Arterial O_2 saturation	AEL, Spacelabs	1	0.1	0.1	Improved prototype needs flight qualification
Mouthpiece/Facemask and Hoses (1)	Respiratory Measurements	Many	500	0.75	None	Flight qualification needed
Metabolic Hood/Rebreathing bag (1)	Metabolic Measurements, Cardiac Output	Many	50	0.75	None	Flight qualification needed
Plethysmograph Cuffs	Leg Volume, Finger Volume, etc.	Many	50	0.5	None	Flight qualification needed
Calibration Gases	Repiratory Measurements	Many	5	0.25	None	Comm available
Pressure/Vacuum Lines, Gauges, Solenoid Valves and Regulator	Pneumatic Support	Many	800	5.0	3	Flight qualification available
Cuffs Neck, Arm, Wrist, Thigh, Ankle, Finger	Blood Pressure, Venous Pressure, Carotid Sinus, Regional Blood Flow, Pulse Contour, etc.	Many	400	2.0	None	Some need flight qualification
Stereo Earphones	Auditory Function	Many	200	0.5	None	Need flight qualification
Orthorater Stimulation Material (Microfilm)	Visual Function	Many	0.10	0.01	None	Flight qualified

Table 5-7. Major IMBLMS Equipment Matrix (Preliminary) (Cont)

MAJOR SYSTEM ELEMENTS	Application	Vendor	Size cu in.	Weight pounds	Power watts	Status
Light Meter	Visual Function	Many	1	0.1	0.025	Flight qualified available
Medical Accessory Kit		Many	400	2	None	Flight qualified available
Expendable/Accessories a. Film (68 cassettes) b. Syringes, capillary tubes pH paper, etc. c. Feces Storage Containers d. Reagents and Container e. Slides (400)	Cinematography Sampling system Sample storage Bio-medical Hematology Support	Many	7000	63	None	Comm available
Power Conditioning (1)		Many	450	15		Flight designs available
Modular Segment Structure (including internal wiring/ plumbing) (3)		GE	6.3 ft^3	20		

The survey revealed that physiological measurement equipment is the furthest advanced, the chemical analysis systems need additional development for space application, and the behavioral measurement techniques are far from being perfected even for ground application. A further finding is that considerable advanced work is being performed by commercial research organizations in medical instrumentation. A mutually satisfactory approach to these companies can make these designs available to IMBLMS without the necessity of NASA's funding of separate research and development. More conventional equipment is available for immediate use; the only effort required is repackaging and incorporation of the components into the IMBLMS hardware configuration.

APPENDICES

APPENDIX A

MEASUREMENT DEFINITION

TABLE A-1. CARDIOVASCULAR EVALUATION

Measurement (Annex B)	Description	Methods and Procedures	Remarks
CLINICAL CARDIOVASCULAR EXAMINATION			
H_x and P_x Forms	These are standardized checklists for verbal report of physical condition and routine physical observations by an astronaut physician if present (GFE)	Written log Taped Keyboard punch Verbal communication	Physical exam/ diagnostic equipment should be included in NASA Medical Kit.
CARDIAC DYNAMICS EVALUATION			
Electrocardiagram	A time-variant record of the electrical activity of the heart measured by means of skin electrodes. Not a measure of the mechanical behavior of the heart	Standard leads Frank leads (VCG) Wilson central terminal	See NASA EPI M051
Phonoelectrocardiogram	A time-variant record of the audible sound at the chest wall	Microphone at heart apex	See NASA Tech. Report
Ballistocardiogram	A time-variant record of the displacement of the whole body which results from ejection of blood from the heart and the ensuing distribution of blood flow	Recording is usually in terms of accelerometers (for zero g this should be triaxial and angular)	For detailed description see Hixon and Beischer

TABLE A-1. CARDIOVASCULAR EVALUATION (Cont)

Measurement (Annex B)	Description	Methods and Procedures	Remarks
Cardiac Output (Non-Invasive)	The product of the blood volume ejected per stroke and the heart rate (ECG) or the average output per unit time. The latter requires stable conditions for the period to allow equilibrium of gas concentrations	Invasive Methods include Fick (mixed venous sample), dye dilution (cuvette), thermal, electrolyte and non-electrolyte (polarograph), EM flow meter, etc Non-Invasive (Gases) Douglas-Haldane CO_2, Acetylene, N_20, C_2H_2I, Transthoracic Impedance. Webb method. Pulse wave analysis. Freon 22 rebreathing method in current use. Requires accurate gas analysis	
Thoracic Blood Flow	Blood flow per unit time in the thoracic aorta. Essentially cardiac output minus cerebral, coronary and upper extremity blood flow	No known quantitative non-invasive method. Transthoracic impedance said to measure right venticular output	Kubicek: Aerospace Med. 37:1208, 1966
HEMODYNAMICS EVALUATION			
Blood Pressure Measurement	A record of the maximum (systolic) and minimum (diastolic) pressure in the brachial artery	Manual: Aneroid manometer, cuff and stethoscope Automatic: Pressure cycle (inflate, deflate), microphone signal superimposed	See NASA document on Gemini system

TABLE A-1. CARDIOVASCULAR EVALUATION (Cont)

Measurement (Annex B)	Description	Methods and Procedures	Remarks
Venous Pressure			
Central	Usually interpreted as the pressure in cm H_2O in the right atrium	No proven non-invasive methods. When central venous pressure is elevated, distension of the jugulars can be observed. Pulsations in the jugular bulb gives no quantitative evidence of the mean pressure	See Biosystems, Inc. report
Peripheral	The pressure (cm H_2O) in a peripheral vein usually in the arm	Most methods involve some variant of plethysmography. Venous pressure balance device of Biosystems, Inc.	
Venous Compliance	A measure of the distensibility of the venous system (reciprocal of elasticity) usually obtained from the slope of the volume-pressure curve of an extremity	The volume of a limb is measured as a function of the venous pressure as developed by the LBNP device. Limb volume or circumference is measured by a plethysmograph or circumference gauge	
Regional Blood Flow	Measures of blood flow in cc/min per gram of body tissue in the region or organ of interest. Regions of interest are the extremities, the coronary circulation, cerebral blood flow, renal and hepatic blood flow	Extremeties: Change in volume with time following venous occlusion with plethysmograph Others: Deposition of a radioactive tracer in the organ and external scan	

TABLE A-1. CARDIOVASCULAR EVALUATION (Cont)

Measurement (Annex B)	Description	Methods and Procedures	Remarks
		Invasive methods are standard for organs and require arterial and venous samples, the latter at the site	
Arteriolar Reactivity	A measure of the response of the regulatory vessels of the body (in practice primarily skin and muscle) in response to environmental and internal changes	Usually measured by a change in volume of the part by means of a plethysmograph. If C.O. and B.P. are measured, total peripheral resistance can be computed (C.O. = BP/TPR) to give an overall estimate of the state of the peripheral vessels	
Pulse Contour	A measure of the dynamic changes in pressure and/or volume in an artery	True pressure and/or volume pulses cannot be obtained by non-invasive methods. The volume pulse can be approximated by a digital plethysmograph or perhaps by an impedance plethysmograph	
FLUID VOLUME DISTRIBUTION EVALUATION			
Body Fluid Distribution	A measure of the percentage of the total body water distributed in the plasma and red cells (intravascular compartment)	Extracellular Space: Radioactive Na, radioactive Cl and Br, thiosulfate and thiocyanate ion, insulin, sucrose	

TABLE A-1. CARDIOVASCULAR EVALUATION (Cont)

Measurement (Annex B)	Description	Methods and Procedures	Remarks
	the extracellular and the interstitial compartments	Total Body Water: Heavy water, antipyrene Total Blood Volume: Red cells: radioactive Cr^{51}, phosphate iron. Plasma: Radioactive Fe^{59},T-1824 Interstitial Fluid Volume: Total extracellular fluid volume - plasma volume	
Urinary Catecholamines, Adrenal Steroids, ADH	See Endocrines		
Fluid and Electrolyte Balance	See Metabolic and Nutritional		
Tilt Table Response	Pre-flight and Post-flight	NA	
Fitness Evaluation	Pre-flight and Post-flight	NA	
PROVOCATIVE TESTS			
Response to Thermal Change	Effect of increased temperature on tilt table tolerance with evaluation of change in cutaneous blood flow	Could be applied in orbit using thermal change, LBNP and thermistor harness	

TABLE A-1. CARDIOVACULAR EVALUATION (Cont)

Measurement (Annex B)	Description	Methods and Procedures	Remarks
Response to Carotid Body Stimulation	Compression of carotid artery by means of a neck cuff results in a fall in carotid sinus pressure and a reflex elevation of arterial blood pressure and pulse rate Compression of carotid sinus itself results in blood pressure fall and cardiac slowing with risk of syncopy	Use blood pressure measurement and ECG (for heart rate)	
Response to In-Flight Exercise	Employs bicycle ergometer or USAF exerciser. One method uses fixed work rate and measures time to criterion pulse rate. Total work = work rate (constant) x work time. Measure work capacity as a function of time in orbit	Bicycle or pedal ergometer USAF exerciser ECG (heart rate) Time Other measures as required	M018, 050, 051
Response to LBNP In-Flight	Uses LBNP to simulate hydrostatic gradient in vascular system by several short cycles of negative pressure from the waist down	LBNP Blood Pressure Heart Rate (ECG)	M051

TABLE A-1. CARDIOVASCULAR EVALUATION (Cont)

Measurement (Annex B)	Description	Methods and Procedures	Remarks
COUNTERMEASURES AND REMEDIAL USE			
Carotid Body Stimulation	Periodic exercise of this particular cardiovascular reflex on the basis that such arterial reflexes deteriorate during weightlessness	Can be performed on self. Should be observed by another crewman for safety	
In-Flight Exercise	Periodic sessions on the ergometer to maintain physical fitness	Requires safety monitoring. Variable dosage for individual crewmen in order to determine optimal regimen. Interacts with exercise as a provocative test	
LBNP In Flight	Exposure to LBNP in simulation of gravity	Safety monitoring. Exposure can be continuous at a lower level than for provocative testing. Experiment with use during other crew duties or during sleep to conserve crew time	
Response to Occlusive Cuffs	Original Mercury device. Latest data suggest that to be effective requires one second on/one second off cycle and four cuffs per man	Use Mercury cuffs and pneumatics	

TABLE A-1. CARDIOVASCULAR EVALUATION (Cont)

Measurement (Annex B)	Description	Methods and Procedures	Remarks
Response to Anti-g Suit and Elastic Leotard Pre-Re-entry	Not clear what test is intended. Both will prevent orthostasis in severe vascular disorders on earth. Leotard protective effect could be checked in LBNP	Supply both anti-g suit (? USN or USAF capstan type) and elastic leotard	

TABLE A-2. RESPIRATORY EVALUATION

Measurement (Annex B)	Description	Methods and Procedures	Remarks
CLINICAL RESPIRATORY EVALUATION	H_x and P_x forms for this purpose will be GFE	Same as cardiovascular. Problem is data management method	
MECHANICS OF VENTILATION EVALUATION			
Lung Capacities	Measures of the capacity of the lungs fractionated as follows: Vital Capacity = Maximum inspiration from maximum expiration Functional residual capacity = Gas remaining in lungs at resting expiratory level Expiratory and inspiratory capacities (measured from resting expiratory level)	Spirometer or mass flow device. Functional residual capacity measured by means of dilution with 0_2 or He. All values must be corrected for standard conditions of temperature and pressure	Kissen and McGuire: Aerospace Medicine 38: 686, 1967
Gas Flow Rate	Used in such measurements as maximum inspiratory and expiratory flow rate studies of airway resistance	Flow rate meter in line	
Pressure, Volume and Flow	Measures when taken together are used to	Volume and flow as above. Pressure is usually assessed	

TABLE A-2. RESPIRATORY EVALUATION (Cont)

Measurement (Annex B)	Description	Methods and Procedures	Remarks
	assess the mechanical properties of the lung and airway i.e., pressure-volume loop, pressure-flow relation	by means of an esophageal balloon requiring intubation. Alternately the airstream can be interrupted repetitively to yield an approximation of the airway pressure. An intraplural needle cannot be used	J. Clements: J Clinical Investigation 38: 1262, 1959
PULMONARY GAS EXCHANGE EVALUATION			
Diffusion (Pulmonary Diffusing Capacity)	A measure of the state of the alveolar-capillary membrane and its resistance to gaseous diffusion	Standard method employs carbon monoxide (single breath) which interferes with N_2 on the mass spectrometer	
DISTRIBUTION OF BLOOD FLOW AND GAS IN THE LUNG	An investigation of the ventilation/perfusion relationships in the total lung and its parts. Extremes are normal perfusion-no ventilation (atelectasis) and normal ventilation - no perfusion (arterial obstruction)	Studies of individual lobes requires intubation and bronchial spirometry. Can use single breath N_2 method for uneven ventilation, measure changes in dead space ventilation, single breath CO_2 for uneven perfusion (which assumes uneven ventilation)	

TABLE A-2. RESPIRATORY EVALUATION (Cont)

Measurement (Annex B)	Description	Methods and Procedures	Remarks
O_2 AND CO_2			
Inspired and Expired Air (Breath by Breath)	The presence of O_2 and CO_2 sensors with rapid response times will permit the utilization of single breath methods of analyzing pulmonary function, acid-base balance, metabolic rate and R.Q.	Individual sensors on line or mass spectrometer	
Arterial Blood	Continuous assessments to follow the consequences of altered inspired gas concentrations	O_2 : Ear oximeter CO_2: No known non-invasive methods. Need arterial samples or arterial polarograph. Can use end expiration sample for mixed venous blood	
FITNESS EVALUATION (PRE-FLIGHT AND POST-FLIGHT)	See Cardiovascular	N/A	

TABLE A-3. CLINICAL METABOLIC AND NUTRITIONAL EVALUATION

Measurement (Annex B)	Description	Methods and Procedures	Remarks
MUSCULAR STATUS EVALUATION			
Blood Lactic Acid	Metabolic product of muscular activity	Venipuncture to obtain blood which must be deproteinized immediately. This requires use of trichloracetic acid or a similar, toxic compound; blood can be stored in a container with TCA	Not recommended for on-board use Storage may prove hazardous due to presence of TCA
Urinary Creatine/ Creatinine	Ratio may be more important than absolute values; little or no creatine found in normal urine, but is found in fever and with increased urine output due to increased water intake	Urine collection no problem if astronauts cooperate; picric acid (a reagent in assay) may be considered a safety hazard	Periodic sampling and storing of urine feasible. Freezing recommended
MINEARL METABOLISM AND SKELETAL STATUS EVALUATION			
Urine Calcium	Hi-levels can contribute to stone formation; increased excretion may be related to bone disuse atrophy	Can be done more precisely and accurately on the ground but can be done in flight if reagents do not pose a safety hazard	Storage feasible-urine best preserved by freezing
Urine Phosphates	Same	Same	

TABLE A-3. CLINICAL METABOLIC AND NUTRITIONAL EVALUATION (Cont)

Measurement (Annex B)	Description	Methods and Procedures	Remarks
Urine Hydroxproline	Increased excretion from dissolution of organic bone matrix	Difficult to do on-board, since assy reactions must be carried out at 4-5°C	Storage feasible-urine best preserved by freezing.
Calcium Metabolism Urine, Serum, Sweat and Feces	a. Radioisotopes used to determine Ca turnover b. Intake, circulating and excretory levels can be determined chemically without using isotopes, with turnover time calculated	Need counter for use on samples Colorimetric method feasible for on-board use, but reagents, e.g. isopropylalcohol, may pose safety hazard	

TABLE A-4. HEMATOLOGICAL EVALUATION

Measurement (Annex B)	Description	Methods and Procedures	Remarks
CELL COUNTS AND MORPHOLOGY	Number, shape and size of cells	Hemocytometer; aliquots of cells diluted for red and white counts	Need centrifuge and microscope; diluting fluids may be safety problem
WBC	Total number and differential count		
RBC	Total number		
RBC Survival	RBC's tagged with I^{59} or other isotope	Counts per aliquot of cells measured periodically; requires multiple venipunctures. Extreme care needed to avoid contamination of equipment	Difficult to do on-board; also problems with presentation
RBC Fragility	Measure of osmotic resistance of RBC membrane	Need series of saline solns	Extremely difficult to do on-board; cannot be done with preserved samples
Direct Bilirubin		Need fresh reagents; some may be hazardous	Difficult to do on-board
Karyotyping	Assess chromosomal changes due to radiation	Tissue culture and harvest requires skill and care	Difficult to do on-board; preservation techniques extremely complicated and involve cryogenic freezing and storage

TABLE A-4. HEMATOLOGICAL EVALUATION (Cont)

Measurement (Annex B)	Description	Methods and Procedures	Remarks
Cellular Body Defenses			
Leukocyte Mobility (Phagocytosis)	Determination of ability of polymorphonuclear leukocytes to engulf foreign particles in blood	Not a quantitative method even in skilled hands. Method requires much care, as well as judgement based on experience	Cannot be done on preserved samples. Do on-board or not at all
Leukocyte Mobilization	Assessment of body defense against bacteria by finding opsonic index	Same and requires fresh cultures of bacteria	Cannot be done on preserved samples. Do on-board or not at all

TABLE A-5. ENDOCRINE EVALUATION

Measurement (Annex B)	Description	Methods and Procedures	Remarks
PITUITARY ACTIVITY			
Adrenocorticotropic Hormone	Measure of circulating ACTH	Analysis should be done immediately and not >12 hours after blood is drawn. Immunochemical test difficult	Difficult to perform, reagents may not store well thus requiring formulation on-board
Urinary Antidiuretic Hormone (Vasopressin)	ADH produced by anterior lobe of pituitary, control of urine output	Bioassay (rat is test species)	Extremely difficult to do on-board
Urine Specific Gravity	Specific gravity indicates total concentration of solutes	Mass measurement, highly accurate and precise, can be used	Must be done on-board
Protein Bound Iodine (PBI)	Indication of thyroid activity and function	PBI difficult to do on-board - ppt, ash, titrate I	Preserved samples may be used, but effects of preservation on PBI or TBPA unknown. R&D needed
TBPA (Thyroxine Binding Prealbumin)	Indication of thyroid activity and function	TBPA can possibly be done on-board-electrophoresis	
Parthyroid Activity	Parathyroid has role in Ca metabolism	No standardized method available - probably assay for parathyroid peptides	Cannot be done on-board until method developed

TABLE A-5. ENDOCRINE EVALUATION (Cont)

Measurement (Annex B)	Description	Methods and Procedures	Remarks
ADRENAL CORTICAL ACTIVITY			
Urinary 17 OH-CS	Indicators of adrenal secretion	Large quantities of urine required: best method for aldosterone complicated	Should be done on preserved samples
Urinary 17-Keto-S	Indicators of adrenal secretion		
Urinary Aldosterone	Adrenal secretion which aids in controlling Na retention		
Gonadal Activity (Preflight and post-flight)	Germ-cell exam (sperm viability and count)	N/A	N/A
NEURO-HUMERAL ACTIVITY			
Urinary Catecholamines	Indicants of stress	Fluorimetry - on-board possible but difficult	Do on preserved samples unless compelling reasons for on-board performance
Serotonin	Indicants of stress	Enymatic cleavage and then fluorimetry	
Pancreatic Islet Tissue Insulin	Determination of circulating insulin level	Isotopic dilution and then anti-body - antigen reaction - complex, requires highly skilled technicians	Do on preserved sample

TABLE A-6. HEMOSTATIS EVALUATION

Measurement (Annex B)	Description	Methods and Procedures	Remarks
Platelet Functions	Platelets important in blood clotting	Determination of platelet attributes such as adhesiveness, is not quantitative and requires large quantities of blood. Considerable skill involved	Cannot be done on preserved samples. Must be done on-board; if at all
Humeral Components of Coagulation			
Serotonin	Vasoconstrictor, leaves smaller orifices through which blood can flow, easier for clot to form	Fluorimetric assay	Feasible to do on-board but may be difficult
Bleeding and Coagulation Times	Clotting for blood placed in capillary tube	Empirical method, not quantitative; relative values of clinical interest	Must be done on-board. See Report NASW-1562
Assay of Element of Clotting			
Fibrinogen	Clotting of blood is a complex phenomenon which can be affected at any one of a number of steps	A different method for each component; none are quantitative. All require extreme care. Most results open to question	May be possible to do on preserved samples, but R&D program required for "standard" values
Fibrinolytic Activity			
Prothrombin Activity			
PTC			
AHG			

TABLE A-7. ENERGY METABOLISM

Measurement (Annex B)	Description	Methods and Procedures	Remarks
ENERGY METABOLISM			
Serum Lipids	Assay of circulating levels	Solvent extraction and digestion with boiling H_2SO_4	Not for on-board determinations
Phospholipids			
Fatty Acids		Assay requires oxalated plasma; differential solvent extraction hazardous for on-board use	Freeze serum for post-flight analyses
Dynamic Carbohydrate	Glucose Tolerance Test	Each test requires eight or nine venipunctures on-board; assay may be possible but present chemical procedures may need modification	Serum can be frozen for post-flight assay
Protein Metabolism	Determines circulating and excretory levels of proteins and breakdown products		
Serum Proteins	Relative amounts of albumin and globulin fractions determined	Electrophoresis	Can be done on-board
Non-Protein Nitrogen	Total N - Protein N	Requires Buiret for color; method empirical	Possible safety hazard if done on-board; preserved samples for post-flight analysis feasible

Measurement (Annex B)	Description	Methods and Procedures	Remarks
Blood Urea Nitrogen (BUN) or Serum		Requires urease digestion, deproteinization and Nesslerization	Same
Blood Uric Acid	Indicator of purine metalolism efficiency	Method uses cyanide for color development	Safety hazard
STANDARD URINALYSIS			
a. Volume	Gross check common in clinical practice	a. and b. OK for on-board	
b. pH			
c. Glucose		Glucose determination may require modification for on-board use	
d. Acetone bodies		Fluorimetric assay	On-board colorimeter can be modified for use as fluorimeter
e. Microscopy		Examination for casts, xtals, etc	
f. Specific gravity		Specific gravity can use mass measurement device on-board	Specific gravity cannot be done accurately on preserved samples

TABLE A-7. ENERGY METABOLISM (Cont)

Measurement (Annex B)	Description	Methods and Procedures	Remarks
g. Albumin		Albumin best determined by sensitive immuno assay procedure	
h. Turbidity		Nephelometric determination	Requires another attachment for colorimeter

TABLE A-8. FLUID VOLUME DISTRIBUTION AND EVALUATION

Measurement (Annex B)	Description	Methods and Procedures	Remarks
Body fluid distribution	Assess degree of fluid shifts from one body compartment to another, e.g., intracellular fluid shifting to blood would dilute blood and cause lower values of blood constituents such as serum proteins	Ingestion of known amounts of labeled sodium or potassium would permit measurement of labeled Na and/or K^+ in the serum and urine	Should not be done if labeled Ca, I or other isotopes are to be used in any experiment. This measure which is neither precise nor accurate is not recommended for inflight use because the same information can be obtained by careful evaluation of other data
Urinary Catecholamines, Adrenal Steroids, ADH (antidiuretic hormone)	See endocrine		
Fluid and Electrolyte Balance	See Metabolic and Nutritional		
ELECTROLYTE BALANCE			
Serum, Urine, Sweat, Feces Na K	Measure intake, circulating levels and output of major electrolytes	Na and K can be determined by flame photometry on the ground: in-flight Na and K can be determined colorimetrically, but reagents may pose safety hazard	Assays on preserved samples feasible Methods may be modified and/or assay in flight performed in sealed enclosure

TABLE A-8. FLUID VOLUME DISTRIBUTION AND EVALUATION (Cont)

Measurement (Annex B)	Description	Methods and Procedures	Remarks
MICROBIOLOGICAL AND IMMUNOLOGICAL			
Microbiological Ecology	Cultures of nose, throat, GT tract (feces) ,Skin, Cough plates, cabin and suit ECS	Culture methods modified as per Final Report draft of NASW1562	Culturing and sub-culturing must be done on-board
IMMUNOLOGICAL EVALUATION			
Globulin Electrophoresis	Estimates of globulin fractions	Electrophoresis simple but requires extreme care for quantitative results	Can be done on-board
Antibody Titration	Determines level of antibody to a specific antigen	Agglutination or precipitation reactions	Very difficult to do on-board
Measurement of Complement	Determines level of complement	Requires sensitized guinea pig or sheep cells	Sensitized cells cannot be stored for subsequent use; this test must be done post-flight on preserved samples
Establishment of serum and plasma bank	Supplies baseline controls to use in ground studies	N/A	Considerable R&D needed to assess effects of storage on various constituents

TABLE A-9. METABOLIC AND NUTRITIONAL EVALUATION

Measurement (Annex B)	Description	Methods and Procedures	Remarks
CLINICAL METABOLIC AND NUTRITIONAL EVALUATION			
MUSCULAR STATUS EVALUATION			
Muscle Size	Assessment of individual muscle sizes for evidence of disuse atrophy	Tape measure, calipers	
Strength (and Power)	Measure of maximum force which can be exerted (strength). Power is a measure of strength x time, i.e., the ability to do sustained work	Strength: Hand dynamometer is the usual approach. Interesting motivation overlay Power: Rhythmic contractions of the arm isotonically against a spring force to limit of endurance	
Efficiency	A measure of the conversion of 0_2 and foodstuff into work output knowing the caloric equivalent of oxygen which depends on the R.Q. A function of work rate as well as skill and training	Requires metabolic study while working on the bicycle ergometer or against the spring in a standard manner	Equipment from the Respiratory Evaluation will handle this but the precision is low
Electromyography	Measures either (1) action potentials for single fiber or (2) integrated voltage due to action potentials in one muscle	Single fiber action potentials require a needle electrode: some evidence that the potential wave shape changes with disuse	

TABLE A-9. METABOLIC AND NUTRITIONAL EVALUATION (Cont)

Measurement (Annex B)	Description	Methods and Procedures	Remarks
		Integrated potential is usual approach either in response to electrical stimulus or to predetermined standard motion and force	
Blood Lactic Acid	A metabolic product of muscular activity	Total venous blood lactic acid requires invasive methods. Lactic acid in blood from exercising muscle can be obtained by venipuncture, i.e., arm vein for hand exercise	Stored or analysed on-board See Endocrine
Urinary Creatinine and Creatine	Urinary constituents and ratios reflect loss of muscle mass but levels also related to diet and exercise	See endocrine for sampling and preservation	
MINERAL METABOLISM AND SKELETAL STATUS EVALUATION			
Mineral Balance	Input-output relations for primarily calcium and phosphorous. Requires careful control of intake and assay of urine, feces and sweat	Requires preflight assay, marking, scheduling and logging of food intake. See Endocrines for sampling and preservation	

TABLE A-9. METABOLIC AND NUTRITIONAL EVALUATION (Cont)

Measurement (Annex B)	Description	Methods and Procedures	Remarks
Stone Formation Factors (Urinalysis)	Combined chemistry and microscopy of urine and urine sediment (Ca, PO_4, pH, etc.)	See Endocrines for sampling and preservation and Hematology for microscopy	
Hydroxyproline	Breakdown product of bone matrix	See Endocrines for sampling and preservation	
Dynamics of Mineral Metabolism (Isotopes)	Use of radioactive tracers to assess mineral turnover and utilization of injested calcium	Requires counter for use on urine, plasma, fecal and sweat samples	
In-Flight Bone Density	Assessment of calcium loss (os calcis, finger) by measurement of bone density against preflight value using calibrated wedge	Requires either in-flight X-ray equipment or gamma gauge. Gamma gauge has more precision. Data display and reduction a problem	See Gershon-Cohen Radiation Research 8:509, 1958
Preflight and Post-flight Densitometry	N/A		
GENERAL METABOLISM AND NUTRITION EVALUATION			
Energy Metabolism at Various Levels of Activity			
O_2 Consumption	Metabolic rate under resting or "basal" conditions and during exercise on ergometer	See Respiratory Evaluation for equipment	

TABLE A-9. METABOLIC AND NUTRITIONAL EVALUATION (Cont)

Measurement (Annex B)	Description	Methods and Procedures	Remarks
CO_2 Production	From O_2 consumption and CO_2 production during rest and activity determine RQ of diet and exercise	See Respiratory Evaluation for equipment	
Caloric Intake	A function of the diet provided. Assess its adequacy to meet metabolic demands	Measure body mass, food acceptability, food eaten and food waste by logging	
Serum Lipids	Mobilization and utilization of lipids and free fatty acids related to sympathoadrenal stimulation (stress)	See Endocrine	
Dynamic Carbohydrate Studies	Primarily a study of glucose tolerance and the factors that regulate blood glucose	Glucose feeding 8 hours after last meal Periodic blood samples assayed for glucose Construction of curve of response	
Determination of Lean Body Mass	Lean body mass or protoplasmic mass devoid of all fat. At 1 G determined by body weight and specific gravity	Specific gravity may be predicted from skin fold thickness, body height and weight nomograph. LBM can be calculated from total body water and from creatinine excretion	Consalazio et al. Physiol. Measurements of Metabolic Functions in Man. McGraw-Hill 1963

TABLE A-9. METABOLIC AND NUTRITIONAL EVALUATION (Cont)

Measurement (Annex B)	Description	Methods and Procedures	Remarks
Measurement of Acid-desk Base Metabolism	See Respiratory Evaluation. Also urine analysis		
Measurement of Protein Metabolism			
Serum Proteins (Electrophoresis) Non-Protein Nitrogen Blood Urea Nitrogen Blood Uric Acid	See Endocrines for sampling and preservation		
Fluid Balance	An assessment of the overall water balance generally given by the Peters-Passmore Equation: Water balance $=[\Delta W_t - (solids_{in} - solids_{out}) - (O_{2ab} - CO_2 \text{ excre}) + H_2O \text{ met}]$ where $H_2O_{met} = [0.089\ O_{2\ ab} + 1.309\ CO_{2\ excre} - 1.04\ N_u]$	By this equation water balance can be measured with no knowledge of water intake or excretion. Requires all solids measured in dry state, O_2, CO_2, urinary N and body weight. The alternate is to monitor water intake and estimate water in urine, feces, sweat, respiratory gases, etc.	
Body Fluid Distribution	See Cardiovascular Evaluation		

TABLE A-9. METABOLIC AND NUTRITIONAL EVALUATION (Cont)

Measurement (Annex B)	Description	Methods and Procedures	Remarks
Body Volume	Determine body volume. At one g this is accomplished in a liquid - filled volumeter. The residual lung volume must be subtracted	In space this can be accomplished by a dilution technique. Use calibrated plastic bag surrounding subject. Add small quantity of He	Siri, W.E. Rev. Sci. Instr. 27: 729-738, 1956
Standard Chemical Urinalysis	See Endocrine Evaluation		
Electrolyte Balance	Measurements of intake and excretion rate of major electrolytes (Na and K) and the control of the extracellular fluid volume by the kidney especially under environmental stress. Use in interpretation of weight changes, thirst, diuresis, antidiuresis, etc	Intake is known from diet. Output (water, electrolyte) is measured in the urine. Body weight is needed for gross changes. Plasma or serum electrolytes	Sampling and preservation in Endocrine Section
GASTROINTESTINAL ACTIVITY EVALUATION			
Intestinal Flora	See Microbiological Evaluation		
Gastric Motility	Assess gastric motions particularly emptying during weightlessness	One g measurement made by balloon intubation. Endoradiosonde only non-invasive method known except auscultation. Dye for total GI transit time	

TABLE A-9. METABOLIC AND NUTRITIONAL EVALUATION (Cont)

Measurement (Annex B)	Description	Methods and Procedures	Remarks
		Endoradiosonde will permit following through GI tract	
pH	Assess gastric and intestinal pH and thereby secretion during zero g	Endoradiosonde only non-invasive method. Stimulus to secretion should be oral not injectables Tubeless Method (acidic ion exchange resin with the base quinine or basic blue dye azure A): At pH below 3.5 H ions displace base which is absorbed and excreted in the urine: unreliable Consider subcut. histamine	
Absorption	Assess absorption of major food types, water and electrolytes during zero g. Usually done segmentally by means of double lumen intubation. If taken by mouth, site of absorption cannot be determined	Water: D_2O (blood) Sodium: Na^{22} or Na^{24} (blood) Glucose Tolerance Test (blood) Protein: N^{15} label detected as urinary ammonia Fat: Fatty acids and triglycerides labeled with I^{131} (blood)	

TABLE A-9. METABOLIC AND NUTRITIONAL EVALUATION (Cont)

Measurement (Annex B)	Description	Methods and Procedures	Remarks
Gastrointestional Cytology	No known non-invasive method. Requires intubation and lavage		
THERMAL REGULATION EVALUATION			
Measurement of Core and Skin Temperature	Provide for means to assess the effects of internal or environmental thermal loads in relation to energy balance	Core Temperature: Oral and/or rectal thermistor Skin Temperature: 12 thermistor harness	 See NASA Specification
Confort Index for Varying Thermal Loads	The confort zone is defined in terms of wall and air temperatures, the water vapor pressure and air velocity with respect to clothing, activity, training, exposure time and water intake	Net combined effect: Effective temperature (ET), Oxford index, predicted four-hour sweat rate Measures include rectal temperature (heat storage), skin temperature, metabolic rate, sweat rate and heat balance Evaluation heavily dependent on environmental instrumentation	See Bioastronautics Handbook
Cardiovascular Response to Thermal Change	See Cardiovascular Evaluation		

TABLE A-10. NEUROLOGICAL EVALUATION

Measurement (Annex B)	Description	Methods and Procedures	Remarks
CLINICAL NEUROLOGICAL EVALUATION	Hx and Px forms are GFE	Data management	
OTOLITH EVALUATION			
Ocular Counter-Rolling	The involuntary conjugate rolling movement of the eyes around their lines of sight in the direction opposite to the lateral inclination of the head with respect to gravity	Restraint system (Rotating Letter Chair in litter mode) Measure tilt in degrees Vehicle acceleration during tilt Cinematographic coverage of eye motions	NASA SP-77, p. 121, 195. Also Acta Otolaryng (Stockholm) 54:479-501, 1962 See MO53
Oculogravic Illusion	An apparent movement and displacement of the visual field when a person is exposed to a change in direction of the gravitational-inertial force environment relative to himself	MO53 calls for studies in both a rotating and non-rotating environment to study spatial orientation: a. Visual orientation using the Otolith Test Goggle b. Non-visual with rod/sphere device c. Correlate with agravic contact cues (stereognosis, two point discrimination, touch threshold and localization	See MO53, Neuro Kit, RLC

TABLE A-10. NEUROLOGICAL EVALUATION (Cont)

Measurement (Annex B)	Description	Methods and Procedures	Remarks
		Integrate with Langley-GD/ Convair small radius centrifuge experiment for IMBLMS requirements	
Threshold of Linear Accelerations to Head	Sensitivity to linear acceleration is believed to be increased at or near zero g as evidenced by detection of deceleration from orbit by astronauts, the reported sensations of retrorocket firing and deductions from Weber-Fechner Law experience. At one g judgement of the vertical in the dark is used. On centrifuge linear acceleration usually compounded by angular acceleration and kinesthetic cues	Rotational device with subject facing inboard with start up at less than 1-2° sec. (semicircular canal threshold) Sensitive accelerometer Verbal reports during repeated trials	

TABLE A-10. NEUROLOGICAL EVALUATION (Cont)

Measurement (Annex B)	Description	Methods and Procedures	Remarks
SEMICIRCULAR CANAL EVALUATION			
Oculogyric Illusion	The apparent motion of an object fixed with respect to the viewer, following cessation of rotation, in the opposite direction from that of rotation	Rotate subject in dark at constant angular velocity. Stop. Record nystagmus	J. Av. Med. 17, 3-27, 1947
Visual Task Performance with Head Rotation	Similar to slow rotating room experiment. Establish task station and task battery requiring head motions (in the actuation of levers, switches, etc.,) of given velocity and amplitude	Both rotating and non-rotating environments Task station and task battery Verbal reports of malaise	GD centrifuge could be used
Nystagmogram (EOG)	Device for monitoring eye movements particularly in response to vestibular stimulation	Bitemporal electrodes, forehead electrode, amplifier, display	
Eye Movement Cinematography (with Fiber Optics Bundle)	Device for measuring eye motion (nystagmus)	Same as for ocular counter-rolling including camera and fiber optics bundle	

TABLE A-10. NEUROLIGICAL EVALUATION (Cont)

Measurement (Annex B)	Description	Methods and Procedures	Remarks
HUMAN OTOLITH FUNCTION (M-9)	Influence of non-visual sensory information under terrestrial and weightless conditions on the visually perceived direction of space	Either M053 Otolith Test Goggle or incorporated in vision tester with bite board	Gemini 7 Report
CEREBRAL ELECTRICAL ACTIVITY (EEG)	To develop an on-line EEG analysis method for the classification of behavioral states for medical flight monitoring and warning	Assess EEG characteristics: a. Range of awake states b. Flashes at 1/sec c. Auditory vigilance d. Visual discriminative performance e. Drowsy and sleep states	NASA EPI pending (Kelloway & Adey): Aerospace Med. 38:371, 1967 includes requirements for: Experiment command system Data Acquisition system Computer Analysis techniques Pattern recognition in individual subjects NASA Tech. Reqts. Project Apollo 1/15/57

TABLE A-11. BEHAVIORAL EVALUATION

Measurement (Annex B)	Description	Methods and Procedures	Remarks
1. Psychiatric Status	Assess the crewman's emotional and personality stability Evaluate status of crewman's intellectual function Assess direction and intensity of mission related motivation	Extensive preflight testing and analysis by competent psychological and psychiatric personnel will be conducted. The personnel involved in the preflight assessment will conduct on-flight interviews via voice communications and administer selected questionnaire material. On-board interview forms will be compiled by crewman on a personal basis	Format, content and validity of this approach yet to be demonstrated
2. Sensory Perceptual Process			
VISUAL FUNCTION			
Acuity	The eye's capability to detect and resolve fine detail as manifested by the subject's capability to detect an object as a function of its size (visual angle) or as a function of his ability to detect a gap between the two stimuli	Optical presentation of visual test material controlled for size or spacing, contrast, illumination and color content	Standard equipments, procedures and values have been developed and are readily amenable to space flight modification

TABLE A-11. BEHAVIORAL EVALUATION (Cont)

Measurement (Annex B)	Description	Methods and Procedures	Remarks
Depth Perception	The ability of the subject to establish either relative or absolute values for distances from or between visually sensed objects. While many cues to depth are available on earth, inside the spacecraft cabin or in the immediate vicinity of the spacecraft (when it is visible along with the object viewed)only the accommodative adjustment of the lens of the eye, the convergent aiming of the two eyeballs at a target and,when items are near enough, the retinal disparity (difference of the scene as observed by the separate eyeballs) and size constancy cues serve as a basis for depth perception in open space	Optical presentation of stimulus material designed to provide the cues to differential depth will be utilized. Subjects will make oral or motor responses to the displayed material or will be called upon to equate apparent distances via some control task. Results will be evaluated against known standards	Standard equipments, procedures and values have been developed and are readily amenable for modification for space flight. While interposition, shading, color content, and edge diffusion may be utilized in viewing the earth surface, this capability is primarily a function of altitude and resolutional considerations

TABLE A-11. BEHAVIORAL EVALUATION (Cont)

Measurement (Annex B)	Description	Methods and Procedures	Remarks
Phorias	In order for the two eyes to focus on a single point in space and to permit the cortex to fuse the two images it receives into a single perceptual scene, it is necessary that the eyeballs be able to converge. The amount of convergence necessary is usually the end product of stimulus size and/or distance as finally expressed as retinal size and locus. The eyes capability to place the image in appropriate retinal locations by this convergent movement determines one aspect of the subject's fusional capability Phorias are an expression of the capability in the eyes to fuse an image as a function of their displacement from a zero point line of sight. Phoric measures are expressed as a function of this distance (i.e., displacement with fusion possible)	Stimulus material is provided for some level of retinal disparity or apparent displacement to each eye. The subject reports the observed phenomena or reduces the displacement until fusion occurs. The results are utilized as definitive data Differential values are developed as a function of the apparent distance of the stimulus material. Two levels (near and far) of apparent distance usually suffice	Standard equipments, procedures and values have been evolved and are readily amenable to modification for space flight

TABLE A-11. BEHAVIORAL EVALUATION (Cont)

Measurement (Annex B)	Description	Methods and Procedures	Remarks
Pattern or Form Discrimination	The subject's capability to extract informational content from a visual pattern as a function of a level of "blur" or lack of resolution. Changes in brightness, color contrast, pattern size and complexity alter the subjects effectiveness. Losses in acuity or cortical function on the part of the subject will also degrade performance	A series of stimulus materials will be presented optically under controlled lighting, contrast and color conditions. The stimulus will be physically graded in contrast at its edges or defocused to preset levels of "blur" and made decisional judgements regarding their identity	Standard equipments, procedures and values have been evolved and are readily amenable to modification for space flight
Reading	Self-evident	Read stored material and test for speed, accuracy and possible retention. Possible measures of eye movement	
AUDITORY FUNCTION			
Pitch	Capability to differentiate supra-threshold (audible) sound as a function of differential frequencies	Comparison of sequential acoustic stimuli or absolute identification of frequency value against standard musical notation	Standard audiometric equipment is amenable to modification

TABLE A-11. BEHAVIORAL EVALUATION (Cont)

Measurement (Annex B)	Description	Methods and Procedures	Remarks
Intensity	Capability to detect the presence of acoustic energy (sound) as a function of signal intensity (energy level) and frequency	Detect the presence or absence of a specific frequency signal at a specific energy level	Standard audiometric equipment is amenable to modification
Localization	The capability to locate the source or point of origin of a sound emitter in three-dimensional space (in relation to the observer). This is a perceptual function (cortex-brain) based primarily on the time disparity between the time the stimuli arrive at the subject's spatially separated ears as well as disparate signal strengths. Some information is also derived from the line of flight of the sound signal	Recordings of tone or clicks will be presented to each ear with or without precision time disparities. The subject will describe localization via oral report or questionnaire	The acoustic presentations to each ear must be precise since discrepencies as brief as one millisecond are readily detected

TABLE A-11. BEHAVIORAL EVALUATION (Cont)

Measurement (Annex B)	Description	Methods and Procedures	Remarks
Patterns	This probably refers to the recognition of acoustic patterns generated by audible tones and/or clicks as a function of frequency, intensity, duration and sequence	Standard tape audiometer recordings or routine tape recordings could be presented with the subject pairing or identifying successive stimuli	Fine pitch-based pattern recognition requires a musically trained ear or extensive preflight training. Aberrations in this area could be based on cortical or auditory failure. Implications of measures are not clear
Motion	This is the capability to detect and localize an apparent movement in the position of a sound source	Utilizes the same equipment as described for static sound localization. In this case the intensity and time discrepancies of the acoustic signals delivered at each ear are varied as a function of time (as opposed to a single static signal). Varied discrepancies are generated and the subject reports subjectively or fills out a questionnaire	This is actually an extension of the static localization test; no substantial differential implication is provided by this additional test

TABLE A-11. BEHAVIORAL EVALUATION (Cont)

Measurement (Annex B)	Description	Methods and Procedures	Remarks
Speech	Detect and analyze modification in routine speech during nominal operations and/or during the reading of specific passages	Preflight testing to establish base lines Evaluate material collected for: Rates (works per minute) Legibility Phrasing Quantity/per unit time (total conversation/hour) Frequency of initiation Frequency-amplitude spectrum for standard material	This procedure could detect changes in: Emotional adjustment Intellectual function Fine motor coordination Motivation Crew interaction
KINESTHETIC FUNCTION			
Positional	Assess the crewman's capability to orient his body position (relationship of his head, arms and legs in respect to his torso)	TBD	
Dynamic	Assess the crewman's capability to determine the rate and path of movement of all of his extremities and torso. In addition, problems related to force emission or resistance to displacement via the use of muscular force can be evaluated	TBD	

TABLE A-11. BEHAVIORAL EVALUATION (Cont)

Measurement (Annex B)	Description	Methods and Procedures	Remarks
Vestibular Function	Assess the crew's susceptibility to semi-circular canal sickness (motion sickness) as a function of rotation and residence time in zero-g Assess the crew's susceptibility to visual and orientational illusions due to disturbances of the vestibular (inner ear) mechanisms as a function residence in zero-g	Measure the number and direction of head movements necessary to produce first symptom of canal sickness while rotating in chair Measure effects on spatial orientation of varying "g" loads as well as a gravic contact cues by using otolith test goggles (artificial horizon alignment device) or magnetic rod/spheres (device for providing artificial cue representing a vertical force vector in respect to spacecraft floor)	
ORIENTATION ABILITY			
Temporal	Assess the crewman's capability to judge the passage of time (both absolute and comparative)	Present continuous and/or a stop/start signal and have subject report on duration of interval in absolute terms (seconds, minutes, hours) Present two signal durations and have subject compare durations	

TABLE A-11. BEHAVIORAL EVALUATION (Cont)

Measurement (Annex B)	Description	Methods and Procedures	Remarks
Positional	Assess crewman's ability to establish his relationship in respect to the spacecraft and/or objects in his immediate vicinity or against artifically generated standards	See Vestibular function See Kinesthetic function	
Location	Assess crewman's ability to judge the distance and vectoral distances between himself and his physical surround	Describe distance and directional locus of items in surround or of self in respect to outside referents	
PSYCHOMOTOR FUNCTION			
Fine Motor Movement			
Manipulation	Assess the crewman's ability to grasp and move objects or controls with precision through 6 degrees of freedom (Short excursion range)	Subject will move a series of multi-dimensional controls in a programmed manner. Displacement error scores will be utilized to establish score	Multiplicity of approaches Precision force emission may be utilized for this measure

TABLE A-11. BEHAVIORAL EVALUATION (Cont)

Measurement (Annex B)	Description	Methods and Procedures	Remarks
Dexerity	Assess the crewman's ability to handle his extremities, objects or controls with precision as a function of time and in a coordinated manner	Subject will be required to carry out a complex task requiring a series of precision placements of a high rate of speed. Scoring. Work done/error rate/time	Basic operational tasks may be utilized as experimental procedure
Positioning	Assess the crewman's ability to locate his extremeties, objects or controls at a specific point and in a specific orientation in three-dimensional space. (Short excursion range)	Subject will be called upon to locate objects at a specific three-dimensional locus in a specific orientation (i.e., phone jack, fuse, or equivalent). Score precision of placement.	Basic operational tasks may be utilized as experimental procedure
Steadiness	Assess the crewman's ability to maintain the three-dimensional locus of an extremity, grasp object or control with minimal displacement	The subject will be required to place and maintain a stylus in a precision locus. Measures will be taken in at least two degrees of freedom	Basic operational tasks may be utilized as experimental procedure

TABLE A-11. BEHAVIORAL EVALUATION (Cont)

Measurement (Annex B)	Description	Methods and Procedures	Remarks
GROSS MOTOR MOVEMENT			
Locomotion	The efficiency and speed with which the crewman can move himself along a course in a controlled and coordinated manner	The subject will perform a preprogrammed traversal. Photographic records could be analyzed for errors (deviation from path), efficiency (lack of extraneous movement) and elapsed time measures	Exact procedures to be determined. Routine maneuvers may be used as basic experimental material
Dexterity	The efficiency and speed with which the subject can perform complex, coordinated total body or full range of motion maneuvers	A preprogrammed maneuver will be executed, photographed and timed. Ground analysis for error and rate of accomplishment	Exact procedures to be determined. Routine maneuvers may be used as basic experimental material
CONTINUOUS PROCESSES			
Tracking			
Pursuit	Measures of the subject's capability to continuously position a moving reticle to follow the random displacement of a target (judgement and eye/hand coordination) (both target and reticle dynamic) Subject controls reticle displacement	The subject will make inputs to a control stick in the form of controlled force emission or displacement in order to keep a cross hair or similar reticle superimposed on a randomly moving target. Scored as a function of time on target, displacement amplitude, etc.	

TABLE A-11. BEHAVIORAL EVALUATION (Cont)

Measurement (Annex B)	Description	Methods and Procedures	Remarks
Compensatory	Measures of the subject's ability to erase random displacement of a target to keep it located at static point of aim	The subject will make inputs to a control stick in the forming of controlled force emission or displacement from a centrally located point of aim. Scoring will be derived as above. (Reticle static, subject corrects target locus)	
Motor and Cognitive	This area of measurement is probably directed at those human performance activities requiring continuous motor (muscular) functions that require active thought processes (analysis and decision making) during their continued execution	Measures can be made in a great variety of ways. Best possible route currently seems to be the measurement of an appropriate performance that is part of nominal station keeping and evaluating the results against standard performance baselines	Tenuous area closely related to on-board tasks which are yet to be determined
DISCRETE PROCESSES			
Reaction Time			
Simple	The elapsed time between the signal to initiate and the completion of a preprogrammed response	Standard stimulus presentation and motor response equipment including some form of time recording gear	

TABLE A-11. BEHAVIORAL EVALUATION (Cont)

Measurement (Annex B)	Description	Methods and Procedures	Remarks
Complex	The elapsed time between the signal to initiate and the completion of a task where two or more choices of response are present, thereby requiring a recognition and decision procedure on the part of the subject	Standard stimulus presentation and motor response equipment including some form of time recording gear	
Motor and Cognitive	The difference between motor and cognitive process under this heading and under continuous processes is a function of task duration		

TABLE A-12. BIOCHEMICAL AND HEMATOLOGICAL METHODS

Measurement	Fluid and Volume Required	Name of Method, Chemicals, and Amounts	Procedural Necessities	Hazard (Safety-Toxcity)	Hazard Control	Earth-Based Laboratory Expendables (Other than Chemicals) For Information Only	Method of Preservation	Comments
Energy Metabolism Serum Lipids	2 ml Serum or Plasma	Gravimetric Method 70 ml ethanol-ether (3:1) 55 ml petroleum ether $CaCl_2$ (in desiccator)	Heating over steam bath (100°C) Vacuum desiccation. Requires weighing apparatus. Preliminary centrifugation of blood necessary	Chemicals are toxic if inhaled and are explosive	Toxic effects could be avoided by carrying out procedures in an enclosed fume hood with glove ports. Explosive potential unavoidable, but same method would reduce the possibility	• 1 Erlenmeyer flask • 2 Breakers • Filters • Pipettes or other volumetric devices for measuring fluid volumes	Freezing	The problem of handling liquids in a 0-g environment, potential hazards, and the problem of weighing, make this measurement a candidate for post-flight analysis. Requires drying for 12-18 hrs. Subject should be in a basal state for assay. Accuracy: Moderate Precision: ±11% Ref: Henry
Phosphospholipids	1 ml Serum or Plasma	Baumann Method 30 ml ethanol-ether mixture (3:1) 1 ml Phosphorus std. (40 μg P/ml) 4 ml 30% H_2SO_4 ~3 ml 30% H_2O_2 1.2 ml Ammonium Molybdate reagent (contains H_2SO_4 also) 12 ml p-Semidine Reagent (contains a few drops of ethanol and also contains Na HSO_3) 30 ml H_2O	Heating over steam bath and hot plate. Heating over an open flame. Method requires colorimetric measurement at 770 mμ (660 mμ filters is O.K.) Preliminary centrifugation of blood necessary	Most of the reagents are toxic. Ethanol-ether is explosive. So is H_2O_2. Use of open flame extremely dangerous for inflight analysis	Requirement for digestion over open flame prevents hazard control. Flameless alternative would be necessary	• Filters • Glass beads • 3 test tubes • Pipettes or other volumetric devices for measuring and dispensing fluid volumes • 3 photometer curvettes	Freezing	p-Semidine reagent must be refrigerated and is only stable for one month. H_2O_2 reagent must be stored in refrigerator. Hazards of procedure make this a candidate for post-flight analysis. Accuracy: High Precision: ±9% Ref: Henry
Fatty Acids	2 ml Serum or Plasma	Method of Trout et al. 30 ml Isopropanol-Heptane - 1 N H_2SO_4 (40:10:1) 2 ml of 0.128 mg Palmitic acid/1 ml Heptane (std.) 16 ml Heptane 16 ml H_2O 15 ml 0.05% H_2SO_4 2 ml 0.02N NaOH 3 ml 0.01% Thymolphthalein in 90% Ethanol N_2 (alkali washed)	Centrifugation. Titrimetry. N_2 bubbler. Preliminary centrifugation of blood	Many chemicals used are toxic and/or hazardous due to flammability and explosion potential	The use of tubes closed with rubber septa to be entered by needle-tipped syringes would reduce the hazard potential. No method would completely insure against hazards	• Volumetric measuring and dispensing apparatus • 3-Glass-stoppered tubes • 3-Glass-stoppered centrifuge tubes • 1 Ultramicroburet • 3 Conical tipped centrifuge tubes (15 ml)	Freezing	Even in the frozen state, fatty acids increase in serum samples. Recoveries of 93% corrected by use of stds Precision: ±5% Ref: Henry

TABLE A-12. BIOCHEMICAL AND HEMATOLOGICAL METHODS (Cont)

Measurement	Fluid and Volume Required	Name of Method, Chemicals, and Amounts	Procedural Necessities	Hazard (Safety-Toxicity)	Hazard Control	Earth-Based Laboratory Expendables (Other than Chemicals) For Information Only	Method of Preservation	Comments
Energy Metabolism								
Dynamic Carbohydrate (Glucose Tolerance Test)	0.1 ml Blood, Plasma or Serum for a Single assay of glucose. Several consecutive timed samples required by the test	Method of Folin and Wu, Modified 0.5 ml 0.83% $ZnSO_4$ 0.7 H_2O 0.5 ml 0.057 N $Ba(OH)_2$ (Both in water) 0.5 ml Glucose std. (0.1 mg/ml in H_2O) 1.5 ml Copper Reagent (40g Na_2CO_3, 7.5g Tartaric Acid and 4.5g $CuSO_4 \cdot 5H_2O$ per liter in H_2O) 1.5 ml Phosphomolybdic Acid Reagent (70g Molybdic Acid, 10g Sodium Tungstate, 40g NaOH, 250 ml 85% H_3PO_4 per liter in H_2O)	The zinc sulfate soln. and the barium hydroxide soln. must be made equivalent volume for volume by titration. Centrifugation or filtration of protein precipitated soln. is necessary. Timed exposure to 100°C (boiling water bath temperature) necessary. Cooling with "tap" water also necessary. Colorimetric measurement at 420 mμ with filter or spectrophotometer is required	Some of the reagents are toxic if ingested. Heating equipment necessary presents a potential burn hazard	Ingestion of reagents could be avoided by adequate operator training and the use of closed containers with rubber septa and syringes and needles for pipetting. Adequate training would also reduce the risk of burns from equipment	• Volumetric measuring and dispensing apparatus • 1 Centrifuge tube • 3 test tubes • 3 photometer curvettes	Freezing	Barium hydroxide soln. must be protected from exposure to CO_2. Glucose std. is unstable and must be prepared fresh daily from a 1% soln. saturated with Benzoic acid and refrigerated. Stable in this form indefinitely. Copper reagent is stable indefinitely at room temp. In-flight analysis is feasible. Estimates using this method yield blood glucose levels which are 5 mg/100 ml too high on the average (max. of 10 mg/100 ml) Precision: ±3% Ref: Henry
Protein Metabolism								
Serum Proteins	0.3 μl Serum	Electrophoresis ~15 ml. buffer such as Veronal, ph 8.6, ionic strength 0.05 to 0.10. ~10 ml. staining solution such as Ponceau-S or Bromphenol Blue ~30 ml. rinsing solution, 5% acetic acid ~10 ml. 95% ethyl alcohol rinse and ~10 ml. clearing solution (30% ethyl acetate in acetic acid) or 10 ml. fixative solution (0.3% Na acetate in 5% acetic acid) and 10 ml. eluting solution (0.01 N NaOH)	Scanning densitometry or some other method of measuring stained protein such as colorimetry on eluted components. Measurement of the native absorbance of protein in the ultraviolet is a third alternative. A drying oven may be required. A D.C. power supply and electrophoresis chambers are necessary	Reagents are relatively non-toxic unless ingested. Some risk due to electrical hazard exists	Handling of reagents in closed containers, adequate electrical insulation and thorough training in techniques necessary should assure crew safety	• Paper, agar, agarose, starch gel, acrylamide gel or cellulose acetate strips • Applicators. 7-10 • containers for staining, washing, etc. of strips	Freezing	In flight determination is feasible. Serum protiens are stable in frozen state for at least six months Precision: ±5 to ±15% Ref: Henry, Millipore

TABLE A-12. BIOCHEMICAL AND HEMATOLOGICAL METHODS (Cont)

Measurement	Fluid and Volume Required	Name of Method, Chemicals, and Amounts	Procedural Necessities	Hazard (Safety-Toxicity)	Hazard Control	Earth-Based Laboratory Expendables (Other than Chemicals) For Information Only	Method of Preservation	Comments
Energy Metabolism α Amino Acid Nitrogen	1 ml plasma	Method of Frame, Russell et al. 33 ml. H_2O, 0.5 ml 2/3N W_2SO_4, 0.5 ml 10% Sodium Tungstate 1.5 ml Standard containing 0.02 mg αamino acid N per ml (glycine and glutamic acid with sodium benzoate as preservative) 0.3 ml Phenolphthalein, 1.0 ml 0.1N NaOH, 1.0 ml 2% Sodium Tetraborate. 1.0 ml. 0.5% Sodium β-Naphthoquinone 4-Sulfonate 1.0 ml 0.3 NhCL containing 0.04 M Formaldehyde, 1.0 ml 0.05 M Sodium Thiosulfate	Filtration required. Colorimetry at 470 mu. Timed Heating at 100°C (boiling water bath) required. Cooling at tap water temperature required. Results must be read from calibration curve	Low toxicity and safety hazards in general. Potential burn hazard from heating equipment	Handling of reagents in closed containers and thorough training in necessary techniques should assure crew safety	• Volumetric measuring and dispensing apparatus • 1 Filter and • Filtration rig • 4 test tubes • 3 photometer cuvettes	Freezing	Sodium β- Naphthoquinone 4- Sulfonate reagent must be prepared fresh within 1 hour of use. Sodium Tetraborate and Acid-Formaldehyde reagent are stable indefinitely. Sodium Thiosulfate reagent and Stock Standard Amino Acid Solution are stable indefinitely in refrigerator. In flight determination is feasible. Freezing of plasma necessary for preservation. Accuracy: Low but results can be intercompared Precision: ±5% Ref: Henry
Non-Protein Nitrogen (NPN)	0.1 - 1.0 ml Serum	Nessierization Method 1.0 ml 2/3N H_2SO_4 1.0 ml 10% Sodium Tungstate 2.0 ml. 0.1 mg N/ml (in form of $(NH_4)_2SO_4$) 3.0 ml 30% (V/V) H_2SO_4 6 ml 15% Sodium Citrate, 3 ml Nessler's Reagent (contains Mercuric Iodide, Potassium Iodide, and KOH) 150 ml H_2O, 0.9 ml 30% H_2O_2	Heating over open flame. Fume hood required. Colorimetry at 420 mμ (filter) or 460 mμ (spectrophotometer) Filtration	H_2O_2 and use of open flame present explosion hazards. Nessler's reagent is toxic if inhaled, ingested or spilled on skin. 30% Sulfuric acid is, also	Use of open flame could not be tolerated. Possibly the use of a hot plate could be substituted. The use of closed containers and adequate training of crew could protect against other hazards	• Volumetric measuring and dispensing apparatus • 3 NPN digestion tubes • 3 glass beads • 3 large test tubes • 3 photometer cuvettes • 1 filter and filtration rig	Freezing	H_2O_2 and Nessler's Reagent must be refrigerated. Other reagents stable indefinitely at room temperature. Candidate for post-flight analysis because of hazards. Post-flight analysis is feasible, but even best preservation technique does not ensure stability of samples. Precision: ±5% Accuracy: Consistent results obtained when same protein precipitant used Ref: Henry

TABLE A-12. BIOCHEMICAL AND HEMATOLOGICAL METHODS (Cont)

Measurement	Fluid and Volume Required	Name of Method, Chemicals, and Amounts	Procedural Necessities	Hazard (Safety-Toxicity)	Hazard Control	Earth-Based Laboratory Expendables (Other than Chemicals) For Information Only	Method of Preservation	Comments
Energy Metabolism Protein Metabolism Blood Urea Nitrogen (BUN)	0.01-0.5 ml Serum	Urease Method 0.5 ml urea standard (0.2 mg/ml with a trace of chloroform as preservative) 1.5 ml Koch's Glycerol-Urease Extract 3.0 ml Phosphate Buffer (6 mg KH_2PO_4 and 2 mg Na_2HPO_4 per ml) 0.5 ml 2/3N H_2SO_4 0.5 ml 10% Sodium Tungstate 0.6 ml 15% Sodium Citrate 3.0 ml Nessler's Reagent (see NPN) 37 ml H_2O	Incubation required; takes 90 min at room temperature, shorter periods at higher temps. Filtration. Colorimetry at 420 mμ (filter or spectrophotometer)	Nessler's reagent is toxic if inhaled, ingested or spilled on skin. Sulfuric acid and sodium tungstate reagents are only moderately toxic if inhaled or ingested	Adequate training and the use of closed containers with rubber septa to be entered by needle-tipped by syringes would assure adequate hazard control	• Volumetric measuring and dispensing apparatus • 6 test tubes • 3 photometer cuvettes • 1 filter and filtration rig	Freezing	Urease extract is stable for at least 1 year if refrigerated. Urea standard must also be refrigerated. Other reagents are stable at room temperature indefinitely. In flight analysis feasible. Post-flight analysis also feasible (BUN in frozen serum stable for at least 6 months) Accuracy: Precision: ±5% Ref: Henry
Blood Uric Acid	0.05-1.0 ml Serum	Alkaline Phosphotungstate Method 0.5 ml 2/3N H_2SO_4 0.5 ml Sodium Tungstate. 3 ml Uric Acid Std. (0.01 mg/ml; also contains Li_2CO_3) 3 ml 14% Na_2CO_3 3 ml Phosphotungstic Acid Reagent (40g Sodium Tungstate and 32 ml 85% Phosphoric Acid and 32g Li_2SO_4. H_2O per liter) 11 ml H_2O	Colorimetry at 710 mμ. Requires photometric measurement within a time of 30 min. Requires filtration or centrifugation	Reagents are toxic if ingested or inhaled. Safety hazard is small	Adequate training of crew could reduce hazard risk to an acceptable level	• Volumetric measuring and dispensing apparatus • 3 test tubes • 3 photometer cuvettes • 1 filter and filtration rig	Freezing	Uric Acid Std: stock soln. usually stable for several years in refrigerator. Dilute std. for test must be made fresh every few days. Phosphotungstic acid reagent is stable indefinitely in refrigerator. Other reagents stable indefinitely at room temp. Beer's law failure is possible, necessitating calibration curve. (Could be determined pre-flight). Sodium Tungstate must be molybdenum-free. In-flight and post-flight

TABLE A-12. BIOCHEMICAL AND HEMATOLOGICAL METHODS (Cont)

Measurement	Fluid and Volume Required	Name of Method, Chemicals, and Amounts	Procedural Necessities	Hazard (Safety-Toxicity)	Hazard Control	Earth-Based Laboratory Expendables (Other than Chemicals) for Information Only	Method of Preservation	Comments
Energy Metabolism								determination are both feasible. Uric acid in frozen serum is stable for at least 6 months. Accuracy: Avg. recovery of added uric acid is 98%. Non-specific chromogenes yield spuriously high results. But these correlate well with other methods Precision: ±5% Ref: Henry
Standard Urinalysis								
a. Volume		*						
b. pH	0.05-0.1 ml Urine	pH Sensitive Paper	A drop of urine is placed on pH sensitive paper tape. The tape then changes color which is compared by eye to a set of standard colors	None		• pH tape itself. Approximately 1 in. per assay	None applicable	In-flight analysis is feasible Accuracy: ±0.1 to 0.5 pH units Accuracy depends on sensitivity of paper tape used
c. Glucose	1 ml Urine	Enzymatic-Photometric Method 250 mg activated charcoal 30 ml Sodium Acetate buffer. 0.15 M, pH 5.0 0.5 ml Glucose Oxidase-Peroxidase Enzyme Solution 1.0 ml 1% O-Tolidine in absolute ethanol. 3.0 ml Glucose Standard (1.5 mg/ml) with Benzoic Acid as preservative 2 ml H_2O	Filtration required Mixing for 10 min period Colorimetry at 625 mμ. Timed incubation at 20°C (method calls for water bath, but alternatives are possible)	Low toxicity and safety hazards O-Tolidine in absolute ethanol is used in too small a quantity to constitute a safety or toxicity hazard	Adequate training of crew members and use of closed containers should eliminate most of risk	• Volumetric measuring and dispensing apparatus • 1 filter and filtration apparatus • 4 test tubes • 4 photometer cuvettes	Freezing	Final mixed enzyme reagent only stable for 1 week in refrigerator. In-flight analysis is feasible. Post-flight analysis also feasible, although changes in glucose during frozen storage do occur Precision: ±5% Ref: O'Brien and Ibbott

* GFE

TABLE A-12. BIOCHEMICAL AND HEMATOLOGICAL METHODS (Cont)

Measurement	Fluid and Volume Required	Name of Method, Chemicals, and Amounts	Procedural Necessities	Hazard (Safety-Toxicity)	Hazard Control	Earth-Based Laboratory Expendables (Other than Chemicals) For Information Only	Method of Preservation	Comments
Energy Metabolism								
Standard Urinalysis								
d. Acetone Bodies	0.2-0.5 ml Urine	Flurimetric Method 0.4 ml NAD + Solution (10 m M) 0.4 ml NADH Solution (5 m M) 0.1 ml Hydroxy butric Dehydrogenase Solution (1 mg/ml in saturated $(NH_4)_2SO_4$)	Requires fluorimetry attachment or modification of colorimeter 20 min incubation time	None		• Volumetric measuring and dispensing apparatus • 3 photometer cuvettes	Freezing or lyophilization	Stability of enzyme and co-factor solutions is undetermined. In-flight assay is feasible. Highly specific and accurate Precision: ±2 to ±5% Ref: Young and Renold
e. Microscopy	1.0 ml Urine	Microscopic Method	Microscope required. Filtration required. Centrifugation can also be used, but filtration still required	None		• Volumetric measuring and dispensing apparatus • 1 membrane and filter and associated apparatus	Lyophilization	In-flight determination is feasible. Post-flight analysis on reconstituted lyophilized samples is also feasible
f. Specific Gravity		Mass Measurement or Refractive Index Measurement	Equipment necessitated by choice of method	None			None applicable	In-flight determination is feasible using an on-board mass measurement device or refractive index measuring device
g. Albumin	0.1 ml Urine	Immunoassay Method 0.1 ml I^{125} labelled human albumin solution (100-200 μC per mg; 0.3-1 mg/100 ml) 0.1 ml guinea pig anti-human-albumin serum 0.1 ml rabbit anti-guinea pig-globulin serum	19 hours incubation at room temperature. Filtration required. Radioactivity measuring equipment required (well-type scintillation counter) Requires construction of standard curves	No toxicity hazards - Safety hazard from radioactivity is very small due to low concentrations and small amounts	Adequate training of crew members and use of closed containers should eliminate the slight risk which exists	• Volumetric measuring and dispensing apparatus • 1 test tube	Freezing or lyophilization	Stability of anti-sera and human globulin solutions is undetermined. In-flight assay is feasible Very sensitive Precision: ±4% Ref: Keen and Chlouverakis
h. Turbidity	1 ml Urine	Nephelometry	Requires nephelometry attachment for colorimeter	None		• 2 nephelometry cuvettes	None Applicable	In-flight determination is feasible Ref: Henry

TABLE A-12. BIOCHEMICAL AND HEMATOLOGICAL METHODS (Cont)

Measurement	Fluid and Volume Required	Name of Method, Chemicals, and Amounts	Procedural Necessities	Hazard (Safety-Toxicity)	Hazard Control	Earth-Based Laboratory Expendables (Other than Chemicals) For Information Only	Method of Preservation	Comments
Endocrine								
Urinary Antidiuretic Hormone (Vasopressin)	0.2-1.0 Urine	Bioassay: Hydrated Rat Assay No chemicals required	Requires the maintenance of a laboratory colony of experimental animals. Requires measurement of urine output of rats (volume and concentration)	None		• 1 syringe • Volumetric measuring apparatus	Freezing or lyophilization	Stability of preservation technique needs to be tested by a laboratory study. Although in-flight analysis is feasible, the need for use of lab animals may make the method non-practicable Sensitivity: ±2 μU(USP) vasopressin Ref: Final Rept NASA Contract No. NASw-1562
Urine Specific Gravity								See "Energy Metabolism, Std Urinalysis"
Protein-Bound Iodine (PBI)	0.05 ml Serum or Plasma	Colorimetric Method 0.05 ml KI Std (5 μg Iodine/100 ml) 0.15 ml. 10% Zinc Sulfate 0.15 ml 2% NaOH 0.15 ml 4N Na_2CO_3 0.3 ml 2NHC1 0.3 ml 7N H_2SO_4 0.0075 ml 1N $NaAsO_2$ 0.0075 ml 0.02 N Ceric Ammonium Sulfate 4 ml H_2O	Requires colorimetry at 317 mμ. Centrifugation required. Controlled heating at 90°C. Controlled heating at 600°C ±25°C for 2 hours. Incubation in water bath or equivalent at 20°C for 30 min in the dark	Hazards exist from heating equipment and from toxicity of reagents	It may be possible to tolerate toxicity problem because of the small quantities of reagents required. The use of containers closed with rubber septa to be entered by needle-tipped syringes would also reduce risk. Safety hazards from heating equipment and toxicity problems could be mitigated by adequate training of crew in risks, methods to protect against them, and procedural details	• Volumetric measuring and dispensing apparatus • 2 centrifuge tubes • 2 photometer cuvettes	Freezing	Reagents should be stable at room temperature indefinitely. In-flight analysis is feasible. Post-flight analysis is also feasible Accuracy: Better than 95% recovery of added thyroxine is possible Ref: O'Brien and Ibbott

TABLE A-12. BIOCHEMICAL AND HEMATOLOGICAL METHODS (Cont)

Measurement	Fluid and Volume Required	Name of Method, Chemicals, and Amounts	Procedural Necessities	Hazard (Safety-Toxicity)	Hazard Control	Earth-Based Laboratory Expendables (Other than Chemicals) For Information Only	Method of Preservation	Comments
Endocrine (Cont)								
Thyroxine Binding Prealbumin (TBPA)	1-3 ml Serum	Electrophoretic Method 20 ml Glycine Acetate Buffer, pH 9.0 0.003-0.015 ml I^{131} labelled thyroxine (75-100 μC/100 ml serum; 3 μg/100 ml serum)	Electrophoresis for 20 hours at 120 volts and 9 ma Strip scanning radioactivity measuring equipment	Radioactivity of labelled thyroxine	Radioactivity is too small to present a significant hazard	• Volumetric measuring and dispensing apparatus	Freezing	Stability of preservation is undetermined. In-flight and post-flight assay both feasible Ref: Oppenheimer, J.H. et al.
Parathyroid Activity								Method undeveloped
Pancreatic Islet Tissue								
Insulin	0.5 ml Plasma	Isotopic Immunoassay 6.0 ml I^{131} labelled insulin 0.5 ml of 12 different Human Insulin Standards. Veronal Buffer containing 0.25% Human Serum Albumin, 6.0 ml Guinea Pig Antiserum, Chromatographic Reagents or Electrophoresis Buffers	Paperchromatography or electrophoresis. 4-5 day incubation at 4°C Radioactivity measuring equipment	Radioactivity is present in too small amounts to constitute a significant hazard. Shock hazard from electrophoresis equipment	Adequate training of crew and insulation of electrical equipment should insure against risks	• Volumetric measuring and dispensing apparatus. • Strips for chromatography or electrophoresis • 16 test tubes	Freezing	Stability of reagents required is undetermined. Much too complicated and lengthy procedure for use in-flight. Post-flight analysis is feasible. Highly specific Ref: Yalow and Berson
Pituitary Activity								
Adrenocorticotropic Hormone		Later						

TABLE A-12. BIOCHEMICAL AND HEMATOLOGICAL METHODS (Cont)

Measurement	Fluid and Volume Required	Name of Method, Chemicals, and Amounts	Procedural Necessities	Hazard (Safety-Toxicity)	Hazard Control	Earth-Based Laboratory Expendables (Other than Chemicals) For Information Only	Method of Preservation	Comments
Endocrine (Cont) Adrenal Cortical Activity								
a. Urinary 17-Hydroxy-corticosteroids	10 ml Urine	Colorimetric Method 0.4 ml Glacial Acetic Acid 4 ml 1 M Acetate Buffer, pH 5 4 ml B-Glucuronidase (Ketodase) Reagent buffered at pH 5 (5000 Fishman units/ml) 60 ml Chloroform/Ethyl Acetate (3:1) 12 ml 0.1 N NAOH 20 mg Sodium Sulfate 4 ml 64% H_2SO_4/Ethonal (3:2) 4 ml Phenylhydrazine in preceding reagent (1 mg/ml) 5 ml Tetrahydro-Hydrocortisone (5 μg/ml), 20 ml H_2O	Colorimetry at 410 mμ Incubation at 50°C for 4 hours. Filtration required. Evaporation under stream of air (chloroform/ethyl acetate)	Toxicity of some reagents required is very great. Chloroform, for example, can form phosgene	Adequate hazard control is unfeasible	• Volumetric measuring and dispensing apparatus • 4 centrifuge tubes • 2 graduated cylinders (50 ml) • Filter paper and filtration rig	Freezing	Phenylhydrazine reagent stable for only 1 week under refrigeration. Because of the toxicity problem, in-flight analysis is unfeasible. Post-flight analysis is feasible Ref: Frankel and Reitman
b. Urinary 17-Ketosteroids	5-10 ml Urine	Colorimetric Method 0.3 ml 4% Formaldehyde 1.2 ml 62% (V/V) H_2SO_4 35 ml Ethylene Dichloride/Ethyl Acetate (2:1) 2 gm Sodium Sulfate, 20 pellets NaOH 0.75 ml Dehydroisoand rosterone (100 μg/ml) in ethanol 2.0 ml 1% m-Dinitrobenzene (in ethanol)/40% N-Benzyltri-methyl-ammonium-methoxide (in methanol) (4:3) 12-24 ml 50% Ethanol 12-24 ml Methylene Chloride	Colorimetry at 520 mμ required. Equivalent of heating in a boiling water bath for 25 min. Filtration required. Evaporation in air steam during incubation at 50°C. Incubation at 30°C for 30 min. Color development must be carried out in dark and measurement must be done immediately because color fades rapidly	Reagents used are extremely toxic. Some are also flammable and/or explosive	Adequate hazard control is unfeasible	• Volumetric measuring and dispensing apparatus • 5 centrifuge tubes • Filter-filtration apparatus • 1 graduated cylinder (50 ml) • 4 photometer cuvettes	Freezing	N-Benzyltri-methyl-ammonium-methoxide solution is stable in refrigerator. Due to hazards and complexity, in-flight analysis is unfeasible. Post-flight analysis is feasible Ref: Frankel and Reitman

TABLE A-12. BIOCHEMICAL AND HEMATOLOGICAL METHODS (Cont)

Measurement	Fluid and Volume Required	Name of Method, Chemicals, and Amounts	Procedural Necessities	Hazard (Safety-Toxicity)	Hazard Control	Earth-Based Laboratory Expendables (Other than Chemicals) For Information Only	Method of Preservation	Comments
Endrocrine (Cont) Adrenal Cortical Activity (Cont) c. Urinary aldosterone	15 ml Urine	Double Isotope Assay: H^3 labelled Aldosterone C^{14} labeled Acetic Anhydride Silica Gels Chloroform ethanol ethyl acetate, ethylene dichloride, methanol, cyclohexane, benzene, acetone (all used as chromatographic solvents) 3 gm 2,5 Diphenyl-oxazole' 200 mg 1,4-bis-2 (4-Methyl-5-Phenyloxazolyl) benzene, 1 ml Toluene, Concentrated HCl, 105 ml Dichloromethane 1.5 ml 1 N NaOH 1.5 ml 0.1 N NaOH 1.5 ml 0.1 N Acetic Acid Sodium Sulfate and Phosphorus Pentoxide as dessicants, 8 ml 70% Methanol, 2 ml Toluene/Petroleum Ether (1:1)	Requires paper chromatography and thin layer chromatography, liquid scintillation radioactivity-measuring equipment, U.V. light source, 24-hour hydrolysis in dark	Some reagents are highly toxic and/or flammable and/or explosive	Adequate hazard control is unfeasible	• Volumetric measuring and dispensing apparatus • 1 separatory funnel • Materials for paper and thin layer-chromatography	Freezing	Very complex procedure requiring multiple chromatographic separations. Because of complexity and hazards, in-flight analysis is unfeasible. Post-flight analysis is feasible Ref: Benraad and Kloppenborg

TABLE A-12. BIOCHEMICAL AND HEMATOLOGICAL METHODS (Cont)

Measurement	Fluid and Volume Required	Name of Method, Chemicals, and Amounts	Procedural Necessities	Hazards (Safety-Toxicity)	Hazard Control	Earth-Based Laboratory Expendables (Other than Chemicals) For Information Only	Method of Preservation	Comments
Endocrine (Cont) Neurohumeral Activity								
Urinary Catecholamines	5-10 ml Urine	Fluorimetric Method: 1 ml 11. 6 N Perchloric Acid, 20 ml 0.4 N Perchloric Acid, 400 mg Acid-Washed Aluminum Oxide, 5 mg Sodium Metabisulfite, 11 ml 1 N NaOH, 40 ml H_2O 3 ml 0.05 N Perchloric Acid 0.1 ml Phosphate Buffer, 0.5 M, pH 7.0, 0.1 ml 1.6 N Acetic Acid 0.2 ml Standard Solutions of Catecholamines 0.02 ml 0.25% Potassium Ferricyanide, 0.2 ml Alkaline Sodium Ascorbate 200 mg EDTA	Fluorimetry attachment for colorimeter. High speed centrifugation. Timed shaking and stirring. Timed intervals between some steps of procedure	Potassium ferricyanide, EDTA and perchloric acid are toxic. Perchloric acid can form explosive compounds when it reacts with other materials	Explosion hazard may be slight due to small quantities and dilutions of perchloric acid used. Toxicity problems can be avoided by the use of closed containers and an adequately trained crew	• Volumetric measuring and dispensing apparatus • 3 centrifuge tubes • 1 breaker • 3 photometer cuvettes	Freezing with sodium metabisulphite as preservative	Ferricyanide solution must be prepared fresh immediately before analysis. In-flight analysis is feasible but difficult. Post-flight analysis is feasible Ref: Anton and Sayre
Urinary Serotonin	100 ml Urine	Enzymatic-Fluorimetric Method 10 gm Ion Exchange Resins Sodium Hydroxide Acetic Acid 6 ml 1 M Sodium Acetate Buffer, pH 6.9, 2 ml 1% EDTA, 2 ml 2% Ascorbic Acid 10,000 units Bacterial B-Glucuronidase, 0.05 ml Chloroform, 6 ml 1 M Sodium Acetate Buffer, pH 7.5, 6 ml Sodium Acetate Buffer, pH 5.5, 10 ml H_2O 0.25 ml Glusulase 46 ml 0.02 M Ammonium Acetate Buffer, pH 7.5 5 ml 6 N HCl	Column chromatography required. Fluorimetry attachment for colorimeter required: Activation wave length - 300 mμ; fluorescence wavelength - 550 mμ. Incubation overnight at 37°C required	Some reagents are toxic	Small amount of chloroform required should not present a significant hazard. Toxicity of other reagents can be controlled by the use of closed containers and adequate training of the crew in safety control and techniques required	• Volumetric measuring and dispensing apparatus • Glassware for ion exchange columns • 6 breakers • 16 test tubes	Freezing	Ascorbic acid solution must be prepared just before use. Use of ion exchange column chromatography is difficult in the absence of gravity. Very complicated and time-consuming procedure. Candidate for post-flight analysis, which is feasible Ref: Davis et al

TABLE A-12. BIOCHEMICAL AND HEMATOLOGICAL METHODS (Cont)

Measurement	Fluid and Volume Required	Name of Method, Chemicals, and Amounts	Procedural Necessities	Hazard (Safety-Toxicity)	Hazard Control	Earth-Based Laboratory Expendables (Other than Chemicals) For Information Only	Method of Preservation	Comments
Hematological								
Cell Counts and Morphology								
RBC (Total)	0.1 ml Whole Blood	Hemacytometer Counting 2-3 ml Gower Diluting Fluid (16.65 gm Glacial Acetic Acid, 6.25 gm Sodium Sulfate per 100 ml H_2O)	Microscope	Reagent is only slightly toxic	Adequate training of crew and use of closed containers should reduce hazard risk to an acceptable level	• 1 hemacytometer counting chamber • 1 red counting pipette	Chemical	No method of preservation is completely satisfactory. In-flight determination is feasible Ref: Frankel and Reitman
WBC (Total)	0.1 ml Whole Blood	Hemacytometer Counting 1-2 ml 1 or 2% Acetic Acid	Microscope	Toxicity of reagent is negligible		• 1 hemacytometer counting chamber • 1 white counting pipette	Chemical	No method of preservation is completely satisfactory. In-flight determination is feasible Ref: Frankel and Reitman
WBC Differential	0.1 ml Whole Blood	Counting of Air-Dried Blood Smear 1-2 ml Giemsa or Wright stain. Both stains employ methanol as a solvent	Microscope Air drying of blood smear required	Staining solutions are toxic and flammable	Quantities of staining solution required are small. Use of closed containers by an adequately trained crew should protect against hazards	• 1 Microscope slide and cover slip	Chemical	Phase microscopy of blood smears is an alternative to using stains. In-flight determination is feasible. Post-flight determination is also feasible Ref: Frankel and Reitman
RBC Survival	1 ml Whole Blood	Isotopic Labeling of Red Cells Subject's red cells can be labeled pre-flight with Fe^{59} or Cr^{51}. No chemicals required	Radioactivity measuring equipment	Amount of radioisotope used is too small to constitute a hazard		• 1 test tube	Chilling or freezing	In-flight and post-flight determination is feasible Ref: Frankel and Reitman
RBC Fragility	0.18 ml Heparinized Whole Blood	Method of Dacie 5 ml each of NaCl solutions of the following concentrations: 0, 0.15, 0.20, 0.26, 0.30, 0.34, 0.38, 0.42, 0.46%	Colorimetry at 540 mμ. Configuration. Incubation at room temperature for 60 min	No hazards		• 9 photometer cuvettes. Volumetric measuring and dispensing apparatus	None applicable	NaCl solutions are stable indefinitely if refrigerated. In-flight determination is feasible but difficult. Post-flight determination is not feasible Ref: Frankel and Reitman

TABLE A-12. BIOCHEMICAL AND HEMATOLOGICAL METHODS (Cont)

Measurement	Fluid and Volume Required	Name of Method, Chemicals, and Amounts	Procedural Necessities	Hazard (Safety-Toxicity)	Hazard Control	Earth-Based Laboratory Expendables (Other than Chemicals) For Information Only	Method of Preservation	Comments
Hematological (Cont)								
Direct Bilirubin	0.04 - 0.8 ml Serum or Plasma	Diazo Method of Malloy and Evelyn 10 ml Methanol 7.2 ml H_2O 1 ml (1.5 ml conc. H Cl in 100 ml water) 1 ml Diazo Reagent (0.3 ml 0.5% Sodium Nitrite plus 10 ml solution containing 1 mg/ml sulfanilic Acid and trace H Cl)	Colorimetry at 540 mμ	Reagents are toxic and/or flammable	Use of closed containers by an adequately trained crew should reduce hazard risk	• Volumetric measuring and dispensing apparatus • 2 Photometer cuvettes • 2 test tubes	Freezing and storage in the dark	Post-flight analysis is feasible. Hazardous nature of reagents may make in-flight determination unfeasible. Sodium nitrite must be stored as a 5% stock solution in refrigerator and diluted just before use Ref: Frankel and Reitman
Karyotyping	0.1 - 0.2 ml Whole Blood	Phytohemagglutinin Incubation 19.9 ml 199 H Medium, 15% Fetal Calf Serum 10 units Penicillin, 0.1 mg Streptomycin, and 20 units Mycostatin 0.1 ml Phytohemagglutinin. 5% CO_2-in-air (must be bubbled through medium) Colchicine 5 ml Cellular Fixative 2% Aceto-orcein Stain	Incubation at 37°C for from 3 to 7 days. Microscope	Colchicine, cellular fixative and staining solutions are toxic	Adequate control of toxicity hazard could be effected by the use of closed containers and an adequately trained crew	• Volumetric measuring and dispensing apparatus • 1 heparinized white cell pipette • 1 20 ml snap plastic cap vial • 5-10 microscope slides	Cryogenic freezing and storage with protective adjuvants	In-flight determination is very difficult, but post-flight determination is not feasible because of the difficulty in preserving viable, mitotically competent leukocytes Ref: Arakaki and Sparkes
Cellular Body Defenses Leukocyte Motility and Phagocytosis	20 ml Whole Blood	Microscopic Observation Suspension of iron filings or latex particles	Microscope	None		• Volumetric measuring and dispensing apparatus • 1 test tube • 5-10 microscope slides	Cryogenic freezing and storage with protective adjuvants	In-flight determination is difficult, but post-flight determination is not feasible Ref: Rowe and Cohen
Leukocyte Mobilization		Later						

TABLE A-12. BIOCHEMICAL AND HEMATOLOGICAL METHODS (Cont)

Measurement	Fluid and Volume Required	Name of Method, Chemicals, and Amounts	Procedural Necessities	Hazard (Safety-Toxicity)	Hazard Control	Earth-Based Laboratory Expendables (Other than Chemicals) For Information Only	Method of Preservation	Comments
Hemostasis								
Platelet Functions Platelet Count	0.1 ml Whole Blood	Rees-Ecker Direct Counting Method 2-3 ml Diluting Fluid (3.8 gm Sodium Citrate, 0.2 ml 40% Neutral Formaldehyde, 0.1 gm Brilliant Cresyl Blue, 100 ml H_2O)	Microscope Controlled shaking 5-10 minutes	Diluting fluid is slightly toxic	Toxicity hazard can be controlled by the use of closed containers and an adequately trained crew	• 1 siliconized syringe • 1 siliconized test tube • 1 red cell pipet • 1 hemacytometer counting chamber • 1 Petri dish	Chemical	In-flight and post-flight determination is feasible Ref: Frankel and Reitman
Platelet Adhesiveness	16 ml Whole Blood	Comparative Counting 4-6 ml Diluting fluid (See platelet count)	See platelet count	See platelet count	See platelet count	See platelet count in addition: • 1 more syringe • Column packed with glass beads.	None applicable	In-flight determination is feasible. Post-flight determination is not Ref: Frankel and Reitman
Humeral Components of Coagulation-Seratonin		See Endocrine						
Bleeding Time		Duke Method No chemicals required	Timing required	None		• 1 Lancet • Blotting paper	None applicable	In-flight determination is feasible. Post-flight determination is not Ref: Frankel and Reitman
Clotting Time	0.5 - 1.0 ml Whole Blood	Capillary Tube Method No chemicals required	Timing required	Safety hazard from small bits of broken glass	Enclosing tubes in plastic bag and breaking the tubes while in the bag should control hazard risk	• 4-5 glass capillary tubes	None applicable	In-flight determination is feasible. Post-flight determination is not Ref: Frankel and Reitman

TABLE A-12. BIOCHEMICAL AND HEMATOLOGICAL METHODS (Cont)

Measurement	Fluid and Volume Required	Name of Method, Chemicals, and Amounts	Procedural Necessities	Hazard (Safety-Toxicity)	Hazard Control	Earth-Based Laboratory Expendables (Other than Chemicals) For Information Only	Method of Preservation	Comments
Hemostasis Assay of Elements of Clotting								
Fibrinogen	0.1 - 1 ml Plasma	Biuret Method 30 ml 0.85% NaCl 1 ml Phosphate Buffer, M/5, ph 6.4 0.5 ml 1% $CaCl_2$ 0.2 ml Thrombin Solution (100 units) 10.0 ml 3% HaOH 3.0 ml Biuret Reagent (17.3 mg. $CuSO_4$ 5 H_2O, 173 mg Sodium Citrate, 100 mg Na_2CO_3 per ml) 2.5 ml Protein Standard Solution 2.5 ml 6% NaOH	May require centrifugation. 37°C water bath or equivalent. Colorimetry at 545 mμ	Some reagents are toxic	Control of toxicity hazard can be accomplished by the use of closed containers and an adequately trained crew.	• 1 flask • 1 glass rod • 1 centrifuge tube • 3 photometer cuvettes • 3 test tubes • Volumetric measuring and dispensing apparatus	Freezing	Thrombine solution is stable indefinitely in refrigerator. Commercial standard protein solutions are stable in refrigerator. In-flight analysis is feasible. Post-flight analysis may be feasible, also Ref: Henry
Fibrinolytic Activity	1.5 ml Plasma	Stefanini-Dame Shek Screening Test: 1 ml 3.8% Sodium Citrate 1.5 ml Bovine Fibrinogen (6 mg/ml isotonic saline) 0.2 ml Thrombin Solution (20 units)	Centrifugation-low and high speed. Ice bath or equivalent. 37°C bath or equivalent. 24 hours observation may be necessary. Timing required	None		• Volumetric measuring and dispensing apparatus • 2 centrifuge tubes • 3 test tubes	Freezing	Stability using this method of preservation is undetermined. In-flight analysis is feasible. Post-flight analysis may be feasible Ref: Frankel and Reitman
Prothrombin Activity PTC AHG	0.2 ml Plasma 1 ml Plasma 0.1 ml Plasma	Owren Method Assay for Factor IX Jung Method	Centrifugation is required. 37°C water bath or equivalent	No reagents are used which are significantly toxic		• 2 centrifuge tubes for each test • 2 test tubes for each test • Volumetric measuring and dispensing apparatus.	Freezing Freezing Freezing	Each of these tests require human and/or bovine plasma standards of various types which may not store well for extended missions. Techniques are complex. Stability of preserved samples has not been determined, In-flight and post-flight

TABLE A-12. BIOCHEMICAL AND HEMATOLOGICAL METHODS (Cont)

Measurement	Fluid and Volume Required	Name of Method, Chemicals, and Amounts	Procedural Necessities	Hazard (Safety-Toxicity)	Hazard Control	Earth-Based Laboratory Expendables (Other than Chemicals) For Information Only	Method of Preservation	Comments
Hemostasis								analysis may both be possible, but post-flight analysis may be preferred because of the problem of storage of standards and complexity of procedures Ref: Frankel and Reitman Report on NASA Contract No. NASW-1562
Clinical Metabolic and Nutritional Evaluation								
Muscular Status Evaluation								
Blood Lactic Acid	1-3 ml Whole Blood	Colorimetric Method 3 ml 10% Zinc Sulfate 3 ml 0.5N NaOH - 1.5 ml 20% Copper Sulfate 0.5 g $Ba(OH)_2$ 0.3 ml 4% Copper Sulfate 18 ml conc H_2SO_4 0.3 ml p-Hydroxydiphenyl Reagent (1.5 mg p-Hydroxy diphenyl per ml of 0.5% NaOH) 1 ml lactic acid standard (200 μ g/ml), 32 ml H_2O	Requires immediate protein precipitation of blood sample. Colorimetry at 570 mμ. Centrifugation. Ice bath or equivalent. Boiling water bath or equivalent	Some reagents are highly toxic. Some can cause severe burns	Adequate hazard control may not be possible	• Volumetric measuring and dispensing apparatus • 6 centrifuge tubes • 3 large test tubes • 3 photometer cuvettes	Freezing of protein precipitated Solution	p-Hydroxydiphenyl Reagents is stable indefinitely. Lactic Acid standard is stable indefinitely in refrigerator. Toxicity and safety hazards may prevent in-flight determination. Post-flight analysis may be feasible Accuracy: ±5% Precision: ±5% Ref: Henry

TABLE A-12. BIOCHEMICAL AND HEMATOLOGICAL METHODS (Cont)

Measurement	Fluid and Volume Required	Name of Method, Chemicals, and Amounts	Procedural Necessities	Hazard (Safety-Toxicity)	Hazard Control	Earth-Based Laboratory Expendables (Other than Chemicals) For Information Only	Method of Preservation	Comments
Muscular Status Evaluation								
Urinary Creatine/ Creatinine	0.2 ml Urine	Colorimetric Method (Jaffe) 9.0 ml 0.04 M Picric Acid 3.0 ml saturated aqueous Oxalic Acid 600 mg Lloyd's Reagent 6.0 ml 0.75 N NaOH 0.02 ml Stock Creatinine Standard (1.5 mg/ml creatinine in 0.1 N HCl) 2.0 ml Creatine Standard (15μg/ml H_2O) 38 ml H_2O	Creatine is converted to creatinine by heating at 100°C for 1.5 to 2 hours. Centrifugation. Colorimetry at 520 mμ	Picric acid is a safety hazard. This and other reagents are toxic	Adequate hazard control may not be possible	• Volumetric measuring and dispensing apparatus	Freezing	Stock Creatinine Standard is stable indefinitely in refrigerator. Creatine standard is not stable and must be prepared fresh just before use. Picric acid reagent is stable in dark at room temperature. If adequate hazard control is possible, in-flight analysis is feasible. Post-flight analysis is also feasible Precision: ±5% Ref: Henry
Mineral Metabolism and Skeletal Status Evaluation								
Urine Calcium (also, urine, serum sweat, and feces Calcium - Min Metab)	0.1 - 1.0 ml of fluid of interest	Atomic Absorption Method	Atomic absorption spectrophotometer	Electrical shock and flash hazard may exist	Proper equipment design should insure against hazards	• Volumetric measuring and dispensing apparatus	Freezing	In-flight and post-flight analysis are both feasible Ref: Henry

TABLE A-12. BIOCHEMICAL AND HEMATOLOGICAL METHODS (Cont)

Measurement	Fluid and Volume Required	Name of Method, Chemicals, and Amounts	Procedural Necessities	Hazard (Safety-Toxicity)	Hazard Control	Earth-Based Laboratory Expendables (Other then Chemicals) For Information Only	Method of Preservation	Comments
Mineral Metabolism and Skeletal Status Evaluation								
Urine Phosphates	0.1 ml Urine	Colorimetric Method 3 ml 30% Trichloroacetic Acid 2 ml Phosphorus Standard (10 μg/ml) 1.2 ml 0.020 M Ammonium Molybdate (contains 0.084 ml conc H_2SO_4 per ml solution) 12 ml p-Semidine Reagent (0.5 mg per ml 1% $NaHSO_3$) 12 ml H_2O	Colorimetry at 770 mμ	Reagents are toxic	The use of closed containers and an adequately trained crew should control toxicity hazard. The use of a closed working area with glove ports should further protect against exposure to toxic materials	• Volumetric measuring and dispensing apparatus • 3 test tubes • 3 photometer cuvettes	Freezing	p-Semidine Reagent is stable for 1 month in refrigerator. In-flight determination is feasible if hazard controls are adequate. Post-flight analysis is feasible Precision: ±4% Ref: Henry
Urine Hydroxproline		Later						
Fluid Volume Distribution and Evaluation								
Body fluid distribution	1 ml Serum and Urine	Information can be obtained by careful evaluation of other data. The use of radioisotopes of Na and/or K can be used for this purpose. Measurement of radioactivity as well as analysis for Na and K would be necessary. See below	Radioactivity measuring equipment	Radioactivity of isotopes presents an insignificant safety hazard because of small amounts used				
Fluid Volume Distribution and Evaluation								
Urinary Catecholamines, Adrenal Steroids ADH (antidiuretic hormone)		See Endocrine						

TABLE A-12. BIOCHEMICAL AND HEMATOLOGICAL METHODS (Cont)

Measurement	Fluid and Volume Required	Name of Method, Chemicals, and Amounts	Procedural Necessities	Hazard (Safety-Toxicity)	Hazard Control	Earth-Based Laboratory Expendables (Other then Chemicals) For Information Only	Method of Preservation	Comments
Fluid Volume Distribution and Evaluation								
Serum, Urine Sweat, and Feces Na and K	0.7 ml Serum 1-2 ml Urine 1-2 ml Sweat 1-2 gm Feces	Chemical Determinations 4.0 ml 10% Trichloroacetic Acid 2.0 ml Sodium Standard (0.64 mg. Na/ml) 4.0 ml Uranyl Zinc Acetate Reagent 8.0 ml 95% Ethanol 0.8 ml Potassium Standard (0.2 mg/ml) 0.8 ml Half-Saturated Sodium Acetate 2.0 ml Sodium Cobaltinitrite Reagent 4.0 ml Wash Solution Saturated with Potassium Cobaltinitrite. 16.0 ml 70% ethanol 4.0 ml 7.5% Glycine Solution 4.0 ml 25% Na_2CO_3 4.0 ml Phenol Reagent of Folin-Ciocalteu 58 ml water	Colorimetry at 430 mμ, and 660 mμ Centrifugation. Boiling water bath or equivalent. 37°C water bath or equivalent	Most reagents are toxic. Some are flammable	Hazard control using closed containers in a closed area (e.g. box with glove ports) may be possible with an adequately trained crew	• Volumetric measuring and dispensing apparatus • 6 test tubes • 12 photometer cuvettes • Centrifuge tubes	Freezing	Post-flight analysis is feasible using flame photometry which yields highly accurate and precise results. In-flight determination may not be feasible due to toxicity and flammability or reagents, and complexity of procedures Accuracy: High Precision: Na-±3.6 K-±10% Ref: Henry

APPENDIX B

EQUIPMENT DEFINITION

APPENDIX B-EQUIPMENT DEFINITION

Appendix B is a compilation of equipment information on the various measurements required. Component and support equipments plus functional flow diagrams are included for each measurement as appropriate.

TABLE B-1. VECTORCARDIOGRAM DATA

Equipment Item	Components	Support Equipment
(See Figure B-1) Ref: NASA Tech. Req. Project Apollo, up-dated 1/15/67, Mod No. 10, paragraph 3.2.1 : DB-53-M051 4/28/67 : DB-50-67-M018 3/31/67	Standard Apollo Block II Signal Conditioners (9) Electrode Harness Assembly (3) (Quick Don-Doff) Electrodes (Spacelabs, Inc. Part No. 102761) (3 sets of 7) Frank Resistor Network (3) Automatic Calibration (1) Calibration Signal Switching DC to DC Power Converter (1)	Cardiotachometer (10 second intervals) Display Heart Race ECG Trace (Strip Chart per M051 and CRT) Calibration Skin Preparation Electrode Paste Applicators Wipes (Post Test Cleaning) Cabling Tape Recording (Dump and Return) Subject Identity Mission Elapsed Time

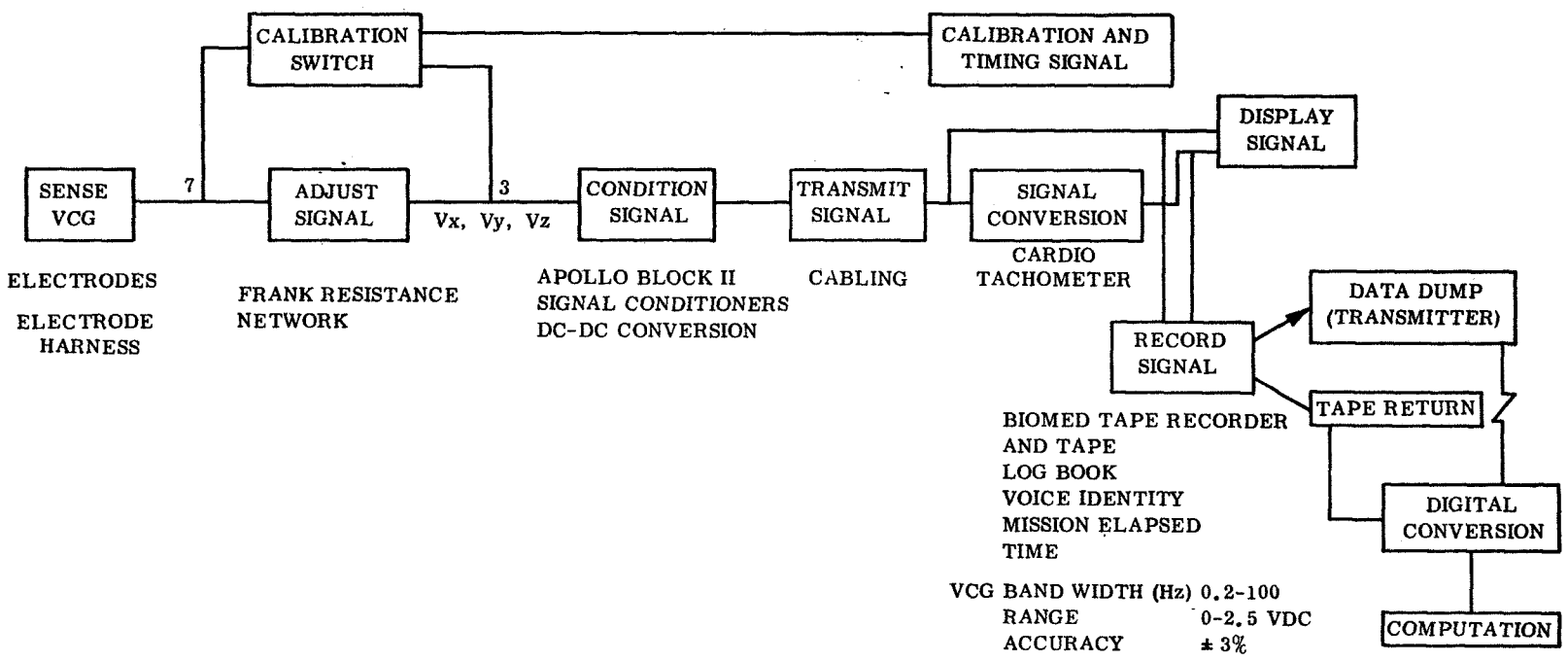

Figure B-1. Vectorcardiogram Functional Flow Diagram

TABLE B-2. PHONOCARDIOGRAM DATA

Equipment Item	Components	Support Equipment
(See Figure B-2) Ref: NASA Tech. Req. Project Apollo, updated 1/15/67, Mod No. 10, paragraph 3.2.4	Microphone Transducer Signal Conditioner (Spacelabs P/N 103070- Same as ECG Conditioner)	Stomaseal Tape (for fastening to sternum) - needs improvement Connector Cable Calibration Signal Ground Electrode with Disconnect

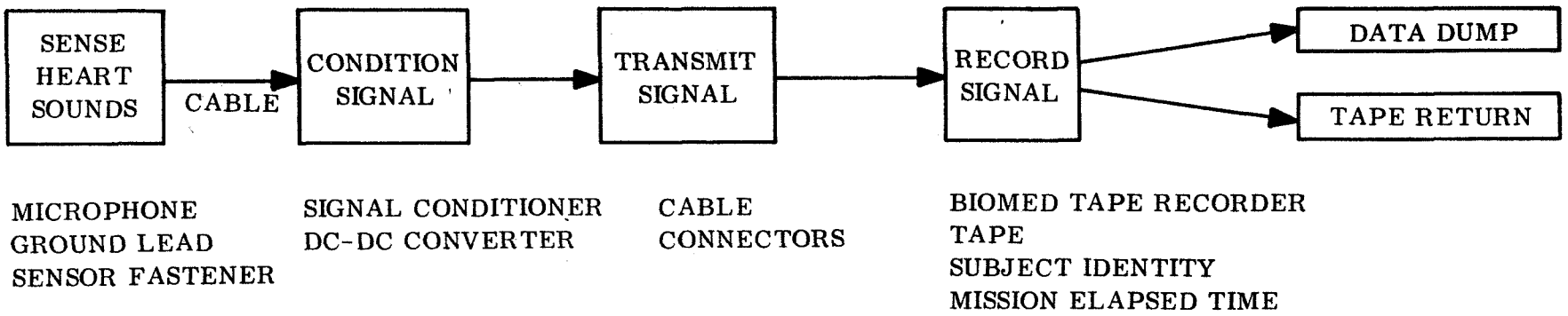

DATA REQUIREMENTS

BANDWIDTH FLAT ± 3 dB 30-100 Hz
ROLL OFF RATES 6 dB/OCTAVE MINIMUM
AMPLITUDE (TRANSDUCER SENSITIVITY) TBD
AMPLITUDE (SIGNAL CONDITIONER)
0-0.5 VDC
0-5.0 VDC

Figure B-2. Phonocardiogram Functional Flow Diagram

TABLE B-3. IMPEDANCE CARDIOGRAM DATA

Equipment Item	Components	Support Equipment
(See Figures B-3, B-4, and B-5) Ref: NASA Tech. Reqt. Project Apollo, updated 1/15/67, Mod No. 10 Aerospace Med. 37, 1208, 1966, Hill et al. J. Applied Physical 22: 161, 1967	Neck Electrodes (2 per subject) Sternal Electrode (1 per subject) Abdominal Electrode (1 per subject) Constant Current Source (6 ma, 100 kH_z Sinusoidal Current) High Impedance Amplifier and Detection Circuit Yielding • Impedance Change Signal • Derivative Calibration Circuit (precision calibrated resistors) DC Power (10 ± 0.1 V)	Phonocardiograph ECG Magnetic Tape and Recorder Strip Chart

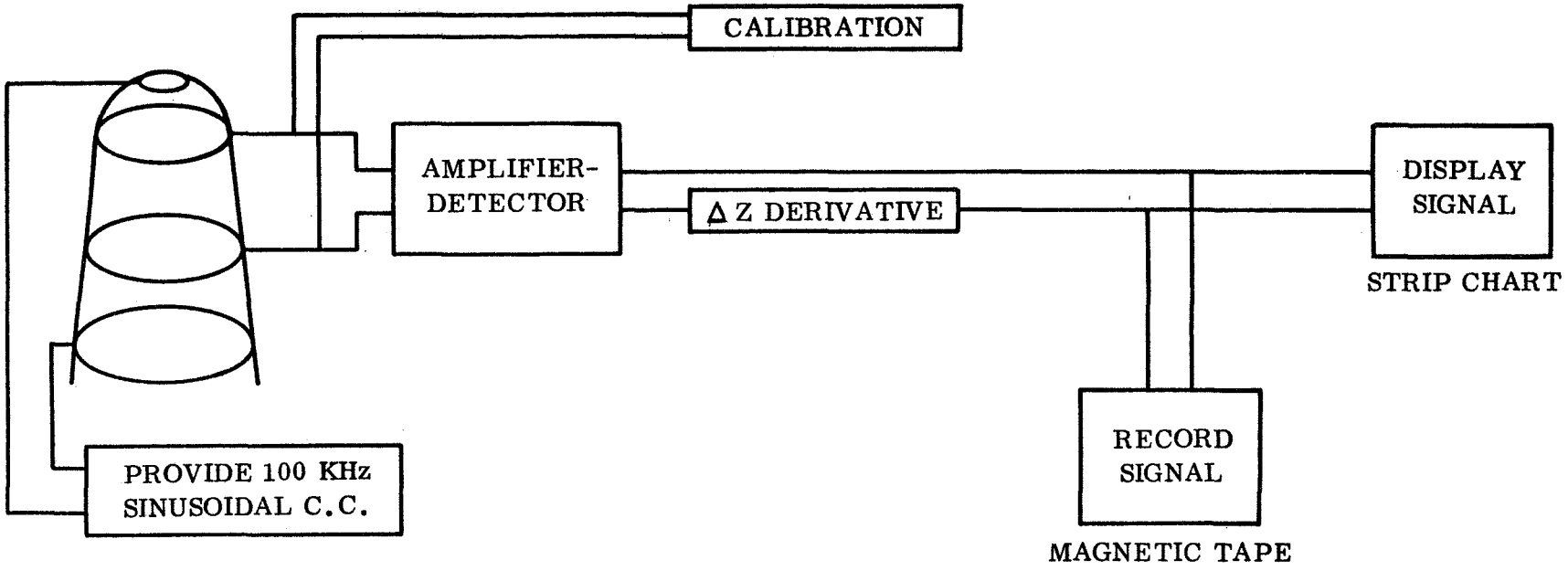

Figure B-3. Impedance Cardiogram Functional Flow Diagram

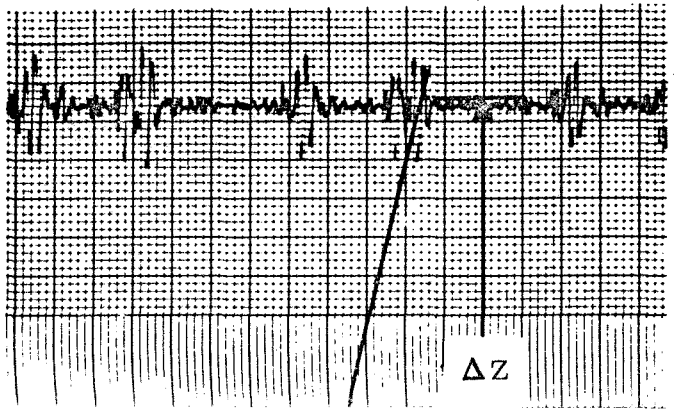

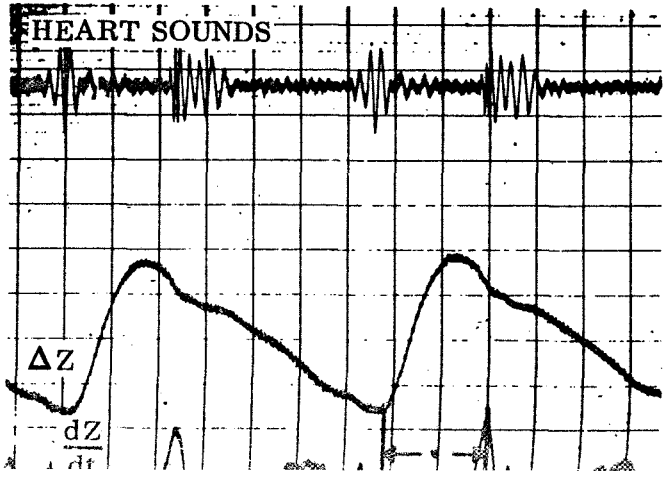

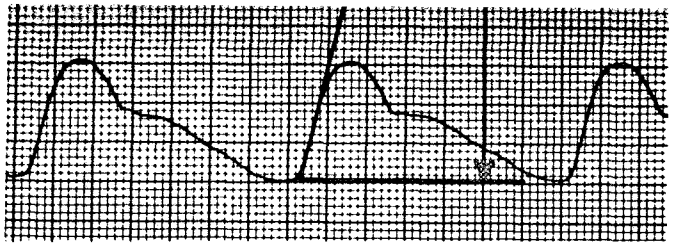

Figure B-4. Heart sounds (upper tracing) and impedance change waveform, ΔZ, with slope extrapolation procedure (lower tracing). Decreasing impedance is upward*

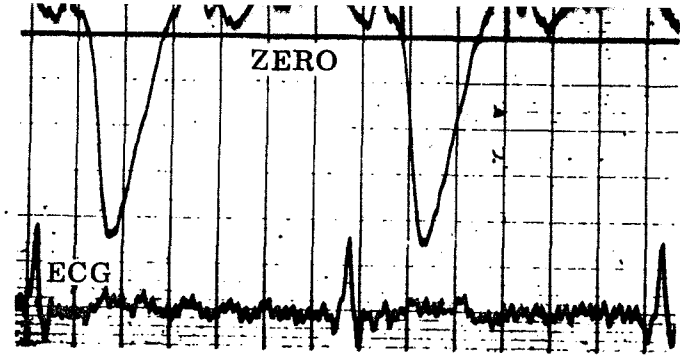

Figure B-5. Heart sounds, impedance change waveform (ΔZ), the first derivative of the impedance change waveform (dz/dt) and the ECG. Vertical time lines indicate 100 ms intervals*

Note: The cardiac output may be calculated from the impedance data with the aid of the formula shown below:

$$\Delta V = \rho \frac{L^2}{Z_0^2} \Delta Z$$

ΔV = ventricular stroke volume (cc)

ρ = the electrical resistivity of blood at 100 kHz (average value 150 ohm-cm)

L = the mean distance between the two inner electrodes (cm)

Z_0 = the basic impedance between the two inner electrodes (ohms)

ΔZ = extrapolated maximum impedance change during systole as described below.

*Extracted from Aerospace Medicine, Vol. 37, No. 12, December 1966

TABLE B-4. MASS FLOW METER DATA

Equipment Item	Components	Support Equipment
(See Figures B-6 and B-7) Ref: Kissen and McGuire: Aerospace Medicine 38: 686, 1967 AMRL-TR-66-37	Linear Flow Meter (Model MFG-16, Technology Inc.) Polarographic 0_2 Sensor (Part No. 78411V, Buhman Inst., Inc.) Microammeter (Model 425A, Hewlett Packard, Inc.) Analog Computer (Model 3000, Donnev) Multiplier (Model 164, Applied Dynamics)	Face Mask (Separation of Inflow and Outflow) Hose Assembly Thermal Blanket (Mass Flow Meter) Temperature Compensation Unit (pO_2)

Critique:

a. System provides only mean values because pO_2 sensor has 6-10 second response time.

b. Requires thermal control.

c. Sensitive to changes in barometric pressure.

d. Phase relations between flow meter and $p0_2$ sensor at low frequency: errors at high respiratory rate of exercise.

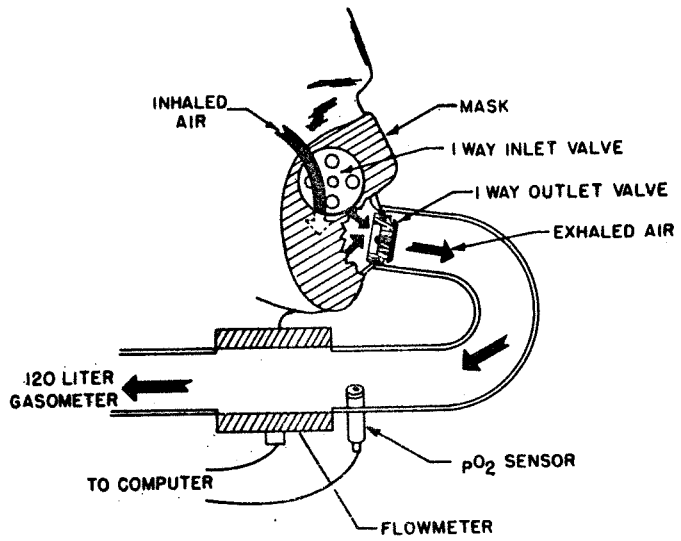

Figure B-6 Pictorial Presentation of Flowmeter and pO_2 Sensor Assembly Used in this Study*

Figure B-6. Pictorial Presentation of Flowmeter and pO_2 Sensor Assembly Used in this Study*

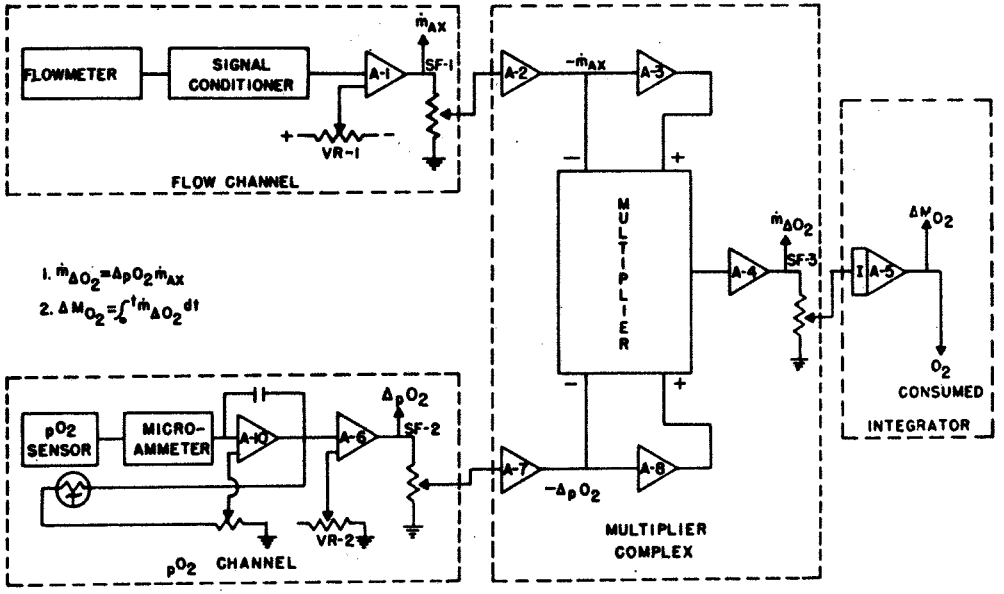

Figure B-7. A Block Diagram of the Complete Electronic Circuit. A Detailed Description is Given in the Text*

*Extracted from Aerospace Medicine, Vol. 38, No. 7, July 1967

TABLE B-5. BALLISTOCARDIOGRAM DATA

Equipment Item	Components	Support Equipment
(See Figure B-8) Ref: Hixon, W.C., and Beischer, D.E., Monograph No. 10; USN Av. Med. Ctr. Pensacola 9/8/64	Three Orthogonal Linear Accelerometers ($BCG\text{-}\ddot{X}$, $BCG\text{-}\ddot{Y}$, $BCG\text{-}\ddot{Z}$) Angular Accelerometer (BCG $\ddot{H}$) Constraint Platform Chopper-Stabilized DC Amplifiers (4) Calibration Network and Gain Control	Biotelemetry or Flexible Cable System VCG for BCG Timing (Telemetry if used) Bead Thermistor, Nares Air Flow Transducer Telemetry Receiver Vehicle Accelerations

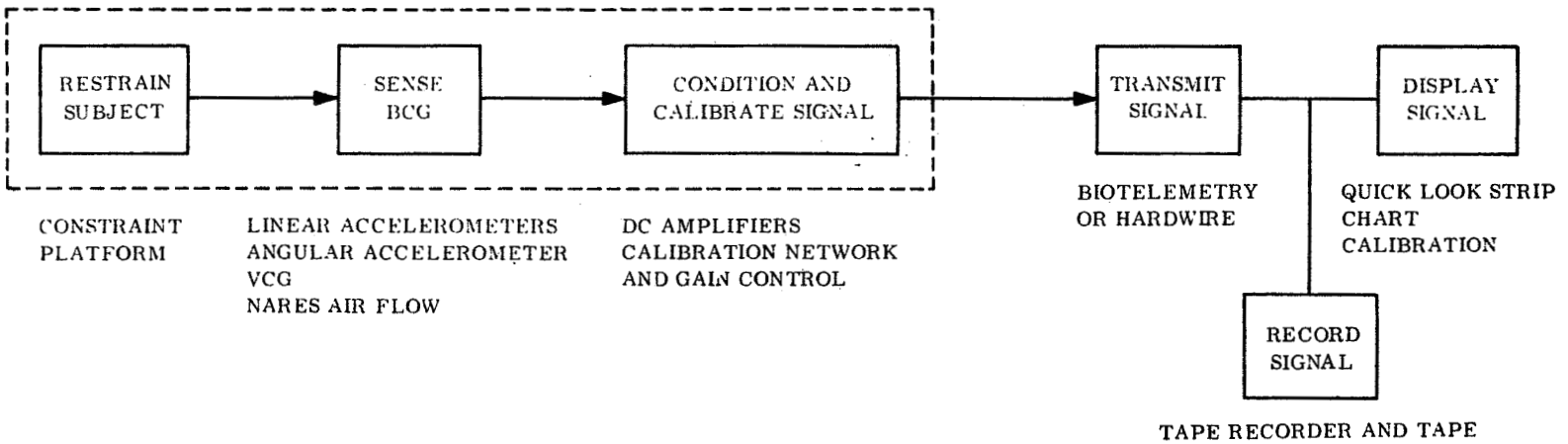

ACCELEROMETERS (LINEAR)
- NATURAL FREQUENCY - 100 Hz
- SENSITIVITY ± 0.25g TO PRODUCE ± 15 VDC OUTPUT SIGNAL

ACCELEROMETER (ANGULAR)
- SENSITIVITY - 5 RADIUS/SEC^2
- NATURAL FREQUENCY - 39 Hz

Figure B-8. Ballistocardiogram Functional Flow Diagram

TABLE B-6. VENOUS COMPLIANCE DATA

Equipment Item	Components
(See Figure B-9) Ref: Biosystems, Inc. Report	Plethysmograph Occluding Cuff Automatic Pressure Cuff

Remarks:

a. The Occluding Cuff is placed proximal (nearer to the heart) to the plethysmograph. When it is inflated, the cuff occludes veins before arteries. Therefore, the input bloodflow exceeds the output and the limb volume changes. Generate volume-pressure curve.

b. Tradeoff study must be done to determine optimum method of plethysmography.

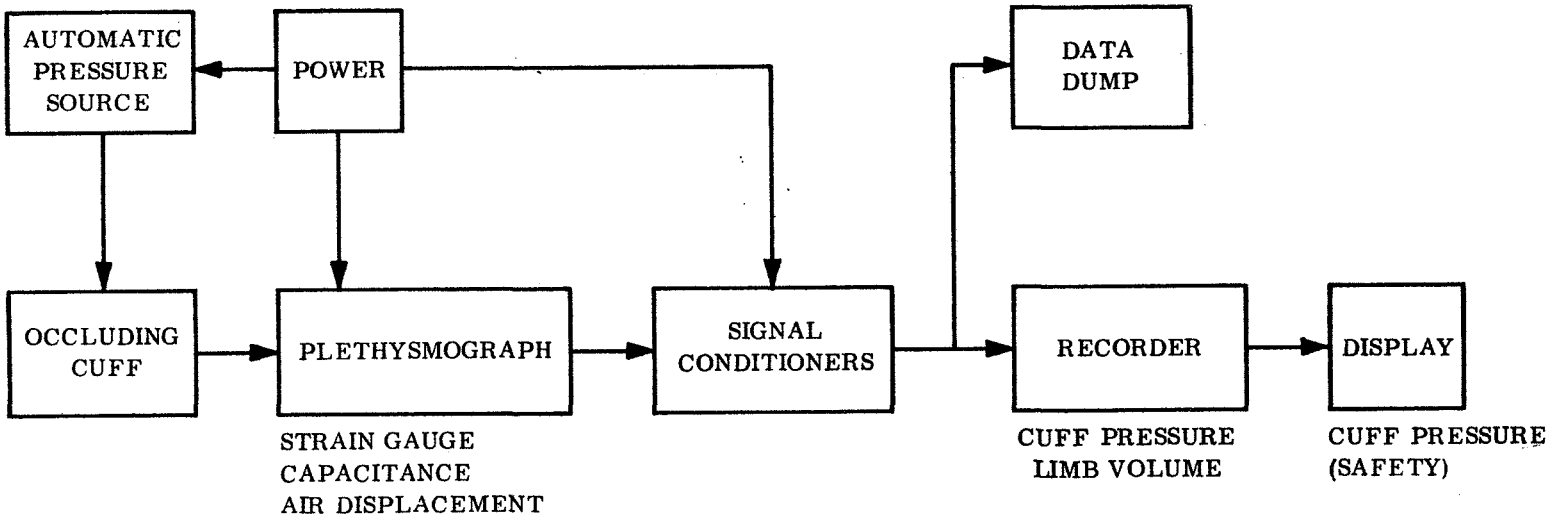

Figure B-9. Venous Compliance Functional Flow Diagram

TABLE B-7. PERIPHERAL VENOUS PRESSURE DATA

Equipment	Components
(See Figure B-10) Ref: Biosystems, Inc. Report	Superficial Vein Occluding Pressure Chamber Thin, Elastic Membrane Pressure Sensor Endpoint Detector a. Trained Operator - Simplest Approach b. Mechanical Endpoint Detector with Pressure Feedback most Feasible for IMBLMS

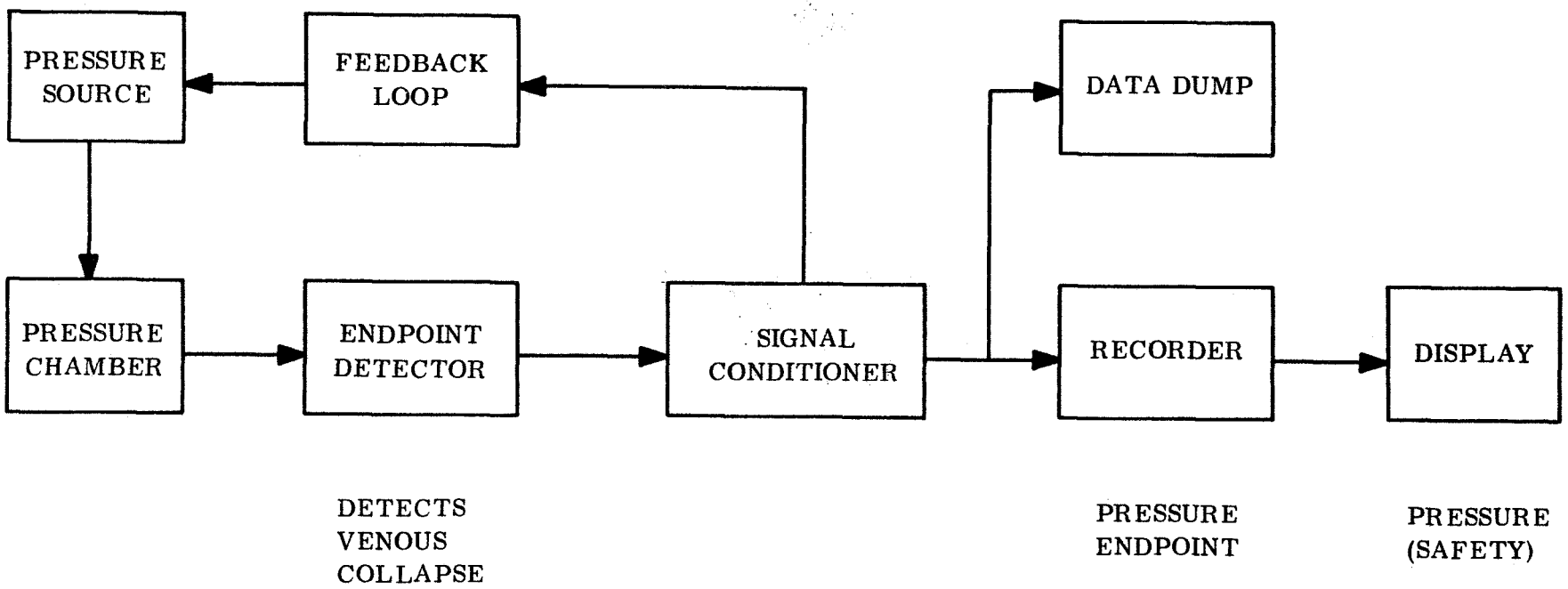

Figure B-10. Peripheral Venous Pressure Functional Flow Diagram

TABLE B-8. DIGITAL PLETHYSMOGRAPH DATA

Equipment Item	Components	Support Equipment
(See Figures B-11 and B-12) Ref: Biosystems, Inc. NASW 1559	Housing includes: Finger Cuff Hold down Balloon (10 mm Hg) Plug (adjustable for finger length) Plastic Pad Fiber Optics bundle (150-20 μ fibers, tip diameter 0.5 mm) Light Source (regulated DC, 10 mW, 8,050 Å) Photocell (CdS or CdSe, or Silicon photodiode)	Bridge for photocell DC Amplifier (photocell) Pressure Regulator Orifice Valve

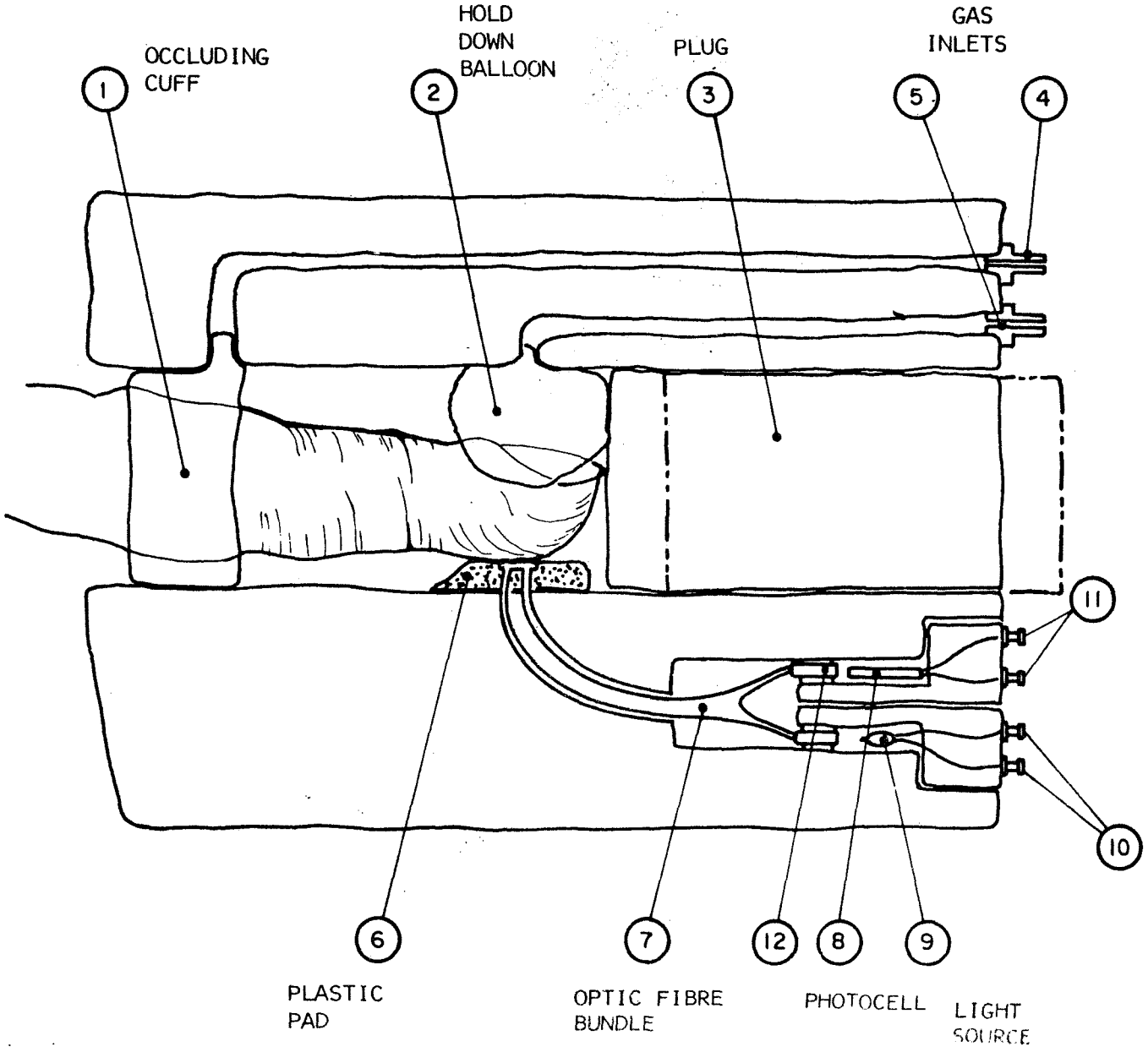
OCCLUDING CUFF
HOLD DOWN BALLOON
PLUG
GAS INLETS
1
2
3
5
4
11
10
6
7
12
8
9
PLASTIC PAD
OPTIC FIBRE BUNDLE
PHOTOCELL
LIGHT SOURCE

Figure B-11. Functional Diagram of Digital Plethysmograph*

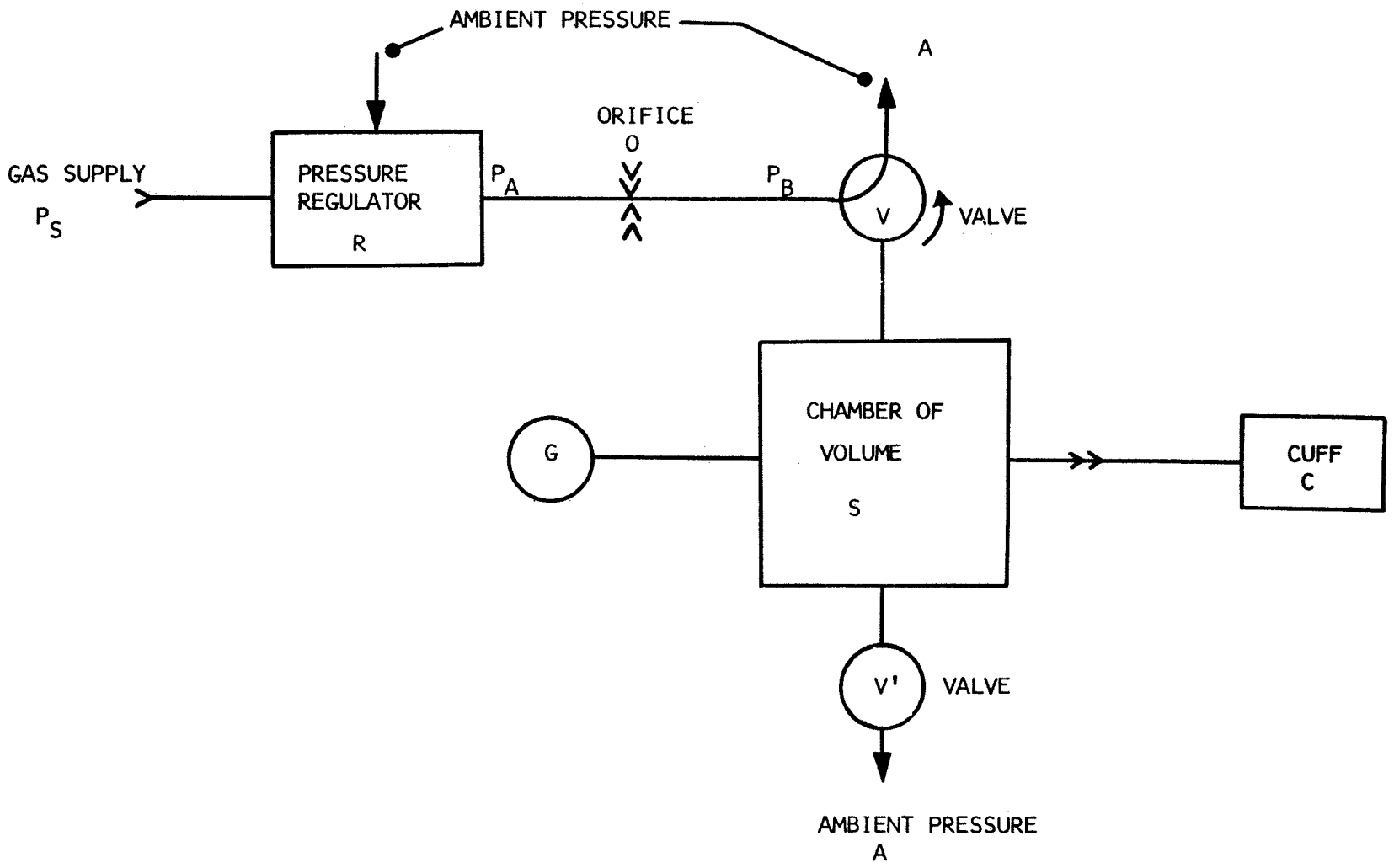

Figure B-12. Schematic of Inflation System for Digital Plethysmograph**

*Extracted from "Feasibility Study of Noninvasive Venous Pressure Measurement," Biosystems, Inc., Final Report, Contract No. NASW-1559, April 1967

**Extracted from "Design Concepts for Mass Measurement Instrument for Une In Outer Space," Southwest Research Institute, Final Report, Project 16-1872-02, May 1966

TABLE B-9. SUPERFICIAL VEIN OCCLUDING PRESSURE

Equipment Item	Components (Visual Endpoint Method)	Support Equipment
(See Figure B-13) Ref: Biosystems, Inc. NASW-1559	<u>Pressure Chamber</u> Viewport and Magnifier Light Source Thin Membrane (36 mm diameter graphite lubricated Silastic 372 Medical Elastomer 0.001 inch thick) Pressure Gauge Inflation Bulb and Tubing	None Data log

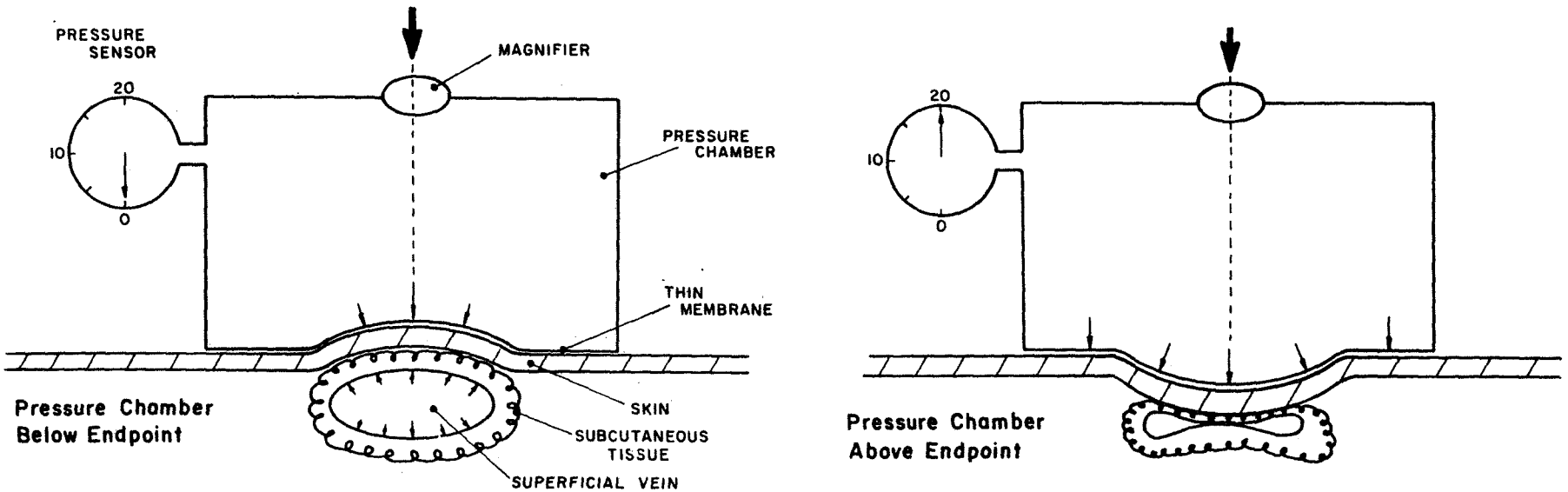

Figure B-13. Functional Diagram of Occluding Pressure Chamber*

*Extracted from "Feasability Study of Noninvasive Venous Pressure Measurement," Biosystems, Inc., Final Report, Contract No. NASW-1559, April 1967

TABLE B-10. FOREARM VENOUS OCCLUSION PLETHYSMOGRAPH DATA

Equipment Item	Components	Support Equipment
(See Figures B-14, B-15, B-16, and B-17 Ref: Biosystems, Inc. NASW-1559	<u>Occluding Cuff</u> (8 cm wide, 20-60 cm long, thin rubber construction 0.005 inch thick, tube 8-10 mm inside diameter) with outer indistensible shell <u>Plethysmograph</u> Air: Plastic shell (incorporating occlusion cuff), plethysmograph cuff. Strain Gauge: Whitney gauge (electrode paste) for forearm circumference. Volume Detector: High displacement pressure transducer or differential transformer. Pressure Gauge for Occlusion Cuff	Pressure regulator (programmed rates from 0.25 mm Hg/sec to 120 mm Hg/sec) Temperature compensation chamber (for air plethysmograph) Bridge circuit for strain gauge (with temperature compensation and balance readout)

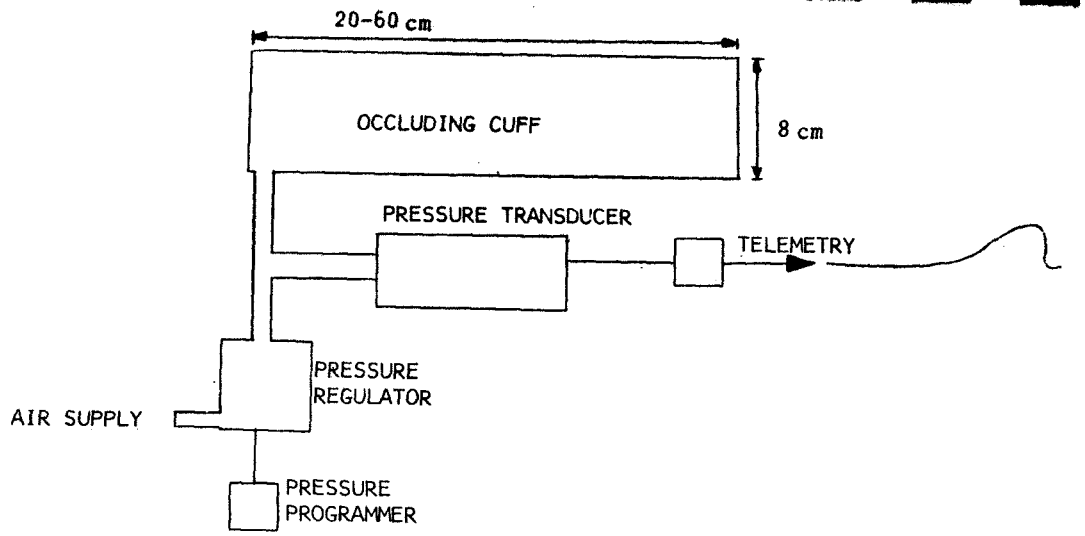

Figure B-14. Block Diagram of Occluding Cuff and Inflation System*

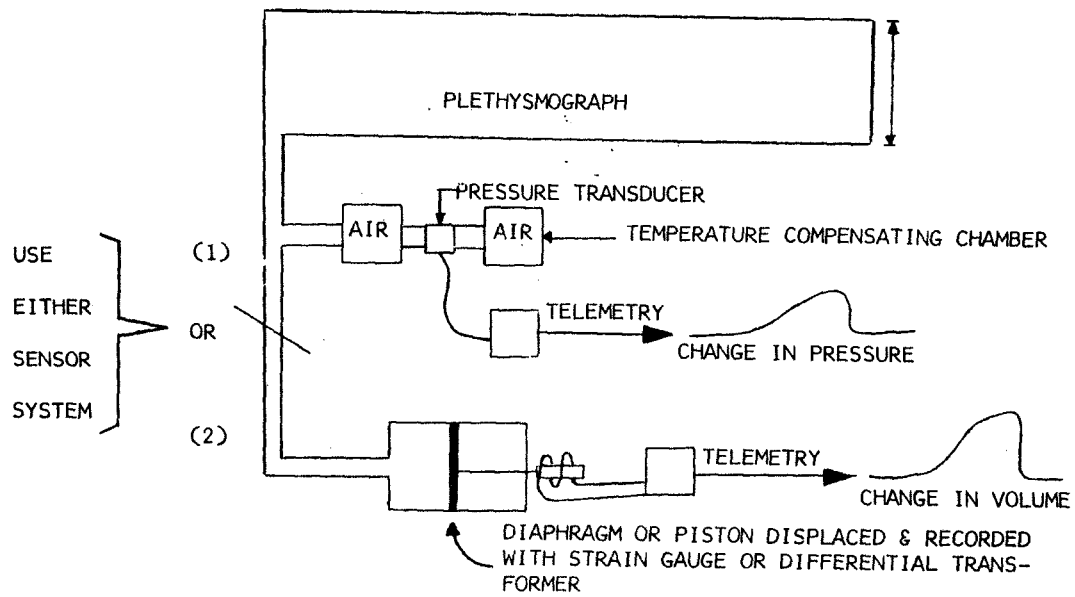

Figure B-15. Block Diagram of Plethysmograph and Readout Equipment*

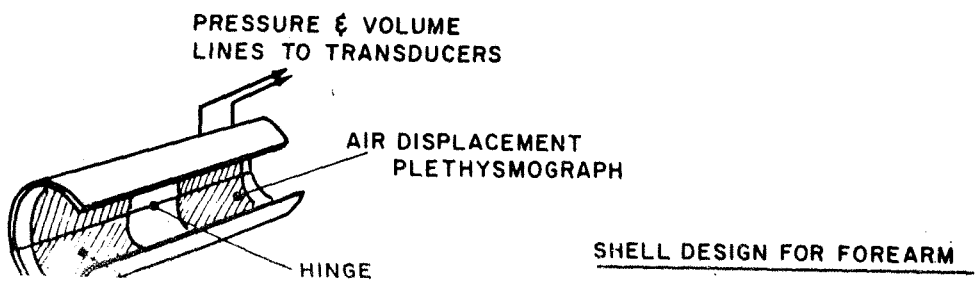

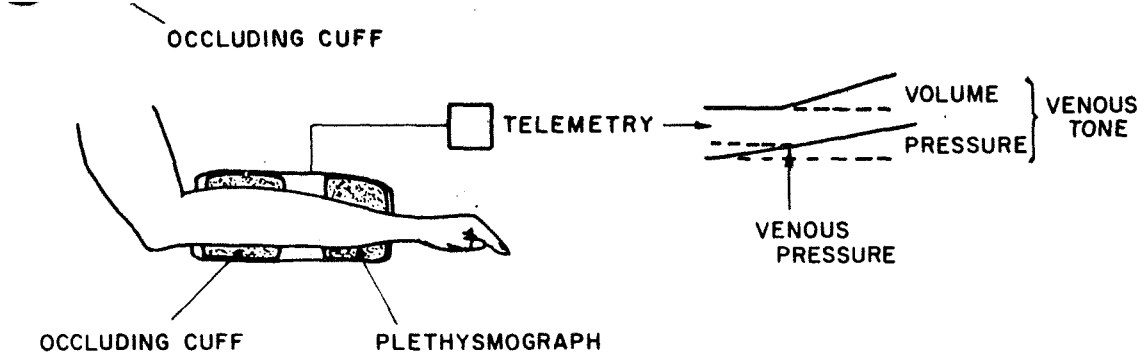

Figure B-16. Physical Concept of Venous Occlusion Plethsmograph*

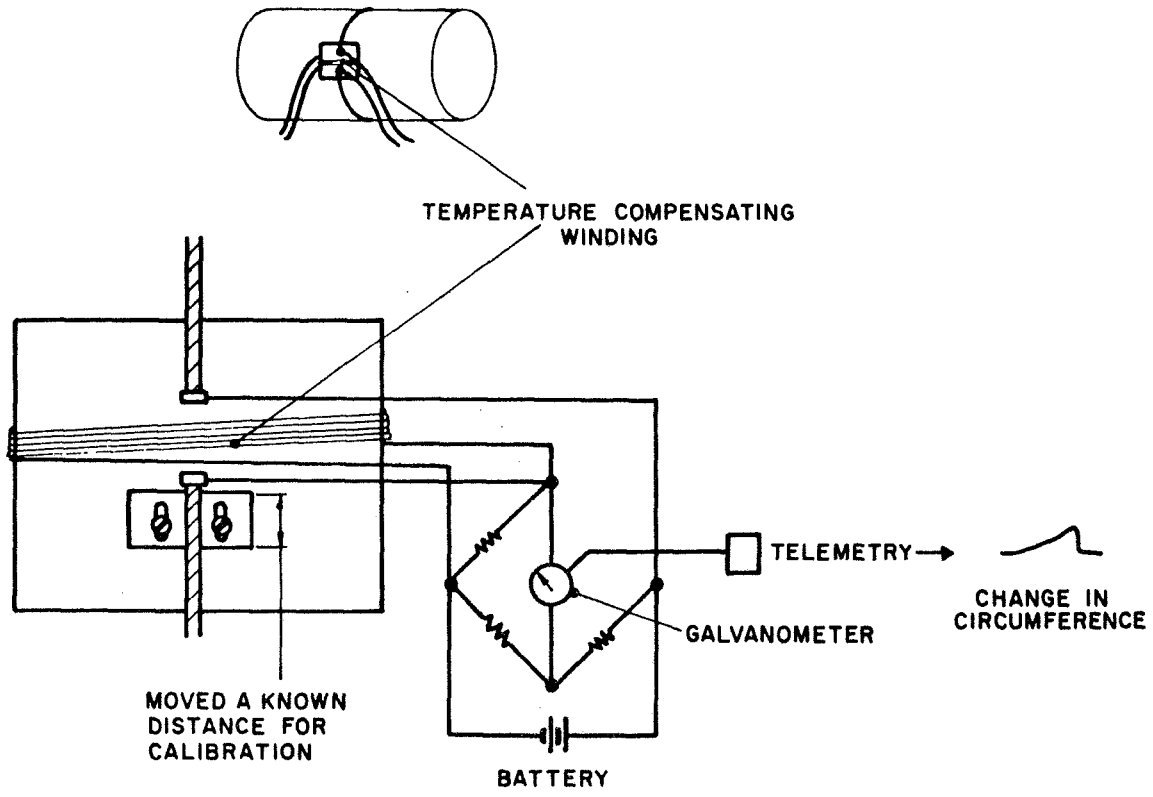

Figure B-17. Functional Diagram of Strain Gauge Plethysmograph*

* Extracted from "Feasibility Study of Noninvasive Venous Pressure Measurement," Biosystems, Inc., Final Report, Contract No. NASW-1559, April 1967

TABLE B-11. ELASTIC LEOTARD DATA

Equipment Item	Components	Support Equipment
(Refer to Tables B-12 and B-13) Ref: Vogt and Johnson Aerospace Medicine 38, 1967, Jobst Institute, 1803 Jefferson Ave., Toledo, Ohio	Custom made garment to measurements of body at one inch increments for total height (foot to xiphoid) Provides 40 mm Hg pressure at any circumference or can be constructed to provide gradient	Test in IBNP in flight

TABLE B-12. MEANS OF TILT TABLE MEASUREMENTS TO COMPARE LEOTARD AND NON-LEOTARD TILTS IN CONDITIONED SUBJECTS[+]

Measurement	Leotard	Non-Leotard
Time to Tilt Down	21.0	21.0
Average HR Pre-tilt	68.2	66.5
Maximum HR During Tilt**	83.4	94.2
Change in HR with Tilt	15.2	27.2
Fractional Increase in HR**	0.24	0.43
Average PP Pre-tilt	46.9	46.4
Minimum PP During Tilt**	30.4	24.8
Average Pre PP-Min During*	16.4	21.7
Fractional Decrease in PP**	0.34	0.46
Slope of Diastolic Pressure	0.26	-0.10
Slope of Systolic Pressure	0.21	-0.22
Slope of Mean Pressure	0.11	-0.14
Slope of Pulse Pressure	0.16	-0.12

*$p<0.05$
**$p<0.01$

TABLE B-13. MEANS OF TILT TABLE MEASUREMENTS TO COMPARE LEOTARD AND NON-LEOTARD TILTS IN DECONDITIONED SUBJECTS[+]

Measurement	Leotard	Non-Leotard
Time to Tilt Down	20.4	20.7
Average HR Pre-tilt	76.2	72.6
Maximum HR During Tilt*	97.9	113.3
Change in HR with Tilt**	21.7	40.7
Fractional Increase in HR**	0.30	0.58
Average PP Pre-tilt	50.8	47.1
Minimum PP During Tilt**	30.6	22.2
Average Pre PP-Min During	20.2	24.9
Fractional Decrease in PP**	0.39	0.52
Slope of Diastolic Pressure	-0.30	-0.20
Slope of Systolic Pressure **	-1.51	-0.41
Slope of Mean Pressure	-0.71	-0.27
Slope of Pulse Pressure*	-1.28	-0.21

*$p<0.05$
**$p<0.01$

[+] Extracted from Aerospace Medicine, Vol. 38, No. 7, July 1967

TABLE B-14. MASS MEASURING SYSTEM DATA

Equipment Item	Components	Support Equipment
(See Figures B-18, B-19, and B-20)		
Ref: Southwest Research Institute, Project 16-1872-02, May 1966	Spring-Mass pendulum system with air bearing Oscillator (1-MHz) Seven-place counter with six-place readout	Gas supply for air bearing 0_2 at 3 lites/min. Power

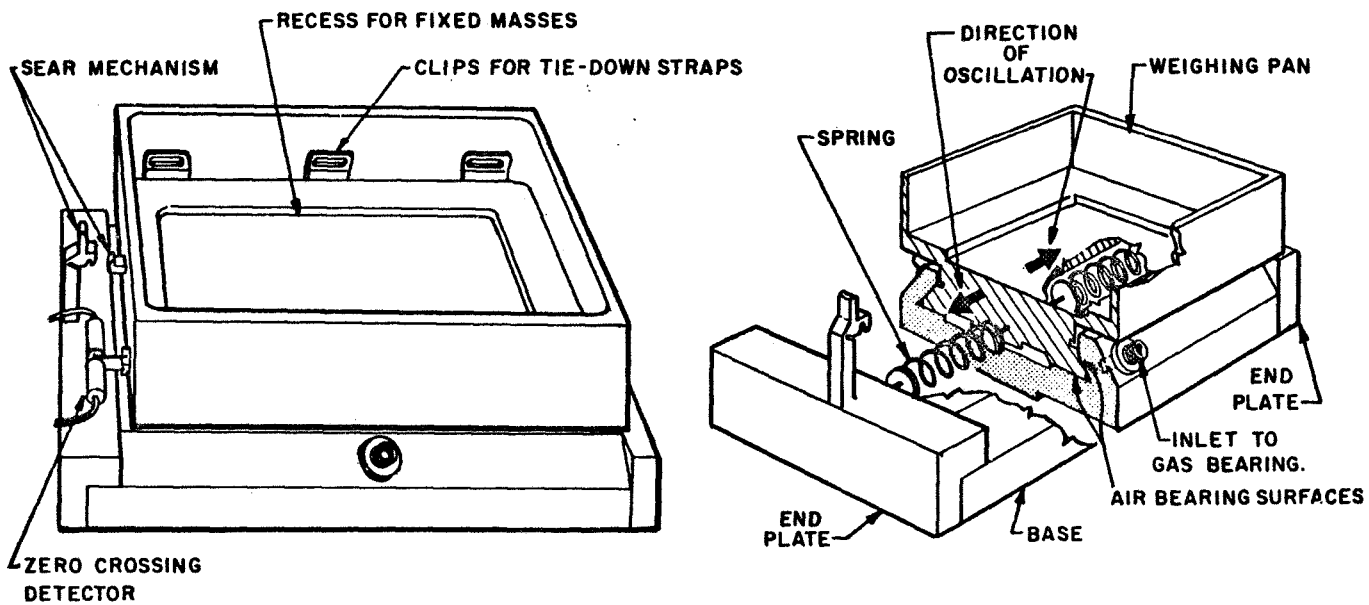

Figure B-18. Flight Version Concept of Spring-Mass Pendulum Mechanism*

*Extracted from "Design Concepts for Mass Measurement Instrument for Use in Outer Space," Southwest Research Institute, Final Report, Project 16-1872-02, May 1966

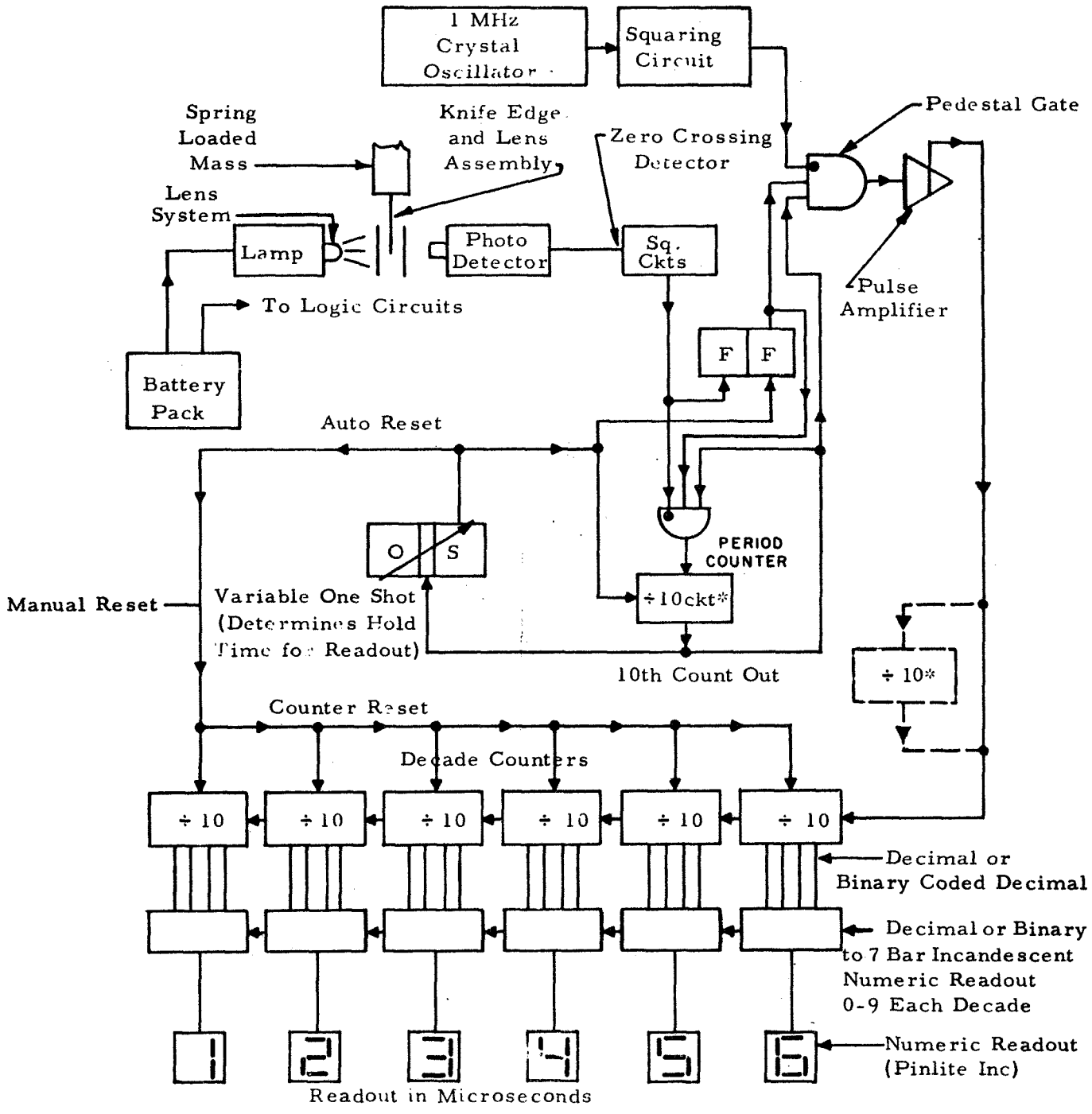
1 MHz Crystal Oscillator
Squaring Circuit
Pedestal Gate
Spring Loaded Mass
Knife Edge and Lens Assembly
Zero Crossing Detector
Lens System
Lamp
Photo Detector
Sq. Ckts
Pulse Amplifier
To Logic Circuits
Battery Pack
F
F
Auto Reset
O
S
PERIOD COUNTER
Manual Reset
Variable One Shot (Determines Hold Time for Readout)
÷10ckt*
10th Count Out
÷ 10*
Counter Reset
Decade Counters
÷ 10
÷ 10
÷ 10
÷ 10
÷ 10
÷ 10
Decimal or Binary Coded Decimal
Decimal or Binary to 7 Bar Incandescent Numeric Readout 0-9 Each Decade
Numeric Readout (Pinlite Inc)
1
2
3
4
5
6
Readout in Microseconds
*Required for ten period averaging.

1, B-25

Figure B-19. Block Diagram of Period-Time Counter*

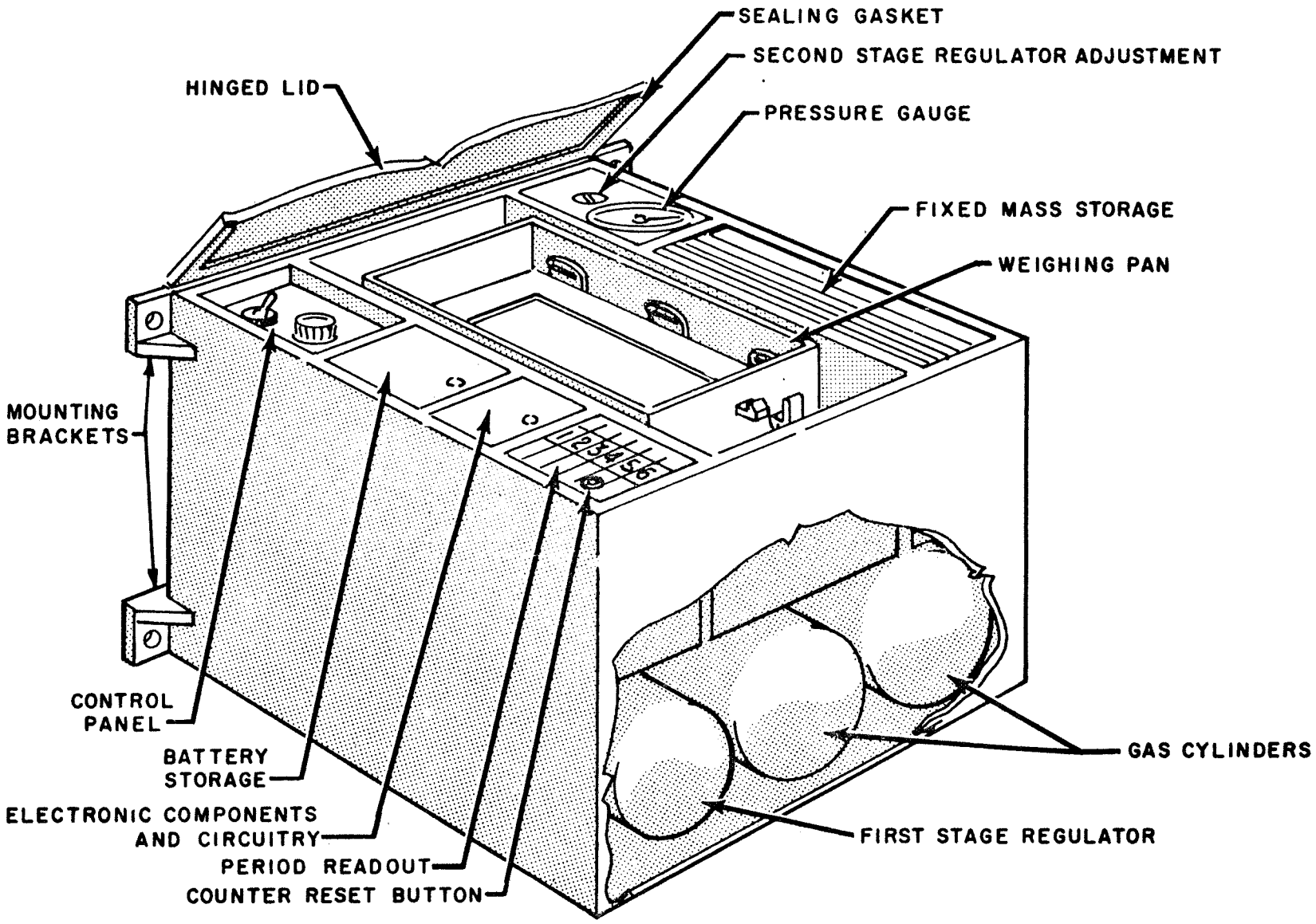

Figure B-20. Spring-Mass Pendulum Package Flight Version Concept*

*Extracted from "Design Concepts for Mass Measurement Instrument for Use In Outer Space," Southwest Research Institute, Final Report, Project 16-1872-02, May 1966

TABLE B-15. BICYCLE ERGOMETER DATA

Equipment Item	Components	Support Equipment
(See Figure B-21) Ref: DB-52-67-M050, DB-50-67-M018, and DB-53-M051	Ergometer a. Tachometer b. Variable Force Device Metabolic Monitoring System a. 0_2 Cons b. CO_2 Prod Impedance Pneumograph Ear Thermistor Vector Cardiogram	a. Tape Recorder (Dump and Return) 1. Metabolic (a) O_2 Cons (b) Resp Rate (c) CO_2 Prod (d) Body Temp (e) Ergometer RPM (f) Ergometer Output (Watts) (g) Time (h) Voice 2. Cardiac - VCG (3 Channels) b. Associated Support Equipment - Electrode Application Kit, etc. c. Display Rate 1. Heart Rate 2. Rate 3. Temp 4. Ergometer Output

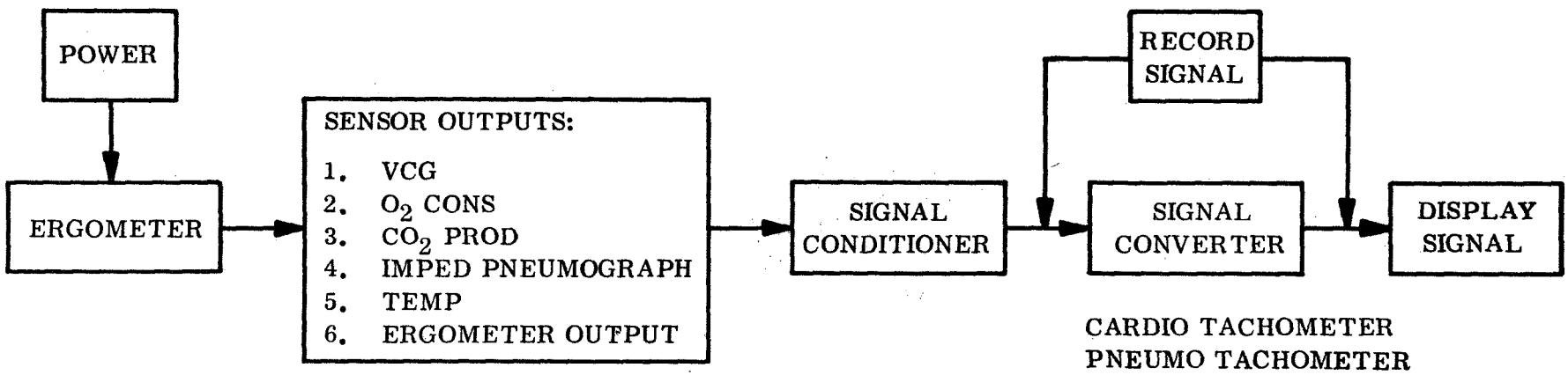

Figure B-21. Bicycle Ergometer Functional Flow Diagram

TABLE B-16. NYSTAGMOGRAM (EOG) DATA

Equipment Item	Components	Support Equipment
(See Figure B-22)	Signal Conditioner (Similar to EKG) Electrodes DC-DC Power Converter	Skin prep. Equipment

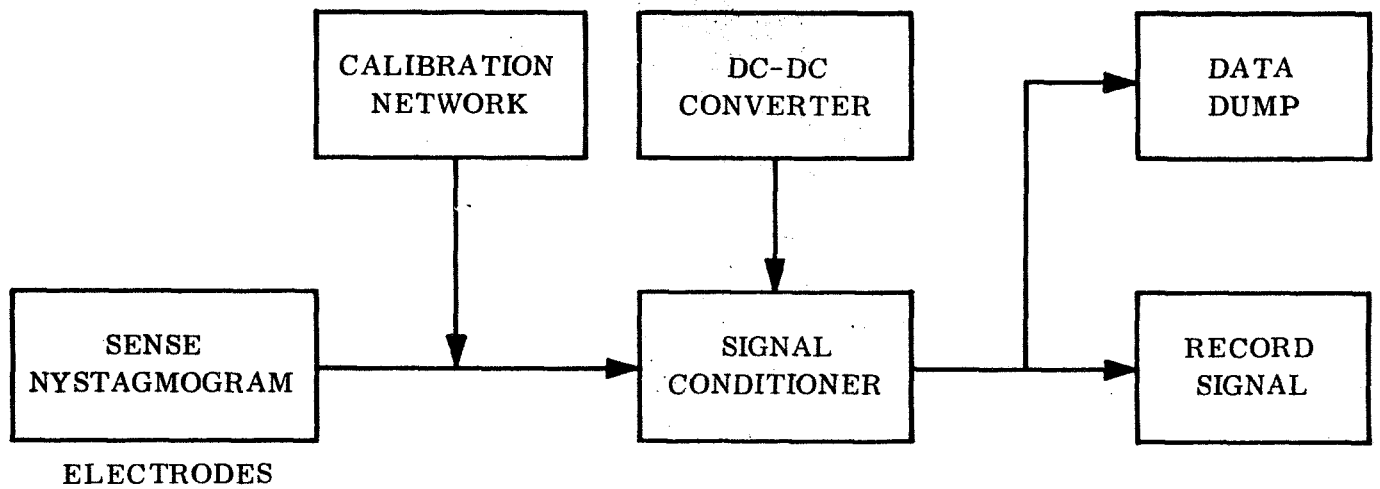

NOTE:

DIFFERENTIAL ELECTRODES SHOULD BE PLACED BITEMPORALLY, WITH REFERENCE ELECTRODE ON FOREHEAD.

Figure B-22. Nystagmogram (EOG) Functional Flow Diagram

TABLE B-17. LBNP DEVICE DATA

Equipment Item	Components	Support Equipment
(See Figure B-23) Ref: DB-53-M051, 4/28/67	LBNP Envelope and Pressure Gauges VCG Leg Plethysmographs (2) Ear Canal Temp Automatic Blood Pressure DC-DC Power Converter	Vacuum Source and Regulator Tape Recorder (Dump and Return) 1. VCG - 3 Channels 2. Leg Volume - 2 Channels 3. Voice Annotation - 1 Channel 4. Neg. Press. - 1 Channel 5. Time - 1 Channel 6. Blood Press. - 1 Channel Display 1. Neg. Press. 2. Blood Press. 3. Ear Canal Temp 4. Heart Rate (Possibly ECG Trace) Cabling

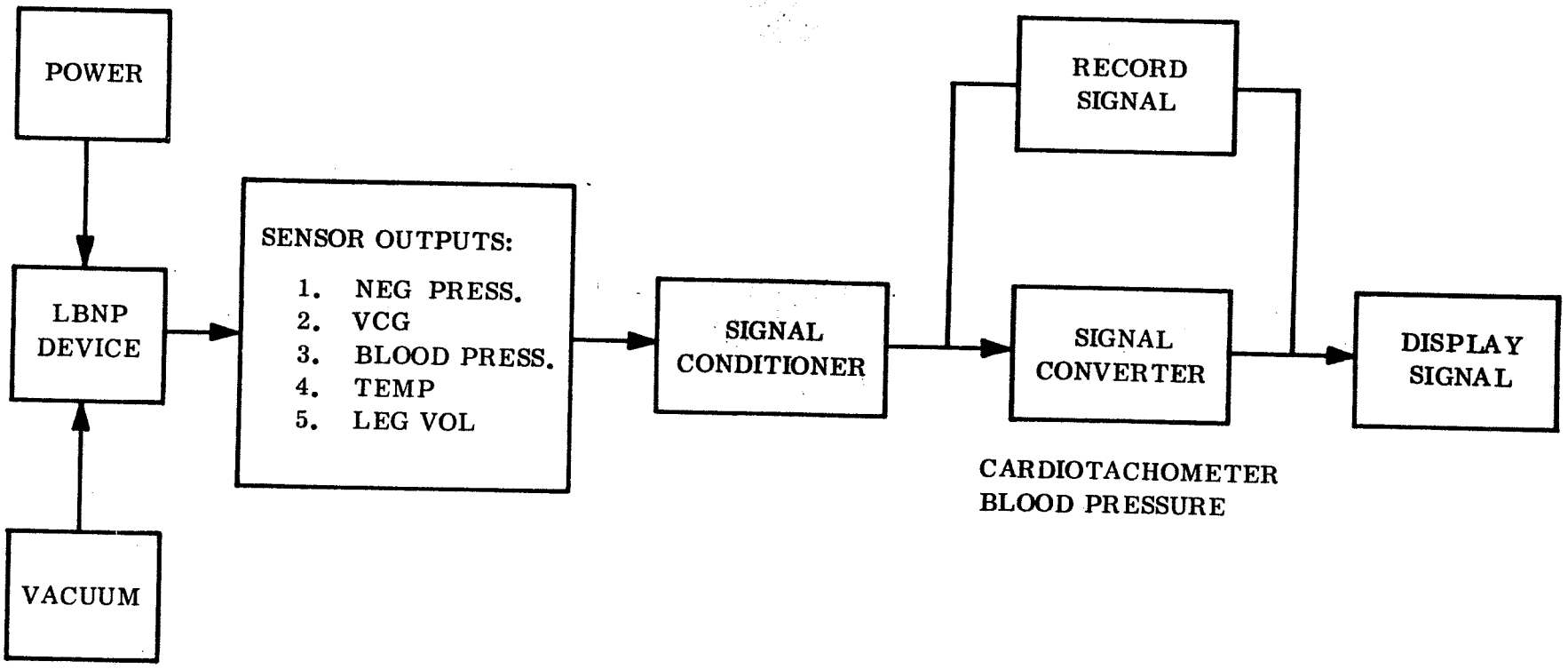

Figure B-23. LBNP Device Functional Flow Diagram

TABLE B-18. ELECTROMYOGRAPH DATA

Equipment Item	Components	Support Equipment
(See Figure B-24)	Signal Conditioner (Similar to EKG with extended high frequency range) Electrode Harness Electrodes a. Needle - Indiv. fibers b. Integrated potential for one muscle group DC-DC Power Converter	Skin Prep. Equipment

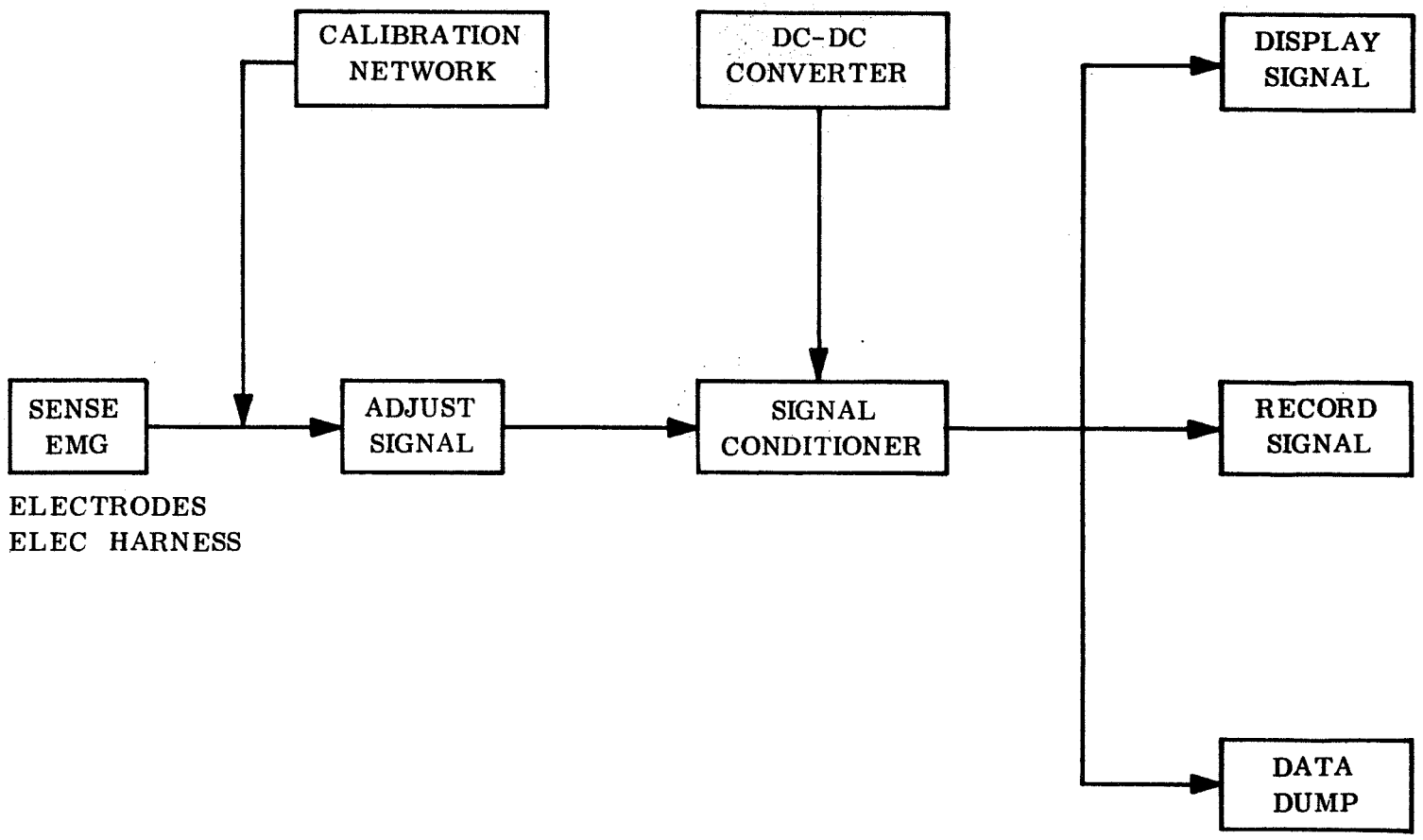

Figure B-24. Electromyograph Functional Flow Diagram

TABLE B-19. BLOOD PRESSURE DATA

Equipment Item	Components	Support Equipment
(See Figure B-25) Ref: Design Reqts. for Gemini Biomed. Instr. System	Arm Cuff Karotkoff Sounds Microphone Hand Bulb with: a. Pressure indicator and transducer b. Karotkoff indicator Signal Conditioner DC-DC Power Converter	Display a. Direct readoff from hand bulb b. Display Oscilloscope - Karotkoff sounds superimposed upon DC pressure level c. Strip Chart Recorder

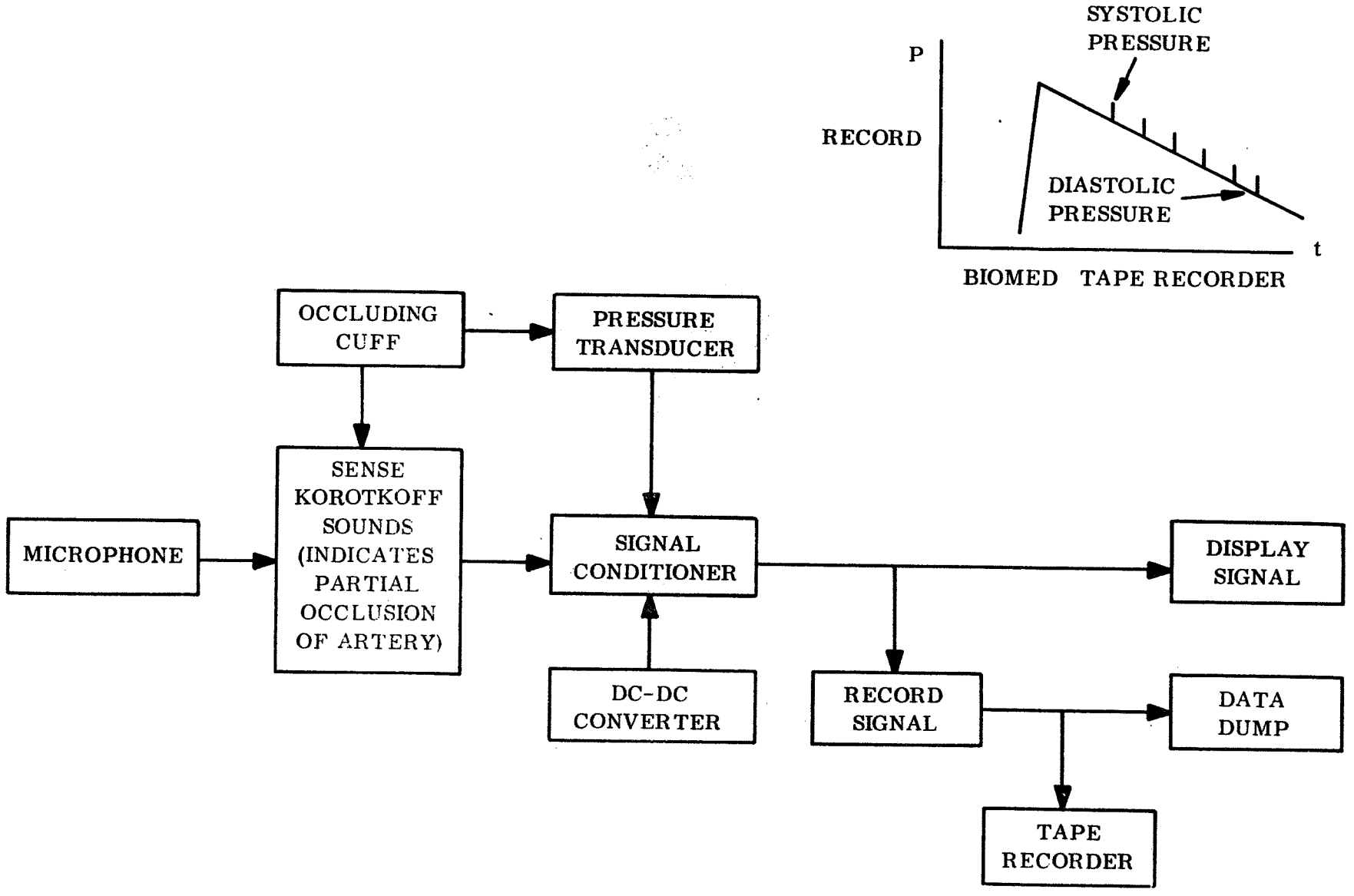

Figure B-25. Blood Pressure Functional Flow Diagram

TABLE B-20. TEMPERATURE DATA

Equipment Item	Components
(See Figure B-26) Ref: Design Reqts. for Gemini Biomed. Instr. System	Deep Body Temp - Ear/Oral/ Rectal Thermistor Skin Temp - Thermistor Vest Signal Conditioner DC-DC Power Converter

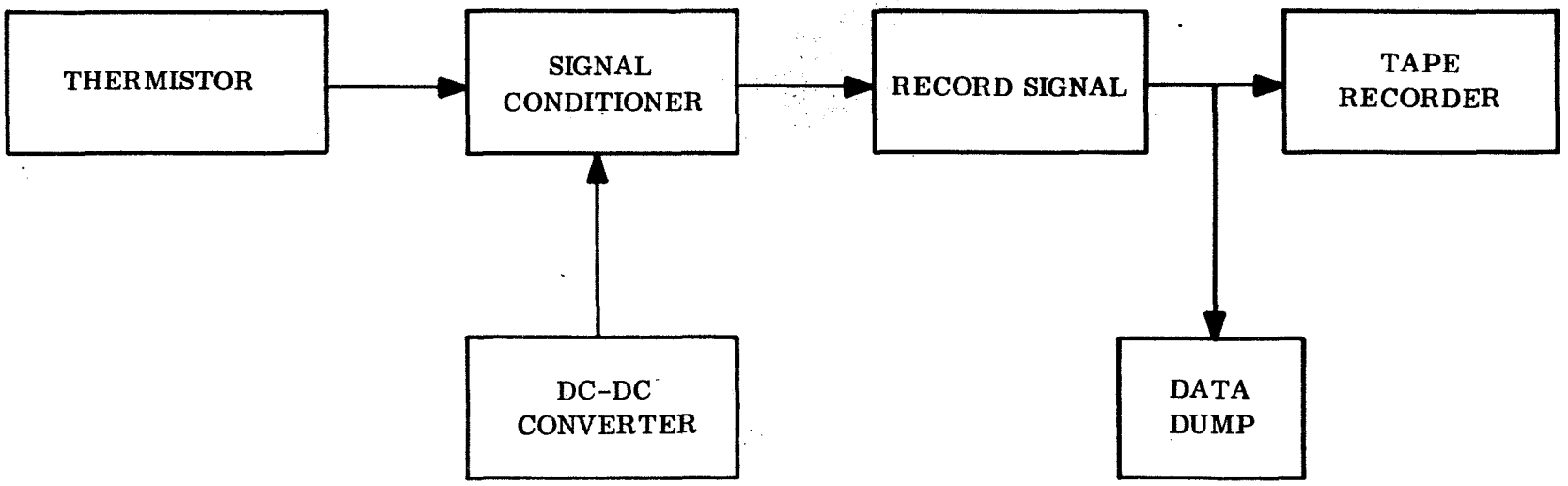

TEMP RANGE - DEEP BODY 95 TO 105°

OUTPUT - 0 TO 5.0 VDC

ACCURACY - 0.1^{o} F

RESPONSE TIME < 16 SEC

Figure B-26. Temperature Functional Flow Diagram

TABLE B-21. BODY TEMPERATURE DATA

Equipment Item	Components	Support Equipment
Ref: Gibbons: Aerospace Medicine 38: 671; 1967	Custom-Fit Ear Plugs (25% RTVS-5370, 75% RTV-502, Dow Corning) Thermistor (Yellow Springs Inst. Co. No. 44012) Wheatstone Bridge	Digital Voltmeter (0.1 mv = 0.0373°F

Critique:

a. Plus or minus 0.6°F compared to oral temperature.

b. 2 minute time lag with respect to oral T.

c. Occasional ear irritation.

TABLE B-22. BONE AND MUSCLE CHANGES DURING PROLONGED SPACE FLIGHT

Equipment	Components	Support Equipment
Ref: DB-51-67-M052	Urine Sampling and Volume Measurement System Specimen Mass Measurement Device Body Mass Measurement System Waste Management System Dryer	Diet and Fluid Intake Records Food Dye Marker Sample Collectors Sample Storage Facilities

TABLE B-23. METABOLIC COSTS OF INFLIGHT TASKS

Equipment	Components	Support Equipment
Ref: DB-52-67-M050 Garrett AiResearch	Bicycle Ergometer - Load Selector, Tachometer Metabolic Device (O_2, CO_2, RQ) Space Suit CO_2 Absorber Weight Mass Flow	Heat Sink (Ergometer) Water Source for Liquid Cooled Suit (from CO_2 Scrubber Cooler) High Pressure O_2 Source (LSE for IVA) Tethers Tape Recorder and Tape Heart Rate Respiratory Rate Body Temperature (Ear Canal - CSD) Respiratory Volumes (not during experiment) Face Mask (Modified Helmet) Respiratory Hoses Pressure Suit Reference Hose Work Task (Pipe Fittings, Bolts, Wire Connections) - Tool Kit Work Task #2 - Constant Load Spring Razor (Electric) Paper Tissues (Electrode Cleaning) Cabling (Ergometer, Metabolic Devices)

TABLE B-24. TIME AND MOTION STUDY

Equipment	Components	Support Equipment
Ref: DB-39-66-055	Cinematography Metro Camera (Time Lapse) Maurer 16 mm Sequence 1, 6 and 16 fps Lenses 5 mm WA, 18 mm	High Contrast Spot and Line Markings on Spacesuit and Uniform Film Magazines (Black and White) Voice Annotation Log

TABLE B-25. CENTRIFUGE DATA

Equipment Item	Components	Support Equipment	Engr. Design Information	Comments
(See Figure B-27) Fluid Volume Distrib. Eval. Muscular Status Evaluation Mineral Metab. and Skeletal Status Eval. Gen. Metab. and Nutritional Eval. Hermostasis Energy Metab. Electrolyte Balance Immunological Eval. Hematological Endocrine	Trunions for Tubes Hematocrit Head Motor Spindle and Arms Enclosure	None (all expendables, such as syringes, tubes, capillary tubes, etc., will be accounted for elsewhere because they will also be used for analyses other than those requiring a centrifuge).	Power - 25 watts during operating periods of 15 - 20 min each; 400 cycle AC induction or DC brushless motor Weight - 2 lb. Volume and Envelope - Cylinder 8 inches in diameter and 6 inches high Data Output - See Comments Thermal Control Requirements - Later Development Status - Design concept drawings available	No. of operating periods dependent on Mission Experiment Plan. No. could be anywhere from 0-25/24 hr-day but reasonable to assume 2-4/day as most probable. Engineering Design Info. based on 4 inch radius, 3000 rpm. The centrifuge itself has no data output but the various analyses will require data recording of some kind, with a log book the most likely.

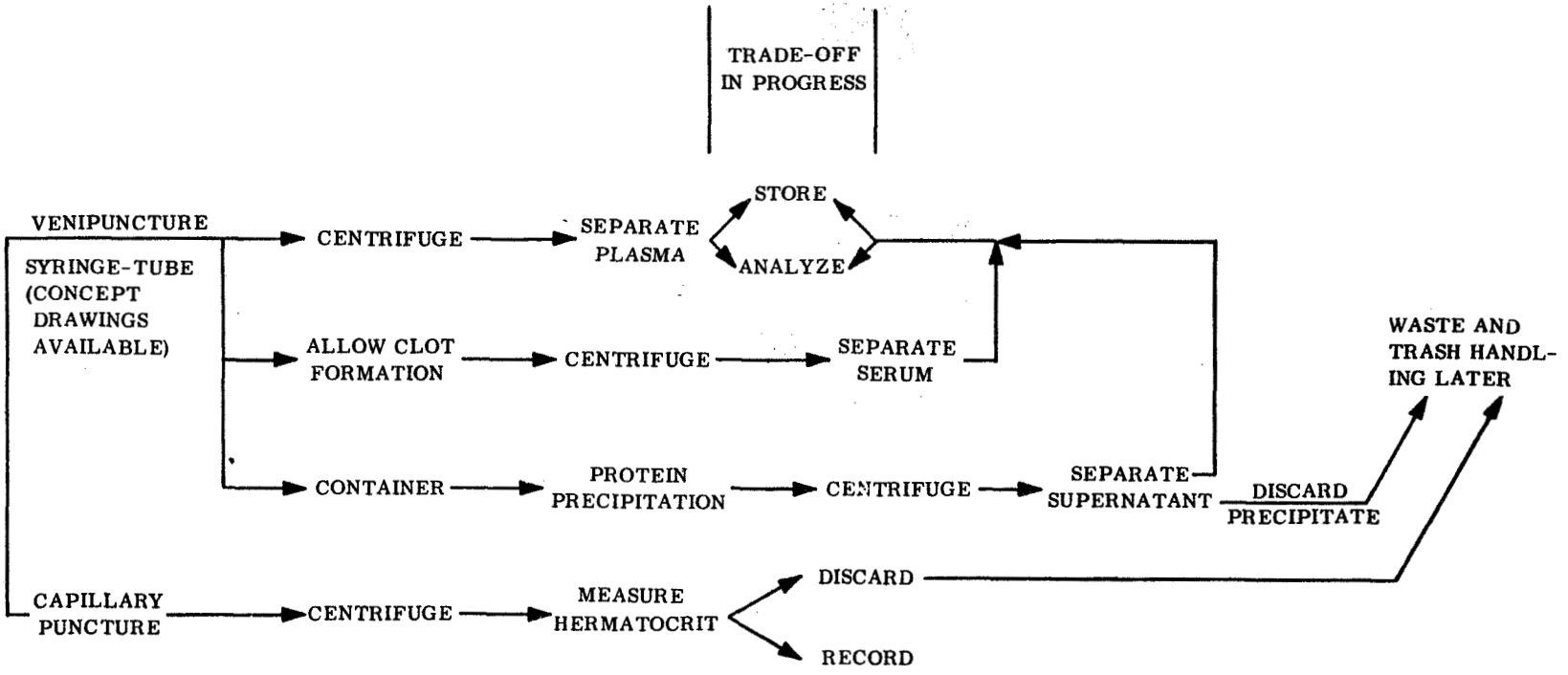

Figure B-27. Centrifuge Functional Flow Diagram

TABLE B-26. MICROSCOPE DATA

Equipment Item	Components	Support Equipment	Engr. Design Information	Comments
Mineral Metabolism and Skeletal Status Evaluation Energy Metabolism Microbiological Hematological (See Figure B-28)	10x or 20x eyepiece 40x, 70x and 100x objectives Movable Stage Light Source and Abbe condenser Rack and pinion for focusing (Most probably Huygenian optics; need for phase contrast possible)	Hemocytometer Wintrobe pipettes Cell Dilution Fluids Slides Immersion Oil Tissue Culture Vessels Stains and Fixatives Millipore-type filters and Holders Counter, Manual (for differentials) Camera	Later	A number of possible uses for the microscope involve complex procedures, high skill levels and/or toxic reagents. Final list of measurements after on-board vs. post-flight trade-off. Volume and envelope dependant on lens system, folded optics a possibility, lab microscopes heavy for rigidity and stability. Weight can be easily reduced by proper design. With adequate funding, flight prototype could be available in 6 months.

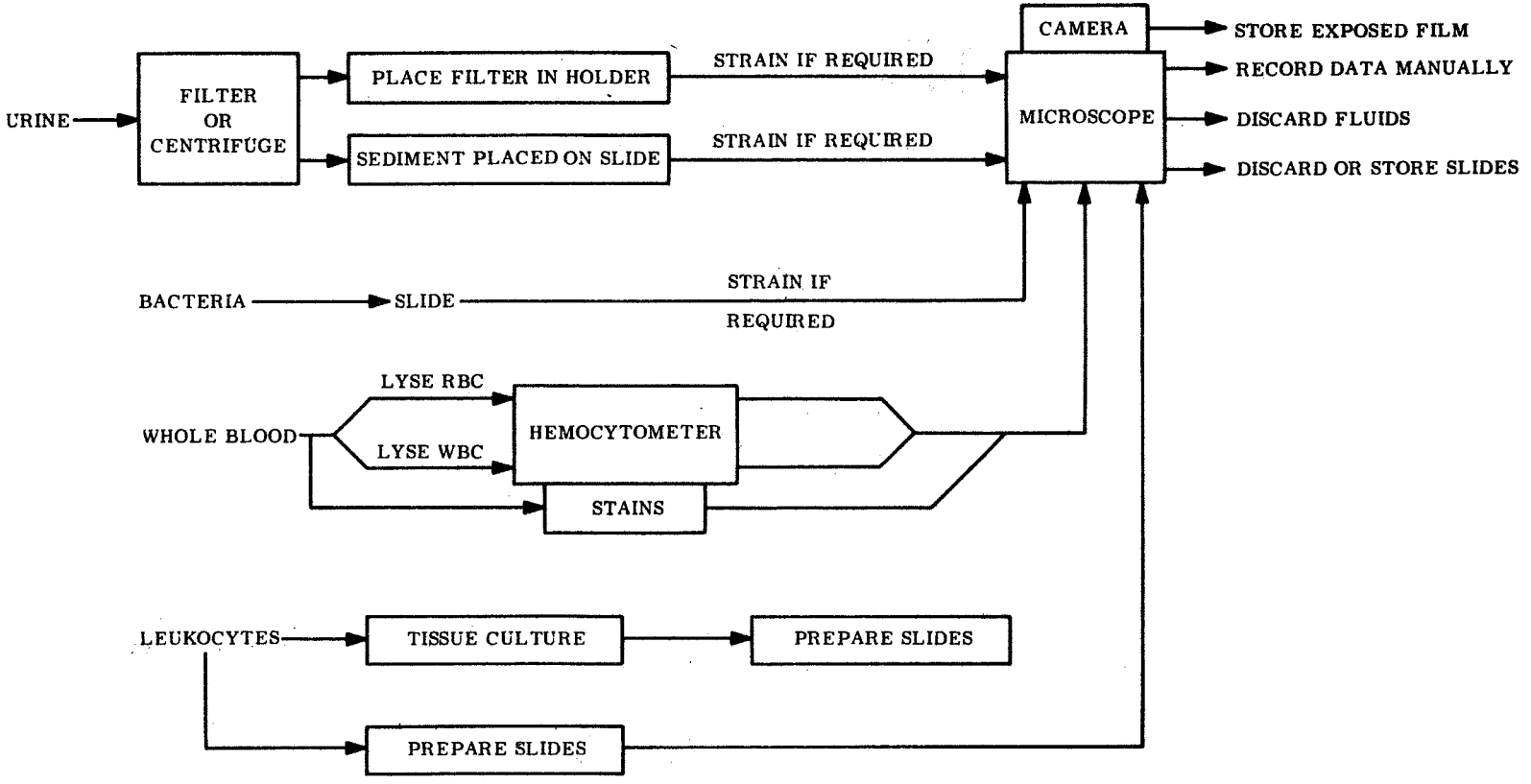

Figure B-28. Microscope Functional Flow Diagram

TABLE B-27. SPECTROPHOTOMETER/COLORIMETER DATA

Equipment Item	Components	Support Equipment	Engr. Design Information	Comments
Fluid Volume Distrib. Eval. Muscular Status Eval. Mineral Metab. and Skeletal Status Eval. Hemostasis Energy Metab. Electrolyte Balance Hematological (See Figure B-29)	Light Source Diffraction Grating or Selected Optical Filters Photocell Readout Scale and/ or Automatic Printout	Calibration Equipment Calibrated Disposable Cuvettes Fluorimeter Attachment Nephelometer Attachment	Weight - 0.75 - 1.0 lb. Volume and Shape - 40 in^3 (3 inches x 3 inches x 4.5 inches) Power - 8 watts during operating; <1 minute per determination maximum operating time of 3 hours/ day, discontinuous. Data Output - Optical density or transmission readings can be read from scale and recorded manually or readout/ printout can be automatic for manual and/or automatic recording. Thermal Control Reqs- No heat transfer to samples. Fluorimeter - 1.3 lb., 70 in^3, 18 watts while operating; maximum operating time 1 hour/day discontinuous. Nephelometer - Design information later.	Miniaturization of existing lab equipment or new design feasible.

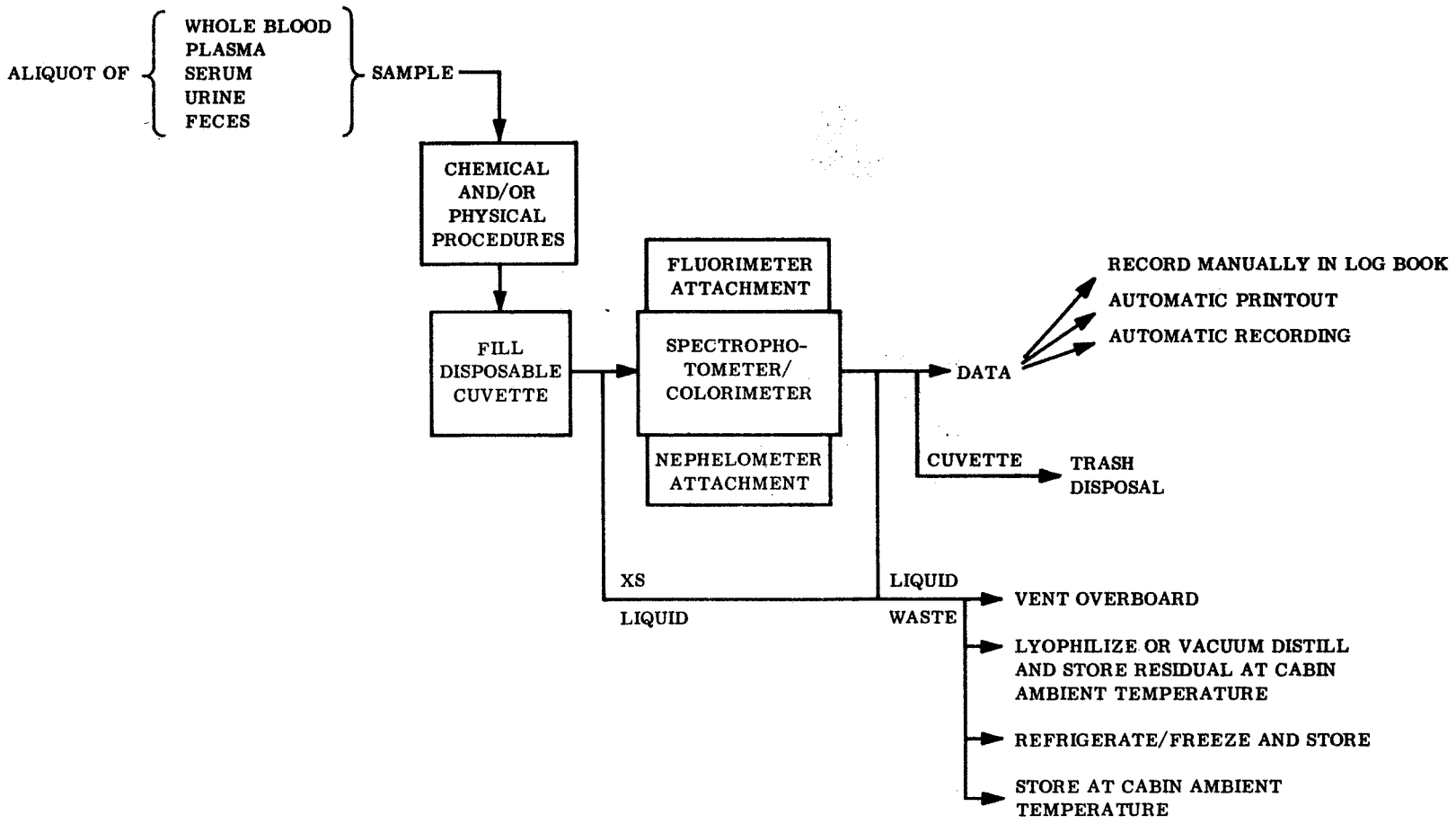

Figure B-29. Spectrophotometer/Colorimeter Functional Flow Diagram

TABLE B-28. AUDITORY FUNCTION DATA

MEASURE:	Auditory Function
(See Figure B-30)	Pitch Intensity Localization Pattern Motion
	Speech
HARDWARE	High Fidelity Binaural Stereophonic Magnetic Tape Playback System Audiometer
Primary	High Fidelity Tape Recorder
Support	Reading Material for Speech Program Restraint Stereo Earphones (Outside Sound Attenuation Pads) Microphone (High Fidelity) Prerecorded High Fidelity Stereo Tapes Scoring Materials
DISPLAYS	Stereo Magnetic Tape Playback System
	Operational States On/Off Stop, Start, Forward, Rewind Tape Position (In Inches) Cartridge Side and Identification Earphone Balance
	Audiometer
	Operational States On/Off Stop, Start, Forward, Rewind Calibration Zero Cartridge Side and Identification Program - In Process, Complete Crew Response Switch
	High Fidelity Tape Recorder
	On/Off Tape Remaining Recording Level Microphone Control (On/Off)

MEASURE:	Auditory Function (Cont)
CONTROLS	Stereo Magnetic Tape Playback System
	On/Off Switch Status Switches for Stop, Start, Forward, Rewind Cartridge Release and Lock Volume Control Earphone Balance Tape Speed
	Audiometer
	On/Off Switch Status Switches for Stop, Start, Rewind Calibration (Push Button) Calibration Adjust Cartridge Release and Lock
	Tape Recorder
	On/Off Switch Recording Volume Control Status Control for Stop, Start, Rewind, Record Playback
FACILITIES	Work Site "Silent Running" Mode Power to Operate Mag Tape Recorder, Playback and Audiometer Cooling - System Cooling Provisions Restraint Storage for Equipments, Tape, Recordings Voice Communication for Results Telemetry Dump for Speech Data
EXPENDABLE MATERIAL	Magnetic Tape (for Data to be Physically Recovered) Attitude Control Fuel Power

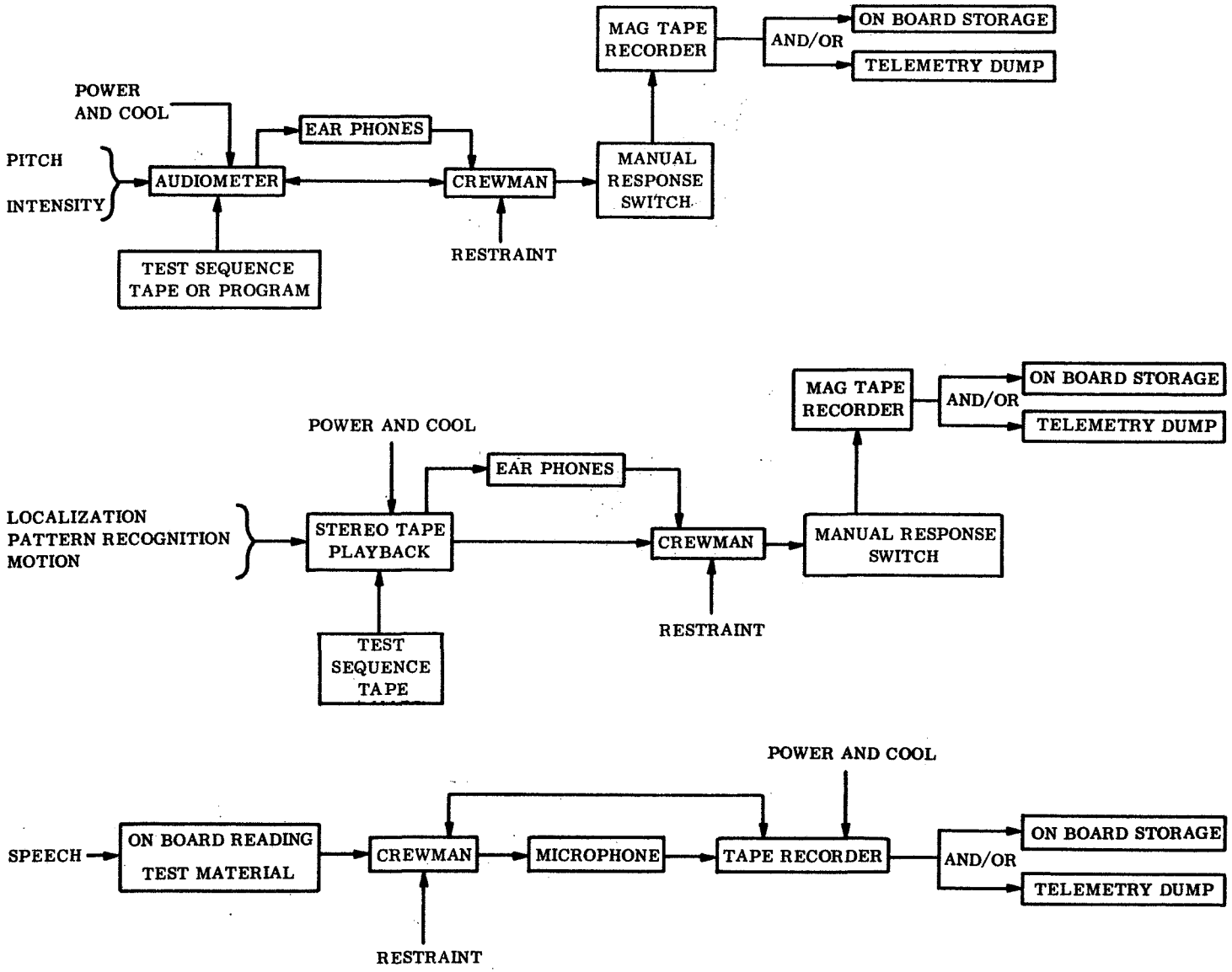

Figure B-30. Auditory Function, Functional Flow Diagram

TABLE B-29. VISUAL FUNCTION DATA

MEASURE:	Visual Function
	Brightness Thresholds Dark Adaptation Time Coarse Profile (While these measures are not formally required, they would be valuable additions in the assessment of retinal health.)
HARDWARE	
PRIMARY	Adaptometer Hecht-Schlaer Type
SUPPORT	Crew Restraint Scoring Material Light Meter
DISPLAYS	On/Off Status Stimulus Brightness Readout
(see Figure B-31)	

MEASURE:	Visual Function (Cont)
CONTROLS	On/Off Switch (Unit) Stimulus Brightness Control On/Off Switch for Fixation Stimulus Position Adjust
FACILITIES	Work Site Minimal Vehicle Dynamics Cabin Lighting Control Voice Communications Power - 2 Low-Light-Level Bulbs Cooling - Probably Forced Air Fan
EXPENDABLE MATERIAL	Power Attitude Control Fuel
COMMENTS	

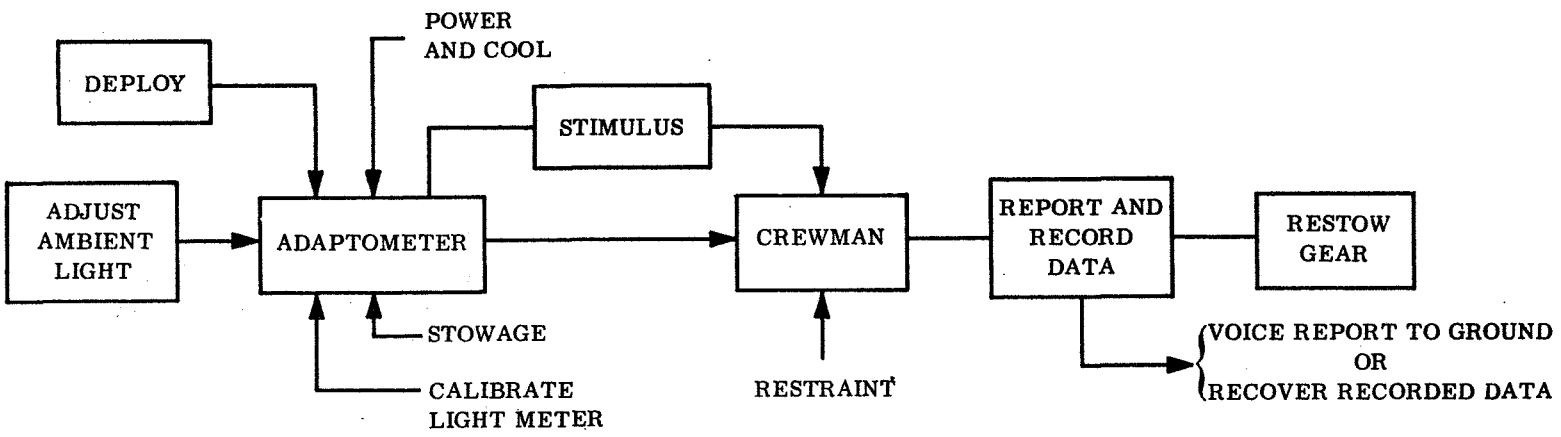

Figure B-31. Visual Function, Functional Flow Diagram

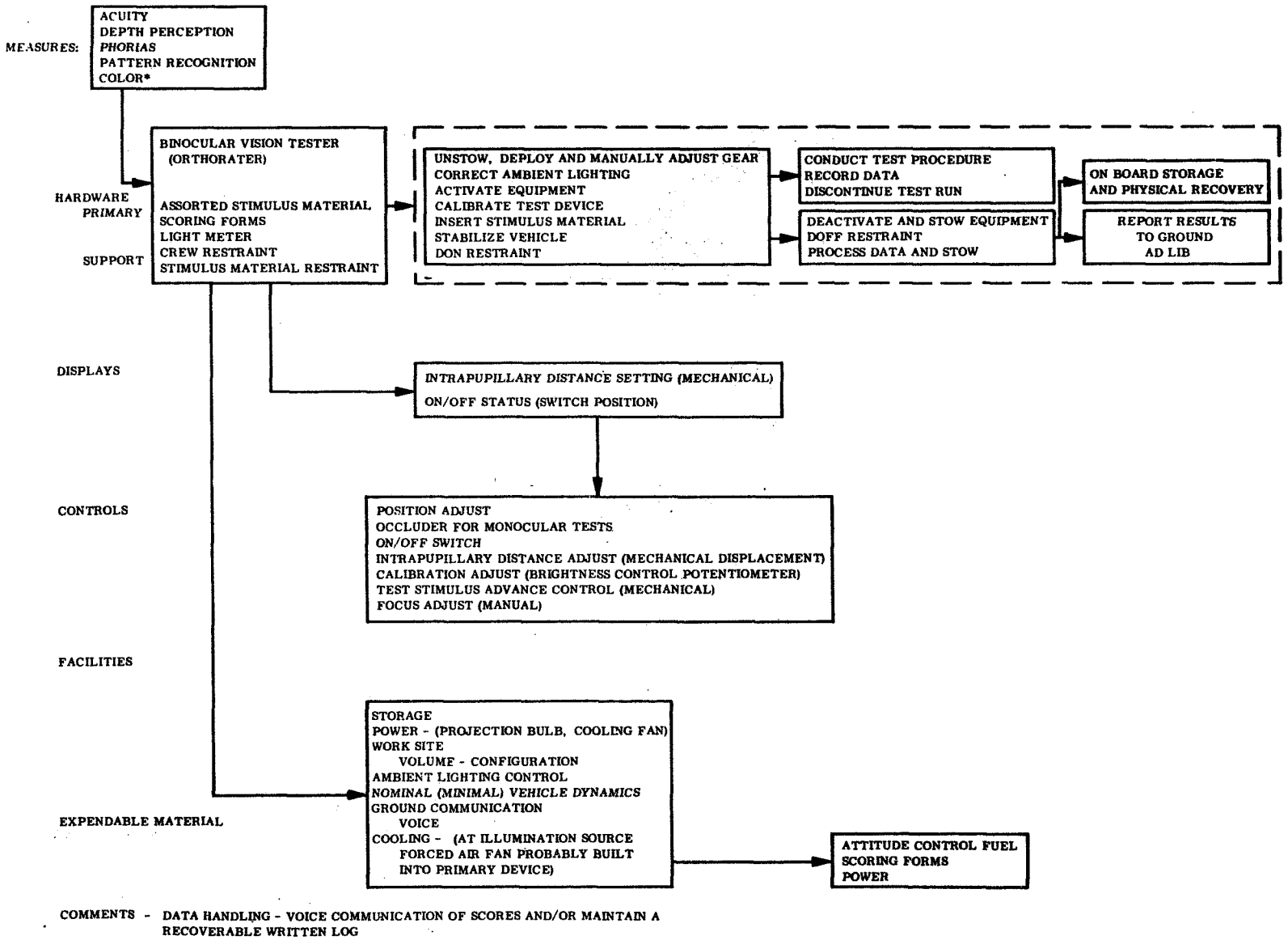

Figure B-32. Acuity Data

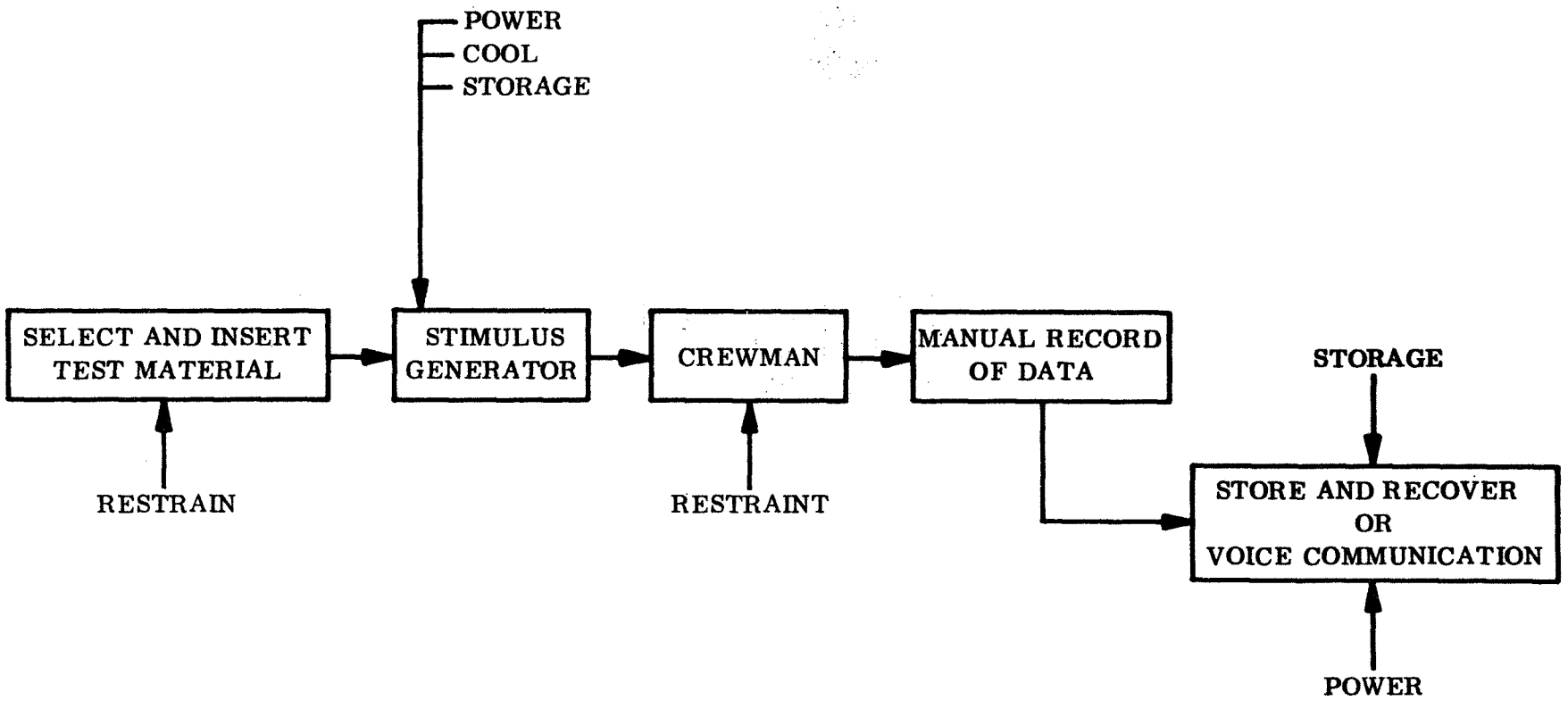

Figure B-33. Acuity Functional Flow Diagram

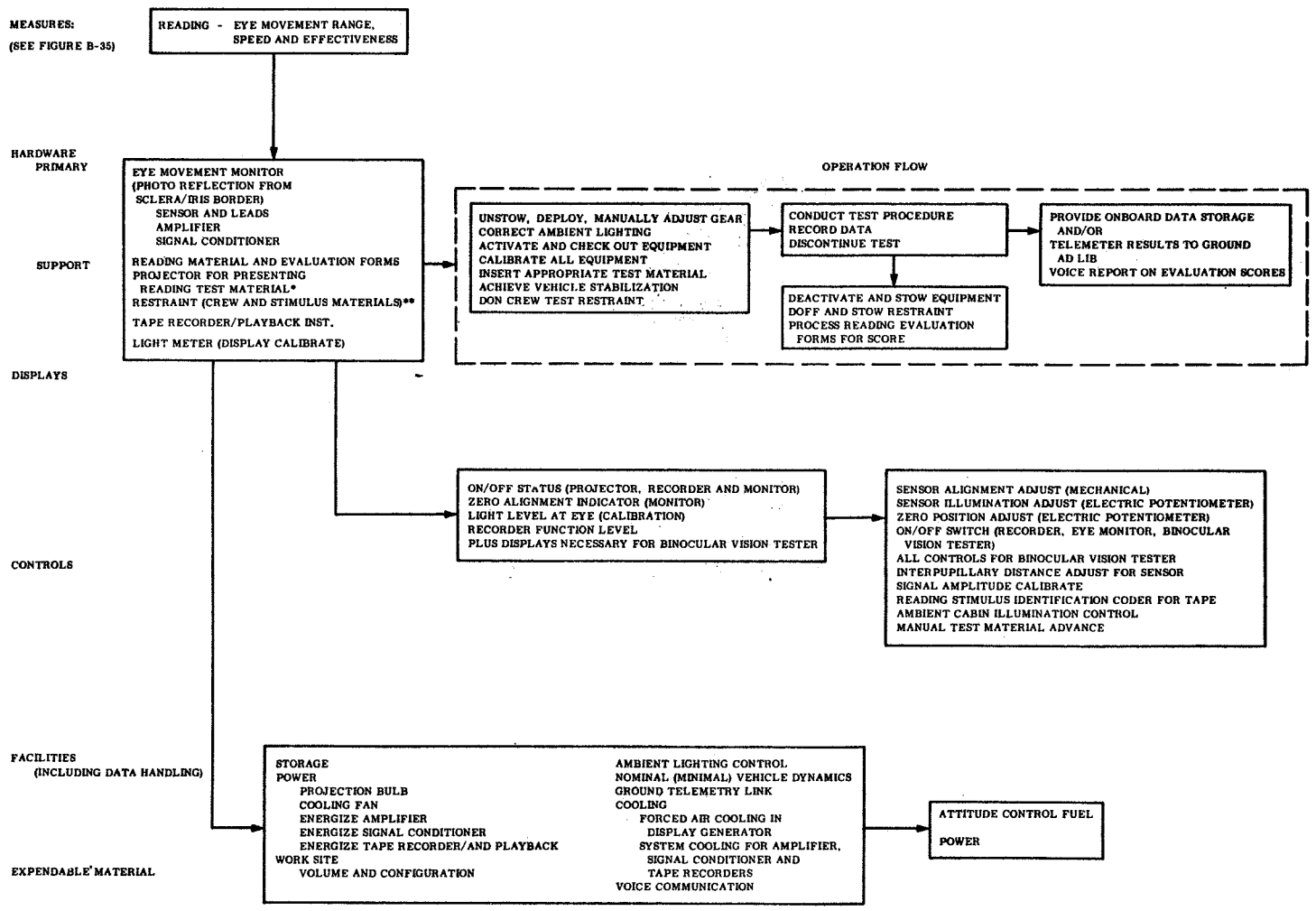

COMMENTS *MAY BE ABLE TO USE BINOCULAR VISION TESTER FOR RAW MATERIAL PRESENTATION.

**MAY BE ABLE TO USE RESTRAINT PROVIDED FOR ABOVE.

Figure B-34. Reading Data

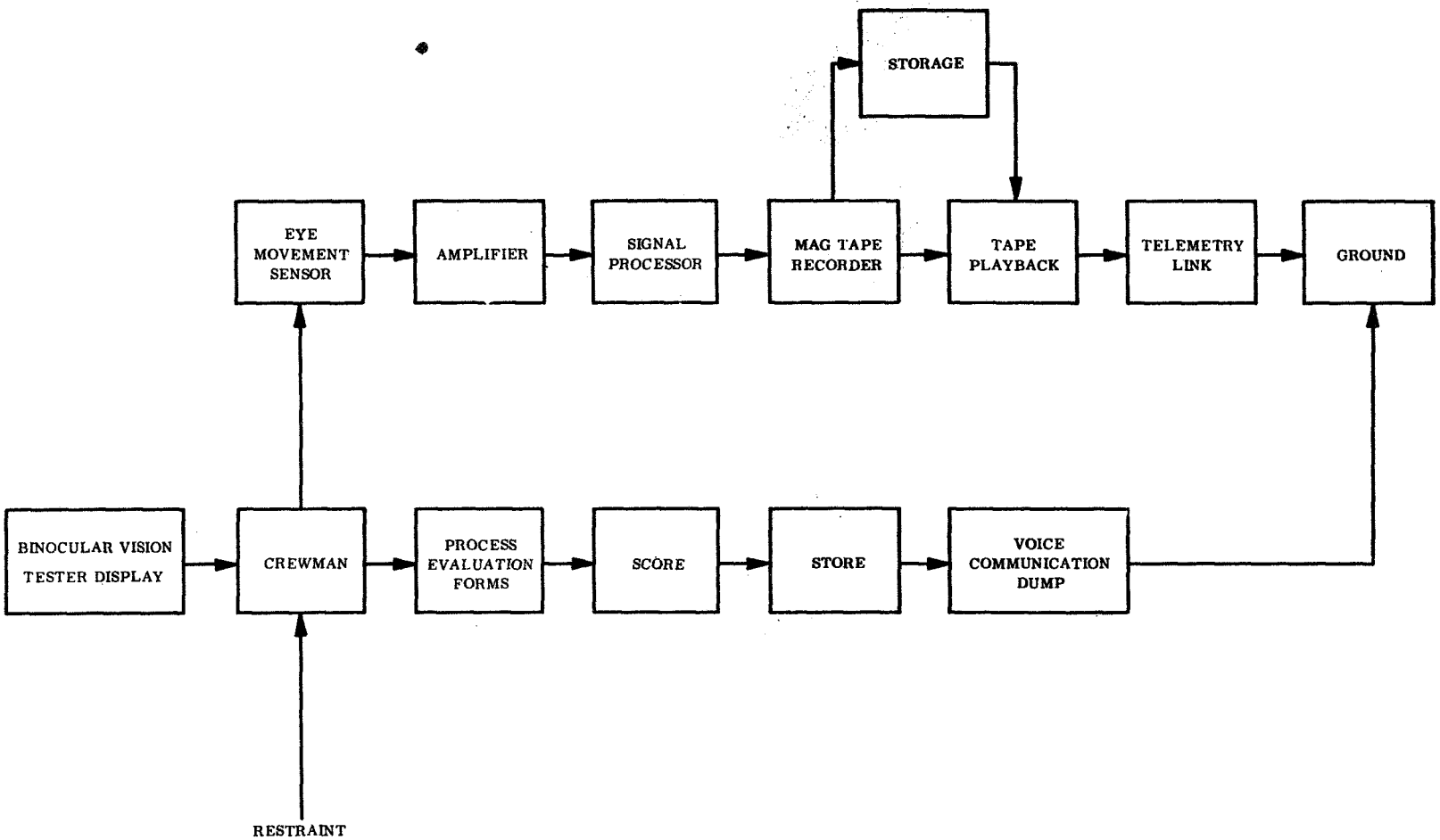

Figure B-35. Reading Functional Flow Diagram

TABLE B-30. ORIENTATION DATA

MEASURE:	Orientation
(See Figures B-36, B-37, and B-38)	I. Temporal
	II. Positional
	III. Localization
HARDWARE PRIMARY	I. Acoustic Signal Generator Earphones Elapsed Time Timer
	II. Otolith Goggles (Visual) Rod/Sphere Device (Non-Visual) Litter Chair Mode
	III. Neuro Kit
SUPPORT	Software for Programming Signal Generator Recording Material Restraint (Crew) Blindfolds Tape Recorder and Tape

MEASURE:	Orientation (Cont)
DISPLAYS	I. On/Off Status Program Status - Standby, On, Complete Elapsed Time
	II. Setting On/Off Status Angular Readout of Litter Chair
	III. None
CONTROLS	I. On/Off Control Volume Control Program Start Timer Reset and Start/Stop
	II. On/Off Display Input Comfort Spacing
	III. None
EXPENDABLES	Recording Materials

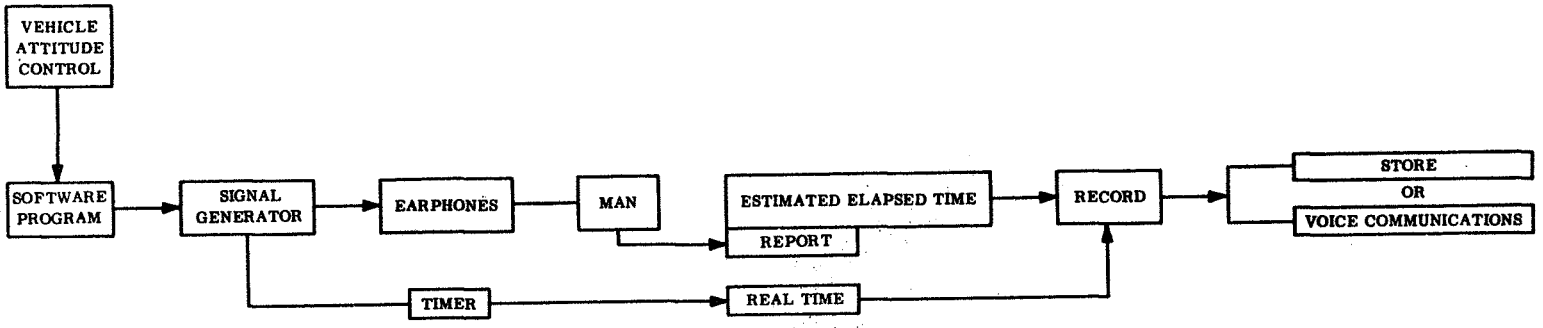

Figure B-36. Temporal Functional Flow Diagram

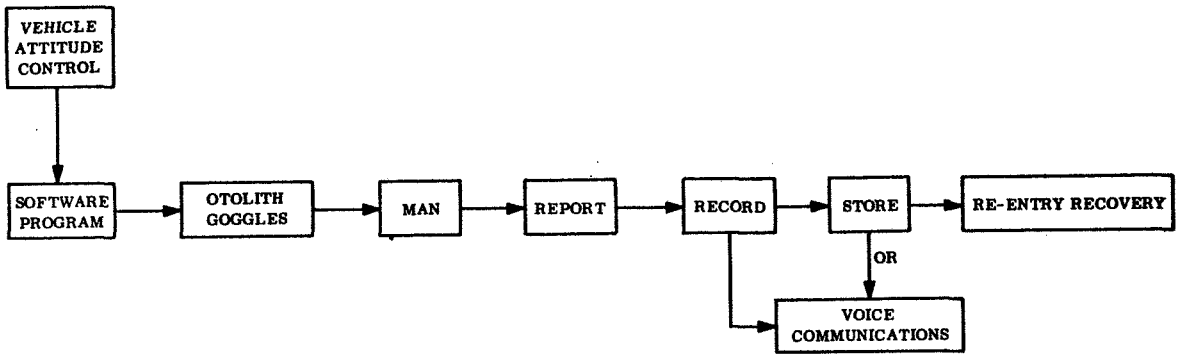

Figure B-37. Positional Functional Flow Diagram

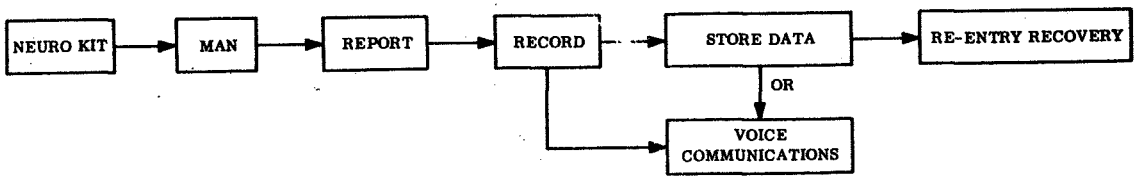

Figure B-38. Localization Functional Flow Diagram

TABLE B-31. KINESTHETIC FUNCTION DATA

MEASURE:	Kinesthetic Function
(See Figure B-39 and B-40)	Positional Dynamic
HARDWARE PRIMARY	I. Wide-Angle Movie Camera with Single Frame Exposure Potential or II. Precision (Large Displacement Moderate Force Emission) Tracking Simulator
SUPPORT	Movie Film (Black and White - High Sensitivity) Storage Cannisters for Film Restraint for Subject and Test Conductor Referent Grid for Photogrammetry Magnetic Tape Recorder for II Magnetic Tape Program Software for II Software Storage for Programming Display on II Light Meter
DISPLAYS	Camera Film Remaining Shutter Speed Frame Rate Shutter Opening Focus Setting Operation State (Position Switch) Point of Aim Experiment Run Identification Material (Standard Camera Display) Tracking Device Target and Referent Hardware Status - On/Off Program Status - Standby, On, Complete Device Status - On/Off

MEASURE:	Kinesthetic Function (Cont)
CONTROLS	CAMERA Film Transport Windup Restraint Photographic Settings Frame Rate Selector Tracking Device On/Off Control Program Status Control - Standby, On, Complete Input Manipulanda (Joy Stick) Display Brightness Control Display Zero Control Displacement Calibrate Display Focus (Include D/C Requirements for Onboard Mag Tape) Mag Tape Transfer to Telemetry Dump
FACILITIES	Adequate Free Volume to Carry Out Tasks Power for Tracking Simulator Power for Tape Recorder Cooling for Tracking Simulator and Recorder Adequate Ambient Lighting for Photography Film Storage on Orbit and for Retrieval at Re-entry Telemetry Dump for Mag Tape Material Vehicle Attitude Control Equipment Storage
EXPENDABLES	Film Film Storage Cannisters Attitude Control Fuel

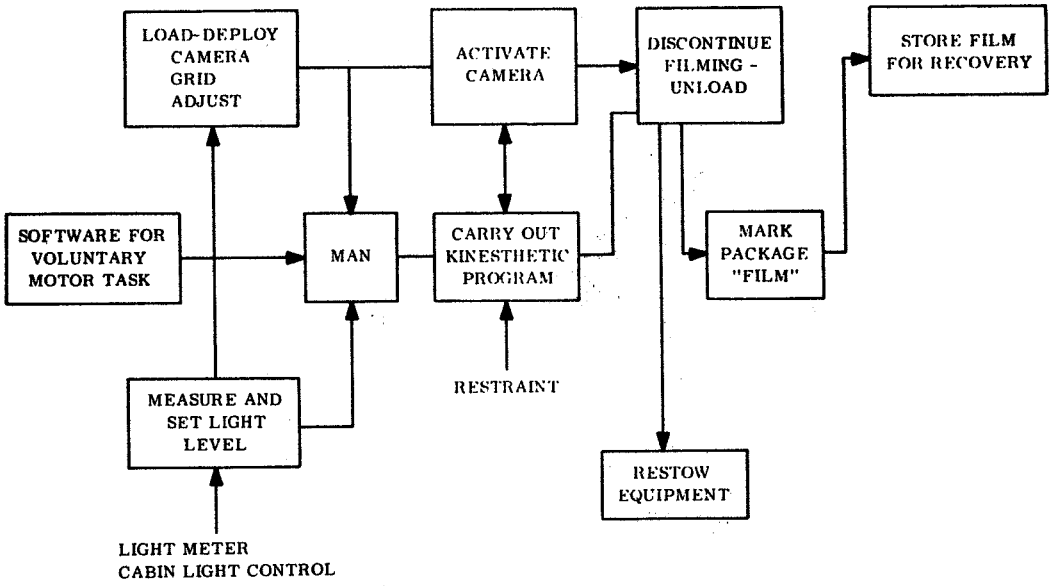

Figure B-39. Kinesthetic Function, Camera Functional Flow Diagram

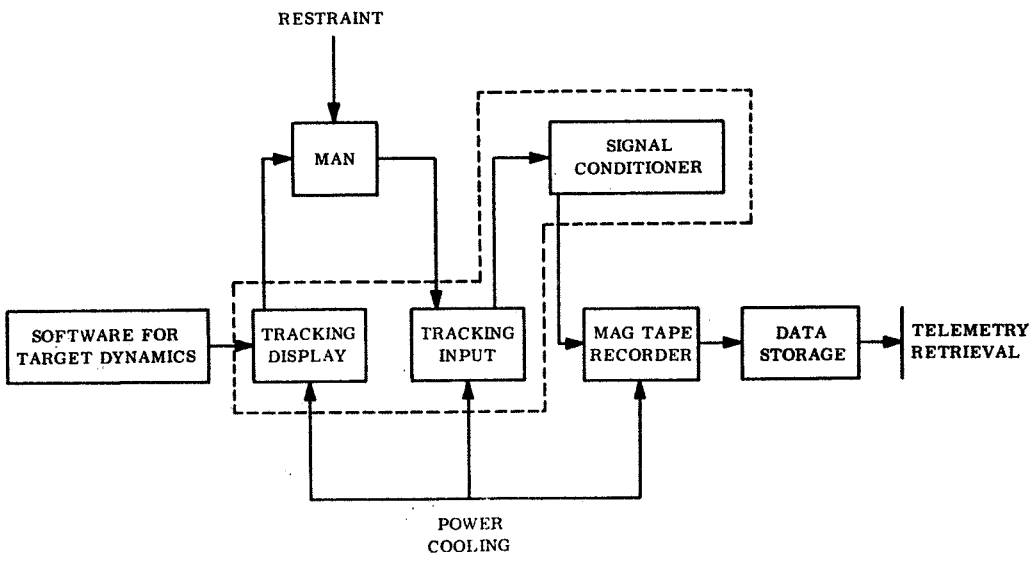

Figure B-40. Kinesthetic Function, Tracking Functional Flow Diagram

TABLE B-32. VESTIBULAR FUNCTION DATA

MEASURE: Vestibular Function (See Also Neurological)

(See Figure B-41)

		Weight	Stored Volume
HARDWARE			
PRIMARY	Rotating Litter Chair	60 Pounds	17.5 Cubic Feet
SUPPORT	Restraint		
	Tape Recorder		
	Camera (Movie)		
	Film		
	Writing Materials		
	Measurement and Recording System for Vehicle Dynamics During Test Procedures		
	Rotation Profile		
	Program Software		
DISPLAYS	Rotation Rate Litter Chair		
	System Status - On/Off		
	Regular Tape Recorder Displays		
	Regular Camera Displays		
CONTROLS	System Activate for Rotating Chair		
	Rate of Rotation Control		
	Camera Operation and Load Control		
	Mag Tape Recorder Operation and Load Control		
FACILITIES	Vehicle Stabilization		
	Mount Site for Rotating Litter Chair		
	Free Volume		
	Storage and Recovery Facilities for (10 pounds, 1 cubic foot)		
	Film		
	Mag Tape		
	Written Notes		
	Neuro Kit		
	Otolith Test Goggles		
	Power (500 Watts - 30 minutes per man - 4.5 kwh)		
	Litter Chair Rotation		
	Recorder		
EXPENDABLES	Film		
	Power		
	Fuel		
	Note Paper		
	Mag Tape		
	Writing Materials		

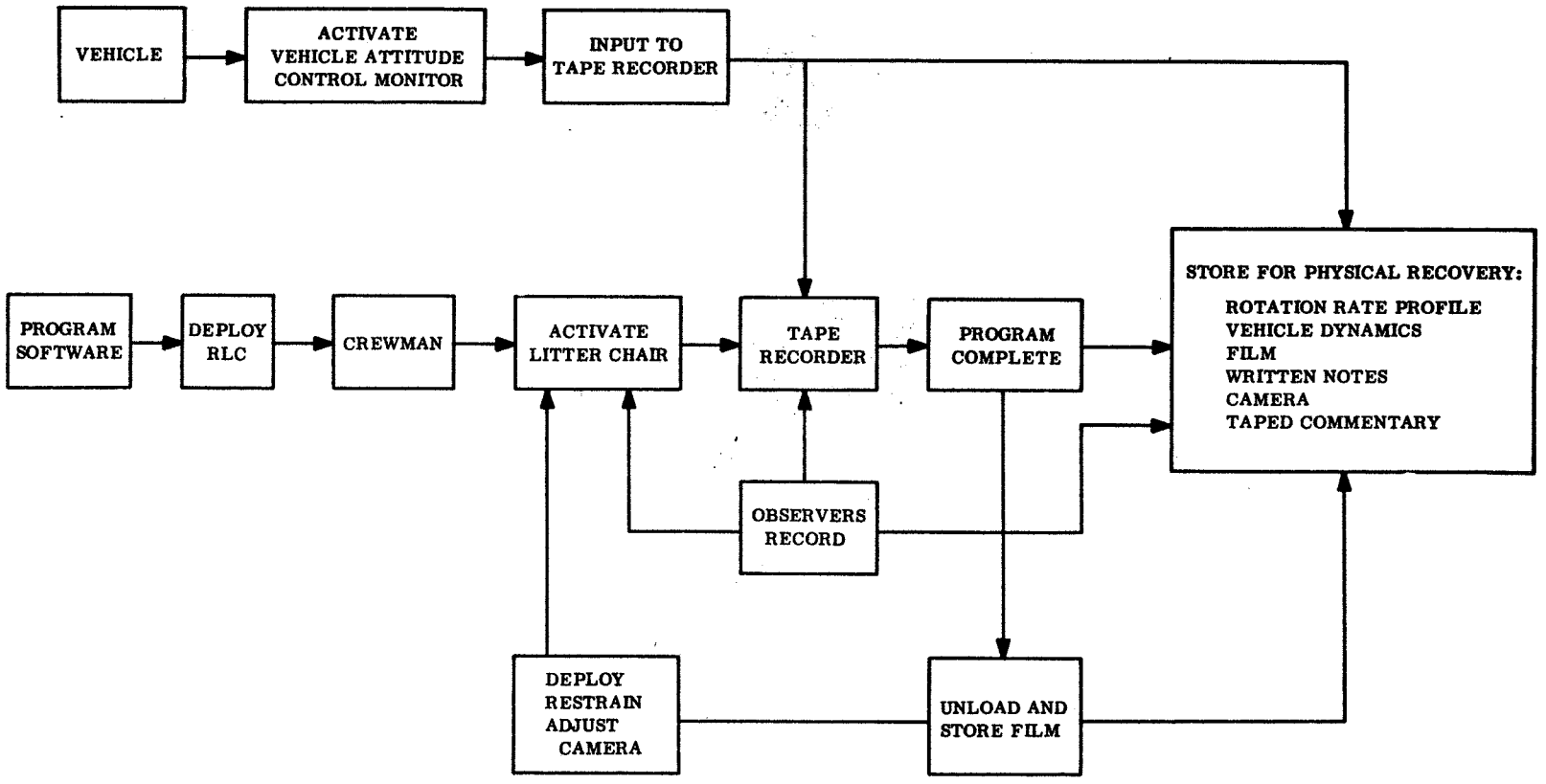

Figure B-41. Vestibular Function, Functional Flow Diagram

TABLE B-33. ELECTROPHORESIS EQUIPMENT ESTIMATED VOLUME, WEIGHT, AND POWER, EXCLUDING EXPENDABLES

Equipment	Volume (cu. in.)	Weight (lb.)	Power
Power Supply	96	1	--
Electrophoresis Chamber	16	0.12	1-3 watts* (100-300 volts and 10 ma)
Scanning Densitometer for Reading Electrophoretic Patterns	1152	15	1000 watts (115 VAC)

*One chamber connected to power supply

TABLE B-34. THIN LAYER CHROMATOGRAPHY EQUIPMENT ESTIMATED VOLUME, WEIGHT, AND POWER, EXCLUDING EXPENDABLES

Equipment	Volume (cu. in.)	Weight (lb.)	Power
Thin Layer Chromatography	10	0.5	None

APPENDIX C

EXERPTS FROM PRESERVATION OF BIOLOGICAL SPECIMENS STUDY

FINAL REPORT

APPENDIX C

EXCERPTS FROM PRESERVATION OF BIOLOGICAL SPECIMENS STUDY FINAL REPORT

This appendix is comprised of selected excerpts from the final report on Contract No. NASW-1562, "A Study of the Collection and Presentation of Biological Specimens during Space Flight for Post-Flight Analysis" and includes the following information:

D.1 Table of Contents

D.2 Summary

D.3 Conclusions and Recommendations

D.4 Selected Charts and Diagrams

C.1 TABLE OF CONTENTS

Section		Page
1	SUMMARY	1-1
2	INTRODUCTION	2-1
	2.1 General	2-1
	2.2 Safety	2-3
	2.3 Why	2-5
	2.4 Measurement Criteria	2-6
3	ANALYTICAL METHODS	3-1
	3.1 Blood	3-1
	3.1.1 Bibliography for Blood Analyses	3-42
	3.2 Urine	3-51
	3.2.1 Correlation of Analytical Methods for Constituents Common to Blood and Urine	3-64
	3.2.2 Bibliography for Urine Analyses	3-65
	3.3 Feces and Sweat	3-77
	3.3.1 Bibliography for Feces and Sweat Analyses	3-80
4	MICROORGANISMS	4-1
	4.1 Sampling	4-2
	4.1.1 Sampling Sites	4-2
	4.1.2 Sampling Methods	4-3
	4.2 Analysis	4-5
	4.2.1 Gas Chromatography	4-6
	4.2.2 Mass Spectrometry	4-6
	4.2.3 Infrared Spectroscopy	4-7
	4.2.4 Fluorescent Antibody Technique	4-7
	4.2.5 Modification of Conventional Methods	4-8
	4.3 Media	4-8
	4.4 Preservation of Samples for Post-Flight Analysis	4-9
	4.4.1 Incubation	4-9
	4.4.2 Refrigeration	4-10
	4.5 Bibliography	4-10
5	PRESERVATION TECHNIQUES	5-1
	5.1 Summary	5-1
	5.1.1 Chemical	5-1
	5.1.2 Refrigeration (Chilling)	5-1
	5.1.3 Freezing	5-4
	5.1.4 Vacuum Distillation (Drying)	5-4
	5.1.5 Lyophilization	5-4
	5.1.6 Adsorption and Ion Exchange	5-4

C.1 TABLE OF CONTENTS (Cont)

Section		Page
5.2	Selection and Approach to Each Preservation Technique	5-4
5.2.1	Chemical	5-7
5.2.2	Refrigeration	5-9
5.2.3	Freezing	5-9
5.2.4	Vacuum Distillation	5-15
5.2.5	Adsorption and Ion Exchange	5-17
5.2.6	Lyophilization	5-17
5.3	Evaluation of Preservation Techniques	5-19
5.3.1	Chemical	5-19
5.3.2	Refrigeration	5-21
5.3.3	Freezing	5-30
5.3.4	Vacuum Distillation	5-47
5.3.5	Adsorption and Ion Exchange	5-54
5.3.6	Lyophilization	5-54
5.4	Biological Aspects of Preservation	5-63
5.4.1	Blood Preservation	5-66
5.4.2	Urine Preservation	5-73
5.4.3	Sweat and Feces	5-84
5.5	Trade-off Considerations of Biological Requirements versus Engineering Penalties	5-85
5.6	Rating of Preservation Methods	5-86
5.6.1	Rating of Preservation Methods on the Basis of Constituent Stability	5-86
5.6.2	Rating of Preservation Techniques in Terms of Safety and Ease of Performance of Procedures for Astronauts	5-96
5.7	Bibliography	5-98
6	COLLECTION AND HANDLING	6-1
6.1	Collection	6-1
6.1.1	Feces Sampling	6-1
6.1.2	Urine Sampling	6-6
6.1.3	Blood Sampling	6-15
6.1.4	Sweat Sampling	6-26
6.1.5	Bacteriological Sampling	6-35
6.2	Handling	6-42
6.2.1	Storage	6-42
6.2.2	Storage Module	6-45
6.2.3	Transportation	6-53
6.2.4	Trash Disposal	6-53
6.3	Bibliography	6-56

C.1 TABLE OF CONTENTS (Cont)

Section		Page
7	SAMPLING REGIMEN	7-1
8	TRAINING	8-1
	8.1 Training Program Outline	8-2
9	CONCLUSIONS AND RECOMMENDATIONS	9-1
	9.1 Conclusions	9-1
	9.1.1 Analytical Methods	9-1
	9.1.2 Microorganisms	9-2
	9.1.3 Preservation	9-2
	9.1.4 Collection and Handling	9-3
	9.1.5 Sampling Regimen	9-3
	9.1.6 Training	9-4
	9.1.7 Reliability as Related to Complexity from the Biological Viewpoint	9-4
	9.2 Recommendations	9-4
	9.2.1 Studies on Preserved Samples	9-4
	9.2.2 Laboratory Procedures	9-5
	9.2.3 Crew Selection	9-6
	9.2.4 Materials	9-6
	9.2.5 Safety	9-6
	9.2.6 Thermodynamic Properties of Biological Fluids	9-7
	9.2.7 Development of Freon Vapor Cycle Cooling Unit for Zero-G Operation	9-7
	9.2.8 Indigenous Microflora	9-8
	9.2.9 Thermodynamic Analyses of Spatial Heat Sinks (Radiators) for Specific Space Flight Missions	9-8
	9.2.10 Development of a Washing Machine for Use In Space Vehicle	9-8
	9.2.11 Centrifuge Development	9-8
	9.2.12 Trash Handling	9-9
	9.2.13 Experimental Design	9-9
	9.2.14 Experimenter's Handbook	9-9

APPENDICES

A.	CLINICAL LABORATORY EVALUATIONS	A-1
B.	PRELIMINARY DESIGN FEATURES	B-1
C.	GENERAL GUIDELINE DESIGN INFORMATION	C-1

C.2 SUMMARY

This four-month study, Collection and Preservation of Biological Specimens During Space Flight for Post-Flight Analysis, performed under Contract NASW-1562, has included consideration of both the biological and engineering aspects of collection and preservation.

The philosophy underlying the approach taken by the General Electric Company is stated in Section 2. The guiding motive in this approach was to try to assure that analytical results would yield the best data possible in terms of physiological significance, accuracy, precision, and sensitivity. The need for good physiological data is self-evident: extended weightlessness may result in changes in the physiology of astronauts which may be deleterious either temporarily or permanently. Little information is available in regard to physiological changes which may take place in the course of space flight. All that we know is the result of before and after studies, for the most part, for the relatively short periods of the Gemini missions. Another consideration which has guided GE's approach has been the safety of the astronauts, who should not be exposed to hazardous chemicals and procedures.

Analytical methods for constituents of blood, urine, feces, and sweat are described in Section 3. These methods were chosen with a view to eliciting the most precise and accurate data possible from samples preserved during experiments planned by NASA. The question of possible preservation methods also played a role in the choice of techniques because some methods could not be used on preserved specimens; especially in the case of whole blood, in-flight determinations may have to be made since no adequate means of preservation was found. Another factor in the choice of analytical methods was their degree of acceptance and use by research and clinical laboratories. Some techniques which may yield excellent results have not as yet come into general acceptance and, because of this and intrinsic difficulty, their use may be limited to a few research institutions. The techniques chosen are summarized in Tables 3-1, 3-2, 3-3, 3-4, and 3-5.

Sampling and preservation of microorganisms are treated separately in Section 4 because so much of the methodology needs firmer definition, and the quantitation of microbiological data still eludes us. The problems of culturing microorganisms during flight and various techniques of preserving them for post-flight analysis are considered at length. Various old and new methods of sampling are also considered; development of new, and modification of currently used techniques are recommended. Methods of analysis and identification of microorganisms are also discussed. Automatic means of identification, such as gas chromatography, mass spectrometry, infrared spectroscopy, and fluorescent antibody technique which are in the development stage and may be available for routine use in the future are considered.

The engineering and biological aspects of preservation techniques are discussed in Section 5. Based on system weight and state of development, the order of engineering preference for biological sample preservation is rated "best to worst": chemical, refrigeration (chilling), freezing, vacuum distillation, lyophilization, and adsorption-ion exchange. A best approach is selected for each, and the weight, power, and volume penalties are discussed at length. The biological problems involved are considered separately for blood, urine, feces, and sweat. Feces and sweat appear to be the easiest to preserve reliably. Urine presents more difficulties, but most can be solved by several approaches. Blood, however, presents extremely difficult problems with respect to the preservation of some of its constituents. The only solution to some of these at present appears to be in-flight analysis. Other problems have no ready solution but would require laboratory developmental work. All preservation choices require experimental verification and establishment of standard base-lines for any changes in constituents which might occur as a result of a preservation method.

Collection and handling of the samples are discussed in Section 6. Each biological material is discussed separately, and approaches which take into account the absence of gravity and the necessity for scrupulous avoidance of spillage are presented. Several approaches are possible for each material and are described in detail. Some of these make use of designs

already developed by the General Electric Company. Other concepts were developed during the course of this study. Besides devices for collection and storage of the materials themselves, the need for an on-board centrifuge and washing machine is pointed out and preliminary concepts for these devices are shown. Sample containers for holding liquid bacteriological culture media, which permit the addition of samples, are discussed as are storage and transporting modules for all samples. A final sub-section treats the problem of trash disposal and describes a suggested approach.

Sampling regimens are presented in Section 7. Included are schemes for accommodating all the clinical evaluations listed in Appendix A as well as others which would provide a stepwise approach. Sample sizes have been determined so as to allow analyses in duplicate for the constituents of interest. Volume, weight, and power penalties for storing samples by the method of choice are also listed. In addition, clinical evaluations listed in Appendix A, plus others of possible interest have been ranked in groups on the basis of physiological importance and feasibility of performance. Volume, weight, and power penalties for these groups have been determined for the various preservation methods considered. The need for assessment of the relative importance of tests and final priority assignments based on a trade-off between priority assignment by scientific merit and feasibility ranking (by flight schedules, flight qualified hardware lead time, and crew skills required) is pointed out. The problem of physiological importance and feasibility of performance has also led to a tabulation of tests listed in Appendix A which could be omitted from the preservation regimen.

An outline of a training program for astronauts to prepare them for carrying out the procedures necessary for collecting, handling, and preserving biological specimens is described in Section 8. There are two approaches taken depending on whether a flight surgeon is a member of the crew. Also included is an estimate of clock-hours of classroom attendance needed to train a crew to the necessary level of proficiency.

Conclusions of this study and recommendations for future work are included in Section 9.

C.3 CONCLUSION AND RECOMMENDATIONS

After a four-month study of a multi-faceted problem containing dependent, independent, and confounding variables, it would be presumptuous to label the bulk of our conclusions as any thing other than "tentative". They are discussed below, as our recommendations for future study.

9.1 CONCLUSIONS

In a number of instances, a recommendation for work in a given area is the result of a conclusion that insufficient information is available.

9.1.1 ANALYTICAL METHODS

The analytical methods deemed best for each of the body constituents are described in Section 3. During the selection of these techniques, two suspicions were confirmed: 1) Precise, accurate, and sensitive tests of proven worth are readily available for elements, inorganic radicals, and relatively simple organic compounds; 2) for complex organic compounds ranging from steroids to proteins, precision and/or accuracy tend to diminish rapidly. Another drawback to many such tests is the large sample volume required.

Clinical tests on whole blood are for the most part approximations which are compared to an empirically obtained set of standards. A common determination such as a WBC differential is subject to considerable fluctuation even when done by the same technician on two samples of blood taken within a few minutes of each other from one person.

Platelet counts can and do vary to the extent of $\pm$ 35%. While such tests do supply qualitative information, their lack of precision and accuracy place them low on the priority list for inclusion in a set of flight experiments.

Urine analyses, with the exception of 17-hydroxycorticosteroids, aldosterone, serotonin, and vasopressin, can be done within the precision limits, set by NASA, of $\pm$ 5%. This is in keeping with the statement above regarding loss of precision in tests for the more complex organic compounds.

Feces and sweat electrolytes can be measured with comparative ease.

9.1.2 MICROORGANISMS

Disagreement is rife among biologists dealing with "locked flora", and microorganisms indigenous to the skin and gut over what constitutes a "normal flora", how "normal" should be defined, how measurements of changes in skin and gut microfloral populations should be made, how samples should be taken and incubated, and the roles of protozoa and particularly viruses in man's personal microorganisms. The unequivocal statement can be made that neither the theory nor the practice of microbiology has yet developed to a state where accurate precise quantitative data on changes in skin and intestinal microorganisms can be obtained on the ground, much less in orbit. Qualitative data though can be obtained but must be carefully interpreted.

9.1.3 PRESERVATION

By far and away, chemical preservation is the simplest and most economical method with minimum weight and volume and no power cost. Unfortunately, electrolyte determinations are the only accurate assays that can be made on samples preserved in this fashion. The handful of reports in which various assays were made on stored samples, preserved chemically by freezing and refrigeration, have proven of minimal value during this study. There is no body of literature devoted to clinical analyses on preserved and stored samples. A considerable amount of work has been accomplished in the freezing of blood for future transfusions, but not only is most of the preservation at dry ice (-78°C) or liquid nitrogen (-195°C) temperatures, (prohibitively low to reach and maintain within the biomedical experiment weight and power bogies shown in Appendix C), but the criteria for efficacy of preservation are concerned with the attribute of cell viability, not minimal changes in value of blood constituents.

For the analyses listed in Appendix A, freezing, refrigeration, and incubation will all be required, plus chemical preservation. For purposes of safety, it may be necessary to refrigerate chemically preserved specimens.

Lyophilization and vacuum distillation, with the exception of reducing wash water volume, are feasible but are considered inferior. Lyophilization is an excellent technique for preserving many sample constituents, but engineering penalties are severe, and freezing preserves these constituents just as well for lfights of several months duration. Drying of samples over a desiccant looks good on paper, but no data on this method is available. Ion exchange resins, ring over chromatography, and other adsorption or absorption techniques are much too unwieldy for application to flight experiments.

9.1.4 COLLECTION AND HANDLING

Feces and urine can be collected automatically. There are no handling problems with the recommended systems.

Sweat, whether the collection bag or washing machine is used, will require a bit more effort on the part of the crew. Handling of the sample is quite straight forward.

Collection and handling of fecal samples, swabs, etc. for microorganism assay, though, is a different story. A highly motivated and well trained crew is mandatory if strict adherence to a sampling protocol is to be assured.

For proper collection and careful attention to the several blood handling schemes, a well trained and highly motivated crew is again mandatory.

Drawings of various pieces of apparatus for use during weightlessness are shown; all would require relatively short development times.

9.1.5 SAMPLING REGIMEN

The number of blood samples and their volumes, when taken on the 7-day rotating schedule (Table 7-2) which includes all the clinical evaluations in Appendix A, can be cut to a more reasonable number if those evaluations listed in Table 7-11 are omitted.

9.1.6 TRAINING

During a GE sponsored test, engineering personnel were trained within a week to draw blood from one another and did so for a month. During another company funded study, test pilots had a great deal of difficulty in using a spirometer. The difference between the two groups was not in intelligence or prior experience but in motivation; without a strongly motivated crew, the experiments will not be done properly, if at all.

9.1.7 RELIABILITY AS RELATED TO COMPLEXITY FROM THE BIOLOGICAL VIEWPOINT

In general the more complex a procedure is for collection, handling, or preservation, the less reliable. At every stage there is the possibility of operator error or system failure with resultant loss of sample and/or hazard to the astronauts. This is particularly true of some of the procedures necessary for handling blood samples. However, this problem has two sides to it. Some techniques and equipment may have to have complexity built-in to ensure greater reliability, especially with reference to stabilization of constituents. For example, serum or plasma has to be separated from blood for many analyses. In order to be able to do this in zero gravity, special containers must be developed and an on-board centrifuge will be necessary. A great deal of operator finesse will also be required. It would be desirable to simplify all techniques and equipment to increase reliability. But in order to perform some tasks at all during flight, a certain degree of complexity is unavoidable.

9.2 RECOMMENDATIONS

9.2.1 STUDIES ON PRESERVED SAMPLES

As has been mentioned several times, there are big gaps in our knowledge of how various constitutents of biological materials hold up under various forms of preservation. A broad laboratory study of this problem utilizing various types of preservation is necessary to determine the best methods for various constituents. Data on stability is meagre. All types of preservation have not been followed experimentally in similar ways so some of the data which is available cannot be compared. This is especially true for duration of reliable storage. The gaps concerning these points can only be filled by extensive experimental studies.

One particular area where there exists little, if any, information is comparison of the efficacy of various temperatures of frozen storage. Those few studies which have dealt with the stability of biological constituents in the frozen state have only dealt with a single temperature of storage (with the exception of freezing erythrocytes for later transfusion). Rate of freezing has also received little discussion aside from its importance in preserving blood cells intact. These two areas, freezing rate and storage temperature, require a great deal more study to permit the choice of optimum conditions for this type of preservation.

If samples are to be preserved and stored for post-flight analyses, studies should be started now to develop standard curves for stored body fluid constituents of interest. Preservation by chemical means, refrigeration, and freezing are the prime candidates. Samples of urine, feces, sweat, whole blood, plasma, and serum should be stored for periods of time not less than twice the planned resupply interval. Chemical preservatives which do not pose a crew safety hazard should be sought. Refrigeration at various temperatures should be tried, $4^{o}C$ seems to be a sacred number; whether $2^{o}C$ or $7^{o}C$ might be better is unknown. Freezing with controlled and uncontrolled rates of heat removal needs investigation as well as frozen storage at various temperatures. It must be emphasized that refrigerators and freezers made for home use, but which are routinely used in laboratories, are not satisfactory for these studies. Constant temperatures ($\pm$ 0.5 to $\pm$ 1.0^{o}C) should be maintained during storage, with a sensitive, precise, and accurate temperature sensor and recorder keeping track of temperature excursions.

9.2.2 LABORATORY PROCEDURES

Modifications of laboratory methods and equipment for easier use in weightlessness should be studied as soon as possible. Standardization of laboratory methods by the American Association of Clinical Chemists is a continuing process. The assistance of this and similar professional groups should be sought in an effort to ensure that laboratory procedures, whether on-board or performed post-flight, on preserved samples are as accurate, precise, and sensitive as possible.

The variation in test results among laboratories is too great to be ignored. Reference laboratories should participate in the planned experiments as a further check on accuracy and precision.

9.2.3 CREW SELECTION

The hypotheses that test pilots can be trained to perform experiments, and the converse, that scientists can be trained to fly the vehicle should be rigorously examined. The successful performance of tedious, sometimes odious, and occasionally complex laboratory procedures is totally dependent upon the crew. If the purpose of the planned missions is to obtain physiological and biochemical data, then highly motivated, well trained crews are essential.

Astronaut selection criteria should be re-examined and probably revised in order to obtain a crew possessing the mix of skills necessary for a top-notch laboratory.

Consideration should also be given to the inclusion of laboratory technicians in the crew. Many good scientists create the illusion that they have ten thumbs and two left hands when they work in a laboratory. The experiments for the AAP missions will be carefully planned with set schedules, thus requiring more doing than theorizing. A scientist-astronaut should be in charge of the laboratory and should make all major decisions, such as switching to an alternate schedule, omitting or adding a given procedure, etc.; but for routine tasks, and there will be many, a good technician would be preferable.

9.2.4 MATERIALS

Materials for use in a space laboratory must be chosen with care to avoid toxicity and/or fire hazards. A candidate list, from which materials for sample containers and handling equipment such as syringes, etc., can be fabricated, should be generated. These materials can then be tested for their applicability to laboratory usage. For example, the surface of plastics tends to be non-wettable. Surface etching may be required for tubes. The extent to which this changes the outgassing characteristics of the plastic is unknown.

9.2.5 SAFETY

During certain of the experiments, one or more of the astronauts will require some finite amount of time to disengage himself from apparatus (e.g., sweat test in Paragraph 3.3). Should an emergency arise occasioning the need to don a pressure suit, time will be of the essence. Procedures should be developed which will permit the astronaut to rid himself of encumbrances (an equipment design criterion must be quick release) in as short a period of time

as possible. Because of the array of equipment contemplated, studies to determine these emergency procedures should be done in parallel with equipment design.

Another hazard is presented by chemicals which may be preservatives or reagents. Each on-board laboratory procedure should undergo a risk assessment as a separate task after a preliminary definition of what equipments and procedures will be included in the operation of the orbiting laboratory.

9.2.6 THERMODYNAMIC PROPERTIES OF BIOLOGICAL FLUIDS

Either as a part of the long-term sample preservation studies mentioned above, or as a separate study, the thermodynamic properties of biological fluids need to be determined. Freezing of blood for transfusion use is largely an "overkill" technique. More heat removal capacity is available than is known to be needed. Overdesign, with safety factor added on to safety factor added on to margin of error, imposes severe weight, power, and volume penalties. Since these penalties have not been of primary concern in research and eleemosynary institutions, the major users of blood freezing and storing equipment, little definitive work on the thermodynamic properties of blood has been done. With knowledge, from studies on blood preservation, of just how cold blood must be for storage, how fast it must be cooled and then knowing how much heat has to be removed at what rate, this becomes an area where spin-off from the space program could influence the design of blood-banking equipment. Smaller, more efficient preservation units would sharply reduce their cost.

For urine, feces, sweat, and blood (including whole, plasma, and serum) information on thermal properties coupled with data on the effects of long term storage would be applicable to the shipment of biological fluids; specimens, when preserved and packaged properly, could be sent to reference laboratories at any time with assurance that the analytical results could be evaluated.

9.2.7 DEVELOPMENT OF FREON VAPOR CYCLE COOLING UNIT FOR ZERO-G OPERATION

The advantages of this type of cooling unit are discussed in Section 5. However, such equipment has not been developed for space vehicles. A study should be undertaken to determine development time and application to uses other than sample preservation.

9.2.8 INDIGENOUS MICROFLORA

Changes in both skin and intestinal microflora during confinement and isolation are under study in our laboratory. Sampling and recovery of microflora from the skin and feces needs considerable study in order to know what the original population is and how it changes with time during isolation and confinement. Since a pathogen can become the dominant microorganism, the health and safety of the crew will be endangered. With the time before long term missions starting to grow shorter, better methods of controlling the microflora must also be found. Additional studies on sampling and recovery of microorganisms and on control of the indegenous microflora are urgently needed.

9.2.9 THERMODYNAMIC ANALYSES OF SPATIAL HEAT SINKS (RADIATORS) FOR SPECIFIC SPACE FLIGHT MISSIONS

During the performance of this study, a lack of information on spatial heat sinks was noted. Weight, power, and volume penalties for given missions could possibly be reduced if the heat transfer requirements of each mission could be treated separately. A modular radiator design would permit addition to, or reduction of, cooling capacity as required and might allow more flexibility in mission planning. A feasibility study is recommended.

9.2.10 DEVELOPMENT OF A WASHING MACHINE FOR USE IN SPACE VEHICLES

A description of a washing machine concept is given in Section 6. As mission length increases, personal hygiene poses more of a problem. Aside from the possibilities of doing mineral balance studies, an on-board clothes washing capability may also result in a weight reduction since less extra clothing would have to be carried. It has been determined that such a washer is feasible; the next step should be design and fabrication of a prototype.

9.2.11 CENTRIFUGE DEVELOPMENT

Whether biochemical analyses are performed on-board, post-flight, or both, a centrifuge will be needed for the preparation of plasma and serum. A description of the centrifuge which is feasible is contained in Section 6. Design and fabrication of a prototype should be started promptly.

9.2.12 TRASH HANDLING

In the normal course of clinical laboratory operation a large amount of trash is generated. Dirty disposable syringes, needles, tubes, used agar plates replete with bacteria, bloody sponges, and the like all furnish excellent breeding grounds for more bacteria and fungi. In a space vehicle, sterilization and storage of compressed plastic appears to be a likely means of coping with this problem. A concept described in Section 6, and probably alternates, should be subjected to a design study in the near future because a trash handling system will be required in an orbiting laboratory.

9.2.13 EXPERIMENTAL DESIGN

The successful performance of contracting tasks depends in part upon the contractors' knowledge of the detailed rationale and experimental design of each experiment as further work related to experiments is initiated. Such information should, therefore, be made available to contractors.

9.2.14 EXPERIMENTER'S HANDBOOK

Most of the experiments have been proposed by principle investigators who have a good deal of scientific competence but little or no knowledge of the process by which hardware for these experiments is fabricated and qualified for flight. We urge NASA to fully exercise its management prerogatives and set forth a carefully defined method of handling experiment hardware (hardware is emphasized here because sample collection and handling analytical and preservation equipment are intimately associated with the experiments) design inputs. Our past experience indicates that the following criteria should be met by such a method:

a. Experimenter identity is recognized and retained throughout the program.

b. Experiment integrity is not compromised in the integration process.

c. NASA liaison will provide opportunity for experimenter-engineer crosstalk at both the contractor's facility and the experimenter's laboratory.

d. Contractor biomedical personnel should participate in experimenter-engineer meetings.

e. Established deadlines for experimenter design inputs.

f. Design inputs to be signed off by NASA and contractor personnel before prototype or flight design freeze.

g. Prototype hardware to be laboratory tested by both experimenters and contractor.

h. Design changes in flight hardware to be specified by experimenters within 90 days after receipt of prototype hardware.

i. Direct contact between contractor personnel and individual experimenters for resolution of problem areas.

Each of the criteria listed is based on GE's experience as an experiment (and experimenter) integrator. Very often the basic conflict between the hardware engineer and the academic research scientist is due simply to lack of understanding of the problems each must solve in order to perform an experiment within the constraints imposed by a space vehicle.

The importance of schedule deadlines must be emphasized. Program delays can occur if experimenters are not acutely aware that this is their program. Some items have a long lead time. Flight schedules can not be met if experimenter inputs are not made in a timely fashion. Design inputs should be signed off by both NASA and the contractor and engineering personnel so that the attainment of experimental objectives will be ensured and the contractor and NASA not faced with time-consuming, costly changes. Prototype testing should be performed in both the experimenter's laboratory and the contractor's laboratory so that design changes recommended for the flight articles will reflect desires tempered by reality.

The orientation of experimenters has, in the past, been hit or miss. That participation in such a costly venture, at no risk to the participant, is the case, has never fully been explained to the members of the scientific community who should be made aware, in detail, of the responsibilities of the experimenter.

To this end, we strongly recommend that an Experimenter's Handbook be prepared, including inputs from experimenters, engineers, and biologists with prior experience on experiment programs. Such a Handbook would explain, for example, why design changes increase in cost as the program moves along.

C.4 SELECTED CHARTS AND DIAGRAMS

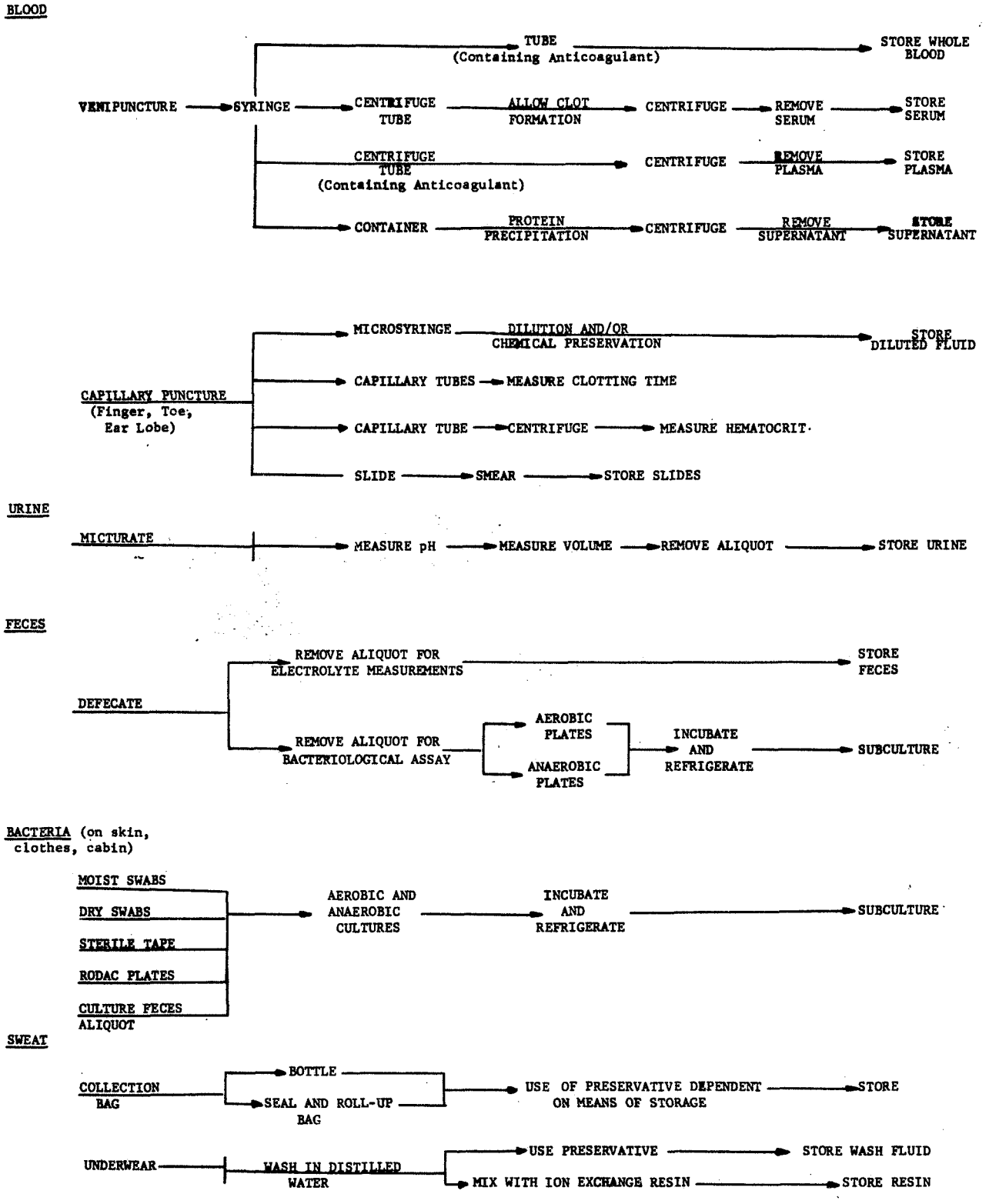

Figure 2-1. Collection to Storage Sequence

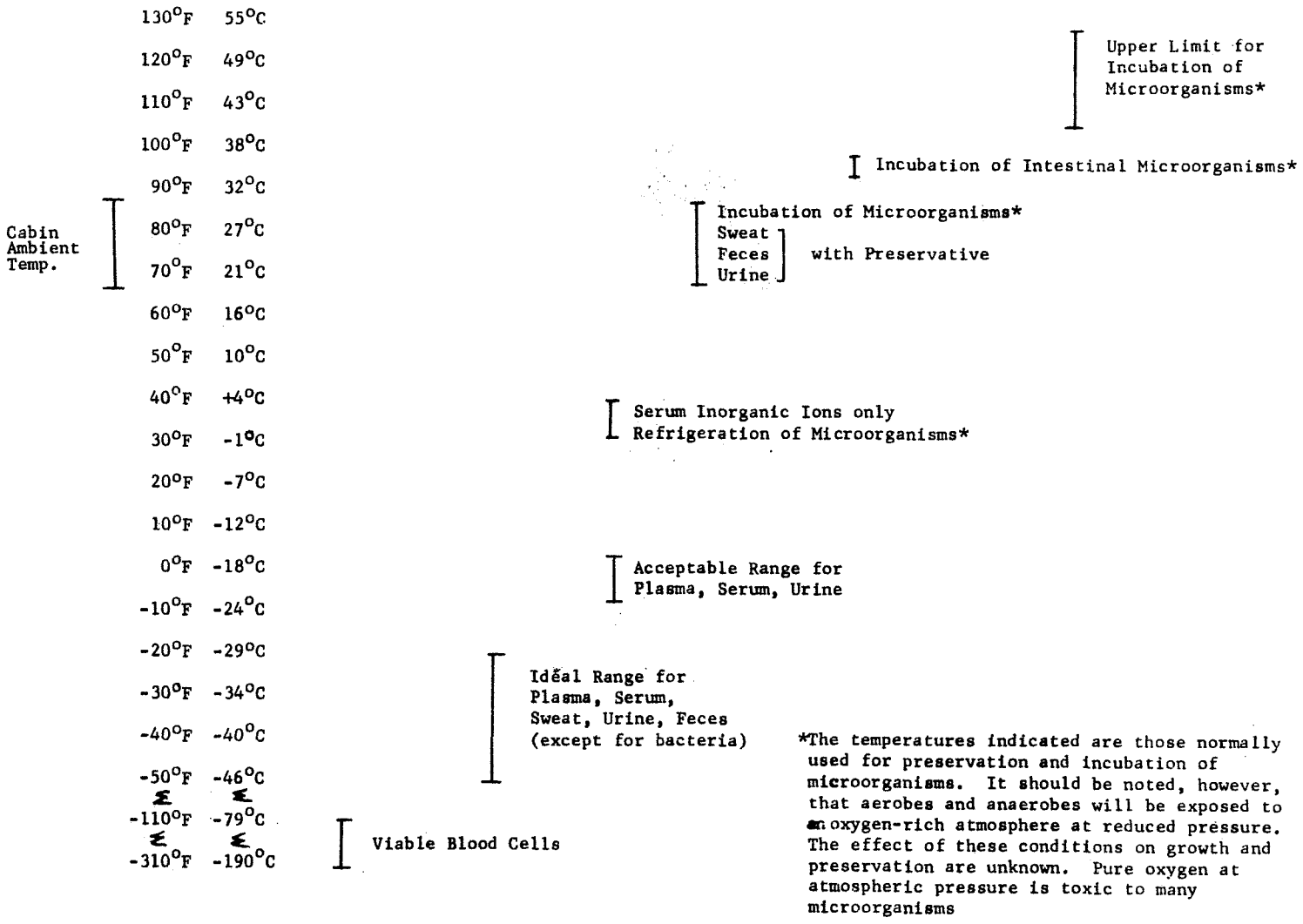

*The temperatures indicated are those normally used for preservation and incubation of microorganisms. It should be noted, however, that aerobes and anaerobes will be exposed to an oxygen-rich atmosphere at reduced pressure. The effect of these conditions on growth and preservation are unknown. Pure oxygen at atmospheric pressure is toxic to many microorganisms

Figure 5-35. Temperature for Sample Preservation

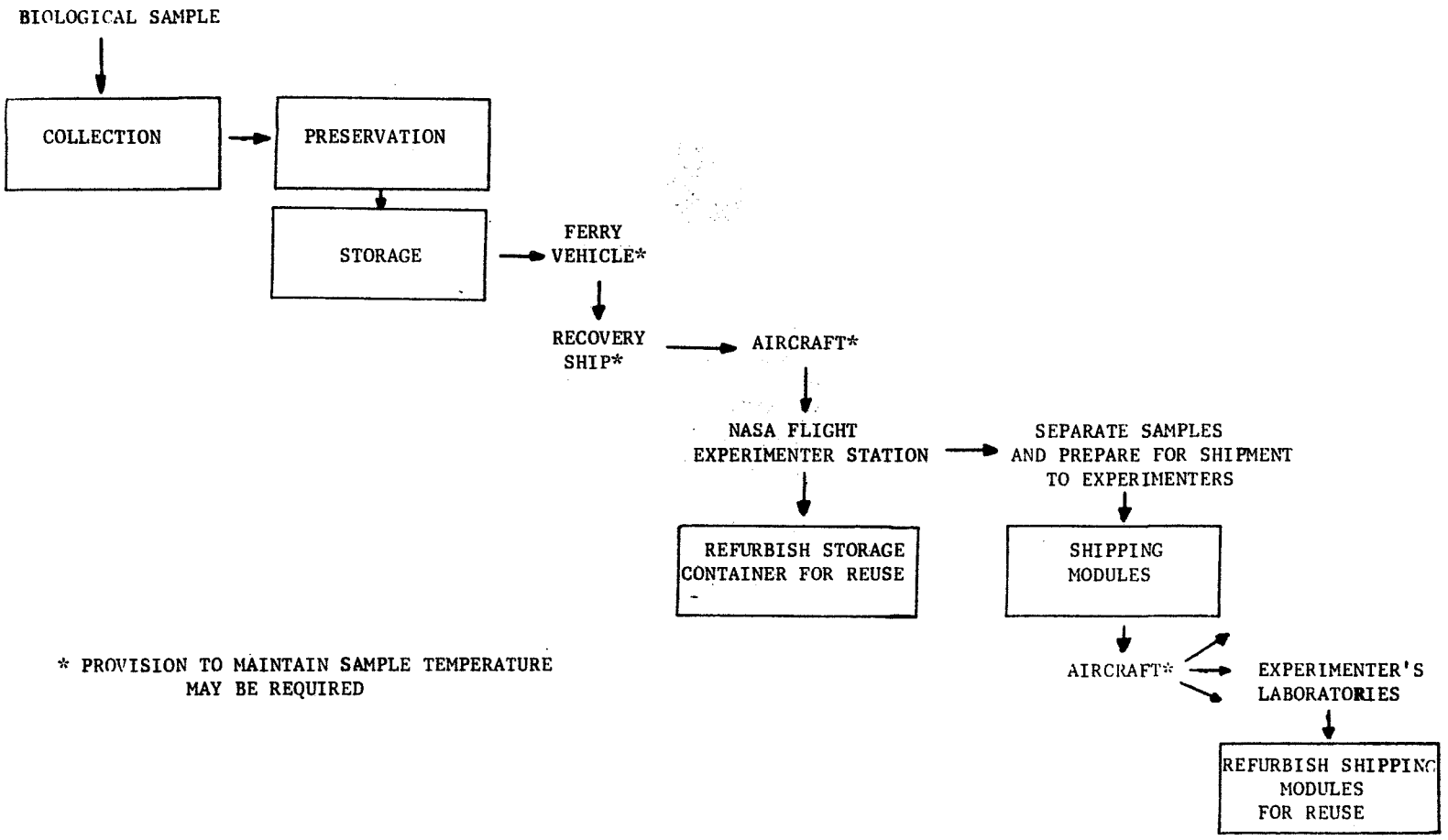

Figure 6-22. Biological Sample Handling Requirements

Table 5-2. Preservation by Chemical Methods

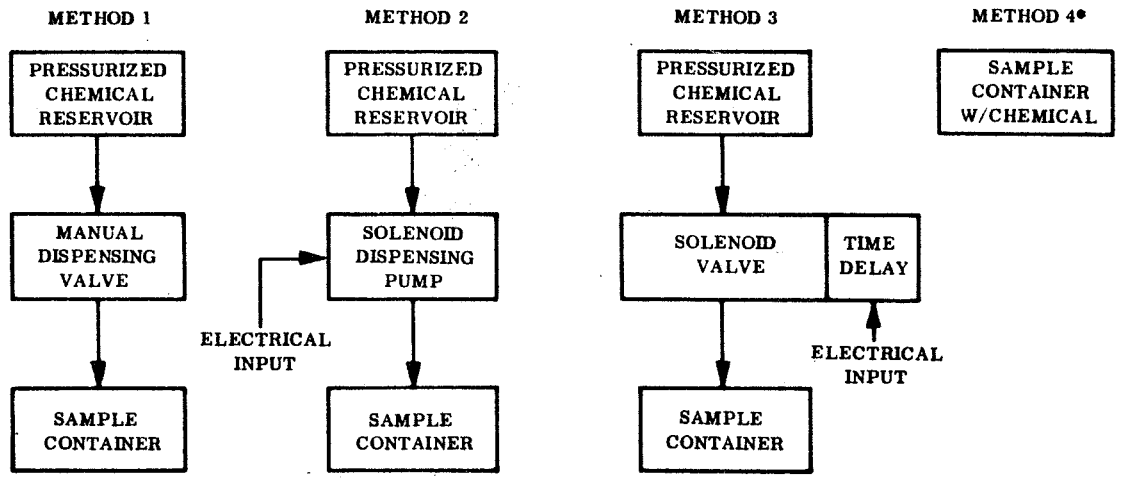

ITEM	RATING			
	METHOD 1	METHOD 2	METHOD 3	METHOD 4
ELECTRICAL POWER REQUIRED	10	1	5	10
WEIGHT	5	1	8	10
COMPLEXITY/RELIABILITY	8	5	5	10
EXPENDABLES	1	1	1	1
VEHICLE PENETRATIONS	10	10	10	10
EASE OF OPERATION	1	5	5	10
SAFETY	5 (a)	1 (a) (b)	1 (a) (b)	10 (c)
TOTAL	40	24	35	61*

NOTE: ALL ITEMS HAVE EQUAL IMPORTANCE

RATING: 10= BEST
1= WORST

*SELECTED

(a) PRESSURE VESSEL HAZARD

(b) SOLENOID JAMMING HAZARD

(c) PRESERVATIVE LEAKAGE HAZARD

Table 5-3. Preservation by Refrigeration or Freezing

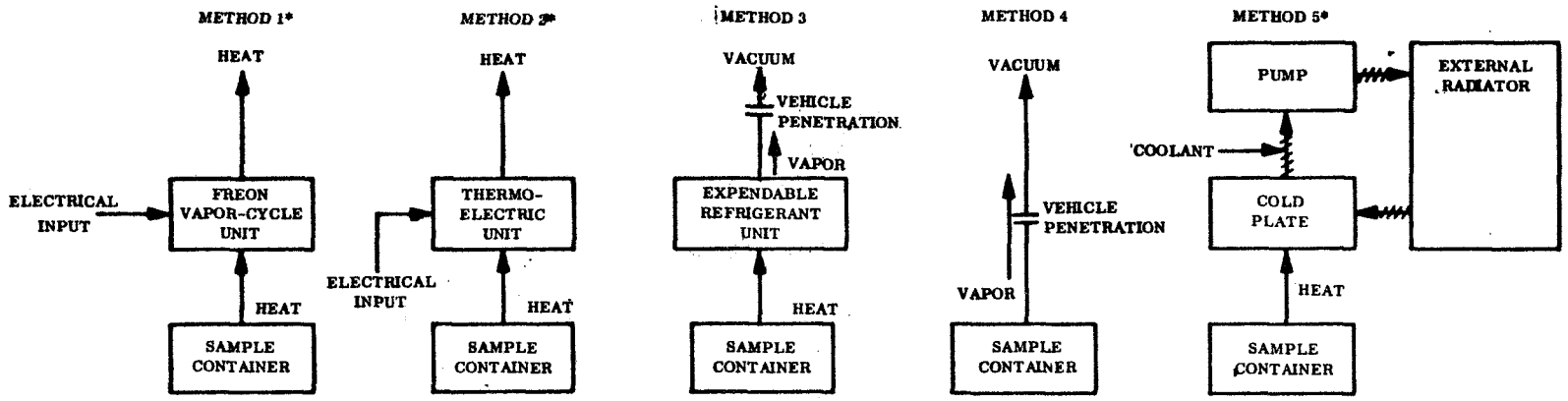

ITEM	RATING				
	METHOD 1	METHOD 2	METHOD 3	METHOD 4	METHOD 5
ELECTRICAL POWER REQUIRED	5	1	10	10	9
WEIGHT	5	5	1	10	7
COMPLEXITY/RELIABILITY	3	8	5	7	4
EXPENDABLES	10	10	1	10	10
VEHICLE PENETRATIONS	10	10	1	SAMPLE LIQUID 1	10
EASE OF OPERATION	10	10	10	1	10
SAFETY	1 (a)	10	1 (a)	5 (b)	5 (a)
TOTAL	44 * (c)	54 * (d)	29	44	55 * (e)

NOTE: ALL ITEMS HAVE EQUAL IMPORTANCE.
RATING: 10 = BEST
1 = WORST
*SELECTED

(a) GAS OR LIQUID LEAKAGE HAZARD

(b) VACUUM SEAL HAZARD

(c) SELECTED FOR FREEZING
(d) ELIMINATED BY POWER REQUIREMENT
(e) SELECTED FOR REFRIGERATION

Table 5-5. Preservation by Vacuum Distillation

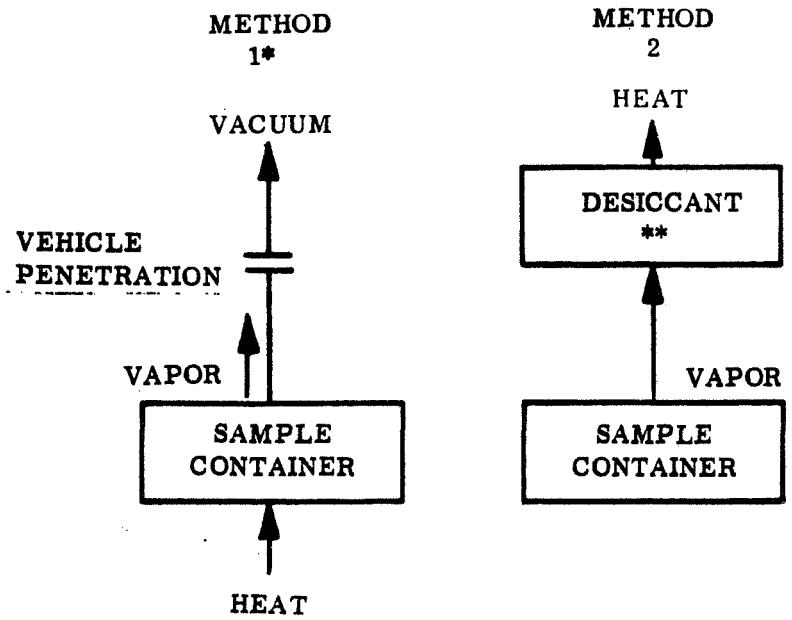

ITEM	RATING	
	METHOD 1	METHOD 2
ELECTRICAL POWER REQUIRED	10	10
WEIGHT	10	3
COMPLEXITY/RELIABILITY	7	7
EXPENDABLES	10 SAMPLE LIQUID	1
VEHICLE PENETRATION	1	10
EASE OF OPERATION	5	5
SAFETY	5 (a)	10
TOTAL	48*	46

NOTE: ALL ITEMS HAVE EQUAL IMPORTANCE.

RATING: 10 = BEST
1 = WORST

*SELECTED

**IN THIS CASE THE DESICCANT ACTS AS A WATER VAPOR PUMP AND CANNOT BE ACCURATELY CALLED VACUUM DISTILLATION.

(a) VACUUM SEAL HAZARD

Table 5-6. Preservation by Adsorption and Ion Exchange

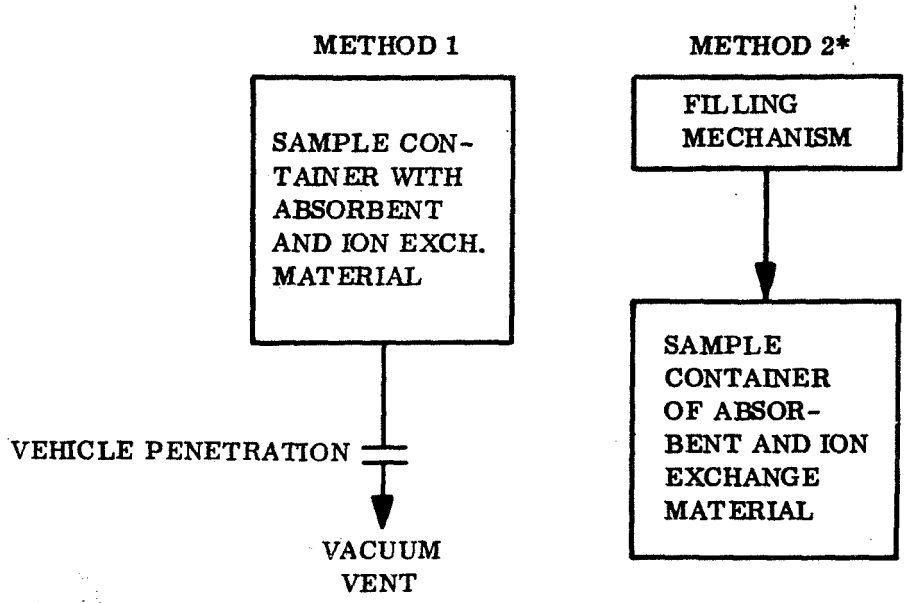

ITEM	RATING	
	METHOD 1	METHOD 2
ELECTRICAL POWER REQ'D	10	10
WEIGHT	3	1
COMPLEXITY/RELIABILITY	5	4
EXPENDABLES	1	1
VEHICLE PENETRATIONS	1	10
EASE OF OPERATION	5	1
SAFETY	5 (a)	10
TOTAL	30	37*

NOTE: ALL ITEMS HAVE EQUAL IMPORTANCE

RATING: 10 = BEST
1 = WORST

*SELECTED

(a) VACUUM SEAL HAZARD

Table 5-7. Preservation by Lyophilization

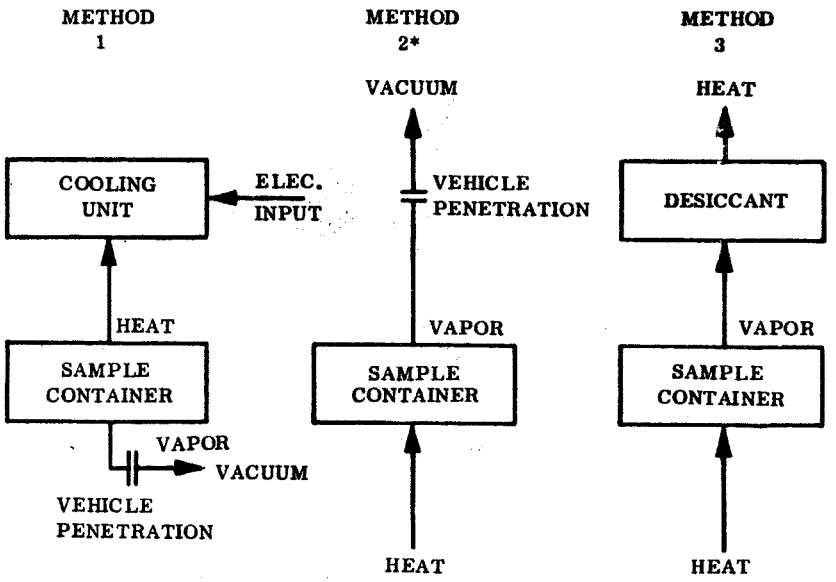

ITEM	RATING		
	METHOD 1	METHOD 2	METHOD 3
ELECTRICAL POWER REQ'D	5	10	10
WEIGHT	5	10	3
COMPLEXITY/RELIABILITY	3	5	5
EXPENDABLES	10 SAMPLE LIQUID	10 SAMPLE LIQUID	1
VEHICLE PENETRATIONS	1	1	10
EASE OF OPERATION	5	5	5
SAFETY	5 (a)	5 (a)	10
TOTAL	34	46*	44

NOTE: ALL ITEMS HAVE EQUAL IMPORTANCE.

RATING: 10 = BEST
1 = WORST

*SELECTED

(a) VACUUM SEAL HAZARD