T-30-67-1
31 AUGUST 1967

T 72-13518 c1

CR 151300

INTEGRATED MEDICAL AND BEHAVIORAL LABORATORY MEASUREMENT SYSTEM

PHASE B INTERIM REPORT

TECHNICAL LIBRARY
BUILDING 45
APR 27 1972
Manned Spacecraft Center
Houston, Texas 77058

MAY 1977
RECEIVED
NASA STI FACILITY
INPUT BRANCH

MICROFICHED

(NASA-CR-151300) INTEGRATED MEDICAL AND BEHAVIORAL LABORATORY MEASUREMENT SYSTEM (IMBLMS), PHASE B Interim Report (Lockheed Missiles and Space Co.) 527 p 1972

N77-78297

Unclas
00/12 29907

IMBLMS

LOCKHEED MISSILES & SPACE COMPANY
A GROUP DIVISION OF LOCKHEED AIRCRAFT CORPORATION
SUNNYVALE, CALIFORNIA

T-30-67-1
31 AUGUST 1967

INTEGRATED MEDICAL AND BEHAVIORAL LABORATORY MEASUREMENT SYSTEM

PHASE B INTERIM REPORT

Prepared for

NATIONAL AERONAUTICS AND SPACE ADMINISTRATION

Contract No. NASw-1631

G. A. Albright - Program Manager

W. M. Helvey - Manager, Biotechnology

IMBLMS

LOCKHEED MISSILES & SPACE COMPANY

A GROUP DIVISION OF LOCKHEED AIRCRAFT CORPORATION

SUNNYVALE, CALIFORNIA

NOTICE

The information and design disclosed herein were originated by and are the property of Lockheed Aircraft Corporation. Lockheed reserves all patent, proprietary, design, manufacturing, reproduction, use, and sales rights thereto, and to any article disclosed herein, except to the extent rights are expressly granted to others. The foregoing does not apply to vendor proprietary parts.

FOREWORD

Lockheed Missiles & Space Company (LMSC) is submitting this interim report in compliance with the requirements of Contract NASw-1631, dated 27 June 1967, from the National Aeronautics and Space Administration.

This report on the Integrated Medical and Behavioral Laboratory Measurement System (IMBLMS) describes the selection of pertinent candidate measurement techniques; presents related mission requirements, spacecraft capabilities, and system and modular design analyses; describes a data management system concept; and offers a preliminary system design concept for the IMBLMS.

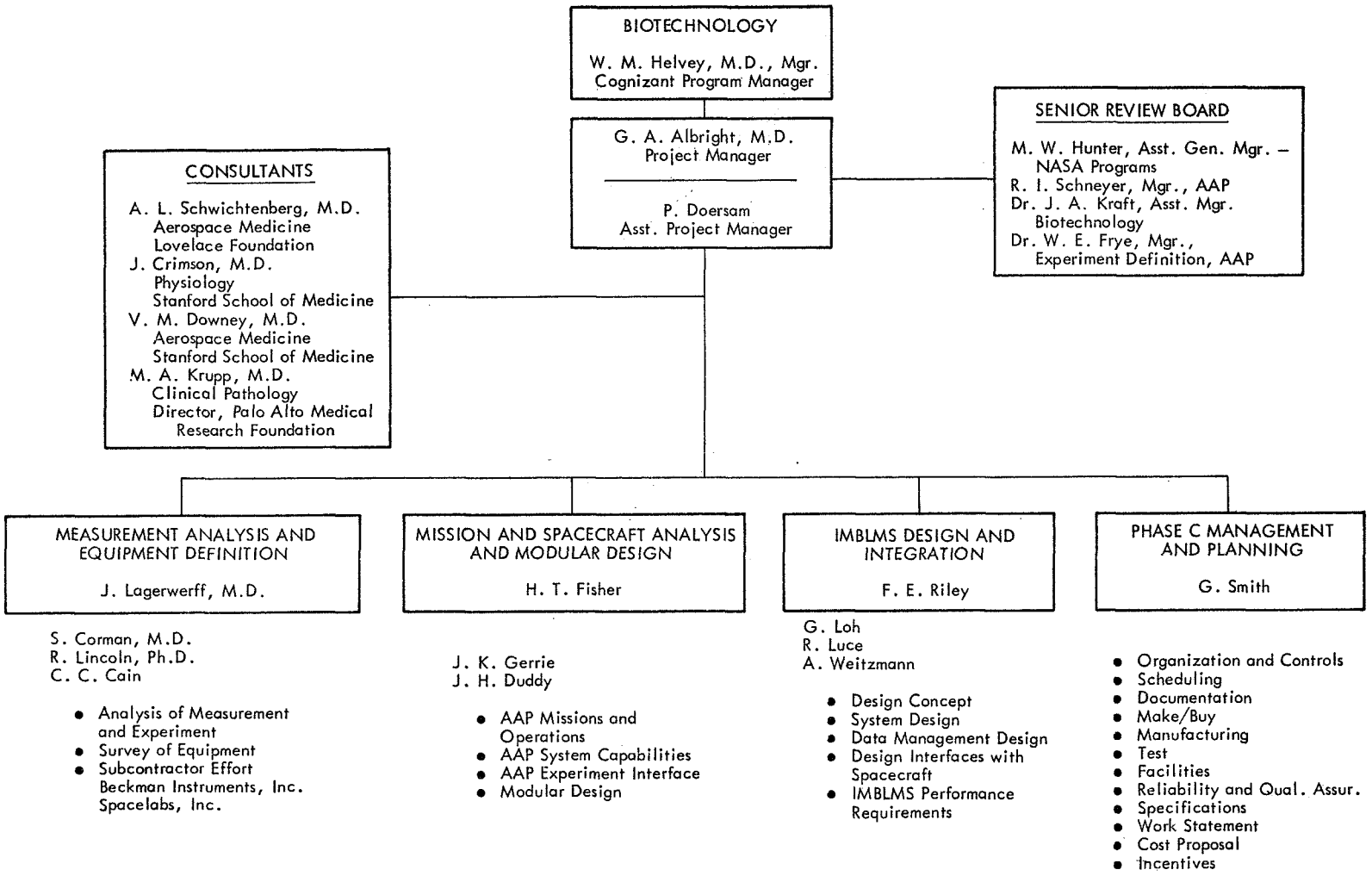

Organization for IMBLMS – Phase B

ACKNOWLEDGMENTS

This report was prepared by a program team (see preceding page) which comprised members of the Biotechnology organization and R&D support organizations of Lockheed Missiles & Space Company (LMSC); representatives of Spacelabs, Inc., and Beckman Instruments, Inc.; and subcontractors in pertinent physiological and biochemical instrumentation.

Program guidance and review were provided by Dr. W. M. Helvey, Manager, Biotechnology; a group of medical consultants; and an LMSC Senior Review Board. Appropriate guidance was provided by Dr. S. Vinograd, contract monitor for the Office of Manned Space Flight, National Aeronautics and Space Administration, Washington, D.C.

The report preparation was accomplished under the direction of Dr. G. A. Albright, IMBLMS Program Manager. The editor was Leon H. Goldich, who was assisted by other members of LMSC R&D Technical Publications.

CONTENTS

CONTENTS

Section		Page
	FOREWORD	iii
	ACKNOWLEDGMENTS	v
	ILLUSTRATIONS	xiv
	TABLES	xix
	GLOSSARY	xxi
1	INTRODUCTION	1-1
	1.1 Study Objectives	1-1
	1.2 Study Approach	1-3
2	MEASUREMENTS AND TECHNIQUES	2-1
	2.1 Objectives and Considerations	2-1
	2.2 Physiology Element	2-5
	2.2.1 Neurological Measurements	2-5
	2.2.2 Cardiovascular Measurements	2-22
	2.2.3 Respiratory Measurements	2-38
	2.3 Behavioral Element	2-54
	2.3.1 General Techniques	2-54
	2.3.2 Selection of Behavioral Measurements	2-55
	2.3.3 Approaches to Behavioral Measures	2-58
	2.3.4 Selection Criteria for Performance Tasks	2-59
	2.3.5 Measurements and Techniques	2-60
	2.3.6 Sensory-Perceptual Processes	2-63
	2.3.7 Cognitive Processes	2-68
	2.3.8 Systematic Measurements of Mood Changes	2-71
	2.3.9 Integrated Performance	2-72
	2.3.10 Effect of Weightlessness on Perception	2-73

Section			Page
	2.3.11	Measurement of Performance During Stress Testing	2-73
	2.3.12	Engineering Considerations	2-73
	2.3.13	Data Collection	2-74
	2.3.14	Data Requirements and Analysis	2-75
	2.3.15	Summary of Behavioral Element	2-76
2.4	Biochemistry Element		2-77
	2.4.1	General Considerations	2-77
	2.4.2	On-board Versus Postflight Analysis	2-79
	2.4.3	Hematological Measurements	2-83
	2.4.4	Microbiological and Immunological Measurements	2-96
	2.4.5	Endocrine Measurements	2-104
	2.4.6	Metabolic and Nutritional Measurements	2-109
3	MISSION AND SPACECRAFT ANALYSIS		3-1
3.1	Cluster A: Mission Goals, Purposes, Objectives, Groundrules, and Profile		3-2
	3.1.1	Mission Purposes	3-2
	3.1.2	Mission Objectives	3-12
	3.1.3	Mission Groundrules	3-15
	3.1.4	Mission Profile	3-16
3.2	Cluster B: Mission Goals, Objectives, Groundrules, and Profile		3-30
	3.2.1	Mission Objectives	3-30
	3.2.2	Mission Groundrules	3-31
	3.2.3	Mission Definition	3-32
	3.2.4	Crew Utilization and Experiment Accomplishment	3-36
	3.2.5	Fallback Missions	3-41
3.3	Clusters C and D and Synchronous Orbits		3-44
3.4	Crew Interface Requirements		3-46
3.5	Analysis of Candidate Spacecraft Carriers		3-49
	3.5.1	General Overview of the Candidate Carriers	3-49
	3.5.2	Command Module (CM)	3-50

Section			Page
	3.5.3	Service Module (SM)	3-75
	3.5.4	Lunar Module (LM)	3-82
	3.5.5	Airlock Module (AM)	3-94
	3.5.6	Multiple Docking Adapter (MDA)	3-99
	3.5.7	S-IVB Orbital Workshop (OWS) Systems	3-108
	3.6	Data-Return Capsule System for Cluster A and Beyond	3-130
4	IMBLMS MODULE DESIGN (TASK E)		4-1
	4.1	Module Design Approach	4-2
	4.1.1	Module Requirements Relative to Measurement Functions	4-2
	4.1.2	Spacecraft Interface and Module Envelopes	4-4
	4.1.3	Design and Packaging of Module Canister	4-8
	4.1.4	Common IMBLMS Support Modules and Early AAP IMBLMS Module Requirements	4-11
	4.1.5	IMBLMS Modular Remove/Replace Capability and Interdependency	4-13
	4.1.6	IMBLMS Modular Layouts and Functional Arrangements	4-14
	4.1.7	Module Design and Layout Verification	4-15
	4.1.8	Use of Existing Flight-Qualified Hardware and Components	4-15
	4.2	Module and Canister Design for IMBLMS	4-16
	4.2.1	IMBLMS Experiment Canister	4-16
	4.2.2	IMBLMS Module Design	4-34
	4.3	IMBLMS Canister and Module Installation Aboard the Candidate Carriers	4-47
	4.3.1	Command Module (CM)	4-49
	4.3.2	Logistics Command Service Module (LCSM, Latest Concept)	4-49
	4.3.3	Refurbished Command Module (RCM)	4-50
	4.3.4	Service Module (SM)	4-50
	4.3.5	Lunar Module (LM)	4-51

Section			Page
	4.3.6	Airlock Module (AM)	4-51
	4.3.7	Multiple Docking Adapter (MDA)	4-51
	4.3.8	S-IVB Orbital Workshop (Spent Stage)	4-52
	4.3.9	S-IVB Orbital Workshop (Ground-Converted)	4-56
5	SYSTEM DESIGN ANALYSIS AND APPROACH		5-1
	5.1	System Requirements Definition	5-1
	5.1.1	Functional Flow Diagrams for Biomedical/ Behavioral Measurements	5-1
	5.1.2	Measurement/Equipment Requirement Summaries	5-7
	5.1.3	Engineering Design Requirements	5-18
	5.1.4	Safety and On-Orbit Maintenance	5-31
	5.2	Reliability Requirements	5-35
	5.2.1	Design Specifications	5-35
	5.2.2	High Reliability Parts Programs	5-36
	5.2.3	Reliability Prediction and Estimation	5-36
	5.2.4	Failure Modes and Effects Analysis	5-37
	5.2.5	Failure Reporting and Corrective Action	5-37
	5.2.6	Standardization of Design Practices	5-37
	5.3	Quality Control Requirements	5-38
	5.3.1	Inspections	5-38
	5.3.2	Drawing and Change Control	5-39
	5.3.3	Materials Identification, Handling, and Storage	5-39
	5.3.4	Inspection and Test Procedures	5-40
	5.3.5	Nonconforming Articles	5-41
	5.3.6	Records of Inspection and Tests	5-41
	5.4	Qualification Test Requirements	5-42
	5.4.1	Equipment to be Tested	5-42
	5.4.2	Use of Qualification Hardware	5-42
	5.4.3	Approval of Test Specification	5-43
	5.4.4	Sequence of Tests	5-43

Section			Page
	5.4.5	Functional Tests	5-43
	5.4.6	Failure Definition	5-43
	5.4.7	Testing Level	5-44
	5.4.8	Test Mounting	5-44
	5.4.9	Failure Reports	5-44
	5.4.10	Qualification Approval	5-44
	5.4.11	Qualification Status	5-45
	5.4.12	Inspection	5-45
	5.4.13	Ambient Laboratory Conditions	5-45
	5.4.14	Test Parameter Measurement and Tolerances	5-45
	5.4.15	Stabilization of Test Temperatures	5-46
	5.4.16	Environmental Test Requirements	5-46
6	DATA MANAGEMENT AND DISPLAY		6-1
	6.1	Objectives	6-1
	6.2	Requirements	6-2
	6.3	Carrier Constraints	6-2
	6.3.1	Candidate-Carrier Capabilities	6-4
	6.3.2	IMBLMS Compatibility	6-7
	6.4	Specific Problems	6-8
	6.4.1	Data Entry	6-8
	6.4.2	On-Board Computation	6-11
	6.4.3	Stored Specimens	6-12
	6.4.4	Portability Requirements	6-12
	6.4.5	Up-Link Data	6-13
	6.5	Equipment Evaluation and Integration	6-13
	6.5.1	Numerical Data Entry Equipment	6-13
	6.5.2	Magnetic Tape Recorders	6-15
	6.5.3	Television Systems	6-19
	6.5.4	Displays	6-22
	6.5.5	Data Processor	6-24
	6.5.6	Controls	6-25

Section			Page
	6.6	Integration of IMBLMS Equipment and System Requirements	6-25
	6.6.1	General Control and Display Rules	6-25
	6.6.2	Dynamic Physiologic Monitor	6-26
	6.6.3	Video and Display Monitor	6-26
	6.6.4	Numerical Data Entry and Printer	6-31
	6.6.5	Data Management Processor	6-31
	6.6.6	Data Management Control	6-32
	6.7	Ground Network Constraints	6-43
	6.7.1	Manned Space Flight Network (MSFN)	6-43
	6.7.2	Manned Space Center	6-44
	6.8	Concepts Still Under Investigation	6-44
	6.9	Overall View of Data Management System	6-45
7	PRELIMINARY SYSTEM DESIGN CONCEPT		7-1
	7.1	Basis of IMBLMS Design Concept	7-1
	7.2	Physiological/Behavioral/Data Management (PBDM) Station	7-2
	7.2.1	Dynamic Physiologic Monitor	7-2
	7.2.2	Respiratory Gas/Blood Monitor	7-7
	7.2.3	Vascular Dynamics Monitor	7-13
	7.2.4	Rotational Equipment for Vestibular Stimulation (REVS) Monitor	7-18
	7.2.5	Behavioral Monitor	7-18
	7.2.6	Stowage Modules	7-22
	7.2.7	Data Management Modules	7-29
	7.3	Biochemical Station	7-30
	7.3.1	Biochemical Analyzer Module	7-30
	7.3.2	Freezer Module	7-35
	7.3.3	Incubator Module	7-36
	7.3.4	Isotope Monitor	7-36
	7.3.5	Biochemical Waste Collection Compartment	7-43
	7.3.6	Biochemical Supplies and Stowage	7-43
	7.3.7	Operational Considerations	7-43

Section		Page
	7.4 Major Peripheral Measurement Equipment	7-43
	7.5 Summary of IMBLMS Equipment	7-44
	7.6 Preliminary Design Concept Tasks To Be Performed	7-50
8	REFERENCES	8-1

ILLUSTRATIONS

Figure		Page
	Organization of IMBLMS – Phase B	iv
1-1	Evaluation of IMBLMS	1-2
1-2	IMBLMS Study Approach	1-4
1-3	IMBLMS Program Schedule	1-5
2-1	Rotational and Linear Equipment for Vestibular Investigations	2-23
2-2	Resting $\dot{V}$-V Loop Superimposed on Maximum $\dot{V}$-V Loop, Showing Use of Loops for Obtaining Values for Subdivisions of Lung Air	2-44
2-3	Hand Microscope – Nikon, Model H	2-102
3-1	Tentative Master Schedule – Clusters A, B, C, and D Missions, and Synchronous-Earth-Orbit and Lunar Missions	3-9
3-2	Orbital Configuration of AAP-1 and AAP-2	3-18
3-3	Flight Profile of AAP-1 and AAP-2	3-19
3-4	Flight Profile of AAP-3 and AAP-4	3-21
3-5	Orbital Configuration of AAP-3 and AAP-4	3-22
3-6	Profile of Altitude Versus Time for Cluster B	3-33
3-7	Orbital Configuration, First 180 Days	3-37
3-8	Orbital Configuration, Second 180 Days	3-38
3-9	Fallback Missions, Single Launch Failure	3-43
3-10	Command Module (Block II), Compartments and Equipment Bays	3-52
3-11	Command Module, Potential Stowage Area Beneath Crew Couches	3-55
3-12	RCM/Rack Configuration	3-59
3-13	Half-Section Mockup of RCM	3-63
3-14	Shirtsleeved Crewman in RCM	3-63
3-15	Suited Crewman in RCM	3-63
3-16	Space Allocation in LCSM	3-71
3-17	Service Module	3-77

Figure		Page
3-18	Major Structural Components	3-79
3-19	Dimensions of Sector 1	3-81
3-20	Lunar Module and Apollo Telescope Mount	3-82
3-21	Basic ATM/ Rack Assembly for AAP	3-83
3-22	LM/ ATM Configuration, Illustrating the Sun-End Film-Cassette Retrieval Station	3-84
3-23	ATM Control/ Display Console	3-90
3-24	Position of Crewman for Operating ATM Control/ Display Console	3-91
3-25	Airlock, General Arrangement	3-95
3-26	Structural Transition Section	3-96
3-27	AM Tunnel, Arrangement and Geometry	3-97
3-28	AM Tunnel, Interior Stretchout	3-98
3-29	MDA in a Typical Cluster A Orbital Configuration	3-100
3-30	External Configuration of the MDA Within the S-IVB	3-101
3-31	Crew Support Equipment in MDA	3-104
3-32	Cutaway of MDA, Showing Stowage of Experiment Canister	3-105
3-33	Most Recent MDA Configuration Under Study	3-106
3-34	S-IVB, Structural Assemblies	3-109
3-35	S-IVB, General Internal Configuration Showing Location of the Crew Quarters	3-112
3-36	S-IVB Orbital Workshop, Configuration	3-116
3-37	S-IVB Orbital Workshop, Preinstalled Astronaut Mobility Aids	3-117
3-38	Crew Quarters, Floor Plan	3-118
3-39	Crew Quarters, Ceiling	3-119
3-40	Vacuum Outlet System	3-122
3-41	Representative Layout of the Food Compartment in the S-IVB	3-123
3-42	Mounting of Experiment Equipment	3-125
3-43	Crew Quarters, Configuration	3-126
3-44	Candidate Layout of Internal Arrangement	3-128
3-45	Loading Sequence	3-132

Figure		Page
4-1	Sequence of Modular Design Study for Phase B IMBLMS	4-3
4-2	IMBLMS Module Configurations and Design Envelope	4-7
4-3	Translation Process for IMBLMS Experiment Canister, MDA to S-IVB	4-12
4-4	Alternate IMBLMS Module Configurations in Various-Sized Experiment Canisters	4-18
4-5	Experiment Canister A, Remove-and-Stack Concept	4-21
4-6	Experiment Canister B, Foldout Concept	4-23
4-7	Experiment Canister C, Fold-Down-Base Concepts	4-24
4-8	Experiment Canister D, Hinged-Panel-Base-Assembly Concepts	4-25
4-9	Experiment Canister E, Elevator-Panel-Assembly Concept	4-27
4-10	Selected Design for IMBLMS Experiment Canister (F)	4-28
4-11	Mechanical Design Layout for Selected Canister Concept	4-30
4-12	Elevator Assembly Withdrawn From Canister to Show Technique of Module Removal	4-33
4-13	Pip Pin D-Ring	4-35
4-14	Biochemical Analyzer	4-39
4-15	Physiological/ Behavioral/ Data Management Modules in Experiment Canister, Functional Arrangement	4-43
4-16	Cutaway of MDA, Showing Installation of Experiment Canister	4-53
4-17	Preliminary Conceptual Layout of IMBLMS in the S-IVB OWS Compartment	4-54
4-18	Preliminary Conceptual Layout of the Biochemical Station in the Personal Hygiene and Waste Management Compartment of the S-IVB OWS	4-55
5-1	Biomedical and Behavioral Measurements – Function 1	5-3
5-2	Respiratory Analysis System	5-3
5-3	Physiological Measurements – Function 1.2	5-5
5-4	Behavioral Measurements – Function 1.4	5-5
5-5	Biochemical Measurements – Function 1.3	5-6
5-6	Data Management – Function 1.5	5-6
5-7	Summary of Approved Medical Experiments for AAP	5-8

Figure		Page
5-8	Vectorcardiograph Experiment, M018 – Function 18. 1	5-9
5-9	Metabolic Activity, M050 – Function 50. 1	5-10
5-10	Assessment of Cardiovascular Function, M051 – Function 51. 1	5-11
5-11	Bone and Muscle Changes, M052 – Function 52. 1	5-12
5-12	Human Vestibular Function, M053 – Function 53. 1	5-13
5-13	Neurological Study, M054 – Function 54. 1	5-14
5-14	Time and Motion Study, M055 – Function 55. 1	5-15
5-15	Specimen Mass-Measurement System, M056 – Function 56. 1	5-15
5-16	Total Body Exercises, M057 – Function 57. 1	5-16
5-17	Body Mass-Measurement System, M058 – Function 58. 1	5-16
6-1	Cluster Hardline and Radiofrequency Communication Lines	6-5
6-2	Dynamic Physiologic Monitor	6-27
6-3	Video and Display Monitor	6-29
6-4	Numerical Data Entry and Printer – Candidate 1	6-33
6-5	Numerical Data Entry and Printer – Candidate 2 (Alternate)	6-35
6-6	Processor – Pushbutton Data Entry	6-37
6-7	Processor – Keyboard Data Entry (Apollo)	6-39
6-8	Data Management Control Module	6-41
6-9	Data Management System (Including Growth Concepts)	6-47
7-1	Physiological/ Behavioral/ Data Management Station	7-3
7-2	Dynamic Physiologic Monitor	7-5
7-3	Dynamic Physiologic Equipment Diagram	7-9
7-4	Respiratory Gas/ Blood Monitor	7-11
7-5	Vascular Dynamics Monitor	7-15
7-6	Vascular Dynamics Equipment Diagram	7-17
7-7	REVS Monitor	7-19
7-8	Behavioral Monitor – Ancillary CRT Presentation	7-23
7-9	Behavioral Monitor – Meter Display for Tracking Task	7-25
7-10	Stowage Modules	7-27
7-11	Biochemical Station	7-31

Figure		Page
7-12	Biochemical Analyzer Monitor	7-33
7-13	Freezer	7-37
7-14	Incubator	7-39
7-15	Isotope Monitor	7-41
7-16	Biochemical Waste Collection Compartment	7-45
7-17	Specimen and Preservation Equipment Stowage	7-47

TABLES

Table		Page
1-1	Distribution of Task Discussion	1-7
2-1	Medical Evaluation Summary Ratings	2-4
2-2	Medical Evaluation Summary – Neurological Measurements	2-7
2-3	Engineering Evaluation Summary – Neurological Measurements	2-9
2-4	Medical Evaluation Summary – Cardiovascular Measurements	2-25
2-5	Medical Evaluation Summary – Respiratory Measurements	2-41
2-6	Gas Analyzers	2-50
2-7	Medical Evaluation Summary – Behavioral Measurements	2-61
2-8	Medical Evaluation Summary – Hematology	2-85
2-9	Medical Evaluation Summary – Microbiology and Immunology	2-97
2-10	Medical Evaluation Summary – Endocrinology	2-105
2-11	Medical Evaluation Summary – Biochemistry: Urine Analysis and Fecal Assay	2-113
2-12	Medical Evaluation Summary – Biochemistry: Blood Analysis	2-121
2-13	Medical Evaluation Summary – Biochemistry: Metabolic Processes, Enzyme Activity, and Body Fluid Compartments	2-129
3-1	Characteristics and Objectives of AAP Vehicles	3-3
3-2	Interface of IMBLMS Equipment With AAP Candidate Spacecraft	3-7
3-3	AAP-1/AAP-2 Crew Utilization (Percent Manhours)	3-27
3-4	AAP-3/AAP-4 Crew Utilization (Percent Manhours)	3-28
3-5	Cluster A Experiment Summary	3-29
3-6	Applications A Experiments	3-39
3-7	Applications B Experiments	3-40
3-8	Crew Utilization, Second 180 Days	3-41
3-9	Flight Schedules for Cluster C, Cluster D, and Synchronous-Orbit Missions	3-44

Table		Page
3-10	Representative Crew Requirements and Constraints	3-47
3-11	Requirements for Data Return	3-54
3-12	Estimated Data-Return Storage Potential of Block II CM	3-58
3-13	Modifications Required for RCM/Rack Basic Carrier	3-60
3-14	Summary of Changes Showing Development of AAP-3 CSM and LCSM From Mainstream Block II CSM	3-66
3-15	90-Day Logistic CSM Weight Summary	3-73
3-16	Maximum Usable Amounts of Stored Commodities, 90-Day LCSM	3-74
3-17	Equipment in SM Compartments	3-76
3-18	Modifications Required for LM-A/Rack Basic Carrier	3-87
4-1	Summary of Connector Analysis	4-45
5-1	Requirements for IMBLMS Early Version – 30-day Period	5-17
5-2	IMBLMS Environmental Modes	5-24
5-3	Safety Evaluation for Ergometer	5-33
6-1	Candidate-Carrier Constraints	6-3
7-1	Preliminary Weight Summary	7-49

GLOSSARY

AAP	Apollo Applications Program
ACA	Attitude Control Assembly
ACTH	Adrenocorticotrophic Hormone
ADH	Antidiuretic Hormone
ALSEP	Apollo Lunar Surface Experiment Package
AM	Airlock Module
AMU	Astronaut Maneuvering Unit
AN	Air Force-Navy
ASO	Apollo Support Office
ATM	Apollo Telescope Mount
ATP	Acceptance Test Procedure
BCG	Ballistocardiogram
BIOLABS	Biomedical Orbital Laboratory System
CDU	Coupling Data Unit
CEI	Contract End Item
Cluster	Aggregate of Spacecraft Assembled in a Docked Configuration
CM	Command Module
CMG	Control Moment Gyro
CPMK	Clinical Physiological Monitoring Kit
CPO	Crew Provision Office
CSD	Crew Systems Division
CSM	Command and Service Module
CWG	Constant Wear Garment
DEDA	Data Entry and Display Assembly
DS	Design Standard
DSKY	Display Keyboard
D/T	Delayed Time

EC	Experiment Carrier
ECG	Electrocardiogram
ECS	Environmental Control System
EDS	Experiment Data System
EEG	Electroencephalogram
EMG	Electromyogram
EMI	Electromagnetic Interference
EMK	Emergency Medical Kit
EMU	Extravehicular Mobility Unit
EOG	Electronystagmogram
EVA	Extravehicular Activity
FEDR	Failed Equipment and Discrepancy Report
FII	Final Inspection Instructions
FMEA	Failure Mode and Effects Analysis
FSE	Flight Support Equipment
GAEC	Grumman Aircraft Engineering Corporation
GI	Gastrointestinal
GOX	Gaseous Oxygen
G&N	Guidance and Navigation
ICD	Interface Control Documents
IMBLMS	Integrated Medical and Behavioral Laboratory Measurement System
IPII	In-Process Inspection Instructions
IR	Infrared
IRIG	Inter-Range Integration Group
IU	Instrument Unit
JAN	Joint Air Force-Navy
KSC	Kennedy Spacecraft Center
LBNP	Lower Body Negative Pressure
LCG	Liquid Cooled Garment
LCSM	Logistics Command and Service Module
LDH	Lactic Dehydrogenase
LES	Launch Escape System
LGC	Lunar Module Guidance Computer

LM	Lunar Module
LMA	LEM Ascent Stage
LM&SS	Lunar Mapping and Survey System
MDA	Multiple Docking Adapter
MOCR	Mission Operation Control Room
MOT	Manned Orbiting Telescope
MS	Military Standard
MSC	Manned Spacecraft Center
MSF MCC-H	Manned Space Flight Mission Control Center-Houston
MSFN	Manned Space Flight Network
MTBF	Mean Time Between Failures
NAA	North American Aviation
NASA M0	NASA Marshall Space Flight Center Experiment Designation
OPR ERR	Operator Error
OSC/Image	Oscilloscope Image
OTG	Otolith Test Goggles
OWS	Orbital Workshop
PBDM	Physiological/Behavioral/Data Management
PCG	Phonocardiogram
PCM	Pulse Code Modulation
PDA	Pre-Delivery Acceptance
PIA	Pre-Installation Acceptance
QTP	Qualification Test Procedures
RAT	Reliability Assessment Test Procedures
RBC	Red Blood Cell
RCM	Refurbished Command Module
RCS	Reaction Control Subsystem
REVS	Rotational Equipment for Vestibular Stimulation
RII	Receiving Inspection Instructions
RMU	Remote Maneuvering Units
R/T	Real Time
SBIAK	Apollo Bio-Instrumentation Accessories Kit
17-KS	17 Ketosteroid

17-OHS	17 Hydroxycorticosteroid
SGOT	Serum Glutanic Oxalic Transaminase
SGPT	Serum Glutanic Pyruvic Transaminase
SII	System Inspection Instructions
SLA	Spacecraft LM Adapter
SM	Service Module
SpII	Special Inspection Instructions
SpTP	Special Test Procedures
SPA	Signal Processor Assembly
SPS	Secondary Propulsion System
SSESM	Spent Stage Environmental System Module
SSR	Staff Support Rooms
STADAN	Scientific Tracking and Data Acquisition Network
STS	Structural Transition Section (AM)
SWPS	Suit Work Performance System
S-IB	Booster Stage of the Uprated Saturn I Launch Vehicle
S-IC	Booster Stage of the Saturn V Launch Vehicle
S-II	Second Stage of the Saturn V Launch Vehicle
S-IVB	Upper Stage of the Saturn Launch Vehicle
S-IVB OWS	Upper Stage of the Saturn Launch Vehicle Used as an Orbital Workshop
TBPA	Thyroid Bound Protein Activity
TMG	Thermal Meteoroid Garments
UHF	Ultra High Frequency
USB	Unified S-Band
UV	Ultraviolet
VBCG	Vibrocardiogram
VCG	Vectorcardiogram
VCO	Voltage Controlled Oscillator
VHF	Very High Frequency
VMA	Vanilmandelic Acid
WBC	White Blood Cell
XCSM	Extended Command and Service Module
ZPN	Impedance Pneumograph

1 INTRODUCTION

Section 1
INTRODUCTION

The program goal for the Integrated Medical and Behavioral Laboratory Measurement System (IMBLMS) is the achievement of a flight system for the Apollo Applications Program (AAP) which will be capable of accepting, within the practical limits of spaceflight technology, a wide variety of biomedical experiments designed to extend the knowledge of man's capability for operating in space.

The IMBLMS must be flexible from flight to flight in both measurement capability and equipment integration. It must combine a practicality and suitability for use in early spaceflight experiments with a growth potential for accommodating new measurements stemming from the impact of new knowledge and the products of new technology.

The underlying concept and early development of the IMBLMS have been derived through numerous contributions from varied sources. Figure 1-1 illustrates the advanced studies, operational experience, and research needs which have identified the requirements and provided the capability and direction for development of the IMBLMS.

1.1 STUDY OBJECTIVES

The National Aeronautics and Space Administration (NASA) has delineated a four-phase program for accomplishing the IMBLMS Program objectives (Ref. 1-1). Phase A – Advanced Studies was completed by Lockheed Missiles & Space Company (LMSC) in 1966. Phase B – Definition is the current effort described in this report and will be followed by Phase C – Design and Phase D – Development and Operations.

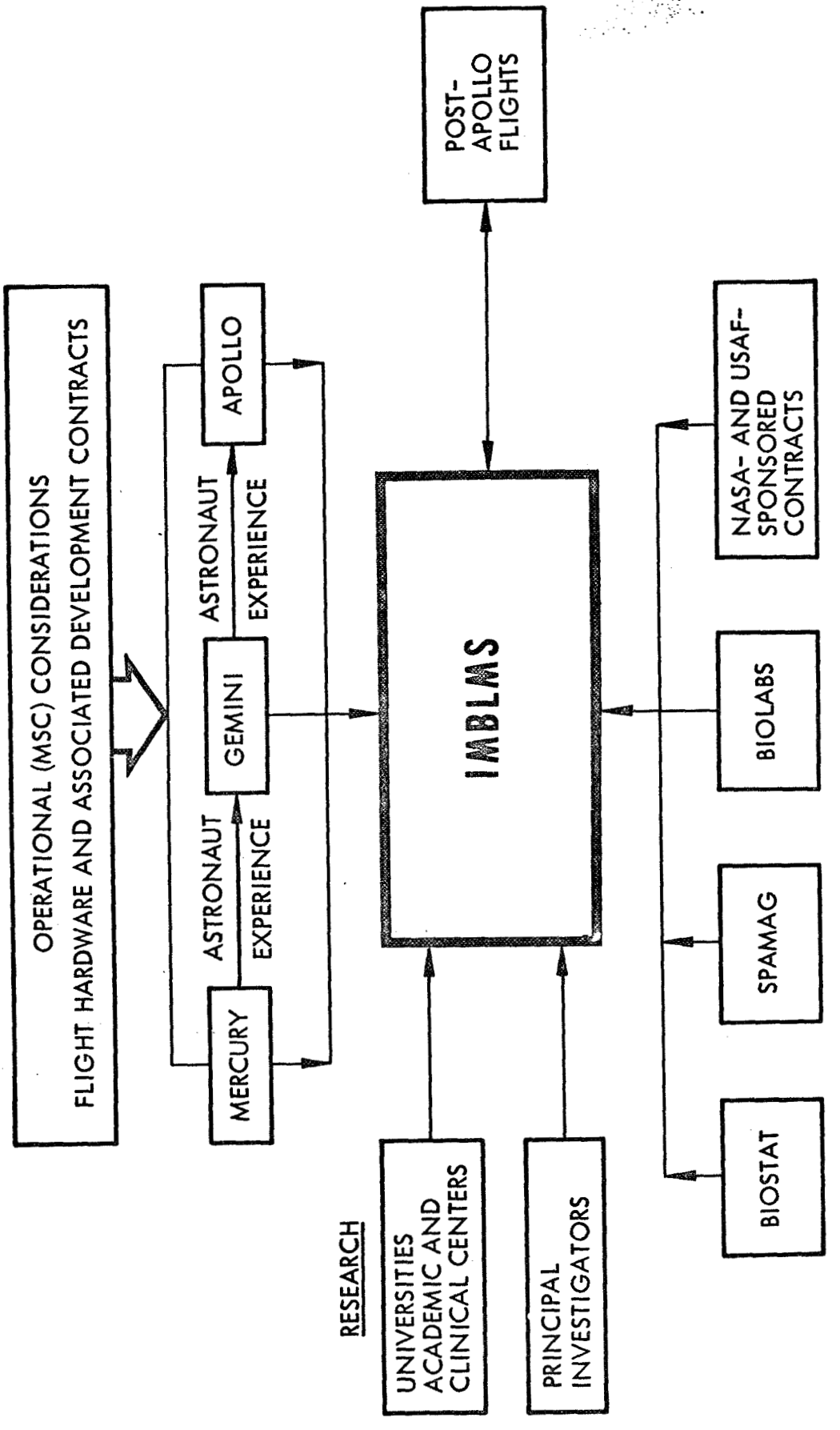

Fig. 1-1 Evaluation of IMBLMS

The study objectives for Phase B are as follows:

- Definition of an IMBLMS design approach meeting the objectives of the medical and behavioral measurements and experiments within the constraints and capabilities of the various AAP spacecraft configurations and the mission objectives
- Preparation and description of an IMBLMS preliminary system-design concept, consistent with design approach and system requirements and based on a modular design concept permitting maximum system flexibility and growth, and optimization of common-use equipment
- Presentation of an approach for implementation of the system design during Phase D – Development and Operations
- Preparation of preliminary program and management plans, a work statement, and cost proposal for Phase C – Design

1.2 STUDY APPROACH

The study approach for implementation of these objectives is illustrated in Fig. 1-2, and the schedule for accomplishing these tasks is shown in Fig. 1-3. Prior LMSC study and experimental hardware-development experience in the biomedical area permitted early initiation of the system analysis portion of the Phase B study for IMBLMS. In addition, study effort by LMSC for the NASA-MSFC AAP Payload Integration Program (Contract NAS-8-21003) was directly transferable to the IMBLMS study group and contributed to an early definition of the mission and spacecraft constraints and capabilities. This study position facilitated concentration on the most critical elements and the placement of emphasis on development of solutions to the more difficult measurement problems. During the study, emphasis was directed toward detailing a modular and system approach and developing a realistic evaluation of the applicability in space of specific measurements. Feasibility was enhanced by performing a comprehensive medical/engineering system analysis and by evaluating such system parameters as reliability, astronaut acceptance, and performance.

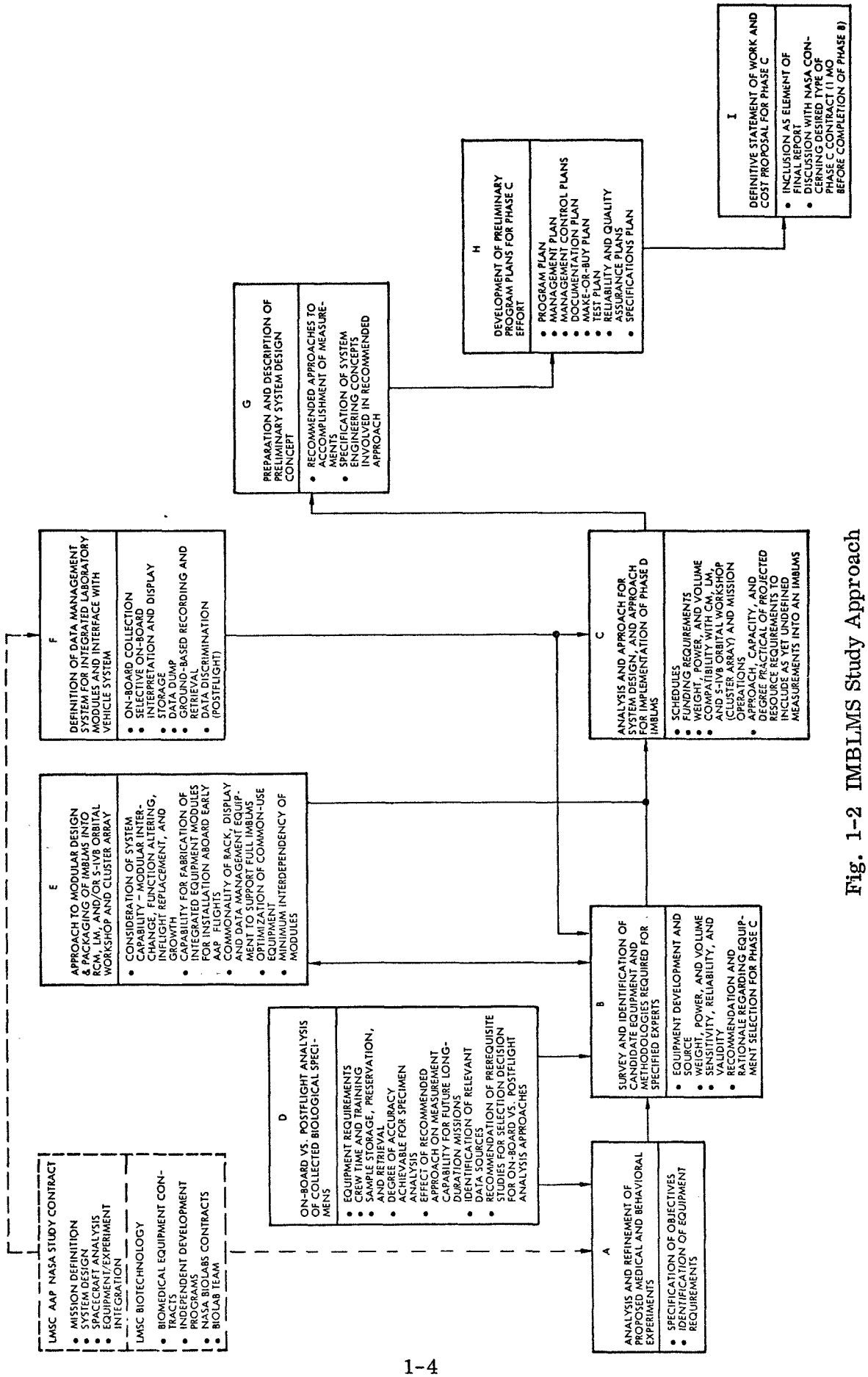

Fig. 1-2 IMBLMS Study Approach

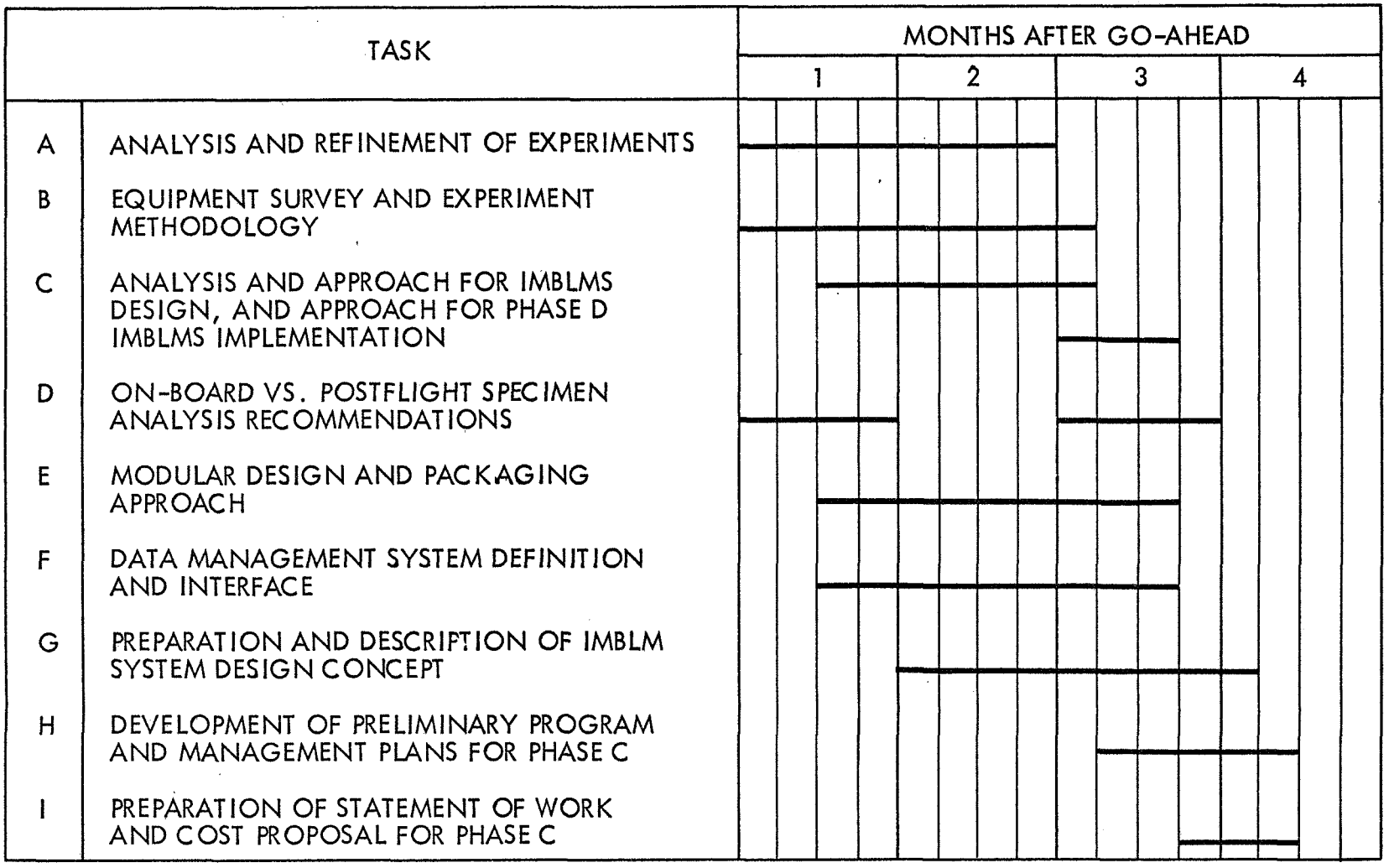

Fig. 1-3 IMBLMS Program Schedule

Phase B study accomplishments to date include the following:

- Definition of a measurement system capable of supporting the objectives of the Physiological, Behavioral, Biochemical, and Data Management elements identified by NASA
- Establishment of a modular concept that permits complete transportability in concurrence with the AAP philosophy
- Establishment of preliminary design and performance requirements
- Establishment of data management and display concept that utilizes the following:
  - Numerical data entry techniques to minimize manual logging
  - Data processor for expediting computational tasks
  - On-board printer to produce hard-copy for readout and up-link information
  - Transmission of TV/microscopy data
  - Three magnetic tape recorders (video, data, and memo-pad – audio)
- Conceptual design of IMBLMS covering major elements, peripheral supporting equipment, and storage requirements

This report describes the analysis required in the various task areas to accomplish the study objectives. Table 1-1 indicates the relationship of the report sections to the tasks described in Fig. 1-2.

Appropriate areas of Task C (Table 1-1) are discussed in Sections 3 and 5. Tasks H and I will be presented in the final report, together with updating of the other tasks and further definition of the IMBLMS data management system and the preliminary system design concept.

Table 1-1

DISTRIBUTION OF TASK DISCUSSION

Report Section	Section Title	IMBLMS Tasks
2	Measurements and Techniques	A, B, D
3	Mission and Spacecraft Carrier Analysis	C
4	Modular Design Approach	E
5	System Design Analysis and Approach	C
6	Data Management and Display	F
7	Preliminary System Design Concept	G

Section 2
MEASUREMENTS AND TECHNIQUES

The measurements and techniques selected for the IMBLMS Program will provide the technology required for the acquisition of data to establish a scientific basis for assessing the performance capabilities and limitations of man in undertaking extended space missions. This section presents the major aspects and considerations involved in identifying, developing, reviewing, and selecting the various types of measurements and techniques required for the IMBLMS.

2.1 OBJECTIVES AND CONSIDERATIONS

The primary objective of the IMBLMS Program is to provide spacecraft design information for interplanetary missions, in such areas as spacecraft rotation versus onboard centrifuge requirements, habitability requirements, life-support and radiation-shielding requirements, and man-machine relationships. A secondary objective is to study man in an unusual environment (e.g., weightlessness) to gain medical knowledge concerning his psychophysiological processes and adaptation mechanisms.

The IMBLMS should also provide a clinical monitoring capability for the detection of physiopathological effects and the evaluation of astronaut fitness. Spontaneous occurrence of disease or injury, although unlikely in young adults, may occur and require accurate diagnosis to form the basis for proper therapy and to provide an indication for possible need for mission abort decisions. Evaluation of astronaut fitness at periodic intervals is mandatory so that early recognition of symptoms or trends which might lead to unfitness can be detected in time for redirection of a countermeasures regime or for execution of an orderly mission abort.

Although life-support and environmental parameters (e.g., total pressure, ppO_2, temperature, and radiation level) can be expected to provide the earliest indication of non-nominal conditions, their significance and the urgency of corrective action usually require correlation with biomedical data. Certain stresses of spaceflight for which there are no physical sensors (e.g., weightlessness or altered circadian rhythm) will require biomedical monitoring for assessment.

Basic hematological and biochemical measurements should be obtained for all astronauts at more frequent intervals during the initial portion of a spaceflight to obtain a data base, and subsequently at less frequent intervals – weekly or monthly, depending on results. Probably no other group of measures is more important to astronaut safety than the performance tests of the astronaut's ability to perform critical tasks. Although reentry and rendezvous may be automated, the use of man, if only in a backup mode, improves system reliability and increases the likelihood of mission success. Immediate post-landing performance cannot be automated during spaceflight and may be critical to astronaut survival. Unfortunately, this performance cannot be adequately simulated during spaceflight, necessitating inferential evaluation of the astronaut capability from a battery of performance tests.

Experience gained from the Mercury and Gemini programs has provided valuable data on physiological measurements. Voice, heart rate, respiratory rate, blood pressure, and body temperature, together or in some combination, have become standard safety measurements during dynamic stress (e.g., launch, reentry, and EVA). Another stress that will be present during the AAP flights is provided by provocative testing and/or the application of weightlessness countermeasures. These physiological measurements should be obtained during the application of the lower body negative pressure, high-exercise loads, or during the application of g loads (in an on-board centrifuge) in order to obtain experimental data as well as provide for astronaut safety. In addition, adequate provision for environmental data readout and recording, including the partial pressure of carbon dioxide associated with space-suit operations, should be supplied. A portable physiologic monitor module (Section 6) with visual and auditory

alarms has been recommended for the IMBLMS to meet these monitoring requirements since various locations within the spacecraft may be involved, particularly during EVA. Provision has also been made in the module for suit parameter readout (e.g., total pressure and $ppCO_2$).

The measurements and techniques described in the following pages are grouped by organ system, as classified in the IMBLMS Request for Proposal (Ref. 1-1). A medical evaluation summary presented for each organ system indicates such aspects as commonality, relation to other measurements and techniques, development status, validity, astronaut factors, analysis requirements, and basic data format. Where applicable, ratings of 1, 2, and 3 have been used in the medical evaluation summaries. The significance of these ratings is shown in Table 2-1.

A representative engineering evaluation summary is provided for neurological measurement indicating weight, volume, and power requirements, details of data format, display, processing, and control requirements, and estimated development time for prototype and flight hardware. Similar summaries will be prepared for the other measurement systems and presented in the final report.

Selection of the measurements themselves, as well as of the recommended primary techniques, has been based upon RFP requirements (Ref. 1-1), AAP 100-, 200-, and M- series approved experiments, literature reviews, conferences with various consultants and NASA representatives, recommendations from the subcontractors, and final selection by LMSC aerospace medical specialists. The recommended measurements and techniques therefore are believed to represent the best choice commensurate with adaptability for spacecraft application, simplicity, reliability, and accuracy.

Table 2-1

MEDICAL EVALUATION SUMMARY RATINGS

Rating	Explanation
1	Minimal complexity
	Minimal training required
	Minimal performance time (<5 min)
	Highly sensitive method
	Well-established clinical validity
	Acceptable to astronauts
2	Intermediate/moderate complexity
	Intermediate/moderate training required
	Intermediate/moderate performance time (5 to 15 min)
	Intermediate/moderate sensitivity
	Clinical validity less established
	Moderate acceptability
3	Complex to very complex procedures
	More extensive training required
	More extensive performance time (>15 min)
	Low sensitivity
	Clinical validity unsubstantiated
	Low acceptability

2.2 PHYSIOLOGY ELEMENT

Although considerable flight-qualified physiological equipment is available, certain parameters (e.g., cardiac output) require further development. The physiological monitoring equipment may be needed in various areas of the spacecraft during EVA. Consideration should be given to continuous monitoring of one astronaut, either at the command station in the CM or during sleep.

Some of the physiology equipment is bulky and will require storage in separate experiment canisters. Many of the neurological tests will require some form of a rotating device (REVS) and possibly outboard telemetry of data if slip rings are not permitted. The pulmonary measurement system is based on the use of an integrating pneumotachograph, a servospirometer, and a mass spectrometer for gas analysis. Further development effort is required to improve the accuracy of derived pulmonary values using space-applicable techniques.

2.2.1 Neurological Measurements

Neurological measurements are intended to permit the assessment of central nervous system functioning, with particular emphasis on the statokinetic labyrinth. Apart from the clinical neurological evaluation (Hx Form and Px) and the periodic recording of astronaut cerebral electrical activity by electroencephalogram (EEG), a series of tests and measurements are included to determine possible changes in sensitivity and/or performance of the vestibular apparatus as a result of long-term exposure to weightlessness.

The vestibular apparatus performs two distinctly different functions: the haircells of the cristae ampullaris in the three semicircular canals register angular accelerations while those of the maculae of the utriculus and sacculus indicate direction and magnitude of linear accelerations. The vestibular measurements can be grouped as follows:

- Otolith Evaluation
  - Ocular counterrolling
  - Oculogravic illusion
  - Linear acceleration threshold
- Semicircular Canal Evaluation
  - Oculogyral illusion
  - Visual task with head rotation
  - Electronystagmogram
  - Angular acceleration threshold

Eye movement cinematography is not included in the foregoing group because it does not represent a separate vestibular parameter, but is a measurement technique to record ocular counterrolling. Angular acceleration threshold has been added since this is an important parameter in the evaluation of the semicircular canal function.

A series of vestibular/orientation tests have been included in the NASA M053 Human Vestibular Function Experiment. However, none of the M053 documents available to LMSC gives a complete description of the individual vestibular tests or associated equipment items. Several documents mention the use of the Rotational Equipment for Vestibular Stimulation (REVS), for example, whereas another document describes rotating the entire spacecraft. Hence, a general review appears more appropriate rather than a discussion of the various vestibular measurements and techniques according to presently available M053 documentation.

The medical evaluation of the neurological measurements is summarized in Table 2-2 and an engineering evaluation summary is shown in Table 2-3. Linear and angular acceleration threshold techniques are discussed in the neurological context rather than as an aspect of the IMBLMS Behavioral Element (Section 2.3).

2.2.1.1 Otolith Evaluation. This area of evaluation includes consideration of ocular counterrolling, oculogravic illusion, and linear acceleration threshold.

Ocular Counterrolling. Counterrolling consists of an involuntary conjugate rolling movement of the eyes around their lines of sight in a direction opposite to the lateral

Meas't No.	Type of Measurement	Clinical Monitor	Experim[illegible]	[illegible]
	Evaluation Factors →			
1	Ocular Counterrolling – Fibre Optics Cinematography		X	
2	Oculogravic Illusion – Large Centrifuge		X	
3	Linear Acceleration Threshold – Modified LMSC Mass Measurement Device		X	
4	Oculogyral Illusion – REVS, Target Light			
5	Visual Task With Head Rotation – REVS, Moving-Spot CRT, Conrol Stick			X
6	Electronystagmogram – REVS, EOG Amplifiers and Display		X	
7	Angular Acceleration Threshold – REVS		X	
8	Cerebral Electrical Activity			X

NOTES: (a) See Table 2-1 for definition of rating scores 1, 2, [illegible]
(b) An on-board physician may be required for 2 [illegible] recommended for 6.

aluation Factors →	Commonality					Rela-tionship	Development Status			Validity		Astronaut Fact				
ment	Clinical Monitor	Experimental	AAP-M Series	AAP 100 to 200 Series	Related Measurement	Space-Qualified	Under Development	Laboratory State of the Art	Conceptual or Research	Clinical	Sensitivity	Astronaut Acceptance	Task Complexity	Performance Time	Training Re-quirements	[illegible]
g – Fibre hy		X						X		1[(a)]	2	1	1	1	1	
– Large		X						X		1	2	2	1	1	1	
LMSC Device		X		X			X			1	2	1	2	2	1	
REVS,				X	7		X			1	2	2	1	2	1	
d ving-ck			X	X	4			X		1	2	2	1	2	1	
– rs and		X			2, 4, 5, 7		X			1	1	2	2	3	2	X
		X			4			X		1	1	1	2	3	1	
			X	X		X				1	1	1	2	3	2	

efinition of rating scores 1, 2, and 3.
ian may be required for 2, 4, and 5 for safety reasons, and is
.

Astronaut Factors				Analysis Requirements			Data Format			
Performance Time	Training Requirements	Physician Required	Automatic	Manual	Preservation/ Postflight Analysis	Analog	Digital	Subjective/ Voice	References	Remarks
	1				X	X				Postflight film development and analysis
	1			X				X	2-1 2-2	REVS considered too small for accuracy; large on-board centrifuge required.
	1			X			X	X	2-3 2-4	
	1			X				X	2-5 2-6	See Note (b)
	1		X				X		2-7 2-8	See Note (b)
	2	X		X		X			2-9	EOG recording may be used in conjunction with 2, 4, and 5 but not required. Transmission of EOG to ground advisable. See Note (b) below. EOG/EEG equipment can be combined.
	1			X			X	X	2-3 2-8 2-10	
	2				X	X			2-11	Transmission of EEG to ground required for detailed analysis.

Table 2-2 Medical Evaluation Summary – Neurological Measurements

CHARACTERISTICS	NEUROLOGICAL M		
	1 – Ocular Counterrolling	3 – Linear Acceleration Threshold	4 – Oculogyral Illusion and 7 – Angular Acceleration Threshold
Technique	Fibre Optics Cinematography	Provide various linear accelerations to subject	Rotation of subject at various rpm
Parameter Range (Limit)	32 frames/sec	0.1 deg to 5 deg/sec^2	0.1 deg to 60 deg/sec and 0.1 deg to 10.0 deg/sec^2
Accuracy (Sensitivity)	±1 frame/sec	0.02 deg to 0.5 deg/sec^2	0.1 deg/sec to 2 deg/sec and 0.1 deg to 0.3 deg/sec^2
Equipment	Cine-camera, fibre-optics bundle, head frame, light source	LMSC modified mass measurement device, position instrumentation	Modified rotating equipment for vestibular stimulation (REVS)
Weight (lb)	20	25	50
Dimensions (in.)	12 × 12 × 12, stored	37 × 20 × 7, stored	18 × 14 × 12, stored
Power (w)	50		200
Output Characteristics (Voltage, Frequency, Impedance)	NA-Film to be processed and analyzed on ground	NA-Digital readout of position instrumentation	Only subjective data reported
Measurement Time Span Observer Subject 1 Subject 2	5 min for each observer/subject (O/S) team	10 to 15 min for each O/S team	30 to 45 min for each O/S team
Repetition Rate	1/2 wk	1/2 wk	1/mo
Data Type Analog Digital Voice Written	Film	Digital	NA
Data Recording (Rate and Duration	NA		NA
Data Rate	NA		NA
On-Board Processing	NA	Transfer subjective reports to tape by means of data management system (DMS) keyboard	Transfer subjective reports to tape by means of DMS keyboard
On-Board Display and Control	NA	Displayed on position instrumentation	Rpm and acceleration levels displayed on meters
Transmission Frequency	NA		
Ground Processing	Laboratory development of film and analysis after return to earth	Recording and comparison with preflight test and results of previous tests	Recording and comparison with preflight test and results of previous tests
Ground Display and Control	NA	NA	NA
Speed of Analysis Required	When convenient	When convenient	When convenient
Time Required	2 to 3 hr	5 min	5 min
Skill Required	Medical technician	Medical technician	Medical technician
Estimated Development Schedule – Phase C Prototype Hardware	4 mo or less	3 mo	4 mo
Estimated Development Schedule – Phase D Flight Hardware	6 mo	4 mo	6 mo

Pg. 2-8 BLANK & Not Filmed

NEUROLOGICAL MEASUREMENT			
4 – Oculogyral Illusion and 7 – Angular Acceleration Threshold	5 – Visual Task With Head Rotation	6 – Electronystagmogram and 8 – Electroencephalogram	2 – Oculogravic Illusion
Rotation of subject at various rpm	Centering of moving spot on CRT while subject rotating	Electrical amplification of eye movement and brain waves	Use requires utilization of large on-board centrifuge not being considered at this time
0.1 deg to 60 deg/sec and 0.1 deg to 10.0 deg/sec^2	10 deg to 60 deg/sec		
0.1 deg/sec to 2 deg/sec and 0.1 deg to 0.3 deg/sec^2	0.5 deg to 2 deg/sec		
Modified rotating equipment for vestibular stimulation (REVS)	REVS and moving spot CRT display plus control stick	REVS and EEG/EOG amplifiers plus electrodes, tape recorder	
50	8 (CRT equipment only)	0.5 (EEG/EOG equipment only)	
18 × 14 × 12, stored	10 × 6 × 6	6 × 4 × 2	
200	25	0.2	
Only subjective data reported	NA-Utilizes two electric timer clocks	0 to 5 vdc; EOG, 0.1 to 300 Hz; EEG, 0.1 to 30 Hz	
30 to 45 min for each O/S team	10 min for each O/S team	EOG – 20 min per O/S team EEG – 4 hr/person: 1 hr awake 3 hr asleep	
1/mo	1/mo	EOG – 1/mo EEG – 1/2 wk	
NA	Analog, total running time and time on target, displayed on two clocks	Analog	
NA	NA	4 hr, 20 min/person	
NA	NA	3,000 bits/sec	
Transfer subjective reports to tape by means of DMS keyboard	Transfer times to tape by means of DMS keyboard	Transfer or recording directly on tape for telemetry to ground	
Rpm and acceleration levels displayed on meters	Rpm and times displayed on meter and clocks	CRT monitoring only	
Recording and comparison with preflight test and results of previous tests	Recording and comparison with preflight test and results of previous tests	Recording on tape for later analysis; comparison with preflight and previous test results	
NA	NA	Write-out of tape for analysis	
When convenient	When convenient	Preferably within 3 days	
5 min	5 min	1 to 2 days/person	
Medical technician	Medical technician	Ability to interpret EEG	
4 mo	3 mo	Available	
6 mo	4 mo	EEG: Available EOG: 2 mo	

Table 2-3 Engineering Evaluation Summary – Neurological Measurements

inclination of the head (and, thus, of the otoliths) with respect to the direction of the force of gravity. If this generally accepted definition is indeed correct, then performance of this test in weightlessness should not result in ocular counterrolling. Positive results can then only be expected if some method is employed to generate an artificial gravity environment by rotating the entire spacecraft.

Measurement of angular torsional movement around the center of the pupil during lateral inclination of the head is accomplished through photographing the entire eye by means of a fibre optics bundle, firmly attached to a head frame or bite board, and a high-speed cinecamera. Small amounts of movement of natural landmarks on the iris can be measured by superimposing consecutive photographs taken during the test upon a photograph of the subject's eye in the neutral position. Both photographic transparencies should be simultaneously projected on a screen to obtain large magnification and optimum accuracy. In a ground-based laboratory, an accuracy of ±5 min of arc can be obtained with this method. In view of the necessary space, weight, and volume limitations on board a space vehicle, the resulting decrease in system rigidity will probably result in a lower degree of accuracy.

A considerable amount of variability among individual measurements, far greater than the measuring error, has been found in almost all subjects tested, indicating that a certain amount of physiological unrest exists with respect to the anteroposterior axis of the eye. It is therefore necessary to make several measurements of eye position for a given body position. Although the ground-based laboratory setup usually employs tilting of the entire body, a bite-board arrangement with one degree of freedom probably would be adequate for on-board use if the circular fixation target is made to move with the bite-board. A triaxial accelerometer and a head-tilt position indicator are attached to the bite-board for the simultaneous recording of linear acceleration.

Oculogravic Illusion. The oculogravic illusion is perceived as an apparent downward displacement of the horizontal plane during forward acceleration and as an apparent upward displacement during deceleration. This illusion arises as a result of stimulation of the otolith organs. On a ground-based centrifuge, different positions of the subject

Continued from page 2-6

Pg. 2-10 Blank, Not Filmed

produce different patterns of the illusion, due to the presence of different gravity-centrifugal force vectors.

Unless the entire spacecraft is rotated, this test cannot be performed without a large on-board centrifuge of the type whereby the subject can be seated radially, and with his head at some distance away from the axis of rotation to prevent stimulation of the semicircular canals. The otolith test goggles (OTG), capable of measuring visual space orientation in two dimensions, are to be used for the quantitative determinations. By using the rod/sphere device (a nonvisual method to determine spatial orientation) in conjunction with the otolith test goggles, the interaction between visual and nonvisual perception of personal and spacecraft coordinates can be explored. Starting with the collimated line target of the OTG in a random position, the subject adjusts this target to coincide with his subjectively perceived horizon while being exposed to a series of constant and different rates of acceleration and deceleration. The reading of the OTG settings can be recorded by camera or closed-circuit TV.

Linear Acceleration Threshold. The haircells of the maculae of the utriculus and sacculus (otolith organs) of the statokinetic labyrinth indicate the direction and magnitude of linear accelerations. The haircells are covered by a gelatinous material – the otolith membrane – containing crystals or concretions of a calcareous substance (calcium carbonate), called the otoliths or otoconia. Linear accelerations or decelerations displace the otoliths sideways, thereby bending the haircells and thus causing neural impulses to travel to the brain. Upward or downward accelerations tend to pull on or compress the haircells, respectively, which also result in neural firing. To measure a person's linear acceleration threshold, it is necessary to subject the individual to various rates of linear acceleration of very low magnitude.

The subject is placed on a moving platform or chair system with one degree of freedom. This system is spring-loaded and can move with very little friction forward and backward along a fixed rail. Starting from rest, gradually increasing amplitudes (accelerations) of simple harmonic motion are imparted to the chair. The oscillation amplitude

is increased until a positive subjective response is obtained, either by vocalization or by recording of the subject's eye movement in synchrony with the oscillations by means of an EOG. Runs will be made with the body in three positions relative to the direction of motion (i.e., front-rear, up-down, and side to side) and with the head in three positions for each body position (i.e., head erect and head forward with chin on chest), and head turned to one side. The subject keeps his eyes closed or is blindfolded during the actual runs. The carriage movement period is digitally displayed, using a photoelectric cell and light source as the sensing element. A light-weight accelerometer is attached to the body and aligned to respond maximally in the direction of primary motion. Two axes of EOG (horizontal and vertical) should preferably be recorded, with individual amplifiers and recording channels (or CRT). The use of impedance EOG for greater sensitivity in detecting small eye movements is recommended. LMSC has demonstrated the feasibility of providing the required linear acceleration levels for this test, using a device which can also provide body mass measurements.

2.2.1.2 Semicircular Canal Evaluation. This aspect of the medical evaluation process includes consideration of such measurements as oculogyral illusion, visual task with head rotation, and the electronystagmogram.

Oculogyral Illusion. The oculogyral illusion is defined as an apparent motion of the environment (or a visual fixation target) relative to the subject during and following stimulation of the semicircular canals by rotary acceleration or deceleration, even though the target is fixed in front of the subject and rotating with him. In darkness, this apparent motion has a threshold of about 0.2 to 1 deg of rotary acceleration/sec/sec. If the subject is rotated to the left, the target appears to move to the left with the onset of rotation and, given a sufficiently strong stimulus, may appear to be displaced as much as 30 deg of arc. The illusion of rapid motion lasts for about 7 or 8 sec, followed by slowing. Finally, the target appears to come to rest after approximately 30 sec. In some cases, the first illusion is followed by a second one, consisting of an apparent and slight movement of the target to the right. More often the target drifts slowly back to its original position in line with the primary visual axis. When the rotation is

suddenly stopped, the target appears to move rapidly to the right in a series of jerks, and may appear to be displaced to the right as much as 60 deg of arc. The apparent movement of the target gradually slows, and finally disappears within 30 sec. This may be followed, in a few seconds, by an apparent small movement to the left.

Performance of this test requires the use of a small on-board centrifuge, such as the Rotational Equipment for Vestibular Stimulation (REVS), which can be used either in a chair or in a litter mode. In either mode, the center of the subject's head must be placed egocentrically with the REVS axis of rotation to ensure stimulation of the semicircular canals only, and not of the otoliths. The REVS must be capable of rotation within the limits of 1 to 30 rpm with an accuracy of ± 0.5 percent. In the chair mode, the subject will be seated. In the litter mode, the "standing" subject can be tilted about his transverse body axis, and, if possible, also his longitudinal axis.

To permit certain vestibular threshold measurements, the acceleration rate of the device should be accurately adjustable, especially at the low end of the scale. It is therefore preferable that the rotating litter chair be motor-driven and, possibly, that the motor speed should be programmed for computer control. Accurate digital readouts of the rpm, the acceleration rate, tilt angle, a support and clamp device for the rod/sphere test, and appropriate strapping for the subject are to be included.*

It is doubtful that the OTG can be used to serve as the visual test target. It is therefore preferable to use a different fixation target which rotates with the REVS. To reduce the occurrence of autokinesis, it is advisable to use a fairly large, tridimensional target, such as a dimly lighted 3-in. cube frame light. Another advantage of using a cubical fixation target is that the subject, by using the central edge of the target (since it is not foreshortened) as unit length, can fairly accurately and conveniently express the magnitude of apparent translation of the target in these units, using conventional clock-face directional terminology. Apparent rotation of the target can be described as about the right top, or left bottom, etc., for estimated number of degrees.

---

*NASA Experiment M053

Visual Task with Head Rotation. No specific information could be found in the M053 documentation to cover this particular test or measurement. However, several ways of accomplishing this measurement suggest themselves. In the simplest approach, the subject could be requested to fill out special forms while being rotated at different velocities on the REVS. A sentence-completion task might constitute an adequate task and not require any peripheral equipment.

A more complex task that will produce quantitative data is recommended. The subject tries to keep a randomly moving spot on a small CRT screen within a circular target by means of a control stick. Time on-target versus total presentation time provides the basis for scoring performance. Special equipment will include the following:

- Random-movement generator to move spot across the CRT
- CRT display
- Control-stick assembly coupled to random-movement generator (capable of canceling out spot movement when properly manipulated)
- Automatic timer (total running time)
- Automatic timer (time-on-target – driven by random-movement generator and activated only while moving spot is within target)

Although the behavioral experiment assembly also utilizes a randomly moving spot, the same movement generator can be employed to drive the CRT. Installation of the equipment will require major modification of the REVS.

Electronystagmogram. The electronystagmogram (EOG) is an electronically derived record of the involuntary rapid eye movements, characteristic of the response of the semicircular canals to rotary stimulation. These movements may be horizontal, vertical, mixed, or rotary in nature.

Electronystagmography is used objectively to determine the duration and intensity of rotationally or calorically induced nystagmus. For the measurement of rotational nystagmus, the following procedure is followed: The subject is accelerated in one

direction for 10 sec at a rate of 6 deg/sec^2 after which a constant velocity of 60 deg/sec is maintained for 2 min. This period is immediately followed by deceleration at 6 deg/sec^2 until standstill. After a 2-min pause, the same sequence is repeated in the opposite direction. In persons with normally functioning labyrinths, the duration, frequency, and amplitude of the nystagmus is approximately equal in both directions. For stimulation of the horizontal canals only, the head should be fixed in a 30-deg forward inclination. For stimulation of the two ipsilateral canals, the head is fixed 60 deg backward, whereas the head position for stimulation of two homonymous vertical canals is 90 deg sideways to the left or right. In all three positions, the center of the head must be egocentrically located with respect to the axis of rotation.

To obtain the proper rotational environment for semicircular canal testing, the REVS should be provided with a removable and adjustable combined back and head rest.

One of the great advantages of the EOG is that the subject's eyes can be closed during recording. Because of the exclusion of fixation, the intensity of the nystagmus becomes up to 10 times greater than with fixation. The technique utilizes the existing constant potential difference between the cornea and the retina of the eye (cornea positive with respect to retina), and the projection of this potential difference, as measured from the soft tissues surrounding the orbit, which changes with positional changes of the eyes. Whereas small positional changes of the eyes result in amplitude changes in the low microvolt region, considerable voltage gain must be used to obtain adequate readout.

Two methods employed to obtain readable signals are the direct amplification of the projected skin potential and the use of impedance changes caused by eye movements when the periocular electrodes are "driven" by a suitable high-frequency carrier. The latter method, although not commonly used, is considerably more sensitive. Following are descriptions of these two methods:

- Direct Ampliciation. The basic elements of the instrumentation consist of a 5-electrode harness, two miniature solid-state preamplifiers, a microampere

meter, mercury battery power and calibration supplies, various function and meter switches, and two short-range telemetry transmitters. Two electrodes are positioned at the temporal canthi of the eyes and provide the inputs for the horizontal nystagmus amplifier, and two electrodes are placed in the supra- and infraorbital positions of one of the eyes and routed to the vertical nystagmus amplifier. The fifth electrode, mounted on the forehead, is connected to the chassis ground, and places the subject at the same ground potential as as the instruments. These electrodes can be either modified silver EEG electrodes, or miniature silver-silver chloride Beckman electrodes with shielded leads.

Each of the transistorized preamplifiers is temperature-compensated, incorporates a differential input circuit with very high common-mode rejection, and has a single-ended output. The voltage gain must be 1,000 v min. and 3,000 v max., and the low-frequency response must have a 1.5-sec time constant (approx. 0.08 Hz). The output must deliver an undistorted output voltage in the the range of 0 to 5 v, without the signal d-c output level centered at zero volts. The 50-0-50 μa meter simplifies calibration, permits battery checking, and can also be used to set the no-signal d-c output voltage of each preamplifier to zero.

- Impedance Technique. In addition to the foregoing equipment, the impedance technique requires the use of a transistorized carrier oscillator for each channel. The oscillation must have a frequency of approximately 50 kc and a maximum signal level output of 5-v peak-to-peak, and continuously be adjustable by means of a potentiometer. Through suitable coupling networks, the same electrode pairs can be used to apply the carrier and to pick up the impedance changes which correspond to the various eye movements.

If no slip-ring assembly can be used on the rotating litter/chair (or centrifuge) it will be necessary to transfer the two channels of EOG data in either of the

foregoing modes by means of short-range telemetry. Two battery-operated, transistorized, FM transmitters, modulated by the outputs from the pre-amplifiers, are required, and are mounted on the litter/chair. Two single-frequency FM receivers are needed to receive the EOG information for display and/or recording. However, the fidelity and reliability of near-field telemetry within the confines of a metallic spacecraft may limit the usefulness of this technique and require the development of a slip-ring assembly for spaceflight application. (See Section 6.5.)

Angular Acceleration Threshold. The specific objective of this experiment is to measure repeatedly the functional state of the semicircular canals of the statokinetic labyrinth during orbital flight in order to determine possible changes in their sensitivity as the result of prolonged weightlessness exposure. These measurements must be made while the subject is being rotated on a device such as the REVS, with very carefully controlled angular accelerations and velocities, together with the necessary recording devices.

Different determinations to be made are as follows:

- Threshold of angular acceleration perception, using accelerations within the range of 0.1 deg/sec^2 to 1 deg/sec^2
- Duration of after-sensation
- Duration of after-nystagmus

The last two of the foregoing are determinations made following rotation-induced stimuli up to a maximum of 90 deg/sec.

The subject is seated on the REVS, the head secured by a restraint in such a way that only one pair of semicircular canals is stimulated at a time. This careful alignment is necessary to prevent confusing results because the after-sensations of the various pairs of canals are not identical. All noise should preferably be eliminated to avoid acoustical impressions, and the subject should wear biconvex Fresnel glasses to prevent him from fixing his eyes on the surroundings.

For the determinations of thresholds and after-sensations, the REVS and subject are given gradually increasing accelerations, starting at the subthreshold level, until the subject is able to perceive a particular stimulus consistently. Acceleration/deceleration rates to be tried are 0.1, 0.2, 0.4, 0.7, and 1 deg/sec^2 for 10, 20, and 40 sec.

In this series, the frame and subject are given the prescribed acceleration for the noted number of seconds, followed by coasting at fixed rotational velocity for a period equal to that of the acceleration, and finally, a deceleration at the same rate as the acceleration. Measurements are continuously recorded, and the subject reactions are noted during each run.

For determination of the duration of after-nystagmus, the rotating system is given a subthreshold acceleration of 0.2 deg/sec^2 for increasing periods of time, varying from 2.5 to 600 sec until a certain angular velocity (0.5 to 120 deg/sec) is attained. This velocity is maintained for 15 sec after which the chair is rapidly brought to a standstill in 1 to 1.5 sec. The duration periods for both after-sensation and after-nystagmus are registered as a function of this stimulus – the former by instructing the subject to report when all turning sensations which follow the sudden stopping have ceased, and the latter by recording the impedance change. The values are then plotted on semilog paper with the durations on the linear scale.

If considered necessary, canal pairs other than the horizontals may be tested, but the time involved is considerable since a minimum of approximately 10 determinations (preferably 15 to 25) must be obtained for an accurate cupulogram.

2.2.1.3 Cerebral Electrical Activity. Electroencephalography (EEG) constitutes the display and/or recording of the electrical activity of the cerebral cortex as projected onto the surface of the head. The signals, picked up by small silver/silver-chloride electrodes, are in the low microvolt region, and require considerable amplification before they can be recorded. Each tracing or channel is a complex rhythmic wave, which never repeats itself precisely. The following sinewave components are

distinguished in the normal EEG: delta waves (1 to 3.5 Hz), theta waves (4 to Hz), alpha waves (8 to 13 Hz), and beta waves (14 to 30 Hz).

Alpha rhythm is present maximally in the occipital and parieto-occipital areas and is usually diminished during visual and mental activity. Theta waves are most frequently found over the parietal and temporal areas; these waves have a very low amplitude (approximately 10 μv). The largest waves are in the delta region and usually appear during sleep, attaining an amplitude of approximately 100 μv. Delta activity may often be provoked by hyperventilation. A considerable variety of abnormal wave forms, superimposed on these normal rhythms, can be distinguished in various pathological states. Each individual has a rather stable and characteristic EEG pattern under various conditions and levels of activity.

Relaxed, drowsy, sleep, and deep sleep states can be easily recognized. Interruptions of either the oxygen or blood supply to the brain cause a slowing or stopping of electrical activity; a drop in the blood sugar level causes a similar slowing. A CO_2 level in the carotid blood of 48 volume-percent induces delta rhythms, and an increase in CO_2 tension in the cerebral cortex produces fast activity.

For EEG monitoring in spaceflight, two channels are usually considered sufficient. Four active electrodes and one ground electrodes are required. The active electrodes are usually placed bilaterally over the parietal and occipital areas. The electrodes, together with two preamplifiers, can be incorporated into a lightweight and flexible holding device which can be easily secured to the subject's head with an adjustable elastic band. By providing miniature pin-and-jacks where the EEG electrode leads connect to the preamplifiers, the latter also can be used for EOG recording (or vice versa) since the gain requirements are the same for both applications.

Suitable bandpass filters are connected to the output leads from the preamplifiers to set the bandwidth to the values required for EEG and EOG, respectively, before display and/or recording in order to minimize the undesired portion of the frequency spectrum.

2.2.1.4 Data Requirements. Most of the subject data can be logged by the astronauts themselves while they are acting as observers. These data can then be transmitted to ground after they have been transferred onto tape by means of the data management input keyboard. EEG and EOG analog tracings will be taped and transmitted to ground for detailed analysis in their entirety. The films taken by the eye-movement camera will require storage for later processing and analysis on the ground. A considerable amount of information pertaining to the operating parameters of the REVS must be displayed in digital form on-board in real time. These parameters include acceleration and deceleration rates, rotational velocity, lateral and sagittal body-tilt angles, the triaxial head or body acceleration levels, and the position indicator for the bite board.

2.2.1.5 Summation for Neurological Measurement. It has been assumed that some form of rotating device, such as a modified REVS, will be carried on-board the spacecraft. Otherwise, all semicircular canal tests will be eliminated and the value of the otolith tests reduced, since the two groups of measurements are not only closely associated but intimately interdependent.

The REVS, as designed for the M053 AAP experiment, consists of a base containing the gear drive, a center post or leg, a square seat, and two foot supports. The seat can either be placed directly above the base in the egocentric position, or extended sideways with respect to the base on a telescoping tube to provide concentric positioning of the subject relative to the axis of rotation. The center post can be moved with respect to the base to allow up to 45-deg of tilt; the subject orientation on the seat determines if this tilt is in the lateral or sagittal plane. The bite board is attached to a folding arm which is adjustable to the subject's height. By substituting a headrest for the bite board and by extending the foot supports horizontally instead of downward, the REVS presumably can be used in the litter mode although no support is provided for the subject's back area; this is a matter of some concern during rotation. By means of quick-disconnect fittings, the base can be either secured to the floor or to a bulkhead of the spacecraft. The entire REVS can be folded together to occupy a volume of less than 1 ft^3.

In its present configuration, the REVS consequently will be unsuitable for the wide variety of vestibular tests previously described. LMSC therefore recommends that a more advanced model of the REVS (Fig. 2-1) be developed with provision for the attachment of adjustable backrests and armrests, and for holding the cube-frame light target and the moving spot CRT display. The control stick assembly can either be mounted on the right armrest, or between the attachments of the foot supports on the front edge of the seat.

Due attention should also be given to the development of the REVS drive motor in view of its stringent acceleration and deceleration and its control flexibility requirements. Use of a miniaturized version of the Velodyne, a component of the Stille-Warner rotating chair, should be investigated. Further, the various acceleration and deceleration rates should be preprogrammed into the on-board computer for optimum accuracy in drive-motor control. Finally, the subject must be able to bring the REVS to a gradual stop as soon as he experiences symptoms of kinetosis.

It has been suggested that semicircular canal tests could be accomplished by rotating the entire spacecraft, but LMSC does not consider this approach feasible. The vestibular measurements require frequent accelerations and decelerations, and rapid rates of onset. These actions are difficult to accomplish because of the large momentum of the spacecraft and will certainly require excessive propulsion capability. Adjustment of the rotational velocity to the precise values necessary will call for a whole series of acceleration and deceleration adjustments, which are very time-consuming and which, in all probability, will be sensed by the experimental subject, thereby completely invalidating the entire experiment.

2.2.2 Cardiovascular Measurements

Deterioration in cardiovascular reactivity due to the absence of the usual hydrostatic stresses during spaceflight has already been demonstrated during the Mercury and Gemini programs. Determination of the time sequence of these changes and their

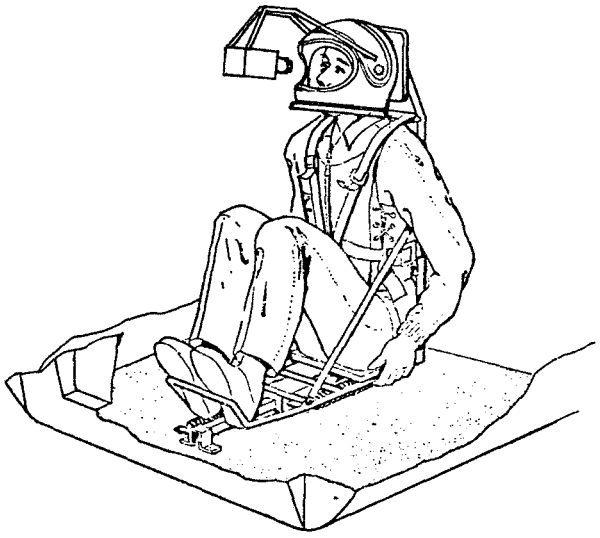

(a) Ocular Counterrolling

(b) Visual Task With Head Rotation

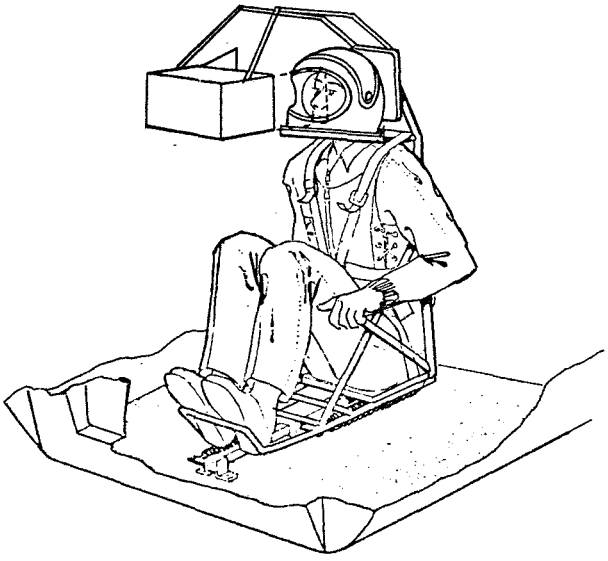

(c) Oculogyral Illusion and Angular Acceleration

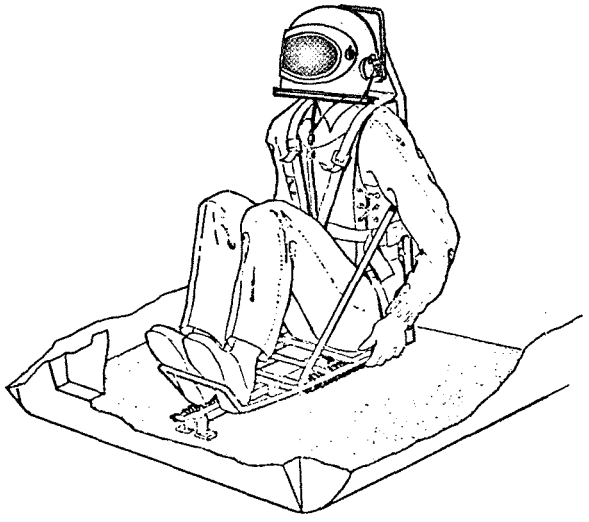

(d) Linear Acceleration Threshold

Fig. 2-1 Rotational and Linear Equipment for Vestibular Investigations

ultimate magnitude, together with a better understanding of the basic mechanism involved, are essential toward assessing human performance capabilities in space. Significant decrements will require the development of adequate cardiovascular countermeasures equipment and the establishment of effective procedures.

The cardiovascular measurements and countermeasures equipment are presented in Table 2-4. Major categories of these measurements are as follows:

- Cardiac dynamic measurements
- Hemodynamics
- Fluid volume distribution (see Section 2.4.6)
- Thermal regulation evaluation
- Countermeasures and provocative testing

2.2.2.1 Cardiac Dynamic Measurements. A variety of measurements in this category have been considered and evaluated in connection with the IMBLMS.

Electrocardiogram. The ECG signal is an analog display of the electrical activity of the heart as it is projected onto the surface of the body at the sites of the applied electrodes. The electrocardiogram measurement is a two-lead measurement and is available as off-the-shelf flight hardware. One pair of electrodes is attached in the sternal position, and the second set of electrodes is placed in a mid-axillary configuration.

Heart Rate. Changes in the heart rate as the result of various activities, exercise, etc., as well as its recovery rate following these stresses, provide an indication of the vagal cholinergic and/or sympatho-inhibitory counter-regulatory power of the cardiovascular system, and thus give a sensitive and accurate indication of an individual's cardiovascular reserve under stressful conditions. The heart rate will be electronically derived from the ECG, either by directly counting the number of heart beats per minute, or by measuring the reciprocal of the time between two successive heart beats.

Meas't No.	Evaluation Factors → / Type of Measurement	Commonality					Relationship	Development Status				Validity		
		Clinical Monitor	Experimental	AAP-M Series	AAP 100 to 200	Related Measurement	Space-Qualified	Under Development	Laboratory State of the Art	Conceptual or Research	Clinical	Sensitivity	Astronaut Acceptance
1	Electrocardiogram	X		X	X	2,3	X				1[a]	1	1
2	Heart Rate	X		X	X	1	X				1	1	1
3	Vibrocardiogram		X			1	X				2	1	1
4	Ballistocardiogram		X						X		2	2	2
5	Thoracic Blood Flow				X			X			3	3	1
6	Cardiac Output				X				X		2	2	1
7	Blood Pressure (Manual)	X		X	X		X				1	1	1
8	Venous Pressure (Peripheral)				X	9,10			X		2	1	2
9	Regional Blood Flow		X			8,9			X		3	2	2
10	Venous Compliance (Occlusive Plethysmography)		X			8,10			X		2	1	2
11	Arteriolar Reactivity		X			8,9, 10			X		3	2	3
12	Arterial Pulse Contour (Infrared Photocell)		X				X				2	1	2
13	Oral Temperature	X	X			14	X				1	1	1
14	Multithermistor			X	X	13		X			1	1	2

(a) See Table 2-1 for definition of rating scores 1, 2, and 3.

	Astronaut Factors				Analysis Requirements			Data Format				
...ptance	Task Complexity	Performance Time	Training Requirements	Physician Required	Automatic	Manual	Preservation/ Postflight Analysis	Analog	Digital	Subjective/ Voice	References	Remarks
1	1	1		X			X					Two leads
1	1	1		X				X				Derived from ECG
1	1	1		X			X					Phonocardiogram derived from vibrocardiogram
1	2	1		X			X					Possible telemetry requirement
1	1	1		X							2-12	Kubicek's Method
2	2	2		X			X				2-13 2-14 2-15	Fick CO_2 rebreathing
1	1	2			X				X			Nose-canceling stethoscope Automatic methods require development
2	1	1		X			X					Superficial pressure chamber Occlusive plethysmography
2	1	1		X			X					Plethysmography
2	1	1		X			X					Strain-gauge techniques as alternate method
2	1	1		X			X					Occlusive plethysmography Histamine skin wheal
1	1	1		X			X					Temporal arterial pulse sensor an alternate method, but requires development
1	1	1		X				X				Ear thermistor under development
2	2	1		X				X				Weighted average

Table 2-4 Medical Evaluation Summary – Cardiovascular Measurements

Vectorcardiograph. The VCG measurement system consists of an electrode harness assembly (using eight electrodes), a Frank VCG resistor network, an automatic calibration system, and three ECG signal conditioners. The Frank lead network is used to minimize the number of electrodes required, consistent with operating stability and reduction of noise and motion artifact. The Frank lead electrode arrangement is such that five electrodes are arranged in a transverse plane at the axillary midline on the left and right lateral chest, sternum, back, and the left anterior chest wall, respectively. A sixth electrode is placed at the back of the neck and the seventh at the mid-posterior waistline. A common electrode is normally used on the right anterior chest wall. Noise over all conditions is less than 7 μv peak-to-peak at the input within the band of 0.2 to 100 Hz. The gain is continuously variable from 1,000 to 4,500. The signal conditioner has a manually operated calibration switch which inserts an equivalent 1-mv signal referenced to the input. The vectorcardiograph is displayed on a CRT equipped with z axis modulation and recorded on the biomedical recorder for transmission to the ground.

Vibrocardiogram. The vibrocardiogram (VBCG) trace is a time function of the total vibrational energy of the precordium in the frequency range of 1 Hz to 2,000 Hz. By suitable filtration of the VBCG, traces can be obtained similar to those of the kinetocardiogram (0.1 to 20 Hz), the accelerogram (5 to 200 Hz), and the phonocardiogram (60 to 120 Hz). The instrumentation for the phonocardiogram is flight-qualified and consists of a piezoelectric transducer and a modified ECG signal conditioner. The modifications consist of changing filtering characteristics to permit the proper frequency response for phonocardiogram measurement.

A single signal conditioner and microphone combination can be designed for both the vibrocardiogram and the phonocardiogram (PCG). The VBCG/PCG display can incorporate either a single control to switch from the wideband VBCG range to the restricted PCG range or two controls for independent adjustment of the upper and lower frequency responses.

Pg. 2-26 BLANK, not Filmed

Ballistocardiogram (BCG). The elimination of artifacts is the greatest problem in obtaining high quality ballistocardiograms (BCG) since body movements, tremors, respiration, and even loose wires can cause masking of the BCG. The null gravity state provides the ideal laboratory environment for investigating these parameters of cardiac kinetics.

The BCG requires that the subject be completely immobilized and mechanically uncoupled from the spacecraft or other large mass. Ideally, the immobilizing frame should have no mass; practically, subject to frame mass ratios of 25 to 1 have been realized.

The three orthogonal linear accelerations and possibly one or more angular accelerations should be measured. Telemetry has been used successfully to free the ballistocardiogram platform from any artifacts resulting from the use of hardwire instrumentation during measurements obtained from subjects flying a Keplerean trajectory in a KC-135 aircraft.

Cardiac Output and Thoracic Blood Flow. The most accurate or accepted method of measuring cardiac output, the direct Fick method, requires catheterization of the test subject. Other direct methods require injections and blood sampling. These techniques are not recommended for space application because they require subject violation.

Two indirect noninvasive methods for determining cardiac output (the carbon-dioxide rebreathing method and the impedance cardiogram) are recommended because of the importance of the measurement and the variability of results among cardiac output techniques. The CO_2 rebreathing method is based upon the indirect Fick technique with the subject rebreathing for a period of about 12 sec into a gas bag containing a mixture of 6 percent CO_2 and 94 percent O_2.

The cardiac output is determined by measuring the carbon-dioxide production and estimating the arteriovenous carbon dioxide difference. This estimation is performed

by measuring the CO_2 concentration at the end of a maximum expiration for arterial CO_2 and by rebreathing to establish a CO_2 equilibrium with mixed venous blood. Accurate measurement of the minute volume of expired air and the partial pressure of carbon dioxide in the expired air gives the amount of CO_2 expired (expressed in milliliters per minute).

During rebreathing, the CO_2 accumulates as the concentration in the lungs, compared to that in the rebreathing bag, rises toward a balance with the CO_2 in the mixed venous blood. The average curve of the CO_2 concentration in the gas bag, obtained either by graphical manual interpolation between the peak and trough during the respiratory cycle or by computer programming, represents the mixed venous CO_2 concentration.

The equipment for this measurement consists of a mass spectrometer for breath-by-breath CO_2 analysis and a respiratory gas-flow and volume analyzer (spirometer or integrating pneumotachograph). The data management system will compute the total CO_2 production, the equilibrium point in the rebreathing bag, and the cardiac output in liters/minutes.

The indirect Fick method requires highly accurate measurement of carbon dioxide for reasonably accurate cardiac output data since the arteriovenous pCO_2 difference is only a few millimeters of mercury. A mass spectrometer with 0.5 percent accuracy in the measurement of CO_2 will result in a cardiac output error of 12 percent when used with the indirect Fick method. Volume errors of 5 percent can be expected from integrating pneumotachographs and of 2 percent from spirometers. These errors, added to the CO_2 measurement errors, give a 14 to 18 percent potential error in cardiac output data.

The second technique, the impedance cardiograph (thoracic blood flow) using Kubicek's method, has the advantage that related space-qualified equipment is under development. Impedance plethysmography derives from the concept of changing parallel resistive impendances within a volume conductor in response to imposed radio frequency signals (50 to 120 kc). The thorax is considered a uniform volume conductor

in which changing resistive impedance is attributed to pulsatile blood flow and respiratory gas volume changes. Thoracic impedance changes can be measured to 3 percent accuracy.

Electrodes placed around the neck and around the body below the heart are excited with high-frequency current. Changes in impedance and the derivative of the change are measured as well as the phonocardiogram. It is claimed that the change in impedance is directly related to cardiac output. Since the technique has primarily been compared to the indirect Fick method, there remains some doubt as to the absolute accuracy of the cardiac output measurement. However, if the validity of this measurement is accepted, the equipment should be accurate and reliable. The execution of the technique is simple and requires a minimum of time; violation of the subject is negligible.

2.2.2.2 Hemodynamics. Various aspects of this measurement category have been considered with respect to the IMBLMS.

Blood Pressure Measurement. Maintenance of perfusion depends upon sophisticated and complex integration of the central nervous system reflexes, circulating blood volume, cardiac stroke output, and local vascular factors. The end result – arterial blood pressure – is one of the most valuable and reliable medical measurements. The traditional occlusive cuff and clinical sphygmomanometer can be relied upon to give valuable information, both in space and on the ground.

It is feasible to train astronauts to use the equipment for this measurement. For routine, discrete measurement of blood pressure, a manually operated sphygmomanometer with a noise-cancelling stethoscope is recommended. This equipment is now being flight-qualified for Apollo. The method requires aural determination of the Korotkow sounds and visual determination of corresponding pressures followed by manual entry of data in a logbook and/or by means of a numerical keyboard.

During dynamic cardiovascular experiments (e.g., for application of lower body negative pressure, during exercise, and during EVA) an automatic or semiautomatic system is preferable.

In indirect automated methods, the occluding cuff is pressurized manually or automatically to a level above the anticipated systolic pressure, after which the pressure is gradually reduced. The initiation and cessation of pulsatile blood flow are detected by a microphone and, when combined with a pressure signal from the occluding device, produce an indication of systolic and diastolic blood pressure.

An on-board gas source and some automated mechanism for controlling that gas flow to inflate the cuff would reduce the manual effort required by the astronaut (i.e., no bulb-squeezing) but would also reduce the portability and greatly increase the system size and complexity. Safety features to prevent over-pressurization of the cuff would be of particular importance.

Some of the previous manned flights used an especially damped piezoelectric microphone with a signal filter for the 32- to 40-Hz operating range. The microphone was 3.5 cm in diameter and 0.5 cm thick. The unit was so constructed that the sensitivity to sound coming from any direction except from the skin was at a minimum (front-to-back ratio of about 20 db). However, additional improvements in the microphone pickup system have been reported necessary to reduce the need for extensive preflight calibration and for matching the microphone (in relation to position, mounting pressure, and amplifier gain) to the individual astronaut.

Other methods available for the detection of pulsatile blood flow include electrical impedance plethysmography and ultrasonic and electromagnetic flowmeters.

The changing opaqueness of tissue to infrared can also be used to indicate changes in blood flow volume. Disadvantages of the reflective technique include increased susceptibility to motion artifacts, reduced sensitivity due to direct light transfer over the skin surface, and the effect of skin color upon the output.

Cyclic-occlusion techniques have several inherent limitations. The long period required to make a single determination of systolic and diastolic pressure makes this technique somewhat less satisfactory than a dynamic measurement. The major disadvantage, however, is that the cyclic-occlusive phenomenon produces considerable discomfort when used continuously on a major artery. If used on a minor artery or arteriole (such as a finger), continuous measurements may be possible, but the inherent accuracy of measurement of the peripheral circulation is limited. All of the influences related to the change of peripheral circulatory resistance (e.g., temperature, position, and the autonomic nervous system) present complications in the measuring problem and may profoundly influence the displayed values of arterial blood pressure.

Various methods of indirect nonocclusive measurement of blood pressure have been proposed, but severe problems facing the transducer developer have, until recently, limited the use of these techniques to rigidly controlled laboratory applications. One technique (pulse sensing) employs a direct force – balance probe which, when placed against the temporal artery, responds to the arterial pressure wave. Although still developmental, this method holds promise for space application as a continuous nonocclusive measurement of temporal arterial blood pressure.

In summary, manual blood pressure determination with a noise-cancelling stethoscope is recommended for the IMBLMS. Further developmental effort will be required before automatic cyclic-occlusive techniques can be recommended for use for dynamic monitoring. Advances in the development of the continuous temporal artery pressure sensor will eliminate the need for complicated pneumatics and provide a means of obtaining blood pressure during suited operations.

Venous Pressure, Central and Perpheral. Venous pressure as well as total venous volume, venous compliance, and venous distensibility are important parameters to determine the integrated function of the veno-motor system and its relation to total cardiac activity. The clinician measures venous pressure at the bedside by observing

distension in the jugular veins. A more accurate measurement requires insertion of catheters into accessible peripheral veins or directly into the atria with direct manometric recording of venous pressure. Measurement of peripheral and central venous pressure techniques has been exhaustively studied by Dr. L. Young and associates* who have noted nine potential techniques for non-evasive venous pressure measurements and have recommended three for further evaluation. These three techniques were superficial, pressure-chamber, occlusion plethysmography; limb plethysmography; and digital plethysmography. In general, the measurement techniques are subject to error and sensitive to placement of the specific sensing devices. Displacement plethysmography techniques are favored. Young and his associates recommend a superficial chamber balance method for estimating peripheral venous pressure which may be adaptable for spacecraft use but which is, at present, only a laboratory concept.

Venous Distensibility and Venous Compliance. Venous compliance is defined as the change in volume of a vein per unit increase in pressure. These measurements are usually taken by measuring the increase in diameter of a limb, distal to an occluding cuff. This requires accurate measurement of the occluding cuff pressure to be plotted against the changes in limb volume. The assumption that limb volume increase distal to the cuff represents only venous distension may be erroneous. Techniques for measuring limb volume changes are strain gauge measurements, capacitance plethysmography, impedance plethysmography, photo-plethysmography, thermal flow measurements, and doppler shift measurements. The state-of-the-art techniques do not demonstrate clear superiority of one method, as all methods share errors related to electrode replacement, difficulty in calibration, and reliability of measurements. LMSC recommends impedance plethysmography or capacitance plethysmography which are in refined development stages at present; alternately, the strain-gauge technique of measuring leg volume may be sufficiently improved to warrant its use in the IMBLMS.

---

*Verbal communication to G. A. Albright, LMSC, July 1967.

Regional Blood Flow. An informative measurement of regional blood flow should differentiate partition of blood between the arterial and venous circulation and between deep and superficial circulation and permit evaluation of fluid transfer into the extravascular spaces. Techniques available for measuring regional blood flow are the capacitance technique, radioactive isotope techniques, thermography, and ultrasonic techniques. None of these techniques can discriminate the complex variables involved. If measurements are desired, it is recommended that plethysmographic techniques be used to measure gross regional blood flow within an extremity.

Arteriolar Reactivity. The purpose of this measurement is to determine the effect of weightlessness on arteriolar tone. Venous occlusion plethysmography can be used to determine blood flow following cuff-induced ischemia, exercise, or a painful stimulus. Subjective observation of the skin response to manual pressure and histamine skin wheal injection will provide additional information. Instrumentation requirements are similar to those for venous compliance measurements.

Arterial Pulse Contour. The contour of the arterial pulse form can be evaluated to provide information on the onset of the arterial pulse wave, the time to the peak of the arterial pulse wave, and the time to the dichrotic notch of the arterial pulse wave. The following indirect methods are feasible for measuring pulse contour of the extremeties:

- Volume displacement plethysmography
- Impedance plethysmography
- Photo-plethysmography
- Pressure pulse sensing

Only photo-plethysmography and pressure pulse sensing have been shown to provide contour data which closely correlate with the direct, pressure-pulse contour measurements. Volume-displacement and impedance plethysmography provide volume-pulse contours which represent the cumulative changes in arterial blood volume, venous blood volume, and tissue volume, and therefore do not provide true arterial

pulse contours. Photo-plethysmographic methods provide a more selective technique in that they are mounted over an arterial site and therefore effectively measure changes in the artery itself. An infrared photocell device (e.g., the Spacelabs Model 404) is recommended for monitoring the pulse contour at a finger site. The temporal artery pulse-sensing device (previously discussed under blood pressure measurement) if adequately developed will provide a preferred method for sensing pulse contour.

2.2.2.3 Thermal Regulation Evaluation. Body temperature is a standard clinical measurement and is considered a vital part of continuous monitoring in stressful environments. Normal body temperature measured orally is about 98.6°F (rectal temperature about 1°F higher and axillary temperature about 1°F lower). Deep-body temperature ranges from 97° to 99.5°F. Deviations of more than 2° indicate unusual ambient conditions or serious change in the physiological state. The monitoring span requirement is approximately 95° to 105°F.

Three devices have been used for monitoring temperature: bimetallic thermocouples, calibrated resistance thermometers, and thermistors. The thermistor is by far the most sensitive. It is a semiconductor device and has a high negative coefficient with temperature. Typical units undergo a 4-percent change in resistance/°C change in temperature (2.2 percent/°F). The thermistor can easily detect temperature changes as small as 0.1°F. It is recommended that temperatures be taken orally and in the ear.

The oral-temperature probe consists of a Yellow Springs Instrument thermistor (Type 44111X) which is molded into a finger-formable probe that is placed in a hermetically sealed handle and cable connector assembly. Bonded to the handle is a Velcro patch by which the thermistor probe may be temporarily attached. The oral-temperature signal conditioner is manufactured by Spacelabs, Inc., and is flight-qualified. This device, when operating with the proper thermistor probe, is designed to amplify with precision the output of the thermistor bridge. The oral temperature system measures temperatures in the range from 95° to 105°F. Its output is 0 to 5 v, single-ended, with ± 1 percent stability.

For continuous monitoring of core temperature, ear-temperature measurements have certain advantages. After extended studies, Benzinger and his coworkers have reached the conclusion that rectal temperatures, and those taken at other commonly used body locations, do not reflect those changes on which the cerebral temperature regulation of the human body depends, namely, changes within the cranium and in the central nervous system. They believe that changes in temperature measured in regions supplied by or located near the deep-seated branches of the carotid arteries parallel the changes in temperature of the anterior hypothalamus, which they regard as the location of the body's central thermoreceptors, i.e., the human thermostat.

LMSC has developed a temperature sensor consisting of a plastic, custom-fitted, hearing-aid-type earmold, employing a highly stabilized thermistor bead. Even though the thermistor does not actually touch the tympanic membrane, and presents an integrated temperature of the deepest portion of the external auditory canal, this method responds far quicker to transient heat-load changes than a rectal probe, and gives a more stable reading than a sublingual probe. Spacelabs, Inc., has already built such earpieces in conjunction with an ear microphone development program.

The ear-temperature probe uses the same temperature signal-conditioner employed for oral-temperature measurements. By using aged and carefully matched thermistors in the sensing elements, the conditioners can be interchanged without the need for recalibration.

Response to Thermal Change. This test can probably be best accomplished under spacecraft constraints by reducing the ventilation flow to the suited astronaut and shutting off flow to his water-cooled garment. The subject will be instrumented with the multithermistor temperature-measurement system currently under development for

the Apollo Program. The points for measuring the temperatures may vary but normally include both core and peripheral body temperatures. The 12 temperature sensors can be multiplexed to a single signal conditioner to simplify equipment requirements. All thermistors must be matched to each other to permit an accurate calibration. A weighted average will probably be required, depending upon the location on or in the body and may change from experiment to experiment. The weighting is easily mechanized electronically although it is somewhat complicated by the sequential nature of the multiplexed data. However, if the weights are to be changed during a mission with no a priori knowledge as to the weight, then 12 multiposition switches will be required. If only a few different weighting functions will be required during a given mission, preprogrammed weighting modules then can be plugged into the panel for each experiment. A third alternative is to transmit the raw data to the ground and perform all the weighting in the final data reduction.

2.2.2.4 Countermeasures and Provocative Testing. Preflight and postflight examinations will include astronaut tilt-table responses and a general fitness evaluation. Provocative tests for flight evaluation, as presented in the IMBLMS RFP (Ref. 1-1), should also be performed on the ground to establish terrestrial norms. In addition to provocative test equipment, additional countermeasures equipment (e.g., occlusive cuffs and elastic leotards) will be provided. Most of the equipment required for these procedures will be transported in separate experiment canisters. Provisions for power and pneumatic connections and experimental parameter displays have been included in the main IMBLMS modules. The dynamic physiologic monitor has been specifically designed for use with these countermeasures equipment as it provides the monitoring astronaut with physiological displays essential for the safe conduct of the test.

Response to Exercise and LBNP. A variety of exercise devices have been recommended for space application. During Mercury and Gemini, a bungee cord was used. Beckman Instruments has developed an ergometer for the Apollo Program, and the U. S. Air Force is considering a modification of the Exergenie for the MOL Program.

NASA-Houston has recently solicited bids for a more advanced ergometer and an LBNP. Provisions for integration of these peripheral equipment items have been made in the IMBLMS design concept. The dynamic physiologic monitor module has been specifically designed to provide on-board readout of critical physiological parameters necessary for the safe conduct of exercise and LBNP experiments.

Occlusive Cuffs as a Countermeasure. The use of intermittent occlusive cuffs on astronaut extremities has been attempted in spaceflight with equivocal results. The equipment is flight-qualified.

Elastic Leotards as a Countermeasure. The use of elastic leotards before reentry has been recommended as a cardiovascular countermeasure. The effectiveness of elastic leotards and occlusive cuffs will be evaluated during flight, utilizing IMBLMS measurement equipment.

2.2.3 Respiratory Measurements

The function of the respiratory system is to exchange gases between the blood and the ambient atmosphere. In addition, there must be satisfactory gas transport between the lungs and body tissues.

It has been postulated that exposure to the weightless state may change lung volumes and capacities from a combination of such causes as displacement of the diaphragm, redistribution of the pulmonary vascular volume with an absolute increase in the size and volume of the pulmonary vascular bed, and altered breathing mechanics.

Internal cabin environmental conditions such as reduced pressure, enriched oxygen, and trace contaminants may result in the development of atelectasis, pulmonary edema, or alterations in alveolar capillary membrane permeability that could have a significant effect on pulmonary function. The development of acceptable tolerance limits for cabin atmospheres, oxygen consumption, and carbon dioxide production rates has important implications for the design of future spacecraft.

The terrestrial pulmonary laboratory uses water-filled spirometers for measuring lung volumes and gas flow rates; diffusion techniques involving carbon monoxide, arterial punctures, and cardiac catheterization for blood gas analysis; and whole body plethysmography for measurements of airway and pulmonary resistance. None of these techniques is considered feasible for space application.

Recommended measurement techniques suitable for the IMBLMS are summarized in Table 2-5. The integrating pneumotachograph and a mass spectrometer form the basic elements of the measurement system. In addition, a servospirometer is recommended because of its greater accuracy in measuring lung volumes. Servospirometric measurements may be used for in-flight recalibrations of the pneumotachograph and, with modifications to the basic instrument, can provide a means for accurate assessment of oxygen consumption under exercise work loads.

2.2.3.1 Respiration Rate. Respiration rate, required for clinical monitoring capability, is measured with the impedance pneumograph. The required equipment is space-flight-qualified and shares in common the transthoracic electrocardiograph leads. A small body-worn signal conditioner is employed, and the analog output can be displayed on a CRT and on a limit meter with alarm for continuous monitoring.

2.2.3.2 Static Lung Volumes and Capacities. The standard definitions accepted by respiratory physiologists include the following volumes and capacities: (1) tidal volume, (2) inspiratory reserve volume, (3) expiratory reserve volume, (4) residual volume, (5) total lung capacity, (6) vital capacity, (7) inspiratory capacity, and (8) functional residual capacity.

Several spirometers have been designed that use a gas bellows without a water seal. The servospirometer measures change in volumes and pressures by displacement of a small piston connected to the cylinder into which the subject breathes. The recommended system incorporates a CO_2 removal canister for closed-circuit spirometry and dual 7-liter compartments modified so that one can act as a replenishable oxygen

reservoir during exercise in oxygen consumption tests. The system weighs approximately 35 lb and measures 2 cu ft. The wedge spirometer also provides signals proportional to volume and flow and has rapid response characteristics. Although it is somewhat large and bulky, it could be used in place of the servospirometer. LMSC recommends the servospirometer since more design effort has been expended in adapting it for spaceflight application.

Probably the most versatile instrument for a flight pulmonary laboratory is the integrating pneumotachograph although it is relatively inaccurate as compared with spirometers. Integrating pneumotachographs, either of the Fleisch or thermal flowmeter design, are at best 5 percent accurate in a space environment. Technology, Inc., claims 2 percent accuracy and 0.1 percent reproducibility for one of their thermal flowmeters; however, this is over the rather limited 55° to 105°F range. Furthermore, this figure was for a single dry gas at relatively high flow rates.

Typical thermal flowmeter problems stem from accuracy drift with temperature and with the use of multiple gases, particularly water vapor. The thermal flowmeter is linear with mass flow and is generally calibrated for a specific gas. This characteristic would make it suitable for use in the inlet oxygen line but not for flow measurement of expired breath. Saturating the gas with water vapor compounds the problem.

Fleisch pneumotachographs use the pressure drop across a linear resistance element to determine the gas flow. To reduce the pressure drop across a linear resistance element to a point where the drop does not affect the experiment, a simple screen is used. Known errors in Fleisch pneumotachographs develop from loading the linear element with water vapor. Various techniques have been used to eliminate this error. The 400-mesh screen has been replaced with parallel plates, concentric cylinders, and egg crate designs, and the linear elements have been heated to drive off water vapor — with varying degrees of success.

More than one flowmeter will be required for the pulmonary function analysis. A device that exhibits 5 percent of full-scale accuracy at 200 l/min (maximum breathing capacity measurement) may have a 20 percent error for a 500-ml/min tidal volume measurement.

Meas't No.	Type of Measurement	Evaluation Factors → Commonality: Clinical Monitor	Experimental	AAP-M Series	AAP 100 to 200	Related Measurement	Relationship: Space-Qualified	Development Status: Under Development	Laboratory State of the Art	Conceptual or Research	Validity: Clinical	Sensitivity	Astro...
1	Respiratory Rate	X					X				1(a)	1	1
2	Static Volumes			X	X				X		1	1	1
3	Residual Volume		X						X		2	2	2
4	Gas Flow Rates			X	X						1	2	2
5	Airway Resistance		X						X		2	2	2,3
6	Lung Compliance		X						X		1	2	3
7	Alveolar Ventilation		X						X		2	1	1
8	Perfusion/ Ventilation Ratio		X						X		2	2	1
9	Breath/ Breath $O_2 - CO_2$ Analysis		X					X			1	1	1
10	Oxygen Consumption			X	X				X		1,2	2,3	2
11	Arterial O_2		X						X		2	2	2

(a) See Table 2-1 for definition of rating scores 1, 2, and 3.

lity	Astronaut Factors					Analysis Requirements			Data Format			
Astronaut Acceptance	Task Complexity	Performance Time	Training Requirements	Physician Required	Automatic	Manual	Preservation/ Postflight Analysis	Analog	Digital	Subjective/ Voice	References	Remarks
	1	1	1		X			X	X			Impedance pneumograph
	2	2	2		X	X		X				Servospirometer more accurate than pneumotachograph
	2	2	2		X	X		X			2-16 2-17	Open circuit N_2 technique using pneumotachograph
	2	2	2		X			X			2-18	Servospirometer and/or dual pneumotachograph
3	2,3	2	2,3		X	X		X			2-19 2-20	Integrating pneumotachograph with interrupting shutter or esophageal pressure and pneumotachograph
	3	3	3		X	X		X			2-21 2-22	Esophageal pressure and integrating pneumotachograph
	1	2	2		X			X			2-23	Nitrogen washout after breathing pure O_2
	1	2	2		X			X			2-16	Comore's single-breath CO_2 expiration test
	1	2	1		X			X				Mass spectrometer gas analyzer
	2	3	2		X			X				Replenishing dual servospirometer or dual pneumotachograph and mass spectrometer
	2	2	2		X			X			2-24 2-25	Ear oximeter

Table 2-5 Medical Evaluation Summary – Respiratory Measurements

The pneumotachograph measures flow rather than volume; however, by suitable integration of the flow curve, volume can be determined. Application of integrating electronic circuitry can provide a direct readout of the volume from the flow trace. A further modification of the flow information from the pneumotachograph can be combined with volume information from an integrating pneumotachograph to form a flow volume loop. This loop is obtained by imposing the volume signal on the X-axis and the flow signal on the Y-axis of an oscilloscope. This loop can be recorded during a forced maximum inspiratory and forced maximum expiratory maneuver.

A resting tidal loop can be subsequently superimposed on the same record and lung capacities measured (Fig. 2-2). A calibration signal is incorporated into the oscilloscope to indicate flows of 1 liter/sec and volumes of 1 liter. Use of this method would provide values for inspiratory capacity, expiratory capacity, inspiratory reserve, expiratory reserve, and tidal volume.

The Apollo impedance pneumograph (ZPN) is not normally used for measuring exact volumes and volume changes. However, a number of investigators have attempted, with some success, to correlate the ZPN output with actual lung volume changes. Bergey and others from the Naval Air Development Center have developed a ZPN that operates at 300 kHz and that correlates well with volume. Poorer correlation was reported at lower frequencies although this result may have been due to the dry electrode technique that was used. Beckman Instruments Company evaluated a ZPN at 50 kHz and was able to correlate impedance change with volume change. The ohms-per-liter response appeared to depend on excitation frequency, electrode location, chest dimensions, and body position. The calibration curves for volume versus impedance change were highly nonlinear and varied widely from subject to subject. It was concluded, however, that volumetric information can be obtained if a preliminary baseline calibration is obtained for each subject and if the subject body position is known or limited. Within a group of astronaut test subjects, the first criterion can be met. The feasibility of meeting the second will depend upon the exact nature of the experiment. For instance, obtaining valid volumetric measurements during exercise evaluation may not be possible with this method; yet lung capacities of a relatively quiet subject may be obtained.

Pg. 2-42 Blank, Not Filmed

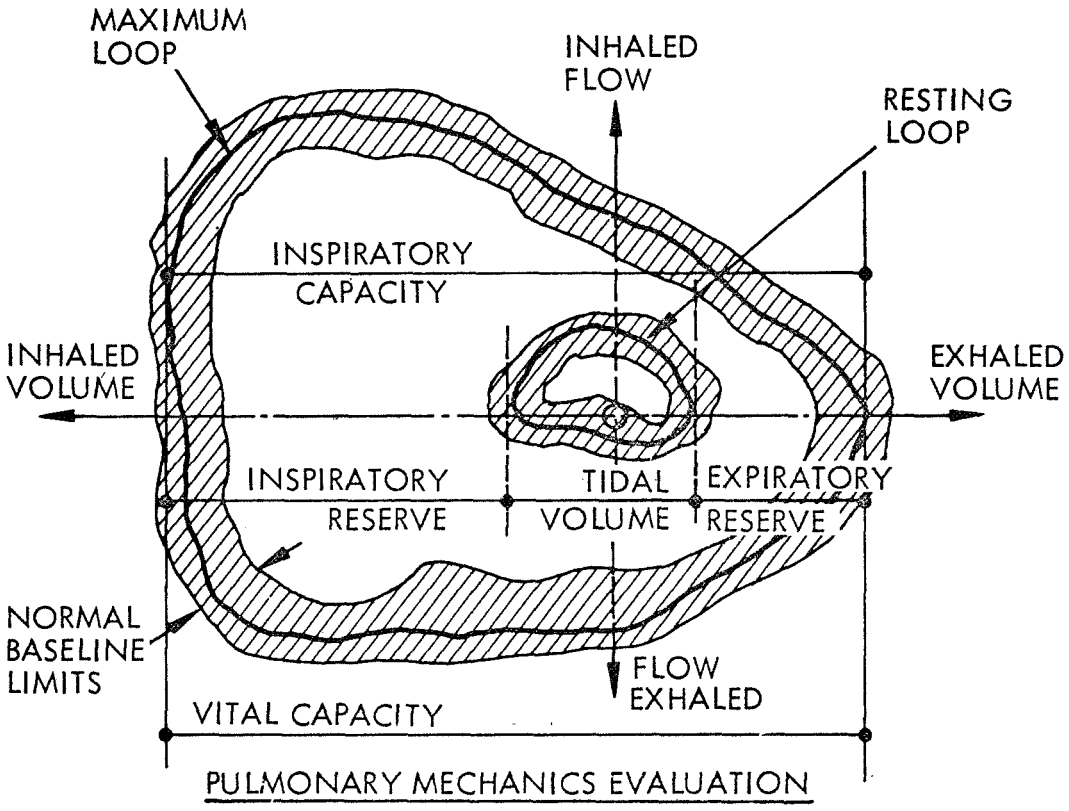

Fig. 2-2 Resting $\dot{V}$-V Loop Superimposed on Maximum $\dot{V}$-V Loop, Showing Use of Loops for Obtaining Values for Subdivisions of Lung Air

Measurement techniques for residual volume required the equilibration of a known gas between the lungs and an exterior connected circuit, or the use of a whole-body plethysmograph. The integrating pneumotachograph could be employed in an open circuit. Pure oxygen is inspired, and the amount of alveolar nitrogen washed out over a 7-min period is determined. Clinical methods use a large spirometer (Tissot) to collect the expired air and a gas meter to measure its volume. For space application, it is recommended that an integrating pneumotachograph be used to measure the expired volume and that a mass spectrometer continuously monitor the N_2 concentrations. Determination of the level of respiration at the start of the collection of expired air would be obtained from a servospirometric tracing.

Whole-body plethysmographic techniques for determining lung residual volume cannot be recommended for space application at this time. Thermodynamic control of the gas volume of the enclosure would be difficult in the confines of the spacecraft, and a collapsible plethysmograph bag would have to be developed to replace the large rigid clinical whole-body plethysmograph.

2.2.3.3 Gas Flow Rate. The measurement of dynamic lung volumes provides an overall assessment of the efficiency of the mechanical function of the pulmonary system and involves the relationship between air flow and changing lung volumes. Timed volumes, maximum flow rates, peak flow rates, and maximum breathing capacity can be measured using an integrating pneumotachograph with electronic processing or with the servospirometer.

Two instruments are typically used for measuring maximum breathing capacity. One, the Ventube, uses a venturi to draw a measured quantity of gas into the respiratory stream during maximum breathing. The quantity of gas drawn into the respiratory stream is proportional to the maximum breathing capacity. The equipment is reliable and simple to operate. However, the Ventube offers about 1 cm of H_2O resistance to the respiratory flow and has been shown to give consistently higher readings than low-resistance devices.

The puffmeter is a design similar to a Lilly pneumotachograph in that it uses a linear resistance element and measures the pressure drop across this element. Resistance to the respiratory flow is comparable to that of the Ventube and can be expected to give similar results.

2.2.3.4 Pressure Flow and Volume. There are two measurement methods: airway resistance and pulmonary compliance.

Airway Resistance. Airway resistance is represented by the alveolar pressure divided by the flow rate at that pressure. It is measured under dynamic conditions with values related to the flow rate at the mouth and the transairway pressure. The commonly accepted clinical technique uses the whole-body plethysmograph. An alternate technique is the airway shutter interrupter modification of the integrated pneumotachograph – which provides a good approximation of the alveoli pressure instantaneously as the shutter interrupts the air flow. When air flow is stopped, the pressure equalizes rapidly between the alveoli and the mouth proximal to the shutter. The pressure measured at the mouth represents a good approximation of alveoli pressure. By making several measurements during a respiratory cycle, airway resistance can be derived from the ratio of pressure to flow.

If esophageal pressure is measured, as required for lung compliance measurement, another technique is available for measuring airway resistance. The flow signal from a pneumotachograph is placed on the Y-axis of a CRT and the esophageal pressure on the X-axis. Assuming that the pressure exerted against elastic resistance is proportional to the volume inspired, a signal proportional to the volume inspired is also applied to the X-axis in the opposite direction to the pressure signal. The volume signal is adjusted to close the pressure-flow loop to form a straight line. The slope of this line is a measure of airway resistance.

Pulmonary Compliance. The elasticity of the lungs and thorax can be represented as the relationship between pressure and volume measured under static conditions in the form of compliance. Compliance is the change in volume per unit change in pressure

(L/cmH_2O). Hence, the measurement requires introduction of an intraesophageal catheter containing a pressure sensor. This technique is not considered hazardous for space application if the subject is well trained and is motivated to submit to the procedure. In the static measurement, the subject inspires a measured volume and holds his breath with the glottis open for a pressure reading, and then repeats the procedure for several different volumes. Compliance measurements can also be made by continuous recording of respiratory volume with an integrating pneumotachograph, and concurrent recording of intraesophageal pressure on a CRT. The slope of the line joining the points of zero air flow (the moment between the beginning of expiration and end of inspiration) represents compliance.

2.2.3.5 Pulmonary Gas Exchange. There are three methods of measurement: diffusion capacity; distribution of blood flow and gas in the lungs; and amount of O_2 and CO_2 in inspired and expired air and in arterial blood.

Diffusion Capacity. The objective in measuring diffusion capacity is to assess transport of respiratory gases into the blood stream. This method presupposes the use of a gas that has a natural affinity for hemoglobin so that its diffusion capacity is not falsely influenced by varying capillary blood flow. Unfortunately, other than oxygen, only carbon monoxide fills this criterion. The use of carbon monoxide in spacecraft is contraindicated . Determination of diffusion capacity employing O_2 cannot be recommended as it is extremely complex and requires measurement of arterial and mixed venous oxygen content at a high (21 percent) and low (12 to 14 percent) level of oxygen breathing in addition to calculation of alveoli oxygen partial pressure from measures of inspired oxygen and expired carbon dioxide tensions.

If the ventilation perfusion ratios are not disturbed and if blood gas analysis shows no deviation from normal standards, it may be inferred that diffusion capacity is unimpaired, for a rather diffuse and severe pathologic change must occur before abnormal diffusion capacity is apparent.

Distribution of Blood Flow and Gas in the Lungs. The following techniques are used:

- Single-breath oxygen technique. Alveolar ventilation depends on the frequency of respiration, total volume, and anatomic dead space. Since dead space volumes vary with posture, changes in weightlessness may occur. Measurement of anatomic dead space in an O_2/N_2 cabin atmosphere may be made with the single-breath oxygen technique of Fowler. Following a single breath of 100 percent O_2, the expired N_2 concentration and volume flow are continuously monitored. Theoretically, the initial portion of expired gas represents the dead space and contains no nitrogen. N_2 concentration rises abruptly as alveolar gas replaces dead space in the expiratory stream.

  Non-uniform alveolar ventilation may occur in conditions of prolonged weightlessness associated with unusual distributions of blood within the lung, or partial atelectasis. The clinician assesses alveolar ventilation by the use of a stethoscope and standard X-ray procedures. The relatively noisy environment of the spacecraft may complicate the use of the stethoscope and would provide only semiquantitative data. X-ray facilities are not currently planned for the IMBLMS.
- Nitrogen washout. An objective measurement of alveolar ventilation can be made using the nitrogen washout technique. The simplest technique involves breathing pure oxygen for 7 min followed by a forced expiratory sample, which should contain less than 2.5 percent nitrogen. Using a fast-response gas analyzer, nitrogen elimination can be continuously monitored, breath by breath, providing information on fast and slow clearance rates.
- Single-breath CO_2 expiration test. Pulmonary capillary blood flow may not be uniformly distributed to ventilated alveoli in the weightless state. Variation in the pulmonary capillary blood flow is in part gravity-dependent and varies still further in certain pathologic states. It is not possible in space to make direct assessments of ventilation perfusion ratios in the classical sense, since these depend on catheterization techniques and assessment of right-to-left shunts through the pulmonary vascular bed. A modified technique in applying

the single-breath CO_2 expiration test provides the best possible approach to analysis of this problem. This procedure assumes that expiratory carbon dioxide comes from the alveoli that are perfused with blood. If the partial pressure of expired carbon dioxide is analyzed continuously by a sensitive instrument, abnormal changes in the expired CO_2 may be noted. Significant variation from predicted normal values in the CO_2 tension implies either disturbance in perfusion or uneven ventilation.

Amount of O_2 and CO_2 in Inspired and Expired Air and in Arterial Blood. An important measurement using pulmonary instrumentation is oxygen consumption, both with the subject at rest and during exercise. With the subject at rest, measurement of oxygen consumption presents little difficulty for closed-circuit spirometric techniques.

Oxygen consumption rates under exercise, however, require a modification to the servospirometer so that one of the dual 7-liter compartments can act as a replenishing oxygen reservoir. Another but less accurate technique would consist of two integrating pneumotachographs to measure the volume of inspired and expired gas where oxygen concentration is monitored by a fast-response gas analyzer. Such an analyzer would permit breath-by-breath analysis of inspired and expired air and is required for certain measures discussed under alveolar ventilation.

Gas Analysis. Many techniques for the analysis of gases are currently employed in commercially available instruments. Only a few techniques, however, have been instrumented for in-flight application. These include gas chromatography, mass spectrometry, electrochemical sensors, and infrared and ultraviolet absorption photometry. Table 2-6 presents the specifications for instrumentation responsive to these analytic techniques and developed for in-flight analysis. Only two of these instruments are currently flight-qualified: the gas chromatograph and electrochemical sensors. The others are currently in prototype form and further development is in progress.

Table 2-6

GAS ANALYZERS

Type of Analyzer	Partial Pressure	Range (mm)	Accuracy (%)	Response	Reproducibility (%)	Manufacturer	Development Status	Data Rate (bb)	Size (in.^{3})	Weight (lb)	Power (w)	Comments
Gas Chromatograph	CO_2	0 to 70	± 5	6 min	5	Melpar	Flight	10	1,728	10	4	Developed for Apollo
	O_2	0 to 760	± 5	3 min	5							
	N_2	0 to 760	± 5	4 min	5							
	H_2O	—	—	—	—							
Mass Spectrometer	CO_2	0 to 70	± 2	1 sec	± 1	Perkin Elmer	Proto-type	18	160	7	3.5	Single focusing, permanent magnet, magnetic type deflection
	O_2	0 to 760	± 1	1 sec	± 1							
	N_2	0 to 760	± 1	1 sec	± 1							
	H_2O	0 to 20	± 2	1 sec	± 1							
Electrochemical Method	CO_2	0.1 to 40	3	1 min	± 3	Beckman	Flight	11	20	0.5	2	Operational life limited to 60 days
	O_2	0 to 760	2	5 sec	± 3							
	N_2	—	—	—	—							
	H_2O	—	—	—	—							
IR Absorption	CO_2	0 to 40	± 2	1 sec	± 2	Perkin Elmer	Proto-type	6	25	1.5	1	Can improve response
	O_2	NA	—	—	—							
	N_2	NA	—	—	—							
	H_2O	NA	—	—	—							
UV Absorption	CO_2	NA	—	—	—	Perkin Elmer	Proto-type	16	75	5	3.5	Can improve response
	O_2	0 to 250	± 2	3 sec	± 2							
	N_2	100 to 300	± 5	3 sec	± 5							
	H_2O	0 to 30	± 5	3 sec	± 5							

The Melpar gas chromatograph, developed for the Apollo program, can potentially separate and detect approximately 75 compounds at part-per-mission sensitivities. This system is completely automated and functions on a repetitive analytical cycle. The instrument basically consists of a programmer, sample selector valve, injection valve, column selector valves, three partitioning columns, three cross-section ionization detectors, and an amplifier assembly. The accuracy is approximately ±5 percent with a reproducibility of about ±5 percent. Although the unit occupies approximately 1 cu ft, weight has been kept at a minimum by the use of lightweight materials such as titanium. If breath-by-breath response is required (≤ 1 sec), however, the relatively long response time of this system will be inadequate for the analyses.

Under development currently by the Aerospace Systems Division of Perkin-Elmer Corporation is a prototype permanent-magnet, deflection, single-focusing mass spectrometer. This unit, being developed for Langley Research Center, Hampton, Virginia, is estimated to weigh about 7 lb, occupy approximately 160 cu in., and require 3.5 w. The accuracy is better than ±1.0 to 2.0 percent with a reproducibility of better than ±1 percent. The response time of this unit is better than 1 sec, which is far superior to any of the other in-flight gas analysis systems developed.

Commonly employed for atmospheric monitoring of carbon dioxide and oxygen, electrochemical sensors yield typical accuracies of ±3 percent and reproducibilities of about ±3 percent. They are easily miniaturized and require minimal power for operation. Polarographic oxygen sensors and glass-electrode carbon dioxide sensors are currently available from Beckman Instruments, Inc., and are flight-qualified. These electrodes, however, are relatively slow in response to the more rapid changes characteristic of breath-by-breath analysis because of the inherent diffusion time for the gas to diffuse through the membrane, react with the respective filling gel, and equilibrate before detection. Hence, the porosity and thickness of this diffusion layer are extremely important for the response time of these electrodes. In general, thinner membranes will reduce the response time substantially; however, reliability is also reduced

considerably since the diffusion membrane is more easily broken under these conditions and the gel tends to dry out more rapidly.

Infrared and ultraviolet absorption photometry are also employed for the analysis of carbon dioxide and oxygen, as well as water vapor. Perkin-Elmer has recently developed a prototype two-gas atmosphere-sensing system employing infrared and ultraviolet optical absorption techniques. This system uses two sensor channels and a total pressure transducer to provide five different measurements (partial pressures of O_2, CO_2, H_2O, and N_2). The unit directly measures the partial pressure of oxygen, carbon dioxide, and water vapor using optical absorption with accuracies of ±2 percent, ±2 percent, and ±5 percent, respectively. In addition, by a ±1 percent total pressure measurement (transducer), the unit computes from all other measurements the partial pressure of nitrogen to an accuracy of ±5 percent.

The entire system is contained in 100 cu in. and weighs only 6.5 lb. The power requirement is approximately 5 w. The response time of this system, approximately 3 sec, requires improvement for breath-by-breath analysis. Such improvement can be made by reduction of the sample path length and volume.

Because of versatility of the system in analyzing directly and simultaneously all the specified parameters, LMSC recommends that a mass spectrometer of the magnetic type be employed for the simultaneous analysis of CO_2, O_2, N_2, and H_2O. The accuracy and reproducibility are far better than in the other methods considered and the system is comparable in volume, weight, and power.

Blood Gas Analysis. In terrestrial studies, instantaneous continuous blood gas analysis involves arterial canulation mechanized withdrawal systems and subsequent reinjection of the samples after analysis. Practical techniques for spacecraft application will employ capillary blood samples collected under suitable anaerobic conditions, as well as analysis for respiratory gas constituents. These samples can be obtained periodically from either the fingertip or earlobe. Laboratory analysis methods are discussed in Section 2.4.6.3.

Arterial blood gas analysis cannot be performed directly. Close approximation of arterial oxygen tension is provided by use of the Wood-type ear oximeter. This device employs the photoconduction principle, is light in weight, and exhibits good correlation with determinations of arterial oxygen concentration by Sholander techniques. Electrical signals from the ear oximeter will be recorded and displayed at the respiratory blood/gas monitor module.

2.3 BEHAVIORAL ELEMENT

Over and above the diagnostic features of behavioral measures, the collection of behavioral data by means of the IMBLMS will serve an important scientific purpose in establishing relationships between performance measures and the multitude of environmental variables to which the astronauts will be exposed on long-term missions. The term "environmental" is used broadly to include the usual factors such as weightlessness, radiation, and gaseous atmospheres as well as relative isolation from normal stimulation, crew organization and interpersonal relations, work-rest cycles, spacecraft accommodations, duration of mission, and task loading.

2.3.1 General Techniques

Because all these factors will be operating simultaneously, it will be very difficult to detect the relationship between any one factor and changes in any one (or a combination) of the behavioral measurements. Several techniques can be employed to alleviate, although not eliminate, this difficulty.

The first and least elaborate technique is based on the previous experience and the judgment of the experimenter concerning the relative sensitivity of the different behavioral tasks to the effects of the various environmental conditions. If, for example, on a relatively long-term flight, the visual acuity of an astronaut subject showed a dramatic shift, the experimenter might well attribute this change to the accumulated effects of weightlessness rather than to work-rest cycles, crew organization, etc.

The second technique involves the identification of "unusual events" that happen to occur before, or at the same time as, a performance decrement. If, after an emergency work period that extended well beyond the normal work cycle, a decrease was noted in tracking proficiency, the experimenter would probably feel that the observed effect was related to work load and loss of sleep rather than radiation, weightlessness, etc. Nevertheless, the decrease in tracking proficiency might actually be a consequence of dissatisfaction resulting from the manner in which the work assignments

were made instead of the lack of sleep. Even though the experimenter makes a correct judgment, this second technique is inefficient because it depends upon the occurrence of "unusual events," over which the experimenter has no control, and which, in fact, may rarely occur.

Ideally in an experiment, the experimenter should be able to manipulate the experimental variables, either singly or in combinations, to obtain unequivocal indications of their effects on his measurements. Such idealized control can scarcely be realized in one orbital flight, but in a series of flights certain variables can be subjected to some measure of control. A good example of such a variable is flight duration. Assuming other uncontrolled variables to be random effects over a series of flights, it then would be possible with greater assurance to attribute observed changes in performance levels to factors associated with flight duration, as the duration of flights was systematically increased.

In addition to increasing the understanding of behavior, the measurements of performance will directly affect the design of future spacecraft, the organization of crews, the determination of operating procedures, the assignment of tasks to man and machine the level of the astronaut's work load, and the duration of tours of duty for individual crews.

2.3.2 Selection of Behavioral Measurements

The selection of behavioral measurements can best be made after an examination of the principles of measurement that must be satisfied if meaningful measurements are to result.

The utility of behavioral measures depends upon the same attributes as measures obtained in the physical sciences. To be of value, any measurement must be reliable and valid. A reliable measure is one that, under the same conditions, gives consistent results upon repeated application. Several key factors that would contribute to unreliability are as follows:

- The characteristics of the task to be performed may vary from one administration to the next.
- Sequential dependencies between tasks may alter performance.
- The scoring instrument (human or machine) may be variable.
- Diurnal rhythms may influence performance.
- Astronaut motivation may vary from time to time.

Performance scores cannot be invariant if they are to be of value in assessing, for example, the effects of various environmental stressors. Unless tasks are administered under conditions that control the foregoing factors, there will be no basis for evaluating the observed changes.

The validity of a measure reflects the degree to which it measures what it is supposed to measure. Validity is often a difficult property to demonstrate. Such a demonstration usually involves the correlation of task performance with that ultimate performance that the task is supposed to measure.

If the requirement were to measure performance on in-flight vehicle control, there could be no more valid measure than a reliable indication of performance on that specific task itself, if it could be obtained. However, when a measure is required of "continuous processes," there is no reason to believe that actual in-flight performance would provide a more valid measure of that aspect of behavior than would a typical compensatory tracking task. Selection between the two tasks might have to be based upon a criterion other than validity.

A third attribute, sensitivity, is also indispensable to a useful measure of performance. Sensitivity refers to the ability of a measure to reflect small, but reliable, changes in the skill being measured. A valid measure is very likely to be relatively sensitive, but there is no guarantee that a sensitive measure will be valid. The measure could be responding to some factor other than the one which it was intended to reflect.

The collection of behavioral measurements presents certain problems not encountered in the collection of data from other areas of experimentation. First, there is the

natural reluctance on the part of test subjects to expose their performance capabilities to the scrutiny of test monitors, unless the required performance is obviously related to the success of their designated mission.

Second, unless integrated with the performance of required duties, the collection of behavioral data requires the scheduled time of the test subject, and, depending on the type of task and the degree of automation, the time of an observer who may have to monitor and score performance.

Third, the repeated administration of behavioral measures necessitates a variety of equivalent problem or stimulus material, if the interest of the test subject is to be maintained and the effects of practice are to be eliminated.

Finally, the subject's performance scores may fluctuate along with his motivation.

Because of the deleterious effects of inadequate astronaut motivation, a positive program for gaining astronaut acceptance of the behavioral testing program is mandatory. Besides stressing the importance of behavioral measures in the design of future spacecraft and the organization of operational procedure, the specific performance tasks should show the following characteristics:

- Be of sufficient difficulty to challenge strongly the well developed skills of the astronaut subjects.
- Exercise the critical sensory-perceptual and motor skills without which the astronauts cannot succeed in their operational tasks.
- Be actual operational tasks, where feasible, for performance measurement. (When nonoperational tasks are required, the reasons for selecting such tasks will be made clear. Emphasis will be placed upon the increased reliability expected from nonoperational tasks because of the improved control of stimulus conditions.)
- Obtain a sufficient variety of stimulus material to reduce the boredom associated with overexposure to identical problems.
- Supply knowledge of task results to permit the astronaut to compare his own performance with scores previously obtained on the ground and in orbit.

2.3.3 Approaches to Behavioral Measures

Three general approaches to the collection of behavioral measures can be readily identified, differing with respect to the degree to which the selected tasks resemble those the astronauts would ordinarily perform while carrying out their normal duties. The first approach involves "fundamental" tasks, which may only slightly resemble actual operational tasks, involving basic skills that presumably have been abstracted from operational tasks.

The second approach (operational task simulation) is less abstract than the first. The tasks still would not be identical to the operational tasks but would be more or less faithful models of the original to simulate the operations required in actual task performance.

The third approach is one in which behavioral measures are extracted exclusively from observations or recordings of performance on mission tasks in an operational situation.

The advantages of extracting behavioral measures from actual operations are the increase in astronaut acceptance of the measurement procedures, reduction in astronaut experiment test time, and reduction in specialized behavioral measurement equipment. However, it is unlikely that measures of all the required functions can be satisfactorily extracted from observations of operational tasks in a manner that will ensure the degree of reliability and validity necessary to permit extrapolations or predictions from the performance.

Foremost among the disadvantages of operational task simulation (second approach) is the problem of negative transfer of training. To simulate adequately a sufficient variety of operational tasks, an additional work station must be provided (in itself an undesirable consumer of space and contributor of weight). In any simulation it will be impossible to duplicate exactly all aspects of the original task. The greater the

discrepancy between the actual and simulated tasks, the greater will be the likelihood of the occurrence of negative transfer from practice on the simulated task to performance on the actual task.

In addition, the collection of performance data from observations or recordings of activities involved in either simulated or "real" operational tasks is also subject to numerous other disadvantages, as follows:

- Operational tasks are likely to be complex and difficult to score. When performance on only one aspect of the task is measured, the resulting scores may depend, in part, on other aspects of the task that are presumably not being measured.
- Instrumentation for task scoring will be complicated by the need for recording the stimulus situation to which the astronaut is responding, as well as the response that he makes.
- Objections concerning equipment reliability and personnel safety may be raised if equipment modifications must be made to permit the recording of astronaut responses.
- Observations of performance on actual tasks may be restricted to mere repetition of routine situations, whereas critical but rare events may never be witnessed.
- Tasks in the command module frequently involve all three astronauts working simultaneously. Individual performance measures will be difficult to obtain under these circumstances.

2.3.4 Selection Criteria for Performance Tasks

The following criteria for evaluating candidate tasks can be identified for possible inclusion in the battery of performance measures:

- Measures must reflect behavior critical to the survival of the astronaut being measured. Since the astronaut's sensory and motor capabilities clearly meet the test of criticality, selected tasks should exercise those skills.

- Measures must be sensitive to slowly changing long-term trends as well as sharp changes in the level of performance. This requirement implies fine rather than coarse scales of measurement, covering extended ranges.
- The selected tasks should show a high level of reliability over repeated adminstrations.
- The conditions under which the tasks are administered should be controlled and repeatable.
- Selected tasks must be acceptable to the astronauts who must perform them. Acceptability can be enhanced by basing measures on the performance of operational tasks, by choosing nonoperational tasks that appear to require skills similar to those required in specific operations, or, through an educational process, by convincing the astronauts that the selected tasks provide potentially useful measures for assessing their health and well-being.
- Requirements for equipment not already included as part of the normal flight gear should be minimized.
- Adminstration time should be as short as possible.
- The amount of specialized instruction required for training observers in techniques of monitoring and sc oring performance should be kept to a minimum.
- Performance scoring should be objective and should require little or no effort on the part of a test observer.
- Particularly for extended flights, the characteristics of the tasks must be readily modified to provide many "equivalent" forms of each task.

2.3.5 Measurements and Techniques

An evaluation of the required measures is presented in Table 2-7. Six measurements would be otained through observation of operational, "in-flight" tasks. The remainder of the tasks in the battery would be of the "fundamental" type, in that they would measure basic skills important to operational performance, but would not be identical to any operational tasks. Vestibular tests are described in Section 2.2. Detailed descriptions of the tasks required to obtain the measurements appear in succeeding subsections.

Type of Measurement	Clinical Monitor	Experimental	[illegible]
Evaluation Factors →			
SENSORY/PERCEPTUAL PROCESSES			
Visual			
Acuity	X		
Depth			
Phoria			
Auditory			
Thresholds	X		
Kinesthetic			
Positional			
Dynamic			
Vestibular			
Linear			
Angular			
Orientation			
Temporal			
Positional			
PSYCHOMOTOR FUNCTIONING			
Fine Motor Movement			X
Hand Steadiness			
Gross Motor Movement			X
Continuous Processes			
Compensatory Tracking	X		
Discrete Processes			
Reaction Time			
COGNITIVE PROCESSES			
Attention			
Visual			
Auditory			
Vigilance			
Visual			
Auditory			
Problem-Solving Ability			
Retention			
Short Term			
Long Term			
Mood Changes	X	X	

(a) See Table 2-1 for definition of rating scores 1, 2, 3

Commonality			Relationship	Development Status				Validity		Astronaut Factors						Analysis Requirements		Data Format			
Series	AAP 100 to 200 Series	Related Measurement	Space-Qualified	Under Development	Laboratory State of the Art	Conceptual or Research	Clinical	Sensitivity	Astronaut Acceptance	Task Complexity	Performance Time	Training Requirements	Observer Required	Automatic	Manual	Analog	Digital	Subjective/Voice	References	Remarks
X	2, 3		X			1[a]	1	2	2	1	1		X			X				Measurements will be made with an Ortho-rater type of device.
X	1, 3		X			1	1	2	2	1	1		X			X				
X	1, 2		X			1	1	2	2	1	1		X			X				
X			X			1	1	2	2	1	1		X			X				Audiograms will be constructed from obtained measurements.
X	2		X			2	2	2	3	1	2	X		X		X				Measurements will be incorporated in the mass measurement chair.
X	1		X			2	2	2	3	1	2	X		X		X				
X	2		X			1	2	1	2	2	1	X		X		X	X			Measurements will be incorporated in the mass measurement chair.
X	1		X			1	1	1	2	3	1	X		X		X	X			
X	2		X			2	2	2	2	2	1		X			X				Task involves the discrimination of the duration of tones.
X	1	X				1	1	1	2	1	2			X		X				Task equipment consists of the egocentric visual location device from Gemini V and VII.
X		X				2	2	1	3	3	3	X		X		X				Measurements will be taken while astronaut is performing his normal duties.
X			X			2	2	2	3	1	1		X			X				The task will measure the astronaut's hand and arm tremor.
X		X				2	2	1	3	3	3	X								Measurements will be taken while astronaut is performing his normal duties.
X			X			2	1	1	3	1	3		X			X				The task will involve two-dimensional adaptive tracking with an acceleration control.
X			X			2	2	2	1	1	1		X			X				Both simple and complex reaction times will be measured.
X			X			2	2	2	1	1	1		X							Task measures the retention of a sequence of displayed numbers or auditory tones.
X			X			2	2	2	2	1	1		X			X				
X			X			3	3	2	1	3	1		X			X				Task measures the frequency with which unusual signals are detected.
X			X			3	3	2	2	3	1		X							
X			X			2	2	3	3	3	3			X		X				The measurement of ability to diagnose circuit failures is derived.
X	2		X			3	3	1	3	1	1		X			X				Retention of memory for operational sequence will be measured on frequently repeated task.
X	1		X			3	3	1	3	1	1		X			X				Retention of memory for operational sequence will be measured on infrequently repeated task.
			X			2	2	2	1	3	3	X		X		X	X			Bales Interaction Process Analysis will be employed by a trained observer, who will infer mood changes from the verbal interactions of crew members.

[a] 2, and 3.

Table 2-7 Medical Evaluation Summary – Behavioral Measurements

2.3.6 Sensory-Perceptual Processes

Several major aspects of measurement of these processes require consideration.

2.3.6.1 Auditory Functions (Thresholds). The sensitivity of the subject to auditory stimuli will be measured with a programmable signal generator capable of generating pure tone signals at various frequencies and intensities. With this device, an audiogram showing the relationship between frequency and intensity can be quickly constructed. The intensity increments can easily be made small enough to provide a highly sensitive index of auditory discrimination. The subject's responses will be recorded on magnetic tape. A matrix of lights corresponding to the subject's responses can be lighted on the data management panel to permit the construction of an audiogram on board the spacecraft.

The measurement of auditory thresholds represents a particularly clear example of the difficulty of obtaining certain measurements from operational tasks. There are no operational tasks that would provide the tones at controlled frequencies and intensities needed for the determination of auditory thresholds.

2.3.6.2 Orientation (Temporal). The subject's task will be to judge, in a series of pairs of tones, the duration of the second tone relative to the first tone, which has a fixed duration. The test stimuli are generated by the signal generator used in obtaining audiograms. Responses are entered on a keyboard. On-board monitoring can be accomplished by observing the lights in the matrix located on the data management panel. Although other measures of temporal orientation are feasible, this task has been shown to be sensitive to the accumulation of extremely small concentration of carbon monoxide in tests conducted at the Stanford Medical School (Ref. 2-26).

2.3.6.3 Orientation (Positional). Positional orientation will be measured in a manner similar to that employed on Gemini Flights 5 and 7. The method, known as Egocentric Visual Location of the Horizontal, requires the subject to adjust (with respect to the spacecraft) a binocularly viewed line of light to a horizontal position. This operation is performed by rotating a knob that also turns a counter, providing an error indication for recording by an observer or the test subject.

pg. 2-62 Blank, Not Filmed

2.3.6.4 Visual Functions (Acuity, Depth Perception, Phorias). These visual functions will be measured with a device resembling an Ortho-Rater, modified to permit the insertion of new stimulus material. A hood to eliminate extraneous light, and a head rest for maintaining head position, will be required. Subjects will enter their responses on a keyboard that also includes switches for identifying the various tests as they are performed. Keyboard responses will be encoded and recorded directly, in digital form, on magnetic tape. On-board recording can also be accomplished by an observer who monitors a matrix of lights corresponding to the keyboard switches that the subject depresses in response to the test stimuli.

Again, there is no operational task that would provide the controlled stimulus targets, under the proper viewing conditions required for a reliable test of visual functions.

2.3.6.5 Kinesthetic Functions. There are two types of kinesthetic functions – positional and dynamic.

Positional. Measurement of kinesthetic thresholds will be obtained with the test subject seated in the same device that is used for mass measurement. An arm rest of the chair, to which one of the subject's arms will be strapped, will be designed to pivot, at the subject's elbow, in a vertical plane with reference to the chair. The arm rest will be driven (at a rate below the threshold for motion) by a motor under control of the observer. The observer can manually select the angle to which the arm rest is to be driven. At the end of a trial the subject reports whether or not he detected a change in arm position. A timer signals the end of a trial so that all trials appear to the subject to be of equal duration. Auditory and vibratory cues will be eliminated by proper equipment design.

Dynamic. Dynamic measurements will be made with the same apparatus described for positional measurements. For dynamic measurements, however, the observer will be provided with controls that permit him to select the rate at which the arm rest moves. Again, a timer controls the length of the trials in order to eliminate temporal cues. At the end of a trial the subject indicates whether or not arm motion (as differentiated from a change in position) was perceived.

2.3.6.6 Vestibular Functions. These are discussed in Section 2.2.1.

2.3.6.7 Psychomotor Functions. These functions comprise hand steadiness, discrete processes, fine motor movement, and gross motor movement.

Hand Steadiness. The subject's task will be to insert a metal stylus in small circular holes drilled in a metal panel. Restraints will be provided to maintain the subject's arm and shoulder in a fixed position relative to the panel. A digital code is recorded directly on magnetic tape each time the stylus touches the edge of a hole during a fixed interval of time. At the end of the trial period, scores will be displayed on the digital display of the data management panel.

Discrete Processes (Reaction Time). Computer-controlled indicator lights will serve as test stimuli for reaction-time measurements. A single light will be used for the measurement of simple reaction time, whereas several adjacent lights will serve as the test stimuli for measurement of complex reaction times that involve identification of the particular stimulus that was presented.

Responses will be entered through the switches associated with the indicator lights, but in this instance the encoded switch signals will be transmitted to the computer. This computer, in conjunction with its real-time clock, will generate the series of test stimuli, measure response times, and record the measurements on magnetic tape. The computer will also display measured response times on the data management panel for the benefit of an on-board observer, or for the test subject himself.

It may seem that reaction time can be conveniently extracted from the astronaut's responses to warning lights and other indicators that are included in his operational equipment. Several difficulties will encumber any attempt to obtain systematic measurements in such a fashion, as follows:

- The experimenter would have no control over the occurrence of warning indications and therefore would have no assurance that he could obtain a reasonable quantity of measures from which to infer level of performance.

- In order to measure reaction time, special instrumentation would have to be added to the operational equipment to determine the time of stimulus presentation.
- The conditions under which stimuli might occur would show considerable variation over repeated measures, greatly reducing the reliability of the obtained scores.
- Patterns of stimuli, such as required for measurement of complex reaction time, would rarely if ever occur.

Fine Motor Movement. Measurements of fine motor movements will not be obtained at the monitoring station. Instead, time-and-motion-study techniques will be employed by an observer who evaluates the performance of the test subject while he works on other experiments involving the precise manipulation of objects or controls.

Gross Motor Movement. Gross motor movement will be evaluated while test subjects perform such tasks as donning and doffing space suits, or while moving from one work area to another. Again, evaluation and recording will depend upon the application of time-and-motion-study techniques. Permanent records of performance will be obtained with a stop-frame camera.

If available, low-resolution video monitoring will also be used to provide a valuable extension of the observations of motor movement for later detailed ground analysis and comparison with previous behavior.

2.3.6.8 Continuous Processes (Compensatory Tracking). The compensatory tracking task is recommended as the one task of potentially greatest value in the entire task battery. Studies have consistently shown that well-designed tracking tasks are highly reliable, and their similarity to operational tasks should enhance astronaut acceptance. A principal reason for this selection is that the tracking task involves a sensory process (visual), a cognitive process (determination of corrections required to reduce tracking error), and the operation of the effector system required to implement the connections. Thus, with one task, a fairly complete system checkout of the astronaut can be obtained.

The task display will appear on two edge meters (or a cathode ray tube, in an advanced system), and the subject will manually correct the observed tracking error by manipulation of a two-dimensional hand controller.

The task will required two-dimensional compensatory tracking with an acceleration control. The target path will be generated with a digital computer, which will also adapt the difficulty of the task to maintain a constant level of performance by the test subject. The score, therefore, will be a computer-generated record of the level of task difficulty to which the computer adapted, rather than the typical root mean square error. Kelley has shown (Ref. 2-27) that the adaptive scoring procedure is highly efficient for measuring tracking performance.

The Critical Tracking Task (developed by Systems Technology, Inc.) has also been considered but, since no empirical or analytical studies have yet been performed to demonstrate the superiority of the Critical Task, the adaptive task is recommended.

The recommendation that tracking scores be collected with a "fundamental" rather than an operational task deserves a critical examination. The major reason for this selection is an inability to control the situation to which the astronaut responds in an operational mode, and the difficulty of obtaining a measure of performance.

The aiming of the Apollo telescope provides a representative example of these difficulties. In this operational task the astronaut aims a telescope as rapidly as possible at sunspots detected on the surface of the sun. Since the location of the spot is unpredictable, the initial aiming error is uncontrollable. Furthermore, once the telescope is aimed, there is no way to measure aiming error because there will be no standard against which astronaut performance can be compared. Finally, the task does not measure a continuous process. Once the aiming has been completed by the astronaut, an automatic system keeps the telescope aimed within some small error tolerance.

A second operational task, the Momentum Dump Procedure, also appears to offer possibilities, but again the amount of correction required by the astronaut is uncontrollable, depending upon random events to some extent. Furthermore, an automatic method of performing this task will be available to the astronaut.

A "fundamental" tracking task of a sufficient level of difficulty, with repeatable forcing functions, will be a far more effective measure than the operational task described.

2.3.7 Cognitive Processes

This category includes a variety of considerations involved in providing for measurement of the cognitive processes.

2.3.7.1 Measurement of Attention: Visual. The measurement of attention will provide an indication of the subject's ability to concentrate while receiving a serial input of stimuli, and to retain the input in short-term memory long enough for him to reproduce the material. The test stimuli will be a sequence of from 8 to 10 numbers that will appear, one at a time, on an alphanumeric display unit. Each number will be displayed briefly until the entire sequence has been presented. After the last number has been displayed, the subject's numerical keyboard will be activated and he will enter as much of the sequence as he can remember. The data processor will generate the number sequence and score his responses. After this procedure has been completed, the processor will provide a display of the score achieved on the same display unit, while at the same time recording the result on magnetic tape. Five different sequences will constitute a single trial.

2.3.7.2 Measurement of Attention: Auditory. The span of auditory attention will be measured by presenting a series of tones in a random sequence. Each tone will be at one of three frequencies (high, medium, low) and the subject's task will be to memorize the pattern of tones as he hears them. After the sequence has been completed,

the subject's keyboard will be activated and he will operate three switches, representing the tones, to reproduce the tones in the same sequence that he heard them. Five sequences will constitute a trial. Tones will be generated by the electronic tone generator, and the data processor will score and display the correct responses.

2.3.7.3 Measurement of Vigilance: Visual. The measurement of visual vigilance will be incorporated with the temporal orientation task so that both run simultaneously. Under the control of the data processor, a mechanical flag indicator will infrequently and periodically flip to the "ON" position for a brief interval. If the change is detected, the subject will respond by operating a switch. The processor will score the subject's responses and display the correct number of responses on the digital display located on the data management panel.

2.3.7.4 Measurement of Vigilance: Auditory. A measure of auditory vigilance will be obtained concurrently with the measure of positional orientation. While the subject attempts to perform the adjustments required by the orientation task, he will be listening to a series of signals presented over his headset. Most of the signals will consist of a single tone but, occasionally, a randomly selected signal will consist of two short tones with a total duration equal to the standard tone. If the subject detects a double signal, he will operate a switch. The source of the auditory signals will be the electronic tone generator used in measuring auditory sensitivity. The tone generator will supply information to the data processor concerning the occurrence of the double signals. By this means, the processor can score performance and provide a digital display of the number of correct detections.

Normally, a vigilance task would require a period of time much longer than is likely to be available for administration on a spacecraft. This requirement would seem to increase the desirability of obtaining vigilance measures from operational monitoring tasks, since such tasks are sure to be included in the daily housekeeping duties and equipment checks that must be performed. Again, however, the problem of controlling the frequency and patterning of stimuli in an operational monitoring task appears insurmountable.

Both vigilance tasks were combined with other on-going tasks, as previously described, in an effort to increase the difficulty of the vigilance tasks without unduly increasing the time required to administer them.

2.3.7.5 Measurement of Problem-Solving Ability. The task devised for measuring problem-solving ability will involve both symbolic and diagnostic elements. The problem material will consist of booklets containing circuit diagrams (or in a more advanced system projected images of CRT images of circuit diagrams). These diagrams will represent various electronic circuits located within the actual spacecraft. The problem for the test subject will be to use the diagram to diagnose simulated malfunctions that are described for each diagram. By turning to the designated pages in the booklet, the subject can determine the outcome of certain tests or checks that he may elect to try. In an advanced system he would be able to interrogate a computer to determine the same sort of information. The subject will be scored with regard to the length of time required to identify the circuit component that would account for the described symptoms.

Considerable pretesting will be necessary to construct a variety of different diagnostic problems that are essentially equivalent in difficulty.

2.3.7.6 Memory Retention (Short Term). A standard sequence of control operations (such as that involved in monitoring the Apollo Service Propulsion System) will be identified from among those tasks normally performed by crew members. One pole from each switch operated in the sequence will be connected to an encoder that provides access to the on-board digital processor. The processor will be programmed to detect errors in the sequence of operations and prepare a record of those errors for recording on magnetic tape. An on-board display of the number of errors committed will be presented on the digital display included in data management subsystem.

2.3.7.7 Memory Retention (Long Term). Long-term retention of a previously learned skill will be measured according to the success with which infrequently performed operations (such as pre-reentry checkout) is performed. Again, a program in the data

processor will monitor the sequence of switching operations that is required in performing the check. Since as many as three astronauts might be simultaneously involved in this operation, it may not be possible to obtain separate measures of individual performance. Instead, it may be necessary to consider the obtained score as representing group task performance, in contrast to the scores obtained with the other behavioral tasks.

2.3.8 Systematic Measurements of Mood Changes

Mood changes will be quantified for each individual astronaut by applying the Bales Interaction Process Analysis to periodically sample recordings of the verbal exchanges that take place between the astronauts during the course of their normal work. The Bales technique has previously been applied to the description of group behavior in a variety of situations in which the relationships between group members, rather than the content of their interactions, are of primary interest. Quantification is achieved by tabulating the frequency with which verbal interactions fall into the following categories:

- Shows solidarity
- Shows tension release
- Shows agreement
- Gives or asks for suggestions
- Gives or asks for opinions
- Gives or asks for orientation
- Shows disagreement
- Shows tension
- Shows antagonism

Changes in mood would be traced by noting changes in the percentages of verbal interactions that fall into the various categories. Rules for classifying interactions have been devised by Bales to ensure reliable measurements.

Because of the slow rate of transmitting audio recordings to the ground, the Bales analysis will be used only when a trained observer is available on board the spacecraft to classify the verbal interactions. The results of his analysis would then be transmitted to the ground.

Self-administered rating forms and questionnaires will be developed in the event that the necessary observers are not available on early flights.

2.3.9 Integrated Performance

The conduct of a reentry simulation is not recommended for inclusion in the battery of IMBLMS performance measures. The reasons for this conclusion are as follows:

- The performance of automatic reentry systems has virtually relieved the astronaut of manual tasks during the course of reentry. Consequently, the need for practicing these skills has been essentially eliminated.
- The simulation of the reentry problem could never be accomplished in its entirety while on orbit. To the extent that critical cues were missing from the simulation, negative transfer of training could be anticipated.
- The weight and space penalties for the simulated work station and the equipment required to control the simulator would be extremely heavy.
- Since all, or most, of the crew members would be needed at the same time for a realistic reentry simulation, the opportunities for performance measurement would be few, unless all other work was abandoned during the practice period.

Instead of the reentry task, the operational tasks involved in the measurement of the retention of learned skills will be adequate for observations of performance on a task requiring the integration of both instrument monitoring and manipulative skills.

2.3.10 Effect of Weightlessness on Perception

Several tasks involving sensory-perceptual skills have been included in the behavioral test battery. Since they will be scheduled for frequent repetition during orbital flight, there will be ample opportunity to observe the effects of zero g and other variables upon the measured perceptual skills. Because several environmental variables will be operating simultaneously, however, it will not be possible to relate observed effects solely to the condition of weightlessness.

2.3.11 Measurement of Performance During Stress Testing

Because of the equipment problems involved, most of the behavioral measures will have to be obtained at the work stations (either performance or operational) where the task materials are permanently located. The principal exception to this limitation will be the auditory tasks (thresholds, attention, vigilance) that can be performed at other locations because of the relative ease with which the subject's headset can be relocated, together with the single switch used for entering responses. Consequently, if measures of performance are desired while the astronaut is enclosed in the lower-body negative-pressure suit, or while performing selected exercises, auditory tasks will be the most likely candidates.

2.3.12 Engineering Considerations

Equipment will be required to generate, display, and record information for the tests selected for behavioral measurement.

Although all the measurements have previously been collected in psychological laboratories, these measurements have rarely been gathered within the confines of a spacecraft operating within a zero-g environment. Consequently, some development time will be necessary for the design and testing of space-qualified experimental equipment. Advances in the engineering state of the art are not required, with the possible exception

of weight and volume reduction and methods of packaging. Many of the behavioral tasks will be generated by the biomedical data processor, which will also automatically score and record the subjects' responses. Other tasks, particularly in the areas of measurement of fine and gross motor skills, will require an on-board observer to observe astronaut performance and to prepare recording sheets.

Task-administration time (including initial turn-on and checkout) varies from a minimum of 5 min for measurement of hand steadiness, attention, and reaction time, to 25 min for measurement of mood changes. The frequency with which the various measures will be collected depends on the measure and on the time period within the mission.

2.3.13 Data Collection

2.3.13.1 Preflight Activity. Preflight activity will include indoctrination with regard to the purposes and scientific nature of the behavioral measurements (described in an earlier section), as well as suitable training in the techniques of data collection, including the rudiments of time and motion study. Extensive empirical investigation will also be conducted to establish the specific characteristics of each individual task and the procedures to be employed in their administration. Empirical determinations of task reliabilities will also be made during this period.

After the final characteristics of the various tasks have been established, training will begin in a simulation facility that duplicates the appearance and mode of operation of the flight-qualified monitoring station. Within this facility the members of the flight crew and a matched control group will practice the tasks until stable baselines of performance have been achieved.

2.3.13.2 In-Flight Activity. In-flight baseline data will be gathered on each task for each crew member as soon as practicable after orbital flight has been achieved. Similar amounts of time will also be required for the control group on the ground.

2.3.13.3 Postflight Activity. Both the flight crews and the control group will repeat the tasks once per day for at least 5 days, beginning as soon as possible after the completion of the flight. If serious performance decrements are encountered, the postflight testing period may have to be extended to permit crew members to return to their preflight level of performance.

2.3.14 Data Requirements and Analysis

The ultimate form of the data for all tasks will be digital, even with the Bales Interaction Process Analysis, for which the data are originally in the form of audio recordings. The result of this arrangement will be to permit the analysis of all data by means of a ground-based digital computer. The rates of data collection will be very low since human subjects are not capable of processing information at very high rates. The rate of transmission of behavioral data to the ground will, of course, be compatible with the transmission equipment installed in the spacecraft.

In addition to the frequent examination of behavioral data for diagnostic purposes, systematic analyses will be made both during and after a flight.

Data analysis will involve two major comparisons. The first will be a comparison of the periodically collected on-orbit data with the baseline data collected both on the ground and when orbit was first achieved. If performance decrements are observed, the same on-orbit data will next be compared with the data generated during the same period by the control group on the ground. If the changes observed on orbit are significantly greater than those changes in performance exhibited by the control group, it will be concluded that the variables associated with orbital flight did produce real effects. If, however, both the flight crew and the control group show equal decrements (or no decrements at all) it will be concluded that, during the flight, the on-orbit variables produced no measurable effects.

2.3.15 Summary of Behavioral Element

Preliminary recommendations for the collection of IMBLMS behavioral measurements were made after consideration of (1) NASA requirements as described in Ref. 1-1, (2) mission characteristics, (3) the purpose of measurement, (4) the characteristics of meaningful measures, and (5) the relative advantages of several alternative approaches to behavioral measurement.

A dual approach to collecting behavioral data was recommended. Certain measurements, for which in-flight collection does not appear feasible, will be gathered at a performance-monitoring station consisting of a behavioral test panel and specially designed chair. The test panel will provide measures of visual and auditory functions, hand steadiness, manual tracking, attention, vigilance, and reaction time. Rotation and translation of the subject's chair will provide thresholds for kinesthetic and vestibular functions.

The remaining measures, including several cognitive functions, fine motor movements, gross motor movement, and attitudinal indicators will be collected during in-flight operations and performance of other required experiments.

Some of the measures will automatically be collected by a time-shared, on-board computer. Other measures will require the participation of a crew member as an experimenter and data recorder.

The simulation of any mission tasks solely for the purpose of performance measurement is not recommended.

2.4 BIOCHEMISTRY ELEMENT

Major aspects of the IMBLMS biochemistry element are treated in this section in terms of measurement types.

2.4.1 General Considerations

The basic requirements of accuracy, speed, and reliability are common to clinical laboratories and spaceflight applications; however, the degree of emphasis on the various parameters is different in the two situations. Biochemical test procedures recommended in this study were chosen on the basis of four factors, considered in the following order:

(1) Adaptability to spacecraft environments
(2) Simplicity
(3) Reliability
(4) Accuracy

Methods which do not appear adaptable to space flight have not been considered, regardless of other merits. Weightlessness, sample handling and size, and reagent toxicity are considered to be the primary difficulties encountered for spaceflight adaptation of many standard procedures.

Zero-gravity conditions essentially eliminate all tests involving liquid-liquid extractions, and render any test involving distillation extremely difficult, if not impossible, to perform. Zero gravity also requires modification of the great majority of clinical test procedures; these modifications are not prohibitive – they simply require ingenuity and laboratory testing. Sample size is a consideration because of the desirability of conserving the astronaut's blood. This latter factor is especially important in view of the wide variety of tests and the frequency with which they are to be performed.

Hazards due to toxic reagents are negligible in a well-ventilated laboratory, but every effort has been made to avoid their use on-board the spacecraft. For instance, the conventional cyanomethemoglobin test has been replaced by the essentially equivalent but nontoxic oxyhemoglobin test. Also, every effort has been made to restrict those tests requiring in vivo administration of radioisotopes, to avoid imposing body radiation burdens in addition to those from ionizing solar and cosmic radiation.

Simplicity is considered to be of major importance in test selection. In clinical laboratories, complexity of procedures means higher cost – but in space, complex procedures require valuable time that could better be spent on other duties, or on performance of other tests and experiments. As an example, the conventional vanilmandelic acid determination requires approximately 20 man-hours of labor, while the electrophoretic technique proposed here requires only 30 min. Although the electrophoretic technique is slightly less accurate, its accuracy is more than sufficient to indicate body malfunction. Furthermore, in a number of cases the net accuracy of simplified tests may be greater because there are fewer chances for manipulative errors.

Reproducibilities of the tests selected are considered to be adequate in the light of the clinical significance of variance. A test with 10-percent nonreproducitility is adequate if a 50-percent change is required before any clinical significance can be attached to this change. On the other hand, a 10-percent nonreproducibility error would not be acceptable if a 5-percent shift would denote body malfunction.

Accuracy can be defined in terms of the combined effects of reproducibility and chemical interferences. All the proposed tests are deemed adequately reproducible. For the present application, chemical interferences are much less important than they would be for standard clinical determinations; it is expected that the chemical profiles of the astronauts will be well-known, and consequently only drastic changes in concentration of interferences would degrade accuracy.

All of the proposed tests are believed to be adequate in each of the performance criteria previously discussed. Since nearly all of these tests will require experimental development, the confidence level for this statement, of course, decreases with increasing complexity of the development effort. Nevertheless, the proposed tests are believed to represent the most feasible approach under the present state-of-the-art. Test procedures are presented for most (but not all) of the desired analyses. Those tests which cannot meet the performance requirements have been relegated to the status of ground-based studies – including pre- and postflight tests, as well as determinations performed on samples collected during flight and then stored for postflight analysis.

2.4.2 On-board Versus Postflight Analysis

Three possibilities for analysis of results must be considered with regard to measurement of man's performance and reactions in space:

- All analysis performed on-board
- All analysis performed postflight
- Some performed on-board, some postflight

In any manned spaceflight, the astronauts' safety, health, and performance capability are matters of primary concern. Performing all analyses on-board, and transmitting the results to earth, would enable the medical monitors to follow the astronauts' responses to various spaceflight stresses precisely and on a daily, weekly, or fortnightly basis in near real time. If persistently unfavorable responses occur, it might be possible to direct the astronauts to take corrective action and to study the effectiveness of this action in flight, without the immediate necessity of aborting the mission. Should a mission meet with disaster, then the availability of all medical data on earth undoubtedly would assist in determining the cause of the mishap to the extent of ruling out or implicating the astronauts' physical condition as a factor.

On-board performance of all measurements and analyses would require the systematic development of a series of space-qualified instruments, together with the appropriate techniques to prepare the biological samples and signals for recording, analysis, and transmission of the results to earth. The use of these techniques requires considerable weight, volume, power, crew performance time, and crew training allocations. Commonality of equipment to reduce the number of hardware items, modular and miniaturized design, reduction of manipulative steps in sample preparation, and (ultimately) complete automation to reduce crew time to a minimum and to exclude manipulative errors are the most important criteria and goals for successful development of a complete in-flight system. However, not a single biochemical or microbiological technique has yet been tested under spaceflight conditions, and it is not considered feasible within the time constraint of the IMBLMS Program to develop such an automated system. Nevertheless, considerable progress can be made toward this ultimate objective.

Preservation of all biological samples and data for postflight processing and analysis would reduce the weight, volume, power, and crew performance time requirements considerably, and would also cut down on preflight crew training. No flight-qualified analytical instrumentation and techniques would have to be developed, and development efforts could be concentrated on specimen collection, preservation, and storage requirements.

However, this approach has severe drawbacks. Essential clinical monitoring data would not be available in near real time, which would jeopardize the safety of the astronaut. Certain measurements would be eliminated, in cases where there are no known preservation techniques available (e.g., blood pH and pO_2) – so that experimenters would be forced to rely on a single preflight and a single postflight data point for these parameters. Such an approach also would inhibit the development of an in-flight biochemical analysis capability for interplanetary missions.

The third approach is to perform some of the analyses on-board during flight while conducting others postflight with preserved samples. To a large extent, this approach

would circumvent the severe disadvantages associated with complete postflight analysis. It would enable the medical monitors on the ground to assess the astronauts' health status and performance capability on the basis of clinical evidence in near real time, make AAP biochemical experiments more meaningful, and permit the orderly development of an in-flight biochemical analysis capability.

Subsequent paragraphs describe recommended space-applicable biochemical techniques. Certain types have been recommended only for pre- and postflight measurement, or for storage and subsequent analysis, since it is not considered feasible to conduct these tests in flight. Particular attention was devoted to the medical significance of the measurements, and to the use of common equipment in this initial selection of techniques to assist in providing IMBLMS design information. During the remainder of the Phase B study, the relative importance of on-board analysis as opposed to storage and postflight analysis for all measurements recommended in the biochemical/ microbiological section of the system will be subjected to a complete evaluation. The factors which are to be considered for each measurement are:

- Importance of the measurement
- Effect of on-board analysis on accuracy
- Effect of storage on accuracy
- Cost and complexity of on-board analysis
- Cost and complexity of storage

This evaluation will allow identification of those measurements which are both important and easily and economically accomplished on-board.

Other measurements will be determined to be important, but to require expensive and/ or complex on-board equipment if they are to be accomplished in flight. In such a case, if it is determined that storage of specimens also involves costly or complex equipment or procedures, or that the accuracy of the measurement is significantly degraded by any known method of storage, it will be recommended that the methodology and equipment for on-board analysis be developed.

This type of investigation will allow the identification of those tests which must be or should be performed on-board and those which must be or should be analyzed post-flight. Each group can then be evaluated in terms of cost or complexity of methodology and equipment for on-board analysis as well as in terms of the effect of storage on accuracy of the measurement. A logical plan of priority for the development of both on-board analytic capability and methodology, and storage and specimen retrieval capability, will then be generated. An important consideration in the final selection of priorities will be that of commonality of equipment or methodology. For example, the colorimeter and microscope are used in a very great number of different determinations, since some of these are critical and others are quite useful, a high priority will be assigned to development of such equipment and methodology. It does not necessarily follow that all tests which can use this equipment will be performed on-board, however. Since other considerations – for example, available astronaut time – must be taken into account, the recommendation might be that some specimens be stored for postflight analysis even though the equipment and methodology are available for on-board analysis. Stored samples can then be analyzed for components which are too difficult or of too low priority to be considered for in-flight analyses. It is of paramount importance that storage conditions not be such as to alter the clinical reliability of the tests to be performed.

Whereas the analyses for urinary 17-OHS, 17-KS, catecholamines, and serotonin are now considered too complex to be performed on-board, samples must be preserved for postflight analysis. According to presently available literature, it appears that freezing of the urine will be the method chosen and would be applicable to practically all determinations – except pH and mucoproteins – for storage beyond 180 days. ALH determinations can be performed on frozen urine for at least 56 days. Since the inorganic constituents of urine tend to precipitate out, stored urine samples should be acidified to redissolve the precipitates prior to analysis.

Because freezing at low temperatures (liquid oxygen or nitrogen) can also be used for long-term preservation of serum and plasma (except for the determination of ADH, LDH isoenzymes, and, possibly, ACTH), feces, and sweat (if desired), and inclusion of a cryogenic on-board freezer is recommended. Due to the absence of convection

currents within such a freezer in weightlessness, all specimens must be stored in contact with a refrigerated wall – requiring a well-partitioned configuration with specimen-holding clamps. It has been estimated that the storage of 12 duplicate sets of specimens – each set consisting of 20 ml of serum, 36 ml of urine, 7 ml of whole blood, 4 gm of feces, and 4 ml of sweat – would require a freezer volume of approximately 500 in.^{3}, weighing 20 to 25 lb, for a 90-day mission.

Certain studies are required before final decisions can be made regarding on-board versus postflight specimen analysis. Such studies, based on final recommendations as to development of in-flight equipment and methodology for specimen analysis and preservation, would include:

- Laboratory feasibility demonstration of conducting space-applicable measurements, including accuracy and reliability assessment
- Laboratory feasibility demonstration of space-applicable specimen-preservation techniques, including measurement accuracy assessment as a function of time preserved

These studies would provide laboratory data on which to base engineering tradeoffs among the alternate approaches and to establish priorities for the development of in-flight biochemical equipment. During the Apollo Program, continued assessment of the medical effects of space flight on man will reinforce or alter these priorities, depending on the time history and magnitude of biochemical changes observed in the astronauts.

The effect of this approach on measurement capability for future long-duration missions will be presented in the final IMBLMS report.

2.4.3 Hematological Measurements

The following paragraphs cover hematological measurements in the following areas:

- Cellular kinetics and structure evaluation
- Cellular body defenses
- Hemostasis

The medical evaluation summary of these measurements is presented in Table 2-8. Those measurements requiring the use of a microscope are listed in Table 2-9 (Section 2.4.4).

2.4.3.1 Blood Collection and Preparation. Blood can be collected by either one of two methods, depending upon the amount required to perform the desired analyses. Where only small samples of blood are required, the use of a spring-loaded finger lancet suffices; otherwise, it is necessary to obtain blood by venipuncture.

The finger lancet consists of a sharply pointed, spring-loaded shaft in a holder. Immediately before use, the shaft is cocked – thereby recessing the lancet into a slotted button – and the finger from which the blood sample is to be obtained is massaged gently and its tip is sterilized with a nonvolatile disinfectant such as benzalkomium. The selected finder presses the button, triggering the mechanism, and the lancet punctures the fingertip to a depth of 2 to 3 mm. Gentle squeezing of the finger forces a few drops of blood out of the small stab wound, and the blood is either drawn up into sterile capillary micropipettes or touched with microscope slides for further processing and/or staining. Removing the trigger button exposes the lancet for cleaning.

Larger blood samples are obtained by a standard venipuncture technique – using individually packaged, sterile, and disposable syringes. Immediately following collection, the blood is transferred into a container (Unopette or plastic bag) – containing an anticoagulant if whole blood is required. For serum specimens, the anticoagulant is omitted from the collection device, in which case the formed blood elements must be separated from the serum and plasma, as soon as possible after collection, with a specially designed zero-gravity centrifuge or by vacuum-assisted filtration through several layers of micropore filter of gradually decreasing pore size. Both techniques have yet to be developed.

2.4.3.2 Hematocrit. A measure of RBC conditions can be obtained by RBC counts, hemoglobin concentration, or hematocrit.

Meas't No.	Evaluation Factors → Type of Measurement	Clinical Monitor	Experimental	AAP-M Series	Commo
1	Hematocrit – Electronic, Micro Mod. 30 (Yellow Springs Instrument Co.)	X		X	X
2	Hemoglobin – Colorimetric Method, Oxyhemoglobin	X		X	X
3	RBC Fragility – Colorimetric Method, 0.16M Sucrose			X	X
4	Red Cell Mass – Isotope Method, CR-51 RBC			X	X
5	Bleeding Time – Duke's Method	X			
6	Clotting Time – Capillary Tube Method	X			
7	Clot Retraction – Test Tube Method		X		
8	Prothrombin – Quick One-Step Method)			X	X

(a) See Table 2-1 for definition of rating scores 1, 2, and 3.

Commonality				Relationship	Development Status				Validity		Astronaut Factors					
...mental	AAP-M Series	AAP 100 to 200	Related Measurement	Space-Qualified	Under Development	Laboratory State of the Art	Conceptual or Research	Clinical	Sensitivity	Astronaut Acceptance	Task Complexity	Performance Time	Training Requirements	Physician Required	Automatic
X	X				X		1[a]	1	2	1	1	1			X
X	X	3			X		1	1	2	1	1	1			X
X	X	2			X		1	1	1	1	2	1			X
X	X				X		1	1	3	2	3	3	X		X
					X		1	1	2	1	1,2	1			X
					X		2	2	2	1	2	1			X
					X		2	2	2	1	3	1			X
X	X				X		1	1	1	2	2	1			X

d 3.

ut Factors			Analysis Requirements			Data Format			
ning Requirements	Physician Required	Automatic	Manual	Preservation/ Postflight Analysis	Analog	Digital	Subjective/ Voice	References	Remarks
			X				X	2-28	
			X				X	2-29 2-30	Danon method can be used also
			X				X	2-30	
	X		X				X		
			X				X	2-29	
			X				X	2-29	
			X				X	2-29	
			X				X	2-29	

Table 2-8 Medical Evaluation Summary – Hematology

RBC counts are notoriously inaccurate and are rather tedious to perform. Hemoglobin concentration must be determined by a wet chemistry colorimetric technique.

The hematocrit determination is the conventional method of determining RBC volumes; the normal technique requires the use of a centrifuge, while the recommended technique employs the Electronic Micro Hematocrit (Model 30) marketed by the Yellow Springs Instrument Company. This latter instrument utilizes the principle that conductivity decreases as the concentration of RBC increases. In a clinical evaluation of this technique it was found that the method agreed with centrifugation methods within 1 percent on 17 patients and between 2 and 3 percent on 11 patients, and differed by 5 percent on 1 patient.

2.4.3.3 Hemoglobin. Quantitative analyses for hemoglobin generally utilize hemolysis followed by measurement of the color produced. The Spencer hemoglobinometer manufactured by the American Optical Company is a self-contained instrument that does not require accurate sample measurement. A drop of blood is placed on one of the plates in the instrument, a stick containing saponin is used to stir and hemolyze the blood, the two plates are closed to provide a known sample thickness, and the resultant color is compared visually to a standard. The precision of the method is only about 10 percent and is adversely affected by inadequate cleaning or handling of the surfaces.

The cyanmethemoglobin method is the generally accepted clinical technique. It uses a ferricyanide-cyanide solution to oxidize hemoglobin to methemoglobin. The resultant color is measured photometrically at 540 mμ. This technique has a precision of 3 percent and provides essentially equivalent response to all hemoglobin types. However, this test does require a waiting time of 20 min before the color is fully developed; it utilizes a toxic reagent, and the reagent is not stable for more than 1 mo.

The oxyhemoglobin method is the recommended technique for this application. Although all hemoglobins do not provide exactly the same response, the precision is 3 percent, and the reagents are completely stable as well as nontoxic. Whole blood is hemolyzed

by a dilute solution of EDTA-Na_4. Upon exposure to oxygen, the absorbance at 540 mμ can be measured immediately with a colorimeter.

2.4.3.4 RBC Fragility. Osmotic fragility is the usual method of testing the fragility of RBC membranes. All test procedures utilize dilution of the blood sample with hypotonic solutions in order to study the release of hemoglobin. In the Wintrobe method, aliquots of the sample are mixed with a series of different saline solutions, and the extent of hemolysis (pink coloration) is determined subjectively at each dilution. The method of Dacie improves the quantitative aspects of the test by using a spectrophotometer to measure hemolysis. The remaining red cells and the red cell ghosts are removed by centrifugation before analysis.

Since the normal biochemical values of the test subjects will be well known, it will probably be sufficient to use a single saline solution rather than a series of solutions. The plastic bag and spectrophotometer combination will provide an accurate evaluation of any changes. In one method, a small sample of blood (0.02 ml) would be transferred to a few milliliters of a median-toxicity saline solution (approximately 0.45 percent NaCl) containing oxalate and buffered to pH 7.4. The viewing window section in the plastic bag would be isolated with a membrane which permits the diffusion of hemoglobin but prevents the intrusion of cellular material. The hemoglobin concentration after equilibration would be a measure of fragility. This method would provide a simple, reliable measure of small changes in fragility. Gross changes in fragility would result in a 100-percent hemoglobin reading, however.

In another technique, the plastic bag would be prepackaged with an extremely-low-toxicity solution in the viewing-window section. This solution could readily be contained in a frangible container within the bag, while the remainder of the bag would contain physiological saline solution. After introduction of the sample, the low-toxicity solution would be released. Diffusion of the low-toxicity solution into the sample chamber, and diffusion of the hemoglobin into the viewing area, would then occur. The result would be a continually decreasing ionic strength which would result in an increasing release of hemoglobin. With this technique, the spectrophotometer reading

should be taken at periodic intervals. This method would be capable of monitoring large changes in fragility, but would be more susceptible to changes in diffusion rate resulting from changes in temperature.

2.4.3.5 Red Cell Survival Time. The normal red cell life span of 120 days is shortened in cases of hemolytic anemia. A normal manifestation of this malfunction is an increased serum bilirubin level. More accurate lifetime assessments can be obtained by the Ashby differential agglutination method, or by radioisotope labeling. The Ashby technique is considered to be far too difficult for spacecraft purposes. Although both Fe-59 and Cr-51 have been used for isotope tagging, Cr-51 is preferred because it is not used again after destruction of the red cells; this method involves incubation of a portion of the astronaut's blood with Cr-51, followed by reinjection. The quantity of Cr-51 is then measured on blood samples drawn periodically. Early values reflect the total RBC mass; values obtained after extended time periods indicate RBC survival time.

2.4.3.6 Red Blood Cell Mass. Total values can be derived arithmetically from knowledge of total plasma volume and by use of the hematocrit. Greater accuracy can be obtained with radioisotope techniques.

2.4.3.7 Red Cell Morphology. The study of stained film of whole blood provides a relatively simple way in which to detect variations in size or shape of red cells. Additionally, an estimation of the hemoglobin content and of the numbers of red and white cells can be made at the same time – a determination of value in that it serves to check analytical results. It is recommended that red cell morphology be evaluated concurrently with the white cell differential count using 1,000× magnification. A permanent record can be provided by color photography or television.

2.4.3.8 Reticulocytes. Reticulation is a characteristic of very young erythrocytes. Thus the number of reticulated erythrocytes in the peripheral blood is probably the best available index of the generation of new RBC's. An increase may be interpreted as indicating both an excessive demand for new erythrocytes and a competent bone

marrow. When the demand lessens, or the bone marrow fails to function in a normal manner, the number of reticulocytes decreases.

The Unopette (Becton-Dickenson) technique is recommended. A drop of capillary blood is mixed with a drop of New Methylene Blue (from a squeeze bottle). The mixture is drawn into the plastic capillary, allowed to stand at ambient temperature for 10 min, and then delivered to a glass slide from which a thin film is prepared. The counting is performed under oil immersion, employing a time-saving ocular disc (Miller Disc, available from Kinsman Optical Co., Washington, D.C.) placed in the eyepiece of the Nikon Model H microscope.

2.4.3.9 White Blood Count. The white blood count is defined as the total number of the three types of leukocytes (granulocytes, lymphocytes, and monocytes) per cubic millimeter of blood. It is normally determined in venous or fingertip blood by diluting a known amount of sample with 2-percent acetic acid solution (with gention violet added) and counting the leukocytes in a hemocytometer chamber under 100× magnification. The error of a count (within normal limits) is approximately ±15 percent.

It is proposed that a disposable plastic system (Unopette, manufactured by Becton-Dickenson) be used for measuring and diluting blood from a fingertip puncture. The hemocytometer adapted for use with the Nikon Model H microscope will be used to perform the count.

2.4.3.10 Differential Count. The differential count is defined as the percentage distribution of the different types of leukocytes in a stained blood smear. Wright's stain and Hayden buffer will be used for staining. The blood smear, accomplished as the last step in the blood-collecting technique, is placed in a covered plastic vial with two openings in its top. The tip of a plastic squeeze bottle half filled with Wright's stain is inserted into one of the openings and the slide vial is filled. After a 4-min waiting period, a plastic extension tube is pressed on the tip of the squeeze bottle, the cap is loosened, the bottle is squeezed, the cap is tightened, the tip is extended

all the way to the bottom of the slide vial; pressure on the squeeze bottle is released and the stain is aspirated back into the bottle. The stain can be reused a number of times. The same steps are followed in the application of buffer solution to the slide, except that the immersion period is 8 min. The buffer also is reusable. The stained smear can be mounted on the Nikon microscope for:

- Examination and enumeration by spacecraft personnel
- Scanning by a TV camera for enumeration on earth
- Color photography of selected fields for postflight enumeration

2.4.3.11 Leukocyte Phagocytic Activity. The capacity of leukocytes for engulfing foreign particles is extremely important in combatting bacterial invasions. A quantitative method could be devised by adding iron filings to a known volume of blood. A magnet trap would then be used to remove the phagocytizing leukocyte, and the resulting concentrate could be observed and counted with the microscope. In view of the low concentration of white cells in blood, this method probably would result in large errors unless preliminary white-cell concentration techniques were employed. A more feasible technique would be to add foreign particles to the white-cell counting reagents and observe phagocytosis under the microscope; this method has the additional advantage that leukocyte mobilization also could be observed. Although opsonized red cells would be the most reliable type of foreign particle, it is believed that more durable particles, such as (UV fluorescent) polystyrene beads, would be better suited to the rigors of spaceflight.

2.4.3.12 Lymphocyte Karyotyping. Lymphocyte karyotyping consists of characterizing the morphology of the chromosomes of lymphocytes. The white blood cells are grown in a culture medium and the cell culture is stopped during metaphase by the addition of cincophen. The chromosomes are then spread out (squashed) and photographed. Pairs of like chromosomes are cut out and placed side by side, and their configuration is analyzed. This process is called karyotyping. Changes occur in the configuration of certain chromosomes during certain disease processes, particularly upon radiation exposure. These changes may give early indications of chromoradiation exposure during spaceflight.

The technique for culturing lymphocytes from the peripheral blood has been used to examine chromosome characteristics in man following in vivo exposure to radiation, organic vapors (benzene, etc.), and other toxic agents. Several variations of the original method of Hungerford et al. are in use but their difficulty makes space application highly doubtful. Initially, the lymphocytes must be separated from the polymorphonuclear leucocytes; this can be accomplished in a manner similar to the leucocyte phagocytosis test, in which finely divided iron particles are added to a leucocyte mixture, and the iron and the cells containing the particles are removed by a magnet. The next step is relatively long incubation (72 hr) in a culture medium followed by centrifugation, fixation, staining, and mounting. All steps require meticulous techniques. It is recommended that this test be performed on pre- and postflight blood samples only.

2.4.3.13 Bleeding Time. In a test of bleeding time, the fingertip should be massaged gently and then sterilized with prepackaged benzolkonium-chloride-impregnated swabs. A sterile, disposable lancet – capable of 2-mm penetration – is used to pierce the skin. Vigorous squeezing after puncture constitutes a source of error, and should be avoided. Bleeding time can be observed, after sampling is complete, according to one of the following methods: Duke, Ivy, or Copley-Latich. Of the three, Duke's method has the advantage of speed, simplicity, and requirement of minimum equipment. The methods of Ivy and Copley-Latich (C-L) are similar, but require the use of a blood pressure cuff (Ivy), or 37° saline. The principle is that of measuring the time required for bleeding to stop after a standardized stab wound. Every 15 sec after collection is completed, a fresh spot of filter paper is applied to the wound until the bleeding has stopped and no longer causes the paper to be stained. The time difference between initiation of bleeding and final clotting constitutes the test measurement.

2.4.3.14 Clotting Time. The whole-blood clotting time provides a measure of the overall coagulation process and is defined as the time required for free-flowing blood to solidify after it has been removed from the body. Unfortunately, in the classical method (Lee-White), the results are influenced by a number of physical factors – such as temperature, agitation of the blood sample, and material, surface, and diameter of the test tubes. In the capillary method, contamination of blood with tissue thromboplastin

is unavoidable, so that this method provides only a very rough measure of the whole-blood clotting time. However, in view of the relative simplicity and reduced procedural requirements of the capillary method, it is recommended for use. To avoid the potential hazard associated with glass capillaries in a zero-g environment, it is proposed that the basic technique be modified by placing a drop of blood on a glass slide and measuring the time required before a fibrin thread can be drawn by a metal wire.

2.4.3.15 Prothrombin Time. The conventional Quick prothrombin time technique is considered to be too difficult for space application. Even though the thromboplastin-calcium reagents are available in prepackaged form from Warner-Chilcott, the stability is not exceptional unless they are maintained in the frozen state. Furthermore, small changes in clot formation time represent gross changes in prothrombin activity. This latter condition can be alleviated by dilution of the sample with prothrombin-free plasma; nonetheless, adequate accuracy is assured only when known plasma is used as a standard of comparison. The many manipulative steps involved in this test, including venipuncture, rule it out.

The Schwager-Jaques method, which obviates many of the difficulties of the Quick technique, uses the clotting time obtained after four drops of blood are added to an excess quantity of thromboplastin extract. The two-standard deviation value of this test is 5.5 percent, and the values correlate closely with prothrombin concentrations. Manipulation is minimal, and less importance is placed on the activity of the thromboplastin. For this application, it is preferable to impregnate a piece of filter paper with thromboplastin and apply several drops of blood during the test. Although it is currently recommended that the thromboplastin tapes be refrigerated, investigations may prove this to be unnecessary if proper packaging procedures are used.

2.4.3.16 Fibrinogen Concentration. Fibrinogen concentration historically has been determined by converting it to fibrin, using mechanical means, and then determining the protein concentration of the fibrin adhering to glass beads. Newer techniques utilize a modification of the Quick prothrombin test, in which serum plus calcium plus

thromboplastin is allowed to clot while in a colorimeter. The time required for a sharp increase in density is used as the prothrombin time, while the actual change in density is a measure of fibrinogen. Although the fibrinogen determination is not as dependent on thromboplastin activity as is the prothrombin time test, many manipulative steps are required. It is recommended that this test be performed pre- and postflight only, but the standard colorimetric procedures described here could be adapted for in-flight determinations, if necessary.

2.4.3.17 Other Clotting Elements. Prolongation of clotting times is due to abnormally low concentrations of one or more of the essential clotting factors. Characterization of the missing factors generally is performed by sequentially adding serum preparations rich in the element of interest and noting the effects on prothrombin time. Because of the instability of these preparations, additional clotting-element assays are not recommended for in-flight use.

2.4.3.18 Clot Retraction. Quantitative clot retraction tests generally are performed by determining the proportion of expressed serum after several hours. It may be possible to adapt this method for fingertip blood by using a plastic capillary containing a glass thread imbedded on the inner wall. The electronic hematocrit could then be used after 2 hr to determine expressed serum – more serum should result in high conductivity readings. Semiquantitative visual measurements, of course, could be conducted every time venous blood is taken to obtain serum for other tests.

2.4.3.19 Fibrinolytic Activity. Fibrinolytic activity is dependent on fibrinolysin, which is formed from plasminogen by the action of activators. The measurement of clot lysis after 24 hr generally is accomplished by removing the clot and then determining the hematocrit. Differentiation between activator and plasmin can be accomplished by adding an activator inhibitor (EACA) to one sample. Equivalent lysis in both tubes is due to plasmin. Lysis in only the tube without EACA indicates activator. It is believed that this procedure could be modified by incorporating a metal or glass thread in the plastic capillary used for sampling fingertip blood. EACA could be impregnated in one thread for each pair of tubes. After 24 hr, the threads, along with

the unlysed clot, would be removed. The hematocrit would then be used to determine the degree of lysis.

2.4.3.20 Platelet Count. The platelet level can be estimated directly by the examination of a stained blood smear. This technique is not quantitative, but can detect pathological decreases. The actual counting of platelets is quite difficult, because they disintegrate easily and are then hard to distinguish from other cellular debris. In addition, there is evidence that they are not evenly distributed in the blood.

Because of the inherent difficulties in performing a platelet count and the large degree of error possible, it is recommended that simple designations – such as "normal," "decreased," or "increased"—be applied to the platelets when the stained blood smear is examined for the leucocyte differential count and red cell morphology.

2.4.3.21 Platelet Adhesiveness. The number of blood platelets *in vitro* progressively decreases with time following withdrawal of blood from the body. Since platelets adhere readily to glass surfaces, the rate of disappearance from blood samples in contact with glass can serve as an index of their adhesiveness (method of Wright, as adapted by R. R. Holburn).

It is proposed to adapt this method to spaceflight application in the following manner. Fingertip blood is drawn up into a heparinized plastic capillary pipette. A platelet count is performed on this sample initially, and then a small-diameter glass rod is inserted into one end of the capillary pipette; this rod is rotated every 5 min over an 80-min period. Blood is withdrawn from the other end of the pipette by the Unopette technique and a platelet count performed every 20 min during the 80-min test period. The number of platelets expressed as percentage of the initial count is plotted against the time at 20-min intervals to derive the index of adhesiveness.

2.4.4 Microbiological and Immunological Measurements

The techniques for obtaining measurements through microbiological and microscopic procedures (Table 2-9) are based primarily upon standard laboratory methods.

2.4.4.1 Microbial Cultering. The microbiological measurements are being considered for two areas:

- The environment or the microbiological monitoring of the cabin, suit, ECS, water, etc.
- Body microflora or the microbiological examination of the throat, skin, GI tract, etc.

Basically standard techniques for microbiological sampling, culturing, and examination will be used. Certain modifications will be required to meet the peculiar requirements of space application; these modifications will involve primarily sample-handling techniques and the selection of culture conditions.

Microbiological evaluation provides an essential clinical monitoring capability to determine whether a particular set of symptoms is caused by bacterial infection. It may become necessary to initiate treatment of both upper respiratory tract disease and intestinal disorders during flight. The type of treatment for either of these conditions will depend on the physician's understanding of the etiology of the disease. If an attack on the respiratory system is caused, for example, by prolonged exposure to high oxygen partial pressures or low relative humidity, the treatment is different than if the cause is a bacterial infection. Even if the process is infectuous, it would be very helpful to know whether it was more probably of viral or bacterial origin. In the case of intestinal disorders, failure to isolate characteristic enterics in astronaut stools or coagulase positive staphylococcus in food remnants could materially help to narrow down a diagnosis which might eventually be termed "mild radiation sickness" (confirmed by radiation monitoring equipment), or "fuel cell malfunction leading to highly alkaline drinking water" (confirmed by measurement of water pH or conductivity).

Meas't No.	Type of Measurement	Clinical Monitor	Experimental	AAP-M Series	AAP 100 to 200	Related Measurement	Space-Qualified	Under Development	Laboratory State of the Art	Conceptual or Research	Clini...
	Evaluation Factors →	Commonality					Relationship	Development Statu			
1	Blood Cell Morphology – Microscopic Examination of Stained (Wright) Slide Preparations	X			X	2,3			X		1[a]
2	WBC Differential – Microscopic Examination of Stained (Wright) Slide Preparations	X			X	1,3			X		1
3	Reticulocyte Count – Microscopic Examination of Stained (Vital) Slide Preparations	X			X	1,2			X		1
4	Lymphocyte Karyotyping		X								
5	Leucocyte Mobility (Phagocytosis) – Microscopic Examination for Ingested Prussian Blue Particles		X						X or	X	3
6	Platelet Count – Microscopic Examination of Stained (Vital) Slide Preparations				X	1,2,3			X		2
7	Urine Sediment – Microscopic Examination of Sediment on 1μ Filter	X			X	See urin-analysis			X		
8	Exfoliative Cytology (Buccal)		X								
9	Environmental Microbiology – Macroscopic and Microscopic Examination of Cultured Samples				X				X		3
10	Body Microflora – Macroscopic and Microscopic Examination of Cultured Samples	X			X	11			X		2
11	Virus Isolation, Fungi, Rickettsia		X			10			X		
12	ACTH Response		X			See endo-crinology			X		2

(a) See Table 2-1 for definition of rating scores 1, 2, and 3.

tus	Validity			Astronaut Factors					Analysis Requirements		Data Format			
nical	Sensitivity	Astronaut Acceptance	Task Complexity	Performance Time	Training Requirements	Physician Required	Automatic	Manual	Preservation/ Postflight Analysis	Analog	Digital	Subjective/Voice	References	Remarks
	1	2	2	2	2			X		X			2-31 2-32	Telemicroscope relay to earth for evaluation; preserve slide preparations
	1	2	2	2	2			X		X			2-31 2-32	Telemicroscope relay to earth; preserve slide preparations
	1	2	2	2	2			X		X			2-31 2-32	Telemicroscope relay to earth; preserve slide preparations; perhaps combine with 1 and 2
														Preflight and postflight
	3	2	2	3	2			X		?		X	2-31 2-32	Spaceflight application questionable
	2	2	2	2	2			X		?		X	2-31 2-32	Telemicroscope relay possible but requires investigation; perhaps use indirect method and combine with 1, 2, and 3
	2	1	2	2	2			X		X			2-31 2-32	Telemicroscope relay to earth; membrane filter technique for separation of sediment possible alternate
														Preflight and postflight
	2	2	3	3	2			X		X				Television relay to earth of macroscopic and microscopic examinations; color photograph of culture plates; preserve culture plates and slides
	2	2	3	3	2			X		X				Same remarks as for 9; preserve fecal sample for postflight analysis
									X					Preservation of selected samples appears only approach; type of sample questionable
	2	3	2	3	2	X		X		X			2-31 2-32	Telemicroscope relay possibility; space application questionable; requires epinephrine HCl injection and repeat count in 4 hr

Table 2-9 Medical Evaluation Summary – Microbiology and Immunology

The three major body areas for which bacterial test capability should be provided are upper respiratory, intestinal, and integumentary. It may also be desirable to provide methods for monitoring the bacterial count in urine; the value of this provision will depend, to a very great extent, on the method of collection and the probability of contamination during and after collection. There is little point in attempting to observe a count of 100,000 bacteria per ml when either (1) the sampling container will contaminate the specimen with 10^6 organisms per ml or (2) preservatives which prevent bacterial growth are routinely employed.

The recommended approach to on-board microbiological testing is the modification of the standard swab technique to miniature culture apparatus. The swab technique is an established procedure for microbiological sampling. Although the method is considered only semiquantitative (as are all other sampling procedures for body micro-organisms), it is more adaptable to sampling areas of undulations and skin folds than are most procedures. The quantitative aspects can be increased by using alginate swabs which are dissolvable in specific buffer solutions; the dissolution frees organisms that would be trapped if normal cotton swabs were used.

The sampled material is inoculated onto prepackaged, refrigerated blood agar dishes of miniature size. Other diagnostic agar media – SS agar for Shigella sonei, EMB agar for Eschericia coli, and TSI agar for secondary testing of isolates from those series – may be inoculated, depending upon sampling source. The dishes are incubated at 37°C for approximately 24 hr, after which the relative numbers and type of colonies are determined. Photographs of the dishes may also be taken, and/or video tape recordings may be made for relay to earth. Microscope slides of representative colonies may be prepared, using the telemicroscope system, for determining cellular morphology. Upon completion of the procedure for each sampling period, the dishes are repackaged and placed in refrigerated storage for return to earth laboratories.

Another approach to on-board testing consists of adaptations of the blotting-paper miniature culture technique (presently commercially available for urine counts under the trade name "Testuria"). Essentially, the same basic procedure could be employed

pg. 2-98 Blank & Not Filmed

for all sampling – with variations in the type of medium used, depending on the source of the sample and type of analysis desired. Sterile paper strips are first placed in contact with the sample and then placed on a miniature block of sterile solidified culture medium contained in a small (approximately 18 by 25 mm), covered plastic box. The plastic cover, which is held in place by adhesive edges, is peeled back and held for the 10 sec required to contact the medium with the moist blotter. The cover is then resealed and the blotter strip either treated with a disinfectant pad and transferred to waste storage or placed in a storage container for postflight analysis.

To achieve approximate quantitation of samples, the sample area is proscribed so that the same area is sampled each time. After innoculation and resealing, the trays are incubated at 37° C for a prescribed time. Semiquantitative and qualitative information can be obtained from this system. If the sampling procedure is carried out properly, the count of colonies on the agar surface will provide an approximate measure of the bacterial concentration in the original sample (in the Testuria system, a count of 0 to 2 colonies is interpreted as 25,000 bacteria/ml, 3 to 25 as 25,000 to 100,000 bacteria/ml, and 26 or more as 100,000 bacteria/ml). By the use of various diagnostic media, qualitative information can be derived.

The quantitative aspects of the technique (other than for urine) have not been determined for the various types of micro-organisms that might be present on the sampled areas.

2.4.4.2 Microscopy. Examination by microscope is required to determine (1) the cellular composition and morphology of blood, (2) the composition of urinary sediment, and (3) the morphological types of cultured microbial cells. It has been suggested that analyses for viruses and rickettsia can be conducted, but this appears to be impractical under space conditions – since viruses and rickettsial organisms require specific living cells for growth and reproduction.

With the possible exception of the urinary sediments, stained slide preparations would be examined microscopically at magnifications of 400× to 1,000× (oil immersion).

In addition to direct viewing of the microscopic fields by the astronaut, the microscope can also be attached to a high-resolution television camera and the necessary fields can be videotaped and relayed to earth station for examination and evaluation. In exploratory investigations of the television technique at a low-resolution level of 525 lines per frame in black and white contrast, blood cell morphology on Wright stained slides was readily discernible, and contrast was satisfactory for detecting white cell differentiation. In urinary sediment preparations, crystals were observed under these conditions. Reticulocytes and platelets are visible, but not easily identifiable, at this resolution. However, increasing the level of resolution to 1,200 to 1,500 lines per frame should not only markedly increase the capability to identify small or low contrast cells but also improve total contrast and thus increase the reliability of the technique. It is suggested that the introduction of color for the TV reception could also enhance contrast and reliability. The engineering aspects of this technique are discussed in Section 6.

The microscope used for these measurements must be a small, compact, rugged instrument supplying all the optical requirements for examining the slide preparations. The Mikon Model H hand microscope (Fig. 2-3), approximately the size of a 35-mm camera, appears to meet most of the necessary requirements. A microscope of this type could be adapted readily to space application. Modification would consist primarily of supplying a mechanical stage and an additional eyepiece for direct viewing by the astronaut.

The other major item required for the recommended microscopy is an apparatus for staining slide preparations. Such a device for operation in the zero-g environment does not exist. However, with the present availability of one- and two-step staining procedures, the development of such a device using pressure differentials and/or capillary forces would not be difficult. The examination of preparations like blood smears presents no difficult problems, but it is questionable whether or not the present laboratory hemocytometer can be used in zero-g conditions, and it may be necessary to modify the hemocytometer chamber.

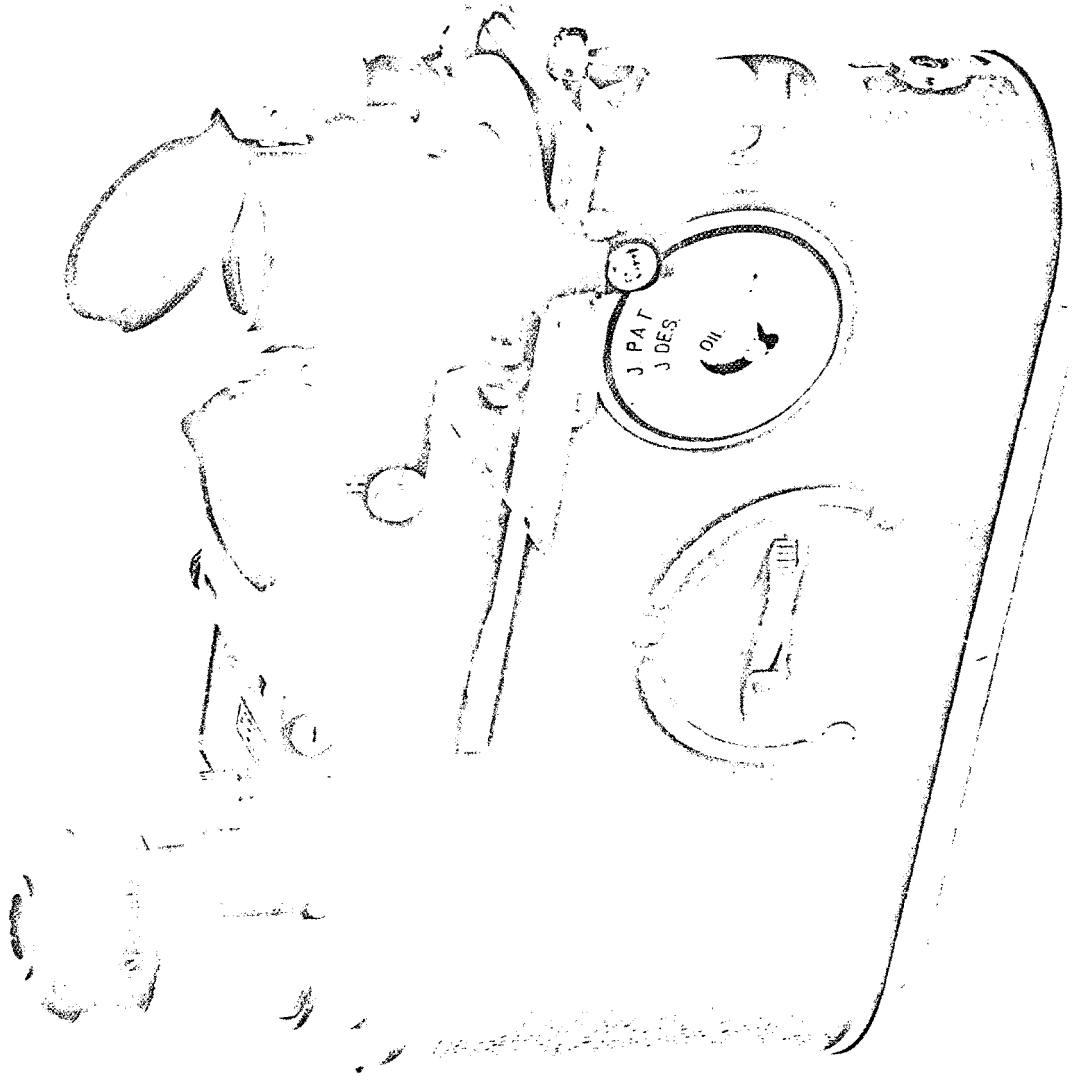

Fig. 2-3 Hand Microscope – Nikon, Model H

2.4.4.3 Antibody Titration. This test can be divided into two sections: (1) the detection and identification of serum antibodies requiring red cell suspensions containing known blood factors, and those requiring red cell suspensions free of blood factor for which antibodies may be present in the serum tested, and (2) the titration or titering of the specific antibody. This immunohematological technique is too complex for spaceflight application. In addition to requiring a prodigious supply of known test cells, it requires meticulous technique for screening and titering. It is recommended that a complete antibody workup be performed pre- and postflight, since sensitization or increase in antibody titer is a relatively long-lasting phenomenon.

LMSC recommends consideration of the use of the TELUS which has been developed by the USAF School of Aviation Medicine for investigating antigen-antibody formation. This unit employs the principle of agar-gel diffusion in small glass tubes, and is completely automatic in operation.

2.4.4.4 Immunoelectrophoresis. With the basic electrophoresis package (Section 2.4.6), the addition of immunophoresis capability is relatively easy. It is suggested that antisera be supplied in the lyophilized state within small plastic containers. Reconstitution could be effected just prior to use, after which the antisera would be applied to the electrophoresis plate. Diffusion usually is permitted to take place for 24 hr, either at ambient temperatures or at 37° C; in this case, ambient temperature would be preferable from an engineering standpoint. Special antisera, such as goat anti-human B, C (Hyland Laboratories), could be used to determine complement. Staining and transmission to earth would be accomplished by the same techniques developed for simple electrophoresis. Alternately, it probably will be possible to obtain perceptible precipitation lines without staining.

2.4.4.5 Complement Evaluation. The measurement of complement can be accomplished in the laboratory by the use of standardized complement titration techniques. These techniques, however, are analogous to the procedures in wet chemistry and involve serum preparations, dilutions, and titrations. Therefore, it appears impractical if not prohibitive to conduct complement measurements in-flight. Periodic serum samples should be preserved and stored for return to earth and subsequent analysis.

2.4.5 Endocrine Measurements

For the evaluation of endocrine functions it is necessary to measure the activity of the following glands:

- Pituitary (adeno- and neurohypophysis)
- Thyroid
- Parathyroids
- Pancreas
- Adrenals
- Gonads

Neurohumoral activity is commonly also included in this series.

The hormones excreted by these glands can be divided into three major groups according to their chemical structure: the anterior pituitary hormones are mostly proteins, the neurohypophyseal hormones are polypeptides, and the adrenal cortical and gonadal hormones are steroids. Assessment of these hormones in urine and serum usually is considered to be among the most difficult and time-consuming biochemical procedures performed in clinical laboratories, and adaptation of these complex procedures to weightlessness would be very difficult. Table 2-10 lists some of the most promising measurement techniques, while others are tabulated in Section 2.4.6.

2.4.5.1 T_3 Test. The T_3 test, an index of the unsaturated thyroxine binding globulin fraction of serum, is recommended as a replacement for PBI determination. It has been shown that PBI values vary significantly if contamination with free iodine or organic iodine compounds occurs *in vivo*, whereas the effects of these compounds on the values derived from the T_3 test have been found not to affect the T_3 test value significantly. In addition, the latter procedure is much cleaner, with a concomittant saving in time.

Essentially, the T_3 test measures, under standard conditions, the *in vitro* partition of I-131 labeled triiodothyronine (T_3) between the subject's serum and a specially treated

Meas't No.	Evaluation Factors → Type of Measurement	Clinical Monitor	Experimental	AAP-M Series	Commo
1	T_3 – Triosorb Scintillation Method		X		
2	VMA – Colorimetric Method With 4-Cl-o-phenylenediamine		X		
3	TBPA – Electrophoretic, Agar Gel		X		
4	ADH – Water-Loading Test		X		
5	Catecholamines				X
6	Parathormone		X		
7	Serotonin – Spectrophotometric After Ion Exchange Purification		X		
8	17-KS – Gas Chromatographic				
9	17-OHS – Gas Chromatographic				

(a) See Table 2-1 for definition of rating scores 1, 2, and 3.

	Commonality					Relationship	Development Status			Validity		Astronaut Factors				
Experimental	AAP-M Series	AAP 100 to 200	Related Measurement	Space-Qualified	Under Development	Laboratory State of the Art	Conceptual or Research	Clinical	Sensitivity	Astronaut Acceptance	Task Complexity	Performance Time	Training Requirements	Physician Required	
X						X		2[a]	2	1	3	3	2		
X						X		2	1	1	2	3	2		
X						X		2	2	2	2	3	3		
X						X		2	3	1	2	3	2		
		X				X									
X						X									
X						X		2	1	1	3	3	2		
		X				X		2	1	1	2	2	2		
		X				X		2	1	1	2	2	2		

1, 2, and 3.

2-105a

...ce	Training Requirements	Physician Required	Automatic	Manual	Preservation/ Postflight Analysis	Analog	Digital	Subjective/ Voice	References	Remarks
	...tronaut Factors			Analysis Requirements			Data Format			
2			X					X	2-33	Use of in vitro Triosorb (Abbott) appears only feasible method, but is complex and time-consuming
2			X					X	2-34	
3			X					X	2-35	
2			X					X		Not quantitative – compare specific gravity of overnight urine sample against test sample
				X					2-36	Preserve samples for postflight analysis; fluorometric or colorimetric method may be possible
				X					2-37	Preserve samples for postflight analysis; fluorometric or electrophoretic method may be possible
2			X					X	2-38	
2			X	X				X	2-39	An on-board gas chromatograph is required; otherwise, preserve urine sample for postflight analysis
2			X	X				X	2-39	An on-board gas chromatograph is required; otherwise, preserve urine sample for postflight analysis

Table 2-10 Medical Evaluation Summary – Endocrinology

resin previously charged with radioactive T_3. In the test, the unsaturated TBG (subject's thyroxin binding globulin) competes with the resin for the radioactive T_3. For example, if there is a large excess of unsaturated TBG in the subject's serum, the resin loses T_3, thus producing a low value in the test. The binding of the labeled hormone to the resin beads is thus inversely proportional to the unsaturated thyroxin binding capacity of the serum.

For space application, the following procedure is proposed. A known amount of serum (0.1 ml) is withdrawn by a syringe from the serum-cell separation system and added to a reaction bag containing precharged Triosorb (Abbott Laboratories). The sample is incubated at 37° C for about 1 hr; from time to time, the bag is squeezed by hand for mixing. At the end of the incubation period, 0.5 ml of saturated serum is removed by capillary tube and a scintillation count is performed. Another test, TBPA, can be performed on the remainder of the sample.

2.4.5.2 Vanilmandelic Acid (VMA). A review of conventional measurements indicates that conventional VMA analysis is impossible in space, but a new electrophoretic technique appears very promising. This method requires concentration of urine by drying 0.1 ml on filter paper, electrophoresis for 1-1/2 to 2 hr, and staining with nitroaniline. The VMA appears as a purple band 7 to 9 cm from the origin. It is believed that this method could be easily incorporated into the basic electrophoresis package.

2.4.5.3 Thyroxine Binding Pre-Albumin (TBPA). This test can be performed with I-131 labeled triiodothyronine serum used for the T_3 test. Standard electrophoretic separation of serum proteins will be performed, and high-speed polaroid film will then be placed close to the electrophoretogram by means of a clamping assembly. After a suitable period of time (approximately 1 hr), the film will be developed and transmitted to earth via the TV camera. Quantitation can then be accomplished densitometrically on a photograph of the TV image.

2.4.5.4 ADH Activity. The quantitative determination of antidiuretic hormone is considered to be far too difficult in-flight. A crude measure of ADH activity can be

pg. 2-106 Blank, Not Filmed

obtained by water loading tests, however. In these tests, urine specific gravity from an overnight sample is compared to that obtained after ingestion of large quantities of water.

2.4.5.5 Serotonin. Classically, serotonin is determined in the urine by colorometric measurement of its metabolite 5-hydroxyindole acetic acid (normally, serotonin is carried in the blood platelet, and is oxidized in the lungs to 5-HIAA). In the classical methods, 5-HIAA is usually extracted from the urine by organic solvent partition, purification, and either analysis of fluorescent spectra, or diazotization and ultraviolet or visible spectrophotometry.

A fairly rapid, colorimetric procedure used directly on urine has been devised. Although subject to the possibility of false positive values, it is sufficiently sensitive to serve as a preliminary screening procedure for the analysis of this urinary metabolite. A 2-cc specimen of 24° C urine is removed by syringe from the urine storage system and transferred to a reaction bag containing the reagents in a microencapsulated form (National Cash Register technique). The resultant purple color is measured photometrically. Since the microcapsules can be isolated easily from the window area by means of a filter partition, the difficulties in handling a two-phase liquid system are avoided.

2.4.5.6 17-Hydroxysteroids, 17-Ketosteroids, Catecholamines, Parathormone. Determination of these compounds is considered to be too complex for in-flight analysis. It is recommended that urine and serum samples be stored and analyzed postflight for these compounds. New serological techniques utilizing specific protein carriers may be useful in the future. Gas chromatography holds promise for the determination of 17-OHS and 17-KS.

2.4.5.7 ACTH Response. Thorn et al. (1948) recommended a test for the evaluation of adrenal cortical function based on the development of eosinopenia following the injection of ACTH (adrenocorticotropic hormone). Absence of a significant drop of eosinophils is interpreted as evidence of adrenal cortical insufficiency.

It is proposed that the eosinophils be stained and counted in accordance with the following procedure. Fifty μl of fingertip blood is added to a Unopette capillary and delivered to a plastic bottle containing Brom Cresol purple in water, using the usual Unopette technique. After a short waiting period, one drop of the mixture is delivered to the hemocytometer for the eosinophil count. The eosinophils appear as dark purple, granular cells, whereas the other leucocytes are ruptured and unstained (the red cells are lysed). The normal eosinophil count is 100 to 300 cells/mm^3. After injection of ACTH, the count should decrease by 50 to 100 percent from normal.

2.4.6 Metabolic and Nutritional Measurements

The evaluation of metabolic and nutritional functions includes the following areas:

- Muscular status
- Mineral metabolism and skeletal status
- General metabolism and nutrition
- Gastrointestinal activity
- Thermal regulation (Section 2.2.2.3)

Their assessment requires the use of physiological techniques – discussed in Sections 2.2.2 (Cardiovascular Measurements) and 2.2.3 (Respiratory Measurements), as well as the biochemical techniques discussed in the following paragraphs.

Following introductory statements regarding sample collection, handling, and preparation, the various measurements and techniques are treated under the following categories:

- Urine analysis and fecal assay
- Blood analysis
- Metabolic processes
- Enzyme activity
- Body fluid compartments

2.4.6.1 General Procedures. Sample collection and handling of body fluids and solids are important to the successful performance of in-flight biochemical measurements.

LMSC recommends that the Apollo Urine Volume Measurement System, developed by Arde Manufacturing under Contract NAS9-5250, be modified and used to obtain urine samples and to measure the volume of each voiding by the astronauts. The original system uses a tracer-concentration technique for volume determination; it is suggested, however, that dye dilution be employed to avoid the use of isotopes. By using a chemically stable dye with a spectral response different from the frequencies involved in other colorimetric determinations, the colorimeter could also be used for on-board urinary volume determinations. The 40-ml sample bags have an individual self-closing seal at the point where they are attached to the three-sided bayonet fitting of the sample collector; transfer of smaller samples for analysis can be accomplished by piercing the seal with a steel or plastic needle and syringe. The remaining sample could be stored for postflight analysis of those parameters which cannot be analyzed in-flight and to serve as a check of the on-board measurements after return to earth. Collection of each of the other biological samples is discussed in the appropriate section of this report.

Preparation of all serum and urine samples for analysis will follow the general principles described later for colorimetric tests. Individual, one-use reaction bags – measuring approximately 4 in. by 1/2 in. by 1/4 in. and made of soft, pliable plastic – will be used for each colorimetric test. In the bags will be brittle plastic reagent capsules containing accurately measured quantities of the reagents, which will be in the dry state whenever possible. The hard plastic capsules and the flexible outer plastic bag should eliminate any possibility of reagent leakage. At the upper end of the bag will be a sealing cap which covers a receptacle for one end of a plastic capillary sample-insertion tube. At the lower end of the bag will be a rigid spacer to ensure a known path length during the subsequent colorimetric readout. The reagent capsules will be separated from the viewing window by partitions or filters within the bag.

A typical colorimetric analysis will be carried out as follows. The astronaut selects the required reaction bag. After reading the directions, he obtains a sample of urine or serum and fills a plastic capillary tube with the sample. One end of this tube is pushed through the self-closing seal in the reaction bag, and the other end is inserted in a distilled-water dispenser consisting of a water bladder, a pump mechanism, and a pushbutton switch which activates the pump to dispense an accurate volume of water. (This dispenser concept is similar to that used in the Warner-Chilcott Robot Chemist.) After the button is depressed the appropriate number of times (one, two, or three), the correct quantity of water flushes the sample into the reaction bag. The reaction bag is removed from the panel and the plastic capillary discarded. Fingertip pressure on the reagent capsules breaks them and the reaction occurs. The reaction bag is inserted in the colorimeter and the meter reading is observed and recorded. The reaction bag is then discarded.

2.4.6.2 Urine Analysis and Fecal Assay. These measurements are summarized in Table 2-11.

Osmolarity. Osmometry allows the quantitative estimation of the molal particle concentration in urine. The usual procedure, measuring osmolarity as a function of freezing-point lowering, is considered unsuitable for space application because of instrument weight and power requirements. It is proposed that a refractometer be used for the estimation of urine specific gravity. The total amount of solids, in grams per 1,000 ml of urine, can then be calculated approximately by multiplying the last two digits of the specific gravity by 2.6, the Long coefficient. This procedure neglects the normally applied temperature correction for specific gravity, as measured with a urinometer.

Sediments. The principal organized structures in urinary sediments are proteinaceous casts, epithelial cells, white and red blood cells, spermatozoa, and bacteria. Of primary importance in spaceflight application would be the visual examination of urinary sediment for casts and red blood cells. The sediment is prepared for examination in

accordance with the following technique. A few milliliters of sediment stain (either eosin or dilute iodine) are drawn into a plastic syringe followed by a few milliliters of urine from the collection device. A micro syringe adaptor (Millipore Filter Corp.) equipped with a 1-μ filter is fitted to the tip of the syringe and the urine expressed through it. The filter is then removed, pressed on a glass slide, and examined under 400× magnification.

Sodium, Potassium, pH, and Chloride. Sodium, potassium, pH, and chloride are involved primarily with four major physiological processes: (1) maintenance of water balance throughout the body compartments and tissues, (2) regulation of osmotic equilibrium, (3) acid-base balance, and (4) biochemical functions of nerve conduction and muscle irritability.

Sodium comprises the largest fraction of the total cations in extracellular fluid. It is quite intimately involved in body hydration and the maintenance of osmotic regulation. Sodium is derived almost completely by absorbtion from the GI tract, and under normal circumstances some 95 percent of the ingested ion is excreted in the urine. Since sodium exists primarily in association with chloride in body fluids, a large change in the level of either of these ions is usually reflected in a change in the other. For example, the chloride loss in urine usually follows loss of sodium; however, the proportions differ, since the body can compensate by increasing the serum bicarbonate. No compensation occurs when sodium is lost, thus necessitating a concomitant water loss.

Potassium is the primary cation of most cells and intracellular tissues. It is vitally important in cellular metabolism and in such specialized functions as nerve conduction. The potassium content of cells is influenced markedly by the pH of the extracellular fluid and, at times, by the changes in sodium concentration. As with sodium, potassium changes are associated intimately with changes in the chloride level.

The measurement of these electrolytes in urine and serum – along with the pH, hematocrit, and urine volume – provides pertinent data on electrolyte balance, dehydration, and acid-base status.

Meas't No.	Evaluation Factors → Type of Measurement	Commonality: Clinical Monitor	Experimental	AAP-M Series	AAP 100 to 200	Related Measurement	Relationship: Space-Qualified
1	Osmolarity – Refractometer, Specific Gravity	X			X		
2	Sediments – Centrifuge or Filter, Microscope	X			X		
3	pH – Ion Specific Electrode	X			X	4,5,6	
4	Sodium – Ion Specific Electrode				X	3,5,6	
5	Potassium – Ion Specific Electrode				X	3,4,6	
6	Chloride – Ion Specific Electrode				X	3,4,5	
7	Calcium – Colorimeter, 575 mμ				X	8,9,10	
8	Inorganic Phosphate – Colorimeter, 660 mμ		X			7,9,10	
9	Creatinine – Colorimeter, 520 mμ				X	7,8,10	
10	Hydroxyproline		X				
11	Glucose – Colorimeter, 620 mμ	X			X	7,8,9	
12	Protein – Labstix	X			X	13,14	
13	Occult Blood – Labstix		X			12,14	
14	Ketones – Labstix		X			12,13	
15	Bilirubin – Ictotest				X		
16	Bile – Test Strip		X				
17	Fecal Assay		X				

(a) See Table 2-1 for definition of rating scores 1, 2, and 3.

ity	Rela-tion-ship	Development Status					Validity		Astronaut Factors					
100 to 200	Related Measurement	Space-Qualified	Under Development	Laboratory State of the Art	Conceptual or Research	Clinical	Sensitivity	Astronaut Acceptance	Task Complexity	Performance Time	Training Requirements	Physician Required	Automatic	Man
			X		1[a]	2	2	1	1	1			X	
			X		2	2	2	2	3	3			X	
4,5,6			X		2	2	1	1	1	1			X	
3,5,6			X		1	1	1	1	1	1			X	
3,4,6			X		1	1	1	1	1	1			X	
3,4,5			X		1	1	1	1	1	1			X	
8,9,10			X		1	1	1	2	2	2			X	
7,9,10			X		2	1	1	2	2	1			X	
7,8,10			X		1	1	1	3	3		X		X	
			X		1	1								
7,8,9			X		2	1	1	1	2	2			X	
13,14			X		2	2	2	1	1	1			X	
12,14			X		2	2	2	1	1	1			X	
12,13			X		2	2	2	1	1	1			X	
			X		2	3	2	1	1	1			X	
			X		2	3	2	1	1	1			X	
			X		2	2								

Factors		Analysis Requirements			Data Format			
...rements	Physician Required	Automatic	Manual	Preservation/ Postflight Analysis	Analog	Digital	Subjective/ Voice	References	Remarks
		X				X			Apply Long coefficient to obtain in gm/ 1,000 ml
		X				X			Use of telemicroscope is feasible
		X				X		2-40	Greater accuracy than Labstix
		X				X		2-40	
		X				X		2-40	
		X				X		2-40	
		X				X		2-41	Ion specific electrode possible
		X				X			
X		X				X		2-42	
			X					2-43 2-44	Preserve samples for postflight analysis; colorimetric in-flight method, using ion exchange resin, may be feasible
		X				X			11 through 16 — Must be considered most feasible method for in-flight use at this time; Labstix combines blood, ketones, glucose, protein, and pH range measurement on a single reagent strip for colorimetric comparison
		X				X			
		X				X			
		X				X			
		X				X			
		X				X		2-45	
			X					2-46	Preserve samples for postflight analysis

Table 2-11 Medical Evaluation Summary — Biochemistry: Urine Analysis and Fecal Assay

Serum and urine potassium and sodium have been frequently quantitated by precipitation as insoluble salts of zinc uranyl acetate and pyroantimonate, for sodium, and cobaltinitrite, for potassium. These methods are considered too complicated for use in space. Recently these chemical techniques have given way to flame photometric analysis, which is relatively rapid and precise, but which would be dangerous for space application. Chloride has been determined routinely by the titrimetric method of Schales and Schales – too cumbersome for use in space.

The development of ion specific electrodes affords a relatively precise and rapid measurement method for urine pH, Na, K, and Cl. Few sample-manipulation procedures are required (in comparison with colorimetric techniques) and, most important, the danger and weight penalty involved in the use of flame photometry are not present. The electrochemical approach has an additional advantage in that state-of-the-art hardware systems can be modified easily for spaceflight conditions, and the specimen (whether serum or urine) maintains its integrity and can be used for other measurements.

A buffered salt solution (NaCl and KCl, at pH 7.4) would be used to calibrate each electrode, followed by sample measurement. Selectivity ratios for each electrode are such that little or no interference is anticipated.

Calcium. Normally, calcium in both serum and urine is determined in the clinical laboratory by the method of Clark and Collip. In this cumbersome approach, calcium is precipitated directly as the oxalate, which is then titrated with potassium permanganate or perchloroacetic acid.

Butcher et al. have developed a colorimetric technique ideally suited for spacecraft use. Nuclear fast red dye (NFR) and sodium hydroxide are added to the sample, and the intensity of the color is measured photometrically after 10 min. This method can be used with either serum or urine. Applied to urine, the method has a precision of approximately 1.5 percent; accuracy is affected by changes in the magnesium concentration, since one equivalent of magnesium reacts with approximately 40 percent the intensity of one equivalent of calcium, but this interference is not expected to create any problems for the proposed application.

pg. 2-114 Blank & Not Filmed

It is proposed to use a plastic reaction bag containing premeasured pellets of sodium hydroxide and NFR. A known quantity of urine (or serum diluted with water) is transferred to the bag by means of a syringe. Manual rupture of the pellets within the bag then permits the reaction to take place, and the bag is placed in the colorimeter for readout.

Inorganic Phosphorus. The most common method for the analysis of inorganic phosphorus in biological fluids is based upon the conversion of phosphorus in a protein-free filtrate to phosphomolybdate, and subsequent reduction to a blue-colored complex which is probably a mixture of molybdenum oxides. A number of modifications of this procedure have been devised, particularly in the use of organic and inorganic reducing (color-producing) agents. The classical method of Fiske and Subbaraw uses aminonaphthosulfonic acid as a reducing agent; McDonald and Hall use stannous chloride. Each of these methods has certain disadvantages in regard to convenience, reproducibility, and reagent stability.

The recommended method is a modification of that of Dryer et al. Urine (or serum) is deproteinized by the addition of a single crystal of TCA. A micro syringe filter holder (manufactured by Millipore) with a filter is attached to the syringe, and a protein-free filtrate is fed to the reaction bag, which contains encapsulated ammonium molybdate and semidine (N-phenyl-p-phenylenediamine). The reagents are distributed by squeezing the bag and, after an appropriate time for color development, the phosphorus level is determined by colorimetry at 620 mμ.

Creatinine. Several specific tests of renal function are based on the clearance principle. For the most part, however, these tests require intravenous infusion of test substances at constant rates, catheterization, and a relatively complex laboratory facility. Because of these constraints, the methods are judged unsuitable.

Most techniques for the analysis of creatinine are based on the Jaffe reaction, in which creatinine reacts with picric acid in an alkaline solution to form a red chromagen.

The proposed creatinine clearance test is relatively simple to perform and closely approaches the ideal substance (insulin) as an indicator of glomerular filtration rate. It can be performed in the following manner. At least 1 hr before the test, the subject is given 8 ml of water per kg of body weight. At the beginning of the test, the subject empties his bladder completely, discards the specimen, and records the time accurately. Blood is drawn after 30 min by venipuncture. The subject voids again after 1 hr; the measurement of the output in milliliters is divided by 60 to calculate the number of milliliters per minute. A volume of urine diluted with H_2O is added by syringe to a reaction bag containing picric acid and NaOH; after color development, this is read in the colorimeter at 520 mμ to determine the urinary creatinine level. The creatinine level in the blood sample is determined by syringe filtration (to obtain serum or plasma), deproteinization, filtration, and the addition of a known amount of the protein-free filtrate to a reaction bag containing alkaline picric acid; this is read at 520 mμ. Renal clearance is calculated in accordance with the following formula: $C = UV/B$, where U is urine concentration of creatinine, V is volume in milliliters per minute, and B is blood concentration of creatinine.

Creatine. This measurement would be of importance in determining the creatine-creatinine ratio. However, since the procedure involves autoclaving or boiling under pressure, it is considered unsuitable for on-board performance.

Hydroxyproline. The colorimetric determination of hydroxyproline is fairly simple. However, the preliminary sample-preparation steps require protein precipitation and hydrolysis of the precipitate. Hydrolysis requires concentrated HCl and high temperatures, both of which would be unfeasible for this application. It is recommended that only pre- and postflight analyses be performed.

Protein. The test square of the Labstix contains tetrabromphenol blue with a citrate dye buffer, which permits the indicator to change color if protein is present. The test portion will produce a "trace" reaction to protein in amounts of 5 to 20 mg/100 ml of urine. This method is considerably more sensitive than conventional turbidimetric tests, and is unaffected by urine turbidity.

Glucose. The Labstix test square contains glucose oxidase and a catalyst-chromagen combination. The test is sensitive to as little as 0.1 percent of glucose in the urine, and is specific in that it will not react with reducing substances or sugars other than glucose. The results are semiquantitative in the range of "small" to "large" amounts of glucose present. Measurement of glucose by the colorimetric technique yields more accurate data and therefore is preferred.

Blood. The test square of the Labstix contains peroxide, orthotolidine, and buffers. Hemoglobin red blood cells or myglobin catalyzes the reaction between peroxide and orthotolidine, producing a blue color proportional to the amount of hemoglobin present. This screening test for total occult blood may protect against the underestimation of hematuria that arises from averaging field counts of intact red blood cells.

Ketones. The Labstix test square contains sodium nitroprusside, glycine, and phosphate buffers. A purple color is developed by sodium nitroprusside with ketone bodies, acetoacetic acid, and acetone at the alkaline reaction provided by the incorporated phosphate buffers. It has been demonstrated that nitroprusside tests are more sensitive to acetoacetic acid than to acetone, and that acetoacetic acid is more stable for assessing ketonuria than acetone. The color in the test area is proportional to the amount of ketone bodies present.

Bilirubin. There appear to be few acceptable quantitative tests for bilirubin in urine; however, qualitative indications generally are sufficient for the detection of early hepatitis or massive hemolysis of red cells.

The use of Ictotest tablets (manufactured by Ames Company, Inc.) is proposed for a qualitative urine bilirubin test. A diazo-containing tablet is placed on a urine-moistened gauze pad in a special holder, and the color developed is compared visually to a color chart.

Bile. Use of a special paper strip is proposed for the determination of urinary bile. The strip, pre-impregnated with barium chloride, is allowed to stand in the urine for 1 min, removed, and blotted with a piece of filter paper; then two drops of Fouchet's

reagent (from a plastic squeeze bottle) are added directly to the strip. A positive reaction is denoted by the appearance of a green color, which varies in intensity with the amount of bile present.

Fecal Assays. Sample homogeneity and offensiveness are major problems in assaying feces for blood, calcium, nitrogen, etc. Although typical clinical assays could be developed for in-flight analysis of feces, it is believed that these tests would tend to degrade morale. Consequently, it is suggested that only ground-based tests be performed on preflight, postflight, and stored in-flight feces samples.

2.4.6.3 Blood Analysis. Several techniques proposed earlier for urinalysis – such as the use of ion specific electrodes for pH, Na, K, and Cl (Section 2.4.6.2) – can also be used for the analysis of the same parameters in blood or serum; these will not be discussed again here. However, these measurements are included in Table 2-12.

Total Protein. Classically, serum protein levels have been quantitated by the Kjeldahl determination of protein-nitrogen. Recently, this test has been used only for standardization of other methods, or as a reference method for evaluating other methods. Its cumbersome and relatively dangerous methodology make it totally unfit for spacecraft application.

It is recommended that one of two methods be used: the Biuret method (wet chemical), or a physical test (the measurement of the refractive index of serum). Each has advantages and disadvantages. For example, the Biuret method is simple and accurate for total serum protein, but interference is caused by turbidity and bilirubin. The refractive index method, although very rapid and direct, is also affected by turbidity, bilirubin, or components other than protein which change the refractive index.

In the refractive index method, a drop of serum from a capillary pipette is touched to the measuring prism of a temperature-compensated refractometer (American Optical Co.) so that the liquid will be drawn into the space between the prisms by capillary action. The instrument is pointed toward a light source and the scale

brought into focus by rotation of the eyepiece. A reading is obtained on the appropriate scale at the point where the dividing line between bright and dark fields crosses the scale, and the scale reading is converted by use of a table to grams per 100 milliliters of serum protein. This method has the advantage that the instrument can also be used for urine specific gravity by changing the prisms.

The Biuret method of Henry et al. can be modified to make it applicable. A 0.25-ml serum sample is diluted with physiological saline in a syringe and added to a reaction bag containing encapsulated Biuret reagent and sodium hydroxide solution. The pellets are ruptured by squeezing the bag and, after time for color development, a reading is taken photometrically at 545 mμ.

Glucose. One of the most important carbohydrates is glucose. Blood concentration changes quite dramatically in response to disease or therapy. Only recently, with the introduction of glucose-specific enzymes, has it been possible to estimate the level of "true" glucose in blood or urine. Since it appears that the estimation of glucose will be used frequently (CHO metabolism, GI absorbtion, etc.) in spaceflight application, care must be exercised in selecting a method that is simple, relatively accurate, and specific, and that requires micro-quantities of blood.

The Ames Company recently introduced Dextrostix for semiquantitative blood glucose estimation. These are cellulose strips impregnated with glucose oxidase (glucose-specific enzyme) and an indicator system. When used with a drop of fingertip blood, the indicator system produces a color that varies in intensity with the amount of glucose present. The test will detect as little as 20 to 30 mg/100 ml of true glucose and, by comparison with a color chart, values can be estimated from approximately 40 mg/100 ml through 250 mg/100 ml. It is recommended that this system be evaluated as a screening test for the proposed application.

Another glucose-specific system using lyophilized reagents was introduced recently by Cal-Biochem. This system has additional advantages in that no deproteinization of blood is required, the results are more precise than the dipstick approach, and the

Meas't No.	Type of Measurement	Clinical Monitor	Experimental	AAP-M Series	AAP 100 to 200	Related Measurements
	Evaluation Factors →	Commonality				
1	pH – Ion Specific Electrode				X	2,3,4
2	Sodium – Ion Specific Electrode				X	1,3,4
3	Potassium – Ion Specific Electrode				X	1,2,4
4	Chloride – Ion Specific Electrode				X	1,2,3
5	Glucose – Colorimeter, 340 or 620 mμ				X	6 to 13
6	Protein – Colorimeter, 545 mμ				X	5,7 to 13
7	Calcium – Colorimeter, 575 mμ				X	5,6, 8 to 13
8	Inorganic Phosphate – Colorimeter, 660 mμ				X	5 to 7, 9 to 13
9	Bilirubin – Colorimeter, 460 or 540 mμ				X	5 to 8, 10 to 13
10	Creatinine – Colorimeter, 520 mμ				X	5 to 9, 11 to 13
11	Cholesterol – Colorimeter, 660 mμ		X			5 to 10, 12,13
12	Bromsulphalein – Colorimeter, 580 mμ		X			5 to 11, 13
13	Uric Acid – Colorimeter, 660 mμ				X	5 to 12
14	BUN – Ames Test Strip				X	
15	Albumin – Test Strip				X	
16	Triglycerides – Carlson method		X			
17	Phospholipids – Turbidometer		X			
18	Capillary pO_2, pCO_2				X	1,2,3,4

(a) See Table 2-1 for definition of rating scores 1, 2, and 3.

Commonality				Relationship	Development Status				Validity		Astronaut Factors				
Experimental	AAP-M Series	AAP 100 to 200	Related Measurement	Space-Qualified	Under Development	Laboratory State of the Art	Conceptual or Research	Clinical	Sensitivity	Astronaut Acceptance	Task Complexity	Performance Time	Training Requirements	Physician Requirements
		X	2,3,4			X		2[a]	2	1	1	1	1	
		X	1,3,4			X		1	1	1	1	1	1	
		X	1,2,4			X		1	1	1	1	1	1	
		X	1,2,3			X		1	1	1	1	1	1	
		X	6 to 13			X		2	1	1	2	2	2	
		X	5,7 to 13			X		1	1	1	2	3	2	
		X	5,6, 8 to 13			X		1	1	1	2	2	2	
		X	5 to 7, 9 to 13			X		1	1	1	1	3	1	
		X	5 to 8, 10 to 13			X		1	1	1	1	2	1	
		X	5 to 9, 11 to 13			X		1	1	2	3	3		X
			5 to 10, 12,13			X		1	1	1	2	3	2	
			5 to 11, 13			X		1	1	2	3	3		X
		X	5 to 12			X		1	1	1	2	3	2	
		X				X		2	2	1	1	3	1	
		X				X		2	2	1	1	1	1	
						X		2	2	1	2	3	2	
						X		2	2	1	2	1	2	
		X	1,2,3,4			X		2	2	1	1	1	1	

t Factors			Analysis Requirements			Data Format			
aining Requirements	Physician Required	Automatic	Manual	Preservation/ Postflight Analysis	Analog	Digital	Subjective/ Voice	References	Remarks
			X				X		
			X				X		
			X				X		
			X				X		
			X				X	2-47 2-48	Ames Dextrostix is a backup method
			X				X	2-49 2-50	
			X				X		
			X				X		
			X				X	2-50 2-51 2-52	
	X		X				X	2-51	
			X				X	2-53	
	X		X				X	2-54	
			X				X		
			X				X	2-55 2-56	
			X				X	2-57 2-58	Electrophoretic method should be considered
			X				X	2-59	Requires further evaluation for in-flight use
			X				X		
			X				X		

Table 2-12 Medical Evaluation Summary — Biochemistry: Blood Analysis

system is amenable to the reaction bag concept. A 0.02-ml sample of serum or plasma is diluted with water and added to a reaction bag containing the lyophilized reagents. These are mixed and the color read at 340 mμ on the colorimeter. It is recommended that this system be evaluated for those tests requiring maximum precision of true glucose values.

Bilirubin. A breakdown product of the red blood cell, bilirubin reacts to form a pink azo-dye upon treatment with diazotized sulfanilic acid. This is the most common method employed in clinical laboratories. Henry et al. devised a modification of the older Icterus index test which appears to be ideally suited for spacecraft application. Whole serum or plasma is diluted with aqueous sodium citrate and the yellow color measured at 460 mμ. A modification of this method, in which a micro-quantity of serum is delivered into a reaction bag containing aqueous sodium citrate, is proposed. The reading is taken in the on-board colorimeter at 460 mμ, after which the reading is converted to milligrams of bilirubin per 100 milliliters.

Bromsulphalein (BSP). This test provides a sensitive indication of liver function, and is recommended even though dye injection is required. When a solution of bromsulphalein (phenoltetra-bromphthalein-disodiumsulfonate) is injected into the bloodstream, most of the dye is removed by the liver and excreted into the bile within a short period of time. With liver impairment, however, the damaged cells are not able to excrete this dye in a normal manner, and therefore considerably more dye is retained in the bloodstream.

A dose of 5 mg BSP per kilogram of body weight is injected after a short fast. Exactly 45 min later, a blood sample is drawn and serum or plasma separated. Using the method of Siligson, Marino, and Dodson, a serum sample is added to a reaction bag containing encapsulated alkaline buffer and acid reagent. The alkaline capsule is broken and a reading is taken at 580 mμ. The acid reagent capsule is then broken and a reading taken at 580 mμ, which represents the "fasting specimen" or the color of the sample in the absence of the dye. At alkaline pH, the BSP is a red-yellow chromagen which is proportional to the concentration of the dye present.

pg. 2-122 Blank not filmed

Blood Urea Nitrogen (BUN). Urea is measured by either enzymatic or chemical techniques. Early attempts to measure this variable by deamination with sodium hypobromite or precipitation with xanthydrol lacked sufficient precision. Recently, organic reagents containing adjacent carbonyl groups in the form of monoximes or dioximes in acid solution have been used with considerable success, but this method does not appear feasible for spacecraft application due to instability of the organic diacetyl monoxime.

The enzymatic method appears to be ideal. The General Diagnostics Division of Warner-Chilcott recently introduced a stick test for urea which makes use of the enzymatic approach, and the Ames Company will market a similar test kit within the next few months. A modification of the stick test is proposed as follows. A 0.2-ml serum sample is applied to a strip of chemically impregnated paper (Urograph) containing buffered urease, potassium carbonate, and, as an ammonia indicator, bromcresol green plus tartaric acid. The paper strip is placed in a clear plastic tube. The tube is capped and allowed to stand for 30 min. As capillary action draws the serum up the paper, the urease splits ammonia gas off the urea molecule, and the ammonia reacts with the tartaric acid to form ammonia tartrate. The change in pH causes the color of the bromcresol green indicator to change from yellow to blue-green over a length proportional to the amount of ammonia in the sample. This length is measured on a special scale and is converted into milligrams of urea per 100 milliliters of blood.

Non-Protein Nitrogen (NPN). This measurement is sometimes performed to measure kidney function. All such methods (Folin and Wu, Haden's modification, and Folin's modification) require the use of either 2/3- or 1/3-normal sulfuric acid, making them unacceptable for in-flight use. Also, the specific determination of urea, or of creatinine if urea is markedly elevated, is usually preferred.

Uric Acid. The measurement of uric acid is based on the reduction of a complex phosphotingstate in an alkaline solution, with the production of a blue color. This color is read out at a wavelength of 660 mμ in a colorimeter. The ordinarily rather

complex laboratory procedure, simplified considerably by the Dow Chemical Company, is available commercially in a two-step kit form. Although the procedure requires centrifugation, the supernatant need not be transferred, and only 0.2 ml of serum is required. This method is considered feasible for spaceflight adaptation.

Lactic Acid. The lactic acid content of blood is usually determined by conversion to acetaldehyde, which is then measured by titrimetric or colorimetric methods; it is important to avoid the blood glucose converting to lactic acid by glycolysis on standing. The blood should be drawn from the subject resting in the postabsorptive condition and should be prepared immediately for analysis. The presently used Boehringer method is rather complex, but should be studied for possible adaptation. The readout is obtained colorimetrically, at 340 mμ. Since the measurement in its present form is considered unsuitable, it has not been included in the Medical Evaluation Summary (Table 2-12).

Protein Electrophoresis for Individual Proteins. Although serum protein electrophoresis is a well-established clinical technique, its adaptation to spaceflight requires considerable investigation. Four basically different types of substrates are in general use: Paper, cellulose acetate, agar gel, and acrylamide gel. Cellulose acetate is far superior to paper – it provides much better resolution, is much faster, and can be observed easily; a small instrument using this method is available from Beckman Instruments, Inc. Although acrylamide gel provides the best resolution, it is considered to be too fragile for spacecraft purposes. Agar gel provides good resolution and is recommended; it has a low electrophoretic mobility, which permits the use of low-ionic-strength buffers – reducing the power requirements and permitting faster analyses. Agar gel also will permit intimate contact of the electrodes, expected to be the greatest problem in adapting electrophoresis to weightless conditions. Agar gel can also be used for immunophoresis, which would make it possible to use one unit for determination of individual serum proteins, immune components, and complement.

Cawley et al. have developed a system using agar gel-coated cronar film,* marketed by the HCS Corp., Wichita, Kansas. This system has the advantage of durability, flexibility, and transparency. The ultimate electrophoresis kit is visualized as being packaged in a plastic bag to retain moisture. Approximately six channels, each with a pair of slots for antibodies, would be provided to permit duplicate runs on samples from all astronauts or to permit the use of different antisera on the same sample. Sample application could be effected by means of a capillary tube. Electric leads contained in each kit would plug into a master power supply in the instrument console, which could be a fixed-voltage type providing 100 vdc. The duration of the electrophoretic run could be controlled by a time-limit switch within the power supply, or by visually determining the migration of a marker dye.

Staining of the plates may present a problem. Normally, electrophoretic plates are permitted to remain in contact with a dye for a long period of time, after which the excess dye is removed by multiple washings. This procedure could be duplicated by using plastic containers to inject dye into the electrophoresis bags, and then withdrawing the dye by squeezing the original dye container before insertion in the bag. Rinsing would be accomplished in the same manner. A simplified, one-step procedure may provide essentially equivalent results, but this method requires laboratory verification.

Interpretation of the electrophoretic pattern can be accomplished by TV camera for transmission to earth. A photograph of the television scan can then be monitored quantitatively by any of the commercial density-scanning instruments.

Capillary pO_2, pCO_2. These measurements must be obtained anaerobically to prevent changes from interactions with ambient air. A micro-cuvette is available commercially which can be modified to include all three electrodes in a single holder. After expression of one or two drops of blood from the finger, the capillary tube from the micro-cuvette is brought in contact with the stab wound in the fingertip through these initial drops of blood and a reading is taken while additional blood is gently squeezed from the finger. The initial drop of blood serves as a barrier to the ambient air.

*J. Lab. & Clin. Meth., Vol. 66, 1965, p. 342.

2.4.6.4 Metabolic Processes. Measurements for metabolic processes, enzyme activity, and body fluid compartments are summarized in Table 2-13.

Carbohydrate Metabolism and GI Absorption. The glucose tolerance test (GTT) has long been used as an indicator of carbohydrate metabolism, and it is recommended that this test, or a practical variation, be incorporated into the spacecraft testing plan. Upon ingestion of a standard meal (100 gm of glucose in water), the blood glucose level becomes elevated for a period of 1 to 2 hr and then returns to normal. The degree and length of elevation depends on the amount of carbohydrate absorbed from the intestine and its metabolism. Oral glucose-tolerance tests assume a relatively uniform rate of absorption of glucose from the gut, but in certain situations this is not true. Intravenous administration of glucose eliminates the effect of GI absorption, but appears not applicable for space application since it has been reported that in about 10 percent of the cases it may produce pyrexia, malaise, headache, or phlebitis.

Classically, serial blood and urine collections are conducted at specified time intervals before and after the ingestion of the standard glucose load. The glucose values are determined precisely for blood and semiquantitatively for urine. The resulting data points are clinically helpful in the evaluation of CHO metabolism and, indirectly, of GI absorption. It is recommended that fingertip blood be used, and that the analysis be performed by the procedure discussed in Section 2.4.6.3.

A practical variation of the oral glucose-tolerance test is to obtain a single blood and urine sample after a breakfast containing approximately 100 gm of carbohydrate, 30 gm of protein, and 30 gm of fat. This method correlates well with other standard tests and appears to be useful as a screening test. The basic assumption is that 2 hr after ingestion of this load the blood glucose level should approach the baseline or fasting level; an elevated level would indicate an abnormality. If results are abnornal, the standard GTT test could be run to check the results.

Fat Metabolism. Generally, fat metabolism studies utilize fat analyses of stool after ingestion of a known quantity of fat. Radioisotope studies using tagged fat can be used instead of chemical tests but are less accurate. If the blood volume is known, radioactivity counts on blood made at periodic intervals after ingestion of labelled fat also will provide information; although this would be a possible technique for spaceflights, it has the disadvantage of requiring multiple venipunctures and the ingestion of a rather large dose of radioactive material (50 to 100 μC of I-131). In view of these considerations, LMSC recommends that in-flight fecal samples be taken 24, 36, and 48 hr after ingestion of a standardized quantity of fat and preserved for postflight analysis by chemical methods.

Protein Metabolism. Determination of protein metabolism usually is accomplished on the basis of the total serum protein level, or by means of electrophoretic determination for individual proteins, such as albumin, globulin, and gamma globulin (see Section 2.4.6.3).

Lipid Metabolism. Plasma cholesterol and cholesterol ester levels provide an indication of lipid metabolism. The determination of plasma cholesterol was included in Section 2.4.6.3, while the determination of cholesterol ester is too complex for spaceflight application.

Vitamin Metabolism. Measurement of vitamin metabolism is commonly performed as Vitamin A and Vitamin B_{12} tolerance tests. Because these tests require serial serum collections, are of questionable usefulness, and are very complex in nature, they are not recommended for the IMBLMS.

Body Mass. Measurement of the astronauts' weight or body mass is important in the assessment of their health status. A development unit recently completed by LMSC (under contract NAS1-7135) operates on the principle of simple harmonic motion of an oscillating mass, with precise timing of the oscillatory movements. In this case, the oscillating mass consists of a lightweight platform carrying the astronaut and mounted on a monorail. The electronic timing system employs a light source and

Meas't No.	Type of Measurement	Clinical Monitor	Experimental	AAP-M Series	AAP 100 to 200	Related Measurements
	Evaluation Factors →	Commonality				
a	Metabolic Processes					
1	Carbohydrate Metabolism and GI Absorption – Test Meal, Blood Glucose				X	
2	Fat Metabolism – Test Meal				X	
3	Body Mass	X		X	X	
4	EMG – 2-Channel Amplifier/ Integrator			X	X	
b	Enzyme Activity					
1	Alkaline Phosphatase – Colorimeter, 500 mμ				X	b2 to 5
2	LDH – Colorimeter, 340 mμ		X			b1, b3 to 5
3	Amylase – Colorimeter, 420 mμ		X			b1,2,4,5
4	SGOT – Colorimeter, 340 mμ		X			b1 to 3, b5
5	SGPT – Colorimeter, 340 mμ		X			b1 to 4
c	Body Fluid Compartments					
1	Total Body Water – Ethanol Breath Analyzer, Gas Chromatograph				X	
2	Plasma Volume – Colorimeter, 620 mμ				X	

(a) See Table 2-1 for definition of rating scores 1, 2, and 3.

mmonality		Rela-tion-ship	Development Status				Validity		Astronaut Factors					
Series	AAP 100 to 200	Related Measurement	Space-Qualified	Under Development	Laboratory State of the Art	Conceptual or Research	Clinical	Sensitivity	Astronaut Acceptance	Task Complexity	Performance Time	Training Requirements	Physician Required	Automatic
X				X		1[a]	2	1	1	2	1			X
X				X										
X			X			3	2	1	1	3	1			X
X				X		3	2	1	2	3	2			X
X	b2 to 5			X		1	1	2	2	3	2			X
	b1, b3 to 5			X		1	1	2	2	3	2			X
	b1,2,4,5			X		2	2	2	2	2	1			X
	b1 to 3, b5			X		2	1	2	2	3	2			X
	b1 to 4			X		2	1	2	2	3	2			X
X				X		2	2	1	1	1	1			X
X				X		1	1	3	3	3		X		X

Factors		Analysis Requirements			Data Format			
...ing ...equirements	Physician Required	Automatic	Manual	Preservation/ Postflight Analysis	Analog	Digital	Subjective/ Voice	References	Remarks
			X				X		
				X					Preserve fecal samples at 24, 36, and 48 hr after test meal for postflight analysis
			X				X		LMSC/NASA or AF device
			X				X		
			X				X	2-60	Electrophoresis
			X				X	2-61 2-62	Electrophoresis
			X				X	2-63	
			X				X	2-64	
			X				X	2-65	
			X				X	2-66 2-67	Colorimetric method following anti-pyrine injection (350 mμ)
X			X				X	2-68 2-69 2-70	Evans Blue method preferred to others

Table 2-13 Medical Evaluation Summary – Biochemistry: Metabolic Processes, Enzyme Activity, and Body Fluid Compartments

phototransistor as the sensing device, and an electronic ripple counter to determine the duration of a pre-determined number of forward-and-backward oscillation cycles. Oscillation is imparted to the mass by means of two coil springs, starting from a fixed position in which one of the springs is slightly compressed and the other stretched; upon release of a catch, the mass starts oscillating.

A device developed by the U.S. Air Force operates on the same principle but utilizes leaf springs, rather than coil springs. Both devices have an accuracy of ±0.10 lb for a man of average weight. The LMSC/NASA Mass Measurement Device was tested successfully on a KC-135 aircraft flying zero-g parabolas. The major advantage of the LMSC/NASA device (over that developed by the Air Force) is that, by replacing the normal springs used for mass measurements with soft springs, it can also be used to measure man's linear acceleration threshold – down to a range as low as 5 to 10 cm/sec^2.

Muscle Size and Strength. The absence of a gravitational force field produces muscular deconditioning (muscular disuse atrophy). In fact, a small reduction in muscle mass was measured in the Gemini 3 and Gemini 6 astronauts, and such a reduction probably has occurred on other flights. Since more severe musculoskeletal pathology can be expected following long-term exposure to weightlessness, it is necessary to develop a quantitative method to determine the decrease in muscle size and strength; measurements could then be used as a guide to determine the amount of exercise the astronauts would have to perform on-board to prevent muscular deconditioning.

Muscle size can be measured by using a flexible tape measure applied to accurately determined positions on various limbs. Although inaccuracies are certain to occur due to slight variation in the tension on the tape measure if different persons perform the measurement, this measure is useful for in-flight application. No other more accurate method is presently available.

Muscle strength can be measured with a hand-held dynamometer. The astronaut would simply squeeze the grip of the dynamometer with maximum force and take a

 pg. 2-130 BLANK, & not Silmed

reading. While this method has its merits, it is likely to give a positive indication only when rather significant changes have already occurred. A more accurate and sensitive method, involving electromyography, makes use of the principle that for a certain muscle to perform a measured amount of effort when atrophy has occurred requires "recruitment" of additional spindles (motoneurons) to perform this task, as compared to the normal muscle.

The number of motoneurons firing simultaneously in a unit of time can be assessed by means of a pulse-frequency EMG integrator.* For spaceflight use, a two-channel unit would be sufficient, and different muscles can be measured sequentially. The electrode locations should be marked with a tattooed dot to ensure accurate placement from one measurement to the next. By using gradually increasing workloads, as determined with a high-resolution dynamometer, the performance level at which recruitment becomes necessary can be determined accurately.

Body Volume. Various methods of obtaining this measurement have been investigated, but none appears feasible for in-flight adaptation. A method using the TV camera and a grid has been suggested; its major disadvantage lies in the necessity of lining up the subject very accurately with the "vertical" reference line of the grid, which doubtless would be very difficult in weightlessness. Also, simultaneous pictures should be taken corresponding to the three body axes.

In another method, still in an experimental status, a strong light source projects a grid pattern onto the subject's body. The same objection applies as with TV, though perhaps to a lesser extent.

An LMSC invention disclosure by G. Goble describes the use of two airtight plastic half "shells" for body-volume measurements. However, the difficulties associated with obtaining thermal equilibrium before the various parameters can be read off have not been analyzed sufficiently to warrant present inclusion of this procedure, and the space required for storage of the half shells is very considerable.

---

*J. M. Lagerwerff and H. D. Fyffe, "Improved Six-Channel Electromyograph Amplifier-Integrator and Event Counter," Trans. Fifth National Symposium of Human Factors in Electronics, May 1964

Therefore, determining the body surface area from length and weight (the latter determined by means of a mass measurement device) by use of the NMRI monogram would appear the only presently feasible method of approximating body volume.

Endoradiosondes. The use of endoradiosondes to measure intestinal motility, pressure, and pH is a fairly recent development which has encountered several technical problems. Once the sonde has passed through the stomach, there is no accurate way of determining its location without the use of either fluoroscopic examination or complex tri-orthogonal antenna arrays. The abdominal belt antenna does not permit localization of the sonde, and it is felt that the pH and pressure information by themselves are of limited value. Further development effort is required before the use of endoradiosondes can be recommended.

2.4.6.5 Enzyme Activity. Of the more than 40 enzymes that have been recognized in serum, only a few lend themselves to possible adaptation for measurement under spaceflight conditions. The amount of enzyme present is not measured directly, but is inferred from its activity in catalyzing a chemical reaction. The rate of a reaction catalyzed by an enzyme is directly proportional to its concentration.

Alkaline Phosphatase. This enzyme is of importance in the detection of hepatic and bone diseases. The various methods available for its determination depend on the measurement of one of the products of hydrolysis of phosphate-monoesters. By using antipyrine as the color reagent (Klein method), alkaline phosphatase activity can be determined colorimetrically at a wavelength of 500 mμ following incubation.

Lactic Dehydrogenase (LDH). Serum lactic dehydrogenase is an enzyme that catalyzes the conversion of pyruvic acid to lactic acid and is determined in the clinical laboratory in accordance with the classical method of Wroblewski, as modified by Henry et al. The sample is incubated with pyruvate and reduced diphosphopyridine nucleotide (DPNH), and the decrease in absorbence of DPNH at 340 mμ is a measure of the LDH activity.

It is recommended that the Worthington pre-packaged enzyme kit be used. A diluted serum sample is added to lyophilized reagents in a reaction bag, incubated, and read at 340 mμ.

Amylase. Amylase is a general term applied to a group of enzymes, found in animal and plant tissues, which hydrolize starch, glycogen, and dextrins to smaller disaccharide units (usually maltose).

There are three general categories of amylase methods: viscosimetric, which measure the depolymerization of starch (decrease in viscosity); saccharific, which measure the amount of sugar released; and iodometric, which measure the amount of undegraded starch. It has been pointed out that there really is no "right" way to perform serum amylase determinations; an amylase method which is rapid and can distinguish, with a fair degree of certainty, the difference between normal and abnormal is generally all that is needed for clinical evaluation. In line with this situation, Fishman and Doubilet have introduced a semiquantitative modification of the iodometric method requiring only a 5-min incubation period; this technique appears adequate as a rapid screening test.

It is recommended that this method be used. The decrease in the starch-iodine blue color after a 5-min. incubation period is a measure of the amylase activity. The decrease in absorbence is measured at 420 mμ in the colorimeter.

Serum Glutamic Oxalacetic Transaminase (SGOT). Determination of SGOT is accomplished routinely in the clinical laboratory in accordance with the method of Karmen, as modified by Henry et al. In this method, L-aspartic acid and a ketoglutaric acid are incubated with the sample, and the rate of formation of oxalacetic acid is determined by the MDH-DPNH system. The rate of decrease in absorbance at 340 mμ is a measure of the SGOT activity.

Recently, the Worthington Biochemical Corporation (Freehold, New Jersey) introduced prepackaged enzyme reagents for the determination of this variable with the Karmen-

Henry method. The reagents are premeasured, lyophilized, and packaged in individual vials. Each vial contains the proper amount of lyophilized reagent for a single test, which is reconstituted simply by the addition of water.

It is proposed that this concept be used for space application. The lyophilized reagents will be packaged in plastic reaction bags, with serum (diluted with water) added by means of a plastic pipette. The reaction bag is squeezed to reconstitute and mix reagents, then incubated at 37°C. The reaction is monitored in the colorimeter at 340 mμ.

Serum Glutamic-Pyruvic Transaminase (SGPT). Determination of SGPT is performed in the laboratory by the method of Henley and Pollard, in which excess lactic dehydrogenase (LDH) and reduced diphosphopyridine nucleotide (DPNH) are added to the system. As the pyruvate is formed, it is reduced to lactic acid with the concomitant oxidation of DPNH to DPN. The rate of decrease in absorbence at 340 mμ (the rate of oxidation of DPNH) is a measure of GPT activity.

Materials for this determination, like those for SGOT, are prepackaged by the Worthington Biochemical Corporation, and it is recommended that it be used. A diluted serum sample will be added to a reaction bag containing the lyophilized reagents, followed by incubation at 37° C and a reading in the colorimeter at 340 mμ.

2.4.6.6 Body Fluid Compartments. Measurement of the body fluid compartments is restricted to total body water and plasma volume. These determinations require intravenous injection of chemical substances and either serial or single withdrawal of blood samples for analysis. Therefore, they can be performed only by a physician who is thoroughly acquainted with these techniques, which call for great accuracy of execution.

Total Body Water. Friis-Hansen and associates have derived a formula which correlates total body water with body weight for children weighing up to 20 kg. This formula,

$$\text{Total body water in liters} = (0.55 \times \text{weight in kg}) + 0.51$$

fits quite well with the data available for adults. The standard deviation for the formula is ±7.4 percent.

Clinical estimation of total body water can be performed by intravenous injection of antipyrine, which is rapidly and evenly distributed throughout all of the body's water compartments. Blood samples are taken at various intervals before and after the injection and are deproteinized and treated with sodium nitrite. The concentration of 4-nitrosoantipyrine formed is measured colorimetrically, using a wavelength of 350 mμ (Brodie method).

Since ethanol also appears to distribute itself evenly throughout the body, the use of the reversed "drunk driver test," which derives the level of blood alcohol from the level present in expired air, should also be considered for space application. The advantages of this method are that it is simple, fast, and does not require an on-board physician. Despite the necessity of carrying a fairly large amount of 100-proof (50-percent) ethanol or equivalent alcoholic product on-board (30 to 50 ml/man/test), this test is recommended because of its advantages.

Plasma Volume. Evans Blue (Tolidene-1824) is a blue dye that binds totally to serum albumin and is therefore retained within the plasma space. The dye escapes from the blood very slowly; hence, knowledge of the exact quantity injected intravenously, and the determination of its concentration in the plasma 15 min after injection, allow calculation of the entire space in which the dye has been diluted (Gregerson method). Evans Blue has an absorption spectrum maximum at 610 mμ, which shifts to 620 mμ in the presence of plasma proteins. Numerous precautions are required to avoid artifacts from influencing the measurement, and the standard laboratory method of sample preparation is complex – making its use in spaceflight cumbersome.

Shapiro has described a considerable simplification of the original method which requires only one determination without the use of a control plasma. Although

theoretically correct, the use of a plasma blank is of questionable value in view of the problems arising from differences in turbidity and hemolysis between the blank and the dyed specimen.

Caster et al. have developed a direct method using Zephiran as a solvent for the T-1824, rather than saline, to avoid the errors caused by absorption of the dye on the surfaces of the syringe and other containing vessels and on the plasma proteins themselves. Saline concentration and pH effects also cause variations in the amount of dye absorption. These authors were able to perform plasma volume determinations using only 0.02 ml of plasma.

LMSC recommends that this last method be developed further for adaptation to space-flight use.

Section 3
MISSION AND SPACECRAFT ANALYSIS

This section presents LMSC's current understanding of the NASA Apollo Applications Program mission plans and spacecraft configurations relative to the implementation of the proposed earth orbital flight program. The currently envisioned missions and spacecraft assignments of the Apollo Applications Program are summarized in Table 3-1. The interface of IMBLMS equipment with each of the candidate spacecrafts (CM, RCM, LM, MDA, AM, and S-IVB) is summarized in Table 3-2.

As NASA's AAP effort continues both in planning and hardware development, program details will further solidify and specific experimental requirements will evolve into operational reality. Current program direction, however, has provided a great deal of flexibility in mission planning and in spacecraft definition, selection, and assignment. Thus, specific mission details and spacecraft flight assignments will undoubtedly change. As the IMBLMS's program continues, LMSC will endeavor to update the mission and spacecraft data.

Several NASA documents (Refs. 3-1 through 3-3) relative to AAP have been used as the basic source material for the Cluster A mission profile. Current LMSC contract effort for NASA has provided the baseline for the Cluster B mission profile. Only meager details are available for Cluster-C, Cluster-D, and synchronous-earth-orbit mission profiles. Data relative to these missions will be included in the final report as they become available.

Figure 3-1 shows a preliminary LMSC concept of the overall AAP mission scheduling and spacecraft flight assignment. Included are spacecraft identifications, NASA agency responsibilities, flight numbers approximate launch dates, and a general indication of time requirements for the following:

- Preliminary definition
- AAP integration planning and conceptual design

- Flight/mission go-ahead
- Design and development
- Manufacture, fabrication/assembly, and modification
- Subsystems and experiment installations
- Systems test and checkout
- KSC operations
- AAP flight/mission milestones

Figure 3-1 presents information not only for Clusters A and B, but also for the following missions:

- Clusters C and D
- Synchronous earth orbit
- Lunar orbit
- Lunar orbit and surface

The master schedule presented in Fig. 3-1 is tentative only and is continually being changed. Nonetheless, it is a reasonable and fairly realistic starting point relative to AAP planning and IMBLMS implementation.

3.1 CLUSTER A: MISSION GOALS, PURPOSES, OBJECTIVES, GROUNDRULES, AND PROFILE

The primary goals of missions AAP-1A through AAP-5 are to provide the opportunity to evaluate man's capabilities in space and to conduct a variety of tasks for periods of time in excess of those possible in the Apollo Program. Purposes and objectives will be discussed, and basic groundrules for each of the seven missions will be presented.

3.1.1 Mission Purposes

The general purposes of the initial AAP flight (AAP-1A) are as follows:

- Conduct earth-orbit technology experiments.
- Check out the lunar mapping and survey system (LM&SS) for the Apollo Program.
- Further verify the various navigational and operational subsystems of the CSM.

Cluster and Flight Number	Spacecraft	Orbit	Orbital Inclination (deg)	Orbital Altitude (nm)	Mis Dur
I. Cluster A					
AAP-1A, No. 207	XCSM and LM&SS	Circular	29	120	10 to
AAP-1, No. 206	CSM	Circular	29	260	14 to
AAP-2, No. 208	OWS-1, AM and MDA	Circular	29	260	8 to (Jan
AAP-3A, No. 209	RCM or LCSM (1st article refurbished)	Circular	29	260	Up to (Mar
AAP-3, No. 211	CSM	Circular	29	260	28 to
AAP-4, No. 210	LM-8/ATM-A	Circular	29	260	22 to (Jun
AAP-5, No. 212	RCM or LCSM	Circular	29	260	Up to (Sep
II. Cluster B					
No. 213	LCSM (114)	Circular	29	260	10 to 1
No. 214	OWS/AM/MDA-2	Circular	29	260	1 yr w visit, ply, a transf ularly out ye
No. 215	LCSM (115)	Circular	29	260	
No. 216	LCSM (117)	Circular			
No. 217	LM(12), Rack/Apps. A/B	Circular	29	260	(Jan - 197
No. 218	LCSM (119)	Circular	29	260	

Mission Duration	Experiment Objectives	Remarks
) to 14 days	Qualification of LM&SS for circumlunar mapping and earth survey	Absolute minimum of biomedical monitoring equipment: thermometer, blood pressure device, stethoscope, biosensors for heart beat and respiration rate, and radiation dosimeter
; to 28 days ; to 28 days (Jan 1969)	S-IVB spent-stage operations; XCSM, AM, and MDA subsystems performance	Approved biomedical experiments planned for installation in MDA; some question as to availability; second day after CSM liftoff, rendezvous accomplished with S-IVB OWS-1; very difficult to send up major biomedical experiment/equipment for this cluster on remaining Cluster A and B flights through 213
) to 14 days Mar 1969)	Revisitation, resupply, and reuse of airlock and OWS-1 (evaluate further use capability of OWS-1)	Minimum of biomedical equipment (same as AAP-1A, No. 207) on board RCM; rendezvous with OWS-1 after liftoff; no biomedical equipment available if OWS-1/MDA not habitable
; to 56 days ; to 56 days (Jun 1969)	Solar astronomy, OWS/LM-ATM docking, resupply and reuse of OWS (MSFC includes all NASA-approved biomedical experiments on this flight; not known where or how stowed)	Same remarks as for AAP-1 and AAP-2, except LM-A/ATM instead of S-IVB OWS and AM/MDA is second spacecraft with which rendezvous will be made about 2 days after CSM liftoff
) to 14 days (Sep 1969)	Revisitation, resupply, and reuse of airlock and OWS-1 (evaluate further use capability of OWS-1)	Same remarks as for AAP-3A, No. 209
) to 14 days	Revisitation, resupply, and reuse; setup of S-IVB and ATM for near-continuous operation	Same remarks as for AAP-3A, No. 209
yr with sit, resup- y, and crew ansfer reg- arly through- it year	Meteorology experiments	If OWS-1 cluster fails, LMSC recommends additional biomedical equipment be sent aloft in OWS-2 MDA
	Resupply	Newly approved NASA biomedical experiments could be orbited
	Resupply	
an - Dec 1970)	Earth resources and resupply	
	Resupply	Newly approved NASA biomedical experiment could be orbited

Table 3-1 Characteristics and Objectives of AAP Vehicles

	Cluster and Flight Number	Spacecraft	Orbit	Orbital Inclination (deg)	Orbital Altitude (nm)
II. (ctd)	No. 219	LCSM	Circular	29	260
	No. 220	LCSM	Circular	29	260
	No. 221	LCSM	Circular	29	260
	No. 222	LCSM	Circular	29	260
III.	Cluster C				
	No. 518	Mission Module, AM, and MDA	Circular	29	260
	No. 223	LCSM and E.C.	Circular	29	260
	No. 224	LCSM and E.C.	Circular	29	260
	No. 225	LCSM and E.C.	Circular	29	260
	No. 226	LCSM and E.C.	Circular	29	260
IV.	Cluster D				
	No. 522	Mission module, AM, and MDA	Circular	29	260
	No. 227	LCSM and E.C.	Circular	29	260
	No. 228	LCSM and E.C	Circular	29	260
	No. 229	LCSM and E.C.	Circular	29	260
	No. 230	LCSM and E.C.	Circular	29	260
V.	Synchronous Earth Orbit				
	No. 514	LCSM, OWS-3, AM, and MDA	Synchronous	28.5	19,350
	No. 515	LCSM and LM-A/ATM-3	Synchronous	28.5	19,350
	No. 523	LCSM and LM-A/ATM-4	Synchronous	28.5	19.350

pg. 3-4 BLANK & NOT Filmed

Mission Duration	Experiment Objectives	Remarks
1 yr with visit, resupply, and crew transfer regularly throughout year (1971)	Visit, resupply, and crew exchange at 90-day intervals; science and technology experiments; biomedical laboratory tests; 4- to 6-man CSM operations and land landing	Assumption: biomedical equipment probably brought aloft by LCSM or alternate OWS if required; if assumption is correct, LMSC recommends continuation of biomedical program (with varying degrees of emphasis) as one of the major flight objectives; a minimum of volume for storage at liftoff in the LCSM
1 yr with visit, resupply, and crew transfer regularly throughout year (1972)	1-yr mission module; four revisitation flights; resupply; biomedical laboratory test/Bio-A (No. 223 is biomedical laboratory)	Same remarks as for Flights 219 through 222, Cluster B
1 yr with visit, resupply, and crew transfer regularly throughout year (1973)	1-yr mission module and rendezvous with 518 assembly; resupply; similar to Cluster C mission; possible manned orbiting telescope (MOT) for 1 yr	Same remarks as for Flights 219 through 222, Cluster B
45 to 90 days 45 to 90 days 45 to 90 days (1971-1972)	Communications and tracking relay experiments; synchronous orbit operations; communication and meteorology experiments; initial activation, resupply, and reuse of airlock/OWS; stellar astronomy; biomedical observation of radiation at high altitude, experiments M011 (cytogenetic studies) and M022 (red blood cell survival)	No hematological-specific experiments approved for AAP at this time; M011 and M022 recommended for approval as candidate experiments for these flights

Table 3-1 (Cont.)

Features and Constraints	SM	CSM	RCM
Available Experiment/ Equipment Volume For Installation	Sector I (pie-shaped): 125 cu ft; 160 × 48-to-13 × 49 in.; 44-sq-ft exposure to space	2 boxes, 18.7 × 82 × 11 in.; tunnel 30 × 15 in.; 9 × 50 × 50 in. beneath couches; 12-in. cube where helmets stored; 2 small compartments in forward lower equipment bay	3 prime areas: (1) 32 in. high × 16 in. deep × 39 in. long; (2) 32 in. high × 16 in. deep × 32 in. long; (3) 32 in. high × 16 in. deep × 11 in. long (this area has minimum top accessibility and much available space)
Available Free Volume For Conduct of Experiments	EV conduct or remove to spacecraft; 44 sq ft access for EV conduct	Sufficient room for one crewman to stand forward of couches in front of lower equipment bay	Approximately 40 sq ft of floor space for crewmen; no couches, sufficient area for 1 or 2 crewmen to sit at consoles; 366 cu ft for RCM total laboratory volume
Transportability			
Hatch	No hatch; remove sector cover for access	Less than 32-in.-dia. hatch (approximately 29 in.)	Less than a 32-in.-dia. hatch (approximately 29 in.)
Translation and Transfer of Equipment	EV translation and transfer; rails, handholds, and line required	No internal translation/transfer techniques provided; hand-positioned by crewman	No internal translation/transfer techniques provided; hand-positioned by crewman
Pressurized Versus Nonpressurized Compartments	Sector I nonpressurized; equipment stowed in compartment must be designed for vacuum; not pressurized at liftoff	Generally can be depressurized; pressurized at liftoff; may have to be repressurized on orbit after docking	Primarily a shirt sleeve compartment; not anticipated to depressurize at liftoff; may have to be repressurized on orbit initially after docking
Experiment Mounting Provisions	Mounting provisions fitted on ground	Generally none basic to spacecraft; use of a few compartments feasible	Experiment/equipment generally pre-installed in compartments; modular remove/replace design

pg. 3-6 BLANK & not filmed

	Spacecraft				
	LM	MDA	AM	S-IVB	Remarks
6 in. ; 6 in. ; 6 in. : iimum ind ace)	Two small areas in LM-A/rack with ATM: (1) 25.5 × 4 × 4 in.; (2) 12 × 8 × 7.5 in.; (perhaps some panel area on main control/display panel in forward station area)	Tunnel: 120-in. ID. 163-in. high; experiment packages can extend in 20 in.; 4 docking ports approximately 32 in. unavailable for experiment mounting area; much available space for experiment/equipment package mounting	Tunnel: 65-in. ID; no experiment/equipment stowage area available; tunnel length 153 in.; no experiment/equipment stowage area in STS, which is 47 in. long × 120 in. ID	Compartment 6.5 ft high, one-half of 20-ft dia. floor; 1,300-cu-ft volume; some experiment/equipment stowage above crew compartment hard ceiling; maximum available experiment/equipment stowage area	SM: experiment/equipment installed for EVA use CSM: minimum experiment/equipment stowage volume RCM: considerable experiment/equipment stowage volume LM: minimum storage volume with ATM installed MDA: considerable experiment/equipment stowage volume AM: no internal experiment/equipment stowage volume S-IVB: maximum experiment/equipment stowage volume
sq ft crew- suf- or 2 con- ir :ory	2 areas available of free volume: (1) aft area 40 in. deep × 24 in. wide × 60 in. high (2) 28 in. deep × 36 in. wide × 72 in. high	Free volume 13.5 ft high and 5 ft in dia. when experiment/equipment extends into 10 ft dia. of MDA	No experiments to be conducted in AM tunnel	Approximately 1,300 cu ft available; 20-ft-dia. floor, 6.5 ft high; considerable experiment area available	SM: free volume for experiment conduct is EV CSM: minimum free volume for large equipment vs. man RCM: reasonable free volume for experiment performance LM: 2 standup areas only; minimum free volume MDA: adequate free volume for experiment performance AM: no experiment conducted in tunnel S-IVB: maximum free volume for any experiment
.-dia. :ely	Oblong hatch less than 32 in. in dia.	Less than a 32-in.-dia. hatch opening into the docked spacecraft	A 39.75-in.-dia. hatch to S-IVB OWS	A 39.75-in.-dia. hatch opening to AM	CSM/RCM/LM: hatches less than 32 in. (29 in.) AM/S-IVB: Hatch is 39.75 in. MDA: 5 ports at 29 in.; AM interface, 65 in.
lation/ es pro- ioned	A few handholds; no translation/transfer rails or lines	At present no technique designed into MDA for translation/transfer; handholds near ports	Handrails in tunnel; no translation/transfer rail or lines	Several handrails; fireman's pole; pole usable as translation/transfer technique for moving packages	SM: external rails and handholds CSM/RCM: no translation/transfer techniques or rails LM: minimum handhold/rail capability MDA/AM: no translation/transfer rails S-IVB: handholds, rails, and pole
: sleeve : anti- surize re to be orbit king	May be frequently depressurized and repressurized for ATM experiments; pressurized at liftoff; must be repressurized on orbit after docking procedure	May frequently be depressurized and repressurized; pressurized at liftoff; must be repressurized on orbit after docking with spacecraft	Airlock within airlock module used for EVA; pressurized at liftoff; must be repressurized on orbit after docking	Must be purged on orbit; pressurized on orbit; pressure probably maintained for entire mission; full of fuel at liftoff	SM: no pressurization CSM/RCM: minimum number of depressurizations and repressurizations LM: frequent depressurizations and repressurizations MDA: minimum number except for docking AM: internal airlock; depressurization and repressurization – docking S-IVB: not depressurized after purge
ment talled ; modu- ce	Generally none basic to spacecraft; use of a few compartments feasible; mounting provisions must be grnd-installed; mod. remove/replace design not practical	Mounting provision located around periphery of tunnel ID; experiment/equipment cannisters easily mounted; remove/replace very feasible	No internal mounting provisions	Experiment workshop area has mounting provisions on floor, on partition grid surfaces, and on rails between thermal curtain hat sections and tank wall	SM: ground-installed for experiment-peculiar CSM: minimum to no mounting provisions RCM: compartment mounting; remove/replace LM: minimum mounting capability MDA: maximum mounting capability AM: no experiment mounting capability required S-IVB: excellent mounting provisions

Table 3-2 Interface of IMBLMS Equipment With AAP Candidate Spacecraft

AAP PLANNING MASTER SCHEDULE

PRIMARY RESPONSIBILITY		PLANNED LAUNCH VEHICLE ASSIGNED	PLANNED PAYLOAD ASSIGNED
NEAR EARTH CLUSTER MISSIONS:			
MSC		207	CSM/N&SS
MSC		206	XCSM (FIRST ARTICLE MOD)
	MSFC	208	OWS-1, AM/MDA
MSC		209	RCM (FIRST ARTICLE REFURB)
MSC		211	XCSM
	MSFC	210	LM-A/ATM-1
MSC		212	RCM
MSC		213	LCSM
MSC	MSFC	214	E.C./APP-A *ALT. OWS-2 ②
MSC		215	LCSM/BIO-MED LAB
MSC		216	LCSM
MSC	MSFC	217	E.C./APP-B *ALT. LM-A/ATM-2 ②
MSC		218	LCSM
	MSFC	219	LCSM, E.C. (CONTINGENCY P/L)
MSC		220	LCSM, E.C. - BIO-MED LAB
MSC		221	LCSM, E.C.
MSC		222	LCSM, E.C. - BIO-MED LAB
	MSFC	518	MISSION MODULE
MSC		223	LCSM, E.C.
MSC		224	LCSM, E.C.
MSC		225	LCSM, E.C.
MSC		226	LCSM, E.C.
	MSFC	522	MISSION MODULE
MSC		227	LCSM, E.C.
MSC		228	LCSM, E.C.
MSC		229	LCSM, E.C.
MSC		230	LCSM, E.C.
SYNCHRONOUS EARTH-ORBIT MISSIONS:			
	MSFC	514	LCSM, OWS-3, AM/MDA
	MSFC	515	LCSM, LM-A/ATM-3
	MSFC	523	LCSM, LM-A/ATM-4
LUNAR-ORBIT MISSIONS:			
MSC		512	LCSM, LM & SS (LUNAR ORBIT)
MSC		519	LCSM, LM & SS (LUNAR POLAR ORBIT)
LUNAR ORBIT/SURFACE MISSIONS:			
MSC		513	LCSM, LM-A/D (LUNAR SURFACE EXPL)
	MSFC	516	LCSM, STRIPPED LM
MSC		517	LCSM, LM TAXI
	MSFC	520	LCSM, LM TRUCK
MSC		521	LCSM, LM TAXI - OEM
	MSFC	525	LCSM, LM TRUCK
MSC		526	LCSM, LM TAXI - OEM

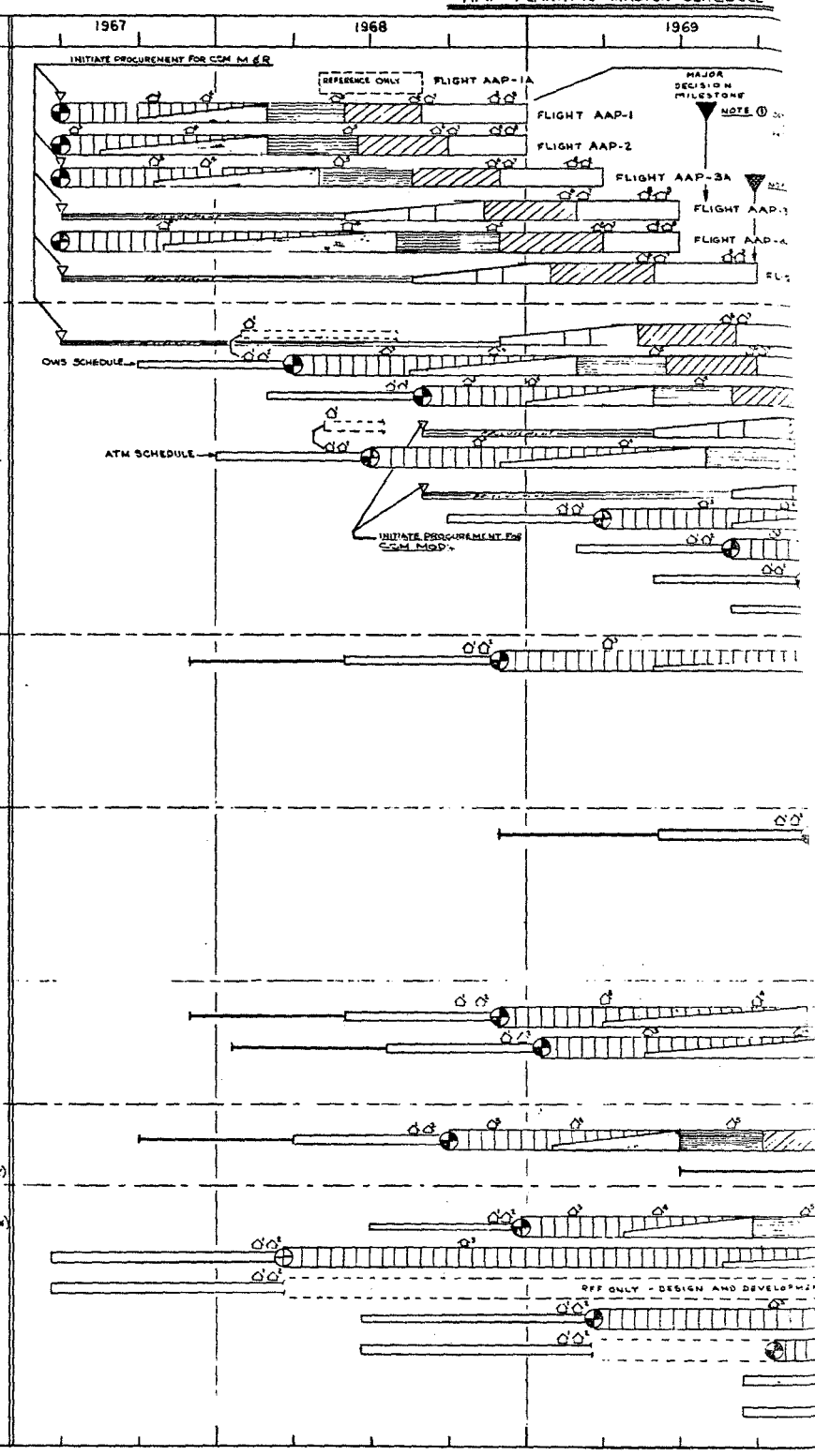

Pg. 3-8 BLANK & Not Filmed

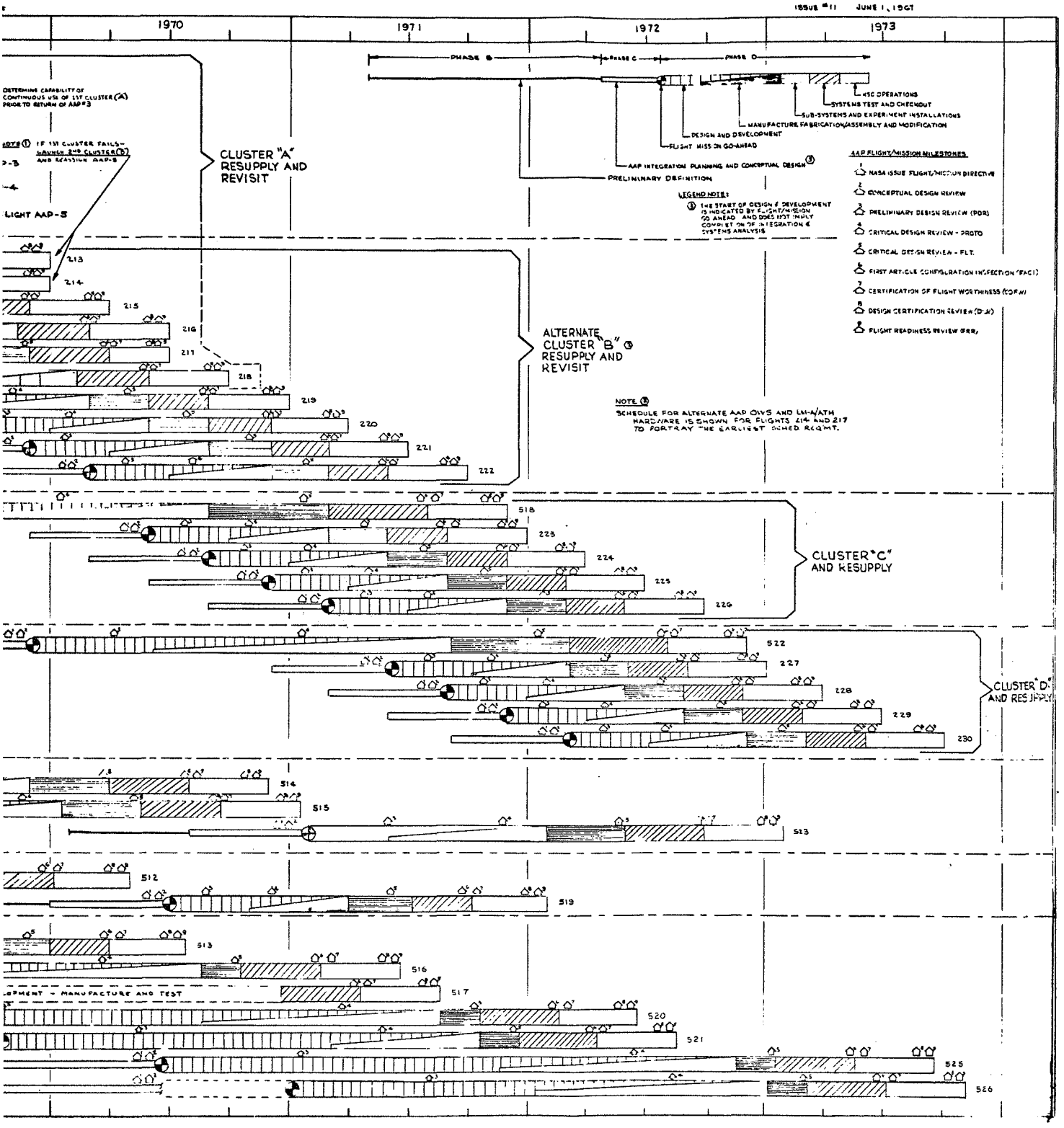

Fig. 3-1 Tentative Master Schedule – Clusters A, B, C, and D Missions, and Synchronous-Earth-Orbit and Lunar Missions

The general purposes of the AAP-1 and AAP-2 portions of the Cluster A mission are as follows:

- Conduct low-altitude, low-inclination, earth-orbit operations of a spent S-IVB orbital workshop (OWS) for an open-ended maximum duration of 28 days.
- Evaluate the support requirements and determine the performance capabilities to qualify man for long-duration space flight.
- Conduct various in-flight scientific and technology experiments.
- Provide for subsequent reactivation and reuse of the OWS on later missions.
- Conduct in-flight experiments in the areas of science, applications, technology, engineering, and medicine.

The general purpose of the AAP-3A portion of the Cluster A mission is a manned revisit to the AAP-1/AAP-2 cluster to determine the present status of the cluster and to transport resupply provisions before the launch of AAP-3 and AAP-4.

The general purposes of the AAP-3 and AAP-4 portion of the Cluster A mission are as follows:

- Obtain data on the characteristics of the sun by using a solar astronomy observatory in earth orbit during a period of maximum solar activity.
- Evaluate the performance of a manned solar astronomy observatory to provide engineering and scientific data essential to the development of advanced observation systems.
- Reactivate the OWS stored in orbit and use it as a base of operations for the conduct of scientific, technology, and engineering experiments.
- Continue the evaluation of man's capabilities and support requirements for long-duration space flight.

The general purpose of the AAP-5 portion of the Cluster A mission is a manned revisit to the AAP-3 and AAP-4 orbital assembly to determine future habitability of the orbiting cluster.

Pg. 3-10 Blank & Not Filmed

3.1.2 Mission Objectives

If preflight malfunctions of spacecraft or launch vehicle systems, ground equipment, or instrumentation prevent the objectives from being met, the mission will be held or cancelled until the malfunction has been eliminated.

3.1.2.1 Flight AAP-1A (Ref. 3-1). The following objectives will be met:

- Verify and practice the transposition maneuver of the CSM.
- Demonstrate hard-dock of the command and service module to the LM&SS.
- Test the LM&SS photographic equipment and spacecraft subsystems in earth orbit for subsequent lunar mapping and survey missions.
- Determine the performance of CSM subsystems during spaceflight for up to 14 days' duration.
- Verify the ability of the mission ground support systems to support CSM activities at low orbits.
- Conduct a variety of manned experiments in the fields of space sciences, advanced technology, and engineering, and in earth orbital simulation.

3.1.2.2 Flights AAP-A1 and AAP-A2 (Refs. 3-1 and 3-2). The following objectives will be met:

- Demonstrate rendezvous and hard-dock of the command and service module (CSM) to the multiple docking adapter (MDA) of the S-IVB/airlock-module (AM).
- Demonstrate passivation of the spent S-IVB stage and activation of the OWS as a habitable space structure (Experiment M402).
- Determine the feasibility of operating the OWS as a habitable space structure for a period of up to 28 days from the AAP-1 launch date through evaluation of CSM/S-IVB/AM/MDA, to include the following:
  - Subsystems performance
  - Astronaut mobility and work capability in both intravehicular and extravehicular activity
- Determine performance of the CSM subsystems during spaceflight for up to 28 days' duration.

- Evaluate spaceflight environmental effects on the crew of a mission duration up to 28 days.
- Demonstrate the feasibility of extending CSM mission duration by means of an external source of expendables.
- Leave the OWS, MDA, and AM docked in orbit for reactivation and reuse.
- Verify the ability of mission ground support systems to support mission activities of extended duration.
- Obtain data to evaluate spaceflight environmental effects on the crew for a mission duration up to 28 days (Experiments M050, M051, M052).
- Obtain engineering and technological data needed for development of advanced space vehicles and equipment (Experiments T002*, D017*, M466, M469, M479, M486, M487, M488, M489, M492, M493, D018, D019, D020, D021, D022, T017, T020, T021, T022, T023).
- Obtain data prerequisite to identification of earth resources and development of imporved cartographic procedures (Experiment S065*).
- Obtain data to develop a fuller understanding of the physical characteristics of the extra-atmospheric environment (Experiments S009*, S018*, S063*).
- Obtain medical and biological data as required for evaluation of the effects of weightlessness on man (Experiments M018, M053, M055, T004*).
- Obtain stellar and solar astronomy data (Experiments S069, S019*, S070*).

3.1.2.3 Flight AAP-3A (Ref. 3-1). The following objectives will be met:

- Determine the current status of the AAP-1 and AAP-2 cluster, and evaluate subsequent rehabitation capability.
- Provide resupply to the cluster.
- Further demonstrate CSM hard-docking with the MDA.
- Determine the CSM subsystems performance during spaceflight for up to at least 14 days.
- Further evaluate man's performance in space.

*These experiments may be reassigned to Flight AAP-1A.

3.1.2.4 Flight AAP-A3 and AAP-A4 (Refs. 3-1 and 3-3). The following objectives will be met:

- Obtain scientific data about the physical and temporal characteristics of the sun by observations of various portions of the electromagnetic spectrum made with the Apollo-telescope-mount (ATM) experiments.
- Obtain engineering data for selected modes of operation of the ATM attached to a lunar module (LM) ascent stage to support development of an advanced manned orbital observatory.
- Demonstrate hard-dock of the LM/ATM to the MDA of the OWS left in orbit from mission AAP-1/AAP-2.
- Demonstrate the feasibility of reactivating and reusing the OWS.
- Determine the feasibility of operating the OWS as a habitable space structure for a period of up to 56 days from the AAP-3 launch date by evaluation of the CSM/S-IVB/Airlock/MDA, to include the following:
  - Subsystem performance
  - Astronaut mobility and work capability in both intravehicular and extravehicular activity
- Determine performance of the CSM subsystems during spaceflight of up to 56 days' duration.
- Evaluate spaceflight environmental effects on the crew of a mission duration up to 56 days.
- Leave the LM/ATM and the OWS docked in orbit for future reuse and refurbishment.
- Verify the ability of mission ground support systems to support mission activities of extended duration.
- Obtain basic research data prerequisite to identification of earth resources and development of improved cartographic procedures.
- Obtain basic research data prerequisite to a more complete understanding of the physical characteristics of the extra-atmospheric environment.
- Obtain engineering and technological data needed for development of advanced space vehicles and equipment.
- Further evaluate man's performance in space.

3.1.2.5 Flight AAP-A5 (Ref. 3-1). The following objectives will be met:

- Determine the current status of the AAP-3 and AAP-4 cluster, and evaluate subsequent rehabitation capability.
- Provide resupply to the cluster.
- Further demonstrate and practice CSM hard-docking with the MDA.
- Evaluate performance of the CSM subsystems during spaceflight for up to at least 14 days.
- Continue to evaluate man's performance in space.

3.1.3 Mission Groundrules

3.1.3.1 General Applicability. The following groundrules apply:

- The uprated S-I booster will be used on all seven flights.
- All launches will take place from KSC. Launch complex (LC) 34 will be used for the CSM flights and LC 37B will be used for the unmanned flights.
- Maximum use will be made of qualified hardware and existing Apollo procedures.
- Mainline Apollo hardware will be modified only to the extent that it will remain returnable to Apollo.
- Apollo crew safety criteria will be maintained.
- The MSFN will be used for communications and data exchange.
- Launch azimuths will be limited to 72 to 108 deg, consistent with range safety.

3.1.3.2 Space Operations. The following groundrules apply:

- The S-I attitude control system (IU) will have a lifetime of 7 hr after launch.
- All CSM flights will carry a crew of three.
- The CM will be manned continuously although the crewman may be asleep.
- Docking maneuvers will be controlled manually.
- Astronaut sleep periods (8 hr per day) may be scheduled on a staggered basis. There will be sleeping provisions in the OWS.

- Both the CSM and LM will be capable of performing independent rendezvous and docking maneuvers. The spacecraft will be designed so that any one crewman can perform all functions required for these operations.
- The LM/ATM will be capable of independent, undocked operations for a minimum of two 2-day periods.
- EVA's will be performed during 3-men-awake time only, although preparation can be scheduled during 2-men-awake time.
- One crewman will be in the CSM to monitor systems, and another in the airlock hatch during the other's EVA, unless required to assist in the EVA.
- A suited astronaut will be a full-time monitor of the EVA astronaut. Two astronauts can perform EVA together.
- One EVA will be permitted per day.
- Two hours of preparation and one hour of post-EVA will be considered normal.
- Electrical and fluid umbilicals will be provided to interconnect the MDA/AM, CSM, and LM. There will be multiple (contingency) paths for the transfer of power and consumables between modules.

3.1.4 Mission Profile

3.1.4.1 General Overview. The basic mission of Cluster A consists of seven uprated S-I flights, each carrying the following modules:

Flight	Launch Vehicle	Payload Module
AAP-1A	207	CSM, rack/LM&SS
AAP-1	206	CSM
AAP-2	208	AM, MDA, nose cone, modified S-IVB OWS
AAP-3A	209	RCM and SM (with resupply)
AAP-3	211	CSM
AAP-4	210	LM-8, ATM-A and nose cone
AAP-5	212	RCM and SM (with resupply)

A brief synopsis of the flight profiles for Cluster A is presented in the paragraphs that follow.

3.1.4.2 Flight Profile for AAP-1A. The 1A mission is essentially a low, 125- to 150-nm orbit whose inclination is optimized within the ranges of 28.5 to 50 deg. Once the CSM has achieved orbit, it will be transposed and docked to the LM&SS. At this point the instrument unit (IU) and second stage (S-IVB) of the launch vehicle will be jettisoned. A group of manned experiments will be conducted relative to space sciences, advanced technology and engineering, and earth-orbital simulation of LM&SS lunar operations. The LM&SS is jettisoned after completion of experiments, and the CM is placed in an earth-return trajectory by the SPS propulsion systems for ultimate water landing. The flight is planned for an open-ended mission of up to 14 days.

3.1.4.3 Flight Profile for Cluster AAP-1/AAP-2. The flight profile for AAP-1 and AAP-2 is based on the concept of rendezvous and docking of the CSM with the modified S-IVB, airlock module, and multiple docking adapter. The CSM for the AAP-1 mission is launched from LC 34 at KSC into an elliptical earth orbit of approximately 81 by 120 nm and is separated from the instrumentation unit and S-IVB. The CSM is put into a 120-nm circular orbit until the uprated S-I, airlock module, multiple docking adapter, and nose cone for the AAP-2 mission are launched approximately 1 day later from LC 37B at KSC. The S-IVB stage of the launch vehicle, IU, MDA, AM, and nose cone are inserted into a 260-nm circular orbit from a launch azimuth of approximately 83 deg in order to achieve an orbital inclination of 28.9 deg. The launch timing and orbit inclination will be selected so that the manned CSM from the AAP-1 flight will be able to rendezvous (using the coelliptical technique) and dock to the radial port of the MDA of flight AAP-2 (Fig. 3-2). The flight profile for this mission is presented in Fig. 3-3.

Upon completion of the orbital experiments and activities, experiment data to be returned to earth will be stowed in the CM. Operational and experimental equipment in the MDA, AM, and S-IVB OWS are deactivated and stored until subsequent revisit flights. The crew will return to the CSM and separate from the MDA, leaving the cluster in a gravity-gradient-stabilized attitude. The CM then jettisons the SM after

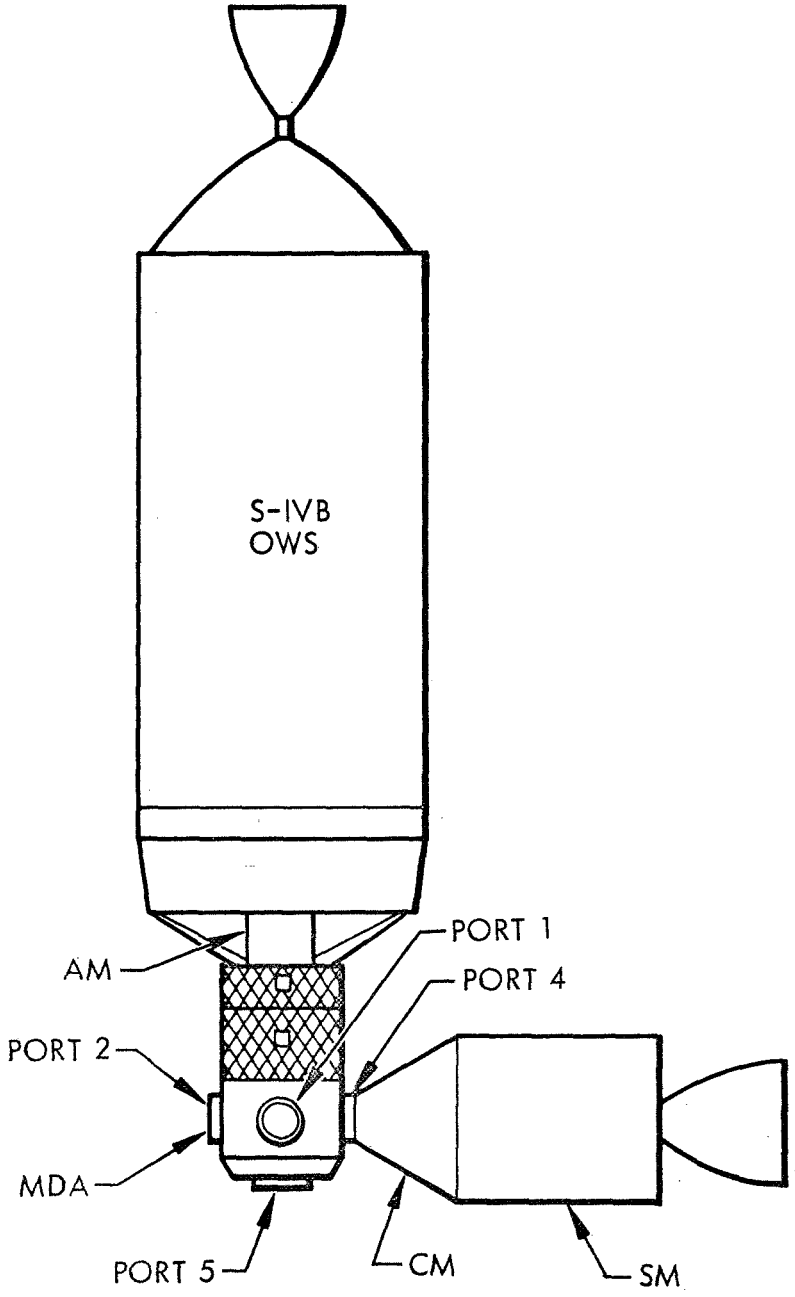

Fig. 3-2 Orbital Configuration of AAP-1 and AAP-2

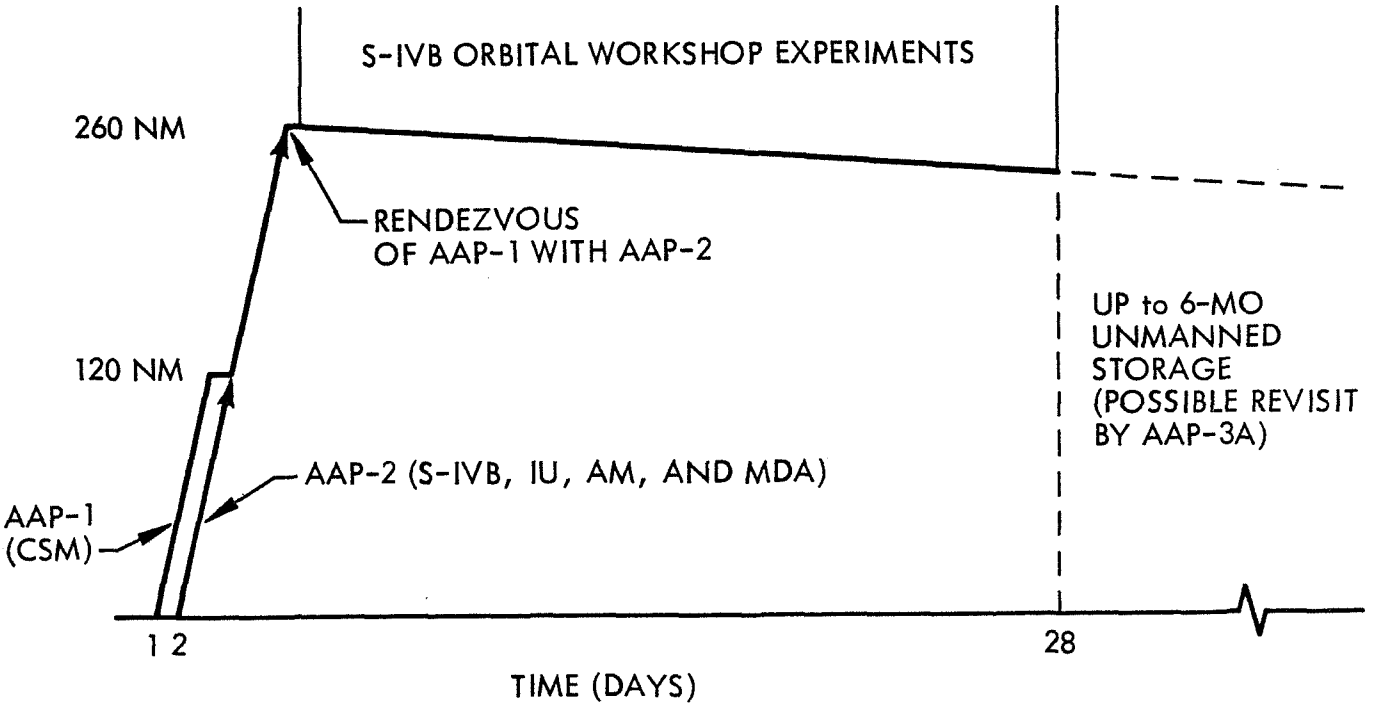

Fig. 3-3 Flight Profile of AAP-1 and AAP-2

being placed on an earth-return trajectory and is prepared for a water landing and recovery approximately 28 days after liftoff.

3.1.4.4 Flight Profile for AAP-3A. Flight 3A is essentially a CSM revisit mission to the still orbiting AAP-2 cluster vehicles. The CSM is launched from LC 34 at KSC up to 6 mo after completion of the AAP-1 and AAP-2 missions. The CSM is placed in an elliptical orbit of about 81 by 120 nm by the uprated S-I launch vehicle in approximately the same orbital plane as the AAP-1 and AAP-2 cluster vehicles. Initially, the CSM is separated from the S-IVB IU, and the SPS is used to provide rendezvous and docking capability to an orbit of 240 nm. The crew from the CSM will inspect the orbiting S-IVB, AM, and MDA in order to access the current status of the cluster assembly and to determine future habitability of the cluster for the AAP-3 and AAP-4 missions. To the extent practical because of payload limitations, resupplies will be transferred from the CSM to the cluster assembly for use by subsequent flights. The

AAP-3A mission may last for up to 14 days, during which some on-orbit experimentation may be conducted. Return of the CM is similar to that for AAP-2.

3.1.4.5 Flight Profile for Clusters AAP-3/AAP-4. The flight profile for the AAP-3 and AAP-4 is based upon the concept of rendezvousing with the already orbiting cluster AAP-1/AAP-2 assembly. Initially, the manned CSM (AAP-3 flight) is launched from LC 34 at KSC by an uprated S-I launch vehicle sometime after completion of mission AAP-3A. The CSM is placed in an elliptical orbit of about 81 by 120 nm and approximately the same orbital plane as the cluster AAP-1/AAP-2 assembly. The CSM is separated from the S-IVB/IU, and the SPS is used to place the CSM in a 120-nm circular orbit. Later, the SPS is again used to increase the CSM's altitude to approximately 240 nm for eventual rendezvous with AAP-4.

The unmanned AAP-4 flight is launched from LC 37B at KSC approximately one day after launch of AAP-3. The flight hardware includes an uprated S-I, lunar module ascent stage (modified), Apollo telescope mount (ATM), and a nose cone. Essentially, the S-IVB stage and IU of the launch vehicle, together with the LM and ATM, are launched into a nominally circular orbit of about 240 nm altitude. The launch timing and orbit inclination will be selected so that the manned CSM from AAP-3 can rendezvous and dock with the LM/ATM of AAP-4 within 7.5 hr (Fig. 3-4). After separating the LM/ATM from the AAP-4 launch vehicle, the crew will use the SM propulsion systems to rendezvous with the assembly left in orbit after the AAP-1 and AAP-2 missions. One or two crew members will transfer from the CSM into the LM ascent stage and the modules will undock. Using the LM RCS, the LM will rendezvous with the orbital assembly and dock to a radial port on the MDA. Upon completion of this activity, the CSM will be docked to the axial hatch of the MDA (Fig. 3-5). The crew will establish a shirtsleeve environment within the OWS, MDA, and AM and will transfer from the CSM and LM into these areas. Using the SM RCS, the cluster will be oriented with the ATM pointed toward the sun and the S-IVB roll axis in the orbital plane. After activation, the ATM pointing control system will be used to maintain vehicle attitude.

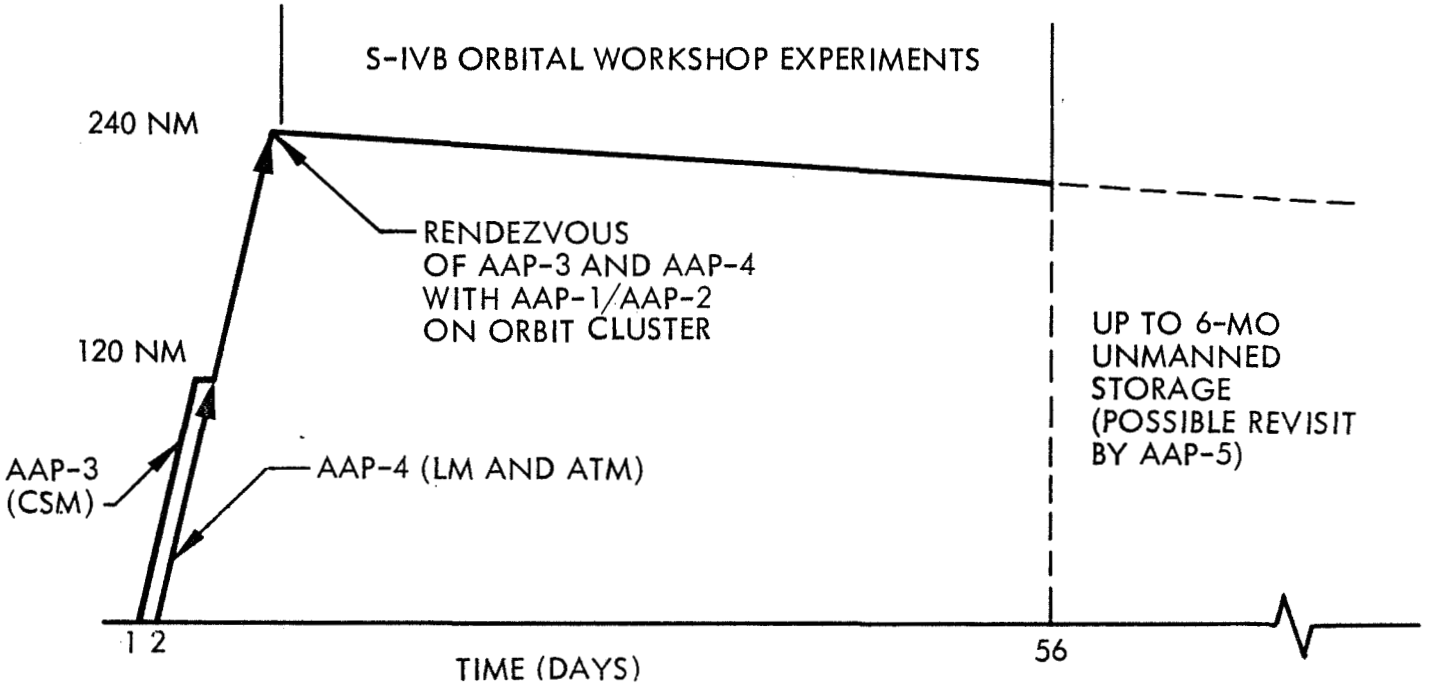

Fig. 3-4 Flight Profile of AAP-3 and AAP-4

Although the mission will be open-ended, the planned mission duration for the crew will be 56 days. During this period the crew will conduct solar observations using the ATM equipment and will perform additional experiments within the OWS, MDA, and AM. Consideration is being given to the possibility of operating the LM/ATM in a free-flight mode for some period of the mission (i.e., not docked to the MDA). After completion of these activities, these modules and their associated experiments will be placed in a storage mode. The crew will return to the CSM and will separate from the MDA, leaving the cluster in a gravity-gradient-stabilized attitude for revisit by future AAP missions, e.g., AAP-5. The SM propulsion systems will be used to place the CM on an earth-return trajectory to a water landing.

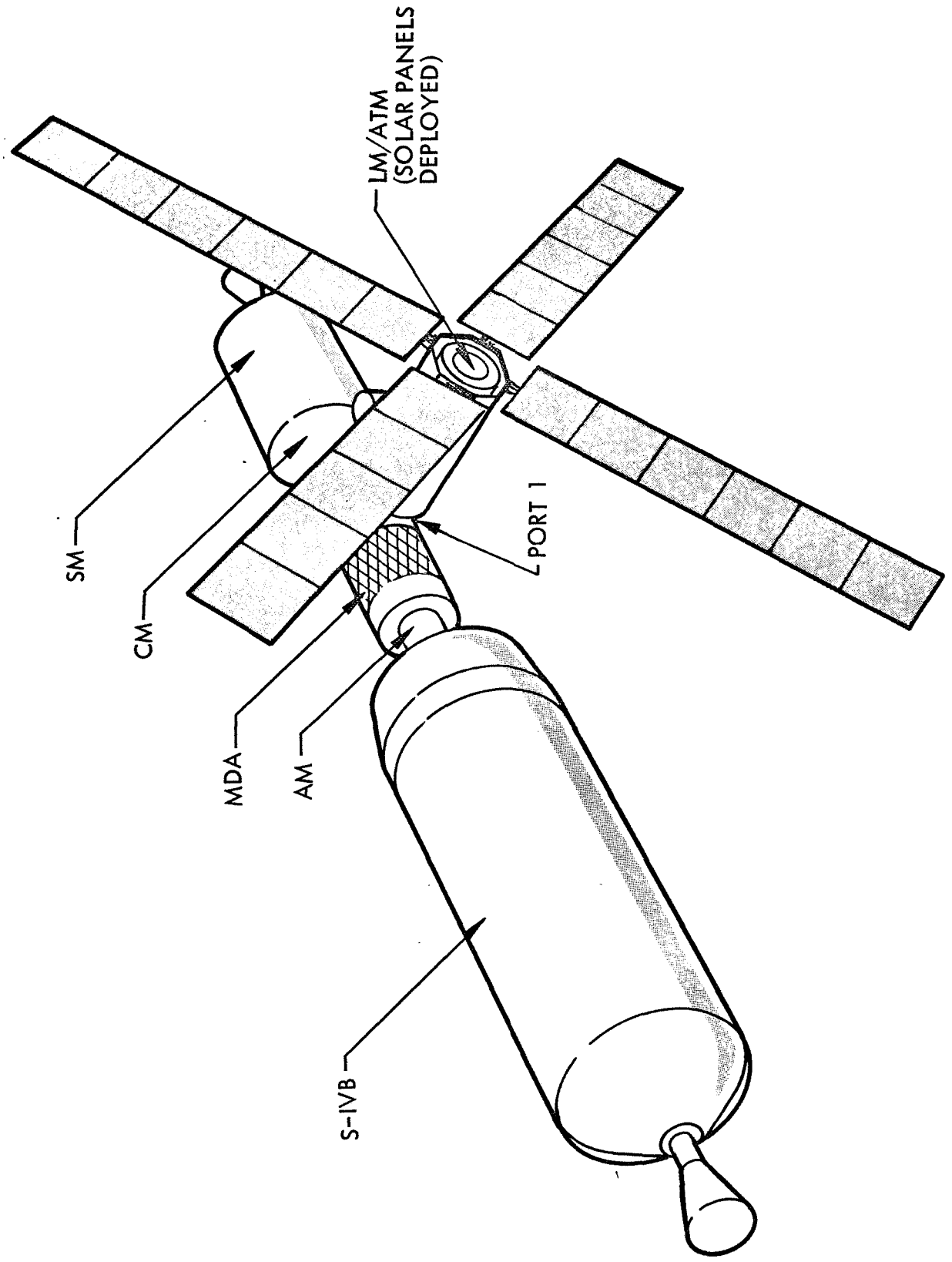

Fig. 3-5 Orbital Configuration of AAP-3 and AAP-4

3.1.4.6 Flight Profile for AAP-5. Flight 5 is tentatively classified as the last flight of the cluster A mission sequence. This flight is nearly identical in function to flight AAP-3A since it too has a revisit and resupply objective. Should the AAP-5 crew find the cluster assembly habitable, it is feasible that this flight could last up to 14 days. If the cluster assembly is assessed as being potentially uninhabitable either at that time or in the future, the Cluster A mission sequence may be completed and the Cluster B mission sequence subsequently initiated. The flight hardware for AAP-5 is similar to that for AAP-3A, as is the flight profile except for the probable lesser orbital altitude of the cluster assembly because of orbit decay.

3.1.4.7 Sequence of Events. This subsection summarizes the sequence of major events that constitute the Cluster A mission flights AAP-1/AAP-2 and AAP-3/AAP-4. The events for AAP-1/AAP-2 are as follows:

Day	AAP-1/AAP-2 Events, Referenced from AAP-1 Launch
1	Launch AAP-1 from LC 34 at KSC. Injection orbit is 80 × 120 nm. Jettison S-IVB spent stage. Perform apogee service propulsion system (SPS) burn to produce circular orbit at 120 nm altitude.
2	Launch AAP-2 from LC 37B at KSC. The AAP-2 injection orbit is 260 × 260 nm. Jettison nose cap and open SLA panels. Perform CSM terminal phase maneuvers in order to rendezvous with the AAP-2 vehicle.
2+	Perform maneuvers to dock the CSM to the MDA of the OWS. Complete MDA radial docking and CSM/MDA axial docking activities and initiate the OWS passivation and habitation procedures. Deploy AM solar arrays, connect umbilicals, and pressurize the OWS. Complete OWS habitability operations, transfer experiment canisters to OWS from MDA, and set up experiment modules.
5-25	Conduct OWS engineering, scientific, and biomedical experiments.

26-27	Retrieve all data packages and stow in CM for return. Transfer equipment to storage location and deactivate OWS. Depressurize OWS and isolate pressure-sensitive equipment in AM. Orient OWS long axis toward center of earth to achieve gravity-gradient-stabilized mode.
28	Separate CSM from MDA. Conduct deboost, entry, and recovery operations.

The OWS is left in unmanned orbital storage for a period of 3 to 6 mo. During this dormant period, daily status data are monitored via command-telemetry link. Ground tracking will maintain an updated OWS orbit ephemeris and ensure that no catastrophic breakup has occurred. Before the launch of AAP-3A, the OWS attitude-hold control system is activated and elimination of excessive tumble is verified. It is considered that only structural breakup or excessive (uncontrollable) tumbling will preclude revisiting the OWS by AAP-3A.

Because duration of the orbital storage period is uncertain, the sequence of events for the AAP-3/AAP-4 portion of the mission is not referenced to the AAP-1 launch day, but rather to the AAP-3 launch day, as follows:

Day	AAP-3/AAP-4 Events, Referenced from AAP-3 Launch
1	Launch manned AAP-3 from LC 34 at KSC. Injection orbit is 80 × 120 nm. Jettison S-IVB spent stage. Perform apogee SPS burn to produce circular parking orbit at 120-nm altitude in order to provide adequate lifetime while waiting for the launch of AAP-4.
2	Launch unmanned AAP-4 from LC 37B at KSC. Injection orbit is 240 × 240 nm. Jettison nose cone and open SLA panels. Perform CSM maneuvers in order to rendezvous with the LM/ATM within 7-hr IU lifetime of the AAP-4 booster. Hard-dock CSM and LM. Jettison S-IVB. Initiate phasing ellipse in order to adjust relative positions of OWS and the CSM/LM, as required.

3-8	Perform maneuvers to rendezvous the CSM/LM and OWS. Transfer two crewmen to the LM. Free-fly the LM and hard-dock to a radial MDA port while the CSM stands by in a stationkeeping position. Perform CSM hard-docking to the axial MDA port. Reactivate OWS, connect umbilicals, and set up experiment equipment. Check out and prepare LM for ATM operations.
9-22	Conduct experiment operations, with ATM and biomedical as first priority.
23-50	Conduct experiment operations with reduced ATM emphasis and continuing biomedical observations. Conduct correlative scientific experiments primarily during this period.
51-53	Continue experiment operations with primary emphasis on biomedical data. During this period, perform OWS experiments to be repeated from AAP-1/AAP-2.
54-55	Stow all data packages to be returned in CM. Transfer equipment to unmanned storage locations and deactivate OWS. Orient OWS in gravity-gradient attitude.
56	Separate CSM from MDA. Conduct deboost, entry, and recovery operations.

3.1.4.8 Crew Utilization and Experiment Accomplishment (Refs. 3-1 and 3-2). The five phases of experiment operation are as follows:

- The first 5 days of AAP-1, during which the launch, rendezvous, docking operations, and OWS habitation are performed
- Twenty days of the AAP-1/AAP-2 (days 5 through 25) experiment operation in the OWS and the CM
- Fourteen days of AAP-3/AAP-4 (days 9 through 22), concentrating on ATM operation

- Twenty-eight days (days 23 through 50) of combined ATM, biomedical, and scientific experiments
- Three days (days 51 through 59) of scientific, biomedical, and OWS repeat experiments

The remaining phases consist of singular activities whose sequence follows a definite pattern set by mission requirements. In contrast, the five phases involving experiment operation can be scheduled in a variety of sequences. A feasible schedule for each of these phases is presented in succeeding paragraphs. The schedules described are a result of grouping and crew cycle variations performed to obtain maximum experiment completion in terms of repetitions.

The division of crew utilization between personnel, housekeeping, and spacecraft operations, and experiment preparation and performance is given in Table 3-3 for AAP-1/AAP-2 and in Table 3-4 for AAP-3/AAP-4. The basic schedules provide approximately 12 hr of personal time for each crew member throughout the mission. The times required for the basic mission operations – i.e., launch, ascent, rendezvous, activation, deactivation, and recovery – were determined with respect to personal crew requirements. The remaining periods of time were then allotted to experiment operations.

For the ATM, two basic cycles were determined, one based on three four-orbit shifts per day for maximum solar activity, and a period of medium ATM operation based on two four-orbit shifts per day. ATM operation is based on one man in the LM operating only the ATM equipment. He has no other duties during his four-orbit shift which last approximately 6 hr.

A further scheduling requirement was that one man must be in the CM at all times, but that he could sleep. This combination of maximum ATM and CM occupancy resulted in a staggered sleep cycle.

The total accomplishment of experiments for the Cluster A mission is given in Table 3-5. To perform these experiments requires approximately 25 percent of the total mission manhours.

Table 3-3

AAP-1/AAP-2 CREW UTILIZATION (% MANHOURS)

Activity	Days 1–5	Days 6–10	Days 11–25	Days 26–28	Total Days 1–28
Crew Personal Activities	48.6	55.6	50	50.4	50.8
Vehicle Housekeeping	10	10.7	12	13.9	11.6
Spacecraft Operations	1	14.9		2.8	3.2
Ascent					
Rendezvous					
Deorbit					
Recovery					
Experiment Preparation		16		32.9	6.4
Assembly					
Activation					
Deactivation					
Retrieval					
Experiment Performance	23.6	2.8	30.9		21.3
Total	83.2	100	92.9	100	93.3

LOCKHEED MISSILES & SPACE COMPANY

Table 3-4

AAP-3/AAP-4 CREW UTILIZATION (% MANHOURS)

Activity	Days 1–8	Days 9–22	Days 23–50	Days 51–53	Days 54–56	Total Days 1–56
Crew Personal Activities	53	50	50	50	50.4	50.5
Vehicle Housekeeping	13.2	10.4	11.1	15.9	13.9	11.6
Spacecraft Operations	14.5				2.8	2.2
Ascent						
Rendezvous						
Deorbit						
Recovery						
Experiment Preparation	19.3	1	1		32.9	5.3
Assembly						
Activation						
Deactivation						
Retrieval						
Experiment Performance		26.8	27.6	19.8		21.6
Total	100	88.2	89.7	85.7	100	91.2

LOCKHEED MISSILES & SPACE COMPANY

Table 3-5

CLUSTER A EXPERIMENT SUMMARY

Experiment Number	Experiment Name	Flight AAP-1/AAP-2				Flight AAP-3/AAP-4						Cluster A Total	
		Days 1–5		Days 11–25		Days 9–22		Days 23–50		Days 51–53			
		Repetition	Manhr	Repetition	Manhr	Repetition	Manhr	Repetition	Manhr	Repetition	Manhr	Repetition	Manhr
ATM	ATM S052, S053, S054, S055, and S056						238.3		340.8				579.1
D017	CO_2 Reduction	1	0.7									1	0.7
D018	Integrated Maintenance			5	26					1	4	6	30
D019	Suit Donning and Sleep Station Evaluation			1	8					1	6	2	14
D020	Alternate Restraints Evaluation – Performed during D018, no crew time scheduled.												
D021*	Expandable Airlock Technology			1	6.3							1	6.3
D022*	Expandable Structure for Recovery			1	7.4							1	7.4
M0+1-X	Biomedical M018, M050, and M051			27	94.5	3	10.5	24	84	3	10.5	57	199.5
M052	Bone and Muscle Change			58	21.1	39	14.8	190	66.8	26	9.5	313	112.2
M053	Human Vestibular Function			35	39	9	10.6	40	48.1	9	10.6	93	108.3
M054	Neurological Study – Data obtained during crew sleep periods, no crew time scheduled.												
M055	Time and Motion Study – Data obtained during other crew activities, no crewtime scheduled.												
M402	Spent-Stage Habitability – Setup during activation, Days 6–10, no crew time scheduled.												
M439	Star Horizon Automatic Tracking							22	3.7			22	3.7
M466	Hard Suit Evaluation – Performed during M486, no crew time scheduled.												
M469	ST-124 Removal			1	11.2							1	11.2
M479	Zero-G Flammability			9	9.5							9	9.5
M486	Astronaut EVA and Equipment Evaluation			10	78.7							10	78.7
M487*	Crew Quarters Habitability – Setup during activation, Days 6–10, no crew time scheduled.												
M488	High Pressure Gas Expulsion			1	0.4							1	0.4
M489	Heat Exchanger Service			6	3.8							6	3.8
M492	Tube Joining			1	0.6					1	0.6	2	1.2
M493	Electron Beam Welding			1	0.7					1	0.7	2	1.4
S005	Synoptic Terrain Photography	2	0.5	4	1			4	1			10	2.5
S006	Synoptic Weather Photography	5	0.8	10	1.6			10	1.6			25	4
S009	Nuclear Emulsion	40	20									40	20
S015	Zero-G Human Cells							35	2.9			35	2.9
S017	X-Ray Astronomy	17	7.2									17	7.2
S018	Micrometeorite Collection			1	0.5			2	1			3	1.5
S019	UV Stellar Astronomy			30	5			40	6.7			70	11.7
S020	UV, X-Ray Solar Photography							20	10			20	10
S027	Galactic X-Rays – Installed in IU of S-IVB (A3), no crew involvement.												
S061	Potato Respiration					55	3.7	56	3.7			111	7.4
S063	UV Airglow Horizon Photography			12	3					3	0.8	15	3.8
S065*	Multiband Terrain Photography	5	1.3	13	3.3			10	2.5			28	7.1
T002	Manual Navigation Sightings	29	40.2									29	40.2
T004	Frog Otolith	5	0.7									5	0.7
T017/T021*	Meteoroid Impact, Erosion and Velocity			1	10.1							1	10.1
T020	Jet Shoes			1	3							1	3
T022	Heat Pipe	1	0.3									1	0.3
T023	Surface Absorbed Materials – Data recovered during activation, Days 6 – 10, no crew time scheduled.												

*Candidates for reuse on subsequent revisits to orbital workshop with resupply as necessary.

3.2 CLUSTER B: MISSION GOALS, OBJECTIVES, GROUNDRULES, AND PROFILE

The general goals of Cluster B are (1) to achieve continuous manned operation of the OWS for a period of 1 yr, (2) to perform meteorology and earth resource (Applications A and B) experiments, and (3) to conduct further solar astronomy experiments with ATM-B if required.

The specific mission objectives, which are based on these general goals, are given in Section 3.2.1; the groundrules to be observed in accomplishing these objectives are given in Section 3.2.2.

3.2.1 Mission Objectives

The mission objectives for Cluster B are as follows:

- Demonstrate the capability of overlapped manned flights. If continuity of manned flight (overlap) conflicts with maximum potential duration, the continuity of manned operation has priority
- Determine the feasibility of operating the OWS as a habitable space structure for 1 yr
- Demonstrate the design, performance, and reliability of OWS systems to operate for 1 yr
- Determine the LCSM subsystem performance for 90 days of space flight operation
- Demonstrate the feasibility of utilizing the LCSM as a resupply module
- Conduct meteorology and earth resource experiments (Applications A and B) from a high-inclination orbit for large earth coverage, particularly the continental United States
- Evaluate the environmental effects on the crew of a 1-yr space flight

3.2.2 Mission Groundrules

The mission groundrules for Cluster B are as follows:

- The uprated S-IB booster with four Minuteman solid strap-on rockets will be used to launch each of the six flights.
- The nose cone and SLA on the unmanned flights will be jettisoned 33 sec after S-IVB ignition to increase the orbital payload capability.
- Launch azimuths will be limited to between 45 and 108 deg to achieve a 50-deg inclination. The present approved range safety launch azimuths are between 55 and 105 deg.
- Dual launches will be 1 day or more apart, with normal pad turnaround time of 56 calendar days.
- LC's 34 and 37B are capable of launching manned flights.
- Experiments will be Applications A and B, early biomedical laboratory, and secondary experiments (to be defined).
- Hardware for CSM and Workshop OWS will follow these principles:
  - Flight ready by first quarter of 1970
  - No quantum jump from Cluster A subsystem components
  - Changes from Cluster A to provide significant improvements compatible with an austere budget
  - Changes not to eliminate the interchange capability of CSM or OWS with Cluster A hardware
- The LCSM's for Cluster B will be capable of 90-day operation.
- The OWS will be capable of 1-yr continuous operation and reactivation if a manned flight should fail.
- The OWS will be launched into a 260-nm circular orbit; no drag makeup will be considered during the first year.

3.2.3 Mission Definition

The basic mission for Cluster B consists of six uprated S-I B launch vehicles, each with four solid strap-on rockets, to place the following payload modules into orbit:

Flight	Launch Vehicle	Payload Module
B-1	213	114 LCSM, data capsules
B-2	214	OWS/AM/MDA-2
B-3	215	115 LCSM
B-4	216	117 LCSM
B-5	217	12 LM, rack/Applications A & B
B-6	218	119 LCSM

The remaining four flights assigned to Cluster B are discussed in Section 3.2.5.

The mission presented assumes that sufficient solar observation was completed successfully with Cluster A. However, if OWS-1 failed before the launch of AAP-4, the ATM could be dual-launched with B3 and operated with the Cluster B Workshop.

3.2.3.1 Profile. The altitude-time profile of the six Cluster B flights is illustrated in Fig. 3-6. The B1/B2 rendezvous is accomplished at the OWS-2 altitude of 260 nm, using the co-elliptical technique proposed for Cluster A. The initial orbit altitude of 260 nm will ensure an orbital lifetime of 1 yr without drag makeup requirements. The two launch opportunities, northeast and southeast, that occur for a 50-deg inclined orbit are used to achieve continuous manned operation throughout the nearly 1-yr period.

The integrated mission profile consists of two dual launches and two single manned launches. Each time segment between flight or dual launches is approximately 90 days apart. This time period will allow an adequate period to refurbish each launch complex and prepare for the following launch.

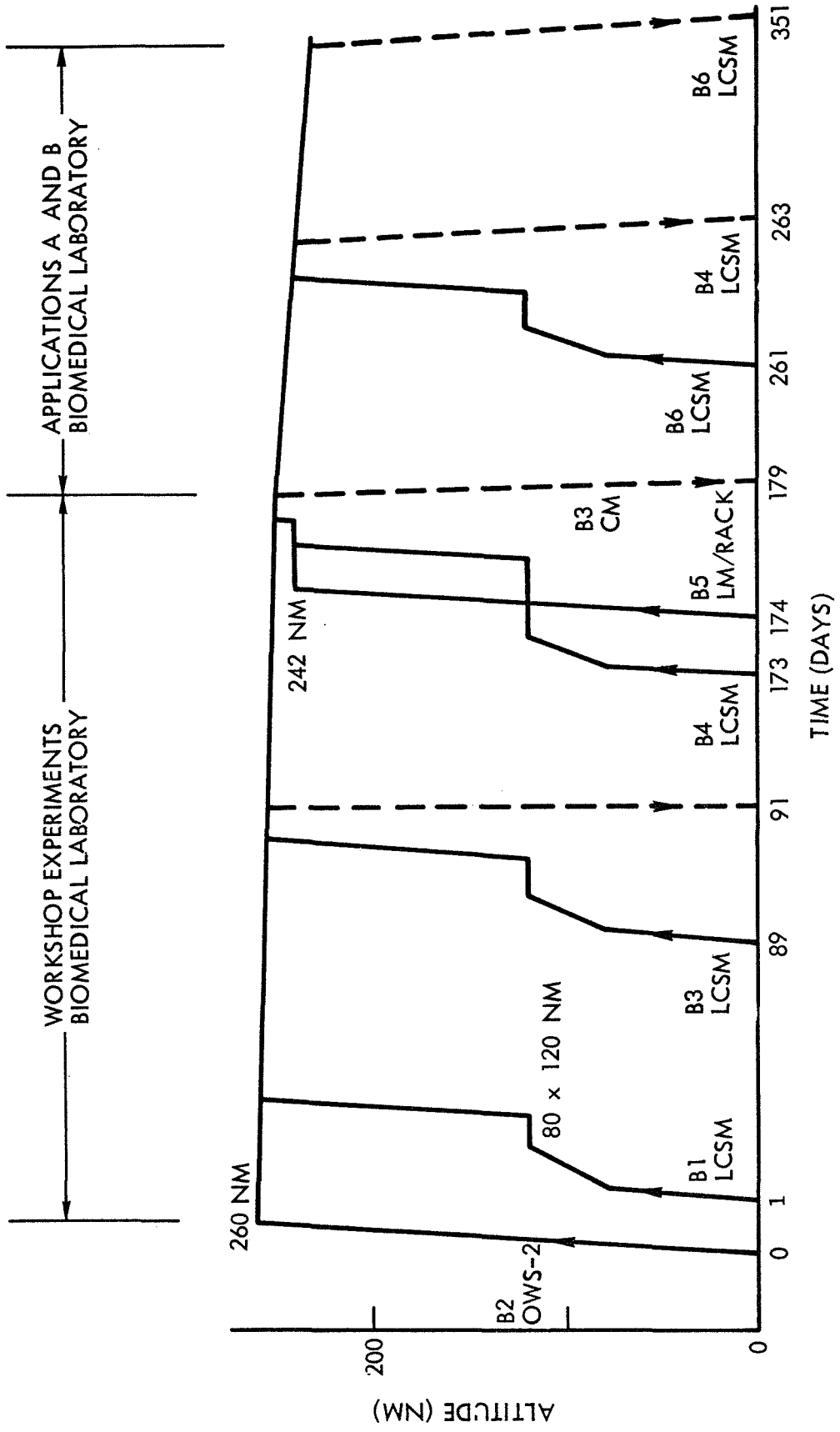

Fig. 3-6 Profile of Altitude Versus Time for Cluster B

3.2.3.2 Sequence of Events. The following summarizes the sequence of major events that constitute the Cluster B mission (a more detailed definition of the experiment operation is contained in Section 3.2.4).

Day	Events From Initial Launch
0	Launch B2 from LC 37B at KSC. The nose cone, SLA, and solar array shroud will be jettisoned at approximately 33 sec after S-IVB ignition. The B2 Workshop final orbit injection will be into a 260-nm circular orbit. The automatic passivation sequence will begin with the dumping of the S-IVB hydrogen and oxygen tanks. The solar arrays will be deployed. The auxiliary attitude control system will stabilize the vehicle in a gravity-gradient mode until B1 LCSM is docked 1 to 2 days later.
1	Launch B1 from LC 34 at KSC. Injection orbit is 81 × 120 nm. Jettison S-IVB, transpose and dock with data capsule rack, then withdraw it from the SLA. Perform apogee service propulsion system (SPS) burn to produce a circular orbit at 120 nm altitude. Perform orbit altitude change and maneuvers in order to rendezvous with B2 Workshop.
2-6	Perform maneuvers to dock the LCSM and data capsule rack with the MDA. Complete Workshop passivation and habitation procedures. LCSM will be docked to axial port.
7-89	Perform biomedical and Workshop experiments from the cluster stabilized in a gravity-gradient mode by the OWS auxiliary control system.
89	Launch B3 from LC 34 at KSC and inject into an 81- × 120-nm orbit. Jettison S-IVB and produce a circular orbit at 120 nm with the SPS.
90	B3 completes phasing with cluster. Ignite SPS to rendezvous with cluster. Complete terminal phase maneuvers and dock with the MDA radial port.

	Exchange one or two crewmen, retrieve all data packages and stow in B1 CM for return, allow information exchange between crew, and provide the six men with a rest/sleep period.
91	B1 LCSM jettisons cluster and reenters.
92-173	Repeat events of days 7-89.
173	Launch B4 from LC 34 at KSC and inject into an 81- × 120-nm orbit. Jettison S-IVB and produce a circular orbit at 120 nm with the SPS.
174	Launch B5 from LC 37B at KSC and jettison nose cone/SLA 33 sec after S-IVB ignition. Final injection orbit of the B5 LM/rack will be 242 nm, circular. Perform LCSM maneuvers in order to rendezvous with the LM/rack. The auxiliary control system will stabilize the B5 vehicle until the B4 LCSM completes docking and removing the LM/rack from the SLA.
175-178	Phasing of docked LCSM/LM with cluster may require up to 4 days, depending upon the exact cluster position and launch of B5. Complete rendezvous and docking of LM/rack and LCSM to MDA. B4 LCSM will dock to the axial port and the LM/rack to the radial port opposite the data return capsule. Exchange one or two crewmen, retrieve all data packages and stow in B3 CM for return, allow information exchange between crew, and provide a rest/sleep period before the B3 reentry.
179	B3 LCSM jettisons cluster and reenters.
180-260	Perform biomedical and Applications A and B experiments. Load and return data capsules as required.
261-263	Repeat events for days 89, 90, and 91 with the B6 LCSM.
263-350	Repeat events for days 180-260.

351 Data are retrieved and placed in CM for reentry. The cluster subsystems are deactivated for future utilization. An alternative to cluster deactivation at this time would be to continue LCSM launches as discussed and shown in Section 3.2.6.

Figures 3-7 and 3-8 show the two cluster orientations to be flown for the 1-yr mission.

3.2.4 Crew Utilization and Experiment Accomplishment

Not all the candidate experiments for applications shown in Tables 3-6 and 3-7 were assigned to this manned, 1970 flight. All experiments were reviewed and brief descriptions of their primary objectives are listed in Tables 3-6 and 3-7. Experiments S047, S048, S049, S050, and S057 were selected because either the astronaut was definitely required, as in S047, S048, and S057, or he was not required but would add significantly to the resulting data, as in S049 and S057. S043, S044B, S045, and S046 were included since their support was required by the assigned experiments. Selection of the Applications B experiments would be based upon estimates of equipment availability.

Approximately 167 days have been allocated to experimentation, with the remaining time for rendezvous, activation, and deactivation operations. Time during every seventh day is to be spent for EVA and crew relaxation.

Upon completion of the various experiment activities for Applications A and B, as well as the crew personal and vehicle housekeeping activities, 95 percent of the available manhours are utilized. This percentage would decrease slightly if all 25 EVA's were not required. These time and percentage values are listed in Table 3-8. During the first 180 days, Applications A and B would not be with the cluster. Therefore, the utilized time would be approximately 84 percent.

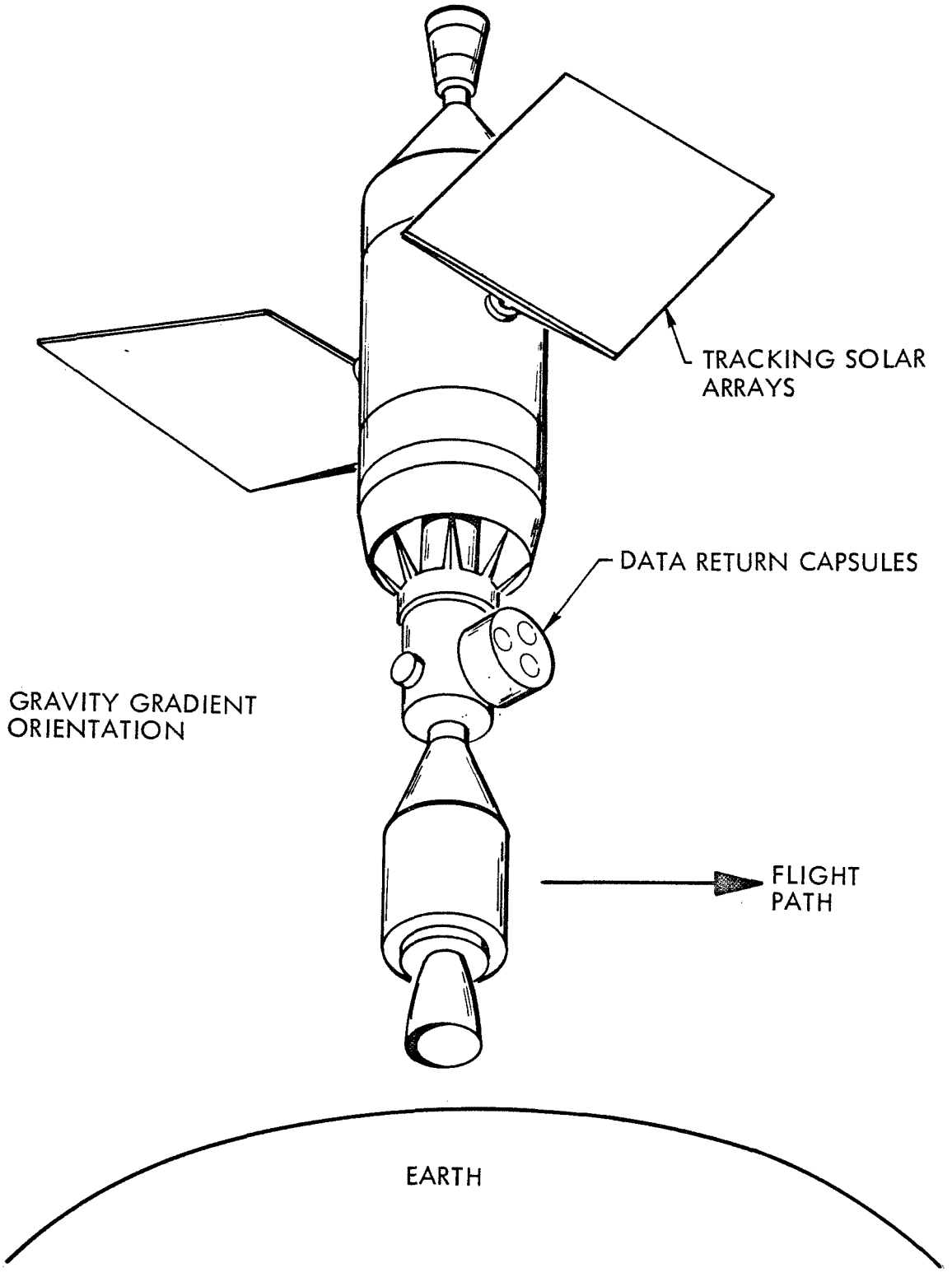

Fig. 3-7 Orbital Configuration, First 180 Days

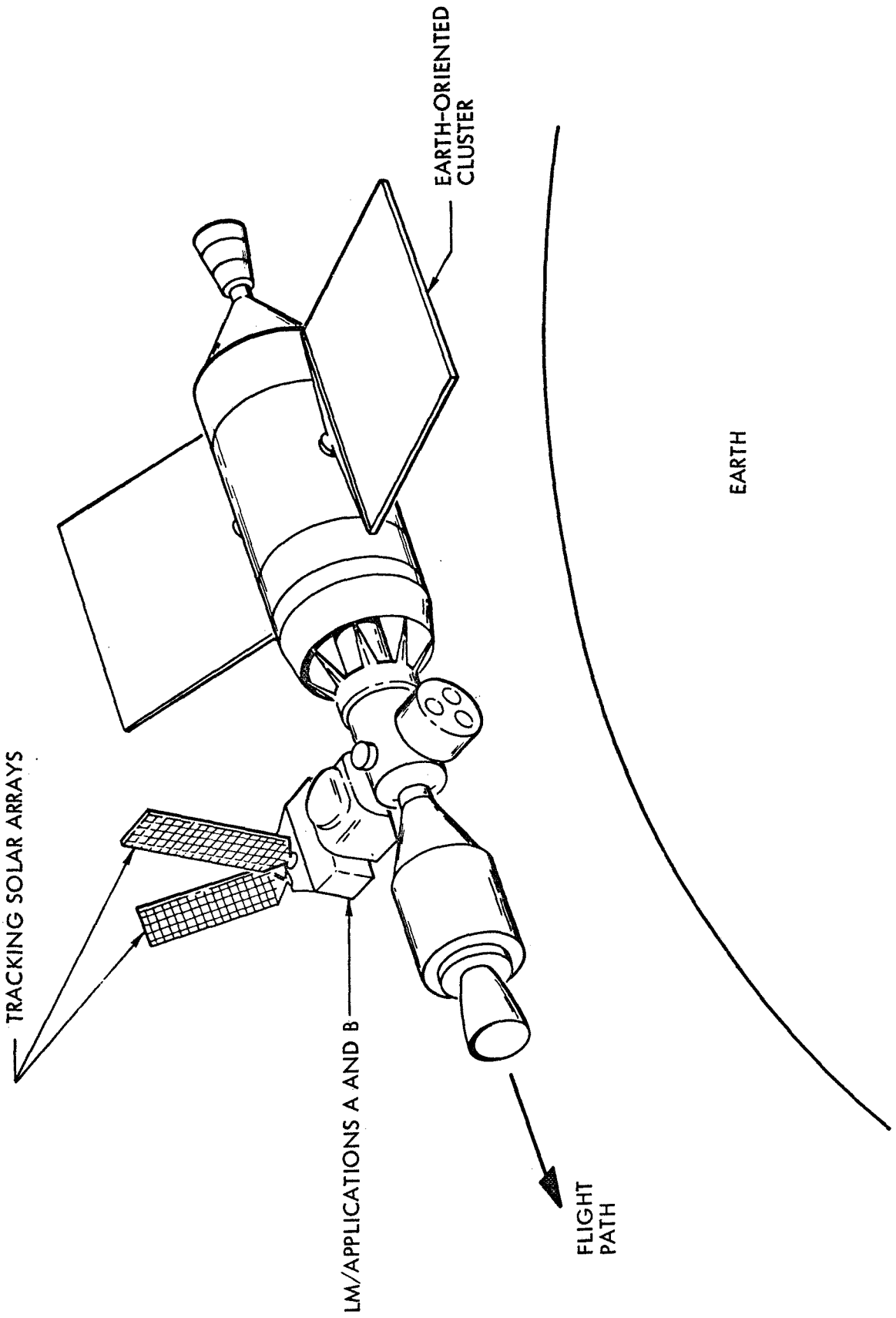

Fig. 3-8 Orbital Configuration, Second 180 Days

Table 3-6

APPLICATIONS A EXPERIMENTS

Experiments	Objective
S043 – IR Temperature Sounding	Determine the vertical temperature profile and measure the solar radiation reflected from the earth's surface and cloud tops
S044B – O_2 Microwave Radiometer	Determine the atmospheric temperature structure from 10 km to 80 km as a function of latitude and longitude
S045 – IR Filter Wedge Spectrometer	Determine the absorbing properties of the earth's atmosphere for the study of atmospheric heating and dynamics and effects of nonselective scattering by dust particles
S046 – Visible Radiation Polarization Measurements	Study the effects of surface reflectance on the radiation emerging from the top of the atmosphere and determine the vertical distribution of atmospheric aerosol
S047 – Stellar Refraction Density Measurements	Study the technique of determining atmospheric structure by measurement of the refraction of light from occulting stars
S048 – UHF Sferics Detection	Map the global distribution of thunderstorm activity, identify weather features, and determine if cloud UHF emissions contribute substantially to the total planetary UHF emission
S049 – IR Interferometer Spectrometer	Determine the atmospheric structure, surface temperature, pressure, and composition for meteoroligical analysis and prediction; determine the brightness temperature of the lunar disk
S050 – Temperature Profile Radiometer	Test a medium-resolution radiometer modified to provide the measurements necessary for determining atmospheric temperature and moisture profiles
S057 – Multichannel Radiometer	Verify present Rayleigh and Mie scattering theories, provide data on the nature of the earth's surface, map cloud formations, and estimate their height and thermal properties

Table 3-7

APPLICATIONS B EXPERIMENTS

Experiment	Objective
Synoptic Multiband Camera, SMC	Obtain multispectral, synoptic, steroscopic coverage over a selected portion of the earth for identification of surface features and characteristics
Metric Camera, MC	Conduct a geodetic survey of selected areas of the earth and provide the basis for surface inventory and determination of surface changes
Panoramic Camera, PC	Obtain stero panoramic photography over large areas of earth in support of geology, hydrology, agriculture, and forestry interests
Radar Imager, RI	Space-qualify the radar imager at orbital altitudes and evaluate the usefulness of the acquired data
Wide-Range Imager, WRI	Obtain imagery data in several wavelengths to assess its usefulness in areas of geology, oceanography, hydrology, agriculture, forestry, and meteorology
IR Spectrometer/ Radiometer, IRSR	Obtain measurements of the emitted radiance in the near-infrared spectral range, from which geologic interpretations may be made
Radar Altimeter/ Scatterometer, RAS	Qualify the radar altimeter/scatterometer at orbital altitudes and evaluate potential accuracies of lunar radar altimetry and profiles
Passive Microwave Imager, PMI	Experimentally verify the detectability of surface features utilizing a microwave imaging instrument
Passive Microwave Radiometer, PMR	Study the earth's surface at long wavelengths and evaluate the role of microwave radiometers as companion sensors to those of other spectral regions
Absorption Spectrometer, AS	On a worldwide basis, map the distribution of volcanic fumaroles and air pollution by measuring the total mass of sulfur dioxide within the sensor's field of view

Table 3-8

CREW UTILIZATION, SECOND 180 DAYS

Activity	Manhours Allocated	Percent of Total Manhours*
Crew Personal Activities	6,012	50.0
Vehicle Housekeeping	1,563	13.0
Biomedical Experiments	2,234	18.6
Applications A and B Experiments	1,354	11.3
EVA	252	2.0
R&R and Contingency Time	609	5.1
TOTAL	12,024	100.0

*Total manhours are based on 167 days available for experimentation, EVA, relaxation, and recuperation.

3.2.5 Fallback Missions

The four flights after B6 are as follows:

Flight	Launch Vehicle	Payload Module
B7	219	121 LCSM, Experiment Carrier
B8	220	123 LCSM, Experiment Carrier
B9	221	125 LCSM, Experiment Carrier
B10	222	127 LCSM, Experiment Carrier

The objective of these four manned flights is to revisit, resupply, and make crew exchange with Cluster B at 90-day intervals. Science and technology experiments will be continued from the workshop and experiment carrier. The LCSM's for these flights will be reconfigured from the 90-day B1, B3, B5, or B6 LCSM to provide a 4- to 6-man CM with capability for alighting on land. The four flights are utilized in the fallback missions for Cluster B.

Figure 3-9 shows that for any one launch failure the continuous manned operation of the cluster is terminated. However, 1-yr continuous operation is usually possible with one failure, since the baseline sequence provides seven segments of 90 days each.

Failure of B2, OWS-2, would find two vehicles in the latter stages of prelaunch check-out. Rather than hold these reconfigured 90-day LCSM's until another workshop is available (approximately 11 mo), it is recommended that they be held 6 mo and used with LM/Applications A and B. The LCSM and LM will be designed for this backup mode.

OWS-3 from the synchronous launch vehicle 514 would then be utilized to establish a low earth-orbit workshop which would provide the capability of 1 yr continuous manned operation. An alternative to using OWS-3 would be to configure an S-IVB with backup hardware (MDA, AM, solar arrays, etc.).

Failure of the LM/Applications A and B could result in replacement by a previously designed unmanned experiment carrier such as ATM-0 (EMR) configured for 214; however, this would result in only a 270-day continuous manned mission. An LCSM with adequate additional experiments (not EMR) might possibly make better utilization of flight B7.

Cluster B is a backup or alternate mode for Cluster A. The decision to switch to Cluster B may occur at any point in 1969, which may find Cluster A launch vehicles and payloads not launched. These must be recycled into the Cluster B schedule. For example, if at the end of AAP-3 it is determined that Cluster A is inoperative, then Cluster B will be launched. AAP-5, the 14- to 28-day RCM, will not be launched. It must be taken from its launch vehicle and reconfigured for 90-day capability since a 14- to 28-day CSM is not compatible with Cluster B objectives. However, AAP-5 may be used as a short-term backup if pad turnaround time permits.

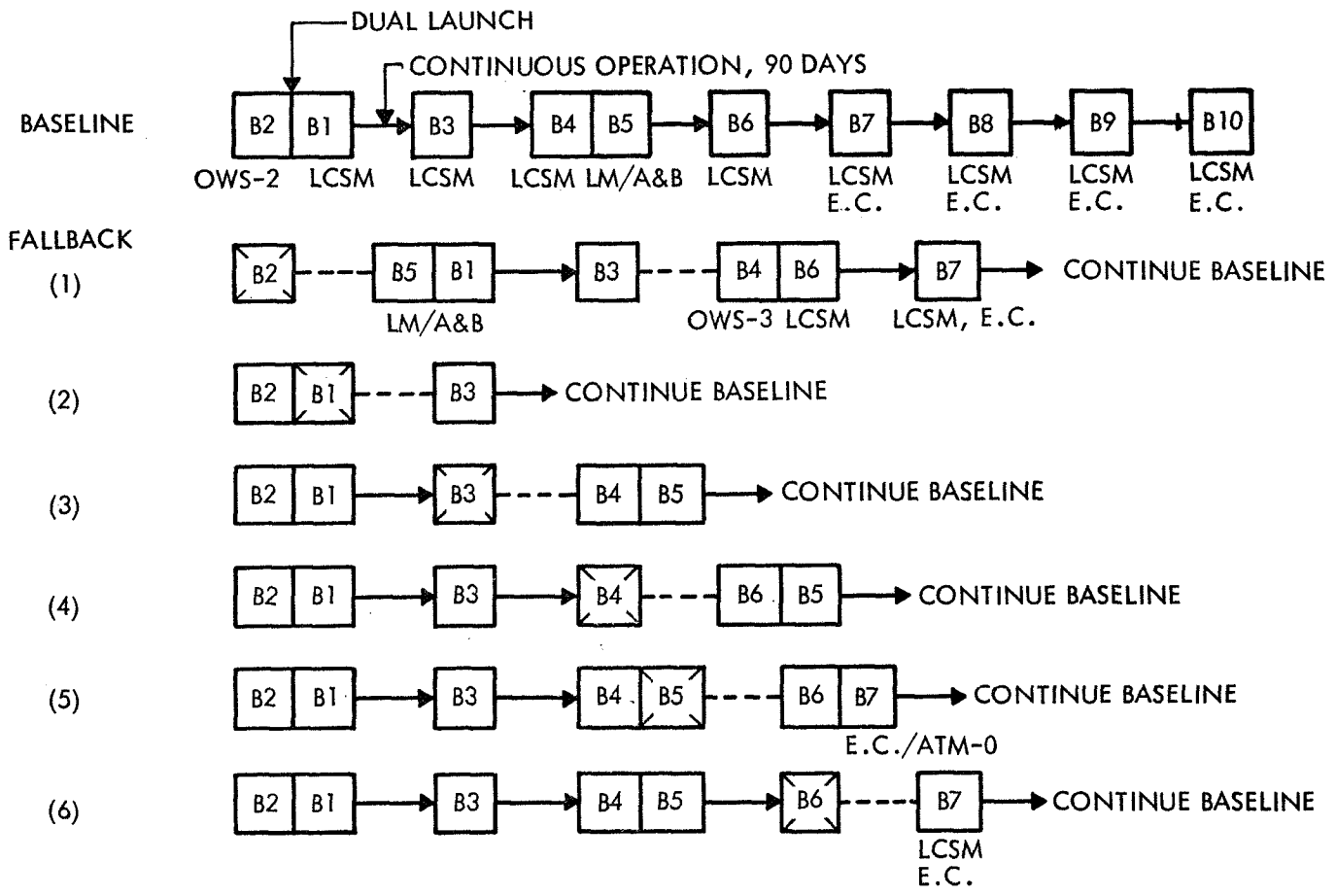

NOTES:

1. OWS-3 is utilized from synchronous mission if OWS-2 fails.
2. Launch failures of B7, B8, B9, or B10 (not shown above) would result in an unmanned Cluster until the following launch.
3. ☒ = failure.
4. E.C. = experiment carrier.

Fig. 3-9 Fallback Missions, Single Launch Failure

LOCKHEED MISSILES & SPACE COMPANY

3.3 CLUSTERS C AND D AND SYNCHRONOUS ORBITS

At present, only a minimum of planning information is available relative to Clusters C and D and to the synchronous-orbit missions. Flight assignments and highly tentative flight schedules for these three mission segments are presented in Table 3-9.

Table 3-9

FLIGHT SCHEDULES FOR CLUSTER C, CLUSTER D, AND SYNCHRONOUS-ORBIT MISSIONS

Flight No.	Vehicle Assignment	Launch Date	
518	Mission module, AM, and MDA	Dec 1971	Cluster C
223	LCSM, E.C.	Feb 1972	
224	LCSM, E.C.	Apr 1972	
225	LCSM, E.C.	Jul 1972	
226	LCSM, E.C.	Oct 1972	
522	Mission module, AM, and MDA	Dec 1972	Cluster D
227	LCSM, E.C.	Jan 1973	
228	LCSM, E.C.	Mar 1973	
229	LCSM, E.C.	Jun 1973	
230	LCSM, E.C.	Sep 1973	
514	LCSM, OWS-3, AM, and MDA	Nov 1970	Synchronous Orbit
515	LCSM, LM-A/ATM-3	Feb 1971	
523	LCSM, LM-A/ATM-4	Feb 1973	

Clusters C and D are essentially 1-yr mission flight profiles wherein a mission module is launched into a 1-yr orbit and four resupply and revisitation flights are made during that period. The mission module for Clusters C and D is a ground-modified S-IVB fitted out for the 1-yr on-orbit flight plan. The resupply and revisitation flight vehicles (logistic or LCSM) are actually second-generation derivatives of the Block II CSM specifically modified to provide cluster and subsystem resupply and astronaut transit capability. The LCSM is configured to supply all expendable commodities required for a 90-day period of cluster activities and also to be capable of 7 days of independent operations. The E.C. (experiment carrier) simply refers to the rack to which the LSCM will be initially mated and upon which much of the expendable commodities will be mounted, including experiment resupply packages.

The Cluster C and D flights are configured to carry out a group of experiments similar to or complementing those in Clusters A and B, as well as new ones.

The three synchronous-orbit flights are launched into a 19,350-nm synchronous orbit for 45 to 90 days. These flights are primarily concerned with communications and tracking relay experiments, synchronous-orbit operations, communications and meteorology experiments, stellar astronomy, radiation effects, and evaluation experiments.

Flight hardware for the synchronous-orbit flights is basically similar to that employed in the Cluster A mission. An S-IVB OWS, LSCM, AM, and MDA are initially launched into a high orbit, and operations on orbit continue for 45 to 90 days. The second flight is composed of an LSCM and LM-A/ATM-3 which rendezvous and reuse the orbiting OWS (if operable and habitable). The third flight is composed of an LSCM and LM-A/ATM-4, which are also planned to rendezvous with the OWS (if operable and habitable) for approximately 45 days.

3.4 CREW INTERFACE REQUIREMENTS

Several specific crew interface requirements and constraints are evident relative to IMBLMS. Representative requirements and constraints are the following:

- Monitoring of EV astronauts
- Monitoring of astronauts remotely stationed
- Translation of experiment canisters and setup
- Power, data management, and plumbing interconnection
- Interface with the waste management system
- Experimenter-subject interface
- Stowage, transfer, and return of data sample
- Astronaut skill requirements and cross training

As the IMBLMS Phase B study evolves, crew interface requirements and constraints will continually be identified and evaluated in relation to IMBLMS, particularly with respect to design and integration. Table 3-10 presents a selected and typical representation of several of these crew interface requirements and constraints.

Requirement or Constraint	SM	CSM	RCM	LM	M
Crew Size and Location at Liftoff	Unmanned spacecraft	3 at liftoff	1 to 2 during laboratory experiments. Possibly unmanned at liftoff.	1 to 2 during laboratory experiments. 0 at lift-off.	1 to 2 durin experiments off.
Crew Harness	Unmanned spacecraft	Restrained during all maneuvers. Restrained during sleeping and operations.	Restrained during all maneuvers.	Restrained during all maneuvers.	Restraints f ments.
Space-Suit Versus Shirtsleeve Operations	Suit required for all activities associated with SM EV tasks.	Suits during liftoff and on-orbit checkout. Suits during docking and reentry. Shirtsleeves for most operations and experiments.	Suits during operations and on-orbit checkout and docking. Shirt-sleeves during experi-ments.	Suits during checkout, docking/rendezvous, and EVA with monitor. Shirtsleeves during certain experiments.	Suits durin mating, and Shirtsleeves ments.
Extravehicular Mode	Possible for tasks asso-ciated with pallet utiliza-tion and equipment removal.	Quite likely for certain experiments. Crewman inside monitoring also in suit.	Possible if EV require-ments for experiment and capability are pro-vided in RCM. Crew-man inside monitoring also in suit.	Required for ATM film retrieval and replace-ment and possibly other experiments. Crewman inside monitoring also in suit.	Generally no quired for M ing; perhaps experiment carried in M EV setup an
Translation/Transfer	Possible that suited crew-man will have to trans-late to a sector of SM and bring back equipment in EV mode.	Translation of crewman and transfer of equip-ment from CSM to other spacecraft.	Crew has to translate and transfer himself and equipment to other spacecraft.	EV translation of crew-man and transfer of equipment/film. Crew has to translate to other spacecraft.	Crew has to to other spa transfer equ data.
Housekeeping	Performed in CM.	One man at operations station at all times.	Only occasional house-keeping once RCM is docked.	Only occasional house-keeping once LM is docked.	Very little h involved.
Sleep/Work Cycles	Not applicable.	Current concept is for staggered cycles. One crewman in CM at all times on duty.	No couches – NA. No more than 2 men avail-able at any one time.	No couches – NA. No more than 2 crewmen available at any one time.	No couches more than 2 available at time.
Eat/PH/Recreation	Not applicable.	Performed in CM until S-IVB is activated.	Not performed in RCM if S-IVB is available.	Not performed in LM.	Not perform
Warning and Voice Links	EV umbilical or RF.	Headphone or normal speech. Display and audio alarms.	Headphone or normal speech. Displays and audio alarms.	A voice and audiovisual warning and abort hard line is provided between CM and LM.	A voice and warning and line is provi CM and MD
TV Monitoring	Possible TV camera mon-itoring of EV crewman when in field of view of CM, LM, or tandem spacecraft.	TV camera probably pro-vided for observation of crew activities (IV and EV if appropriate).	TV camera probably provided for observation of crew activities.	TV camera probably provided or transferred to LM for observation of crew IVA and EVA.	TV camera vided for ob IVA and EV the ports.
Umbilicals	Possibly a life support umbilical used for EV tasks.	Possibly a life support or tether umbilical used if EV activities are re-quired to support experiments.	Possibly a life support or tether umbilical used to support EV if required.	Possibly a life support or tether umbilical used if EV activities are re-quired to support experiments.	A suit umbil is provided hard-wired
Ambient Illumination	If EVA is on dark side, an illumination kit will be required.	General spacecraft illumination is adequate for experimentation. For fine work, addi-tional illumination is required.	General spacecraft illumination is adequate for experimentation. For fine work, addi-tional illumination is required.	General illumination is only fair. Additional illumination is required for experiments where reading of documents or dials is required.	At present, illumination Additional is required ment tasks reading of displays/co
Capabilities and Training	Minimum relative to un-stowage of equipment in sector of pallet.	Minimum to moderate for IMBLMS since only a few experiments/ measurements can be accommodated.	Major developments in IMBLMS training and skill since nearly all types of experiments/ measurements can be accommodated.	Minimum to moderate for IMBLMS since only a few experiments/ measurements can be accommodated.	Major devel IMBLMS tra skill since types of exp measurem accommodat and/or S-IV

Tal

CSM	RCM	LM	MDA	AM	S-IVB
liftoff	1 to 2 during laboratory experiments. Possibly unmanned at liftoff.	1 to 2 during laboratory experiments. 0 at lift-off.	1 to 2 during laboratory experiments. 0 at lift-off.	Possibly 1 to 2 during certain experiments. 0 at liftoff.	Generally 2 during laboratory experiments. 0 at liftoff.
rained during all ›uvers. Restrained ıg sleeping and ations.	Restrained during all maneuvers.	Restrained during all maneuvers.	Restraints for experiments.	Restraints for certain experiments if conducted in AM.	Restrained during all maneuvers. Restraints for certain experiments, for sleeping, etc.
during liftoff and rbit checkout. during docking and ry. Shirtsleeves ıost operations and riments.	Suits during operations and on-orbit checkout and docking. Shirtsleeves during experiments.	Suits during checkout, docking/rendezvous, and EVA with monitor. Shirtsleeves during certain experiments.	Suits during activation, mating, and checkout. Shirtsleeves for experiments.	Suits during activation, mating, checkout, and S-IVB activation. Suits during EV airlock utilization.	Suits for activation and checkout and for equipment installation. Shirtsleeves for experiments. Suits during depassivation.
› likely for certain riments. Crewman e monitoring also it.	Possible if EV requirements for experiment and capability are provided in RCM. Crewman inside monitoring also in suit.	Required for ATM film retrieval and replacement and possibly other experiments. Crewman inside monitoring also in suit.	Generally no EV required for MDA monitoring; perhaps certain experiment packages carried in MDA require EV setup and operations.	Airlock with AM requires suit and crewman monitoring also in suit.	Probably no EV visual monitor. Perhaps stowed equipment may have to be removed for EV setup.
slation of crewman ransfer of equip- from CSM to other ecraft.	Crew has to translate and transfer himself and equipment to other spacecraft.	EV translation of crewman and transfer of equipment/film. Crew has to translate to other spacecraft.	Crew has to translate to other spacecraft and transfer equipment/ data.	Primarily translation through AM with transfer of equipment/data.	Considerable distance of translation of crew and transfer of equipment.
man at operations on at all times.	Only occasional housekeeping once RCM is docked.	Only occasional housekeeping once LM is docked.	Very little housekeeping involved.	Some housekeeping of AM and the AM's ECS and power support output to other spacecraft.	Occasional housekeeping – mostly associated with waste management and seal inspection.
nt concept is for ered cycles. One man in CM at all › on duty.	No couches – NA. No more than 2 men available at any one time.	No couches – NA. No more than 2 crewmen available at any one time.	No couches – NA. No more than 2 crewmen available at any one time.	No couches – NA. Generally only one man in AM at any one time.	No more than 2 crewmen available at any one time.
ormed in CM until B is activated.	Not performed in RCM if S-IVB is available.	Not performed in LM.	Not performed in MDA.	Not performed in AM.	Primary area for eating/ sleeping/recreation and waste management and PH.
phone or normal ch. Display and › alarms.	Headphone or normal speech. Displays and audio alarms.	A voice and audiovisual warning and abort hard line is provided between CM and LM.	A voice and audiovisual warning and abort hard line is provided between CM and MDA.	A voice and audiovisual warning and abort hard line is provided between CM-MDA-AM and S-IVB.	A voice and audiovisual warning and abort hard line is provided between the S-IVB and the AM.
amera probably pro- l for observation of activities (IV and appropriate).	TV camera probably provided for observation of crew activities.	TV camera probably provided or transferred to LM for observation of crew IVA and EVA.	TV camera may be provided for observation of IVA and EVA through the ports.	Little likelihood a TV camera will be provided for observation of IV activities in the AM.	High probability a TV camera will be provided for observation of crew IV activities.
ibly a life support ther umbilical used activities are re- d to support riments.	Possibly a life support or tether umbilical used to support EV if required.	Possibly a life support or tether umbilical used if EV activities are required to support experiments.	A suit umbilical plug-in is provided which is hard-wired from AM.	Umbilical suit plug-in capability is provided.	"Drag-in" umbilical(s) with power and suit air is (are) provided from the AM; also ECS.
ral spacecraft ination is adequate xperimentation. ine work, addi- l illumination is red.	General spacecraft illumination is adequate for experimentation. For fine work, additional illumination is required.	General illumination is only fair. Additional illumination is required for experiments where reading of documents or dials is required.	At present, only general illumination is provided. Additional illumination is required for experiment tasks that demand reading of text or displays/controls.	Illumination is sufficient for internal panel reading of existing panels. General illumination is adequate for translation and transfer tasks.	Eight general-purpose lights are provided. Additional illumination is required for moderate and fine reading and visual interpretation.
num to moderate MBLMS since only experiments/ urements can be nmodated.	Major developments in IMBLMS training and skill since nearly all types of experiments/ measurements can be accommodated.	Minimum to moderate for IMBLMS since only a few experiments/ measurements can be accommodated.	Major developments in IMBLMS training and skill since nearly all types of experiments/ measurements can be accommodated in MDA and/or S-IVB.	Minimum to no training for IMBLMS since no experiments or measurements will be conducted or accommodated in AM.	Major developments in IMBLMS training and skill since nearly all types of experiments/ measurements can or will be conducted in S-IVB.

Table 3-10 Representative Crew Requirements and Constraints

3.5 ANALYSIS OF CANDIDATE SPACECRAFT CARRIERS

This section has been prepared to present an analysis of spacecraft and spacecraft modules relative to their general configuration and the available volume for potentially stowing IMBLMS measurement equipment. The following flight hardware was considered during this analysis:

- Command module (three different configurations)
- Service module
- Lunar module
- Airlock module
- Multiple docking adapter (two different configurations)
- S-IVB orbital workshop (two different configurations)

The IMBLMS RFP (Ref. 1-1) required that the refurbished command module, lunar module, and S-IVB orbital workshop be analyzed relative to capabilities and constraints for possible integration and installation of IMBLMS. However, LMSC studies for NASA's AAP effort have indicated that other flight hardware may possibly be considered as a candidate carrier. Hence, the foregoing six major flight spacecraft were included in this analysis to ensure maximum consideration of candidate carriers for IMBLMS.

3.5.1 General Overview of the Candidate Carriers

During the flight-hardware analysis of the forementioned six carriers, it was found that certain carriers offered alternate configurations within themselves. Therefore, LMSC deemed it advisable to present at least brief summaries of each of these alternate configurations for each carrier as appropriate.

Three differing configurations have been identified for the command module: (1) standard off-the-shelf Block II CM's; (2) completely modified CM's – referred to as refurbished command modules (RCM's) – which are reconfigured inside the crew compartment, several major subsystems removed or modified, and the heat shield removed; and (3) LCSM's, which are logistics command and service modules used for resupply

 pg. 3-48 Blank, Not Filmed.

and astronaut transit. The RCM is designed as an on-orbit laboratory only and is not configured to return to earth. The other two CM configurations are reentry spacecraft.

The service module and airlock module are standard configurations with the possibility of using Sector I of the SM for AAP resupply or mission extension.

The apparent final lunar module configuration selected for AAP is combined with the Apollo telescope mount and rack to become an LM/ATM assembly.

The multiple docking adapter is currently undergoing design evaluation for two possible configurations. The differences are in the method of mounting the experiment canister and in the orientation of the astronaut relative to this mounting – horizontal versus radial.

The S-IVB orbital workshop has two primary configurations. The first is the configuration that will be modified minimally on the ground and made habitable on orbit after its primary function as a booster stage. The second configuration is an S-IVB with major ground modifications so that it is a laboratory before liftoff; this configuration is referred to as the mission module. Both configurations are currently undergoing intense study and analysis relative to alternate interior arrangements for various mission requirements.

3.5.2 Command Module (CM)

The three alternate configurations for the CM are presented in this section. The first is a standard off-the-shelf CM with only very minor modifications since this CM may be a backup for the Lunar Apollo Program. The second CM is a vehicle that has been modified to a major extent: several subsystems are modified, others are totally removed, the heat shield is removed, crew couches have been removed, and the reentry capability is essentially eliminated. This vehicle, renamed the refurbished command module (RCM), is essentially an on-orbit laboratory with no provision for astronaut return transit. The third CM configuration, referred to as a logistics command and service module (LCSM), has minor modifications and retains the capability for astronaut use as a reentry vehicle.

Each of these three CM configurations is discussed in succeeding paragraphs with respect to structure, layout, and experiment/measurement equipment-stowage area relative to the IMBLMS.

3.5.2.1 Command Module: Standard. This section discusses function, structure, stowage volume, and operating areas.

Function and Structure. The Apollo Block II command module houses the flight crew, the equipment necessary to control and monitor the spacecraft systems, and equipment required for the comfort and safety of the crew. The CM is divided into three sections: forward compartment, crew compartment, and aft compartment, as follows:

- Forward Compartment. The forward compartment is a section between the forward heat shield and the upper side of the forward pressure bulkhead. The center portion is occupied by a forward tunnel, which permits crew members to transfer to the LM or other spacecraft and return to the crew compartment during the performance of mission tasks. The interior of the forward compartment is divided into four 90-deg segments, which contain the recovery equipment, two reaction control motors, and the heat-shield separating (jettisoning) mechanism.
- Crew Compartment. The crew compartment (Fig. 3-10) is a pressurized, three-man cabin. The crew compartment contains spacecraft controls and displays, observation windows, access hatches, food, water, sanitation, and survival equipment. The compartment incorporates windows and equipment bays as a part of the structure.
- Aft Compartment. The aft compartment is an area encompassed by the aft portion of the crew compartment heat shield, aft heat shield, and aft portion of the primary structure. This compartment contains 10 reaction control motors, the impact attenuation structure, instrumentation, and storage tanks for water, fuel, oxidizer, and gaseous helium.

Equipment Stowage Volume and Performance Areas. A detailed analysis of the Block II command module (unmodified, off-the-shelf) equipment stowage areas has been conducted to determine the availability of any extra stowage area for IMBLMS

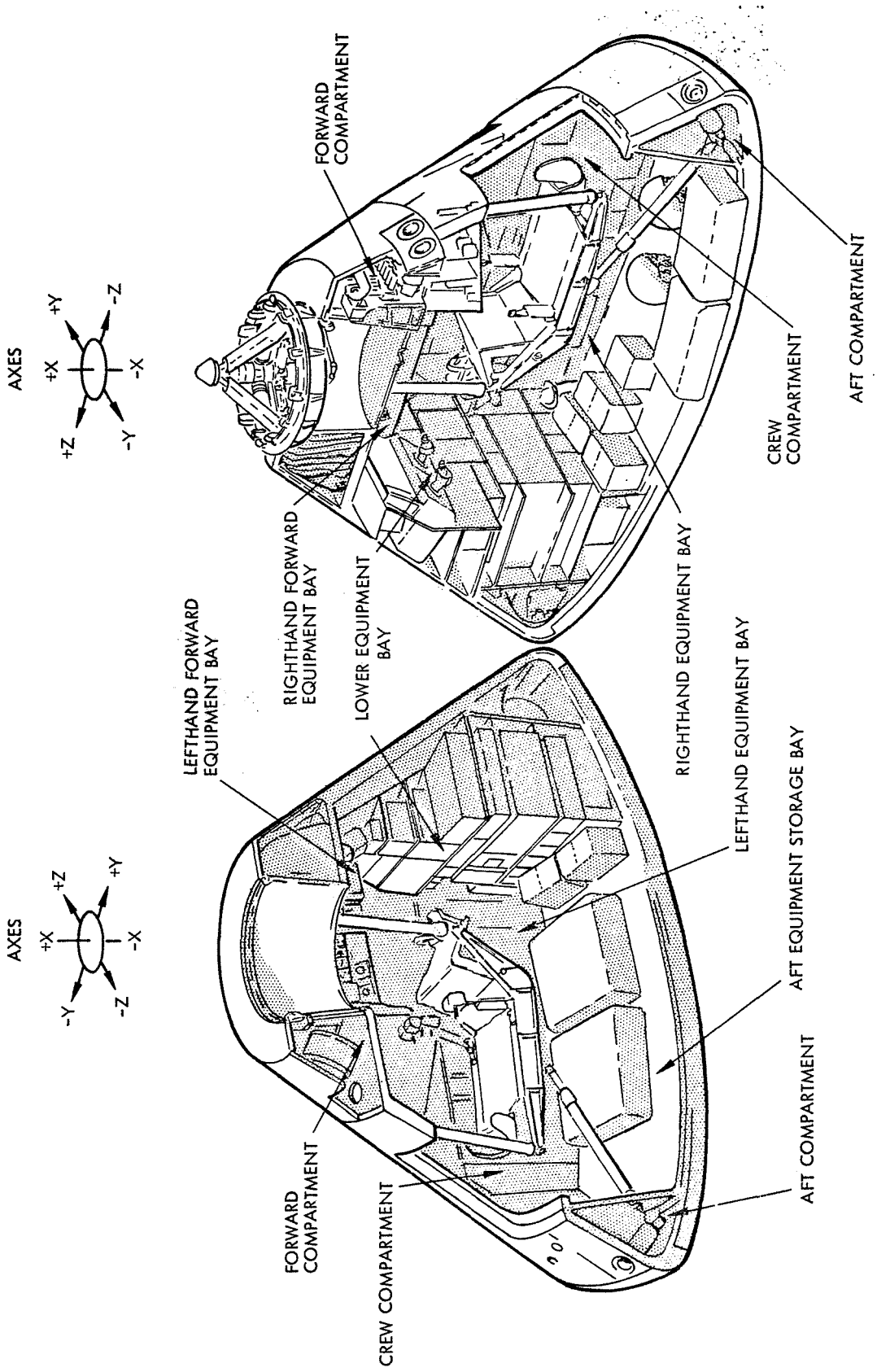

NOTE: CENTER COUCH OMITTED FOR CLARITY

Fig. 3-10 Command Module (Block II), Compartments and Equipment Bays

equipment items. This analysis was conducted for three mission modes: (1) liftoff to orbit attainment, (2) on-orbit operations, and (3) return to earth, as follows:

- CM Liftoff. There are three primary candidate storage areas within the CM at liftoff, although one is no longer available when the CM docks and crew transfer is initiated: (1) the CM forward tunnel (not available when docking and crew transfer are required), (2) two rock box areas in the lower equipment bay, and (3) the area beneath three crew couches.

  The forward tunnel could be used as a temporary storage area until orbit is achieved and the CM is docked to another spacecraft, permitting crew transfer. Available volume is approximately 30 in. in diameter by 15 in. in depth.

  The two rock boxes in the lower equipment bay offer two storage areas 18.7 in. wide by 11 in. deep by 8 in. high. As with the forward tunnel, neither of these two areas provides stowage volume at even a reasonable crew operating interface point, i.e., ease of access (visual and motor) for control functions or display monitoring.

  The third candidate stowage volume is that area located beneath the three crew couches. There does appear to be some extra space available for equipment stowage in this area. Figure 3-11 illustrates two views of this stowage area. The experiment pallet platform illustrated in Fig. 3-11 is approximately 52 in. wide by 53 in. long. As can be seen in View a, two corners have a very large radius whereas the radius of the remaining two corners is smaller. It should be pointed out that the storage compartments for the thermometeoroid garment(s) and the pressure garment assembly have been removed since it appears that these garments can be stowed elsewhere for the cluster missions. Similarly, CO_2 absorbers have been removed from the pallet platform and stowed along the lower edge of the lower equipment bay forward of the crew couches. The depth of 10.2 in. beneath the lowest point of crew couch attenuation (Fig. 3-11, View b) provides a reasonable height for stowage of the experiment package.

Again, as in the two preceding areas (tunnel and rock boxes) this area is not in an optimum crew display/control functional interface area. At present, several items are stowed in these various areas, but there appears to be room for additional equipment stowage.

- On-Orbit Operations and Return to Earth. Once the CM has achieved the desired orbit, normal crew operations associated with the cluster will begin, depleting the CM on-board provisions and consumables. This depletion is advantageous for two reasons: (1) the CM becomes less full relative to storage areas and hence other equipment can be set up within the CM; and (2) volume for stowing return-to-earth data becomes available before completion of that particular flight.

  Data-return requirements for the Cluster B mission have been studied from standpoints of weight and volume. Table 3-11 presents a preliminary list of those experiments that require data to be returned to earth. This table shows the return required for the second 180 days of the mission. The data to be returned during the first 180 days derive from the biomedical experiments shown, but not from Applications A and B.

Table 3-11

REQUIREMENTS FOR DATA RETURN

Experiment	Volume (ft^3)	Weight (lb)
Biomedical		
M018	0.25	2.5
M050	0.10	2.5
M051	0.10	2.5
M052	0.10	2.0
M053	1.0	3.1
M054	–	1.0
M055	0.50	12.5
M056	0.3	1.0
M057	0.15	5.0
M058	0	0
Total	2.5	32.1

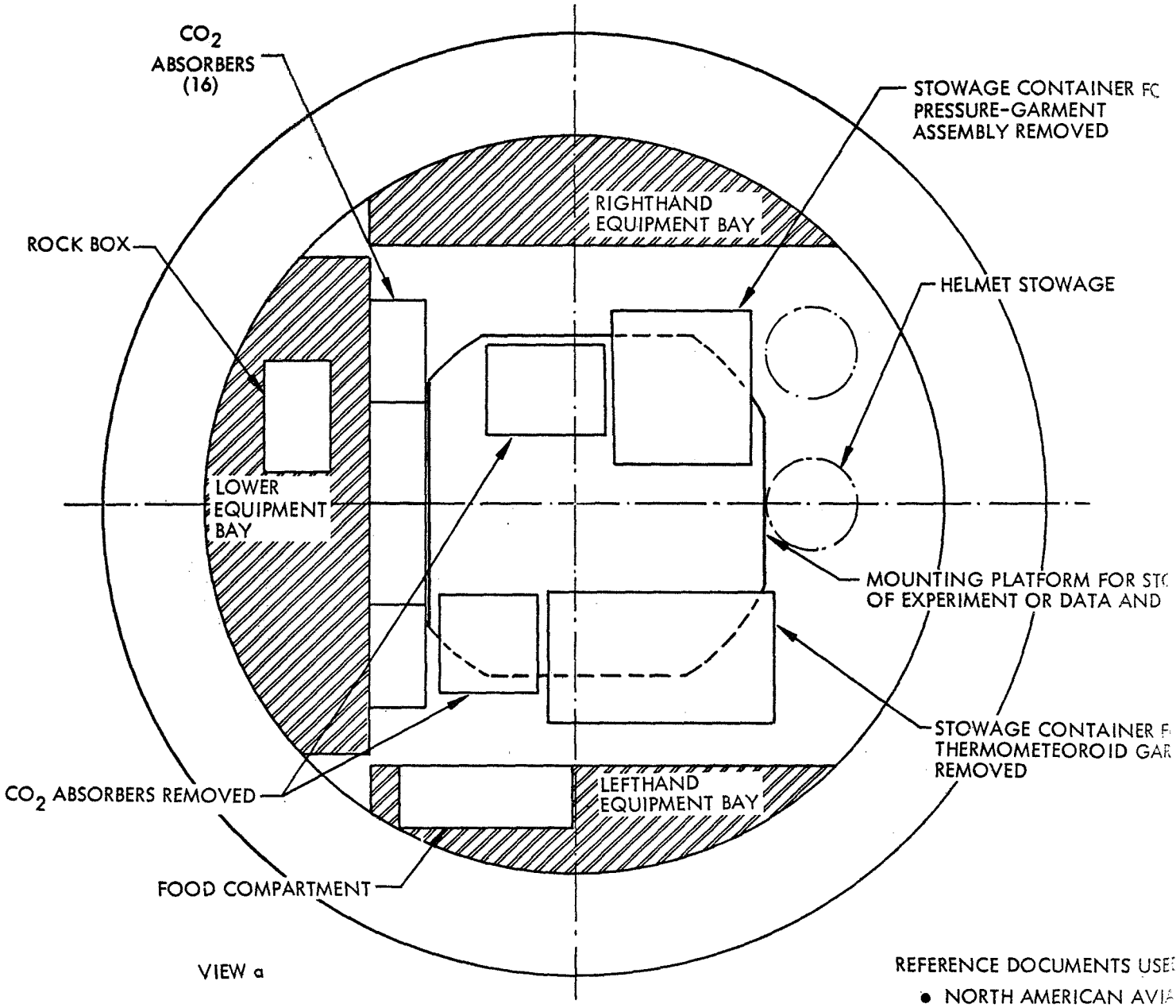

VIEW a

REFERENCE DOCUMENTS USE

- NORTH AMERICAN AVIA
  DEFINITION PHASE, APC
  SID 65-1529
- NORTH AMERICAN AVIA
  MODULE RETURN PAYLC
- NORTH AMERICAN AVIA
  900003, REVISED 10-7-6
  COMPLETE BLOCK II
- NASA, OFFICE OF MAN
  DIRECTIVE NO. 3B, FLI
  AAP-1/AAP-2

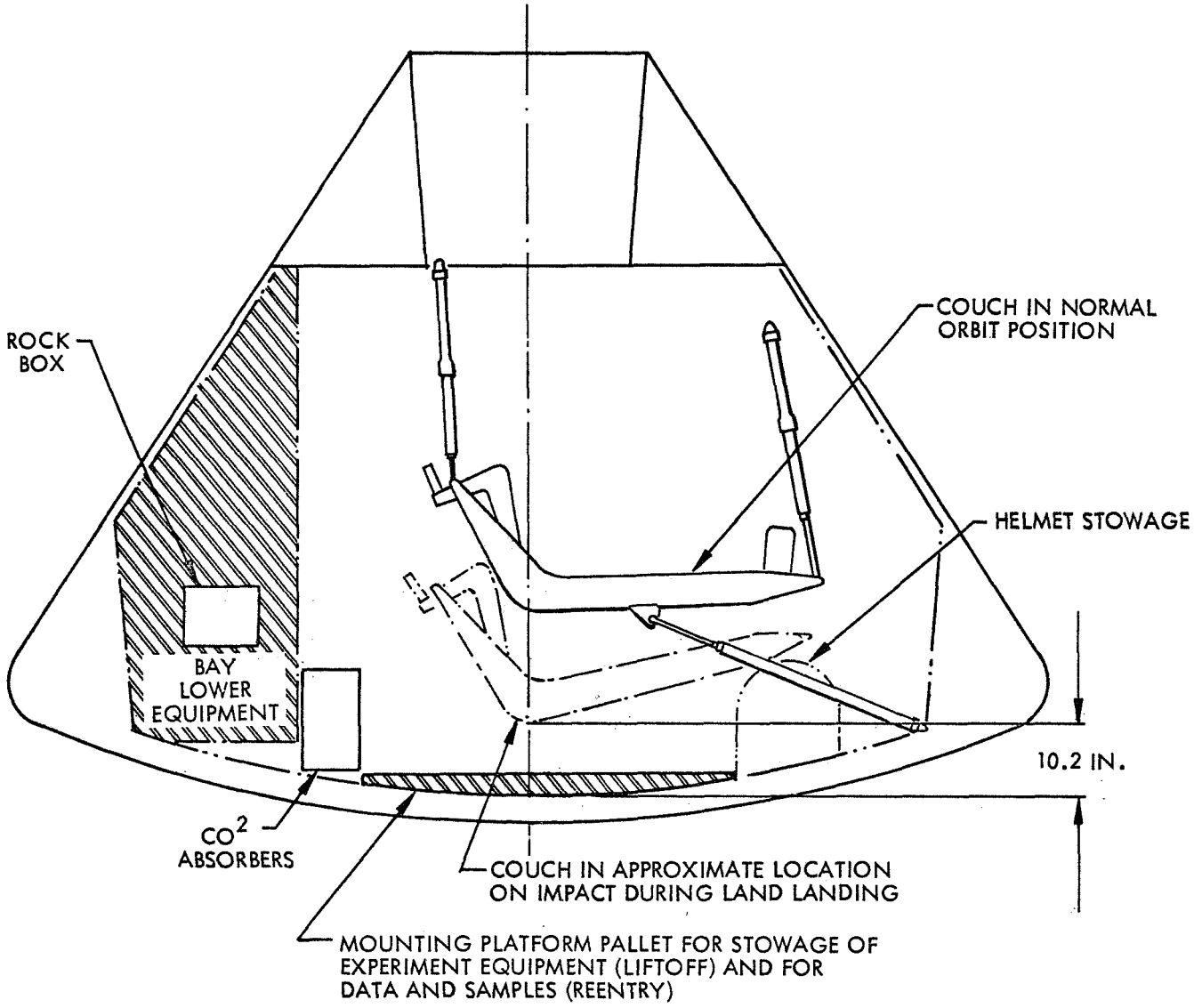

VIEW b

IR

OWAGE
SAMPLE

FOR
RMENT

ED FOR STUDY:

ATION CORP., PRELIMINARY
OLLO EXTENSION SYSTEM,

ATION CORP., COMMAND
OAD CAPABILITY, SID 66-773
ATION CORP., DRAWING V34-
5, INBOARD PROFILE APOLLO

NNED SPACE FLIGHT, PROGRAM
GHT MISSION DIRECTIVE FOR

Fig. 3-11 Command Module, Potential Stowage Area Beneath Crew Couches

Table 3-12 summarizes the estimated data-return storage potential in the Block II CM (937 lb) based on off-loading the maximum amount of equipment possible, including utilization of the thermometeoroid garment (TMG) storage and pressure garment (PGA) storage containers. However, the 30 data-return packages from the synoptic multiband cameras appear to exceed any available space in the CM and must be reduced in size or returned by another method.

3.5.2.2 Refurbished-Command-Module/Rack (RCM/Rack). The totally refurbished command module (RCM) is derived from the Apollo Block II CM by the refurbishing and modification of a vehicle previously flown. The rack is used to support the RCM in the Saturn LM adapter during launch and to mount the experiments and various subsystem components. Figure 3-12 illustrates the RCM/rack configuration.

The equipment installation on the rack is essentially identical to that for the LM-A/rack carrier; the only significant difference is the addition of a cold-gas reaction control system. A bipropellant system is used in the LM-A/rack configuration because it is existing equipment on the LM-A.

Several significant changes are made to the recovered CM. The ablation material and heat shield substructure are removed, since no reentry requirement exists for the experiment carrier; this reduces weight by approximately 2,850 lb. The crew couches are removed to provide a substantial increase in the free space available since they are not required at launch and the astronauts will use the CSM or LCSM and the S-IVB OWS for rest and sleep.

Other subsystem equipment is deleted or added either because capability for a longer mission duration is needed, or because its function has been transferred to the CSM (e.g., life support). Subsystem equipment deletions and additions are summarized in Table 3-13.

Structure. The RCM structure is basically identical to that discussed for the CM. During refurbishment, the entire outer shell including insulation is removed, exposing the conical inner aluminum honeycomb pressure shell. The inner shell is supported by

Pg. 3-56 BLANK, Not Filmed

Table 3-12

ESTIMATED DATA-RETURN STORAGE POTENTIAL OF BLOCK II CM

Command Module Availability

Equipment Removal	Wt (lb)	Dimension (in.)	Vol (in.^{3})
Food Container and Compartment Door	35.0	10.0 x 10.5 x 28.0	2,940
LDEC (2)	24.0	8.0 x 11.0 x 5.9	1,000
Extra Food	20.0		1,625
Food Container, Compartment Door, Door Retainer	27.0	16.0 x 10.0 x 14.5	2,200
Sequence Camera	10.0	5.5 x 8.5 x 6.0	275
Still Camera	15.0	9.5 x 8.5 x 9.0	725
Medical Refrigerator	5.0		190
Rock Box and Support	52.0	18.7 x 8.0 x 11.0	1,640
Medical Supplies		In Med. Refrig.	
Vacuum Cleaner	3.0	7.5 x 6.0 x 9.5	350
Waste Bag Box	.5		
Waste Container	9.0	14.0 x 7.5 x 15.5	1,625
NASA Bioinstrumentation	5.0	5.0 x 10.5 x 4.0	210
Sanitary Supplies	18.5	8.5 x 7.5 x 12.5 8.5 x 4.0 x 9.5	1,125
Shelf Space	30.0		1,040
EVCT Device			600
CWG, LCG, Tools	12.0	18.5 x 8.0 x 21.5	3,160
TV Camera	13.4	13.0 x 9.0 x 5.5	650
CO_2 Absorbers	154.0	15.0 x 16.0 x 5.0 15.0 x 20.0 x 9.5 15.0 x 10.0 x 9.0 15.0 x 10.0 x 9.0	6,750
Data Storage	4.0		14.0
Tunnel	15.0		
Thermometeoroid Storage Pressure Garment, two places	420.0		
TOTAL	937.0		26,119.0

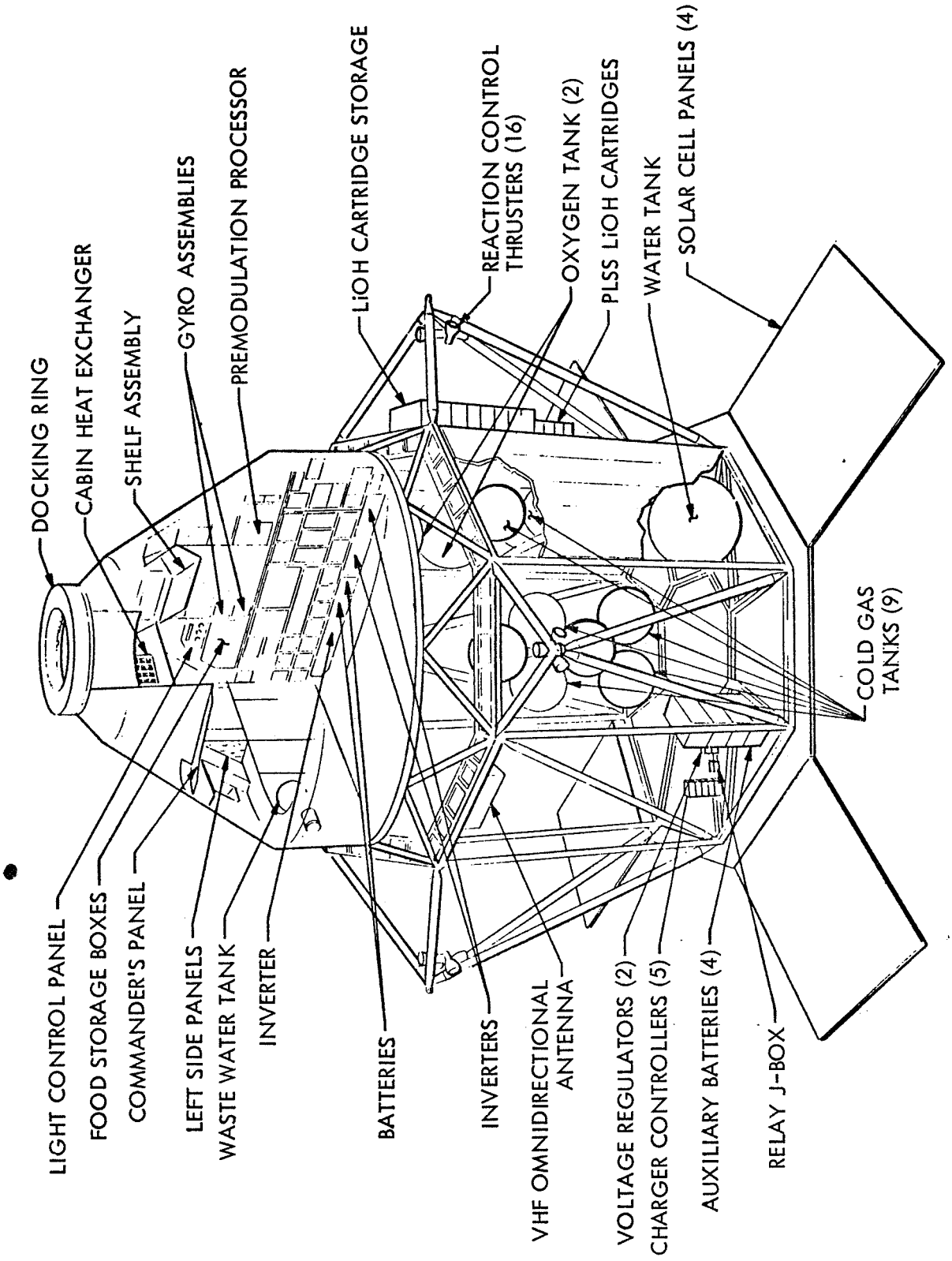

Fig. 3-12 RCM/Rack Configuration

Table 3-13

MODIFICATIONS REQUIRED FOR RCM/RACK BASIC CARRIER

System	Deleted	Retained	Added	Remarks
Spaceframe	Ablation material and heat shield substructure, docking structure, earth landing system	Pressure shell, major internal secondary structure	LM-type docking structure, combined micrometeoroid and thermal shield	2,400 lb of reentry structure removed
Stabilization and Control	Service propulsion system (SPS), couplers and indicators	Remainder	Optical reference sensors	CMG's included as experiment equipment
Guidance and Navigation (G&N)	Primary guidance including computer	Coupling display unit	None	No G&N functions for RCM
Crew Provisions	Crew couch assembly, food and waste management	Main control panel orientation, PLSS recharge station, 1 PLSS	Crew station restraints, 1 PLSS	Free volume and habitability enhanced by crew couch removal, supplies stowed in carrier for extended missions
Environmental Control	Suit loop, secondary coolant loop, life-support portion of water management	Water control module, cabin loop, O_2 control module, primary coolant loop	Radiator system on rack, modified cold-plate installation, recirculation duct	CSM maintains 5-psi pure O_2 atmosphere; normal operation (docked) with hatch open
Electrical Power	Selected terminal equipment wiring	Power distribution and conditioning system, emergency and pyro batteries	Solar cell and battery installation in rack, experiment support J-box in rack and RCM	Service module (SM) fuel cell system not adequate for extended missions
Propulsion	None	None	None	None
Reaction Control	CM reaction-control system	None	Cold-gas installed on rack	CM ablative nozzle life inadequate for most missions
Communications	VHF and HF recovery communications installation, S-band high-gain antenna, C-band beacon	CM antennas, S-band system (less transmitter), up-data link, audio center	2 LM S-band transceivers, reactive-command system	Redundant transceiver on Saturn frequency
Instrumentation	Central timing equipment, CM TV camera	Remainder	LM TV camera, TV monitor, and TV tape recorder, experiment TLM; data processing equipment consisting of computer, core, and tape memories	Modify tape recorder for earth orbit
Controls and Displays	Earth landing system, flight control displays, abort sequence controls, SPS controls, suit-loop controls, all G&N controls	Modify remaining panels as required, display keyboard	Control and display for solar cell and battery system CRT and TV monitor	8 ft^2 available for experiment controls and displays

a framework of four longerons and three rings. C-channels and T-stringers located longitudinally along the pressure shell provide attachment for the micrometeoroid/thermal shield. This structure is required because the inner honeycomb shell is inadequate for either thermal or micrometeoroid protection.

The secondary equipment support structure consists of frames and shelves supported from the forward and aft bulkheads, a girth shelf, and wall brackets bonded to the honeycomb shell. Maximum use will be made of existing secondary structure; however, additional brackets may be bonded to the pressure shell without impairing the structural integrity.

Six ties near the aft bulkhead are used as attachment points to the rack. A ring and truss structure must be added to provide a structural interface between the RCM hardpoints and the rack.

Experiment Stowage Volume and Performance Areas. Several alternate layouts of the RCM cabin interior have been prepared by LMSC; each has sufficient stowage volume for the modular IMBLMS medical or behavioral measurement equipment. With the removal of the crew couches, a reasonably adequate free volume of experiment area is available for conducting measurements/experiments that require rather large free-swept volumes – e.g., body mass measurement, lower body negative pressure measurement, ergometer exercising/conditioning measurement, and rotation of the subject in a spin chair. These large nonmodular equipment items could be transferred to the RCM for measurement with the option of removing the equipment once any measurements have been conducted or leaving the equipment within the RCM free area for subsequent use.

LMSC recently constructed a full-scale soft mockup of an RCM in order to evaluate fully the impact of the deletions mentioned in Table 3-13. Figure 3-13 shows a half-section of the mockup with the couches removed. The following areas, as shown in Fig. 3-13, are available for IMBLMS equipment:

- Area directly beneath and to the left of the midline of the tunnel – 28 in. wide by 16 in. high by 9 in. deep
- Area directly beneath and to the right of the tunnel edge (because of minimum depth, area is not usable except for stowage of small items)
- Area directly beneath the window (currently shown as three elongated stowage compartments) – 40 in. wide by 32 in. high by 16 in. deep.
- Area to the right of above where the backpack is temporarily stowed – 32 in. wide by 32 in. high by 16 in. deep

Figure 3-14 shows a crewman in shirtsleeve mode at the RCM operational (commander's panel) station. Figure 3-15 illustrates a crewman in a vented suit standing in the RCM for size comparison and perspective.

There is nearly 40 sq ft of free standup floor space in the RCM with an internal free volume of 360 cu ft.

Additional candidate stowage areas are identical to those previously discussed in Section 3.5.2.1.

Because of the major refurbishment required of the CM, it would appear that locating IMBLMS equipment aboard can realistically be accomplished during the systems allocation and design layout phases of the initial refurbishment. LMSC has learned from construction of the RCM mockup that CM refurbishment requirements for hardware integration and equipment relocation are difficult to implement relative to operational crew interface unless equipment mockups are built and actually installed in their proposed locations. As the measurement modules become firmly established for the IMBLMS, they can be mocked up in volume and installed in the RCM mockup for further design evaluation and integration analysis.

3.5.2.3 Description and Configuration of the LCSM. The logistics spacecraft, or LCSM, is a second-generation derivative of the Block II CSM specifically modified to

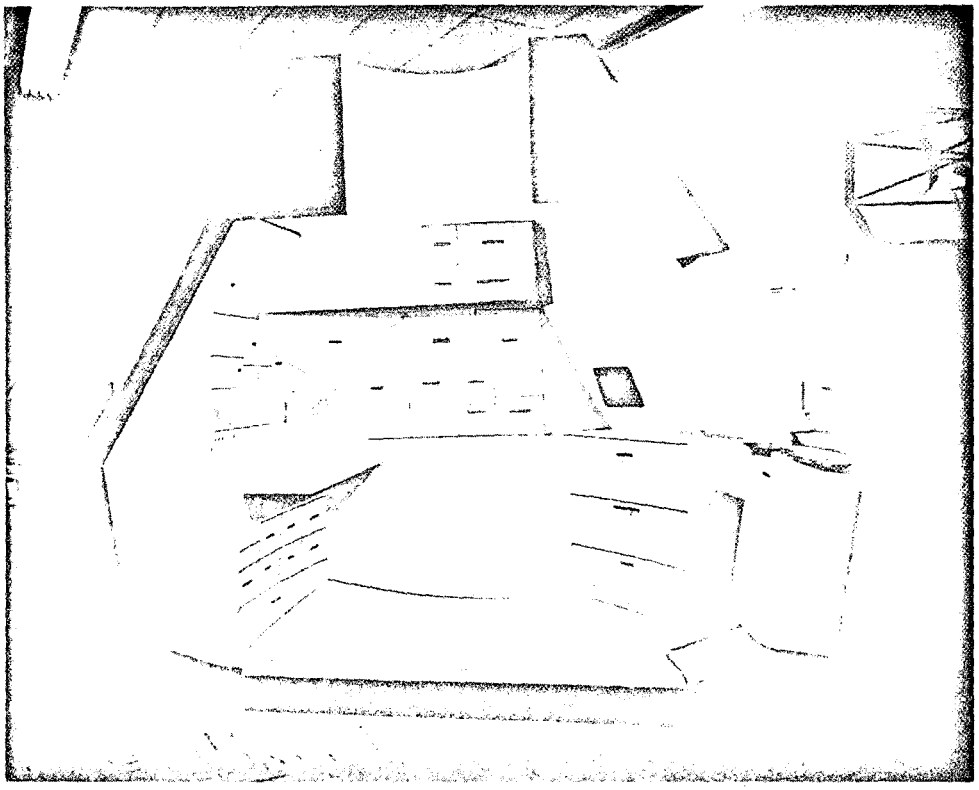

Fig. 3-13 Half-Section Mockup of RCM

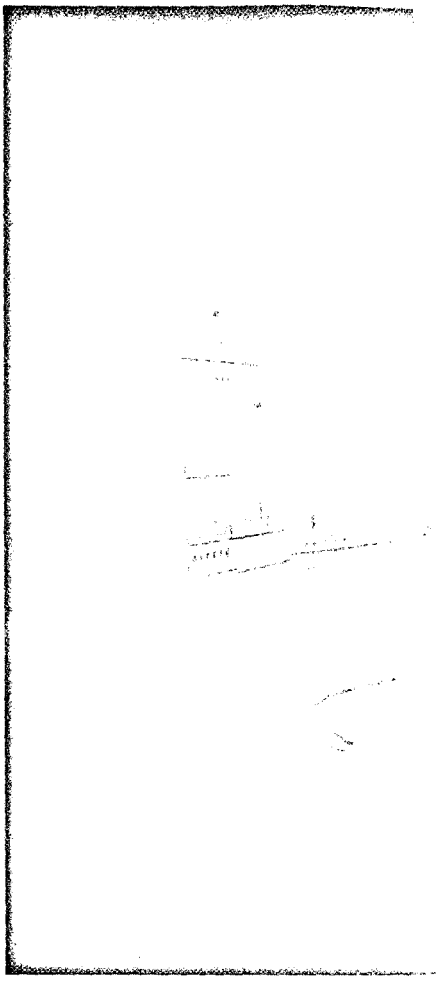

Fig. 3-14 Shirtsleeved

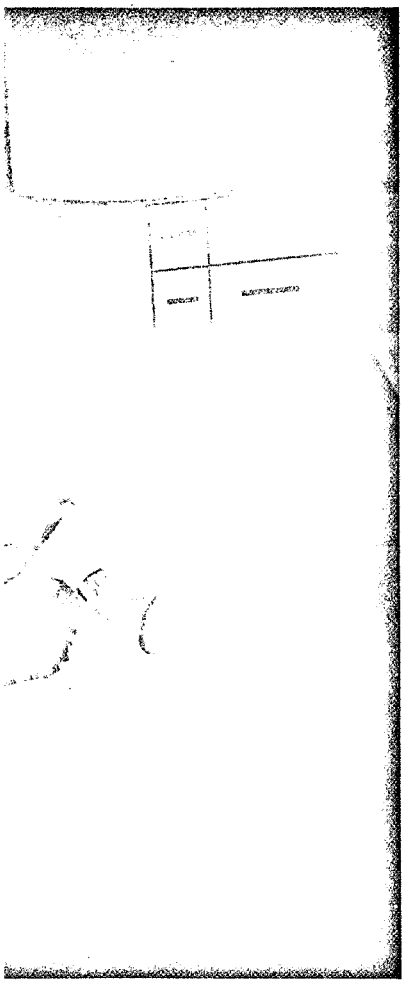

ved Crewman in RCM

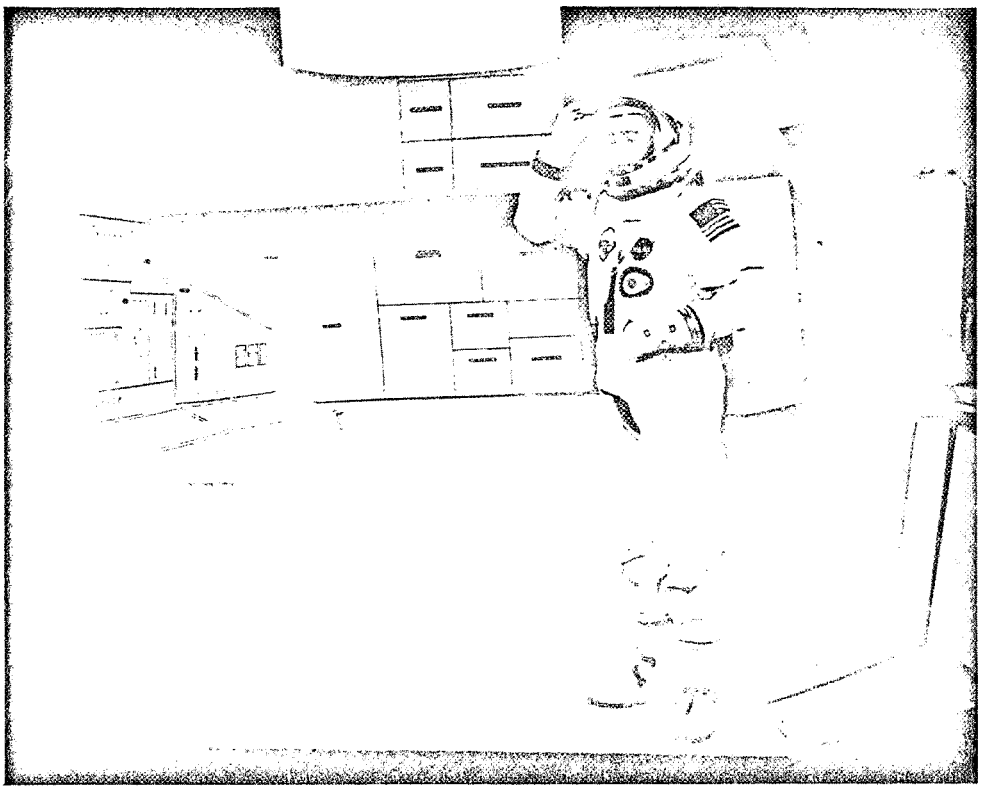

Fig. 3-15 Suited Crewman in RCM

provide cluster and subsystem resupply and astronaut transit capability. The LCSM is configured to supply all expendable commodities required for a 90-day period of cluster activities and also be capable of 7 days of independent operations. The structure is identical to that of the Block II CSM.

Systems. Space and weight limitations preclude the continuous operation of the LCSM fuel cell electrical system, which is sized to provide cryogens for 7 days of independent operation – sufficient time for ascent/descent phasing maneuvers. After docking to the cluster, the fuel cells are shut down and LCSM power is drawn from the OWS solar array power system. The Allis-Chalmers fuel cells, with in-orbit start capability, are reactivated before undocking from the cluster. Fuel cell cryogens are stored in Phase III CGSS tanks with inherently low boiloff rates; however, to ensure a supply of hydrogen at the end of 90 days of orbit operations, a Block II SPS He tank is added as a backup gaseous hydrogen supply. Reentry batteries located in the CM provide a further backup.

Space and weight constraints also prohibit the continuous use of LiOH for CO_2 removal and the inclusion of a 90-day potable water supply. During independent flight, water for 7 days is available from the fuel cells and LiOH for a similar duration is stored in the CM. While the LCSM is docked to the cluster, CO_2 is removed by a molecular sieve located in the AM. Water is provided by a Sabatier-reactor CO_2 reduction system and a urine-still installation also located in the AM. An electrolytic stack provides H_2 and O_2 from water produced in excess of astronaut requirements; however, the excess H_2 is not sufficient to supply the full requirements of the Sabatier reactor. An umbilical from the LCSM to the AM provides the required makeup H_2.

The volume saved by shutdown of in-orbit fuel cells, and by elimination of LiOH CO_2 removal and stored water supplies, allows the use of Sector I for storage of EVA (PLSS) and crew systems consumables. Access to Sector I is made through a structural access door similar to that proposed for the Apollo Experiments Pallet.

A summary of modifications showing the development of the LCSM from the Block II and AAP-3 configurations is presented in Table 3-14.

pg. 3-64 Blank & Not Filmed

Table 3-14

SUMMARY OF CHANGES SHOWING DEVELOPMENT OF AAP-3 CSM AND LCSM FROM MAINSTREAM BLOCK II CSM

Module/Subsystem	Changes to Block II to Achieve AAP-3 CSM Configuration	Changes to AAP-3 CSM to Achieve LCSM Configuration
CM		
Structure	Add minor support structure and bracketry; add access for N_2 line from SM; add support installation for solid retro rocket	Same as AAP-3
Stabilization/ Control	Same as Block II	Same as AAP-3
Guidance/ Navigation	Same as Block II	Same as AAP-3
Crew Systems	Same as Block II	Same as AAP-3
Environmental Control	Add H_2O sterilization tanks, additional suit loop fan, pO_2 sensor installation and N_2 plumbing	Same as AAP-3
Earth Landing	Same as Block II	Same as AAP-3
Instrumentation	Minor modifications to wiring associated with SM tankage changes	Minor modifications to wiring associated with SM tankage changes
Electrical Power	Minor modifications to wiring	Minor modifications to wiring; add power umbilical to cluster in docking tunnel area
Reaction Control	Same as Block II	Same as AAP -3
Communications	Same as Block II	Same as AAP-3
Controls/ Displays	Modify panel to accept rendezvous radar display and reflect deletion of SPS storage tanks; add additional functions to display status of new SM cryogenic and RCS tankage and solid retro	Add additional panel for cluster caution/warning and checkout functions; modify tank status functions

Table 3-14 (Cont.)

Module/Subsystem	Changes to Block II to Achieve AAP-3 CSM Configuration	Changes to AAP-3 CSM to Achieve LCSM Configuration
CM (Cont.)		
Useful Load	Remove lunar mission scientific equipment; add solid propellant retro rocket installation	Same as AAP-3
SM		
Structure	Primary structure same as Block II secondary structure modified and strengthened to provide attachments for increased cryogenic storage, long-life fuel cells, and additional RCS tankage; mounting provisions for SPS propellant storage tanks (2) and helium tanks (2) are removed	Add structural door and secondary structure to Bay I to provide in-orbit access to stored life support comsumables; remove secondary structures required for one CGSS oxidizer tank and one CGSS hydrogen tank, and attachments for one Block II He tank
Environmental Control	Add water-monitoring unit and Phase I CGSS N_2 tank and plumbing	Replace Phase I CGSS N_2 tank with Phase III CGSS N_2 tank; add H_2 umbilical to AM H_2O reclamation system
Instrumentation	Add transducer and wiring modifications required by changes in cryogenic, SPS, and RCS tankage	Add minor transducer and wiring modifications required by cryogenic tankage changes
Electrical Power	Replace two Block II H_2 tanks with three Phase I CGSS H_2 tanks; replace two Block II O_2 tanks with three Phase I CGSS O_2 tanks; revise cryogenic plumbing and wiring	Replace three P&W fuel cells with AC fuel cells; replace three Phase I CGSS O_2 tanks with two Phase III CGSS O_2 tanks; replace three Phase I CGSS H_2 tanks with two Phase III CGSS H_2 tanks; add one Block II He tank for gaseous H_2 storage; revise plumbing and wiring

Table 3-14 (Cont.)

Module/Subsystem	Changes to Block II to Achieve AAP-3 CSM Configuration	Changes to AAP-3 CSM to Achieve LCSM Configuration
SM (Cont.)		
Service Propulsion	Remove two Block II propellant storage tanks; replace two Block II He pressurant tanks with one smaller He tank; He and propellant plumbing are modified accordingly	Same as AAP-3
Reaction Control	Add two LM He tanks, two LM oxidizer tanks, and two LM fuel tanks to each of the four Block II RCS modules	Same as AAP-3
Communications	Remove steerable S-band antenna; add rendezvous radar	Same as AAP-3

LCSM and SM Equipment Stowage Areas. The internal LCSM equipment stowage area is nearly identical to that discussed for the standard CM (see Section 3.5.2.1) relative to the IMBLMS. Space allocation for the LCSM relative to increased requirements and modifications necessary to support the longer missions is presented in Fig. 3-16. In general, no IMBLMS equipment is stowed in the SM for this configuration. Module weights and available quantities of stowed supplies for the LCSM and SM are summarized in Tables 3-15 and 3-16, respectively.

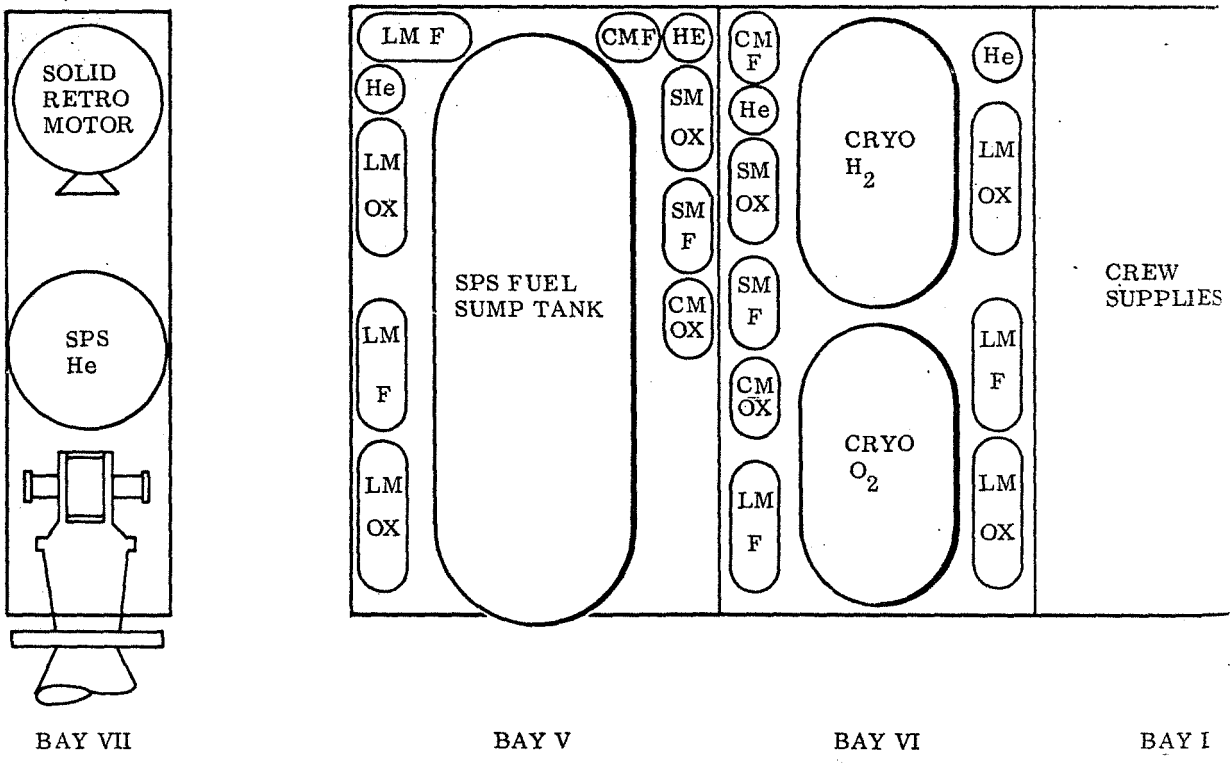
SOLID RETRO MOTOR
SPS He
LM F
He
LM OX
LM F
LM OX
SPS FUEL SUMP TANK
CMF
HE
SM OX
SM F
CM OX
CM F
He
SM OX
SM F
CM OX
LM F
CRYO H_2
CRYO O_2
He
LM OX
LM F
LM OX
CREW SUPPLIES
BAY VII
BAY V
BAY VI
BAY I

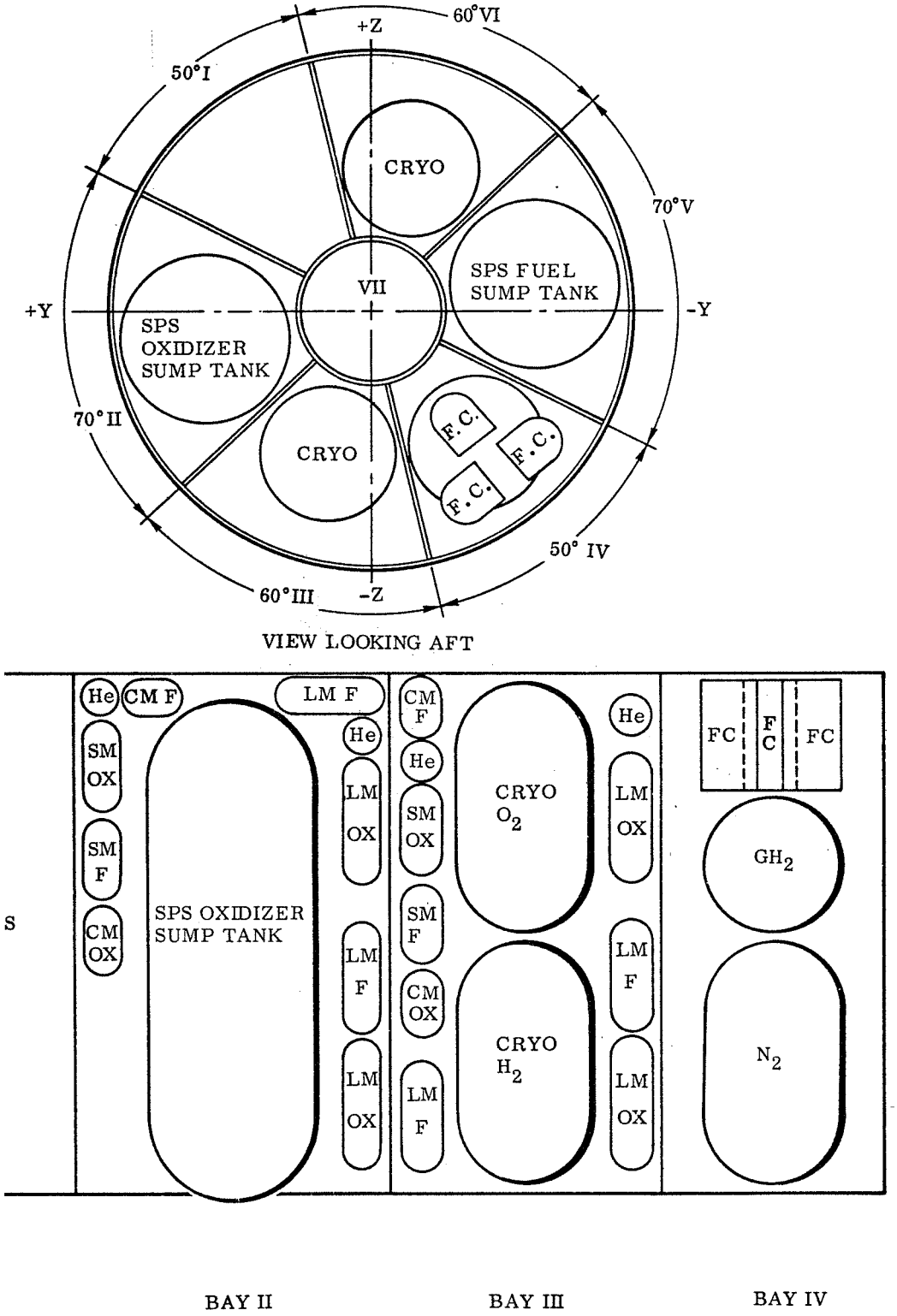

Fig. 3-16 Space Allocation in LCSM

Table 3-15

90-DAY LOGISTIC CSM WEIGHT SUMMARY

Subsystem	Weight (lb)	
	CM	SM
Weight Empty		
Structure	6,150	4,162
Stabilization and Control	190	–
Guidance and Navigation	392	–
Crew Systems	88	–
Environmental Control	477	568
Earth Landing	643	–
Instrumentation	20	61
Electrical Power	1,435	3,007
Reaction Control	298	1,044
Main Propulsion	–	1,218
Communications	300	140
Controls and Displays	465	–
Fire Modifications	250	–
Total	10,708	10,200
Useful Load – 100 Percent Capacity		
Reaction Control	270	3,596
Electrical Power	–	2,648
Environmental Control	90	876
Crew Systems and EVA	924	1,109
Main Propulsion Residuals	–	645
Retro Rocket Installation	1,271	–
Total	2,555	8,874
Module Totals	13,263	19,074
Gross Weight Less Impulse SPS Propellant		32,337

pg. 3-72 Blank & not filmed

Table 3-16

MAXIMUM USABLE AMOUNTS OF STORED COMMODITIES, 90-DAY LCSM

Item	CM (lb)	SM (lb)
Reaction Control Propellant	225	3,228
Hydrogen - Supercritical	–	150
Hydrogen - Gaseous	–	22
Oxygen – Supercritical	–	2,400
Oxygen - Gaseous	4	–
Water	16	–
LiOH	66 (7 days)	–
Nitrogen	–	850
Crew Supplies	57 (7 days)	718 (88 days)
EVA Supplies	9 (2 EVA)	234 (13 EVA)
SPS Propellant	–	21,040

3.5.3 Service Module (SM)

The SM will be used on every flight including a manned command module (CM). The SM will be ground-modified to varying degrees for each flight based on specific mission functions and requirements.

3.5.3.1 General Description. The service module structure is a cylinder formed by six panels of 1-in. aluminum honeycomb. Its interior is unsymmetrically divided into six sectors by radial beams or webs fabricated of milled aluminum alloy plate. The interior consits of diametrically opposed sectors around a circular section 44 in. in diameter. Sectors 1 and 4 are 50-deg segments and house essential auxiliary equipment. Sectors 2 and 5 are 70-deg segments and contain a large oxidizer tank for the service propulsion system. The remaining sectors, 3 and 6, are 60-deg segments and hold fuel tanks for the service propulsion system. The equipment contained within the SM is accessible through maintenance doors located strategically around the exterior surface of the module. The items contained in specific SM compartments are listed in Table 3-17. The detailed configuration is shown in Fig. 3-17.

3.5.3.2 Service Module, Sector 1. A pie-shaped segment (Sector 1) on the service module provides a compartment for stowage of experiment equipment, as well as for performance of EVA experiments (Fig. 3-17). Since the area is exposed to the space environment, it is not recommended that the astronaut perform an EV excursion to conduct medical or behavioral experiments at this work station area. However, it may be possible to stow medical/behavioral equipment designed to withstand the space environment (e.g., mass measurement device) within the segment for on-orbit removal and relocation within any of the candidate carriers.

3.5.3.3 Structure. The structural subsystem is designed to provide the mechanical support required by the sector for assembly, transportation, testing, and operation. This support includes the enclosure, shape strength, accessibility, exposure, space allocation, mounting locations, and attachment points. The configuration is shown in Fig. 3-18. This arrangement permits the installation of a large number of partial and full-depth experiments. At the same time, each experiment benefits from an unobstructed exposure to the prime outboard surface area.

Table 3-17

EQUIPMENT IN SM COMPARTMENTS

Compartment	Equipment
Sector 1	Electrical power system space radiator Supercritical oxygen tank (2) Supercritical hydrogen tank (2)
Sector 2	Environmental control system space radiator Service propulsion system oxidizer tank Reaction control system engine cluster (+Y axis) Reaction control system helium tank Reaction control system fuel tank Reaction control system oxidizer tank Space radiator isolation valve (2)
Sector 3	Service propulsion system fuel tank Reaction control system engine cluster (+Z axis) Reaction control system helium tank Reaction control system fuel tank Reaction control system oxidizer tank Rendezvous radar transponder
Sector 4	Electrical power system space radiator Fuel cell power plant (3) Helium distribution system Reaction control system control unit Electrical power system power control relay box High-gain antenna (stowed under)
Sector 5	Environmental control system space radiator Service propulsion system oxidizer tank Reaction control system engine cluster (-Y axis) Reaction control system helium tank Reaction control system fuel tank Reaction control system oxidizer tank
Sector 6	Space radiator selection valve (2) Glycol shutoff valve (2) Reaction control system engine cluster (-Z axis) Reaction control system helium tank Reaction control system fuel tank Reaction control system oxidizer tank Service propulsion system fuel tank
Center Section	Service propulsion system helium tank (2) Service propulsion system engine

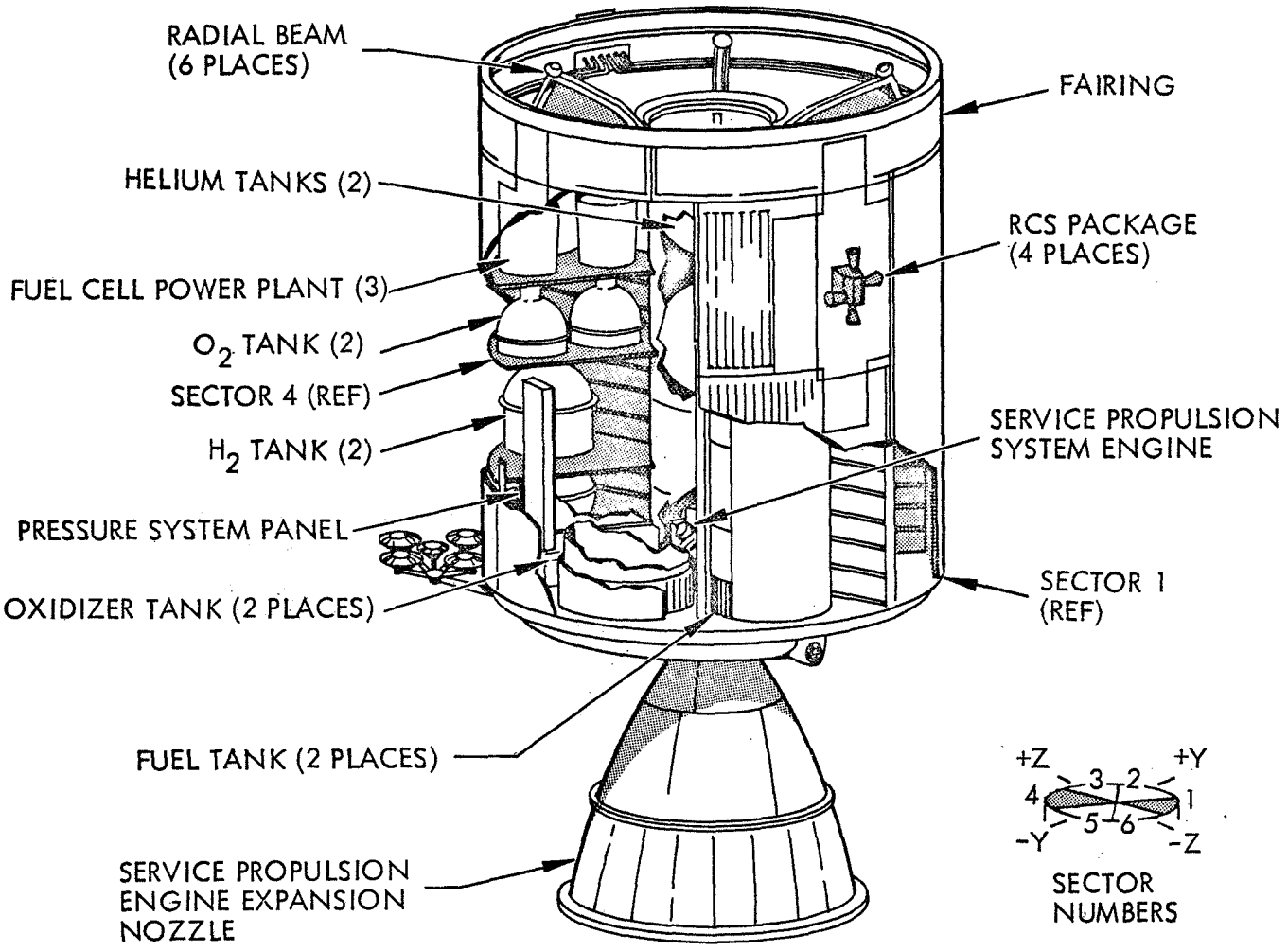

View (a) Detailed Configuration

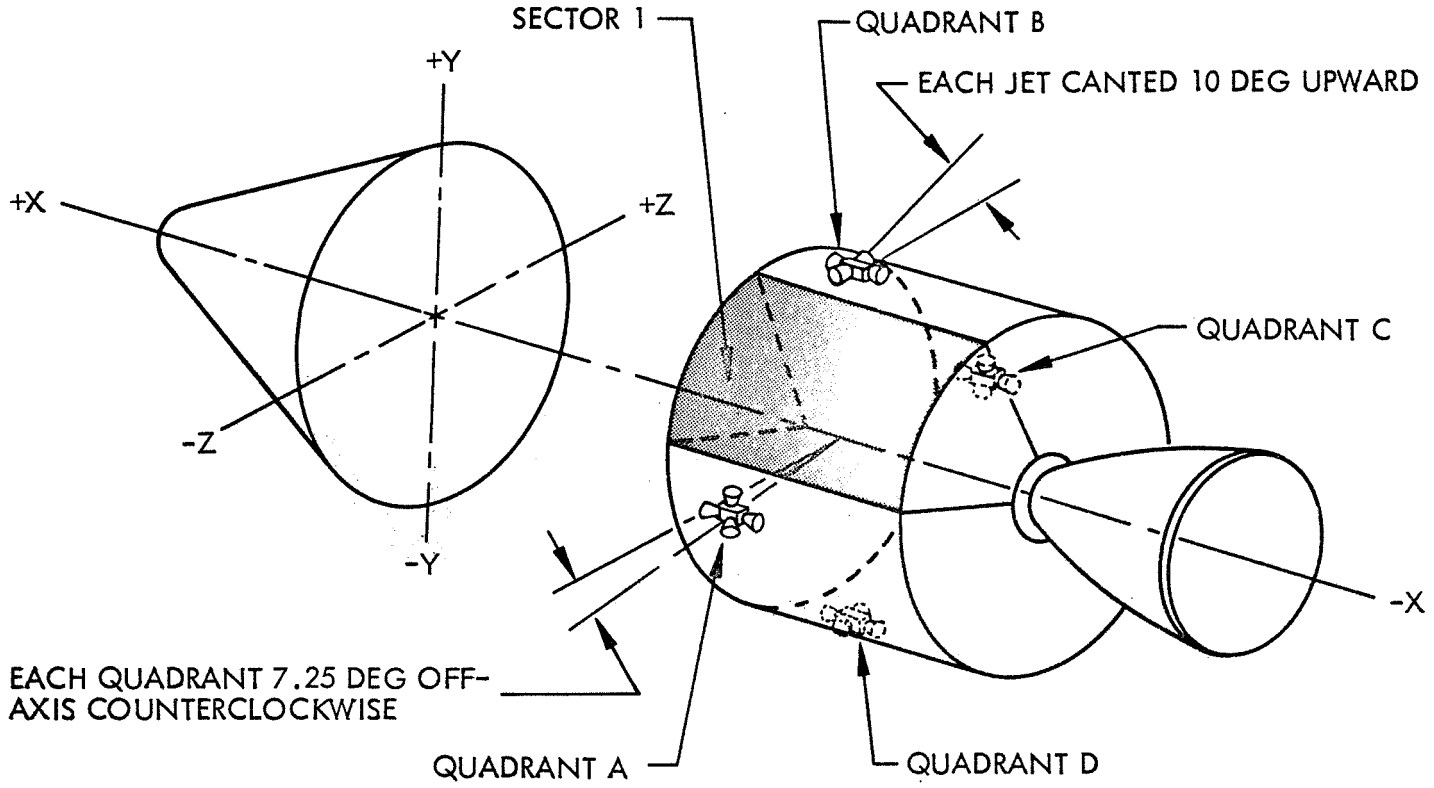

View (b) Location of Sector 1

Fig. 3-17 Service Module

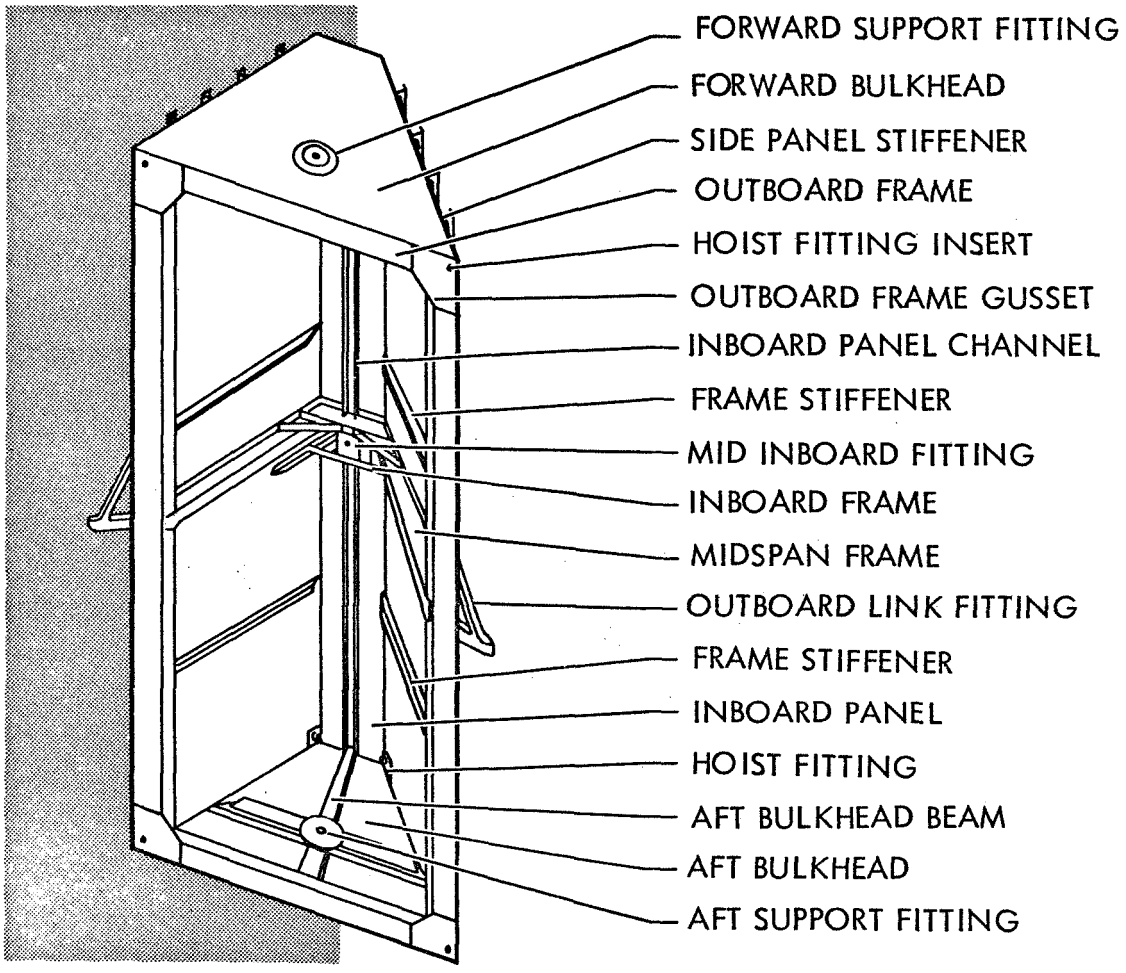

Fig. 3-18 Major Structural Components

Pg. 3-78 BLANK & not filmed

The mounting provisions and allocation of space are designed to accommodate the installation of modular hardware. Acceptance of large, modular units is permitted by the open-pallet design. The open section is stiffened by an outboard frame, which also provides a base for supporting experiments and door covers. This design provides flexibility for installations by eliminating the need for panels and doors while maintaining structural integrity.

Flexibility is also provided by the configuration of the internal mounting surfaces, which are essentially uninterrupted by the structural members. These surfaces provide full design flexibility of the experiment support structure, which is not penalized by being designed around a standard configuration.

3.5.3.4 Experiment Mounting Provisions. With most of the outboard surface area available for experiments, the optimum installation is on the outboard frame. This frame is easily accessible for installation of equipment and for EVA, and provides a rigid base for both fixed and removable installations. Particularly large experiments that require the full pallet depth can also be attached to support points on the inboard panel. Support structures for such large experiments are designed to distribute the loads to the specific attach points in the pallet.

Experiments that require less outboard surface area are effectively attached to the side panels by use of support frames. These frames distribute loads to the side panels, outboard frame, and inboard panel. Intercostals between frames transmit experiment axial loads to the stringers. The frames and intercostals are rigidly attached to the side panels, and have provisions for picking up the specific attach points of the experiments.

Nut plates, located on all side-panel stringers, are spaced 6 in. apart to accommodate last-minute installations of experiments or other equipment. This arrangement permits installation without drilling within the pallet or disturbing the thermal insulation. By installing a structure of frames and intercostals to the nut plates, any reasonably sized unit(s) may be installed where the existing experiments leave space.

3.5.3.5 Sector 1: Experiment Stowage Volume and Performance Area. Sector 1 (Fig. 3-19) has a volume of 125 cu ft available for installation of experiment equipment, with a 44-sq-ft exposure to space. There could be considerable flexibility for installing equipment for subsequent on-orbit removal within the SM Sector 1, assuming that logistics and resupply of expendables do not consume the sector volume. The main features of the installation capability are as follows: (1) large open surface area for exposure of, and ready access to, stowed experiment equipment; (2) clear internal surfaces, which allow flexibility in design of experiment equipment mounts; and (3) standard support subsystems with their capability extended by optional modular units.

The SM Sector 1 has the advantages of a custom design and efficient use of space availability for installation of experiment equipment, and yet permits the installation and checkout of experiment equipment late in the factory-to-launch sequence. The pacing factors in late installation will be the overall mission planning, scheduling, and training activities. The major disadvantage is the requirement for the astronaut to perform an EV excursion in order to retrieve the equipment item and to transfer it to the appropriate candidate carrier.

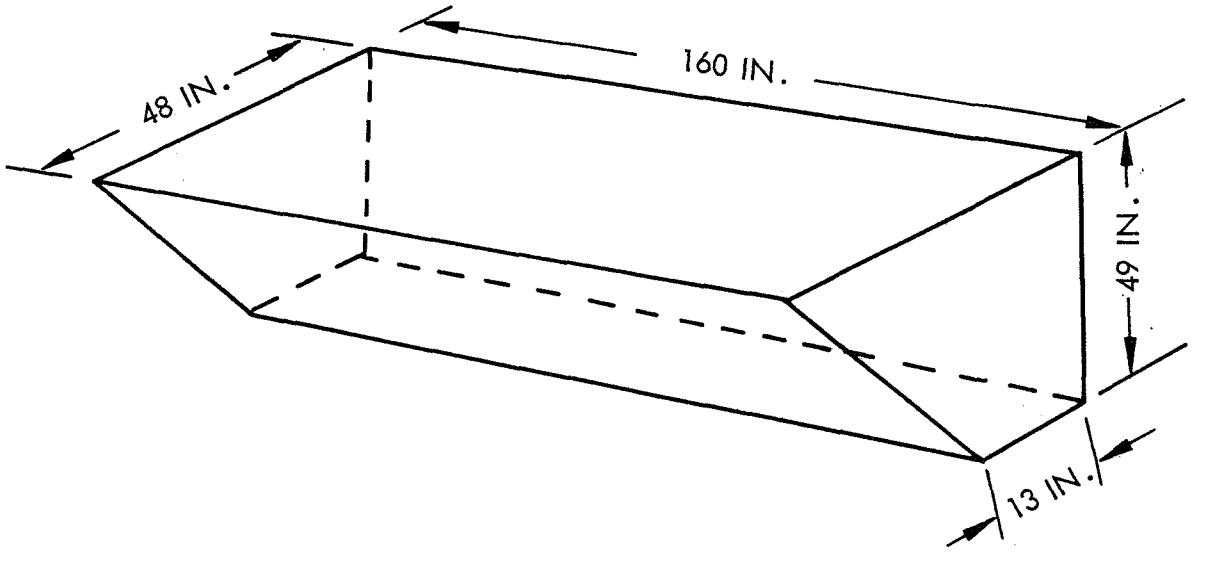

Fig. 3-19 Dimensions of Sector 1

3.5.4 Lunar Module (LM)

Until recently, several versions of the LM were being proposed as candidate orbital laboratory spacecraft for AAP. In the last few months, however, the lunar-module/Apollo-telescope-mount (LM/ATM) has evolved as the LM vehicle that will be flown for AAP.

The LM/ATM is a composite of a modified LM and an ATM/rack. The integrated LM/ATM vehicle is shown in Fig. 3-20 with solar panels erected. The ATM and rack assembly are shown in Fig. 3-21. Figure 3-22 illustrates the astronaut removing film cassettes from the sun-end retrieval station of the ATM/rack.

3.5.4.1 LM Structure. The LM is derived basically from the standard Apollo LM. The ascent stage is constructed of aluminum alloy. The structural skin is surrounded with an outer aluminum alloy skin approximately 2 in. from the structural skin. The outer skin provides thermal protection. The crew compartment and the equipment

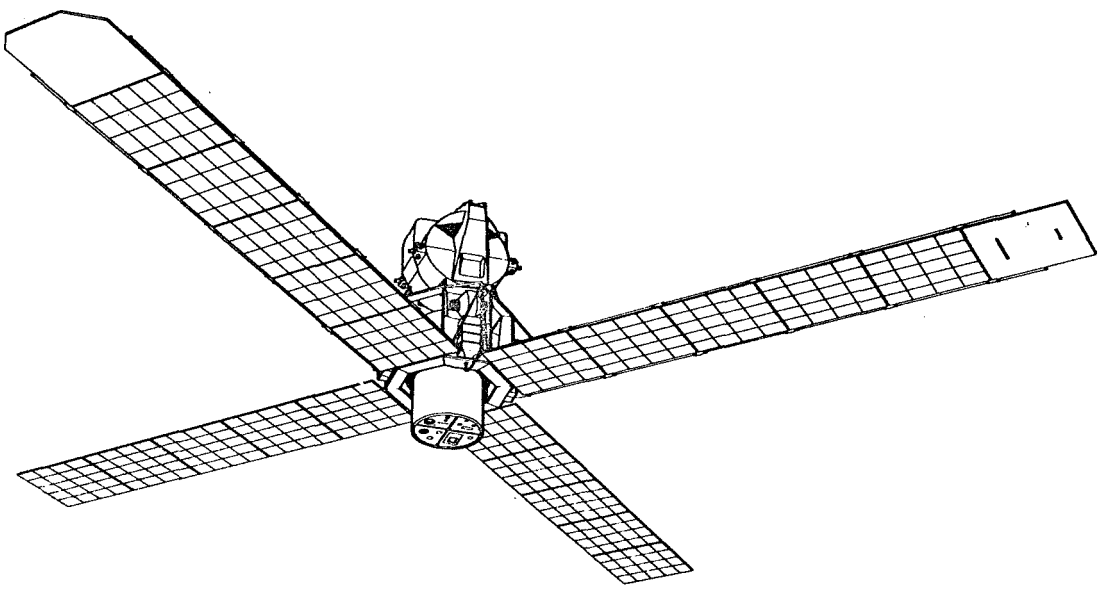

Fig. 3-20 Lunar Module and Apollo Telescope Mount

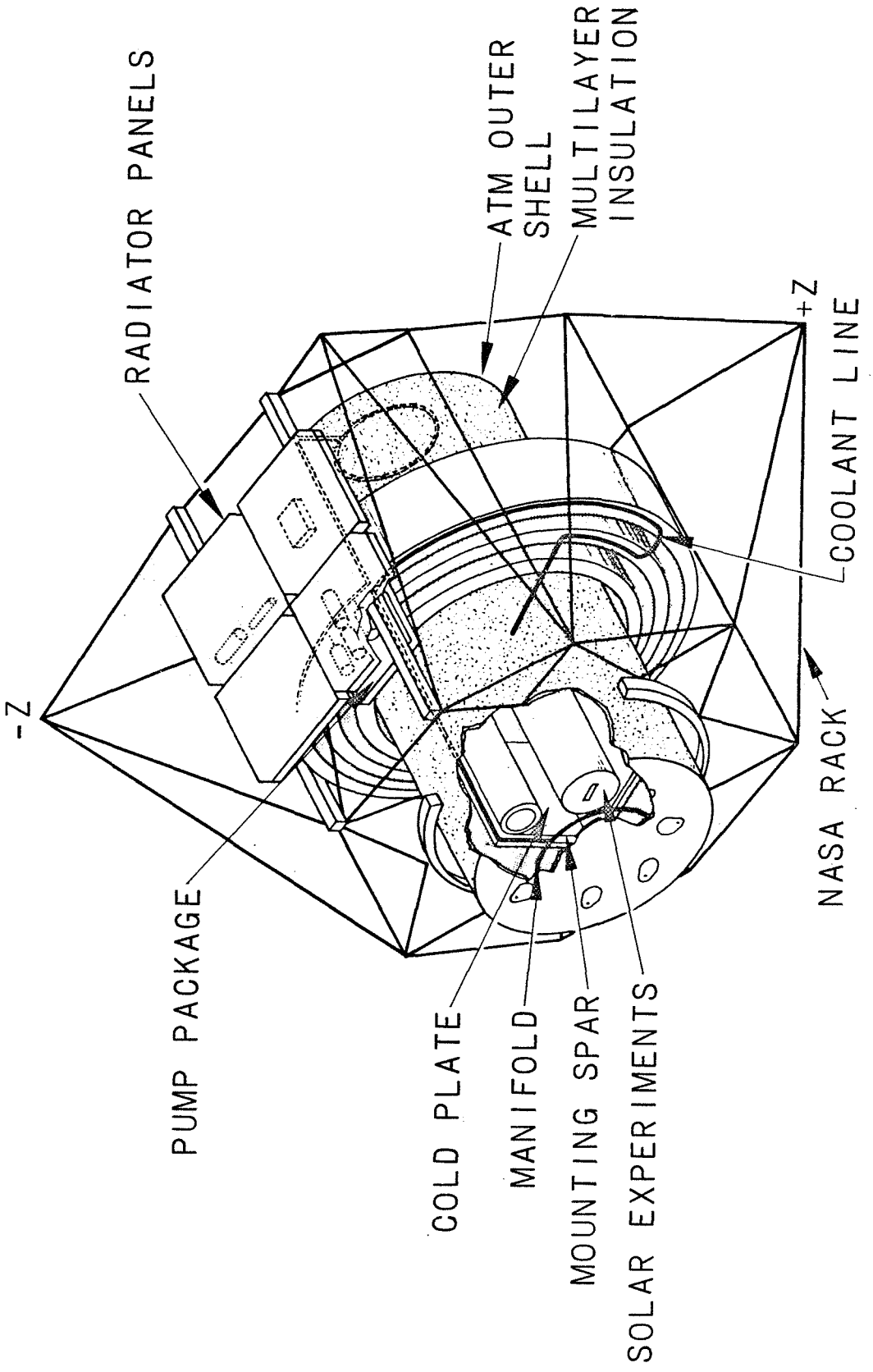

Fig. 3-21 Basic ATM/Rack Assembly for AAP

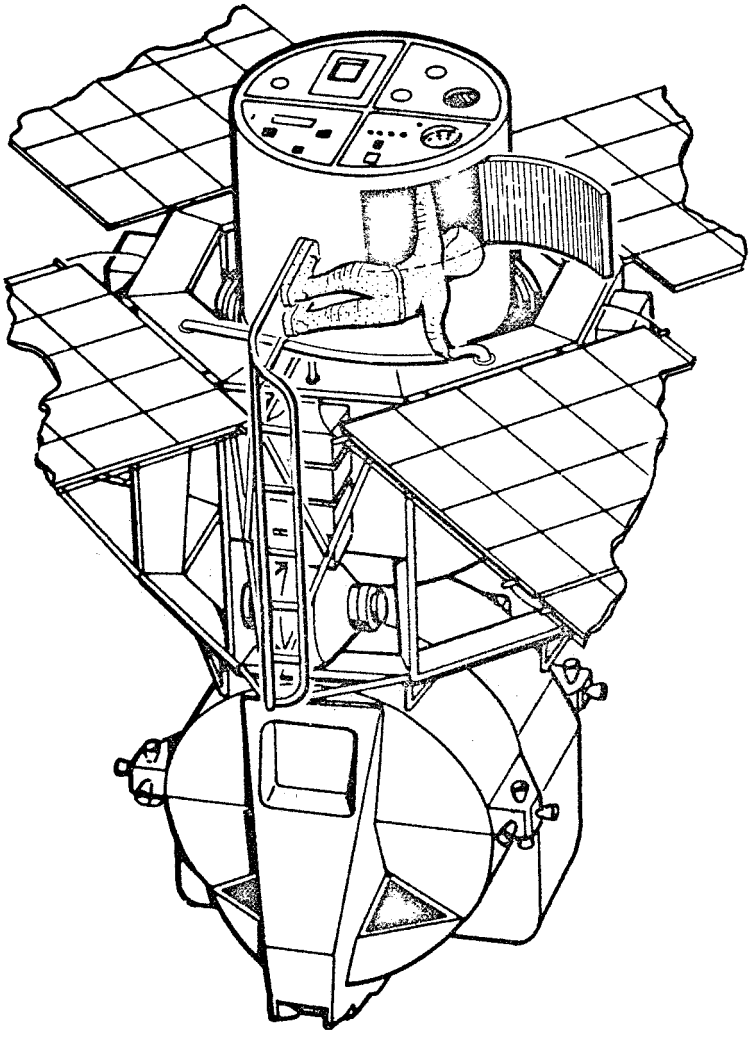

Fig. 3-22 LM/ATM Configuration Illustrating the Sun-End Film Cassette Retrieval Station

compartment are pressurized. The crew compartment contains two triangular windows, the forward hatch and tunnel, controls and indicators, and items necessary for crew comfort and support. The equipment compartment is a smaller, cylindrical section directly behind the crew compartment. The equipment compartment contains the ascent engine hatch, top hatch, and tunnel, and provides stowage for equipment requiring crew access.

The upper docking tunnel, at the top centerline of the ascent stage, is used for transposition and for transferring the crew during flight. Pressure-tight, plug-type hatches in each tunnel are mechanically operated and sealed with formed-in-place silicon elastomeric seals.

The equipment bay and the tank sections are not pressurized. The equipment bay is aft of the crew compartment and is separated by a pressure-tight bulkhead. This area houses the glycol loop and GOX accumulator for the ECS, two helium tanks for ascent engine pressurization, inverters, batteries, electrical equipment, and cryogenic oxygen and hydrogen tanks for the EPS. The tank sections are on either side of the equipment compartment and are separated from it by pressure-tight bulkheads. One tank section contains the ascent engine oxidizer tank while the other contains the ascent engine fuel tank.

Two triangular windows in the frontal face of the crew compartment provide visibility during the rendezvous and docking phases of the mission. Both windows have approximately 2 sq ft of viewing area and are canted down and to the side to permit adequate peripheral and downward visibility.

Two similar hatches in the ascent stage permit entrance to and exit from the LM. The top hatch is on the x-axis, directly above the ascent engine cover; the forward hatch is on the z-axis, beneath the center of the instrument console. Because both hatches are hinged to open into the LM, normal cabin pressurization is used to force the hatch into the seal. To open either hatch, the portable extension tool is first used to unlock the latches. Cabin pressure is then purged through a dump valve located in the hatch proper.

Two primary subassemblies of the LM are structurally significant to the volume requirements and equipment stowage needs of the IMBLMS program. These subassemblies are the main cabin (which faces from station Z+27 forward) and the midsection.

The main cabin consists of a 92-in.-diameter, aluminum-alloy cylinder, stiffened by 2-in.-deep circumferential frames spaced approximately 10 in. apart. The cylinder is made up of two skin subassemblies, each covering 180 deg of the cylinder, with a splice at the top and bottom. Integral members, such as longerons, are welded to the skin segments to minimize the number of mechanical joints. The forward hatch is included in this section.

The midsection is made up of two major weld assemblies. The upper weld assembly contains a machined deck, a docking tunnel and ring, and two cylindrical segments of a chem-milled skin. The lower assembly consists of a machined engine support deck and the two lower cylindrical segments of a chem-milled skin. The segments are stiffened by 2-in.-deep circumferential frames spaced approximately 10 in. apart. The forward and aft ends of the midsection skin-deck assemblies are attached to two machined bulkheads at station Z+27. The upper hatch is located at the top of the midsection and is the primary translation tunnel between the LM and the CM, MDA, and AM.

Table 3-18 lists the major equipment items deleted, those retained, and the major items of new subsystem equipment that must be added to derive the new basic LM-A configuration.

The major deletions from the original ascent stage are associated with the removal of the engine (now superfluous), crew provisions and environment, control system equipment whose functions have been transferred to the CSM, electrical power system equipment (replaced by a new system), and the communications system S-band steerable antenna (not required for low-earth-orbit missions).

The new subsystem equipment that has been added is required either for supporting the experiments (communications and instrumentation) or for extending the mission-duration capability. The LM-A portion of the basic carrier configuration will remain essentially

Table 3-18

MODIFICATIONS REQUIRED FOR LM-A/RACK BASIC CARRIER
(Modified From Grumman Hardware; Descent Stage Deleted, Rack Added)

System	Deleted	Retained	Added	Remarks
Spaceframe	Propulsion support structure	Ascent-stage primary structure	Micrometeoroid and thermal insulation, ascent engine well cover, equipment bay support structure	Micrometeoroid and thermal protection inadequate
Stabilization and Control	Controls for ascent engine	Abort guidance system (for vehicle stabilization)	Optical reference sensors	Abort guidance adapted to stabilization and control function (CMG's are part of ATM)
Guidance and Navigation (G&N)	Primary guidance – inertial measuring unit (IMU) and LM guidance computer (LGC)	Support equipment common to G&N and to Stabilization and Control	None	No G&N functions required for laboratory
Crew Provisions	Food and waste management	Lighting and crew restraints, 2 portable life-support systems (PLSS)	None	Supplies stowed on rack for extended missions
Environmental Control	Suit loop, secondary coolant loop, water management system (less control module)	Water control module, cabin loop, oxygen control module, primary coolant loop	Radiators, O_2 supply, recirculation duct; modification of cold-plate installation	CSM maintains 5-psi pure O_2 atmosphere, normal operation (docked) with hatch open
Electrical Power	Deadface relay box, LM batteries, translunar bus, electrical control assembly	Pyro system, AC system, commander's and system engineer's bus, remainder of distribution system	Solar cell system to rack, CSM entry batteries, CSM battery charger and control circuitry; modification of under-voltage sensors	Relay junction boxes for LM and rack added to support experiments
Propulsion	Ascent-stage propulsion system	None	None	No primary propulsion required
Reaction Control	None	Bipropellant system	None	Problems of contamination and optical distortion may cause reconsideration and substitution of cold-gas system
Communications	S-band steerable antenna	Existing system	Up-data link, reactivate-command system, redundant S-band transmitter, 2 S-band antennas	Redundant transmitter will be on Saturn frequency
Instrumentation	None	Existing system with minor adjustments	Experiment TLM, TV monitoring and recording, on-board checkout equipment consisting of computer core and tape memories	Modification of tape recorders for earth orbit
Controls and Displays	Ascent and descent propulsion controls, portions of ECS and guidance controls, minor electrical functions, radar panel, 1 attitude controller, 1 thrust translation controller	Caution and warning, biomedical, monitoring, display keyboard	Communications panel, solar array panel	6 ft^2 available for experiment control and display

unchanged for all missions, with flexibility provided by varying the subsystem components mounted on the ATM/rack.

The ATM/rack provides an extravehicular mounting area for certain experiment packages — a concept similar to the use of the SM as a possible experiment package carrier. As with the SM, however, it is necesary to perform an extravehicular sortie in order to tether, unmount, and translate in, out, or around the rack with an experiment canister to the LM, CM, or AM. Furthermore, each of these three spacecraft has a hatch opening somewhat limited in size; hence, large experiment canisters will not fit through the hatch. It is also possible that the LM might be tethered to the MDA during certain flight modes — which further increases the problem of EV translation of experiment canisters. For these reasons, the ATM/rack was not included in this interim report as a potential IMBLMS carrier. If further studies indicate that it has potential as an IMBLMS carrier, however, a detailed discussion will be prepared for inclusion in the final report.

3.5.4.2 Experiment Stowage Volume and Performance Area. The primary objective of the LM/ATM is to function as a solar telescope tracking the sun and recording data on film. To achieve this objective, an ATM control/display console station must be provided within the LM cabin interior. Additionally, several hundred film cassettes of unexposed film will also have to be stowed within the cabin. Available volume within the LM becomes extremely minimal — particularly during ATM operations when a crewman or crewmen are assigned ATM measurement duty and the control/display station must be set up.

The pressurized cabin areas of principal interest are the main cabin (where the main LM navigation and control station is located) and the midsection (where the descent engine used to be located, and directly above which is the main IV translation hatch used when the LM is docked). A considerable degree of free-swept volume is required in the midsection for the upper hatch to swing down into an open position. The hatch cover, and its swing-to-close area, must be free from any restrictions at all times to permit rapid closure and dogging in the event of an emergency (if the LM were tethered to the MDA and in "free flight," the hatch would not be open). Added to this absolute

consumed volume are the ATM control/display console station and the film cassettes for ATM data collection.

Figure 3-23 presents a general layout of the midsection in which the ATM display/control console is located. View (a) presents the general concept of console location and film cassette stowage. Also shown is the requirement to fold part of the console out of the way to permit astronaut passage down into the main cabin area. View (b) shows the general layout of the current ATM display/control console station. Figure 3-24 presents a side view of the console with an astronaut in the operating position. Also shown is the approach for the folded console section.

LMSC is very familiar with the modifications, deletions, and additions required of the LM for IV ATM operation because of the current NASA AAP study contract, which emphasizes analysis, design, and integration of the LM/ATM with respect to AAP. Considerable effort has been expended by both LMSC and the two NASA Centers, MSC and MSFC, relative to the ATM project, particularly with respect to LM-4 (the lunar lander backup LM). LMSC was not only involved in systems and hardware design (fabricating a full-scale semi-hard mockup of the LM cabin interior and associated consoles and equipment for ATM operation), but also participated in astronaut design and layout evaluations relative to the total LM/ATM concept. LMSC also assisted MSFC in the final design, hardware selection, and initial fabrication (currently in progress) of NASA's full-scale functional man-in-the-loop ATM simulator. The statements in succeeding paragraphs relative to available LM experiment stowage and to experiment performance are based on this knowledge.

Midsection. Within the midsection pressurized compartment, the right cabin wall is used for stowage of film cassettes and/or the fold-to-stow portion of the ATM display/control console. The left wall bulkhead contains life support displays and controls and associated hardware (this area is not modified for LM-4). There is approximately 31 in. between the equipment and stowage areas on the left and right midsection cabin walls. Behind the open hatch when it is swung down into the open position is a space approximately 12 in. deep by 30 in. wide by 34 in. high; it is probable that film cassettes will be stowed here. The remaining area (12 in. deep) around the periphery of

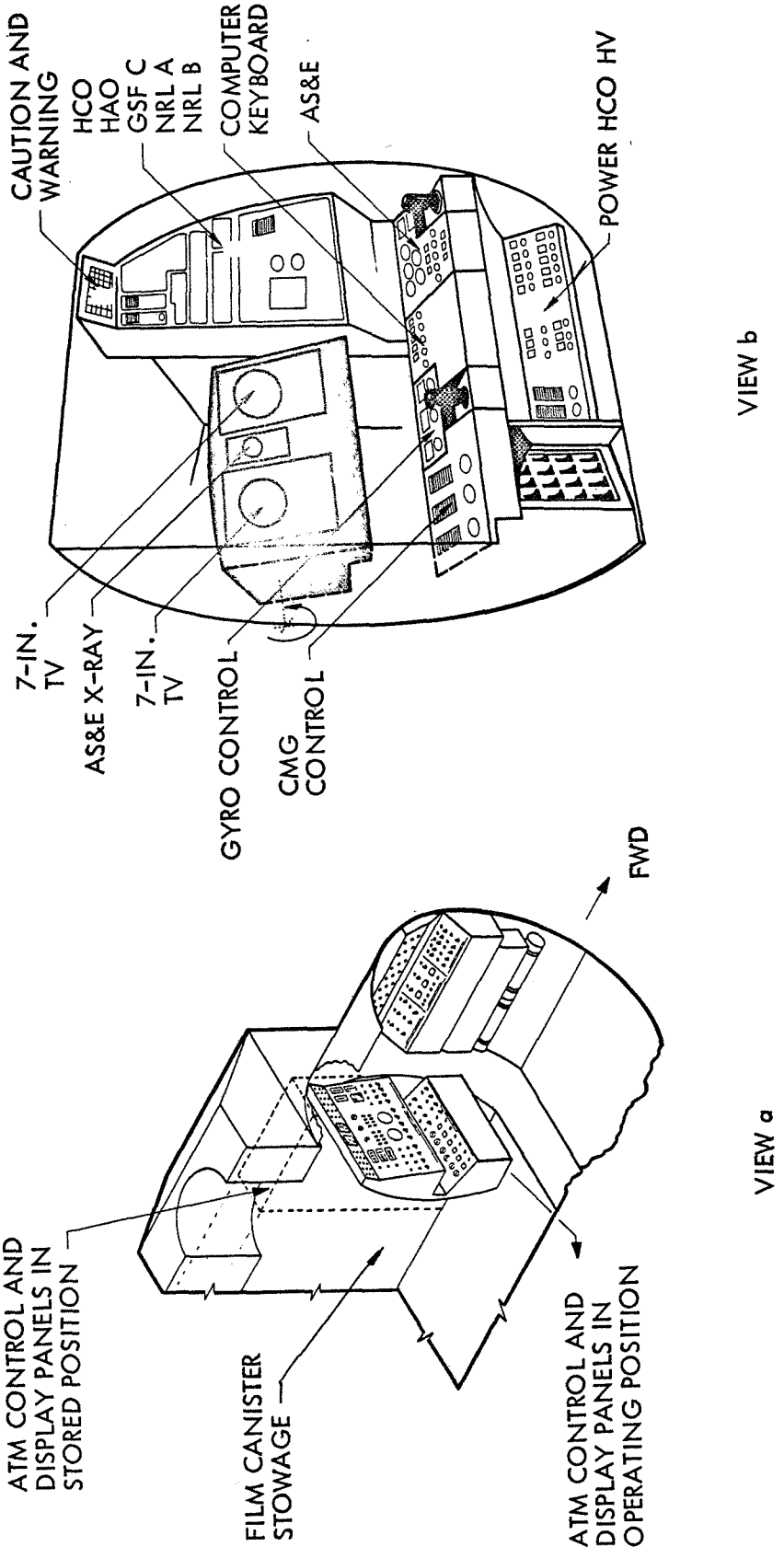

Fig. 3-23 ATM Control/Display Console

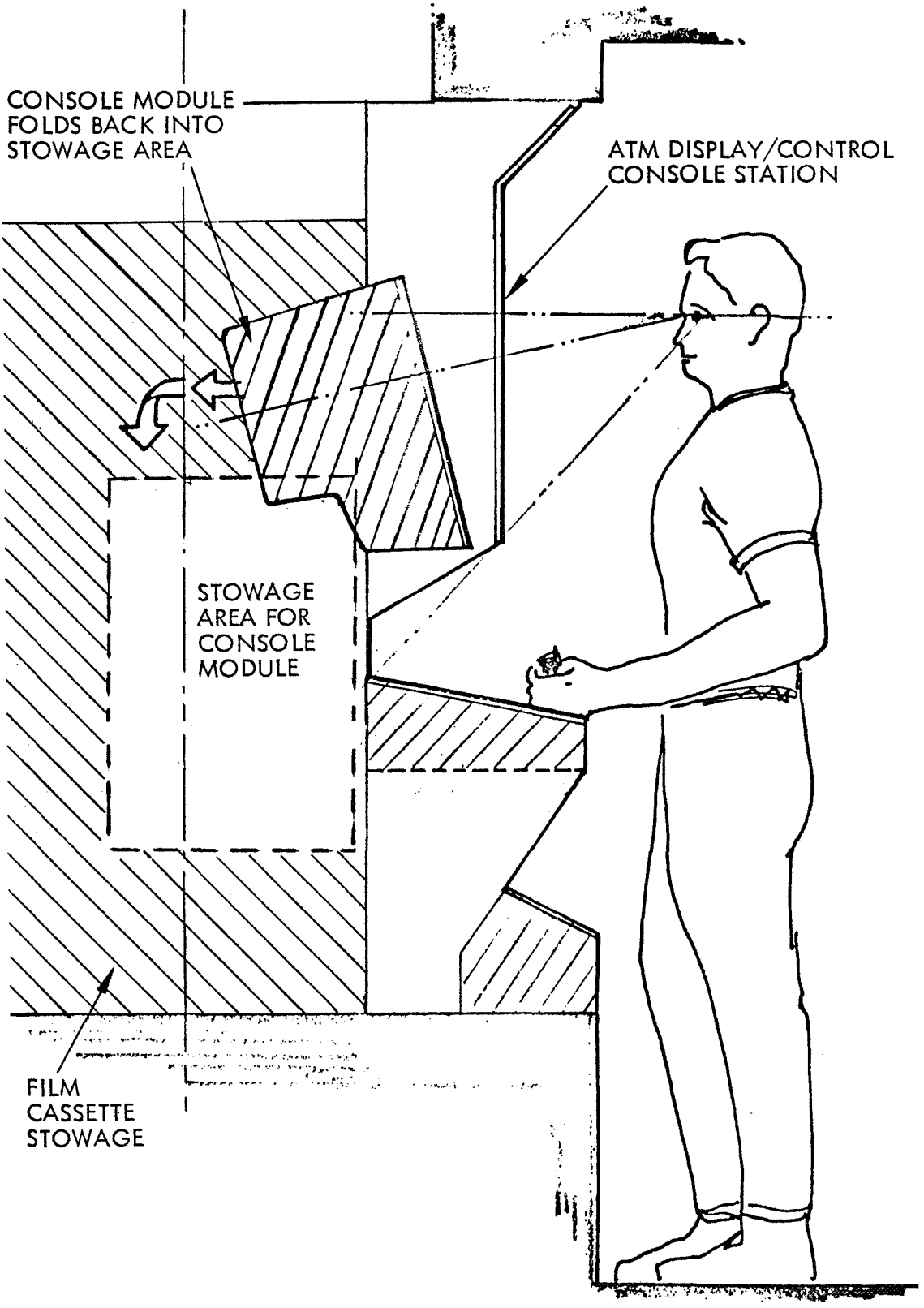

Fig. 3-24 Position of Crewman for Operating ATM Control/Display Console

the hatch cover in the aft end is allocated to existing on-board equipment. Additionally, the ATM display/control console is mounted on the front edge of the midsection deck just forward of the engine cover plate. Thus, in the midsection there is just sufficient room for a suited astronaut to pass through the hatch, through the midsection, past the ATM display/control console, and into the main cabin. There is no other volume of significant size or usable shape in the midsection.

Main Cabin. The forward end of the main cabin contains the display/control panel for existing LM navigation, operation, and systems monitoring. Just below this large panel is located the EV egress/ingress hatch. Facing the aft end of the cabin, with the LM main display/control panel directly behind, at about waist level on both cabin walls are additional LM systems operations and monitoring panels. Below these panels are storage areas for miscellaneous spacecraft equipment.

The general open volume must be maintained as free volume for the following reasons:

- Space suit donning and doffing
- Backpack donning and doffing
- EV monitoring by a suited crewman if required
- Room for crewmen to operate LM or ATM display/control panels (crewmen may be attired in shirtsleeves, vented suit, or pressure suit)

There appears to be some free volume or unused panel area on the left or -Y side cabin wall, waist high, facing forward toward (+Z) the two LM windows. Two areas are involved. The first is the flight instrumentation panel; three-fourths of the panel length appears available, as well as some surrounding area just above and below the panel. An area approximately 7 in. high by 24 in. long is available; however, depth appears to be limited to 5 to 7 in.

The second available area is the commander's audio panel, of which perhaps as much as two-fifths of the length may be available. This panel area, assuming that no surrounding space is available, is approximately 8 in. high by 15 in. long by as much as 7.5 in. deep (perhaps 10 in. if panel depth could be exceeded by extending out from the wall).

Since these two panels are directly above one another and in very nearly the same plane, it may be possible to mount an equipment module 12 in. high by 15 in. wide by 10 in. deep. Indeed, if these panel areas are free, and the free panel material can be easily removed, and there are no cable trays in the way, this area may be available for experiment installation.

3.5.4.3 Summary. A detailed examination of the LM soft and hard* mockups configured in an LM/ATM experiment configuration reveals almost no volume (with the exception already noted) for non-ATM experiment equipment or areas in which to conduct experiments — particularly if two crewmen are required. This conclusion is further substantiated by the fact that the PLSS unit and donning and doffing station will have to be relocated somewhere within the cabin area. Hence, stowage of film cassettes and installation of the ATM display/control console station within the interior of the LM greatly reduce any available volume.

*Provided to LMSC by NASA on short-term loan.

3.5.5 Airlock Module (AM)

The airlock module (AM) is a tunnel forming the core of a unit around which are clustered four truss modules. Three of these modules mount cryogenic tanks; the fourth provides the mounting for the spare lithium hydroxide cartridge and experiment equipment. Electrical power is obtained from the CSM fuel cells in exchange for AM-provided reactants. The complete unit mounts in the SLA in the position normally allocated to the LM. The AM provides the following functions:

- Permits the CSM or MDA to dock with the tank
- Provides crew access via a pressurized tunnel
- Provides life support and electrical power in the S-IVB tank
- Supplements the CSM capabilities beyond 14 days
- Allows EVA through the tunnel egress hatch
- Provides 1 kw for the S-IVB in addition to the basic support requirements
- Provides some storage for corollary experiment equipment at liftoff
- Provides intracrew and network communications
- Provides a separate life support system for the AM

Figure 3-25 shows the general arrangement of the AM.

Structure. The airlock module is composed essentially of a long tunnel, tunnel extension bellows interface to the S-IVB, EVA hatch, two internal hatches, structural transition section with four viewing ports, external trusses, radiator, thermal curtain, and associated mating hardware, including display/control panels, umbilicals, AM support equipment, etc. The AM is supported on the SLA by four truss modules that provide the reaction for structural loading. The truss assemblies also support the cryogenic tankage, EV experiment packages, and possibly the CSM LiOH canisters.

The structural transition section (STS) provides the interface between the AM and the MDA (Fig. 3-26). The overall length of the AM, including the STS (47 in.), is 12.5 ft, excluding the interface bellows with the S-IVB hydrogen tank dome hatch. The inside diameter of the pressurized tunnel is 65 in. Figure 3-27 shows the tunnel arrangement. Figure 3-28 shows the AM tunnel stretchouts.

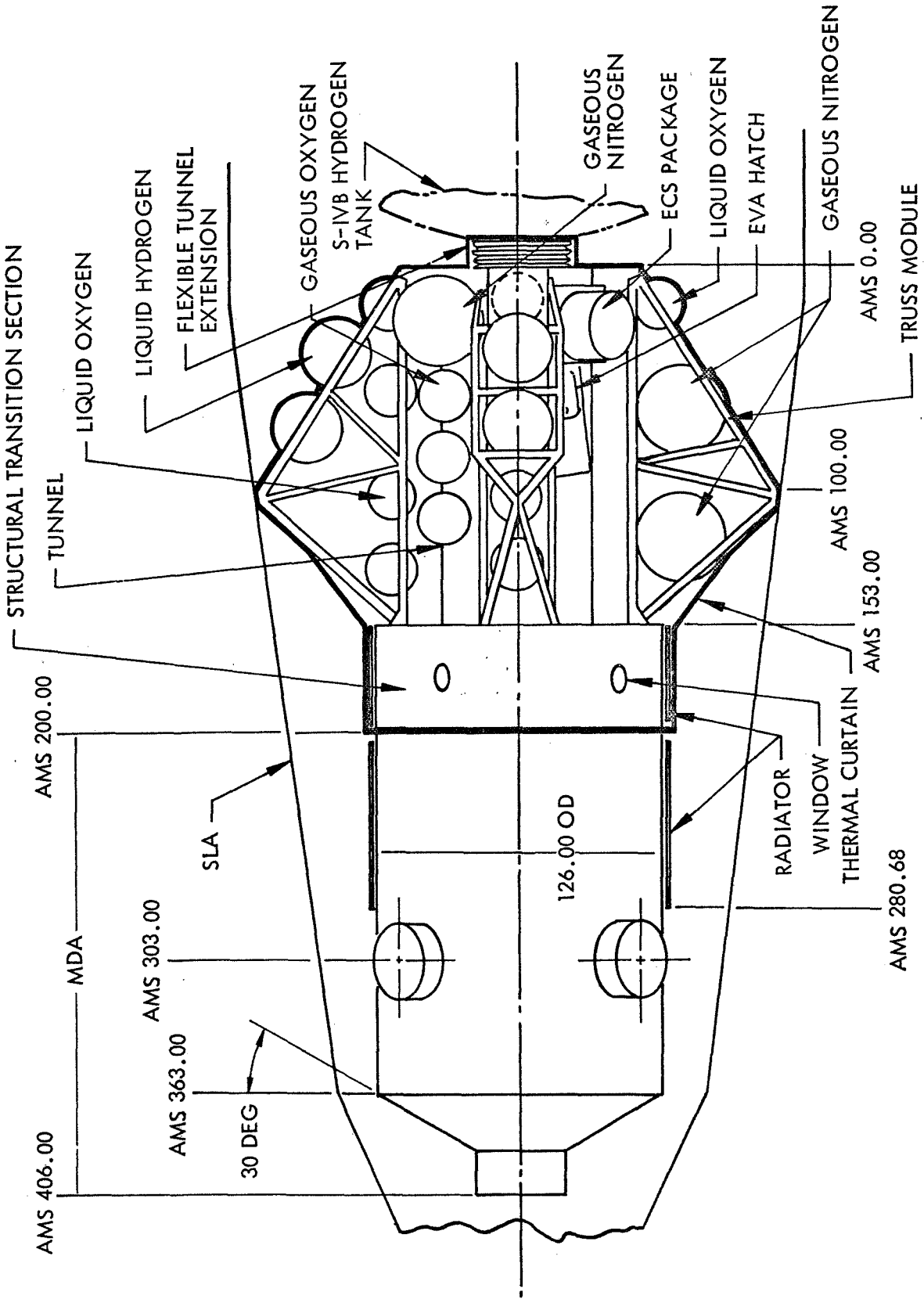

Fig. 3-25 Airlock, General Arrangement

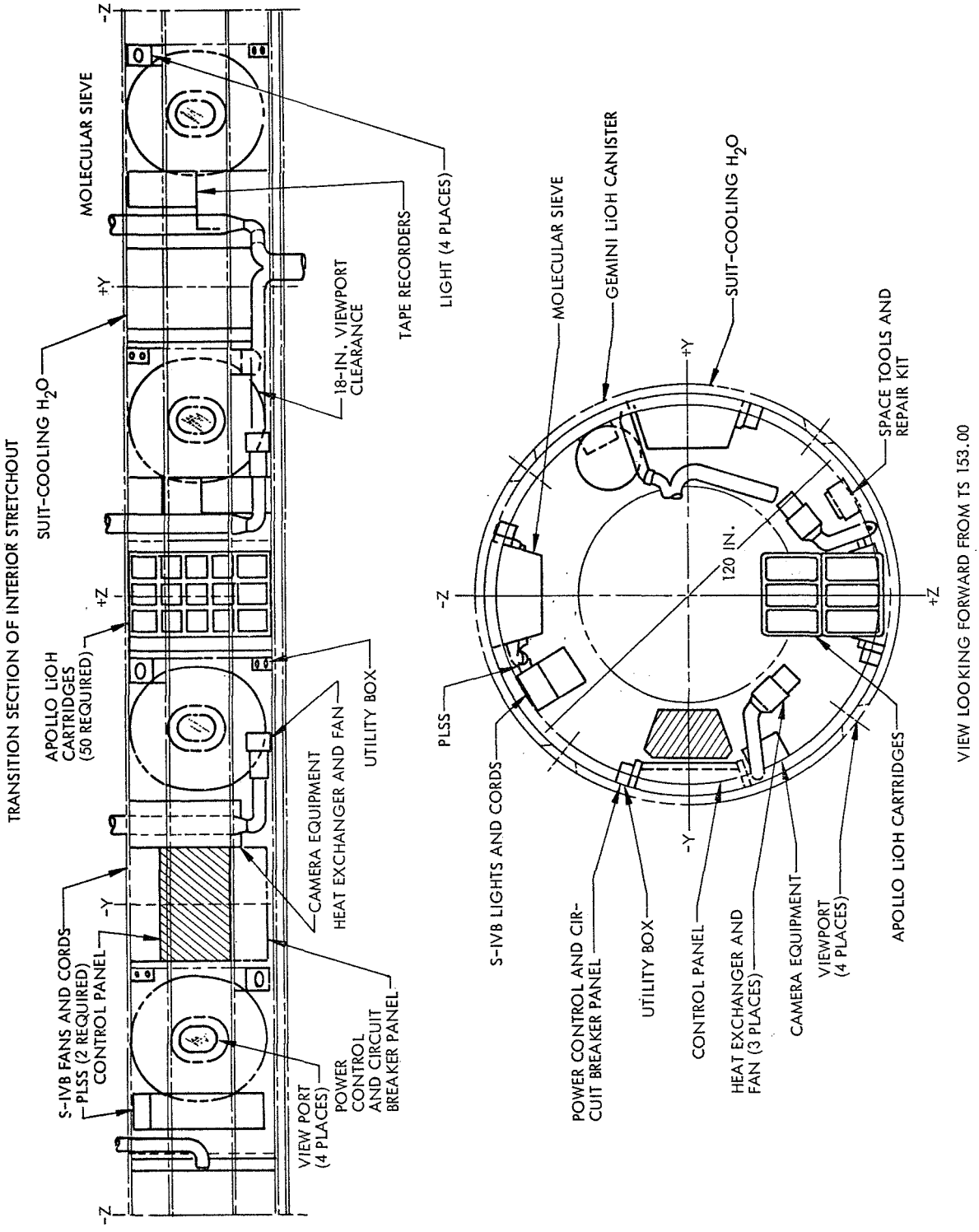

Fig. 3-26 Structural Transition Section

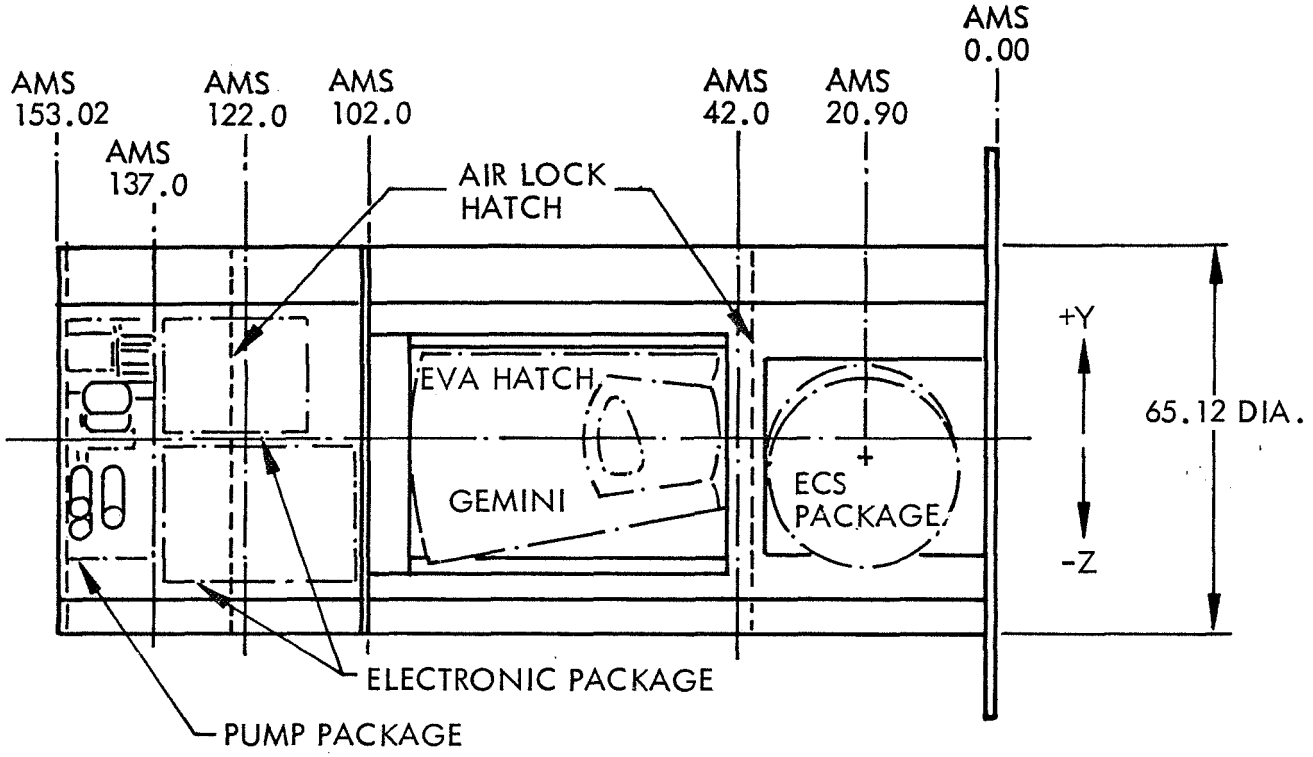

Fig. 3-27 AM Tunnel, Arrangement and Geometry

Experiment Stowage Volume and Performance Area. The AM provides almost no stowage or installation area for IMBLMS equipment once the AM becomes an integral passage tunnel and EV airlock in a cluster assembly. Nevertheless, there is some available stowage area outside the pressurized tunnel using the truss modules as experiment canister rack mounts. It is conceivable that some experiment equipment might be stowed in the AM tunnel at liftoff. However, when the CSM or LCSM is docked to the MDA and the crew is transferred to the MDA and airlock interface hatch, any equipment stowed within would have to be unmounted, removed from the AM tunnel, and stowed elsewhere. This approach seems contrary to the expediency required in setting up the S-IVB and making it habitable. The tunnel ID (65 in.) and configuration are inadequate for installing permanent experiment packages of any reasonable size. However, an EVA IMBLMS monitoring module might effectively be temporarily mounted in the STS for use by the suited astronaut in the AM observing the EV astronaut conduct his assignments. Upon completion of the EV mode, the IMBLMS module should be removed to ensure maximum passageway area within the AM.

LEGEND

A PERSONAL HYGIENE
B WASTE MANAGEMENT
C ASTRONAUT SUIT STOWAGE (2 PLACES)
D UTILITY LIGHTS
E EXPERIMENTAL PANEL ASSEMBLIES
F EVA UMBILICALS
G LIGHT ASSEMBLY (9 PLACES)
H VENTILATION DUCT
I HANDRAILS
J CIRCUIT BREAKER PANEL
K FORWARD INSTRUMENT PANEL
L CENTER INSTRUMENT PANEL
M AFT INSTRUMENT PANEL

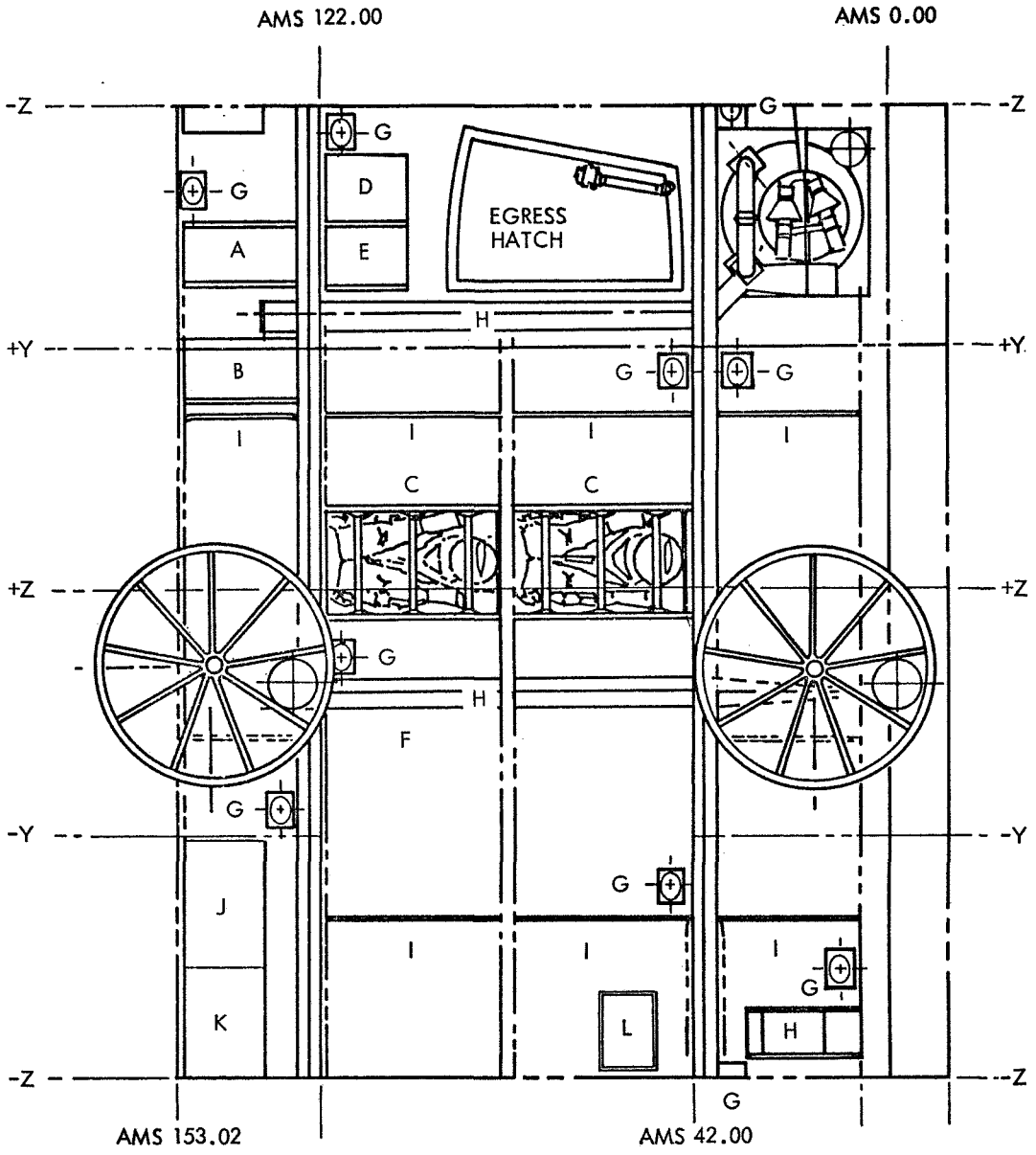

Fig. 3-28 AM Tunnel, Interior Stretch Out

3.5.6 Multiple Docking Adapter (MDA)

The multiple docking adapter (MDA) is an assembly that will be used as a means of docking several spacecraft about a common junction connected to the AM, which in turn provides an access capability to the S-IVB orbital workshop. Figure 3-29 illustrates the MDA in a typical AAP Cluster A orbital configuration. In addition to providing a docking assembly, the MDA is used as an experiment package transport from the point of liftoff until such time on orbit as the majority of experiment packages are transported to other vehicles, e.g., S-IVB OWS, LM, etc.

MSFC and MSC have provided a set of jointly approved design criteria for the MDA, as follows:

- Four side docking ports, an aft hatch, and forward docking port
- No requirement for its own life support system
- CSM hatch to be closed if a 1-gas ECS is used
- External viewing windows
- Sufficient internal volume for stowage of experiment equipment (800 cu ft)
- Structural support independent of the AM and connecting to the SLA attachment points
- MDA to contain umbilicals permitting AM communications and power systems between the CSM, OWS, and EVA
- Sufficient volume for crew turnaround, and adequate techniques for restraint and interface of the crew

Figure 3-30 presents the external configuration of the MDA while housed within the S-IVB.

Structural Features. The MDA consists of three principal sections:

- Docking adapter section
- Cylindrical section
- Radiator and structural transition section

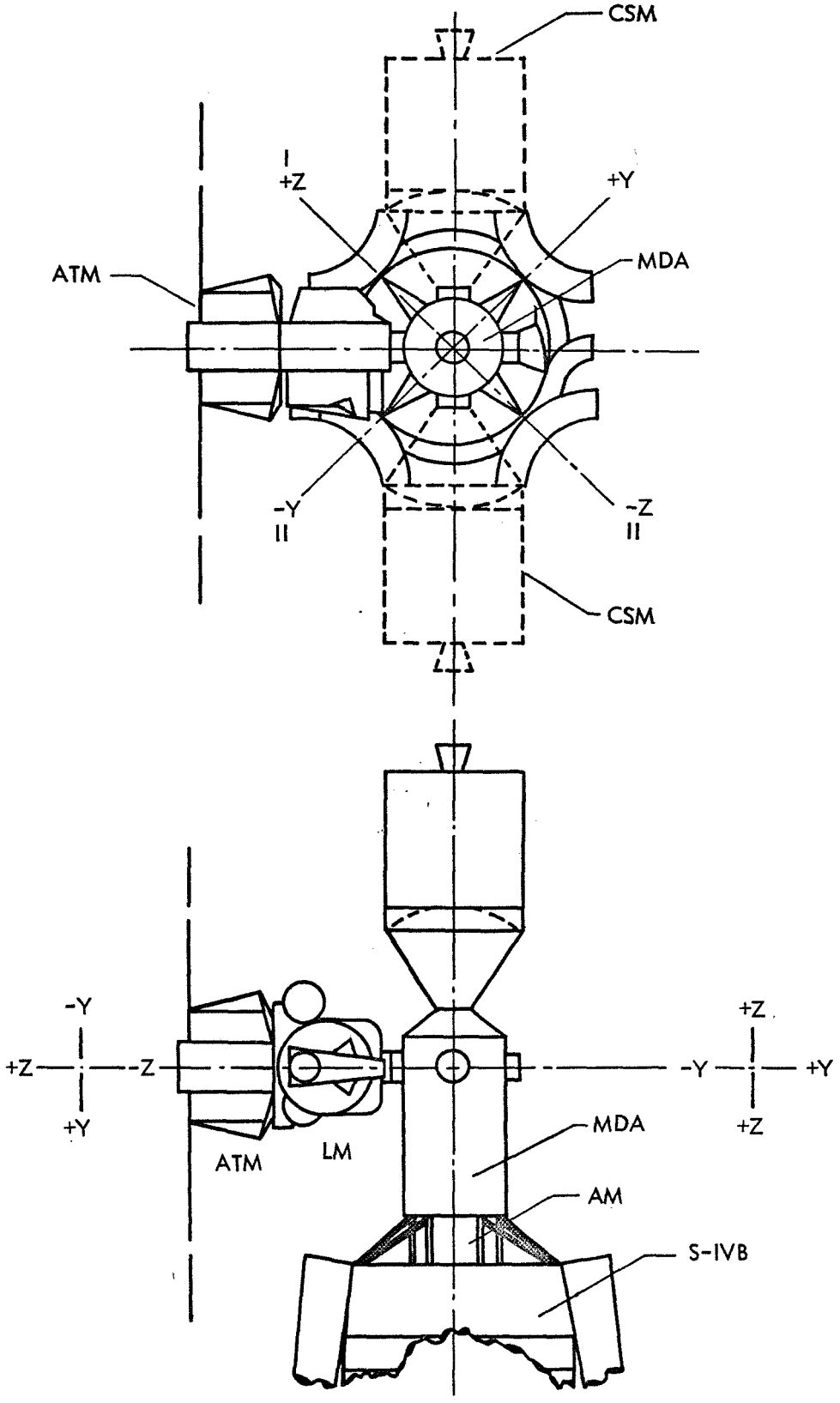

Fig. 3-29 MDA in a Typical Cluster A Orbital Configuration

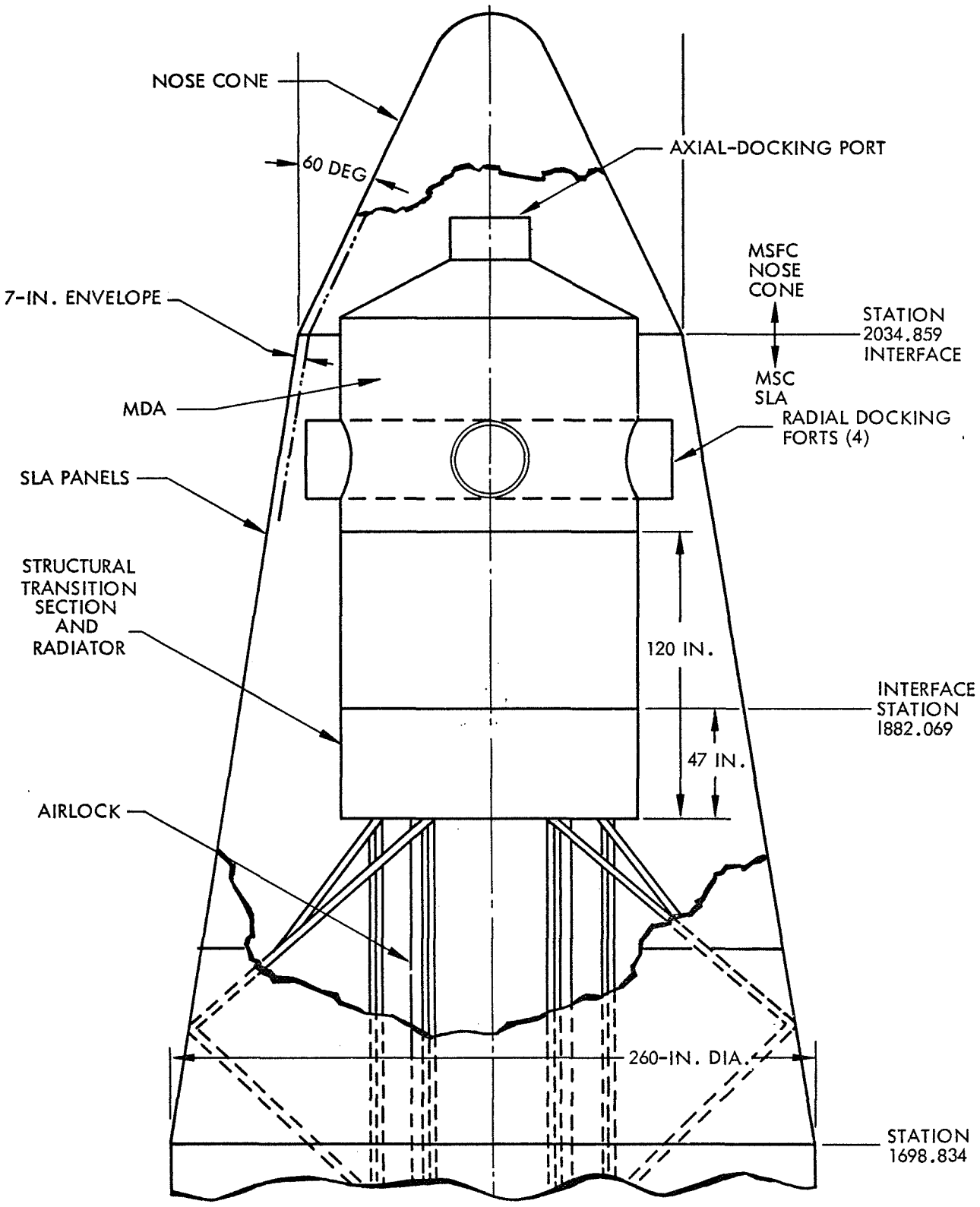

Fig. 3-30 External Configuration of the MDA Within the S-IVB

These three sections are assembled to form a structural identity and are affixed to the AM. The MDA mates with the AM and all launch, docking, and on-orbit maneuvering loads are transmitted through the MDA/AM interface. A passive thermal control blanket combined with a micrometeoroid protection shield is installed over the external surface of the pressure shell.

A total of five docking ports and one axial interface hatch are mounted on the MDA structure. The docking structure and mechanisms use the CM/LM system that has been developed for the Apollo Program. Windows for astronaut observation are installed in the MDA above each radial docking port in the forward conical bulkhead. Four windows are provided – either rectangular, with minimum 9-in. sides, or circular with 12-in. diameters – and they are designed to provide thermal and micrometeoroid protection equivalent to that provided in the LM.

Support structure for the installation of subsystem and experiment equipment is provided on the inside surfaces of the MDA. Crew system support is provided in the form of mobility aids inside the MDA to enable the astronauts to move from one location to another and for body restraint during experiments. Crew support aids in the MDA are as follows:

- Two handholds located at each view port
- A square-cross-section handrail installed around the periphery of the AM hatch and around each docking port
- Four longitudinal removable handrails
- Tether attachment points installed at each experiment stowage station

During the independent operation of the LM/ATM, the LM/ATM and MDA are connected by a tether line. A fitting is provided externally on the MDA near the Z-axis port for this tether. The breakaway link is provided on the LM side of the tether.

Experiment Stowage Volume and Performance Area. Two approaches for integration and installation of the MDA experiment payload are under consideration by NASA, MSC, and MSFC. The most frequently used and widely published design layout is

presented in two views in Fig. 3-31. View (a) of Fig. 3-31 shows the MDA interior as seen from the axial docking end. The experiment canisters are mounted around the ID of the MDA on rigid, longitudinal stringers, which can accommodate packages up to a maximum dimension of 20 by 30 by 40 in. Assuming that the canister is mounted so that the 20-in. dimension protrudes into the center of the MDA tunnel area, there is approximately 6.5 ft of free-swept volume throughout the length of the MDA (17 ft excluding the STS).

View (b) of Fig. 3-31 shows a tunnel stretchout of View (a). Approximately 15 experiment canisters (20 by 30 by 40 in.) can be installed in this layout, as well as several smaller canisters; only a few are shown, however. Figure 3-32 presents a cutaway of the MDA showing the position of the MDA central control/display console, peripheral equipment, and experiment canister stowage.

In the second approach, which is currently in the conceptual study and layout phase, the experiment canisters are mounted on rows of rigid vertical stringers oriented parallel to the long axis of the MDA on either side throughout the length of the MDA (17 ft excluding the STS). This layout, shown in Fig. 3-33, may provide mounting capability for nearly as many (or possibly more) experiment canisters (20 by 30 by 40 in.) as does the original configuration.

Locating the astronaut's upper trunk, arms, and head in the proper relationship to the bottom row of experiment canisters would be achieved simply by having the astronaut literally turn upside down with respect to his previous position.

Both concepts offer crew problems relative to unmounting the experiment canisters and translating them through the MDA to the AM and then to the S-IVB experiment areas. Each concept also presents problems relative to crew positional interface and stabilization with respect to any specific experiment canister.

At present, the original layout as presented in Fig. 3-31, Views (a) and (b), is the accepted approach. Since approximately 25 experiment canisters (of varying sizes) can be

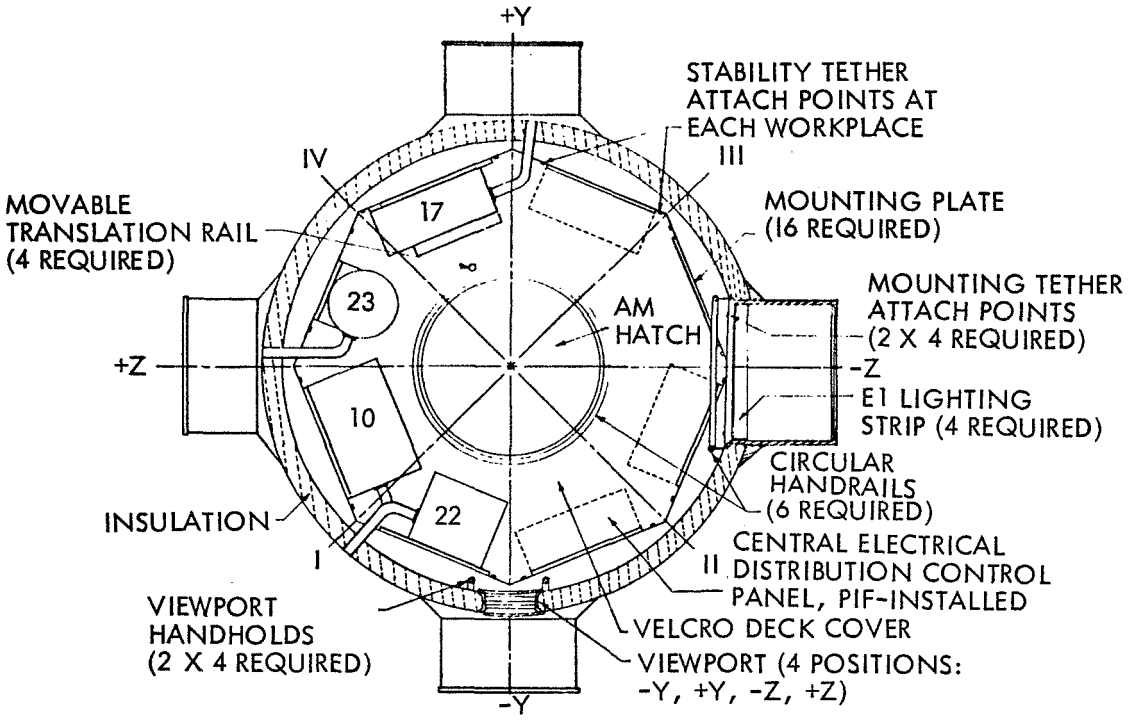

VIEW a

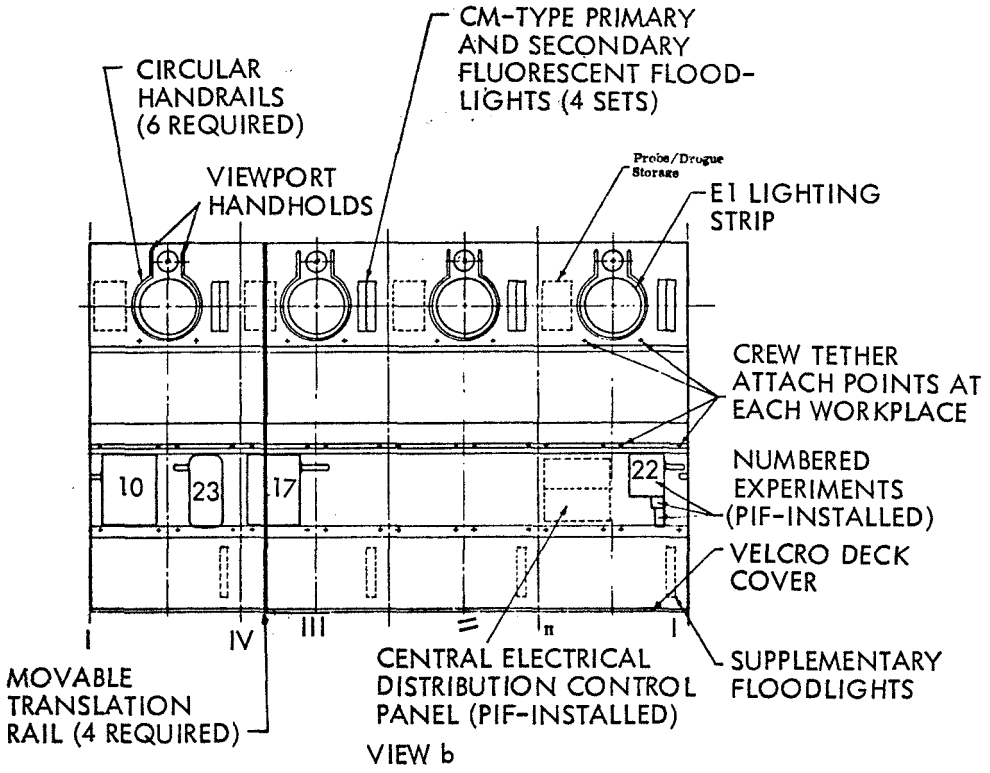

VIEW b

Fig. 3-31 Crew Support Equipment in MDA

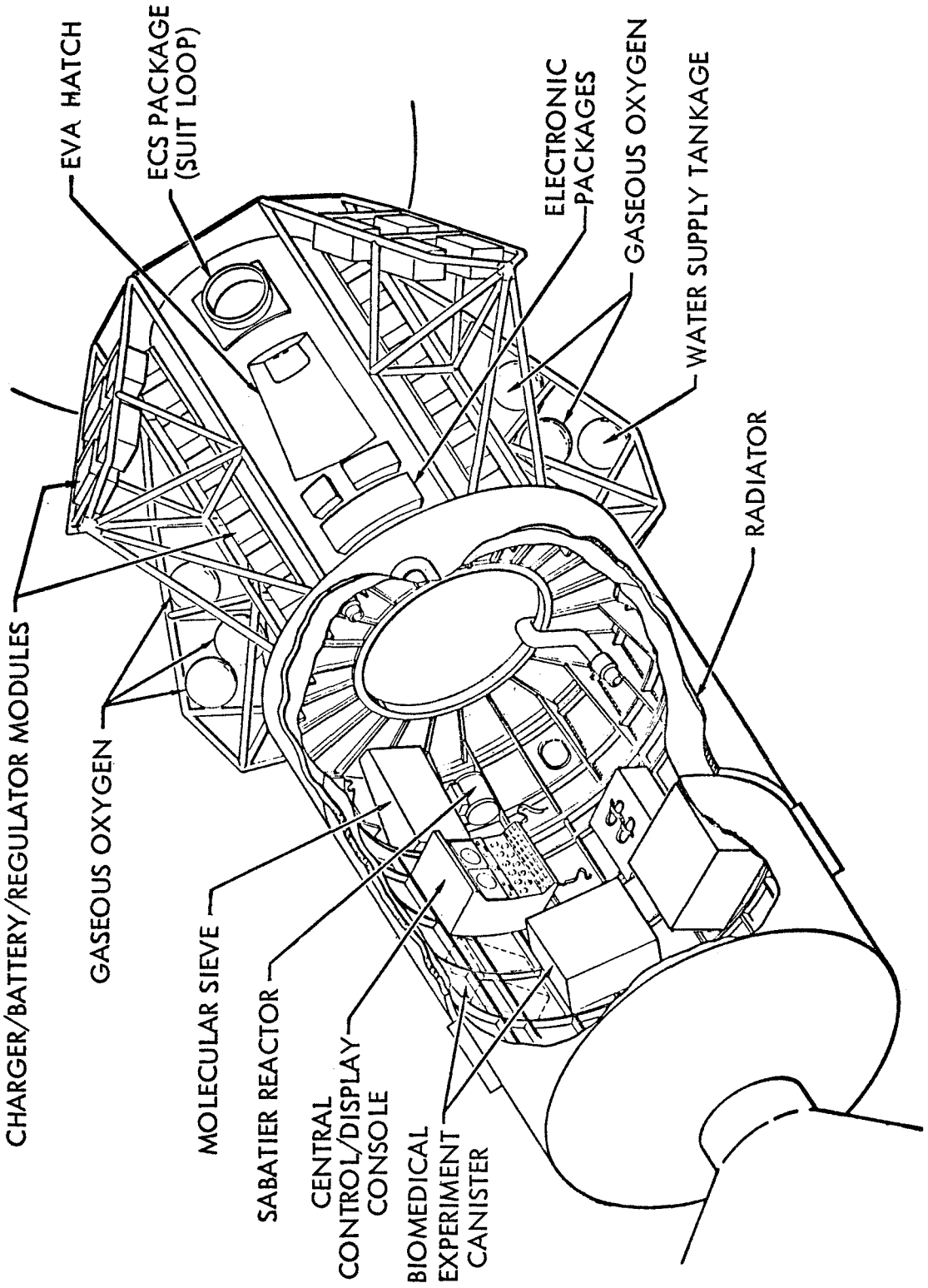

Fig. 3-32 Cutaway of MDA, Showing Stowage of Experiment Canister

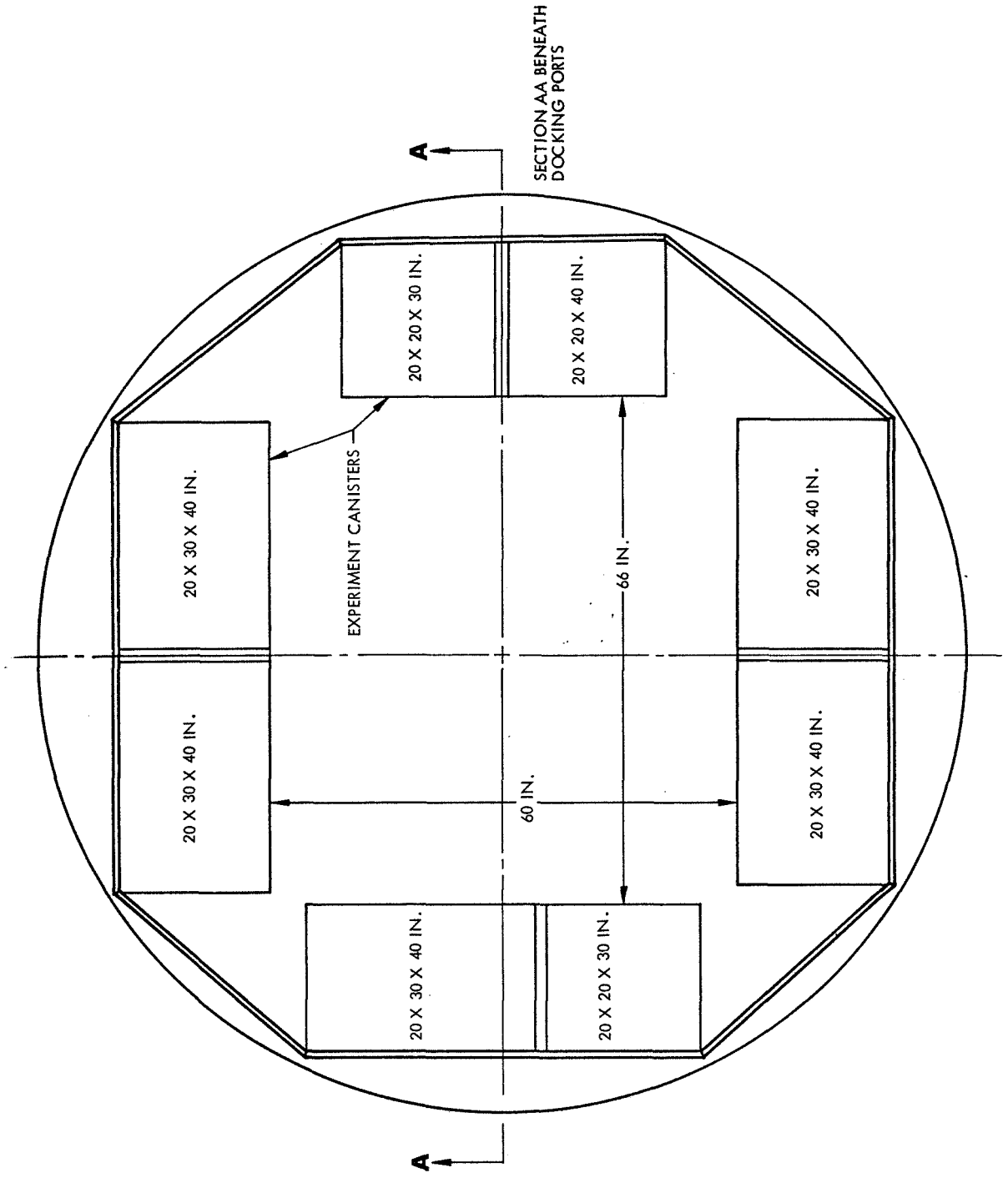

Fig. 3-33 Most Recent MDA Configuration Under Study

mounted in either MDA concept, it would appear that IMBLMS experiment canisters can be accommodated, depending on priority installation criteria relative to mission requirements.

The MDA may act as an interim or backup experiment area if the S-IVB OWS is uninhabitable, or possibly if the MDA is used as an ancillary experiment station area (assuming more than one MDA employed on a given cluster). The available free volume of the MDA, then, establishes the dimensional constraints for free-swept volume requirements of experiment-apparatus/crew interface if the experiment/measurement cannot be conducted within the dimensional confines of the experiment canister (20 by 30 by 40 in.).

Methods of transporting the experiment canister from the MDA to the AM and then to the S-IVB OWS crew compartment have not yet been established. Since sufficient free volume must be provided within the MDA to implement the canister transfer technique, all equipment stowed within canisters and removed and deployed for use within this free volume will probably have to be torn down and reinstalled within the canister. Furthermore, all loose cables, hose lines, and umbilicals must be securely tied down to prevent their interfering with canister transport.

Integration and installation of IMBLMS measurement equipment into the MDA will be formalized during the second half of the study so that the equipment is compatible with final conceptual design and systems integration.

3.5.7 S-IVB Orbital Workshop (OWS) Systems

Two candidate S-IVB orbital workshop carriers are being considered for the AAP mission. The first candidate is an S-IVB spent stage that must be purged and readied for astronaut occupancy. The spent-stage S-IVB will, in all probability, be available for the AAP Cluster A series of missions, i.e., the AAP-1 and AAP-2 mission element and the AAP-3 and AAP-4 mission element. The second candidate is a ground-converted S-IVB that has been modified and augmented by ground system personnel for specific orbital workshop requirements before liftoff. This vehicle would be available, in all likelihood, for the AAP Cluster B (or at latest Cluster C) series of flights. Discussions in this report will purposely be responsive to the S-IVB spent stage since it represents the most well-defined concept at this time. Although information on the ground-converted S-IVB concept is highly conceptual at this time, data will be included to provide a brief comparative survey of the two candidate carriers.

3.5.7.1 S-IVB Spent Stage. The S-IVB spent stage is a bipropellant tank structure designed to withstand all flight-induced loads when fully loaded with propellants and pressurized.

Structure. The structural network of the S-IVB spent stage consists of a forward skirt assembly, propellant tank assembly, aft skirt assembly, thrust structure assembly, and aft interstage assembly (Fig. 3-34).

The forward skirt assembly (FSA) is a cylindrical skin/stringer structure 122 in. long. The FSA is attached to the LH_2 tank at the junction of the cylindrical portion of the tank and the hemispherical tank head. The FSA provides attach points for the instrument unit (IU) on its forward end.

The propellant tank assembly (PTA) is a 260-in.-diameter cylindrical pressure vessel 268 in. long, using hemispherical heads. An intermediate spherical radius bulkhead is provided to separate the fuel tank from the oxidizer tank. The fuel tank contains eight spherical pressurized helium tanks, two fuel probe instrumentation assemblies, and sailcloth baffles.

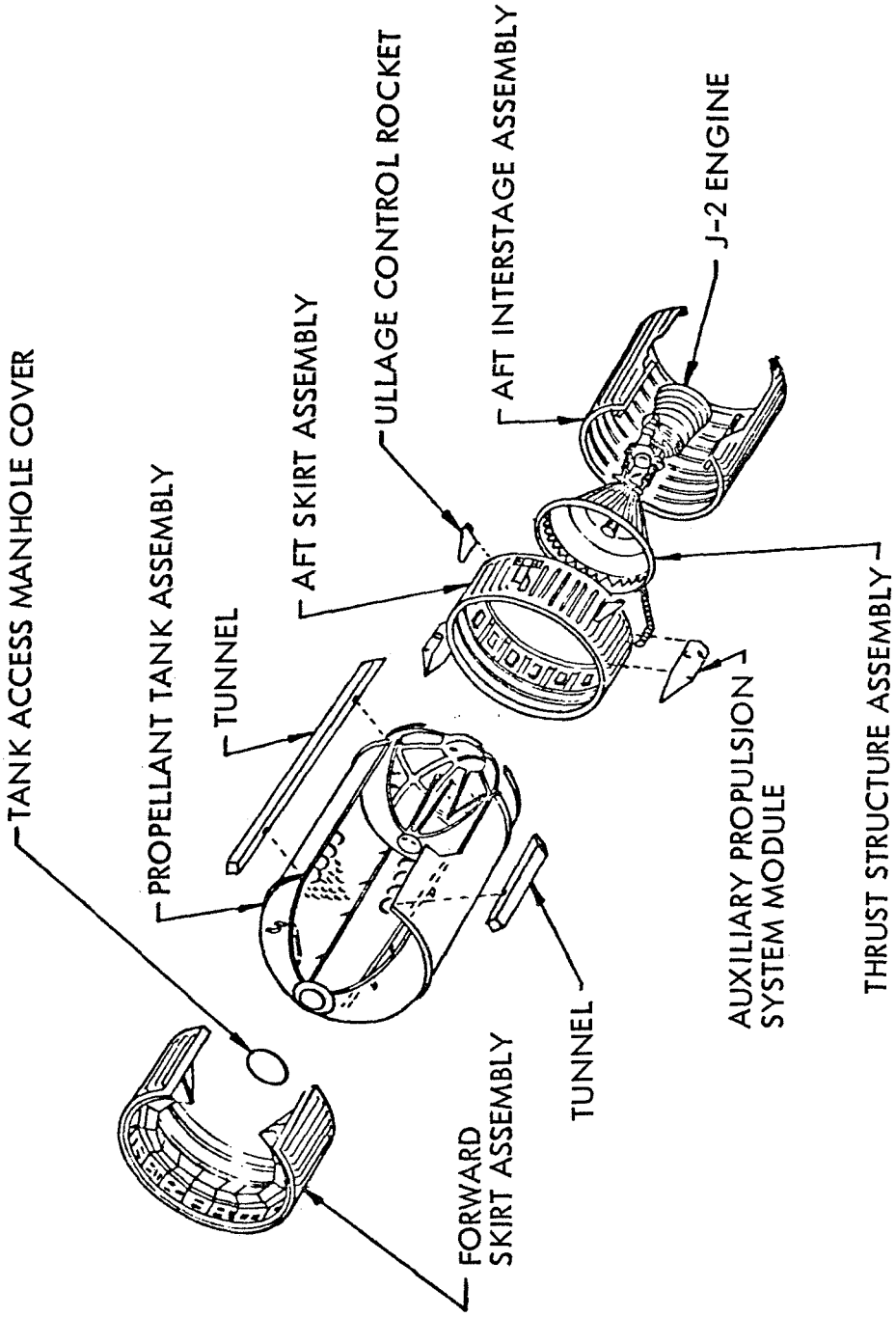

Fig. 3-24 S-IVB Structural Assemblies

The thrust structure assembly is an inverted truncated cone of aluminum construction 62 in. long, with a base diameter of 168 in. and a top diameter of 34 in.

The aft interstage assembly is a stiffened aluminum cylinder. This assembly provides the structural interface between the S-IVB and the booster stages.

The aft skirt assembly is a stiffened aluminum cylinder 85.5 in. long. The interface between the propellant tank and aft interstage assemblies is provided by the aft skirt assembly.

Thrust for the S-IVB spent stage – a Rocketdyne J-2 engine burning liquid oxygen (LOX) and liquid hydrogen (LH_2) – is transmitted to the stage through a skin-and-stringer structure shaped in the form of a truncated cone that attaches tangentially to the aft liquid oxygen dome. The hydrogen tank is internally insulated with reinforced polyurethane foam and contains a series of high-pressure spheres storing gaseous helium for liquid-oxygen tank pressurization. Adapter structures, referred to as the forward and aft skirt and the aft interstage, provide the necessary interfaces for mating with the payload and the lower stages. The tank structure features a waffle-like pattern on the hydrogen tank sidewall to act as a semimonocoque load-bearing member. A double-walled composite structure with an insulating fiberglass honeycomb core forms the common bulkhead that separates the hydrogen and oxygen tanks. The propellant tanks have spherical end domes. Skirt and interstage structures are composed of conventional skin, external stringers, and internal frames. Vehicle sequencing devices, engine control system electronics, and telemetry signal conditioning units are mounted inside the skirt section of the stage.

Features. There are several obvious advantages in using an S-IVB spent stage as an orbital workshop. The prime consideration is, of course, the increased volume over the other defined spacecraft. For example, the LM laboratory has an available volume of approximately 267 cu ft (which is not particularly well laid out for manned experiments), whereas the OWS has a volume of 10,426 cu ft for both the pressurized and unpressurized concepts. This large volume is advantageous for a work-place layout

and it also provides, after a 0.5-in.-diameter meteoroid penetration, approximately two hours of pressurization, before the loss of pressure presents a hazard to crew members. Figure 3-35 presents a typical layout of the interior of the OWS and the crew quarters location.

Past studies have conceptually located the crew work station and living quarters toward the aft end of the OWS adjacent to the LOX tank, as seen in Fig. 3-35; however, current in-house NASA studies have recently been initiated relative to the two-sided floor scheme within the S-IVB. This concept, simple and straightforward, positions the floor within the S-IVB somewhat nearer the entry/exit dome hatch interface with the AM, i.e., somewhat above station 1417.364. The floor, then, can be used on both sides (by earth reference, top and underneath) as the floor for distinctly separate crew compartment areas. For example, the side nearest the dome hatch might be allocated primarily to installation and use of experiment equipment. The opposite side (the side nearest the aft end of the S-IVB and the LOX tank) might be allocated to crew sleeping, food preparation, waste management, hygiene, recreation, and maintenance. "Above" each floor would be installed a soft ceiling, and the waste-management, hygiene, and food-preparation compartments would probably be sealed compartments with exit filters to remove particles and odors.

Certain minor modifications to the S-IVB spent stage will have to be made before launch, as follows:

- Application of LH_4 tank internal coating
- Installation of equipment attachment fittings, including crew mobility aids
- Installation of internal tank thermal sleeve
- Installation of crew quarters framework, including the deck
- Vacuum outlet provisions for experiments
- Modifications to tank outlets for plugging and sealing
- Modifications to S-IVB and IU systems to facilitate passivation
- Application of external paint for thermal control aid
- Enlargement of the hydrogen access hatch from 23 in. to 43 in. in diameter
- Installation of protective padding or nets

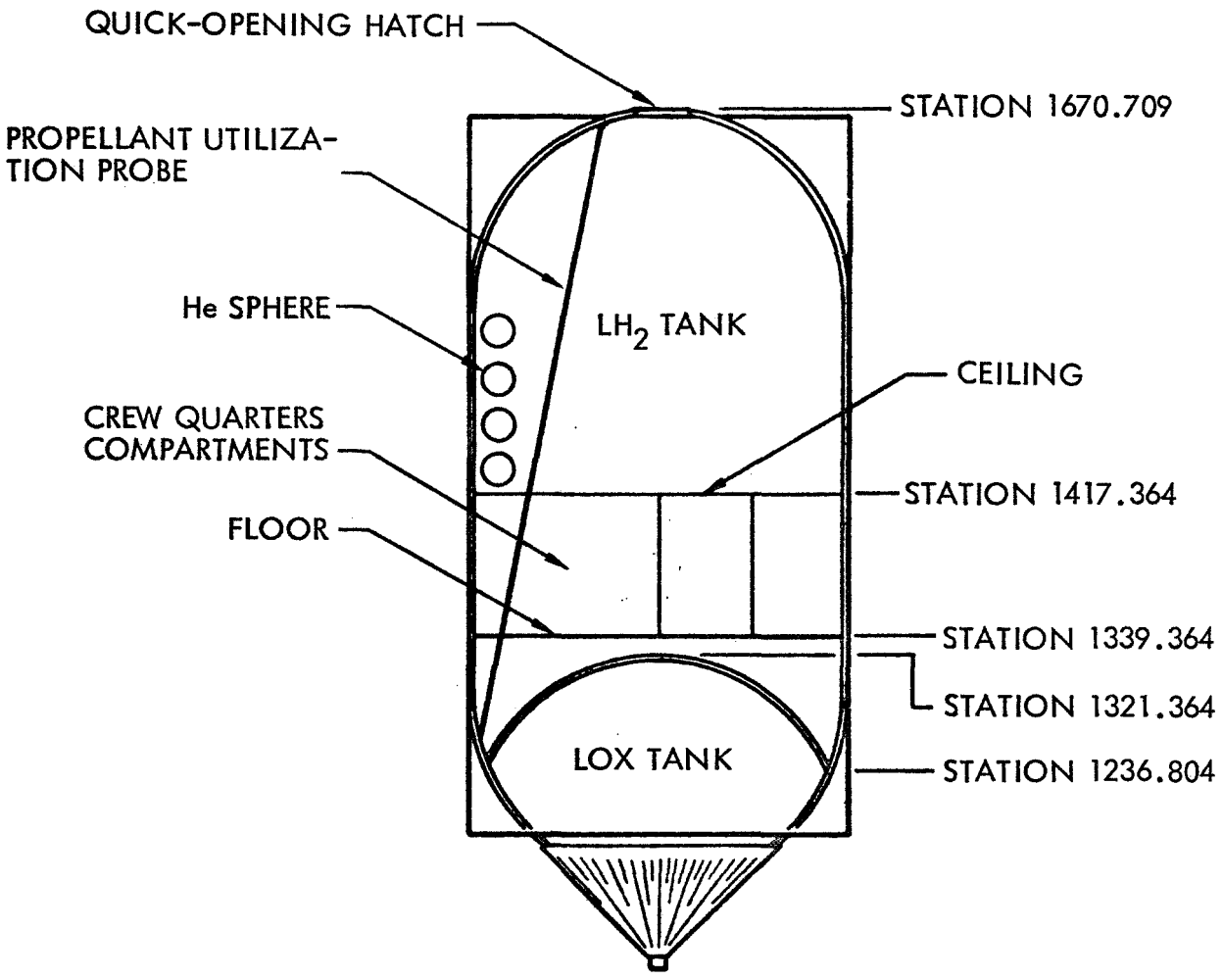

Fig. 3-35 S-IVB, General Internal Configuration Showing Location of the Crew Quarters

Several other modifications, additions, and deletions currently being considered for the OWS are relevant to the IMBLMS program. They are as follows:

- Simple internal sensors will be installed for automatic signaling of readiness for human occupancy on completion of purging the workshop of liquid and gaseous propellant residues (passivation).
- The hydrogen access hatch will be enlarged from 23 in. to 43 in. in diameter, and the original 72 locking bolts will be replaced with a positive-actuation locking assembly for fast and easy operation of the hatch cover.
- The OWS atmospheric composition and pressure currently are undetermined, but may evolve as a 50-50 to 70-30 oxygen/nitrogen system maintained at about half sea-level pressure (7.4 psi), or possibly 5 psi.
- Current safety provisions include separate life support systems and certain redundancies in several of the major component modules of the cluster.

The AAP crew will have to activate the OWS once the spacecraft have docked in the 260-nm orbit of the rendezvous mission. The initial task after all spacecraft transposition and docking procedures have been completed will be activation by the crew of the modified Gemini environmental control system installed in the airlock, after which the spent stage will be purged and pressurized. Subsequent astronaut tasks are as follows:

- Verification of shirtsleeve habitability of the workshop
- Activation of an uprated version of the basic Apollo electrical power system, including fuel cells
- Deployment of solar cell array power subsystem
- Location and sealing of any atmospheric system leaks
- Cushioning of all structural protrusions inside the workshop potentially hazardous to astronauts in shirtsleeves or space suits
- Attachment of grips and point-to-point movement-assist handles, rails, lines, and nets
- Assembly and placement of stored floors, panel dividers, beds, furniture, structural mounting frames, and experiment modules

S-IVB OWS Guidelines. The following guidelines relative to the S-IVB OWS and mission interface have been identified by NASA MSFC:

- The S-IVB instrument unit has 7.5 hr of active life after S-IVB engine cutoff.
- Astronauts initiate S-IVB LH_2 tank pressurization from the AM.
- The S-IVB LH_2 tank pressurization process is monitored by the astronaut on watch in CM.
- All astronauts sleep in the CM until habitability installation is complete.
- After installation of the flexible flooring, the astronauts can wear CWG's to finish installation of habitability equipment.
- There may not be a transfer device for the experiment package.
- Gaseous oxygen is available for initial OWS pressurization.
- LH_2 tank valve closing during passivation can be verified by ground stations and relayed to the CM. LH_2 tank valve closing cannot be verified directly by the CM.
- The LH_2 tank can be pressurized to 5.0 psia without penetration sealing operations and without exhausting ECS 28-day capability.
- A voltmeter should be used to check proper circuit resistances before lights and fans are switched on.
- Circuit breakers should be used in electrical wiring to eliminate short circuit arcing.
- The flexible boot connection of the AM LH_2 tank is preinstalled.
- During normal operations, it is not permissible to pressurize the aft AM compartment while the LH_2 tank is unpressurized.
- Characteristics of the AM umbilical, relative to the S-IVB, are as follows:
  - It will supply closed-loop cooling water (4 lb/min at 40 to 45°F) at the suit interface. Water pressure and suit interface parameters are defined in NASA CSD-A-096. Body heat from the astronaut will be absorbed by the water-cooled undergarment.
  - It will supply open-loop gaseous oxygen (7.9 lb/man/hr at 50 ±10°F and 80 psig minimum) for breathing, suit pressurization, and CO_2 washout. Emergency flow should be 16 lb/man/hr, for one man for 1 hour. The other man on umbilical will receive nominal flow for this hour.

- It will provide electronic circuits for hardline communications among all the flight crew.
- It will supply an electrical circuit for power tool operation.
- It will act as a restraining tether for the astronaut.
- It will be approximately 60 ft long.

- The LH_2 tank manhole cover is never reinstalled after removal.
- The LH_2 tank NPV switch is located in the aft AM compartment.

Inboard Profile. The inboard profile of the S-IVB spent-stage orbital workshop is presented in Fig. 3-36. Astronaut mobility aids are preinstalled as shown in Fig. 3-37, and portable astronaut aids are provided for the astronauts to install, as required, to increase mobility and body restraint capabilities. These aids are designed so that they can be installed at locations other than those requiring special effort or planned experiments.

A floor and partitions making up the orbital workshop crew quarters are installed in the aft end of the LH_2 tank 15 in. above the common bulkhead. The floor is an open-grid structure with a 6-in. radial clearance between the floor and the tank wall insulation. The floor is attached to the tank wall by eight struts at four equidistant locations. The current floor plan is shown in Fig. 3-38. A cloth ceiling, stored in the MDA during boost, is installed in orbit by the astronauts. Support members for the cloth ceiling are preinstalled in the tank. A fully closed ceiling, similar in construction to the floor grid, is installed over the sealed (controlled pressure differential) food-management and waste-management facilities of the crew quarters. Figure 3-39 illustrates the crew quarters ceiling, with subceiling support members as required.

The annular plenums and thermal ducts of the thermal control system are installed on the inside cylindrical surface of the LH_2 tank. A series of 16 structural "hat" sections attached to tank wall studs support the plenum and ducts. Perforated tubes or their functional equivalent are located throughout the LH_2 tank as astronaut mobility aids.

A LOX tank nonpropulsive vent system has been added. The ducting is attached to the forward area of the thrust structure. An LH_2 tank nonpropulsive vent system is

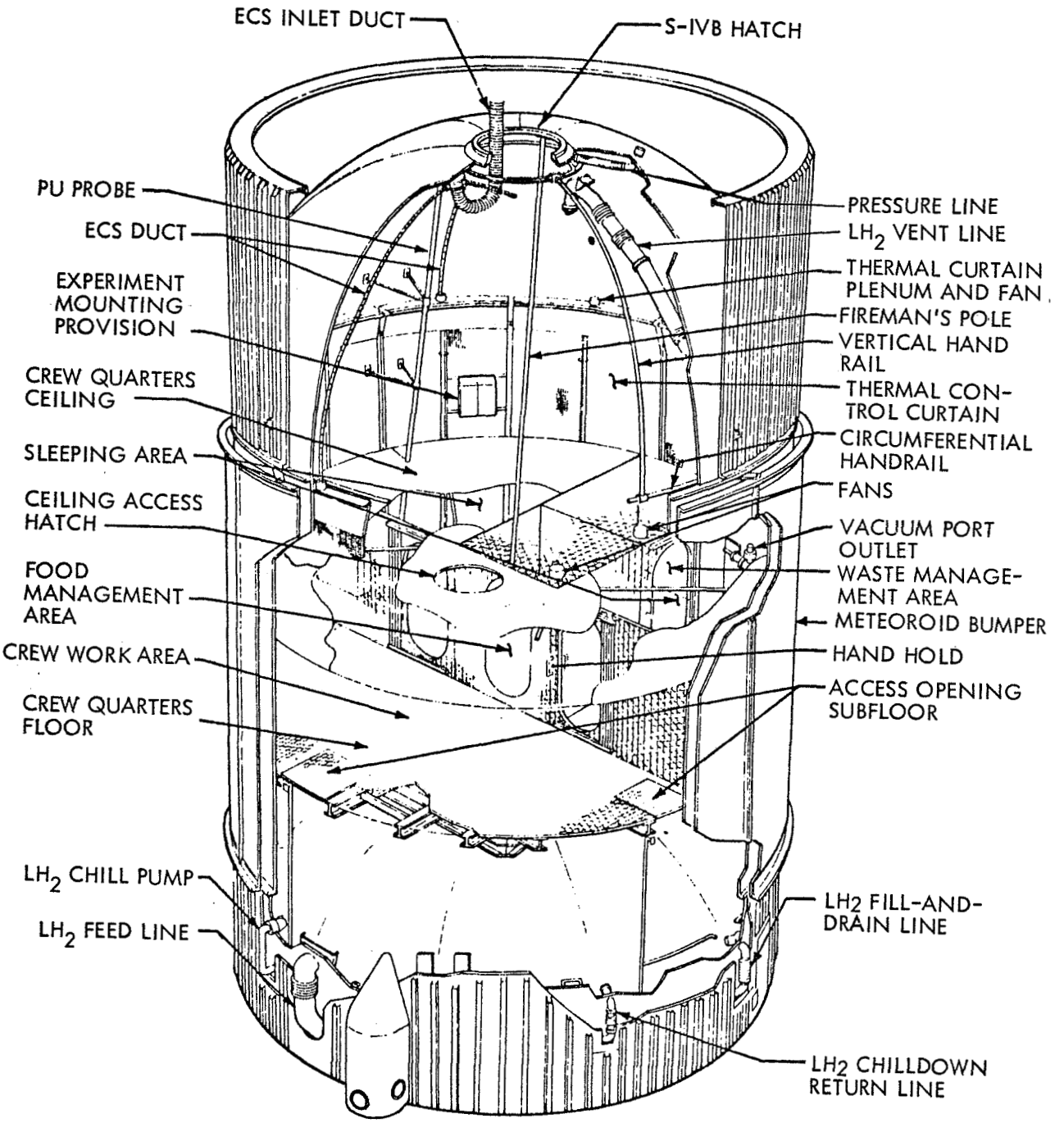

Fig. 3-36 S-IVB Orbital Workshop, Configuration

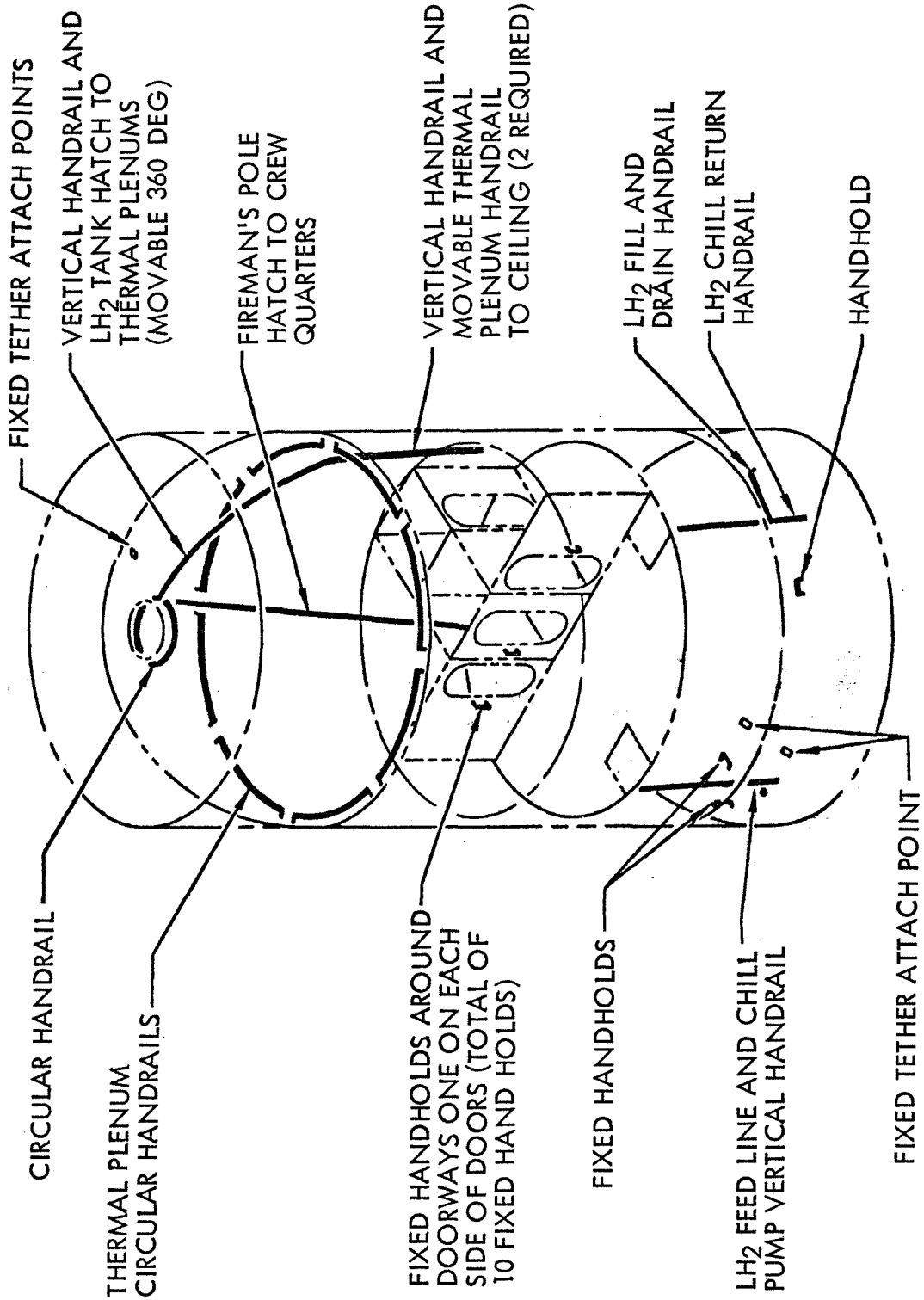

Fig. 3-37 S-IVB Orbital Workshop, Preinstalled Astronaut Mobility Aids

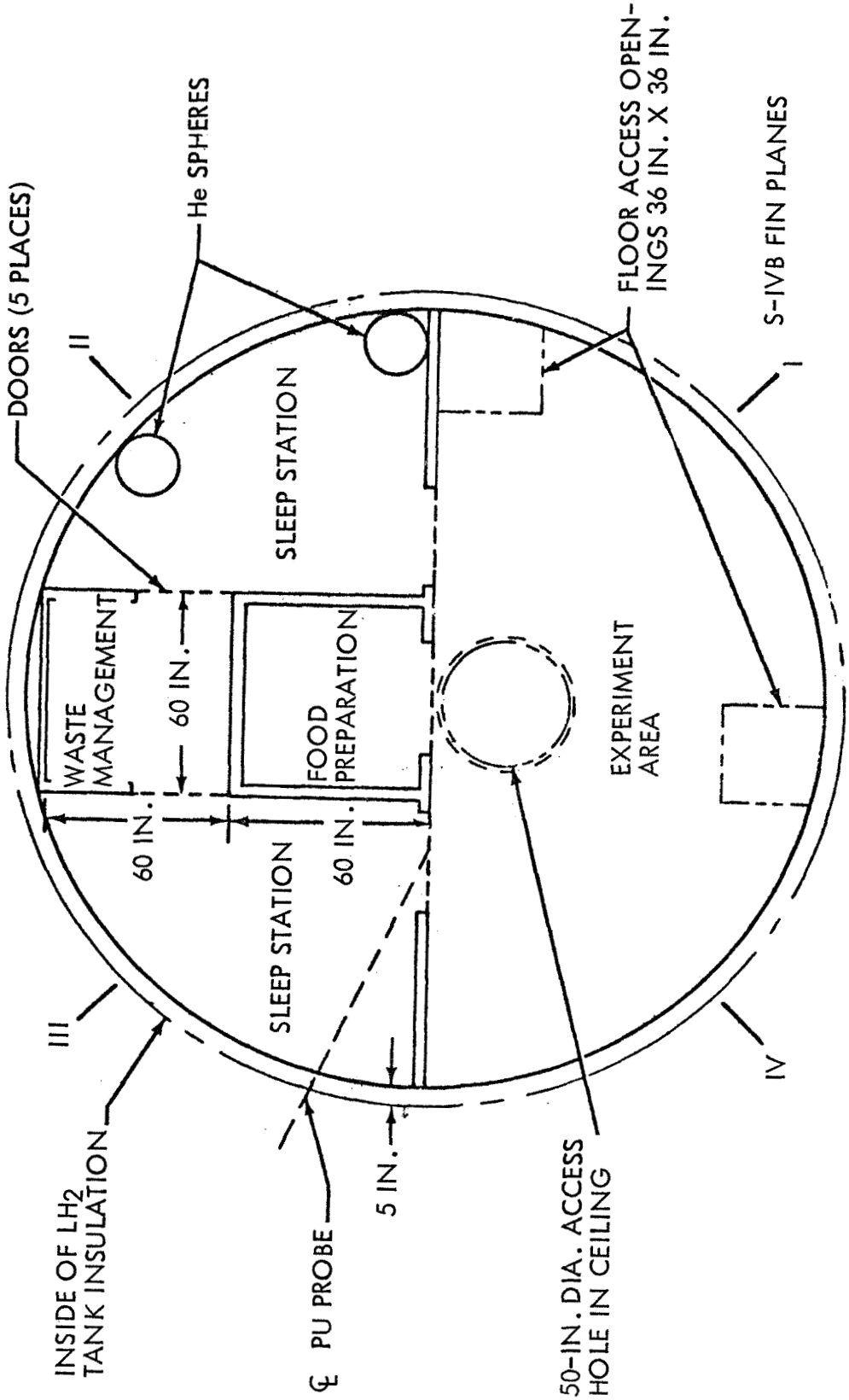

Fig. 3-38 Crew Quarters, Floor Plan

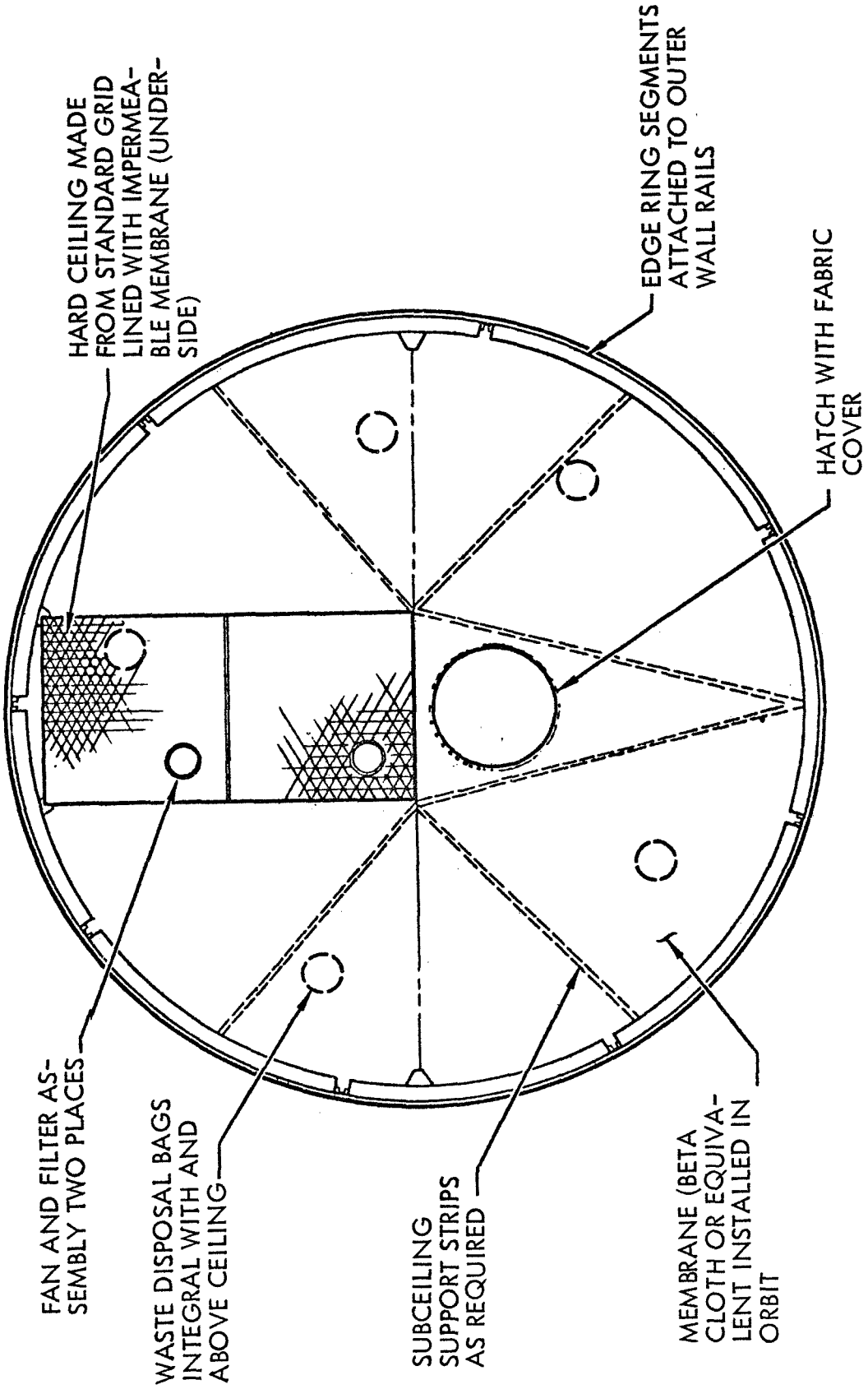

Fig. 3-39 Crew Quarters, Ceiling

installed on the forward dome of the LH_2 tank. A quick-opening access hatch replaces the LH_2 tank manhole cover on the forward dome of the LH_2 tank. A deployable meteoroid shield is installed on the LH_2 tank exterior cylindrical surface between the forward and aft skirts.

Crew Compartment and Experiment Area. The crew quarters floor plan as shown in Fig. 3-38 is composed of five major areas. Four of the five compartments are of direct significance to IMBLMS relative to experiment setup, performance, and/or interface. The five compartments are briefly described in succeeding paragraphs; where appropriate, IMBLMS specific interfaces are discussed.

The waste-management and food-preparation areas, being sources of both particulate matter and odors, are sealed to ensure controlled circulation. The controlled flow is into the compartments, with exhaust gas being drawn through an exhaust fan and filter combination. Figure 3-38 also shows the currently proposed location of these two fan/filter assemblies in the ceiling area.

The sealed compartment is also of prime importance to the biochemical measurements in IMBLMS. Body liquids, such as urine and blood, obtained from the astronaut for measurement and evaluation must be transferred from sample takers to stowage containers and then frequently to measurement devices. Since the possibility of liquid loss or spill is present, it would be highly advantageous to provide an environment in which liquid handling and processing could be accomplished without fear that loose liquid globules floating about the entire crew quarters would cause potential electrical hazards. Location of the biochemical measurement station within the waste-management compartment appears desirable if a modesty screen is provided around the stool. Furthermore, since many of the samples are urine, locating the biochemical station close to the urine collection and handling system is quite logical. Some consideration has been given by LMSC to slightly reconfiguring the waste-management compartment into two subcompartments: (1) waste management, and (2) personal hygiene and biochemistry. This arrangement, which could be accomplished simply, would separate the waste-management functions from hygiene and, in particular, from the taking, handling, and measuring of body fluids.

The sleeping areas on either side of the waste-management and food-management compartments contain equipment for testing two concepts of sleep restraint. The primary difference is that in one area the beds will be attached to the walls, and in the other to the floor. Both sleeping compartments will be provided with light and noise control. The vacuum outlet system, located in one of the two compartments, is an essential interface for IMBLMS. One interface is to the waste-management system (relative to urine collection); the second interface is the 0.5-in. vacuum line that may be used in cardiovascular measurement. The vacuum outlet system is illustrated in Fig. 3-40.

The food compartment is also a sealed environment with controlled circulation. Figure 3-41 presents a representative layout of the interior of the compartment. This area interfaces with IMBLMS in that the amount of food or liquid left over from each meal for all astronauts is measured to determine daily intake. Hence, a small mass measurement device will probably be set up within this compartment to handle this function.

The remaining compartment is the experimental workshop, wherein various AAP engineering, scientific, operational, and medical/behavioral experiments/measurements are performed. Access to the area below the floor is provided by two hatches. Since the subfloor operations are limited primarily to the period immediately after astronaut entry, these hatches will remain closed throughout the remainder of the mission. The large central ceiling access opening is expected to be open for normal activity, but may be closed for circulation control.

All the structural dividing partitions and floor surfaces are constructed of the same standard panels – which provides a great deal of standardization and flexibility. The floor panels are an open framework to permit LH_2 flow and in addition are capable of absorbing and distributing loads imposed upon them. The grids of the floor are fairly large to facilitate assembly in the tank and to minimize the number of supporting beams and structural complexity. The floor grids are approximately 3 ft wide by 10 ft long, and holes are drilled at the intersections of the triangular truss lattice to remove material for weight reduction and to create a pegboard hole pattern for attaching equipment.

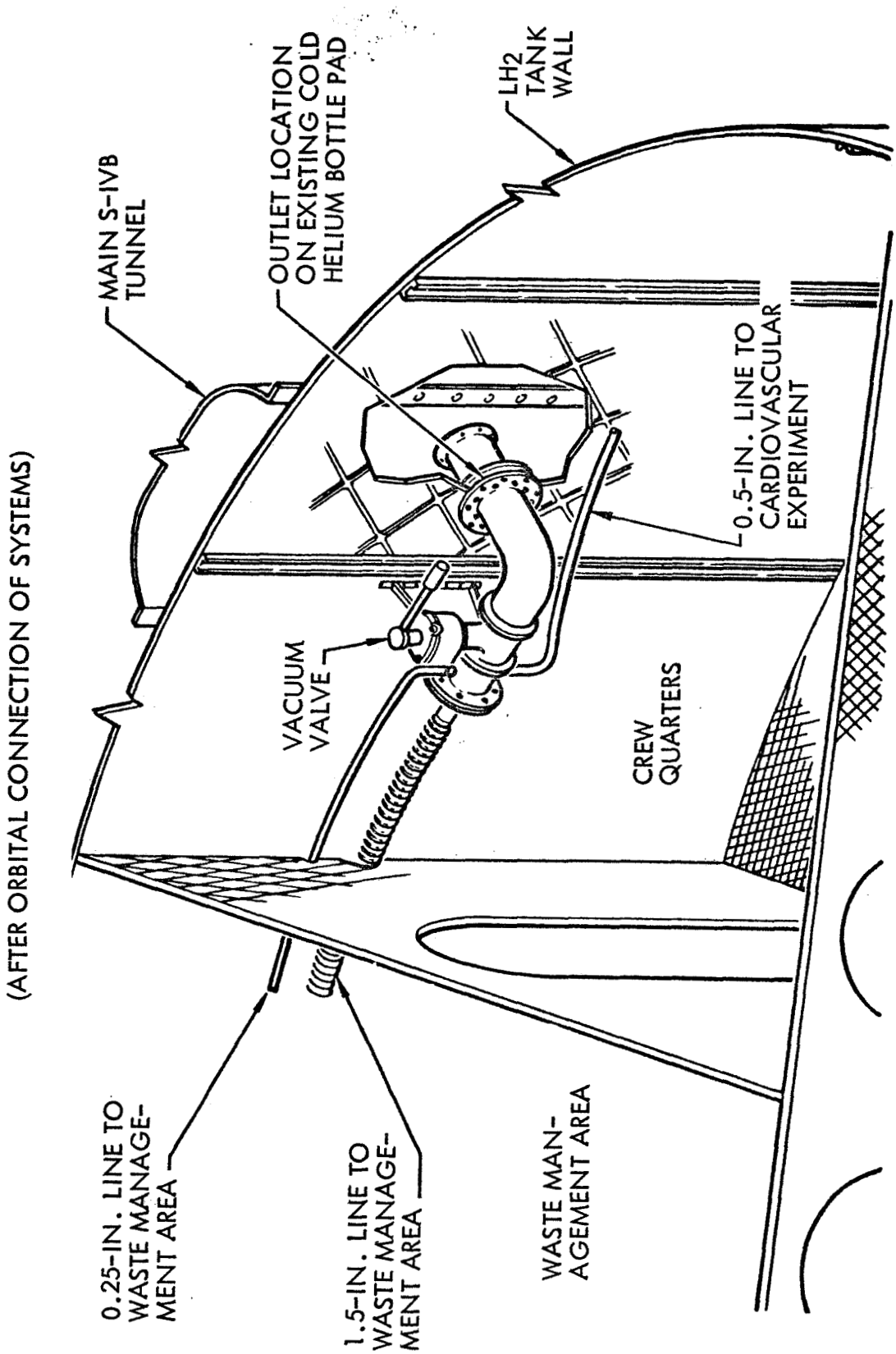

Fig. 3-40 Vacuum Outlet System

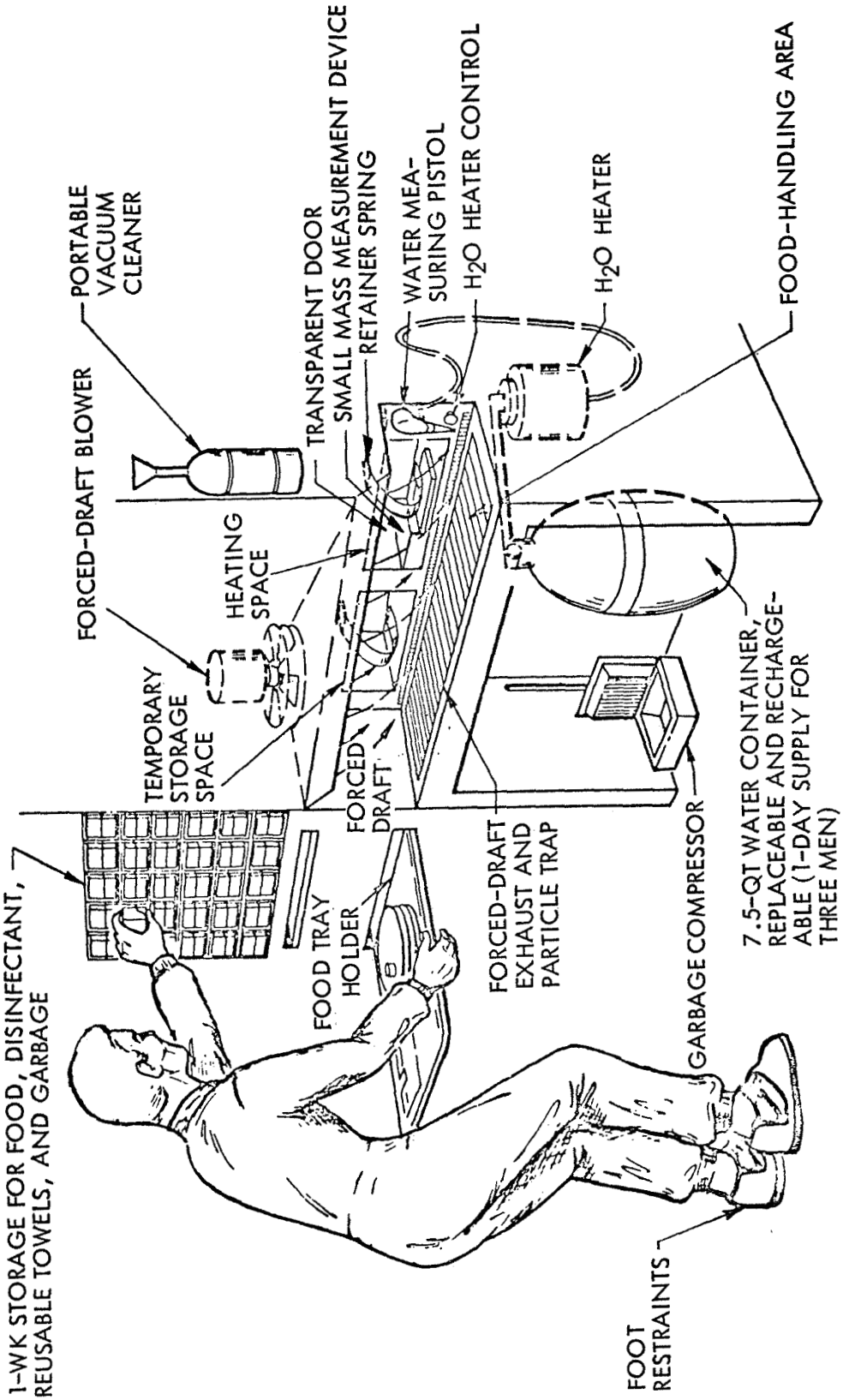

Fig. 3-41 Representative Layout of the Food Compartment in the S-IVB

Thermal control in the S-IVB is achieved through passive control and a system of thermal sensors and fans. The fans are cycled as a function of heat load to control the temperature; heat is absorbed on the tank side exposed to solar radiation and is rejected through the side radiating to cold space.

Experiment equipment in the crew compartment will generally be mounted on the floor, on the partition grid surfaces, or on special mounting rails between the thermal curtain hat sections on the tank wall. Since most of the experiment equipment will be transferred to the OWS from the MDA and other carriers, equipment will be set up after orbit clustering. Therefore, the translation of experiment canisters from their original location during boost to the crew compartment becomes a necessity. To achieve this translation with a minimum of time and effort, very simple experiment mounting schemes are required. One approach, successfully accomplished in Gemini XII, is the use of a "pip pin" to insert in the canister frame to the grid pattern in the floor or wall partition, possibly even to the rails between the thermal curtain hat sections on the wall. At present, no specific technique has been identified as the required approach for mounting equipment in the S-IVB. The current NASA scheme is presented in Fig. 3-42 relative to the crew compartment and the stowage of empty experiment canisters.

Experiment Stowage Volume and Performance Area. No experiment equipment will be stowed within the LH_2 tank in the S-IVB according to present NASA plans. Experiment equipment will be transferred from other carriers into the S-IVB and set up for eventual use. This procedure is necessary, of course, because the tank is originally filled with fuel, which is consumed during boost and orbit attainment. Once the S-IVB is on the desired orbit, however, the nearly empty fuel tank will be purged and the interior made habitable.

Total experiment volume and dimensions are presented in Fig. 3-43. The large open area that represents one-half of the compartment floor is available for experiment equipment with the exception of those items called out – such as the floor and ceiling access openings and the area in front of the smaller crew compartment "doors." The compartment is 6.5 ft high from floor to ceiling.

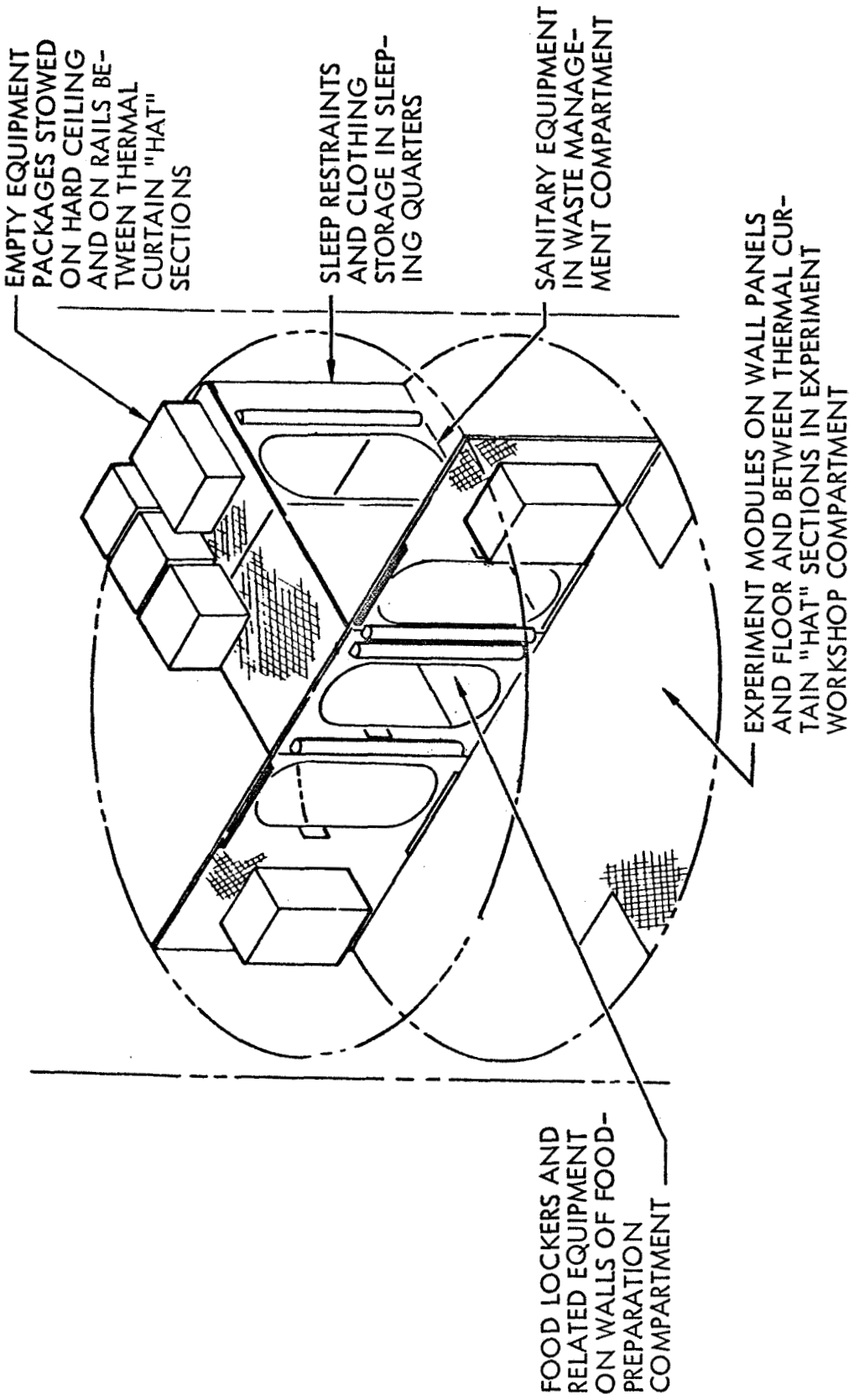

Fig. 3-42 Mounting of Experiment Equipment

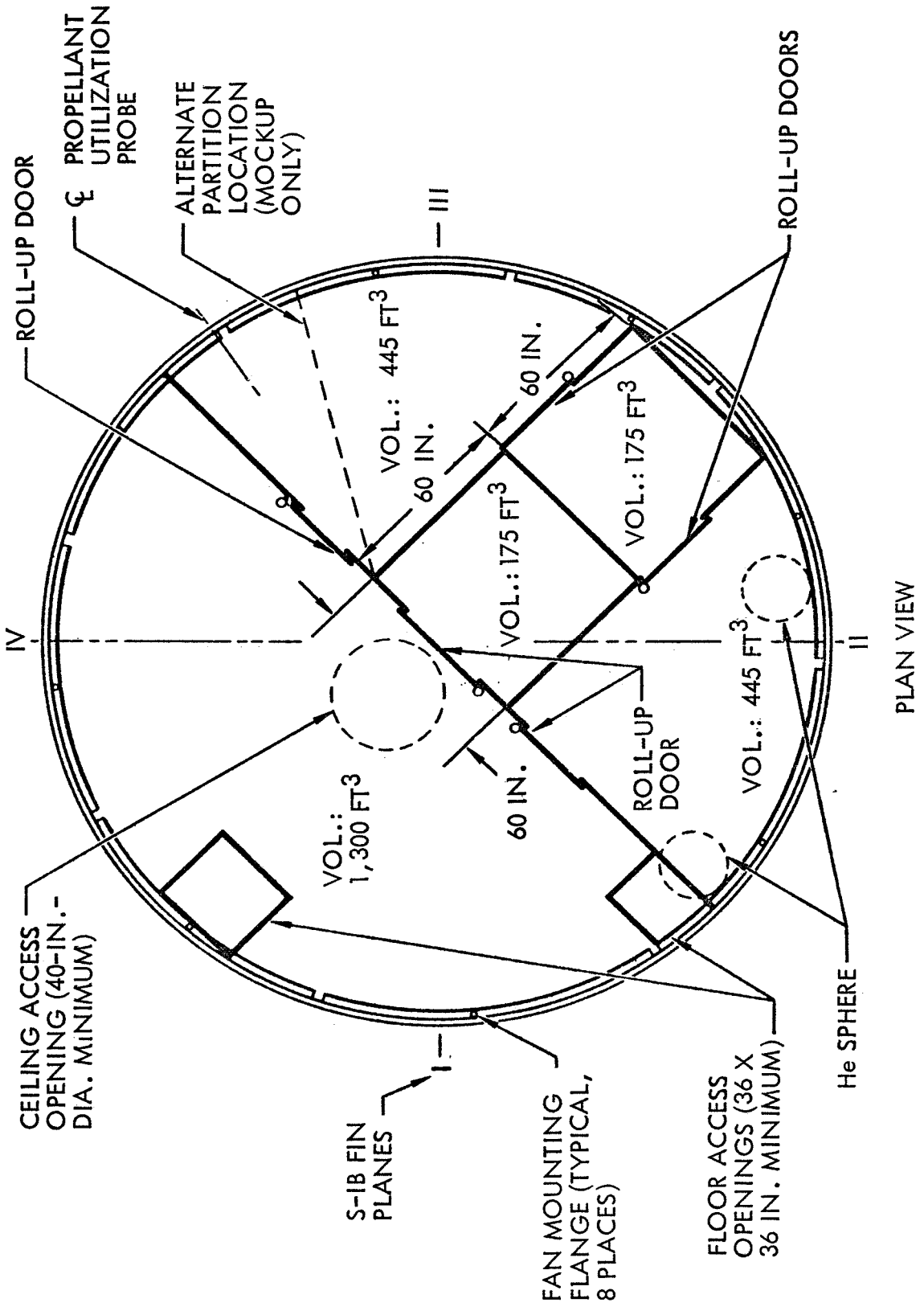

Fig. 3-43 Crew Quarters, Configuration

Location of the IMBLMS experiment canisters in the experiment areas of the crew compartments appears to be no problem in respect to available volume, but it is entirely contingent on the number and size of other experiment apparatus required to support engineering, scientific, and operational experiment programs. Furthermore, IMBLMS design will not be complete before the final report period. Hence, specific layout of the IMBLMS modules in the S-IVB will be studied and evaluated as part of the final activity of this contract phase.

3.5.7.2 Ground-Modified S-IVB Mission Module. Several interim space stations are currently under consideration by NASA for mission durations and operational lives of 1 to 2 yr. One of the candidate concepts is a ground-modified S-IVB stage that could house six to nine astronauts at an orbital altitude of 250 nm and at an orbital inclination of 28.5 to 55 deg. The space station would be launched by a two-stage Saturn V and would be resupplied every 120 days by a CSM modified to carry three to six crewmen. This configuration may be considered for Clusters B or C in the AAP.

Several candidate S-IVB mission module configurations are undergoing study; some of them use an AM and MDA forward, and the primary section of an MDA aft. Provisions on the station would be made for four docking adapters forward and four aft – which would allow the docking of several spacecraft, logistic vehicles, specialized experiment modules, and system extension modules (specialized carriers would probably appear in the latter part of the 1971-1973 period).

Several internal arrangements are being considered, all of which are compartmentalized as a means of providing logical partitioning and separation of activity areas. The compartments are all arranged around the central crew/equipment transition tunnel running the length of the spacecraft. Provisions for habitation space (approximately 5,000 cu ft) and subsystems are well within required minimums, and the layout scheme attempts to locate the primary elements logically.

One candidate layout of the internal arrangement, shown in Fig. 3-44, provides five major compartments and a centrifuge area. The biomedical deck shown in section C-C contains a filtered compartment for handling liquids, a data analysis work desk and

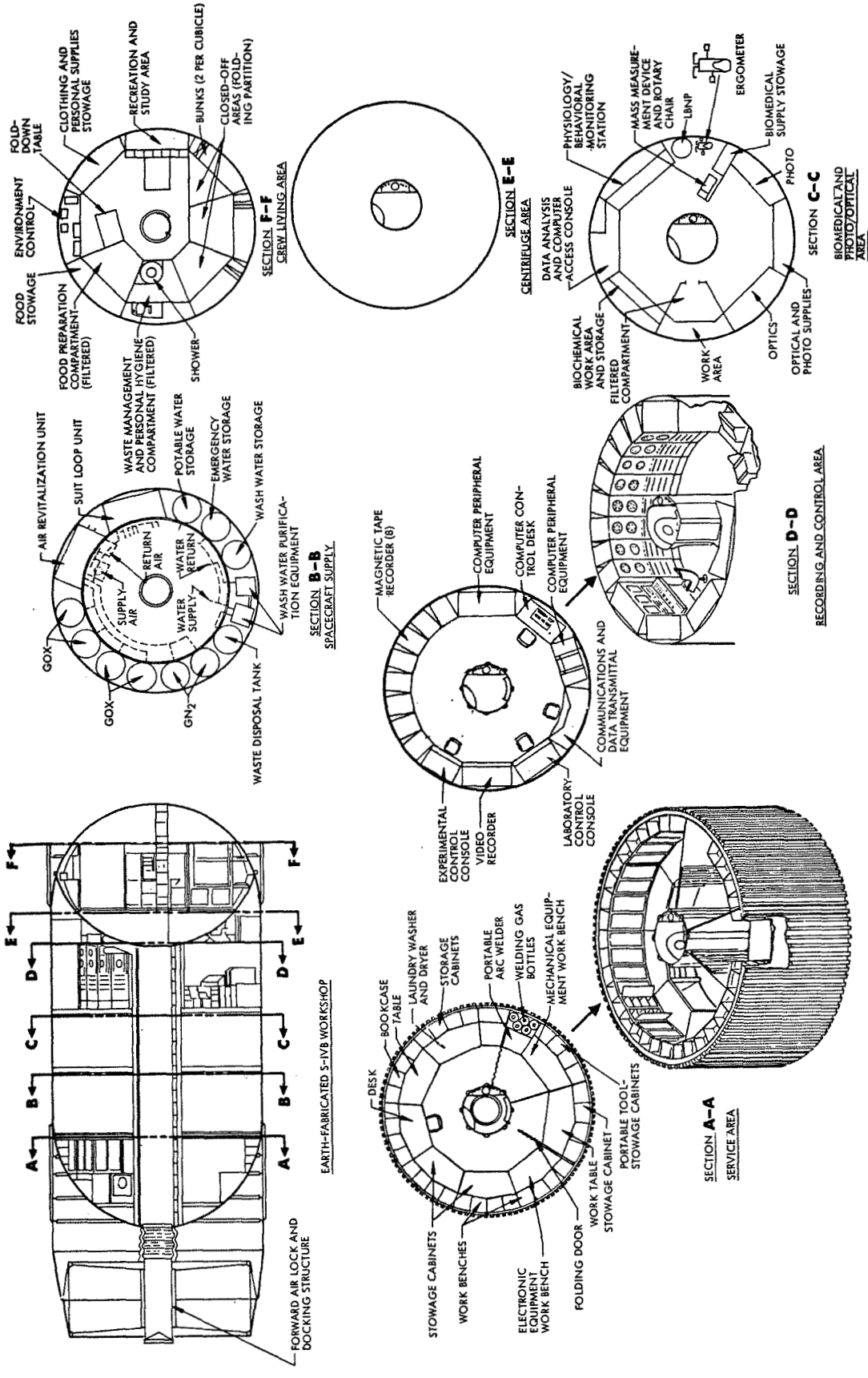

Fig. 3-44 Candidate Layout of Internal Arrangement

computer access console, biochemical and physiological/behavioral work stations and consoles, support equipment layout, and a supply/spares stowage cabinet. This area can also serve as a medical treatment facility. The filtered compartment partitions can be extended laterally and the area converted into a quasi-emergency operating/ treatment room.

The basic spacecraft provides for simple installation and attachment of equipment while circumventing any major modifications to the stage pressure structure. The basic advantage of the 1- to 2-yr station is the extensive flexibility and utility for the variety of mission objectives.

3.6 DATA-RETURN CAPSULE SYSTEM FOR CLUSTER A AND BEYOND

During the Cluster A mission, particularly AAP-3 and AAP-4, the volume and weight of data to be collected and returned to earth from orbit appears to exceed the data-return capacity of the CM or LCSM. LMSC has studied this problem in some detail (Ref. 3-4); the results of this analysis indicate that sufficient capability can be provided to return all data (for the entire group of experiments/measurements) generated on Clusters AAP-1/2 and AAP-3/4 by the addition to the MDA of four data-return recovery capsules, each capable of returning approximately 100 lb of data.

The preliminary study results indicated that the capsule configuration should be an adaptation of the Mark V recovery system used by the Air Force. The principal criteria used in the selection of this capsule recovery system were as follows:

- Fulfillment of all data-return requirements
- Adherence to the AAP-1 and AAP-2 launch schedule
- Minimum changes to AAP hardware
- Maximum use of existing capsule design capabilities
- Minimum modification to capsule

A smaller capsule (30-lb payload capability), which has been through a detailed preliminary design under an Air Force study contract, was also evaluated but was not recommended because the extensive development required during the short time preceding the AAP-2 launch would entail program risk.

Certain medical information can be obtained from body fluids and wastes using ground-based equipment not available in the IMBLMS. For this reason, it is proposed to return samples of these materials to earth on a programmed basis in a data capsule. In addition, there may be certain kinds of data that cannot be adequately transmitted by telemetering (e.g., on a real-time basis) but could be returned to earth as magnetic tape recordings, films, reports, etc.

Typical biomedical samples to be returned are as follows:

- Blood serum, 25 cc, refrigerated
- Blood plasma, 5 cc, refrigerated
- Blood smear on slide, and blood in pipette
- Urine, frozen
- Feces, vacuum-dried
- Saliva and throat swabs
- Cabin atmosphere
- Undeveloped radiation film badges
- Biochemical reagent test strips
- Magnetic tape (e.g., video)

The critical portion to be transmitted by data capsule weighs approximately 5 lb and requires 75 cu in. It is estimated that a total of 55.8 lb of material will be returned, requiring approximately 2.5 cu ft.

The specific proposed sequence for loading the data capsule with biomedical data and samples is presented in Fig. 3-45.

General ground rules and design features for the data-return capsule system are as follows:

- For Cluster AAP-1/2, the data and samples could be launched at or near the midpoint of the 28-day mission.
- For Cluster AAP-3/4, the data and samples could be launched approximately on the 21st day of the 56-day mission, and on the 35th day or later.
- The data-stowage unit of the capsule features foam construction with designated pockets (eggcrate style) to permit easy installation of the data package.
- Separation velocity of the data capsule from the spacecraft is 1 to 1.5 fps.
- The capsule will spin-up to 60 to 70 rpm 2 sec after separation from the cluster. Spin stabilization is provided before retrorocket ignition.
- Data loading will be accomplished by a shirtsleeved crewman.

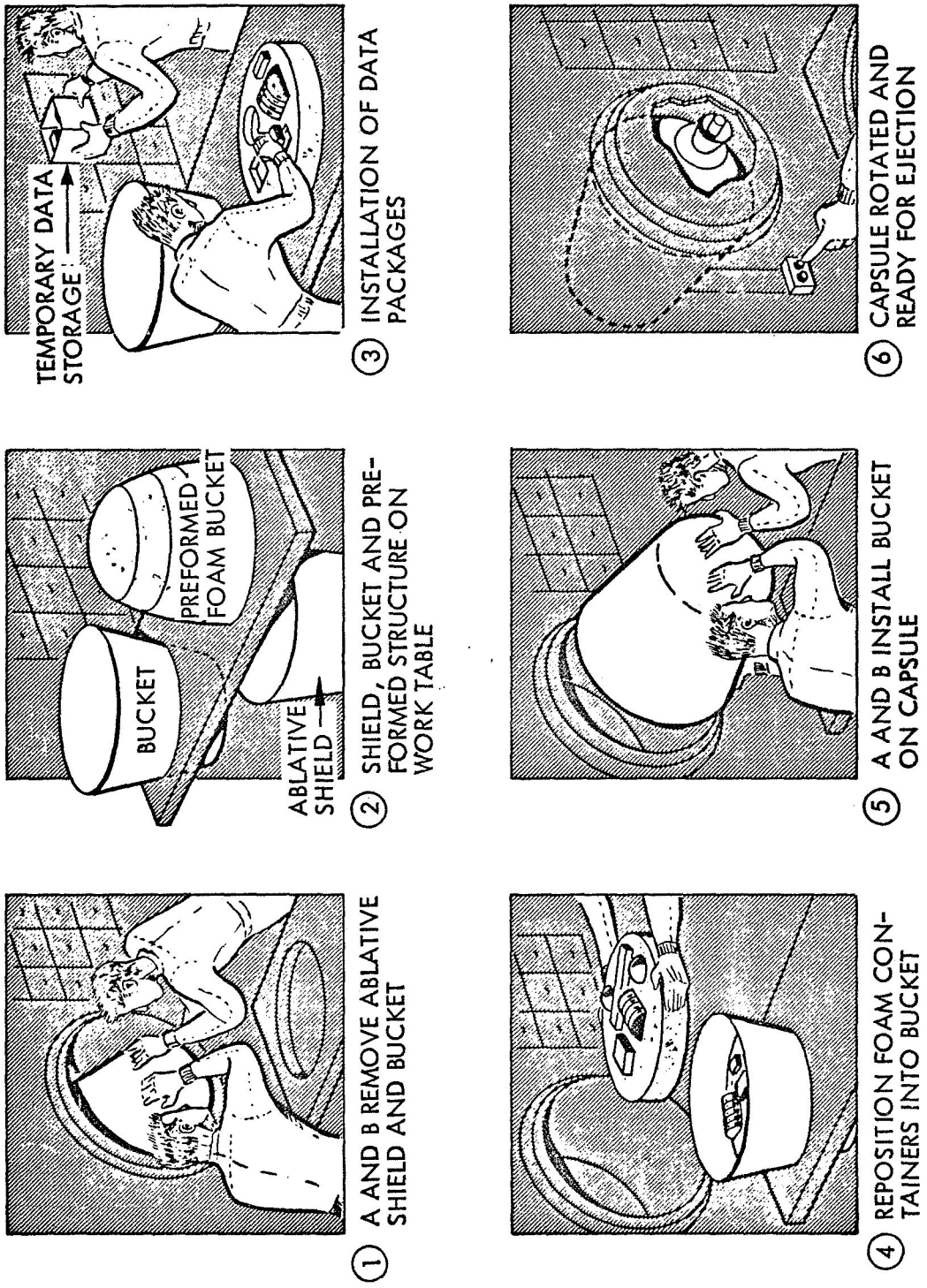

Fig. 3-45 Loading Sequence

- The data capsule will be on the earth's surface (land or water not yet determined) within 30 min of ejection from the spacecraft.
- The 100-lb payload capability for the data capsule can be met by a configuration approximately 12 by 12 by 12 in.
- The data and sample packages in the capsule are self-contained and non-contaminating.
- The environmental control capability will provide the package with a 32° to 80° F environmental range and will protect the payload from direct contact with the reentry shield.

At present, no specific NASA requirements are known to LMSC for data and sample payload return via an earth-return capsule. Nevertheless, it appears that the approach is feasible and desirable if the CM or LCSM is incapable of returning the required data and samples to earth for postflight analysis and evaluation.

4 IMBLMS MODULE DESIGN (TASK E)

Section 4
IMBLMS MODULE DESIGN (TASK E)

This section discusses the modular concept relative to the IMBLMS design, operational configuration, and integration method for such AAP carriers as the RCM, LM, and S-IVB orbital workshop. The modular concept for biomedical, behavioral, and related data-management support equipment has evolved from findings of the Biolabs studies (Ref. 4-1). Experience with modular design was gained during the last phase of the Biolabs studies (Ref. 4-2), and the practicality of this concept was further justified because of the AAP mission requirements for experiment equipment interchange, flexibility, and growth from flight to flight and from cluster to cluster.

Modularization of IMBLMS equipment will serve the following purposes:

- Provide maximum flexibility of measurement systems
- Reduce requirements for major equipment modification solely to update IMBLMS equipment
- Permit system growth through module add-on
- Enable experiment and measurement modules to be installed near liftoff dates
- Enable modules to be transported and installed during the on-orbit phase
- Ensure a minimum degradation of the biomedical mission in the event of a single module failure

This modular building block concept provides the inherent flexibility and growth necessary to accommodate the comprehensive IMBLMS measurement program, and at the same time reduces the costly and time-consuming features of modifying equipment for each flight or mission if changes must be made in the measurement requirements.

In the development of the modular concept for IMBLMS, LMSC has delineated requirements for each of the measurement functions and the associated equipment and instruments. Module envelopes have been selected for each of the candidate spacecraft. Specifications have been established for the design, packaging, racking, mounting, interchange, interdependency, and removal/replacement requirements for each module. Existing flight-qualified components are being specified for the module controls, displays, interconnections, and assemblies.

Additionally, concepts and techniques are being developed for the functional arrangement of the modules and for verifying the adequacy of their configuration and layout. The subsections that follow discuss these considerations and present a design configuration based on development of a full-scale partially functional mockup.

4.1 MODULE DESIGN APPROACH

Figure 4-1 illustrates the approach of Phase B IMBLMS modular design study and the interacting elements relative to development of the modular concept. The specific design details are discussed in Section 4.2.

4.1.1 Module Requirements Relative to Measurement Functions

Tasks A and B (Identification of IMBLMS Measurement Functions) were concerned with the analysis and refinement of the proposed medical and behavioral experiments and a survey and identification of candidate equipment and methodologies required to perform these experiments and measurements. Lists of experiments and measurements were prepared that indicated the various methodologies for conducting these experiments and the candidate equipment or instruments necessary to perform the measurement identified.

These lists were reviewed with the medical and engineering team and recommendations were made relative to the best measurement approach. A selection was then made of equipment or instrument candidates required to conduct the measurement. From this

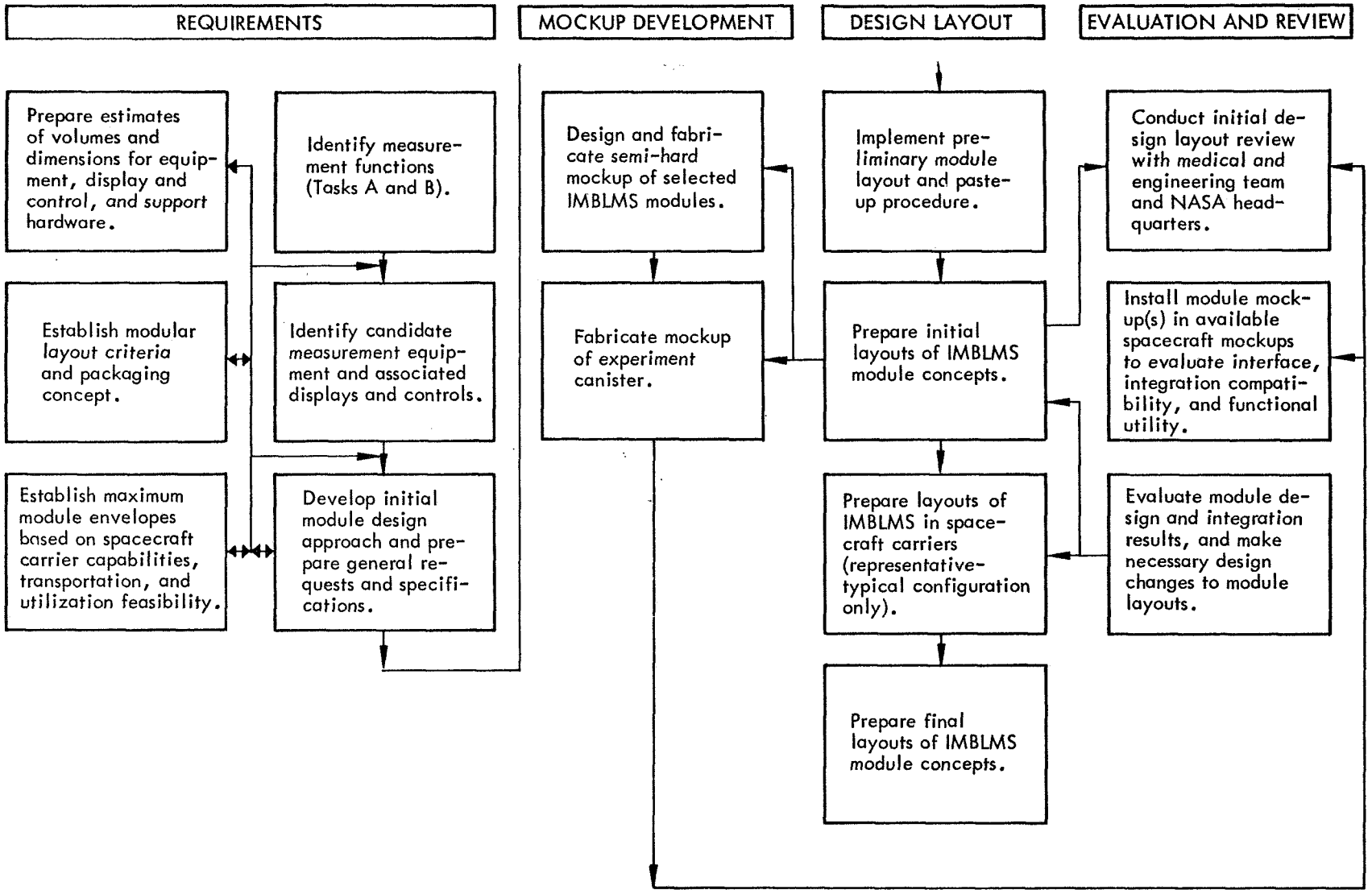

Fig. 4-1 Sequence of Modular Design Study for Phase B IMBLMS

LOCKHEED MISSILES & SPACE COMPANY

T-30-67-1

effort measurement functions were identified and grouped into their respective IMBLMS elements – physiological, biochemical, behavioral, and data management support requirements. Then, module requirements were identifed with respect to the four IMBLMS elements. A general approximation was made of the number of modules and their approximate functional equipment volumes. This activity was performed in parallel with the spacecraft analysis effort, which identified integration and interface characteristics of the candidate AAP spacecraft.

4.1.2 Spacecraft Interface and Module Envelopes

A detailed analysis of the mission characteristics and candidate AAP spacecraft carriers (Section 3) was performed to determine the mission and spacecraft interfaces with IMBLMS and its associated equipment. The analysis covered AAP flight dates, orbit characteristics, flight duration, mission objectives, flight measurements, spacecraft assignments, and logistics.

Also considered were the following aspects of the spacecraft:

- Internal arrangement and geometry of the candidate carriers
- Availability of equipment stowage locations
- Accessibility of equipment stowage locations
- Available volume for setup of experiment/ measurement equipment and for experiment/measurement performance
- Constraints relative to transfer and relocation of experiment/measurement equipment
- Availability of mounting provisions
- Availability of power, data management, and communication cables
- Availability of support requirements peculiar to experiments/measurements (vacuum lines, etc.)
- Weight, power, and operational constraints

The analysis identified interface and integration requirements and constraints, which are summarized in the paragraphs that follow.

4.1.2.1 Module Mounting. With the exception of the multiple docking adapter (MDA) and S-IVB orbital workshop, there appears to be no standard technique for effectively mounting modules. Therefore, the IMBLMS measurement equipment packaged within modules or in experiment canisters will have to be specially mounted in the spacecraft.

4.1.2.2 Connector Interface With IMBLMS. There appears to be no standard connector interface provided in any of the candidate spacecraft for power, data management, or plumbing. Hence, IMBLMS modules and/or experiment canisters will have to be provided with connectors that will properly interface with as yet undetermined and undefined connectors made common throughout the AAP spacecraft and cluster assembly.

4.1.2.3 Transportability and Translation. At present, no standardized technique has been established for transferring and translating equipment from one spacecraft to another in the cluster configuration. The IMBLMS modules or experiment canisters will therefore need to be provided with attachment methods for whatever technique may be selected. Furthermore, the size of the IMBLMS module and experiment canister is constrained by hatch sizes of the candidate spacecraft.

4.1.2.4 Module and Canister Stowage. As in the case of module and canister mounting, stowage of the modules and/or canisters has not been provided as an integral element of spacecraft design in the candidate spacecraft, with the exception of the MDA and S-IVB OWS. Therefore, stowage of each module or experiment canister in the various candidate spacecraft becomes unique to that carrier. The modules and/or canisters also must fit within stringent volume constraints different for each carrier. Once on orbit, the module or canister would have to be removed from its stowage area and transported to the location wherein the experiment/measurement is to be performed. Thus, module and/or canister design must be such that the item can be easily stowed, unstowed, and transported to an appropriate experiment station.

4.1.2.5 Module Envelope. The actual module envelope depends on several major criteria that significantly influence design configuration as well as dimensions. For example, the module must meet the following requirements:

- Fit in the RCM or LCSM since these are used for logistics resupply and astronaut transit
- Fit in the MDA since this vehicle will transport the initial IMBLMS equipment into orbit for Clusters A and B
- Fit into an experiment canister since this is the generally accepted method of housing experiment equipment in the MDA
- Be transportable from spacecraft to spacecraft, and hence fit through the various hatches
- Be large enough to accommodate a functionally useful assembly of measurement equipment
- Be of a size that permits easy and rapid removal and replacement
- Be designed to standard rack envelope dimensions that conform with standardized engineering practices
- Be designed so that several can be grouped together within astronaut's visual and reach capabilities

Based on these criteria, three basic module envelopes – two with alternate configurations – have been established for IMBLMS. The general configurations and dimensional envelopes for these three categories of modules are presented in Fig. 4-2. The maximum depth of all modules is 16 in.; however, the depth can be reduced to any desirable standardized dimension (e.g., 12 in., 10 in., and 8 in.). Exact dimensions of the modules are presented in Section 4.2. The overall width, height, and depth of these modules enables them to be installed in the experiment canister, stowed in the RCM/LCSM, stowed or mounted in the LM, and mounted or stowed in the MDA and S-IVB OWS.

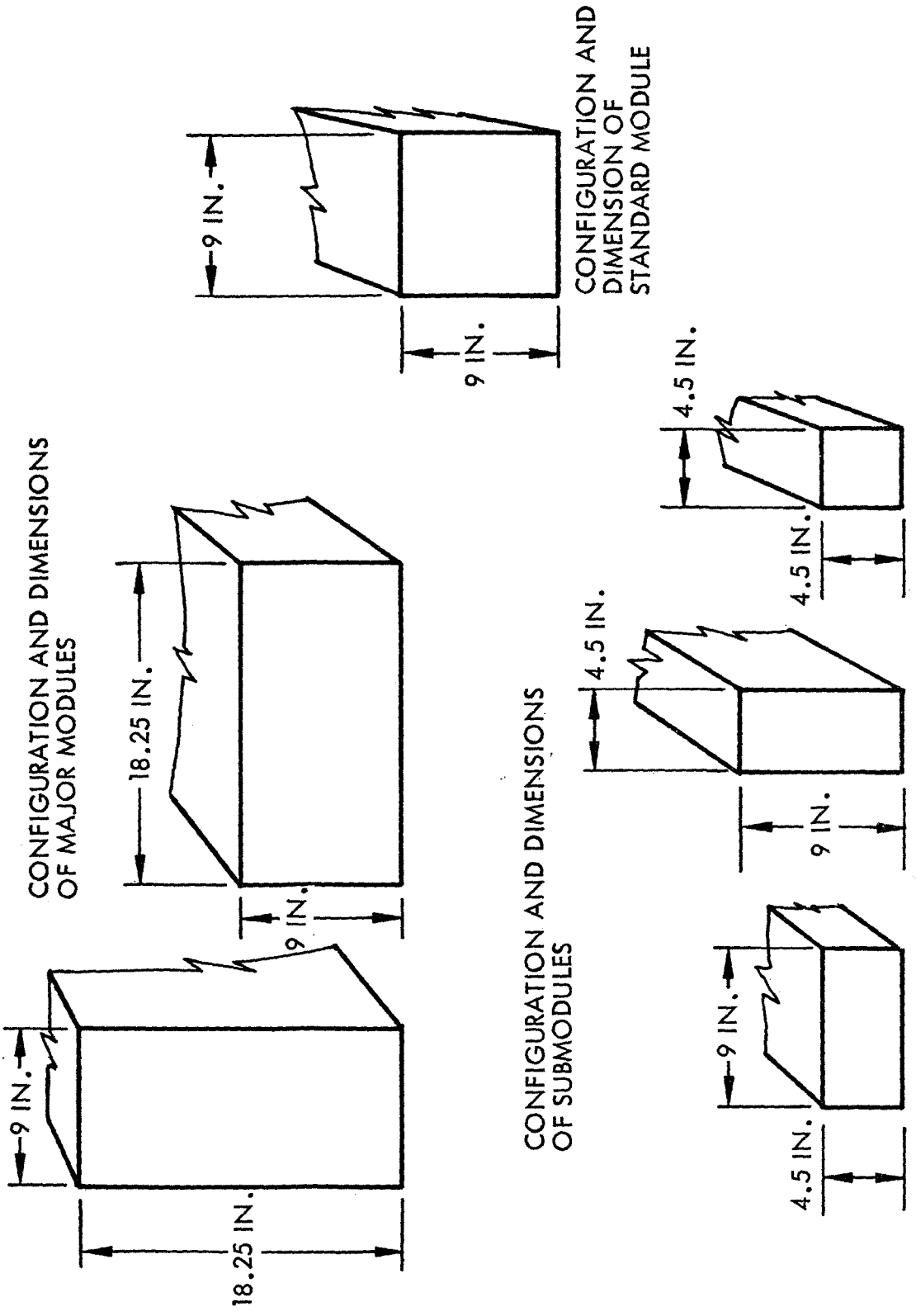

Fig. 4-2 IMBLMS Module Configurations and Design Envelope

4.1.3 Design and Packaging of Module Canister

Individual IMBLMS module stowage is feasible and practical within the CM, RCM, LCSM, and LM carriers. However, the modules will be exposed and subject to damage unless a protective case or cover is provided. The available volume for such a protective feature is negligible and only a portion of the total IMBLMS modules can be transported to orbit in these spacecraft.

All mission ground rules, current NASA concepts, and contractor studies demonstrate the advantages of stowing experiment equipment within canisters and mounting these canisters in the MDA at liftoff for launch to orbit. Once on orbit, the experiment equipment would be transported to the crew compartment of the S-IVB OWS, deployed in the MDA, or transported to the appropriate clustered carrier. If extravehicular stowage of the experiment canisters is determined to be feasible, then the IMBLMS canister could be mounted on the CSM or LCSM and launched as a piggy-back item on the outside of the carrier's structure. In either event, the requirement for an experiment canister exists.

4.1.3.1 Experiment Canisters. Present NASA estimates of the experiment canisters range from small cylinders to fairly large rectangular boxes, e.g., 20 by 30 by 40 in. There are several constraining factors relative to canister configurations and sizes, as follows:

- The envelope must be able to fit through the MDA/AM and AM/S-IVB OWS hatches.
- The volume must be manageable, relative to astronaut capabilities, for transfer of the canister to the desired area.
- A positive method of mounting the canister in the candidate carrier must be provided.
- Practical sizing relative to manufacture, GSE handling, functional internal arrangement and capability, material selection, and the capability (if desired) to provide internal environmental control and monitoring must be considered.

LMSC examined these and other factors relative to the advisability and practicality of an experiment canister for IMBLMS equipment and modules. One of the prime considerations for IMBLMS was that certain hardware – e.g., ergometer, LBNP, mass measurement device, motion chair, and the like – are too large to install in a module of practical size. Therefore, a means of stowing these large IMBLMS equipment items is required. Since most of these equipment items are too large to stow or mount collectively in the CM, RCM, LCSM, LM, or AM, it is highly probable that they will be stowed in canisters and mounted in the MDA for subsequent launch to orbit. Furthermore, if the AAP cluster assembly is left unattended for a matter of months until a resupply and revisit flight is launched, there must be a means of protecting these large equipment items during this period.

Consideration must also be given to development of the following:

- A means for protecting the IMBLMS modules during launch, during non-use on orbit, and between flights when the cluster is unattended
- A method for centrally locating IMBLMS modules
- A method for grouping related IMBLMS elements or subelements into a composite package
- A method of operationally positioning the IMBLMS modules relative to the astronaut
- A method for providing a mounting, racking, or packaging technique for the modules
- A simple method for ease and speed of removal and replacement of modules

4.1.3.2 Experiment Canister Design for the MDA and S-IVB. With these considerations in mind, LMSC examined the MDA and S-IVB OWS relative to the integration, mounting, unmounting, transportation, and setup activities that would have to be performed relative to canister use. A very significant constraint was immediately identified with respect to the MDA. If the S-IVB OWS is not habitable or another MDA is used as an experiment carrier and station for conducting experiments, the interior pressurized compartment of the MDA may have to be used as the experiment area.

Because of the limited volume and the requirement to mount the canisters very close to one another on the interior wall bulkhead stringers, the canister literally becomes the experimenter's "work station." Should this be the situation for a two-man experiment/measurement, there will not be a great deal of extra volume within the MDA to take out and deploy the experiment/measurement equipment. Hence, it would be highly advisable to permit the astronaut to remove the front of the canister and actually use the equipment within, removing and deploying only that equipment that must unfold or be assembled.

Assuming that this procedure is feasible, a major problem arises with respect to the MDA – i.e., how the power and data-management cables are connected to the modules in the canister if rear cable connectors are used. (Rear connectors are desirable to minimize the number of cables interfacing into the front of the modules since these get in the way of the astronaut.) LMSC resolved that problem by providing connector cable plug-ins on the top and bottom of the canister; these provide the interface to the rear of the module chassis and permit the astronaut to connect the power and data-management cables to the canister either above or below the control/display work area out of the astonaut's way.

Modules can be removed from the canister by simply sliding the module forward, disconnecting the expandable rack and panel module connector from the canister connector, and removing the module. To replace the module, the reverse process is performed.

Thus, simply removing the front panel of the canister and connecting the power and data-management cables make it possible to use several of the IMBLMS modules mounted in the canister. Other modules requiring special interfaces (e.g., vacuum) are provided with both a front and rear panel connector interface so that they too can be used in the MDA. All umbilicals, hoses, signal carrier lines, etc., that interface with the module from peripheral equipment (e.g., biomedical signal conditioners, mask hoses, and electrical signal lines) are routed in the front of the panel to permit operation of IMBLMS in the MDA or wherever rear access is difficult or impossible.

The canister can also be used in the S-IVB OWS just as easily by being mounted either on the floor or wall grid of the crew compartment or on special mounting rails employed between the thermal curtain hat sections of the tank wall. The canister is transported and translated to the crew compartment area from the MDA where it is mounted on the floor. The astronaut mounts the canister on the floor with Gemini-like pip pins at four points in the grid system. He then opens the lid and swings it down into the workshelf position. Next he unlocks the module frame suspension system and lifts the system (or cranks it) into operating position (one-handed operation). He secures the suspension system in place, hooks up the appropriate power, data-management, and communication lines available in the crew compartment, and completes the IMBLMS canister mounting and setup. Figure 4-3 illustrates this procedure.

4.1.4 Common IMBLMS Support Modules and Early AAP IMBLMS Module Requirements

The data management system for IMBLMS has been selected as the common support module(s). This system is used for display, signal routing, data processing, and data evaluation. To duplicate this system for the three other IMBLMS elements – physiological, biochemical, and behavioral – appears to be a highly unnecessary requirement, particularly from the standpoint of weight, power, and volume. This approach is discussed in detail in Section 6.

The earliest flight date for AAP-1 and AAP-2 appears to be early 1969; that should be the potential target date for design, development, and flight readiness of the first IMBLMS module. At present, the dynamic physiological monitor seems the most likely candidate for the first flight. This module has the capability to monitor the basic functions of the astronaut related to his safety and well-being. Furthermore, the module can monitor his status while the astronaut is performing EV tasks in a suited mode. Since this module is critical to the clinical monitoring of astronaut safety and well-being and is the building block of the IMBLMS modular physiology system, it is recommended that this item be given prime consideration as the initial development module.

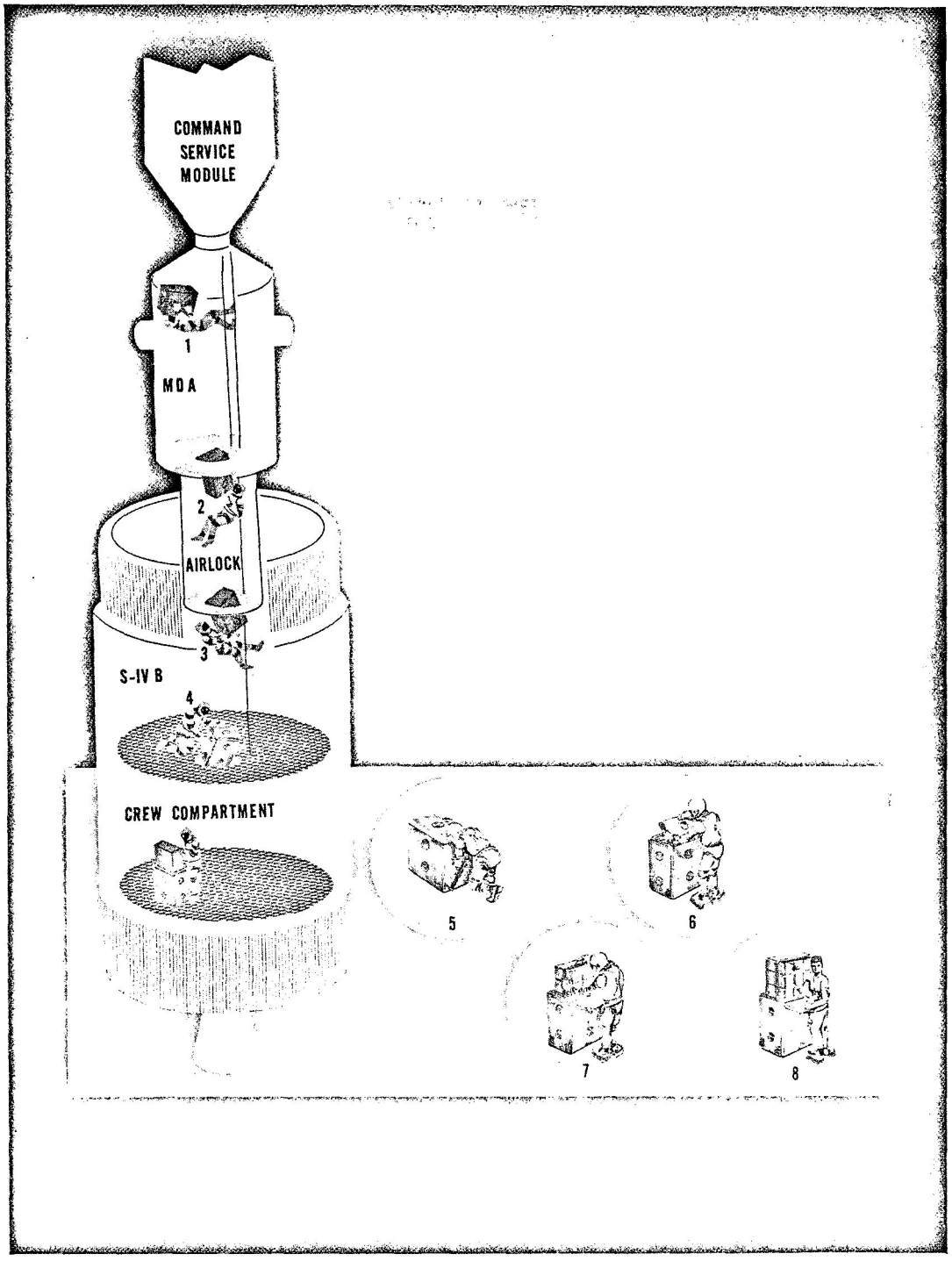

Fig. 4-3 Translation Process for IMBLMS Experiment Canister, MDA to S-IVB

4.1.5 IMBLMS Modular Remove/Replace Capability and Interdependency

The removal and replacement of modules is required for several reasons. The first is the obvious requirement to replace a module if it malfunctions and cannot be repaired on orbit. The second reason is to permit personnel of the IMBLMS experiment/measurement program the capability to modify the measurement program based upon results of each flight. If, during an extended flight, trends occur that require further investigation in depth, the capability of sending up other measurement modules on the resupply/transit flight to further examine these trends should be provided. The third reason is to permit additional growth and add-on as the IMBLMS program responds to the needs of extended flight and the necessity to continue to monitor and evaluate the astronauts' capability and status.

Removal and replacement of a module will be simply a matter of disconnecting the various connectors, sliding the module out of the canister frame, and replacing the unit with another.

Modular interdependency involves two concepts. The first is the isolation of any failures within a module to ensure that no cascading of failure can occur to other modules. The second concept of interdependency is that a module is self-sustaining, has its own data handling, processing, display, control, and ancillary support.

The LMSC approach to cascading failure is to eliminate it at the cause; in other words, isolate the failure to and within the module in which it occurred. Specific techniques for resolving the problem within the module are presented in Section 4.2.

In part, the IMBLMS modules should be interrelated to the degree that common-use items (e.g., a cathode ray tube, data entry keyboard, and time displays) are not duplicated since the IMBLMS measurement capability does not entirely depend upon these things to function. Nevertheless, critical modules such as the dynamic physiologic monitor may have to be interdependent since it may be transported to other

spacecraft for monitoring of the astronauts (e.g., in the CM or LCSM, AM, and LM). To this extent, the module must be interdependent of IMBLMS and dependent only for signal routing to it, and possibly for a power supply.

The exact level of IMBLMS interdependency will have to be resolved as IMBLMS is further defined relative to design. The approach used for modular design and integration will be that, if one module malfunctions, IMBLMS can still basically function.

4.1.6 IMBLMS Modular Layouts and Functional Arrangements

The key to modular design and layout, as envisioned by LMSC, is designing into the module maximum measurement flexibility while at the same time providing the minimally necessary displays, controls, and peripheral equipment. Similarly, potential for growth in certain modules is to be expected; therefore, some panel area and volume behind the panel must be left available. Also, the module must not be so inclusive as to functions that, if it were not flown or if it malfunctioned or was damaged, the measurement program would be totally jeopardized. For example, if the cathode ray tube (CRT) module were damaged by loose debris in the crew cabin area, IMBLMS could still function since there are other means of obtaining the graphically displayed data.

The following approaches were applied in the layout and general arrangement of the IMBLMS modules:

- Use of space-rated components
- Use of common displays, controls, interconnects, and components
- Association of common measurement parameters relative to modular grouping
- Association of measurements that are displayed on the CRT
- Use of authoritative human engineering design criteria
- Arrangement of the modules for ease of astronaut operation
- Selection of components that can be operated in zero gravity

- Design of panels that can be operated by nonmedical personnel
- Allocation of module measurement functions usually to one organ system
- No overlapping of elements into other element modules

4.1.7 Module Design and Layout Verification

Verification of the module design (i.e., envelope, volume, and integration compatibility) is necessary to ensure that the initial approach is practical and feasible to implement. As a verification tool, LMSC has fabricated a mockup of an experiment canister and two modules for installation in representative mockups of the various candidate carriers. These module and canister mockups, once installed in the representative carrier mockup (LMSC has several in house), will be subjected to a detailed examination by the LMSC medical and engineering team. The team will evaluate the panel layouts in terms of functional capability to perform the measurement with the associated peripheral equipment and to determine the adequacy of design. Also, the approach to canister work station layout will be evaluated and the mockup revised as necessary to reflect the suggested design change requirements.

4.1.8 Use of Existing Flight-Qualified Hardware and Components

Before the modular design effort began, LMSC conducted a hardware and component search to determine availability of certain items necessary to conceptually design the IMBLMS measurement modules and associated equipment. A large number of the displays, controls, connectors, and behind-the-panel components selected for the physiology modules are currently space-qualified hardware. Many of these items were also used on the behavioral, biochemical, and data management modules. This approach further substantiates the design validity and feasibility of module development for IMBLMS and permits more realistic estimates of weight, power, and volume when determining IMBLMS system characteristics.

4.2 MODULE AND CANISTER DESIGN FOR IMBLMS

This subsection presents the LMSC design concept for the modules and experiment canisters necessary to support the IMBLMS development effort. As discussed previously in this section, the experiment canister is an integral item of equipment relative to IMBLMS. The canister will in all likelihood serve two functions for IMBLMS modules. First, it will be used to stow the modules in the MDA at launch through orbit attainment. Second, the canister will probably act as a transport case for the modules during the time they are being translated from the MDA, through the AM, and into the S-IVB OWS crew compartment for setup. Modules should, therefore, fit not only within the candidate spacecraft but also within the experiment canister. Hence, the experiment canister design is presented first to provide design parameters for module design, which is presented second. General features to be covered in the two design discussions are configuration, sizing, connector interfaces, setup and use, and alternate design layouts.

4.2.1 IMBLMS Experiment Canister

The IMBLMS experiment canister will be used to stow the modules in the MDA during launch through orbit attainment. When the S-IVB OWS is made habitable, the canister will be unmounted from the MDA and translated to the crew compartment of the S-IVB OWS. Modules not stowed in the experiment canister may be flown in the RCM or LCSM. For Clusters A and B initially, however, it is planned to launch the majority of IMBLMS equipment within experiment canisters mounted in the MDA.

The succeeding paragraphs describe the canister design and present several examples of the configurations LMSC evolved before selecting a preliminary design candidate.

4.2.1.1 IMBLMS Experiment Canister Sizing. The largest experiment canister that has been identified by NASA for mounting within the MDA is a rectangular envelope 20 in. deep by 30 in. wide by 40 in. long. The probable reason for establishing a

maximum canister envelope of this size is to ensure that the canister can be translated through the MDA, AM, and S-IVB hatches. Lt. Cdr. A. L. Bean* and others discussed experiment canister design in detail with LMSC personnel. In summary, the results of this discussion indicated that the astronauts felt that the 20 by 30 by 40-in. canister was the maximum envelope that could be reasonably managed relative to unmounting, translating distances, and setting up at another experiment station. They also suggested that smaller envelopes might even be more manageable and that LMSC should explore optimum canister sizes with respect to maximum use of packaging capability within the canister.

IMBLMS experiment canister envelopes were set up on the basis that 20 by 30 by 40 in. was maximum. Alternate canister envelopes were based upon envelopes that did not exceed these dimensions. Based upon the general module envelopes established in Section 4.1.2.5, the configurations of the alternate canister candidates were designed to permit installation of the modules within the canister in practical functional arrangements. The five candidate canister envelopes are as follows:

- 20 by 20 by 40 in.
- 20 by 20 by 30 in.
- 20 by 30 by 30 in.
- 20 by 20 by 20 in.
- 20 by 30 by 40 in.

Figure 4-4 illustrates just a few of the many configurations in which the modules can be arranged within the five candidate canister envelopes.

The above canister configurations were evolved not only by considering the various module dimensions, but also by determining volumes of nonmodularized IMBLMS

*Lt. Cdr. A. L. Bean was in charge of the 12-man astronaut team that participated in the extensive S-IVB orbital workshop astronaut walkthroughs and preliminary design reviews (PDR) conducted by NASA's MSFC Systems Engineering Branch (R-P & VE-VA) on May 3-5 and 8-10, 1967. Other astronauts assigned to this group were Joe Engle, Owen Garriott, Ed Gibson, Joe Kerwin, Jack Lousma, Bruce McCandless, Curt Michel, Bill Pogue, Paul Weitz, Eugene Cernan, and Ed Aldrin — all of NASA MSC.

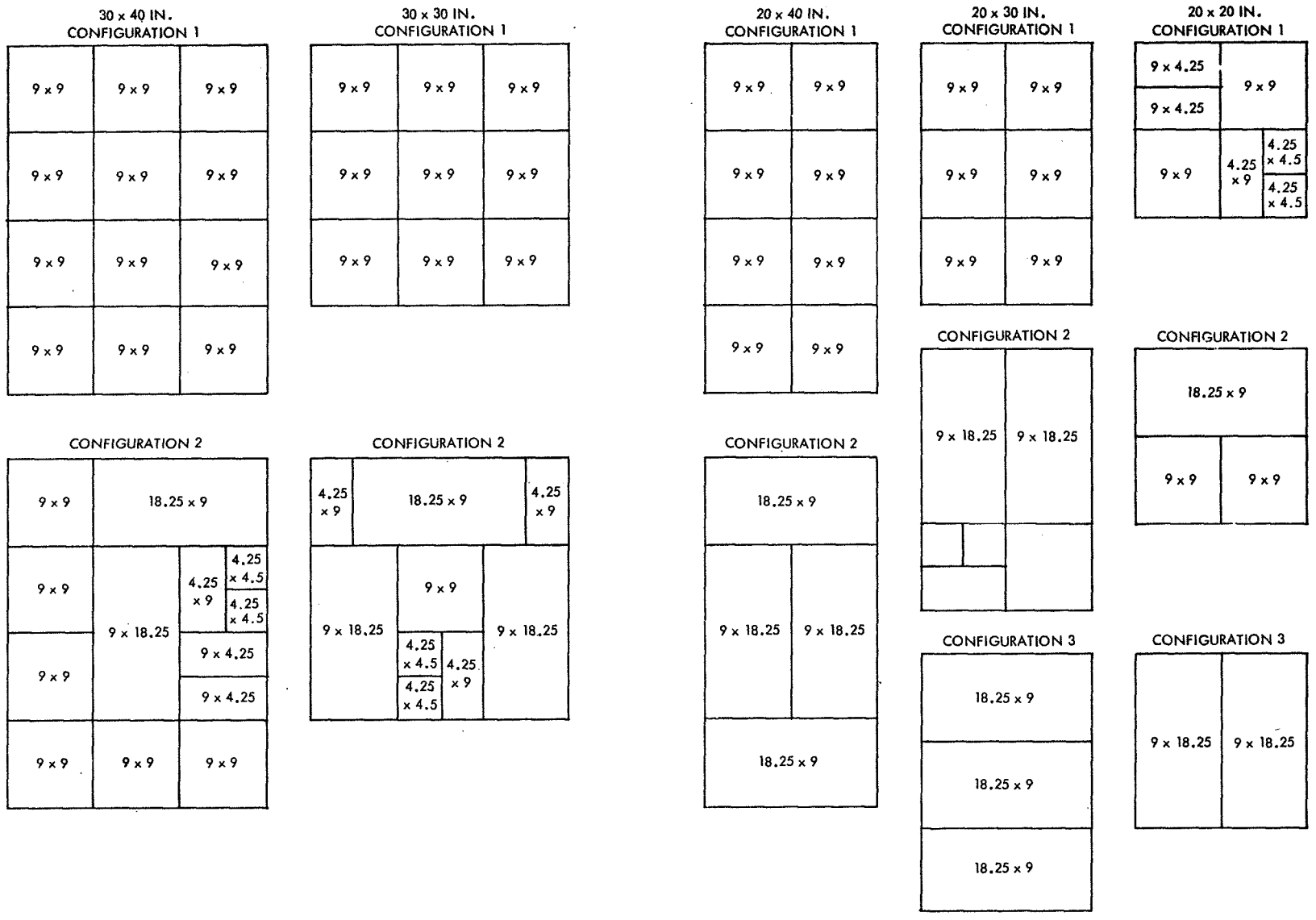

Fig. 4-4 Alternate IMBLMS Module Configurations in Various-Sized Experiment Canisters

support equipment. In addition, a general review was made of other scientific and engineering experiment equipment envelopes that must also be stowed in the MDA. From this quick survey, it appears that a set of "standardized experiment canisters" can be evolved for the Apollo Applications Program, several of which would be highly compatible with the IMBLMS module and equipment stowage requirements.

4.2.1.2 IMBLMS Modular Installation in the Canister. IMBLMS modules must be capable of operation in the canister, and the canister must be designed so that a module can be removed and replaced whether the canister is in the MDA or S-IVB OWS. To accomplish this design goal, several general guidelines were established, as follows:

- Modules must be easily and rapidly removable and replaceable.
- Modules must be operable in the MDA.
- Modules will be provided with rear connectors for power, data management, and plumbing.
- Modules will be grouped in arrangements for ease of operation.
- Canister can be set up by one hand (suited mode, worst case).
- Canister can be mounted by one astronaut (suited mode, worst case).
- Canister can be transported by one astronaut.
- Canister will have no sharp corners or protrusions.
- Canister mounting and setup time will be minimal.
- Pip pins will be the only tool required for mounting or setup of the canister.
- Connectors will be provided for the operation of the modules within the MDA.
- Workshelves will be provided.
- Tether attachment points will be provided for transport and astronaut tie-down.
- Module removal from the front with no rear canister access will be provided.

The initial design configurations developed were based upon the concept that most IMBLMS equipment would be located in canisters mounted in the MDA and subsequently transported to the S-IVB OWS. It would be advantageous, therefore, to use the canister as much as possible – perhaps to the extent of using it as "console base" for the modules. This concept would eliminate the need to remove the modules from

the canister, mount them elsewhere, and still have to transport the empty canister to another area and stow it until later. Furthermore, moving the canister elsewhere means that there would be no immediate protection of the modules when they were not being used. It becomes apparent that the canister should be used as a base or mounting frame for the modules and as a protective enclosure for the modules when the astronauts are not performing IMBLMS measurements or when the S-IVB OWS is buttoned up between flights, as in the case of Clusters A and B.

Several alternate canister layouts, shown in Figs. 4-5 through 4-10, represent the initial design concepts considered. Each design concept is discussed and evaluated in the succeeding paragraphs.

Canister A: Remove and Stack Concept. This canister (Fig. 4-5) was the initial design concept from which all other concepts evolved. The main concept was to use the canister as the base for the modules, thus eliminating the requirement to remove the equipment from the canister, and then to transport the empty canister to a remote stowage location, viz., above the crew compartment. Pip pins are used to mount the canister to the floor grid (not shown, but easily provided, are pip pin mounting holes on the sides, if mounting the canister to the wall is desired). The front of the canister folds down onto the floor, exposing preinstalled "dutch shoes" for the astronaut to use in orienting and restraining himself in the normal operating position with respect to the modules. The upper half of the panel is raised into position and used as a workshelf.

The modules are removed from within the canister and mounted on top of the canister. They are held in place by captive brackets. This concept presents problems in the method of interfacing cables (power and data management) into the front of the canister for operation in the MDA. Another problem is the method of removing the modules on the bottom layers without first removing all the other modules above them. Furthermore, a great deal of setup time is required to remove the modules and position them on top of the canister. This concept was deemed unsatisfactory.

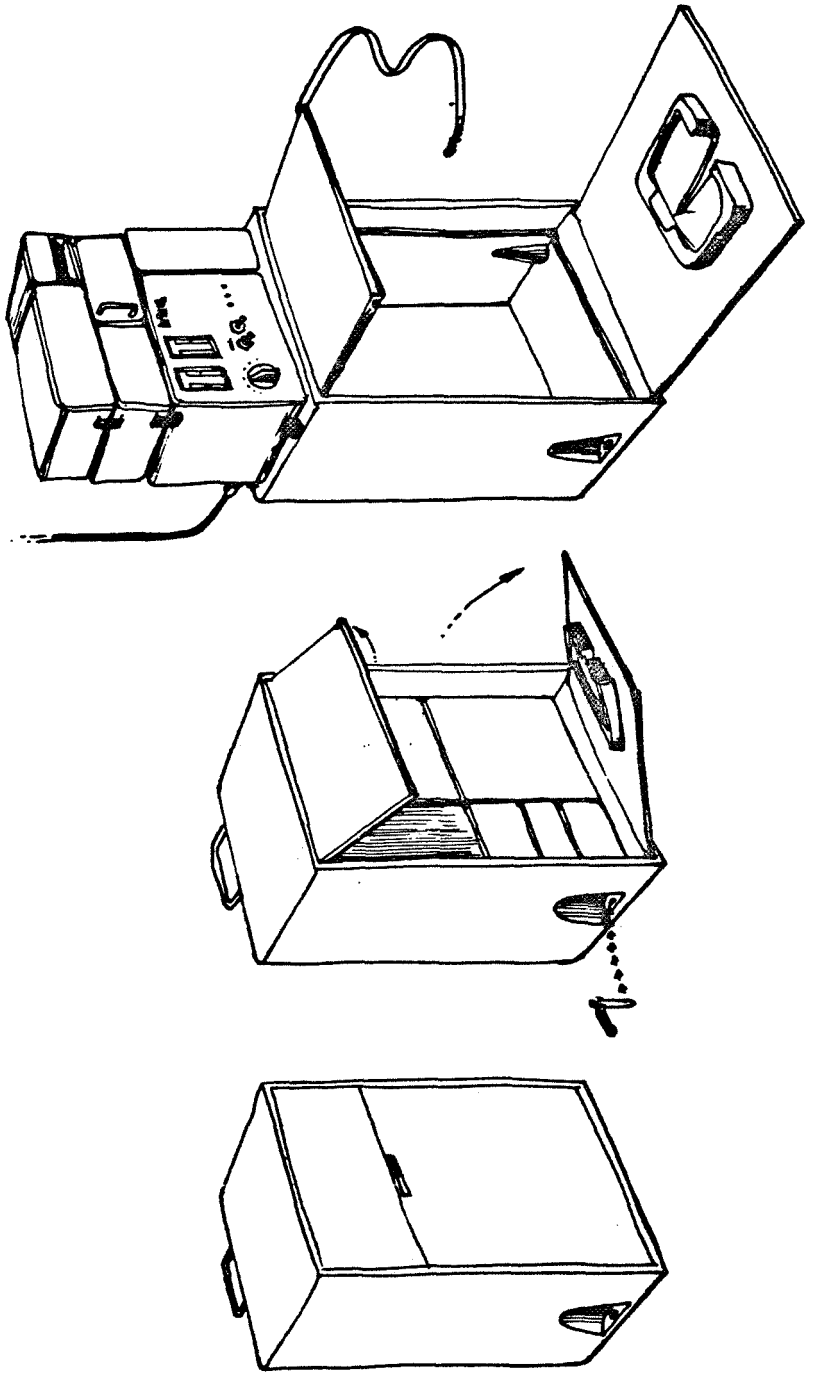

Fig. 4-5 Experiment Canister A, Remove-and-Stack Concept

Canister B: Foldout Concept. The foldout concept illustrated in Fig. 4-6 appeared to resolve the problem of positioning the modules in the optimum operating position with a minimum of setup effort and time. This concept, however, when deployed, takes up considerable volume even though the astronaut experimenter can walk inside the canister and be securely tethered in place. The lack of a work surface is evident, although it could be a separate item installed after the modules had been folded up into position. The concept is operable in the MDA since the rear panel could be removed for access to the front of the modules. However, the canister would have to be mounted "backwards" in the MDA to permit operation, and there is a major problem of front-connector interface for power and data management. This concept was deemed unsatisfactory.

Canister C: Fold-Down Base. Figure 4-7 illustrates two canister concepts in which the base is an integral panel of the canister and actually folds down for the canister to be mounted in place. A separate workshelf would have to be provided and mounted after the canister was set up. The canister could be mounted in the MDA and operated in place by removing the front panel. Cable connectors for power and data management are provided on the side of the canister frame. These connectors feed wires through the frame into the rear of the canister where they interface with their respective connector counterparts. The canister can also be wall-mounted. Either concept takes excessive time to set up and tear down. Both concepts were considered unsatisfactory.

Canister D: Hinged Panel Base Assembly. This configuration, illustrated in Fig. 4-8, is based upon the concept of removing the front and rear panels (and hinge pins) and repositioning them as a base, after which the hinge pin is replaced. Both examples shown in Fig. 4-8 require that extra hinge brackets be provided on the external surface of the canister – an arrangement that is generally not desirable from a safety standpoint. Both examples are provided with edge-mounted connector interfaces for use in the MDA (as described in Concept C), and both can be wall-mounted. Setup time for these canisters is excessive and requires the use of two astronauts. Also,

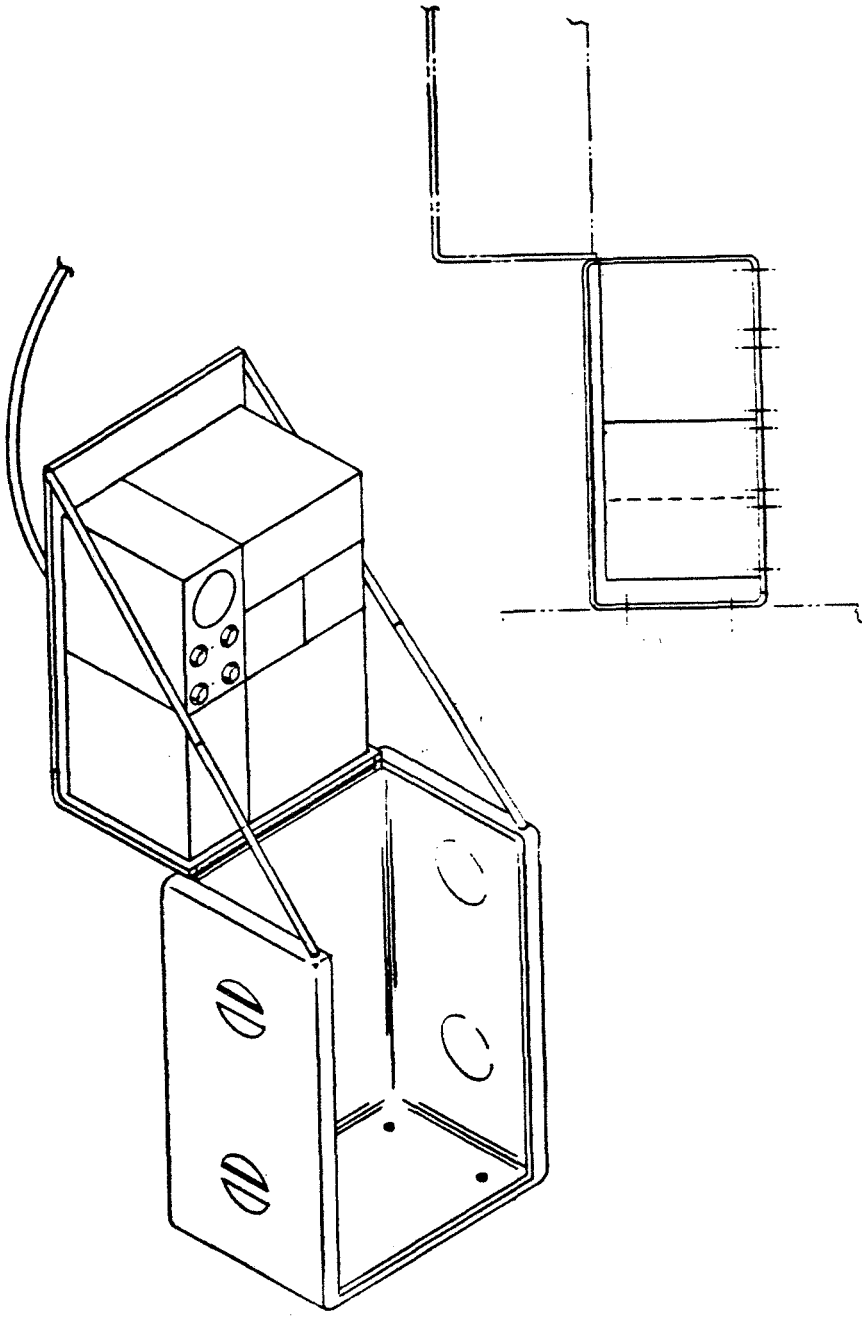

Fig. 4-6 Experiment Canister B, Foldout Concept

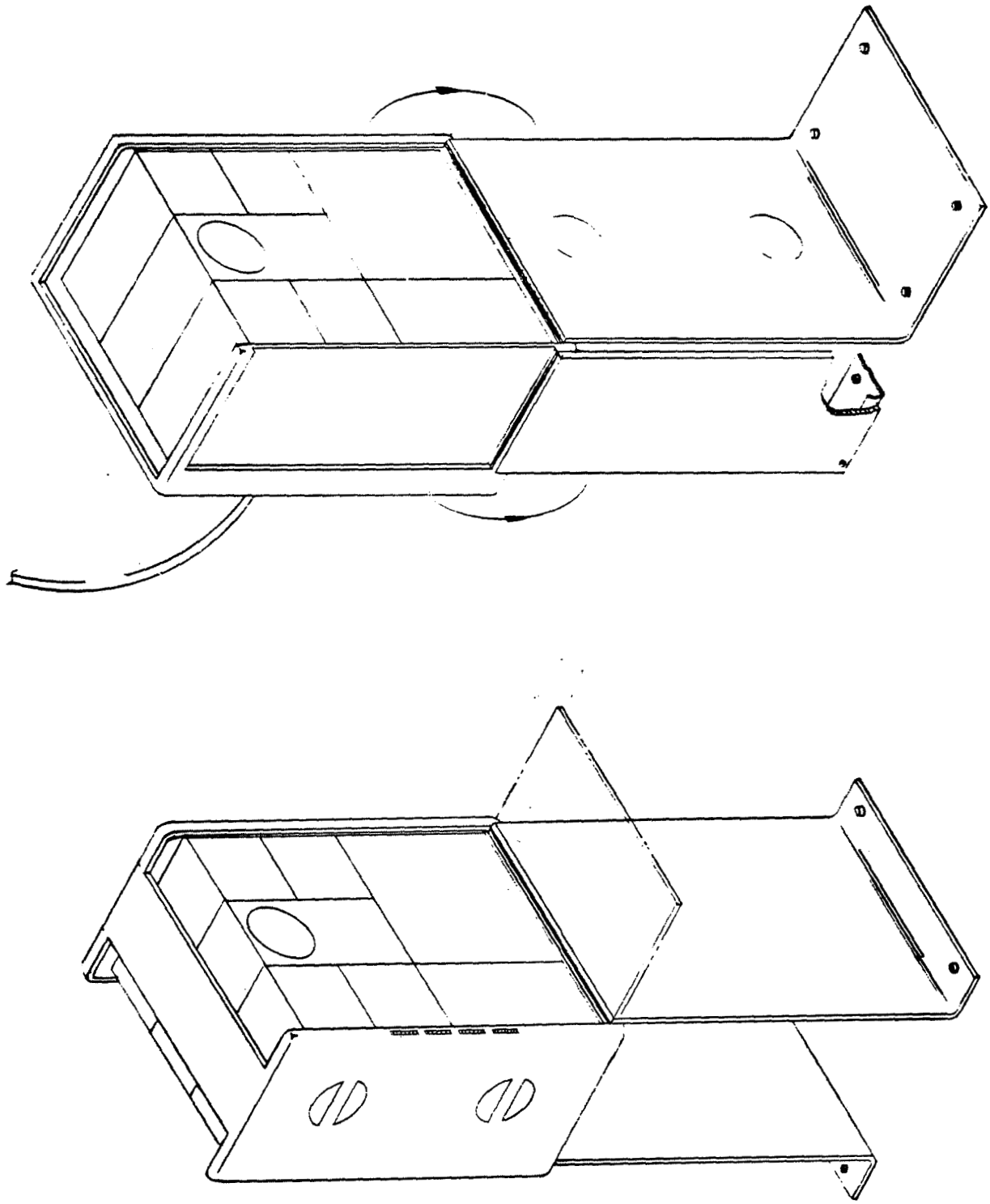

Fig. 4-7 Experiment Canister C, Fold-Down-Base Concepts

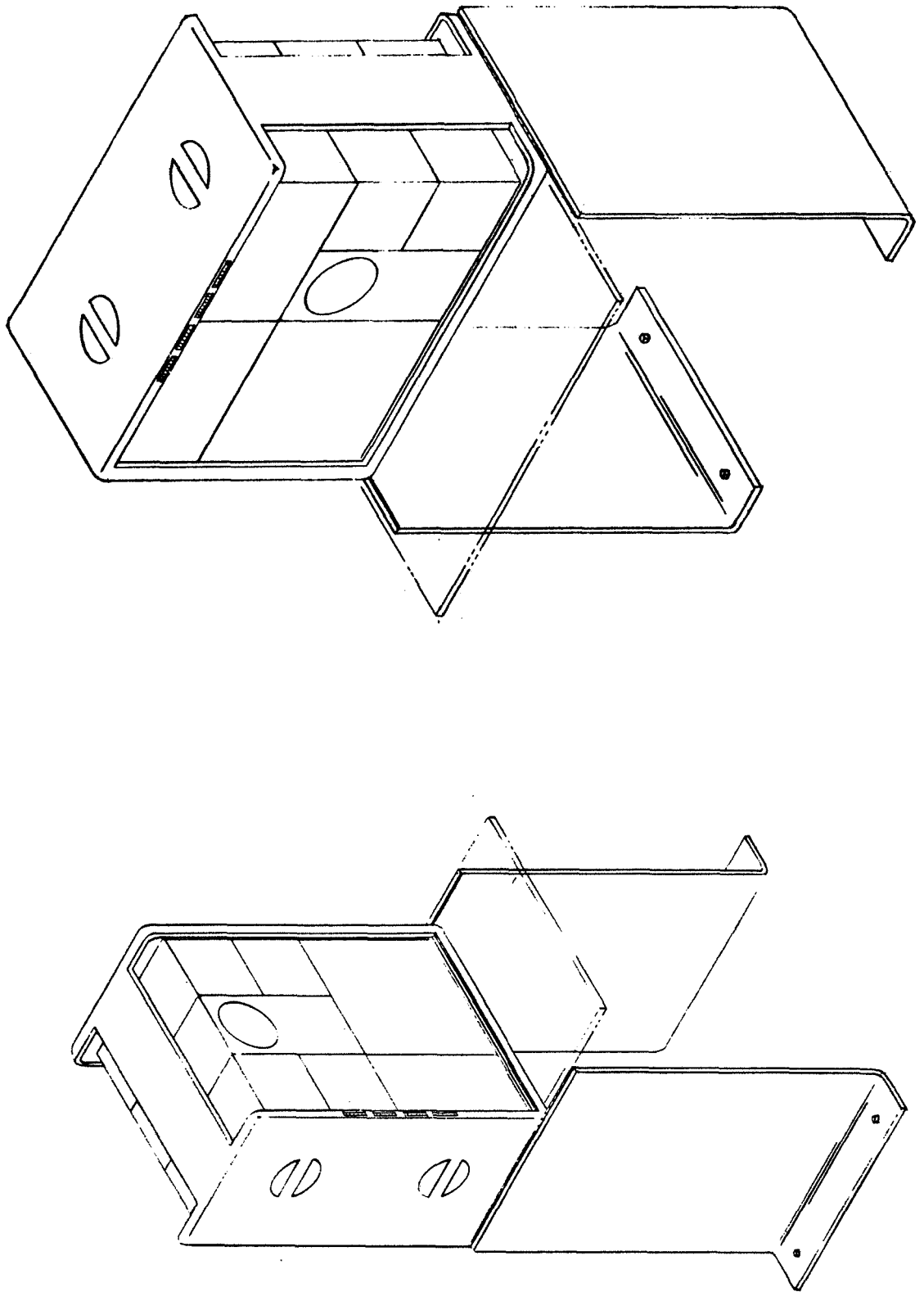

Fig. 4-8 Experiment Canister D, Hinged-Panel-Base-Assembly Concepts

if the hinge pin is bent or dropped, setup may be extremely difficult or time-consuming. Both examples are considered unsatisfactory.

Canister E: Elevator Panel Assembly. The elevator configuration, shown in Fig. 4-9, is based upon the concept of mounting the modules on a panel frame, which is on tracks that can be easily and rapidly raised or lowered. The front panel is removable, and connector units are provided on the front canister edge for module use in the MDA. The canister can also be wall-mounted. The front panel folds down into a workshelf for the seated configuration, although it would have to be removed and set up in a new position if the modules were raised to the operating position for the standing configuration. The undesirable feature, movement of connector wire, occurs when the modules are raised if front cable interface is desired for power and data management. This design configuration is acceptable – particularly in view of the simplicity of, and minimum time for, setting up the canister module with one hand. It was felt that this canister design could be improved upon, however, and a final layout was prepared as Canister F.

Canister F: Elevator Frame Assembly. The final selected candidate is shown in Fig. 4-10. This configuration is based upon the concept of mounting the modules in a slide-rail frame that can also be quickly and easily raised into the proper operating position. A conceptual mechanical layout of the canister concept is shown in Fig. 4-11. Initially, the top is flipped down into the workshelf position. The slide-rail frame with modules is then lifted or cranked by one hand into the operating position and locked in place. Power and data-management cables are connected either in front of the slide-rail frame (top and bottom) or in the rear of the modules. Thus, the canister can accept cables from either the front or the rear when in the S-IVB OWS or from the front when in the MDA. This canister can be mounted on the wall and the upper part of the front panel removed; the lower front panel is hinged at the bottom to fold down as a work surface.

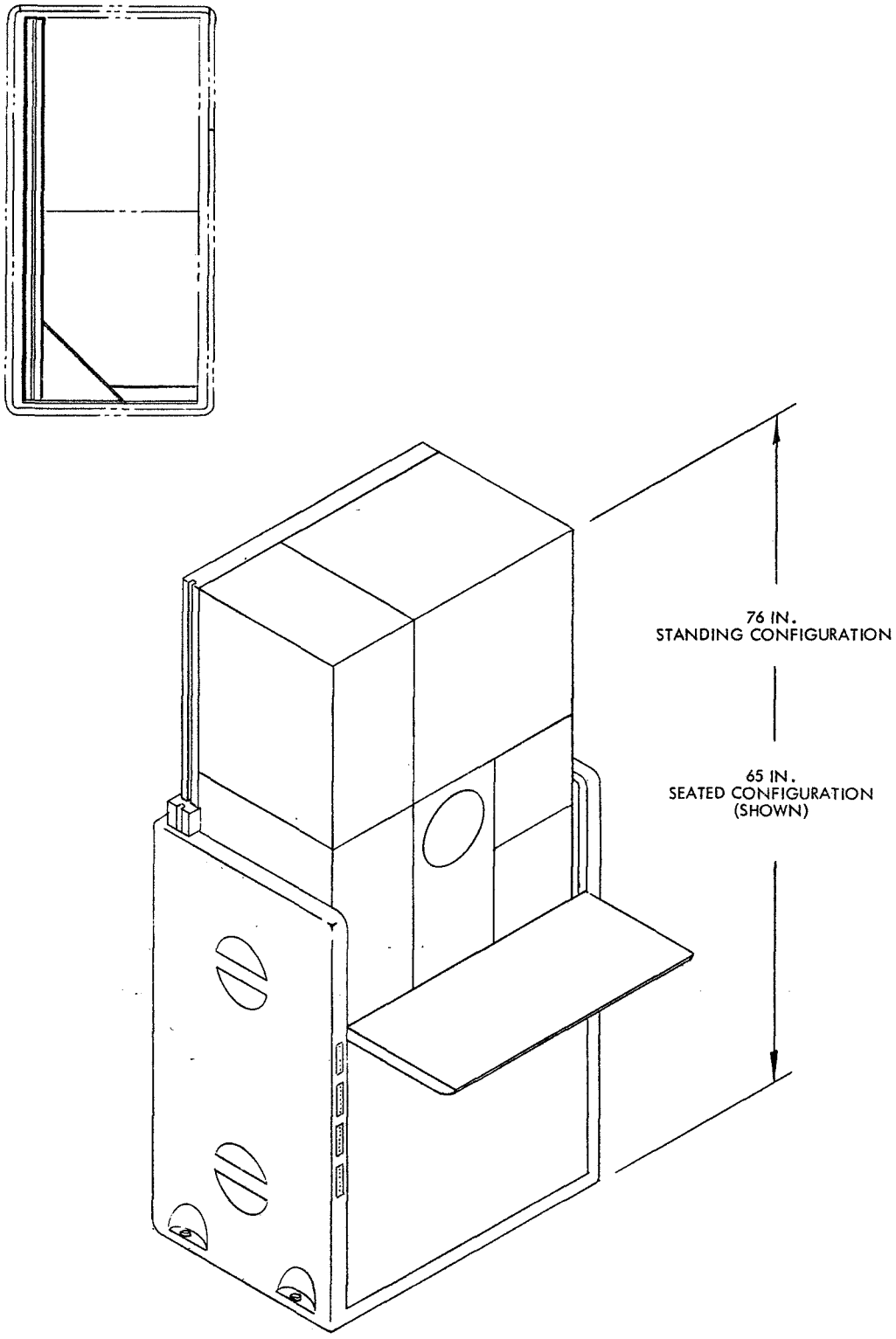

Fig. 4-9 Experiment Canister E, Elevator-Panel-Assembly Concept

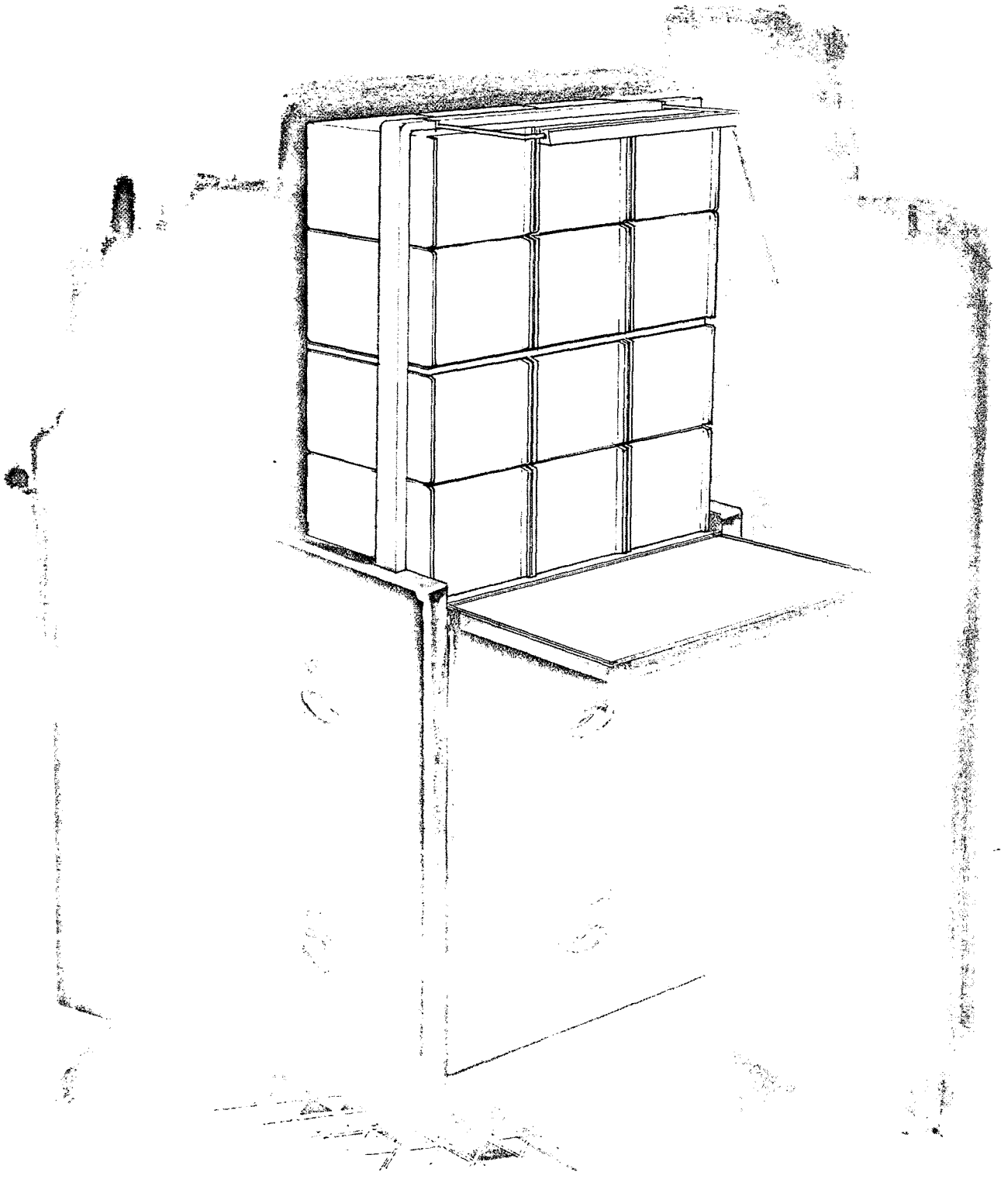

Fig. 4-10 Selected Design for IMBLMS Experiment Canister (F)

There is sufficient stowage space behind the upper slide-rail frame to hold an accessory lamp unit. When the canister is set up, the lamp is easily positioned over the modules and work surface (Fig. 4-11). As with all the canister design configurations previously presented, the canister base is mounted to the floor with pip pins. This configuration appears to be a desirable design concept because of the ease and speed of setup. Also, the canister can be set up with one hand and requires only a pip pin for installation and mounting to the floor or wall. The configuration is designed to permit the astronaut to slide the elevator frame back into the canister case quickly and easily, flip back the lamp unit, and fold the stowage shelf back into its position as the canister top. Thus, the IMBLMS modules are in a protected condition when the astronauts are not using the equipment during the flight, or the canister can be easily buttoned up between flights for Cluster A and B missions.

4.2.1.3 Illumination Augmentation for Modules and Work Surface. A NASA document (Ref. 4-3) disclosed a discrepancy report relative to an illumination problem in the crew quarters of the S-IVB OWS crew compartment. This report, contained in the document, indicated that "S-IVB light levels in the crew quarters with all lights on measure an average of 1/2 foot candle. The recommended MSC illumination levels for AAP is a nominal 30 ± 10 foot candles." Since the astronaut is required to position himself in front of the IMBLMS modules as the experimenter, ambient light would be blocked out, thus possibly reducing the existing 0.5-ft-c illumination (if that is all that is provided in the S-IVB OWS). This illumination would be absolutely unacceptable whenever the astronaut had to read material, log entries, or perform even the most gross eye-hand coordinated efforts such as handling electrodes, plugging in connectors, etc.

The addition of an ancillary light source is mandatory for the S-IVB OWS. Furthermore, it is not known what light levels will be available in the MDA. Although the module panels may be illuminated through the use of electroluminescence, additional lighting for IMBLMS activities is required since the tasks require approximately 30-ft-c of illumination.

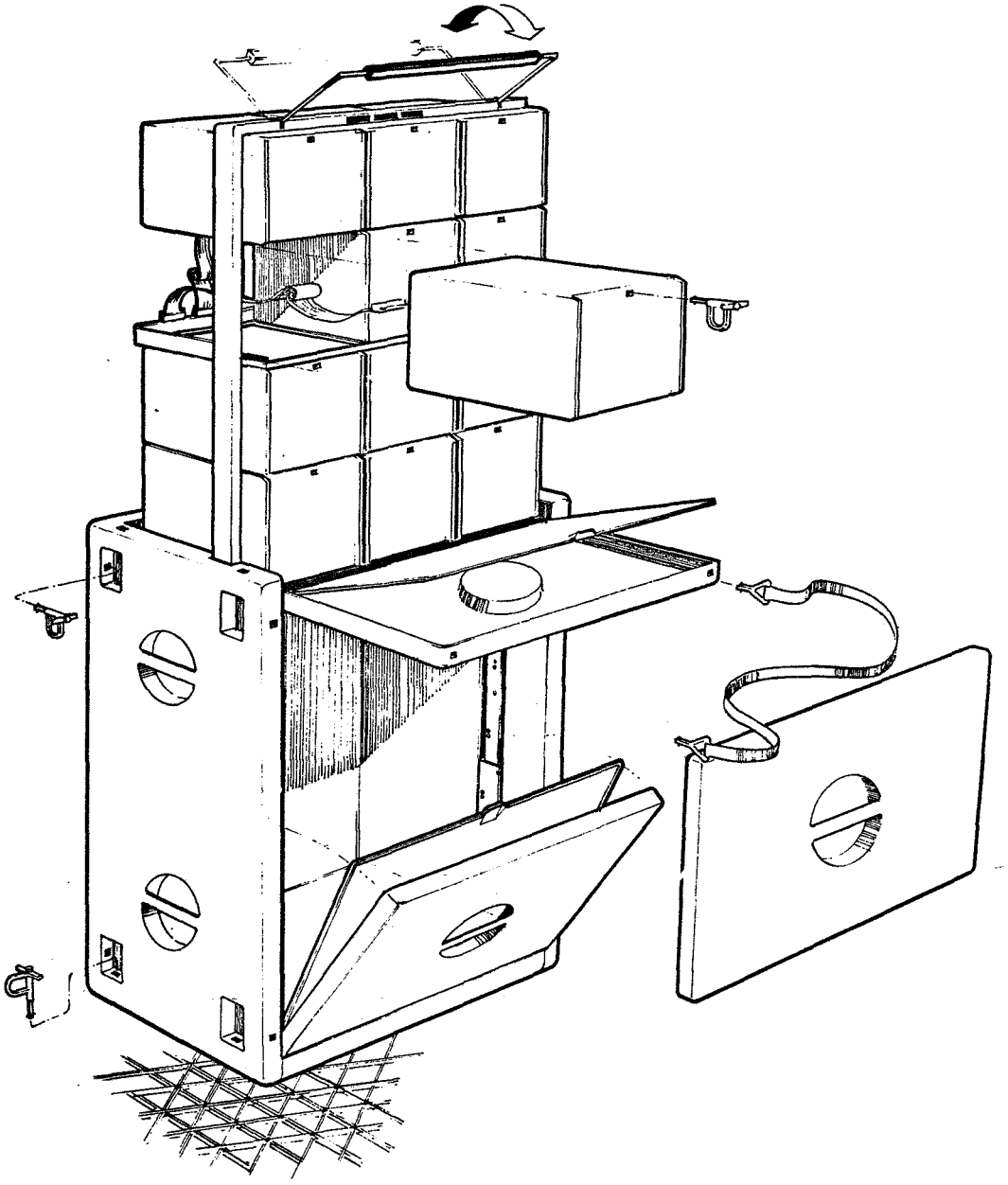

Fig. 4-11 Mechanical Design Layout for Selected Canister Concept

A lamp and shade unit has been included on the canister design (Fig. 4-11) to provide supplementary illumination for the module panels and work surface. When modules are removed from the canister frame and mounted elsewhere, however, the lamp unit remains attached to the canister and additional illumination is required for the transposed module.

4.2.1.4 Canister Workshelf. A workshelf has been provided as an integral element of the canister design. In actuality, two workshelves are included in the canister assembly. The first workshelf is the top lid of the canister, which is hinged on the front of the case and folds down into the working position as seen in Fig. 4-11.

The second workshelf is integral to the front of the canister. The workshelf is in the lower half of the front panel and is hinged to fold down at the base of the canister. This workshelf is provided in the event that the canister is wall-mounted, as in the MDA.

The surface of the workshelf is covered with a newly revised velcro-like product composed of fire-resistant materials. This material provides a simplified yet positive approach to temporarily holding items on the work surface. The lid of the workshelf lifts up to provide stowage for marking devices, logs, data sheets, etc.

4.2.1.5 Canister Connector Interface. As seen in Fig. 4-11, female connectors are installed in the top and bottom of the elevator slide-frame to provide front connector interface capability if the canister is mounted on a bulkhead wall and the elevator assembly is not raised. The female connectors provided on both the top and bottom elevator slide-frame permit the astronaut to couple incoming connectors either from above or below. This versatility ensures that cables can be positioned out of the way when use of the modules is required or when the elevator assembly is not in a raised position.

The front-mounted connector cable runs are inside the elevator slide-frame and exit inside the canister into flat wire channels which wrap around and distribute the wires

at the appropriate level behind the modules (Fig. 4-12). This is highly advantageous since the cables do not move or stretch when the elevator frame and module assembly are raised. These flat wires terminate in special expandable rack and panel male connectors, which are in turn coupled with female connectors mounted on the rear panel of each appropriate module.

Expandable connectors (or suitable alternates) such as those shown in Fig. 4-12 are necessary to permit the modules to be removed when the canister is wall-mounted and the elevator assembly is not raised.

4.2.1.6 Canister Tether Attachments. Several areas have been provided on the canister for tether attachment. Tether attachment points are provided on each panel face of the canister to facilitate the astronaut during activities associated with canister transport and translation.

Two additional tether attachment points are provided on both of the workshelves. These attachment points are located on the edge of the workshelf and are used by the astronaut to assist in "tying" himself to the canister during operating modes. Figures 4-3 and 4-5 illustrate this concept.

4.2.1.7 Removal and Replacement of Canister Module. The canister design permits modules to be removed in either the MDA or S-IVB OWS. To reduce the number of special tools and to reduce components mounted on the module panel face, a simplified module removal technique is employed. A small hole the size of the pip pin shank is provided in the very top or lower center of each panel. The astronaut simply inserts the pip pin into the hole and pulls the module out until he can grasp it with his hands, whereupon he pulls it all the way out. Since the pip pin must be used so frequently in the S-IVB OWS and occasionally in the MDA, this may be the one tool that the astronaut may constantly carry. It seems advisable, therefore, to make use of it and thus to reduce special tools for IMBLMS as well as to eliminate handles or similar components on the module panel fronts.

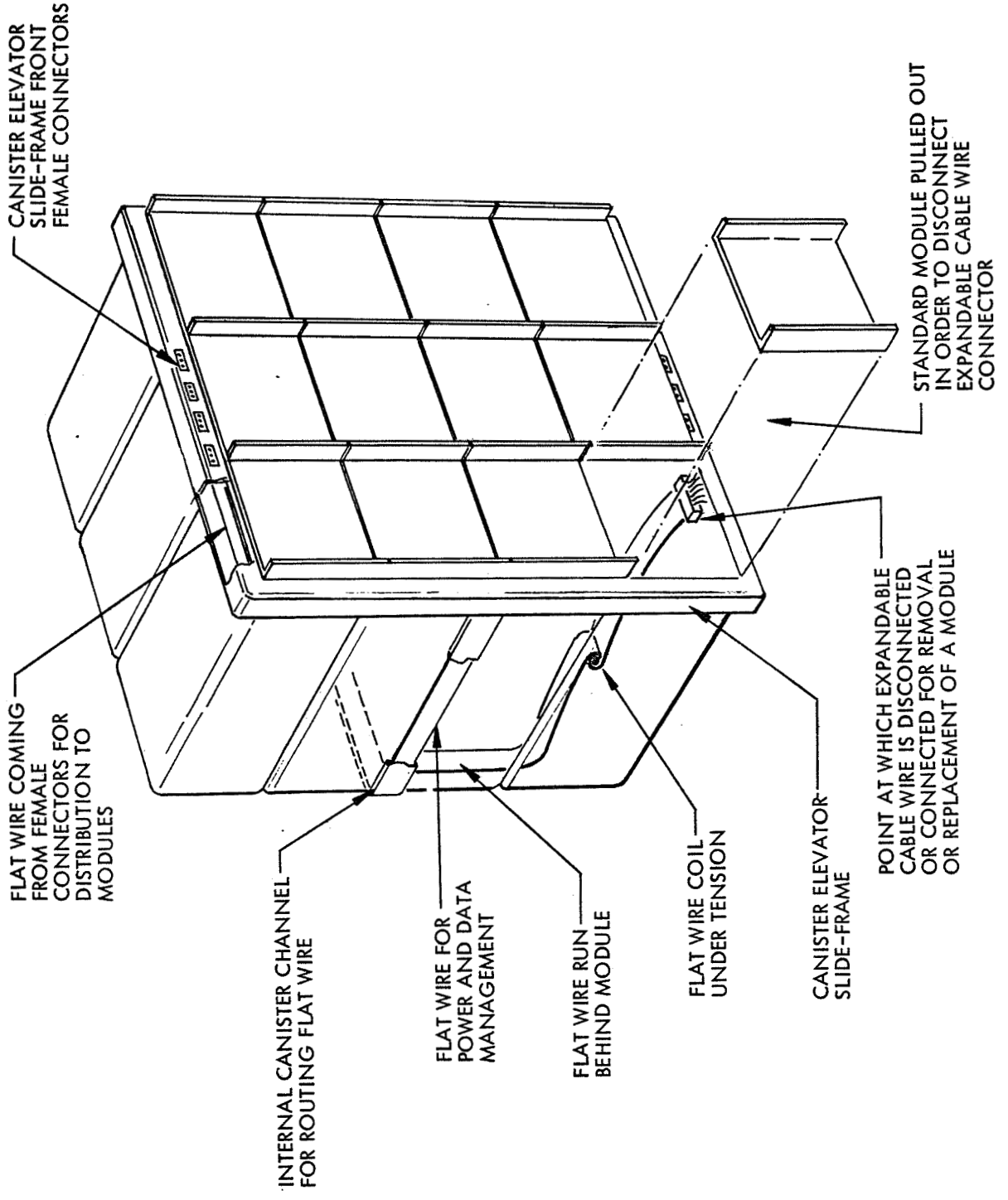

Fig. 4-12 Elevator Assembly Withdrawn From Canister to Show Technique of Module Removal

4.2.1.8 Canister Mounting and Setup. The specific technique for mounting experiment canisters in the MDA has not yet been determined. The currently accepted technique for mounting experiment equipment in the S-IVB OWS is with pip pins (Fig. 4-13). The pip pin D-ring as shown is an adaptation of the Gemini-XII-like tool found useful by the astronauts. The equipment item is provided with mounting holes (larger than the diameter of the pin shank) which mate with the mounting surface holes. The pip pin is grasped, the plunger is depressed to retract the bearing points, and the pin is inserted into the mounting hole. The plunger is released, and the pip pin is securely in place. The mounting holes can be keyed to prevent rotation of the pin (also keyed) or equipment.

This technique appears technically well-suited to the IMBLMS canister mounting requirement, particularly with respect to the S-IVB grid floors and walls. This approach may not be appropriate for the MDA and is not recommended for securing any items subject to launch accelerations, shocks, vibration, and possible shear loads.

It is recommended that the D-ring of the pip pin be reevaluated with respect to glove size and grasping envelopes of the Apollo suit gloves. With minor modifications, however, the pip pin and D-ring tool appear quite satisfactory for mounting the IMBLMS canisters in the S-IVB OWS.

Figure 4-3 presents the general steps for mounting and setting up the canister in the S-IVB OWS. Setup of the canister in both the MDA and S-IVB has been covered in detail in Section 4.1.3.2.

4.2.2 IMBLMS Module Design

Section 4.1 presented the IMBLMS modular design approach. This section offers the design criteria, requirements, and detail of the modular design effort. The following paragraphs present the design tasks and results.

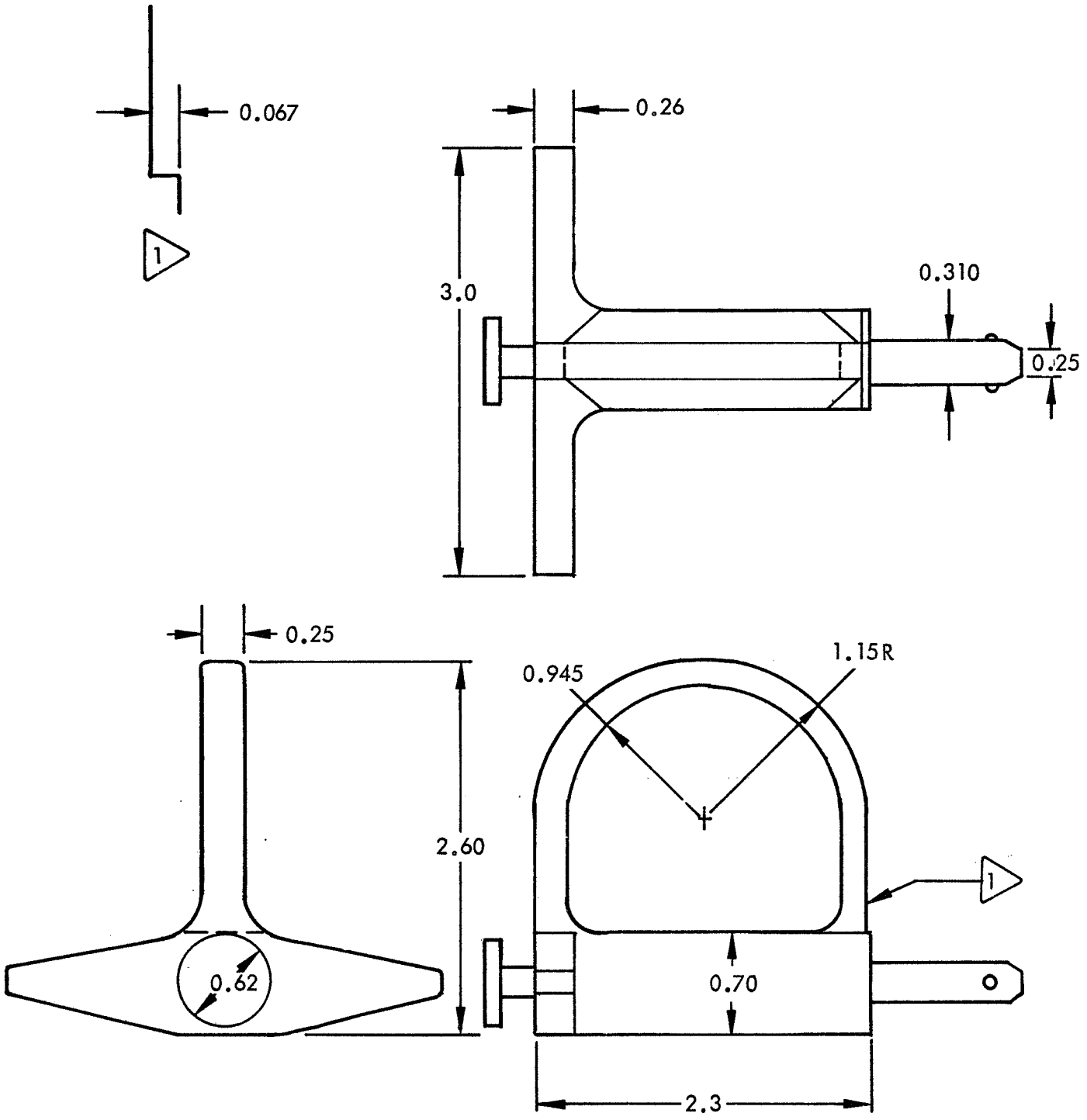

Fig. 4-13 Pip Pin D-Ring

4.2.2.1 Module Definition and Sizes. An IMBLMS module is defined as a rigid structure of finite dimension in which is mounted or stowed an aggregation of components, instruments, or measurement items and supplies. The components may be self-contained units or may be interdependent or dependent equipment items. Section 4.1.2.5 presented the general module envelopes for IMBLMS. There are three types of module categories: (1) major module, (2) standard module, and (3) submodule. The exact design dimensions for these three module categories and their individual alternate configurations depend largely on maximum stowage envelopes in the spacecraft carrier and on experiment canister design. Preliminary design estimates have been established for each of the module categories as follows:

- Major Modules
  - Configuration A: External, 18.25 in. wide by 9 in. high by 16 in. deep
    Internal, 18 in. wide by 8.87 in. high by 15.87 in. deep
  - Configuration B: External, 9 in. wide by 18.25 in. high by 16 in. deep
    Internal, 8.75 in. wide by 18 in. high by 15.87 in. deep
- Standard Module
  - External, 9 in. high by 9 in. wide by 16 in. deep
  - Internal, 8.87 in. high by 8.87 in. wide by 15.87 in. deep
- Submodules
  - Configuration A: External, 9 in. high by 4.25 in. wide by 16 in. deep
    Internal, 8.87 in. high by 4.13 in. wide by 15.87 in deep
  - Configuration B: External, 4.25 in. high by 9 in. wide by 16 in. deep
    Internal, 4.13 in. high by 8.87 in. wide by 15.87 in. deep
  - Configuration C: External, 4.25 in. high by 4.25 in. wide by 16 in. deep
    Internal, 4.13 in. high by 4.13 in. wide by 15.87 in. deep

The depth of the modules currently stated is 16 in. maximum. However, it is anticipated that the length of the module may be considerably less, particularly for the smaller submodules. The 9-in.-square by 16-in.-deep (or less) module envelope is particularly adapted for use in the CM or LM spacecraft carriers. Furthermore, it is adaptable to the canister in a variety of configuration arrangements.

The module dimensions lend themselves to standardized engineering practices relative to module design for equipment racks, which are designed on the basis of 19-in. centers. In general, ground equipment packages have classically followed this concept, and components and hardware items have been designed with this requirement in mind. Therefore, if this standard practice can be followed in IMBLMS without sacrifice to integrity or installation and integration requirements, it is suggested that this practice be continued.

All modules can be transported through any spacecraft hatch, thus ensuring that transportability of the IMBLMS modules is practical. However, modules being transoorted are subject to damage through handling – particularly with respect to panel faces. A tether attachment point will be necessary for transport of the module(s). Stacking or racking of the modules is quite practical, based on the standardized shape of the package and on adherence to the standard rack-mounting principles.

4.2.2.2 IMBLMS Module Panel Layouts. During the preliminary module panel layout activity, several dozen layouts were prepared, each of which was evaluated, revised, and updated to reflect the latest measurement technique specified in Section 2. From these layouts, a basic working group of module designs emerged, which represented the initial IMBLMS design concept.

Criteria. Several criteria were developed for the design of the IMBLMS modules to be used during the preliminary design and layout activity. Since the list of criteria is too large to be included within this report, only the major categories are specified, as follows:

- Spacecraft interface requirements and design interface
- Equipment connector design
- Plumbing connector design
- Mounting and attachment design
- Modular independency and redundancy
- Layout of module panel face

- Control and display selection
- Attachment and mounting of internal module equipment components
- Astronaut interface requirements

Design Method. In the design and layout of a typical module (Fig. 4-14), the first step was to specify functions relegated to the biochemical measurements and to identify equipment and/or instruments. General equipment and instrument allocations per module were then delineated and supplies were specified. Measurement tasks were identified, and the number of modules that would be concerned primarily with the physical measurement and analysis functions was determined. Once this effort had been performed, the module that might be a likely candidate for biochemical processing, measurement of samples, and evaluation of sample constituents was determined.

Next, specific equipment and instrument items necessary to perform these tasks that the astronaut would conduct at the module work station area were identified. General design data were then obtained for each of these equipment and instrument items — such as configuration dimensions, mounting requirements, and specific display and control requirements. These design data factors were then translated into requirements and the module layout design of the biochemical analyzer was initiated.

First, behind-the-panel equipment was allocated to the available volume within the module. Initially, this allocation did not appear feasible for the biochemical analyzer because of arrangement and location interferences. These equipment items were rearranged, however, and a very practical layout within the module was achieved. The next step was to determine whether the necessary displays, controls, and hardware mounted externally on the panel face could be positioned within the available area. As can be seen in Fig. 4-14, there was more than adequate room — with some space available for future growth if required.

Now that availability of internal and external volume had been determined, the third step was to ascertain whether the internal components/equipment/instruments could

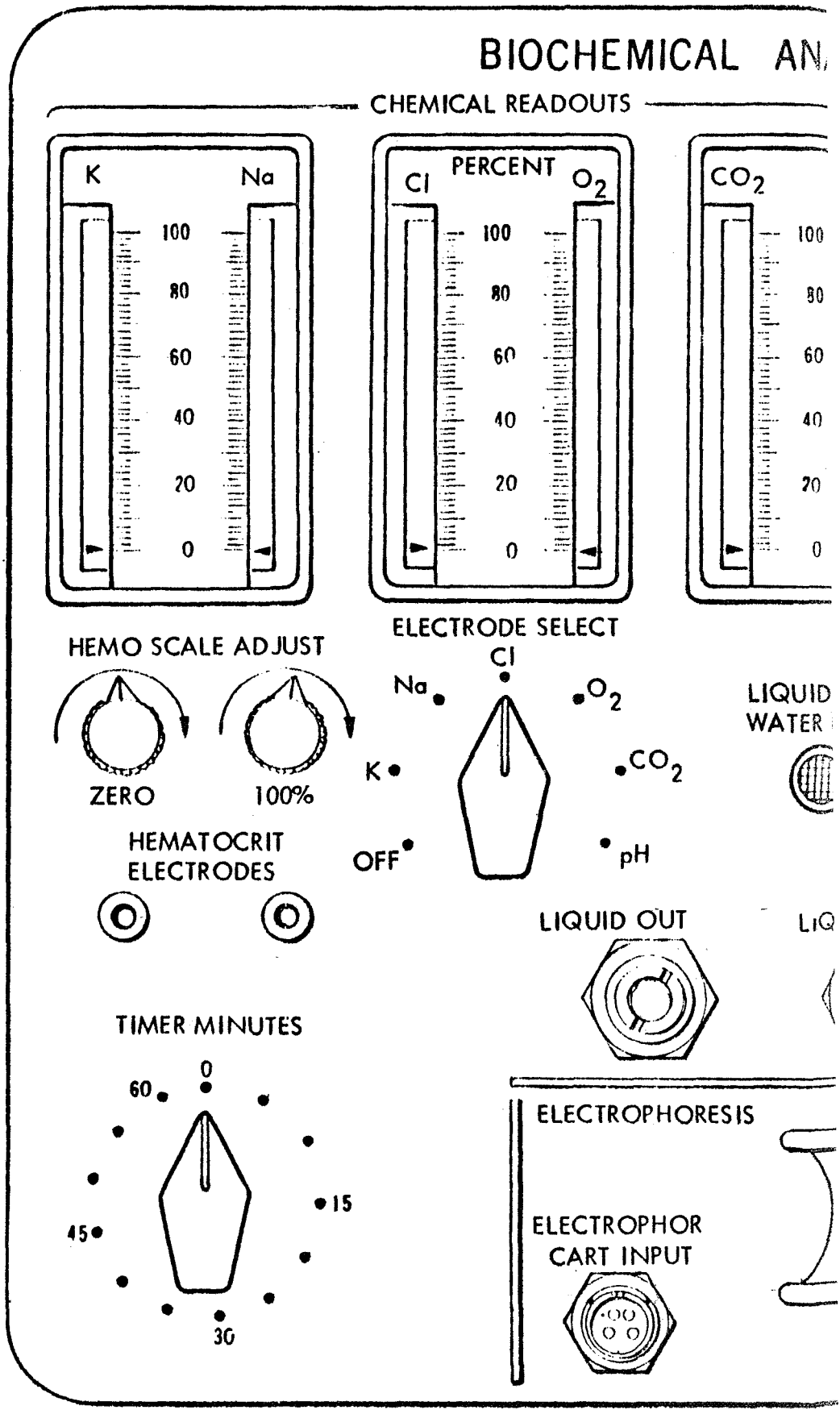
BIOCHEMICAL AN
CHEMICAL READOUTS
K
Na
PERCENT
Cl
O_2
CO_2
100
80
60
40
20
0
HEMO SCALE ADJUST
ZERO
100%
ELECTRODE SELECT
Cl
Na
O_2
K
CO_2
OFF
pH
LIQUID
WATER
HEMATOCRIT
ELECTRODES
LIQUID OUT
TIMER MINUTES
0
60
15
45
30
ELECTROPHORESIS
ELECTROPHOR
CART INPUT

(ACTUAL SIZE)

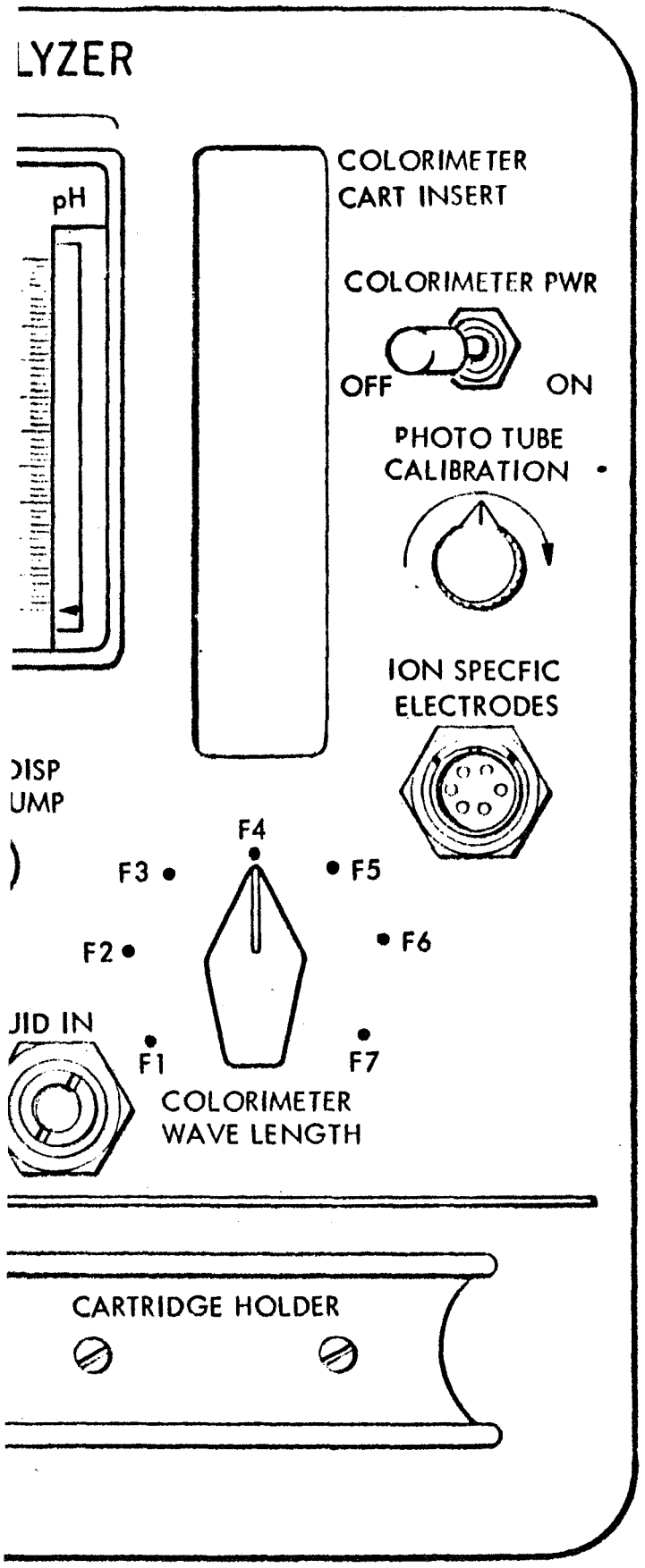

Fig. 4-14 Biochemical Analyzer

be adequately mounted with supports, mounting brackets, and associated internal structure. Once the feasibility of internal module mounting had been established, the next step was to lay out the panel face into a functionally usable arrangement. This was completed, and the first design review was held with the medical, engineering, and data-management personnel to evaluate the initial design layout. Several recommendations were made and were immediately incorporated into the design layout.

Upon completion of the review and updating procedure, the design layout concept was then turned over to the design team for further design (Task G) reported in Section 7. All IMBLMS modules prepared for inclusion within this report were treated as discussed in the previous paragraphs.

Not all of the criteria previously discussed could be met on all occasions and certain exceptions and tradeoffs had to be made. For example, a display problem in which further effort will have to be expended is the number of graduations on a scale and the size of the corresponding numerical identifications. This was usually a problem since medical personnel wanted the widest and most inclusive range possible. Such a range may not be possible, and certain exceptions and tradeoffs will have to be made by the medical, design, and human factors engineering personnel. Nonetheless, design tradeoffs similar to this are an important step in the design of IMBLMS equipment and modules, and module layout development has provided the initial stepping stone to reach the design stage.

4.2.2.3 Module Functional Grouping. One of the major difficulties in the conceptual layout of the modules was locating related displays and controls to modules that had to be functionally close to one another or in close association with another support module (e.g., the cathode ray tube or data-management modules). When the modules were laid out initially, a very careful overall scheme of functional association had to be maintained at all times to ensure the proximity of related displays and controls.

Pg. 4-40 Blank and not filmed

This scheme necessitated a master inventory as a guide to enable the layout designer to locate certain related functional groupings. For example, it was determined desirable to have physiology readouts (meters, scales, digital displays, etc.) next to one another in an arrangement that would permit the astronaut to easily scan a given area and evaluate the situation with a minimum of searching for related functional information.

Functional grouping of displays and controls on modules related to other modules was maintained wherever feasible. Similarly, grouping of related modules (e.g., by element) into functional areas was also accomplished (Fig. 4-15). For example, it was determined advisable to have all the physiological element modules closely grouped together. The same concept held true for the biochemical element as well as for the data management support element. The behavioral modules (only two) were also grouped fairly close together although there was very little functional display and control interrelationship between the two.

4.2.2.4 Module Connectors. One of the critical areas in modular design of IMBLMS is the method of interfacing cables with equipment and modules. Cables can include wires, air lines, and fluid lines and must interface with the various functional capabilities of candidate spacecraft (i.e., power, data management, and fluid and vacuum lines). Since the IMBLMS concept requires a modular design approach, certain modules or submodules may be removed from their original stowed or operating position and transferred to other operating areas — perhaps from spacecraft to spacecraft. It is essential, therefore, to review the current connector technology in order to ascertain the alternate types potentially applicable to this program.

Emphasis was placed on investigating connectors that have passed military specifications and are on current military specification lists. In addition, a preferred parts list issued by NASA was reviewed to determine the connector candidates space-qualified by NASA. Various connector types were identified as potential candidates for IMBLMS, based on NASA and DOD information.

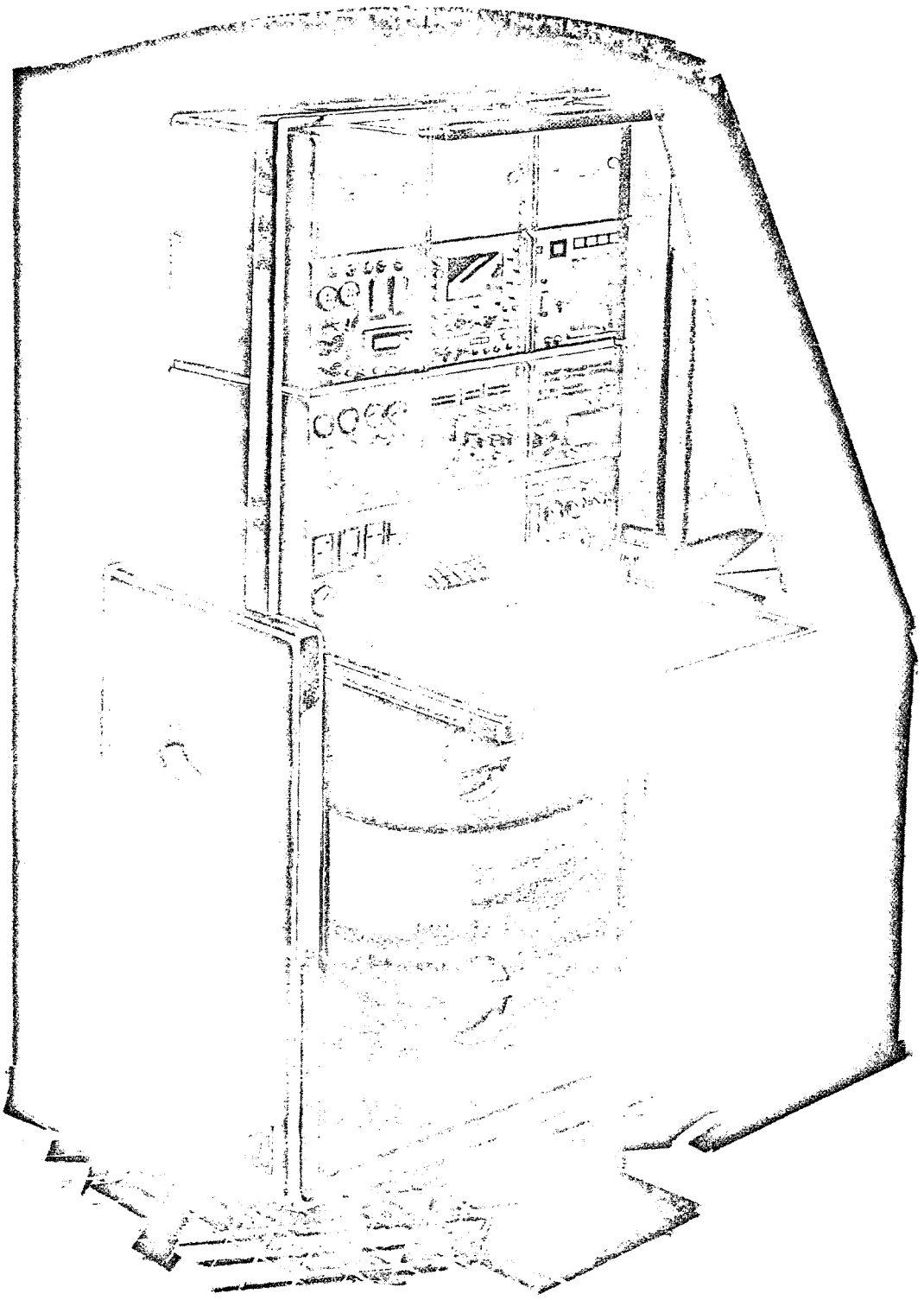

Fig. 4-15 Physiological/Behavioral/Data Management Modules in Experiment Canister, Functional Arrangement

Table 4-1 presents the results of an investigation of several candidate connectors. The table lists several design features and presents summary comments relative to the nature of these design features.

Connectors may be mounted on either the front or rear of the module, depending upon the requirement. In general, all modules were designed so that IMBLMS support equipment (e.g., sensor umbilicals, equipment cable leads, hoses, etc.) will interface in the front of the appropriate module. Spacecraft power, data management, and communication leads all interface either in the rear of the module or in the experiment canister elevator slide-frame (Fig. 4-12).

For front or rear connectors requiring the astronaut to couple and uncouple the connector frequently, bayonet types are recommended. The bayonet connector can also be manipulated with gloves while the astronaut is in a pressurized suit. The sleeve and poppet coupling appears most satisfactory for IMBLMS since this type of connection does not leak when it is uncoupled – a definite advantage if it is used for liquid or vacuum sources.

4.2.2.5 Module Interdependence. Module interdependence has been reduced to a minimum wherever possible in IMBLMS. This was accomplished primarily be providing a discrete set of modules for each organ system. For example, a behavioral monitoring module does not depend on a physiology monitoring module for information display or on any common module for power. Thus, if one or two modules from the three elements (physiological, biochemical, or behavioral) were removed, the remaining modules could function.

The only major area of module interdependence is in the data management element. It was determined that adding data management capability to every module would be highly redundant and very costly in terms of weight, power, and particularly volume. Therefore, a common data management element is provided for the entire group of IMBLMS modules. Each module is also distinctly separated from every other module

Table 4-1

SUMMARY OF CONNECTOR ANALYSIS

Type of Connector	Usage	Method of Connection	Special Tools Required	Speed of Connection	Ease of Connection	Reliability Data	Gross Dimension	Remarks
Shell Type	Wall or bulkhead Cable to cable Box or panel (Angle plugs optional)	Thread	Preferred	Slow	Poor if connector is out of site	Available mil-spec; sealed; pressure-tight; explosion-proof	0.5 in. square to 2.25 in. square	MS 3100, 3101, 3102, 3106, 3108 series
Shell Type	See above	1-turn thread (quick action)	None required	Fair	Fair	Available mil-spec.	See above	MS 3107 and others
Shell Type	See above	Bayonet	None required	Fast	Good	Available mil-spec; hermetically sealed	0.9 to 1.7 in. square	Some units on Agena; many variaties available
Rack and Panel	Racks and/or panels	Push-pull	None required	Fast	Good	Highly dependent on package design	1 to 4 in. square	Requires module to be on rails; several types available
BNC Coaxial	Cable or box	Bayonet	None required	Fast	Good	Available mil-spec.	0.6 to 0.8 in. square	Several types available, including RF capability
Coaxial	Cable or box	Thread	Preferred	Slow	Poor if out of sight	Available mil-spec.	1 in. square	Several types available, including RF capability
Phone Plugs and Jack	1- to 3-conductor, audiofrequency or 10-w current dc	Push-pull	None required	Fast	Good	Accidental pull will break contact	0.5 to 0.8 in. square	Several types available
Double Poppet (Fluid Coupling)	Air or liquid	Push-pull	None required	Fast	Good	Possible trapped air or liquid	About 0.75 in. typical	Several types available
Sleeve and Poppet (Fluid Coupling)	Air or liquid	Push-pull	None required	Fast	Good	No trapped air; no fluid loss	About 0.75 in. typical	Several types available; preferred for air or liquid
Slide Seal Fluid (Fluid Coupling)	Air or liquid	Push-pull	None required	Fast	Good	Possible to lose fluid while connected	About 0.75 in. typical	Several types available
Double Ball (Fluid Coupling)	Air or liquid	Push-pull	None required	Fast	Good	Trapped air or liquid possible	About 0.75 in. typical	Several types available

relative to power inputs. A common spacecraft power line is provided to the IMBLMS experiment station and power-line taps are provided for each module. Power problems occurring in any individual module are handled within that module to preclude cascading malfunctions.

In addition, independence of the modules is achieved by including several means of reading out measurement data. For example, there are several techniques for displaying data to the astronaut with the currently designed modules – CRT, printer, digital and analog displays, and mechanical flags. Reduction of module interdependence is advantageous to ensure that, if one module malfunctions, other modules are not affected severely. However, some interdependence is desirable to reduce equipment redundancy.

4.2.2.6 Elimination of Cascading Module Malfunctions. Cascading or internal module malfunctions are primarily the result of component failures, electrical overloads and short circuits, and power supply surges. Therefore, the goal of IMBLMS modular design will be to isolate the failure to the module and, within the module, to the component wherein the failure occurred.

Several techniques have been considered for use in IMBLMS modular design. Input and output lines will be protected against surge by active circuits to bypass temporary over-voltage conditions, particularly with respect to delicate circuits. Current-limiting circuits will be used to minimize damage to faulty circuits and prevent a severe drain on power sources. Isolation diodes will be used to prevent data loads from feeding spurious pulses back to their sources. Electronic crowbars will be used on main power lines between relays that can become overloaded, and on sensitive circuits that would be irreparably damaged by voltage surges.

Each module circuit will have to be examined in detail and the appropriate technique selected for reducing or eliminating cascading or internal module malfunctions. This effort is conducted in the preliminary design phase and is highly affected by circuit design, power interface, and the problems of volume availability and weight.

4.2.2.7 Module Transportability. Each module is designed so that it can be removed and replaced simply and easily by quick-disconnect connectors and rapidly actuated mounting assemblies. The module frame assembly is fully enclosed to protect internally mounted components and parts. Therefore, the only damage that can occur to the module during transport (short of crushing or other catastrophic event) is damage to the front panel. Protective edges protrude nearly 1 in. from the panel face and will, to some degree, protect the panel during transport.

The module is removed from the canister by inserting the pip pin into the front panel and drawing the module out far enough that the astronaut can grasp the module with his hands. After the module is drawn out of the mount, the rear panel connectors are uncoupled and the module is free to be transported.

The modules can be relocated in the CM, LM, AM, etc., providing there are mounting supports or brackets available if the module is to be set up into the operating position. The connectors would have to be mated and the module checked out to ensure its operational status (the module most likely to be transported is the dynamic physiologic monitor).

Resupply missions may bring new modules or replacement modules on subsequent flights. These modules would simply be installed and the out-of-date or malfunctioning units replaced.

4.3 IMBLMS CANISTER AND MODULE INSTALLATION ABOARD THE CANDIDATE CARRIERS

The three NASA-specified candidate carriers – refurbished command module, lunar module, and S-IVB orbital workshop – were examined relative to their potential capability for integration of IMBLMS aboard each. In addition, LMSC examined the AAP mission cluster concept, which includes additional carriers as well (e.g., airlock module, multiple docking adapter, command module, service module, logistics command service module, and a laboratory-type earth-modified S-IVB OWS.

Included in this examination were the following considerations:

- Available experiment volume and location
- Potential for transporting equipment from one carrier to another
- Methods for installing and mounting the IMBLMS modules or canisters in the carrier
- Available free volume for conduct of the experiment (including setup volume)
- Accessibility and interface of the crew with the equipment stowed or mounted in each of the carriers

These factors were examined in detail and analyses were conducted to determine optimum grouping and arrangement of the various equipment items. From these analyses, preliminary engineering recommendations were made relative to module and canister installation, racking, and integration.

Considerable more effort was expended on the cluster concept and associated spacecraft carriers, as opposed to the consideration of the three NASA-specified carriers as separate entities not part of an integral mission system. It was determined to be more appropriate to examine the carriers in a clustered configuration according to the current AAP flight objectives and mission schedules. This approach permitted a more realistic appraisal of the carrier function and planned configuration engineering details. Thus, more accurate analyses of candidate carriers could be performed, with particular emphasis on AAP mission objectives, experiment assignments, orbital characteristics, time on orbit, flight dates, projected equipment availability, and alternate carrier assignments.

As previously indicated, several candidate carriers were examined relative to the integration of IMBLMS aboard each. The succeeding sections briefly summarize the conclusions reached for each of the candidate carriers.

4.3.1 Command Module (CM)

The unmodified command module has very limited volume for experiment stowage or mounting. The primary areas available are in the two rock boxes in the lower equipment bay, beneath the crew couches, and in the tunnel area. None of these areas appears satisfactory for an IMBLMS experiment station, particularly if a crewman is to monitor and conduct complex tests. There is a minimum of volume just beneath the forward hatch/tunnel in which a man could stand; however, there would not be sufficient room for a second crewman or other major IMBLMS equipment. The area beneath the couches may be converted to stow equipment at liftoff until orbit; however, the depth of the equipment could not exceed 10 in. At best, the most complex IMBLMS subsystem that could be integrated into the CM is the dynamic clinical monitor module. If this were accomplished, there would be a problem in locating the module for monitoring by the crewman since prime panel area is just not available.

4.3.2 Logistics Command Service Module (LCSM, Latest Concept)

This vehicle is nearly identical to the CM discussed previously. Some lunar associated equipment will be removed for the earth-orbital mission. However, the extent and nature of this equipment removal does not significantly increase the capability of the LCSM relative to integration of additional IMBLMS equipment since the vehicle is used as a transit spacecraft for astronaut return to earth. One of the major functions of the LCSM is to provide additional logistics for the cluster; much of this equipment is located in the SM and rack and not accessible other than by EVA. Stowage and mounting areas of the LCSM are similar to those discussed for the CM. Since this vehicle must be used as a return-to-earth taxi, it must stay up for the duration of the 28- and 56-day Cluster A flights and up to 90 days (estimated) for the Clusters B, C, and D and synchronous-orbit flights. Hence, provisions for extending the current on-orbit stay time of the LCSM become paramount. The additional extension support capability that is required consumes, to a large degree, the volume made available by the removal of the lunar mission-specific equipment. As with the CM, it appears that only a minimum of IMBLMS modules can be permanently installed; however, some stowage

volume that can be realistically allocated to IMBLMS is aboard the LCSM. Display and control location also becomes a problem relative to installation of the IMBLMS module(s) in a panel area for effective crew-equipment interface. Free volume for experiment conduct is minimum, as with the CM, because of the requirement to have three crew couches available for earth reentry.

4.3.3 Refurbished Command Module (RCM)

The RCM as defined in the early phases of the AAP effort was a command module with such major modifications as removal of the heat shield, couches, lunar navigation and guidance equipment, and of various subsystems associated with earth return and recovery. Removal of many panels and modules normally installed in the cabin interior results in considerable volume available for equipment installation. It appears that the IMBLMS standard modules could be integrated into existing panel areas although large equipment volumes such as the LBNP, mass measurement device, rotation chair, and ergometer would have to be stowed on the floor or in another carrier. However, there appears to be sufficient free-swept volume for the conduct of any of the IMBLMS measurements since the couches have been removed.

4.3.4 Service Module (SM)

Although not a candidate carrier, the SM has been examined by LMSC for possible use as a vehicle that could transport equipment into orbit. At that point the equipment, when it was to be used, would have to be removed by an EV crewman and transported to the appropriate experiment area in another vehicle. The amount of available stowage space (Sector 1) depends upon the degree to which the SM must be uprated to extend its capability for support of the extended CM for longer missions. Obviously, certain lunar-associated equipment can be removed from the SM for earth-orbital flights; however, a great deal of the volume made available will be consumed by the required extension provisions necessary to support the extended CM on-orbit schedule. Nonetheless, the volume that may be available in Sector 1 of the SM should be given consideration if additional IMBLMS equipment, packaged in appropriate protective canisters, is needed to support resupply missions.

4.3.5 Lunar Module (LM)

The lunar module has been studied intensively by LMSC for over two and one-half years as a potential candidate carrier for biomedical and behavioral equipment used during earth-orbit missions. The current AAP configuration was used as the basis of this analysis. This LM, designated LM-4/ATM, is configured primarily as an in-space telescope. As such, the internal pressurized compartment has been packed with an ATM display and control console and film cassettes. The available volume for IMBLMS is therefore very meager, with hardly sufficient room for the dynamic clinical monitoring module. Furthermore, the minimally available volume is not configured in a practical shape for equipment installation, there is insufficient room for the equipment to be set up, and the necessary free or swept volume for conducting the experiment with a subject, experimenter, and experiment equipment is lacking.

4.3.6 Airlock Module (AM)

The airlock module was studied to determine whether any of the internal area of the airlock tunnel could be used for stowage or installation of IMBLMS equipment. It was immediately determined that there is really no available volume within the tunnel for items other than those essential to airlock function, use, and support. However, the truss modules and support structure within which are housed the tunnel and airlock could support experiment canisters mounted extravehicularly. Mounting experiment canisters outside the tunnel and airlock necessitates that the astronaut perform an EV excursion to retrieve the equipment and transport it back into the desired carrier through the AM hatch – a requirement not generally considered desirable. The AM, therefore, does not appear to warrant further consideration as a candidate carrier.

4.3.7 Multiple Docking Adapter (MDA)

The multiple docking adapter is a basic spacecraft structure used as a docking port for other spacecraft and as interface tunnel through which astronauts can translate from the CSM to the AM and finally to the S-IVB OWS or to other radially docked

spacecraft (e.g., LM-A/ATM's, CSM's, etc.). Another prime feature of the MDA is the large pressurized volume within which experiment equipment can be stored in canisters (Fig. 4-16). Furthermore, the MDA can function as a small laboratory for experimentation if the S-IVB OWS has not been or cannot be made habitable. The entire IMBLMS equipment complement can be stowed in the MDA (assuming that other experiment packages and IMBLMS do not exceed payload weight limitations or total available volume). The current AAP program has generally assigned the stowage of medical and behavioral experiment equipment to the MDA at liftoff; and once on orbit, the astronauts are to remove the experiment canisters from the MDA and transfer them to the S-IVB OWS crew compartment experiment area.

4.3.8 S-IVB Orbital Workshop (Spent Stage)

The S-IVB OWS is an on-orbit, spent-stage launch vehicle which, in a long-stay-time earth orbit, is converted into a habitable space structure for use by astronauts in performance of mission activities. A 40-in. hatch in the forward end of the LH_2 tank provides access to the crew quarters and experiment area located in the aft end of the tank. A grid floor, crew compartments, ceiling, and two closed (controlled pressure differential) compartments constitute the crew area. There is 157 sq ft of free deck area in the 1300-cu-ft experiment area, which is 6.5 ft high. In addition, the waste-management and food-preparation areas (175 cu ft each) are sealed and filtered compartments. The remaining two compartments (445 cu ft) are used for sleeping. Experiment equipment can be installed on the grid deck and/or grid walls; empty equipment canisters may be stowed on the hard ceiling above the two sealed compartments and/or on rails between thermal curtain hat sections. There would be more than adequate room in the crew experiment compartment area for installing, setting up, and conducting the full complement of IMBLMS experiments, as shown in Figs. 4-17 and 4-18.

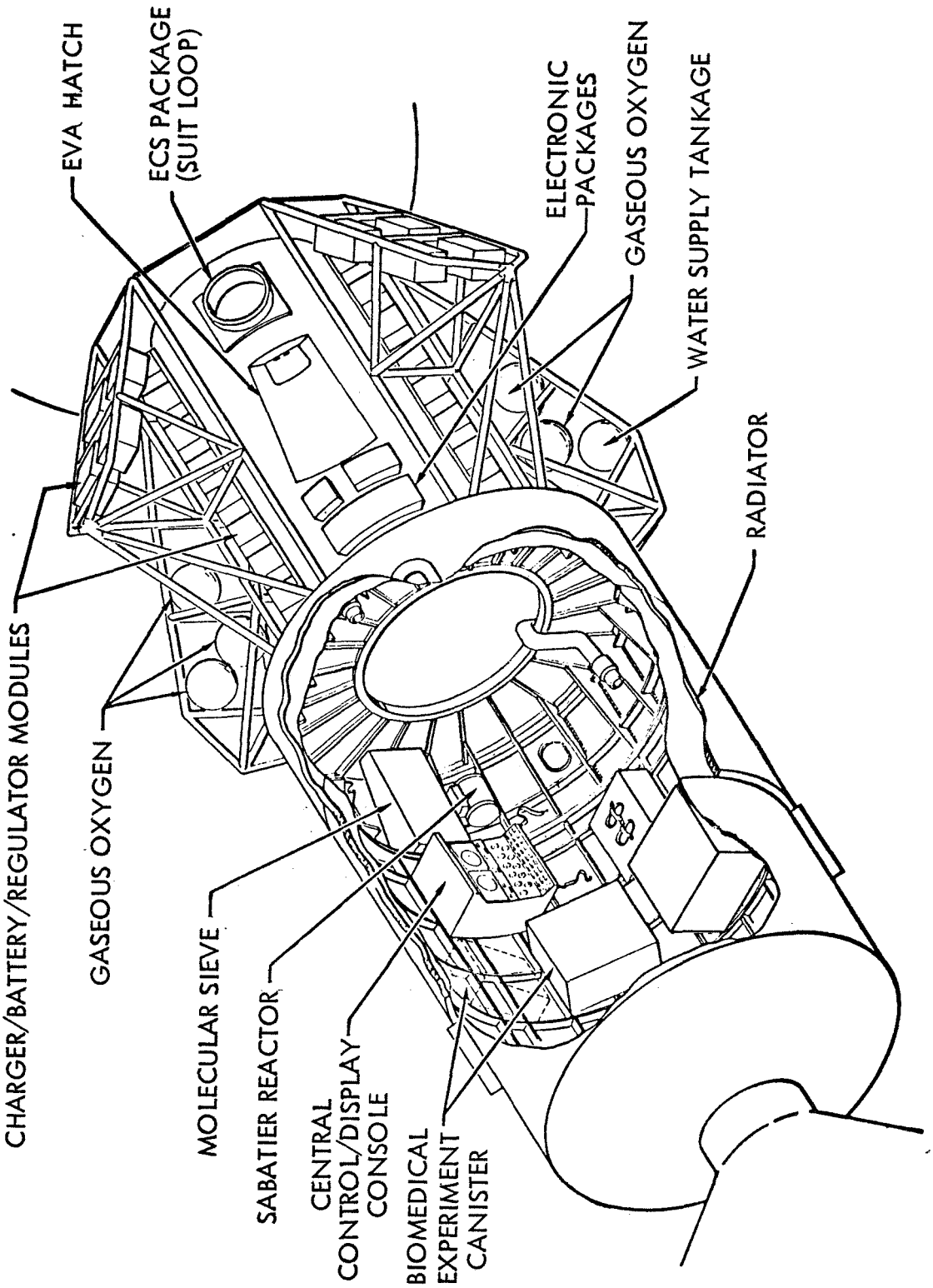

Fig. 4-16 Cutaway of MDA, Showing Installation of Experiment Canister

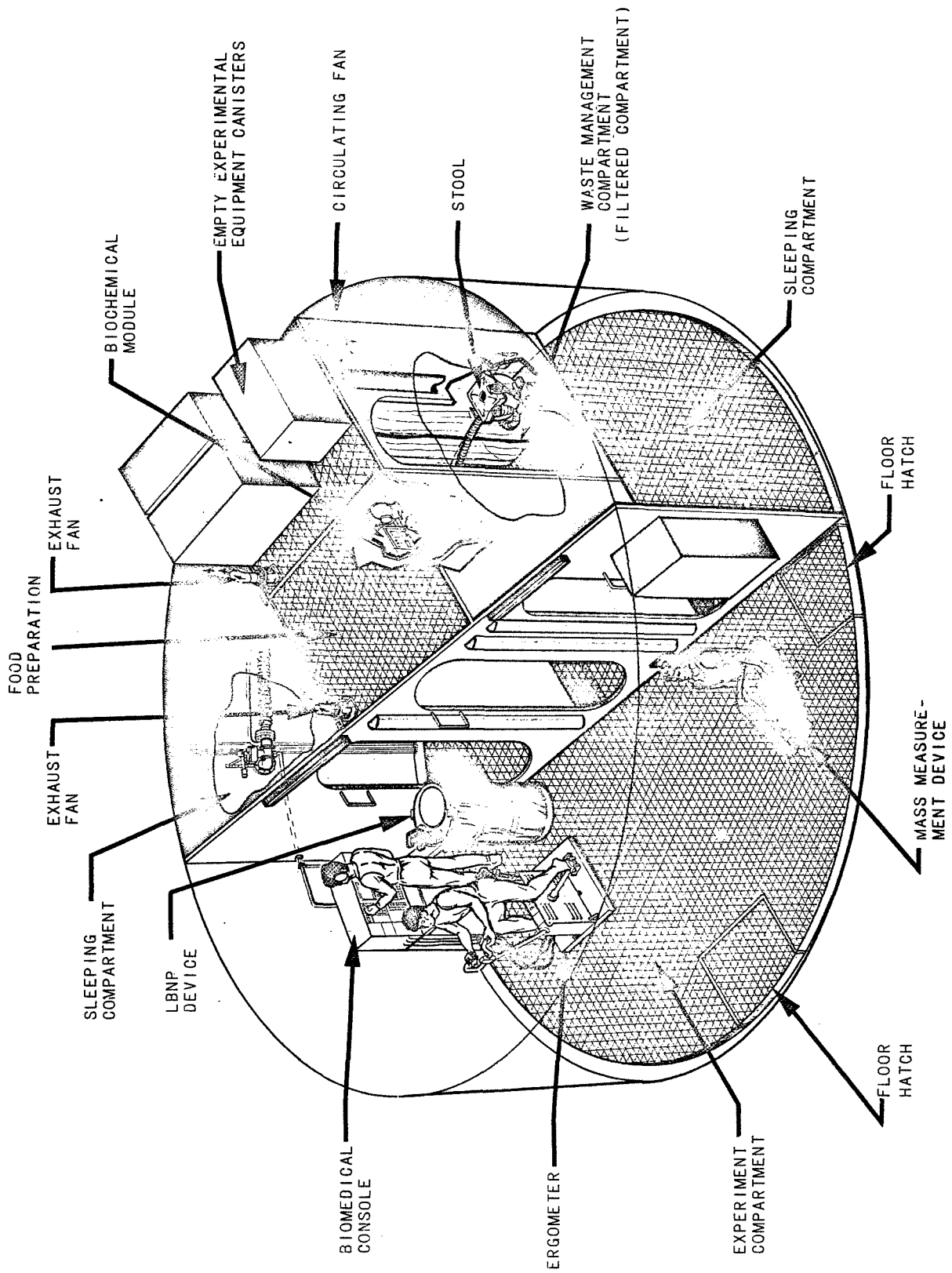

Fig. 4-17 Preliminary Conceptual Layout of IMBLMS in the S-IVB OWS Compartment

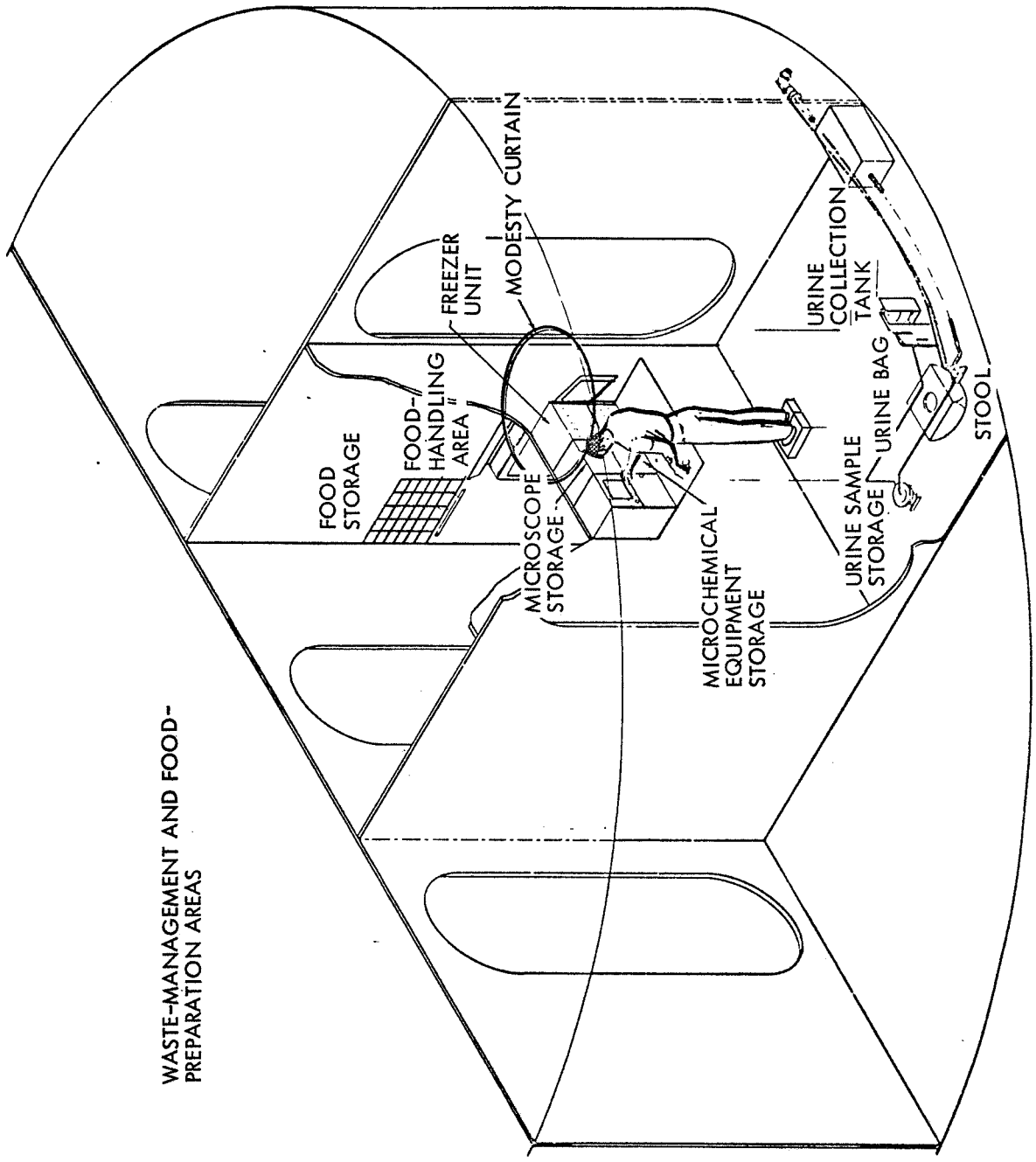

Fig. 4-18 Preliminary Conceptual Layout of the Biochemical Station in the Personal Hygiene and Waste Management Compartment of the S-IVB OWS

4.3.9 S-IVB Orbital Workshop (Ground-Converted*)

The S-IVB ground-converted OWS is essentially an S-IVB stage taken from the production line and modified during its assembly into a laboratory that is pre-set-up for orbital operations. The essential difference between the orbital and ground-converted OWS is the feasibility of using the LOX tank as an additional crew compartment area. The common bulkhead between the two tanks is ground-modified to make provision for two openings large enough for astronauts to pass from one tank to another. Obviously, the entire complement of IMBLMS experiments can be conducted in the ground-converted S-IVB OWS with additional area available for treatment and emergency facilities (Fig. 3-44).

*Referred to by MSFC as the "Mission Module."

Section 5
SYSTEM DESIGN ANALYSIS AND APPROACH

A preliminary system requirements analysis was conducted to determine detailed requirements and characteristics data for the recommended measurement equipment. These characteristics are concerned primarily with such aspects as weight, power, size, operational volume, skill requirements, and sensitivity of the measurement. Concurrently with this equipment requirements analysis, a system compatibility analysis was performed that examined in detail the specified spacecraft – the RCM, the LM, and the S-IVB OWS. In addition, several other candidate carrier spacecraft were examined. Mission considerations relevant to the effect of such aspects as profile, time, and objectives on the IMBLMS design were also analyzed.

5.1 SYSTEM REQUIREMENTS DEFINITION

The development of IMBLMS requirements required a detailed analysis of spacecraft candidate constraints and capabilities, mission objectives and schedules, in-flight medical and behavioral measurement objectives, and interface and integration requirements. A major end product of a detailed system design effort is the development of a Measurement/Equipment Requirements Document. This approach involves collecting pertinent design information in a logical functional flow diagram, specifying general engineering design requirements, and summarizing requirements in the areas of test, quality control, data handling, and mission operation.

5.1.1 Functional Flow Diagrams for Biomedical/Behavioral Measurements

Functional flow block diagrams have been developed for the primary purpose of structuring system requirements into functional terms that can be translated by system engineering into contract end items (CEI). A major purpose of these diagrams is to present a

logical flow illustrating both parallel and sequential procedures and assuring consideration of all important aspects or steps.

Organization of Diagrams. The functional areas presented in the flow diagrams are for the following major IMBLMS measurement elements:

- Physiological
- Biochemical
- Behavioral
- Data Management

Figure 5-1 indicates the overall relationship of the Physiological, Biochemical, and Behavioral measurement elements – grouped as parallel functions – to the Data Management element and to the ultimate provision of the resulting data to the NASA principal investigators.

The four major elements constituting the IMBLMS are next expressed in terms of more detailed functional flow levels. The resulting diagrams are next examined by medical and engineering personnel; equipment block diagrams are prepared; and detailed design requirements are then developed.

The equipment block diagrams are organized around the individual models required for specific body organ measurements. These diagrams summarize major components and illustrate their interfaces with the complete system. The diagrams permit, in turn, the initiation of the next detailed design step of determining electrical wiring requirements, harness layouts, and detail design layouts. A typical example of an equipment block diagram is shown in Fig. 5-2 which indicates the major components required to conduct respiratory evaluations.

Design requirements are prepared in relation to the functional flow diagrams. The numerically identified function is used for identification of the specific requirements, thus permitting the tracing of any change effected during the course of the IMBLMS

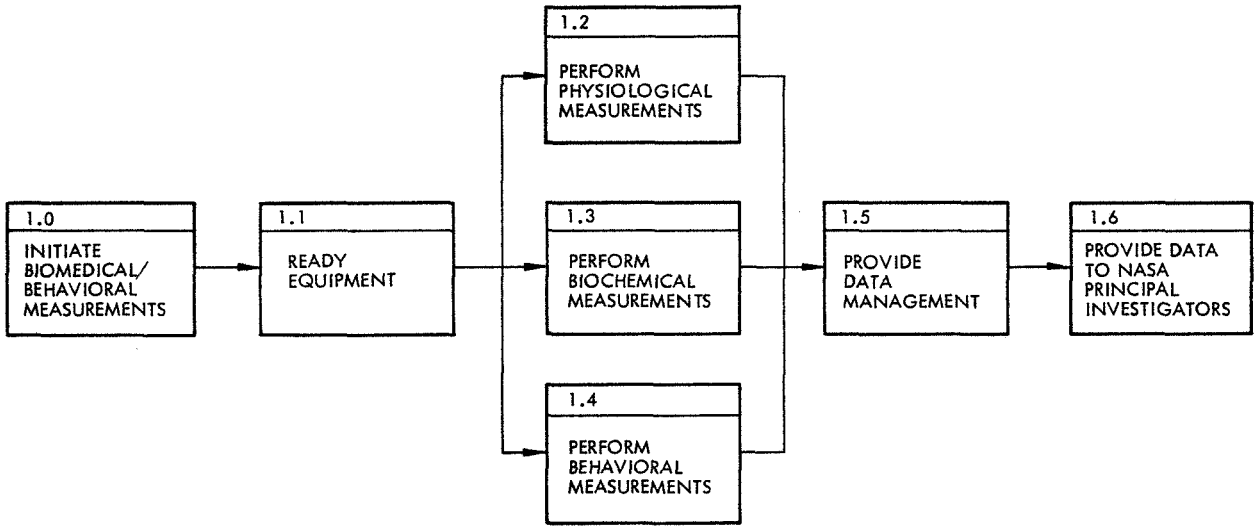

Fig. 5-1 Biomedical and Behavioral Measurements – Function 1

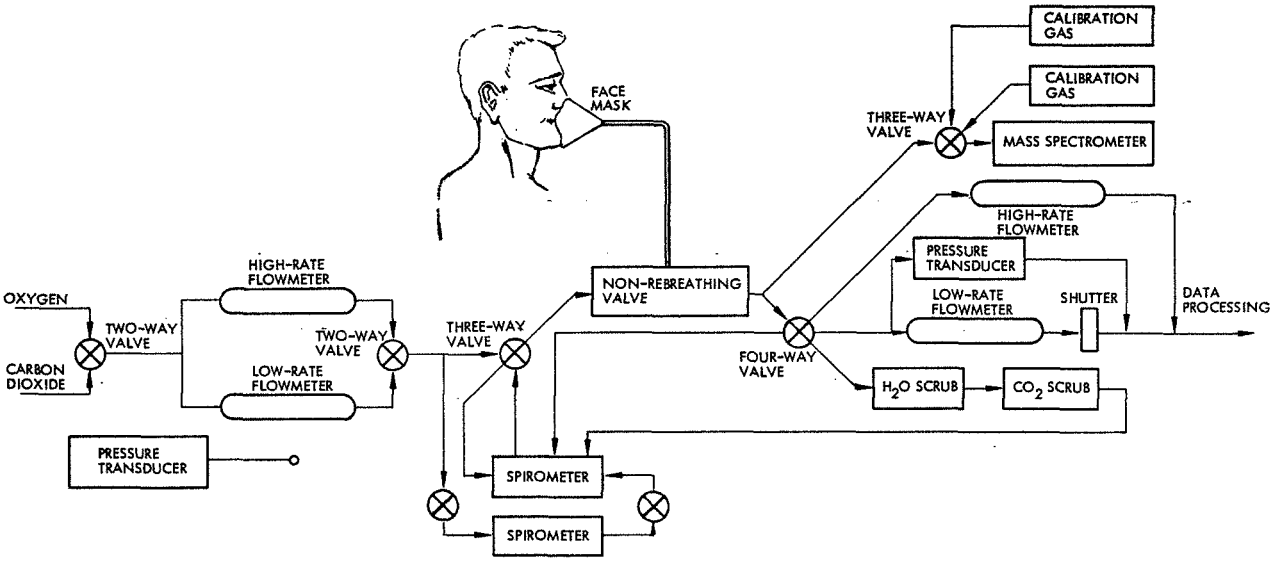

Fig. 5-2 Respiratory Analysis System

development to its original source and assuring the uniform application of changes to the three major control areas – functional flow diagram, equipment diagrams, and design requirements.

The use of numbers in each flow diagram block (e.g., 1.2, Perform Physiological Measurements) facilitates the breakdown of the major functions into lower level operations or procedures, thus permitting easier cross-identification of functions with the equipment block diagrams and with design requirements. Figure 5-3 offers an example of this structuring. The various functions of placing and adjusting sensors are followed by a calibration requirement leading to activation and execution of the scheduled measurement. Data Management has been maintained at the major function level (1.5) since it is a major IMBLMS element ranking and must be designed to handle the entire IMBLMS.

Figure 5-4 illustrates the logical flow of assembling and initiating behavioral measurements. The parallel structure in the diagram does not indicate simultaneous performance of each measurement but rather a possible grouping for sequential action.

Figure 5-5 illustrates the organization of the Biochemical measurement element. The sub-elements depict conventional clinical and measurement categories.

One of the major functions of the highest order in the IMBLMS breakdown is Function 1.5 (Provide Data Management). A second-order functional flow diagram (Functions 1.5.1 through 1.5.14) therefore was prepared to indicate those functions which can be readily identified with a particular associated category of equipment.

A brief examination of Function 1.5 (Fig. 5-6) reveals some significance relative to function placement. Stacked functions (those in the same vertical plane) could occur simultaneously but, since neither an "and" nor an "or" gate is shown, they need not occur simultaneously. Further, it is not necessary to perform more than one of these functions before moving on to the next function. The flow lines show that Function 1.5.7 (Transmit Data to Ground/CMS/EVA) normally will be performed without any of the preceding functions being involved.

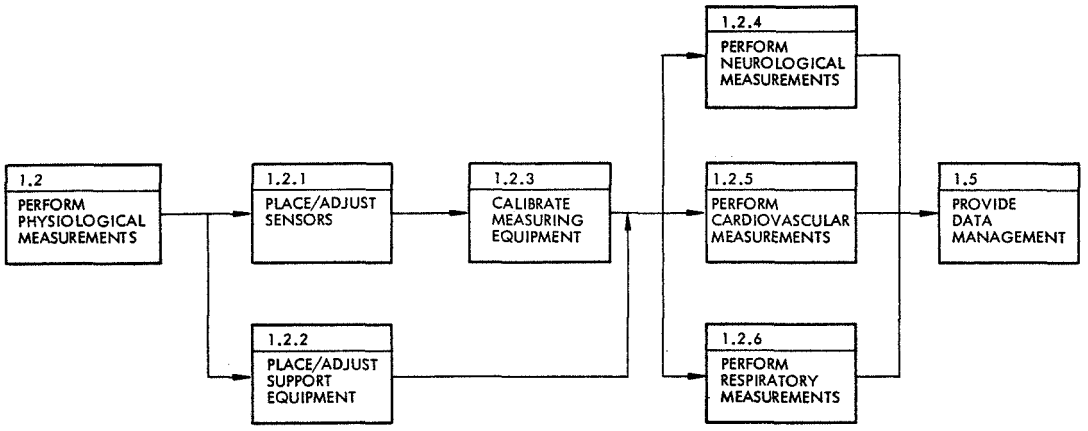

Fig. 5-3 Physiological Measurements – Function 1.2

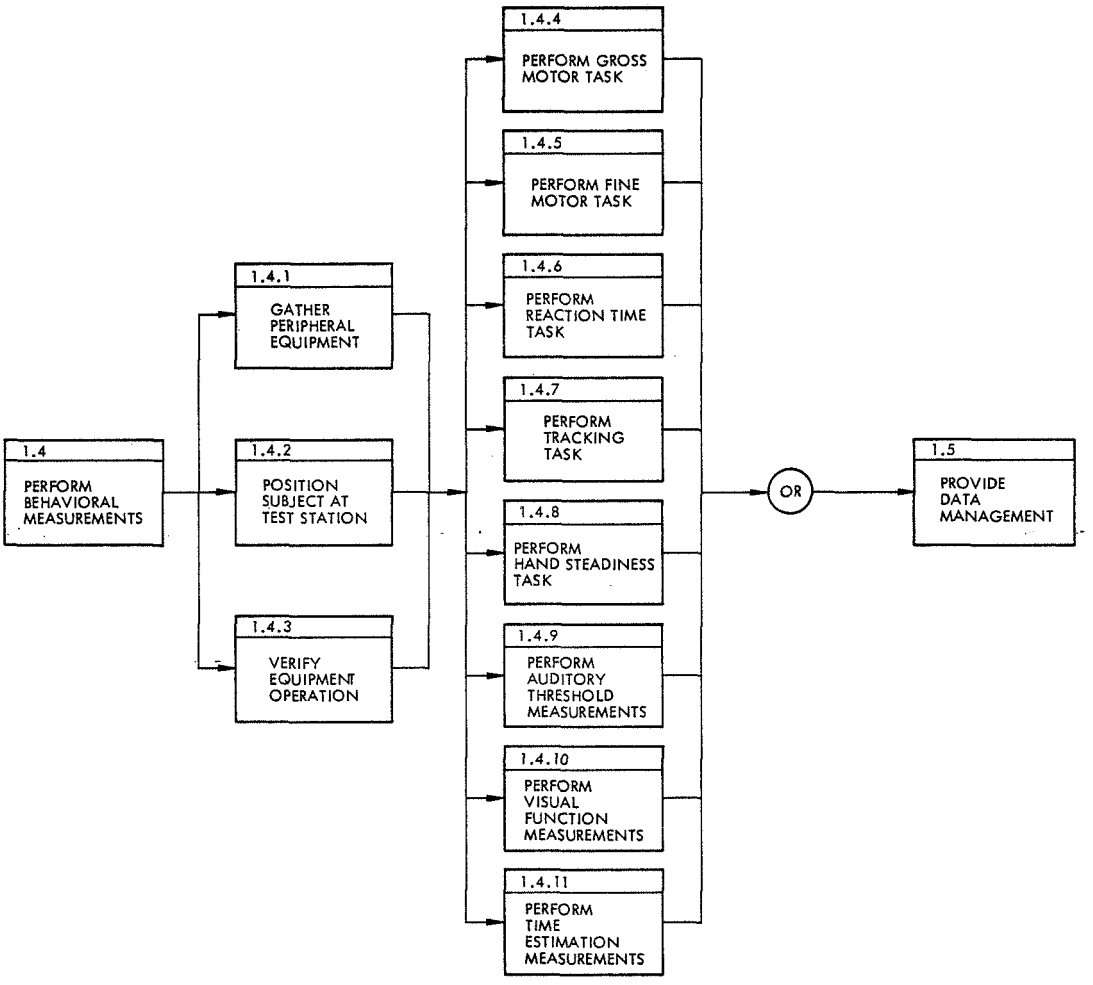

Fig. 5-4 Behavioral Measurements – Function 1.4

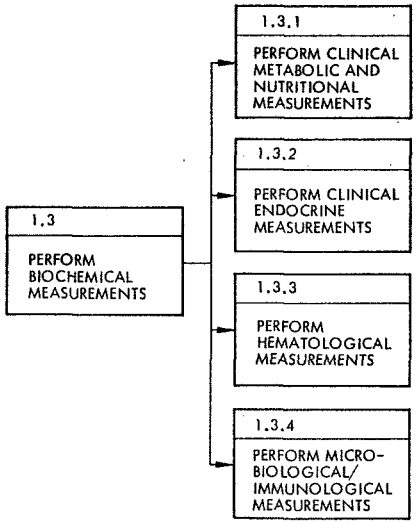

Fig. 5-5 Biochemical Measurements – Function 1.3

Fig. 5-6 Data Management – Function 1.5

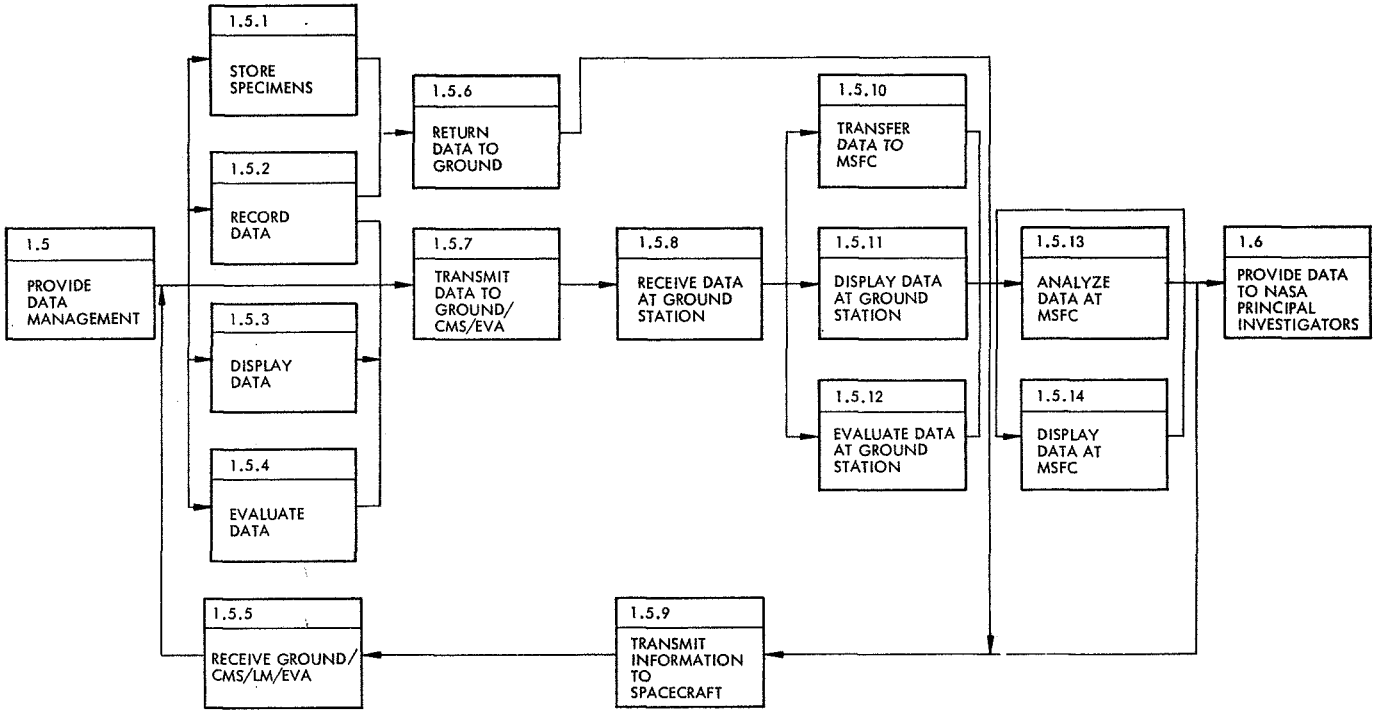

Figure 5-7 through 5-17 are functional flow diagrams for presently approved AAP medical experiments. The first function in each diagram initiates the functional flow sequence, and is followed by separate functional blocks for each experiment. Each experiment block is identified by the NASA M0 number (e.g., M018, M050, or M057), followed by the title of the experiment. The next lower functional level divides the experiment into discrete functions required for conduct of the experiment. These functions may denote lesser functions or tasks to be performed by man, equipment, facilities, or any combination of the three.

The diagrams permit the structuring of system requirements in functional terms and form the first logical step in the preparation of design requirements for the measuring equipment. The combined consideration of design requirements and the equipment diagrams provides a basis for an interface analysis between the experiment equipment and man, among individual items of equipment, and between the measurement system and the spacecraft. This analysis includes allowance for the constraints imposed by the space environment, operational procedures, experiment module, configuration, and the innate limitations of man.

5.1.2 Measurement/Equipment Requirement Summaries

The engineering evaluation summary for neurological measurements presented in Table 2-3 includes all major engineering parameters for the measurement of equipment. The type of data provided will comprise, when completely developed, a definite body of engineering data for all IMBLMS equipment. It will include information and data from major subcontractors and vendors producing or developing pertinent equipment.

A detailed measurement/equipment summary, representative of the AAP biomedical flights, is shown in Table 5-1. The table lists the requirements for approved AAP experiments recommended for the early version of the biomedical laboratory and includes estimates of performance characteristics for astronaut time involvement.

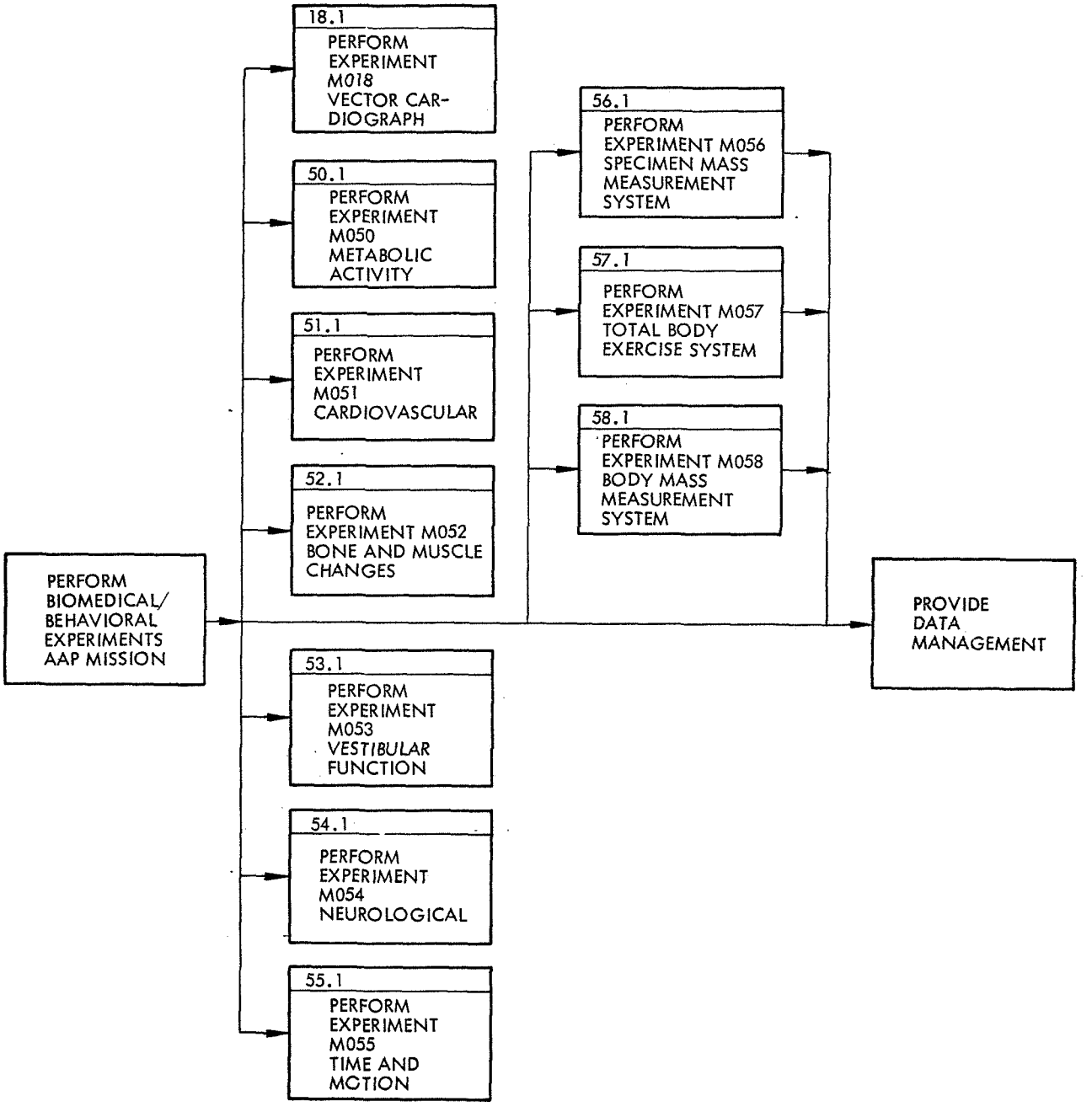

Fig. 5-7 Summary of Approved Medical Experiments for AAP

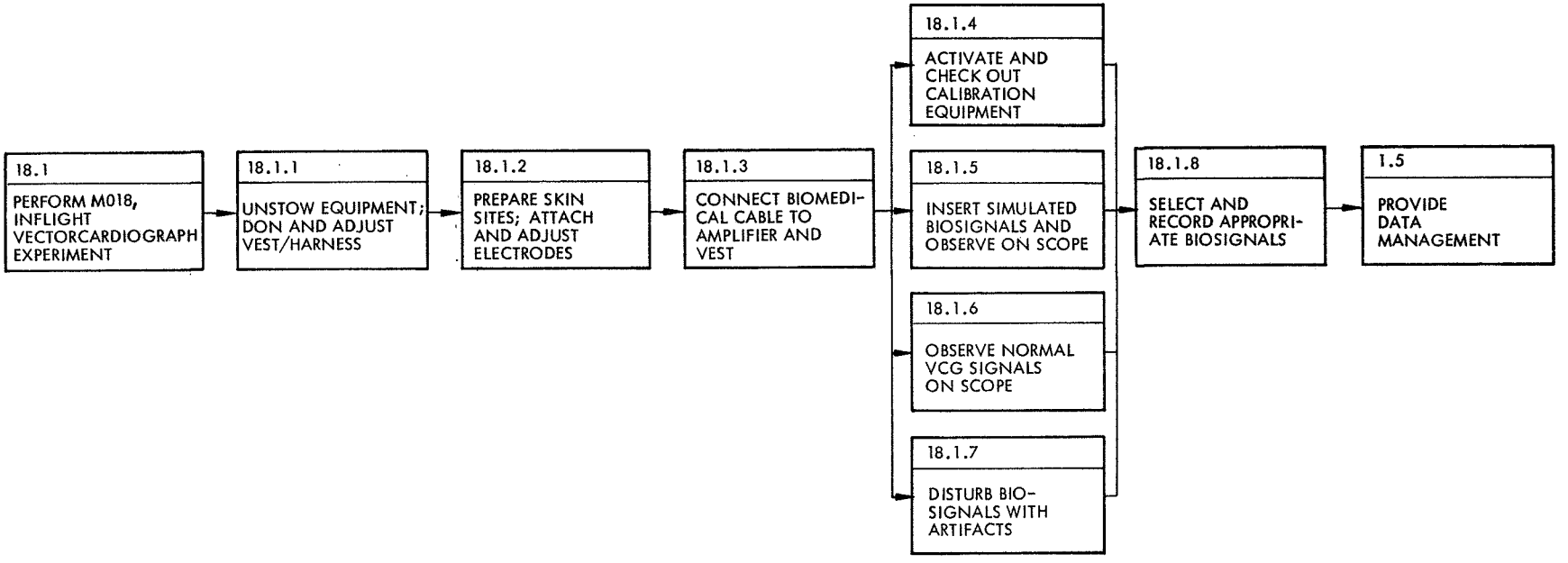

Fig. 5-8 Vectorcardiograph Experiment, M018 – Function 18.1

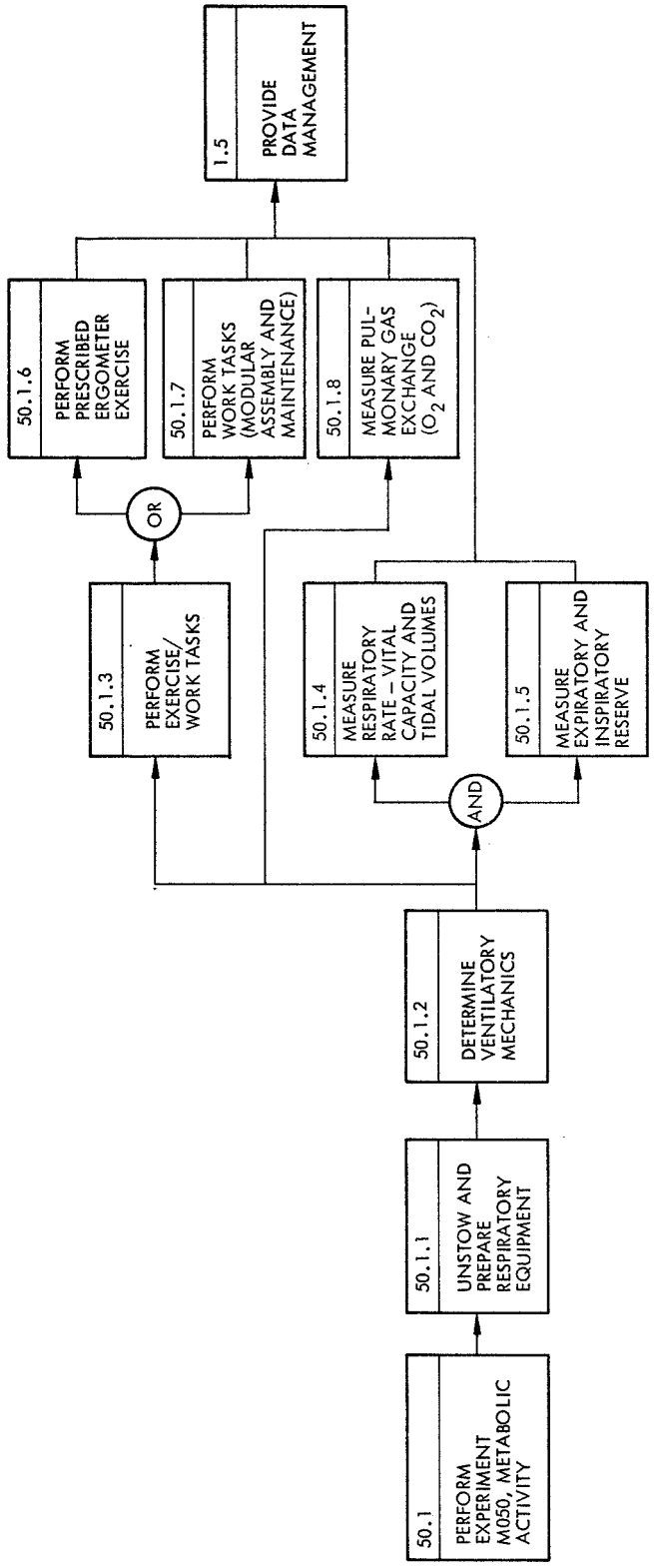

Fig. 5-9 Metabolic Activity, M050 – Function 50.1

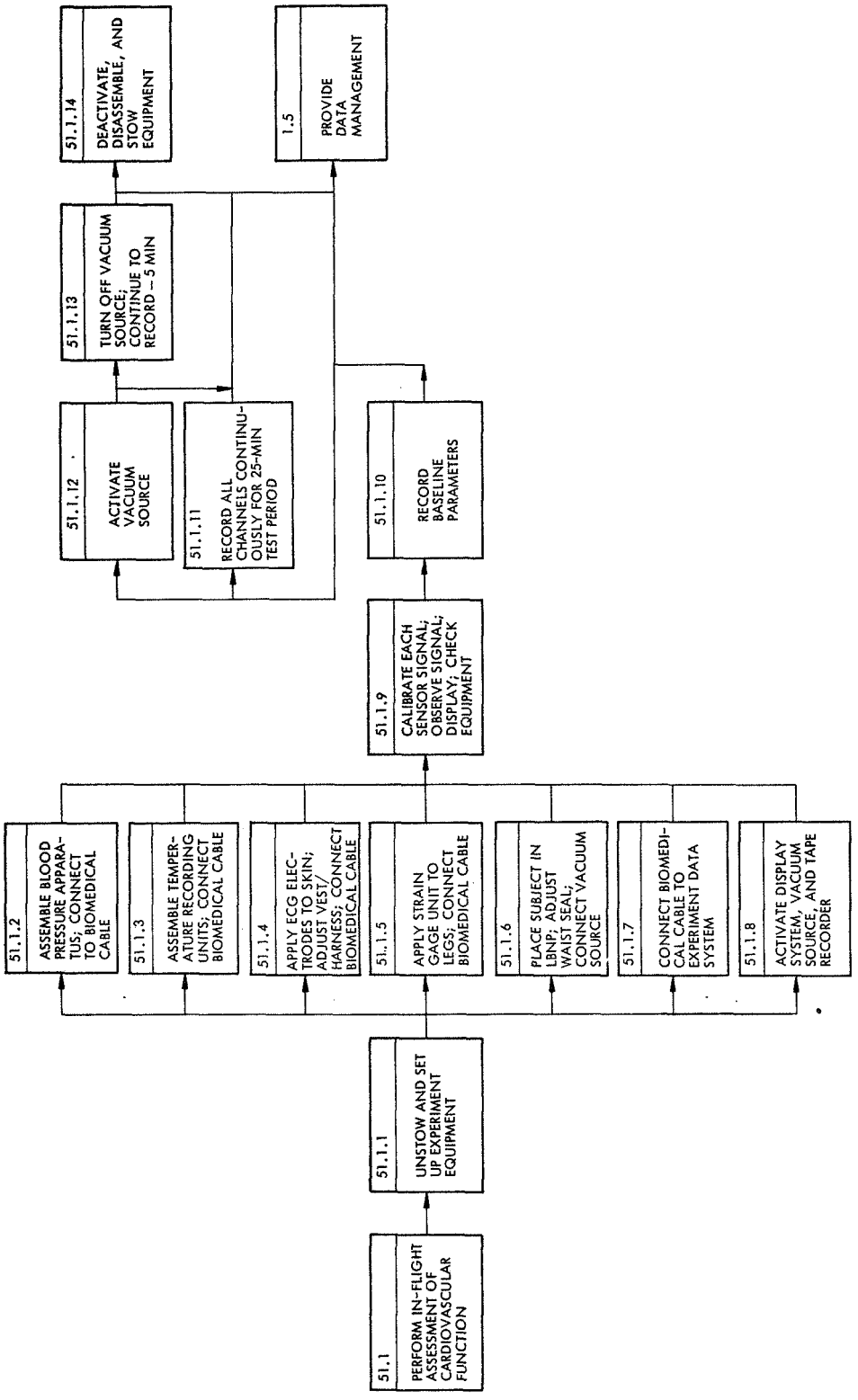

Fig. 5-10 Assessment of Cardiovascular Function, M051 – Function 51.1

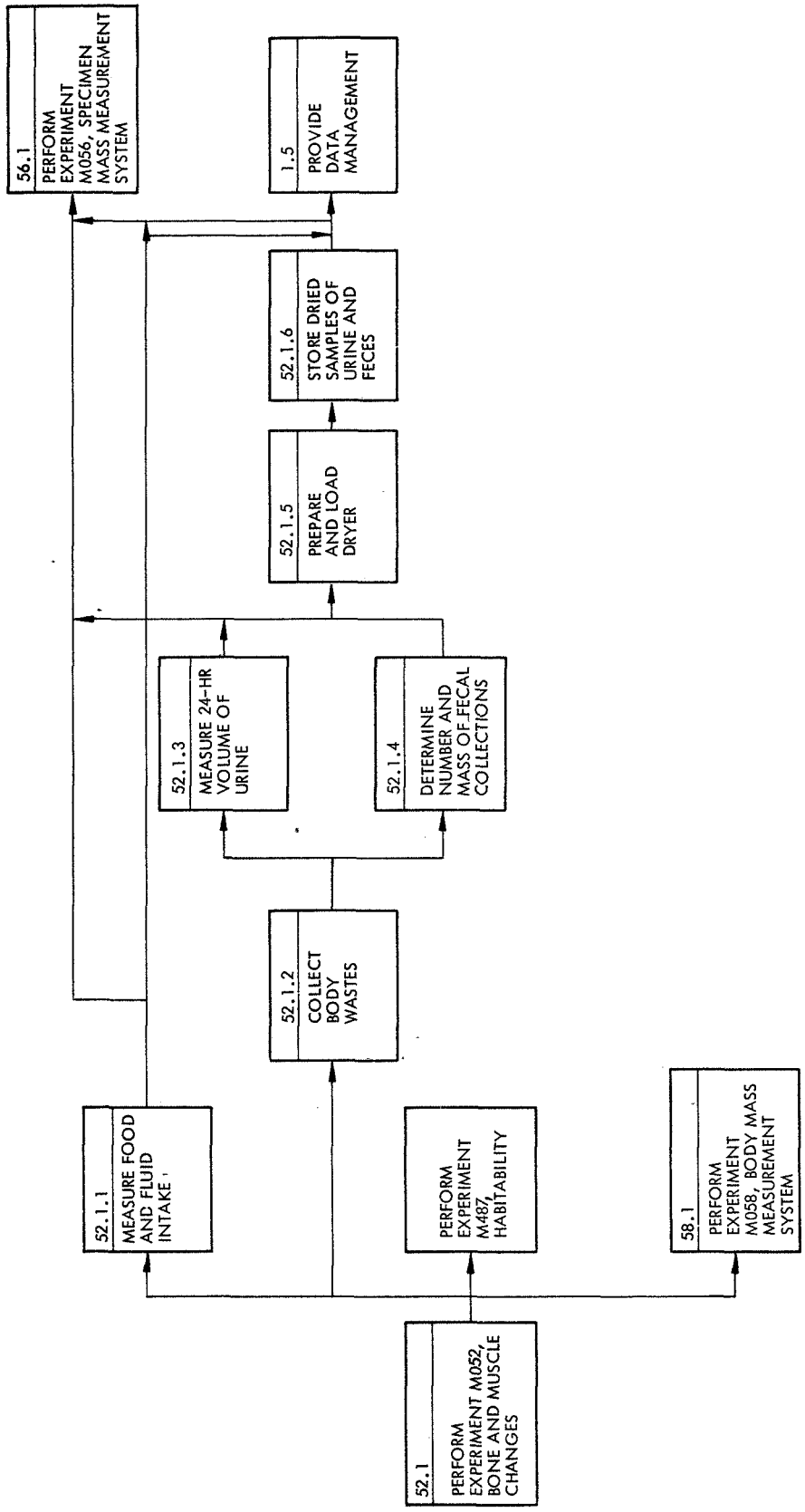

Fig. 5-11 Bone and Muscle Changes, M052 – Function 52.1

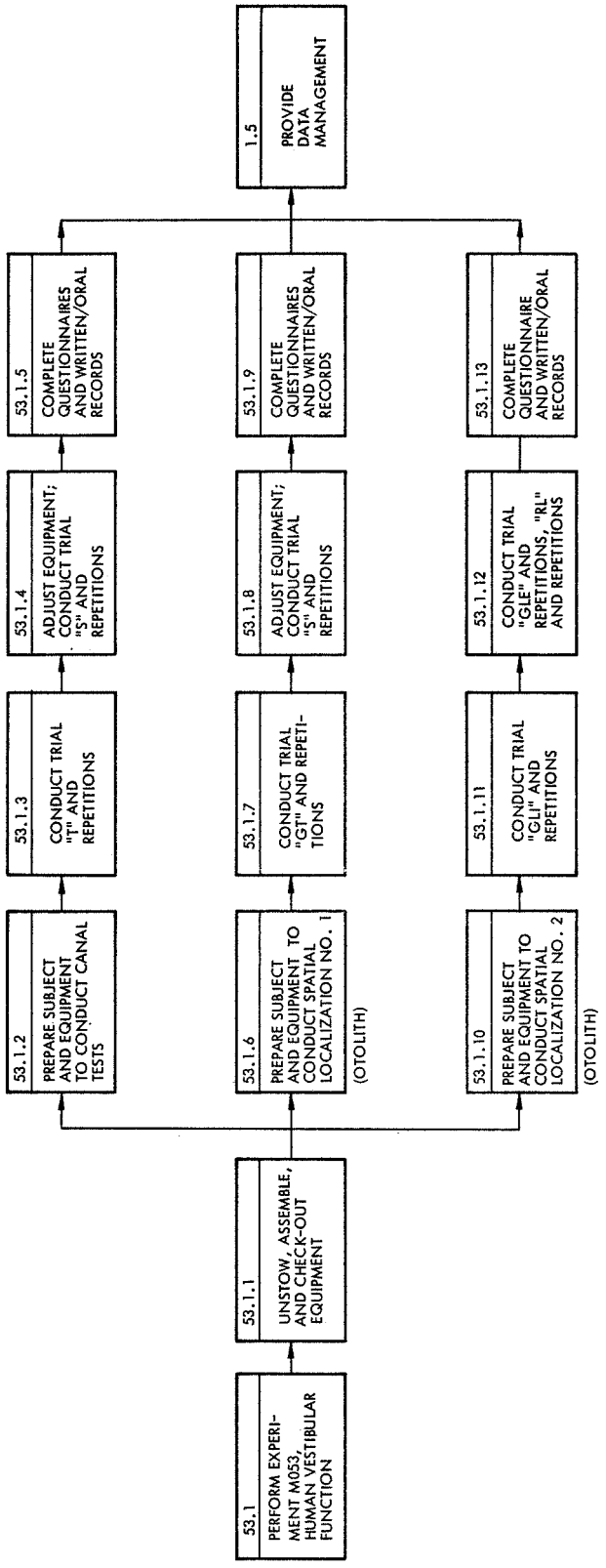

Fig. 5-12 Human Vestibular Function, M053 – Function 53.1

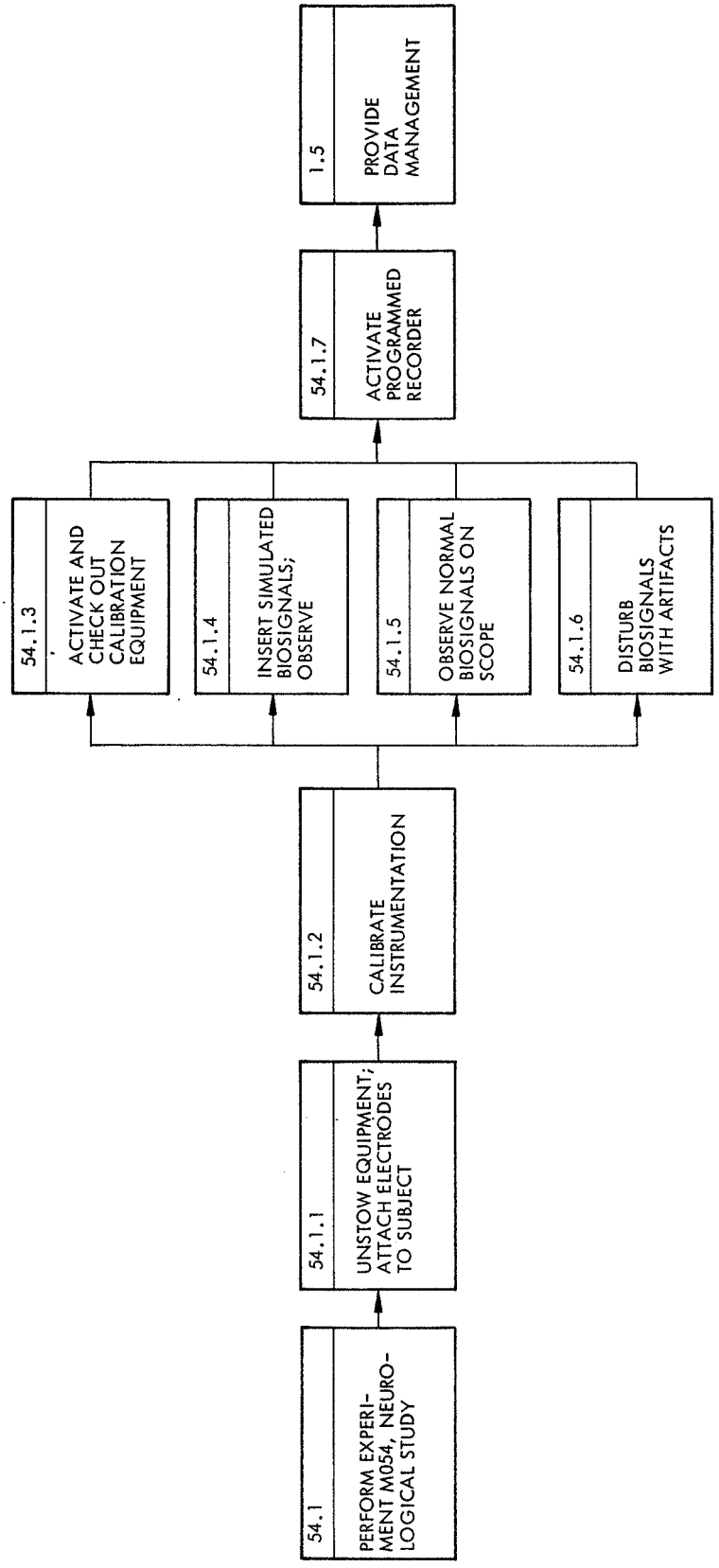

Fig. 5-13 Neurological Study, M054 – Function 54.1

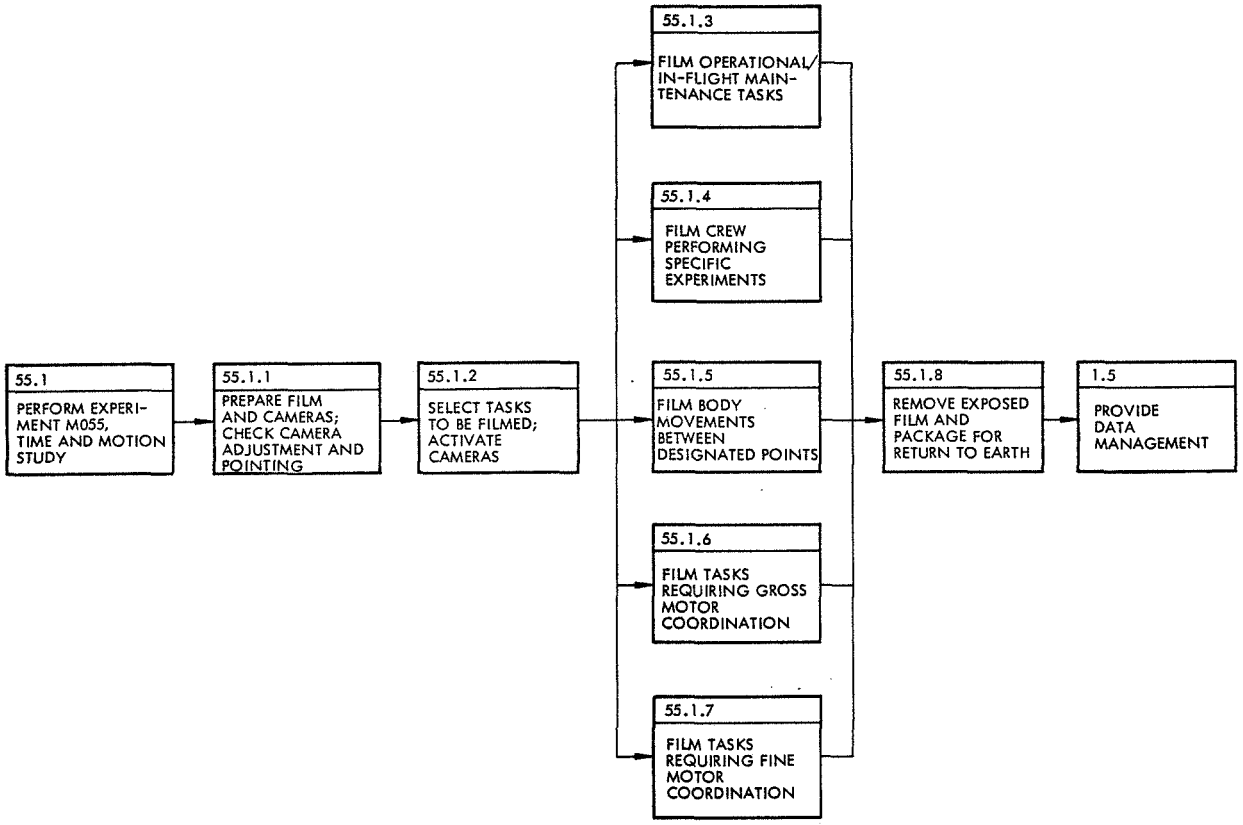

Fig. 5-14 Time and Motion Study, M055 – Function 55.1

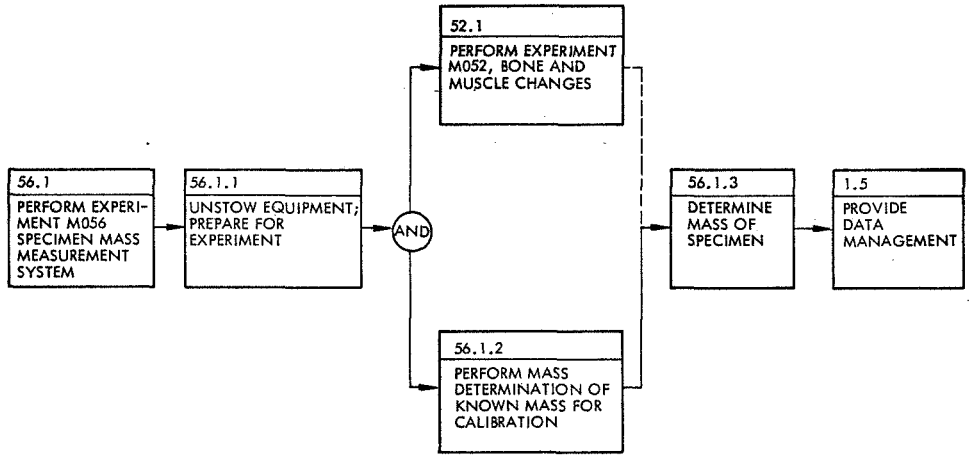

Fig. 5-15 Specimen Mass-Measurement System, M056 – Function 56.1

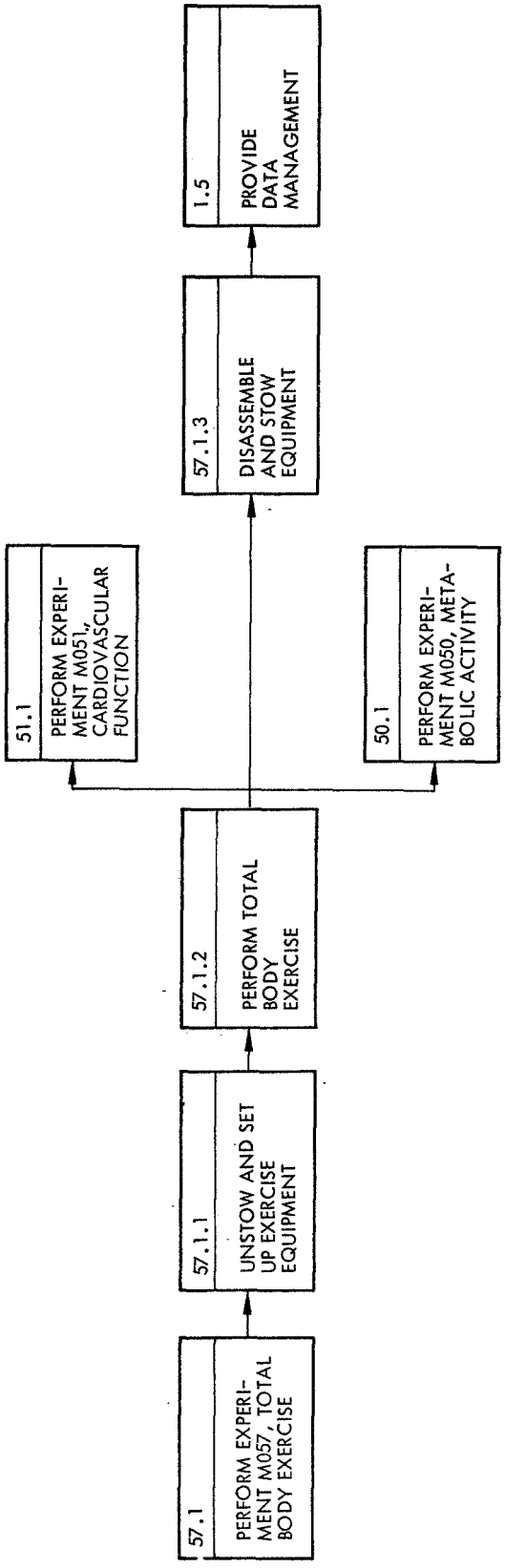

Fig. 5-16 Total Body Exercises, M057 – Function 57.1

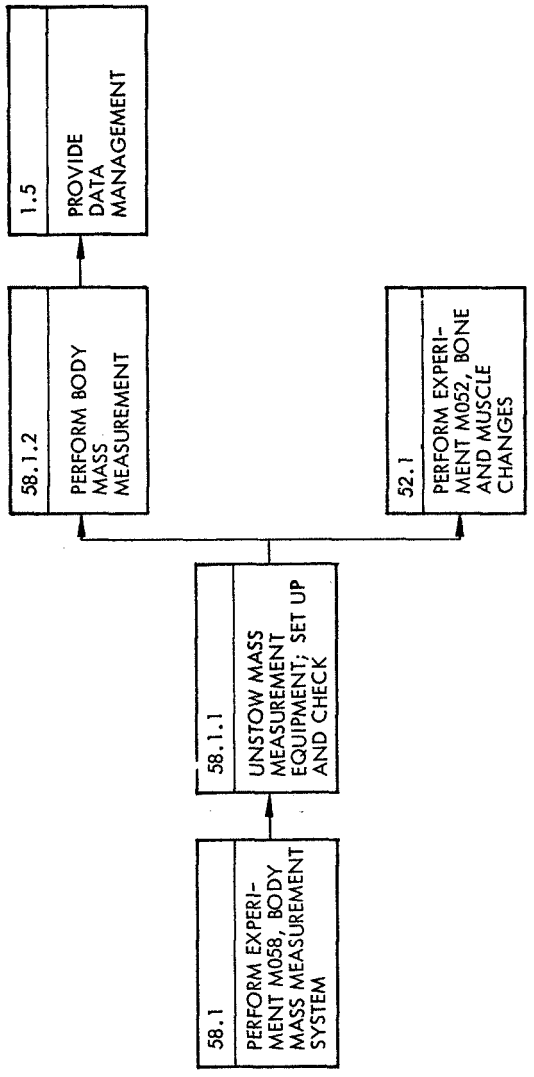

Fig. 5-17 Body Mass-Measurement System, M058 – Function 58.1

Table 5-1

REQUIREMENTS FOR IMBLMS EARLY VERSION – 30-DAY PERIOD

Exper. No.	Experiment Title	Weight (lb)		Volume (ft^3)		Average Power		Extent of Astronaut Effort		No. Times Conducted	Total Test Time (hr)
		Ascent	Return*	Ascent	Return	(w)	(hr)	Number	Time (hr)		
M018	Vectorcardiogram	4.7	2.5	0.5	0.25	1.1	15	3	2 ea.	5	30
M050	Metabolic Cost	98	2.5	8.5	0.1	62	13.5	3	6 ea.	3	54
M051	Cardiovascular Function	55	2.5	2.4	0.1	43	12	3	2 ea.	4	24
M052	Bone and Muscle Changes	47	2	1.3	0.1	35	11	1	0.5 ea.	28	14
M053	Human Vestibular Function	67	3.1	14	1	400	4	3	2 ea.	5	30
M054	Neurological Study	1	1	0.2	–	0.2	64	1	8 ea. (sleep)	8	64
M055	Time and Motion (Film)	12.5	12.5	0.5	0.5	40	4	3	0.5 ea. (monitor activity)	10	15
M056	Specimen Mass Measurement Device	28	1	0.6	0.3	–	–	3	0.05 ea.	28	4
M057	Total Body Exercise System	35	5	14	0.15	–	–	3	0.75 ea.	28	63
M058	Body Mass Measurement System	38	0	14	0	–	–	3	0.09 ea.	28	8
	Total	386.2	32.1	56	2.5	581.3	123.5	–	–	147	306

*Data or sample returned (for postflight analysis)

5.1.3 Engineering Design Requirements

The IMBLMS preliminary engineering design requirements have been established to provide guidelines for component and system development and to assure that interfaces between the IMBLMS and the spacecraft carrier are met. These requirements will be reviewed with NASA and will be updated to take advantage of current technology. They will include mission, overall IMBLMS, and IMBLMS/spacecraft carrier interface requirements. Various NASA, military, and industry specifications (Refs. 5-1, 5-2, and 5-3) particularly pertinent to the IMBLMS design, served as basic guides in the following discussion of these requirements.

5.1.3.1 Definition. On the basis of this current NASA literature, the following major definitions for the IMBLMS at various stages of its development, testing, and qualification have been established:

- Mass Mockup. An exact model of the IMBLMS with correct external dimensional configuration and with weight, center-of-gravity, functional controls, electrical connections, and mounting provisions of the flight hardware; need not be a functional model.
- Development Unit. IMBLMS unit developed to a design point where unit is representative of the flight prototype except that it may not conform to the prototype in terms of material and weight. It is space-oriented and similar in design and configuration to flight units complete with accessories, offers the same functional performance, and will be submitted to thorough examination to determine functional performance envelopes.
- Training Hardware. IMBLMS flight configuration for providing exact operation and manipulation characteristics and for demonstrating compatibility with other crew equipment and activities
- Prototype Hardware. Flight-qualifiable unit used in design-verification testing to finalize design concepts
- Qualification Test Hardware. Flight-qualifiable unit selected from first production units; qualification testing performed on this unit

- Flight and Backup Hardware. Flight units identical in design, configuration, and production processing to the qualification test unit (changes to the qualification test unit during qualification testing must be effected in these units before delivery to NASA. These units must be manufactured by means of the same production techniques as the qualification test unit.)
- Ground Support Equipment. Support equipment peculiar to the requirements of the various measurements; required for equipment evaluations, training, functional tests, and pre-installation tests
- Flight Support Equipment. Support equipment required to maintain the system operation for duration of the flight period

5.1.3.2 Mission Requirements. The primary objective of the AAP mission is to conduct long-duration spaceflights, using a variety of spacecraft and carrier assemblies. The major interest of the IMBLMS Program is concerned with those AAP missions specifically intended to permit the conduct of experiments in the biomedical area.

Mission-oriented requirements are associated with four major program phases:

- Preflight operations
- Launch and launch operations
- In-Orbit operations
- Recovery operations

Preflight Operations. The IMBLMS is to be capable of withstanding, without degradation, all preflight checkout operations from the completion of component fabrication to the time of launch. These operations will be specified in the Pre-Delivery Acceptance Test Plan and Procedures and the Pre-Installation Acceptance Test Plan and Procedure.

The nominal prelaunch procedures at the Kennedy Space Center for AAP flights have been investigated and compared with the IMBLMS requirements. This comparison indicates that, even though the SLA is normally closed 24 days prior to launch, IMBLMS

expendable material (particularly in the case of radioisotopes), may require installation as close to launch as possible. To provide this capability, critical IMBLMS components will be designed as an integral unit to be inserted into the payload at the latest possible time in the countdown. No additional access provisions in the SLA will be required.

Launch and Launch Operations. For all normal operations, the IMBLMS will be capable of withstanding, without degradation, all normal spacecraft operations from liftoff to earth touchdown. When not in use, the IMBLMS will be stowed in the selected carrier. When in use, it will be operated from any designated location such as the CM, LM, or OWS. Two possible modes – pressurized and unpressurized – are possible, depending on the location of the IMBLMS.

The system will be capable of withstanding, without degradation, spacecraft contingent flight operations resulting from unscheduled loss of cabin pressure and emergency temperature and radiation levels during spaceflight.

In-Orbit Operations. The IMBLMS will incorporate a caution and warning system for critical measurements. A communication system including voice and biomedical monitoring will be provided to and from all locations by the spacecraft. The IMBLMS will provide the necessary interconnects. Stowage provisions for film, slides, checklists, and other miscellaneous items at several locations will also be included to avoid additional transfer and duplication of time and effort.

Flexible data-recording equipment specifically designed for biomedical measurement will be provided in various locations. High-speed TV capability for astronaut dynamic monitoring, and low speed (one frame per second or slower) for microscopy and other medical data transmission will be required. The IMBLMS will be capable of operating under the natural and induced environment as specified. The IMBLMS also will be designed to display, control, transmit, and/or analyze medical and behavioral measurements for both the intrastation and the EVA modes.

Data management and control for the IMBLMS will be an integral part of the overall design. On-board evaluation capability will be provided, together with a capability for transmittal or physical return of data to the ground. The physical return of data to the ground will be accomplished by transferring film, samples, slides, and similar items to the CM during resupply maneuver or possibly to a data capsule for subsequent ground recovery. IMBLMS communication requirements will be compatible with present or planned NASA ground networks.

The general operating constraints and requirements for the IMBLMS may be summarized as follows:

- Performance task scheduling should be compatible with mission activities.
- Measurement period scheduling should fall within the same diurnal phase of each subject's work/rest cycle.
- Environmental temperature, pressure, humidity, and air composition should be kept as constant as possible for successive experimental runs.
- Subjects will wear constant-wear garments (CWG) during all experimental sessions except where measurements specifically require donning of pressurized space-suits.

Recovery Operations. Extensive postflight analyses are scheduled for biospecimens, photographic material, and other data obtained during the IMBLMS operation. In some instances, it will be necessary to protect this material from adverse environmental factors, such as high temperature, humidity, and salt. Recovery packages will be specifically designed to afford protection, and returned data will be collected as soon as possible after reentry.

An integral part of the recovery operation is the postflight data analysis. The IMBLMS function is to present to the investigators valid flight data that can be compared with the baseline data collected on the ground during preflight and postflight measurement.

5.1.3.3 Performance Characteristics. The IMBLMS will be designed to provide sufficient measurement capability for supporting experiments presently approved and those that are planned. It will be sufficiently flexible to accommodate additional modules for specific experiments that develop as a result of new findings, unanticipated space environment effects, and/or changes in experimental procedures.

A major objective for the IMBLMS is to provide measurement coverage for long-duration AAP missions up to 1 yr. To achieve this objective, the IMBLMS must have the following performance goals:

- Reliable performance for mission periods up to 1 yr
- Provision of adequate interfaces with overall mission operations
- Supply of detailed logistic support requirements for resupply modules
- Minimum personnel training requirements except in those areas requiring medically trained personnel
- Minimum weight, power, and volume
- Efficient utilization of experiment time by crew

5.1.3.4 System Engineering Documentation. System analysis will produce documents covering experiments, missions, and interfaces. A Measurement/Equipment Data Book, to be issued for each mission, will firmly establish measurement requirements for the particular mission. A Mission and Measurement/Equipment Requirements Document, specifically related to the IMBLMS, will be prepared and used as a preliminary planning document until a detailed Flight Operations Plan is published. Preparation of the requirements document has been initiated in Phase B and will continue throughout Phase C with updating in Phase D.

Interface Control Documents (ICD's) will be prepared for each experiment and will specify all mechanical, electrical, power, thermal, data subsystem, and GSE interfaces. Preliminary ICD's will be coordinated with the principal investigators, equipment contractor, and NASA, and mutually agreed upon before firm definition of the measurement complement prior to flight.

5.1.3.5 Operability. The IMBLMS operating mode is primarily in a normal spacecraft environment except for a possible exposure to the space environment during an EVA emergency. The following requirements will apply:

- Reliability Goal. The reliability goal for the IMBLMS is at least 3,000 hr MTBF under any combination of loads and environmental design requirements. Analysis will be performed to substantiate the 3,000-hr prediction. Limited operating-life tests will be performed on the IMBLMS Qualification Unit as part of the reliability tests, and will include a total of 100 hr of testing in 1-hr increments, as specified in the Test Plan.
- Ground and Flight Maintainability. Basic requirements for the IMBLMS are the provision of the support necessary to maintain system operation for duration of the flight period, and for meeting the performance level required by the equipment evaluations, training, functional tests, and pre-installation tests conducted as necessary during ground functions. The IMBLMS will be designed to permit removal and replacement of submodules without access to their interior and with minimal disturbance to the integrity of other submodules. In-flight system maintenance will be evaluated but probably limited to cable switching, submodule replacement, connecting wire, and troubleshooting.
- Useful Life. The maximum-duration mission planned for AAP is approximately 70 to 90 days with resupply capability to extend mission time up to 1 yr. Estimates of time-line testing and equipment use indicate that a target useful life of 3,000 hr is reasonable over a time period of 1 yr. The specific test to verify this requirement will be detailed in the Test Plan.
- Shelf Life. The IMBLMS design must allow for a minimum shelf life of 3 yr under normal warehouse conditions and for storage for 1 yr under high vacuum conditions.
- Natural Environment. Two modes – non-operating and operating – are to be specified as indicated in Table 5-2.
- Transportability. The IMBLMS must be designed to permit its passage through a 43-in.-wide hatch. The overall envelope dimension must be within

Table 5-2

IMBLMS ENVIRONMENTAL MODES

Aspect	Requirement
Non-Operating	
Temperature	22° to 166° F
Pressure	25 psia to 1×10^{-6} mmHg
Relative Humidity	15% to 100%
Oxygen Atmosphere	20% to 100% oxygen
Acceleration	0 to 7 g
Random Vibration	
20 to 100 Hz	Linear increase (log by log plot) from 0.001 g^2/Hz to 0.075 g^2/Hz
100 to 500 Hz	Constant at 0.075 g^2/Hz
500 to 1,000 Hz	Linear decrease (log by log plot) from 0.075 g^2/Hz to 0.015 g^2/Hz
1,000 to 2,000 Hz	Constant at 0.015 g^2/Hz
Acoustic Noise	130 db max.
Salt Fog	5% salt solution
Shock	30 g
Meteoroid Impact	MSC Design Standard DS-21
Operating	
Temperature	40° to 100° F
Pressure	5 psia to 15 psia
Relative Humidity	15% to 100%
Oxygen Atmosphere	20% to 100%
Acceleration	0 to 1 g
Salt Fog	5% salt solution
Electromagnetic Interference	MIL-STD 826
Radiation	4 mr/ft^2/day

20 in. × 30 in. × 40 in. If separate packaging or a canister is provided, these envelopes must be within the foregoing limits.

- Electromagnetic Interference. The fundamental requirement of the IMBLMS interference control program is compliance with the system electromagnetic compatibility requirements of MIL-E-6051. Such compliance will be demonstrated by test and analysis in accordance with MIL-STD-826. A detailed EMI Plan will be developed.
- Human Engineering. Human engineering design requirements for the IMBLMS will be specified in MSFC-STD-267A, and GSE design criteria will be as required by MSFC-STD-267A and MIL-STD-803-1. Training equipment design criteria will be as specified in MSFC-STD-267A, MIL-STD-803A-2, and MIL-T-27474.
- Crew Safety. The probability for crew safety will be determined by the performance of reliability analysis early in the design effort. Preliminary considerations indicate that any potential malfunctions can be successfully met by packaging, shielding, and/or location of the IMBLMS.

5.1.3.6 General Project Design and Construction Standards. These standards, discussed in the following pages, have been selected to ensure that the equipment will meet functional and safety requirements.

Materials. The materials selected for IMBLMS use must withstand, without deterioration, the environment to which the system will be exposed during the mission and be capable of accomplishing the IMBLMS purpose at any time its use is scheduled. Materials that may emit radiation or toxic or noxious products while stored or operated under the specified service conditions will not be used. The following standards and requirements will apply:

- Metals. All metals selected for use will be resistant to the specified environmental conditions or protected from such an environment by a suitable protective coating. The use of cadmium or zinc is prohibited.

- Electrolytic Corrosion. If dissimilar metals (as defined in MS-33586) are used in physical contact, they must be suitably coated or otherwise protected from the ambient atmosphere. The protection used will provide a low impedance path to radio-frequency currents.
- Corrosion Resistance. Corrosion-resistant materials, or those suitably processed to resist corrosion, will be used. Protective coatings may not crack, chip, or scale with age or under the anticipated environmental extremes.
- Shatterable Material. Shatterable material will not be used unless positive protection is provided to the astronauts.
- Oxygen Environment. Materials used will be of such composition as to prevent the liberation of toxic fumes, irritating vapors, noxious or objectionable odors, or the initiation of combustion in the oxygen environment.
- Nonmetallic Materials. Nonmetallic materials, if used, will be of a type not subject to failure or deterioration under the specified environmental conditions. Flash, fire, and autogenous ignition points of the materials will be higher than the maximum temperature to which they will be subjected. Nonmetallic materials used in equipment to be exposed to the oxygen environment must meet the evaluation and procedure requirements of MSC-A-D-66-3. (See Ref. 5-4.)
- Lubricants. The use of lubricants will be minimized; petroleum-based lubricants will not be used.
- Wear-Generated Particles. The equipment design will minimize the release of particles generated by the wear of moving parts.
- Fungus. Fungi nutrient materials will be avoided, if possible; if required, they will be protected with a suitable fungicidal agent in accordance with MIL-T-152.

Ignition Proofing. The system will be designed so as to ensure against ignition of an explosive mixture in the spacecraft atmosphere.

Orientation. Operation or calibration of the system will not be affected in any way by physical orientation of the system.

Standard Parts. Standard Parts, Air Force-Navy (AN), Military Standard (MS), or Joint Air Force-Navy (JAN) parts will be used wherever suitable, provided they conform to the remaining IMBLMS requirements.

Pyrotechnic Devices. Pyrotechnic device design will comply with the Manned Spacecraft Criteria and Standards Bulletins. Further, compliance with any special requirements imposed on such devices by Range Safety at the Kennedy Space Center is mandatory. Identification requirements for explosive devices will be supplied and must include a checklist necessary for handling, storing, installation, and use.

Interchangeability. Flight and backup hardware will be physically and functionally interchangeable. All subassemblies or components bearing the same part number will be physically and functionally interchangeable.

Workmanship. Workmanship will be of a quality consistent with IMBLMS performance and reliability requirements and reflect high quality spacecraft practice. All surfaces will be smooth and free from burrs, chips, and particles. Sharp edges or corners or external protrusions which could damage a space suit will be avoided.

Protection Against Radiation. Equipment design will reflect consideration of the possibility of hardware degradation caused by exposure to electromagnetic and/or particle radiation at altitudes ranging from 200 nm to synchronous orbits. Both high- and low-inclination orbits will be considered. Radiation from internal sources such as radioactive tracer injectables must be fully controlled.

Calibration. Calibration devices and methods will be furnished.

Identification of Product. Equipment will be marked in accordance with MIL-STD-130. The following information will be engraved on the equipment:

- Item name
- Manufacturer's part number
- Manufacturer's serial number
- Operation controls identified as to function
- NASA control number

Structural. A structural safety factor of 1.4 will be used as the standard value in structural design to determine ultimate loads (limit loads multiplied by the safety factor).

Mechanical Interface. Mechanical alignment and attachment requirements will be coordinated as part of the Interface Control Documents. Details of this mechanical interface will be specified at a later date.

Drawings. Engineering drawings will be furnished. They will be prepared in accordance with the requirements of MIL-STD-1000, Form 2, Drawings to Industry Standard (Partial Military Controls). In Phase C, initial drawings to Form 3 level will be furnished.

Storage. The system will be capable of fulfilling its mission after being stored for two years, providing that the necessary maintenance is performed.

Electrical Design. Following are requirements to be considered in the design of the IMBLMS electrical components:

- Power Requirements. The equipment will utilize spacecraft power for its operation. Since the spacecraft power source provides unregulated direct current, ranging from 22 to 34 v, the equipment must be able to withstand, without damage, continuous operation on under-voltages ranging from 18 to 22 v and on over-voltages ranging from 34 to 37 v. It must be able to perform satisfactorily within 30 sec after return to the normal operating voltage.

- Transients. The equipment will be capable of withstanding transient surges of 10 times the rated power supply voltage for a duration of 5 μsec (as demonstrated by use of Test Method 5006 of MIL-STD-826). The equipment must be able to survive negative 28-v and positive 15-v pulses with a rise time of 8 ms, a duration of 20 ms, and a random pulse repetition frequency.
- Ripple. The equipment must be able to withstand, without performance degradation in excess of 1 per cent, a 4-v peak-to-peak ripple (d-c to 2 kc square wave) imposed on the power input.
- Reflected Audio Ripple. The reflected audio ripple is not to exceed 0.03 v peak-to-peak.
- Voltage Input Polarity. A means will be provided for preventing equipment damage by application of a reverse polarity of input voltage.
- Warm-Up Time. The equipment will be designed to permit power shutoff for extended periods and to provide specified performance within 1 min after power is resumed.
- Protective Devices. The system will incorporate circuit breakers or other protective devices for protection against short circuits.
- Electrical Connectors. The spacecraft interface connectors to be used will be specified by NASA-MSC at a later date.
- Outputs. A single electrical output will be available from each of the biomedical transducers for recording, display, and similar functions. The electrical design will assure that a short circuit on one output will not change any other output by more than 1 per cent.
- Output Range. The voltage range for each of the outputs to be supplied by the contractor will be 0 to 5 vdc.
- Output Impedance. Each of the voltage outputs for contractor-supplied transducers shall have an output impedance of 200 ohms or less.
- Adjustments. Wherever possible, zero and span adjustments will be provided internally for each of the contractor-supplied transducers to permit a plus and minus 10 per cent of full-scale (± 0.5 vdc) adjustment of the 0 and 5-v output limits.

- Motors. Motors utilizing mechanical commutation or slip rings shall not be used unless hermetically sealed.
- Wiring. All electrical wiring will be insulated with Teflon.
- Electronics. All solid-state construction will be used for the IMBLMS. Integrated circuits will be used, wherever practical, to minimize weight, size, and power consumption.
- Electromagnetic Interference. The equipment shall be designed and built with respect to electromagnetic interference, to meet the requirements of MIL-E-6051 and tested in accordance with MIL-STD-826. A minimum d-c isolation of 20 MΩ at 100 vdc will exist between power input and signal circuits and grounds. Grounds shall be carried on wires to the interface connectors and be d-c isolated from the housing by at least 20 MΩ at 100 vdc.
- Sealing. All electrical connections not hermetically sealed from the spacecraft atmosphere will be potted. Before potting, all Teflon wires will be etched in accordance with MSC-SPEC-Q-3.
- Crimping of Electrical Connectors. Crimping of electrical connectors will be performed in accordance with JC-001.

5.1.3.7 Development Test Requirements. The purpose of the development tests is to provide individual items of equipment with demonstrated capability to meet all program objectives. These tests will also provide additional information for evaluating the feasibility of the design concept or for demonstrating that the equipment will operate as expected. Requirements for these tests may be relatively fluid with changes being made as information is obtained.

Since the development test program encompasses all the test activity preceding the formal qualification testing, it is anticipated that testing at several levels of detail and formality will be necessary. Breadboard tests will be conducted with a minimum of formality and documentation. Materials tests will be performed in accordance with test procedures accepted as good practice in the aerospace industry. Each major development demonstration test will be performed in accordance with a formal

Test Specification. Development demonstration test procedures will be applied to components for verification and demonstration of the final design. These tests will encompass a series of functional performance-and-use environmental tests in order to establish functional performance envelopes, constraints, and capabilities, and to verify operation in the use environments.

5.1.4 Safety and On-Orbit Maintenance

Provision for safety and on-orbit maintenance are two major and interrelated aspects of the IMBLMS design.

5.1.4.1 Safety. Identification, classification, and analysis of hazardous events constitute an integral aspect of the LMSC design effort. Each item of equipment will be examined thoroughly during IMBLMS development, together with a detailed scrutiny of the integrated system. The approach to defining the criticality level of the IMBLMS will proceed in the following sequence:

- Postulate emergency situations and develop related detailed information
- Establish reasonable estimates concerning the relative probability of the emergency occurring
- Establish an understanding of the sequential history that takes place during emergencies with regard to the equipment, vehicle, and crew
- Develop an intelligent interpretation of reliability history regarding component and subsystem failure and crew interaction to apply corrective techniques, methods, and equipment that can alleviate or reduce the hazard to permit initiation of escape action

Equipment Safety Evaluation. The IMBLMS has major measurement equipment, display electronics, and peripheral experiment equipment that is subject to both mechanical and electrical failure. In the majority of cases, adequate protection can be afforded by appropriate packaging design, location in the spacecraft, and protection against known environmental hazards; due consideration for such operational aspects as

activation and maintainability; and emergency factor considerations such as fail-safe capability, detection capability, etc. An example of the evaluation applied to each item of equipment is shown in Table 5-3 which shows the most common hazards (e.g., fire or explosion) and their effects on equipment operation and crew interaction. The ergometer was selected since it normally employs both mechanical and electrical parts and is used under fairly high stress conditions. Other equipment proposed for use in the IMBLMS that will require careful examination for possible hazard includes radioisotope injectables, biochemical reagents, staining material, and equipment that interfaces with vacuum sources or which utilizes motors.

Protection of the IMBLMS Against Meteoroid Hazard. The IMBLMS experiment equipment may be located in any one of several spacecraft (e.g., CM, MDA, LM, AM, or S-IVB OWS). Initially, the equipment will probably be launched in experiment canisters located within the MDA. Upon activation of the S-IVB OWS spacecraft, it is planned to transfer the IMBLMS experiment equipment into the OWS experiment area. It is likely that the IMBLMS equipment for the most part will be permanently located in this spacecraft. The extent to which the OWS area provides protection against meteoroid puncture is of primary concern with respect to the IMBLMS. In this connection, an 0.25-in. aluminum meteoroid bumper, placed 5 in. from the S-IVB tank wall, will probably provide adequate protection against hazardous or damaging penetration for a 1-yr period and thus during the AAP 1969-70 time period. During deactivation periods within this time span, the IMBLMS equipment will probably be enclosed in protective experiment canisters.

5.1.4.2 On-Orbit Maintenance. The maintenance philosophy for IMBLMS is directly related to the general concept of space maintenance as applied to the AAP. The following considerations are included:

- Fault isolation by automatic or semiautomatic checkout performed by equipment located either in the space station or on the ground
- Restoration of subsystem to active status by module replacement

Table 5-3

SAFETY EVALUATION FOR ERGOMETER

Hazard	Possible Causes	Effect on Personnel	Degree of Emergency	Time Required to Affect Personnel	Time Available For Corrective Action	Means of Detection	Corrective Action
Fire	Electric heating Friction causing high temperature Electric spark Mechanical impact spark	Effect of heat and smoke on astronaut respiration, eyes, and skin	Minor if localized, otherwise major	2 min	2 min	Olfactory, visual, spacecraft sensors	Manual extinguishing Disconnect damaged electric circuits
Toxic Gas	Fire Improper material	Toxic effect on astronaut respiration, eyes, and skin	Minor	3 min	Indefinite	Spacecraft sensors (gas analyzers), smell	Depressurize, Repressur Repair equipment
Explosion	Ignition of combustible wear-generated particles	If confined, damage to ergometer case; if case broken, flying fragment injury to personnel	Major	Instantaneous	Indefinite	Auditory, visual	Repair or jettison
Structural Failure	Inadequate design Faulty material Damage Space radiation Wear, fatigue Faulty manufacture	Injury to astronaut	Major	Instantaneous	Indefinite	Visual, auditory, tactile	Repair or jettison

- Limited repairs by manual methods; such repairs confined primarily to emergency action required to preserve or sustain life or to prevent catastrophic mission failure
- Limited system re-verification by on-board equipment or through the existing communication links to ground-based equipment

The IMBLMS on-orbit maintenance tasks vary although the basic skills remain nearly the same. Following are some potential maintenance tasks examined with respect to on-orbit maintenance activities:

- Connecting Wires. In an electrical/electronic subsystem specifically designed for in-space maintenance, it seems improbable that wire and connection repair will be a common or frequent task. However, it is possible that wire and conductor repairs may be required occasionally on station power systems or, perhaps, for in-space assembly operations. Crimping or wrapping appears far more appropriate than soldering.
- Troubleshooting. Troubleshooting is the most complex task in the spectrum of maintenance technologies. It consists of fault detection, fault location, and fault isolation. Troubleshooting requires a maximum degree of skill and resourcefulness, particularly in the case of space systems. Those malfunctions which cannot be isolated by automatic means are the type which demand the greatest interpretive capability. They include intermittent problems, loose connections, and malfunctions which cross-feed through a system and cause malfunction indications in unrelated system areas, but which do not indicate in the portion of the system which is malfunctioning.
- Repair. Actual equipment repair (once a malfunction has been precisely located and isolated to a repairable element) is usually a comparatively simple task but occasionally will require high mechanical and mental skills. Repair work is generally accomplished by removal and replacement of the malfunctioning unit. If good design has provided adequate accessibility, this activity presents a minimal problem.
- Remove/Replace. The remove and replace philosophy apparently will govern the major maintenance performed on the IMBLMS during on-orbit operations.

Since the IMBLMS experiment modules are small, compact and easily removable units, the remove/replace approach is probably the most feasible and desirable for this function.

Spares for IMBLMS experiment modules can be transported in the MDA or in any LCSM/RCM vehicle programmed for revisit and resupply. Common support and critical measurement modules are two types of modules which should particularly be programmed for thus receiving spares and provisioning.

No skill requirements are necessary for removal and replacement for on-orbit maintenance of IMBLMS modules.

5.2 RELIABILITY REQUIREMENTS

Reliability and quality assurance support to the IMBLMS Program is supplied by the LMSC R&D Product Assurance organization.

5.2.1 Design Specifications

NASA directive specifies that NPC 250-1 (Ref. 5-5) is to be used as a guide for conduct of the IMBLMS reliability program. Response to this directive requires that the following actions be taken:

- Interpretation of NASA reliability requirements as reliability specifications applicable to each design associated with the IMBLMS; such specifications to be included as basic portions of each overall design specification issued
- Review of each design drawing and specification before release and approval by the responsible reliability engineer to ensure compliance with all pertinent reliability requirements
- Review and approval of all procurement specifications by the LMSC Product Assurance organization to ensure that vendors and/or subcontractors are aware of the requirements with which they must comply

5.2.2 High Reliability Parts Programs

High reliability parts, as specified in Ref. 5-4, will be employed throughout the design phase of the program. Electronic parts will be purchased and treated in a fashion similar to that employed for parts used on the Apollo Spacecraft Program. Parts selection will be undertaken by the responsible reliability engineer working with design engineering, and the use of all such parts will be reviewed to ensure their proper application and derating, in accordance with the derating procedures set forth in Ref. 5-5.

5.2.3 Reliability Prediction and Estimation

Starting with the initial design concept, reliability predictions will be made to estimate the inherent reliability of the designs as configured. Such predictions will be updated as design changes occur. Where alternate designs are to be considered, tradeoff analyses will be performed on the basis of the best available compromise between reliability, weight, size, power, maintenance, and cost. Since elements of the IMBLMS system are space maintainable, at least to the module replacement level, the reliability will be assessed considering the effects of both remedial maintenance as a consequence of failure and of regularized maintenance associated with experimental aims of the system mission. The need for redundancy at any or all levels of hardware (e.g., part, module, or subsystem) to meet reliability requirements will be assessed as part of the prediction and estimation task, again considering the weight, cost, maintenance, and complexity constraints involved in the application of redundant elements to the system. Regular reports of all such predictions and estimates will be made available. Such reports will also form a basic tool of the design review technique to be described in a reliability program plan now in preparation for inclusion in the IMBLMS final report.

5.2.4 Failure Modes and Effects Analysis

The system design will be subject to a Failure Modes and Effects Analysis conducted in accordance with Ref. 5-5. The purpose of such an analysis is to discover any major failure modes inherent in the designs, discern any areas of critical weakness, and, by judicious redesign, minimize problem areas. The analysis will consider the failure modes, their causes and effects, and possible effects on other elements of the system. It will include recommendations for changes needed to correct or counteract the discovered conditions. The analysis will be updated at each major design change, and all results will be reported in accordance with NASA requirements as specified in Ref. 5-5.

5.2.5 Failure Reporting and Corrective Action

All failures and malfunctions occurring during the life of the hardware, beginning at Acceptance Testing of Qualification Test Hardware, will be reported immediately. A detailed failure analysis down to the component level, as required to determine the cause of failure, will be conducted for each failure, and suitable corrective action will be taken to preclude failure repetition. All activity of this type will be reported by means of a closed-loop reporting system utilizing a Failed Equipment and Discrepancy Report (FEDR). The failure is logged on the FEDR form which remains current until the analysis of the failure and its causes is complete. Reasons for failure as discovered are entered on the FEDR form as well as the corrective action recommended, and the form is closed out only when the corrective action has been completed. The form is filed and the data subsequently included in a failure summary report which is then distributed. The series of failure summary reports will form a section of the overall IMBLMS Program log.

5.2.6 Standardization of Design Practices

Reference 5-5 (Sec. 3.8) sets forth the impact of the standardization and control of design practices upon quality and reliability. The responsibilities are set forth also

for action upon the part of reliability personnel to ensure that standardization is effected. These requirements will be followed throughout the IMBLMS Program.

5.3 QUALITY CONTROL REQUIREMENTS

The Quality Assurance program instituted for the IMBLMS Program will be pursued using the provisions of NPC 200-2 (Ref. 5-6) as a guide. The basic purpose of the program is to assure compliance with the following requirements:

- All hardware purchased for inclusion in the system to meet and/or exceed specifications prepared to govern its performance
- All designs produced for the system to take due cognizance of the procedures and provisions set forth in Refs. 5-5 and 5-6 in terms of standardization and conformance with customer requirements
- Rigorous in-process inspection to make certain that all hardware is degraded minimally, with respect to ultimate quality, by the processes used to produce it
- All workmanship to be performed to the highest possible standards
- Adequate records to be maintained for all phases of program performance in order to facilitate NASA acceptance of the final product

5.3.1 Inspections

The IMBLMS Program will assure quality in production of the system hardware by means of several inspection routines. These will include but not be limited to the following activities:

- Incoming/Receiving Inspection – To assure that incoming hardware as received is in good condition
- In-Process Inspection – To assure that hardware produced during the several production stages of the program is constructed according to the specifications prepared for its control and that it accurately reflects the requirements of the design

- Final Inspection – To assure that the hardware, in its final assembled state, functions properly in accordance with the functional specification requirements
- Pre-Shipment Inspection – To assure that the final system is correctly packaged and is ready for shipment

5.3.2 Drawing and Change Control

A drawing and change control will be implemented for the IMBLMS Program to ensure compliance with the following procedures:

- Proper review and approval of all drawings before release
- Regular release of changes as either engineering change notices or engineering orders and their incorporation into drawing revisions which are to be released in a timely manner
- Proper numbering of all drawings and changes with the number sequence reflecting the correct sequence of date and applicability of issue
- Purging of superseded drawings from the control system as quickly as practicable and on a regular basis

5.3.3 Materials Identification, Handling, and Storage

All materials received or intended for use in the program will be stamped or tagged (whichever is appropriate) "IMBLMS Program Only." In general, markings on finished articles will be made in accordance with MIL-STD-130. Name plates will be in conformance with the requirements of MIL-STD-6909. Raw or partially processed materials will be segregated in a special storage area from other materials to avoid confusion with materials destined for use with other programs.

All materials used in IMBLMS components will be fabricated of the lightest weight and highest quality compatible with design requirements and will conform with applicable government specifications. Where no government specifications exist, materials will require NASA approval prior to use.

All materials will be corrosion-resistant or suitably protected by certified processes to resist corrosion. Protective coating that will crack, chip, or scale with age or under extremes of climatic or environmental conditions will be avoided. Fibrous, phenolic, or plastic nonmetallic materials used will be of a type not subject to failure due to the environmental extremes specified.

Electronic parts and materials will be processed and handled in accordance with the high reliability parts program set forth in the reliability program plan to be included in the final IMBLMS report.

Parts with limited calendar-life characteristics will be stored in accordance with the prescriptions of NPC 200-3 (Ref. 5-7).

All parts will be identified to permit traceability to the manufacturing source and be stored in accordance with either the prevailing manufacturer's instructions or the requirements of Ref. 5-7 as applicable.

5.3.4 Inspection and Test Procedures

Adequate inspection and test procedures will be prepared to permit the proper and required inspection and test of all IMBLMS hardware. These will include but not necessarily be limited to the following instructions:

- Receiving Inspection Instructions (RII)
- In-Process Inspection Instructions (IPII)
- Final Inspection Instructions (FII)
- System Inspection Instructions (SII)
- Special Inspection Instructions (SpII)

In addition to the foregoing, the following test procedures will be prepared:

- Qualification Test Procedures (QTP)
- Reliability Test (Assessment) Procedures (RAT)

- Acceptance Test Procedures (ATP)
- Special Test Procedures (SpTP) on an as needed basis

All of the foregoing will be subjected to the review and approval loop throughout all levels of the Program prior to institution and use. In the case of the ATP, NASA approval will also be required.

5.3.5 Nonconforming Articles

All nonconforming articles and/or materials will be subjected to formal action by the Material Review Board as defined and described in Ref. 5-6. The Material Review Board, composed of representatives of those organizations involved in the IMBLMS Program, will convene as set forth in Ref. 5-6 on an as-required basis to effect disposition of the articles in question. NASA participation on this Board is required as specified in Ref. 5-6.

5.3.6 Records of Inspection and Tests

Adequate records of all inspection and test activity will be kept to ensure that performance of the IMBLMS equipment complies with the specified requirements. Record-keeping will be performed, in general, in accordance with the stipulations of Ref. 5-6, including, but not limited to, the following data:

- Elapsed time and running-time logs for equipment requiring such records
- Major equipment performance logs
- Inspection records and failure records
- Failed Equipment and Discrepancy Reports (FEDR's)
- Test data and performance records
- Performance summaries
- MRB activity reports on failed or discrepant material disposition
- Test equipment calibration reports

- Qualification test records
- Acceptance test records
- Any other NASA-required reports of a special nature

5.4 QUALIFICATION TEST REQUIREMENTS

This section specifies the environmental conditions under which the IMBLMS must operate and the test environments in which the components must be qualified. The test environments which are listed in Section 5.4.16 are applicable to all IMBLMS components; however, the list is not all-inclusive, and some equipment may require testing in environments and to levels which are not specified.

All new components designed and procured specifically for the IMBLMS will meet the following qualification requirements. If a component cannot meet these requirements, or if a particular test is not appropriate for a particular component, the contractor will request a waiver by the customer.

5.4.1 Equipment to be Tested

The equipment tested will be designated as qualification hardware and be identical in configuration and production processing to the flight hardware. Any differences between the qualification hardware and the flight hardware will invalidate flight qualification except where written approval is granted to qualify the flight hardware by similarity. This approval usually will be given for minor modifications.

5.4.2 Use of Qualification Hardware

The qualification units are utilized in obtaining verification by test of compliance with the specified design and performance requirements. It will not be used as flight hardware.

5.4.3 Approval of Test Specification

The test specification and changes thereto for qualification testing will be submitted to NASA for approval. Testing will not be initiated until such approval is received.

5.4.4 Sequence of Tests

The sequence of tests will normally follow the same order in which the environments will be encountered during the mission. If scheduling of test equipment and other factors presents undue difficulty in complying with this requirement, the sequence of tests may be altered subject to approval, noting that changes in test sequence may require changes to the test specification.

5.4.5 Functional Tests

The hardware must be inspected before conducting any functional tests for compliance with the applicable design, procurement, or acceptance test specifications. A functional test to determine whether the hardware is performing within specification tolerances must be conducted before and after each environmental exposure. The same test must be performed during the exposure period if the equipment is required to operate in that environment during the mission. If the tests are run in series without a significant time interval between tests, the functional test after an environmental exposure may serve as verification of proper performance before the succeeding environmental test.

5.4.6 Failure Definition

The following conditions are classified as failures:

- Performance outside of specification tolerances during and/or after any of these tests, whichever is appropriate

- Any physical damage or degradation which impairs the operational design characteristics of the component
- Any loose, bent, cracked, or otherwise damaged or improperly adjusted parts resulting from the test inputs

5.4.7 Testing Level

Tests will be conducted at the system level of assembly if practical. If testing at this point is not practical because of equipment size and complexity, the testing will be performed at the next lower level of assembly.

5.4.8 Test Mounting

Equipment will be mounted in a manner simulating the actual mounting in the spacecraft for all environmental tests in which such mounting is expected to affect the equipment.

5.4.9 Failure Reports

Failures (as defined in Section 5.4.6) encountered during environmental qualification testing must be reported immediately, followed by a Failure Analysis and Corrective Action Report for review. Modification of hardware configuration as a result of failures will invalidate previous testing. The extent of retesting will be subject to NASA approval.

5.4.10 Qualification Approval

A final environmental qualification test report must be submitted for approval. The qualification test program must be scheduled so as to allow sufficient time for failures, rework during testing, preparation of the final test report, and review after submittal. Qualification approval may be considered and granted, on a case-to-case basis, upon presentation of documentation that the equipment was tested to equivalent or more rigorous levels of environmental testing.

5.4.11 Qualification Status

A status report of the qualification testing will be included by the contractor in the Monthly Progress Report. This status report will indicate those tests which have been completed at the time of the report and those yet to be performed.

5.4.12 Inspection

Government source inspection is required for all environmental qualification testing.

5.4.13 Ambient Laboratory Conditions

Unless otherwise specified, tests will be performed under the following ambient conditions:

- Temperature: 25° ± 10° C (77° ± 18° F)
- Relative humidity: 15% to 90%
- Barometric pressure: Local ambient

5.4.14 Test Parameter Measurement and Tolerances

A list of all measuring equipment (described by make, model serial number, accuracy, range, and date of last calibration) will be included in the reports of the tests for which they were used. Instrument calibration will be traceable to the prime standards at the U. S. Bureau of Standards. The instruments will be sufficiently accurate to assure that errors are less than one-fifth the tolerance for the variable to be measured. Maximum allowable tolerances, unless otherwise specified, will be as follows:

- Temperature: ±2° C (3.6° F)
- Altitude: ±5%
- Relative humidity: + 5% to -0% (of R.H. value)
- Vibration amplitude: ±10%
- Vibration frequency: ±2%

5.4.15 Stabilization of Test Temperatures

Unless otherwise specified, temperature stabilization will be considered attained when the temperature of a centrally located experiment hardware component, or that part of the experiment hardware with the largest mass, does not change more than 2° C/hr.

5.4.16 Environmental Test Requirements

The environmental tests to be accomplished for qualification of experiment hardware are separated into the following test groups:

- Earth environment
- Spacecraft environment
- Space environment
- Orbiting workshop or module environment

Test required for more than one group may be combined into a single test if the various test objectives are not compromised.

5.4.16.1 Earth Environment. Specifications and tests for this category are as follows:

- Temperature/Humidity. The equipment will be subjected to a humidity test in accordance with Method 507 of MIL-STD-810 (USAF), except that the maximum test temperature will be 49° C(120° F).
- Salt Fog. MIL-STD-810A (Method 509.1) will apply. This test may be eliminated on certain articles if it is shown that the equipment will not be exposed to this type of atmosphere.
- Fungus. MIL-STD-810A (Method 508.1) will apply. Fungus test may be eliminated upon certification that fungus nutrient materials have not been used, or that, where used, adequate protective treatment has been provided.
- Vibration. MIL-STD-810A (Method 514.1, Curve A, Fig. 514-6) will apply. Time Schedule IV of Table 514.1 applies except that resonance dwell time shall be ten minutes per equipment axis per resonant frequency. If the random vibration test (Spacecraft Environment) is to be conducted, this test will be eliminated.

- Sand and Dust. MIL-STD-810A (Method 510.1) will apply. This test may be eliminated if exposure to this type of atmosphere will not occur.
- Rain. MIL-E-5272C(ASG), Procedure II, will apply. This test may be eliminated for components which will not be exposed to rain.
- High and Low Temperature. These tests are covered in Section 5.4.16.2.

5.4.16.2 Spacecraft Environment. This group includes the following tests and requirements:

- Shock. MIL-STD-5272, Procedure IV, will apply, except that the unit will be subjected to a peak acceleration of 30 g for 8.5 ms duration.
- Acoustical Noise. MIL-STD-810A (Method 515.1) will apply, except that the exposure time will be 10 min.
- Pressure (Positive). This test will apply to any hermetically sealed equipment. The test specimen will be placed in a chamber and pressurized to 25 psia ± 0.5 psia for a period of not less than 15 min. This test will not be conducted if the test equipment is not to be pressurized.
- Acceleration. MIL-STD-810A (Method 513.1, Procedure I) will apply, except under the following circumstances:
  - Longitudinal Axes. Linear increase in acceleration from 1 g to 7 g in 60 sec.
  - Lateral Axes. Linear increase in acceleration from 1 g to 4 g in 5 sec.
- Vibration. MIL-STD-810A (Method 514.1 for ground-launched missiles) will apply. The test equipment will not be in operation during the test.
- High and Low Temperature and Low Pressure. Since the IMBLMS may be located in either a vacuum or pressurized area within the spacecraft, the equipment, including the experiment canisters, must be subjected as completely as possible to full ascent and orbital temperature and pressure conditions and testing.
  - High Temperature Test. MIL-STD-810A (Method 501.1) will apply, except that the exposure period will be at least 4 hr at the stabilized temperature condition.

- Low Temperature Test. MIL-STD-810A (Method 502.1) will apply, except that the temperature will be stabilized for 4 hr at -22° F.
- Low Pressure. MIL-STD-810A (Method 500.1, Procedure II) will apply. The minimum test chamber pressure will be equal to or less than 1×10^{-5} mm Hg.

- Electromagnetic Interference (EMI) Compatibility. Electrical, electromechanical, and electronic equipment will be tested to MIL-STD-826 for EMI generation and susceptibility.
- Magnetic Fields. Where permanent or residual magnetic fields exist in the equipment, they will be measured and field strength reported for distances of 1 and 2 ft from the source. Acceptable field strength will be determined, depending on mission requirements and magnetically susceptible equipment to be flown.

5.4.16.3 Space Environment. Test requirements for this category are as follows:

- Low Pressure. MIL-STD-810A (Method 500.1, Procedure II) will apply. The minimum test chamber pressure will be equal to or less than 1×10^{-5} mm Hg.
- Low Pressure Solar Energy and Meteoroid Impact. These tests are waived since IMBLMS equipment will not be subjected to these environments during flight.

5.4.16.4 Workshop – Space-Module Environment (Equipment Operational Checkout). All IMBLMS equipment will be tested for satisfactory operation under ambient environmental conditions before being tested under any special environmental conditions. These checks will include but not be limited to the following tests:

- Electrical Compatibility. The following tests will be performed:
  - Power. Electrical components and assemblies will be tested for operation within specified performance criteria when subjected to abnormal power inputs.
  - Output. Tests will be conducted to verify workload range, voltage, frequency response, and impedance.

- Electromagnetic Interference and Isolation and Grounding.
- Structural Member Verification. This test will be conducted to ensure a 1.4 structural safety factor. It must be performed once on each component for which it is applicable, but repeated performances may be waived if visual inspection does not reveal any structural change in the component.
- Operational Testing. These tests will be considered accomplished by verifying equipment operation in an ambient environment under laboratory conditions and by performing the oxygen compatibility test.
- Oxygen Compatibility. The equipment will be operated in the workshop – space-module environment for 24 hr. Equipment which does not operate continuously will be operated through one duty cycle during the last hour of exposure. The temperature will be maintained at workshop ambient level during the first 16 hr and then raised to 49° C (120° F) and maintained for 8 hr. Performance will be within specification tolerance. Visible burning, creation of toxic gases or obnoxious odors, or deterioration of seals or lubricants during the exposure will render the equipment item unacceptable. Nonmetallic materials used must meet the requirements established in Ref. 5-4.

Section 6
DATA MANAGEMENT AND DISPLAY

6.1 OBJECTIVES

The major objective of the data management system is to accept, handle, process, display, and/or transmit efficiently the results of the medical and behavioral measurements performed with the IMBLMS. The following operational rules were established to aid in obtaining these objectives:

- Minimization of manual tasks required of the astronauts
- Maximum on-board preprocessing of data to reduce telemetry down-link time, particularly for advanced AAP flights
- Maximum use of the carrier digital up-link equipment, rather than voice, for ground-to-vehicle communications
- Minimization of ground station data processing

Further, to reduce the amount of new (to be developed and/or qualified) equipment, the use of existing, flight-qualified equipment was examined for implementation of an IMBLMS data management system.

Studies have indicated that the Manned Space Flight Network (MSFN) capabilities will approach saturation when it is necessary to accommodate data inputs from other programs running concurrently with the IMBLMS and AAP programs. Emphasis therefore will be placed on preprocessing data before transmission to the ground. Such preprocessing will permit faster ground station response and a subsequent reduction in ground station traffic.

6.2 REQUIREMENTS

A typical data management system for a space vehicle consists of fixed installation equipment which samples data from various transducers, puts the data in appropriate format for recording, records the data and plays them back through the spacecraft transmitters for relay to the ground. An on-board computer is provided primarily to perform computations on guidance-type data.

The IMBLMS, however, requires a data management system which, in addition to performing as a typical data system, can fulfill a multiplicity of special tasks unique to the IMBLMS concept. These special requirements are as follows:

- Modular construction to permit on-orbit system assembly and capability expansion
- Automatic data routing in response to measurement requirements
- Ability to log manual entry of numerical data
- A portable physiological monitoring unit for operation in the S-IVB, AM, CM, or LM, or in an IMBLMS console
- Programming of and acceptance of data from a behavioral test module and scoring of results
- Handling and processing visual data (e.g., slides, photographs, and specimens)
- Extraction of data from rotating devices
- Interface with an existing spacecraft data management system

6.3 CARRIER CONSTRAINTS

Table 6-1 contains a brief summary of the data management capabilities provided by the various candidate carriers for IMBLMS. The impact of these constraints on an IMBLMS data management system is discussed in the following pages.

Table 6-1

CANDIDATE-CARRIER CONSTRAINTS

ELEMENTS	RCM	LM	S-IVB OWS	Cluster
RF Equipment	VHF equipment removed; S-band retained	VHF and S-band equipment retained	Uses AM VHF (only) equipment	Also uses AM VHF equipment
Instrumentation	Timing equipment deleted; LM data processing equipment added; LM TV replaces CM TV; tape recorder modified for earth orbit; 30-min to 60-min record time	Possible addition: On-board checkout system using modified guidance computer equipment; vehicle tape recorder modified for earth orbit; 30-min to 60-min record time	Interconnect with LM, CM, or RCM by means of audio/power link only; AM has Gemini (4 hr) recorder which cannot accept sample rates required by IMBLMS; recorder W/FM mode needed; no processing equipment available	Interconnect with other vehicles via audio/power link only
Controls and Display	Deletion of CM unused equipment leaves 8 ft^2 panel space	Added ATM equipment; if various ascent and descent equipment removed, 6 ft^2 of panel space available; added keyboard and some biomedical monitoring capability (not completely defined)	Minimal; in AM only, needs extension of controls and/or displays in OWS	Same as OWS
Ground Stations	Scheduling of data reception may become problem when interleaved with Apollo in-line programs; reduction in ground contact to minimize problem (24-hr repeat orbit, time sharing of ground equipment, etc.) will necessitate some on-board preprocessing of biomedical and behavioral data; problem increases in intensity with lengthening missions and complex cluster configurations generating additional housekeeping data.			

6.3.1 Candidate-Carrier Capabilities

Two areas of capability – interspacecraft and down-link and up-link – are the major aspects considered in this section.

6.3.1.1 Interspacecraft and Down-Link. The S-IVB orbital workshop uses the air-lock module (AM) data management system. The AM telemetry link with the ground is provided by VHF equipment. It has a dual transmitter and can simultaneously transmit real-time and stored data. As proposed, the AM has an input switch enabling an experiment data system to use either its transmitter or recorders.

The AM voice link to the ground is normally handled by means of a separate, duplex VHF link with the CM; the voice signals are relayed from the VHF link to the ground on the CM unified S-band (USB) equipment. Simplex voice communication for backup can be accomplished directly with the ground using these same transmitters. Figure 6-1 shows the communication links within the various carrier spacecraft, among the carriers, and with the ground links for the cluster configuration.

The CM normally communicates (voice and data) with the ground through its USB equipment. Biomedical data are transmitted only in real-time whereas other data can be transmitted in real or delayed time. Communication between the CM and the AM and for EVA purposes is obtained by means of the CM VHF equipment.

The LM communicates (pulse code modulation and voice) with the ground in real-time by means of its USB equipment. Communication between the LM and the other carriers, and for EVA, is accomplished through the VHF equipment. Since recorded data cannot be played back while the spacecraft is on orbit, delayed transmissions are not possible unless the data received by the CM are recorded and played back through the USB/ground link of the CM.

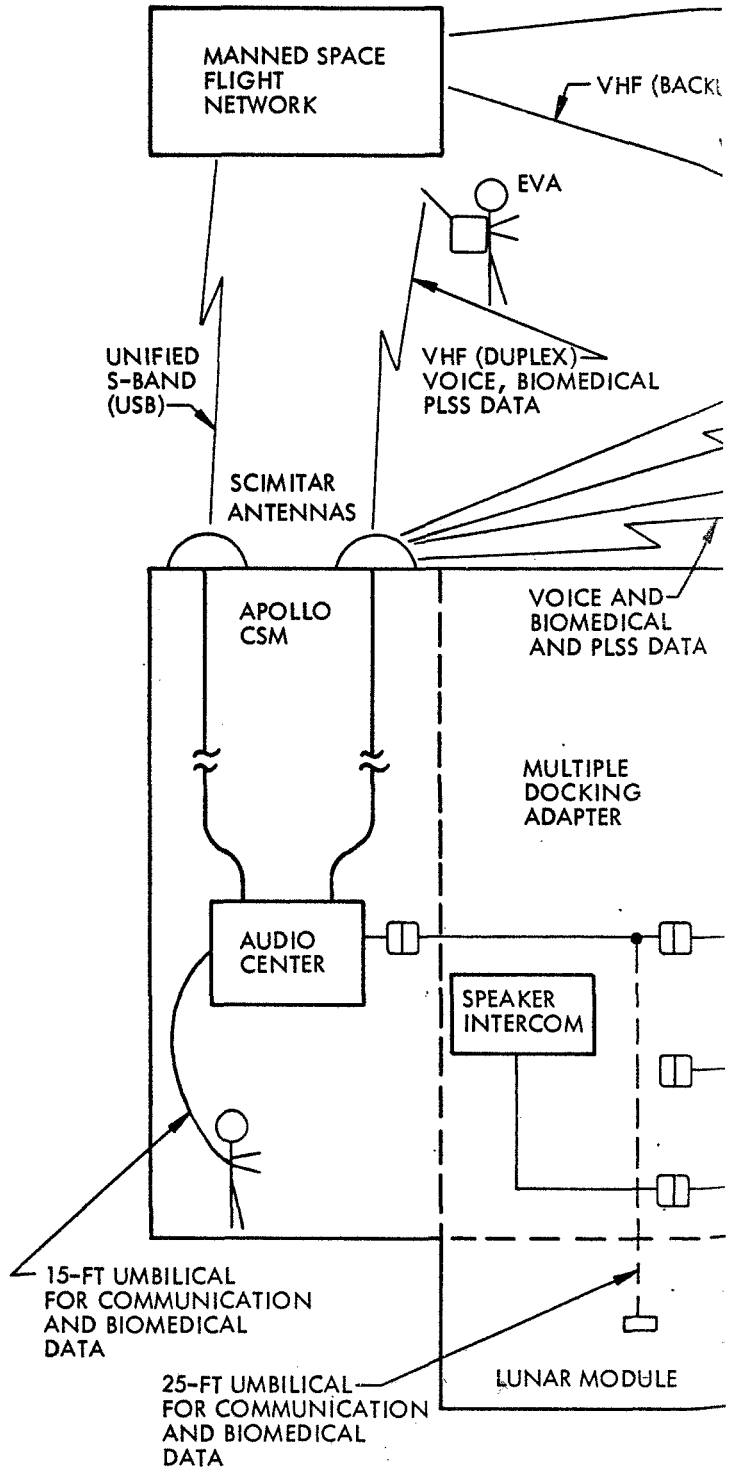
MANNED SPACE FLIGHT NETWORK
VHF (BACK
EVA
UNIFIED S-BAND (USB)
VHF (DUPLEX) VOICE, BIOMEDICAL PLSS DATA
SCIMITAR ANTENNAS
APOLLO CSM
VOICE AND BIOMEDICAL AND PLSS DATA
MULTIPLE DOCKING ADAPTER
AUDIO CENTER
SPEAKER INTERCOM
15-FT UMBILICAL FOR COMMUNICATION AND BIOMEDICAL DATA
25-FT UMBILICAL FOR COMMUNICATION AND BIOMEDICAL DATA
LUNAR MODULE

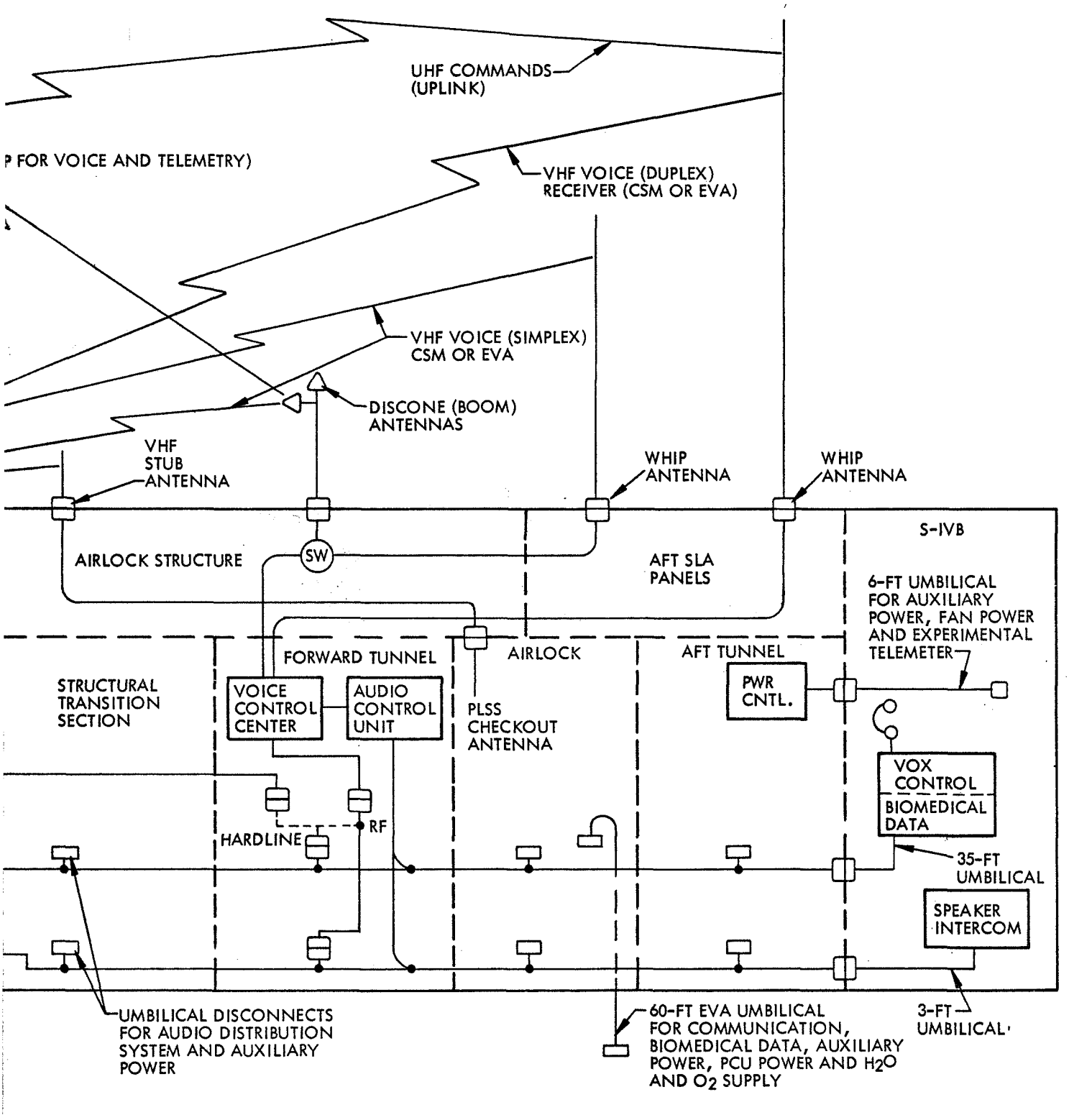

Fig. 6-1 Cluster Hardline and Radiofrequency Communication Lines

6.3.1.2 Up-Link. The AM will have 96 real-time, digital command functions on its UHF receiver (up-link) of which 18 are presently unassigned. The IMBLMS will consider the use of these 18 command channels for the following functions:

- Transmittal of experiment change and correction instructions
- Operation of an on-board digital printer for a communication link other than voice
- Ground control of IMBLMS recorder readouts, etc.

6.3.2 IMBLMS Compatibility

Operation of the IMBLMS should introduce no major data management problems (other than scheduling interface with carrier status data) when the CSM/LM is the candidate carrier.

Operation of IMBLMS with the S-IVB presents a bandwidth problem for the proposed TV system. A 1-mHz bandwidth is desired for maximum definition while the AM VHF transmitters are limited (FCC and IRIG standards) to a 500-kHz bandwidth. Video data compression is under consideration for resolution of the problem; however, the installation of USB equipment in the AM will make the module compatible with all spacecraft and ground stations and alleviate bandwidth problems, and warrants serious consideration by NASA.

Because each candidate carrier has its own tailor-made data management system for vehicle status data, the IMBLMS will generally interface only with the carrier transmitters and command receivers. None of the existing carrier data management systems can completely fulfill the IMBLMS requirements. Separate transmitters and receivers have been considered for the IMBLMS; however, this will require additional ground equipment and definitely overtax the data-handling capabilities of the MSFN.

Although the existing candidate carrier data management systems will not be used by the IMBLMS, the various individual flight-qualified items of equipment that make up those systems have been reviewed for IMBLMS use (see Section 6.5).

Pg. 6-6 Blank and not filmed

6.4 SPECIFIC PROBLEMS

Data entry, on-board computation, storage and return of test specimens, portability requirements, and up-link data receipt are major concerns of the IMBLMS data management system.

6.4.1 Data Entry

Data to be entered into the IMBLMS data management system takes many forms, each having its own peculiar handling requirements.

Analog data will be routed, in most cases, directly to the data management magnetic-tape recording equipment and/or an oscillographic display. Actual recordings will be accomplished under the astronauts' direct manual control. Playback for transmission to the ground will be under astronaut direct manual control or the digital command up-link.

Logging numerical data presents a different problem. These data include information which is manually recorded at various locations in the carriers during an actual measurement/test situation and then returned to a central data management console for entry and transmission to the ground. The foregoing data can be vocally recorded and "dumped" to the ground during ground contact although, in general, voice data are easily garbled and lost. Further, the volume of data that can be recorded and played back in a given unit of time is relatively small when compared to other methods. Also, the handling of numerical data on a vocal basis will prevent its being available for on-board preprocessing, automatic computation, etc. Logging of numerical data by vocal means is therefore unreliable, inefficient, and noncompatible. Numerical data can also be logged by means of an on-board video camera and recorder combination. However, the quality of the data will be subject to handwriting clarity; the data will again be unavailable for on-board automatic preprocessing. This approach therefore represents an inefficient use of the bandwidth required by video transmission.

Numerical data therefore should be converted to an analog or digital format for recording and subsequent transmission to the ground during ground communications. Data

converted to an analog or digital format will also be available to the data management system for such functions as on-board processing and analysis before transmission to the ground.

Manual logs for the transmitted data will be preserved and returned at the end of a mission to provide redundant information. Although equipment for entering data at these remote locations is being considered, the added weight, space requirements, and necessary manipulation of this equipment during an actual measurement/test situation may preclude application of this approach.

White blood count, differential count, red blood-cell morphology, and urine sediment data are entered on slides which will, at a later time, be viewed and relayed to the ground by a telemicroscope – video-recorder combination. Identification data (e.g., astronaut, time of sample, type of test, etc.) can be placed on each slide and similarly recorded and transmitted. Details of this equipment are discussed in Section 6.5.

Some measurements require that the results be recorded/entered photographically by means of motion or still pictures or both. Since there are no unusual requirements in this area, such as high-speed filming, the IMBLMS will utilize photographic equipment planned for AAP use. It is not intended, due to the complexity of the development process and lack of a need, to produce film for playback in the spacecraft; however, the use of Polaroid-type still pictures for later return and/or immediate presentation to the IMBLMS television system will be reviewed.

A peculiar data handling and entry requirement occurs in the REVS experiment since electronystagmogram (EOG) data must be obtained from a test subject while he is seated in a revolving chair and at least two channels of data are required. Generally, slip rings are used to obtain data from rotating test fixtures. However, such rings tend to contribute noise to the data signals, and the character of the EEG and EOG signals makes it difficult to remove the slip-ring noise from the data signals. A short-range telemetry system therefore will be considered for transmission of the data from the test subject to the display and recording equipment.

The interior of the metal space laboratory acts as a large nonresonant cavity for radio-frequency electromagnetic fields. A rotating antenna will create rapidly varying standing wave patterns in the laboratory which cause large variations in signal strength at the receiver. In the REVS case, however, use of antennas to obtain the required data should be unnecessary. An inductive coupler mounted coaxially with the axis of rotation of the chair will result in most of the transmitted energy being coupled directly to the receiver with little variation in signal strength. The inductive coupler can be shielded sufficiently to prevent interference with experiment or communication equipment resulting from the use of this telemetry system.

A number of telemetry modulation methods can be utilized for the REVS telemetry system. Use of an amplitude-modulated system only is undesirable since residual signal strength variations due to the inductive coupler will create data accuracy problems. On the other hand, the accuracy of a pulse-code-modulated (PCM) system does not justify the greatly increased equipment complexity that would be involved.

The data bandwidths for EOG and EEG are 50 and 100 Hz, respectively, and are well within the limitations of standard, constant-bandwidth, FM subcarrier oscillators. Four of these bandwidths could be used in either an FM/FM or an FM/AM mode of transmission. There is little to choose between the two methods from a systems standpoint although circuit details may indicate a clear-cut choice. Space-qualified, subcarrier oscillators are available, and few design difficulties should be encountered.

The telemetry transmitter and experiment signal conditioners will require a battery power supply if all slip rings are to be eliminated. This power source can be supplied as part of the REVS chair package or as part of the EEG and EOG experiment packages.

If additional data channels are required as part of the experiment, they can be supplied as additional FM subcarrier channels. The practical limit for this additional capacity is 15 channels if IRIG standard, constant-bandwidth channel assignments are specified. The complexity of the telemetry system will increase directly in relation to the number of data channels.

6.4.2 On-Board Computation

Data evaluation activity requiring astronaut visual and mental evaluation is required for the performance of such tasks as making adjustments to obtain optimum TV camera output or previewing data prior to recording in order to aid in minimizing the quantity of data ultimately transmitted to the ground. Color comparison charts and other miscellaneous instructional and procedural aids will be necessary to support these functions. In general, except for some controls directly associated with the data management equipment, these aids will be considered an integral part of the measurement equipment.

In most cases, automatic evaluation of data will be performed by a special-purpose IMBLMS digital data processor. The processor will provide an astronaut/physician with measurement results from numerous tests of which the following are representative:

- Average heart rate over specific time periods
- Mean integrated gas concentration from mass spectrometer input
- Derivation of cardiac electromechanical delay and isometric contraction phase from simultaneous measurement of ECG, PCG, and pulse contour values
- Computation of cardiac output by the carbon-dioxide rebreathing technique, using parametric input from the mass spectrometer
- Acceptance of data (pressure) from an esophageal catheter to measure negative chest pressures for CRT display and digital printout of pulmonary compliance

The preprocessing of data will reduce the amount of data to be telemetered to the ground regardless of the presence of an on-board astronaut/physician. If an astronaut/physician is a member of the spacecraft crew, his presence will improve the selectivity of the on-board processing.

Total tasks assigned to the on-board processor may be summarized as follows:

- Storage and control of behavioral tasks
- Establishment of signal routing for each measurement task

- Computation of task scores
- Acceptance of ground instructions for display and program correction
- Conversion of data for on-board alphanumeric display
- Removal of redundant data to minimize spacecraft-to-ground transmission time
- Performance of other computation as required

Processor software and hardware specifications will be presented in the final report.

6.4.3 Stored Specimens

Some IMBLMS measurements, mostly in the biochemical area, will require the on-board storage of specimens (e.g., blood, feces, and urine). Space required for this storage will be included as an integral aspect of the modular packaging concepts being established for the various potential carrier spacecraft. The return of stored specimens to earth can be accomplished at the completion of the mission, or by data capsules returned to earth before mission completion. Data capsules are tentatively proposed for the AAP, and will be considered as a secondary method of partially returning hard information.

6.4.4 Portability Requirements

As previously mentioned, one of the goals of the data management system was to provide a portable module for displaying and recording dynamic physiological data obtained at various locations throughout the spacecraft cluster (including the LM, CSM, MDA, and S-IVB carriers). Further, present AAP plans call for relaying EVA and LM biomedical data to the ground in real time, without any intervening on-board recording. (This elimination of on-board recording is probably due to the inability of the CM recorder to accommodate 0 to 50-Hz data.) It is planned therefore that the IMBLMS will extract the biomedical data from the receiver for recording and display on the IMBLMS dynamic physiologic monitor, and that EVA and LM voice signals will be similarly recorded. Communication among the CSM, LM, and EVA is normally handled by means of the VHF equipment, and the IMBLMS design will assure compatibility with this equipment.

6.4.5 Up-Link Data

On the longer missions proposed for AAP flights in which IMBLMS will be carried, ground-to-spacecraft contacts apparently will be more restricted (i.e., reduced in number) than on the current shorter missions. Problems underlying this potential restriction involve the number of personnel required for long-term manning of MSFN ground stations and other simultaneous Apollo missions, which also require use of MFSN ground stations. By providing an on-board digital printer, and judicious use of the processor storage capability, IMBLMS will be capable of receiving a large volume of up-link information in the shortest period of time. Printout of such information will provide hard copy for astronaut use. Also, if an on-board digital printer were available, records of biochemical and other data could be printed, thus avoiding manual logging.

6.5 EQUIPMENT EVALUATION AND INTEGRATION

Performance of IMBLMS data management requires the use of data recorders, memo recorders (voice), a video recorder and television equipment, equipment to perform data entry, display and control equipment, etc. Each of these items has been carefully considered by LMSC and, where applicable, a tradeoff evaluation has been made for final selection.

6.5.1 Numerical Data Entry Equipment

Numerical data must include, as a minimum, identification of the astronaut and the test, the time the test was made, and the value obtained for the test. Lockheed has concentrated on several approaches toward partial automation of the logging of data. One approach is to furnish each astronaut with a notebook providing space for describing the test and for writing the values and time. This information could then be entered into the master tape by means of a keyboard. Unfortunately, this keyboard entry method is susceptible to human error since it provides opportunity for the transposition

of digits during the keyboard entry process. Displays of keyboard selections prior to entry, should minimize such opportunity for human error.

Another approach is to furnish three half-size IBM cards with each test – one for each astronaut. Each card will be identified for each astronaut in the following ways:

- Color-coded for the particular astronaut
- Astronaut name printed on card (together with test instructions)
- Prepunching to identify astronaut and test

Upon completion of the test, the astronaut will insert the card into the card reader, dial the digits required to express the value obtained for the test and the time of the test, and push the record button. At this point, the prepunched information, the values obtained, and the time will be entered into the master tape. The only possible human error with this procedure lies in the dialing to enter the test value and time.

On-board record maintenance also offers the advantage of allowing the astronauts to observe any trends in tests performed periodically. The availability of this information is likely to heighten astronaut interest in conducting time-line trend studies. It is suggested that the reverse side of each data transmission card be treated so that the date and test value can be entered in pencil.

The IBM card does present some disadvantages, such as the necessity of searching a stack of cards to locate a particular experiment, the possibility of card loss or mutilation, the continuing need to record data manually since measurement values will generally be obtained in locations remote from the data management system and an inherent inflexibility regarding the incorporation of changes or corrections required for a particular measurement procedure.

A third approach under investigation is the use of an on-board, alphanumeric printer which provides, in conjunction with entry switches, a hard copy of the data entered into IMBLMS for immediate (i.e., next ground-station contact) return to ground. This

technique will aid the astronaut in verifying his entry and also provide clean, clear data at the end of the mission for ground verification and further study, analysis, or other use.

Various types of entry switches, such as digit dials, rotary switches, and pushbuttons, have been considered, and two candidate configurations are presently under evaluation. A human factors evaluation indicated that the amount of astronaut time required to enter data on either type of switch was relatively equal; however, the flight-qualification status of these switches must be verified.

6.5.2 Magnetic Tape Recorders

Analog data will be recorded on an on-board magnetic tape recorder with a high-speed playback capability. This feature will enable the recorder to "dump" this data into the carrier telemetry transmitters for return to the ground. Playback of previously recorded analog and/or PCM data for possible display or data editing (more easily performed on the ground) will require extensive additional electronics. At this point in the study, this capability does not appear sufficiently important to warrant the added complexity.

Of the various magnetic tape-recorder requirements reviewed, portability (with or without a battery power source), ability to change reels, analog and digital recording capability, and cathode ray tube image reintensification for ZNP loop measurements have received major attention. A tradeoff was performed to compare the various recorder requirements against such factors as existing flight-qualified units, development costs, and weight penalties. It appears that the present Apollo CM recorder with some added electronics best meets the IMBLMS requirements. However, the CM recorder size and weight are not compatible with the IMBLMS modular requirements for portability when used with the dynamic physiological monitor; this lack represents a major drawback.

6.5.2.1 Data Recorder Requirements. At present, it is known that the CM recorder does not permit easy access to the tape reels and that it cannot record analog data for the 0 to 50-Hz range without additional electronics. The reel-changing ability was primarily considered for various behavioral auditory tasks and has been delegated to a separate memo recorder.

The CM recorder accepts five channels of digital information and seven channels of analog information (for direct recording). Four of the seven analog channels were not originally implemented but can be easily added. The direct recording analog capability does provide recordings with the widest frequency bandwidth but at the sacrifice of the lower frequencies. There are several approaches for extending the lower frequency capabilities; however, the simplest (an FM recording technique) requires voltage-controlled oscillators (VCO) to accept the analog signal and then record the oscillator output. Such a modification is proposed to meet the lower frequency requirements of the IMBLMS for performing such measurements as vectorcardiograph measurements (1 to 100 Hz), cardiovascular function assessment (1 to 100 Hz), human vestibular-function assessment (1 to 50 Hz), and neurological study (1 to 100 Hz). This modification should not affect the existing flight-qualified status fo the CM recorder.

Among other recorders considered, those proposed for recording status information and experiment data in the AM are designed to record PCM data only. Any measurements resulting in analog data would have to be converted to PCM prior to recording. Without this analog capability, pertinent vocal comments could not be directly recorded on this unit. Airlock Module groundrules indicate that any voice recording will be handled with the CM recorder. Placing measurement data and voice data on two different data management systems (and subsequently on two different spacecraft-to-ground links), will create major data-correlation problems when the data are to be presented to ground-based observers.

The lunar module (LM) recorder was also considered but was immediately rejected since the unit had a record-only capability without provision for on-orbit playback. The recorder used for biomedical data on various Gemini missions was rejected for the same reasons.

6.5.2.2 Video Recorder. The proposed TV system for the IMBLMS is discussed in Section 6.5.3. It will require an on-board video recorder for which there is no flight-qualified unit. Under consideration for this purpose is a tentative LMSC design. This unit will weigh about 25 lb, consume approximately 20 w of power, and be about 8 in. × 10 in. × 6 in. in size. It will operate at 100 ips using 10 tracks (channels) on 0.5-in. tape, for a total recording capability of 24 min (2.4 min/track). Operating in the FM mode, it will utilize a 1.5-MHz carrier (giving about 1-MHz total information bandwidth) with a signal-to-noise ratio greater than 24 db.

Its purpose will be to record information on blood and urine specimens on slides, general cabin conditions, and some specific physical information, such as astronaut suit donning and doffing before and after EVA operations.

Further analysis will be conducted to finalize all the necessary parameters needed for the transmission and reception of specimen information in either black and white or color TV. The color system will use the same general method, with minor modifications, as that used under the Surveyor Program to obtain color photographs of the lunar surface. The color capability dictates that at least three frames of video (red, green, and blue) must be used to look at each field. Mechanical construction of the recorder necessitates a 3-sec run-up time to allow the recorder to reach the desired speed and 3 sec of coast-down time upon deactivation.

Medical requirements have established that the astronaut will perform at least three distinct tasks in which recording of the specimen will be needed. These tasks are as follows:

- WBC Count. For this measurement, 5 to 10 fields of interest will be manually located and recorded from the specimen slide. Automatic movement of the microscope stage is under consideration. Time savings and other advantages are being evaluated.
- Blood Morphology – Differential Count. The microscope slide stage will be located with a discrete area of interest positioned under the lens, and the

stage then will be automatically moved to allow scanning of 35 separate fields in a preprogrammed sequence.

- Urine Sediment. This measurement will repeat the WBC task, with 5 to 10 fields observed and recorded.

With a total of 55 fields to be recorded at a video rate of 1 frame/sec, there are two possibilities for videotape recorder utilization. If a color system is used, it will require, at 3 frames/field, a maximum of about 3 min/slide (including run-up and coast-down time of the recorder). Since the total recording time is limited to 24 min, these handling requirements limit the recording to 8 specimen slides at a time.

With a black and white system, 24 specimen slides can be recorded. Since the design time limit for videotape recorder operation is 24 min (within the constraints of reasonable size, weight, and power considerations necessary for spacecraft operation), it is apparent that further capability will require investigation of data compression techniques, or slower video frame rates. Data compression will require some development effort while a slower video frame rate will inject further complications in implementing the fast-erase feature needed to eliminate smearing or ghost images.

All information will be recorded utilizing the full 1.5-MHz bandwidth of the video recorder to provide the best possible resolution. However, the 500-kHz video-bandwidth constraint created by the AM VHF telemetry system will limit the readout rate to half-speed, thus requiring 48 min total readout time. Since the spacecraft period within range of each ground station is only 6 to 8 min, and since there will be 48 min of recorded information to be transmitted, the video information can be read out in segments while the spacecraft is within range of various remote ground stations equipped for video reception and recording. The segments could then be relayed (by RF links or physically) to the MCC for integration and analysis.

If readout can be made only over the MCC at MSC-Houston, and assuming total access to the ground station recorder, it will require approximately 2 days to dump each 48 min of video information. This is computed on a basis of 3 passes per day (24 hr) and a time-of-transmission of 8 min maximum.

6.5.2.3 Memo Recorder. A memo (scratch-pad) recorder is proposed for operation in only an audio mode. This recorder will be available to record running audio comments during an entire experiment or a measurement procedure whereas data from the measurement (with subjective auditory comments) will be recorded at preset intervals. These running comments will then be available to the astronauts and/or physicians for playback and manual numerical data entry after the experiment is concluded. By providing this memo recorder with interchangeable cartridges, it can also be used for various behavioral auditory tasks. Several memo recorders have been in use, or proposed for the various manned spaceflight programs, but none of these units provides for cartridge changing or on-orbit playback.

The proposed memo recorder will meet the following requirements:

- Recording time – 1 hr at 1 ips
- Replaceable cartridge – 300 ft of tape on 3-in. reel (changeable with gloved hands)
- Frequency response – 0.3 kWh to 3.0 kWh; direct record, voice only, single channel
- Speeds – fast forward and reverse; slow forward for recording only
- Compatibility – with astronaut microphone, earphones, and carrier audio center
- Size – 8 in. × 4 in. × 3 in. (96 in.^{3})
- Weight – 2 lb
- Power – 35 w; 28 vdc, unregulated

6.5.3 Television Systems

It is proposed that biochemical data (slides) be recorded by means of an on-board telemicroscope (integrated TV camera and microscope) and a video recorder. A second camera is to be provided for general observation and recording, particularly for the suit donning and doffing task. The camera redundancy also increases the reliability of this recording technique.

The TV system will be a 1,200 to 1,500 line/frame, high-resolution type in order to produce highest contrast and resolution. The Apollo TV camera is not suitable because it is not a high-resolution system, and is not set up for on-board recording. The cameras will interface with a CRT monitor (Section 6.5.4) and a tape recorder (Section 6.5.2).

6.5.3.1 Telemicroscope. As each slide is inserted into the telemicroscope, it will be necessary for the astronaut to recheck focus visually before exposure to the vidicon camera head. Since there is a wide range in the ability of the human eye to adjust when bringing an image into focus, and since the vidicon tube cannot duplicate this capability, a positive method is required for assuring consistency between the physiological and electronic focusing. Consistency is achieved by first focusing the reticle attached to the optical train leading to the vidicon, and then bringing the real image (slide) into focus until it falls on exactly the same plane as the reticle. The shutter in front of the vidicon will be equipped with circuitry attached to a photocell in order to vary the speed of the shutter in relationship to the amount of light available (similar to the electric-eye device employed in the Polaroid Land camera). This variation is necessary because the amount of light needed by the operator to view the specimen is far different from that needed for good resolution on the vidicon tube. This provision also assures uniform and optimum picture quality for each specimen.

Once the operator is assured that an optical focus has been achieved, he will press a switch to display the image on a 5-in TV monitor, and thus enabling him to verify that optimum visual conditions are present. The operator will then activate the videotape recorder, bring it up to proper speed, thus reducing excess tape usage, and then press another switch to start tape movement and recording at the same instant.

The recorder will be programmed to shut itself off as soon as a recording cycle is complete, and the entire process then will be repeated for the next slide. A high-speed erase feature will be provided for the camera so that when the shutter closes on the vidicon tube after exposure, it will completely erase itself and be ready to accept the next image with the highest possible resolution capability (i.e., without any ghost image).

Such information as astronaut name or number, date, time, and specimen description will be imprinted or taped on a small square on the side of the specimen slide. The astronaut will fill in the blanks, position the square under a 1 to 1 lens in the microscope, and scan one frame of video, thus providing identification for each specimen before it is viewed. The information therefore will not only appear in the video display but be physically recorded on each specimen slide for later ground analysis.

6.5.3.2 Color Capability. Additional information can be obtained from the telemicroscope equipment if the images are transmitted in color. Examination of the possibility of adding a color capability to the IMBLMS telemicroscope unit has indicated the feasibility of using the color wheel (three primary colors) filter method similar to that used to transmit color photos from the moon on the Surveyor program. It is not practical at this time to consider a commercial-type color-camera for the monitor system for the following reasons:

- This type of color equipment is beyond the present state-of-the-art for space applications.
- It presents a high development cost factor.
- The required bandwidth is beyond the Apollo constraints.
- The size, weight, and power requirements are prohibitive.
- The picture quality inherent in a complete color system is not really required since the IMBLMS television unit will be an instrumentation system required to observe only certain reasonably static chromatic conditions that will be present to some degree in each specimen slide.

Two methods were considered to implement the three-color scheme. The first provides for three separate sources (lamps) within the telemicroscope, with a filter of each primary color placed in front of each lamp, and then optical alignment to project through the image plane within the microscope. This approach is a prohibitive one since achieving the required alignment will involve an extremely delicate, sensitive, and difficult operation. A second and better method is to design a color wheel with the three primary colors built into it. This wheel will be positioned in front of the source and

electronically synchronized with the TV camera or rotated manually. The vidicon will then slow the scan to one frame per second and, for each frame or sequence of frames, a different color will be rotated in front of the source. Each desired image will require three frames or more of video to filter each of the three red, blue, and green color components within the image, and this information will be stored, frame by frame, on the video recorder for later transmission to the ground. At the ground station control, a Polaroid camera containing color film will be set up in front of the monitor, and the camera will be activated as each frame is received. The three frames containing the three primary colors will be photographed through the same types of filters as those used in the IMBLMS telemicroscope unit on-board the spacecraft and all will be impinged on the same film.

The IMBLMS telemicroscope unit can thus be implemented and a RETMA color chart can be used for chromatic calibration and verification. The possibility of having color filters available for use, only if required and under the direct control of the astronauts, is being studied.

6.5.4 Displays

A variety of approaches were considered regarding the display functions of the IMBLMS.

6.5.4.1 General. A display, on request, of an astronaut's respiration and heart rates, with out-of-tolerance alarm capability, was considered mandatory for monitoring of EVA and stressful conditioning requirements. These displays, together with other somewhat less critical information, will be displayed on vertical meters having adjustable high and low limit (visual and auditory) alarm points. Other non-set point types of display will be presented (wherever possible) on dual-range vertical meters or dual-range circular meters, depending on the scale and resolution requirements.

As previously discussed, the physiologic monitoring module containing the heart rate and respiration rate displays will be sufficiently portable to permit monitoring to be accomplished at various measurement locations in the candidate carriers.

6.5.4.2 Cathode Ray Tube. The dynamic physiologic monitoring module will contain a miniature cathode ray tube (CRT). This can be used to view sensor data before or during recording or transmitting. Viewing the sensor output will establish confidence in the correctness of the circuits, connections, and other operations and will be of assistance during calibration procedures.

A standard TV monitor, with an approximate viewing area of 25 in.^{2} is proposed for use with the IMBLMS telemicroscope and other TV equipment. This monitor can be used to optimize the telemicroscope output and other TV observations made prior to video recording. The monitor will also have a capability for displaying a $\dot{V} - V$ loop, a ZNP loop for evaluation, a moving spot for the behavioral tracking task, and the same analog data as was presented on the miniature oscilloscope, but with much greater resolution.

6.5.4.3 Alphanumeric Display. This type of display has been considered for the presentation of the following information:

- Cardiotachometer output
- Verification of 0 to 9 keyboard activation before entry into a processor
- Analog signal amplitudes
- Blood pressure computations
- Processor register status
- Behavioral test scores
- Respiratory measurements
- Other miscellaneous measurements handled by the processor

Two types of alphanumeric display have been considered. One is the semipermanent illuminated type display which can be viewed, and which provides information that can be entered manually in a log (if necessary); the other is a permanent hard-copy display that can be achieved with an alphanumeric printer. The latter type will be used with the IMBLMS and will be available for verification of numerical data before entry into IMBLMS, for printout of computational results from an IMBLMS data processor,

and for printout of ground instructions containing measurement changes and deviations. This third function will most certainly occur on the long missions in which the IMBLMS will be used.

6.5.4.4 Miscellaneous. Certain biochemical measurement equipment will possess or require the inclusion of integrated displays which are not of an analog format and which cannot be directly entered into the data management system. These displays, requiring interpretation, analysis, logging, or other effort by the astronaut, will not be considered part of the data management system. The resultant interpretation, however, will be under the data management cognizance.

6.5.5 Data Processor

The possible utilization of the LM or Apollo guidance computers (representative of existing flight-qualified units) has been considered; however, their use presents two major drawbacks. The largest portion of the memories of these computers consists of a "rope" core which is fixed and can only be modified by ground-based equipment. However, a fixed memory will seriously hamper any changes or program revisions that may be necessary to meet unanticipated conditions during the long missions envisioned for IMBLMS application. Secondly, the Apollo computers are primarily intended for processing guidance equations and their use, if possible, for other types of curve fitting, computations, and similar operations, will be less efficient. General-purpose airborne computers available from other vendors will be studied, but appear to fall into the inefficient category. Consequently, a new special-purpose processor, with an NDRO memory capable of accommodating on-orbit revisions, will be designed to meet the unique computational requirement of the IMBLMS. It is anticipated that this processor, using microcircuitry and airborne packaging techniques well within the current state-of-the-art, can be housed in one IMBLMS module with a maximum dimension of 8.5 in. × 8.5 in. × 15 in.

6.5.6 Controls

There are no unique control requirements for IMBLMS; however, pertinent groundrules are presented in Section 6.6.

6.6 INTEGRATION OF IMBLMS EQUIPMENT AND SYSTEM REQUIREMENTS

In accordance with the LMSC modular approach to implementing the IMBLMS, the various data management system equipment units have been modularly configured to meet system requirements.

6.6.1 General Control and Display Rules

Final module designs will incorporate the following control and display philosophies:

- Arrangement of Controls and Displays – Determined on the basis of the following considerations:
  - Function (i.e., by subsystem)
  - Criticality of response time
  - Crew task loading
  - Mission phase
  - Control and display relationship (i.e., controls as close as possible to their associated displays)
  - Control operating ease and display legibility
- Types of Controls and Displays – Determined on the basis of the following considerations:
  - Hand operation with pressurized glove wherever possible
  - Display/control placement
  - Lighting conditions
  - Zero-g environment
  - Operating ranges
  - Resolution requirements
  - NAA/GAEC commonality
  - Function

6.6.2 Dynamic Physiologic Monitor

Figure 6-2 shows the concept of this module. Although it is not strictly a data management module, it contains (with appropriate controls) the data management data recorder and instrumentation oscilloscope (miniature).

This module can be used either in the data management section of the IMBLMS console or at any remote location where power is available. In its remote mode of operation, neither the oscilloscope nor the recorder can be used for other than the physiological data displayed by the various meters. All controls and displays are self-explanatory except the recorder slew button which causes the tape to advance or reverse at high speed.

6.6.3 Video and Display Monitor

Figure 6-3 presents the concept of an on-board combined video image and oscillographic display unit. This unit also contains the controls and displays associated with the video recorder.

The majority of the controls and displays are self-explanatory, except perhaps the input selection (INT/EXT). When this switch is in the EXT(external)position it activates the input coaxial connector so that only one input can be displayed on the screen. This mode is employed more often for maintenance purposes and allows external testing of transducer outputs and other aspects. In the INT (internal) position, this switch activates the four-channel input controls (directly above it) which automatically receive (under program control) appropriate measurement data for verification and other purposes, or which receive inputs manually selected through the CRT controls at the data management control module.*

---

*See Fig. 6-8.

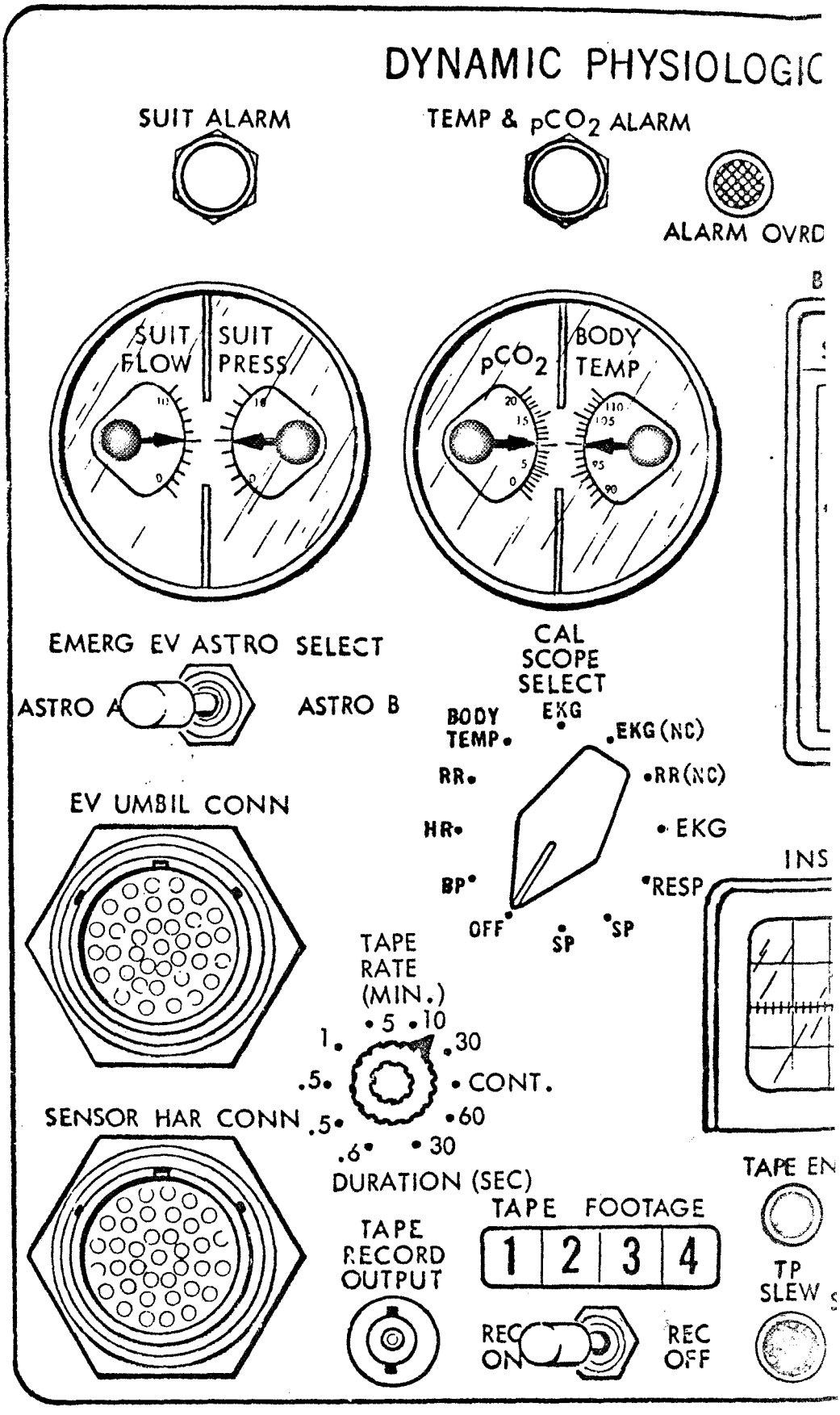
DYNAMIC PHYSIOLOGIC
SUIT ALARM
TEMP & pCO2 ALARM
ALARM OVRD
SUIT FLOW
SUIT PRESS
pCO2
BODY TEMP
EMERG EV ASTRO SELECT
ASTRO A
ASTRO B
CAL SCOPE SELECT
BODY TEMP
EKG
EKG (NC)
RR
RR (NC)
HR
EKG
BP
RESP
OFF
SP
SP
EV UMBIL CONN
TAPE RATE (MIN.)
1
.5
5
10
30
CONT.
60
30
.5
.6
DURATION (SEC)
SENSOR HAR CONN
TAPE FOOTAGE
1 2 3 4
TAPE RECORD OUTPUT
REC ON
REC OFF
TAPE EN
TP SLEW
INS

(ACTUAL SIZE)

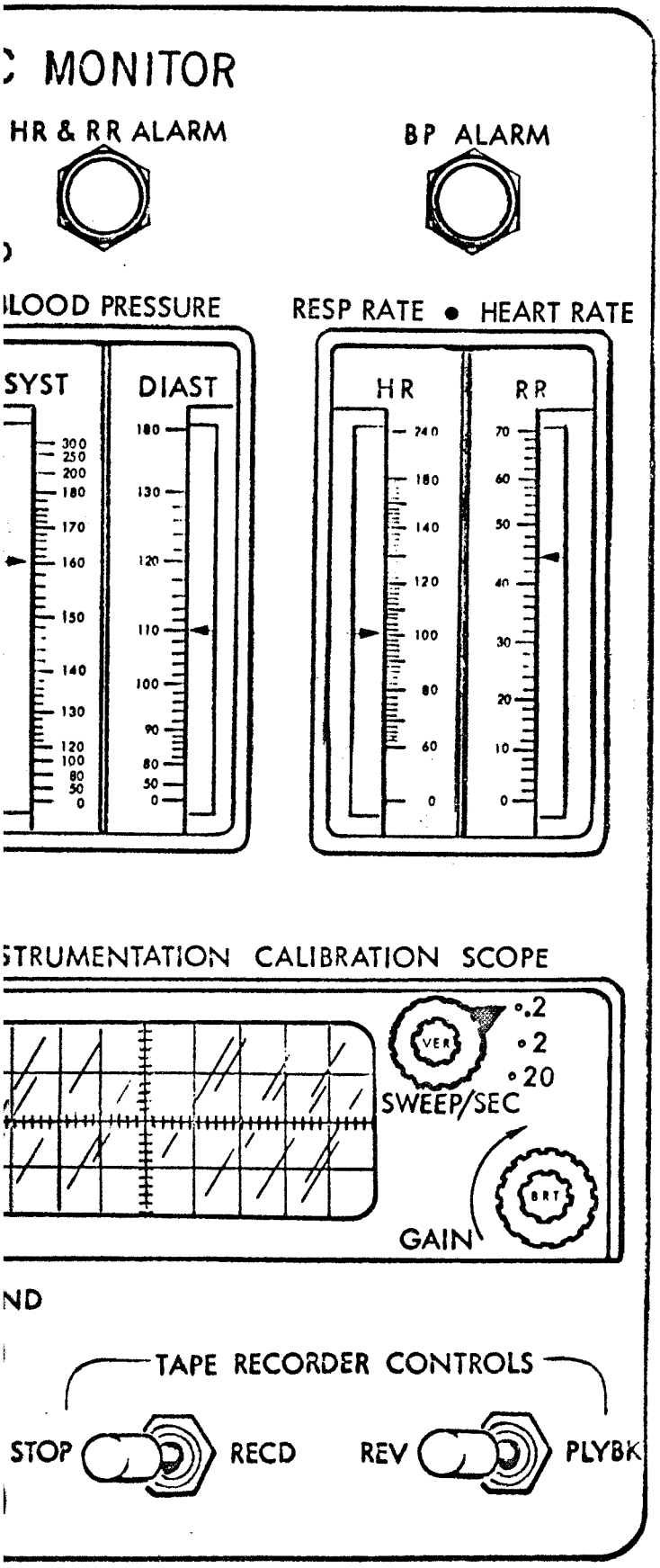

Fig. 6-2 Dynamic Physiologic Monitor

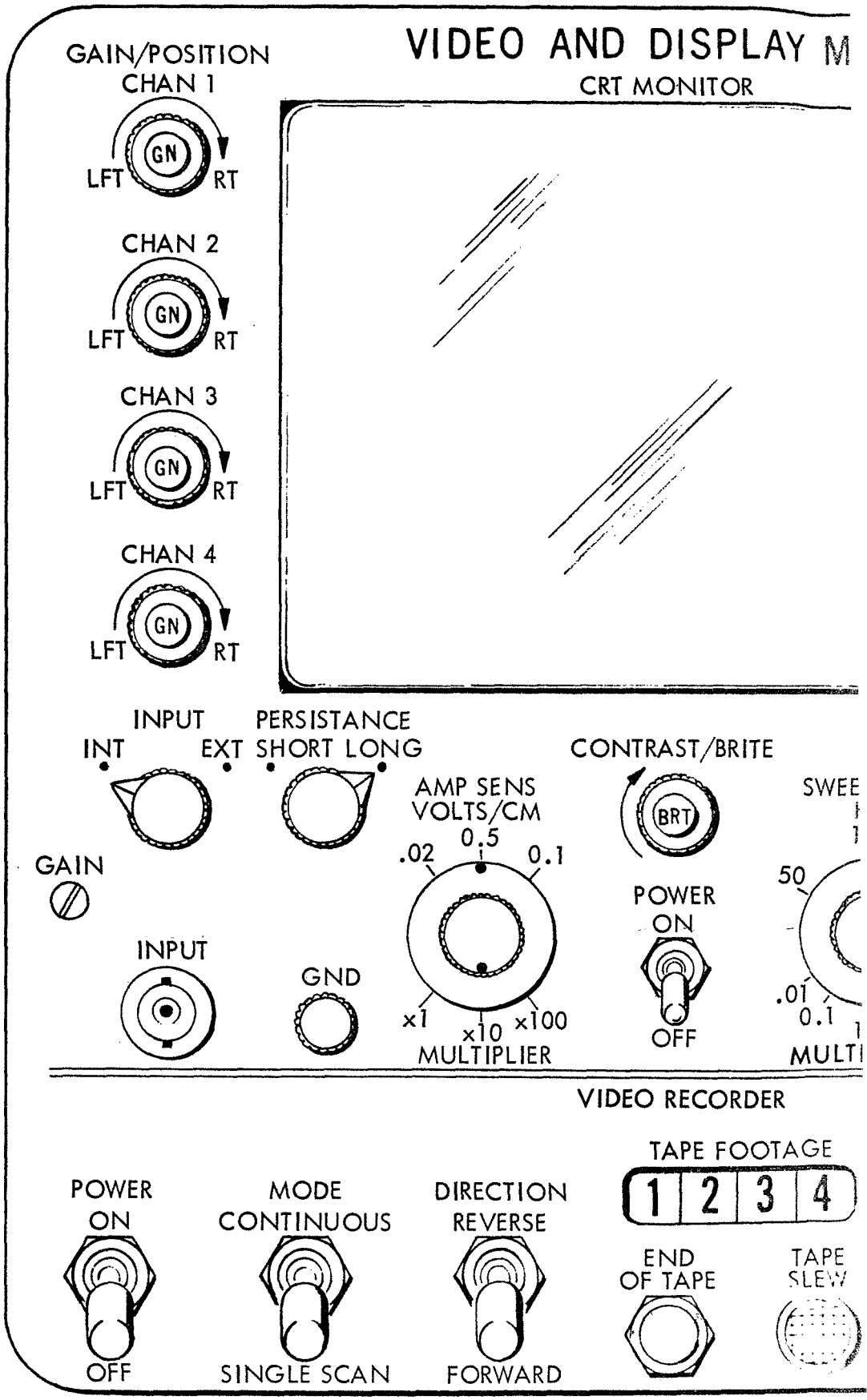

(ACTUAL SIZE)

pg. 6-28 Blank
& not filmed

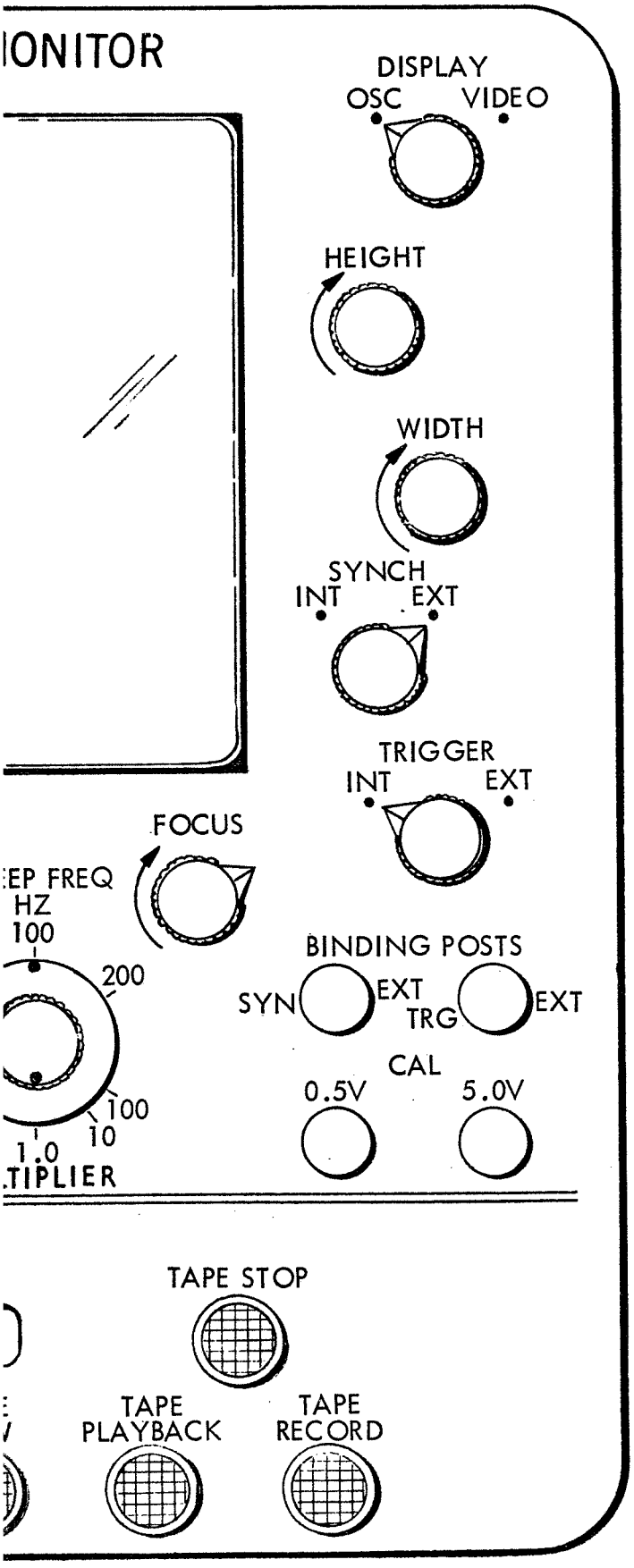

Fig. 6-3 Video and Display Monitor

6.6.4 Numerical Data Entry and Printer

Figures 6-4 and 6-5 present two candidate modules for the entry of numerical data into the IMBLMS, together with provisions for a hard-copy printout before actual recording. An interim storage area provides this capability. The printer, shown in both illustrations, is available for printing out computations occurring in the IMBLMS processor, ground (up-link) instructions, and similar data.

The candidate in Fig. 6-4, using digit dial switches, provides for entry of numerical data which have been obtained elsewhere, logged, and then brought to this station. After such items as day, organ system, test number, and test time i.e., (time of actual measurement) have been dialed in, a series of test values then can be entered. Only new values are recorded. The status data are only recorded with the first entry or if any of the status dials are changed. Printout of the dialed-in data can be obtained, prior to recording, by initiating the PRINT button. If an error is made, the CLEAR button can be activated and the data reentered. Once the data has been recorded, however, corrections cannot be made nor printout obtained. This is the LMSC-recommended candidate; however, it must remain a candidate until flight-qualifiable, digit-dial switches can be obtained. An alternate candidate, shown in Fig. 6-5, was created and utilizes the IMBLMS processor keyboard for entering the appropriate date. As the keys are selected for the day, organ system, test number, and test time, the selection will be displayed on alphanumeric displays. Actual entry of displayed data for recording, printout, and other operations will be made at this panel.

6.6.5 Data Management Processor

The data management processor module contains the necessary controls and displays for astronaut communications with the processor. Two candidates for this module were prepared. The candidate shown in Fig. 6-6 uses a pushbutton entry somewhat less complicated than the Apollo guidance computer keyboard and displays system, and the candidate shown in Fig. 6-7 uses the entire Apollo keyboard and displays, except that

pg. 6-30 BLANK & not filmed

the keyboard is recessed for ease of operation and for protection from inadvertent operation. Since the astronauts will be familiar with the Apollo unit, it therefore may be a more advisable choice; however, such selection may present the possibility of astronaut confusion and resulting improper program call-up.

Information on operation of the various controls and interpretation of the displays will be provided to astronauts through training and the issuance of an instruction handbook.

6.6.6 Data Management Control

This module (Fig. 6-8) is multifunctional. It provides remote control of the carriers' real-time (R/T) and delayed-time (D/T) transmitters, controls, and inputs for the TV cameras; a mission cumulative timer and an event timer; manual control of the four-channel inputs to the video and display monitor; and controls and displays (plus a housing) for the memo recorder.

Many of the controls are self-explanatory; however, any attempt to put more than one device on the same transmitter will cause the operator error (OPR ERR) display to be illuminated.

When one TV camera is in operation, it will automatically be displayed on the video and display monitor, provided the video and display monitor OSC/IMAGE switch is in the image position. Turning on both cameras will cause the OPR ERR display to be illuminated.

The memo-pad recorder can be operated either manually or automatically by means of voice-controlled relays. Fast-forward and fast-reverse controls are provided to reposition the tape.

NUMERICAL DATA ENTRY AND PRINTER

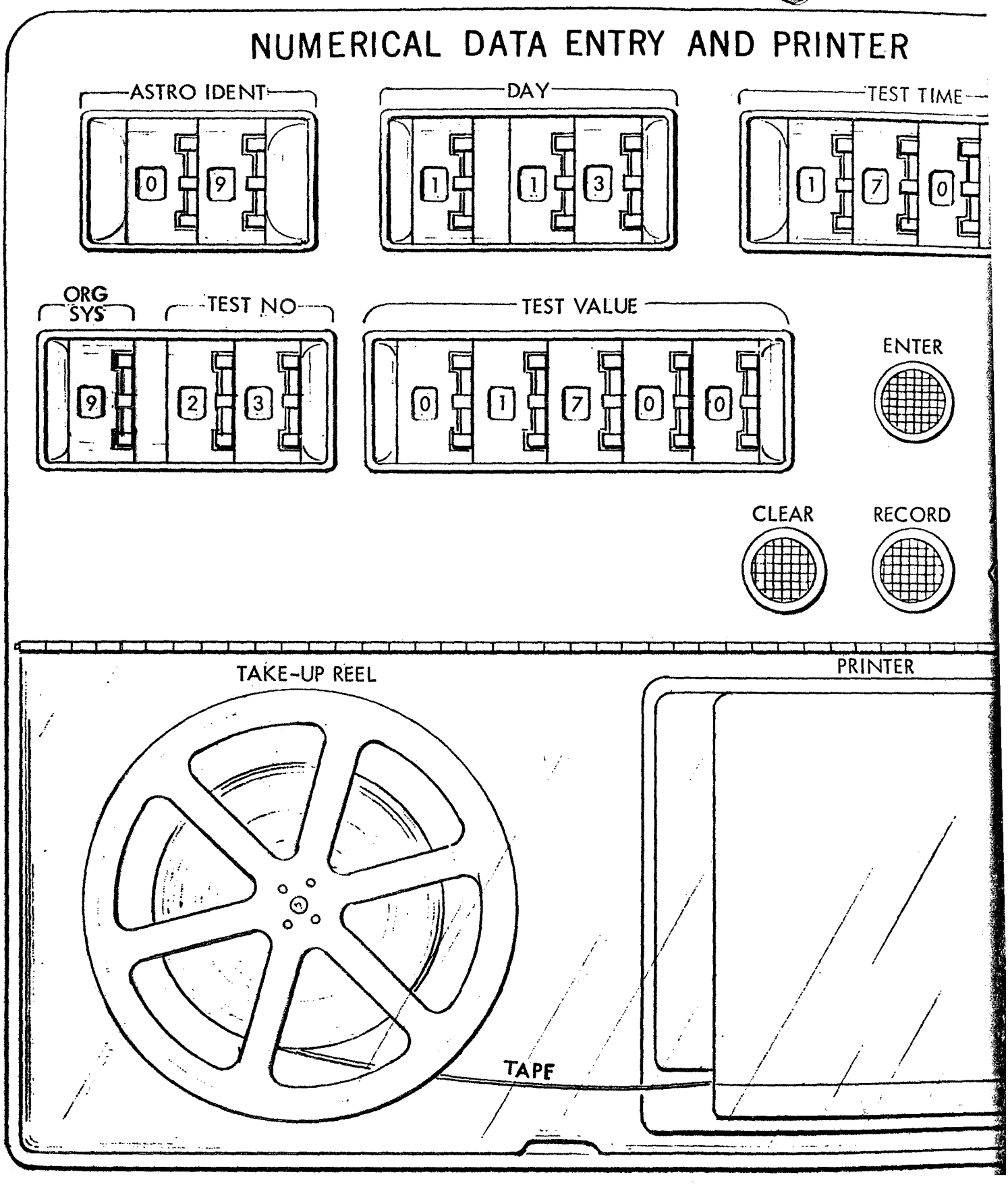

(ACTUAL SIZE)

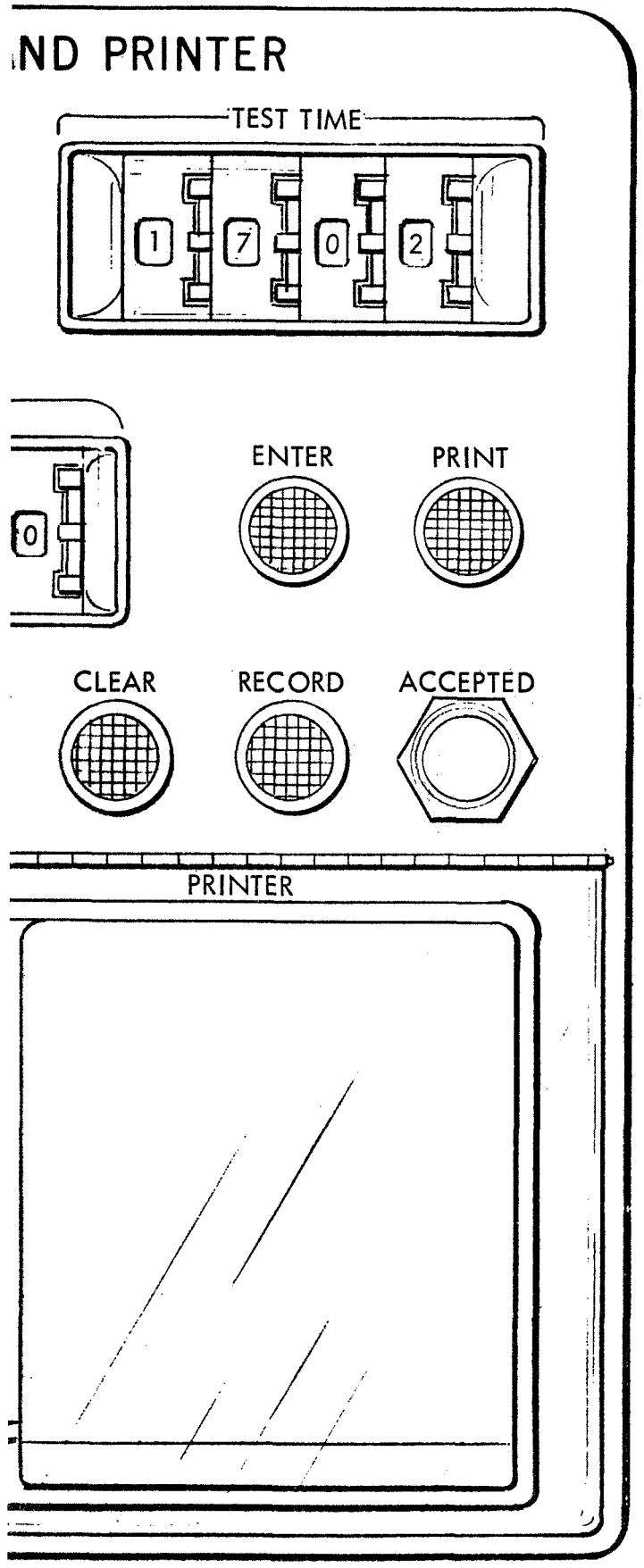

Fig. 6-4 Numerical Data Entry and Printer – Candidate 1

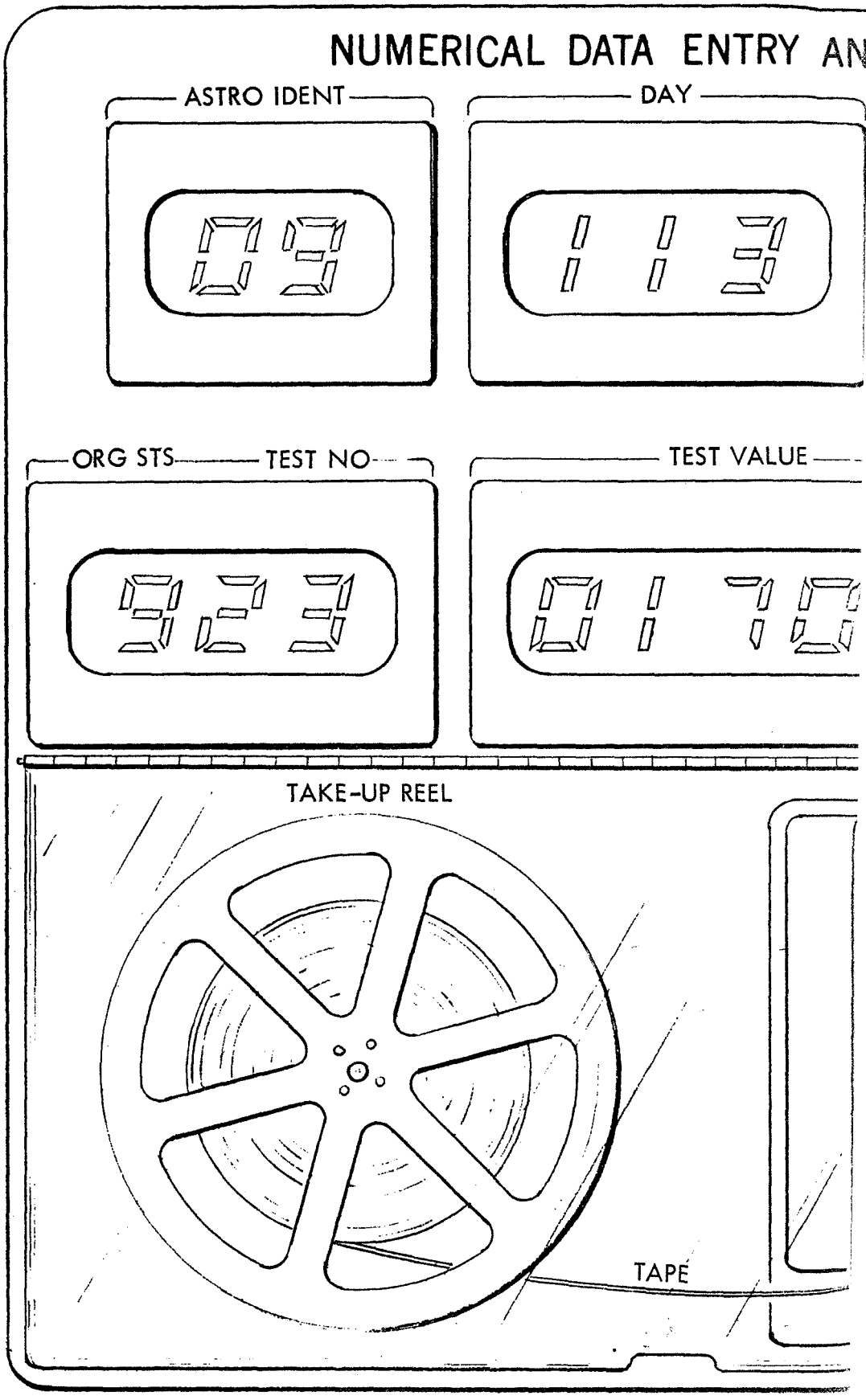

(ACTUAL SIZE)

pg. 6-34 BLANK & not filmed

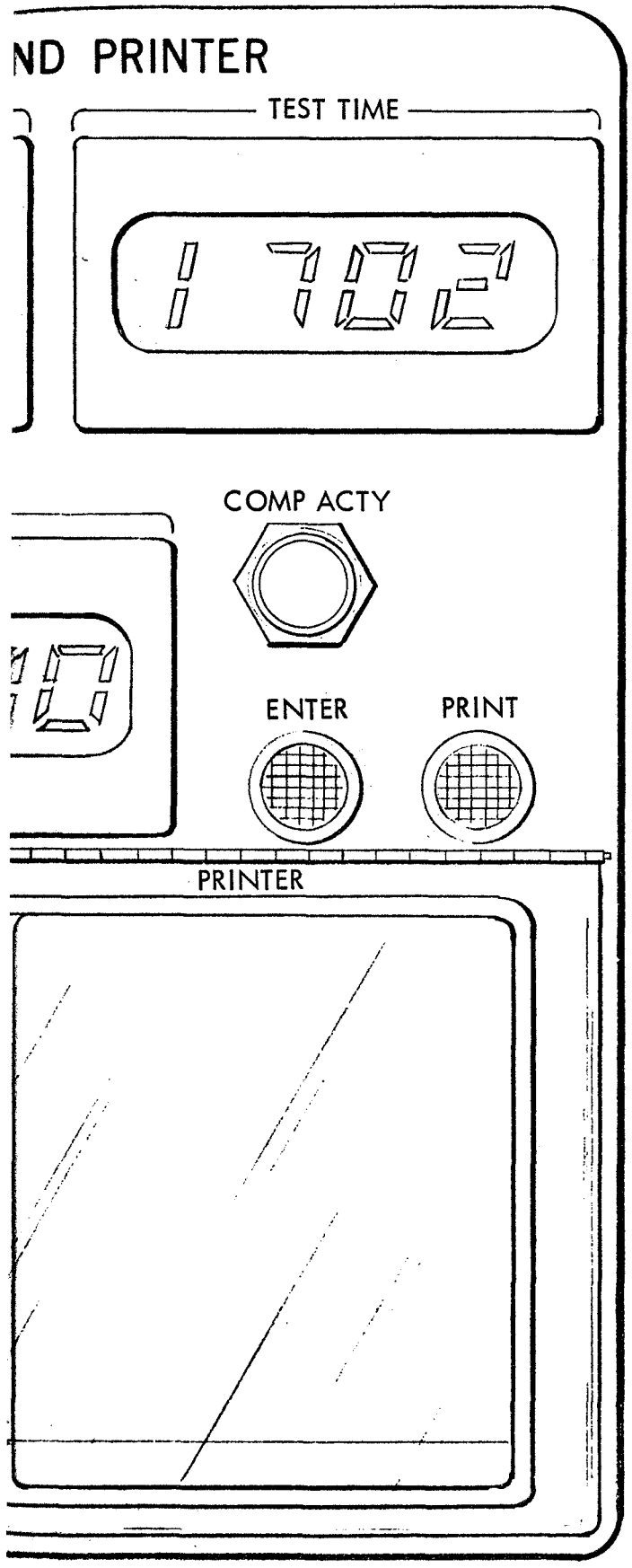

Fig. 6-5 Numerical Data Entry and Printer – Candidate 2 (Alternate)

PROCESSOR

UP LINK ACTY	COMP ACTY
SELF CHECK	EXP ACTY
PROG	STBY
NUM DATA	RESTART
SPARE	OPP ERROR
SPARE	SPARE
SPARE	SPARE

KEYBOARD

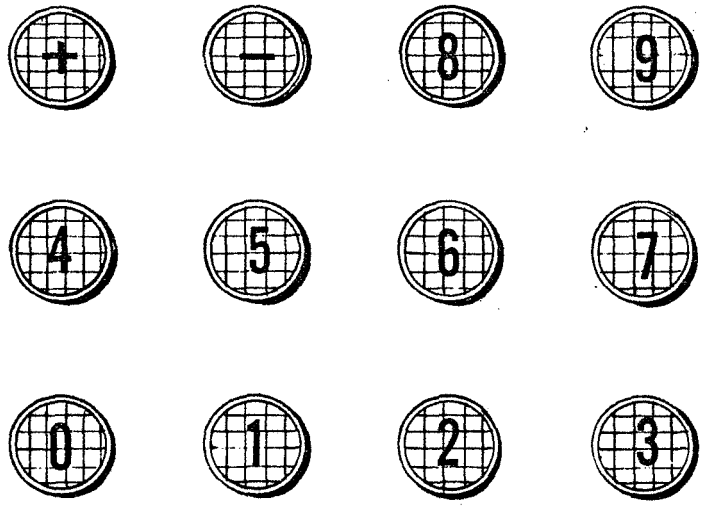

ENTE

(ACTUAL SIZE)

Pg. 6-36 Blank & not filmed

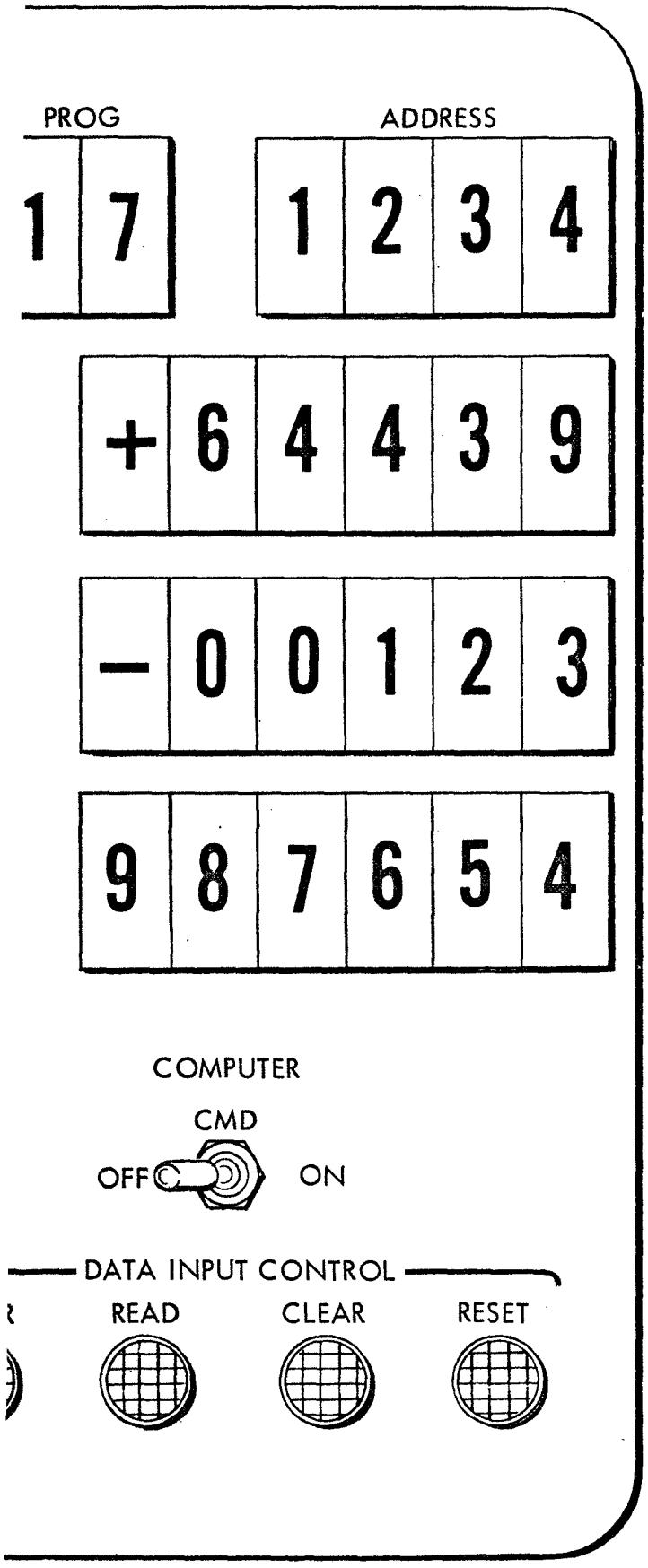

Fig. 6-6 Processor – Pushbutton Data Entry

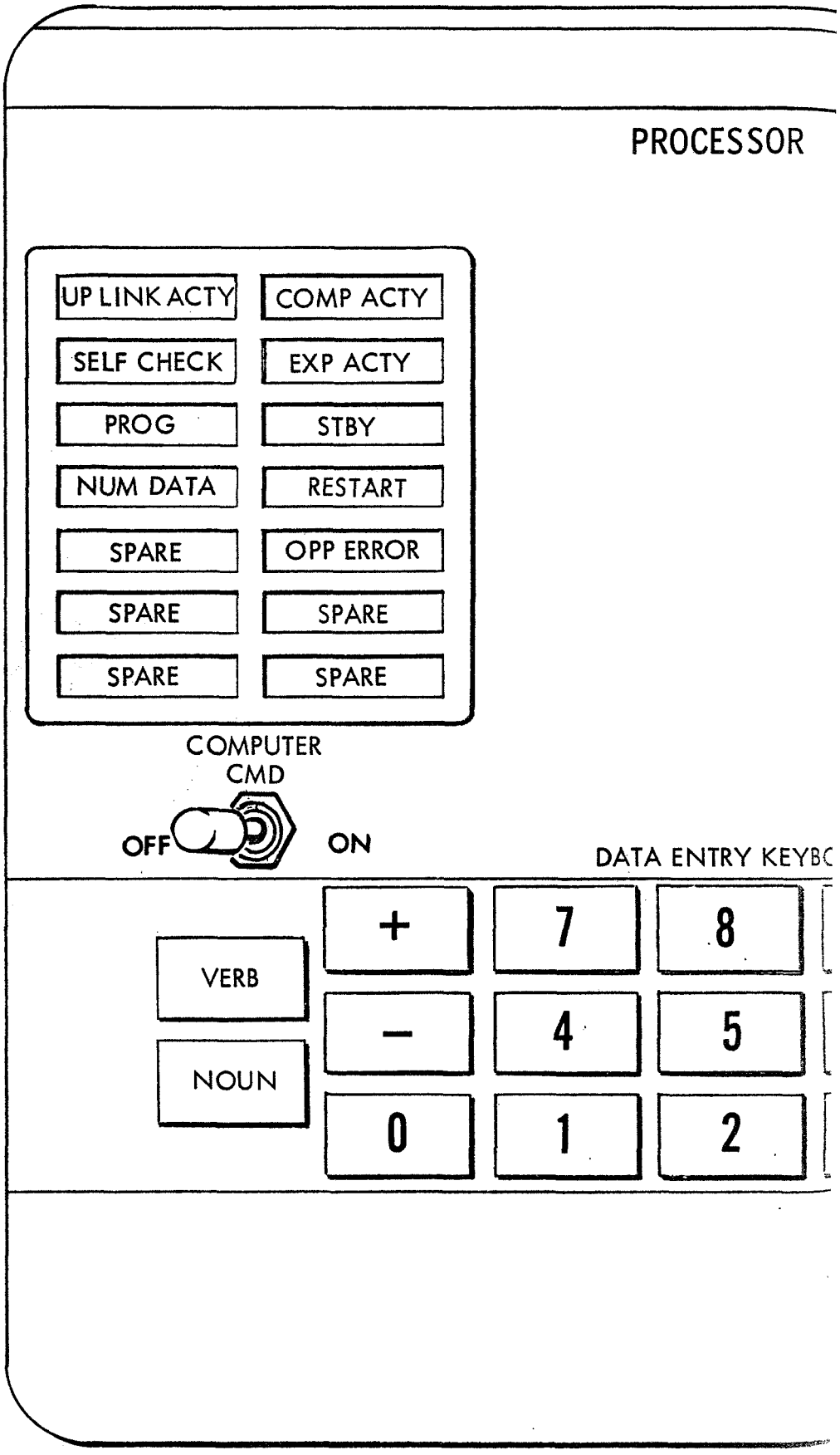

(ACTUAL SIZE)

pg. 6-39 BLANK & NOT filmed

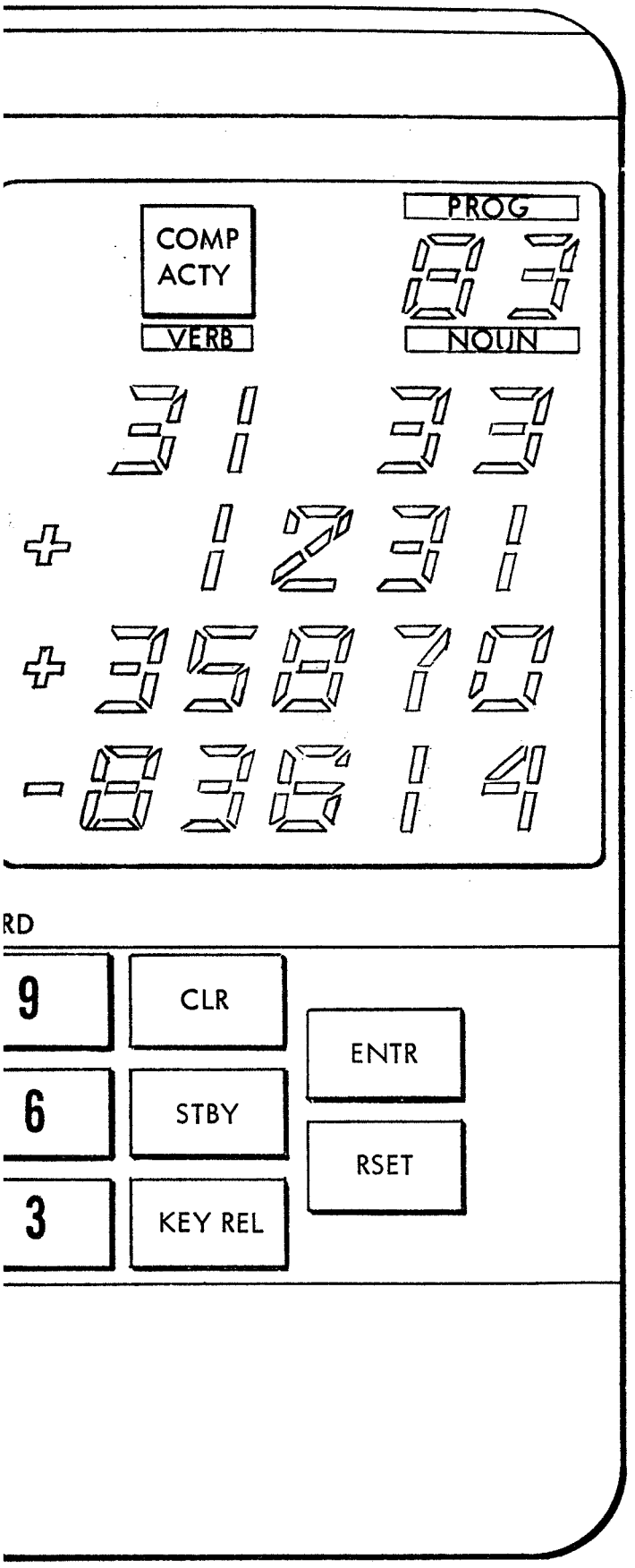

Fig. 6-7 Processor – Keyboard Data Entry (Apollo)

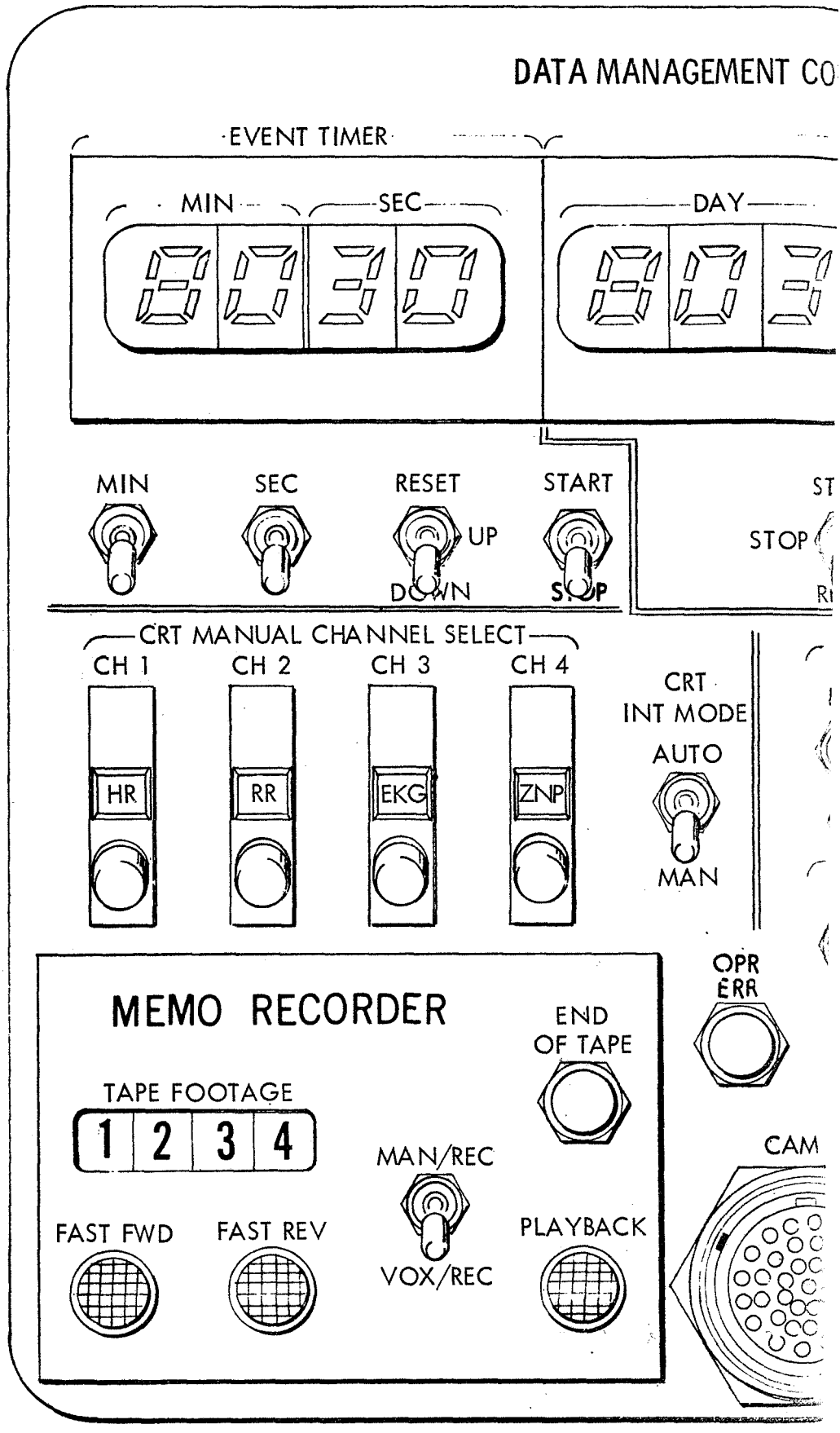

(ACTUAL SIZE)

pg. 6-40 Blank & not filmed

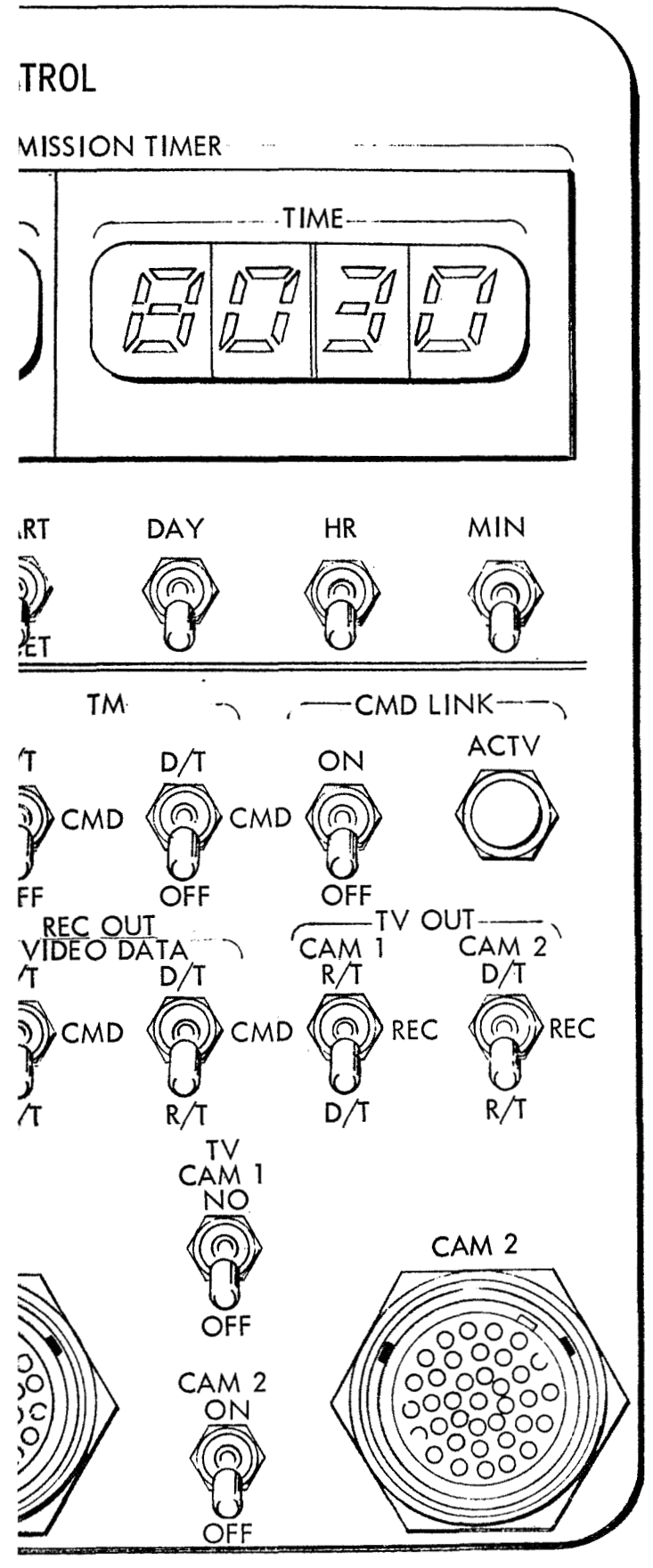

Fig. 6-8 Data Management Control Module

6.7 GROUND NETWORK CONSTRAINTS

Two sources of constraint due to ground network requirements have been considered.

6.7.1 Manned Space Flight Network (MSFN)

The ground stations of the MSFN serve as the remote arms for the MCC-Houston. There are 11 ground stations with 30-ft S-band antennas, three with 85-ft S-band antennas, 5 shipboard stations, and 8 Apollo range-instrumented aircraft. These stations should be available for support of the IMBLMS data, but care must be taken to minimize interference with in-line Apollo support requirements. The 30-ft ground stations will provide primary support to the early low-orbital-altitude missions for which the IMBLMS will be utilized. All stations have USB equipment, UHF command equipment, VHF telemetry receivers, two computers, at least two PCM decommutators (probably three or four), two wideband magnetic-tape recorders and other associated equipment. Each of the 30-ft, single, USB ground stations can handle one S-band PM circuit, one S-band FM down-link, at least three UHF down-links, and a UHF up-link. The dual USB stations can accommodate two coherent PM circuits, two FM down-links (at those stations with four S-band receivers), and UHF and VHF links.

With the cluster-concept carrier, up to six data links must be simultaneously received and recorded at the dual USB stations (4 S-band and 2 VHF) and 4 links at the single USB stations (2 S-band and 2 VHF). NASCOM circuits for Apollo, between the ground stations and the MCC consist of the following:

- 1 TTY circuit (duplex)
- 1 or 2 voice circuits
- 1 biomedical data circuit
- 2 or 3 digital-data circuits
- 1 command circuit

Data processing, reduction, and archiving will present a problem. Data compression, both on-orbit and at the ground stations, will help relieve this situation.

pg. 6-42 BLANK & not filmed

6.7.2 Manned Space Center

The nerve center for the ground support of a manned space mission is at MCC-Houston. For the IMBLMS, MCC-Houston will be utilized in a similar manner as for in-line Apollo missions. This MCC-Houston complex consists of two mission operation control rooms (MOCR) each with a set of staff support rooms. The MOCR contains a series of consoles with the necessary controls and displays for flight control personnel. There are 16 console positions with at least one more position required to support experiment systems. Staff support rooms include Flight Dynamics SSR, Vehicle Systems SSR, Life Systems SSR, Flight Crew SSR, Networks SSR, and Operations and Procedures SSR. Experiment support will be required either as part of the Vehicle Systems SSR or in a separate room reasonably accessible to the MOCR.

Off-line data-reduction facilities are available at MSFC, MSC, and GSFC for use in data processing and reduction. Large scale computer systems are available at each of these NASA centers. However, with the MSFN obtaining data from many different programs, the greatest problem, besides manning the ground stations, is the transmission of these data to the large-scale computer centers at these facilities for performance of the necessary complete processing.

6.8 CONCEPTS STILL UNDER INVESTIGATION

General additional concepts for various elements of the data management system are still under consideration.

- TV Signal Compression. As previously mentioned, the bandwidth required for the TV system was not compatible with the AM VHF-transmitter bandwidth, and compression of the video signal therefore is being studied. The signal can be compressed in its analog form, digitized, and then recorded in a PCM format, thus eliminating the need for a video recorder, or it can be compressed and recorded in an analog form, with compression occurring after the information is reviewed on the monitor. Results of this evaluation will be provided in the final IMBLMS report.

- Flight-Qualifiable Hardware. As previously mentioned under the numerical data entry function, some of the candidates revolve around the lack of hardware, etc., that is, or which can be, flight-qualified. Various vendors are being contacted to resolve these questions before completion of final report.

6.9 OVERALL VIEW OF DATA MANAGEMENT SYSTEM

Figure 6-9 presents a preliminary, simplified block diagram of the on-board IMBLMS data management system equipment. This diagram also shows, by means of symbolic switches S1, S2, and S3, an equipment growth and system expansion concept that continues to utilize all the initial configuration equipment except several voltage-controlled oscillators. An early data management system could handle basic physiologic data along with numerical data. Follow-on equipment could include such items as the TV system and automatic data processing. A more detailed diagram to be presented in the final report will show the modular interconnections and signal routing between various modules and candidate carrier interfaces.

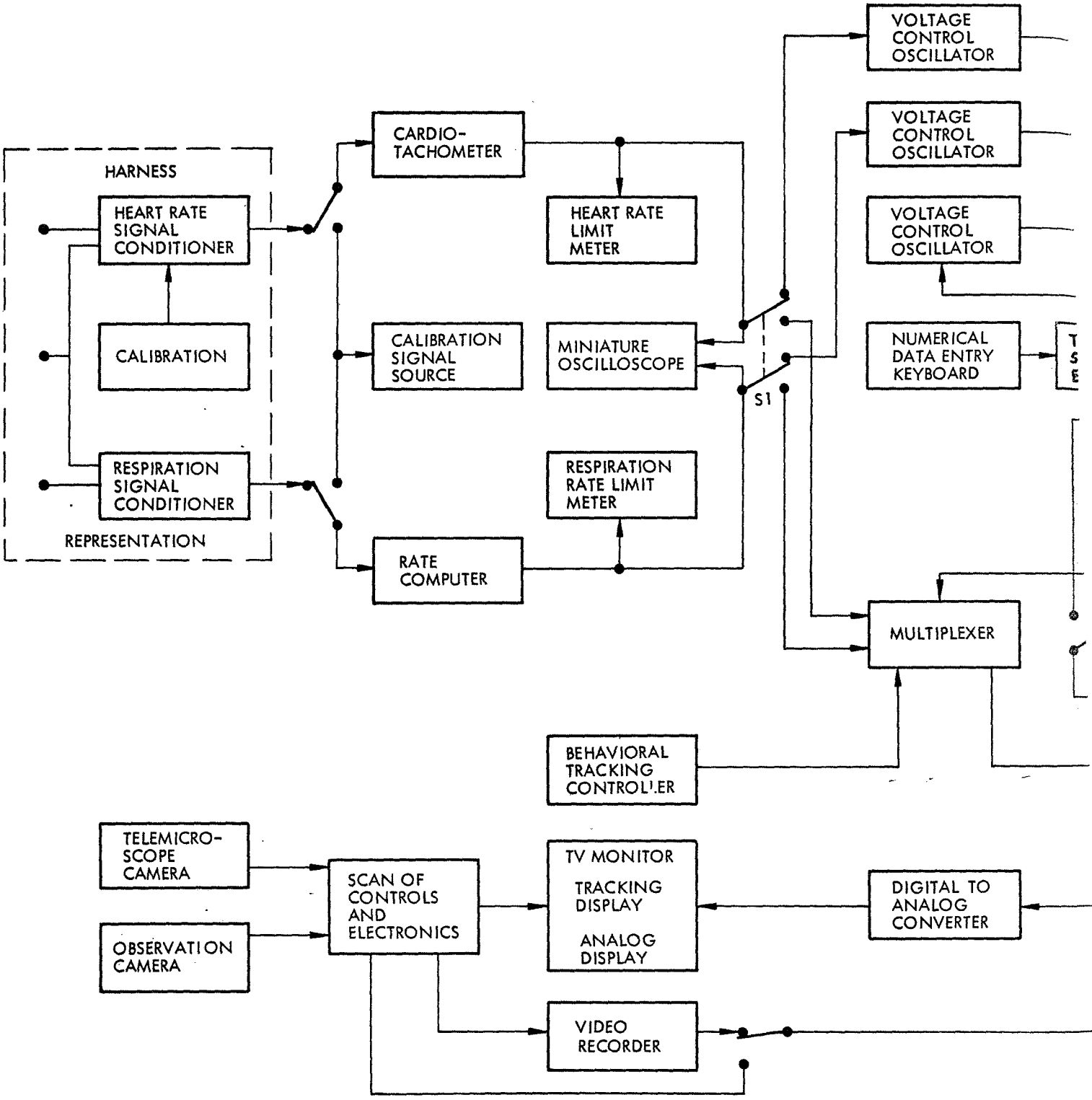

pg. 6-46 Blank & not Sized

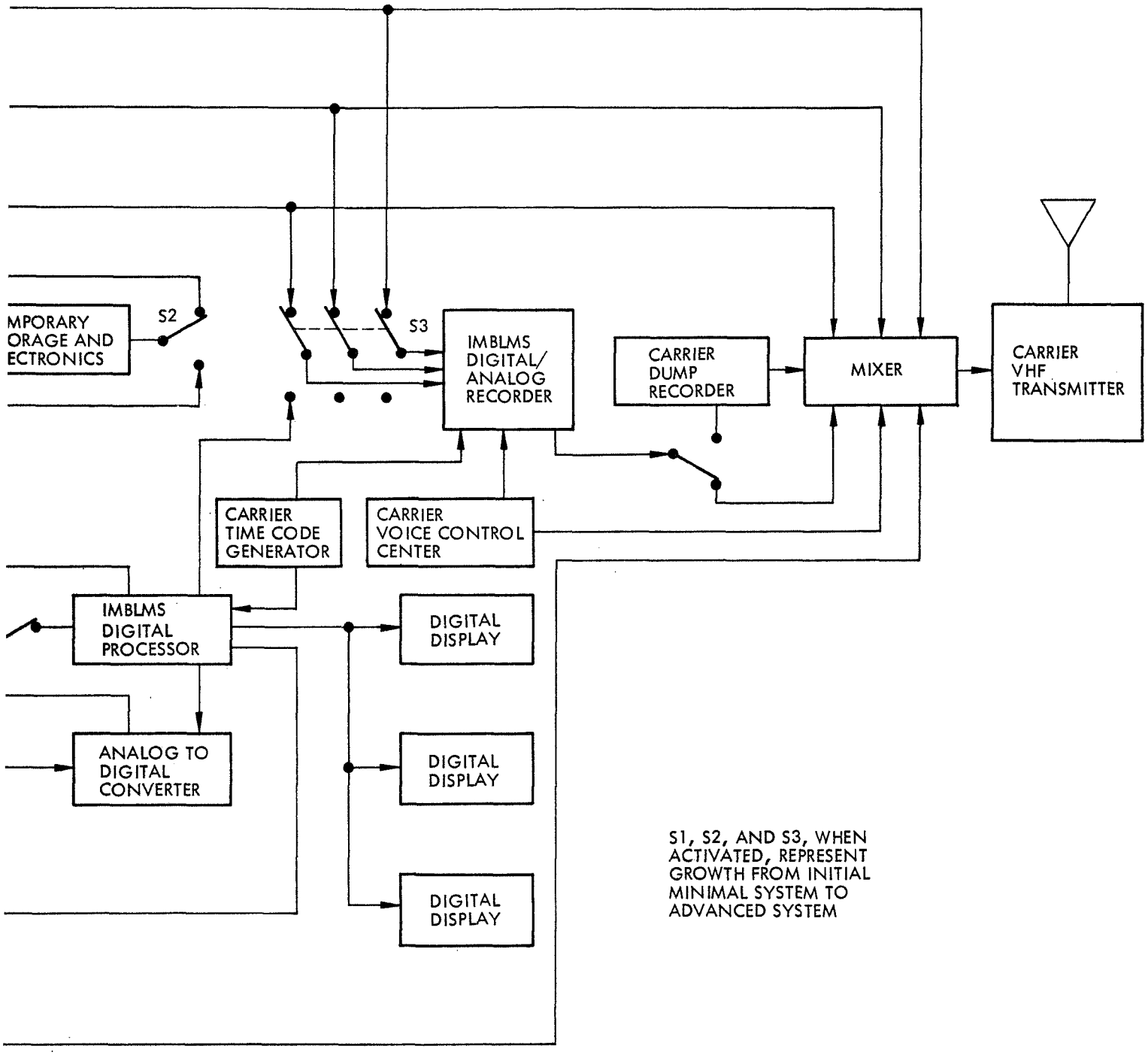

Fig. 6-9 Data Management System (Including Growth Concepts)

7 PRELIMINARY SYSTEM DESIGN CONCEPT

Section 7
PRELIMINARY SYSTEM DESIGN CONCEPT

This section delineates the initial systems approach for the IMBLMS, based on the system requirements definition and mission/spacecraft analysis. The major consideration influencing a specific modular approach is the need to group commonly used measurement equipment and associated display and controls in proximity to each other. The major advantage to such a grouping is that it permits adding or subtracting major equipment without redesigning the entire package.

7.1 BASIS OF IMBLMS DESIGN CONCEPT

The overall IMBLMS concept consists of the following:

- Physiological/behavioral/data management (PBDM) station
- Biochemical station
- Major peripheral measurement equipment
- Storage

The following basic design decisions were made:

- Grouping of measurement equipment in accordance with a specific body organ or class of measurement (e.g., cardiovascular and respiratory)
- Centralizing data management and control so that storage, recording, display, evaluation, and control can be accomplished for all modules
- Physical separation of physiological/behavioral measurements from biochemical measurement, and provision of a filtered compartment for those measurements involving liquid or gas
- Provisions for interconnect at a centralized biostation for all peripheral measurement equipment such as LBNP, ergometer, mass measurement system, and for total body exercise.

- Use of displays and controls similar to those specified for the AAP
- Use of the IMBLMS in MDA within experiment canister

The primary objective of this initial design effort is to establish the feasibility of accommodating all the measurement equipment and to uncover any design problems associated with packaging, human engineering, and operation.

7.2 PHYSIOLOGICAL/BEHAVIORAL/DATA MANAGEMENT (PBDM) STATION

The PBDM station is packaged in a 20- × 30- × 40-in. experiment canister that is stowable. The canister is an integral part of the station and provides major support when the station is set up for operation. The station itself has 12 removable modules, as shown in Fig. 7-1. One removable module (dynamic physiological monitor) can be used at remote sites and is particularly suited to making dynamic measurement of vital signs, such as heart rate, respiration rate, temperature, and blood pressure. Preliminary estimates have indicated that all equipment associated with a particular organ function can be housed in a 9- × 9- × 15-in. module, thus permitting standardization of the housing, rails, frames, and fasteners, as well as addition or removal of a module with a minimum of effort.

7.2.1 Dynamic Physiologic Monitor (Fig. 7-2)

This is the most versatile module in IMBLMS. It has the capability of being removed from the PBDM station and transported to remote sites such as the CM, LM, AM, or MDA. For EVA, two modules should be provided – one at the CM and one at the AM.

The dynamic monitor will obtain standard physiological measurements (body temperature, heart rate, respiration rate, and blood pressure) and major critical pressure suit measurements (suit flow and pressure, and pCO_2). Dual limit meters are provided for both heart rate and respiration rate, and for systolic and diastolic blood pressure. Dual round indicators are provided for suit flow and pressure and for pCO_2 and body

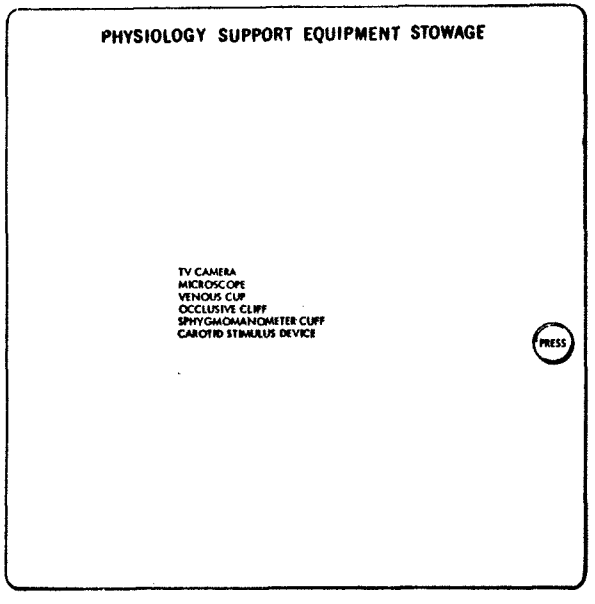
PHYSIOLOGY SUPPORT EQUIPMENT STOWAGE
TV CAMERA
MICROSCOPE
VENOUS CUP
OCCLUSIVE CLIFF
SPHYGMOMANOMETER CUFF
CAROTID STIMULUS DEVICE
PRESS

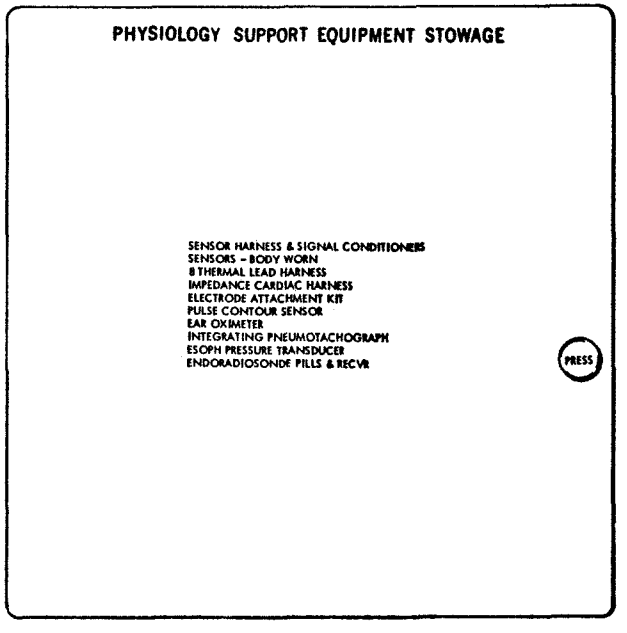
PHYSIOLOGY SUPPORT EQUIPMENT STOWAGE
SENSOR HARNESS & SIGNAL CONDITIONERS
SENSORS - BODY WORN
8 THERMAL LEAD HARNESS
IMPEDANCE CARDIAC HARNESS
ELECTRODE ATTACHMENT KIT
PULSE CONTOUR SENSOR
EAR OXIMETER
INTEGRATING PNEUMOTACHOGRAPH
ESOPH PRESSURE TRANSDUCER
ENDORADIOSONDE PILLS & RECVR
PRESS

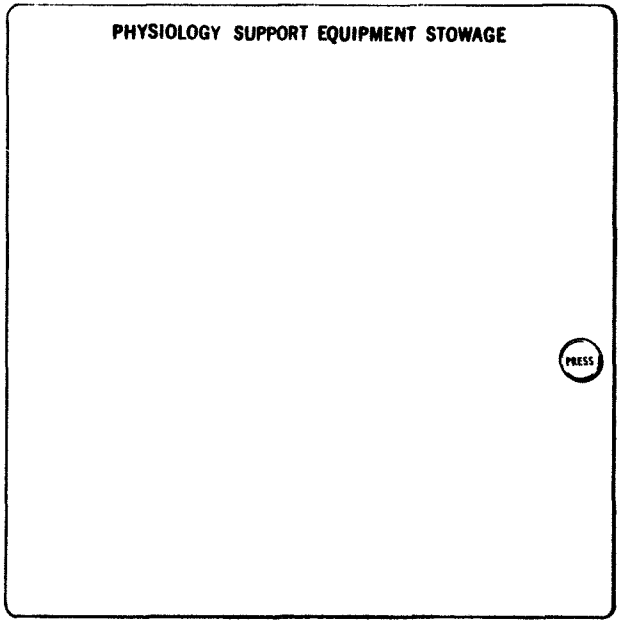
PHYSIOLOGY SUPPORT EQUIPMENT STOWAGE
PRESS

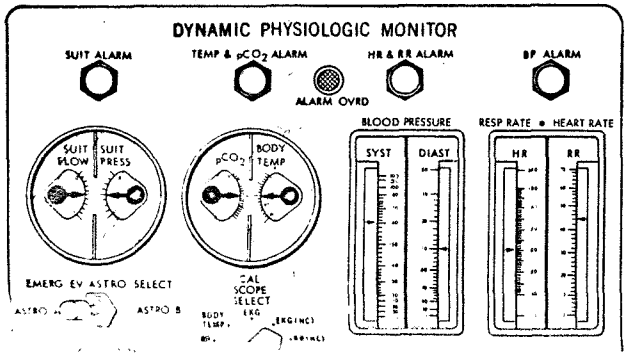
DYNAMIC PHYSIOLOGIC MONITOR
SUIT ALARM
TEMP & pCO2 ALARM
HR & RR ALARM
BP ALARM
ALARM OVRD
BLOOD PRESSURE
RESP RATE • HEART RATE
SUIT FLOW
SUIT PRESS
pCO2
BODY TEMP
SYST
DIAST
HR
RR
EMERG EV ASTRO SELECT
ASTRO A
ASTRO B
CAL SCOPE SELECT
BODY TEMP
EKG
(EKG INC)
(RESP INC)

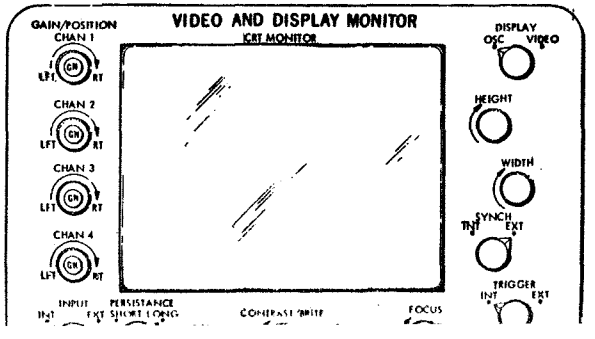
VIDEO AND DISPLAY MONITOR
GAIN/POSITION
CHAN 1
CHAN 2
CHAN 3
CHAN 4
LFT
RT
GN
CRT MONITOR
DISPLAY
OSC
VIDEO
HEIGHT
WIDTH
SYNCH
INT
EXT
TRIGGER
INT
EXT
INPUT
INT
EXT
PERSISTANCE
SHORT LONG
CONTRAST/BRITE
FOCUS

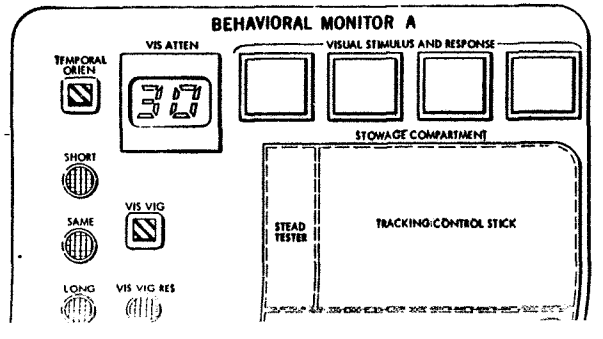
BEHAVIORAL MONITOR A
VIS ATTEN
VISUAL STIMULUS AND RESPONSE
TEMPORAL ORIEN
STOWAGE COMPARTMENT
SHORT
SAME
VIS VIG
STEAD TESTER
TRACKING CONTROL STICK
LONG
VIS VIG RES

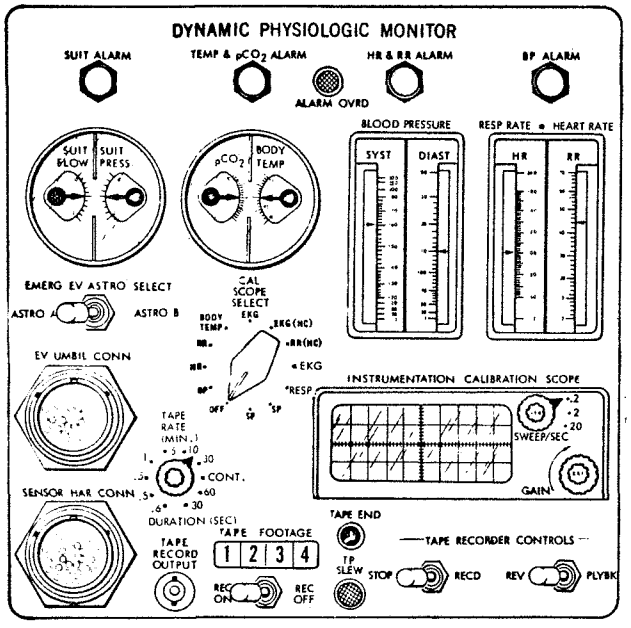
DYNAMIC PHYSIOLOGIC MONITOR
SUIT ALARM
TEMP & pCO2 ALARM
HR & RR ALARM
BP ALARM
ALARM OVRD
BLOOD PRESSURE
RESP RATE • HEART RATE
SYST
DIAST
HR
RR
SUIT FLOW
SUIT PRESS
pCO2
BODY TEMP
EMERG EV ASTRO SELECT
ASTRO A
ASTRO B
CAL SCOPE SELECT
EV UMBIL CONN
INSTRUMENTATION CALIBRATION SCOPE
SWEEP/SEC
GAIN
TAPE RATE (MIN.)
CONT.
DURATION (SEC)
SENSOR HAR CONN
TAPE RECORD OUTPUT
TAPE FOOTAGE
TAPE END
TAPE RECORDER CONTROLS
TP SLEW
STOP
RECD
REV
PLYBK
REC ON
REC OFF

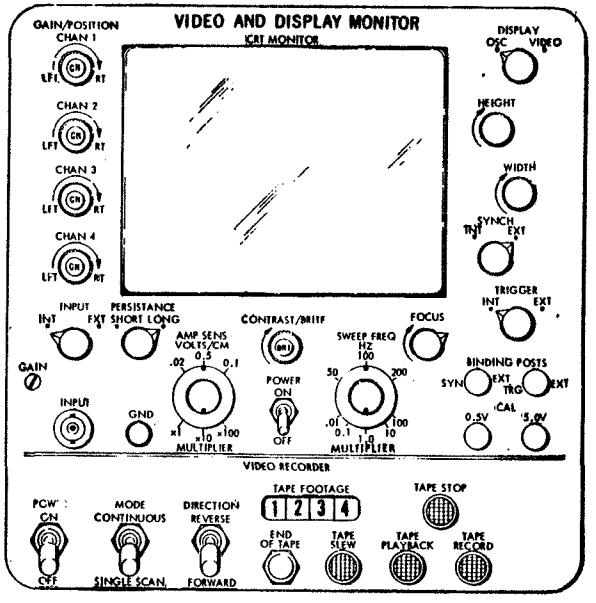
VIDEO AND DISPLAY MONITOR
GAIN/POSITION
CHAN 1
CHAN 2
CHAN 3
CHAN 4
CRT MONITOR
DISPLAY
OSC
VIDEO
HEIGHT
WIDTH
SYNCH
INT
EXT
TRIGGER
INPUT
PERSISTANCE
SHORT
LONG
AMP SENS VOLTS/CM
CONTRAST/BRIFT
SWEEP FREQ HZ
FOCUS
GAIN
POWER ON
OFF
MULTIPLIER
BINDING POSTS
SYN
TRG
CAL
0.5V
5.0V
VIDEO RECORDER
PGW ON
OFF
MODE
CONTINUOUS
SINGLE SCAN
DIRECTION
REVERSE
FORWARD
TAPE FOOTAGE
END OF TAPE
TAPE SLEW
TAPE PLAYBACK
TAPE RECORD
TAPE STOP

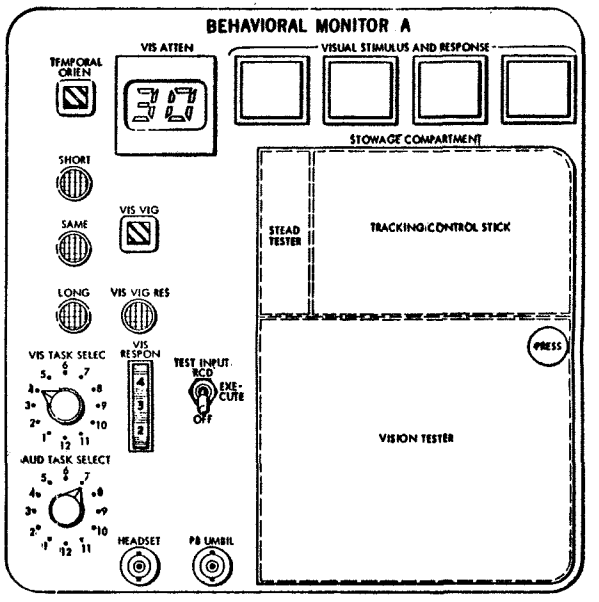
BEHAVIORAL MONITOR A
TEMPORAL ORIEN
VIS ATTEN
VISUAL STIMULUS AND RESPONSE
STOWAGE COMPARTMENT
SHORT
SAME
LONG
VIS VIG
VIS VIG RES
STEAD TESTER
TRACKING/CONTROL STICK
VIS TASK SELEC
VIS RESPON
TEST INPUT RCD
EXE-CUTE
OFF
PRESS
VISION TESTER
AUD TASK SELECT
HEADSET
PB UMBIL

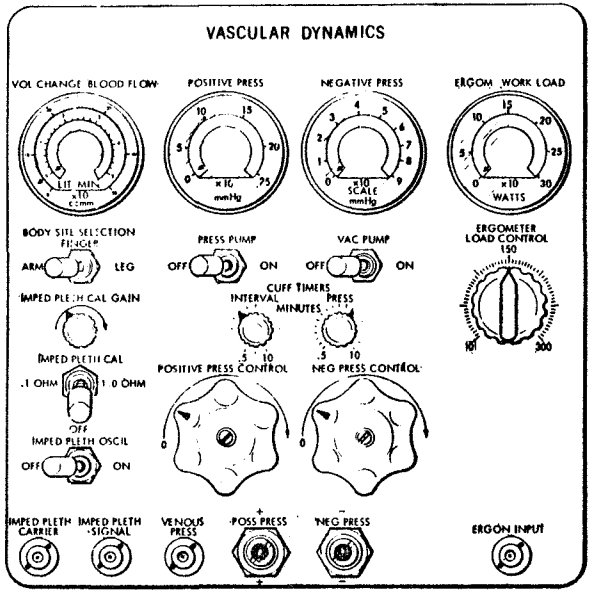
VASCULAR DYNAMICS
VOL CHANGE BLOOD FLOW
POSITIVE PRESS
NEGATIVE PRESS
ERGOM WORK LOAD
BODY SITE SELECTION FINGER
ARM
LEG
PRESS PUMP
OFF
ON
VAC PUMP
ERGOMETER LOAD CONTROL
IMPED PLETH CAL GAIN
CUFF TIMERS
INTERVAL
PRESS
MINUTES
IMPED PLETH CAL
.1 OHM
1.0 OHM
POSITIVE PRESS CONTROL
NEG PRESS CONTROL
IMPED PLETH OSCIL
IMPED PLETH CARRIER
IMPED PLETH SIGNAL
VENOUS PRESS
POSS PRESS
NEG PRESS
ERGON INPUT

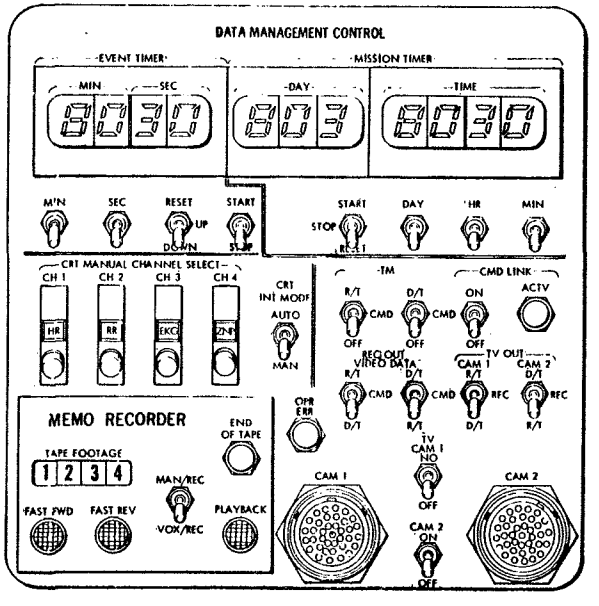
DATA MANAGEMENT CONTROL
EVENT TIMER
MISSION TIMER
MIN
SEC
DAY
TIME
RESET
START
STOP
HR
CRT MANUAL CHANNEL SELECT
CH 1
CH 2
CH 3
CH 4
CRT INT MODE
AUTO
MAN
TM
CMD LINK
ACTV
TV OUT
CAM 1
CAM 2
MEMO RECORDER
TAPE FOOTAGE
END OF TAPE
MAN/REC
FAST FWD
FAST REV
VOX/REC
PLAYBACK
OPR ERR
TV CAM 1 NO
OFF
CAM 2 ON

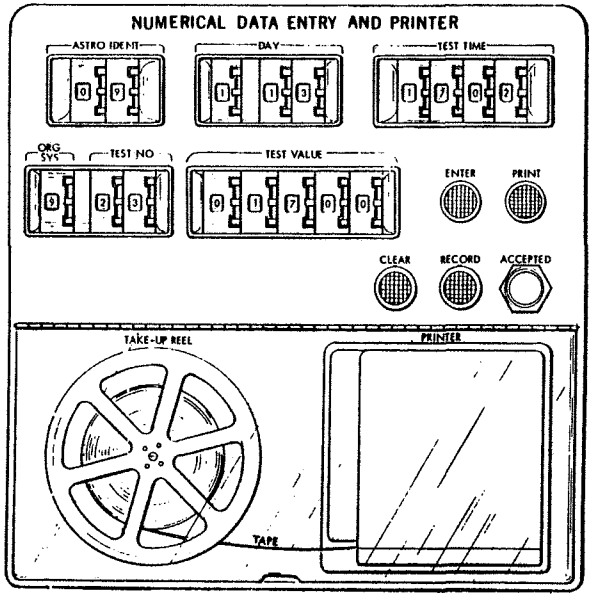
NUMERICAL DATA ENTRY AND PRINTER
ASTRO IDENT
DAY
TEST TIME
ORG SYS
TEST NO
TEST VALUE
ENTER
PRINT
CLEAR
RECORD
ACCEPTED
TAKE-UP REEL
PRINTER
TAPE

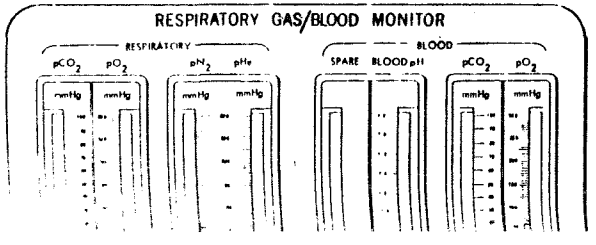
RESPIRATORY GAS/BLOOD MONITOR
RESPIRATORY
BLOOD
SPARE
BLOOD pH

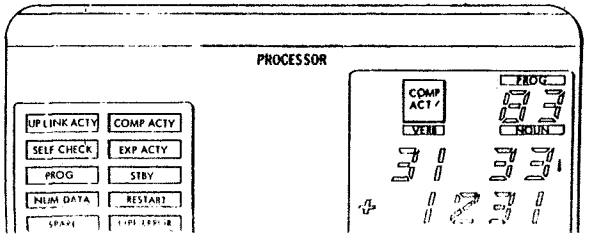
PROCESSOR
UP LINK ACTY
COMP ACTY
SELF CHECK
EXP ACTY
PROG
STBY
NUM DATA
RESTART
COMP ACT
PROG
VERB
NOUN

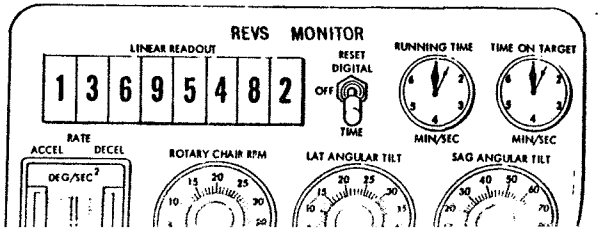
REVS MONITOR
LINEAR READOUT
RESET
DIGITAL
OFF
TIME
RUNNING TIME
TIME ON TARGET
MIN/SEC
RATE
ACCEL
DECEL
DEG/SEC²
ROTARY CHAIR RPM
LAT ANGULAR TILT
SAG ANGULAR TILT

7-3a

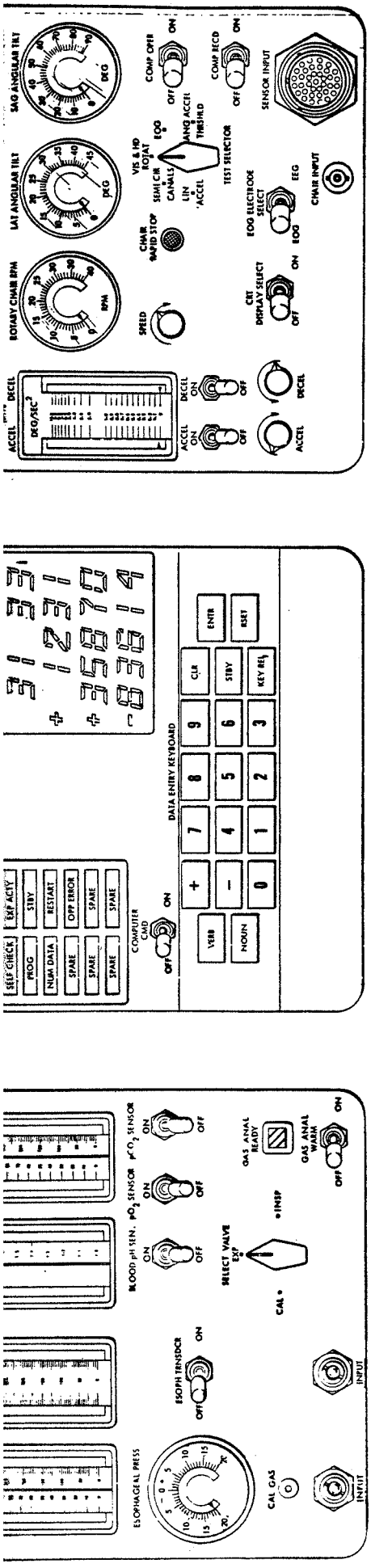

Fig. 7-1 Physiological/Behavioral/Data Management Station

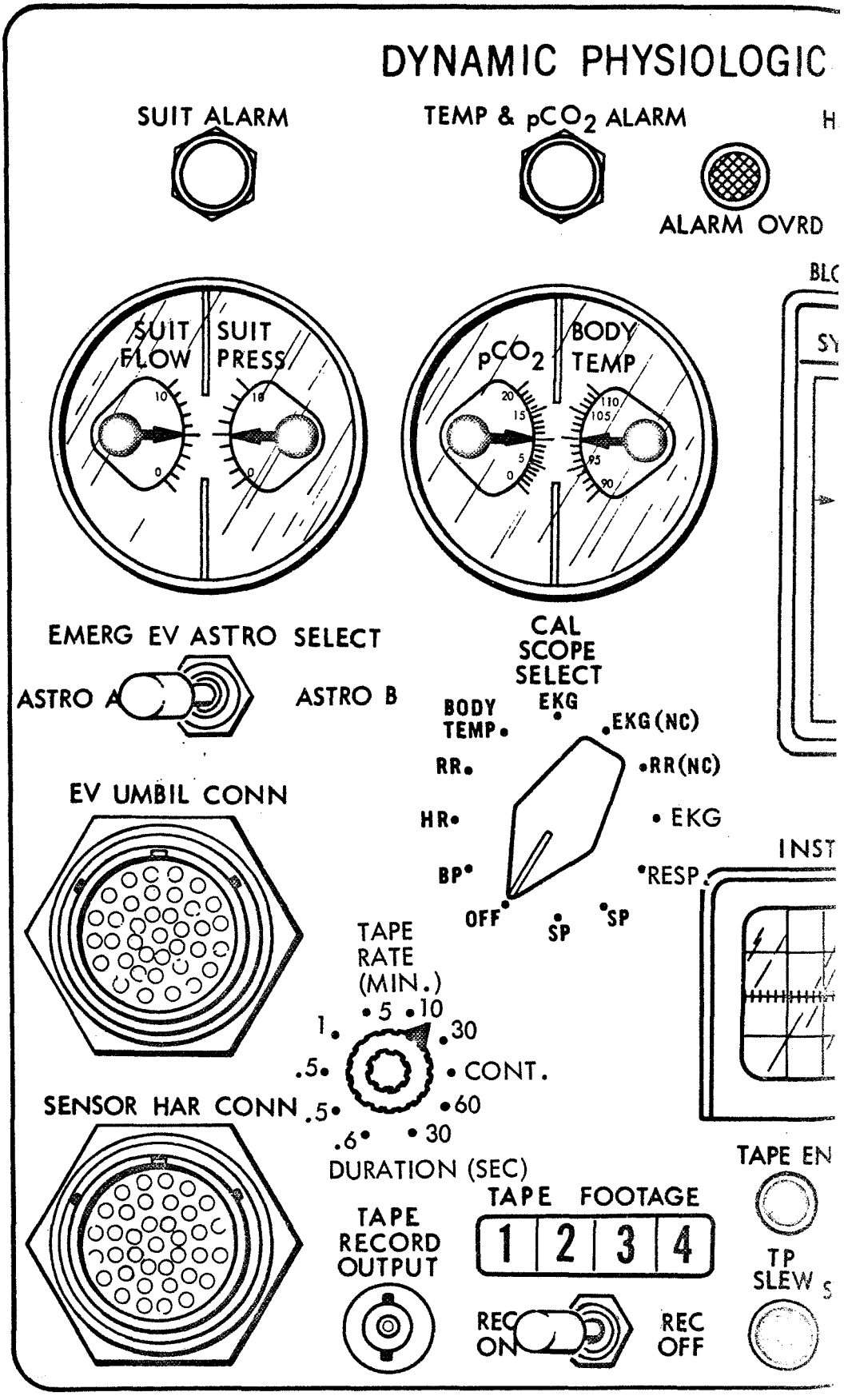

(ACTUAL SIZE)

Pg. 7-4 Blank & Not Filmed

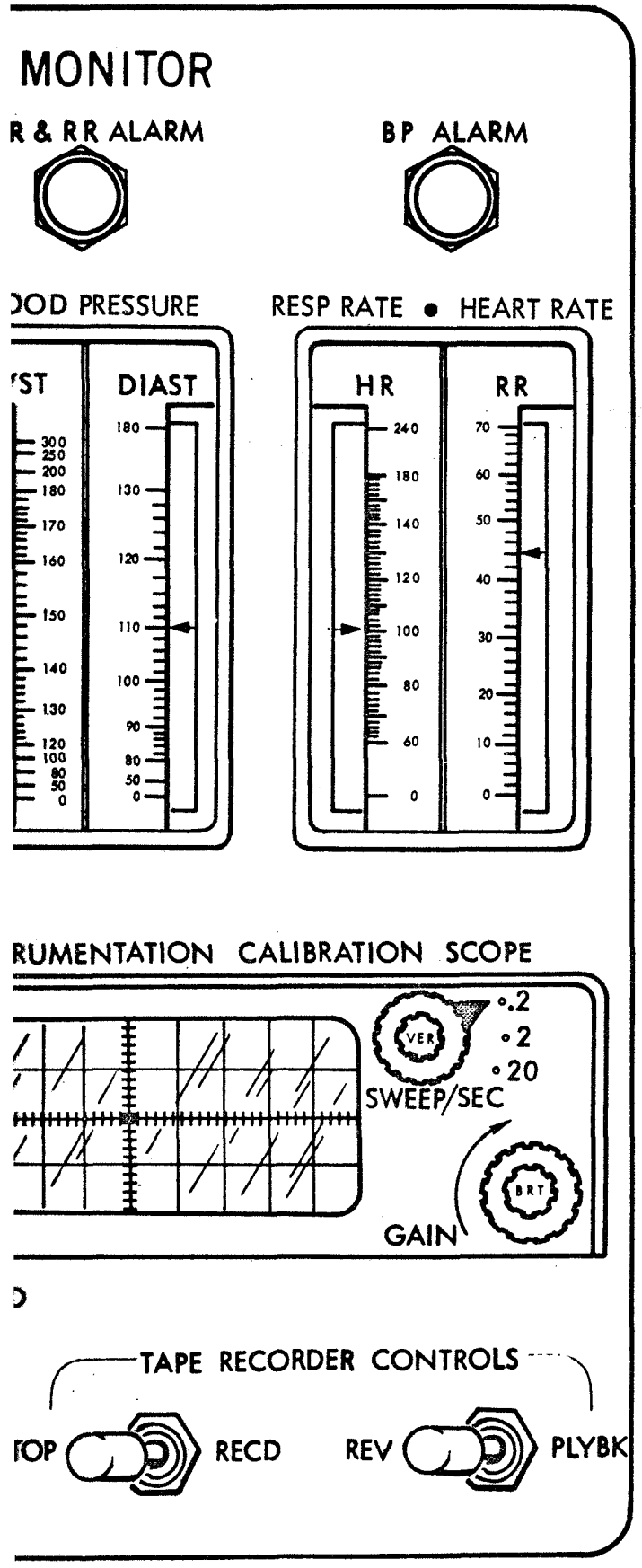

Fig. 7-2 Dynamic Physiologic Monitor

temperature. End instrument calibration is provided, using a signal generator with display on a miniature CRT. Calibration scope selector is provided for all measurements. A tape recorder is positioned at this module.

Emergency provisions consist of alarm lights and an audio alarm. An additional safety feature is provided for an EVA emergency. Normally when an astronaut is performing EVA, one crewman will be stationed in the command module and the other crewman will be suited in the unpressurized airlock module. In an emergency, the astronaut in the airlock module will egress. By means of a switching arrangement the crewman in the command module can continue to monitor both EVA astronauts.

Equipment requirements other than those displayed on the panel layout are the switching network, calibration circuitry, and the digital tape recorder. Figure 7-3 presents a block diagram of the dynamic physiological monitor. All operating elements are shown for both the basic monitor unit and the peripheral sensors and signal conditioners. The physiological signals are first acquired by the sensors, then processed by the signal conditioners to be raised to significant levels before long-line transmission to the monitor. Once the signals reach the monitor, they are either distributed to display and recording elements, or are further processed to extract additional information required for complete display and record keeping. In addition to the meters and alarm devices, a distinctive feature of the display devices is the calibration oscilloscope, which permits verification and level adjustment of all parameters.

7.2.2 Respiratory Gas/Blood Monitor (Fig. 7-4)

Several methods were considered for analysis of O_2, CO_2, N_2, and H_2O. The recommended one, using a mass spectrometer, is depicted in the panel layout. Two dual meters for respiratory gases and two for blood gases are shown. Toggle switches permit controlling displays. Two electrical interconnects for the gas analyzer are provided. Coaxial connectors are provided for the esophageal pressure input and for the ear oximeter. A block diagram of the respiration analysis subsystem is shown in Fig. 5-2. A non-rebreathing valve at the face mask draws inspired air from the left

pg. 7-6 BLANK & Not Filmed

and expels expired air to the right. Static and timed lung volumes can be obtained by integrating the upstream and downstream flow measurements. Alternatively, the spirometer can be used to make these measurements.

For evaluation of pulmonary function, it is proposed to use the velocity-volume ($\dot{V}$-V) loop of Bartlett. A $\dot{V}$-V loop is constructed by simultaneously plotting values for respiration velocity and volume in a two-dimensional plot. Residual lung volume is measured by setting the valves to allow pure O_2 to be inspired. The volume expired is obtained by integrating the downstream flow meters for 7 min. Concurrently with this, the mass spectrometer measures the pN_2 concentrations; from the mean pN_2 and the 7-min volume, the lung volume can be computed based on the point in the respiration cycle (determined from the flow meter) where the measurement began.

Airway resistance is measured with the downstream flow meter, pressure transducer, and shutter. The four-way valve is set so that the subject exhales through the flow meter and shutter. The shutter rapidly interrupts the expired gas flow and the resultant pressure rise, along with the flow, is used to compute airway resistance.

Oxygen consumption is measured by rebreathing O_2 from one spirometer. The water and carbon dioxide are scrubbed from the expired air, which is returned to the spirometer. As oxygen is consumed from one spirometer, it is periodically replenished by an accurately measured quantity from the other spirometer.

Cardiac output measured by the CO_2 rebreathing technique requires three pCO_2 measurements. Carbon dioxide production and pCO_2 at the end of a maximum exhalation are measured by the mass spectrometer. Volumes are measured with the spirometer. The spirometer is then loaded with an O_2 and CO_2 mixture and this gas is rebreathed until pCO_2 equilibrium is obtained. The three carbon dioxide measurements are used with the Fick equation to give cardiac output.

Esophageal pressure is measured by an esophageal pressure transducer mounted on a catheter. Equipment requirements other than those displayed on the panel layout are

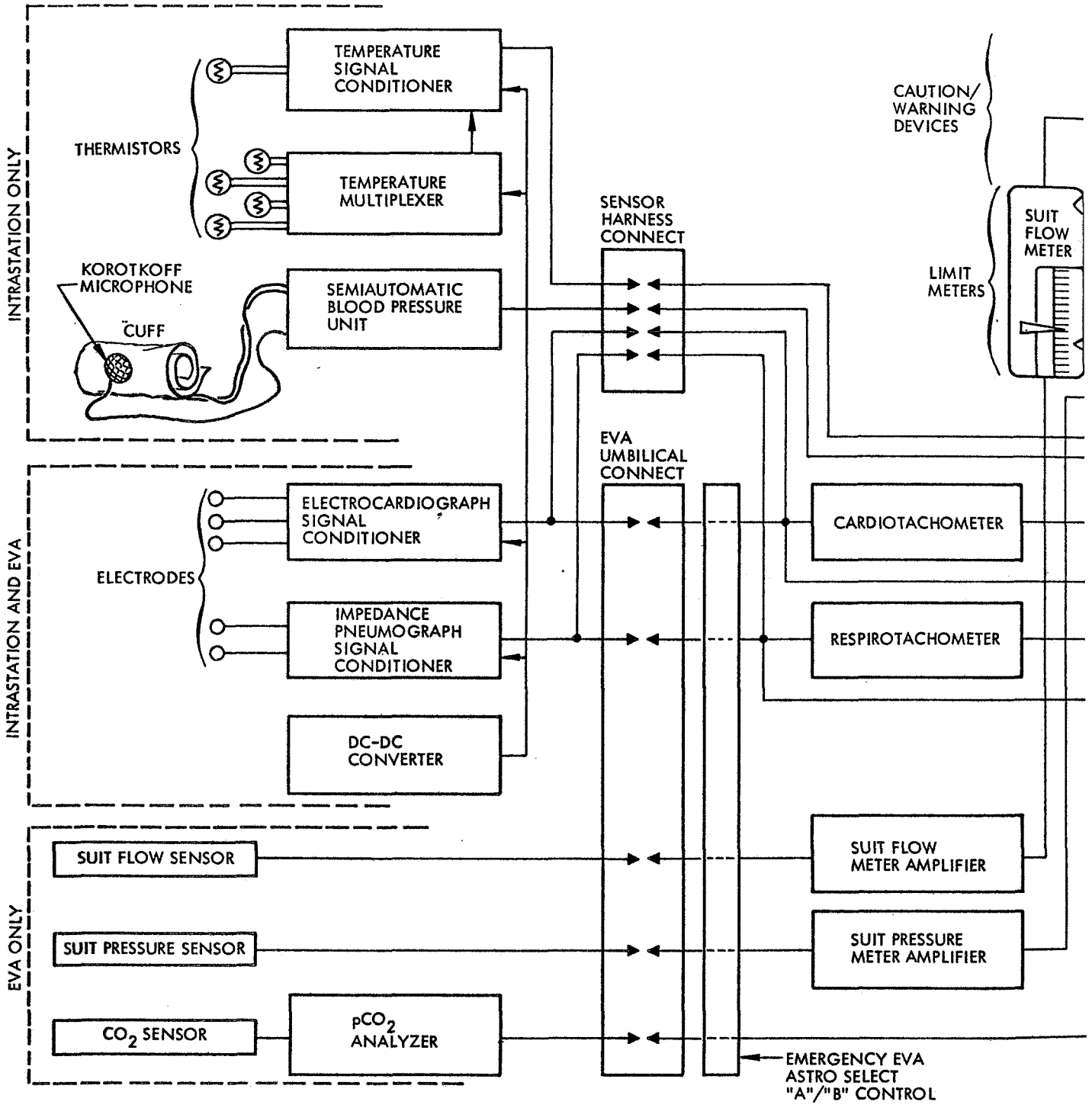
INTRASTATION ONLY
THERMISTORS
TEMPERATURE SIGNAL CONDITIONER
TEMPERATURE MULTIPLEXER
KOROTKOFF MICROPHONE
CUFF
SEMIAUTOMATIC BLOOD PRESSURE UNIT
SENSOR HARNESS CONNECT
CAUTION/ WARNING DEVICES
LIMIT METERS
SUIT FLOW METER
EVA UMBILICAL CONNECT
INTRASTATION AND EVA
ELECTRODES
ELECTROCARDIOGRAPH SIGNAL CONDITIONER
IMPEDANCE PNEUMOGRAPH SIGNAL CONDITIONER
DC-DC CONVERTER
CARDIOTACHOMETER
RESPIROTACHOMETER
EVA ONLY
SUIT FLOW SENSOR
SUIT PRESSURE SENSOR
CO_2 SENSOR
pCO_2 ANALYZER
SUIT FLOW METER AMPLIFIER
SUIT PRESSURE METER AMPLIFIER
EMERGENCY EVA ASTRO SELECT "A"/"B" CONTROL

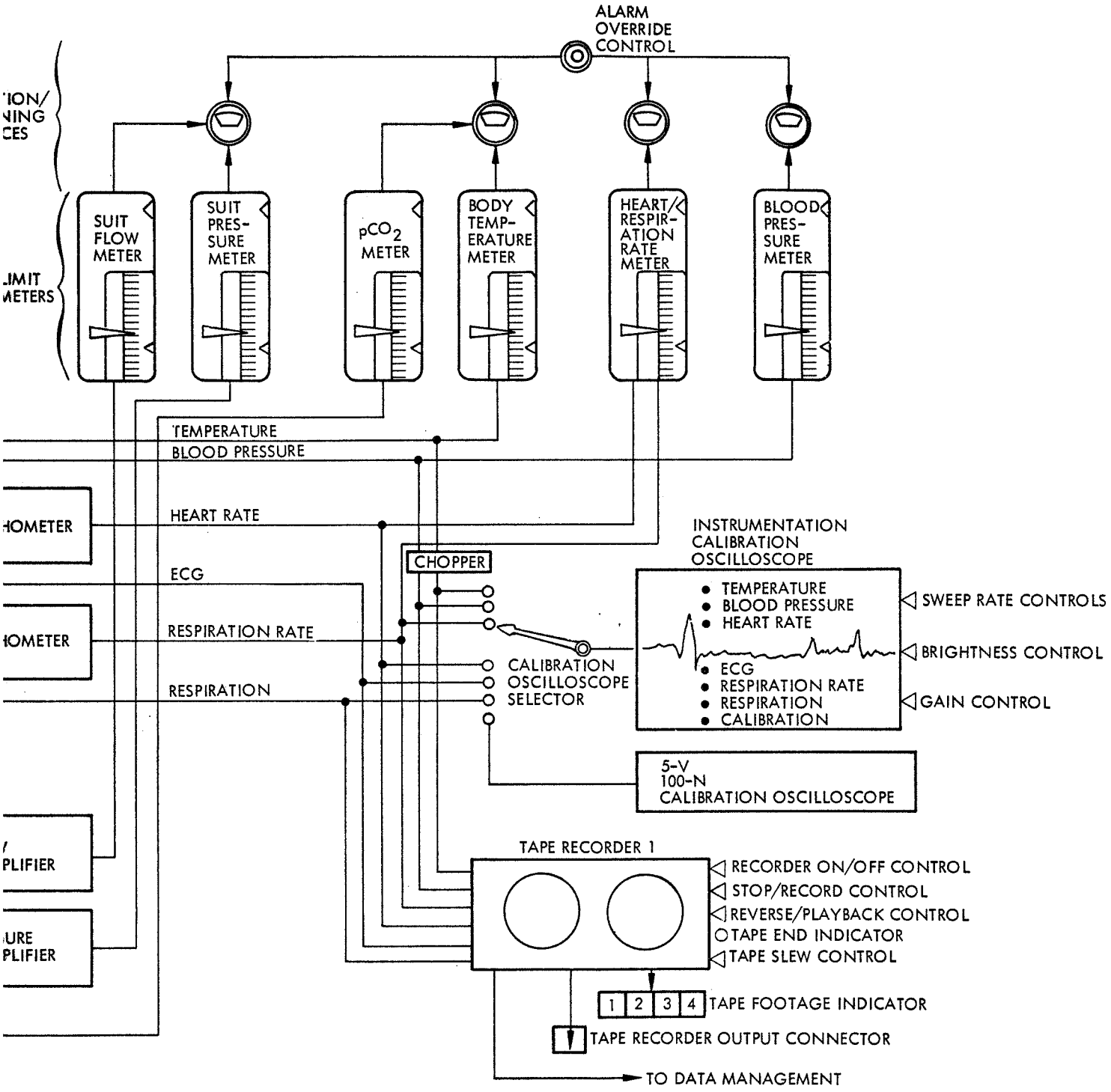

Fig. 7-3 Dynamic Physiologic Equipment Diagram

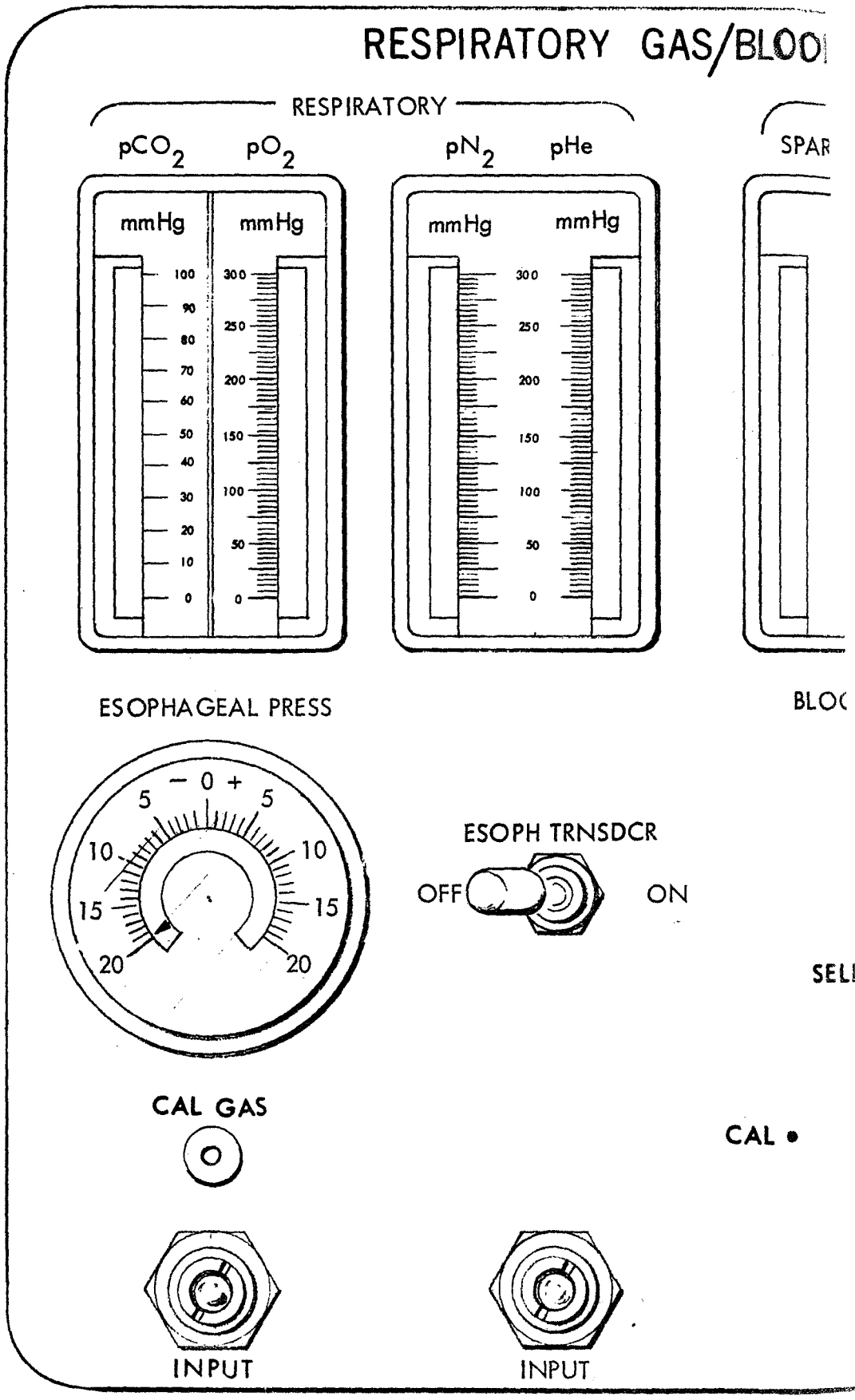

(ACTUAL SIZE)

Pg. 7-10 BLANK & not filmed

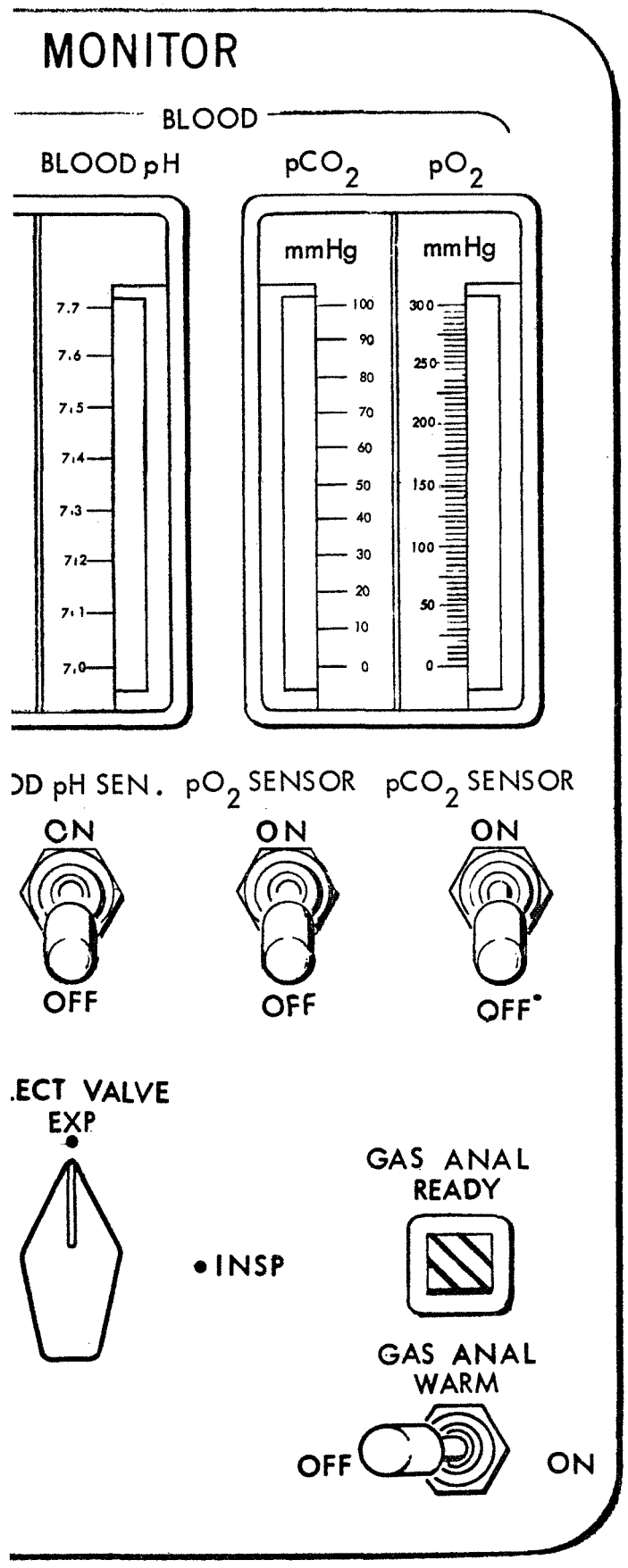

Fig. 7-4 Respiratory Gas/Blood Monitor

flow meters, servospirometers, plumbing, canisters, valves, mass spectrometer, and calibration gases.

7.2.3 Vascular Dynamics Monitor (Fig. 7-5)

The vascular dynamics module is structured primarily to support peripheral measurements requiring relatively large equipment – such as the LBNP, ergometer, and countermeasure devices – and to support associated measurements being taken while using this equipment. Timers have been provided for measurements requiring specific measurement time periods.

All controls and monitoring of the measurements are regulated by an observer because of the stress level imposed on the subject. For those measurements requiring a vacuum source such as the LBNP, hose connections are provided at this panel. Individual coaxial connectors are shown for some of the associated measurements such as impedance plethysmograph and venous pressure. Consideration will be given to integrating these into a common umbilical if detailed studies indicate that the measurement will not be compromised.

Equipment requirements other than those displayed on the panel layout are plumbing and electrical circuits.

Figure 7-6 is an equipment block diagram of the vascular dynamics module. In addition to showing the major operating elements of the module, the diagram shows the external peripheral units that may be plugged into the module panel. All major paths of information may be followed through their control and processing elements to the appropriate display devices. All functional elements are shown, including data flow paths, signal processors, control devices, and display units, thus permitting full visualization of the operation of the panel in conjunction with the peripheral equipment.

pg. 7-12 BLANK & not filmed

VASCULAR DYNA

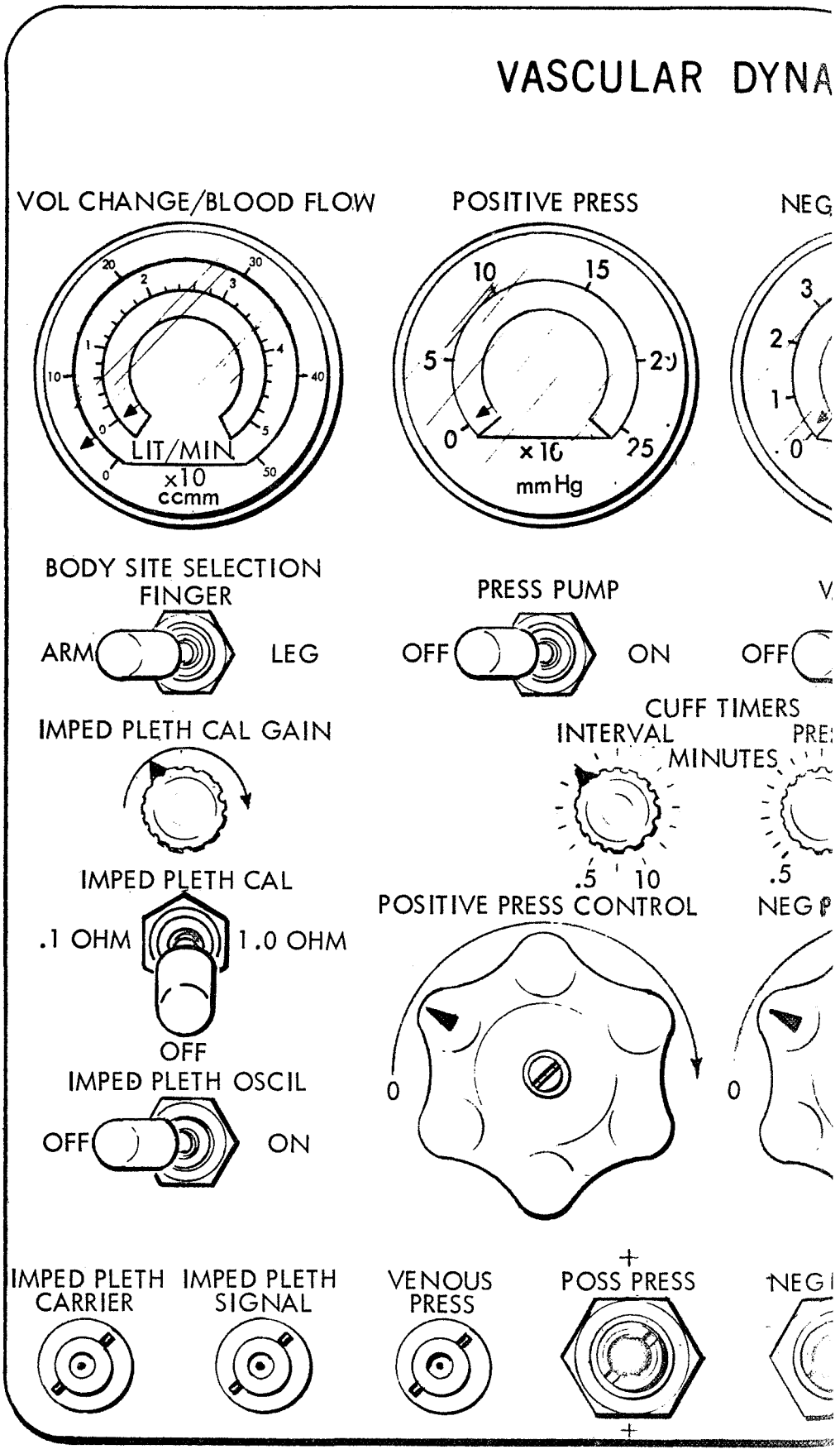

(ACTUAL SIZE)

pg. 7-14 BLANK & not filmed

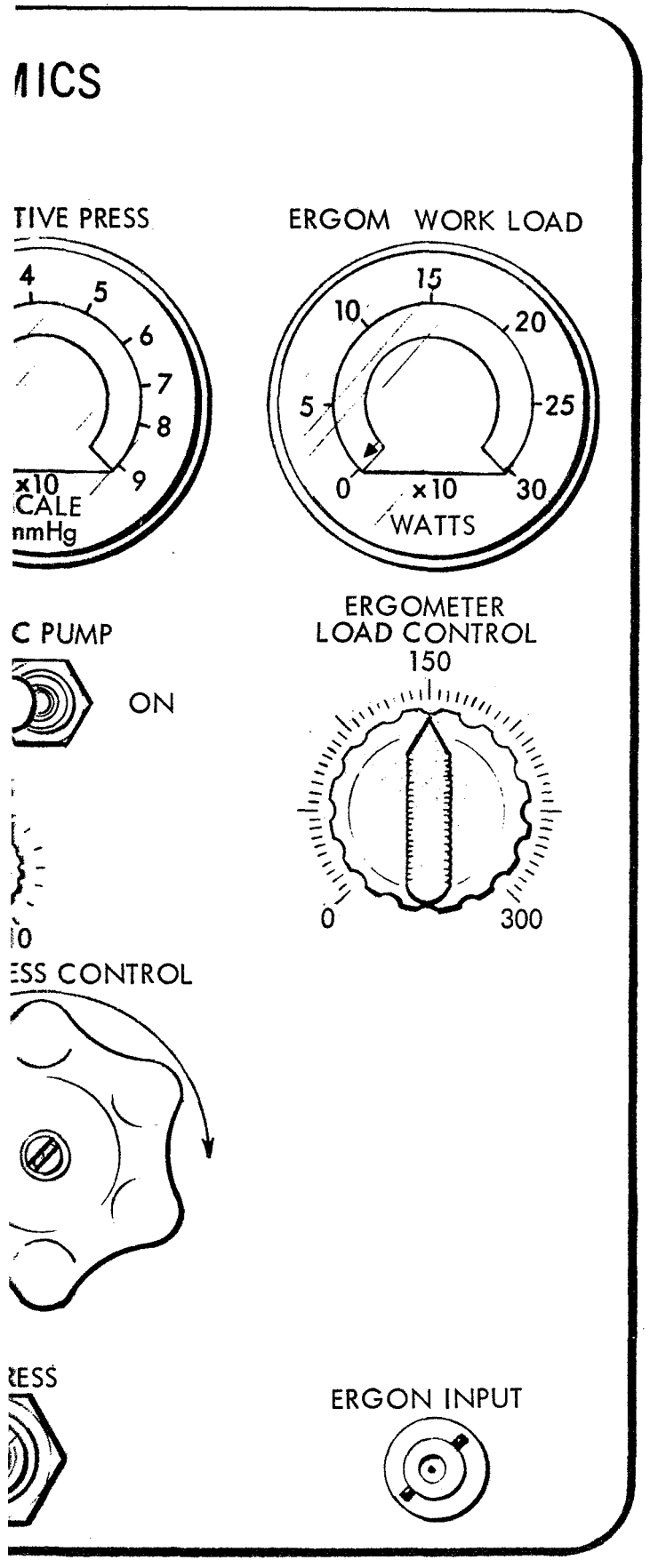

Fig. 7-5 Vascular Dynamics Monitor

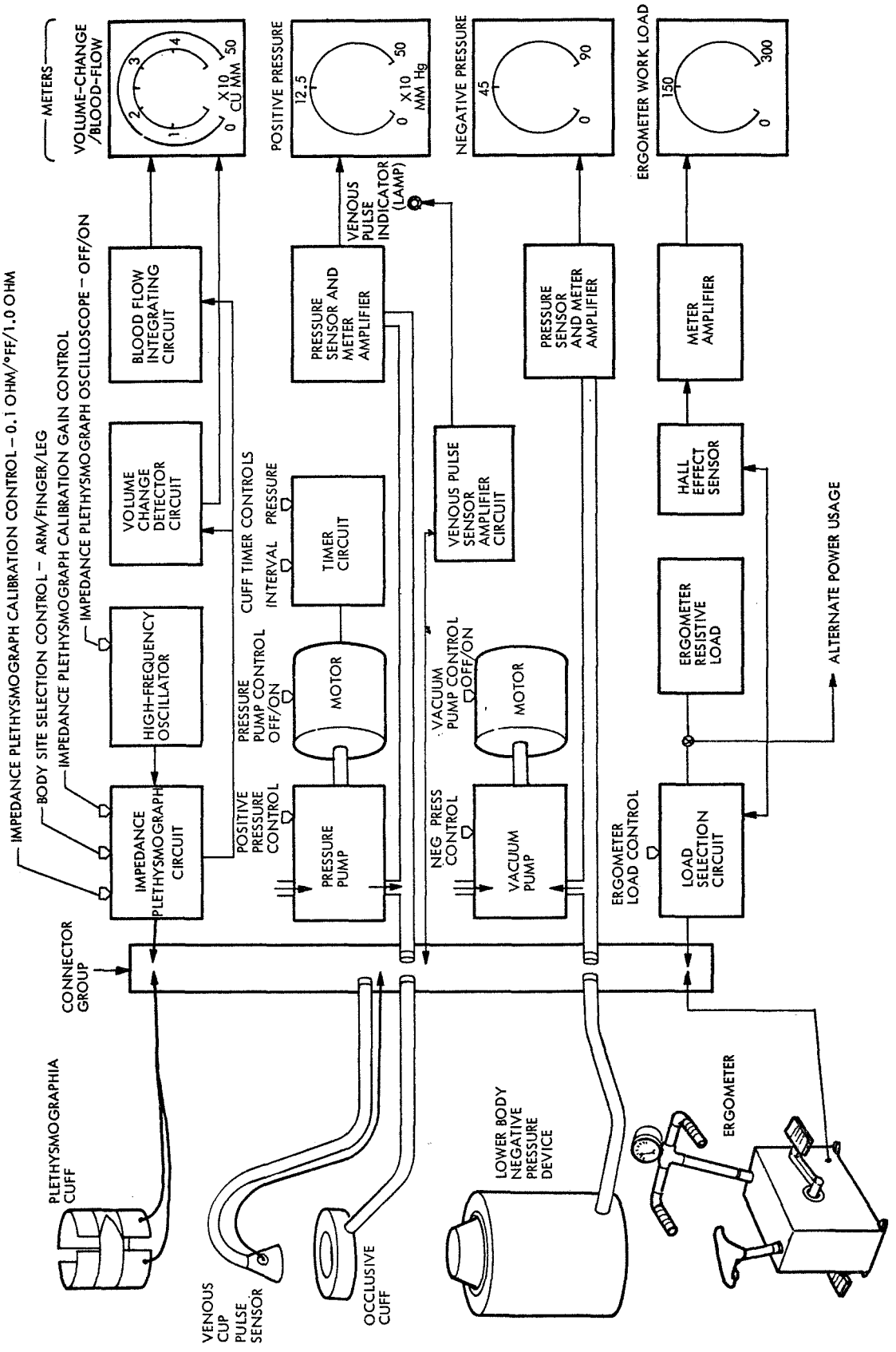

Fig. 7-6 Vascular Dynamics Equipment Diagram

Pg. 7-16 BLANK & not filmed

7.2.4 Rotational Equipment for Vestibular Stimulation (REVS) Monitor (Fig. 7-7)

This module is designed to accomplish the detailed vestibular measurements specified for the AAP. Tests are conducted using a rotating litter chair as a peripheral piece of equipment. In addition, a neurokit is required containing a rod/sphere, stereognosis test objects, test cards, kinesthetic sense and tactile test instruments, data cards, pens, and questionnaires. Otolith test goggles and fibre-optics/cine-camera are required for measuring visual space orientation and for detection of ocular counter-rolling. Electronystagmogram (EOG) is provided to measure involuntary rapid eye movement.

Panel instrumentation is required for displaying chair rotation rates from 1 to 30 rpm and digital readouts of tilt angles when the rotating chair is used in the litter mode. Measurements of linear acceleration are required and must be displayed and recorded. Threshold levels from 0.0003 to 0.01 g are normal. Clocks are provided for those measurements requiring accurate timing. Associated physiological measurements, EOG, and EEG can be selected and/or displayed by using selector switches.

These vestibular investigations require a subject and one observer. The panel has been designed to permit observer control of speeds and of stopping and initiating measurements. Instrumentation measurements can also be selected on an individual basis by the test selector switch provided.

Equipment requirements other than those displayed on the panel layout are primarily electrical interconnect and EEG and EOG sensors. The equipment associated with the rotating litter chair, such as the neurokit, is recommended for packaging with the chair in a standard experiment canister.

7.2.5 Behavioral Monitor

This monitor has been designed to provide measurement capability for visual, psychomotor, and auditory functions. A manual tracking task is used for evaluation of

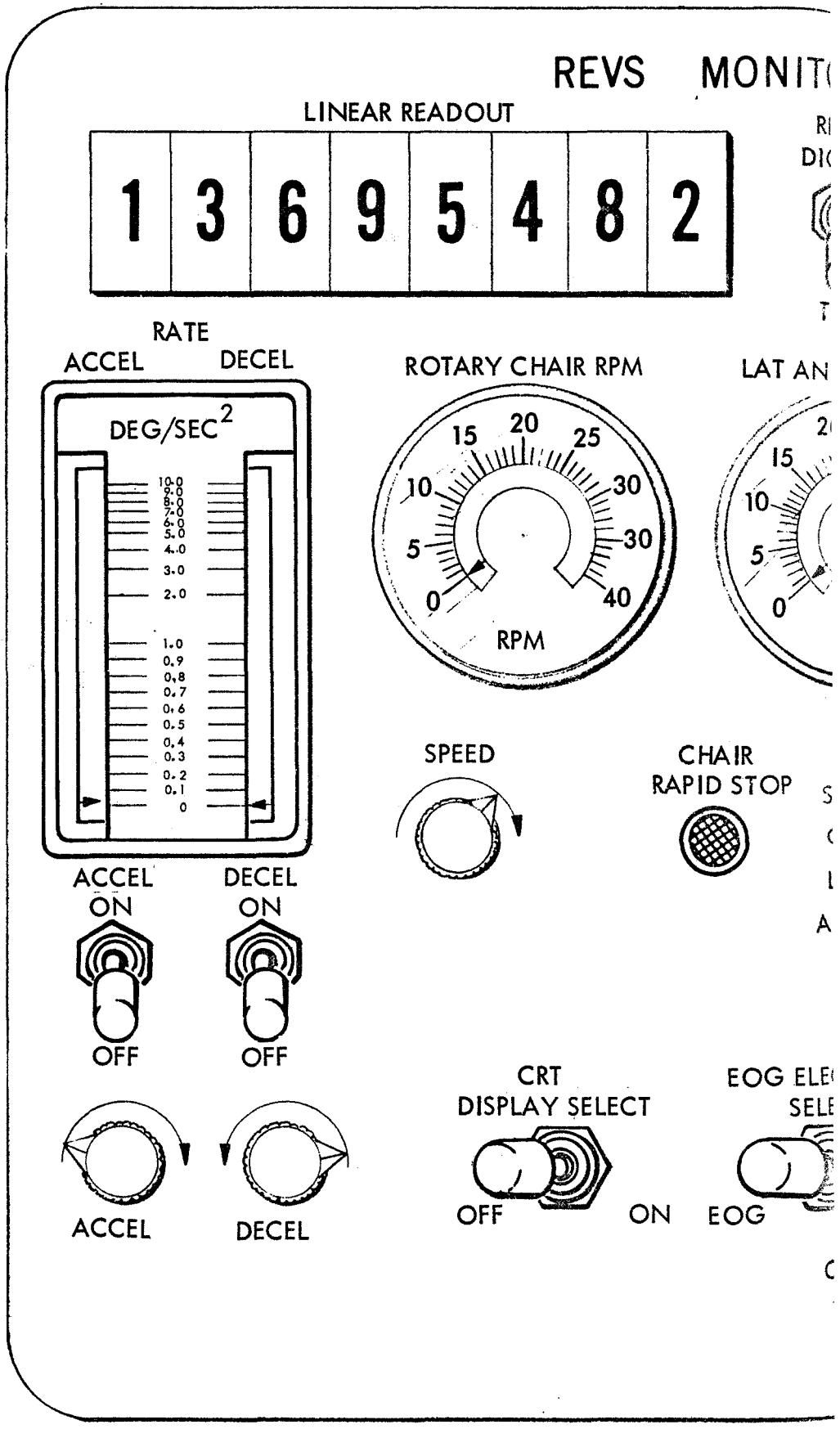
REVS MONIT
LINEAR READOUT
1 3 6 9 5 4 8 2
RATE
ACCEL
DECEL
DEG/SEC2
10.0
9.0
8.0
7.0
6.0
5.0
4.0
3.0
2.0
1.0
0.9
0.8
0.7
0.6
0.5
0.4
0.3
0.2
0.1
0
ROTARY CHAIR RPM
0
5
10
15
20
25
30
30
40
RPM
LAT AN
SPEED
CHAIR
RAPID STOP
ACCEL
ON
OFF
DECEL
ON
OFF
ACCEL
DECEL
CRT
DISPLAY SELECT
OFF
ON
EOG ELE
SELE
EOG

(ACTUAL SIZE)

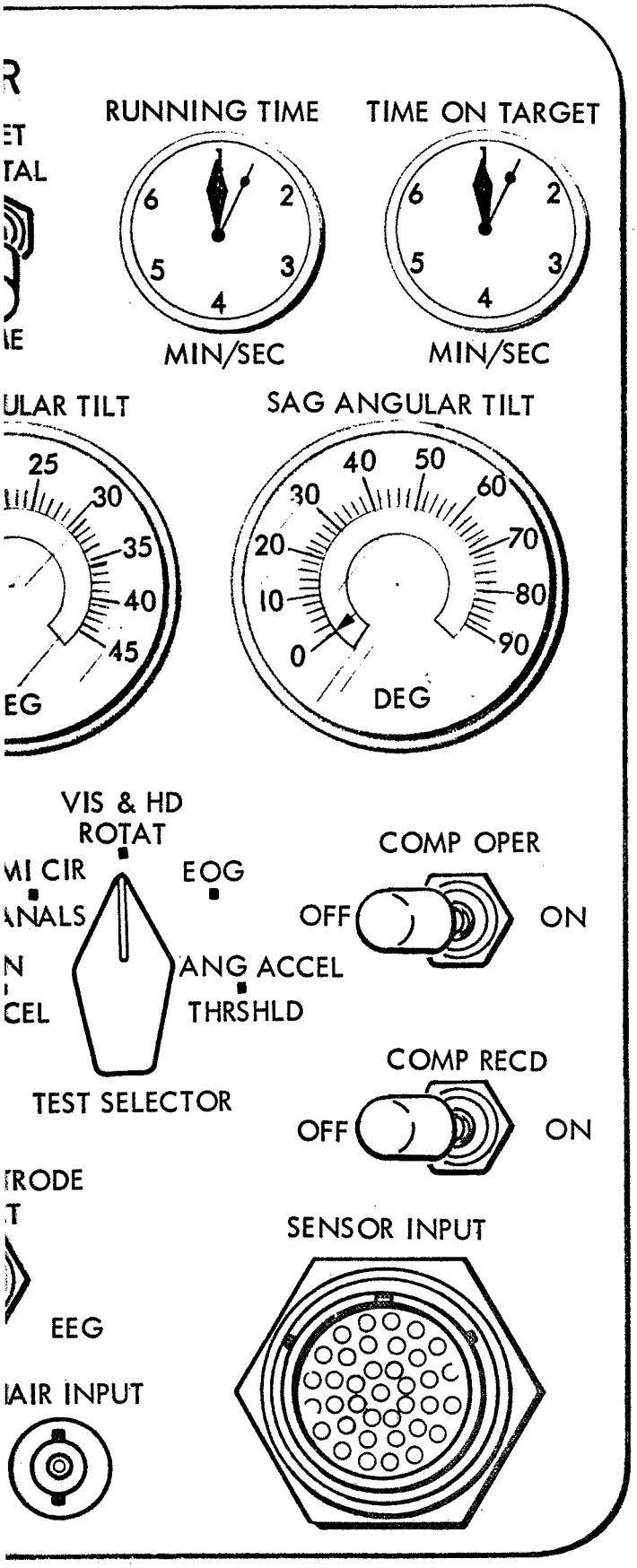

Fig. 7-7 REVS Monitor

combined visual and psychometer capabilities. The task display appears on a cathode ray tube housed in one of the data management modules. Figure 7-8 illustrates the module, which uses the separately located CRT for tracking tasks. This module approach is preferred because of the versatility of the CRT for tracking task presentations.

An alternate candidate, presented in Fig. 7-9, uses tracking displays mounted on the panel for the tracking task. This approach is somewhat less versatile because only meters are used for tracking tasks. The subject manually corrects the observed tracking error by manipulation of a two-dimensional hand controller. The task requires two-dimensional compensatory tracking with an acceleration control. The target path is generated with a digital processor. A vision tester housed in a storage compartment at the behavioral monitor is used to test visual acuity, depth perception, and phoria. The vision tester is a device resembling an orthorater, modified to permit the insertion of new stimulus material. The tester will be removed from its storage position to be centrally located on the work table in front of the data keyboard. A hood to eliminate extraneous light, and a head rest for maintaining head position, are required. Subjects enter their responses using a thumbwheel dial switch.

The sensitivity of the subject to auditory stimuli is measured with a prerecorded tape containing pure tone signals at various frequencies and intensities. The subject's responses are entered on an audio memo tape recorder. Temporal orientation testing is provided by means of the same audio tape. The subject's task is to judge the duration of the second of a series of pairs of tones relative to the first tone, which has a fixed duration. Responses are entered on the thumbwheel dial switch used for the visual entries.

Psychomotor functioning is evaluated using a hand-steadiness tester and processor-controlled indicator lights, which serve as test stimuli for reaction-time measurement. The subject's task for hand-steadiness evaluation is to insert a metal stylus in small circular holes drilled in a metal panel. Restraints are provided to maintain the subject's

 pg. 7-20 BLANK & not filmed

arm and shoulder in a fixed position relative to the panel. A digital code is recorded directly on magnetic tape each time the stylus touches the edge of a hole during a fixed interval of time. Processor-controlled indicator lights serve as test stimuli for reaction-time measurements. A single light is used for the measurement of simple reaction time, whereas several adjacent lights serve as the test stimuli for measurement of complex reaction times involving the identification of the particular stimulus that was presented.

Responses are entered using the thumbwheel dial switch. The encoded switch signals are transmitted to the processor, which, in conjunction with its real-time clock, generates the series of test stimuli, measures response times, and records the measurements on magnetic tape. The processor also displays measured response times on a four-unit digital display for the benefit of an on-board observer, or for the test subject himself.

Required equipment other than that displayed on the panel layout are the processor interface circuitry, the electrical system, and the stowed vision tester, tracking control stick, and hand-steadiness tester.

7.2.6 Stowage Modules (Fig. 7-10)

Three stowage modules are provided. They contain physiological sensors, harnesses, etc., that are required in making measurements concerned with respiratory and dynamic physiology. They also contain equipment supporting vascular dynamics and provide the housing for the TV-microscope. The equipment items are as follows: sensor harness and signal conditioners, body sensors, thermal harness, impedance cardiac harness, pulse contour sensor, electrode attach kit, integrating pneumotachograph, esophageal pressure transducer, plethysmograph, TV-microscope, venous cup, occlusive cuff, sphygmomanometer cuff, and carotid stimulus device.

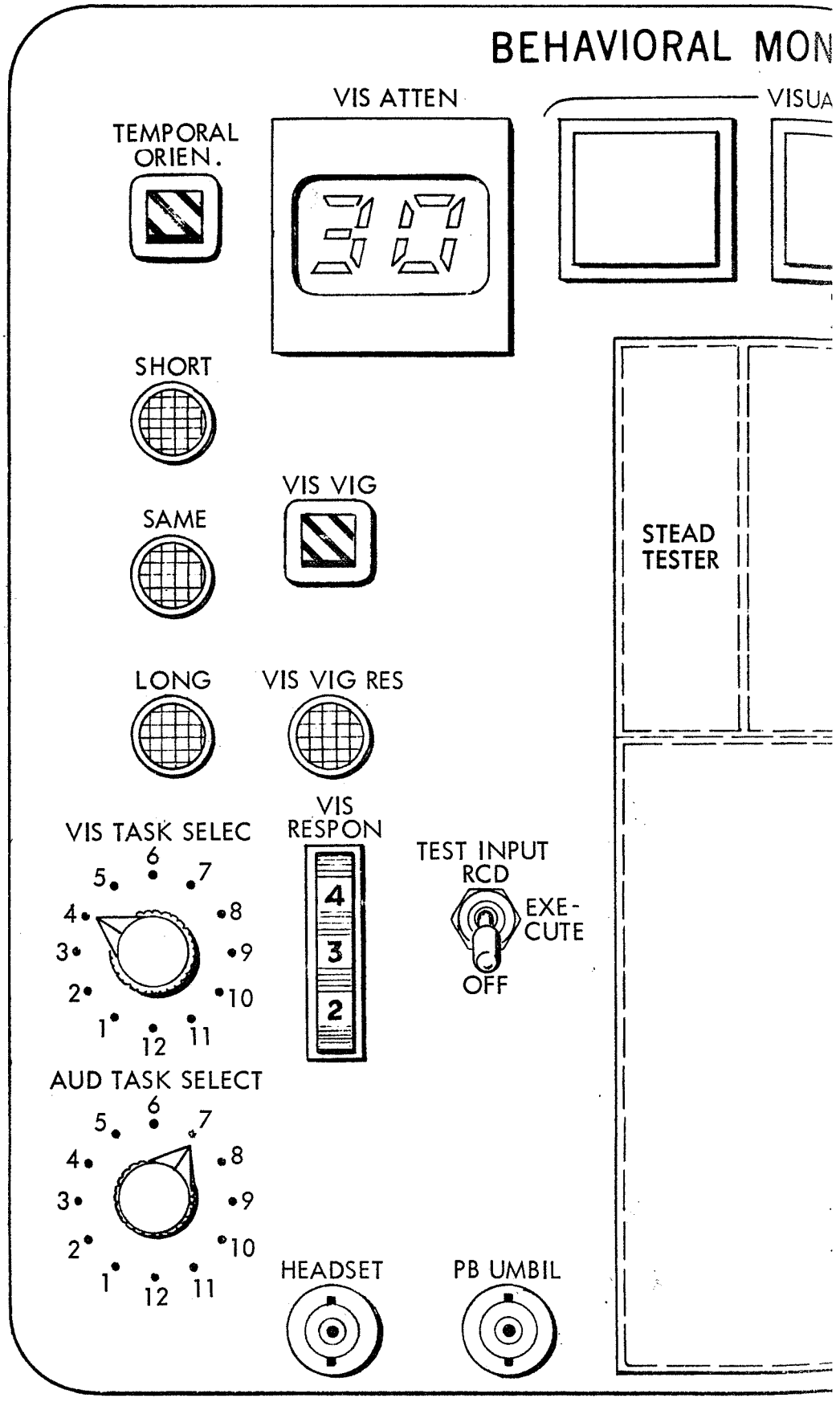
BEHAVIORAL MON
VIS ATTEN
VISUA
TEMPORAL ORIEN.
SHORT
SAME
VIS VIG
LONG
VIS VIG RES
STEAD TESTER
VIS TASK SELEC
VIS RESPON
4
3
2
TEST INPUT RCD
EXE-CUTE
OFF
AUD TASK SELECT
HEADSET
PB UMBIL

(ACTUAL SIZE)

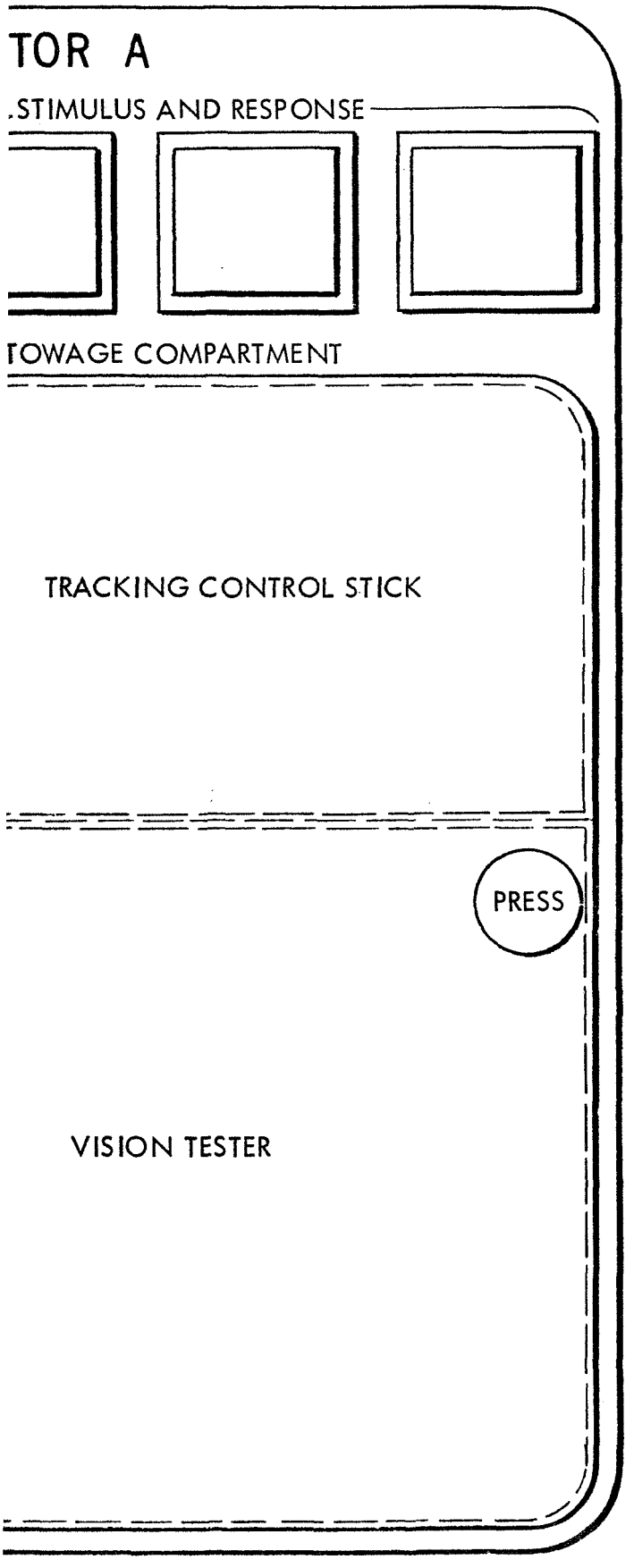

Fig. 7-8 Behavioral Monitor – Ancillary CRT Presentation

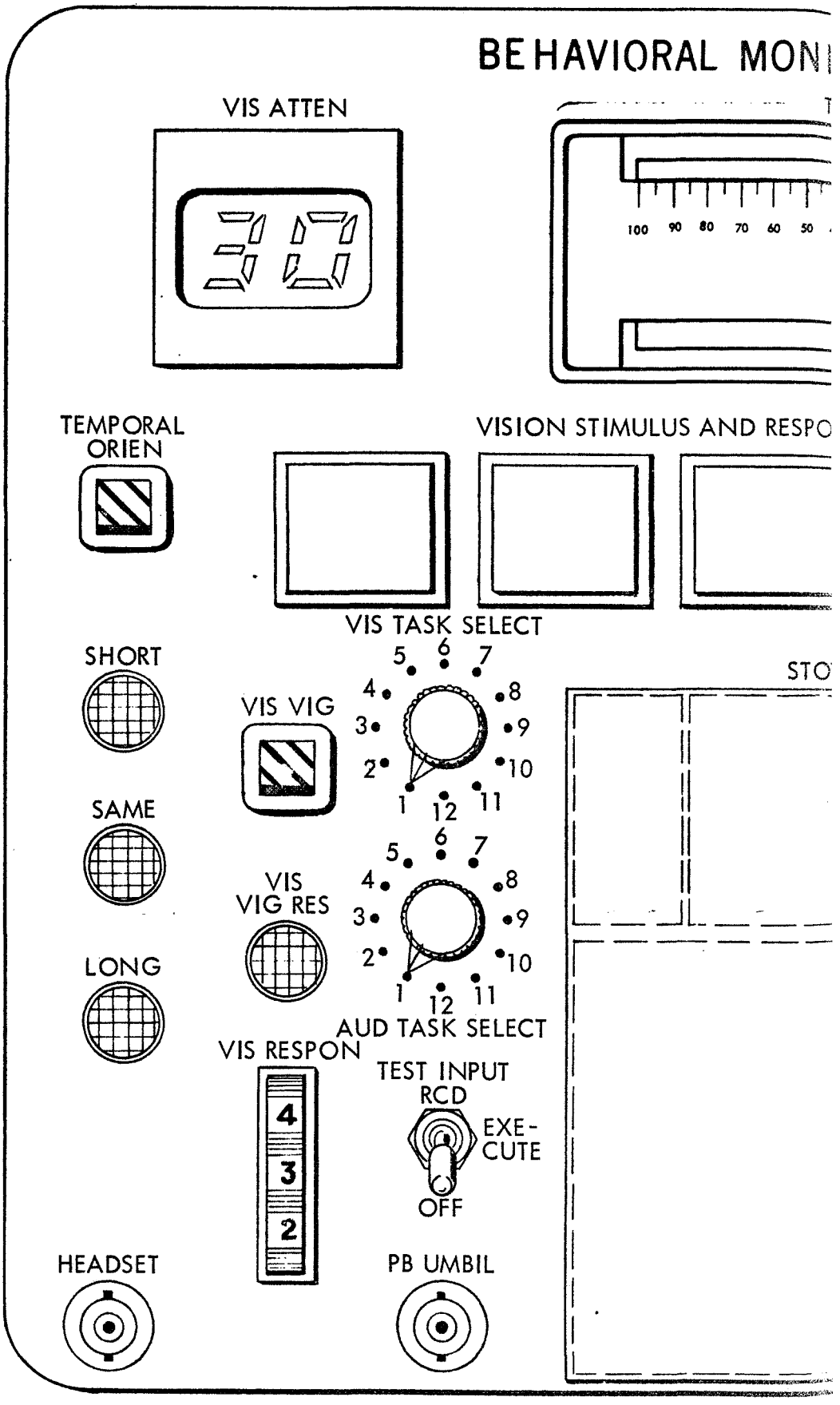

(ACTUAL SIZE)

Pg. 7-24 Blank & not filmed

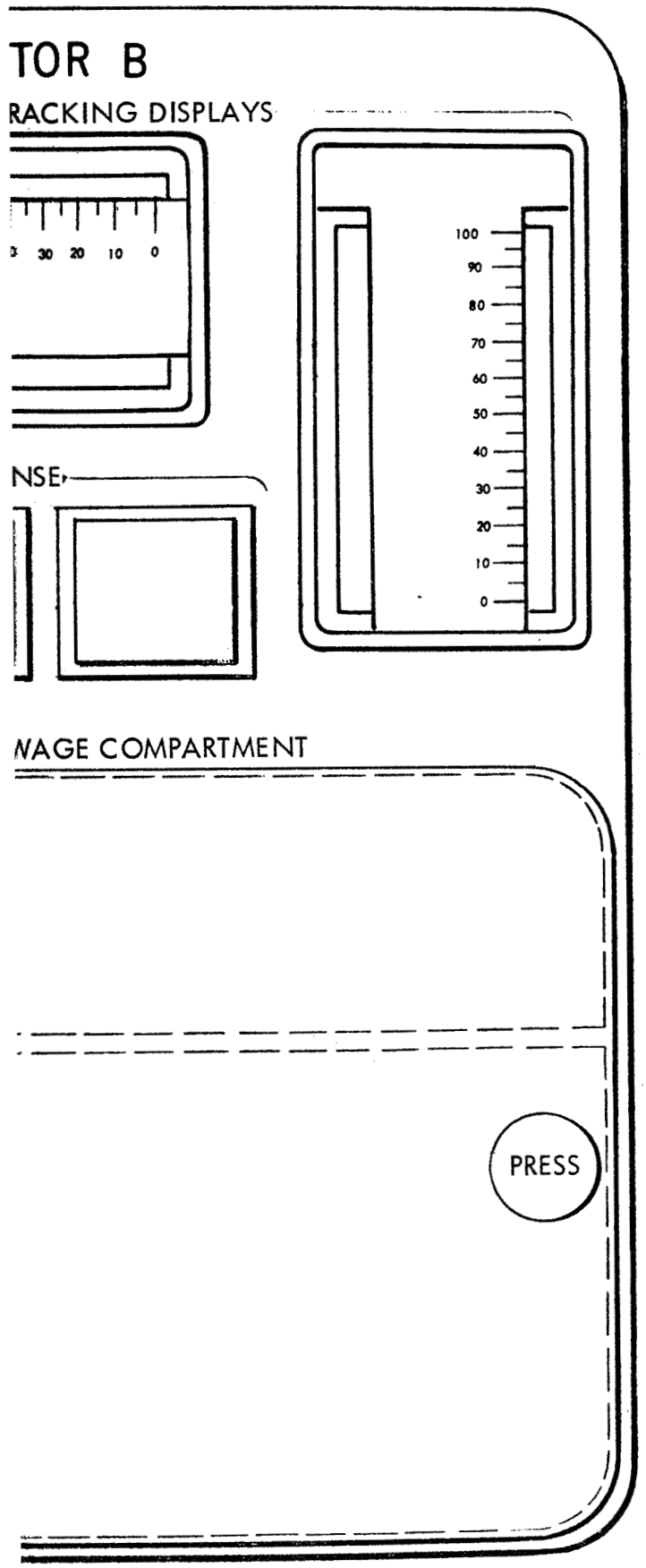

Fig. 7-9 Behavioral Monitor – Meter Display for Tracking Task

PHYSIOLOGY SUPPO

SENSOR HARNESS &
SENSORS - BODY W
8 THERMAL LEAD H
IMPEDANCE CARDI
ELECTRODE ATTAC
PULSE CONTOUR SE
EAR OXIMETER
INTEGRATING PNE
ESOPH PRESSURE TR

(AC

pg. 7-26 BLANK
& not Silmed

Y SUPPORT EQUIPMENT STOWAGE

SOR HARNESS & SIGNAL CONDITIONERS
SORS - BODY WORN
ERMAL LEAD HARNESS
EDANCE CARDIAC HARNESS
TRODE ATTACHMENT KIT
E CONTOUR SENSOR
OXIMETER
GRATING PNEUMOTACHOGRAPH
PH PRESSURE TRANSDUCER

PRESS

(ACTUAL SIZE)

PHYSIOLOGY SUPPORT EQUIPMENT STOWAGE

TV CAMERA
MICROSCOPE
VENOUS CUP
OCCLUSIVE CUF
SPHYGMOMAN
CAROTID STIMUL

(ACTUAL SIZE)

GE

PRESS

PHYSIOLOGY SUPPORT EQUIP

(ACTUAL SIZE)

7-27 c

)RT EQUIPMENT STOWAGE

PRESS

Fig. 7-10 Stowage Modules

.CTUAL SIZE)

7.2.7 Data Management Modules

Four data management modules are illustrated in Fig. 7-1: video and display monitor; numerical data entry and printer; processor; and data management control. These modules are described and illustrated in detail in Section 6. This section summarizes the equipment requirements.

7.2.7.1 Video and Display Monitor. This monitor contains two major items: the CRT monitor and its associated controls, and the controls for the video recorder. The CRT has a combined capability of video image presentation and oscillographic display. The latter capability is used for presenting analog information, including the $\dot{V}$-V loop by CRT image reintensification, and for presenting vectorcardiogram data using Z-axis modulation.

7.2.7.2 Numerical Data Entry and Printer. This module contains a printer that provides hard copy printout before actual recording. It can print out computations occurring in the IMBLMS processor and also ground (up-link) instructions, etc. Copy is obtained by swinging back a plastic lid for access to tape. The panel shows digit dial switches that provide for entry of numerical data.

7.2.7.3 Data Management Processor. This module contains the necessary controls and displays for astronaut communication with the processor. The panel shows a recessed Apollo-type keyboard and display.

7.2.7.4 Data Management Control Module. This module provides remote control of the carriers' real-time and delayed-time-transmitted controls and inputs for the TV camera, a mission cumulative time-and-event timer, manual control of the four channel inputs to the video and display monitor, and controls and displays for the memo recorder.

pg. 7-28 BLANK & NOT FILMED

7.3 BIOCHEMICAL STATION

The biochemical station furnishes a centralized facility for storing and operating the equipment for in-flight measurements. In addition, it provides the facility for collecting, handling, and preserving biospecimens either for transmittal to ground via a TV-microscope or for transporting frozen samples to ground during a resupply mode. It is conceptually designed to provide maximum capability for performing biochemical analysis with a minimum of astronaut handling and interpretation. The design of the station modules are based on the following design criteria:

- Majority of experimental procedures to be performed at the station
- Majority of experimental procedures to be performed with minimal use of multiple devices
- Manual use of buttons and switches, and manual insertion of specimens into measurement devices
- Recording and transmitting of logged data to be performed at PBDM station
- Transmittal of TV-microscopy scheduled for PBDM station
- Filtered compartment used wherever gas/liquid is involved

The design of the station is based on the biochemical analyzer module because of the requirements of the determinations. Instrument readout sensors and support instruments required to monitor the different modalities are grouped at this module. Other major modules are the following: freezer, incubator, isotope, canister, waste storage, and four supporting stowage modules. Figure 7-11 illustrates the grouping of the modules.

7.3.1 Biochemical Analyzer Module (Fig. 7-12)

The major equipment located in this module comprises colorimeter, electrophoresis unit, electronic hematocrit, and the ion-specific electrode measurement unit. Dual indicator dials permit reading quantitative data on K, Na, Cl, O_2, CO_2, and pH.

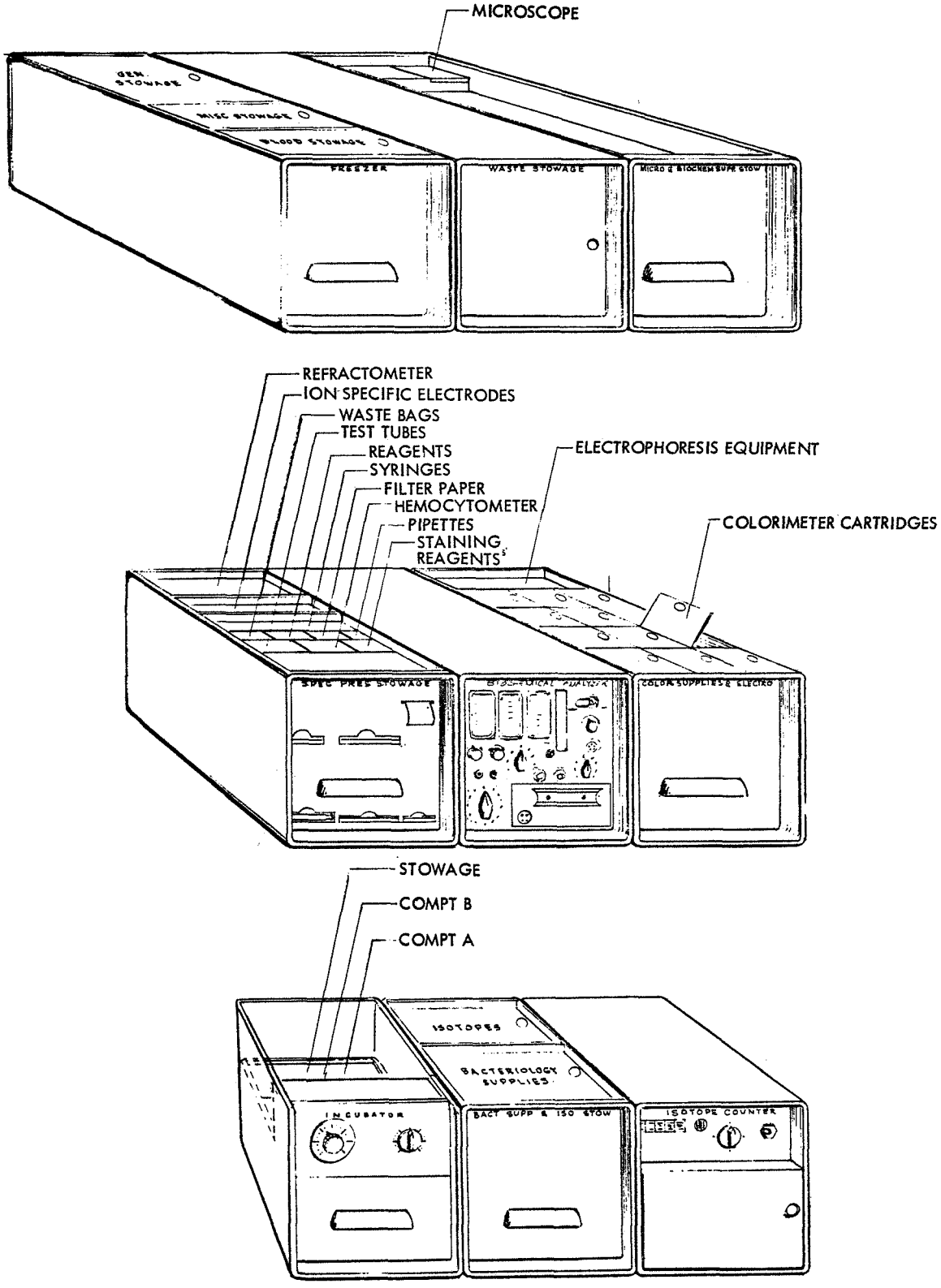

Fig. 7-11 Biochemical Station

The colorimeter consists of a source of radiant energy, a sample cell that accepts the liquid or gas cartridge to be analyzed, a wavelength selector device, and a detector. Colorimeters are used to perform discrete analyses using light in the visible region from about 360 to 700 mμ, where the measurement can be made without interference from other components in the sample. An analysis is performed by measuring the amount of transmitted light passing through the sample as a function of a known optical pass-band, approximately 10 to 20 mμ wide. Since colorimeters are subject to drift, a phototube calibration technique has been provided at the module.

Prepackaged reagents, which are premeasured, lyophilized, and packaged in individual vials, are used in conjunction with the colorimeter to provide many biochemical measurements. The lyophilized reagents packaged in plastic reaction bags have serum (diluted with water) added by means of a plastic pipette. The reaction bag is squeezed to reconstitute and mix reagents, then incubated for a prescribed time. The bag is then inserted into the colorimeter cartridge insert slot and read out at the proper wave length.

Electrophoresis measurement determines the quantitative fractionation of proteins and protein conjugates by electrical means. The electrophoresis kit is packaged in a plastic bag to retain moisture. Approximately six channels, each with a pair of slots for antibodies, is provided so as to permit duplicate runs (if desired) on samples from all astronauts or to permit the use of different antisera on the same sample. Sample application is effected by means of a capillary tube. Electrical leads contained in each kit are plugged into the master power supply located at the biochemical analyzer module. The duration of the electrophoretic run is controlled by a time-limit switch on the timer. The required staining of plates is accomplished by using plastic containers to inject dye into the electrophoresis bags, and then withdrawing the dye by squeezing the original dye container before insertion in the bag. Rinsing is accomplished in the same manner. Interpretation of the electrophoretic pattern can be accomplished by ground photographing of a TV scan and quantitatively monitoring by any of the commercial density scanning instruments.

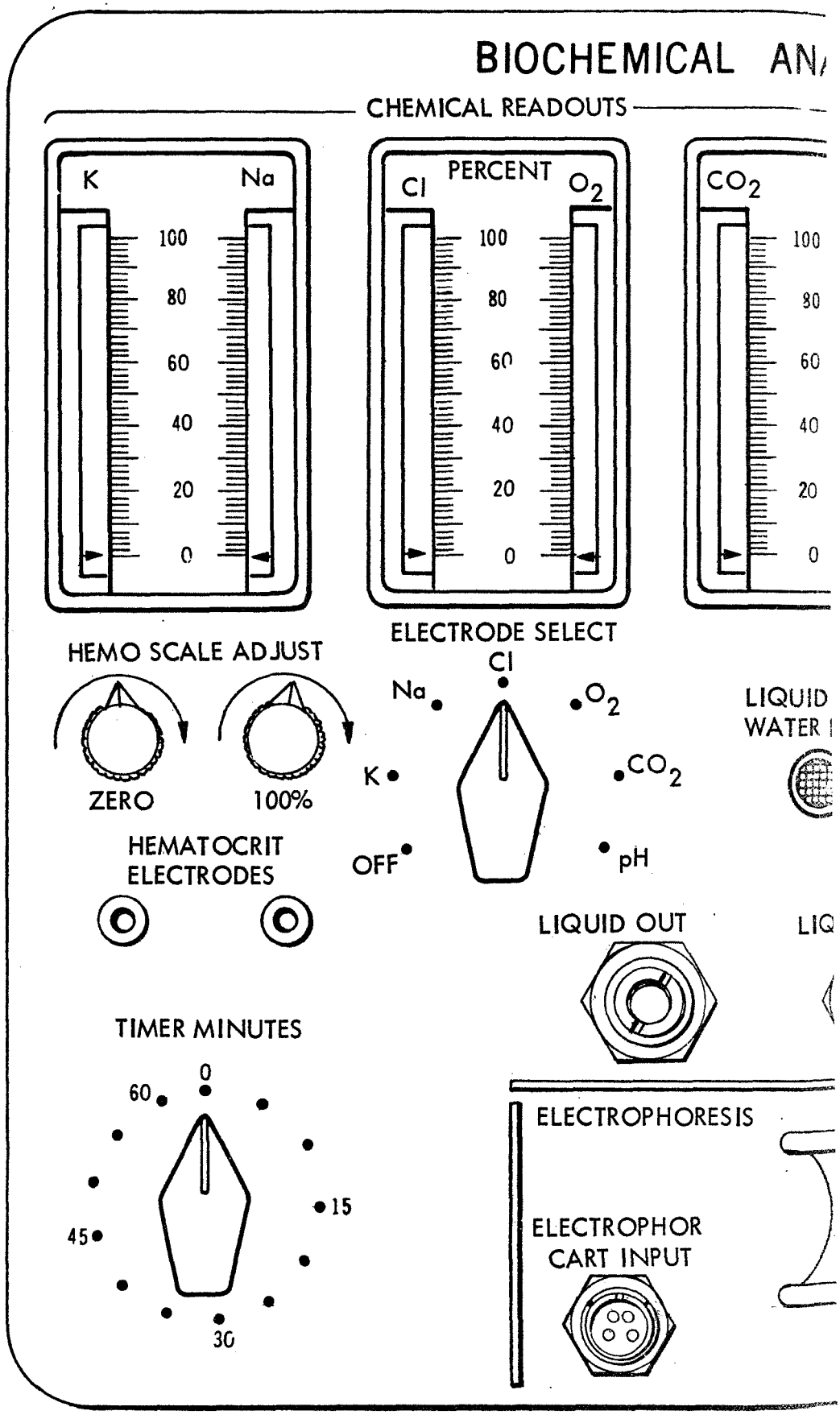

(ACTUAL SIZE)

P 7-38

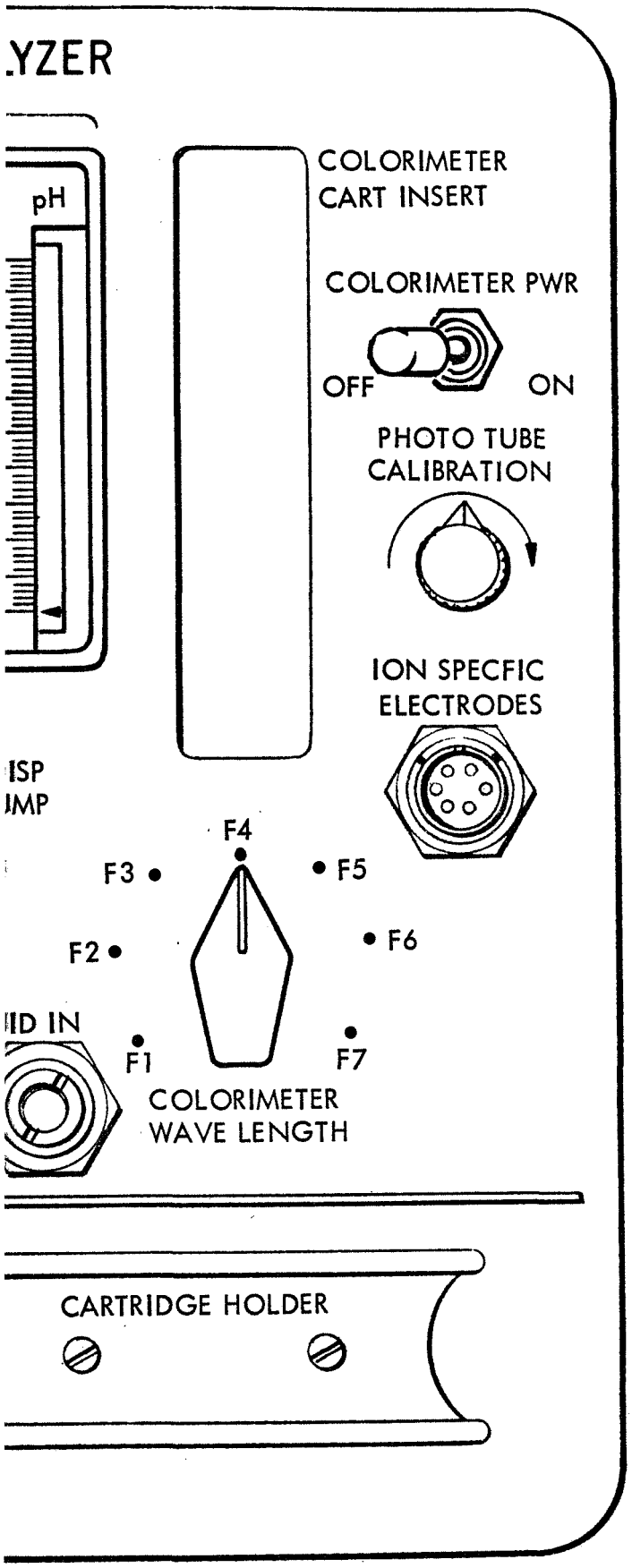

Fig. 7-12 Biochemical Analyzer Monitor

The electronic hematocrit (Model 30 Electronic Micro Hematocrit) is an accepted method of determining hematocrit. The determination is based upon a measurement of the electrolytic conductivity of whole or heparinized blood. Since the specific conductance of all ions is temperature-dependent, the conductivity cell must be compensated for temperature variations. The Model 30 Electronic Micro Hematocrit, marketed by the Yellow Springs Instrument Company, appears to be well-suited to the present application.

Determinations by ion-specific electrode use electrode syringes (pH, pCl, Na, K, pO_2 and pCO_2) to measure the specified concentrations in the biological materials sampled. The electrodes also monitor the concentration changes and levels during the preparatory step in various determinations. The electrodes are positioned in the plungers of the various syringes and thus readily allow transfer of the sample to and from the measuring device. A cable at the end of a syringe provides contact at the module, and appropriate chemical readout is made on a selector switch.

Equipment stowed in an adjacent module but used in performing measurements at this module comprises ion-specific electrodes, reagents, syringes, pipettes, staining reagents, electrophoresis bags, colorimeter cartridges, and miscellaneous collection and handling equipment for blood and urine.

7.3.2 Freezer Module (Fig. 7-13)

The requirement for storing body and waste fluids for on-board or postflight analysis can be achieved by a cryogenic freezer. One technique uses high-pressure gas or cryogenic fluid in a freezer unit. The fluid or gas, which fills all the void space around the specimen containers, is solidified by being subjected to a vacuum before launch. The temperature of the solidified gas is controlled by vapor pressure with a pressure relief valve.

Pg. 7-34 Blank & Not Filmed

Insulation is provided over the surface of the unit. Associated equipment to be used with the freezer unit is the Arde urine-volume measurement system modified to permit extraction of aliquots of urine. A liquid-gas phase separator, and a transfer system, must also be used to transfer samples to freezer, reagent bags, or slides.

7.3.3 Incubator Module (Fig. 7-14)

Temperature blocks are used to facilitate the incubation of sample and/or reagent syringes at manually set temperatures as prescribed for the various measurements being performed. The temperature blocks are designed for rapid temperature equilibration to eliminate, as much as possible, prolonged stabilization periods. Temperature control and readout are included on the module face. A section of the incubator has been provided for the cytological determinations requiring the incubation of stains, cultures, or bacteria. The oven is designed for running multiple, individual incubations with a temperature range from ambient to 40 °C above ambient. The interior accommodates several of the special cytological devices.

7.3.4 Isotope Monitor (Fig. 7-15)

This module houses a scintillation counter used in radioisotope tracer determinations of body fluids compartments. A well crystal and spectrometer are used in determining equilibrium concentrations of chromium 51 and iodine 125.* The Cr-51 is used to find red blood cell mass, the I-125-tagged human serum albumin to monitor blood plasma volume. Measuring these two directly avoids possible error in obtaining total blood volume from venous hematocrits and correction factors. Further, by measuring RBC Cr-51 activity over the course of several weeks, RBC mean lifetime can be determined. Water tagged by tritium (hydrogen 3)* is used to study total body water. A urine sample is measured with a liquid scintillator, and the count is totaled, using a photomultiplier tube.

---

*If used for IMBLMS.

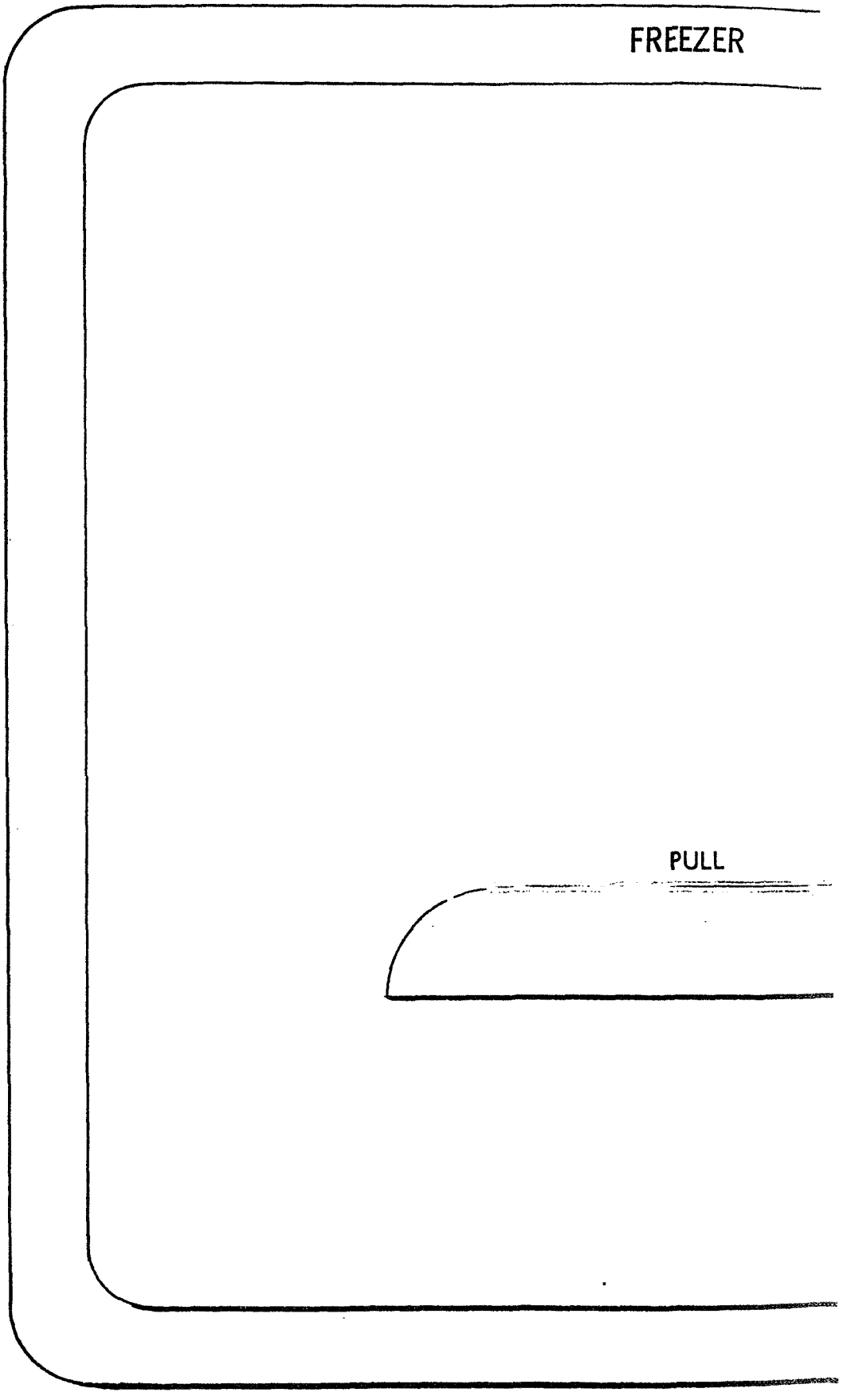

(ACTUAL SIZE)

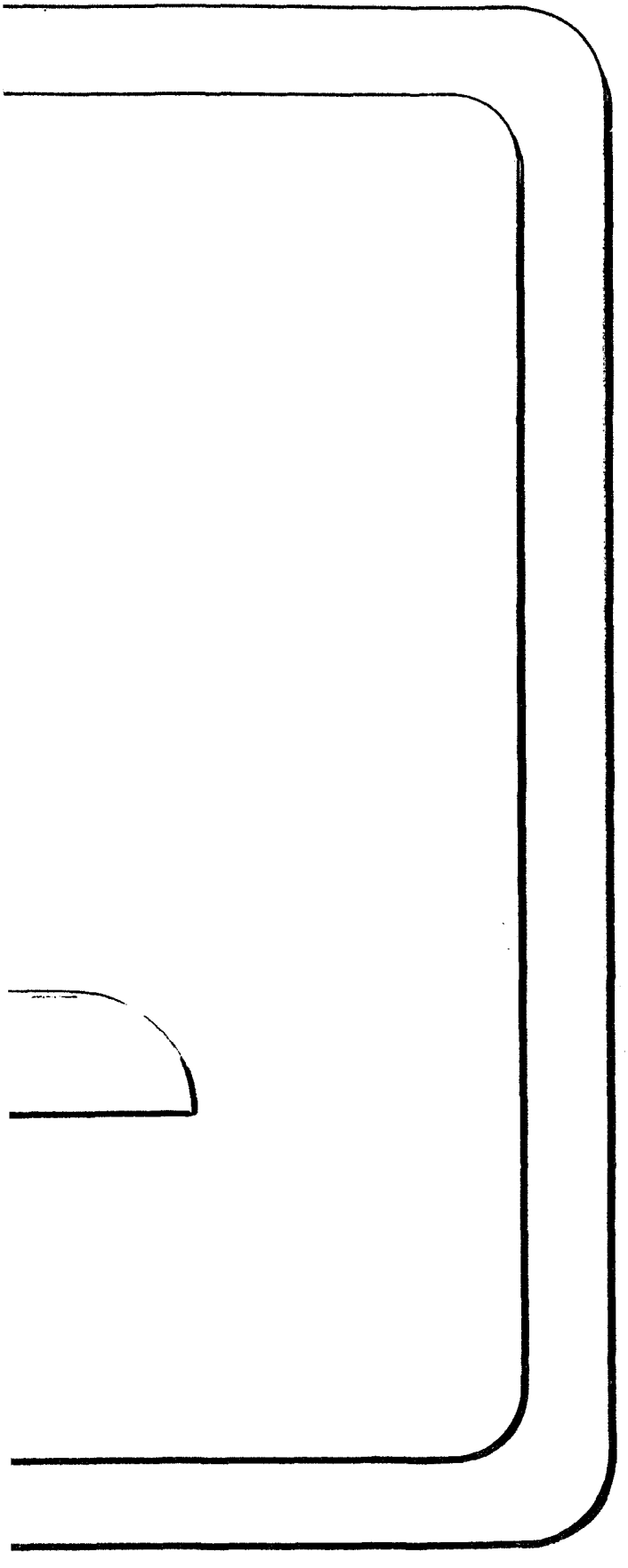

Fig. 7-13 Freezer

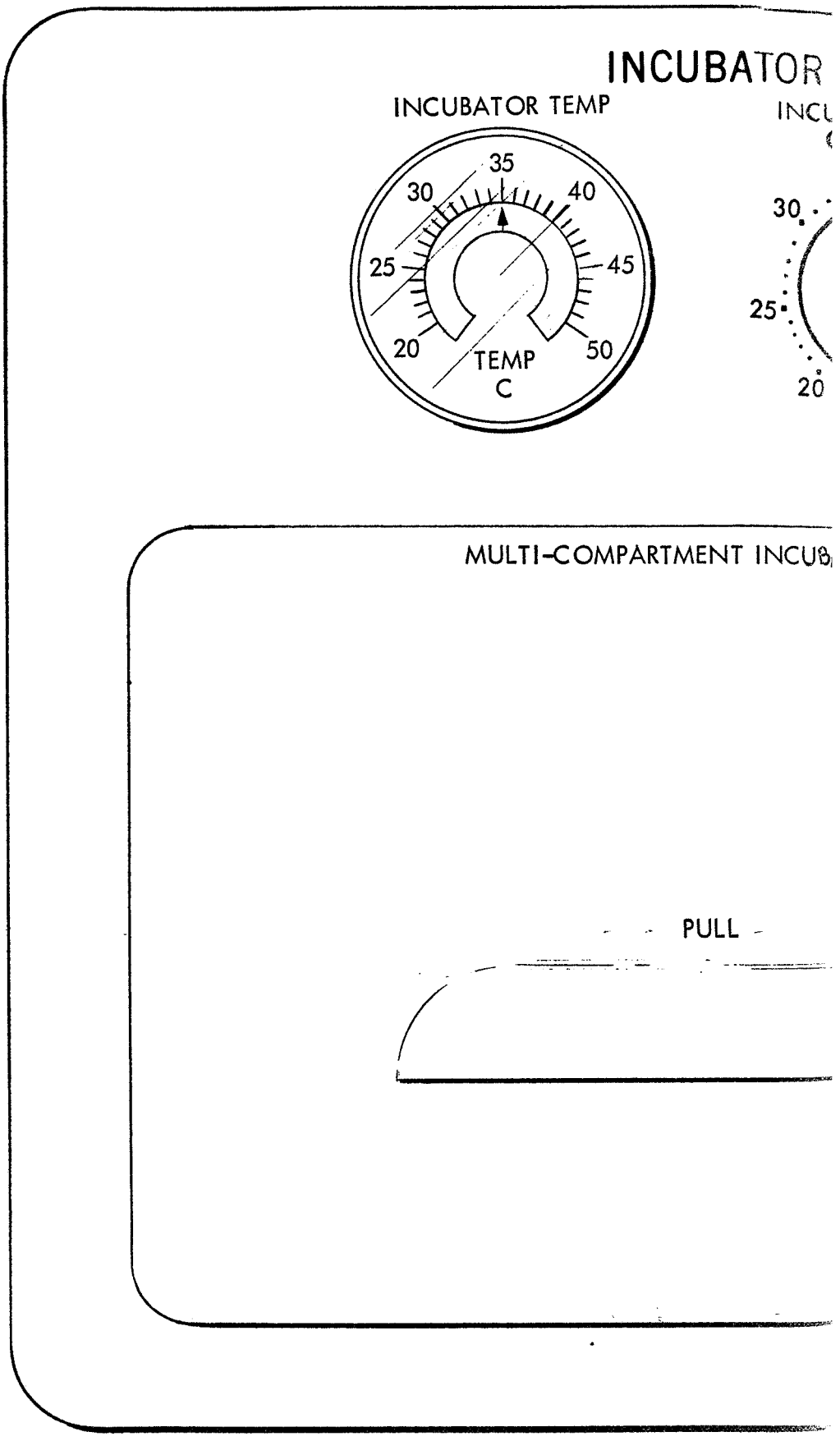

(ACTUAL SIZE)

pg. 7-38 BLANK & Not Filmed

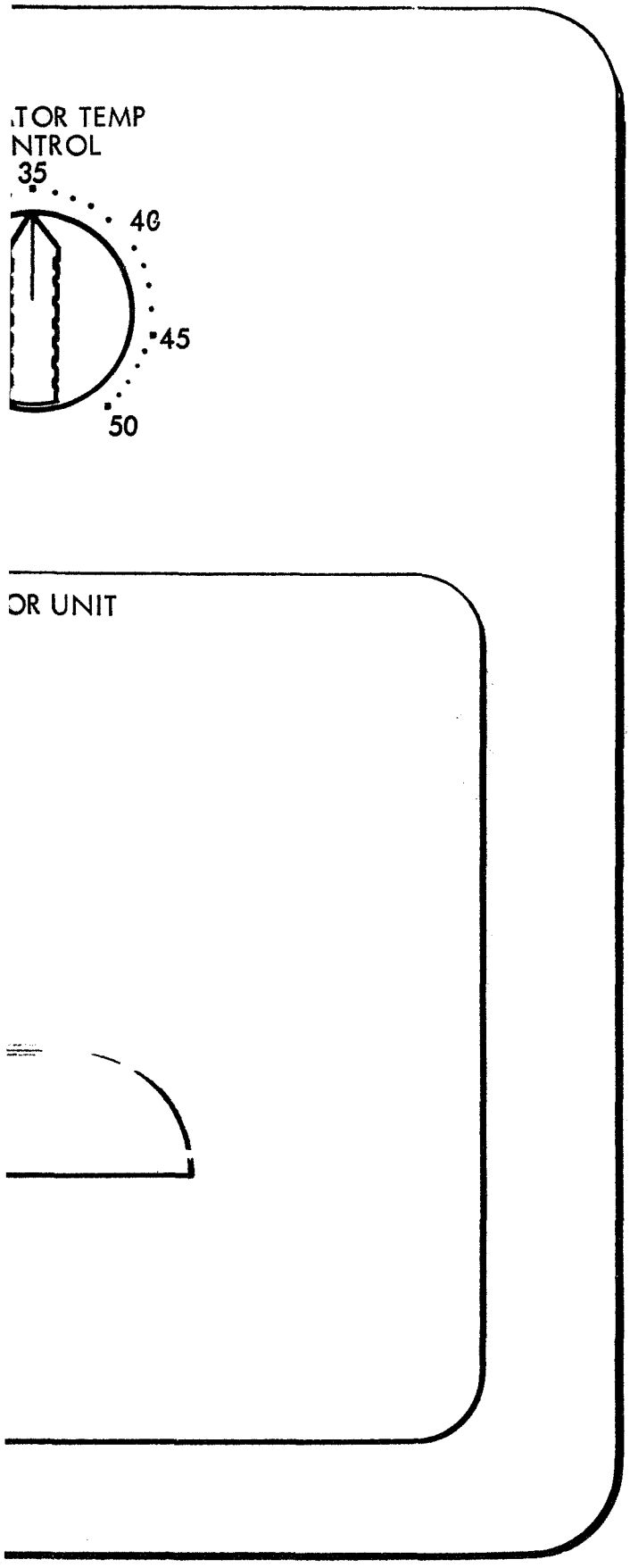

Fig. 7-14 Incubator

ISOTOPE MONIT

TOTAL COUNTS

0	0	0	3	9	5

AUTO CAL

SCINTILLATOR COUNTE

(ACTUAL SIZE)

Pg. 7-40 BLANK & not Filmed

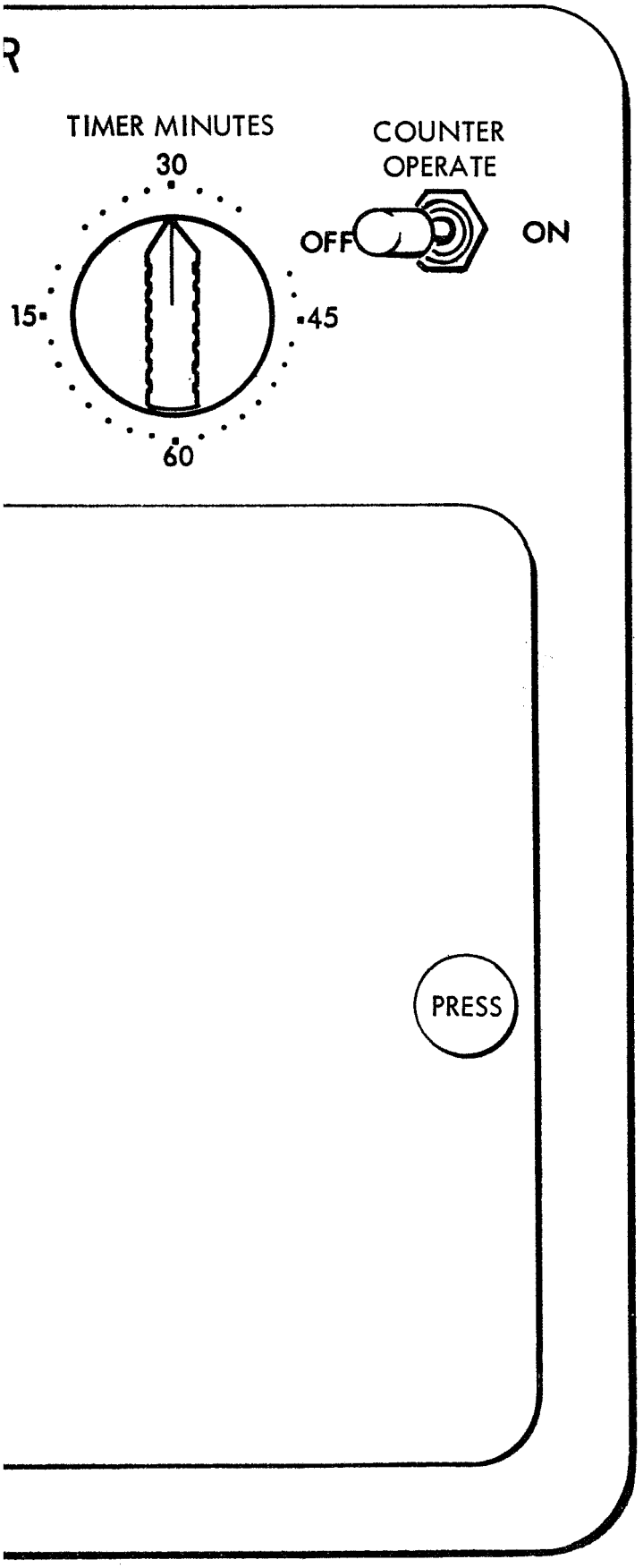

Fig. 7-15 Isotope Monitor

7.3.5 Biochemical Waste Collection Compartment (Fig. 7-16)

Waste products – including used reagent, water, urine, and blood – must be flushed from measuring devices and stored in the waste storage area. Plastic bags will be used, with desiccants if required.

7.3.6 Biochemical Supplies and Stowage (Fig. 7-17)

Four supporting stowage modules are required to house peripheral measuring equipment, reagents, syringes, refractometer (used for urine specific gravity), test tubes, pipettes, staining reagents, staining slide apparatus, urine-volume measurement equipment, and miscellaneous biochemical supplies. A microscope is stored for ancillary microscope work. This microscope can also act as a spare for the one integrated in the TV-microscope system at the PBDM station.

7.3.7 Operational Considerations

It is recommended that any measurement involving the taking of liquid samples be carried out at the filtered biochemical station. Experimental data will be logged in a standard log book. Encoding and transmittal of this data to ground are scheduled for the PBDM station. In the preparation of blood and urine slides, the initial operation will take place at the biochemical station; however, since the TV-microscope system is located at the PBDM station, the slides will have to be carried to that area for data transmittal to ground.

7.4 MAJOR PERIPHERAL MEASUREMENT EQUIPMENT

Major peripheral measurement equipment is categorized as any equipment that, because of its physical size or its use in the measurement, can be located remotely from the two identified stations. This equipment has been identified as lower body negative pressure device (LBNP), ergometer, total body exercise system, mass measurement

Pg. 7-42 BLANK & NOT FILMED

system (specimen and body), rotating chair and its associated equipment, maintenance equipment, and the helmet used in pulmonary evaluations.

LMSC considers integration of this equipment an important aspect of the total IMBLMS concept. The numerous interface problems associated with physical location, electrical connections, display requirements, and data management control must be considered. An equally important aspect of the problem is packaging and storing this peripheral equipment properly. The design of common experiment canisters suitable for withstanding ascent loads and other environmental conditions is considered within the scope of the IMBLMS. By proper design the canister can be an integral part of the equipment, as illustrated in Fig. 4-10 and discussed in Section 4. For example, the canister for LBNP can form the bottom panel of the LBNP, thereby reducing the overall weight of the system and, in addition, providing a more satisfactory seal. The ergometer canister can form the base plate and be a part of the ergometer structure.

7.5 SUMMARY OF IMBLMS EQUIPMENT

Based on the preliminary design concept of the IMBLMS and taking into consideration approved biomedical experiments on AAP, a preliminary equipment list (Table 7-1) has been developed. This list shows that a comprehensive biomedical measurement system requires 777 lb of equipment. This list will be subject to further detailed analysis and refinement during the final Phase B study effort.

Four categories were established to summarize the state of development of IMBLMS equipment: (1) off-the-shelf, (2) under development, (3) laboratory state-of-the-art, and (4) conceptual/research. In general, it can be stated that physiological measuring equipment has been developed to the space-qualified status in many areas; behavioral equipment is fairly well defined but extensive modification and development effort must be expended; and biochemical equipment is the least defined and requires extensive

BIOCHEMICAL WASTE COLLECTI

(ACTUAL SIZE)

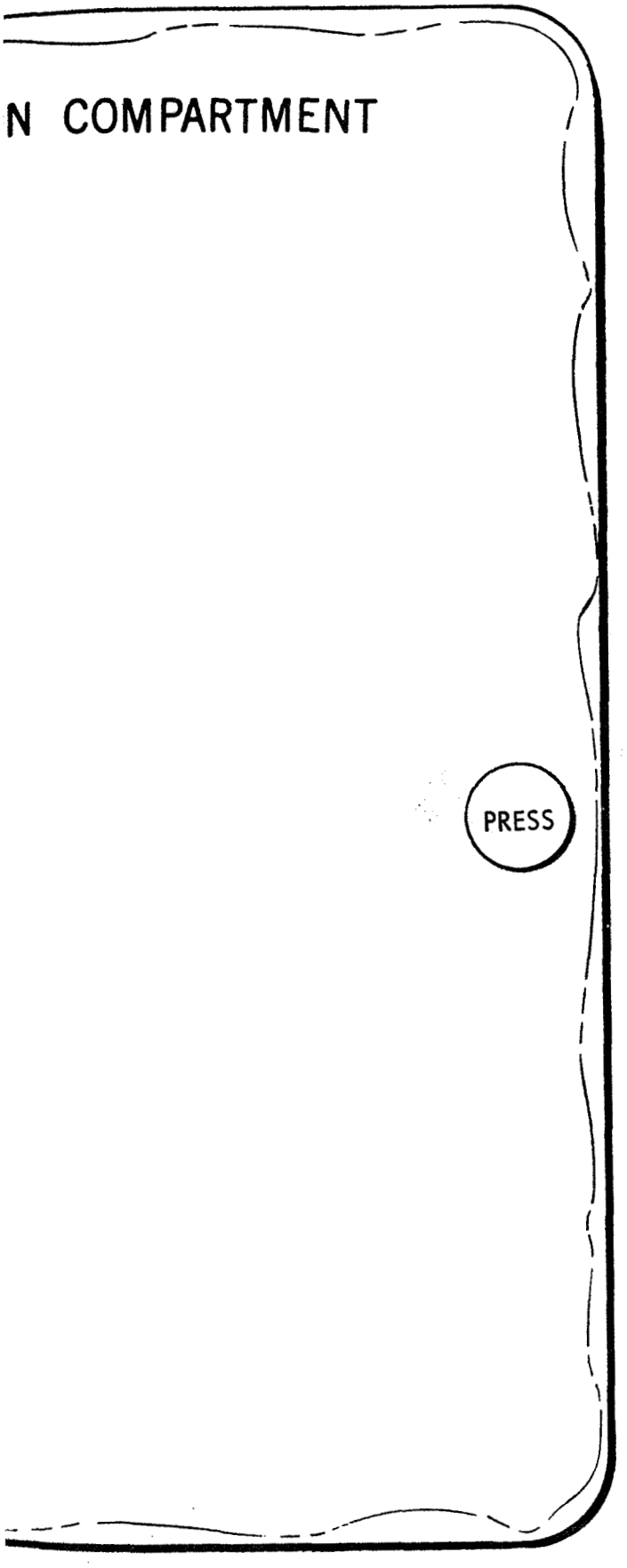

Fig. 7-16 Biochemical Waste Collection Compartment

SPECIMEN AND PRESERVATION EQUI

ANTISEPTIC PADS

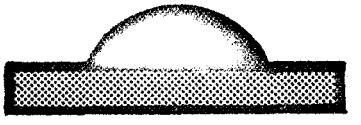

CAPILLARY PI

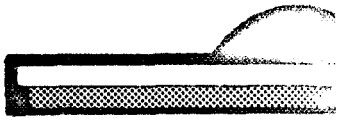

PULL

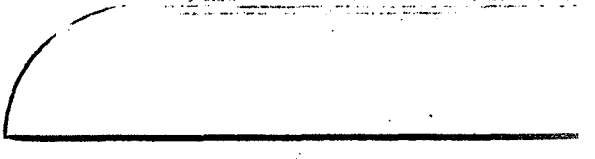

SYRINGES

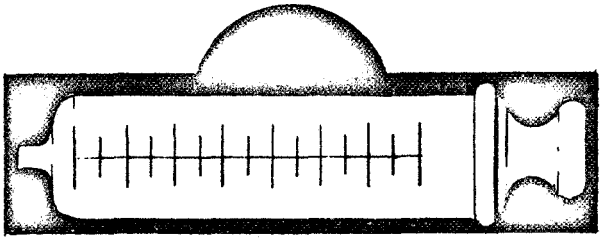

SLIDES

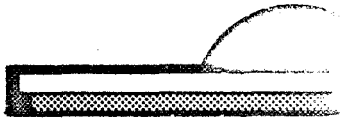

(ACTUAL SIZE)

pg. 7-46 BLANK + Not Signed

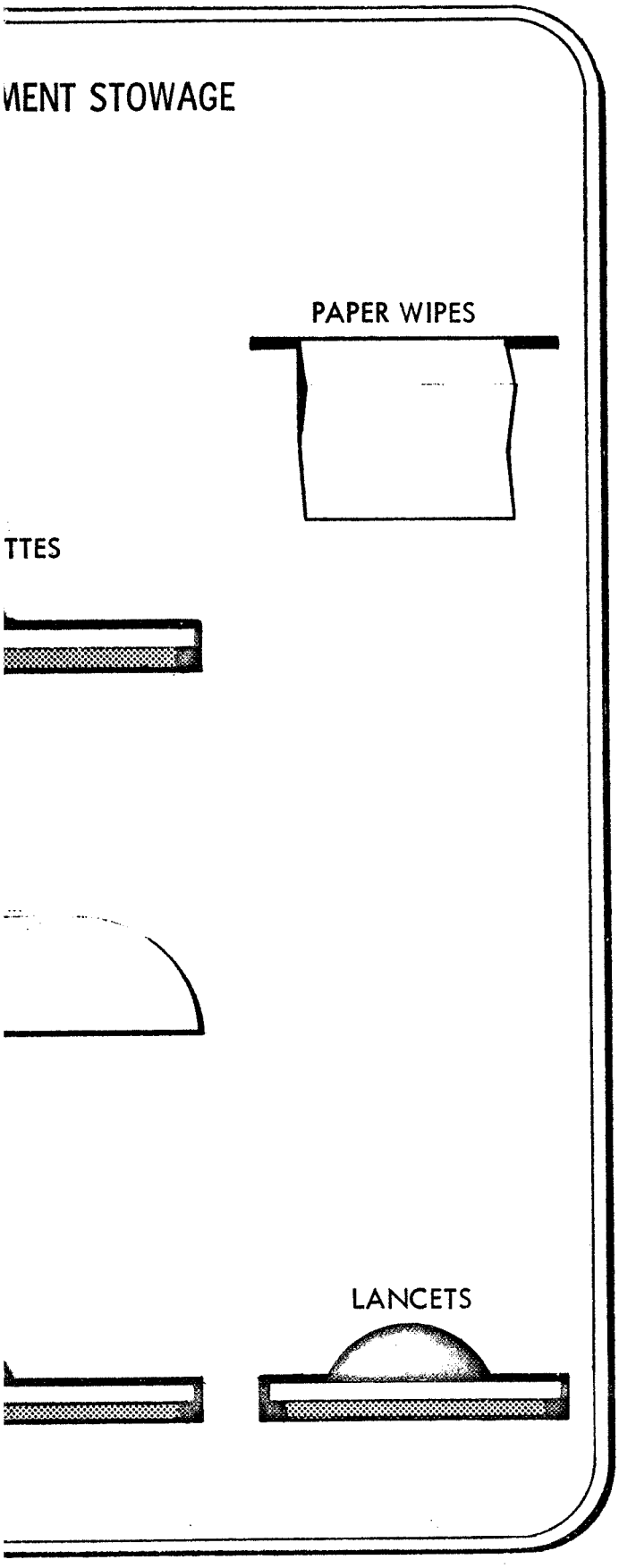

Fig. 7-17 Specimen and Preservation Equipment Stowage

Table 7-1

PRELIMINARY WEIGHT SUMMARY

Item	Weight (lb)
PHYSIOLOGICAL/BEHAVIORAL/DATA MANAGEMENT STATION	
Dynamic Physiological Monitor	49
Respiratory Gas/Blood Monitor	77
Vascular Dynamics Monitor	26
REVS Monitor	36
Behavioral Monitor	18
Stowage Modules, Including Stowed Equipment (3)	56
Video and Display Monitor	56
Numerical Data Entry and Printer	11
Data Management Processor	32
Data Management Control Module	21
BIOCHEMICAL STATION	
Biochemical Analyzer Module	23
Freezer Module	22
Incubator Module	8
Isotope Monitor	36
Waste Storage Module	7
Stowage Modules (4)	50
EXPERIMENT CANISTERS (7)	65
MAJOR PERIPHERAL EQUIPMENT	
LBNP	15
Ergometer	20
Total Body Exercise System	35
Body Mass Measurement System	38
Specimen Mass Measurement System	20
Rotating Chair	56
TOTAL	777

Pg. 7-48 BLANK & Not filmed

research and development. Data-management display equipment is well-defined and much of it is available. Primary recording equipment has been developed and flight-tested but most of it is not directly applicable to IMBLMS requirements and will require additional development.

A preliminary survey has indicated that, of the approximately 300 equipment items identified, 90 items can be purchased off-the-shelf. These items include physiological sensors and signal conditioners, as well as display and control equipment. Approximately 12 major equipment items are under development, including the ergometer, LBNP, body exercise system, mass spectrometer, and the rotating litter chair. Relatively few equipment items are in the conceptual/research category (e.g., body volume measurement, and isotope scintillator counter). Although major modifications are required for most of the clinical biochemical equipment, most IMBLMS equipment is in the state-of-the-art category. Techniques are well known, and further engineering development is required – e.g., the TV-microscope concept. Low-frame-rate TV units have been developed for the Surveyor and Mariner, but IMBLMS requirements may demand extensive modifications. Although compact rugged microscopes have been developed for general field work, the unique requirements imposed by the space environment will demand engineering development.

Identification of the equipment development needs and a realistic appraisal of the development time and cost constitute an important aspect of IMBLMS and will be reviewed thoroughly during the course of the Phase B study.

7.6 PRELIMINARY DESIGN CONCEPT TASKS TO BE PERFORMED

Additional technical effort during Phase B is to be directed toward the following engineering tasks:

- Prepare preliminary block diagram schematics for each module and overall system interfaces.

- Evaluate internal volumetric requirements of IMBLMS modules.
- Reexamine parts placement, density, and thermal considerations, and investigate further harness/cable/connector interfaces.
- Review each candidate IMBLMS in terms of weight, power, and size.
- Reevaluate stowage volume allotment based on IMBLMS candidate design.
- Review need for data compression as a tool to reduce video bandwidth and minimize quantity of data on downlinks.
- Analyze EMI requirements and consider solutions such as box shielding, special harness shielding, and filtering.
- Investigate problem area of RF radiation within spacecraft when operating near field telemetry.
- Perform preliminary analysis of an automatic pulmonary function evaluation program for on-board processor.

Determination of the resource requirements for Phase D – Development and Operations is a subtask to be defined during the Phase B effort. Items to be specifically covered are equipment availability and qualifications.

Two major tasks (H, Development of Preliminary Program Plans for Phase C Effort; and I, Definitive Statement of Work and Cost Proposal for Phase C) are scheduled for completion during Phase B and will be included as sections of the final report.

8 REFERENCES

Section 8
REFERENCES

1-1. National Aeronautics and Space Administration, Design and Development of an Integrated Medical and Behavioral Laboratory Measurement System, NASA RFP 10-1243, Washington, D. C., 27 Dec 1966

2-1. A. Graybiel, "The Oculogravic Illusion," A. M. A. Arch. Ophthal., Vol. 48, 1952, p. 605

2-2. B. J. Loret, "Optimization of Space Vehicle Design with Respect to Artificial Gravity," Aerosp. Med., Vol. 34, 1963, p. 430

2-3. A. A. J. van Egmond, J. J. Goren, and L. B. Jongkees, "The Function of the Vestibular Organ," Pract. Otorhinolaryng, Vol. 14, Suppl. 2, 1952, p. 1

2-4. B. F. McCabe, "Nystagmus Response of the Otolith Organs," Laryngoscope, Vol. 74, 1964, p. 372

2-5. A. Graybiel and H. Hupp, "The Oculogyral Illusion," J. Aviat. Med., Vol. 17, 1946, p. 3

2-6. U. S. Army Medical Research Laboratory, Adaptation to Bizarre Stimulation of the Semicircular Canals as Indicated by the Oculogyral Illusion, by A. Graybiel, F. Guedry, and W. Johnson, Report No. 464, Fort Knox, 1964

2-7. R. Lorente de No', "Vestibulo-ocular Reflex Arc,"Arch. Neurol. Psychiat., Vol. 30, 1933, p. 245

2-8. A. A. J. van Egmond, J. J. Groen, and L. B. Jongkees, "The Mechanisms of the Semicircular Canal," J. Physiol., Vol. 110, 1949, p. 1

2-9. U. S. N. School of Aviation Medicine, A Signal Conditioner and Electrode Technique for Nystagmus Measurements, by W. Carroll Hixson and J. J. Niven, Project MR005.13-6001, 1963

2-10. R. S. Weaver, "Theoretical Aspects of the Role of Angular Acceleration in Vestibular Stimulation," Acta Oto-Laryng., Suppl. 205, 1965, p. 1

2-11. R. L. Maulsby, "Electroencephalogram during Orbital Flight," Aerosp. Med., Vol. 37, 1966, p. 1022

2-12. R. Patterson, W. F. Kubicek, E. Kinnen, and D. Witsoe, "Development of an Electrical Impedance Plethysmography System to Monitor Cardiac Output," Proc. of First Annual Rocky Mountain Bioengineering Symposium, 1964, p. 56

2-13. J. G. Defares, M. E. Wise, and J. W. Duyff, "New Indirect Fick Procedure for the Determination of Cardiac Output," Nature, Vol. 192, 1961, p. 760

2-14. O. T. Garza, "Measurement of Cardiac Output in Man, at Rest and During Exercise, by an Indirect Fick CO_2 Method," master's thesis, University of New Mexico, 1963

2-15. K. Klausen, "Comparison of CO_2 Rebreathing and Acetylene Methods for Cardiac Output," J. Appl. Physiol., Vol. 20, 1965, p. 763

2-16. J. H. Comroe, Jr., R. E. Forster II, A. B. Dubois, W. A. Briscoe, and E. Carlsen, The Lung: Clinical Physiology and Pulmonary Function Tests, 2nd edition, Year Book Publishers, Inc., 1962

2-17. R. C. Darling, A. Cournand, and D. W. Richards, Jr., "Studies on the Intrapulmonary Mixtures of Gases. III. Open Circuit Method for Measuring Residual Air," J. Clin. Invest., Vol. 19, 1940, p. 609

2-18. R. G. Bartlett, Jr., and N. E. Phillips, "The Velocity-Volume Loop; A Composite Pulmonary Function Test," Dis. Chest, Vol. 42, 1962, p. 482

2-19. K. von Neergard and K. Wirz, "Die Messung der Strömungswiderstande, in den Atemwegen des Menschen Inbesondere bei Asthma und Emphysem," Z. Klin. Med., Vol. 105, 1927, p. 51

2-20. J. Mead and J. L. Whittenberger, "Physical Properties of Human Lungs Measured During Spontaneous Respiration," J. Appl. Physiol., Vol. 5, 1953, p. 779

2-21. J. Mead, M. B. McIlroy, N. J. Selverstone, and B. C. Kriete, "Measurement of Intraesophageal Pressure," J. Appl. Physiol., Vol. 7, 1955, p. 491

2-22. K. von Neergard and K. Wirz, "Über eine Methode zur Messung der Lungenelastizität am lebendend Menschen, Inbesondere beim Emphysem," Z. Klin. Med., Vol. 105, 1927, p. 105

2-23. W. S. Fowler, E. R. Cornish, Jr., and S. S. Kety, "Lung Function Studies: Analysis of Alveolar Ventilation by Pulmonary Nitrogen Clearance Curves," J. Clin. Invest., Vol. 31, 1952, p. 40

2-24. J. H. Comroe, Jr., and E. H. Wood, "Measurement of Oxygen Saturation of Blood by Filter Photometers (Oximeters)," Methods in Med. Res., Vol. 2, 1950, p. 144

2-25. E. H. Wood and J. E. Geraci, "Photolectric Determination of Arterial Oxygen Saturation in Man," J. Lab. Clin. Med., Vol. 34, 1949, p. 387

2-26. George Wertheim, personal communication

2-27. Dunlap and Associates, Adaptive Simulation, Final Report, by Charles R. Kelley, Contract Nonr-4986(00), Design Applications of Self-Adjusting Simulators, 15 Aug 1966

2-28. R. H. Okada, IRE Trans. Med. Elec., Vol. 7, 1966, p. 188

2-29. Gradwohl, Clinical Laboratory Methods and Diagnosis, S. Frankel and S. Reitman, eds., 6th edition, C. V. Mosby Co., Inc., St. Louis, 1963

2-30. D. Danon, J. Clin. Path., Vol. 16, 1963, p. 377

2-31. I. Davidsohn and B. J. Wells, eds., Clinical Diagnosis by Laboratory Methods, 13th edition, Todd-Sanford, 1963

2-32. Gradwohl, Clinical Laboratory Methods and Diagnosis, Vol. 2, C. V. Mosby Co., Inc., St. Louis, 1963

2-33. Abbott Laboratories, Triosorb T-3 Diagnostic Kit, Abbott Radio-Pharmaceuticals Brochure 97-0152/R4-20-Rev., Nov 1965

2-34. J. H. Fellman, et al., Am. J. Clin. Path., Vol. 38, 1962, p. 651

2-35. P. Di Giulio et al., J. Lab. Clin. Med., Vol. 63, 1964, p. 864

2-36. S. Burnjes et al., Clin. Chem., Vol. 10, 1964, p. 1

2-37. H. E. Harrison, Yale J. Biol. & Med., Vol. 38, 1966, p. 393

2-38. G. W. Asheroft, Clin. Chem. Acta, Vol. 9, 1964, p. 364

2-39. C. R. Berrett et al., Clin. Chem., Vol. 12, 1966, p. 399

2-40. H. Jacobson, Anal. Chem., Vol. 38, 1966, p. 1951

2-41. B. A. Butcher et al., Aerospace Med., Vol. 36, 1965, p. 1032

2-42. General Dynamics, Report ERR AN415, by A. Wolgin and G. J. Goble, 1963

2-43. E. J. Miller and K. A. Piez, Anal. Biochem., Vol. 16, 1966, p. 320

2-44. F. Hutterer and E. J. Singer, Anal. Chem., Vol. 32, 1960, p. 556

2-45. V. Hawkinson et al., J.A.M.A., Vol. 128, 1945, p. 514

2-46. O. Wrong et al., Clin. Sci., Vol. 28, 1965, p. 357

2-47. R. L. Searcy et al., Clin. Chem., Vol. 11, 1965, p. 786, and Am. J. Clin. Vol. 46, 1966, p. 582

2-48. M. Mager and G. Farese, Techn. Bull. Reg. Med. Techn., Vol. 35, 1965, p. 104

2-49. H. G. Goslar, Acta Histochem. Suppl., Vol. 4, 1965, p. 317

2-50. R. J. Henry et al., Am. J. Clin. Path., Vol. 23, 1953, p. 841

2-51. Gradwohl, Clinical Laboratory Methods and Diagnosis, 6th edition, C. V. Mosby Co., St. Louis, 1963

2-52. S. H. Jackson, Clin. Chem., Vol. 11, 1965, p. 1051

2-53. K. Cramer et al., Scand. J. Clin. Lab. Invest., Vol. 11, 1959, p. 213

2-54. D. Seligson et al., Clin. Chem., Vol. 4, 1958, p. 159

2-55. G. M. Martin and L. Siebel, Cann. Med. Assn. J., Vol. 83, 1960, p. 1214

2-56. Miles Lab, Inc., Br. Pat. No. 922655, 3 Apr 1963

2-57. A. Ness, Clin. Chem. Acta, Vol. 13, 1966, p. 532

2-58. K. Lorentz, Clin. Chem. Acta, Vol. 13, 1966, p. 660

2-59. L. A. Carlson, Acta Soc. Med. Upsalien., Vol 64, 1959, p. 208, and Clin. Chem. Acta, Vol. 4, 1959, p. 197

2-60. B. Klein et al., Clin. Chem., Vol. 6, 1960, p. 269

2-61. F. Wroblewski and J. S. La Due, Proc. Soc. Exp. Biol. Med., Vol. 90, 1955, p. 210

2-62. R. J. Henry et al., Am. J. Clin. Path., Vol 34, 1960, p. 381

2-63. L. Fishman and J. Doubilet, J. A. M. A., Vol. 157, 1955, p. 908

2-64. A. J. Karmen, J. Clin. Invest., Vol. 34, 1955, p. 131

2-65. K. S. Henley and H. M. Pollard, Lab. Clin. Med., Vol. 46, 1955, p. 785

2-66. B. J. Friis-Hansen et al., Pediat., Vol. 7, 1951, p. 321

2-67. B. B. Brodie et al., J. Biol. Chem., Vol. 179, 1949, p. 25

2-68. M. J. Gregerson, J. Lab. and Clin. Med., Vol. 29, 1944, p. 1266

2-69. S. L. Shapiro, Science, Vol. 114, 1951, p. 73

2-70. W. O. Caster et al., J. Lab. and Clin. Med., Vol. 42, 1953, p. 493

3-1. National Aeronautics and Space Administration, Office of Manned Space Flight, Apollo Applications Program, Baseline Configuration Definition AAP-1A Through AAP-5, 1 Jun 1967

3-2. -----, Program Directive No. 3B, Flight Mission Directive for AAP-1/AAP-2, 19 Jun 1967

3-3. -----, Program Directive (Preliminary), Flight Mission Directive for AAP-3/AAP-4, undated

3-4. Lockheed Missiles & Space Company, Data Return Capsule System Feasibility Study for the Cluster A Mission, LMSC-A842144, 1967

4-1. -----, Biological Measurement of Man in Space, Vols. I–VI, NASA Contract NASw-1071, Report M-61-64-1, 1964–1967

4-2. Lockheed Missiles & Space Company, Biological Measurement of Man in Space, Vol. VI, "Time-Line and Feasibility Analysis for AAP Biomedical Experiment Program, Final Report," NASA Contract NASw-1071 Modification 3, Report M-61-64-1-VI, Jan 1966

4-3. National Aeronautics and Space Administration, Marshall Space Flight Center, Systems Engineering Branch, R-P&VE-VA, S-IVB Orbital Workshop Astronaut Walkthrough Final Report, 28 Jun 1967

5-1. -----, Orbital Workshop Experiment Requirements, NASA General Working Paper No. 10,065

5-2. -----, Marshall Space Flight Center, Environmental Design and Qualification Test Criteria for ATM, 50M02408, Huntsville, Ala., 31 Jan 1967

5-3. -----, Manned Space Center, Apollo Spacecraft Parts and Material Program, MSC-A-D-66-7, Houston, Tex., 14 Nov 1966

5-4. -----, Manned Spacecraft Center, Procedures and Requirements for the Evaluation of Spacecraft Nonmetallic Materials, MSC-A-D-66-3, Houston, Tex., 5 Jun 1967

5-5. -----, Reliability Program Provisions for Space Systems Contractors, NPC 250-1, Jul 1963

5-6. -----, Quality Provisions for Space System Contractors, NPC 200-2, Apr 1962

5-7. -----, Inspection System Provisions for Suppliers of Space Materials, Components, and Services, NPC-200-3, Apr 1962