12

T72-13259

C1

CR 151318

MICROFICHED

APR 24 1972

TECHNICAL LIBRARY
BUILDING 45

APR 20 1972

Manned Spacecraft Center
Houston, Texas 77058

MAY 1977
RECEIVED
NASA STI FACILITY
INPUT BRANCH

(NASA-CR-151318) INTEGRATED MEDICAL AND BEHAVIORAL LABORATORY MEASUREMENT SYSTEM, PHASE B 2. VOLUME 3: SYSTEM CONCEPT AND DESIGN. APPENDIX B: FUNCTION FLOW BLOCK DIAGRAMS Final report (General Electric

N77-78300

Unclas

00/12 29910

GENERAL ELECTRIC

DOCUMENT NO. 68SD8011
12 FEBRUARY 1968.

INTEGRATED MEDICAL AND BEHAVIORAL LABORATORY MEASUREMENT SYSTEM PHASE B II FINAL REPORT

VOLUME III - SYSTEM CONCEPT AND DESIGN
APPENDIX B
FUNCTION FLOW BLOCK DIAGRAMS

CONTRACT NASW—1630

PREPARED FOR THE

NATIONAL AERONAUTICS AND SPACE ADMINISTRATION

BY THE

BIOASTRONAUTIC SECTION

SPACE SYSTEMS ORGANIZATION

GENERAL ELECTRIC

MISSILE AND SPACE DIVISION
Valley Forge Space Technology Center
P.O. Box 8555 • Philadelphia 1, Penna

LIST OF ILLUSTRATIONS

Figure	Function Block Title	Page
1	AAP Top Level Function Flow Block Diagram for One Flight . .	5
2	IMBLMS Composite Function Flow Block Diagram for One Flight.	6
3	Perform IMBLMS Tests in Integrated Systems Tests	7
FFBD NO.	PHYSIOLOGICAL	
3.X	Perform On-orbit Medical and Behavioral Measurements . . .	8
3.X.3.1	Perform Neurological Measurements	9
3.X.3.1.1	Perform Agravic Perception Measurements	10
3.X.3.1.2	Perform Ocular Counter-Rolling Measurement	11
3.X.3.1.3	Perform Oculogyral Illusion Measurement	11
3.X.3.1.4	Perform Visual Task with Head Rotation Measurement	12
3.X.3.1.5	Perform Electronystagmogram Measurement	13
3.X.3.1.6	Perform Angular Acceleration Threshold Measurement	14
3.X.3.1.7	Perform EEG Measurement	15
3.X.3.2	Perform Cardiovascular Measurements	16
3.X.3.2.1	Perform VCG Measurement	17
3.X.3.2.2	Perform Phonocardiogram Measurement	18
3.X.3.2.3	Perform Cardiac Output Measurement.	19
3.X.3.2.4	Perform Arterial Blood Pressure Measurement	20
3.X.3.2.5	Perform Blood Flow Measurements.	21
3.X.3.2.6	Perform Peripheral Venous Pressure Measurements.	22

LIST OF ILLUSTRATIONS (CONT)

FFBD NO.		Page
3.X.3.2.7	Perform In-flight Exercise Measurement	23
3.X.3.2.8	Perform Rheology Measurement	24
3.X.3.2.9 3.X.3.2.10	Perform LBNP Measurement	25
3.X.3.2.11	Perform Ballistocardiogram Measurement	26
3.X.3.3	Perform Respiratory Measurements	27
3.X.3.3.1	Perform Respiratory Rate Measurement	28
3.X.3.3.2	Perform Lung Volume Measurement	28
3.X.3.3.3	Perform Pressure, Flow and Volume Measurement	29
3.X.3.3.4	Perform Breath by Breath Gas Analysis Measurement	30
3.X.3.3.5	Perform Alveolar to Arterial O_2 Gradient Measurement	30
3.X.3.3.6	Perform O_2 Consumption Closed Circuit Measurement	31
3.X.3.3.7	Perform Ventilation Measurement	32
3.X.3.3.8	Perform Diffusion Measurement	33
3.X.3.3.9	Perform Arterial O_2 Saturation Measurement	34
3.X.3.4	Perform Metabolic and Nutritional Measurements	35
3.X.3.4.1	Perform Core Temperature Measurement	36
3.X.3.4.2	Perform Body Mass Measurements: Body Mass, Lean Body Mass	37
3.X.3.4.3	Perform Muscle Size and Strength Measurements	37
3.X.3.4.4	Perform EMG Measurement	38
3.X.3.4.5	Perform Energy Metabolism Measurement	38

LIST OF ILLUSTRATIONS (CONT)

FFBD NO.	LABORATORY ANALYSIS	Page
3.X.4.1	Perform Blood Measurements	39
3.X.4.1.4	Perform Whole Blood Measurements and Sampling (No Anticoagulant)	40
3.X.4.1.5	Perform Serum Measurements and Sampling	41
3.X.4.1.6	Perform Whole Blood Measurements (Any Anticoagulant) for RBC Mass and RBC Survival Measurements	43
3.X.4.1.7	Perform Plasma Measurements and Sampling (Any Anticoagulant) for On-board Plasma Volume Measurement and Post-flight Protein Electrophoresis Measurement	43
3.X.4.1.8	Perform Oxalated Blood Measurement for Hemoglobin	43
3.X.4.1.9	Perform Oxalated Plasma Measurement and Sampling for Total Protein Measurement	45
3.X.4.1.10	Perform Heparnized Blood Measurement for Lymphocyte Karyotyping	47
3.X.4.1.11	Perform Heparnized Plasma Sampling for Immunoglobulin, Fibrinogen, ACTH Measurements Post-flight	47
3.X.4.1.12	Perform Citrated Plasma Sampling for Post-flight Fibrinogen Activity Measurement	47
3.X.4.2	Perform Urine Measurements	49
3.X.4.3	Perform Feces Measurements	51
3.X.4.4	Perform Microflora Measurements	52
3.X.4.5	Perform Sweat Measurements	53
3.X.4.6	Perform Food Intake Measurements	54
3.X.4.7	Perform Fluid Intake Measurements	54

LIST OF ILLUSTRATIONS (CONT)

FFBD NO.	BEHAVIORAL	Page
3.X.5.1	Perform Sensory Battery Measurements	54
3.X.5.1.1	Perform Visual Measurements	55
3.X.5.1.2	Perform Auditory Measurements	56
3.X.5.1.3	Perform Kinesthetic Measurements	57
3.X.5.1.3.1	Perform Cutaneous Touch Measurements	57
3.X.5.1.3.2	Perform Proprioceptive Measurements	58
3.X.5.2	Perform Higher Thought Processes Measurements	59
3.X.5.3	Perform Memory Measurements	60
3.X.5.3.3	Perform Short-Term Memory Measurements	60
3.X.5.3.4	Perform Long-Term Memory Measurements	61
3.X.5.4	Perform Vigilance Measurements	62
3.X.5.5	Perform Learned Activity Measurements	63
3.X.5.5.1	Perform Tracking Measurements	63
3.X.5.5.2	Perform Reaction Time RT Measurements	64
3.X.5.5.2.4	Perform Simple Visual RT Tests	65
3.X.5.5.2.5	Perform Complex Visual RT Tests	66
3.X.5.5.2.6	Perform Simple Auditory RT Tests	67
3.X.5.5.2.7	Perform Complex Auditory RT Tests	68
3.X.5.6	Perform Time and Motion Measurements	69
3.X.5.7	Perform Clinical Evaluation (Crew Intercommunications, etc.)	70

APPENDIX B

IMBLMS RECOMMENDED SYSTEM FUNCTION FLOW BLOCK DIAGRAMS FOR ON-ORBIT MEDICAL AND BEHAVIORAL MEASUREMENTS

INTRODUCTION

Function Flow Block Diagrams (FFBD's) describing the sequence of functions required to perform each on-orbit measurement recommended for IMBLMS are contained in Appendix B.

The function flow begins at the AAP mission level, Figure 1, from which the specific IMBLMS functions have been extracted, Figure 2. From these IMBLMS functions, FFBD 3.X, "Perform On-Orbit Medical and Behavioral Measurements", was selected to be detailed to the measurement level. Diagrams detailing the functions required for these measurements have been assembled for Appendix B. In addition, FFBD 6.X, "Perform IMBLMS Tests in Integrated Systems Tests", has been detailed to one level and is shown in Figure 3.

The term "measurement" as used in the FFBD's can indicate a measurement function in its usual sense, as well as on-board sampling functions for post-flight measurements.

The "AND" symbol indicates two or more functions each of which must be accomplished before the next function can begin. The "OR" symbol indicates two or more functions, one of which must be accomplished before proceeding to the next function. The dot at a conjunction of flow lines is used to designate the "and/or" logical connective. A function in a sequence which is only shown for reference or information is indicated by brackets in distinction to a function block requiring action in a sequence which is enclosed in a full box. The letter, e.g. "X", "Y" or "Z", in a function block number will be replaced by a number when this number is determined at a higher level breakdown of mission functions not yet fully diagrammed.

Physiological and Behavioral measurements are divided into four and seven major measurement disciplines, respectively. The third major category of measurements, "Laboratory Analyses", was selected to gather measurements requiring similar techniques and is divided into seven groups, corresponding to the nature of the sample being measured.

A cross reference of blood sample types and measurements is included to assist in locating FFBD's for specific blood measurements in the Laboratory Analyses measurement category.

Whole Blood (No Anticoagulant) Measurements & Sampling 3.X.4.1.4

Blood Cell Morphology

Reticulocyte Count

Hematocrit

Bleeding Time

Clotting Time

Total Body Water

Serum Measurement and Sampling 3.X.4.1.5

Alkaline Phosphatase

Antibody Titrations

Bilirubin

Blood Lipids

BUN

Ca

Calcitonin

Cholesterol

Cl

CPK

Complement Titrations

Glucose

K

LDH

LDH Isoenzymes

Mg

N

Na

P

Parathyroid Hormone

PBI

Prothrombin Consumption

Serum Free Thyroxin

SGOT

SGPT

Transferrins

Uric Acid

Whole Blood (Any Anticoagulant) Measurements and Sampling 3.X.4.1.6

RBC Mass

RBC Survival

Plasma (Any Anticoagulant) Measurements and Sampling 3.X.4.1.7

Plasma Volume RISA

Protein Electrophoresis

Oxalated Blood Measurements and Sampling 3.X.4.1.8

Hemoglobin

Oxalated Plasma Measurement and Sampling 3.X.4.1.9

Protein (Total)

Heparnized Blood Measurement and Sampling 3.X.4.1.10

Lymphocyte Karyotyping

Heparnized Plasma Sampling 3.X.4.1.11

Immunoglobins

Fibrinogen

ACTH

Citrated Plasma Sampling 3.X.4.1.12

Fibrinolytic Activity

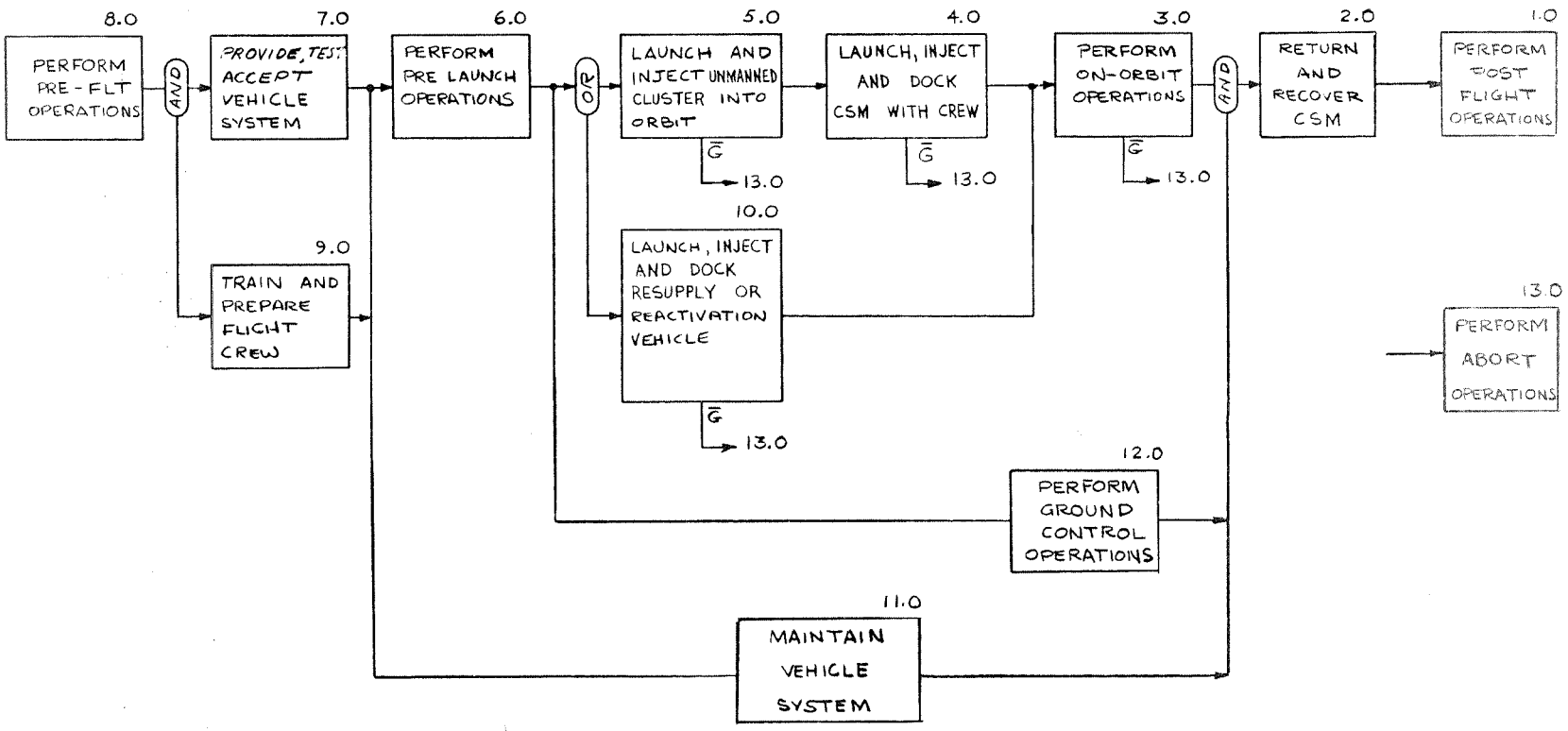

Figure 1. AAP Top Level Function Flow Block Diagram for One Flight

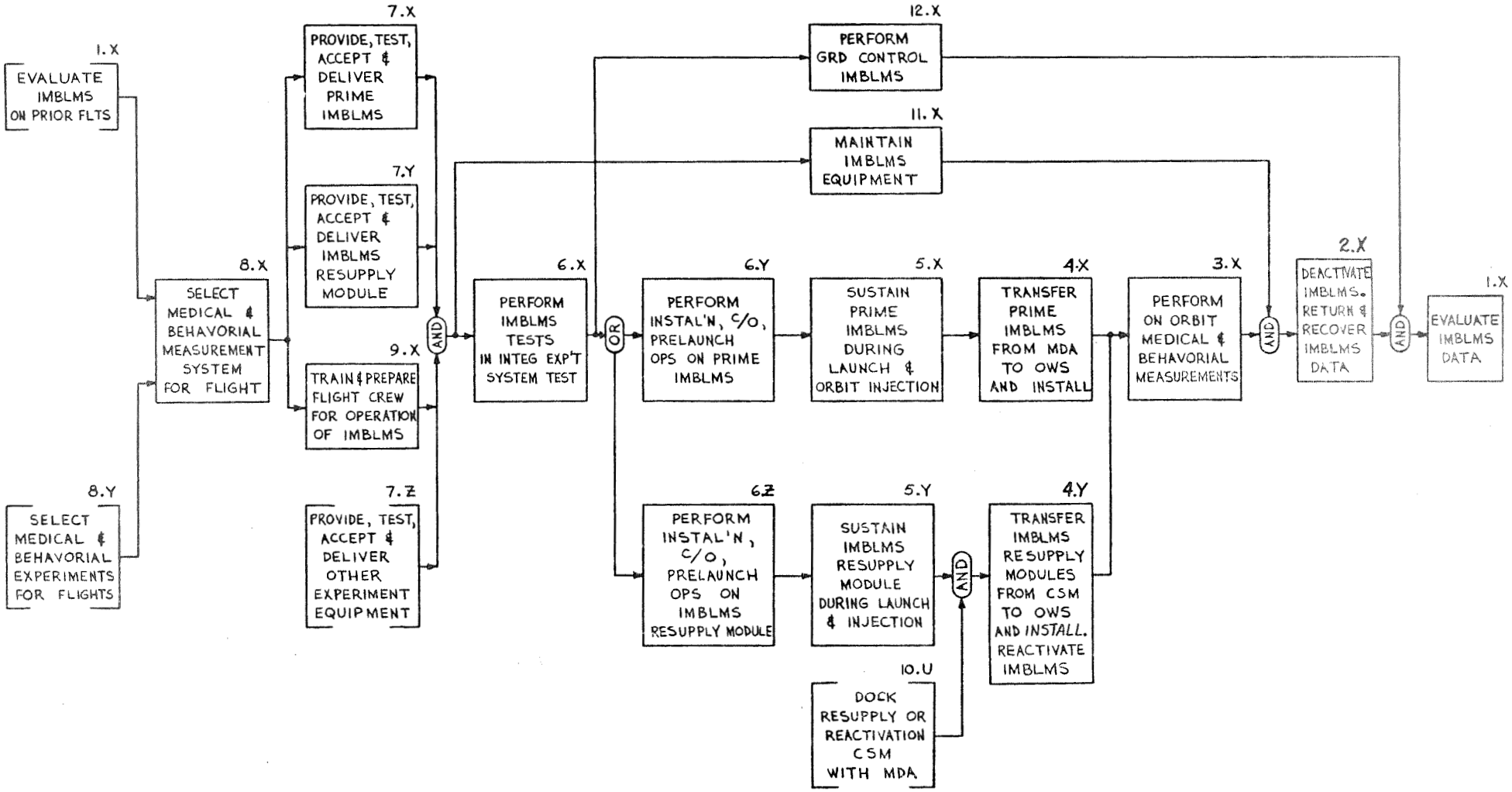

Figure 2. IMBLMS Composite Function Flow Block Diagram for One Flight

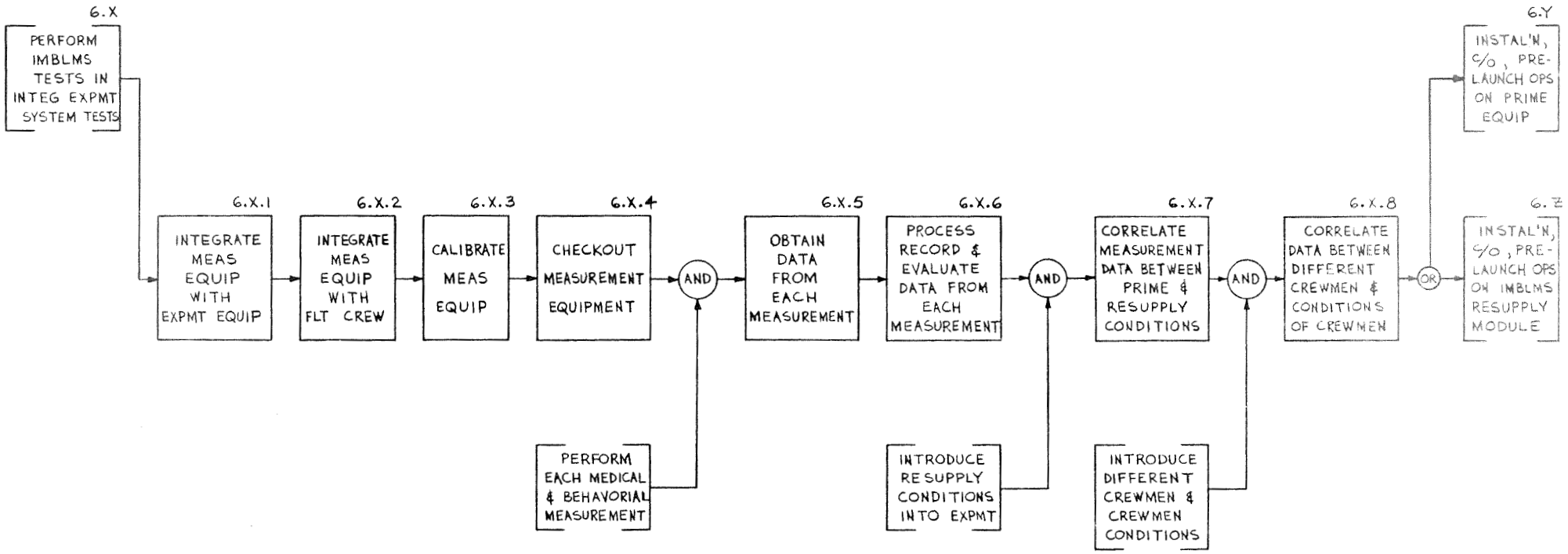

Figure 3. Perform IMBLMS Tests in Integrated Systems Tests

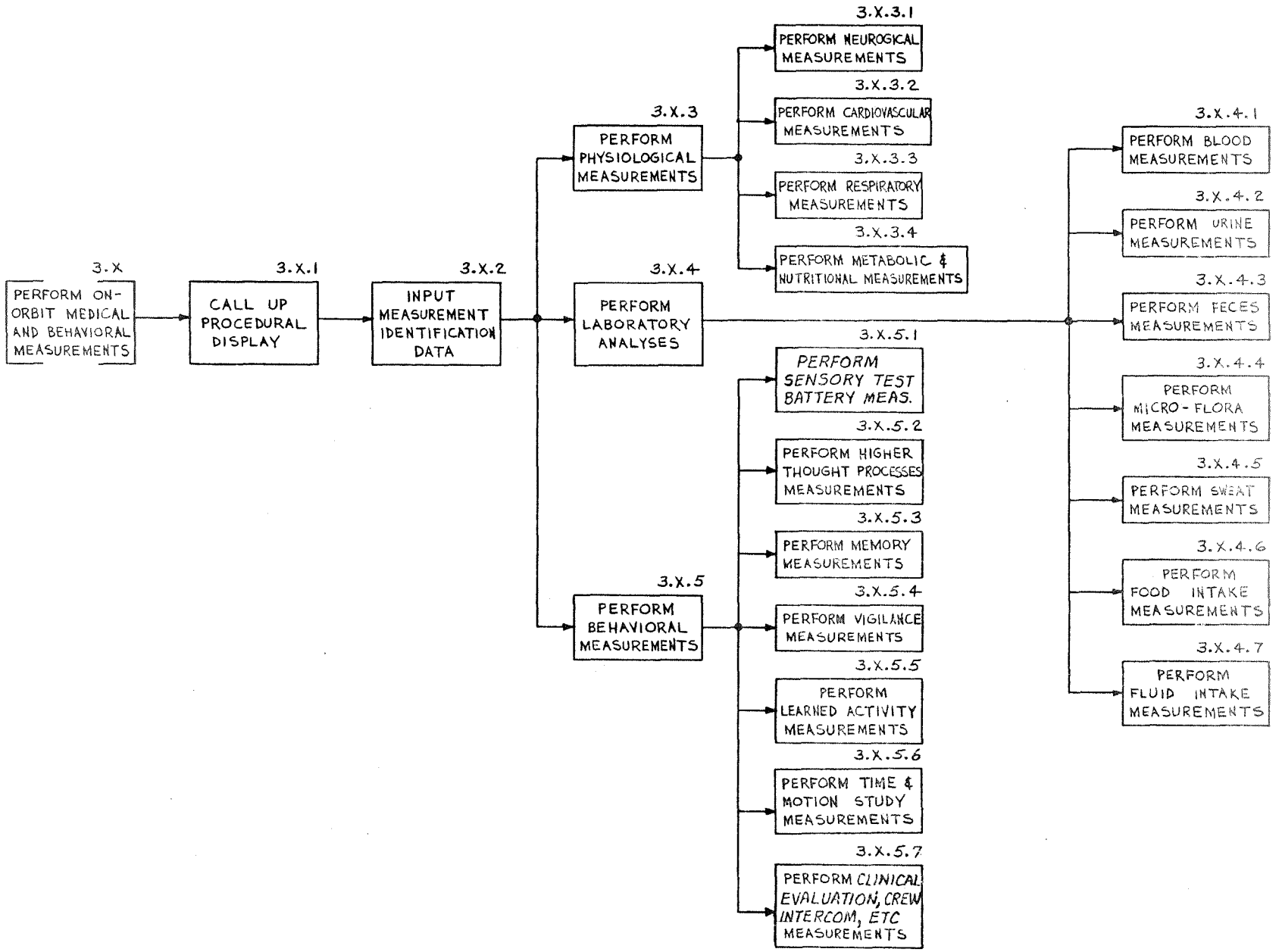

FFBD 3.X Perform On-Orbit Medical and Behavioral Measurements

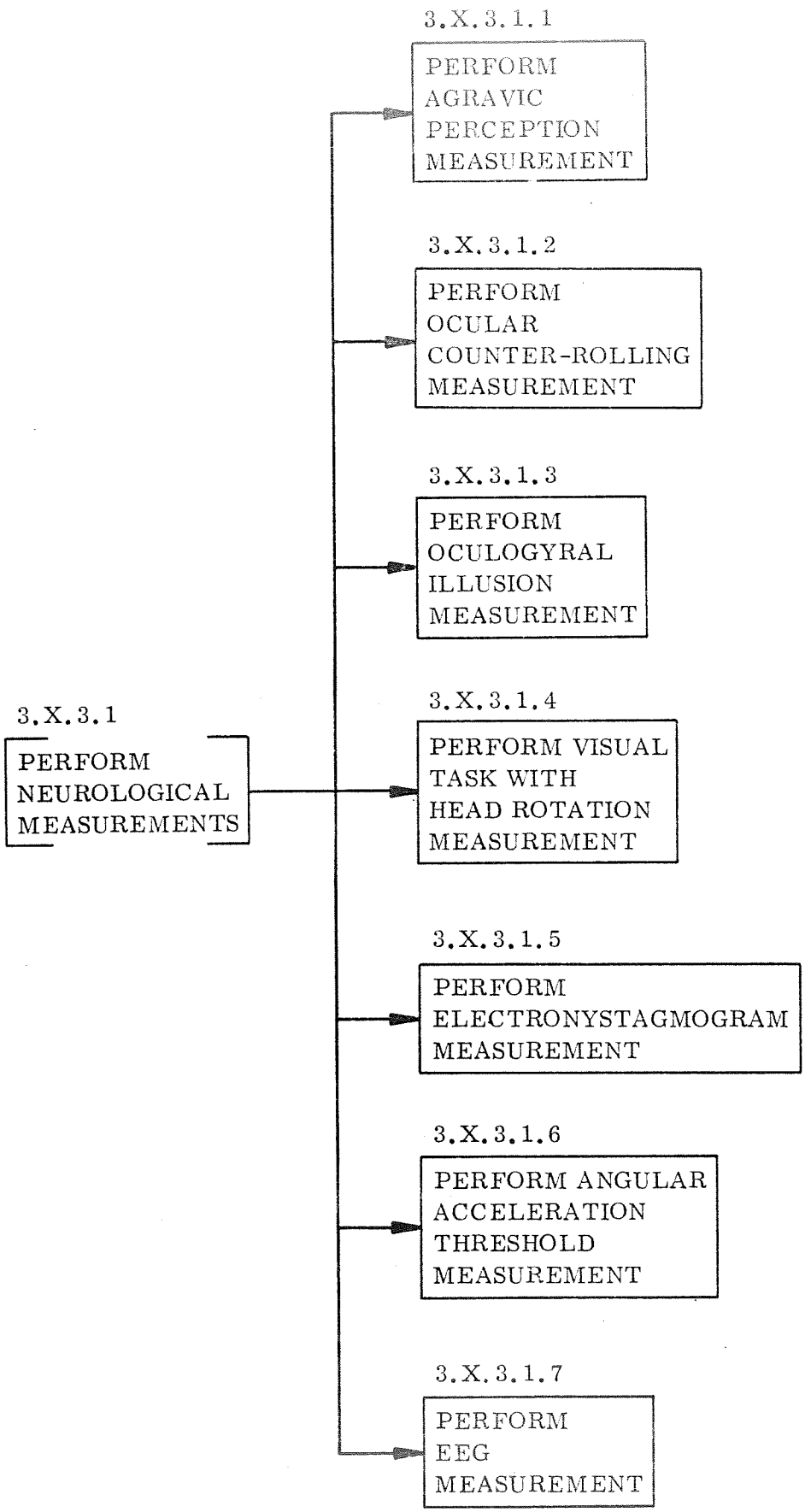

FFBD 3.X.3.1 Perform Neurological Measurements

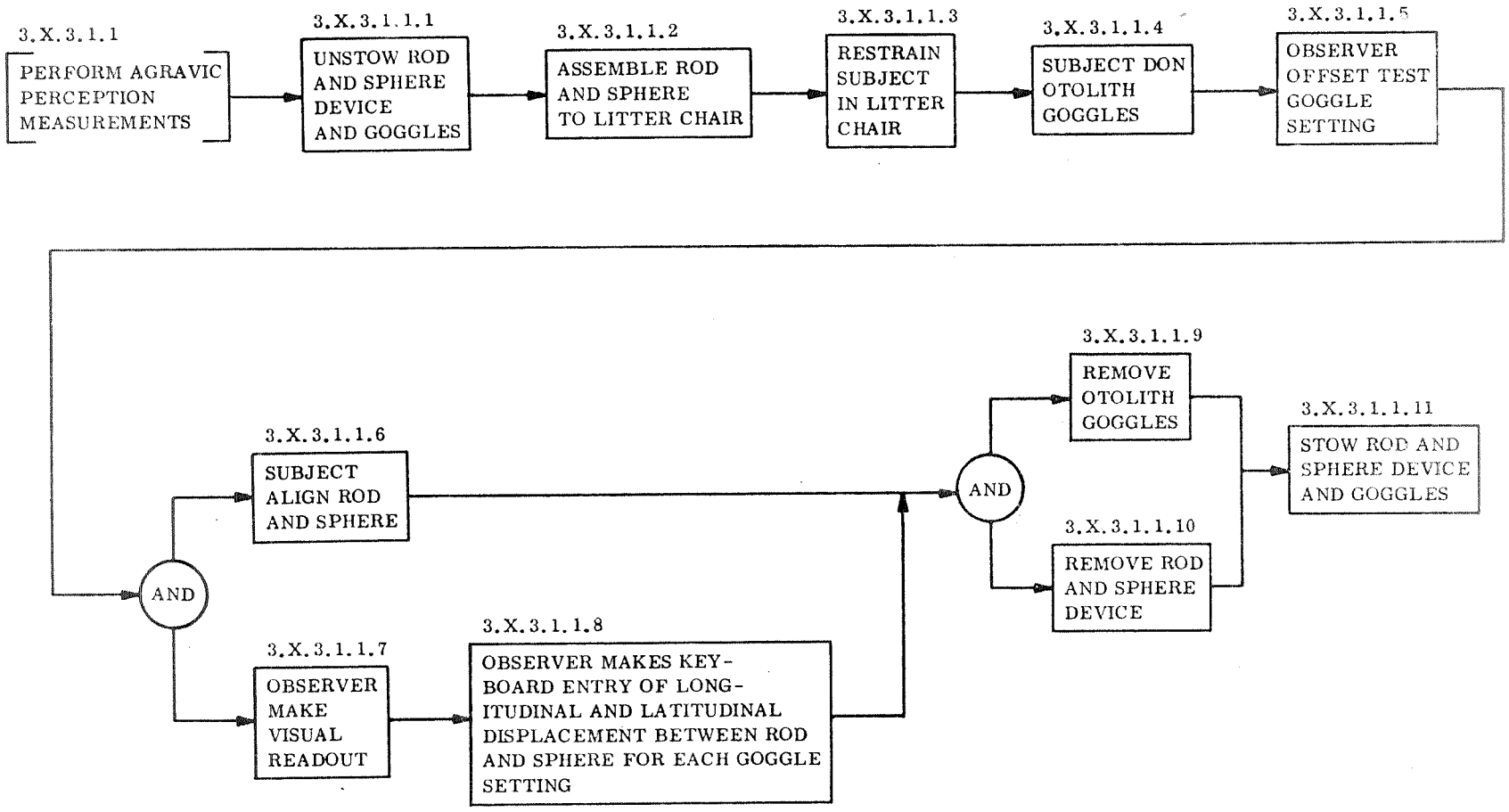

FFBD 3.X.3.1.1 Perform Agravic Perception Measurements

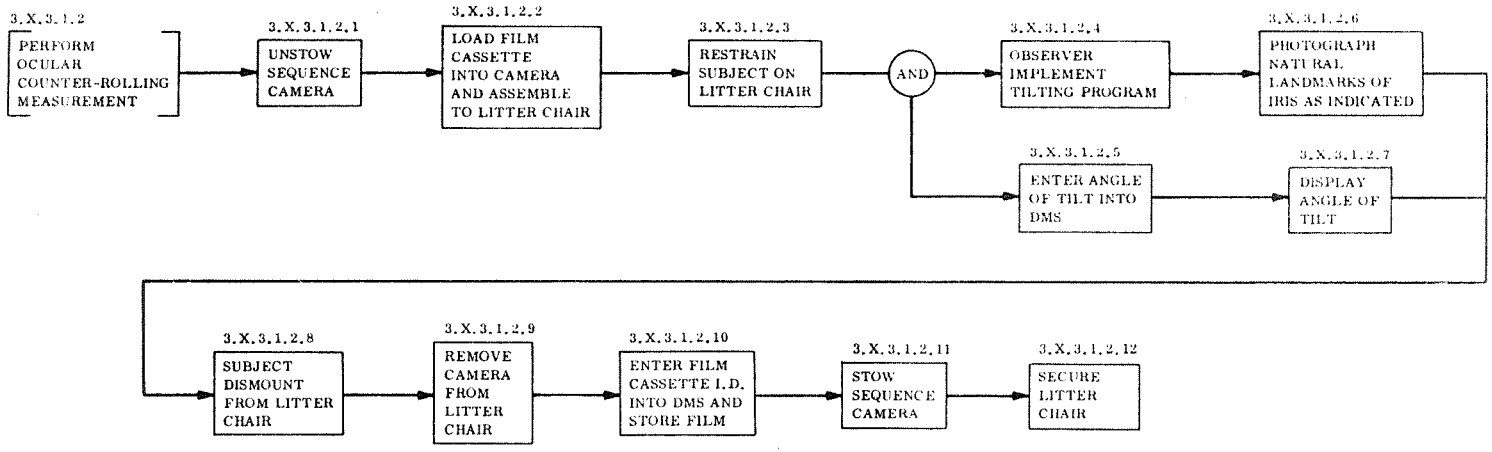

FFBD 3.X.3.1.2 Perform Ocular Counter-Rolling Measurement

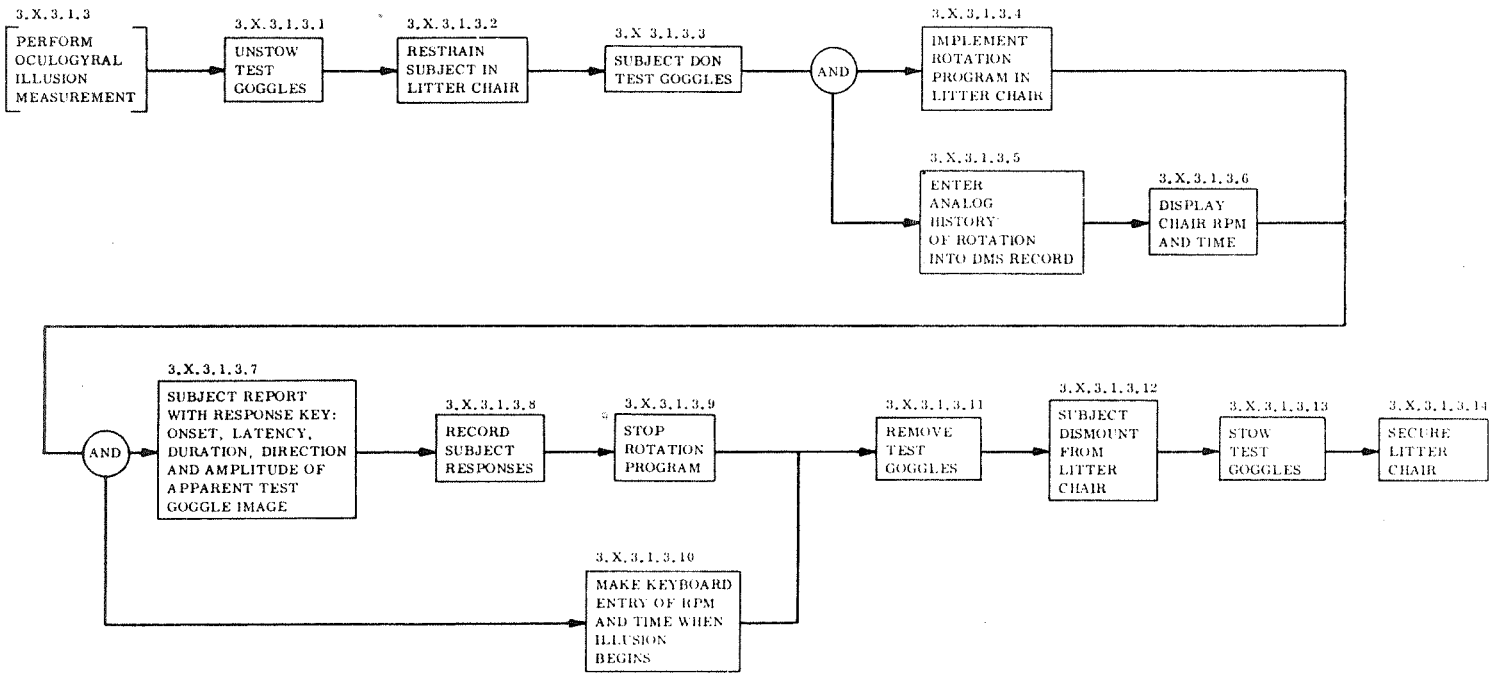

FFBD 3.X.3.1.3 Perform Oculogyral Illusion Measurement

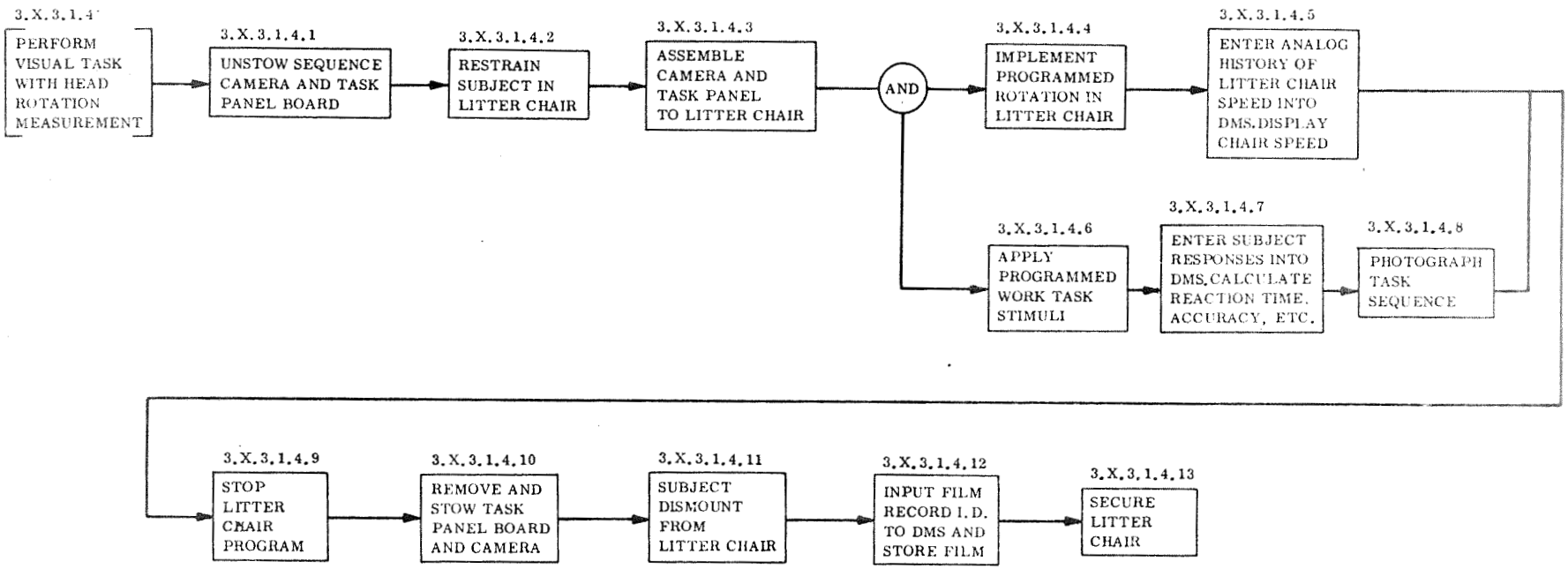

FFBD 3.X.3.1.4 Perform Visual Task with Head Rotation Measurement

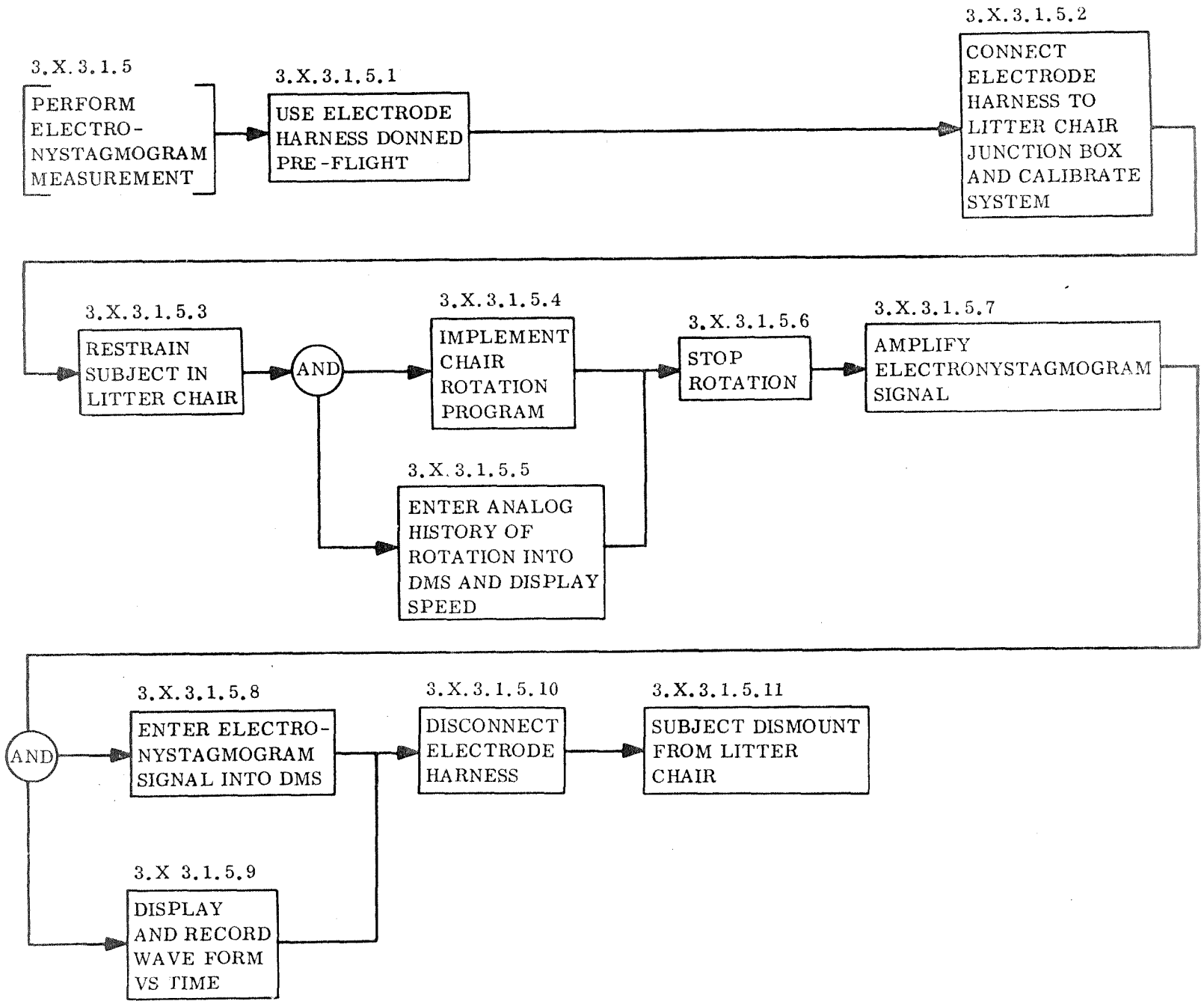

FFBD 3.X.3.1.5 Perform Electronystagmogram Measurement

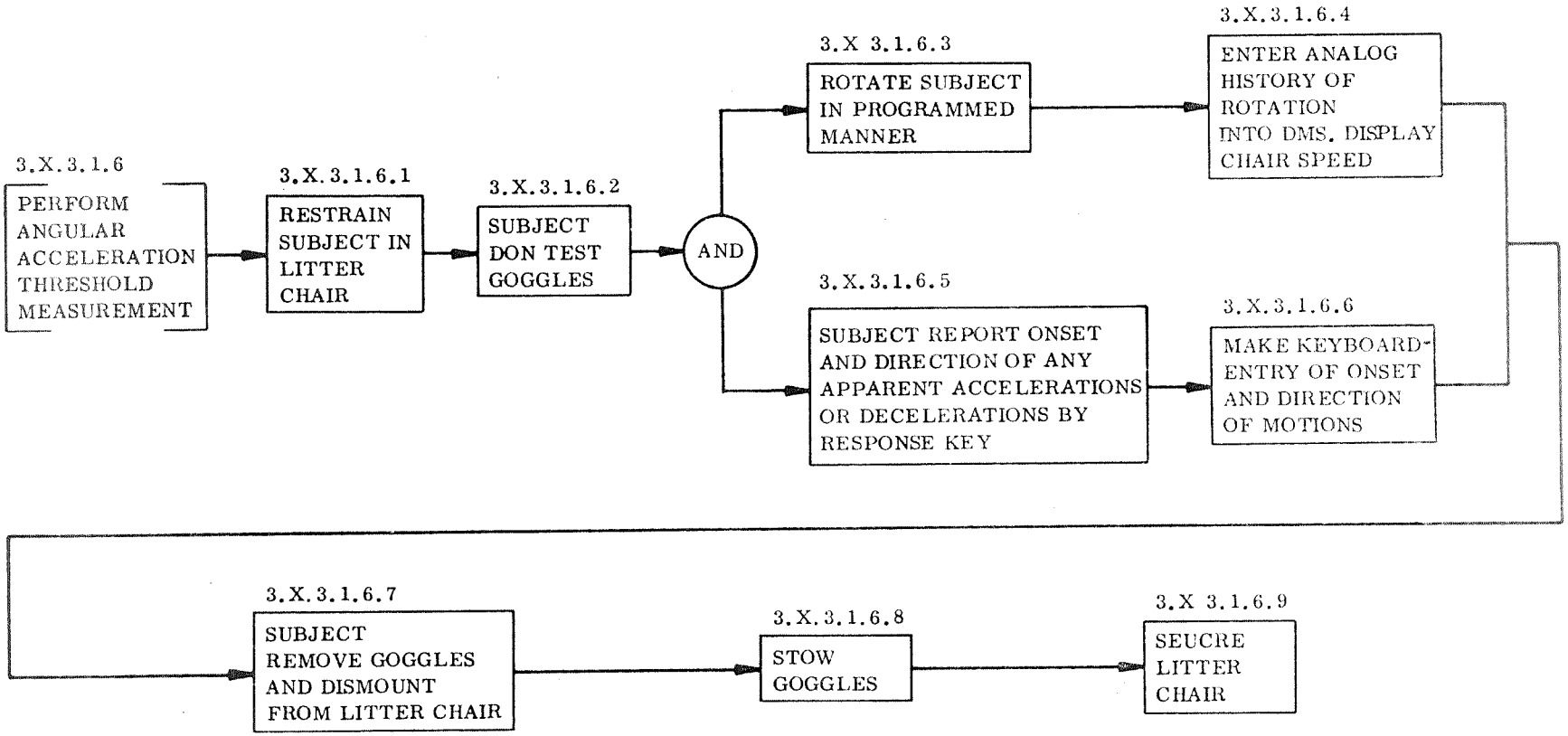

FFBD 3.X.3.1.6 Perform Angular Acceleration Threshold Measurement

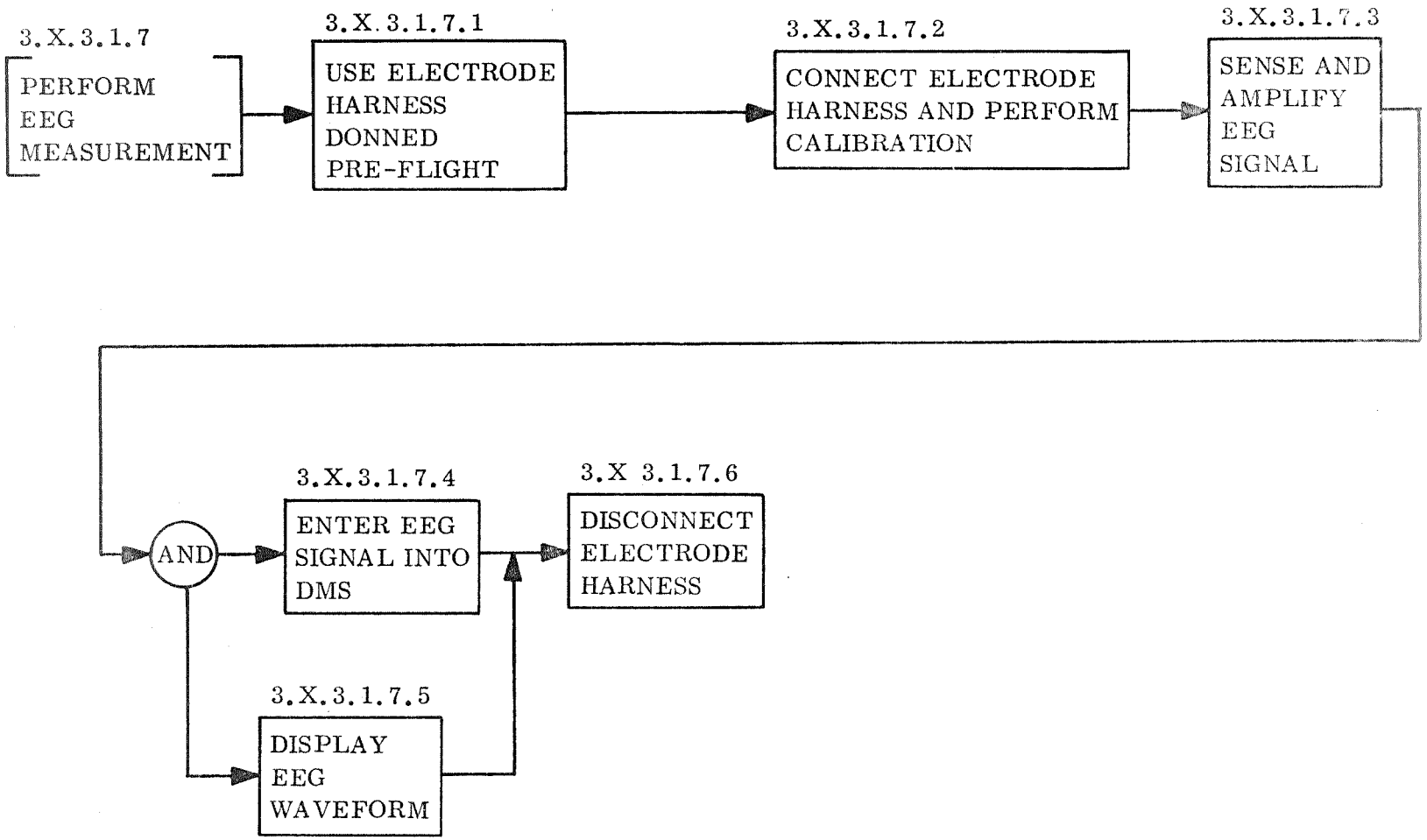

FFBD 3.X.3.1.7 Perform EEG Measurement

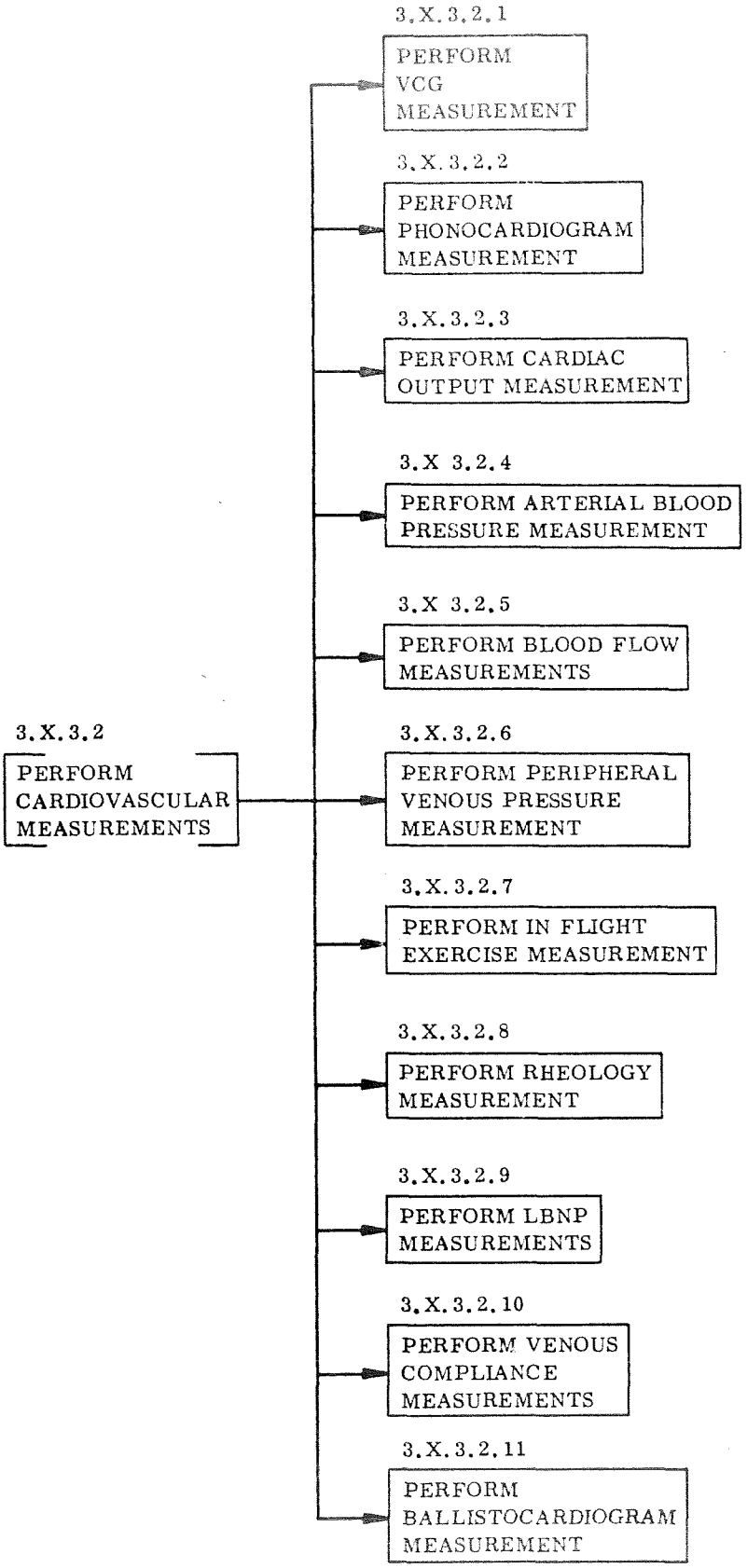

FFBD 3.X.3.2 Perform Cardiovascular Measurements

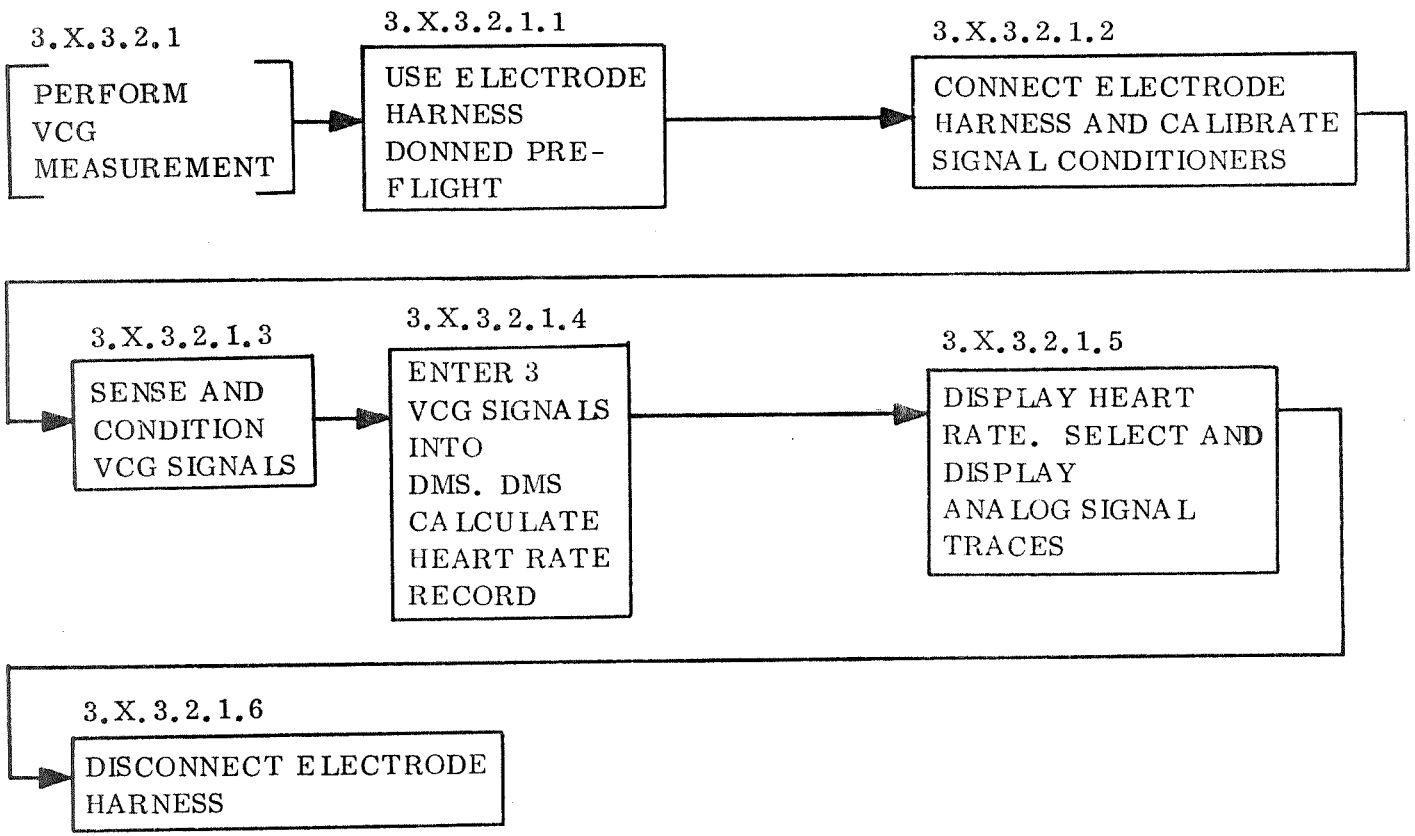

FFBD 3.X.3.2.1 Perform VCG Measurement

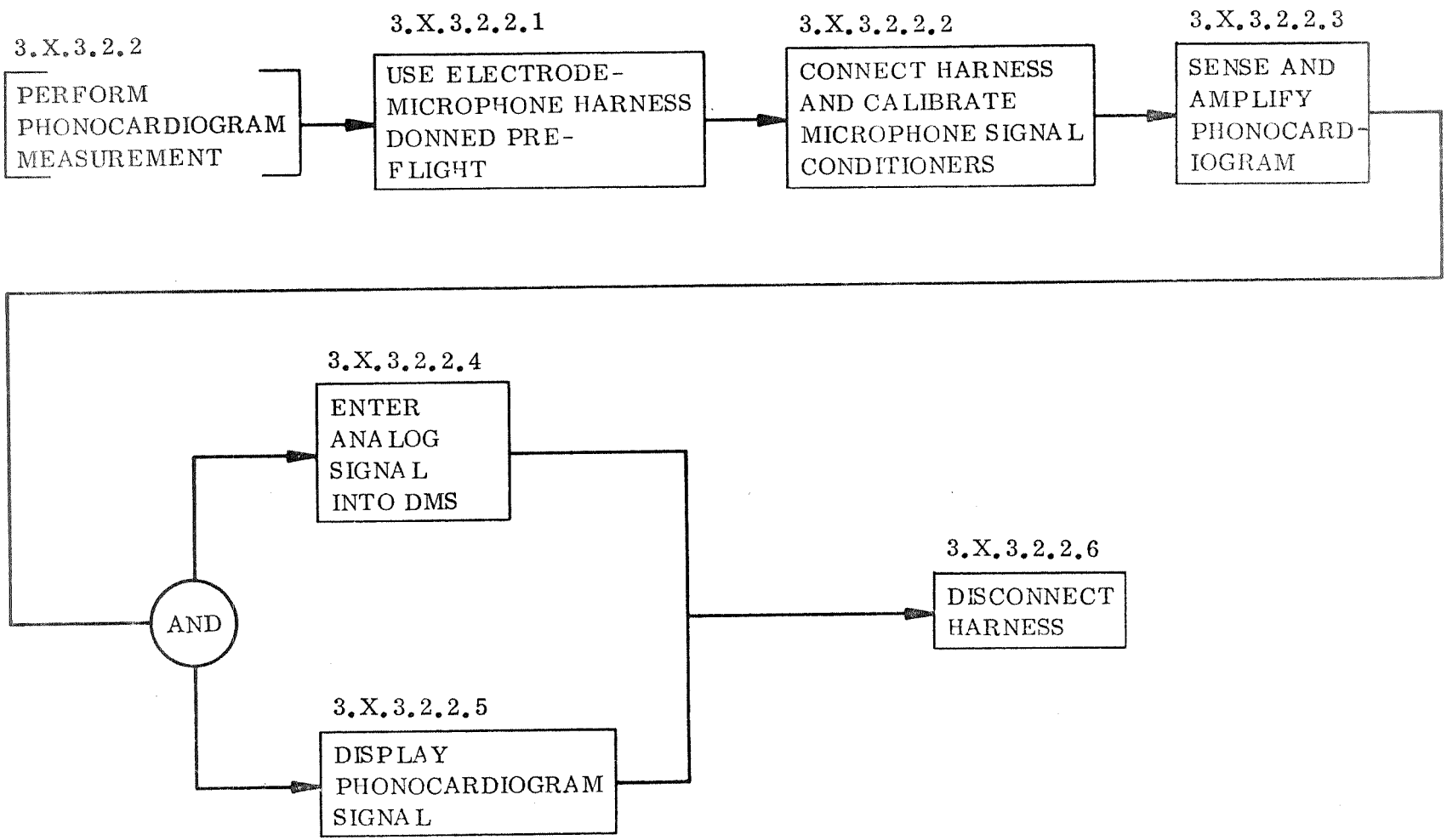

FFBD 3.X.3.2.2 Perform Phonocardiogram Measurement

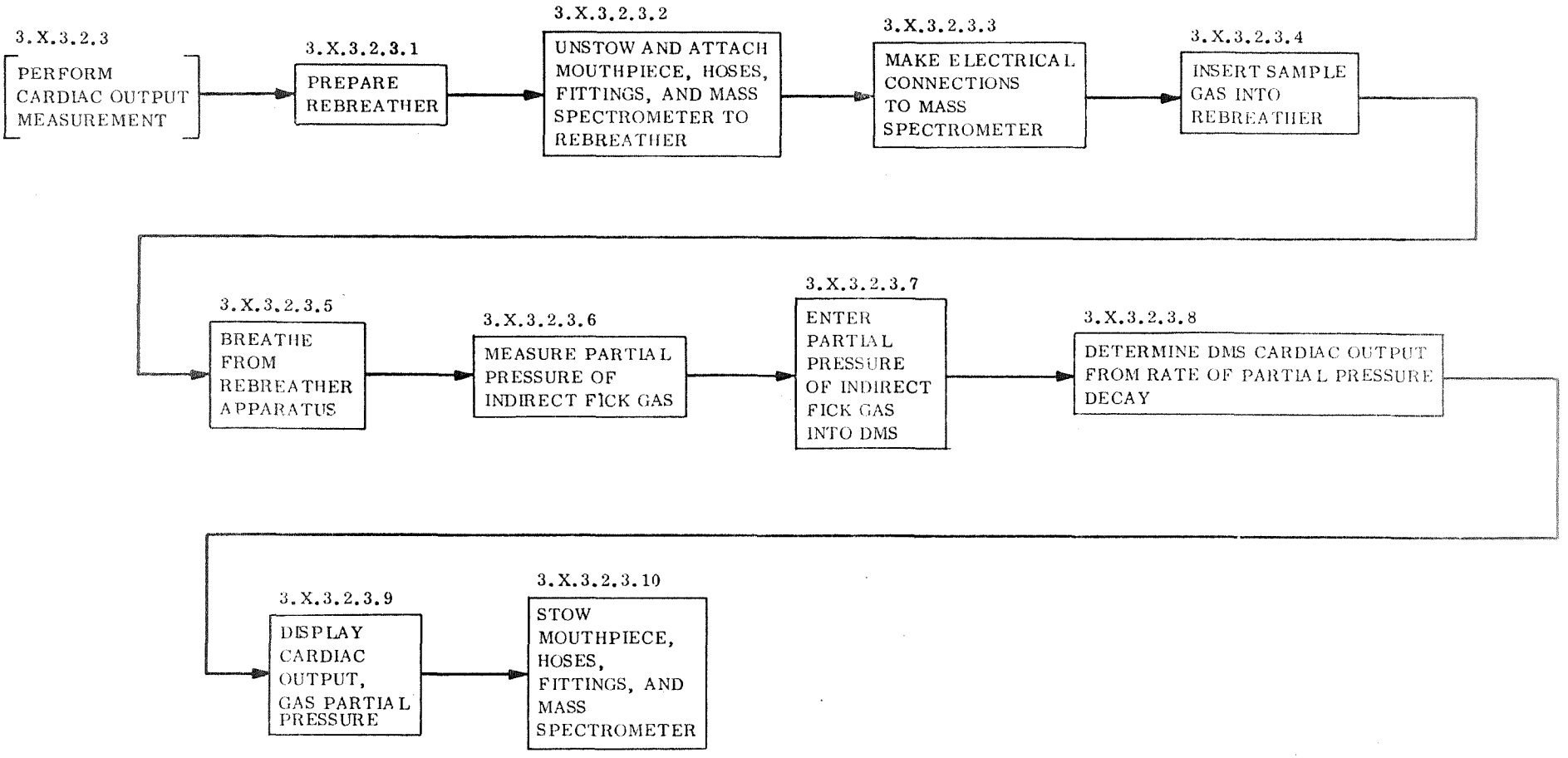

FFBD 3.X.3.2.3 Perform Cardiac Output Measurement

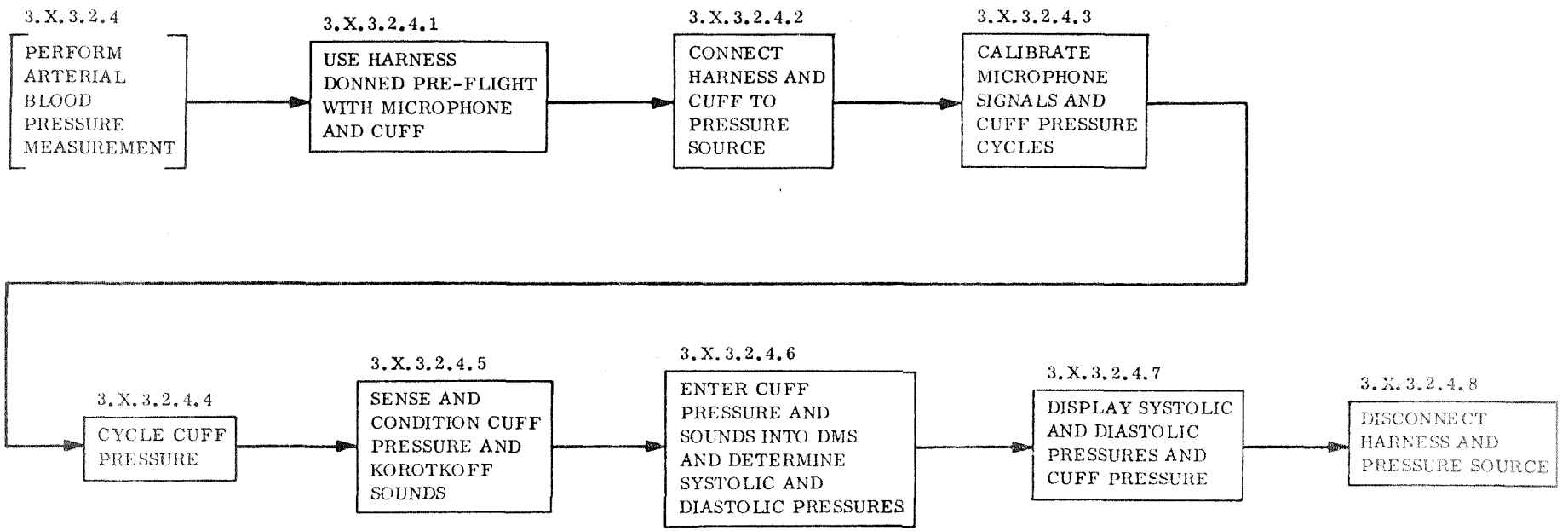

FFBD 3.X.3.2.4 Perform Arterial Blood Pressure Measurement

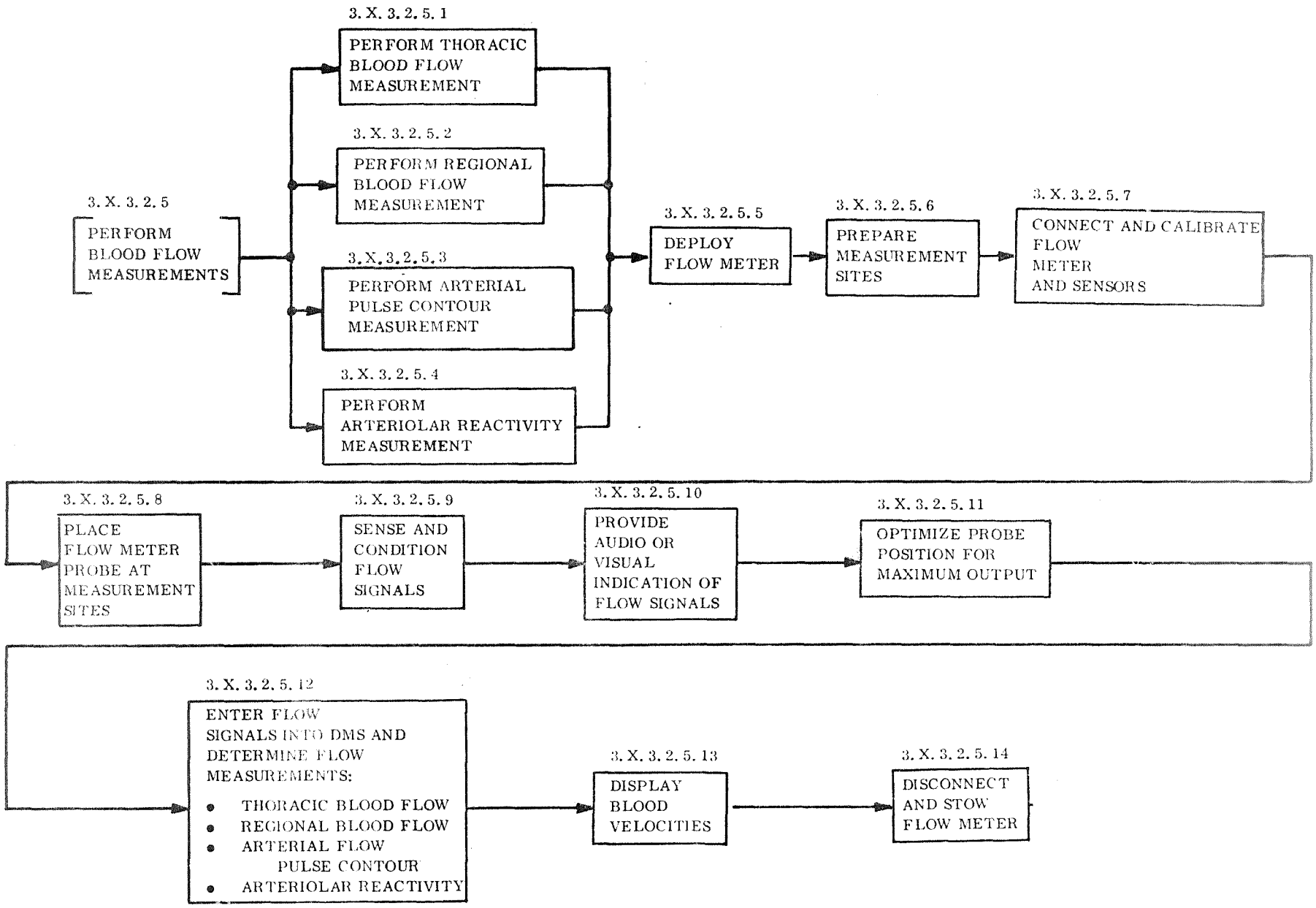

FFBD 3.X.3.2.5 Perform Blood Flow Measurements

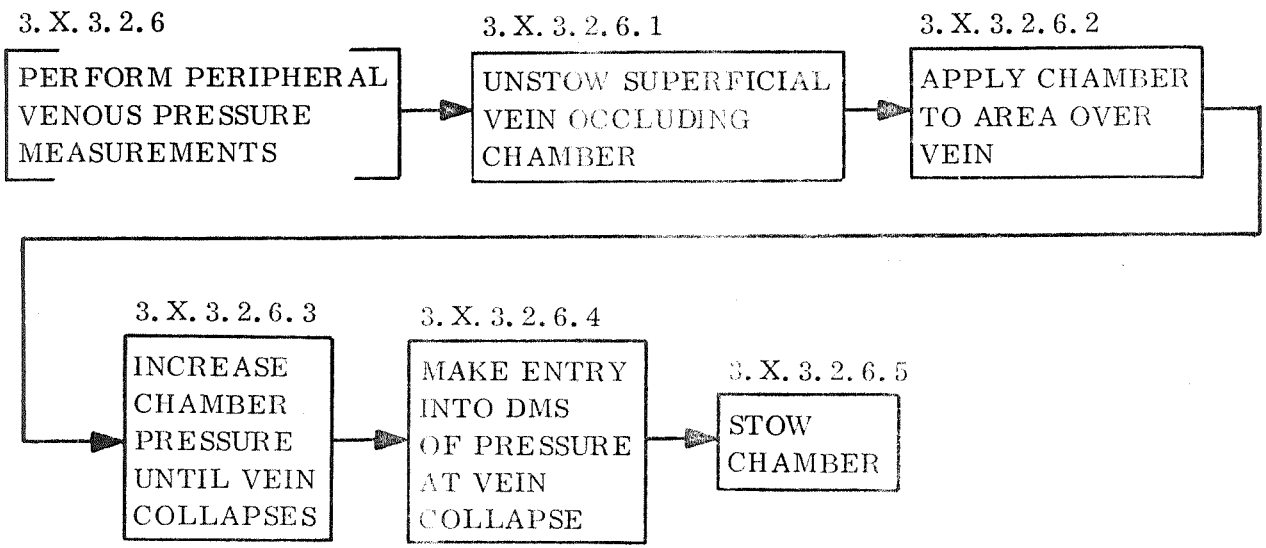

FFBD 3.X.3.2.6 Perform Peripheral Venous Pressure Measurements

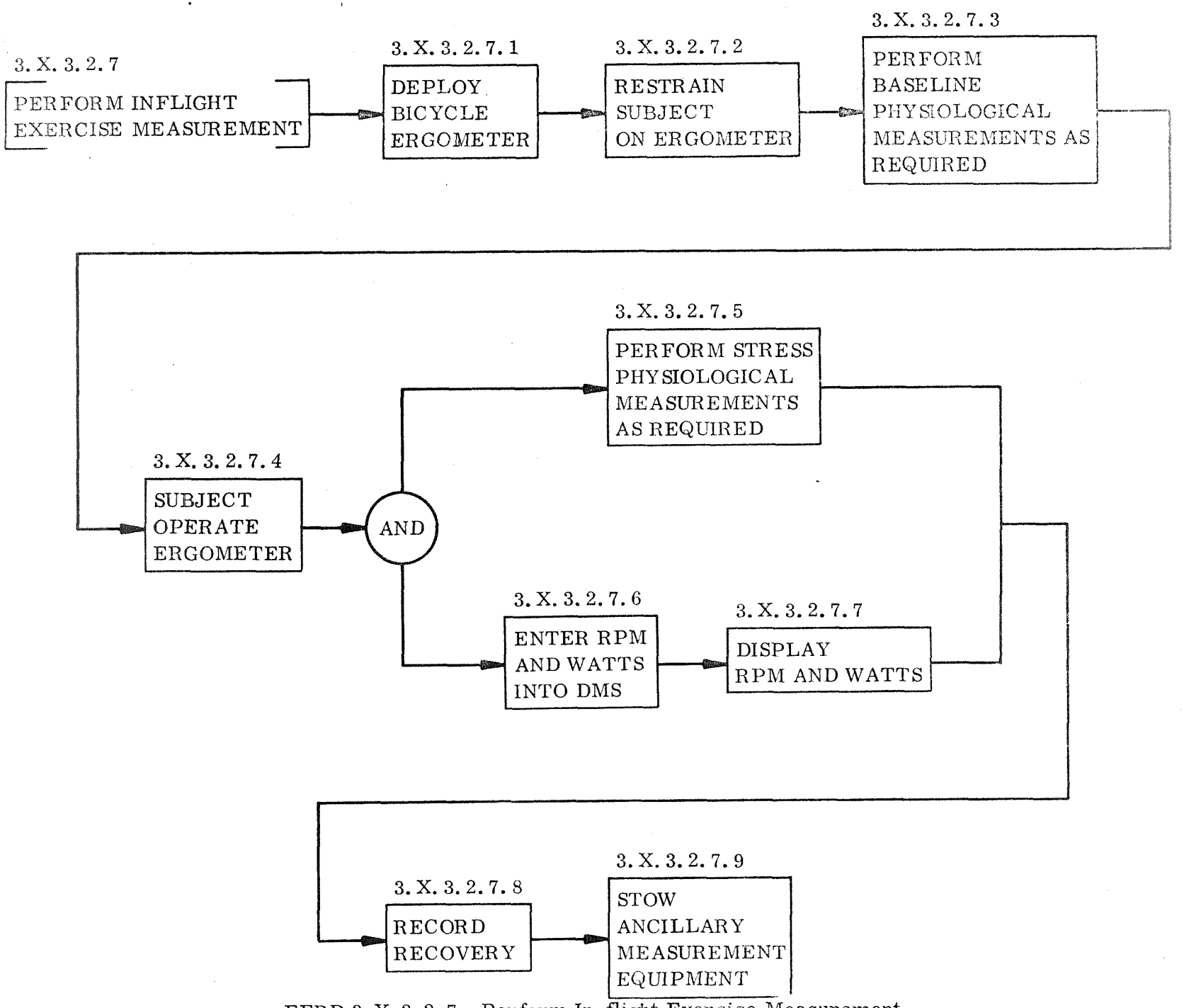

FFBD 3.X.3.2.7 Perform In-flight Exercise Measurement

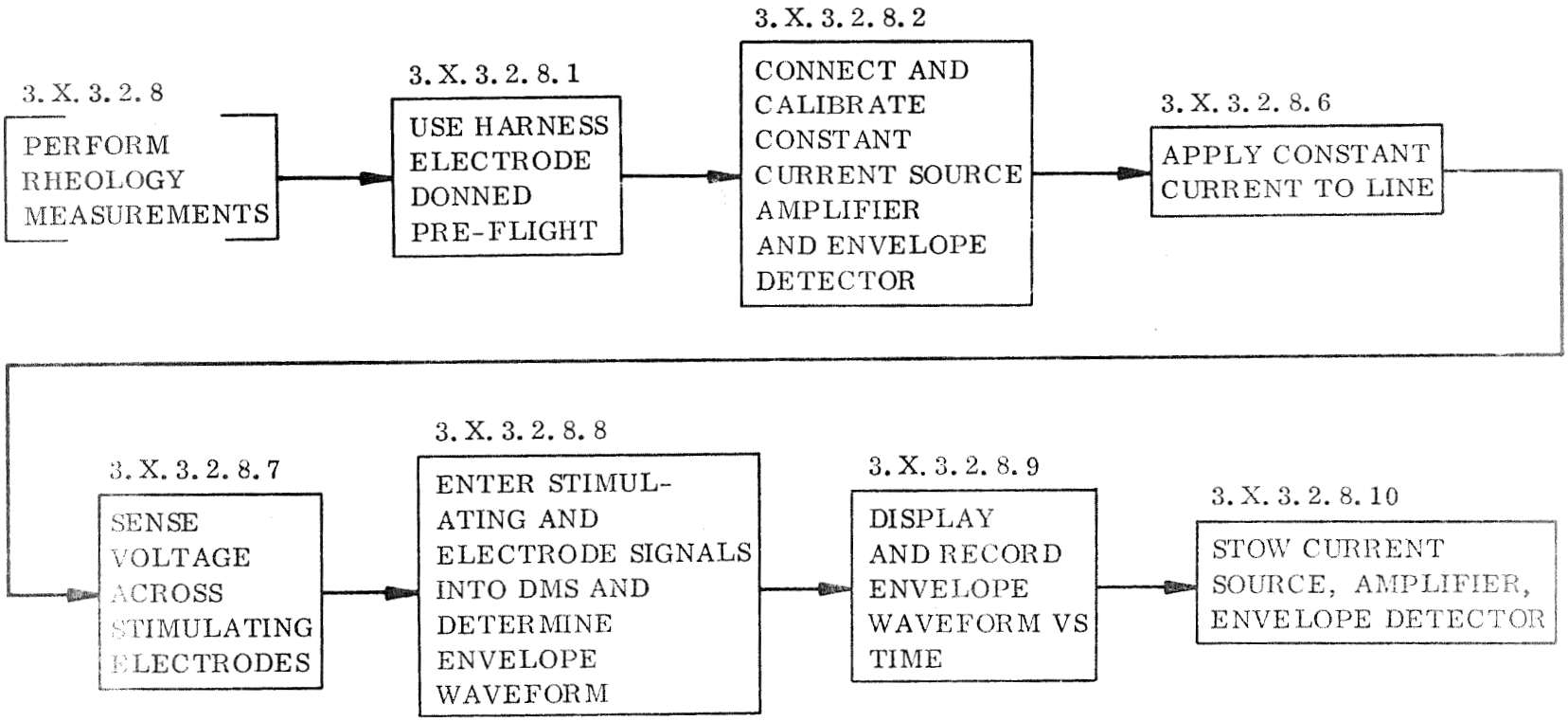

FFBD 3.X.3.2.8 Perform Rheology Measurement

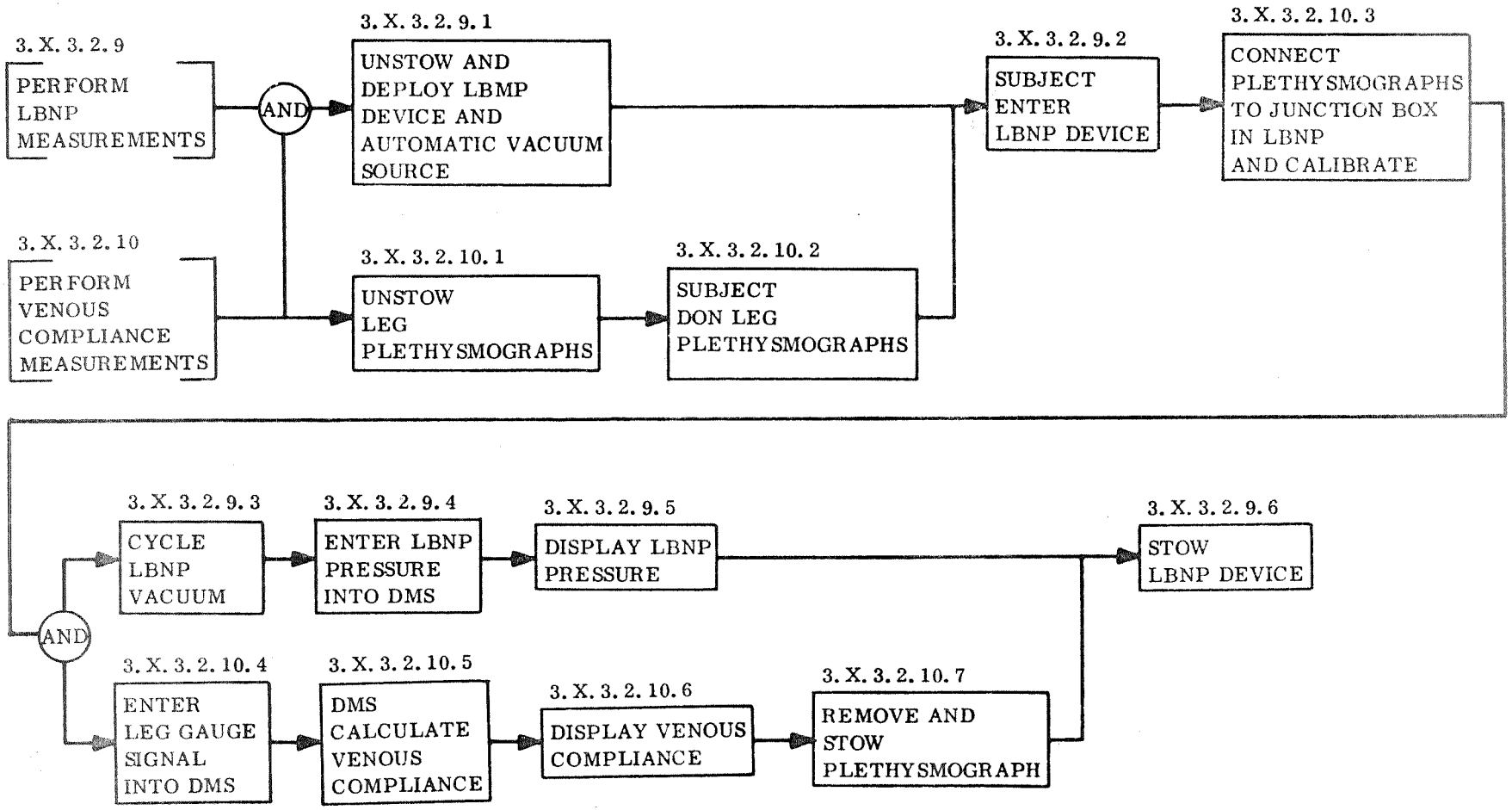

FFBD 3.X.3.2.9 - FFBD 3.X.3.2.10 Perform LBNP Measurement

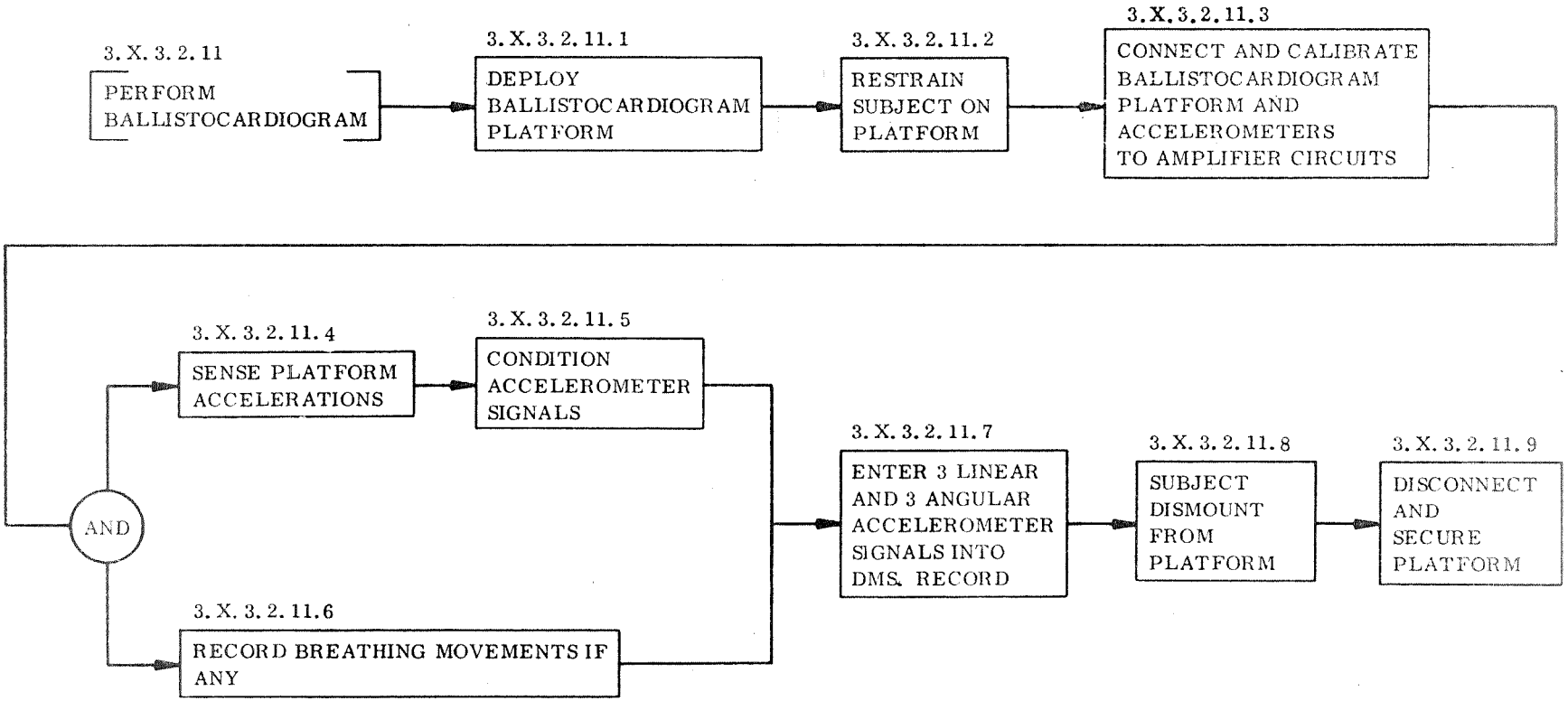

FFBD 3.X.3.2.11 Perform Ballistocardiogram Measurement

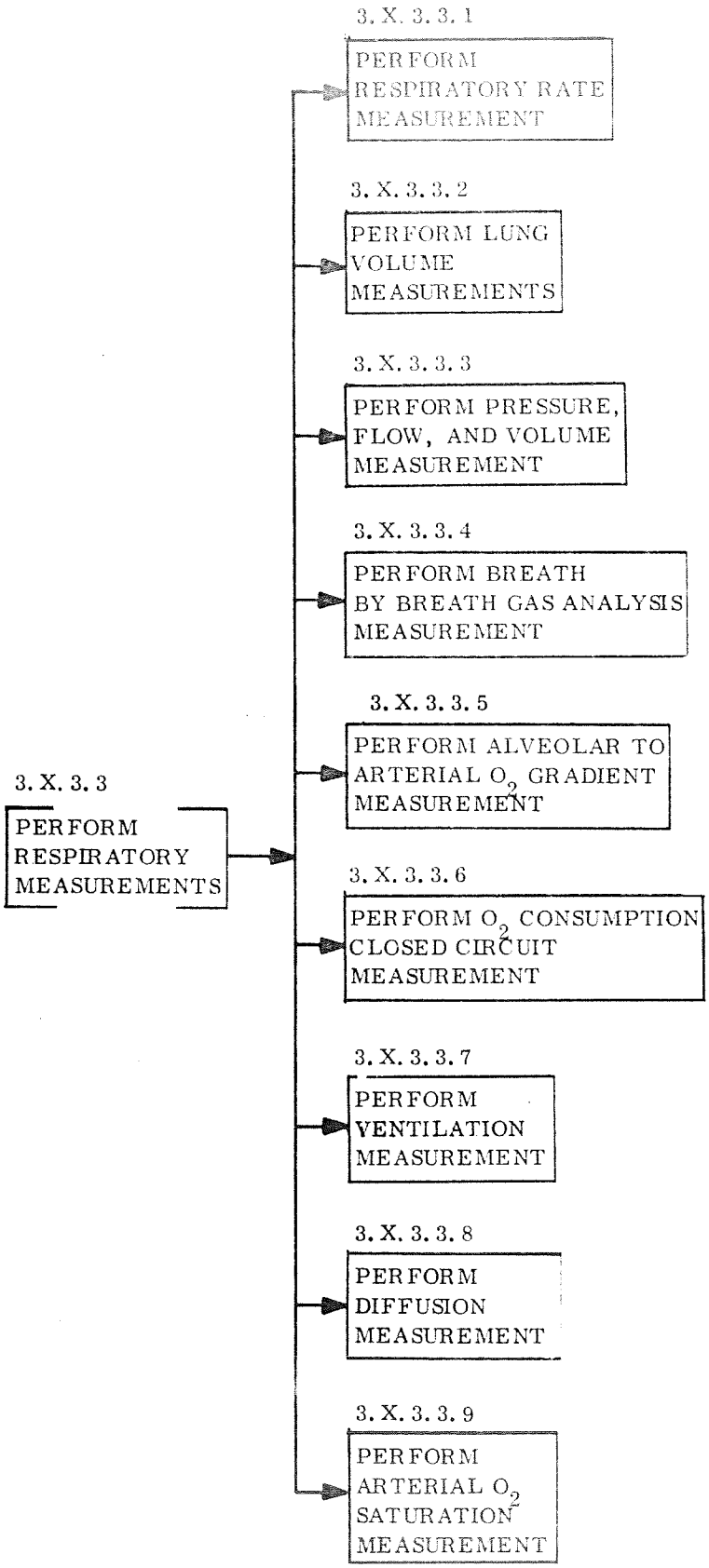

FFBD 3.X.3.3 Perform Respiratory Measurements

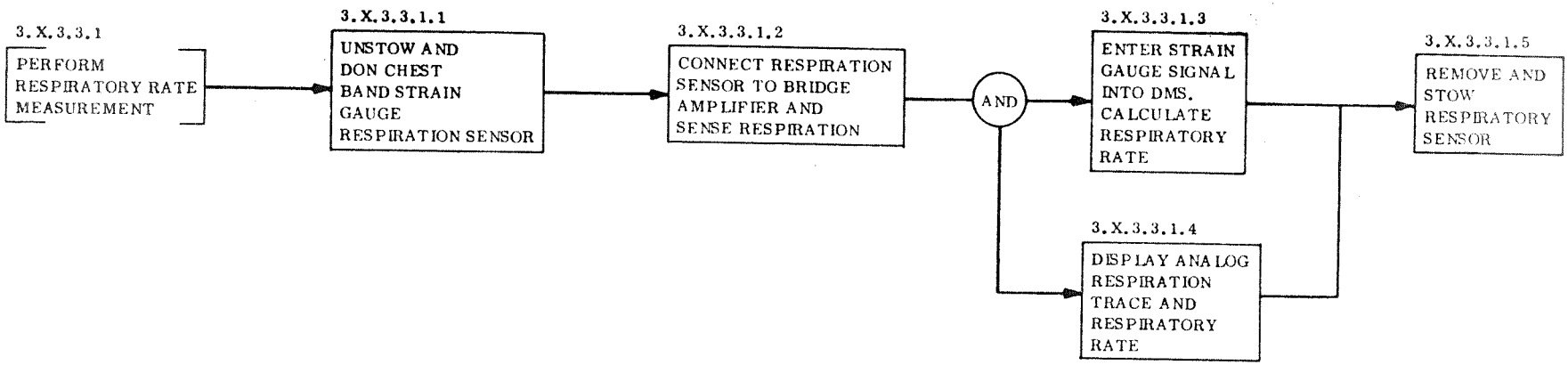

FFBD 3.X.3.3.1 Perform Respiratory Rate Measurement

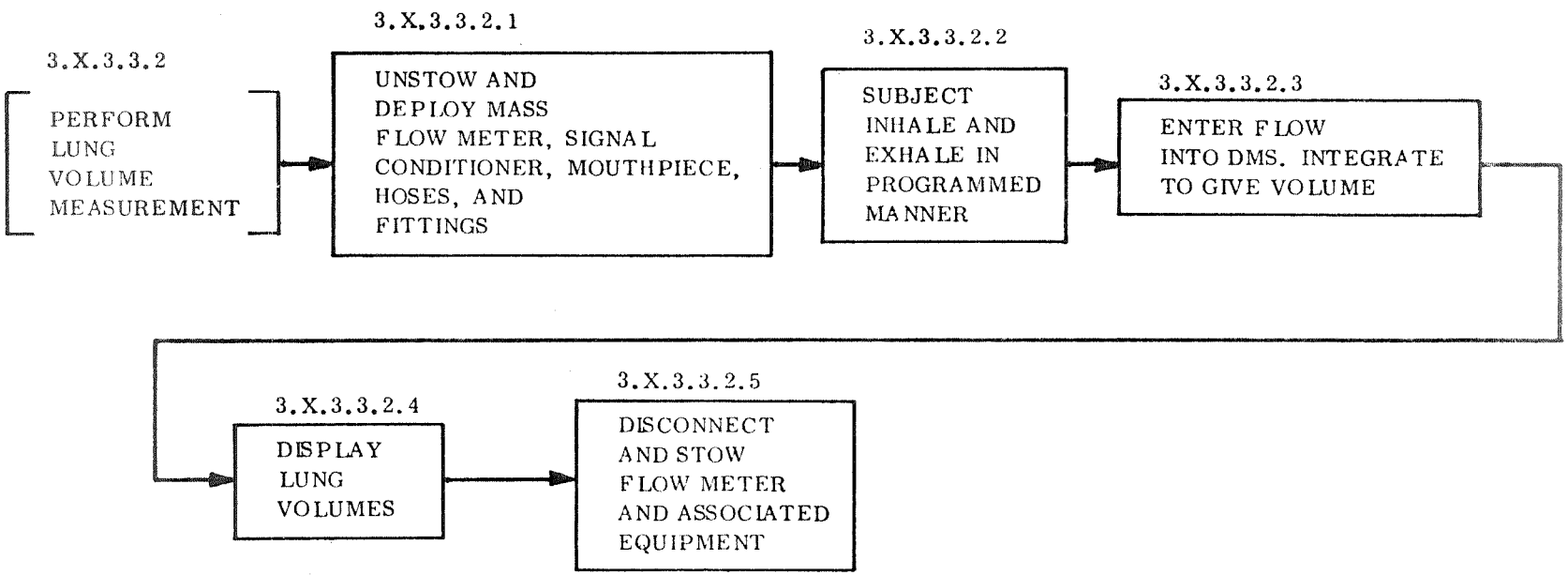

FFBD 3.X.3.3.2 Perform Lung Volume Measurement

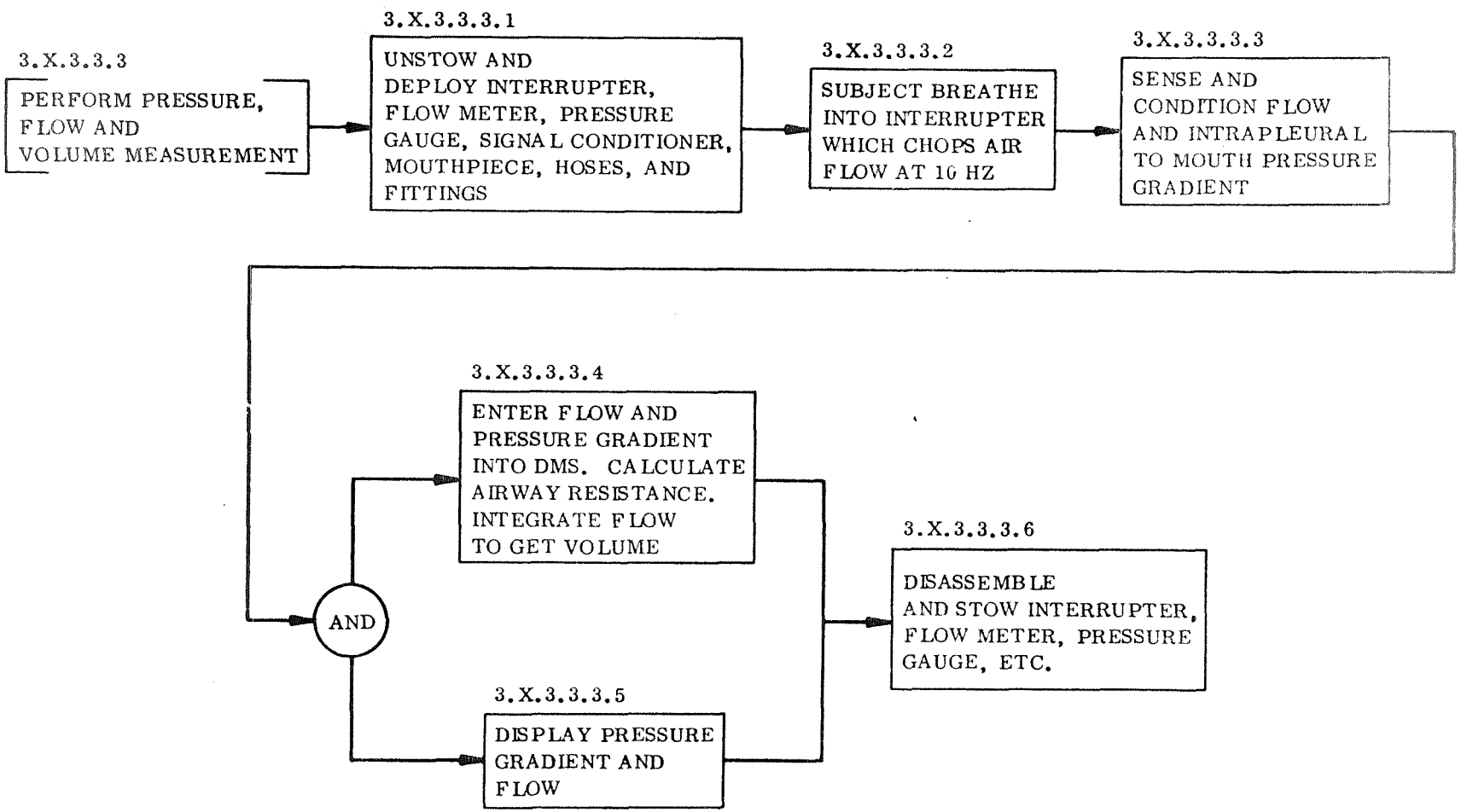

FFBD 3.X.3.3.3 Perform Pressure, Flow and Volume Measurement

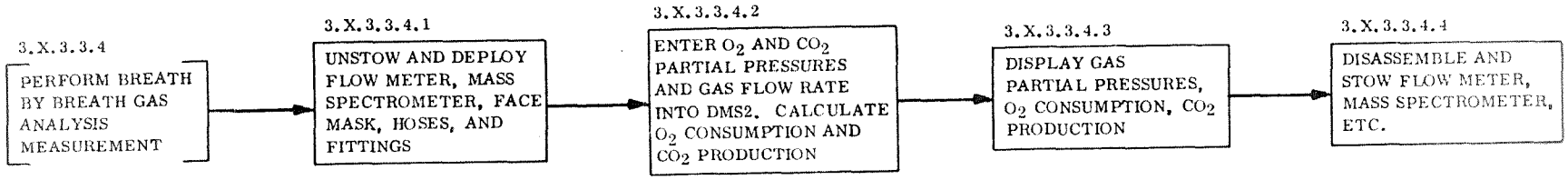

FFBD 3.X.3.3.4 Perform Breath by Breath Gas Analysis Measurement

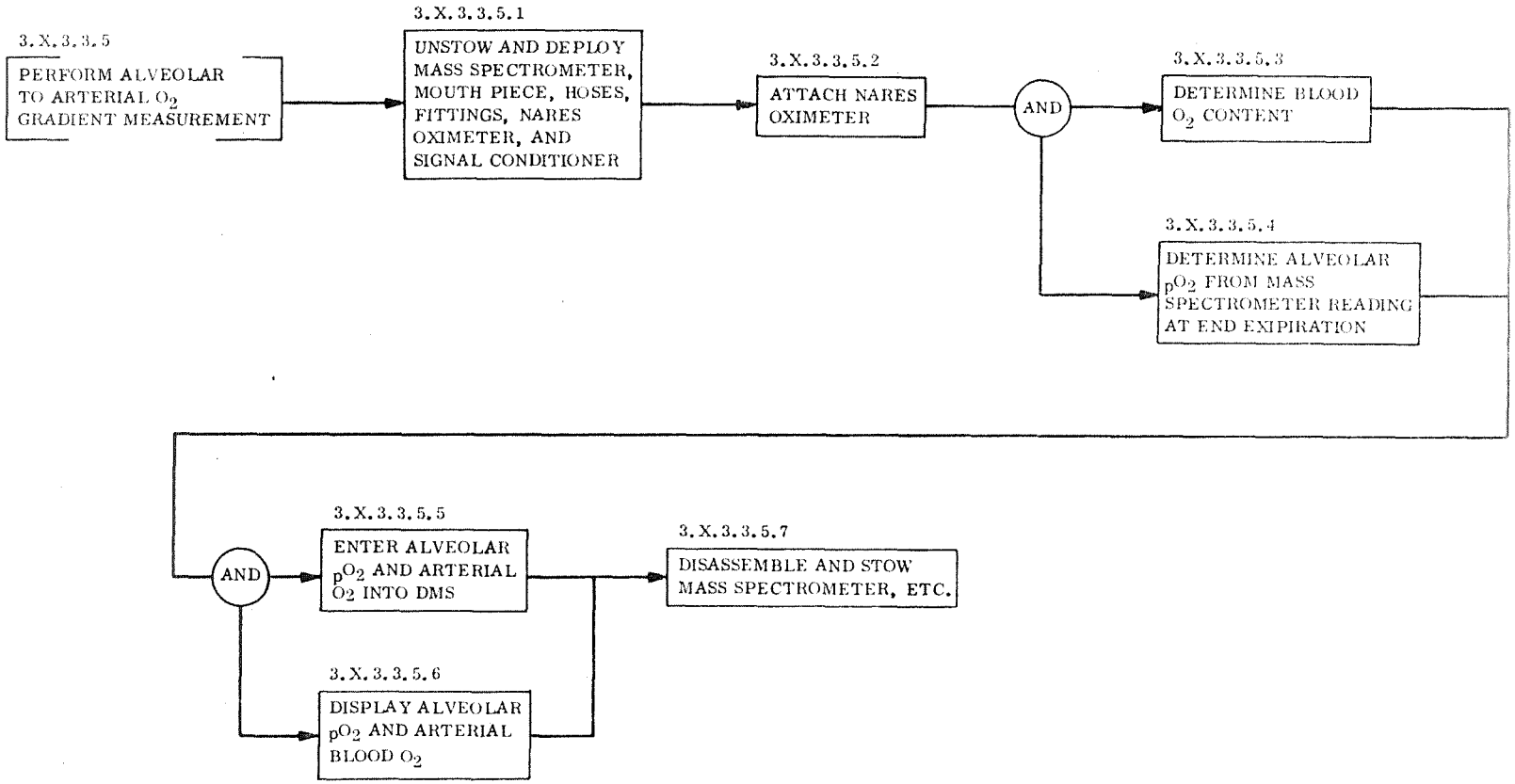

FFBD 3.X.3.3.5 Perform Alveolar to Arterial O_2 Gradient Measurement

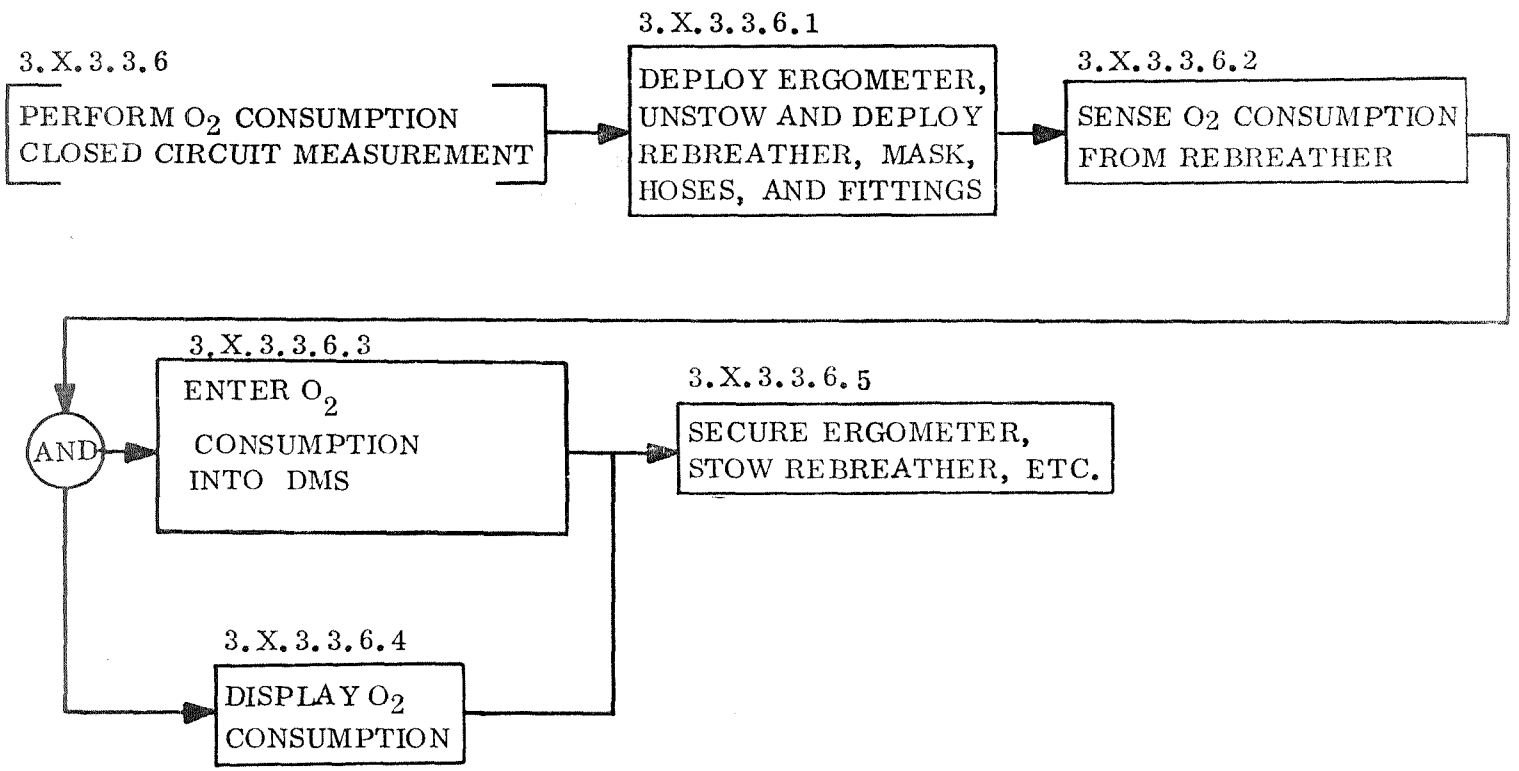

FFBD 3.X.3.3.6 Perform O_2 Consumption Closed Circuit Measurement

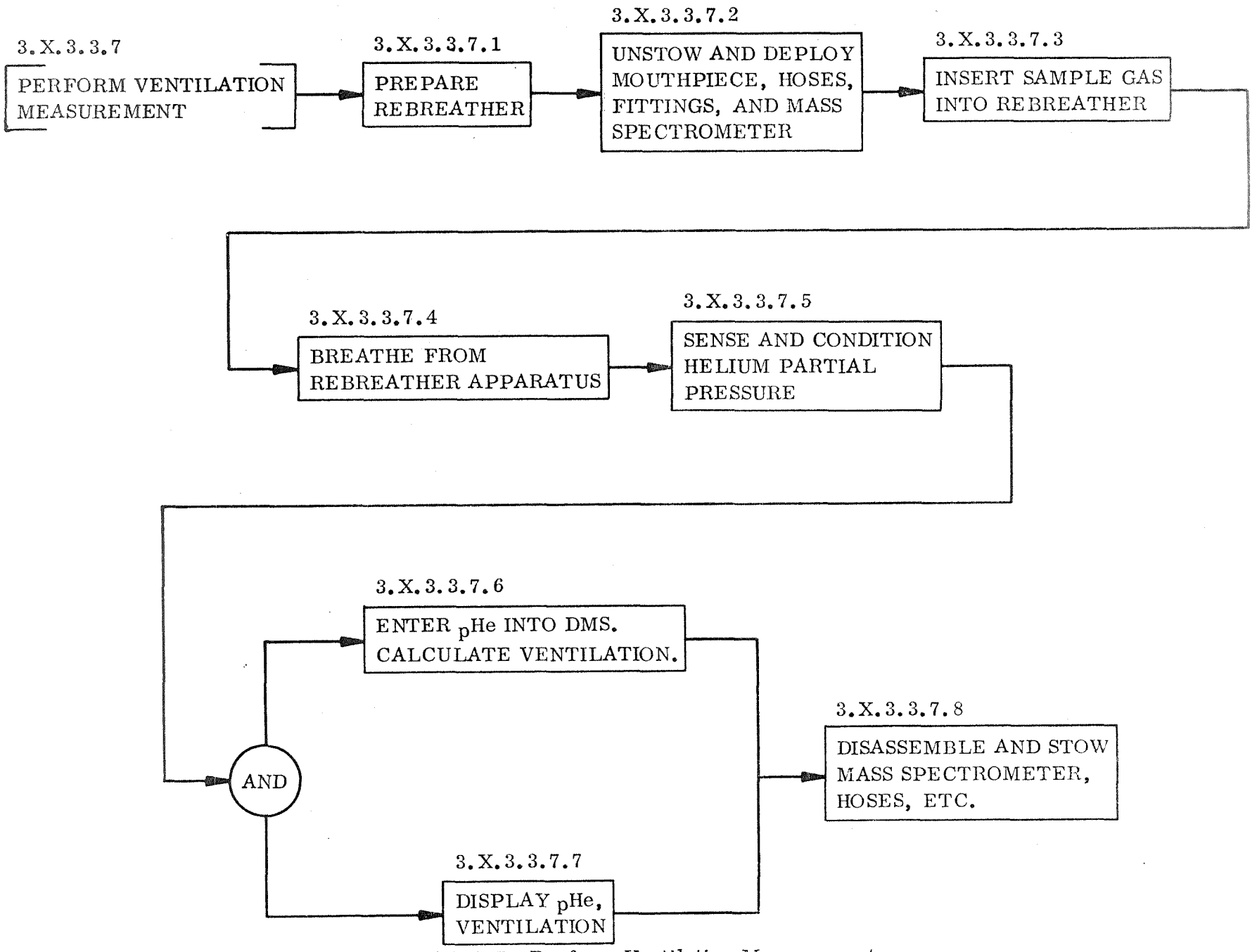

FFBD 3.X.3.3.7 Perform Ventilation Measurement

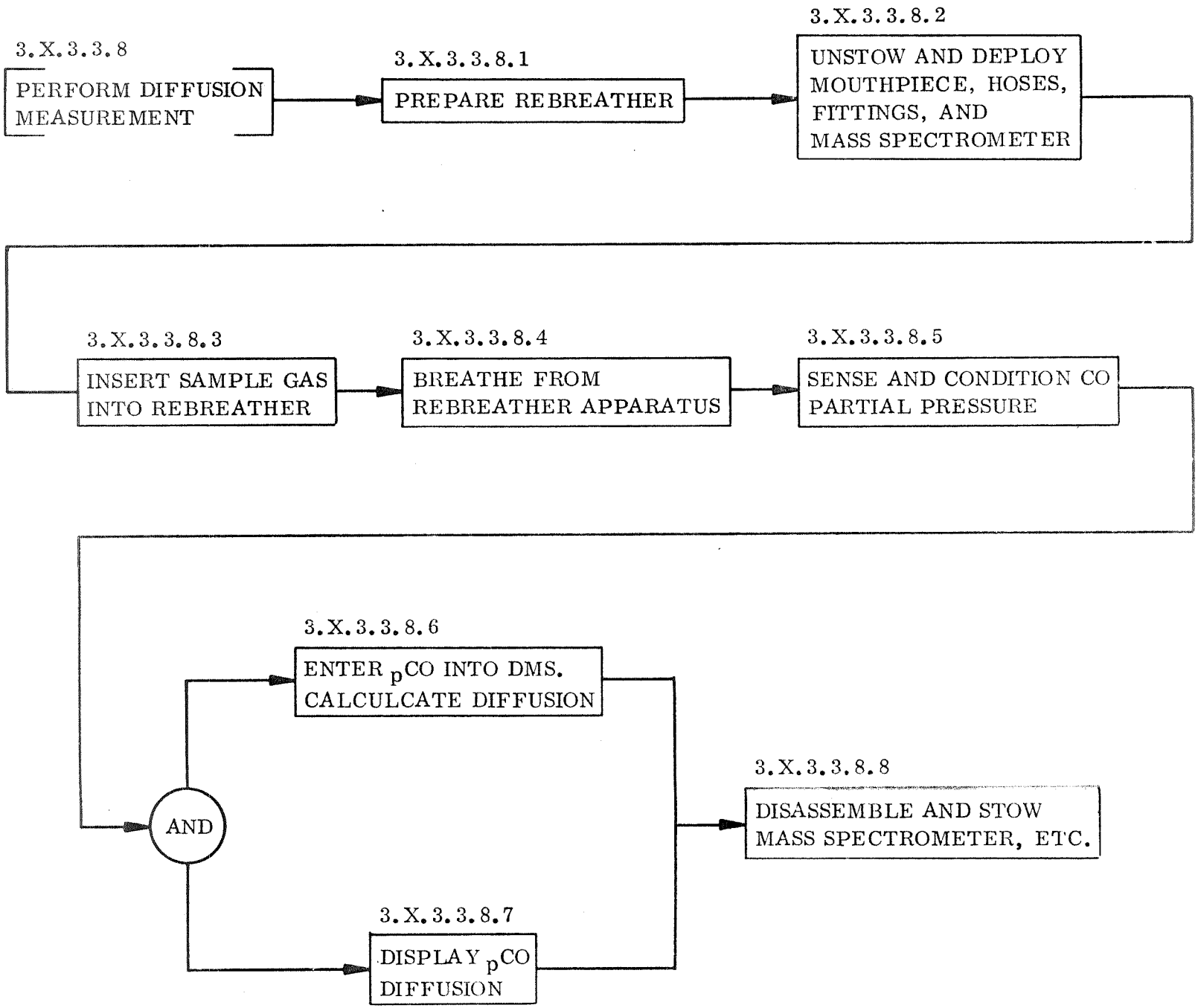

FFBD 3.X.3.3.8 Perform Diffusion Measurement

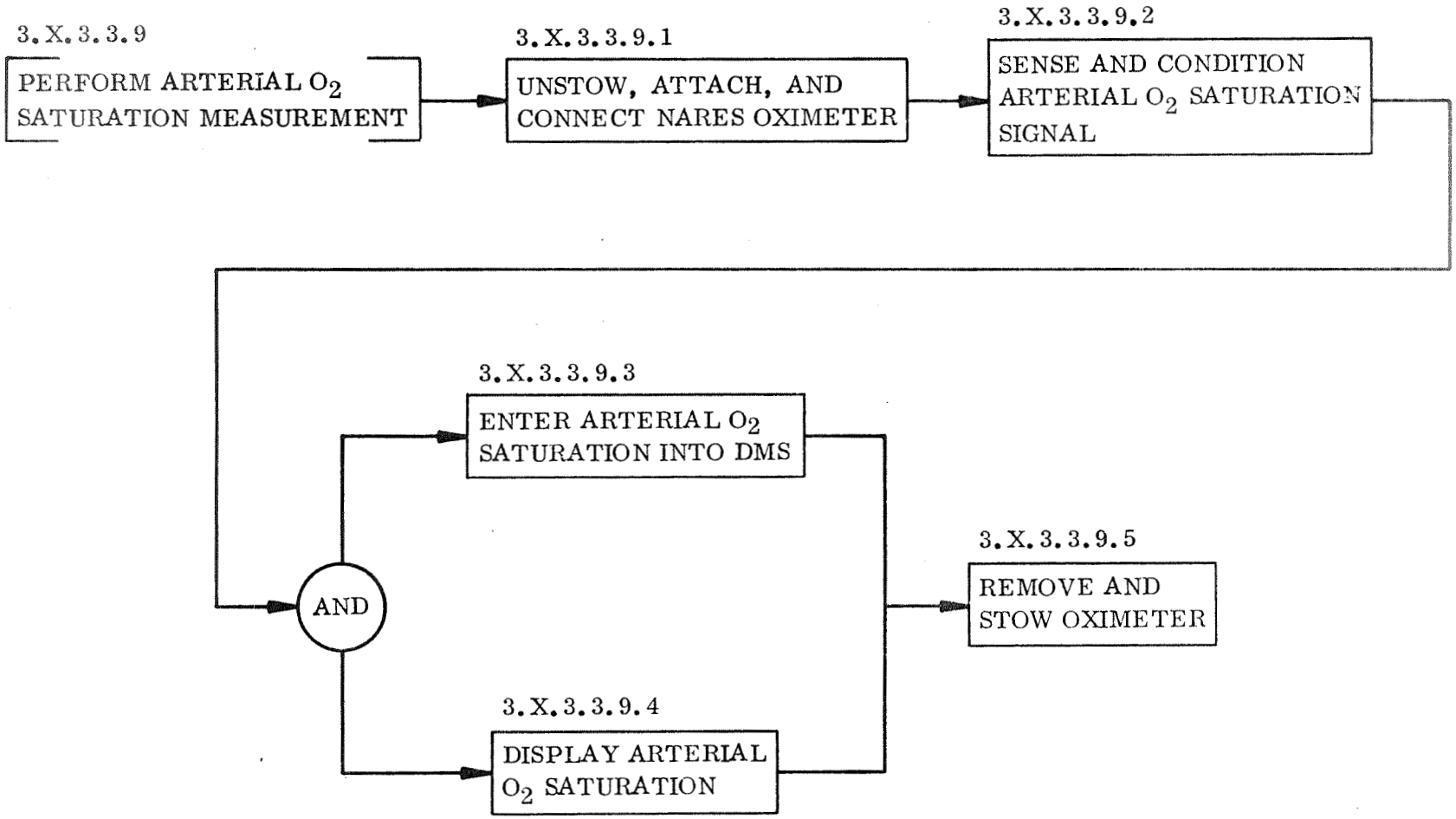

FFBD 3.X.3.3.9 Perform Arterial O_2 Saturation Measurement

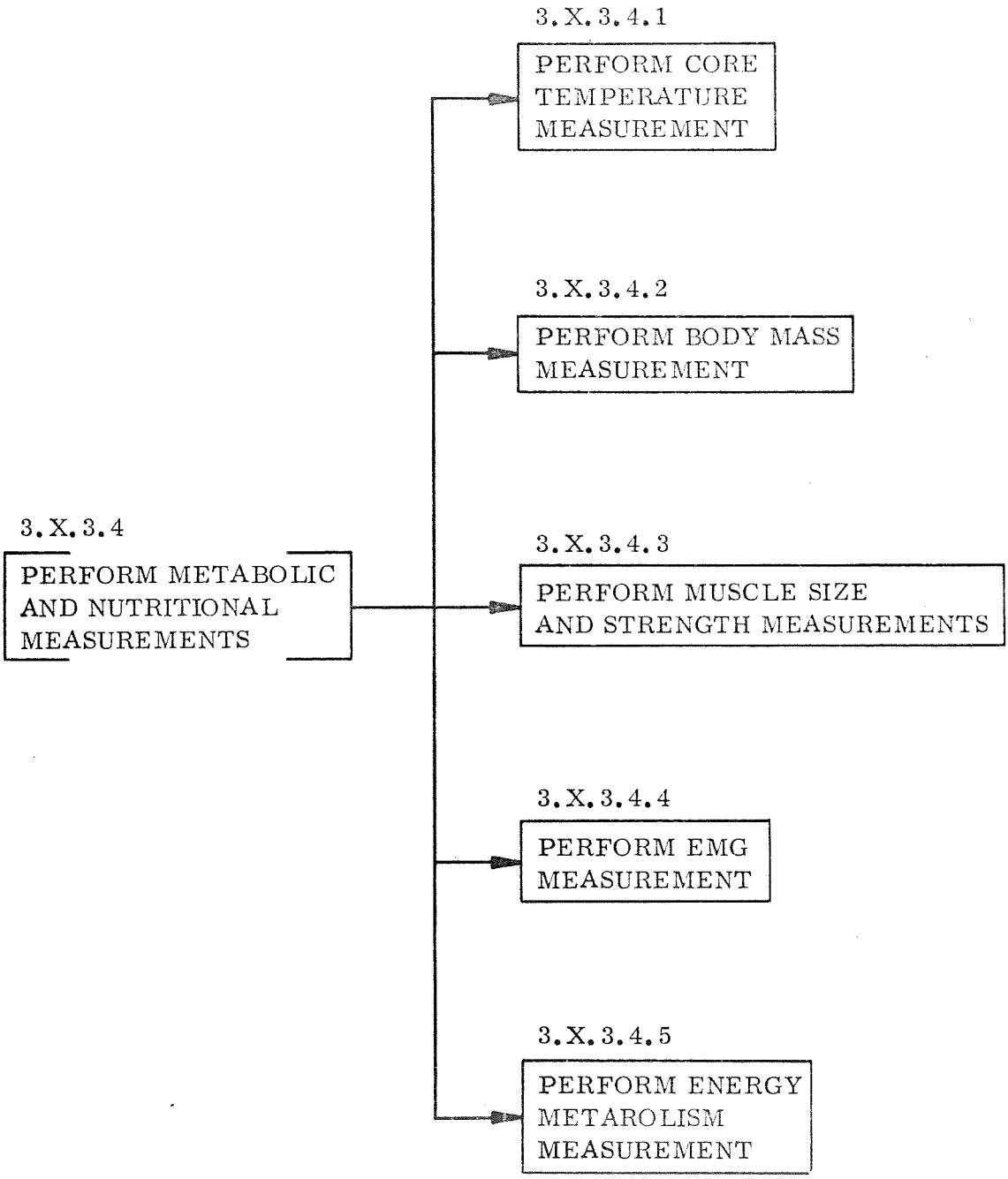

FFBD 3.X.3.4 Perform Metabolic and Nutritional Measurements

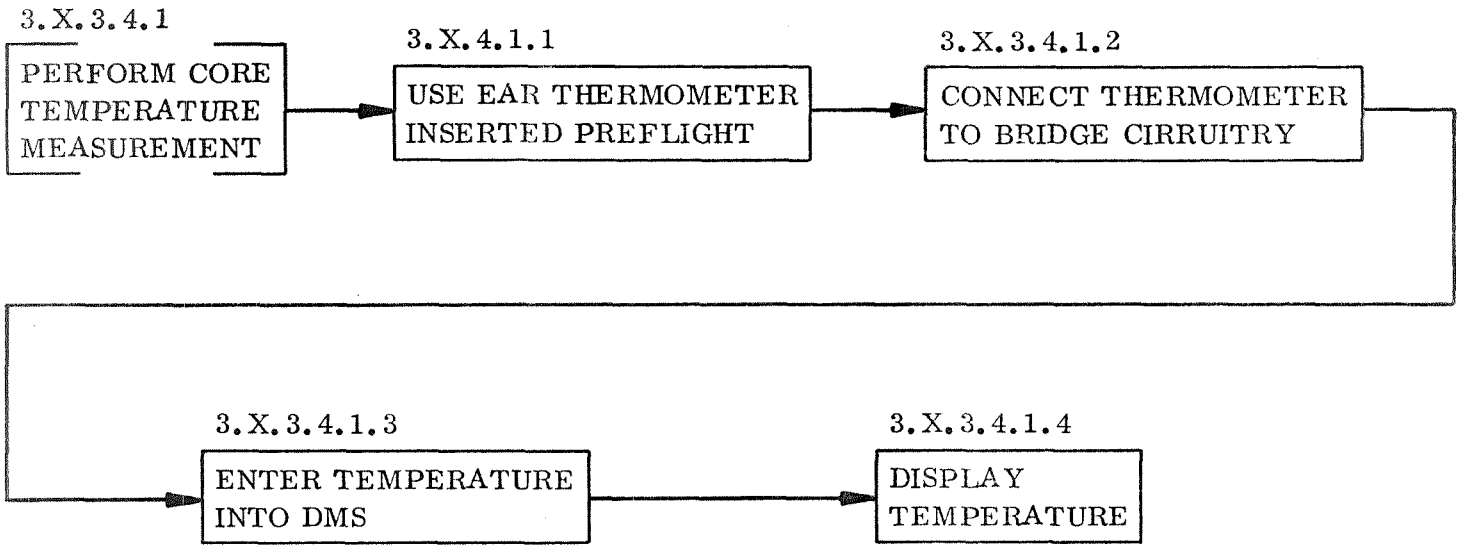

FFBD 3.X.3.4.1 Perform Core Temperature Measurements

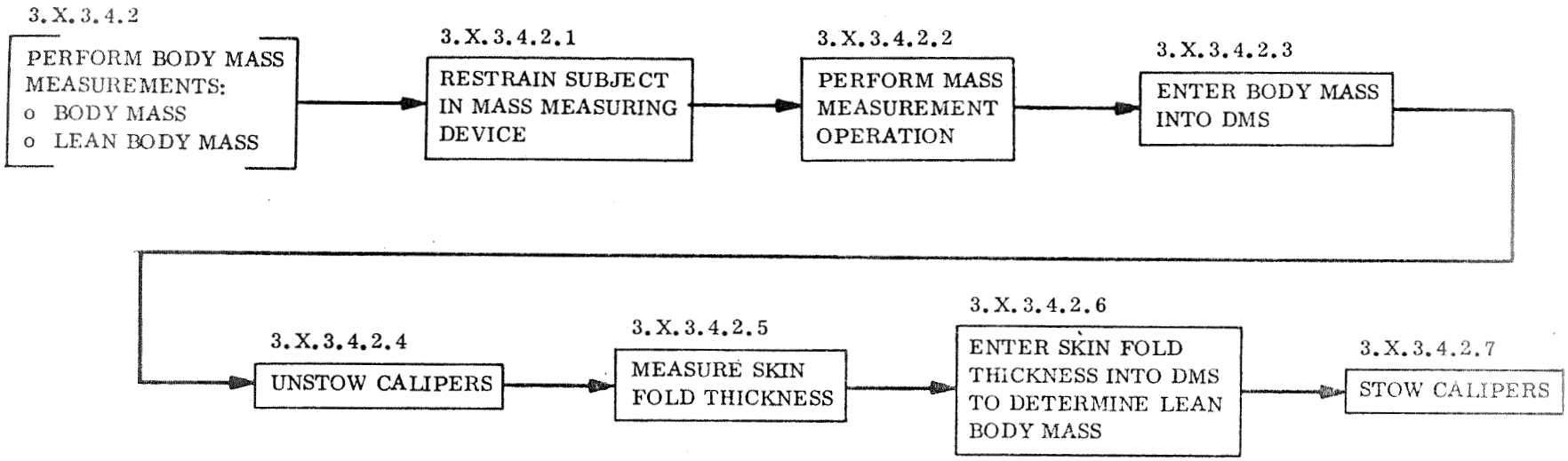

FFBD 3.X.3.4.2 Perform Body Mass Measurements: Body Mass, Lean Body Mass

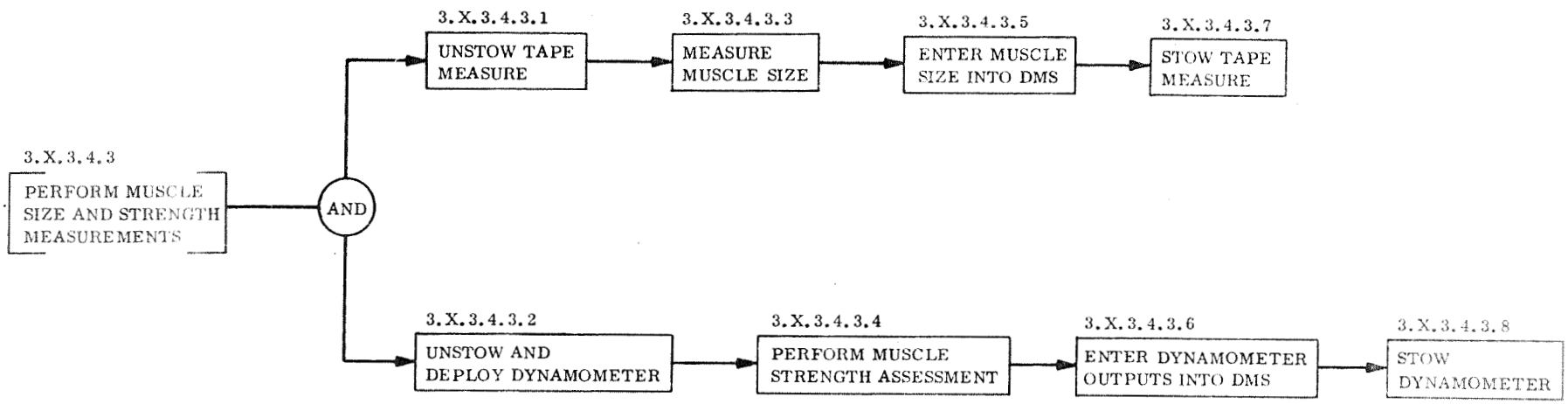

FFBD 3.X.3.4.3 Perform Muscle Size and Strength Measurements

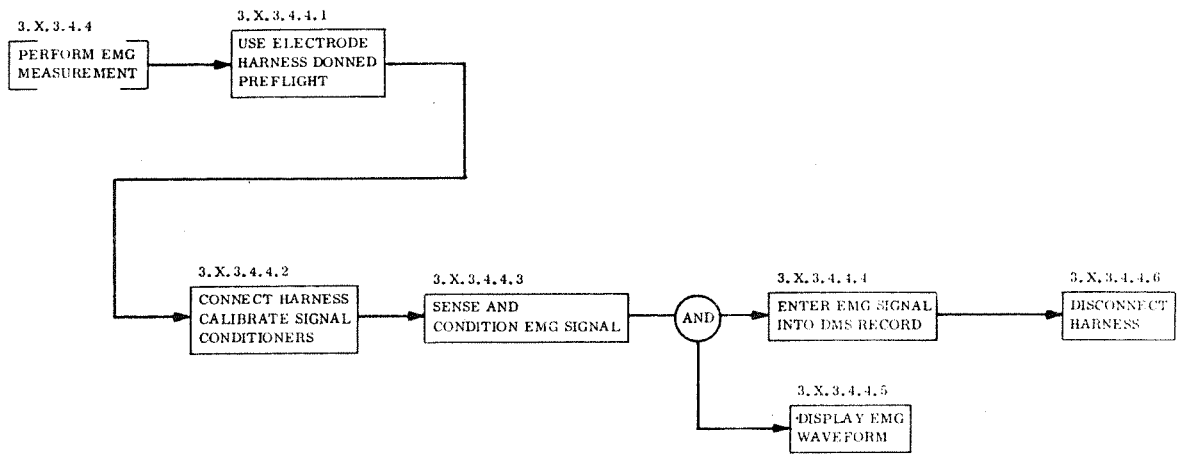

FFBD 3.X.3.4.4 Perform EMG Measurement

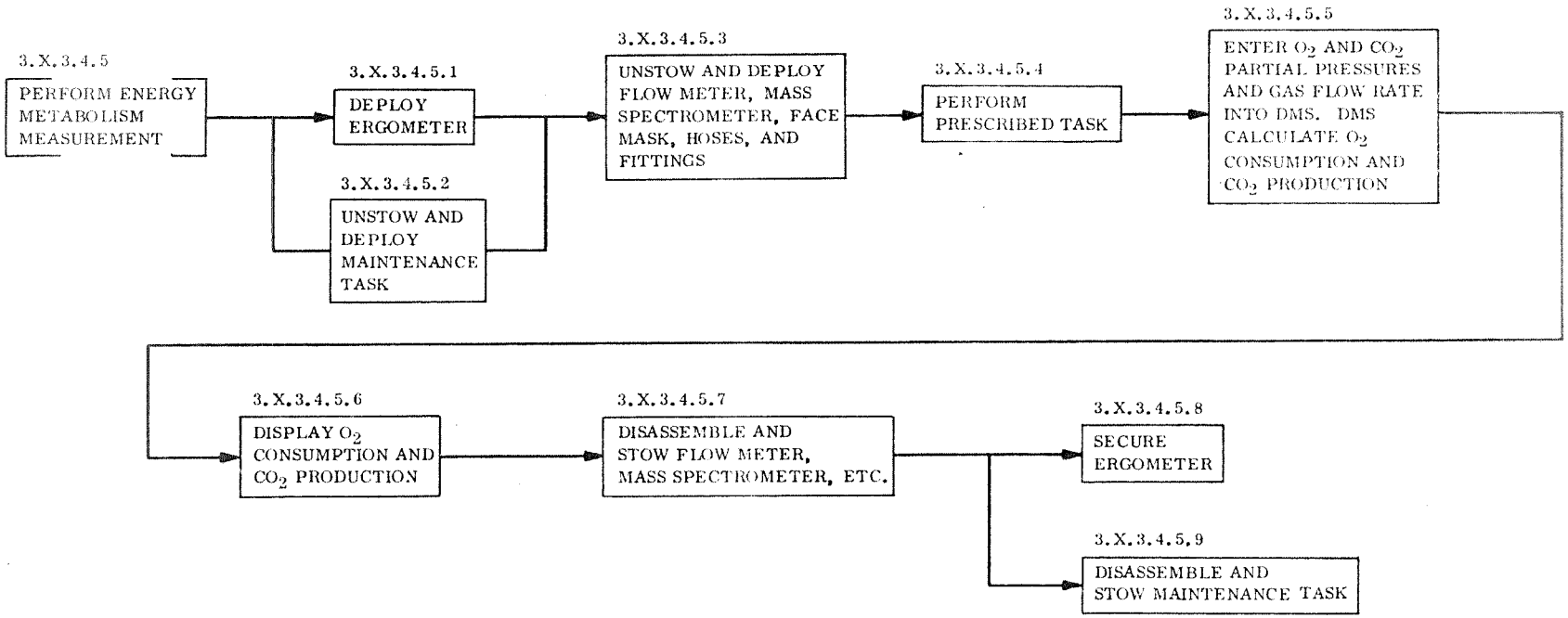

FFBD 3.X.3.4.5 Perform Energy Metabolism Measurement

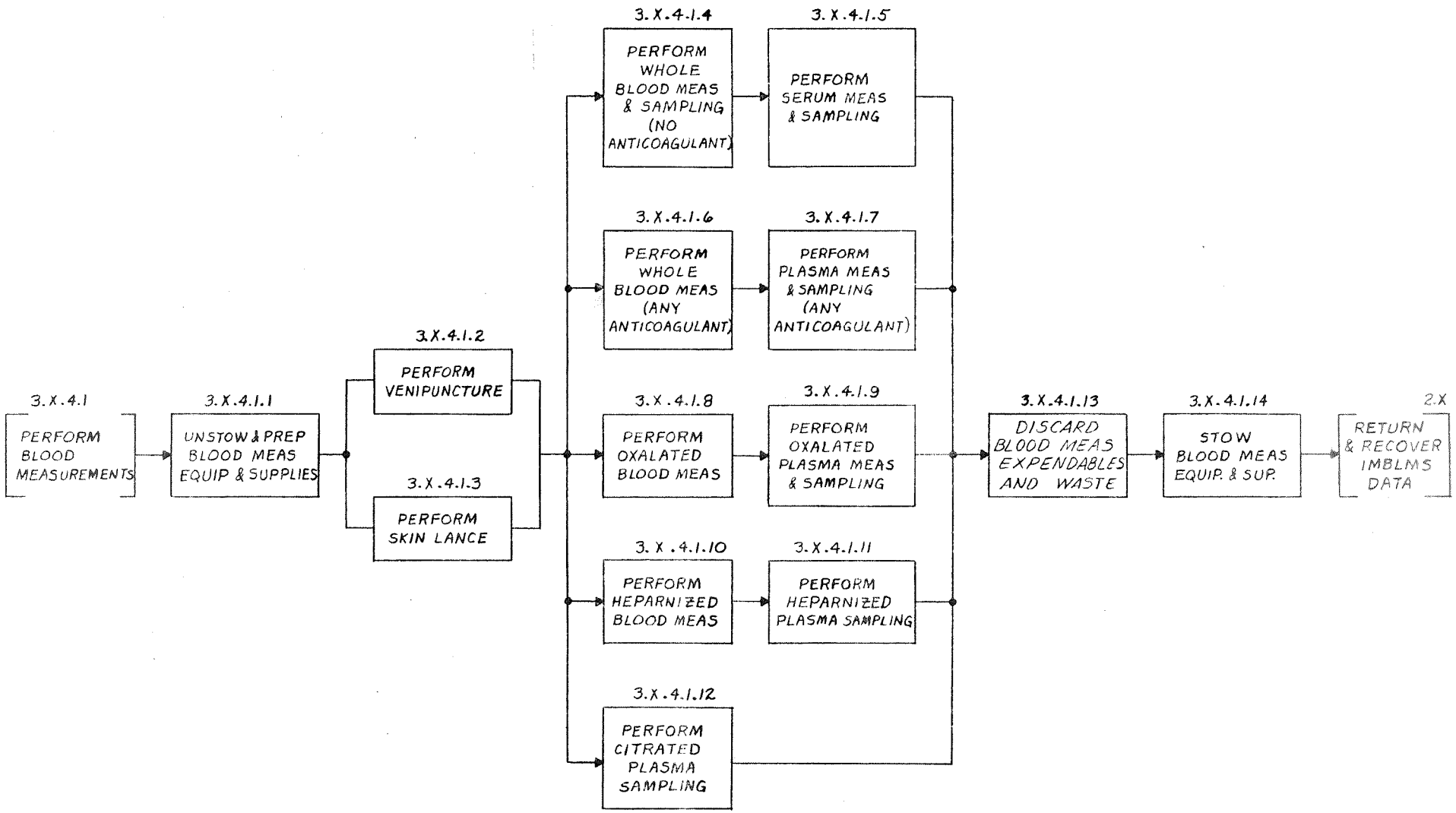

FFBD 3.X.4.1. Perform Blood Measurements

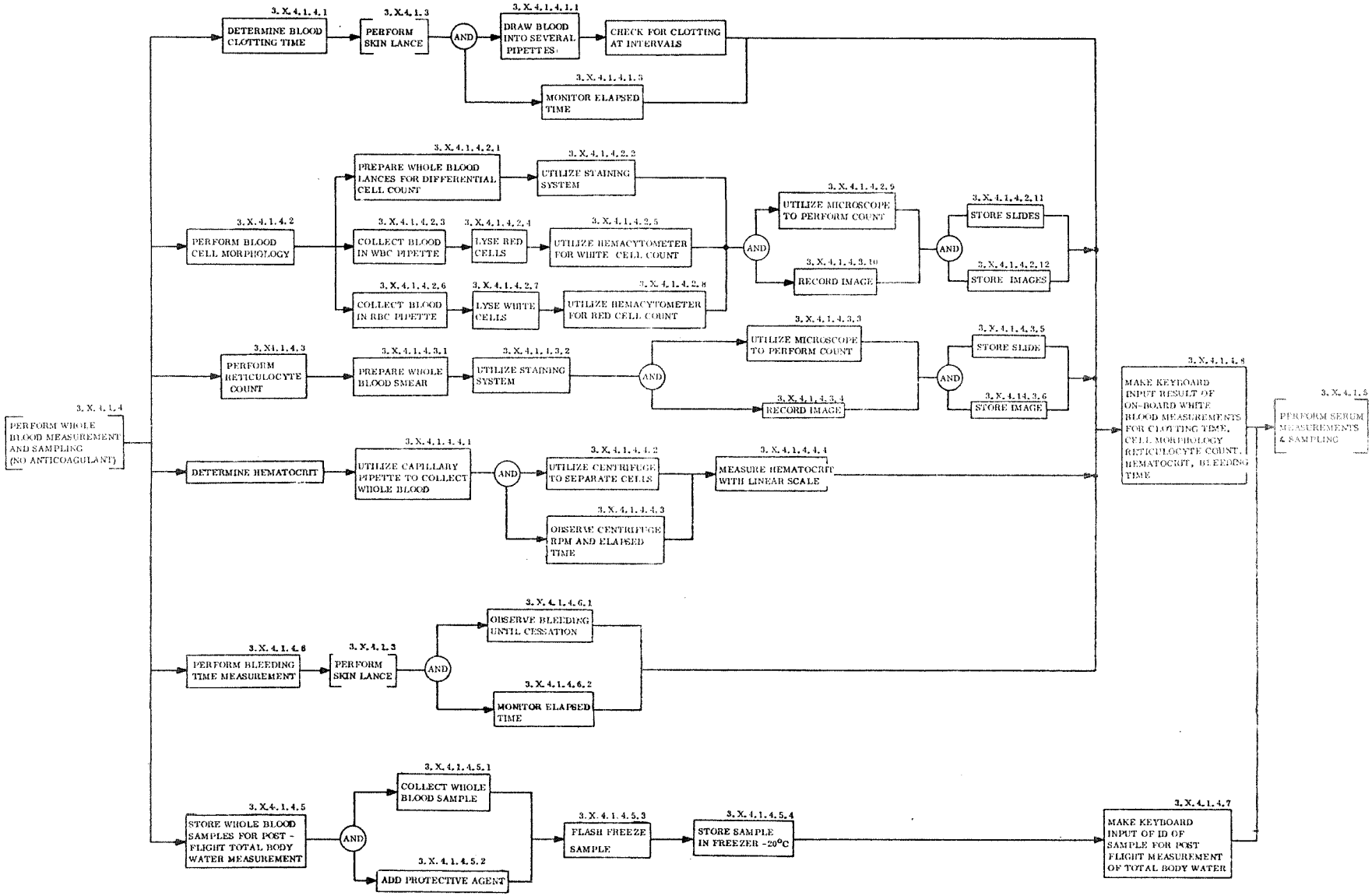

FFBD 3.X.4.1.4 Perform Whole Blood Measurements and Sampling (No Anticoagulant)

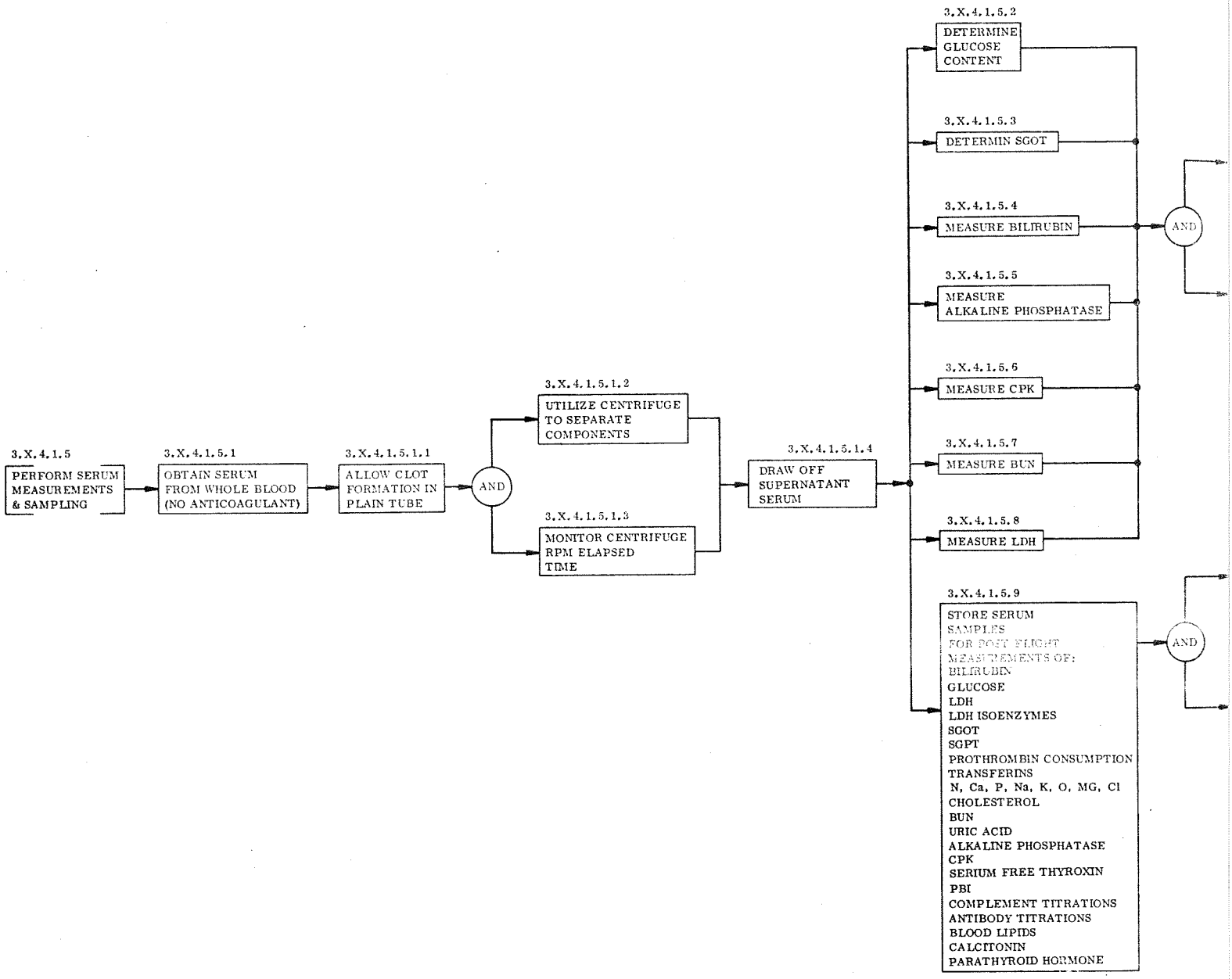
3.X.4.1.5
PERFORM SERUM MEASUREMENTS & SAMPLING
3.X.4.1.5.1
OBTAIN SERUM FROM WHOLE BLOOD (NO ANTICOAGULANT)
3.X.4.1.5.1.1
ALLOW CLOT FORMATION IN PLAIN TUBE
AND
3.X.4.1.5.1.2
UTILIZE CENTRIFUGE TO SEPARATE COMPONENTS
3.X.4.1.5.1.3
MONITOR CENTRIFUGE RPM ELAPSED TIME
3.X.4.1.5.1.4
DRAW OFF SUPERNATANT SERUM
3.X.4.1.5.2
DETERMINE GLUCOSE CONTENT
3.X.4.1.5.3
DETERMIN SGOT
3.X.4.1.5.4
MEASURE BILIRUBIN
3.X.4.1.5.5
MEASURE ALKALINE PHOSPHATASE
3.X.4.1.5.6
MEASURE CPK
3.X.4.1.5.7
MEASURE BUN
3.X.4.1.5.8
MEASURE LDH
3.X.4.1.5.9
STORE SERUM SAMPLES FOR POST FLIGHT MEASUREMENTS OF:
BILIRUBIN
GLUCOSE
LDH
LDH ISOENZYMES
SGOT
SGPT
PROTHROMBIN CONSUMPTION
TRANSFERINS
N, Ca, P, Na, K, O, MG, Cl
CHOLESTEROL
BUN
URIC ACID
ALKALINE PHOSPHATASE
CPK
SERIUM FREE THYROXIN
PBI
COMPLEMENT TITRATIONS
ANTIBODY TITRATIONS
BLOOD LIPIDS
CALCITONIN
PARATHYROID HORMONE
AND
AND

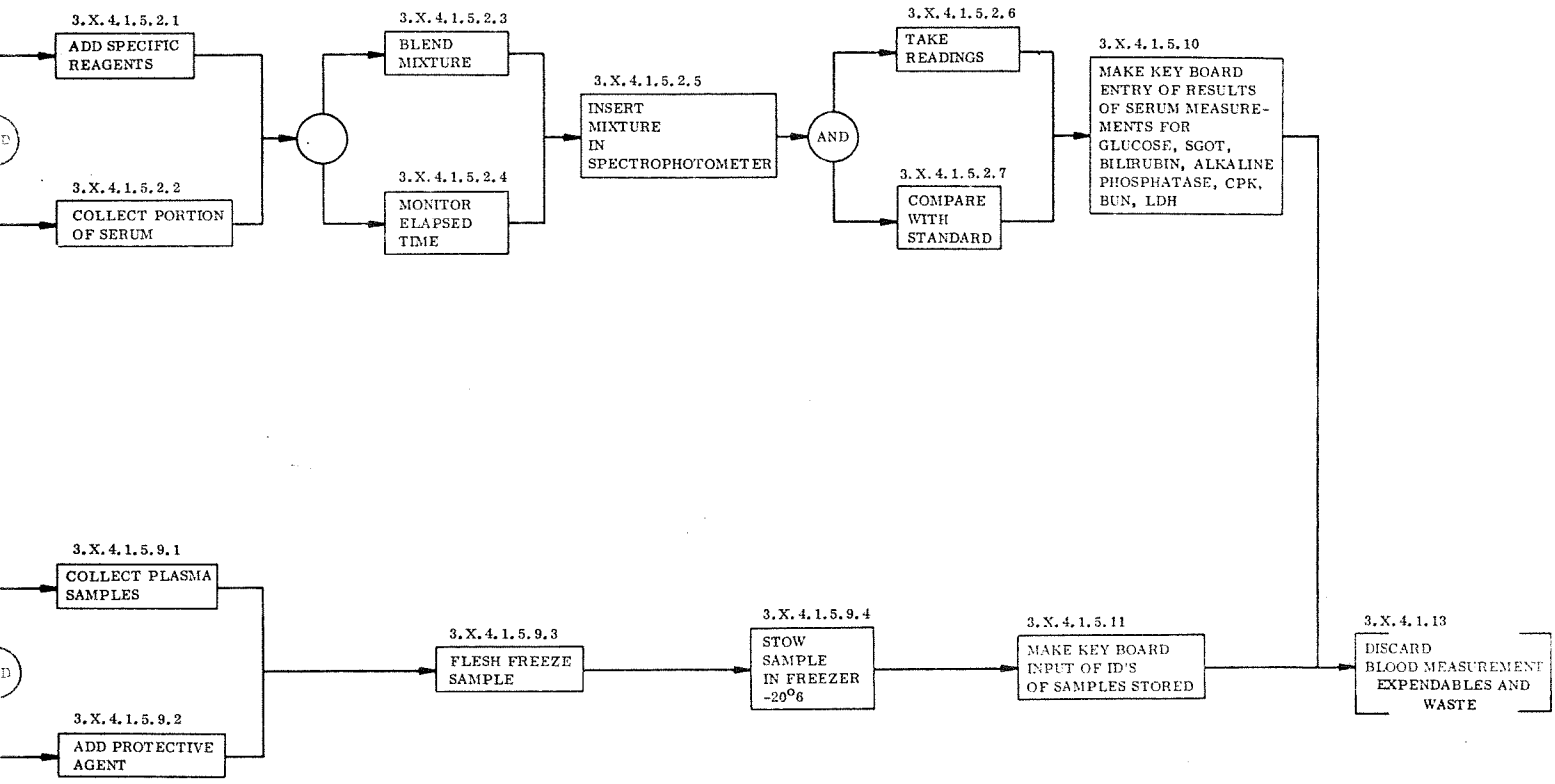

FFBD 3.X.4.1.5 Perform Serum Measurements and Sampling

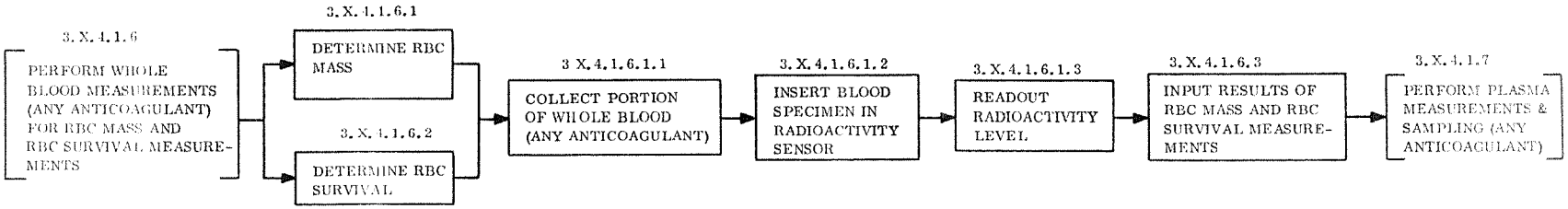

FFBD 3.X.4.1.6 Perform Whole Blood Measurements (Any Anticoagulant) for RBC Mass and RBC Survival Measurements

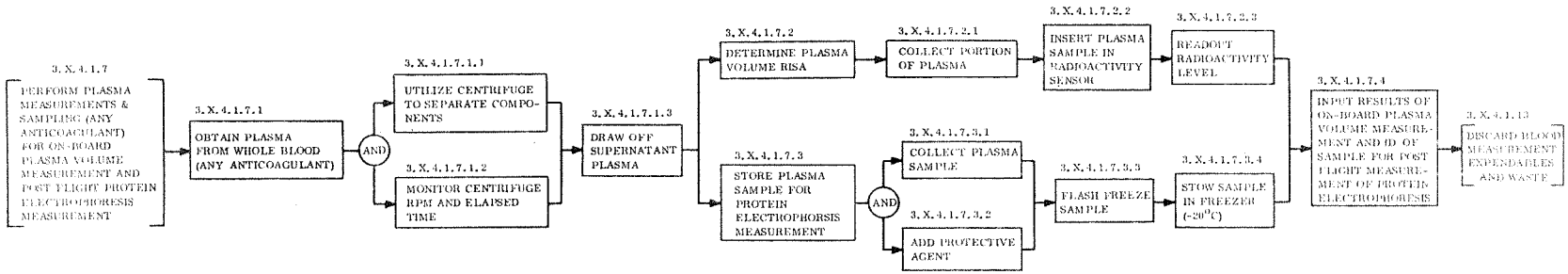

FFBD 3.X.4.1.7 Perform Plasma Measurements and Sampling (Any Anticoagulant) for On-Board Plasma Volume Measurement and Post-Flight Protein Electrophoresis Measurement

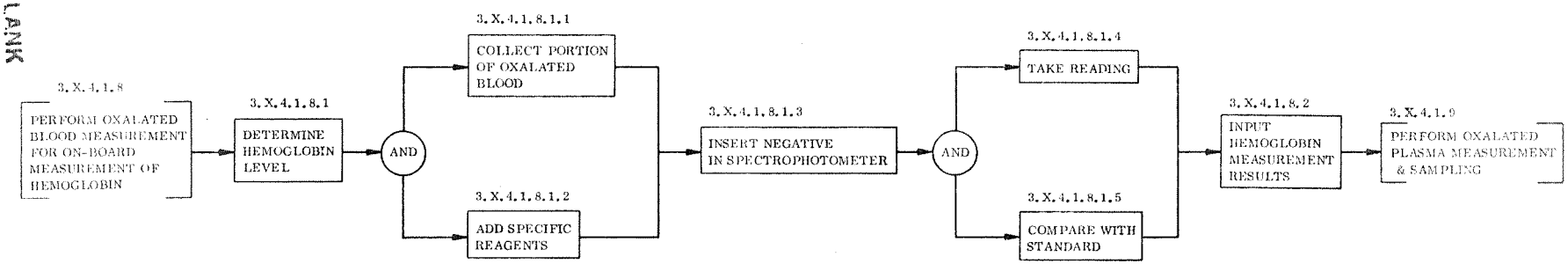

FFBD 3.X.4.1.8 Perform Oxalated Blood Measurement for Hemoglobin

PAGE INTENTIONALLY BLANK
PRECEDING PAGE BLANK NOT FILMED

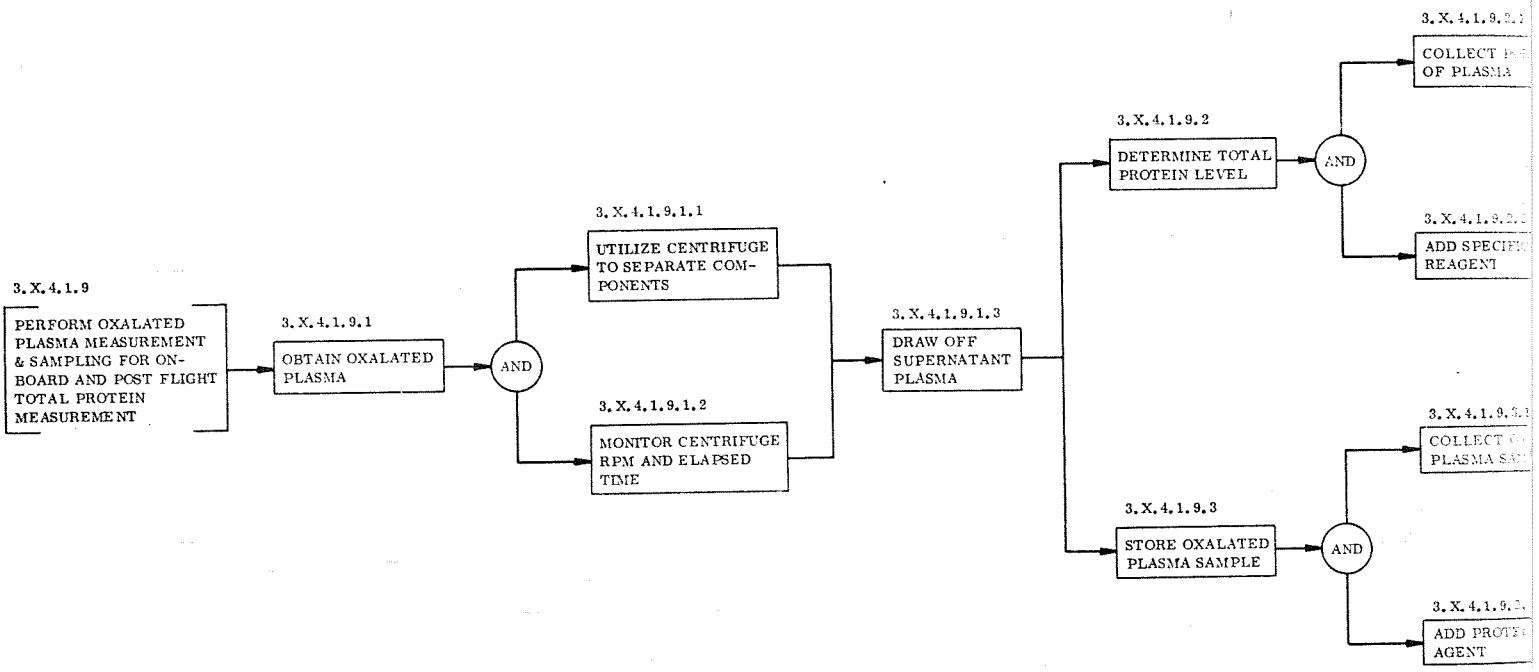

PRECEDING PAGE 44 BLANK NOT FILMED

PAGE 45 INTENTIONALLY BLANK

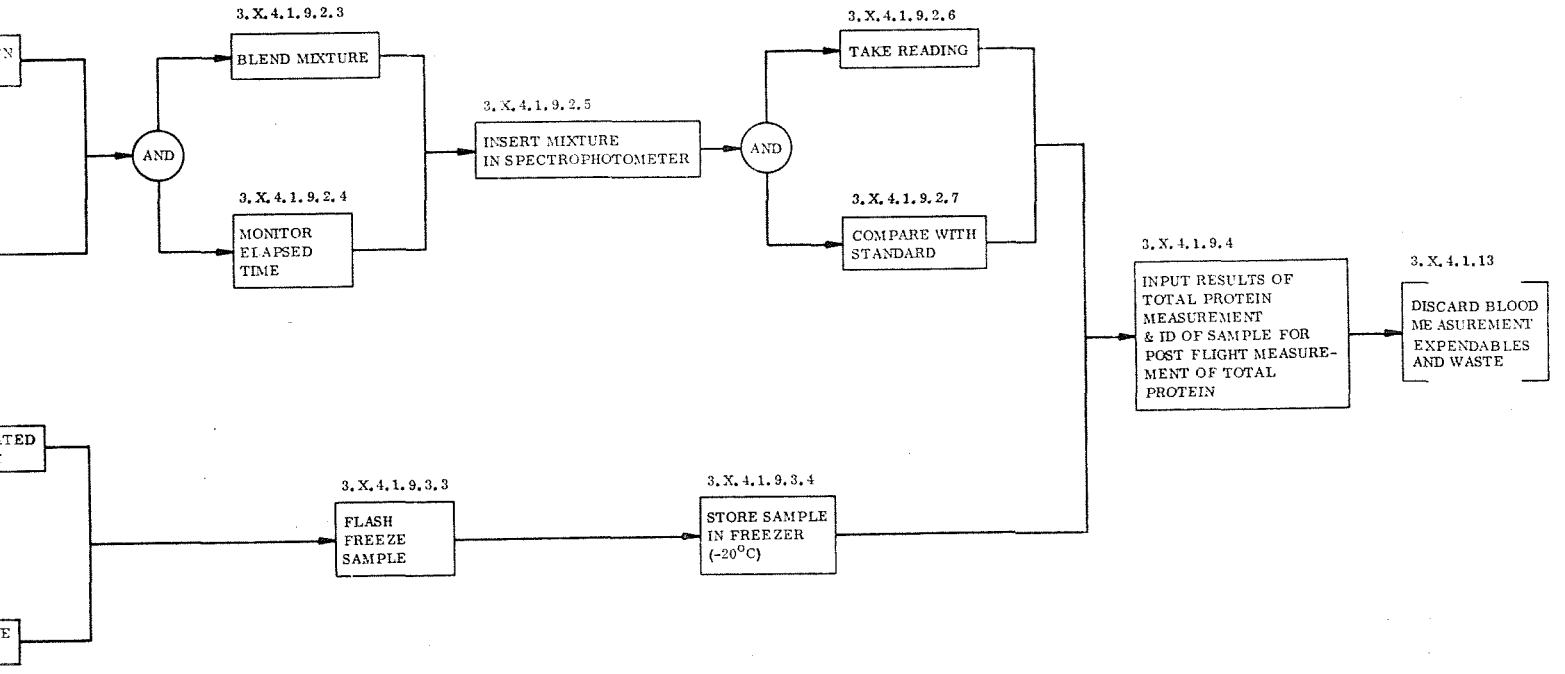

FFBD 3.X.4.1.9 Perform Oxalated Plasma Measurement and Sampling for Total Protein Measurement

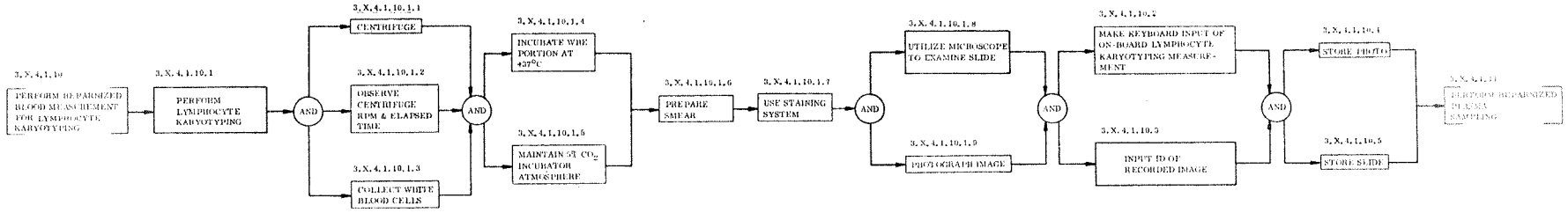

FFBD 3.X.4.1.10 Perform Heparnized Blood Measurement for Lymphocyte Karotyping

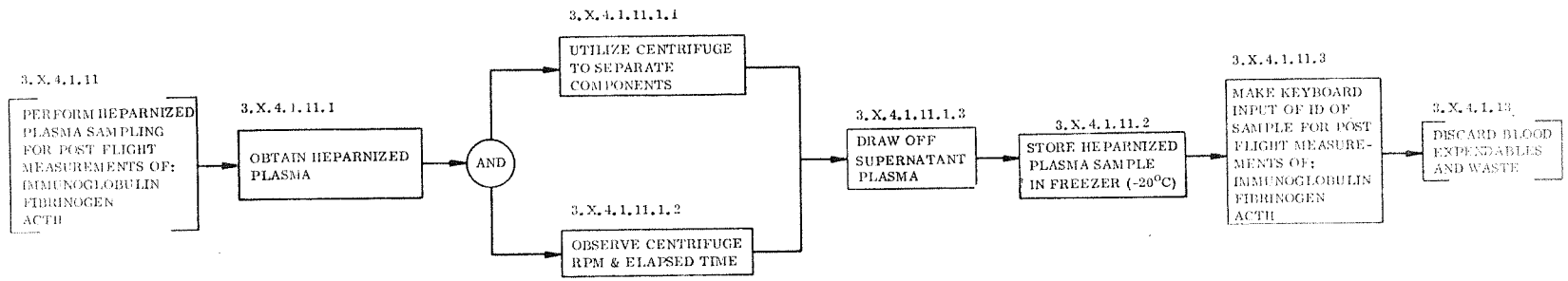

FFBD 3.X.4.1.11 Perform Heparnized Plasma Sampling for Immunoglubulin, Fibrinogen, ACTH Measurements Post-flight

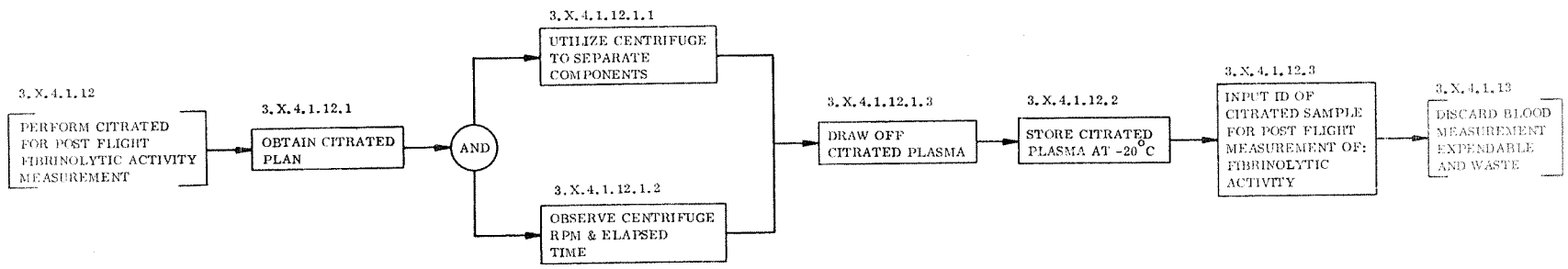

FFBD 3.X.4.1.12 Perform Citrated Plasma Sampling for Post-flight Fibrinogen Activity Measurement

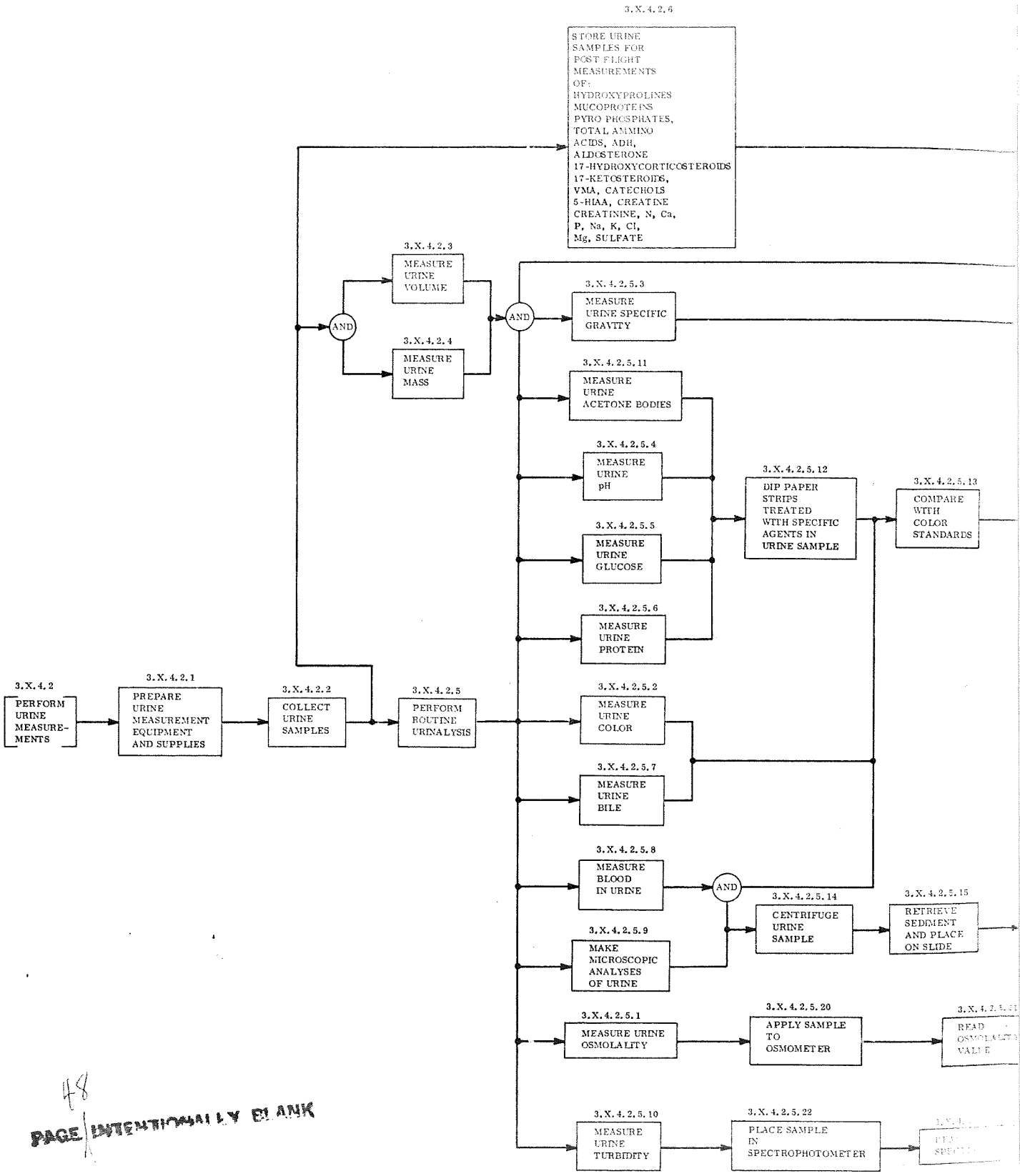

48

PAGE INTENTIONALLY BLANK

48

PRECEDING PAGE BLANK NOT FILMED

49/50

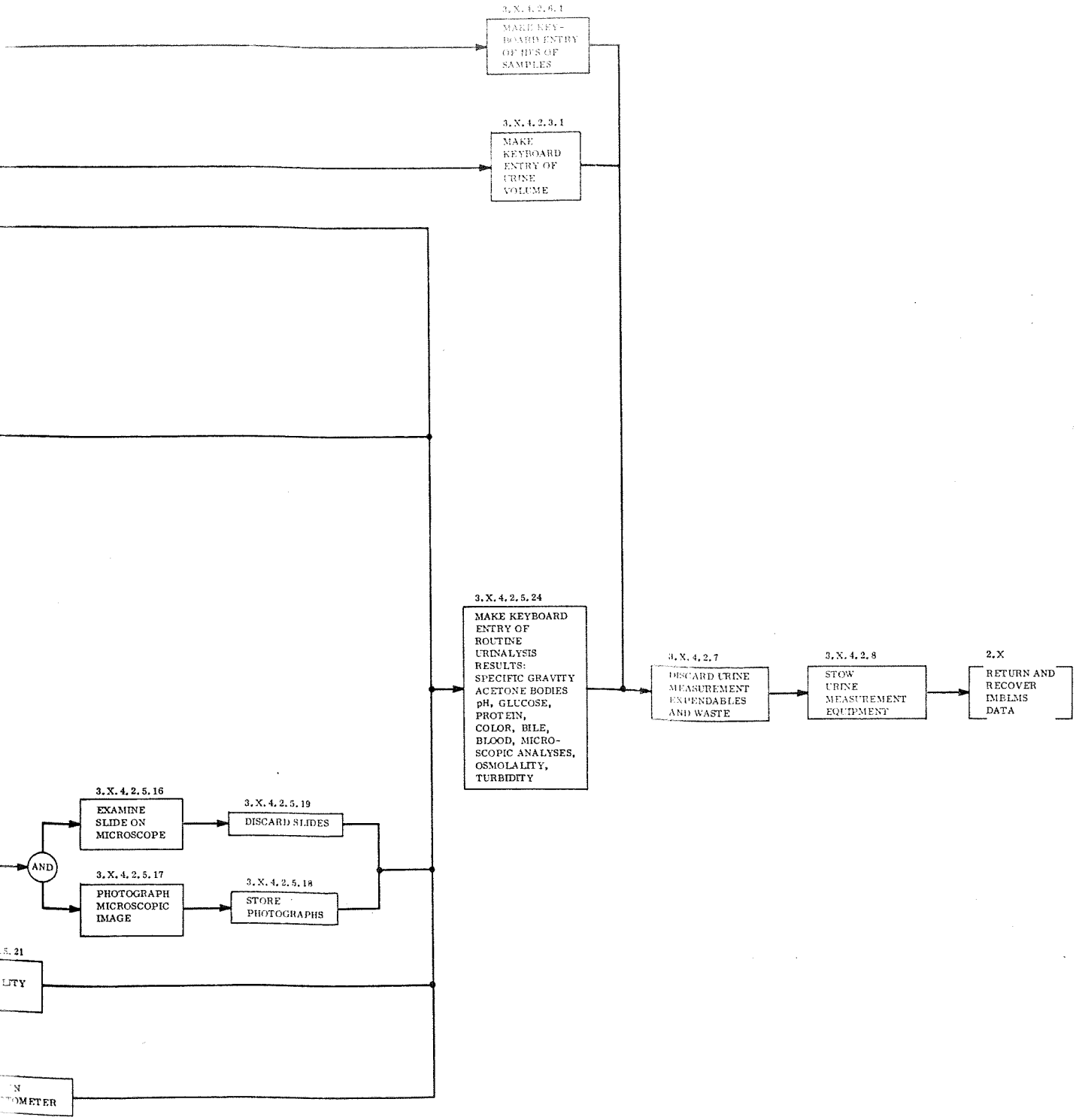

FFBD 3.X.4.2 Perform Urine Measurements

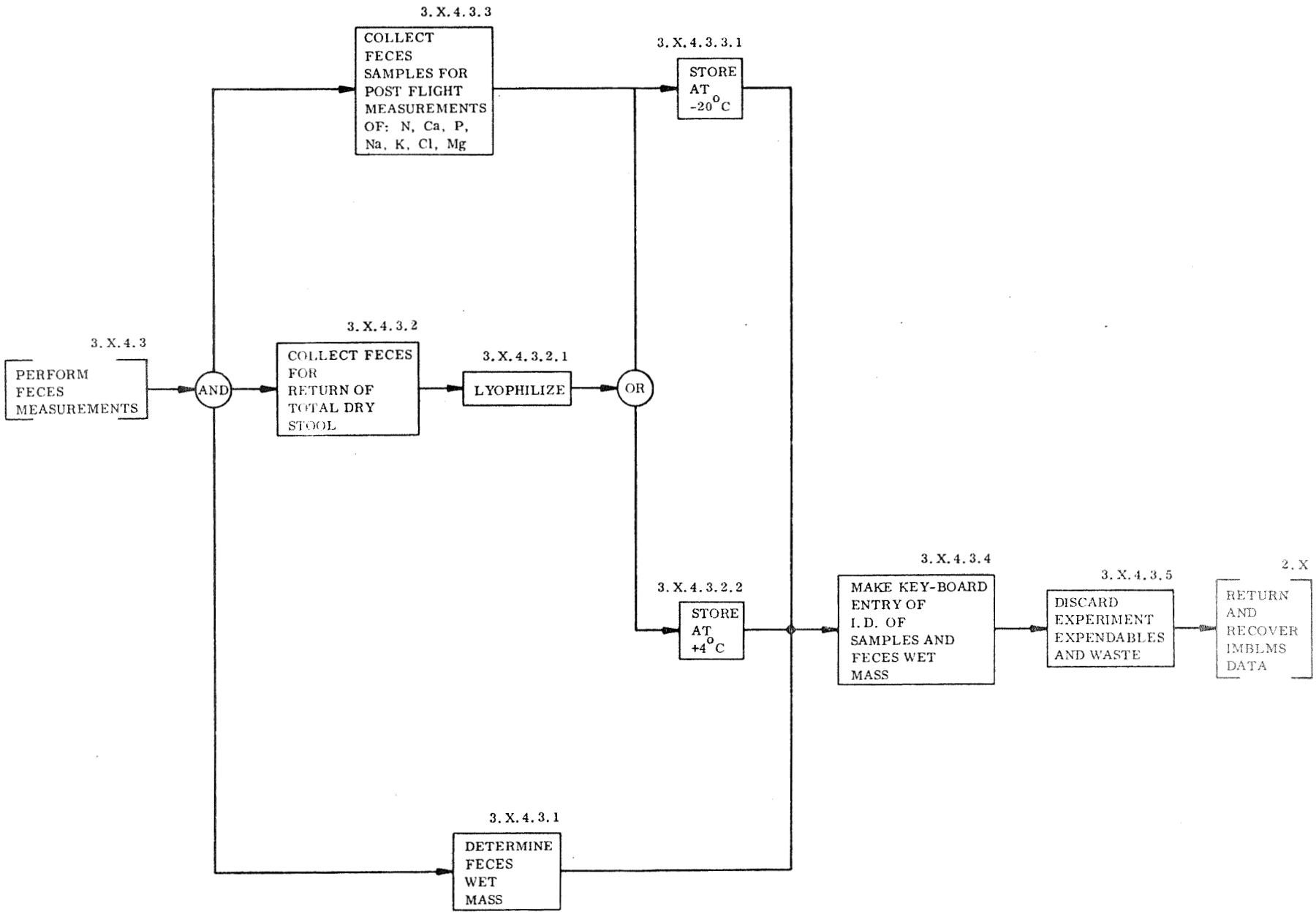

FFBD 3.X.4.3 Perform Feces Measurements

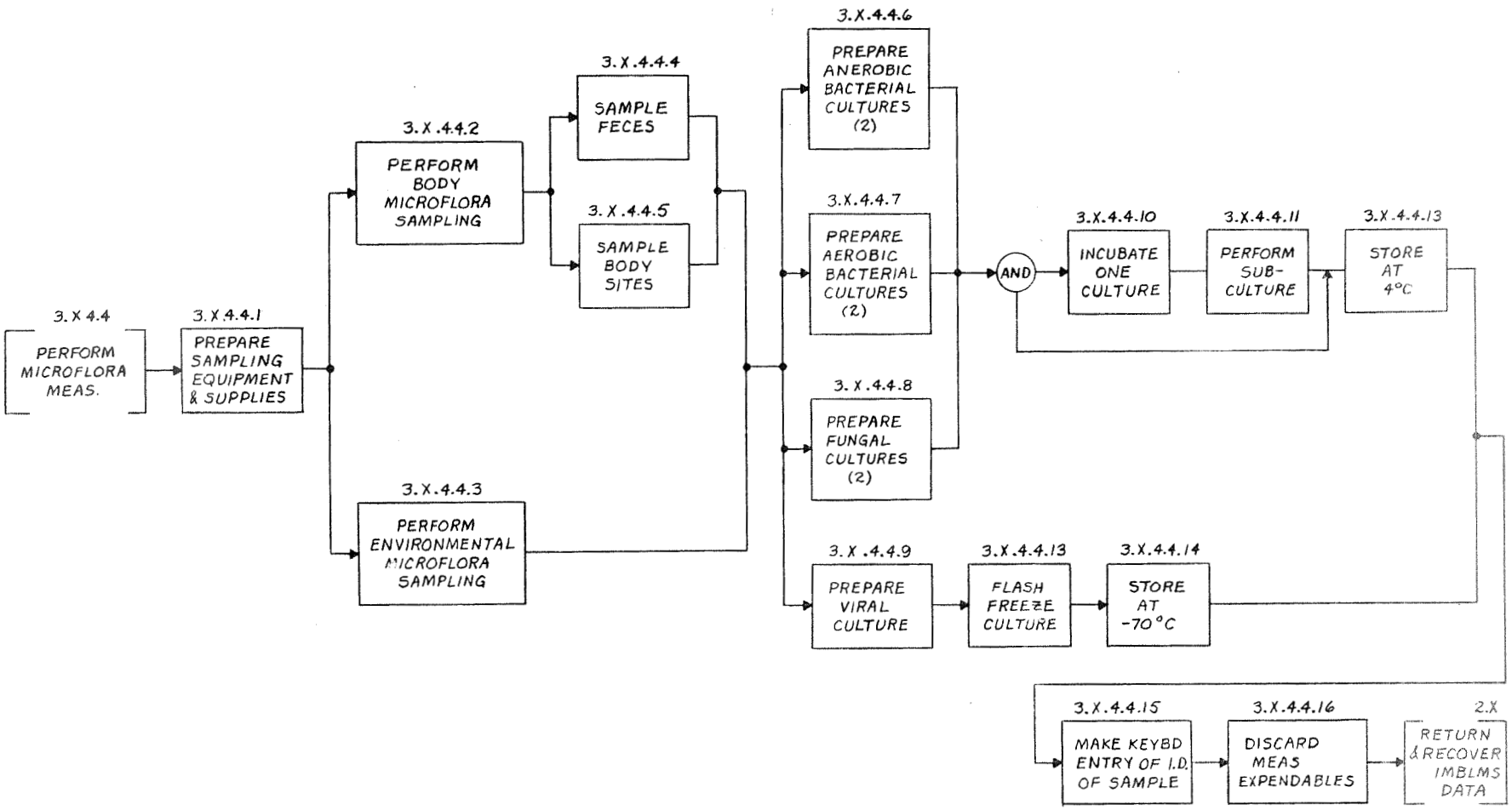

FFBD 3.X.4.4 Perform Microflora Measurements

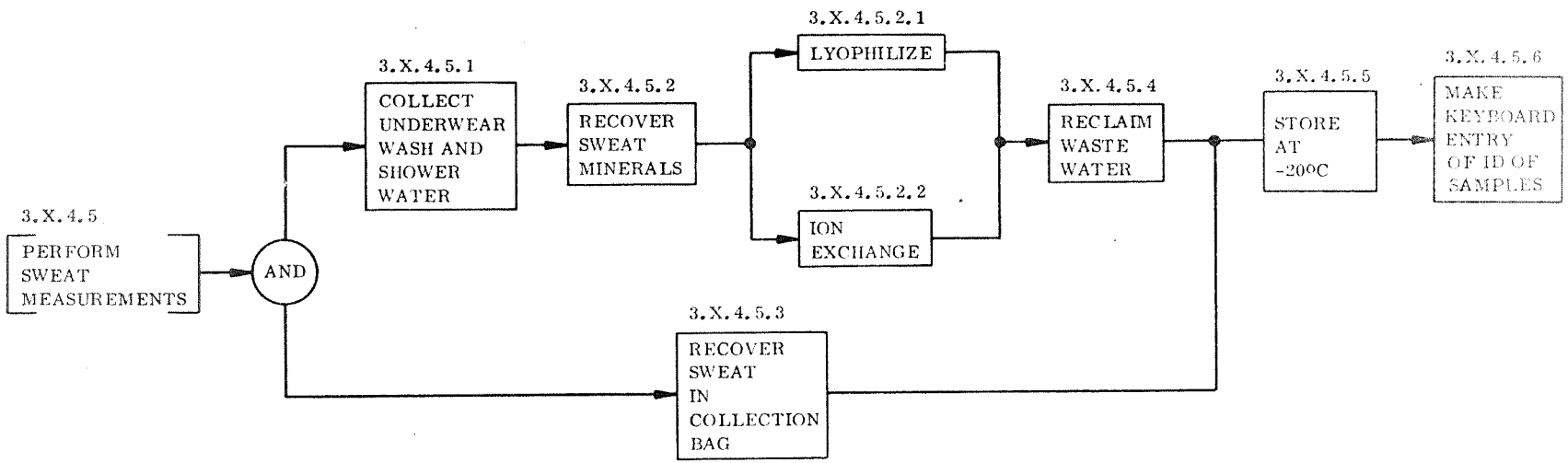

FFBD 3.X.4.5 Perform Sweat Measurements

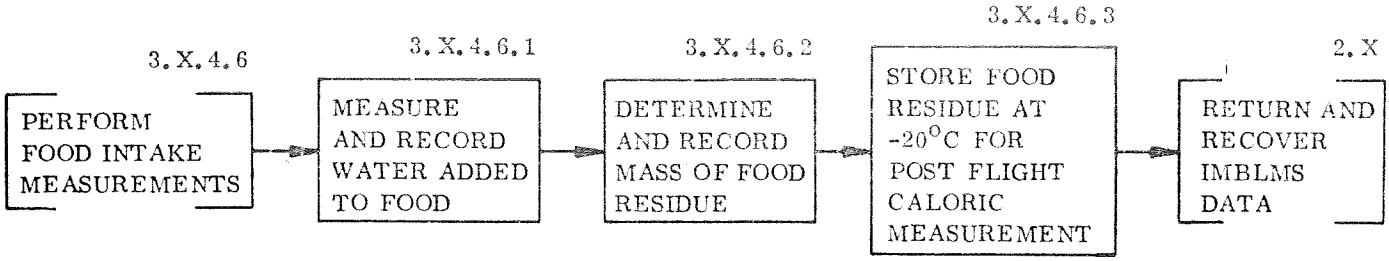

FFBD 3.X.4.6 Perform Food Intake Measurements

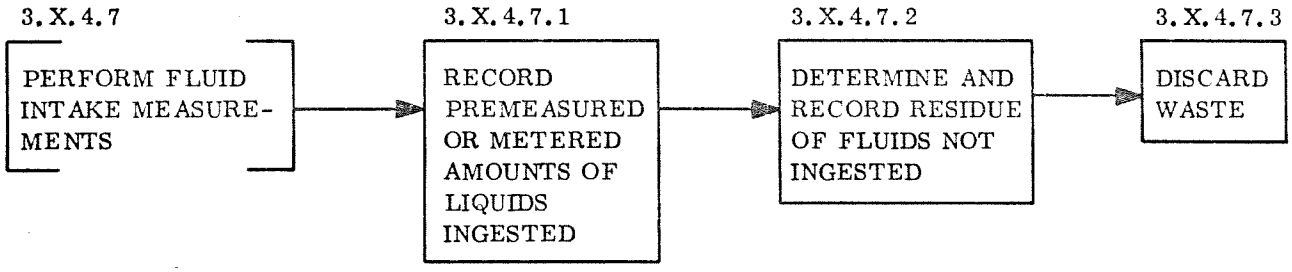

FFBD 3.X.4.7 Perform Fluid Intake Measurements

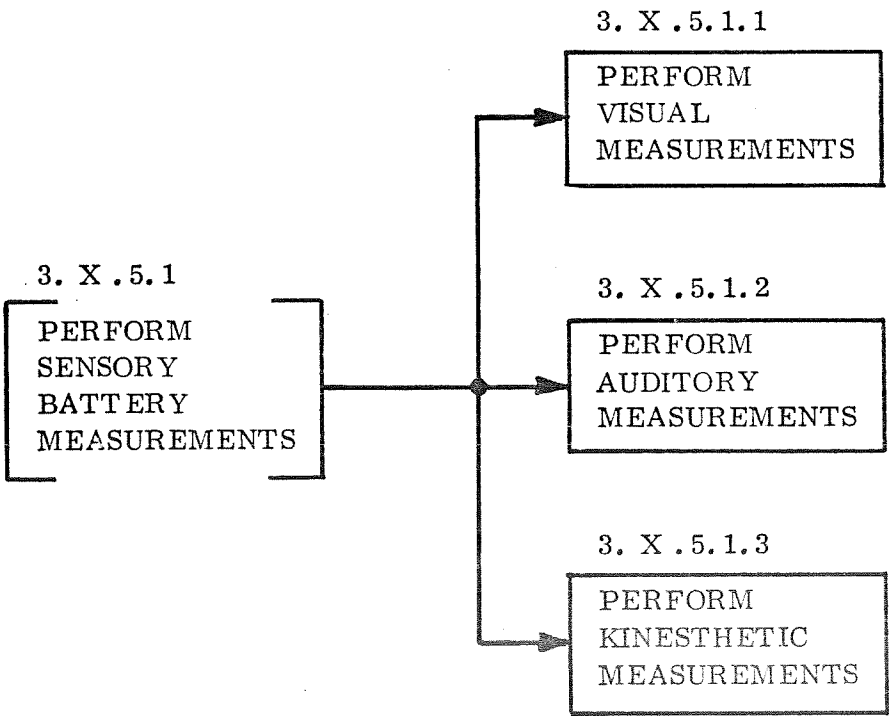

FFBD 3.X.5.1 Perform Sensory Battery Measurements

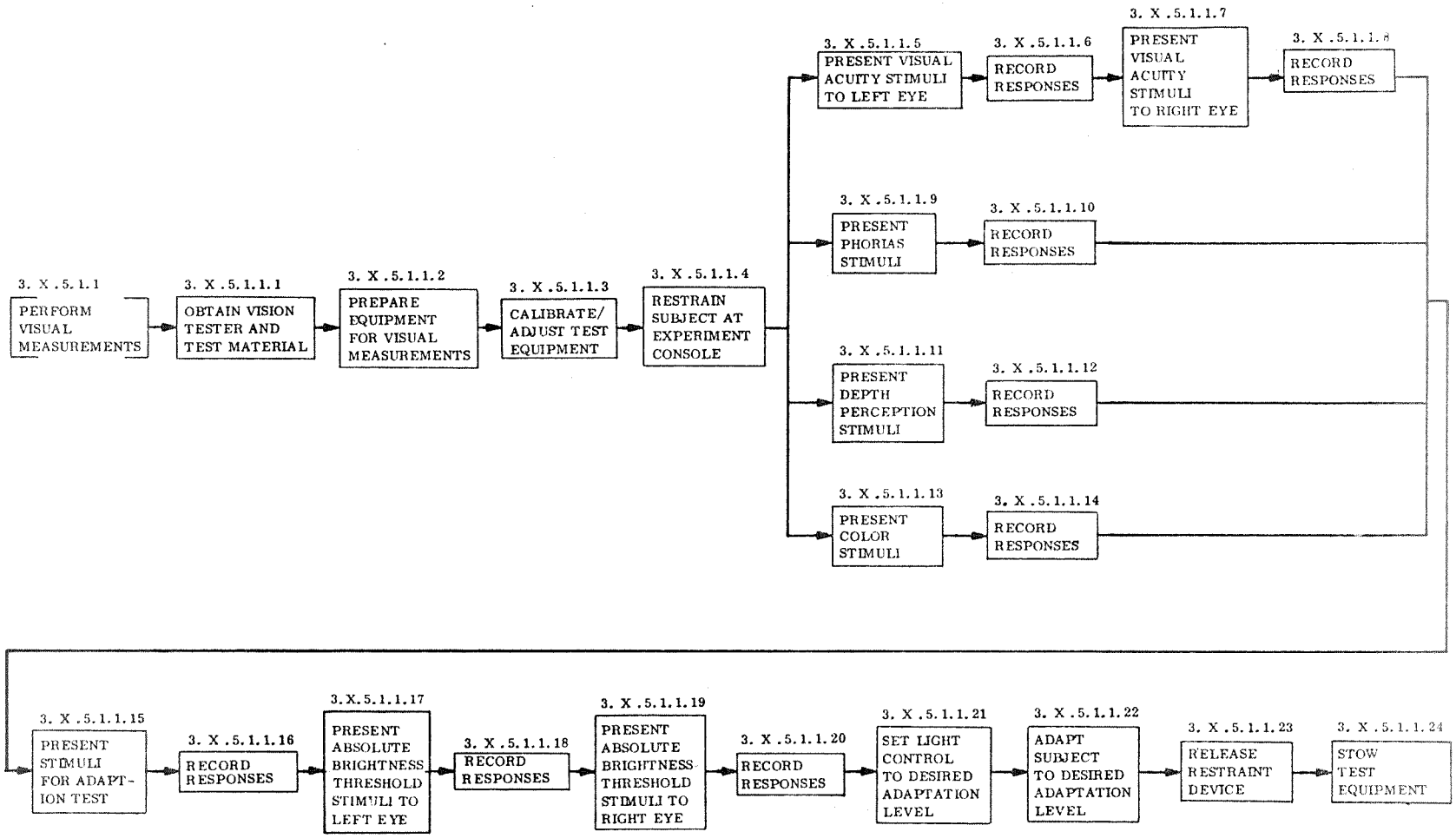

FFBD 3. X. 5. 1. 1 Perform Visual Measurements

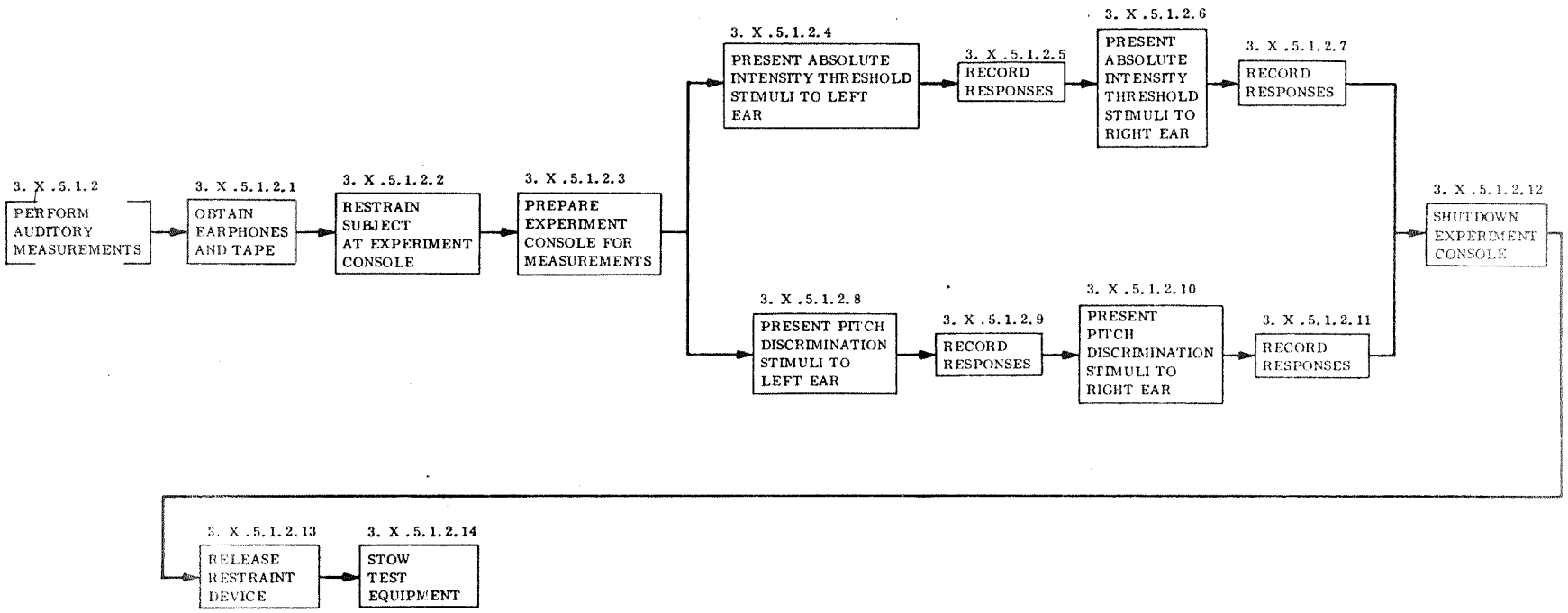

FFBD 3.X.5.1.2 Perform Auditory Measurements

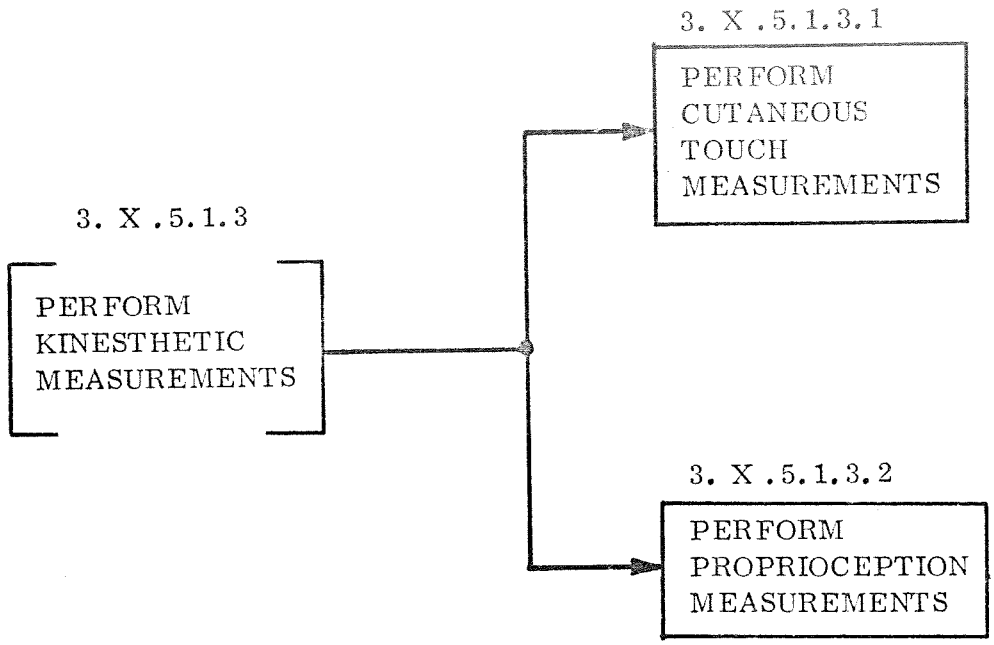

FFBD 3.X.5.1.3 Perform Kinesthetic Measurements

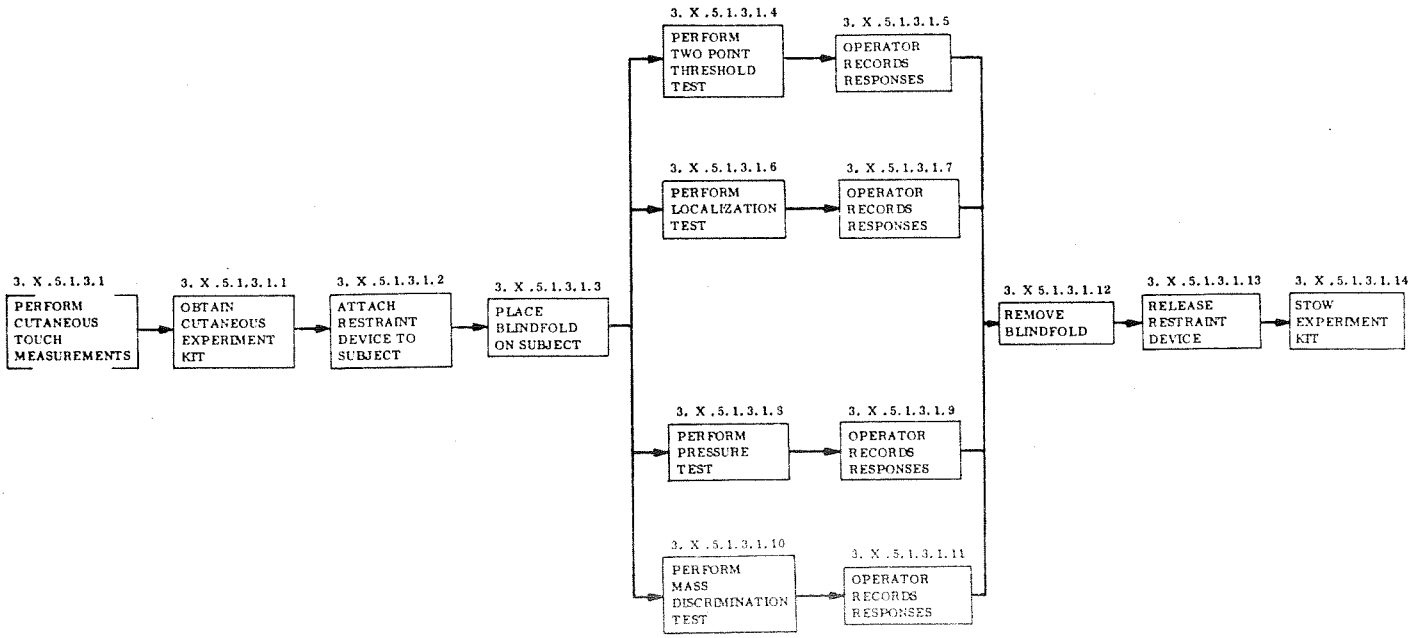

FFBD 3.X.5.1.3.1 Perform Cutaneous Touch Measurements

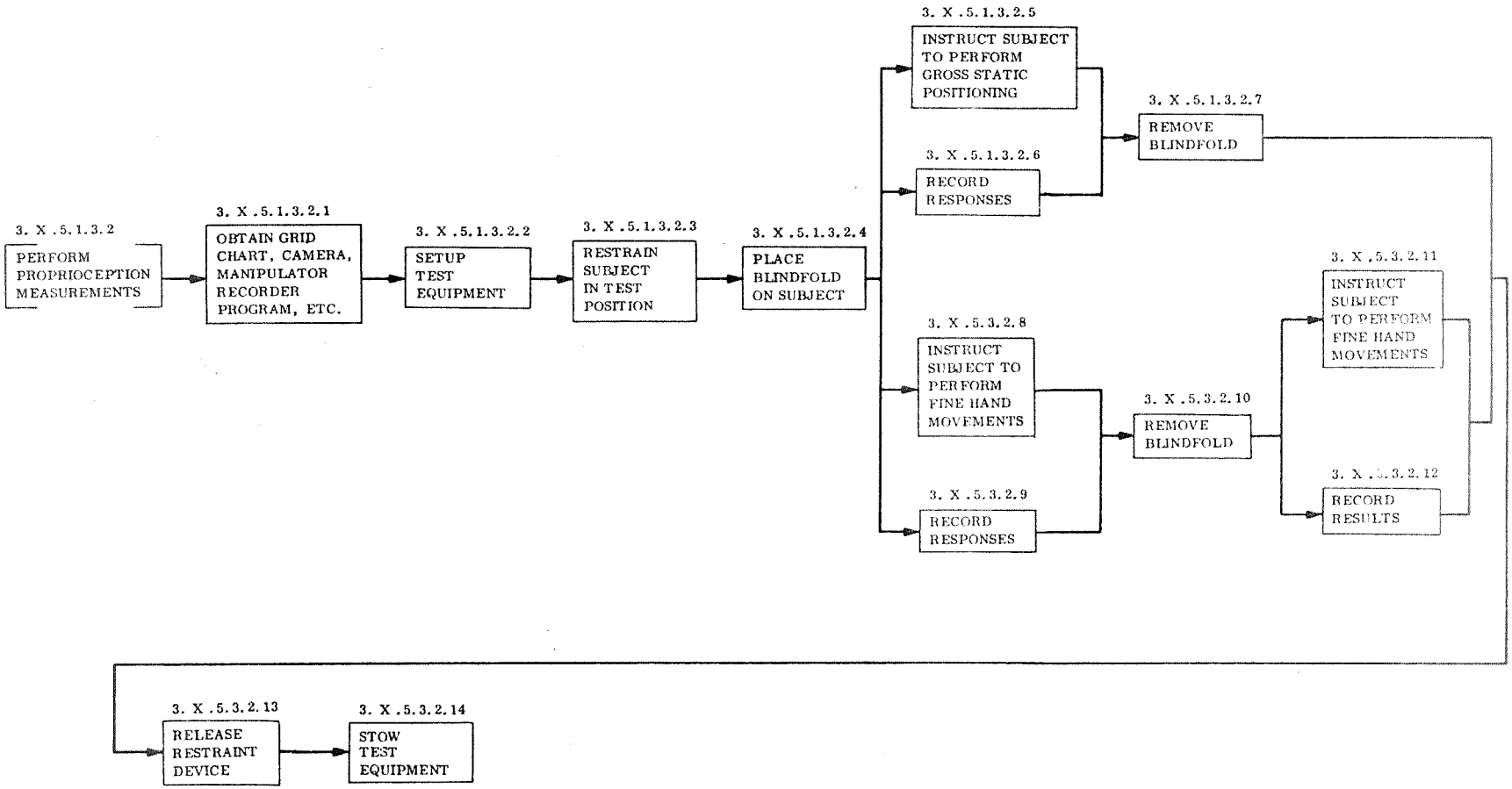

FFBD 3. X. 5. 1. 3. 2 Perform Proprioceptive Measurements

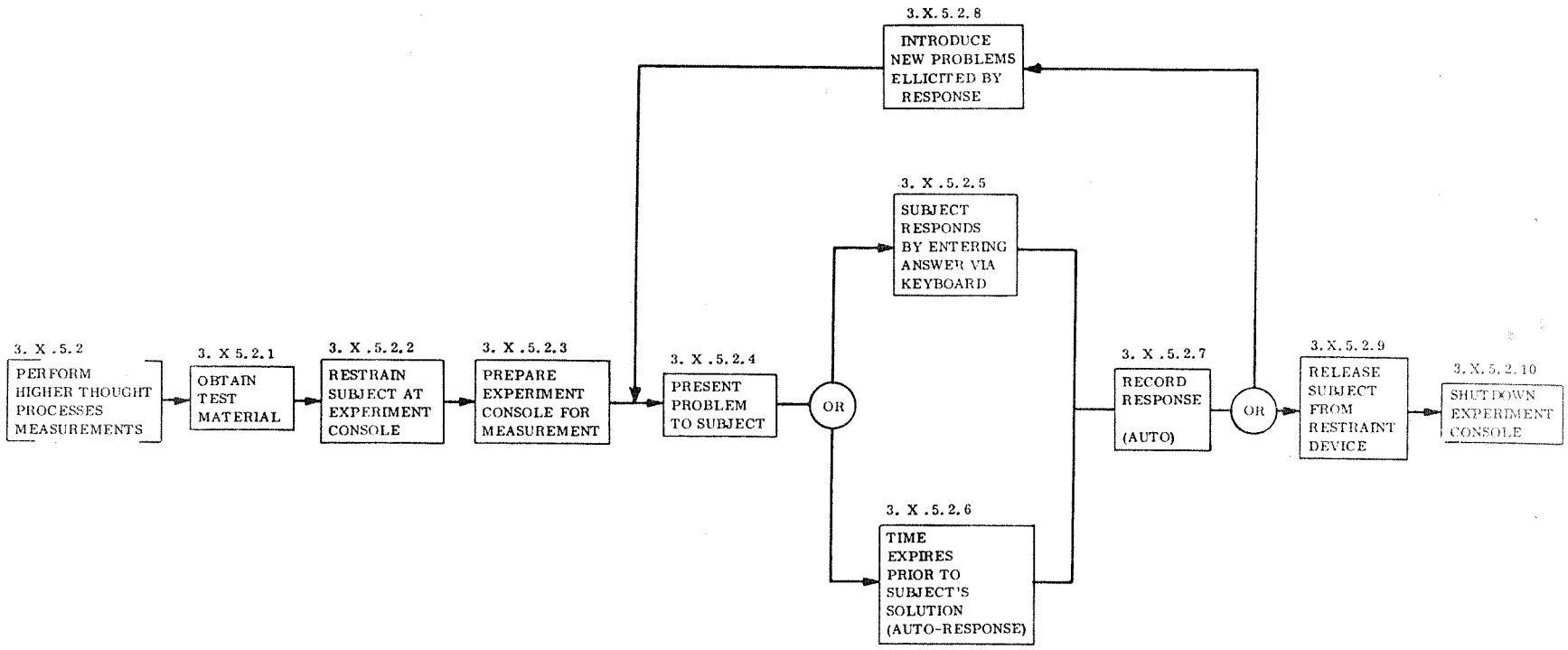

FFBD 3. X. 5. 2 Perform Higher Thought Processes Measurements

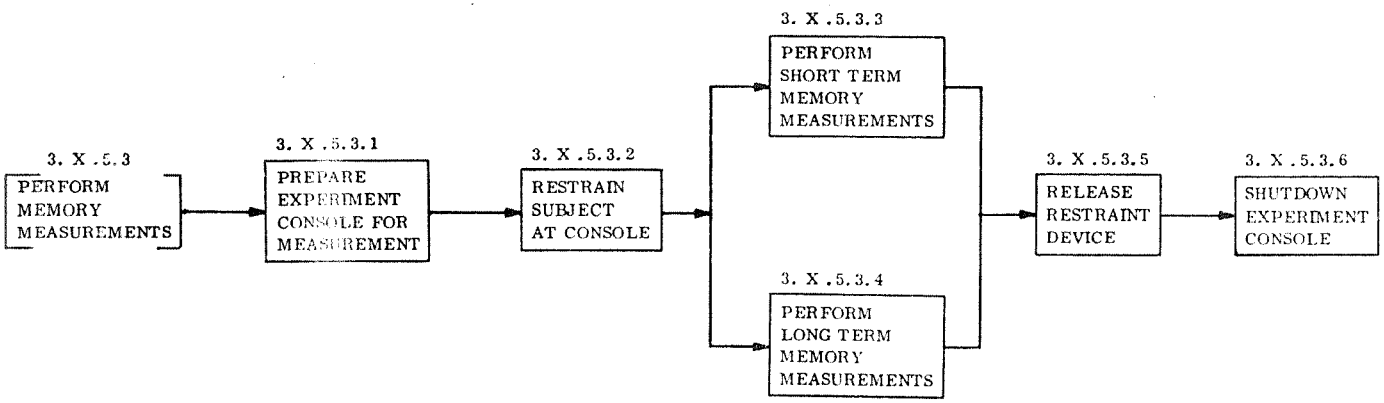

FFBD 3.X.5.3 Perform Memory Measurements

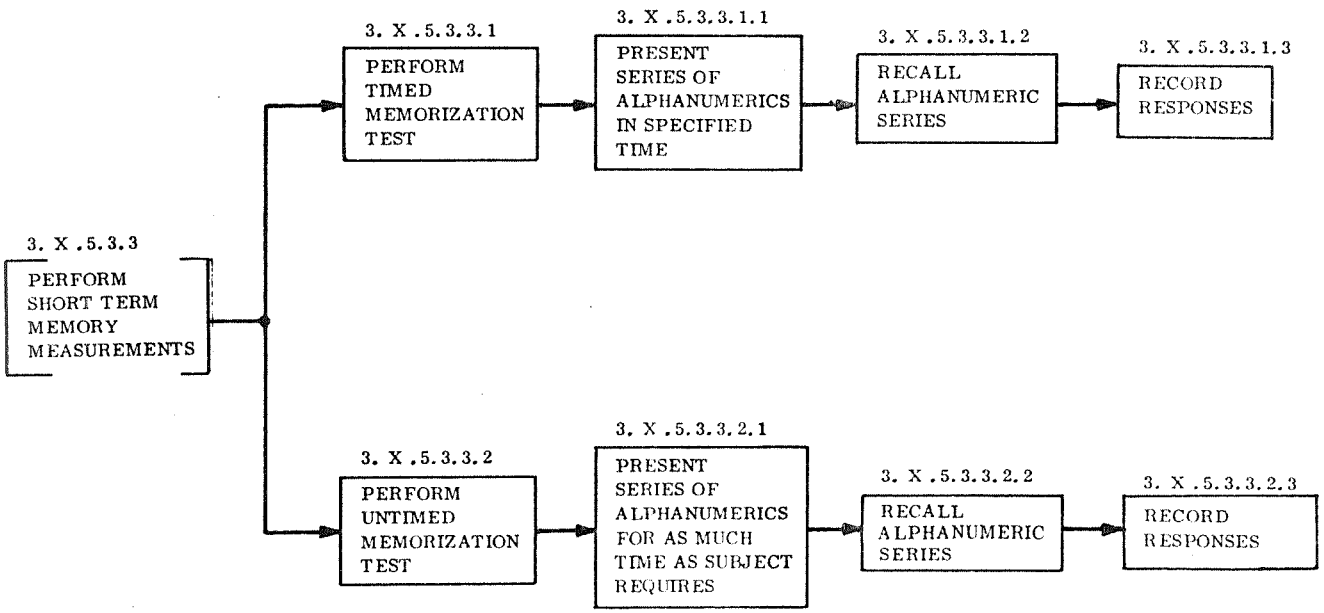

FFBD 3.X.5.3.3 Perform Short-Term Memory Measurements

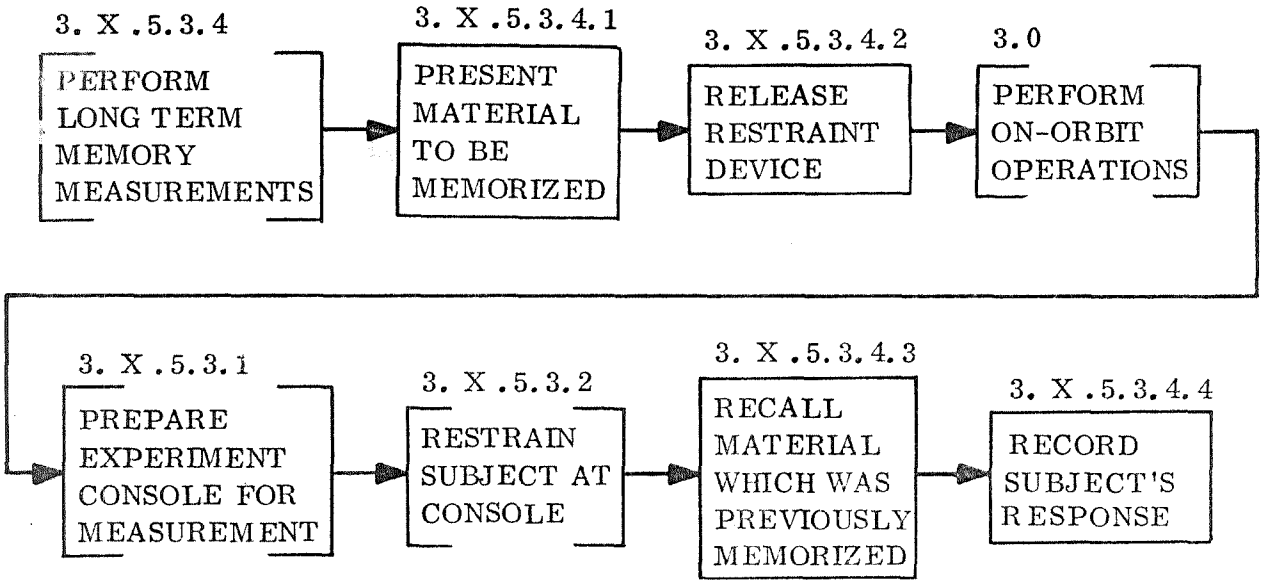

FFBD 3.X.5.3.4 Perform Long-Term Memory Measurements

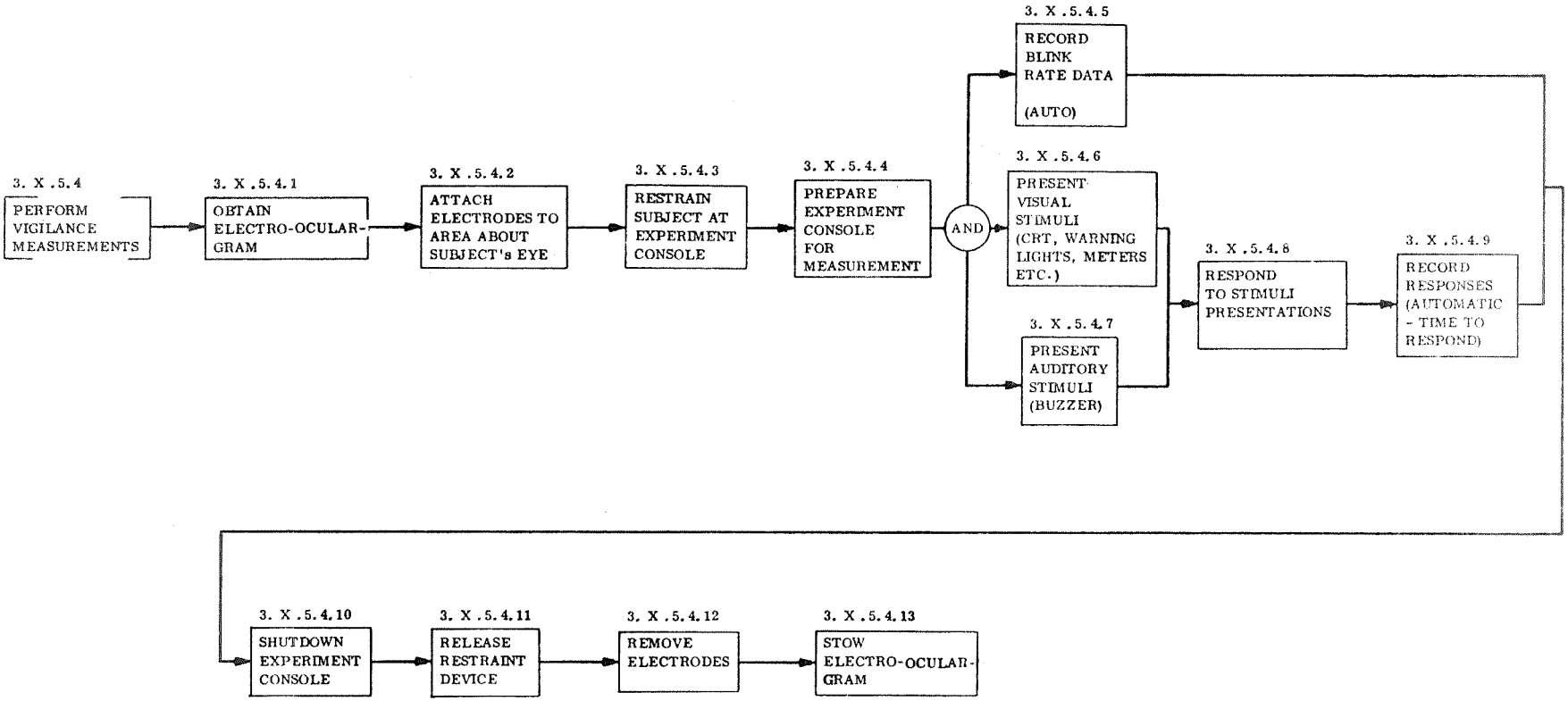

FFBD 3.X.5.4 Perform Vigilance Measurements

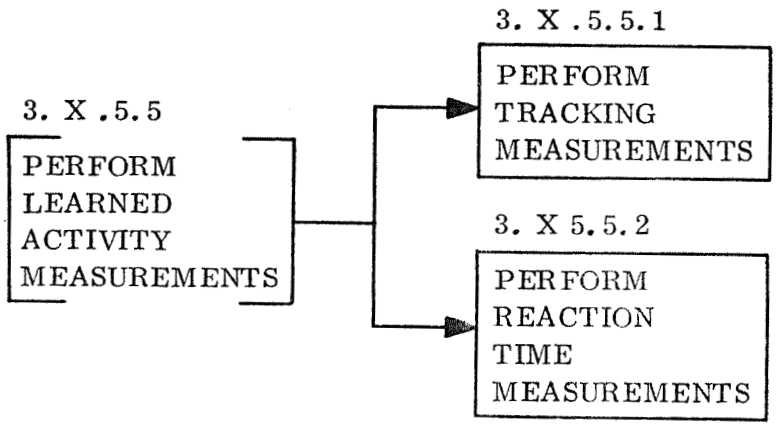

FFBD 3.X.5.5 Perform Learned Activity Measurements

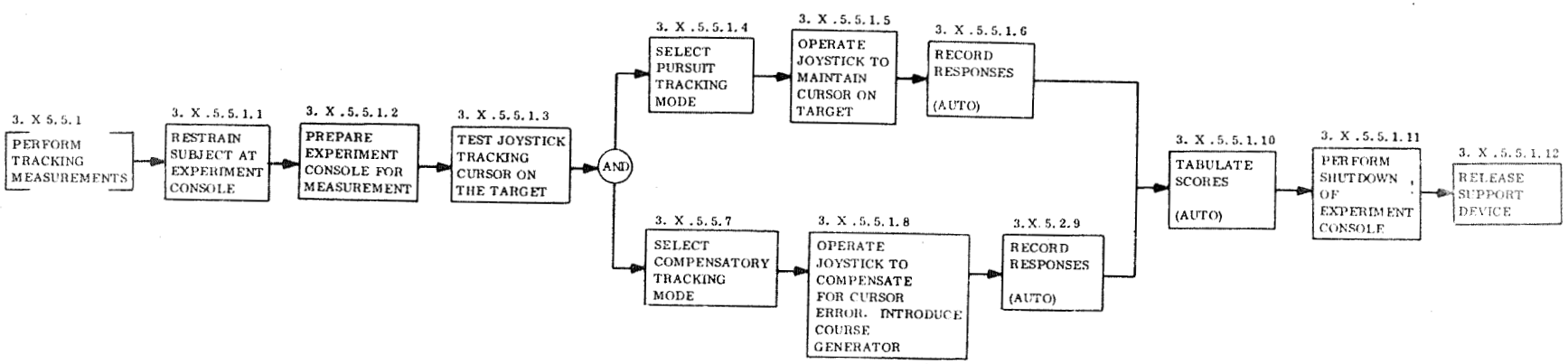

FFBD 3.X.5.5.1 Perform Tracking Measurements

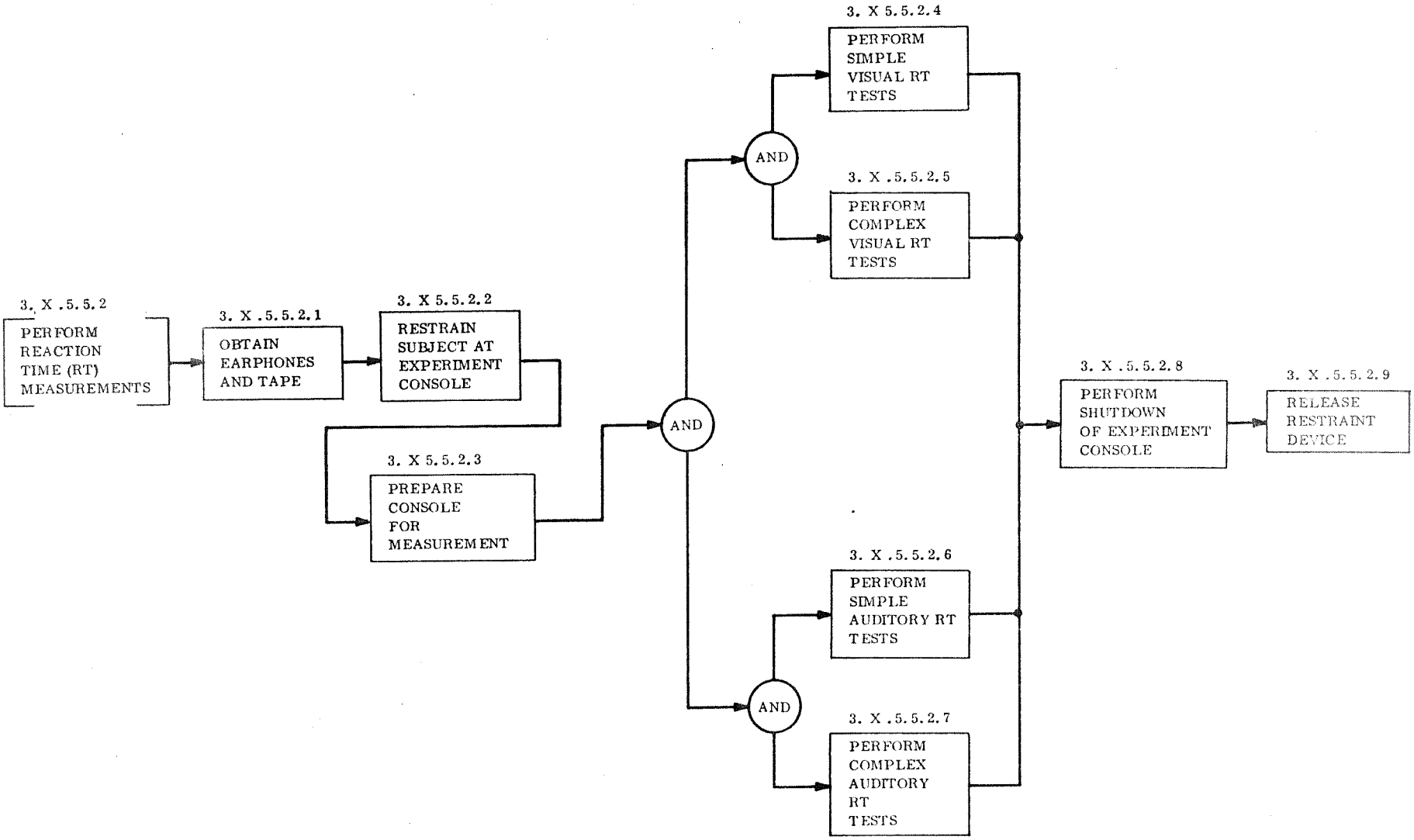

FFBD 3.X.5.5.2 Perform Reaction Time RT Measurements

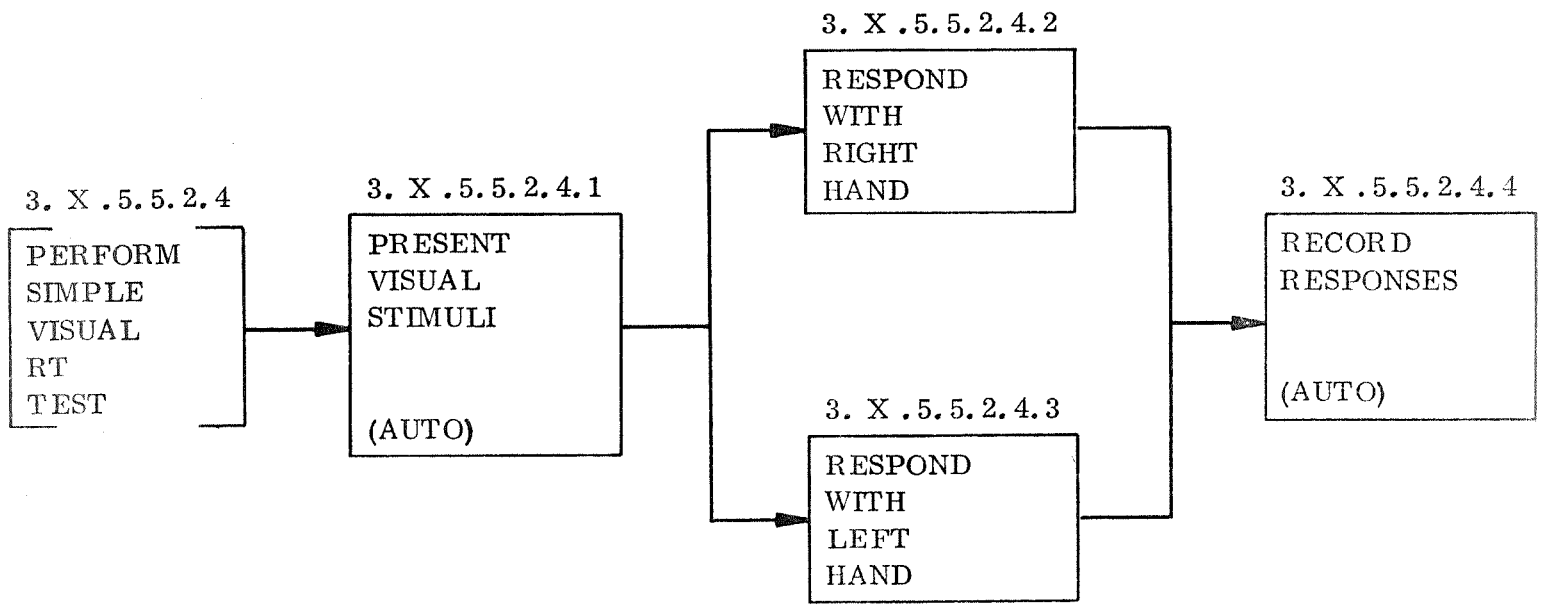

FFBD 3.X.5.5.2.4 Perform Simple Visual RT Tests

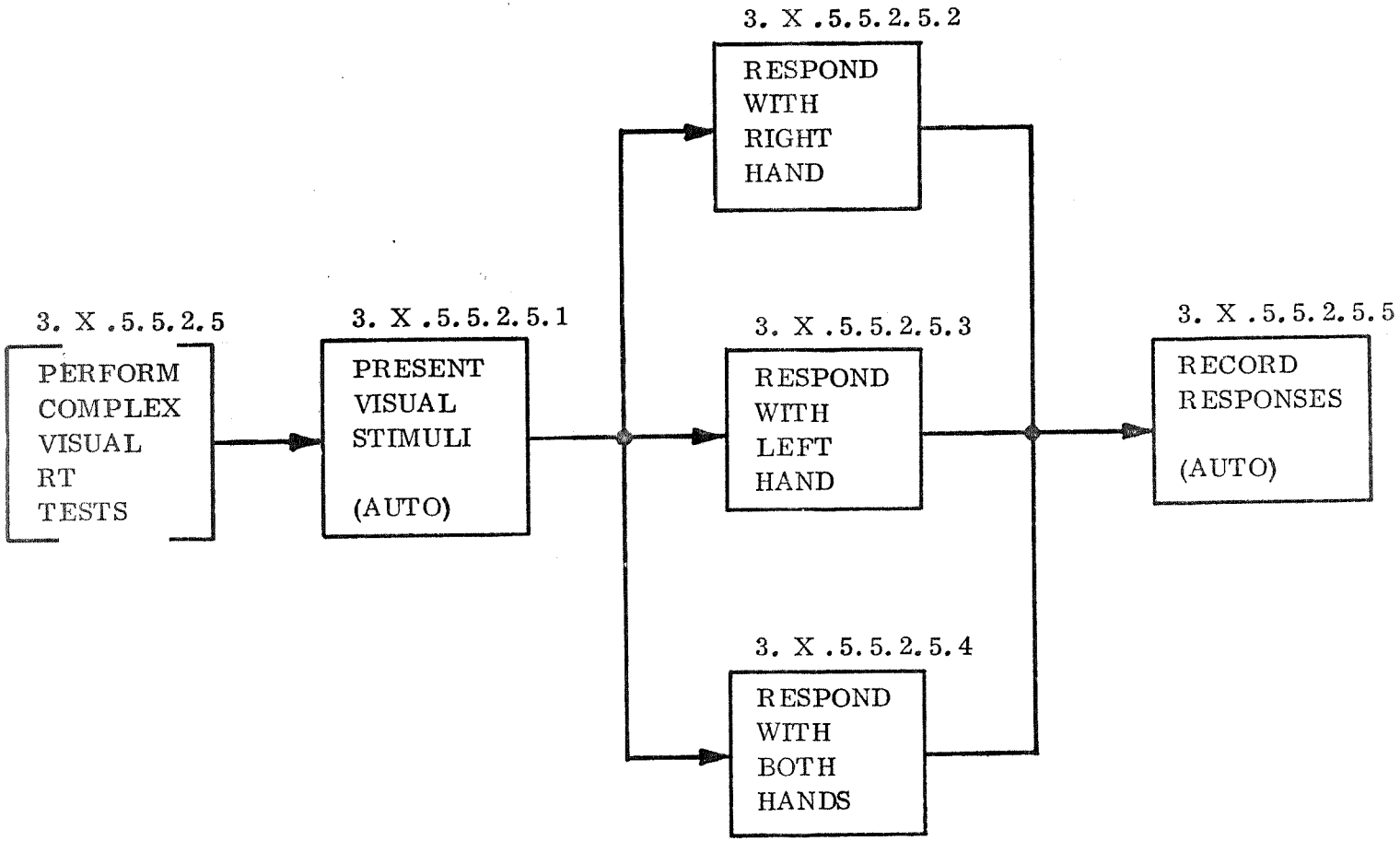

FFBD 3. X. 5. 5. 2. 5 Perform Complex Visual RT Tests

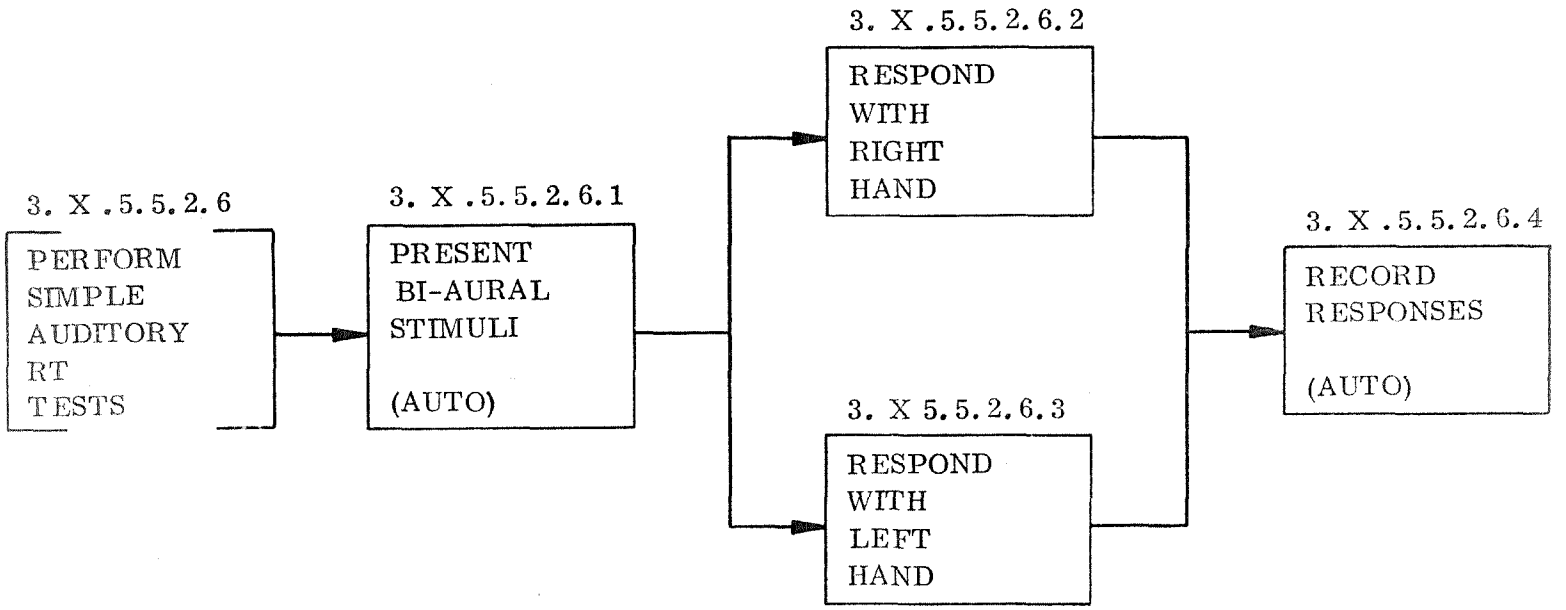

FFBD 3.X.5.5.2.6 Perform Simple Auditory RT Tests

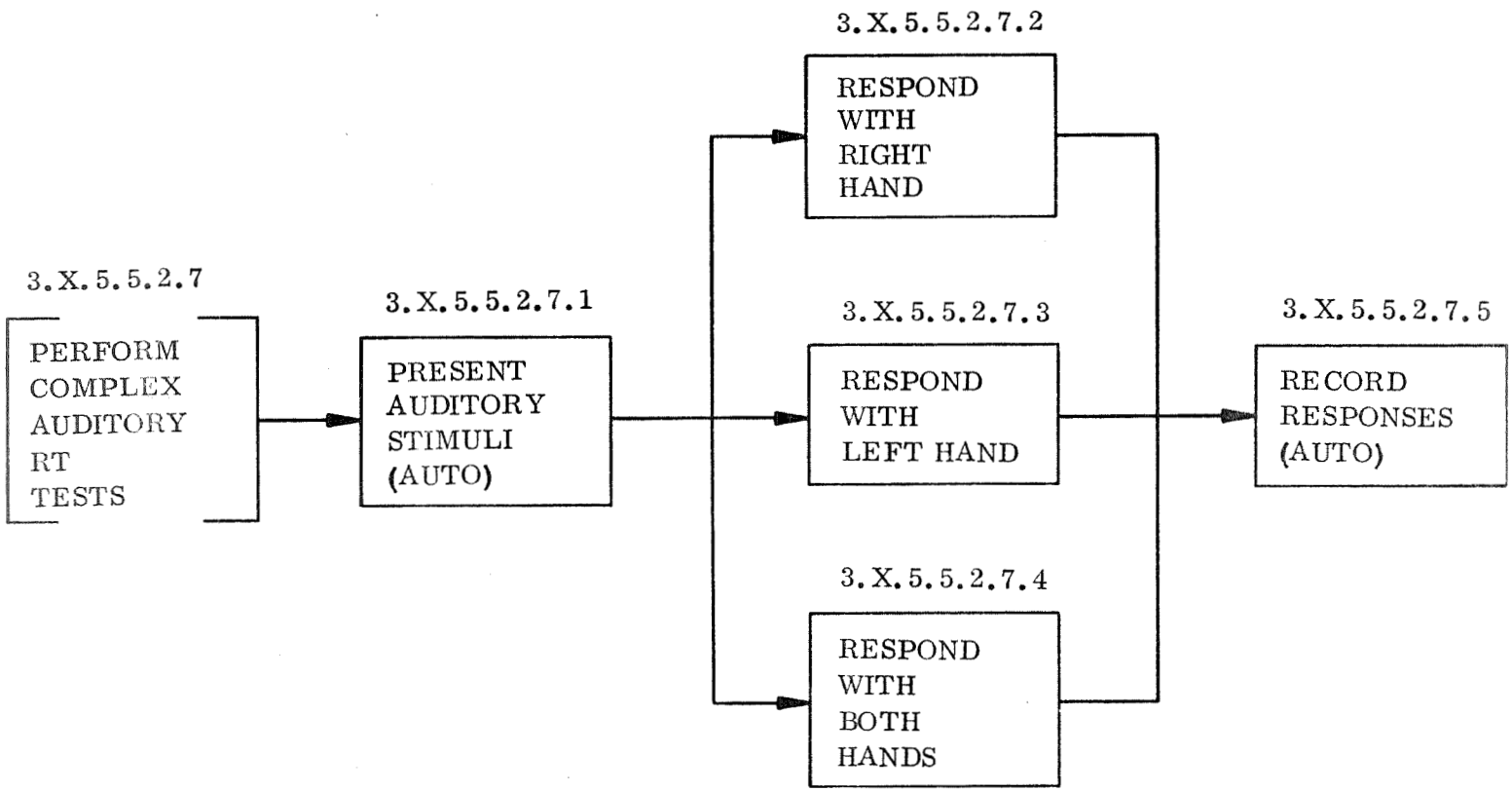

FFBD 3.X.5.5.2.7 Perform Complex Auditory RT Tests

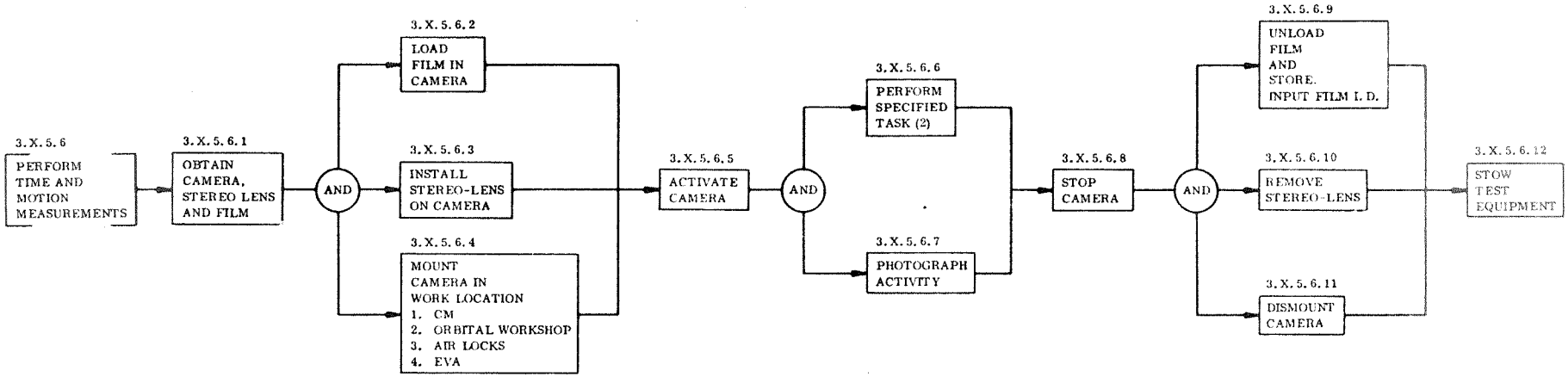

FFBD 3.X.5.6 Perform Time and Motion Measurements

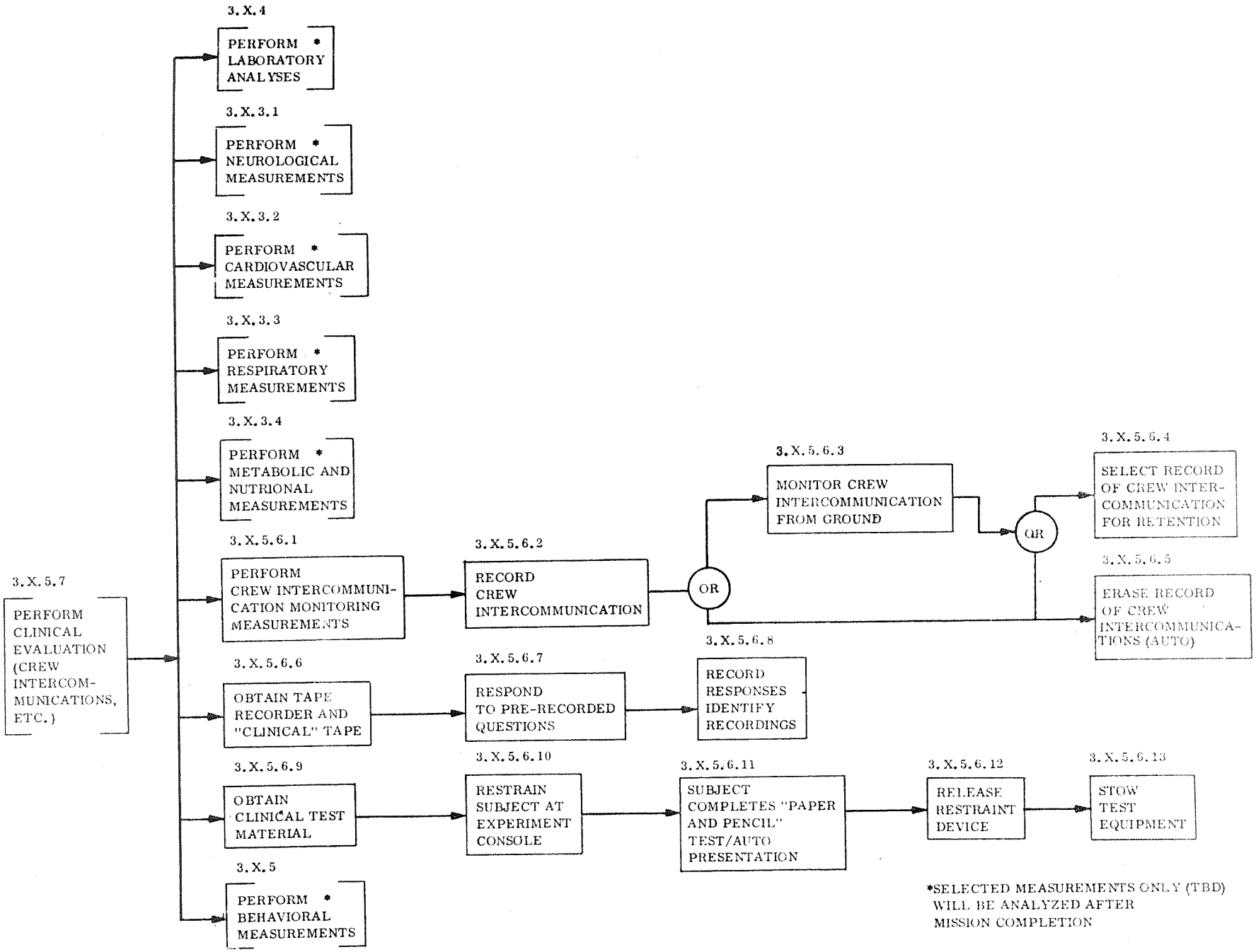

FFBD 3.X.5.7 Perform Clinical Evaluation (Crew Intercommunications, etc.)