DOCUMENT NO. 68SD8010
12 FEBRUARY 1968

INTEGRATED MEDICAL AND BEHAVIORAL LABORATORY MEASUREMENT SYSTEM PHASE B II FINAL REPORT

VOLUME III - SYSTEM CONCEPT AND DESIGN
APPENDIX A
MEASUREMENT SPECIFICATION SHEETS

CONTRACT NASW—1630

PREPARED FOR THE

NATIONAL AERONAUTICS AND SPACE ADMINISTRATION

BY THE

BIOASTRONAUTIC SECTION

SPACE SYSTEMS ORGANIZATION

GENERAL ELECTRIC

MISSILE AND SPACE DIVISION
Valley Forge Space Technology Center
P.O Box 8555 • Philadelphia 1, Penna.

(NASA-CR-151319) INTEGRATED MEDICAL AND BEHAVIORAL LABORATORY MEASUREMENT SYSTEM, PHASE B 2. VOLUME 3: SYSTEM CONCEPT AND DESIGN. APPENDIX A: MEASUREMENT SPECIFICATION SHEETS (General Electric Co.) 00/12

N77-78301

Unclas
29911

NATIONAL AERONAUTICS AND SPACE ADMINISTRATION
WASHINGTON, D.C. 20546

IN REPLY REFER TO: MM(NASw-1630)

21 November 1967

RECEIVED
BIOASTRONAUTICS SECTION
[illegible] 1967
R. W. LAWTON, M. D.
MANAGER

Dr. Richard W. Lawton, Manager
Bioastronautics Section of MOL Department
General Electric Company
P. O. Box 8048
Philadelphia, Pennsylvania

Dear Dr. Lawton:

The enclosed material is forwarded for your utilization in carrying out the objectives of the IMBLMS effort.

1. IMBLMS Measurements to be accommodated.

2. "Apollo Applications Test Requirements," NHB 8080.3, dated 13 October 1967.

3. Organization and Designation of Medical Experiments and Personnel for Medical Experiments Program Beyond Apollo.

4. List of Experiments (3) in Definition.

The NASA measurements list (item one) indicates three categories of measurements, those which are required, those which are not required, and those for which provision is to be made to accommodate the specific requirement should it arise. During the course of the two month Phase B extension, you may wish to suggest that this list be further altered. If this is the case, your recommendations should be included in either your mid-term or final report. You will note that the list is divided into the eight areas of body function to which has been added a ninth area, "Clinical Laboratory Evaluation." This addition was made only for purposes of clarity and does not imply that there are now nine areas of body function to which the IMBLMS should address itself. The specific body function area(s) to which each laboratory determination pertains is indicated in the middle column of Category IX.

Should there be any question concerning any of this material, please contact me without delay.

Sincerely yours,

S. P. Vinograd, M.D., Director
Medical Science and Technology
Space Medicine, Manned Space Flight

Enclosures (4)

TABLE OF CONTENTS

Section			Page
	INTRODUCTION		vii
1	PHYSIOLOGICAL MEASUREMENTS		1
	1.1	Neurological Measurements	3
	1.1.1	Agravic Perception	5
	1.1.2	Ocular Counter-Rolling	6
	1.1.3	Oculogyral Illusion	7
	1.1.4	Visual Task with Head Rotation	8
	1.1.5	Electronystagmogram	9
	1.1.6	Angular Acceleration Threshold	10
	1.1.7	EEG	11
	1.2	Cardiovascular Measurements	13
	1.2.1	VCG/ECG	15
	1.2.2	Phonocardiogram	16
	1.2.3	Cardiac Output	17
	1.2.4	Arterial Blood Pressure	18
	1.2.5	Regional Blood Flow	19
	1.2.6	Peripheral Venous Pressure	20
	1.2.7	Inflight Exercise (Ergometer)	21
	1.2.8	Blood Rheology	22
	1.2.9	Lower Body Negative Pressure (LBNP)	23
	1.2.10	Venous Compliance	24
	1.2.11	Ballistocardiogram	25
	1.3	Respiratory Measurements	27
	1.3.1	Respiratory Rate	29
	1.3.2	Lung Volume	30
	1.3.3	Lung Pressure, Flow, and Volume	31
	1.3.4	Breath by Breath (O_2 and CO_2)	32
	1.3.5	Alveolar to Arterial Gradient (O_2)	33
	1.3.6	O_2 Consumption with Measured Exercise (Closed Circuit)	34
	1.3.7	Ventilation	35
	1.3.8	Diffusion	36
	1.3.9	Arterial O_2 Saturation	37
	1.4	Metabolism and Nutrition	39
	1.4.1	Core Temperature	41
	1.4.2	Body Mass	42
	1.4.3	Muscle Size and Strength	43
	1.4.4	EMG	44
	1.4.5	Energy Metabolism with Various Activity Levels	45

TABLE OF CONTENTS (cont)

Section		Page
2	BEHAVIORAL MEASUREMENTS	47
	2.1 Sensory Test Battery	49
	2.1.1 Visual Sensory Test	51
	2.1.2 Auditory Sensory Test	52
	2.1.3 Proprioceptive Sensory Test	53
	2.1.4 Cutaneous Sensory Test	54
	2.2 Higher Thought Processes	55
	2.3 Memory - Short and Long Term	56
	2.4 Vigilance (Operational Tasks)	57
	2.5 Learned Activity	59
	2.5.1 Learned Activity (Tracking)	61
	2.5.2 Learned Activity (Reaction Time)	62
	2.6 Time and Motion Study	63
	2.7 Clinical Evaluation (Crew Communication, etc.)	64
3	LABORATORY ANALYSIS	65
	3.1 On-Board Measurements	67
	3.1.1 Blood Measurements	69
	3.1.1.1 Whole Blood with no Anticoagulant	71
	3.1.1.2 Whole Blood with any Anticoagulant	72
	3.1.1.3 Oxalated Blood	73
	3.1.1.4 Plasma with any Anticoagulant	74
	3.1.1.5 Heparinized Blood	75
	3.1.1.6 Serum	76
	3.1.1.7 Oxalated Plasma	77
	3.1.2 Urine Measurements	79
	3.1.2.1 Accurate Urine Mass and Volume	81
	3.1.2.2 Routine Urinalysis	82
	3.1.3 Feces Measurement - Accurate Feces Wet Weight	83
	3.1.4 Accurate Food Intake	84
	3.1.5 Accurate Fluid Intake	85

TABLE OF CONTENTS (cont)

Section		Page
3.2	On-Board Sample Collection and Storage	87
3.2.1	Blood Sampling	89
3.2.2	Urine Sampling	90
3.2.3	Feces Sampling	91
3.2.4	Microflora Sampling	92
3.2.5	Sweat Sampling	93

pg. vi Blank, Not Filmed

INTRODUCTION

Measurement specification sheets were generated as work sheets to consolidate the the requirements applicable to each selected measurement. As the list of recommended measurement was modified, and as the measurement techniques were developed, the sheets were continuously modified.

The specification requirements were utilized in developing the system and subsystem concepts, and for identifying the environmental and support requirements for each of the measurements. These measurement specification sheets supplement the system schematic, design constraints, and tradeoff considerations used in designing the IMBLMS hardware.

The specification sheets are grouped in three sections of this appendix:

Section 1 - Physiological Measurements

Section 2 - Behavior Measurements

Section 3 - Laboratory Analysis

These work sheets are essentially hardware-oriented and feature equipment block diagrams showing the hardware chain up to the interface with the Data Acquisition and Distribution Subsystem. Although a considerable number of equipments are common to many physiological and behavioral measurements, an individual sheet was developed for each measurement because the equipment groupings are essentially unique for each measurement. For the laboratory analyses, each sheet was developed for groups of measurements because so many are performed not only with common equipments, but also with identical hardware chains.

Pg. viii Blank & Not filmed

INCLUDE		DELETE
I. NEUROLOGICAL		
Clinical Evaluation (to include reflexes and sensory and motor pathways)		Linear Acceleration Threshold
Agravic Perception of Personal and Extra-Personal Space (Minimum restraint device)		Oculogravic Illusion
Ocular Counter-Rolling	To be done with litter-chair	
Oculogyral Illusion	To be done with litter-chair	
Visual Task with Head Rotation	To be done with litter-chair	
Electronystagmogram	To be done with litter-chair	
Angular Acceleration Threshold	To be done with litter-chair	
EEG		
II. CARDIOVASCULAR		
Clinical Evaluation		Occlusive Cuffs
ECG (Frank Lead System)		
Phonocardiogram		
Cardiac Output - (By impedance if technique verified; by indicator-dilution if necessary)		
Arterial Blood Pressure		
Venous Pressure - Peripheral		
Blood Volume and Fluid Compartments - See Hematology and Metabolism		
Regional Blood Flow - Limb (or Digit) (Distribution of Blood Volume)	(Limb Plethysmography)	
Venous Compliance	(Limb Plethysmography)	
Arteriolar Reactivity	(Limb Plethysmography)	

INCLUDE	DELETE
Arterial Pulse Contour	
In-Flight Exercise	
LBNP	
Elastic Leotards	
PROVIDE FOR INSTALLATION IF REQUIRED:	
Ballistocardiogram	
Carotid Body Stimulation	
Thoracic Blood Flow	
Venous Pressure - Central (By Catheter if Necessary)	

III. RESPIRATORY

Clinical Evaluation

Respiratory Rate

Lung Volumes Including Residual Volume (For total lung capacity, and mixing efficiency)

Pressure, Flow, and Volume (Simultaneously) (Airway Resistance)

Compliance - Lung or Total (Lung if can)

INCLUDE	DELETE
Distribution of Blood Flow and Gas in Lungs	
Includes: Capillary Blood O_2, CO_2, and pH	
Breath by Breath O_2 Consumption and CO_2 Production	
O_2 Consumption - With Measured Exercise	
Alveolar to Arterial Gradient Breathing Air and 100% Oxygen	
Diffusion Capacity (if suitable technique) (Look into O_2 ^{18} method - Dr. Richard W. Hyde, U. of Pennsylvania, Dept. of Physiology)	
IV. METABOLISM AND NUTRITION	
Clinical Evaluation	Lean Body Mass In-flight (Unless Suitable Technique Known)
Energy Metabolism (Continuous O_2 and CO_2 Analysis with Breath by Breath Sensitivity) with Various Levels of Activity	GI Cytology
Oral Temperature	Fat Tolerance
Skin Temperature	BSP Test
Caloric Intake	
Body Mass In-Flight (Thornton Technique - GFE)	
[Lean Body Mass Pre- and Post-Flight] - (Not a Part of IMBLMS)	
Muscle Size and Strength	
Balance Studies - Fluid, including Sweat	
- Nitrogen (See Area IX)	
- Mineral (See Area IX)	
- Electrolyte (See Area IX)	

INCLUDE	DELETE
Provide for: Accurate Urine Volume Measurement	
Accurate Wet Weight of Feces	
Return of Total Dry Stool	
Accurate Fluid Intake Measurement	
Return of all Food Packages Marked by Date, Time and Individual	
Sweat Measurement and Sample Return	
Total Body Water (Breatholator or Deuterium)	
± Clinical Laboratory Evaluations - See List Under Area IX	
PROVIDE FOR INSTALLATION IF REQUIRED:	
EMG	Thermal Comfort Zone
Bone Densitometry - Isotope Technique	
Gastric Pressure and pH (Endoradiosonde)	
Plasma Volume On-Board	
Mineral Metabolism by Isotopic Techniques	

V. ENDOCRINOLOGY

Clinical Evaluation	Hypothalamic Activity
± Clinical Laboratory Evaluations - See List	Germ Cell Examination
	Testicular Biopsy

INCLUDE	DELETE
VI. HEMATOLOGY	
Clinical Evaluation	Bone Marrow Biopsy
Rumple Leede	
Blood Volume and Fluid Compartment Plasma Volume - RHISA RBC Mass - DFP^{32} or Cr^{51} Total Body Water	
RBC Survival - DFP^{32}	
Clinical Laboratory Evaluations - See List	
VII. MICROBIOLOGY AND IMMUNOLOGY	
Clinical Evaluation	
Body Microflora (Bacterial, Viral, and Fungal)	
Environmental Culturing (Bacterial, Viral, and Fungal)	
Clinical Laboratory Evaluations - See List	
VIII. BEHAVIORAL EFFECTS	
Clinical Evaluation	Learning Testing
Sensory Test Battery (See Also Neurology)	
Perceptual Evaluation (If validity of Tests Established)	
Higher Thought Processes	
Memory - Short and Long Term	
Vigilance (By measurement of operational tasks)	

INCLUDE

Learned Activity (Tracking and Reaction Time)

Recording of Crew Intercommunication with Automatic Erase in 15 Minutes if not Sampled

Time and Motion Study

DELETE

IX. CLINICAL LABORATORY EVALUATIONS

	Reference Area	
Creatine and Creatinine - Urinary	IV	Lactic Acid - Blood IV
Urinary and Fecal: N, Ca, P, Na, K, Cl, and Mg	IV	Amylase - Serum IV
Mucoproteins - Urinary (Pi)**	IV	Manganese - Urinary IV
Pyrophosphates - Urinary (Pi)**	IV	NPN - IV
Hydroxyprolines - Urinary (probably Pi)**	IV	Zinc - Urinary IV
Total Amino Acids - Urinary (Pi)**	IV	PBI - V
Urinary: Osmolality, Color, Sp Gr, pH, Glucose, Protein, Bile, Blood, and Microscopic (i.e., Routine Urinalysis - Inflight)	IV	Butinol Extractable Iodine (BEI) - V
Plasma Volume (probably P&P)*	IV & VI	Platelet Count - VI
Electrolytes - Serum	IV	WBC Phagocytic Activity - VI
Total Protein - Plasma	IV	PTC (Plasma Thromboplastic Component) - VI
Protein Electrophoresis - Plasma	IV	
Glucose - Blood (Inflight)	IV	AHG (Antihemophilic Globulin) - VI
Ca and PO_4 - Serum (probably Pi)	IV	
Bilirubin - Serum		

*p&p - pre & post-flight
**Pi - Post-flight evaluation of inflight samples

INCLUDE	Reference Area	DELETE
Cholesterol - Serum (probably Pi)	IV	
BUN (probably Pi)		
Uric Acid - Blood (Pi)	IV	
Alkaline Phosphatase - Serum (probably Pi)		
pH, pO_2, and pCO_2 - Blood	III & IV	
Bicarbonate - Blood	III & IV	
CPK (Creatine Phosphokinase - Serum (Pi)	IV	
LDH and LDH Isoenzymes - Serum (On-board if have electrophoresis)	IV	
SGOT - Serum	IV	
SGPT - Serum	IV	
Aldosterone - Urine (Pi)	IV & V	
ADH - Urinary and Serum (Pi)	V	
ACTH - Blood (Pi)	V	
Serum Free Thyroxin (T_4 - Serum) (If in-flight, will require thin layer chromatography)	V	
TBPA (Probably Pi)	V	
17-hydroxycorticosteroids - Urine and blood (Pi)	V	
17-ketosteroids - Urine (Pi)	V	
VMA - Urine (Probably Pi)	V	
Metanephrines - Urine (Pi)	II & V	
Catechols - Urine (Pi)	II & V	
Histamine - Blood and Urine (Pi)	II & V	

INCLUDE	Reference Area	DELETE
5 Hydroxy indolacetic acid - Urinary (Probably Pi)	V	
Blood Cell Morphology (RBC, WBC, and Diff - Smear will suffice for platelets)	VI	
Reticulocyte Count	VI	
Hematocrit	VI	
Hemoglobin	VI	
RBC Fragility (Osmotic)	VI	
RBC Mass and Survival	VI	
Bleeding Time	VI	
Clotting Time	VI	
Prothrombin Consumption	VI	
Clot Retraction	VI	
Lymphocyte Karotyping (probably Pi)	VI	
WBC Mobilization (Rebuck Technique)	VI	
Immunoglobulins and Fibrinogen Transferins Hemoglobin Methemoglobin	VI & VII on board if have electrophoresis	
RBC Enzyme Studies (Pi) (ref. Governing Protocol M110)	VI	
Complement Titration	VII	
Antibody Titration	VII	
PROVIDE FOR INCLUSION IF REQUIRED:		
Sulfate - Urinary	IV	
TSH (Pi)	V	
Growth Hormone (Pi)	V	
Thyroid Bound Globulin (T_3) (Pi)	V	

INCLUDE		REFERENCE AREA	DELETE
	PROVIDE FOR INCLUSION IF REQUIRED (Cont'd):		
	Parathyroid Hormone (Radio-immune Technique - Serum) (Pi)	V	
	Parathyroid Hormone - Urinary (Nelson Technique -(Pi)	V	
	Calcitonin - Serum (Pi)	V	
	Insulin Assay (Pi)	V	
	Glucagon Assay (Pi)	V	
	Serotonin (5 HIAA) - Blood (Pi)	V	
	Platelet Adhesiveness	VI	
	Fibrinolytic Activity	VI	
	Blood Rheology	VI	
	Blood Lipids	VI	

SECTION 1

PHYSIOLOGICAL MEASUREMENTS

1.1 Neurological Measurements

MEASUREMENT SPECIFICATION NO. 1.1.1

1. Measurement Name: Agravic Perception

2. Purpose: Study Non-Visual Spatial Orientation

3. Recommended Technique: Rod and Sphere (R&S) Device

4. Measurement Function Flow Diagram:

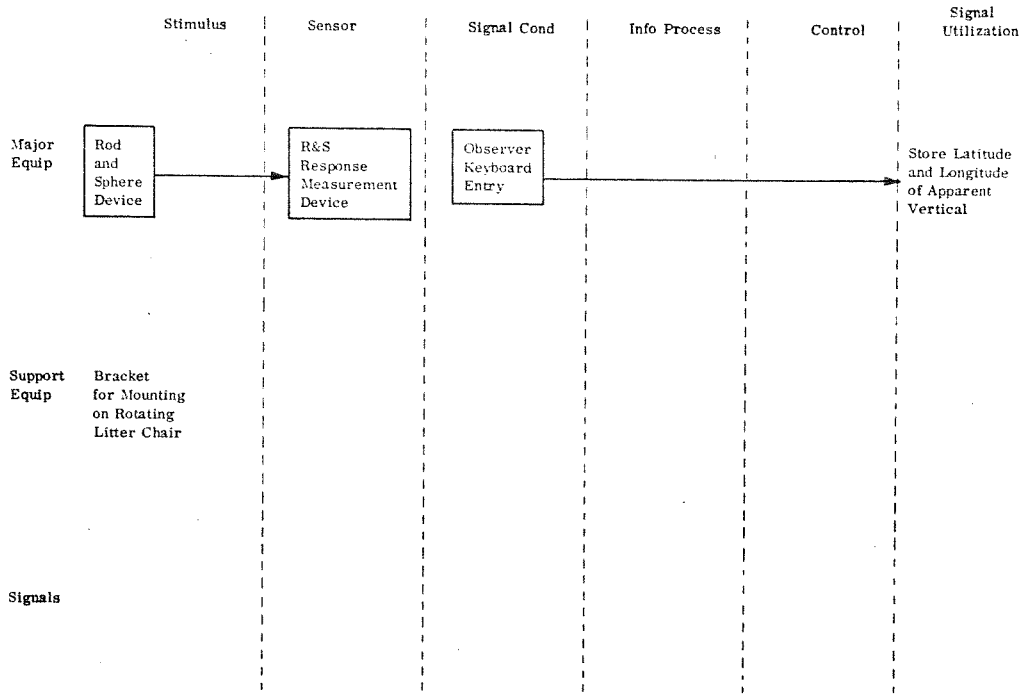

Notes:

5. Input Signal Characteristics (Electrical Analogue, Discrete Data Entry, Logbook, Other?):
   Voltage- NA
   Frequency- NA
   Critical Info In Signal- NA
   Waveform NA

6. Stimuli and Calibration Requirements: None

7. On-Board Output Characteristics:
   Display-
   Voltage-
   Accuracy-
   Resolution-
   Repeatability-
   } None
   Playback Required- No
   Comparison Required (with what)- No
   Processing or Computations - No
   Telemetry No
   Storage- Yes

8. Ground Output Characteristics:
   Real Time- No
   Near Real Time- No
   Delayed (Including Physical Return)- Yes
   Readout Format- Alphanumeric

9. Identify Advanced Evaluation Techniques which May Impose Change in Processing: TBD

10. Support Requirements:
    GFE- Litter Chair
    Electrical- Yes
    Pneumatic- No
    Thermal- No
    Other (Specify)- No

11. Environmental Data Requirements: Check for Normal Ambient
    pO_2 ___ pCO_2 ___ pH_2O ___ pN_2 ___ pTrace ___ Temp ___ "g" ___ Other ___

12. Estimated Time to Perform Measurement: 10 Min

13. Estimated Time to Set Up and Secure Measurement: 10 Min

14. Estimated Measurement Frequency: 1/Man/10 Days

MEASUREMENT SPECIFICATION NO. 1.1.2

1. Measurement Name: Ocular Counter - Rolling

2. Purpose: Study Effects of Zero-G on Otoliths (See Note)

3. Recommended Technique: Litter Chair and Cinematography of Natural Landmarks of Iris.

4. Measurement Function Flow Diagram:

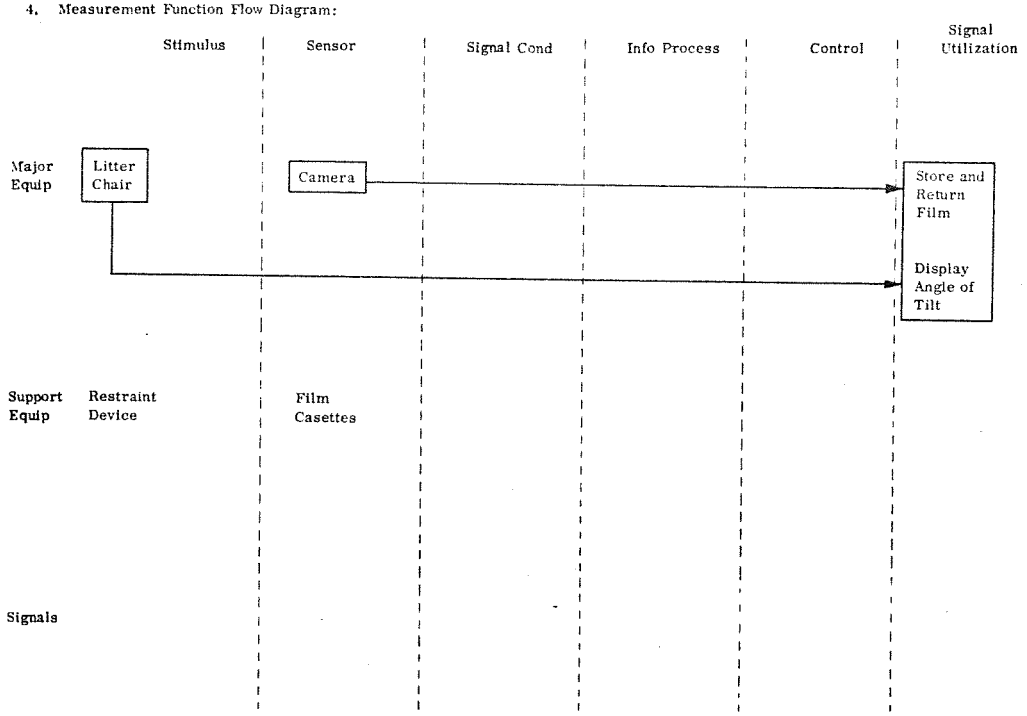

Notes: While the concept of "TILT" per se is inappropriate for the 0G Environment; this measure is included on the basis of demonstrating the presence or absence of a counter-rolling response to physical displacement of the crew member.

5. Input Signal Characteristics (Electrical Analogue, Discrete Data Entry, Logbook, Other?):
   Voltage- NA
   Frequency- NA
   Waveform NA
   Critical Info In Signal- Photo Content Displaying Rotation of the Eye

6. Stimuli and Calibration Requirements: Constancy of a Normal Referent

7. On-Board Output Characteristics:
   Display-
   Voltage-
   Accuracy-
   Resolution-
   Repeatability- } NA
   Playback Required-
   Comparison Required (with what)-
   Processing or Computations -
   Telemetry
   Storage- } NA

8. Ground Output Characteristics:
   Real Time-
   Near Real Time- } NA
   Delayed (Including Physical Return)- Yes
   Readout Format- NA

9. Identify Advanced Evaluation Techniques which May Impose Change in Processing:

10. Support Requirements:
    GFE- Litter Chair
    Electrical- Yes
    Pneumatic- No
    Thermal- No
    Other (Specify)- Photo?

11. Environmental Data Requirements: Check of Normal Ambience
    pO_2 ___ pCO_2 ___ pH_2O ___ pN_2 ___ pTrace ___ Temp ___ "g" ___ Other ___

12. Estimated Time to Perform Measurement: 5 Min

13. Estimated Time to Set Up and Secure Measurement: 25 Min

14. Estimated Measurement Frequency: 1/Man/10 Days

MEASUREMENT SPECIFICATION NO. 1.1.3

1. Measurement Name: Oculogyral Illusion

2. Purpose: Measure of Vestibular Function

3. Recommended Technique: Otolith Test Goggle with Subjective Response

4. Measurement Function Flow Diagram:

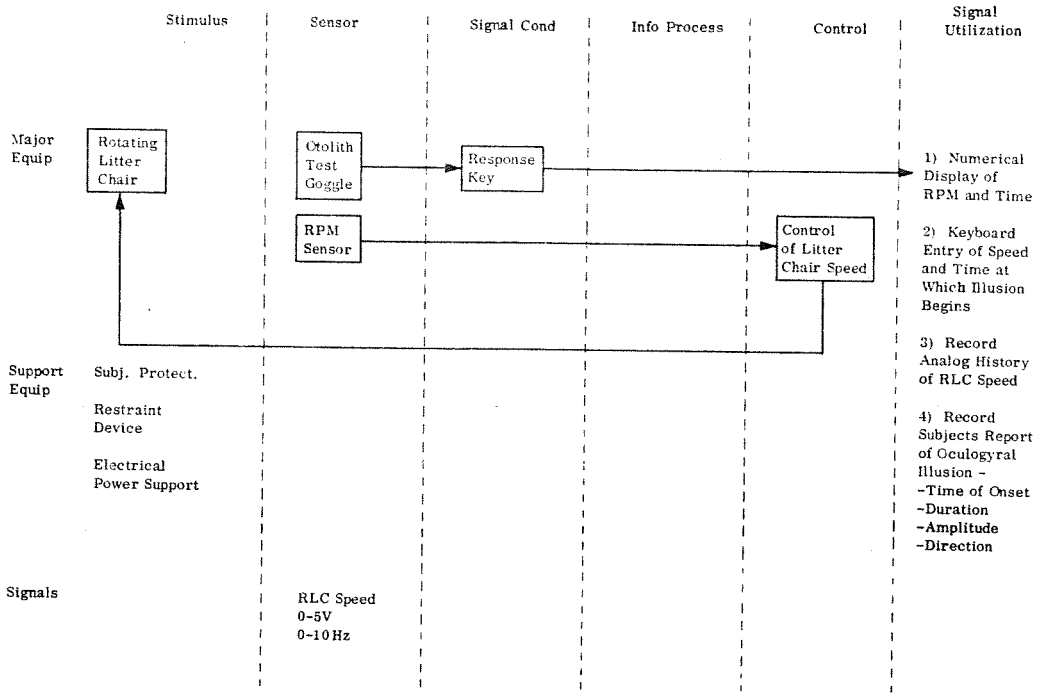

Notes:

5. Input Signal Characteristics (Electrical Analogue, Discrete Data Entry, Logbook, Other?):
   Voltage- NA
   Frequency- NA
   Critical Info In Signal- RPM and Time
   Waveform NA

6. Stimuli and Calibration Requirements: See Item 4

7. On-Board Output Characteristics: See Item 4
   Display-
   Voltage-
   Accuracy- TBD (GFE)
   Resolution- } TBD
   Repeatability- }
   Playback Required- No
   Comparison Required (with what)- No
   Processing or Computations - No
   Telemetry No
   Storage- Yes

8. Ground Output Characteristics:
   Real Time- No
   Near Real Time- No
   Delayed (Including Physical Return)- X
   Readout Format- Alphanumeric and Mag Tape

9. Identify Advanced Evaluation Techniques which May Impose Change in Processing: None

10. Support Requirements:
    GFE-
    Electrical- Yes
    Pneumatic- No
    Thermal- No
    Other (Specify)- No

11. Environmental Data Requirements: Check for Normal Ambient
    pO_2____ pCO_2____ pH_2O____ pN_2____ pTrace____ Temp ____ "g" ____ Other ____

12. Estimated Time to Perform Measurement: 5 Min

13. Estimated Time to Set Up and Secure Measurement: 20 Min

14. Estimated Measurement Frequency: 1/Man/10 Days

MEASUREMENT SPECIFICATION NO. 1.1.1

1. Measurement Name: Visual Task with Head Rotation

2. Purpose: Measure of Vestibular Function

3. Recommended Technique: Performance of Prescribed Task with Rotation

4. Measurement Function Flow Diagram:

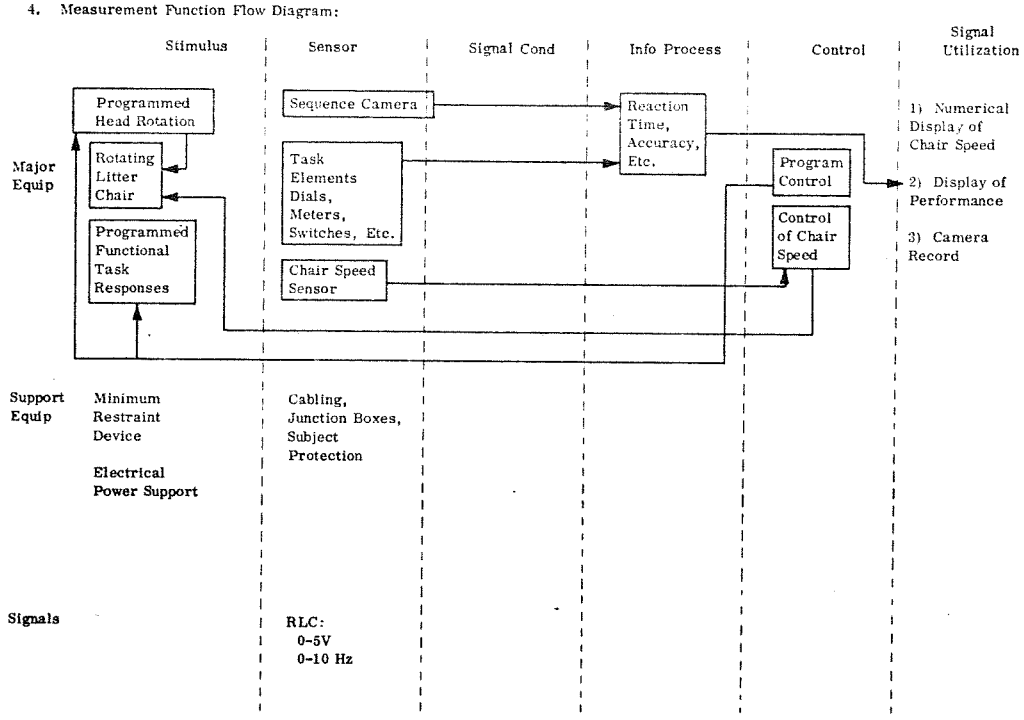

Notes:

5. Input Signal Characteristics (Electrical Analogue, Discrete Data Entry, Logbook, Other ?): Yes
   Voltage- NA
   Waveform NA
   Frequency- NA
   Critical Info In Signal- Parameters of Performance and Speed of Rotation.

6. Stimuli and Calibration Requirements: See Item 4

7. On-Board Output Characteristics: See Item 4 (Discrete Outputs for Time and Error Rate)
   Display-
   Voltage-
   Accuracy- } TBD (GFE)
   Resolution- }
   Repeatability-
   Playback Required- No
   Comparison Required (with what)- No
   Processing or Computations - No
   Telemetry No
   Storage- Yes

8. Ground Output Characteristics:
   Real Time- No
   Near Real Time- No
   Delayed (Including Physical Return)- Yes
   Readout Format- Cinematography

9. Identify Advanced Evaluation Techniques which May Impose Change in Processing:
   Performance Parameters Depend on Software.

10. Support Requirements:
    GFE-
    Electrical- Yes
    Pneumatic- No
    Thermal- No
    Other (Specify)- Restraint

11. Environmental Data Requirements: Check of Normal Ambient.
    pO_2____ pCO_2____ pH_2O____ pN_2____ pTrace____ Temp ____ "g" ____ Other ____

12. Estimated Time to Perform Measurement: 10 Min

13. Estimated Time to Set Up and Secure Measurement: 20 Min

14. Estimated Measurement Frequency: 1/Man/10 Days

4

MEASUREMENT SPECIFICATION NO. 1.1.5

1. Measurement Name: Electronystagmogram

2. Purpose: Study of Vestibular Function

3. Recommended Technique: Bio-Potential Measurement

4. Measurement Function Flow Diagram:

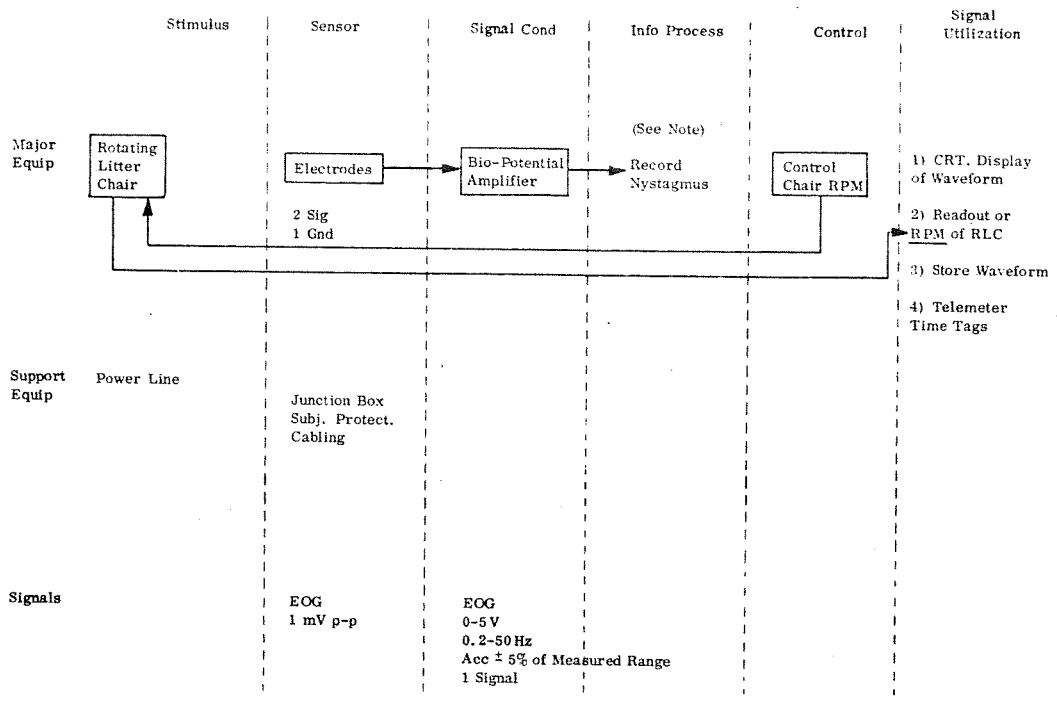

Notes: Data taken in regard to duration, amplitude of response.

5. Input Signal Characteristics (Electrical Analogue, Discrete Data Entry, Logbook, Other ?):
   Voltage- 1 mV p-p
   Frequency- 0.2 - 50 Hz
   Critical Info In Signal- Rate at Nystagmus Duration
   Waveform

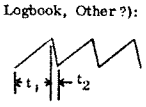

6. Stimuli and Calibration Requirements: See Item 4

7. On-Board Output Characteristics:
   Display-
   Voltage- } See Item 4
   Accuracy-
   Resolution- TBD
   Repeatability- TBD
   Playback Required- No
   Comparison Required (with what)- No
   Processing or Computations - Yes
   Telemetry Yes
   Storage- Yes

8. Ground Output Characteristics:
   Real Time- No
   Near Real Time- No
   Delayed (Including Physical Return)- Yes
   Readout Format- Mag Tape, Analog

9. Identify Advanced Evaluation Techniques which May Impose Change in Processing: None

10. Support Requirements:
    GFE- Litter Chair
    Electrical- Yes
    Pneumatic- No
    Thermal- No
    Other (Specify)- Mechanical; Crew Restraint

11. Environmental Data Requirements: Check for Normal Ambient
    pO_2 ___ pCO_2 ___ pH_2O ___ pN_2 ___ pTrace ___ Temp ___ "g" ___ Other ___

12. Estimated Time to Perform Measurement: 5 Min

13. Estimated Time to Set Up and Secure Measurement: 15 Min

14. Estimated Measurement Frequency: 1/Man/10 Days

MEASUREMENT SPECIFICATION NO. 1.1.6

1. Measurement Name: Angular Acceleration Threshold

2. Purpose: Measure of Vestibular Function

3. Recommended Technique: Rotating Litter Chair

4. Measurement Function Flow Diagram:

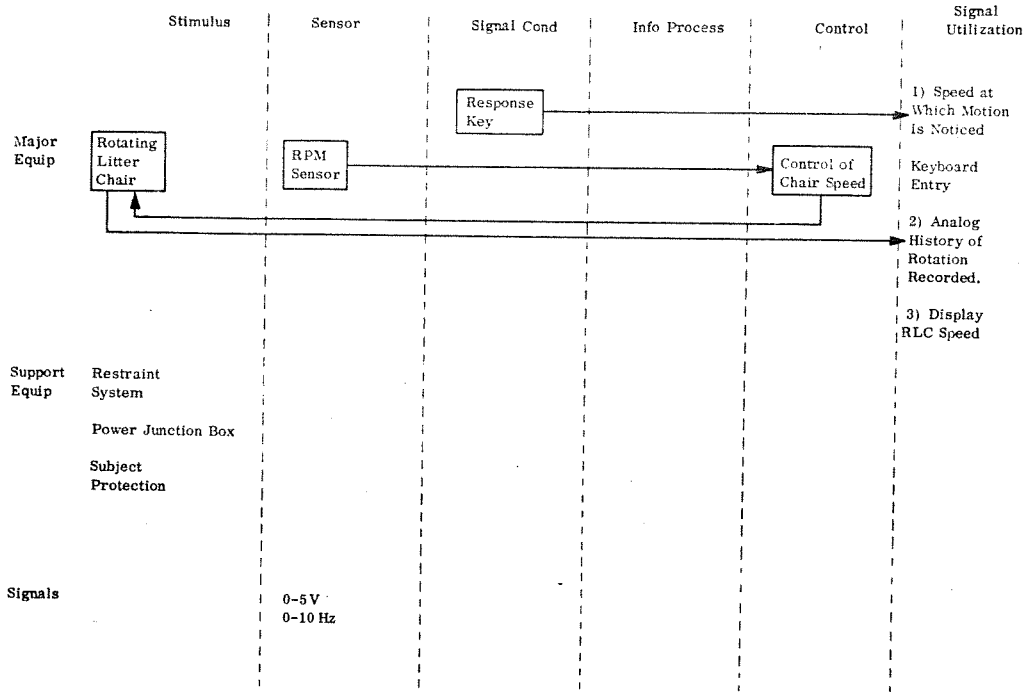

Notes:

5. Input Signal Characteristics (Electrical Analogue, Discrete Data Entry, Logbook, Other ?):
   Voltage- } NA
   Frequency- }
   Critical Info In Signal- Motion Noticed
   Waveform NA

6. Stimuli and Calibration Requirements: See Item 4

7. On-Board Output Characteristics: See Item 4
   Display- }
   Voltage- } See Item 4
   Accuracy- TBD (GFE)
   Resolution- TBD
   Repeatability-
   Playback Required- No
   Comparison Required (with what)- No
   Processing or Computations - No
   Telemetry -No
   Storage- Yes

8. Ground Output Characteristics:
   Real Time- No
   Near Real Time- No
   Delayed (Including Physical Return)- Yes
   Readout Format- Mag Tape, Log

9. Identify Advanced Evaluation Techniques which May Impose Change in Processing: None

10. Support Requirements:
    GFE- Litter Chair
    Electrical- Yes
    Pneumatic- No
    Thermal- No
    Other (Specify)- No

11. Environmental Data Requirements: Check of Normal Ambient
    pO_2____ pCO_2____ pH_2O____ pN_2____ pTrace____ Temp ____ "g" ____ Other ____

12. Estimated Time to Perform Measurement: 5 Min

13. Estimated Time to Set Up and Secure Measurement: 20 Min

14. Estimated Measurement Frequency: 1/Man/10 Days

MEASUREMENT SPECIFICATION NO. 1.1.7

1. Measurement Name: EEG

2. Purpose: Study Cerebral Activity

3. Recommended Technique: Bio-Potential Measurement

4. Measurement Function Flow Diagram:

	Stimulus	Sensor	Signal Cond	Info Process	Control	Signal Utilization
Major Equip		EEG Electrodes →	Bio-Potential Amplifier →	Spectral Analysis if Desired		1) CRT Display of Waveform 2) Store Waveform 3) Telemeter Power Density Spectrum of Signal
		2 Signal 1 Sig Gnd	1 Reqd			
Support Equip		Skin Prep. Kit Junction Box Subj. Protect. Cabling				
Signals		100 μV p-p	0-5 V 0.2 - 100 Hz Acc $\pm$ 5% of Measured Range 1 Signal			

Notes: Variable up to several hours

5. Input Signal Characteristics (Electrical Analogue, Discrete Data Entry, Logbook, Other?):
   Voltage- See Item 4
   Frequency- See Item 4
   Critical Info In Signal- Power Density Spectrum
   Waveform 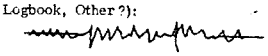

6. Stimuli and Calibration Requirements: Verify Signal Integrity

7. On-Board Output Characteristics:
   Display-, Voltage-, Accuracy- } See Item 4
   Resolution-, Repeatability- } TBD
   Playback Required- No
   Comparison Required (with what)- No
   Processing or Computations - Yes
   Telemetry - Yes
   Storage- Yes

8. Ground Output Characteristics:
   Real Time- No
   Near Real Time- No
   Delayed (Including Physical Return)- Yes
   Readout Format- Analog

9. Identify Advanced Evaluation Techniques which May Impose Change in Processing:
   Spectral Analysis of High Frequency Components.

10. Support Requirements:
    GFE- No
    Electrical- Yes
    Pneumatic- No
    Thermal- No
    Other (Specify)- Restraint

11. Environmental Data Requirements: Check for Normal Ambient
    pO_2 ____ pCO_2 ____ pH_2O ____ pN_2 ____ pTrace ____ Temp ____ "g" ____ Other ____

12. Estimated Time to Perform Measurement: See Note

13. Estimated Time to Set Up and Secure Measurement: 20 Min

14. Estimated Measurement Frequency: 1/Man/10 Days

1.2 Cardiovascular Measurements

MEASUREMENT SPECIFICATION NO. 1.2.1

1. Measurement Name: VCG/ECG

2. Purpose: Measure Vector Electrical Activity of the Heart

3. Recommended Technique:

4. Measurement Function Flow Diagram:

	Stimulus	Sensor	Signal Cond	Info Process	Control	Signal Utilization
				Calculate Heart Rate	Calibrate (Manual or Auto)	1) CRT Display of Waveforms
Major Equip		Electrodes →	Bio Potential Amplifiers →			2) Meter or Numeric Display of Heart Rate 3) Storage 4) Telemetry
		4 Reqd	3 Reqd			
Support Equip			Junction Box Subject Protection Cabling			
Signals		0.1 mV p-p	0-5 V 0.1-100 Hz Acc. ±5% of Measured Range 3 Signals			

Notes: a. Tag with mission time and measurement interval
b. Time reflects ergometer utilization

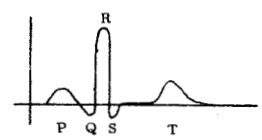

5. Input Signal Characteristics (Electrical Analogue, Discrete Data Entry, Logbook, Other ?):
Voltage- See Item 4
Frequency- See Item 4
Critical Info In Signal- Waveshapes
Waveform

6. Stimuli and Calibration Requirements: TBD

7. On-Board Output Characteristics:
Display-, Voltage-, Accuracy- } See Item 4
Resolution-, Repeatability- } TBD
Playback Required- Yes
Comparison Required (with what)- TBD
Processing or Computations - Yes
Telemetry - Yes
Storage- Yes

8. Ground Output Characteristics:
Real Time- For Safety Monitor Only
Near Real Time- No
Delayed (Including Physical Return)- Yes
Readout Format- Analog

9. Identify Advanced Evaluation Techniques which May Impose Change in Processing: TBD

10. Support Requirements:
GFE- No
Electrical- Yes
Pneumatic- No
Thermal- No
Other (Specify)-

11. Environmental Data Requirements:
pO_2 Yes pCO_2 Yes pH_2O Yes pN_2 Yes pTrace Yes Temp Yes "g" No Other ____

12. Estimated Time to Perform Measurement: 40 Min (See Note b)

13. Estimated Time to Set Up and Secure Measurement: 20 Min

14. Estimated Measurement Frequency: 1/Man/5 Days

MEASUREMENT SPECIFICATION NO. 1.2.2

1. Measurement Name: Phonocardiogram

2. Purpose: Study of Heart Sounds

3. Recommended Technique: Microphone Sound Detection

4. Measurement Function Flow Diagram:

	Stimulus	Sensor	Signal Cond	Info Process	Control	Signal Utilization
Major Equip		Microphone →	Bio Potential Amp			1) CRT Display of Heart Sound 2) Storage 3) Telemetry
Support Equip			Junction Box Subject Protection Cabling			
Signals		2 mV p-p 0-100 Hz	0-5 V Acc. ±5% of Measured Range 1 Signal			

Notes:

5. Input Signal Characteristics (Electrical Analogue, Discrete Data Entry, Logbook, Other?):
   Voltage- } See Item 4
   Frequency- }
   Critical Info In Signal- Heart Sound (Valve Activity)
   Waveform

6. Stimuli and Calibration Requirements: TBD

7. On-Board Output Characteristics:
   Display- }
   Voltage- } See Item 4
   Accuracy- }
   Resolution- } TBD
   Repeatability- }
   Playback Required- No
   Comparison Required (with what)- No
   Processing or Computations - No
   Telemetry - Yes
   Storage- Yes

8. Ground Output Characteristics:
   Real Time- No
   Near Real Time- No
   Delayed (Including Physical Return)- Yes
   Readout Format- Analog

9. Identify Advanced Evaluation Techniques which May Impose Change in Processing: Selection of Bandwidths, Derivatives of Waveform

10. Support Requirements:
    GFE- No
    Electrical- Yes
    Pneumatic- No
    Thermal- No
    Other (Specify)-

11. Environmental Data Requirements:
    pO_2____ pCO_2____ pH_2O____ pN_2____ pTrace____ Temp____ "g"____ Other Noise Level

12. Estimated Time to Perform Measurement: 5 Min

13. Estimated Time to Set Up and Secure Measurement: 6 Min

14. Estimated Measurement Frequency: 1/Man/5Days

MEASUREMENT SPECIFICATION NO. 1.2.3

1. Measurement Name: Cardiac Output

2. Purpose: Measure Lung Perfusion

3. Recommended Technique: Indirect FICK method

4. Measurement Function Flow Diagram:

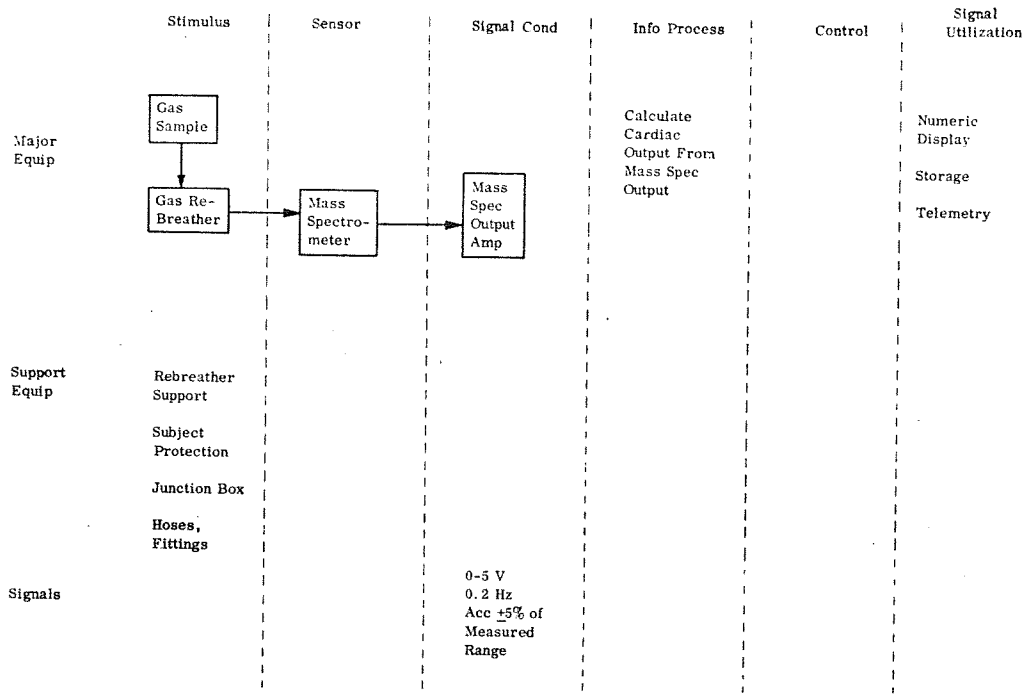

Notes: a. Observer must know (and log) what subject was breathing immediately prior to measurement.
b. Temperature and composition of gas sample must be known.

5. Input Signal Characteristics (Electrical Analogue, Discrete Data Entry, Logbook, Other?):
Voltage- NA
Frequency- NA
Waveform NA
Critical Info In Signal- Change in Gas Percentage

6. Stimuli and Calibration Requirements: TBD

7. On-Board Output Characteristics:
Display- NA
Voltage- NA
Accuracy- See Item 4
Resolution- } TBD
Repeatability- }
Playback Required- No
Comparison Required (with what)- No
Processing or Computations - See Item 4
Telemetry - Yes
Storage- Yes

8. Ground Output Characteristics:
Real Time- NA
Near Real Time- NA
Delayed (Including Physical Return)- Yes
Readout Format- Numeric

9. Identify Advanced Evaluation Techniques which May Impose Change in Processing: TBD

10. Support Requirements:
GFE- No
Electrical- Yes
Pneumatic- Yes
Thermal- No
Other (Specify)- No

11. Environmental Data Requirements: TBD
pO_2 ___ pCO_2 ___ pH_2O ___ pN_2 ___ pTrace ___ Temp Yes "g" ___ Other See Note b
(See Note b)

12. Estimated Time to Perform Measurement: 5 min

13. Estimated Time to Set Up and Secure Measurement: 4 min

14. Estimated Measurement Frequency: 1/Man/5 Days

MEASUREMENT SPECIFICATION NO. 1.2.4

1. Measurement Name: Arterial Blood Pressure

2. Purpose: Measure Arterial Blood Pressure for Changes

3. Recommended Technique: Arterial Cuff (Automatic)

4. Measurement Function Flow Diagram:

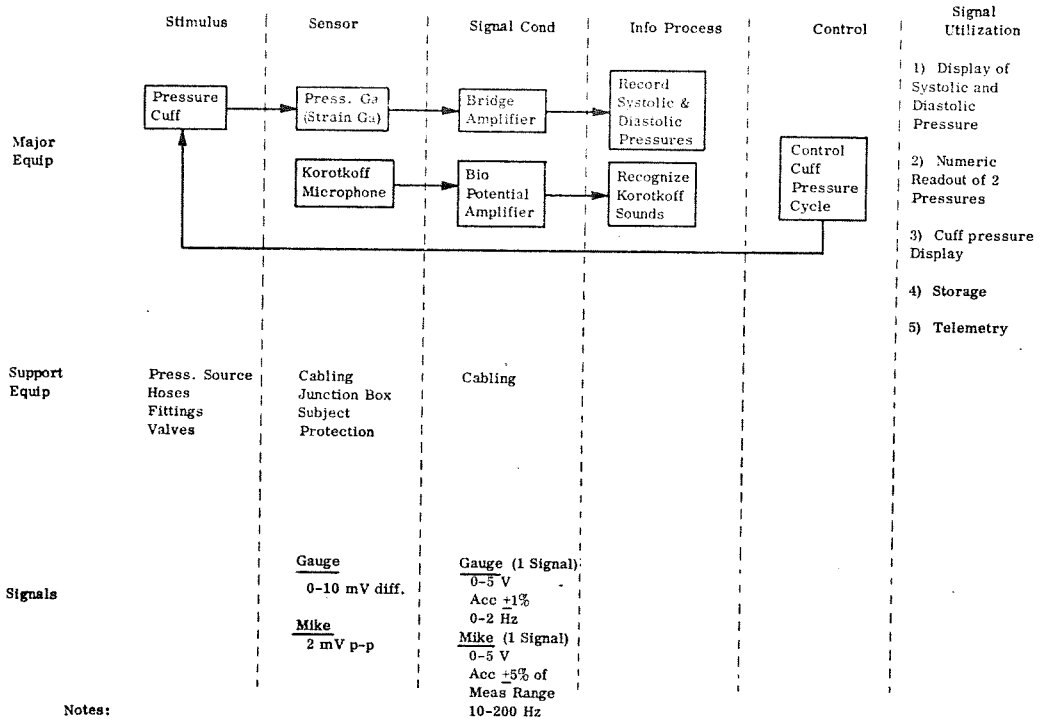

5. Input Signal Characteristics (Electrical Analogue, Discrete Data Entry, Logbook, Other?):
   Voltage- See Item 4
   Frequency- See Item 4
   Critical Info In Signal- Systolic/Diastolic Press.

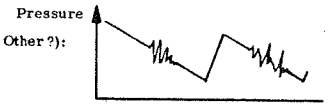

6. Stimuli and Calibration Requirements: See Item 4

7. On-Board Output Characteristics:
   Display-, Voltage-, Accuracy- } See Item 4
   Resolution-, Repeatability- } TBD
   Playback Required- No
   Comparison Required (with what)- No
   Processing or Computations - Yes
   Telemetry -Yes
   Storage- Yes

8. Ground Output Characteristics:
   Real Time- Safety Monitoring Only
   Near Real Time- No
   Delayed (Including Physical Return)- Yes
   Readout Format- Numeric

9. Identify Advanced Evaluation Techniques which May Impose Change in Processing: None

10. Support Requirements:
    Electrical- Yes
    Pneumatic- Yes
    Thermal- No
    Other (Specify)- No

11. Environmental Data Requirements:
    pO_2____ pCO_2____ pH_2O____ pN_2____ pTrace____ Temp ____ "g" ____ Other Noise Level

12. Estimated Time to Perform Measurement: 5 min

13. Estimated Time to Set Up and Secure Measurement: 10 min

14. Estimated Measurement Frequency: Twice per man (4 hrs separation) during each work cycle.

18

MEASUREMENT SPECIFICATION NO. 1.2.5

1. Measurement Name: Regional Blood Flow {Thoracic Blood Flow, Arteriolar Reactivity, Arterial Pulse Contour}

2. Purpose: Determine Regional Blood Flow

3. Recommended Technique: Doppler Flowmeter

4. Measurement Function Flow Diagram:

	Stimulus	Sensor	Signal Cond	Info Process	Control	Signal Utilization
Major Equip	Ultrasonic Signal Generator Ultrasonic Crystal Transducer	Ultrasonic Crystal Transducer	High Frequency Amplifier	Calc. of Doppler Freq Shift Calc. of Blood Velocity From Doppler Shift		1) CRT Display of Waveform for Blood Velocity 2) Record Blood Vel. Waveform 3) Storage
	Note b	Note b		+Vol. Flow For Reg. Blood Flow & As A F (t) For Pulse Contour		4) Telemetry
Support Equip	Junction Box Subject Protection Cabling Ultrasonic Paste					
Signals	1-5 M Hz			Output Band-Bandwidth 0-100 Hz Acc ±5% of Measured Range 1 Signal		

Notes:
a. Various ultrasonic crystal transducers may be required for various regions measured; require instructions for various positionings.
b. Sensor and stimulus crystals will be in same component.

5. Input Signal Characteristics (Electrical Analogue, Discrete Data Entry, Logbook, Other ?):
Voltage- See Item 4
Frequency- See Item 4
Critical Info In Signal- Blood Velocity
Waveform

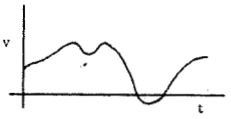

6. Stimuli and Calibration Requirements: See Item 4

7. On-Board Output Characteristics:
Display-
Voltage-
Accuracy- } See Item 4
Resolution-
Repeatability- } TBD
Playback Required- No
Comparison Required (with what)- No
Processing or Computations - Yes
Telemetry - Yes
Storage- Yes

8. Ground Output Characteristics:
Real Time- No
Near Real Time- No
Delayed (Including Physical Return)- Yes
Readout Format- Analog

9. Identify Advanced Evaluation Techniques which May Impose Change in Processing: Stereo Doppler Measurements

10. Support Requirements:
Electrical- Yes
Pneumatic- No
Thermal- No
Other (Specify)- No

11. Environmental Data Requirements: No
pO_2 ___ pCO_2 ___ pH_2O ___ pN_2 ___ pTrace ___ Temp ___ "g" ___ Other ___

12. Estimated Time to Perform Measurement: 5 min

13. Estimated Time to Set Up and Secure Measurement: 10 min

14. Estimated Measurement Frequency: 1/Man/10 Days

MEASUREMENT SPECIFICATION NO. 1.2.6

1. Measurement Name: Peripheral Venous Pressure

2. Purpose: Measure Peripheral Venous Pressure

3. Recommended Technique: Peripheral Venous Pressure Gauge

4. Measurement Function Flow Diagram:

	Stimulus	Sensor	Signal Cond	Info Process	Control	Signal Utilization
Major Equip		Peripheral Venous Pressure Gauge		Record Reading		Store
Support Equip	None					
Signals	Log entry of pressure reading (cm of water).					

Notes:

5. Input Signal Characteristics (Electrical Analogue, Discrete Data Entry, Logbook, Other?):
   Voltage- NA
   Waveform- NA
   Frequency- NA
   Critical Info In Signal- Venous Pressure

6. Stimuli and Calibration Requirements: None

7. On-Board Output Characteristics:
   Display- No
   Voltage- NA
   Accuracy- TBD
   Resolution- TBD
   Repeatability- TBD
   Playback Required- No
   Comparison Required (with what)- No
   Processing or Computations - No
   Telemetry - Yes
   Storage- Yes

8. Ground Output Characteristics:
   Real Time- No
   Near Real Time- No
   Delayed (Including Physical Return)- Yes
   Readout Format- Numeric

9. Identify Advanced Evaluation Techniques which May Impose Change in Processing: NA

10. Support Requirements: None
    GFE-
    Electrical-
    Pneumatic-
    Thermal-
    Other (Specify)-

11. Environmental Data Requirements: NA
    pO_2____ pCO_2____ pH_2O____ pN_2____ pTrace____ Temp Yes "g" ____ Other ____

12. Estimated Time to Perform Measurement: 1 min

13. Estimated Time to Set Up and Secure Measurement: 2 min

14. Estimated Measurement Frequency: 1/Man/5 Days

20

MEASUREMENT SPECIFICATION NO. 1.2.7

1. Measurement Name: In-Flight Exercise (Ergometer)

2. Purpose: Measure Human Mechanical Energy Output

3. Recommended Technique: Ergometer (GFE)

4. Measurement Function Flow Diagram:

	Stimulus	Sensor	Signal Cond	Info Process	Control	Signal Utilization
Major Equip		Bicycle Ergometer →				Display, Store, Telemeter, Watts Output and RPM.
Support Equip		Subject Restraint Subject Protection				
Signals		Watts	0-5 V	0-2 Hz	±5% Accuracy	
		RPM	0-5 V	0-2 Hz	±5% Accuracy of Measured Range	

Notes:

5. Input Signal Characteristics (Electrical Analogue, Discrete Data Entry, Logbook, Other?):
   Voltage- TBD
   Frequency- TBD
   Critical Info In Signal- RPM: Power
   Waveform - NA

6. Stimuli and Calibration Requirements: NA

7. On-Board Output Characteristics:
   Display- Watts Out, RPM
   Voltage- NA
   Accuracy- TBD
   Resolution- TBD
   Repeatability- TBD
   Playback Required- No
   Comparison Required (with what)- No
   Processing or Computations - No
   Telemetry - Yes
   Storage- Yes

8. Ground Output Characteristics:
   Real Time- No
   Near Real Time- No
   Delayed (Including Physical Return)- Yes
   Readout Format- Numeric

9. Identify Advanced Evaluation Techniques which May Impose Change in Processing: NA

10. Support Requirements:
    GFE- Ergometer
    Electrical- Yes
    Pneumatic- No
    Thermal- No
    Other (Specify)- NA

11. Environmental Data Requirements: TBD
    pO_2 Yes pCO_2 ___ pH_2O Yes pN_2 Yes pTrace ___ Temp Yes "g" ___ Other Ambient Atmos Pressure

12. Estimated Time to Perform Measurement: 40 min

13. Estimated Time to Set Up and Secure Measurement: 20 min

14. Estimated Measurement Frequency: 1/Man/10 Days

MEASUREMENT SPECIFICATION NO. 1.2.8

1. Measurement Name: Blood Rheology

2. Purpose: Study Properties of Blood Flow

3. Recommended Technique: Limb Impodance Measurement

4. Measurement Function Flow Diagram:

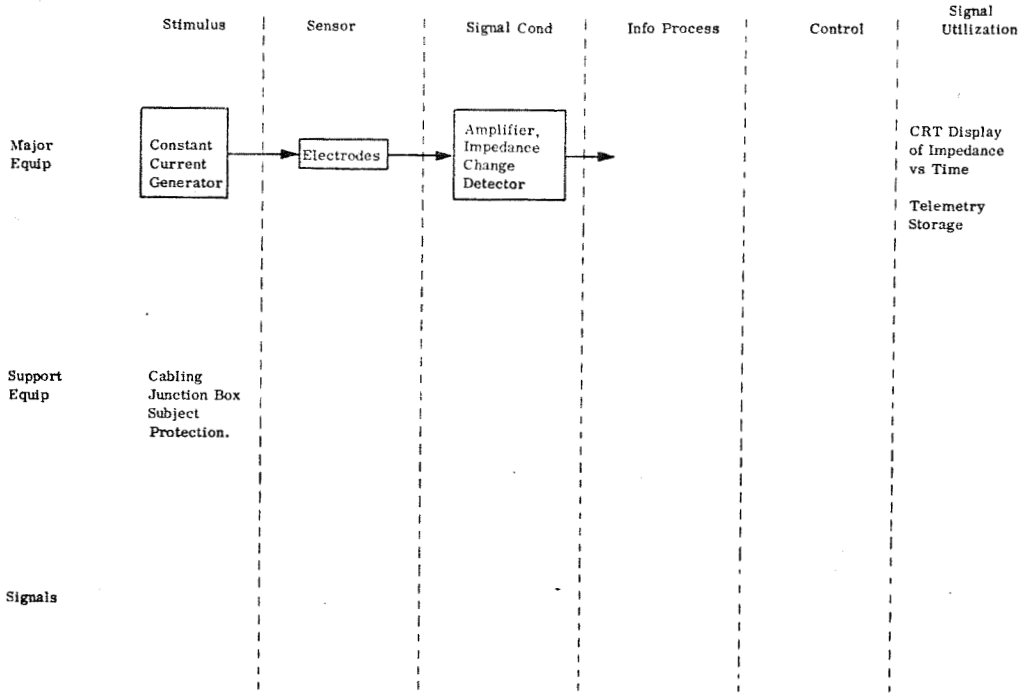

Notes:

5. Input Signal Characteristics (Electrical Analogue, Discrete Data Entry, Logbook, Other?):
   Voltage- (Impedance Change)
   Frequency- 0-100 Hz
   Critical Info In Signal- Time history of impedance change in measured region during cardiac cycle

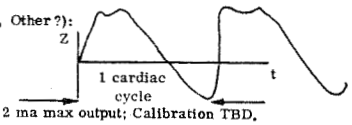

6. Stimuli and Calibration Requirements: Stimulus - Constant current source; 0.2 ma max output; Calibration TBD.

7. On-Board Output Characteristics:
   Display- Yes
   Voltage- NA
   Accuracy- 2%
   Resolution- } TBD
   Repeatability- }
   Playback Required- No
   Comparison Required (with what)- No
   Processing or Computations - Yes
   Telemetry - Yes
   Storage- Yes

8. Ground Output Characteristics:
   Real Time- No
   Near Real Time- No
   Delayed (Including Physical Return)- Yes
   Readout Format- Waveform

9. Identify Advanced Evaluation Techniques which May Impose Change in Processing: None

10. Support Requirements:
    GFE- No
    Electrical- Yes
    Pneumatic- No
    Thermal- No
    Other (Specify)-

11. Environmental Data Requirements:
    pO_2 Yes pCO_2 Yes pH_2O Yes pN_2 Yes pTrace Yes Temp Yes "g" No Other ___

12. Estimated Time to Perform Measurement: 3 min

13. Estimated Time to Set Up and Secure Measurement: 3 min

14. Estimated Measurement Frequency: 1/Man/10 Days

22

MEASUREMENT SPECIFICATION NO. 1.2.9

1. Measurement Name: Lower Body Negative Pressure (LBNP)

2. Purpose: Study effect of artificial gravity gradient.

3. Recommended Technique: LBNP Cuff (GFE)

4. Measurement Function Flow Diagram:

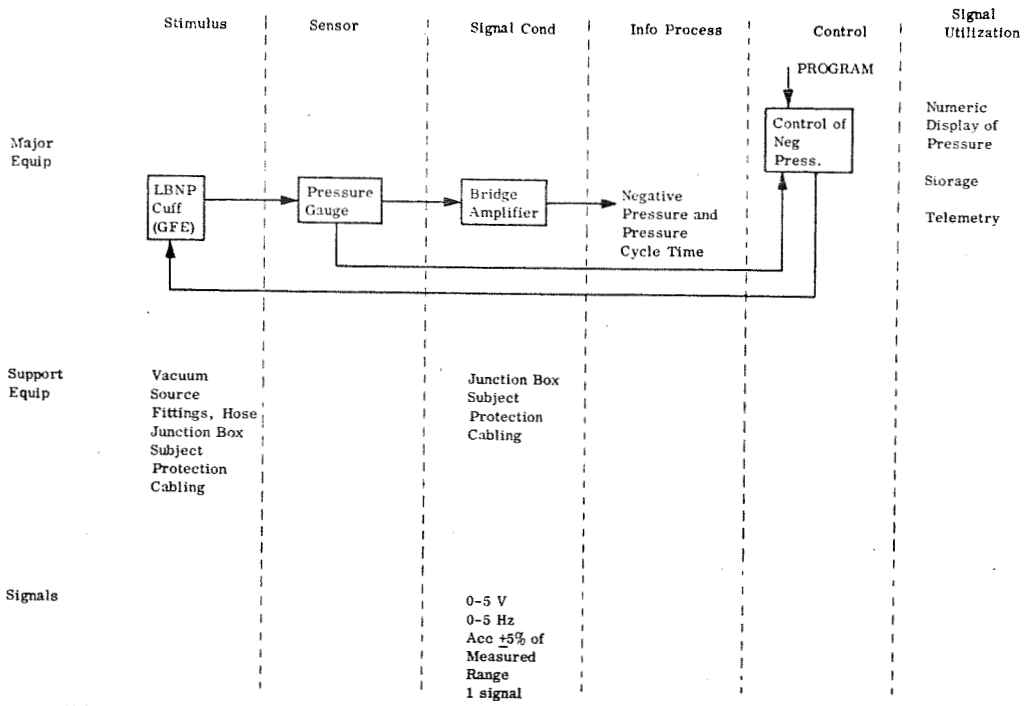

5. Input Signal Characteristics (Electrical Analogue, Discrete Data Entry, Logbook, Other?):
   Voltage- NA
   Frequency- NA
   Waveform - NA
   Critical Info In Signal- Pressure changes

6. Stimuli and Calibration Requirements: Pressure control, timing (cycling)

7. On-Board Output Characteristics:
   Display- Yes
   Voltage- NA
   Accuracy- 5%
   Resolution- } TBD
   Repeatability- }
   Playback Required- No
   Comparison Required (with what)- No
   Processing or Computations - Yes
   Telemetry - Yes
   Storage- Yes

8. Ground Output Characteristics:
   Real Time- No
   Near Real Time- No
   Delayed (Including Physical Return)- Yes
   Readout Format- Numeric

9. Identify Advanced Evaluation Techniques which May Impose Change in Processing: TBD

10. Support Requirements:
    GFE- LBNP
    Electrical- Yes
    Pneumatic- Yes
    Thermal- No
    Other (Specify)- No

11. Environmental Data Requirements:
    pO_2 No pCO_2 No pH_2O No pN_2 No pTrace No Temp Yes "g" Yes Other ambient atmos pressure

12. Estimated Time to Perform Measurement: 20 min

13. Estimated Time to Set Up and Secure Measurement: 20 min

14. Estimated Measurement Frequency: 1/Man/5 Days or on demand (See note.)

MEASUREMENT SPECIFICATION NO. 1.2.10

1. Measurement Name: Venous Compliance

2. Purpose: Study Tonus of Venous System

3. Recommended Technique: Change in Limb Volume with Neg Pressure

4. Measurement Function Flow Diagram:

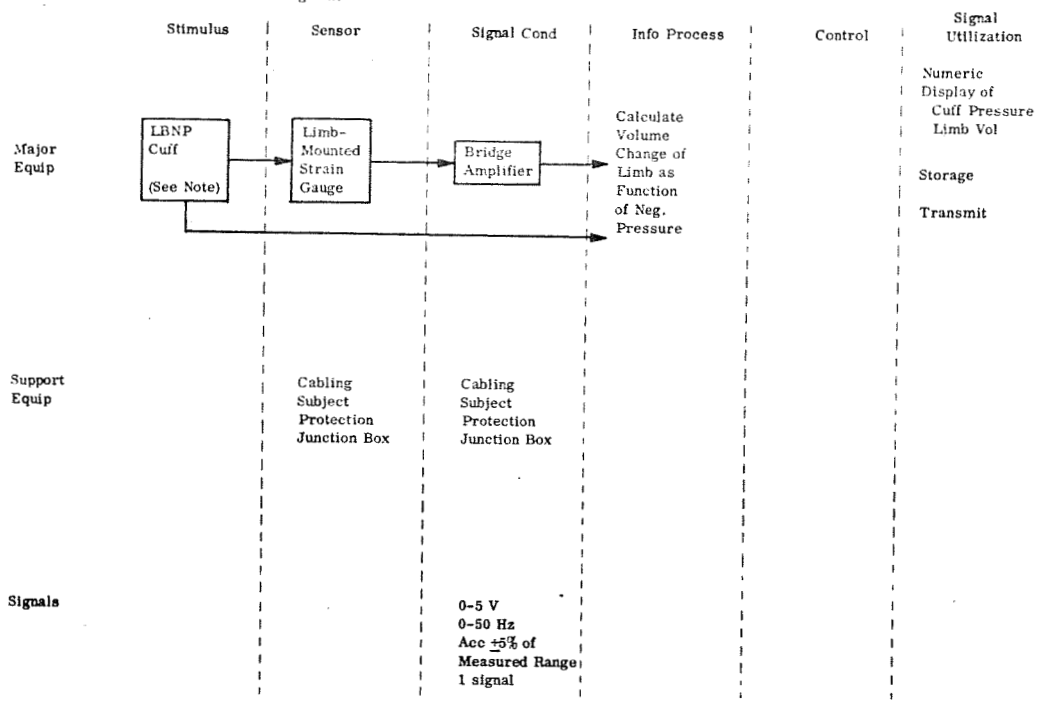

Notes: Venous Compliance Measurement uses LBND device for stimulus; refer to Measurement 1.2.9 for LBNP Measurement Specification.

5. Input Signal Characteristics (Electrical Analogue, Discrete Data Entry, Logbook, Other?):
   Voltage- NA
   Frequency- NA
   Waveform - NA
   Critical Info In Signal- Change in limb periphery

6. Stimuli and Calibration Requirements: TBD

7. On-Board Output Characteristics:
   Display- Yes
   Voltage- NA
   Accuracy- 5%
   Resolution- } TBD
   Repeatability- }
   Playback Required- No
   Comparison Required (with what)- No
   Processing or Computations - Yes
   Telemetry - Yes
   Storage- Yes

8. Ground Output Characteristics:
   Real Time- No
   Near Real Time- No
   Delayed (Including Physical Return)- Yes
   Readout Format- Numeric

9. Identify Advanced Evaluation Techniques which May Impose Change in Processing: Ultrasonic Pulse Echo and Transmission Technique

10. Support Requirements:
    GFE- LBNP Device
    Electrical- Yes
    Pneumatic- Yes
    Thermal- No
    Other (Specify)- No

11. Environmental Data Requirements:
    pO_2 No pCO_2 No pH_2O No pN_2 No pTrace No Temp Yes "g" Yes Other Ambient atmos. pressure

12. Estimated Time to Perform Measurement: 10 min

13. Estimated Time to Set Up and Secure Measurement: 15 min

14. Estimated Measurement Frequency: 1/Man/5 Days

MEASUREMENT SPECIFICATION NO. 1.2.11

1. Measurement Name: Ballistocardiogram

2. Purpose: Measure action-reaction forces exerted by bolus of blood

3. Recommended Technique: 6 degree-of-freedom ballistocardiography

4. Measurement Function Flow Diagram:

	Stimulus	Sensor	Signal Cond	Info Process	Control	Signal Utilization
Major Equip		3 Linear, 3 Angular Accelerometer (GFE)	6 Bridge Amplifiers			Transmit 1 Ang Accel 1 Lin Accel Record 3 Ang Accel 3 Lin Accel
Support Equip		Ballisto Restraint (GFE) Subject Protection				
Signals		0-20 mV	0-5 V (See note) 0-100 Hz Acc ±5% of Measured Range			

Notes: Outputs of GFE Ballistocardiogram TBD

5. Input Signal Characteristics (Electrical Analogue, Discrete Data Entry, Logbook, Other ?):
   Voltage- No
   Frequency- 0-100 Hz
   Critical Info In Signal- Acceleration Analogues
   Waveform

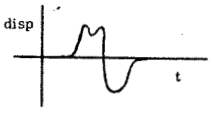

6. Stimuli and Calibration Requirements: Accelerometer Calibration

7. On-Board Output Characteristics:
   Display- No
   Voltage- No
   Accuracy- 5%
   Resolution- TBD
   Repeatability- TBD
   Playback Required- No
   Comparison Required (with what)- No
   Processing or Computations - Accelerations
   Telemetry - Yes
   Storage- Yes

8. Ground Output Characteristics:
   Real Time- No
   Near Real Time- No
   Delayed (Including Physical Return)- Yes
   Readout Format- Analog

9. Identify Advanced Evaluation Techniques which May Impose Change in Processing: Telemetry from Ballisto Platform

10. Support Requirements:
    GFE- Restraint Platform
    Electrical- Yes
    Pneumatic- No
    Thermal- No
    Other (Specify)- No

11. Environmental Data Requirements: No
    pO_2 ___ pCO_2 ___ pH_2O ___ pN_2 ___ pTrace ___ Temp ___ "g" ___ Other ___

12. Estimated Time to Perform Measurement: 10 min

13. Estimated Time to Set Up and Secure Measurement: 35 min

14. Estimated Measurement Frequency: 1/Man/10 Days

1.3 Respiratory Measurements

MEASUREMENT SPECIFICATION NO. 1.3.1

1. Measurement Name: Respiratory Rate

2. Purpose: Detect Changes in Breathing Rate

3. Recommended Technique: Thoracic Strain Gauge

4. Measurement Function Flow Diagram:

	Stimulus	Sensor	Signal Cond	Info Process	Control	Signal Utilization
Major Equip		Thoracic Strain Gauge →	Bridge Amplif. →	Calculate Resp Rate		Numeric Display of Resp Rate Storage Telemetry
Support Equip		Attachment Device	Junction Box, Subject Prot. Cabling			
Signals			0-5V 0-3 Hz Acc ±5%			

Notes:
a. Other measures will also have respiratory rate.
b. May be longer when used with other measurements.

5. Input Signal Characteristics (Electrical Analogue, Discrete Data Entry, Logbook, Other?):
   Voltage- N A
   Frequency- N A
   Critical Info In Signal- resp rate
   Waveform N A

6. Stimuli and Calibration Requirements: TBD

7. On-Board Output Characteristics:
   Display- Yes
   Voltage- N/A
   Accuracy- 5%
   Resolution- } TBD
   Repeatability- }
   Playback Required- No
   Comparison Required (with what)- No
   Processing or Computations - Yes
   Telemetry Yes
   Storage- Yes

8. Ground Output Characteristics:
   Real Time- No
   Near Real Time- No
   Delayed (Including Physical Return)- Yes
   Readout Format- Numeric

9. Identify Advanced Evaluation Techniques which May Impose Change in Processing: None

10. Support Requirements:
    GFE- No
    Electrical- Yes
    Pneumatic- No
    Thermal- No
    Other (Specify)-

11. Environmental Data Requirements:
    pO_2 Yes pCO_2 Yes pH_2O Yes pN_2 Yes pTrace Yes Temp Yes "g" No Other ___

12. Estimated Time to Perform Measurement: 1 Min (See note b)

13. Estimated Time to Set Up and Secure Measurement: 2 Min

14. Estimated Measurement Frequency: On Demand

MEASUREMENT SPECIFICATION NO. 1.3.2

1. Measurement Name: Lung Volume

2. Purpose: Study Changes in Pulmonary Function

3. Recommended Technique: Mass Flow Meter and Integration

4. Measurement Function Flow Diagram:

	Stimulus	Sensor	Signal Cond	Info Process	Control	Signal Utilization
Major Equip		Mass Flow Meter →	Flowmeter Signal Conditioner →	Time Integral of Flow To Give Vol.		1) Numeric Display of Respiratory Rate 2) Numeric Display of Lung vol. 3) Data Storage 4) Data Telemetry
				Calc. Resp. Rate		
Support Equip		Mask/ Mouthpiece Hoses, Fittings, Douglass Bag (May all be one element)	Junction Box Subj. Protect Cabling			
Signals			(I Signal) 0-5V 0-10±2 Acc±5% of Measured Volume			

Notes:

5. Input Signal Characteristics (Electrical Analogue, Discrete Data Entry, Logbook, Other?):
   Voltage- } See Item 4
   Frequency- }
   Waveform N A
   Critical Info In Signal- Gas Flow Rate

6. Stimuli and Calibration Requirements: TBD

7. On-Board Output Characteristics:
   Display- }
   Voltage- } See Item 4
   Accuracy- }
   Resolution- } TBD
   Repeatability- }
   Playback Required- No
   Comparison Required (with what)- No
   Processing or Computations - Yes
   Telemetry Yes
   Storage- Yes

8. Ground Output Characteristics:
   Real Time- No
   Near Real Time- No
   Delayed (Including Physical Return)- Yes
   Readout Format- Numeric

9. Identify Advanced Evaluation Techniques which May Impose Change in Processing: None

10. Support Requirements:
    GFE-
    Electrical- Yes
    Pneumatic- No
    Thermal- No
    Other (Specify)-

11. Environmental Data Requirements:
    pO_2 Yes pCO_2 Yes pH_2O Yes pN_2 Yes pTrace Yes Temp Yes "g" No Other ___

12. Estimated Time to Perform Measurement: 5 Min

13. Estimated Time to Set Up and Secure Measurement: 10 Min

14. Estimated Measurement Frequency: 1/Man/10 Days

MEASUREMENT SPECIFICATION NO. 1.3.3

1. Measurement Name: Lung Pressure, Flow, and Volume

2. Purpose: Study Lung Characteristics

3. Recommended Technique: Flow Interrupter

4. Measurement Function Flow Diagram:

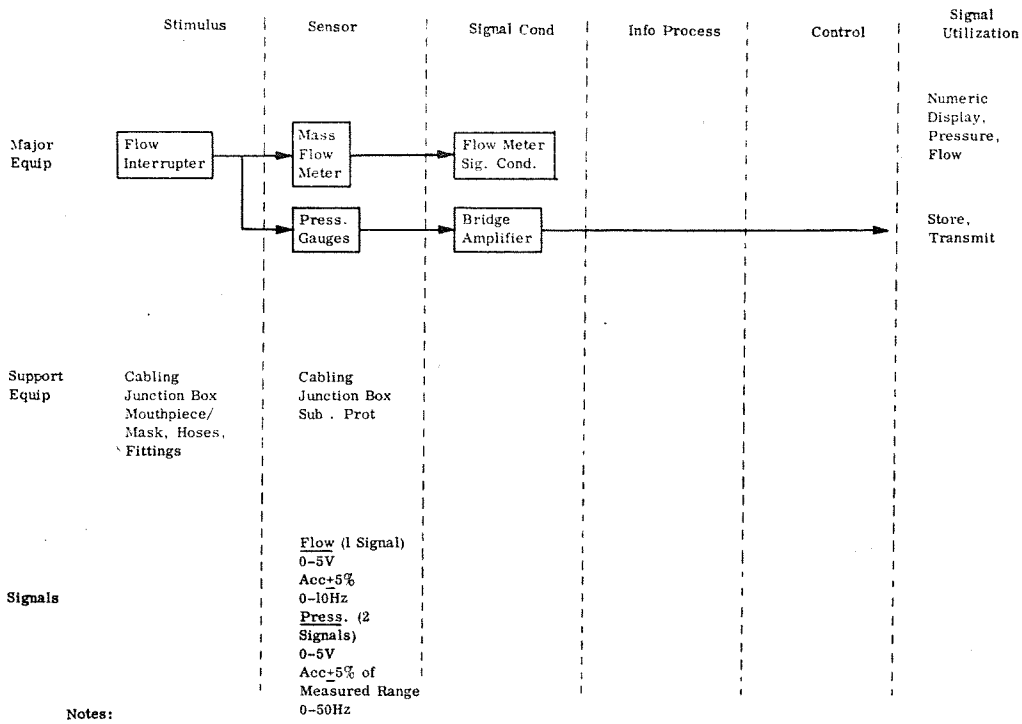

Notes:

Consider combining flow interrupter, flowmeter, rebreather, mask, etc., into one element.

5. Input Signal Characteristics (Electrical Analogue, Discrete Data Entry, Logbook, Other ?):
   Voltage- } See Item 4
   Frequency- }
   Waveform N A
   Critical Info In Signal- Pressure at interrupted flow points, mass flow.

6. Stimuli and Calibration Requirements: TBD

7. On-Board Output Characteristics:
   Display- Yes
   Voltage- N A
   Accuracy- See Item 4
   Resolution- TBD
   Repeatability- TBD
   Playback Required- No
   Comparison Required (with what)- No
   Processing or Computations - No
   Telemetry Yes
   Storage- Yes

8. Ground Output Characteristics:
   Real Time- No
   Near Real Time- No
   Delayed (Including Physical Return)- Yes
   Readout Format- Numerics

9. Identify Advanced Evaluation Techniques which May Impose Change in Processing: N A (For Non-invasive Techniques)

10. Support Requirements:
    GFE-
    Electrical- Yes
    Pneumatic- No
    Thermal- No
    Other (Specify)- No

11. Environmental Data Requirements:
    pO_2 Yes pCO_2 Yes pH_2O Yes pN_2 Yes pTrace Yes Temp Yes "g" ___ Other ___

12. Estimated Time to Perform Measurement: 5 Min

13. Estimated Time to Set Up and Secure Measurement: 10 Min

14. Estimated Measurement Frequency: 1/Man/10 Days

MEASUREMENT SPECIFICATION NO. 1.3.4

1. Measurement Name: A. Breath By Breath O_2 Consumption and CO_2 Production

   B. Energy Metabolism with Breath By Breath O_2-CO_2 Analysis, with Measured Levels of Activity (Note 1)

2. Purpose: Respiratory/Metabolic Assessment

3. Recommended Technique: Flow Meter, Mass Spectrometer.

4. Measurement Function Flow Diagram:

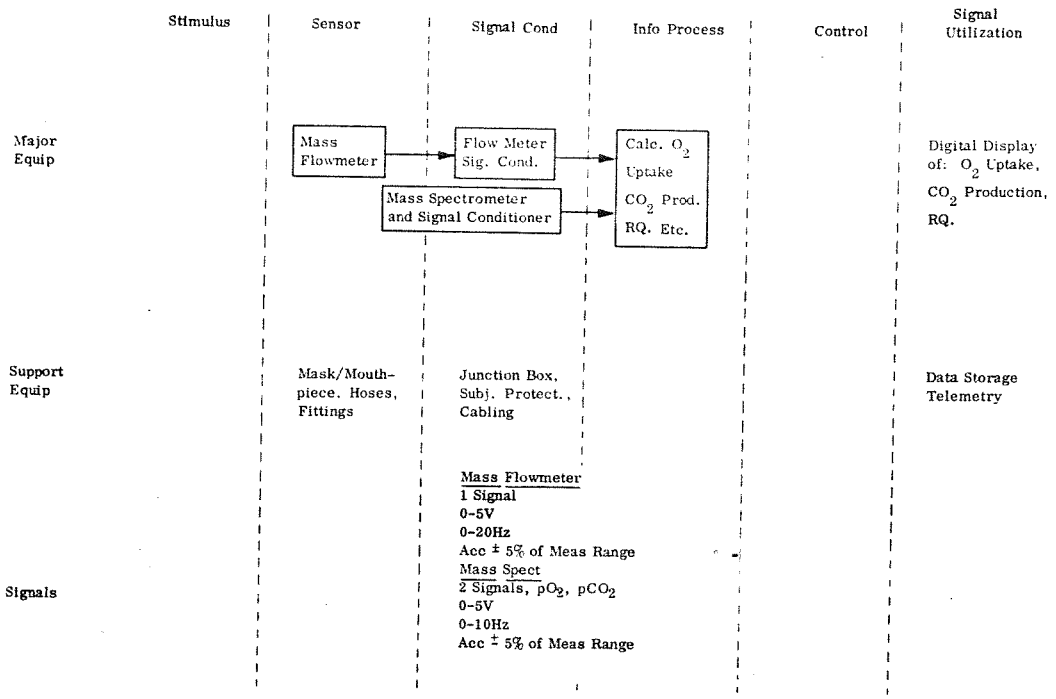

Notes:

1. For this measurement (B) subject must enter in log, a description and the time of his activity.
2. Duration applies to respiratory measurement alone. Longer time would depend on prescribed activity.

5. Input Signal Characteristics (Electrical Analogue, Discrete Data Entry, Logbook, Other ?):
   Voltage- N A
   Frequency- N A
   Waveform N A
   Critical Info In Signal- Air Vol, pO_2 and pCO_2

6. Stimuli and Calibration Requirements: TBD

7. On-Board Output Characteristics:
   Display- Yes
   Voltage- No
   Accuracy- 5%
   Resolution- TBD
   Repeatability- TBD
   Playback Required- No
   Comparison Required (with what)- No
   Processing or Computations - Yes
   Telemetry Yes
   Storage- Yes

8. Ground Output Characteristics:
   Real Time- No
   Near Real Time- No
   Delayed (Including Physical Return)- Yes
   Readout Format- Numeric

9. Identify Advanced Evaluation Techniques which May Impose Change in Processing: Use of Electrometric Techniques to Measure pO_2, pCO_2

10. Support Requirements:
    GFE-
    Electrical- Yes
    Pneumatic- No
    Thermal- No
    Other (Specify)- No

11. Environmental Data Requirements:
    pO_2 Yes pCO_2 Yes pH_2O Yes pN_2 Yes pTrace Yes Temp Yes "g" ____ Other ____

12. Estimated Time to Perform Measurement: 1 Min (Note 2)

13. Estimated Time to Set Up and Secure Measurement: 10 Min

14. Estimated Measurement Frequency: 1/Man/10 Days.

MEASUREMENT SPECIFICATION NO. 1.3.5

1. Measurement Name: Alveolar to Arterial Gradient (Breathing Cabin Atmosphere and 100% O_2)

2. Purpose: Assess Metabolic and Cardiovascular Effiency

3. Recommended Technique: Nares Oximetry

4. Measurement Function Flow Diagram:

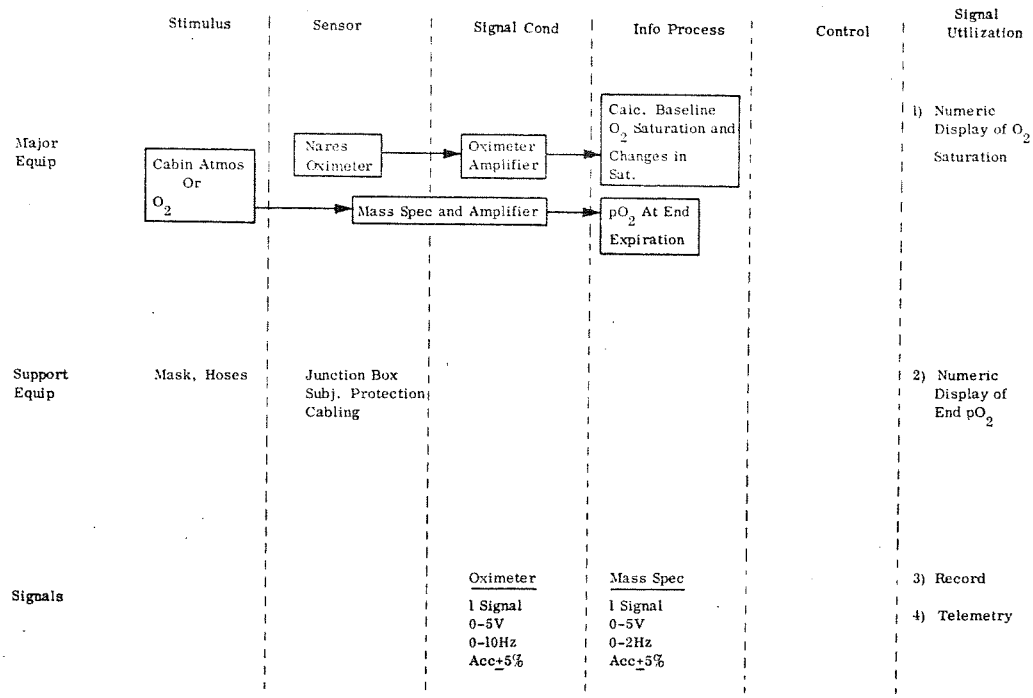

Notes:

5. Input Signal Characteristics (Electrical Analogue, Discrete Data Entry, Logbook, Other?):
   Voltage- N A
   Frequency- 0-10Hz
   Waveform - NA
   Critical Info In Signal- Arterial O_2 Saturation Alveolar pO_2

6. Stimuli and Calibration Requirements: TBD

7. On-Board Output Characteristics:
   Display- Yes
   Voltage- N A
   Accuracy- See Item 4
   Resolution- } TBD
   Repeatability- }
   Playback Required- No
   Comparison Required (with what)- No
   Processing or Computations - Yes
   Telemetry Yes
   Storage- Yes

8. Ground Output Characteristics:
   Real Time- No
   Near Real Time- No
   Delayed (Including Physical Return)- Yes
   Readout Format- Numeric

9. Identify Advanced Evaluation Techniques which May Impose Change in Processing: None

10. Support Requirements:
    GFE-
    Electrical- Yes
    Pneumatic- Yes
    Thermal- No
    Other (Specify)-

11. Environmental Data Requirements:
    pO_2 Yes pCO_2 Yes pH_2O Yes pN_2 Yes pTrace Yes Temp Yes "g" ____ Other ____

12. Estimated Time to Perform Measurement: 3 Min

13. Estimated Time to Set Up and Secure Measurement: 14 Min

14. Estimated Measurement Frequency: 1/Man/5 Days

MEASUREMENT SPECIFICATION NO. 1.3.6

1. Measurement Name: O_2 Consumption with Measured Exercise (Closed Circuit)

2. Purpose: Assessment of Energy Metabolism

3. Recommended Technique: Closed CKT O_2 Uptake vs Ergometer Output

4. Measurement Function Flow Diagram:

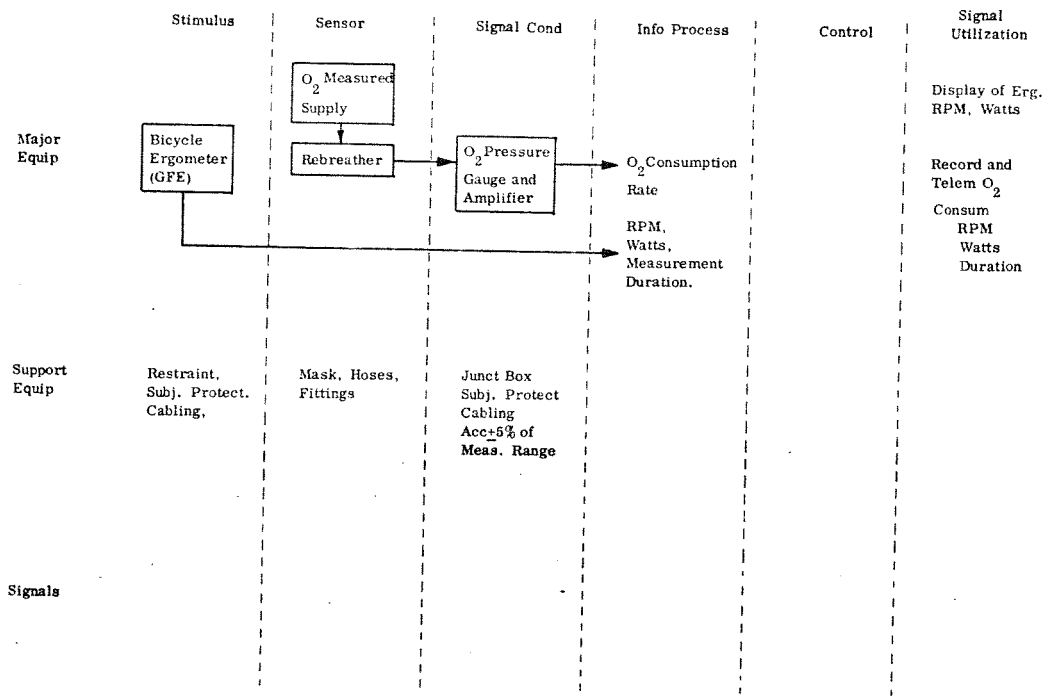

Notes:

5. Input Signal Characteristics (Electrical Analogue, Discrete Data Entry, Logbook, Other?):
   Voltage- N A
   Frequency- N A
   Critical Info In Signal- See Item 4
   Waveform N A

6. Stimuli and Calibration Requirements: TBD

7. On-Board Output Characteristics:
   Display- Yes
   Voltage- N A
   Accuracy- 5%
   Resolution- } TBD
   Repeatability- }
   Playback Required- No
   Comparison Required (with what)- No
   Processing or Computations - Yes
   Telemetry Yes
   Storage- Yes

8. Ground Output Characteristics:
   Real Time- No
   Near Real Time- No
   Delayed (Including Physical Return)- Yes
   Readout Format- Numeric

9. Identify Advanced Evaluation Techniques which May Impose Change in Processing:

10. Support Requirements:
    GFE- No
    Electrical- Yes
    Pneumatic- Yes
    Thermal- No
    Other (Specify)- N A

11. Environmental Data Requirements:
    pO_2 Yes pCO_2 Yes pH_2O Yes pN_2 Yes pTrace Yes Temp Yes "g" No Other N A

12. Estimated Time to Perform Measurement: 5 Min

13. Estimated Time to Set Up and Secure Measurement: 15 Min

14. Estimated Measurement Frequency: 3 Times during each use of ergometer

34

MEASUREMENT SPECIFICATION NO. 1.3.7

1. Measurement Name: Ventilation

2. Purpose: Assess Efficiency of Pulmonary Function

3. Recommended Technique: Helium Closed Circuit Technique

4. Measurement Function Flow Diagram:

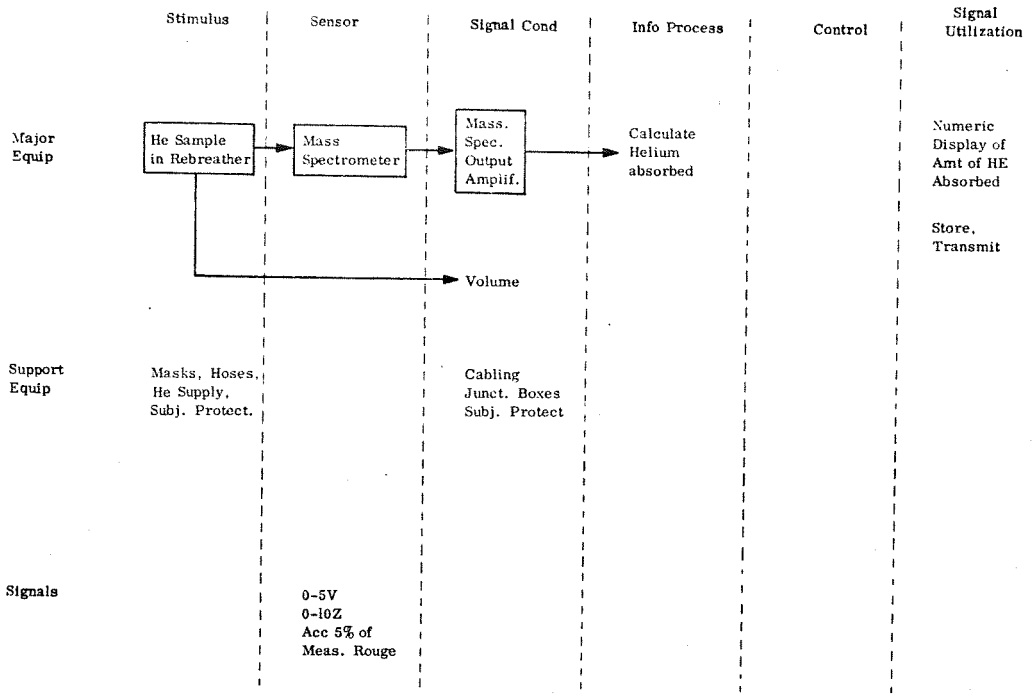

Notes:

5. Input Signal Characteristics (Electrical Analogue, Discrete Data Entry, Logbook, Other?):
   Voltage- N A
   Frequency- N A
   Critical Info In Signal- pHe
   Waveform N A

6. Stimuli and Calibration Requirements: TBD

7. On-Board Output Characteristics:
   Display- Yes
   Voltage- N A
   Accuracy- 5%
   Resolution- } TBD
   Repeatability- }
   Playback Required- No
   Comparison Required (with what)- No
   Processing or Computations - Yes
   Telemetry Yes
   Storage- Yes

8. Ground Output Characteristics:
   Real Time- No
   Near Real Time- No
   Delayed (Including Physical Return)- Yes
   Readout Format- Numeric

9. Identify Advanced Evaluation Techniques which May Impose Change in Processing:

10. Support Requirements:
    GFE-
    Electrical- Yes
    Pneumatic- Yes
    Thermal- No
    Other (Specify)- N A

11. Environmental Data Requirements:
    pO_2 Yes pCO_2 Yes pH_2O Yes pN_2 Yes pTrace Yes Temp Yes "g" No Other ____

12. Estimated Time to Perform Measurement: 15 Min

13. Estimated Time to Set Up and Secure Measurement: 15 Min

14. Estimated Measurement Frequency: 1/Man/10 Days

MEASUREMENT SPECIFICATION NO. 1.3.8

1. Measurement Name: Diffusion

2. Purpose: Assess Efficiency of Pulmonary Gas Transfer

3. Recommended Technique: Closed Circuit CO Rebreathing

4. Measurement Function Flow Diagram:

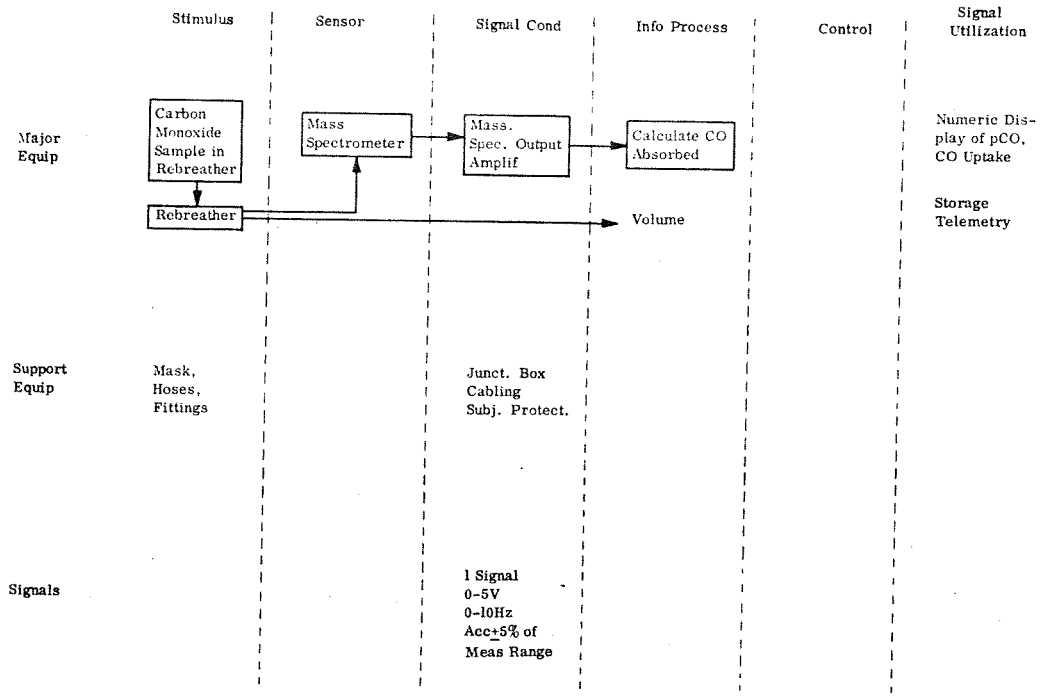

Notes:

5. Input Signal Characteristics (Electrical Analogue, Discrete Data Entry, Logbook, Other?):
   Voltage- N A
   Frequency- N A
   Critical Info In Signal- p CO
   Waveform N A

6. Stimuli and Calibration Requirements: TBD

7. On-Board Output Characteristics:
   Display- Yes
   Voltage- N A
   Accuracy- 5%
   Resolution- } TBD
   Repeatability- }
   Playback Required- No
   Comparison Required (with what)- No
   Processing or Computations - Yes
   Telemetry Yes
   Storage- Yes

8. Ground Output Characteristics:
   Real Time- No
   Near Real Time- No
   Delayed (Including Physical Return)- Yes
   Readout Format- Numeric

9. Identify Advanced Evaluation Techniques which May Impose Change in Processing:

10. Support Requirements:
    GFE- No
    Electrical- Yes
    Pneumatic- Yes
    Thermal- No
    Other (Specify)- No

11. Environmental Data Requirements:
    pO_2 Yes pCO_2 Yes pH_2O Yes pN_2 Yes pTrace Yes Temp Yes "g" No Other No

12. Estimated Time to Perform Measurement: 15 Min

13. Estimated Time to Set Up and Secure Measurement: 15 Min

14. Estimated Measurement Frequency: 1/Man/10 Days

MEASUREMENT SPECIFICATION NO. 1.3.9

1. Measurement Name: Arterial O_2 Saturation (SEE NOTES)

2. Purpose: Support Measurement of Alveolar to Arterial O_2 Gradient (See Measurement Spec. No. 1.3.5 - Alveolar to Arterial O_2 Gradient)

3. Recommended Technique: Nares Oximeter

4. Measurement Function Flow Diagram:

	Stimulus	Sensor	Signal Cond	Info Process	Control	Signal Utilization
Major Equip						
Support Equip						
Signals						

Notes: The measurement is part of Measure Specification No. 1.3.5 (Alveolar to Arterial O_2 Gradient) and is described therewith.

5. Input Signal Characteristics (Electrical Analogue, Discrete Data Entry, Logbook, Other?):
   Voltage-
   Frequency-
   Critical Info In Signal-
   Waveform

6. Stimuli and Calibration Requirements:

7. On-Board Output Characteristics:
   Display-
   Voltage-
   Accuracy-
   Resolution-
   Repeatability-
   Playback Required-
   Comparison Required (with what)-
   Processing or Computations -
   Telemetry
   Storage-

8. Ground Output Characteristics:
   Real Time-
   Near Real Time-
   Delayed (Including Physical Return)-
   Readout Format-

9. Identify Advanced Evaluation Techniques which May Impose Change in Processing:

10. Support Requirements:
    GFE-
    Electrical-
    Pneumatic-
    Thermal-
    Other (Specify)-

11. Environmental Data Requirements:
    pO_2 ___ pCO_2 ___ pH_2O ___ pN_2 ___ pTrace ___ Temp ___ "g" ___ Other ___

12. Estimated Time to Perform Measurement:

13. Estimated Time to Set Up and Secure Measurement:

14. Estimated Measurement Frequency:

1.4 Metabolism and Nutrition

MEASUREMENT SPECIFICATION NO. 1.4.1

1. Measurement Name: Core Temperature

2. Purpose: Assess Effect of Metabolic Study on Core Temperature

3. Recommended Technique: Ear Thermometry

4. Measurement Function Flow Diagram:

	Stimulus	Sensor	Signal Cond	Info Process	Control	Signal Utilization
Major Equip		Ear Canal Thermo-meter →	Bridge Amplif. →	Temperature		Numeric Display of Temp. Storage Telem.
Support Equip		Thermistor Bridge	Junct. Box Subj. Protect Cabling			
Signals			0-5V 0-1 Hz Acc 5% of Meas. Range 1 Signal			

Notes:

5. Input Signal Characteristics (Electrical Analogue, Discrete Data Entry, Logbook, Other ?):
   Voltage- NA
   Frequency- NA
   Critical Info In Signal- Temperature
   Waveform NA

6. Stimuli and Calibration Requirements: TBD

7. On-Board Output Characteristics:
   Display- Yes
   Voltage- NA
   Accuracy- 5%
   Resolution- } TBD
   Repeatability- }
   Playback Required- No
   Comparison Required (with what)- No
   Processing or Computations - Yes
   Telemetry - Yes
   Storage- Yes

8. Ground Output Characteristics:
   Real Time- No
   Near Real Time- No
   Delayed (Including Physical Return)- Yes
   Readout Format- Numeric

9. Identify Advanced Evaluation Techniques which May Impose Change in Processing:
   None

10. Support Requirements:
    GFE- No
    Electrical- Yes
    Pneumatic- No
    Thermal- No
    Other (Specify)- No

11. Environmental Data Requirements:
    pO_2 Yes pCO_2 Yes pH_2O Yes pN_2 Yes pTrace Yes Temp Yes "g" No Other No

12. Estimated Time to Perform Measurement: 2 min

13. Estimated Time to Set Up and Secure Measurement: 1 min

14. Estimated Measurement Frequency: 1/man/10 days

MEASUREMENT SPECIFICATION NO. 1.4.2

1. Measurement Name: Body Mass

2. Purpose: Assess Mass Changes

3. Recommended Technique: GFE Body Mass Measuring Device

4. Measurement Function Flow Diagram:

	Stimulus	Sensor	Signal Cond	Info Process	Control	Signal Utilization
Major Equip		Body Mass Measuring Device GFE	Mass Measuring Signal Cond. →	Calc. of Mass From Period of Oscillation		Numeric Display of Mass
Support Equip		Junction Box Cabling Restraint				Storage Telem.
Signals						

Notes: Mass to be Measured Must be ≪ Support Structure

5. Input Signal Characteristics (Electrical Analogue, Discrete Data Entry, Logbook, Other?):
   Voltage- NA
   Frequency- NA
   Critical Info In Signal- TBD
   Waveform NA

6. Stimuli and Calibration Requirements: TBD

7. On-Board Output Characteristics: See Item 4
   Display- Yes
   Voltage- NA
   Accuracy- TBD
   Resolution- TBD
   Repeatability- TBD
   } GFE
   Playback Required- No
   Comparison Required (with what)- No
   Processing or Computations - Yes
   Telemetry - Yes
   Storage- Yes

8. Ground Output Characteristics:
   Real Time- No
   Near Real Time- No
   Delayed (Including Physical Return)- Yes
   Readout Format- Numeric

9. Identify Advanced Evaluation Techniques which May Impose Change in Processing:
   None

10. Support Requirements:
    GFE-
    Electrical- Yes
    Pneumatic- No
    Thermal- No
    Other (Specify)- No

11. Environmental Data Requirements:
    pO_2 ___ pCO_2 ___ pH_2O ___ pN_2 ___ pTrace ___ Temp ___ "g" ___ Other See Note

12. Estimated Time to Perform Measurement: 5 Min

13. Estimated Time to Set Up and Secure Measurement: 6 Min

14. Estimated Measurement Frequency: 1/man/10 Days

42

MEASUREMENT SPECIFICATION NO. 1.4.3

1. Measurement Name: Muscle Size and Strength

2. Purpose: Effect of Zero G on Muscle Size and Strength

3. Recommended Technique: Dynamometer, tape

4. Measurement Function Flow Diagram:

	Stimulus	Sensor	Signal Cond	Info Process	Control	Signal Utilization
Major Equip		Dynamometer (Strain Gauge) →	Bridge Amplifier →			a. Numuric Display of Force b. Record Muscle Size c. Data Storage d. Telemetry
Support Equip		Tape Measure Junction Box Subj. Protect. Cabling				
Signals			0-5V 0-10 Hz			

Notes:

5. Input Signal Characteristics (Electrical Analogue, Discrete Data Entry, Logbook, Other?): See Item 4
   Voltage-
   Frequency-
   Waveform NA
   Critical Info In Signal- Force

6. Stimuli and Calibration Requirements: NA

7. On-Board Output Characteristics:
   Display- } See Item 4
   Voltage- }
   Accuracy- TBD
   Resolution- TBD
   Repeatability-
   Playback Required- No
   Comparison Required (with what)- No
   Processing or Computations - Yes
   Telemetry - Yes
   Storage- Yes

8. Ground Output Characteristics:
   Real Time- No
   Near Real Time- No
   Delayed (Including Physical Return)- Yes
   Readout Format- Numeric

9. Identify Advanced Evaluation Techniques which May Impose Change in Processing:
   None

10. Support Requirements:
    GFE-
    Electrical- Yes
    Pneumatic- No
    Thermal- No
    Other (Specify)- Restraint

11. Environmental Data Requirements: Check for Normal Ambient
    pO_2____ pCO_2____ pH_2O____ pN_2____ pTrace____ Temp____ "g"____ Other____

12. Estimated Time to Perform Measurement: 3 Min

13. Estimated Time to Set Up and Secure Measurement: 4 Min

14. Estimated Measurement Frequency: 1/man/10 Days

MEASUREMENT SPECIFICATION NO. 1.1.4

1. Measurement Name: EMG

2. Purpose: Study Muscle Tonus

3. Recommended Technique: Bio-potential Measurement

4. Measurement Function Flow Diagram:

	Stimulus	Sensor	Signal Cond	Info Process	Control	Signal Utilization
Major Equip		EEG Electrodes 4 Sig Electr. 1 Sig Gnd.	Bio-potential Amplifier 2 Reg'd	Integration of EMG Signal See Note		a. CRT Display of Integrated EMG Waveform b. Data Storage c. Telemetry
Support Equip		Skin Prep Kit	Junction Box Subj. Protect. Cabling			
Signals		0-10 mV p-p	0-5V 0.1-400 Hz ACC 5% of Meas Range 2 Sig			

Notes: a. Formal Motor Tasks Shall be Implemented in Order to Provide Basis for Work and Rest EMG Levels.
b. May be Longer When Used With Other Measurements.

5. Input Signal Characteristics (Electrical Analogue, Discrete Data Entry, Logbook, Other ?):
Voltage- See Item 4
Frequency- See Item 4
Critical Info In Signal- EMG Waveform

Waveform

EMG Waveform

6. Stimuli and Calibration Requirements: See Item 4

Integrated Waveform

7. On-Board Output Characteristics: See Item 4
Display- Verify Signal Integrity
Voltage- NA
Accuracy- See Item 4
Resolution-
Repeatability-

Playback Required- No
Comparison Required (with what)- No
Processing or Computations - Yes
Telemetry - Yes
Storage- Yes

8. Ground Output Characteristics:
Real Time- No
Near Real Time- No

Delayed (Including Physical Return)- Yes
Readout Format- Analog (Waveform and Integrated Waveform)

9. Identify Advanced Evaluation Techniques which May Impose Change in Processing:
None

10. Support Requirements:
GFE-
Electrical- Yes
Pneumatic- No

Thermal- No
Other (Specify)- Restraint

11. Environmental Data Requirements: Check for Normal Ambient.
pO_2____ pCO_2____ pH_2O____ pN_2____ pTrace____ Temp____ "g"____ Other____

12. Estimated Time to Perform Measurement: 2 Min (See Note 2)

13. Estimated Time to Set Up and Secure Measurement: 5 Min

14. Estimated Measurement Frequency: 1/man/10 Days

3/4

MEASUREMENT SPECIFICATION NO. 1.4.5

1. Measurement Name: Energy Metabolism With Various Activity Levels (SEE NOTES)

2. Purpose: Respiratory / Metabolic Assessment.

3. Recommended Technique: See Measurement SPEC No. 1.3.4.
(Breath by Breath O_2 Consumption, CO_2 Production)

4. Measurement Function Flow Diagram:

	Stimulus	Sensor	Signal Cond	Info Process	Control	Signal Utilization
Major Equip						
Support Equip						
Signals						

Notes: Uses Breath by Breath O_2 Consumption CO_2 Production Measurement in Conjunction With Logged Entries of Activity Description and Time. See Measurement Specification No. 1.3.4.

5. Input Signal Characteristics (Electrical Analogue, Discrete Data Entry, Logbook, Other?):
   - Voltage-
   - Frequency-
   - Critical Info In Signal-
   - Waveform

6. Stimuli and Calibration Requirements:

7. On-Board Output Characteristics:
   - Display-
   - Voltage-
   - Accuracy-
   - Resolution-
   - Repeatability-
   - Playback Required-
   - Comparison Required (with what)-
   - Processing or Computations -
   - Telemetry
   - Storage-

8. Ground Output Characteristics:
   - Real Time-
   - Near Real Time-
   - Delayed (Including Physical Return)-
   - Readout Format-

9. Identify Advanced Evaluation Techniques which May Impose Change in Processing:

10. Support Requirements:
    - GFE-
    - Electrical-
    - Pneumatic-
    - Thermal-
    - Other (Specify)-

11. Environmental Data Requirements:
    pO_2 ____ pCO_2 ____ pH_2O ____ pN_2 ____ pTrace ____ Temp ____ "g" ____ Other ____

12. Estimated Time to Perform Measurement:

13. Estimated Time to Set Up and Secure Measurement:

14. Estimated Measurement Frequency:

SECTION 2

BEHAVIORAL MEASUREMENTS

2.1 Sensory Test Battery

MEASUREMENT SPECIFICATION NO. 2.1.1

1. Measurement Name: Visual Sensory Test

2. Purpose: Det. if extended space flight affects visual abilities of crew

3. Recommended Technique: Visual test present to subject by vision tester

4. Measurement Function Flow Diagram:

a. Acuity
b. Depth Perception
c. Phorias
d. Color
e. Brightness Thresholds
f. Dark Adaption Time

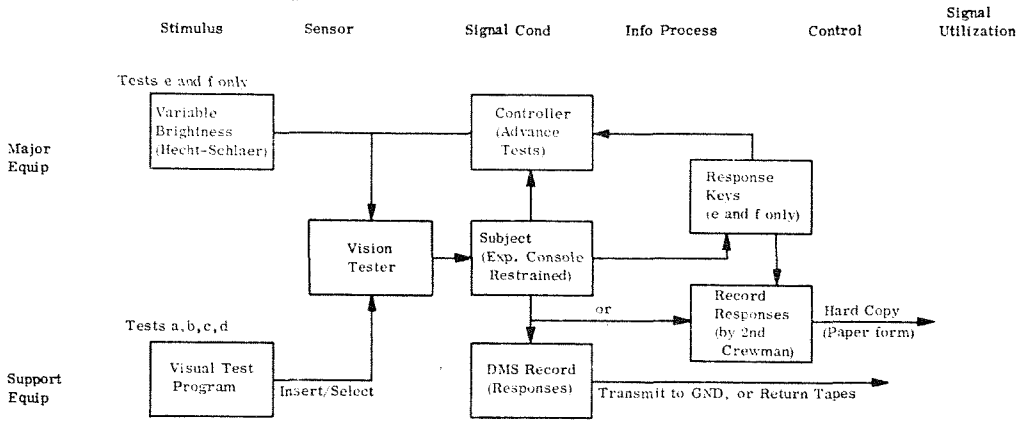

Signals

Vision Tester (modified for visual test programs, controller, adaptometer)
Adaptometer (modified as above-coupled to response key for detecting responses at brightness level)
Controller (advances test programs upon subject demand)
Tape Recorder (subject responses)
Response Key - record subject responses at brightness levels.
Tapes and/or data recording sheets

Notes:

5. Input Signal Characteristics (Electrical Analogue, Discrete Data Entry, Logbook, Other?):
   Voltage- Analog and discrete
   Waveform N/A
   Frequency- N/A
   Critical Info In Signal- Increase - Decrease of brightness-measurement of level at specific times - analog voltage as function of brightness and discrete (subject response) - subjects responds verbally to discrete display data.
6. Stimuli and Calibration Requirements: Test frames and variable light intensity source

7. On-Board Output Characteristics:
   Display- Yes
   Voltage- N/A
   Accuracy- TBD
   Resolution- TBD
   Repeatability- TBD
   Playback Required- No
   Comparison Required (with what)- No
   Processing or Computations - Yes
   Telemetry- Yes
   Storage- TBD

8. Ground Output Characteristics:
   Real Time- No
   Near Real Time- Not critical
   Delayed (Including Physical Return)- X
   Readout Format- TBD

9. Identify Advanced Evaluation Techniques which May Impose Change in Processing: TBD

10. Support Requirements:
    GFE- None
    Electrical- Yes
    Pneumatic- No
    Thermal- No
    Other (Specify)- Restraint for crewman

11. Environmental Data Requirements: Ambient Same as Pre and Post Flight
    pO_2 ____ pCO_2 ____ pH_2O ____ pN_2 ____ pTrace ____ Temp ____ "g" ____ Other ____

12. Estimated Time to Perform Measurement: 50 min.

13. Estimated Time to Set Up and Secure Measurement and Tear Down: 10 min.

14. Estimated Measurement Frequency: 1/10 days/man

MEASUREMENT SPECIFICATION NO. 2.1.2

1. Measurement Name: Auditory Sensory Test

2. Purpose: Det. if extended space flight affects auditory ability of crew

a. Absolute Intensity Thresholds
b. Pitch Discrimination

3. Recommended Technique: Magnetic tape presentation of stimuli and crew response.

4. Measurement Function Flow Diagram:

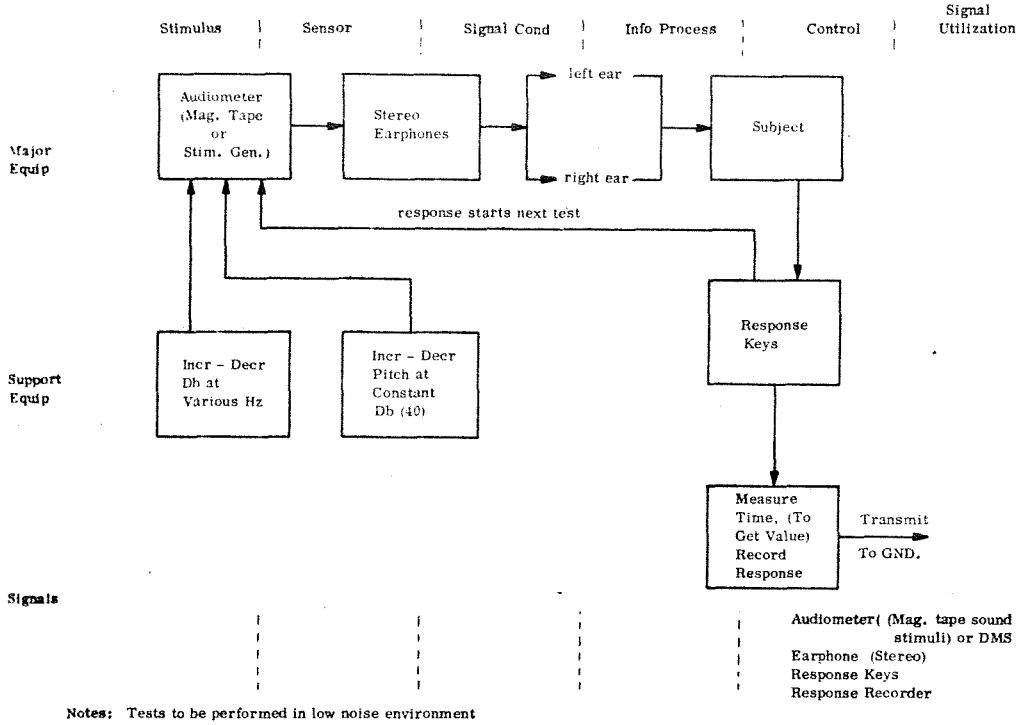

Notes: Tests to be performed in low noise environment

5. Input Signal Characteristics (Electrical Analogue, Discrete Data Entry, Logbook, Other ?):
   Voltage- Analog, Discrete
   Frequency- 50-20 KHz
   Critical Info In Signal- a) Tone frequencies 50 to 20,000 Hz db - up to 50 db at higher freq.
   Waveform
   b) Pitch 40 db at 1000 Hz 500 Hz and - freq. change higher and lower until noticed (± 15 Hz) in increment of 1 Hz
   1500 Hz

6. Stimuli and Calibration Requirements: Tones as specified

7. On-Board Output Characteristics: Yes
   Display- Yes
   Voltage- No
   Accuracy- TBD
   Resolution- TBD
   Repeatability- TBD
   Playback Required- No
   Comparison Required (with what)- No
   Processing or Computations -
   Telemetry- Yes
   Storage- No

8. Ground Output Characteristics:
   Real Time- No
   Near Real Time- Not Critical
   Delayed (Including Physical Return)- X
   Readout Format- TBD

9. Identify Advanced Evaluation Techniques which May Impose Change in Processing: No

10. Support Requirements:
    GFE- No
    Electrical- Yes
    Pneumatic- No
    Thermal- No
    Other (Specify)- Crew Restraint

11. Environmental Data Requirements: Ambient
    pO_2____ pCO_2____ pH_2O____ pN_2____ pTrace____ Temp____ "g"____ Other____

12. Estimated Time to Perform Measurement: 20

13. Estimated Time to Set Up and Secure Measurement: 10
    and Tear Down

14. Estimated Measurement Frequency: 1/10 Days/Man

52

MEASUREMENT SPECIFICATION NO. 2.1.3

1. Measurement Name: Proprioception Sensory Test

2. Purpose: Det. if extended space flight affects man's proprioceptive abilities.

3. Recommended Technique: Perform extremity location and hand movements.

4. Measurement Function Flow Diagram:

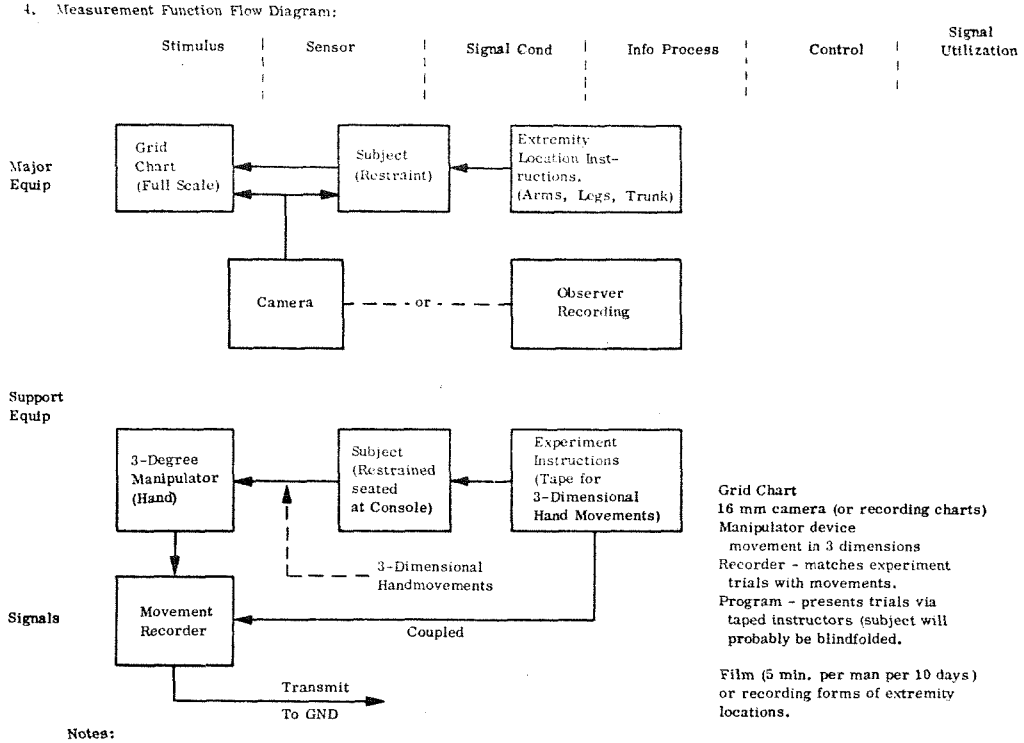

Notes:

Grid Chart
16 mm camera (or recording charts)
Manipulator device
movement in 3 dimensions
Recorder - matches experiment trials with movements.
Program - presents trials via taped instructors (subject will probably be blindfolded.

Film (5 min. per man per 10 days) or recording forms of extremity locations.

5. Input Signal Characteristics (Electrical Analogue, Discrete Data Entry, Logbook, Other?):
   Voltage- TBD
   Frequency- N/A
   Critical Info In Signal- Hand movement (time required and path)
   Waveform

6. Stimuli and Calibration Requirements: Mag. tape and CRT, or written task instructions if observer used.

7. On-Board Output Characteristics:
   Display- No
   Voltage- No
   Accuracy- TBD
   Resolution- TBD
   Repeatability- TBD
   Playback Required- No
   Comparison Required (with what)- No
   Processing or Computations - TBD
   Telemetry - Yes
   Storage- No

8. Ground Output Characteristics:
   Real Time- No
   Near Real Time- Not Critical
   Delayed (Including Physical Return)- X
   Readout Format- Must reconstruct hand movements. Pictures of extremity location. (if camera used)

9. Identify Advanced Evaluation Techniques which May Impose Change in Processing:

10. Support Requirements:
    GFE- N/A
    Electrical- Yes
    Pneumatic- N/A
    Thermal- N/A
    Other (Specify)- crew restraint

11. Environmental Data Requirements: Same as on ground tests
    pO_2 ____ pCO_2 ____ pH_2O ____ pN_2 ____ pTrace ____ Temp ____ "g" ____ Other ____

12. Estimated Time to Perform Measurement: 15

13. Estimated Time to Set Up and Secure Measurement: 10

14. Estimated Measurement Frequency: Once/Man/10 Days

MEASUREMENT SPECIFICATION NO. 2.1.4

1. Measurement Name: Cutaneous Sensory Test

2. Purpose: Det. if extended space travel affects man's cutaneous touch abilities.

3. Recommended Technique:

4. Measurement Function Flow Diagram:

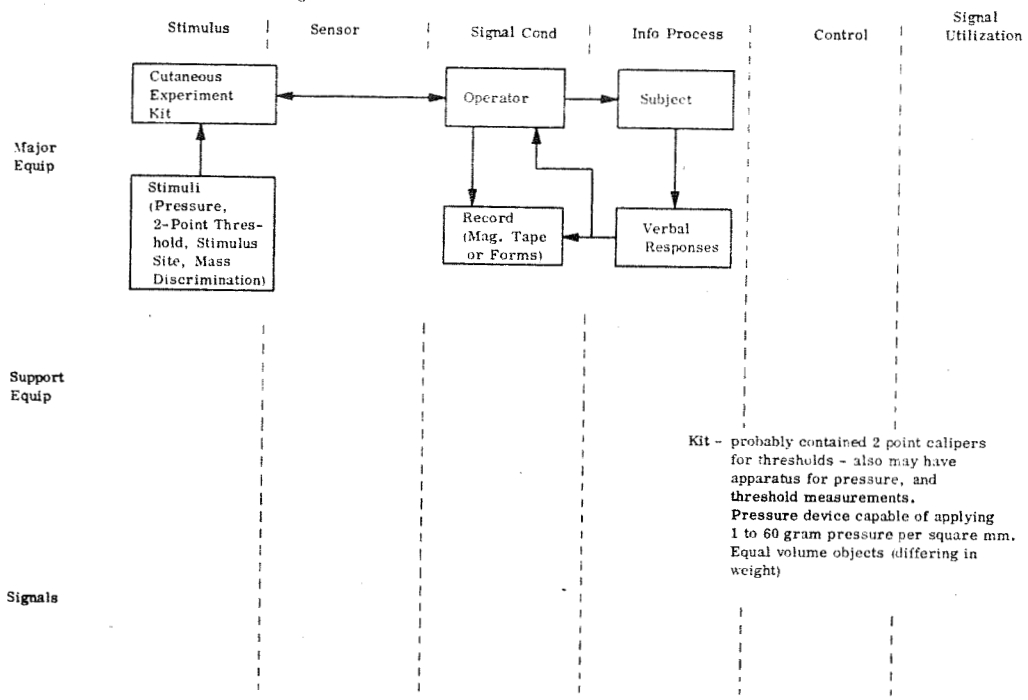

Notes:

5. Input Signal Characteristics (Electrical Analogue, Discrete Data Entry, Logbook, Other?):
   Voltage- NA
   Waveform NA
   Frequency- NA
   Critical Info In Signal- Subject responses are recorded by observer.

6. Stimuli and Calibration Requirements: Mechanical Stimulation

7. On-Board Output Characteristics:
   Display- NA
   Voltage- NA
   Accuracy- TBD
   Resolution- TBD
   Repeatability- TBD
   Playback Required- NA
   Comparison Required (with what)- NA
   Processing or Computations - NA
   Telemetry -Yes
   Storage- No

8. Ground Output Characteristics:
   Real Time- NA
   Near Real Time- NA
   Delayed (Including Physical Return)- X
   Readout Format- Yes/No subject response recorded by subject

9. Identify Advanced Evaluation Techniques which May Impose Change in Processing:

10. Support Requirements:
    GFE- NA
    Electrical- NA
    Pneumatic- NA
    Thermal- NA
    Other (Specify)- Crew restraint

11. Environmental Data Requirements: Same as ground environment
    pO_2____ pCO_2____ pH_2O____ pN_2____ pTrace____ Temp ____ "g" ____ Other ____

12. Estimated Time to Perform Measurement: 30 min.

13. Estimated Time to Set Up and Tear Down and Secure Measurement: 10 min.

14. Estimated Measurement Frequency: once/man/10 days

MEASUREMENT SPECIFICATION NO. 2.2

1. Measurement Name: Higher Thought Processes

2. Purpose: Det. affects of extended space flight on higher thought processes.

3. Recommended Technique: Periodic presentation of problem - solving tests, i.e., arithmetic computation, inductive reasoning, analogies.

4. Measurement Function Flow Diagram:

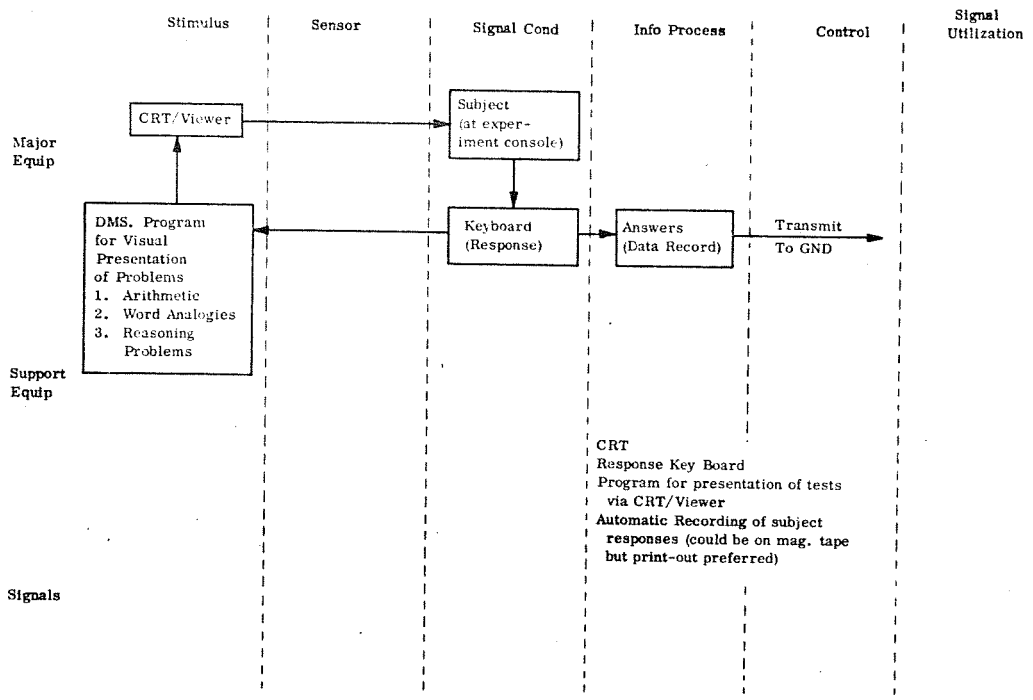

Notes:

5. Input Signal Characteristics (Electrical Analogue, Discrete Data Entry, Logbook, Other?):
   Voltage- Discrete
   Waveform - NA
   Frequency- NA
   Critical Info In Signal- Content of subject's response to stimuli

6. Stimuli and Calibration Requirements: Alpha-numeric presentations

7. On-Board Output Characteristics:
   Display- Yes
   Voltage- No
   Accuracy- TBD
   Resolution- TBD
   Repeatability- TBD
   Playback Required- No
   Comparison Required (with what)- No
   Processing or Computations - No
   Telemetry - X
   Storage- No

8. Ground Output Characteristics:
   Real Time- No
   Near Real Time- No
   Delayed (Including Physical Return)- X
   Readout Format- Ans. to problems - probably alpha-numeric.

9. Identify Advanced Evaluation Techniques which May Impose Change in Processing: None

10. Support Requirements:
    GFE- NA
    Electrical- Yes
    Pneumatic- No
    Thermal- NA
    Other (Specify)- Crew restraint

11. Environmental Data Requirements: Same as pre-flight
    pO_2____ pCO_2____ pH_2O____ pN_2____ pTrace____ Temp____ "g"____ Other____

12. Estimated Time to Perform Measurement: 20 min

13. Estimated Time to Set Up and Secure Measurement: 4 min

14. Estimated Measurement Frequency: Once/Man/10 Days

MEASUREMENT SPECIFICATION NO. 2.3

1. **Measurement Name:** Memory - Short and Long Term

2. **Purpose:** Det. if extended space flight affects retention

3. **Recommended Technique:** Visual presentation of memory tasks such as alpha-numerics

4. **Measurement Function Flow Diagram:**

	Stimulus	Sensor	Signal Cond	Info Process	Control	Signal Utilization
Major Equip						
	Same as higher thought processes (Measurement Spec. No. 2.2) but input is numeric digits and alphabetical non-sense syllables.					
Support Equip						
Signals						CRT Keyboard Experiment Program

Notes:

5. **Input Signal Characteristics (Electrical Analogue, Discrete Data Entry, Logbook, Other ?):**
   Voltage- discretes
   Frequency- NA
   Waveform - NA
   Critical Info In Signal- content of subject's response to stimuli

6. **Stimuli and Calibration Requirements:** Alpha-numerics presented via CRT/or viewer

7. **On-Board Output Characteristics:**
   Display- Yes
   Voltage- No
   Accuracy- } TBD
   Resolution- } TBD
   Repeatability- } TBD
   Playback Required- No
   Comparison Required (with what)- No
   Processing or Computations - No
   Telemetry - Yes
   Storage- No

8. **Ground Output Characteristics:**
   Real Time- No
   Near Real Time- No
   Delayed (Including Physical Return)- X
   Readout Format- Ans. response print-out

9. **Identify Advanced Evaluation Techniques which May Impose Change in Processing:** None

10. **Support Requirements:**
    GFE- N/A
    Electrical- Yes
    Pneumatic- No
    Thermal- No
    Other (Specify)- Crew restraint

11. **Environmental Data Requirements:** Same as preflight
    pO_2____ pCO_2____ pH_2O____ pN_2____ pTrace____ Temp ____ "g" ____ Other ____

12. **Estimated Time to Perform Measurement:** 20 min

13. **Estimated Time to Set Up and Secure Measurement:** 4 min

14. **Estimated Measurement Frequency:** 1/Man/10 Days

MEASUREMENT SPECIFICATION NO. 2.4

1. Measurement Name: Vigilance (Operational Tasks)

2. Purpose: To det. possible changes in man's vigilance capacity as a function of extended space flight.

3. Recommended Technique: Measurement of crew's vigilance during performance of long monitoring, at experimental console.

4. Measurement Function Flow Diagram:

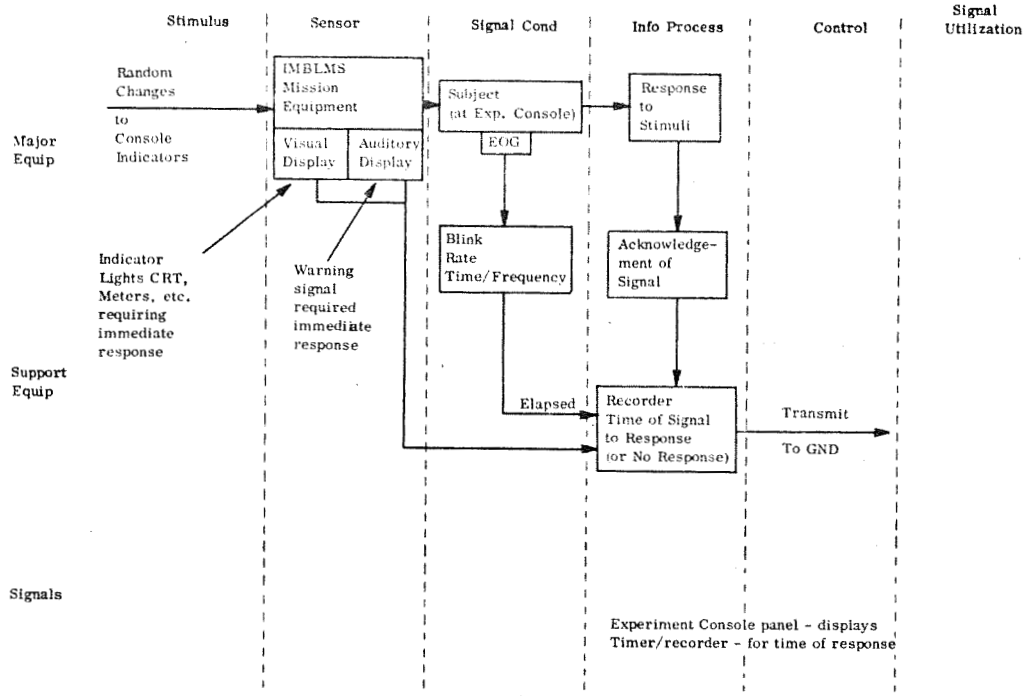

Notes:

5. Input Signal Characteristics (Electrical Analogue, Discrete Data Entry, Logbook, Other?):
   Voltage- } NA
   Frequency- }
   Waveform NA
   Critical Info In Signal- Length of time between onset of stimuli (change in status) and subject response (correct change in status)

6. Stimuli and Calibration Requirements: Visual and auditory stimuli to which subject is required to respond as a task.

7. On-Board Output Characteristics:
   Display- Visual & auditory
   Voltage- Displays
   Accuracy- }
   Resolution- } TBD
   Repeatability- }
   Playback Required- No
   Comparison Required (with what)- Pre-flight and inflight comp.
   Processing or Computations -
   Telemetry - Yes
   Storage- Yes

8. Ground Output Characteristics:
   Real Time-
   Near Real Time- X
   Delayed (Including Physical Return)- X
   Readout Format- Time to correct simulated change

9. Identify Advanced Evaluation Techniques which May Impose Change in Processing:

10. Support Requirements:
    GFE-
    Electrical- X
    Pneumatic-
    Thermal-
    Other (Specify)-

11. Environmental Data Requirements:
    pO_2____ pCO_2____ pH_2O____ pN_2____ pTrace____ Temp____ "g"____ Other____

12. Estimated Time to Perform Measurement: 1 - 10 minute total

13. Estimated Time to Set Up and Secure Measurement: 10

14. Estimated Measurement Frequency: Once/Man/10 Days

2.5 Learned Activity

MEASUREMENT SPECIFICATION NO. 2.5.1

1. Measurement Name: Learned Activity (Tracking)

2. Purpose: Det. if Eye-Hand Coordinated Activities Such as Tracking are Affected by Long Space Habitation.

3. Recommended Technique: Pursuit and Compensatory Tracking - CRT Display and Joy-Stick - Two Dimensional Tracking

4. Measurement Function Flow Diagram:

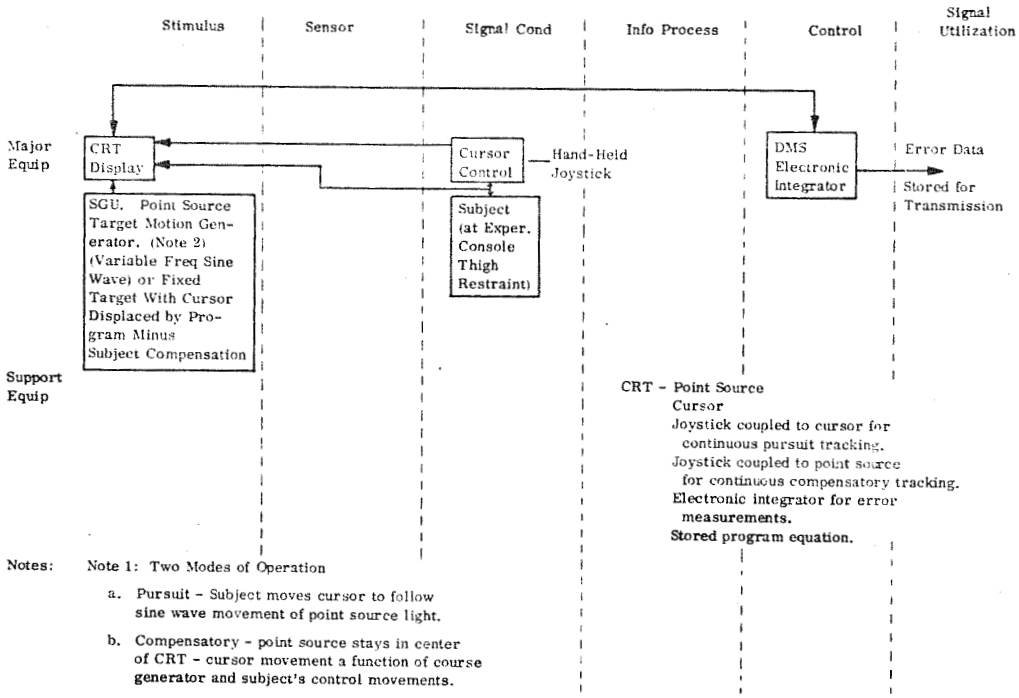

Notes: Note 1: Two Modes of Operation

a. Pursuit - Subject moves cursor to follow sine wave movement of point source light.

b. Compensatory - point source stays in center of CRT - cursor movement a function of course generator and subject's control movements.

Note 2: Random displacement, direction, amplitude or frequency of change as a function of subjects inputs

5. Input Signal Characteristics (Electrical Analogue, Discrete Data Entry, Logbook, Other?):
   Voltage- Analog
   Frequency- NA
   Waveform - Random Program of Increasing Difficulty Until Certain Error Reached.
   Critical Info In Signal- Error - Separation Between Cursor and Point Source.

6. Stimuli and Calibration Requirements: Point Source on CRT as Target - Cursor

7. On-Board Output Characteristics:
   Display- CRT
   Voltage- TBD
   Accuracy- TBD
   Resolution- TBD
   Repeatability- TBD
   Playback Required- No
   Comparison Required (with what)- No
   Processing or Computations - No
   Telemetry - Yes
   Storage- No

8. Ground Output Characteristics:
   Real Time- No
   Near Real Time- No
   Delayed (Including Physical Return)- X
   Readout Format- Error Score Average (Arbitrary Units)

9. Identify Advanced Evaluation Techniques which May Impose Change in Processing: None

10. Support Requirements:
    GFE-
    Electrical- X
    Pneumatic- No
    Thermal- No
    Other (Specify)- Restraint

11. Environmental Data Requirements: Identical to Pre-Flight (i.e. Lighting Same, Restraints, etc.)
    pO_2____ pCO_2____ pH_2O____ pN_2____ pTrace____ Temp____ "g"____ Other____

12. Estimated Time to Perform Measurement: 10 Min

13. Estimated Time to Set Up and Secure Measurement: 10 Min

14. Estimated Measurement Frequency: 1/Man/10 Days

MEASUREMENT SPECIFICATION NO. 2.5.2

1. Measurement Name: Learned Activity (Reaction Time)

2. Purpose: Det. if Long Space Habitation Affects Man's Reaction Time. Comparison of RT During Space Flight and Preflight.

3. Recommended Technique: Visual and Auditory Stimulus - Release of Spring Loaded Button Measure Both Simple and Disjunctive Reactions.

4. Measurement Function Flow Diagram:

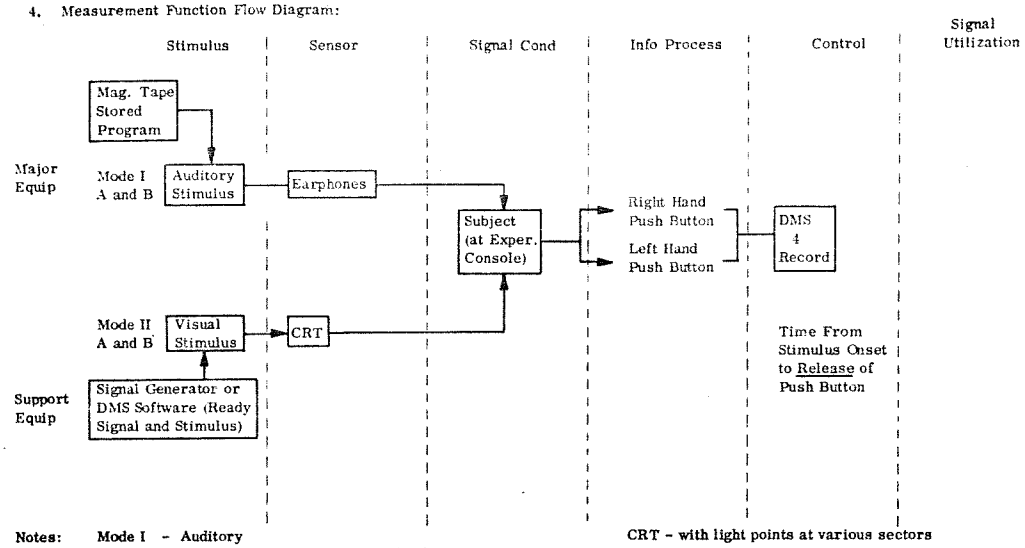

Notes:

Mode I - Auditory
- A - Simple RT - respond to stimulus by release of PB
- B - Complex RT - respond either left/right hand or both to specific Stimulus at specific ear.

Mode II - Visual
- A - Simple RT - release PB at on-set of point source
- B - Complex RT - release of left/right/both push buttons depending on position of point source on scope.

CRT - with light points at various sectors

Light Points - program and control presentation

Mag. Tape and Earphones

Response - push buttons

Recorder for measurements

5. Input Signal Characteristics (Electrical Analogue, Discrete Data Entry, Logbook, Other?):
   - Voltage- Yes
   - Waveform
   - Frequency- TBD
   - Critical Info In Signal- Time From Stimuli Onset to Response
   - Require ready signal to vary from 0.5 to 2 seconds before presentation of stimulus

6. Stimuli and Calibration Requirements: Auditory - Tones required 1) Ready Tone; 2) Stimulus Tone - 500 to 4000 Hz and app. 60 db.
   Visual - Ready Indication - left/right/both hand stimuli

7. On-Board Output Characteristics:
   - Display- Yes
   - Voltage- TBD
   - Accuracy- TBD
   - Resolution- TBD
   - Repeatability- TBD
   - Playback Required- No
   - Comparison Required (with what)- No
   - Processing or Computations -
   - Telemetry - X
   - Storage- No

8. Ground Output Characteristics:
   - Real Time- No
   - Near Real Time- No
   - Delayed (Including Physical Return)- Yes
   - Readout Format- Time of response from stimulus onset to response.

9. Identify Advanced Evaluation Techniques which May Impose Change in Processing: None

10. Support Requirements:
    - GFE- No
    - Electrical- X
    - Pneumatic- No
    - Thermal- No
    - Other (Specify)- No

11. Environmental Data Requirements: Same as preflight environment
    pO_2____ pCO_2____ pH_2O____ pN_2____ pTrace____ Temp____ "g"____ Other____

12. Estimated Time to Perform Measurement: 12 min.

13. Estimated Time to Set Up and Secure Measurement: 10 min.

14. Estimated Measurement Frequency: Once/Man/10 Days

62

MEASUREMENT SPECIFICATION NO. 2.6

1. Measurement Name: Time and Motion Study

2. Purpose: Det. Change in Performance of Crew During Extended Space Flight.

3. Recommended Technique: Periodic Filming of Subjects During Performance of Specific Inflight Tasks. (GFE Experiment M-055)

4. Measurement Function Flow Diagram:

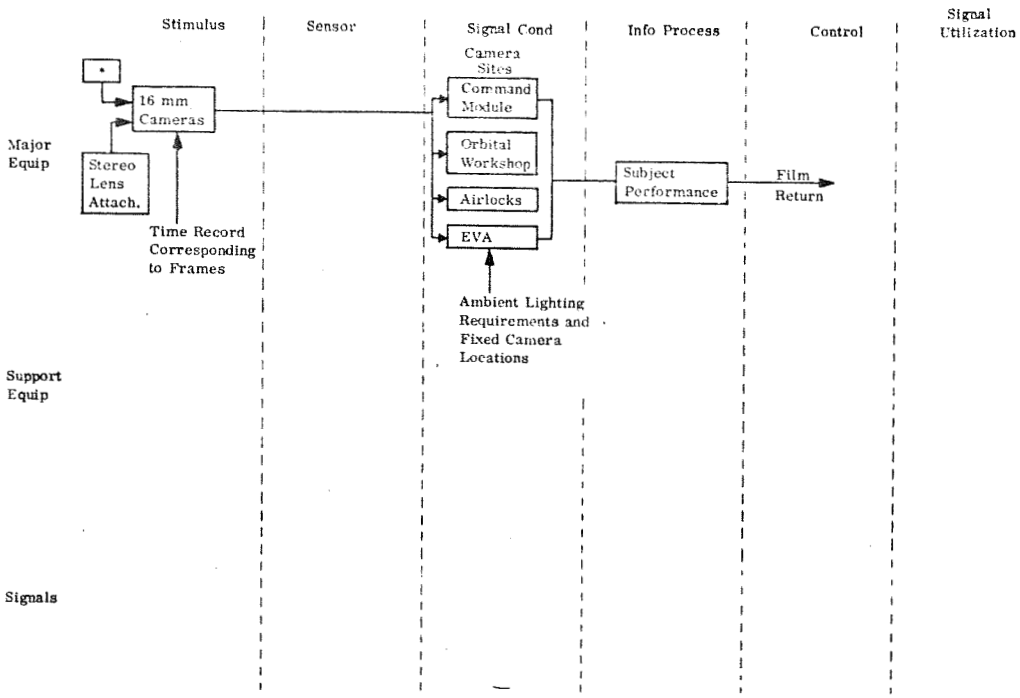

Notes: * Possible inclusion of modified shutter to permit multiple exposure per frame as well as a lens stepping device to permit four photo frames (1/4 of full frame) per frame.

5. Input Signal Characteristics (Electrical Analogue, Discrete Data Entry, Logbook, Other?):
   Voltage- NA
   Frequency- NA
   Critical Info In Signal-
   Require time and frame information
   Waveform - NA

6. Stimuli and Calibration Requirements: Time fix for start and stop of camera - relatable to frames.

7. On-Board Output Characteristics:
   Display- Yes
   Voltage- No
   Accuracy- TBD
   Resolution- TBD
   Repeatability- TBD
   Playback Required- No
   Comparison Required (with what)- No
   Processing or Computations - No
   Telemetry - No
   Storage- Film

8. Ground Output Characteristics:
   Real Time- No
   Near Real Time- No
   Delayed (Including Physical Return)- Film return
   Readout Format- Frame and time

9. Identify Advanced Evaluation Techniques which May Impose Change in Processing: None

10. Support Requirements:
    GFE- Yes - pressure suit (EVA)
    Electrical- Yes
    Pneumatic-
    Thermal- No
    Other (Specify)- EVA Egress

11. Environmental Data Requirements: Same as preflight environment
    pO_2____ pCO_2____ pH_2O____ pN_2____ pTrace____ Temp____ "g"____ Other____

12. Estimated Time to Perform Measurement: 20 Min per man

13. Estimated Time to Set Up and Secure Measurement: 5 Min

14. Estimated Measurement Frequency: 1/Man/day

Note: Gross estimate - very difficult to ascertain as trade study required of wt. limitations vs experiments to be performed.

MEASUREMENT SPECIFICATION NO. 3.7

1. Measurement Name: Clinical Evaluation (Crew Communication, etc.)

2. Purpose: Det. If Long Space Flight, Confindment, etc., Affect Man's Psychological Adjustments.

3. Recommended Technique: Comparison of Pre-Flight Adjustment with Flight Adjustment Via Conversation (to Physchiatrist), Testing, Monitoring of Crew Conversation, and Related Data Obtained From Other Measurements.

4. Measurement Function Flow Diagram:

Stimulus | Sensor | Signal Cond | Info Process | Control | Signal Utilization

Note: It is anticipated that this evaluation will be GFE i.e., specified by NASA - pre-flight psychiatric evaluations are performed on the crew. The evaluating psychiatrist should monitor crew during flight. Possible word associations may be included depending on recommendations from psychiatrists. Possible use of CRT for presentations of above may be required.

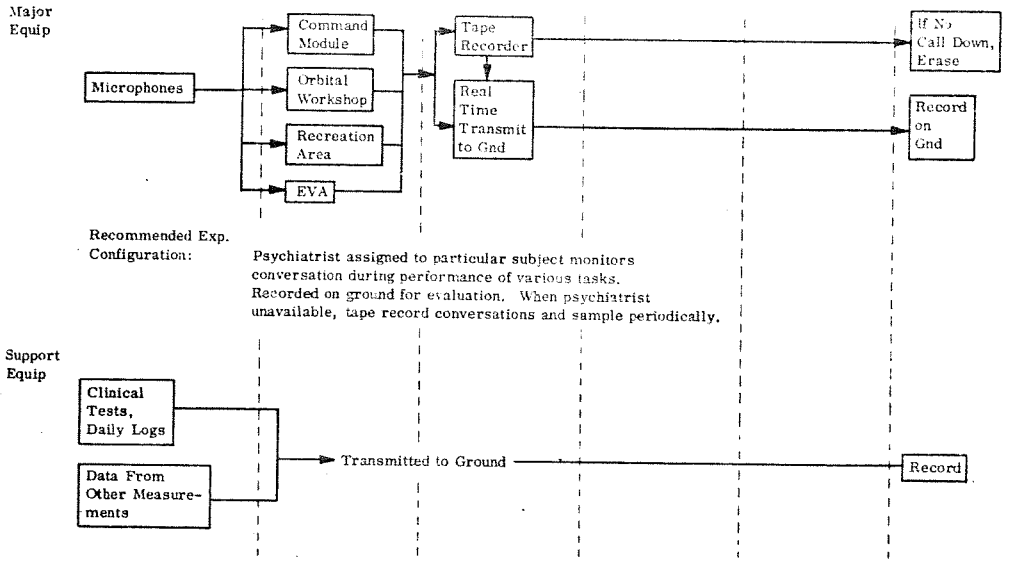

Notes: Test Materials
Microphones
Tape Recorder
Data Transmission

A total picture of changes in psychological behavior will be obtained via post flight analysis of all available information.

5. Input Signal Characteristics (Electrical Analogue, Discrete Data Entry, Logbook, Other?):
Voltage- TBD
Waveform NA
Frequency-NA
Critical Info In Signal- Responses to questions - Crew conversation

6. Stimuli and Calibration Requirements: Prepared questions

7. On-Board Output Characteristics:
Display- Yes
Voltage- No
Accuracy- TBD
Resolution- TBD
Repeatability-TBD
Playback Required- No
Comparison Required (with what)- No
Processing or Computations - No
Telemetry - X
Storage- X

8. Ground Output Characteristics:
Real Time- (Yes)
Near Real Time- No
Delayed (Including Physical Return)- (Yes)
Readout Format- Verbal responses
Crew Conversation

9. Identify Advanced Evaluation Techniques which May Impose Change in Processing:

10. Support Requirements:
GFE-
Electrical- X
Pneumatic-
Thermal-
Other (Specify)-

11. Environmental Data Requirements: Record of environment
pO_2____ pCO_2____ pH_2O____ pN_2____ pTrace____ Temp____ "g"____ Other____

12. Estimated Time to Perform Measurement: 5 min

13. Estimated Time to Set Up and Secure Measurement: None

14. Estimated Measurement Frequency: Once/Day/Man

SECTION 3

LABORATORY ANALYSES

3.1 On-Board Measurements

3.1.1 Blood Measurements

MEASUREMENT SPECIFICATION NO. 3.1.1.1

1. Measurement Name: Blood Measurement - Whole Blood with No Anticoagulant

2. Purpose: To Evaluate Blood Changes Under Zero "G" Conditions

3. Recommended Technique: Eight Discrete Measurements by Microscopic and Timing Techniques

4. Measurement Equipment Block Diagram:

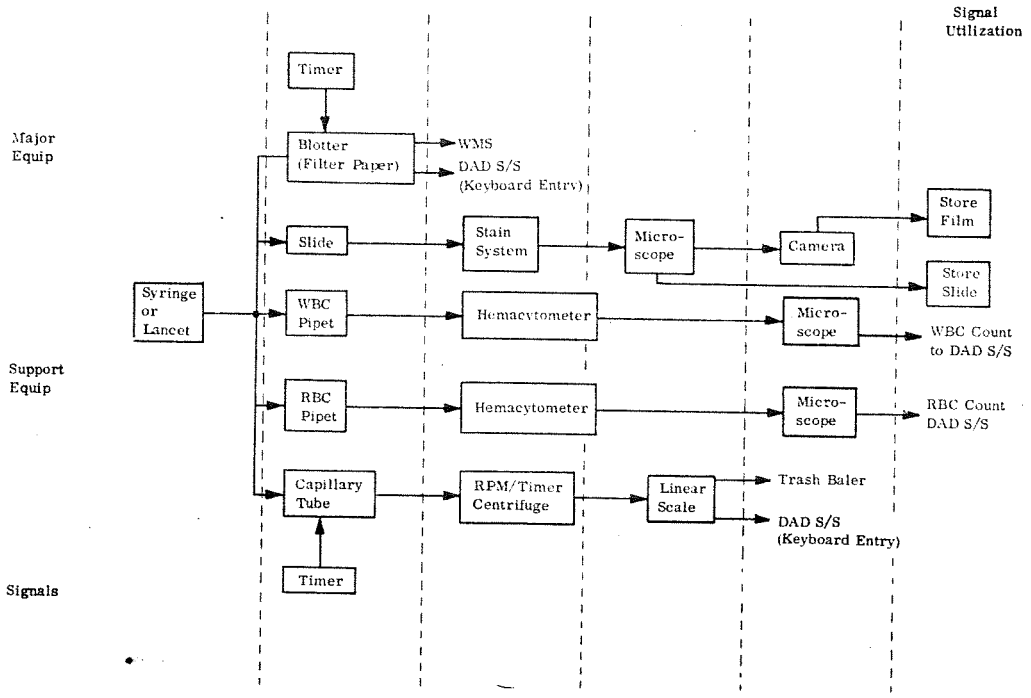

Notes:

5. Input Signal Characteristics (Electrical Analogue, Keyboard Entry, Discrete Data Entry, Logbook, Other ?):
   Voltage- NA
   Frequency- NA
   Waveform - NA
   Critical Info In Signal- Counts, Microscopic Findings, Times

6. Stimuli and Calibration Requirements: None

7. On-Board Output Characteristics:
   Display- Procedures
   Voltage- TBD
   Accuracy- } TBD
   Resolution- }
   Repeatability- }
   Playback Required- TBD
   Comparison Required (with what)- Chart Showing Reticulocyte and Typical Blood Cells
   Processing or Computations -
   Telemetry- Yes
   Storage- Film Freezer, Slides

8. Ground Output Characteristics:
   Real Time- } TBD
   Near Real Time- }
   Delayed (Including Physical Return)- X
   Readout Format- NA

9. Identify Advanced Evaluation Techniques which May Impose Change in Processing: NA

10. Support Requirements:
    GFE- WMS or Trash Baler
    Electrical- Microscope Light Centrifuge
    Pneumatic- TBD
    Thermal- TBD
    Other (Specify)-

11. Environmental Data Requirements: On All - at Intervals, e.g., 1 X 1 Hr.
    pO_2____ pCO_2____ pH_2O____ pN_2____ pTrace____ Temp ____ "g" ____ Other ____

12. Estimated Time to Perform Measurement: } TBD
13. Estimated Time to Set Up and Secure Measurement: }
14. Estimated Measurement Frequency: }

MEASUREMENT SPECIFICATION NO. 3.1.1.2

1. **Measurement Name:** Blood Measurement - Whole Blood with any Anticoagulant

2. **Purpose:** To Evaluate Blood Changes Under Zero "G" Conditions

3. **Recommended Technique:** Two Discrete Measurements. By Radioisotope Tagging Technique.

4. **Measurement** Equipment Block Diagram:

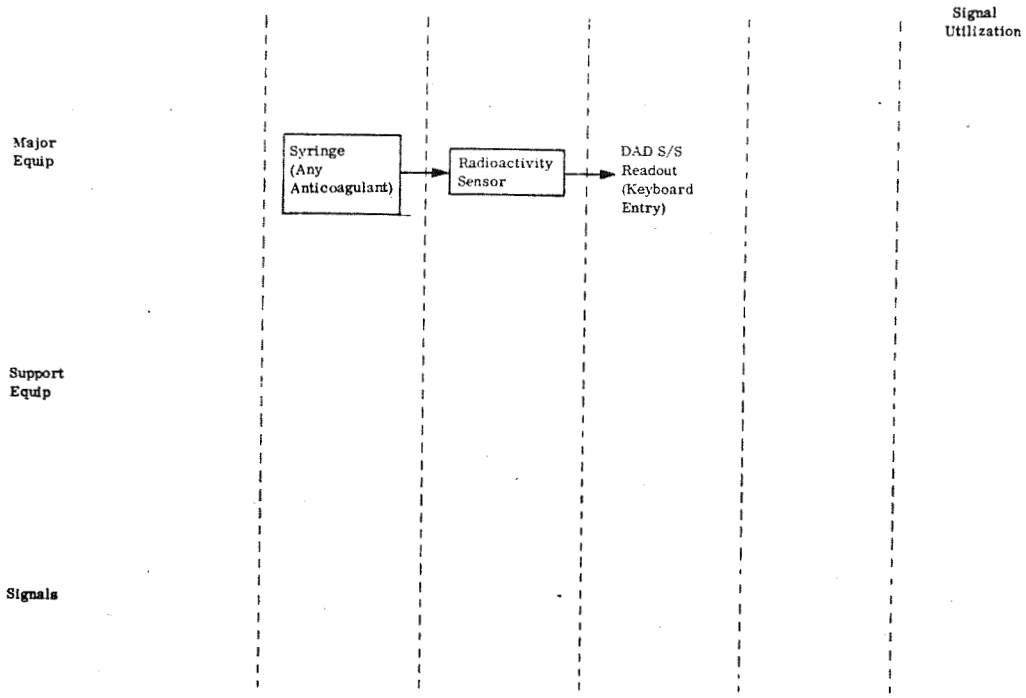

Notes:

5. **Input Signal Characteristics (Electrical Analogue, Keyboard Entry, Discrete Data Entry, Logbook, Other?):**
   Voltage- NA
   Frequency- NA
   Critical Info In Signal- Radioactivity Level
   Waveform - NA

6. **Stimuli and Calibration Requirements:** None

7. **On-Board Output Characteristics:**
   Display- Procedure
   Voltage- TBD
   Accuracy-, **Resolution-**, **Repeatability-** } TBD
   Playback Required- TBD
   Comparison Required (with what)- Baseline Data
   Processing or Computations - NA
   Telemetry - TBD
   Storage- NA

8. **Ground Output Characteristics:**
   Real Time-, **Near Real Time-** } TBD
   Delayed (Including Physical Return) - Yes
   Readout Format- NA

9. **Identify Advanced Evaluation Techniques which May Impose Change in Processing:** None

10. **Support Requirements:**
    GFE-, **Electrical-**, **Pneumatic-** } TBD
    Thermal- TBD
    Other (Specify)-

11. **Environmental Data Requirements:** At Periodic Intervals, e.g. 1 X/Hr.
    pO_2____ pCO_2____ pH_2O____ pN_2____ pTrace____ Temp____ "g"____ Other____

12. **Estimated Time to Perform Measurement:**
13. **Estimated Time to Set Up and Secure Measurement:** } TBD
14. **Estimated Measurement Frequency:**

MEASUREMENT SPECIFICATION NO. 3.1.1.3

1. Measurement Name: Blood Measurement - Oxalated Blood

2. Purpose: To Evaluate Blood Changes Under Zero "G" Condition

3. Recommended Technique: One Discrete Measurement by Spectrophotometeric Technique

4. Measurement Equipment Block Diagram:

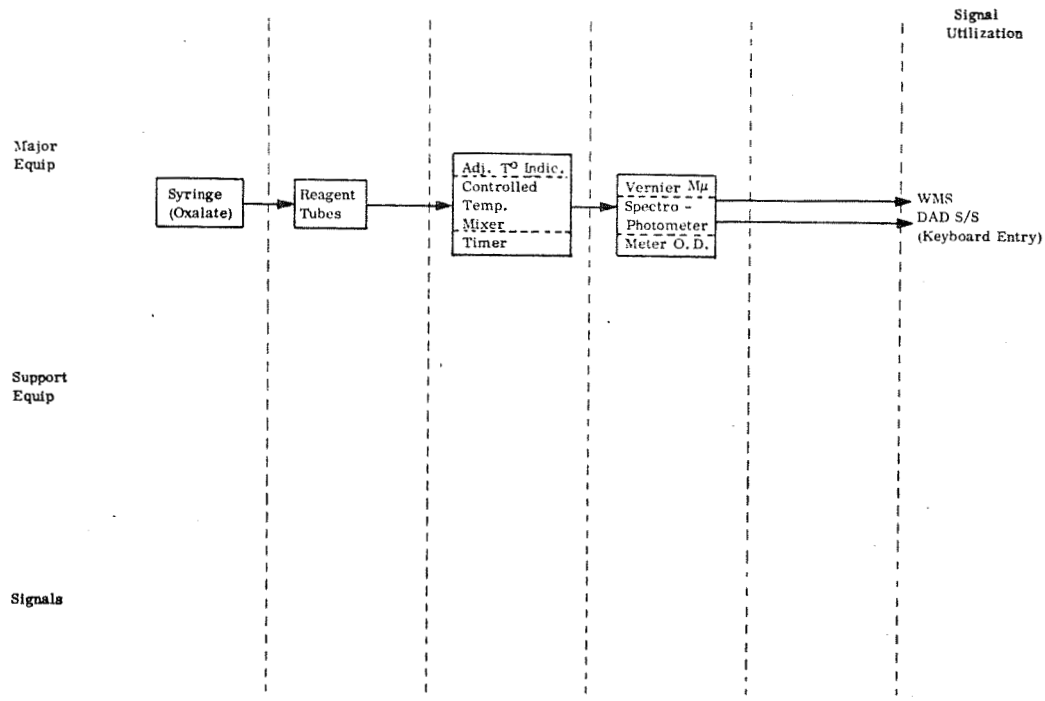

Notes:

5. Input Signal Characteristics (Electrical Analogue, Keyboard Entry, Discrete Data Entry, Logbook, Other ?):
   Voltage- NA
   Frequency- NA
   Waveform - NA
   Critical Info In Signal- Spectrophotomer Meter Reading

6. Stimuli and Calibration Requirements: None

7. On-Board Output Characteristics:
   Display- Procedure
   Voltage- TBD
   Accuracy- TBD
   Resolution- TBD
   Repeatability- TBD
   Playback Required- TBD
   Comparison Required (with what)- Standard Curve
   Processing or Computations - NA
   Telemetry - NA
   Storage- NA

8. Ground Output Characteristics:
   Real Time- } TBD
   Near Real Time- }
   Delayed (Including Physical Return)- X
   Readout Format- NA

9. Identify Advanced Evaluation Techniques which May Impose Change in Processing: NA

10. Support Requirements:
    GFE- WMS or Trash Baler
    Electrical- Spectrophotometer Controlled Temp. Mixer
    Pneumatic- TBD
    Thermal- TBD
    Other (Specify)-

11. Environmental Data Requirements: Monitor at Periodic Intervals, e.g. 1 X/Hr.
    pO_2____ pCO_2____ pH_2O____ pN_2____ pTrace____ Temp ____ "g" ____ Other ____

12. Estimated Time to Perform Measurement: } TBD
13. Estimated Time to Set Up and Secure Measurement: }
14. Estimated Measurement Frequency: }

MEASUREMENT SPECIFICATION NO. 3.1.1.4

1. Measurement Name: Blood Measurement - Plasma with any Anticoagulant

2. Purpose: Determine Total Plasma Volume Changes in the Astronauts

3. Recommended Technique: One Discrete Measurement by Radioisotopic Technique

4. Measurement Equipment Block Diagram:

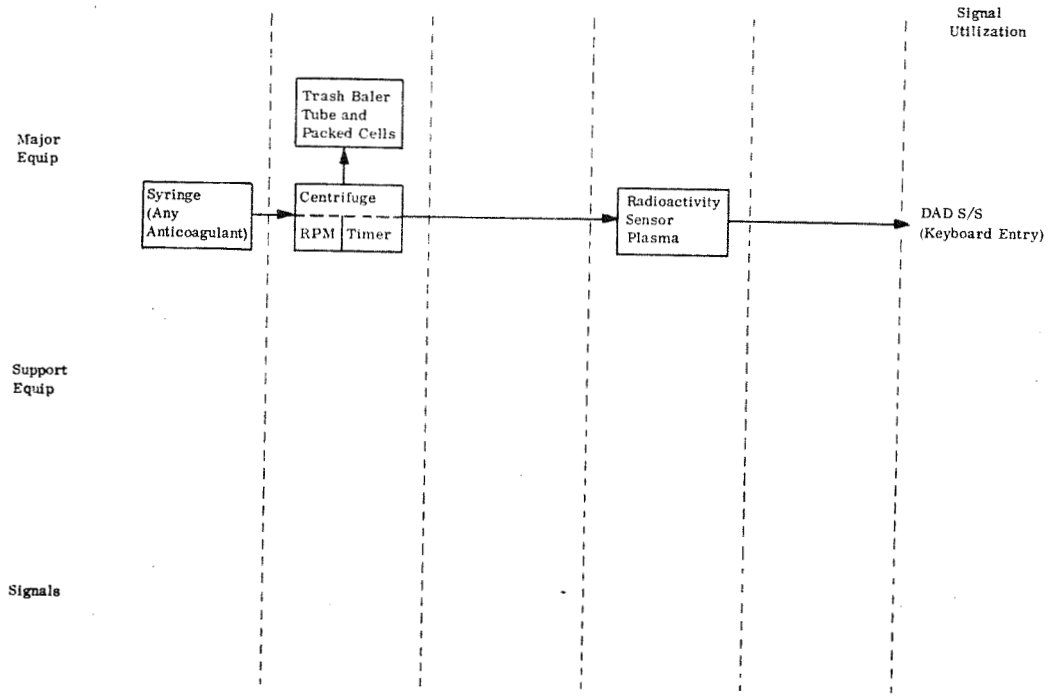

Notes:

5. Input Signal Characteristics (Electrical Analogue, Keyboard Entry, Discrete Data Entry, Logbook, Other ?):
   Voltage- NA
   Frequency- NA
   Critical Info In Signal- Radioactivity Level
   Waveform - NA

6. Stimuli and Calibration Requirements: None

7. On-Board Output Characteristics:
   Display- Procedure
   Voltage- TBD
   Accuracy- TBD
   Resolution- TBD
   Repeatability- TBD
   Playback Required- TBD
   Comparison Required (with what)- Baseline Data
   Processing or Computations - None
   Telemetry - TBD
   Storage- NA

8. Ground Output Characteristics:
   Real Time- } TBD
   Near Real Time- }
   Delayed (Including Physical Return)- X
   Readout Format- TBD

9. Identify Advanced Evaluation Techniques which May Impose Change in Processing:

10. Support Requirements:
    GFE- None
    Electrical- Centrifuge
    Pneumatic- TBD
    Thermal- TBD
    Other (Specify)-

11. Environmental Data Requirements:
    pO_2____ pCO_2____ pH_2O____ pN_2____ pTrace____ Temp____ "g"____ Other____

12. Estimated Time to Perform Measurement: } TBD
13. Estimated Time to Set Up and Secure Measurement: }
14. Estimated Measurement Frequency: }

74

MEASUREMENT SPECIFICATION NO. 3.1.1.5

1. Measurement Name: Blood Measurement - Heparinized Blood

2. Purpose: To Determine Mutations Due to Radiation Effects.

3. Recommended Technique: One Discrete Measurement Using the Microscopic Technique

4. Measurement Equipment Block Diagram

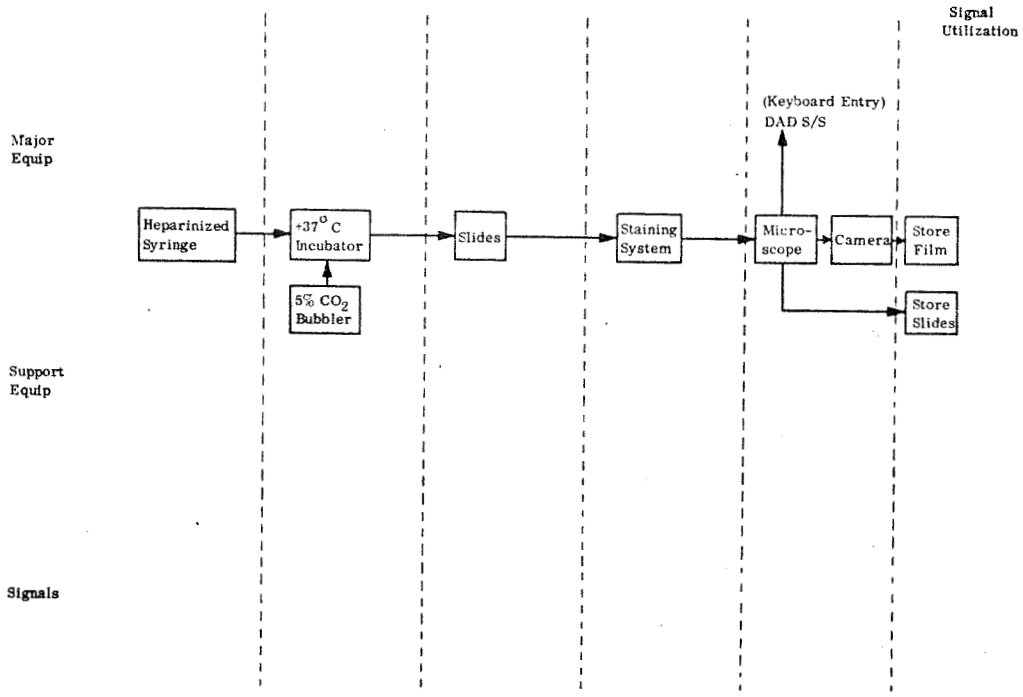

Notes:

5. Input Signal Characteristics (Electrical Analogue, Keyboard Entry, Discrete Data Entry, Logbook, Other ?):
   Voltage- NA
   Frequency-
   Waveform- NA
   Critical Info In Signal- Microscopic Findings

6. Stimuli and Calibration Requirements: None

7. On-Board Output Characteristics:
   Display- Procedure
   Voltage- TBD
   Accuracy- } TBD
   Resolution-
   Repeatability-
   Playback Required- TBD
   Comparison Required (with what)- Baseline
   Processing or Computations - NA
   Telemetry - Yes
   Storage- Yes

8. Ground Output Characteristics:
   Real Time- TBD
   Near Real Time- TBD
   Delayed (Including Physical Return)- X
   Readout Format- NA

9. Identify Advanced Evaluation Techniques which May Impose Change in Processing: None

10. Support Requirements:
    GFE- TBD
    Electrical- Power and Light
    Pneumatic- TBD
    Thermal- TBD
    Other (Specify)-

11. Environmental Data Requirements: At Periodic Intervals, e.g., 1 X/Hr.
    pO_2____ pCO_2____ pH_2O____ pN_2____ pTrace____ Temp ____ "g" ____ Other ____

12. Estimated Time to Perform Measurement: } TBD
13. Estimated Time to Set Up and Secure Measurement: } TBD
14. Estimated Measurement Frequency: } TBD

MEASUREMENT SPECIFICATION NO. 3.1.1.6

1. Measurement Name: Blood Measurement - Serum

2. Purpose: To Determine Metabolic Change in the Astronaut

3. Recommended Technique: Seven Discrete Measurements Using the Spectrophotometric Technique

4. Measurement Function Flow Diagram:

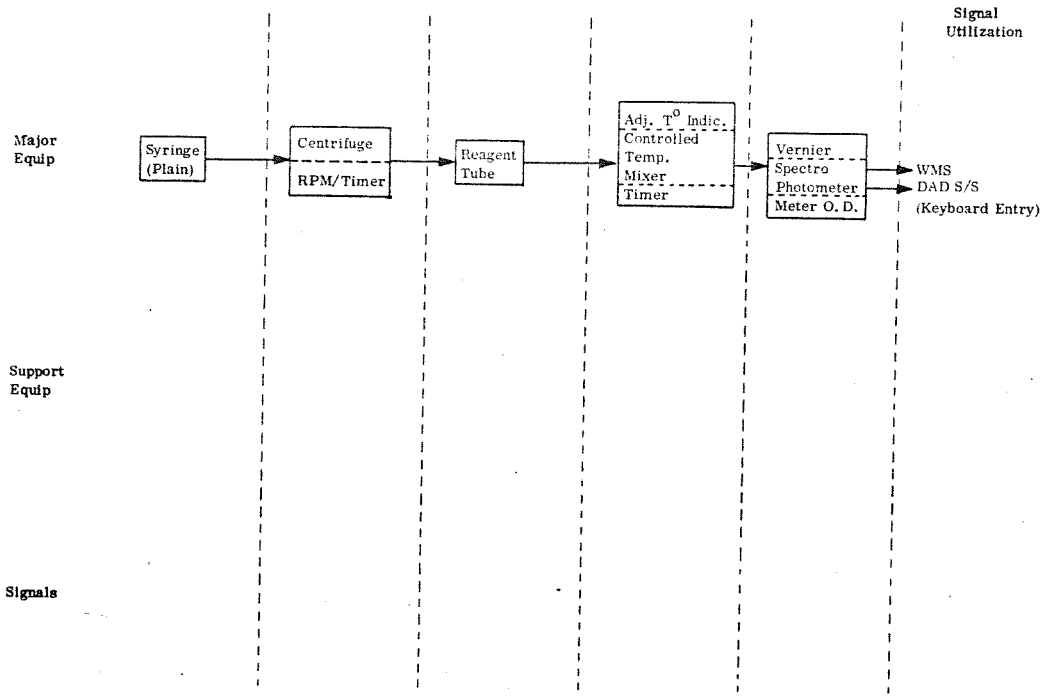

Notes:

5. Input Signal Characteristics (Electrical Analogue, Keyboard Entry / Discrete Data Entry, Logbook, Other?):
   Voltage- NA
   Frequency- NA
   Waveform - NA
   Critical Info In Signal- Spectrophotometric Meter Reading

6. Stimuli and Calibration Requirements: None

7. On-Board Output Characteristics:
   Display- Procedures
   Voltage- TBD
   Accuracy- TBD
   Resolution- TBD
   Repeatability- TBD
   Playback Required- TBD
   Comparison Required (with what)- Standard Curves
   Processing or Computations - NA
   Telemetry - TBD
   Storage- NA

8. Ground Output Characteristics:
   Real Time- } TBD
   Near Real Time- }
   Delayed (Including Physical Return)- TBD
   Readout Format- NA

9. Identify Advanced Evaluation Techniques which May Impose Change in Processing: None

10. Support Requirements:
    GFE- WMS
    Electrical- Centrifuge Spectrophotometer
    Pneumatic- TBD
    Thermal- TBD
    Other (Specify)-

11. Environmental Data Requirements: Moniter 1 X/Hr.
    pO_2____ pCO_2____ pH_2O____ pN_2____ pTrace____ Temp____ "g"____ Other____

12. Estimated Time to Perform Measurement: } TBD
13. Estimated Time to Set Up and Secure Measurement: }
14. Estimated Measurement Frequency: }

76

MEASUREMENT SPECIFICATION NO. 3.1.1.7

1. Measurement Name: Blood Measurement - Oxalated Plasma

2. Purpose: To Determine Metabolic Changes in the Astronaut

3. Recommended Technique: One Discrete Measurement Using the Spectrophotometric Technique

4. Measurement Equipment Block Diagram:

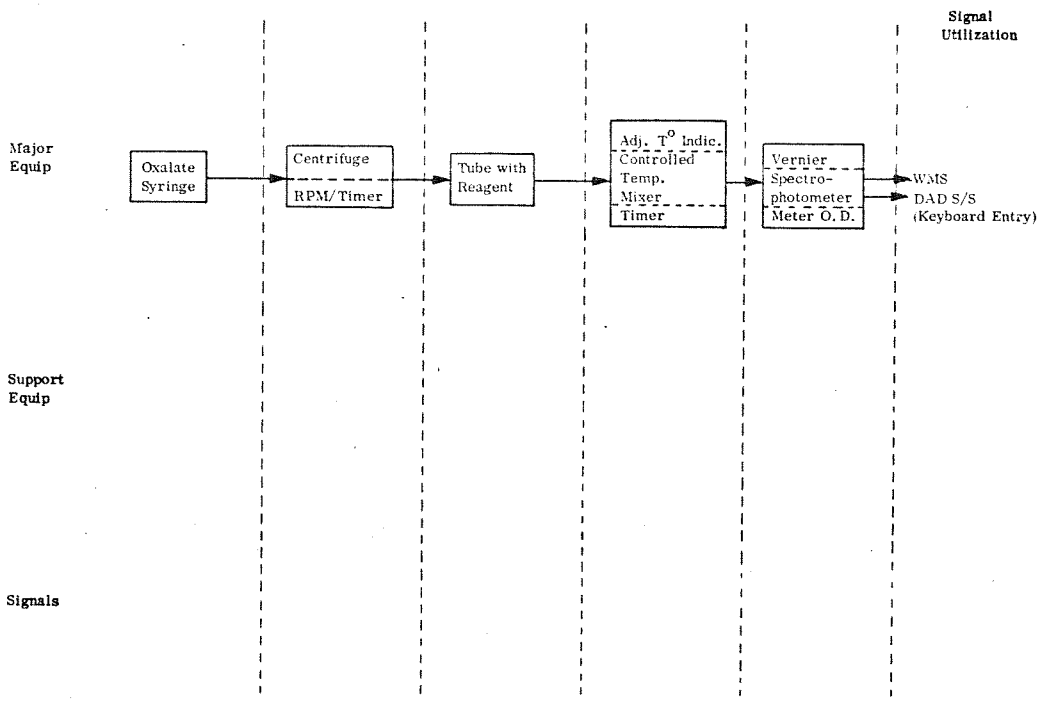

Notes:

5. Input Signal Characteristics (Electrical Analogue, Keyboard Entry, Discrete Data Entry, Logbook, Other ?):
   Voltage- NA
   Frequency-
   Waveform - NA
   Critical Info In Signal- Spectrophotometric Meter Reading

6. Stimuli and Calibration Requirements: None

7. On-Board Output Characteristics:
   Display- Procedure
   Voltage- TBD
   Accuracy- } TBD
   Resolution- } TBD
   Repeatability- } TBD
   Playback Required- TBD
   Comparison Required (with what)- Baseline
   Processing or Computations - NA
   Telemetry - Yes
   Storage- Yes

8. Ground Output Characteristics:
   Real Time- } TBD
   Near Real Time- } TBD
   Delayed (Including Physical Return)- X
   Readout Format- NA

9. Identify Advanced Evaluation Techniques which May Impose Change in Processing: None

10. Support Requirements:
    GFE- WMS
    Electrical- Power and Light
    Pneumatic- TBD
    Thermal- TBD
    Other (Specify)-

11. Environmental Data Requirements: At Periodic Intervals, e.g., 1 X Hr.
    pO_2____ pCO_2____ pH_2O____ pN_2____ pTrace____ Temp ____ "g" ____ Other ____

12. Estimated Time to Perform Measurement: } TBD
13. Estimated Time to Set Up and Secure Measurement: } TBD
14. Estimated Measurement Frequency: } TBD

3.1.2 Urine Measurements

MEASUREMENT SPECIFICATION NO. 3.1.2.1

1. Measurement Name: Urine Measurement - Accurate Urine Mass and Volume

2. Purpose: To Study Fluid Balance

3. Recommended Technique: Two discrete measurements using USVMS and SMMD technique for physical determination

4. Measurement Equipment Block Diagram:

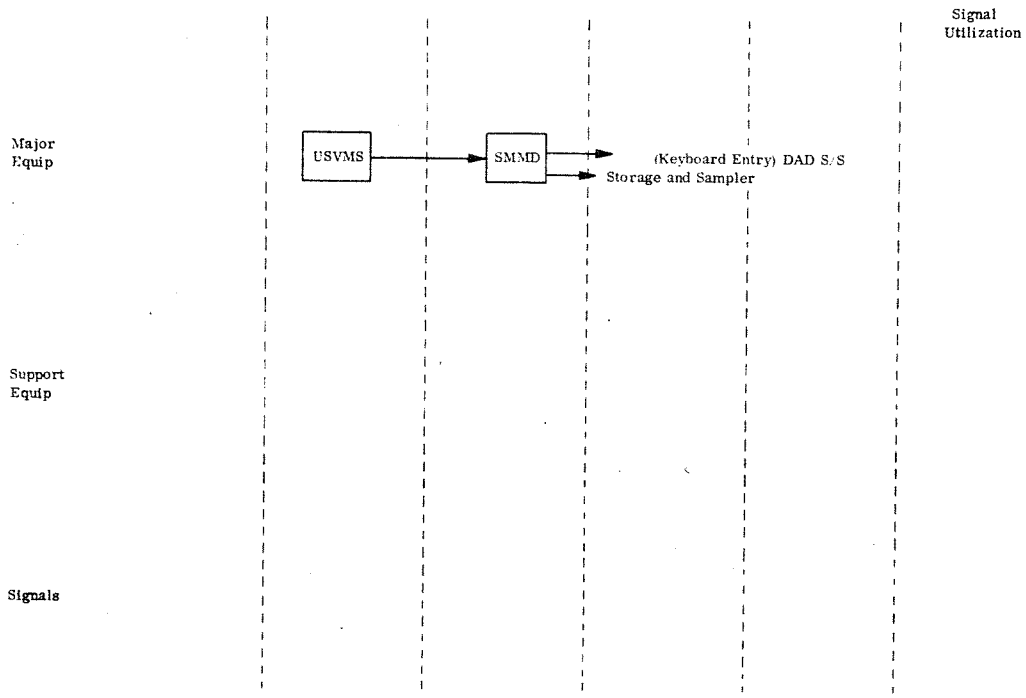

Notes:

5. Input Signal Characteristics (Electrical Analogue, Keyboard Entry / Discrete Data Entry, Logbook, Other ?):
   Voltage- NA
   Frequency- NA
   Critical Info In Signal- Mass and Volume
   Waveform NA

6. Stimuli and Calibration Requirements: None

7. On-Board Output Characteristics:
   Display- TBD
   Voltage- TBD
   Accuracy- TBD
   Resolution- TBD
   Repeatability- TBD
   Playback Required- NA
   Comparison Required (with what)- NA
   Processing or Computations - NA
   Telemetry - NA
   Storage- NA

8. Ground Output Characteristics:
   Real Time- } TBD
   Near Real Time- }
   Delayed (Including Physical Return)- N/A
   Readout Format- N/A

9. Identify Advanced Evaluation Techniques which May Impose Change in Processing:

10. Support Requirements:
    GFE- USVMS, SMMD
    Electrical- TBD
    Pneumatic- TBD
    Thermal- TBD
    Other (Specify)-

11. Environmental Data Requirements: Monitor at periodic intervals, eg., 1X/Hr
    pO_2____ pCO_2____ pH_2O____ pN_2____ pTrace____ Temp____ "g"____ Other____

12. Estimated Time to Perform Measurement:
13. Estimated Time to Set Up and Secure Measurement: } TBD
14. Estimated Measurement Frequency:

MEASUREMENT SPECIFICATION NO. 3.1.2.2

1. Measurement Name: Urine Measurement - Routine Urinalysis

2. Purpose: To determine in-flight change from Norm

3. Recommended Technique: Ten discrete measurements using freezing pt depression, color comparison, microscopic, turbidity, and calculation of sp. gr. from measurements of 3.1.2.1.

4. Measurement Equipment Block Diagram:

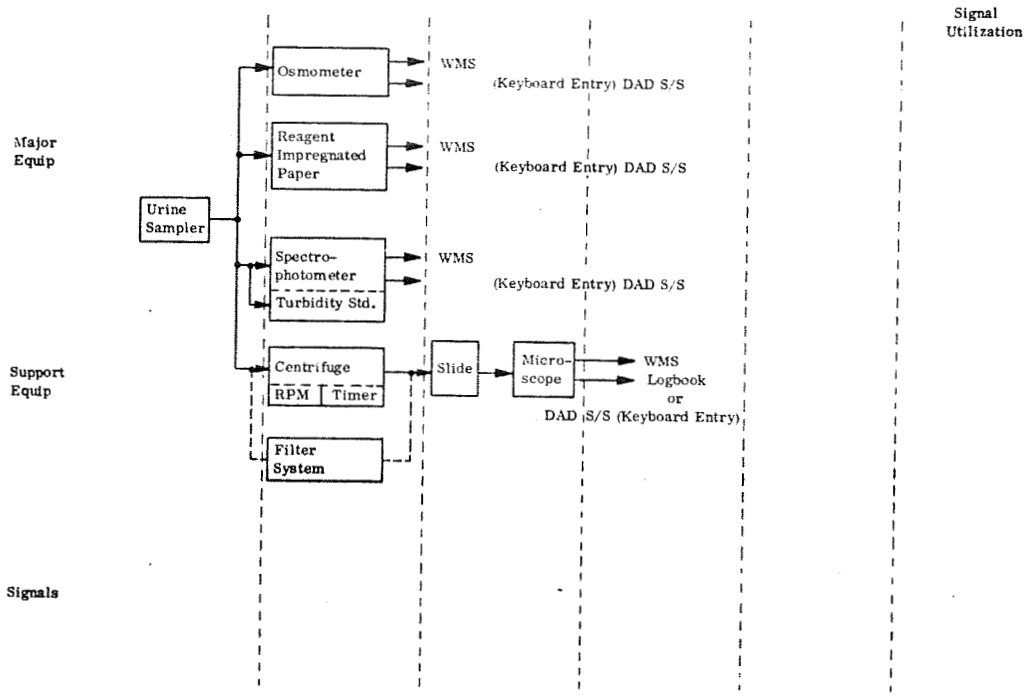

Notes:

5. Input Signal Characteristics (Electrical Analogue, Keyboard Entry, Discrete Data Entry, Logbook, Other?):
   Voltage- } N/A
   Frequency- }
   Waveform N/A
   Critical Info In Signal- Freezing pt. - color comparison readings - turbidity reading - microscopic findings.

6. Stimuli and Calibration Requirements: None

7. On-Board Output Characteristics:
   Display- Procedure
   Voltage- TBD
   Accuracy- }
   Resolution- } TBD
   Repeatability- }
   Playback Required- TBD
   Comparison Required (with what)- Baseline and Color Charts
   Processing or Computations - N/A
   Telemetry- Yes
   Storage- Yes

8. Ground Output Characteristics:
   Real Time- } TBD
   Near Real Time- }
   Delayed (Including Physical Return)- X
   Readout Format- N/A

9. Identify Advanced Evaluation Techniques which May Impose Change in Processing: None

10. Support Requirements:
    GFE- WMS
    Electrical- Power and Light
    Pneumatic- TBD
    Thermal- TBD
    Other (Specify)-

11. Environmental Data Requirements: At periodic intervals, e.g., 1X/HR
    pO_2____ pCO_2____ pH_2O____ pN_2____ pTrace____ Temp____ "g"____ Other____

12. Estimated Time to Perform Measurement: }
13. Estimated Time to Set Up and Secure Measurement: } TBD
14. Estimated Measurement Frequency: }

82

MEASUREMENT SPECIFICATION NO. 3.1.3

1. Measurement Name: Feces Measurement - Accurate Feces Wet Weight.

2. Purpose: To Study Liquid Balance

3. Recommended Technique: Wet Weight By (GFE) SMMD

4. Measurement Equipment Block Diagram

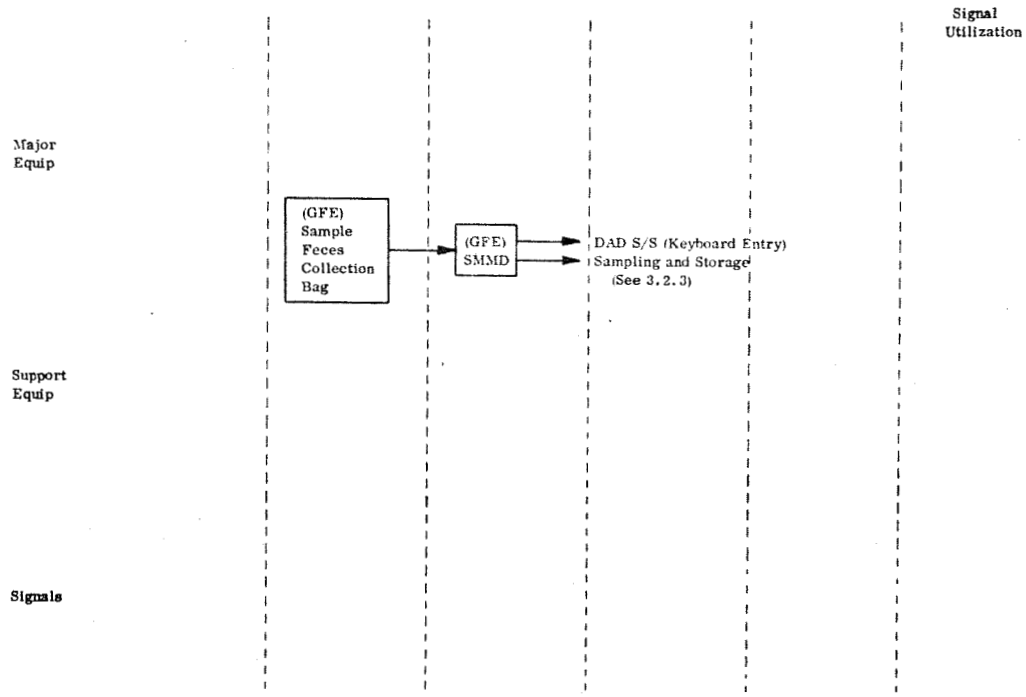

Notes:

5. Input Signal Characteristics (Electrical Analogue, Keyboard Entry / Discrete Data Entry, Logbook, Other ?):
   Voltage- } NA
   Frequency- } NA
   Waveform NA
   Critical Info In Signal- Wet wt. of feces

6. Stimuli and Calibration Requirements: None

7. On-Board Output Characteristics:
   Display- Procedure
   Voltage- TBD
   Accuracy- } TBD
   Resolution- } TBD
   Repeatability- } TBD
   Playback Required- N/A
   Comparison Required (with what)- Baseline
   Processing or Computations - Wt. from chart in SMMD
   Telemetry - Yes
   Storage- Yes

8. Ground Output Characteristics:
   Real Time- } TBD
   Near Real Time- } TBD
   Delayed (Including Physical Return)- X
   Readout Format- N/A

9. Identify Advanced Evaluation Techniques which May Impose Change in Processing: None

10. Support Requirements: Sample feces collection bag
    GFE- SMMD
    Electrical- TBD
    Pneumatic- TBD
    Thermal- TBD
    Other (Specify)-

11. Environmental Data Requirements: At periodic intervals, e.g., 1 X/HR
    pO_2____ pCO_2____ pH_2O____ pN_2____ pTrace____ Temp ____ "g" ____ Other ____

12. Estimated Time to Perform Measurement: } TBD
13. Estimated Time to Set Up and Secure Measurement: } TBD
14. Estimated Measurement Frequency: } TBD

MEASUREMENT SPECIFICATION NO. 3.1.4

1. Measurement Name: Accurate Food Intake

2. Purpose: Determination of Caloric Intake

3. Recommended Technique: Weigh food not consumed - store all food packages in freezer - return to earth for caloric analysis.

4. Measurement Equipment Block Diagram:

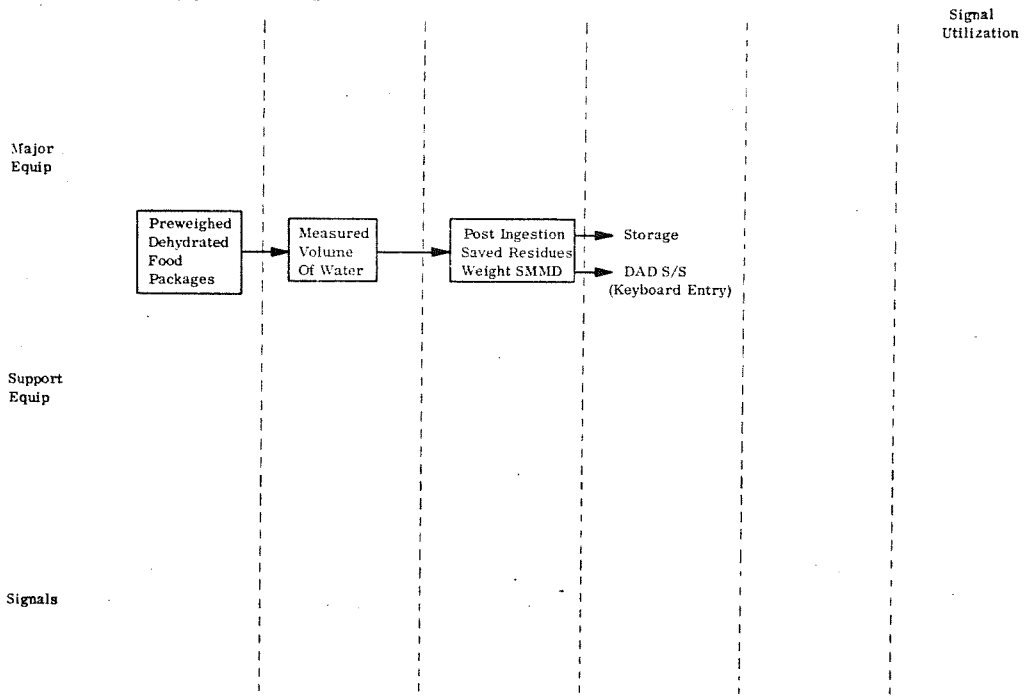

Notes:

5. Input Signal Characteristics (Electrical Analogue, Discrete Data Entry, Logbook, Other?):
   Voltage- NA
   Frequency- NA
   Waveform - NA
   Critical Info In Signal- Mass of hydrated food residues

6. Stimuli and Calibration Requirements: None

7. On-Board Output Characteristics:
   Display- None
   Voltage- TBD
   Accuracy- TBD
   Resolution- TBD
   Repeatability- TBD
   Playback Required- NA
   Comparison Required (with what)- NA
   Processing or Computations - NA
   Telemetry- NA
   Storage- NA

8. Ground Output Characteristics:
   Real Time- TBD
   Near Real Time- TBD
   Delayed (Including Physical Return)- NA
   Readout Format- NA

9. Identify Advanced Evaluation Techniques which May Impose Change in Processing: None

10. Support Requirements:
    GFE- TBD
    Electrical- TBD
    Pneumatic- TBD
    Thermal- TBD
    Other (Specify)-

11. Environmental Data Requirements: Monitor at periodic intervals, e.g., 1X/Hr
    pO_2____ pCO_2____ pH_2O____ pN_2____ pTrace____ Temp____ "g"____ Other____

12. Estimated Time to Perform Measurement: TBD

13. Estimated Time to Set Up and Secure Measurement: TBD

14. Estimated Measurement Frequency: TBD

84

MEASUREMENT SPECIFICATION NO. 3.1.5

1. Measurement Name: Accurate Fluid Intake

2. Purpose: To study liquid balance

3. Recommended Technique: Monitor total fluid intake of astronaut.

4. Measurement Equipment Block Diagram:

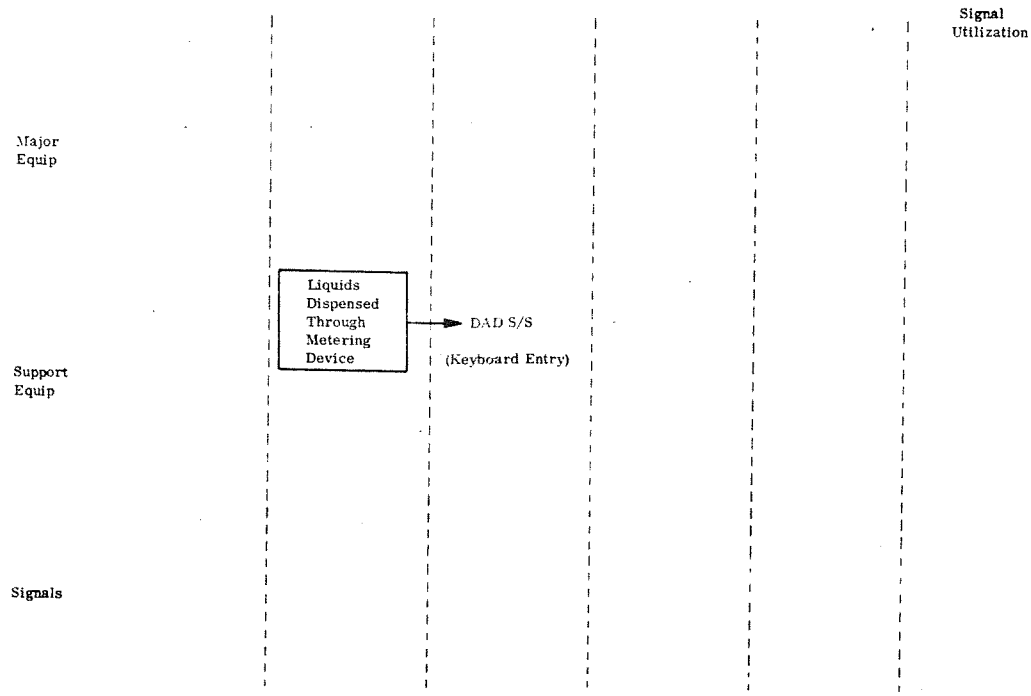

Notes:

5. Input Signal Characteristics (Electrical Analogue, Keyboard Entry, Discrete Data Entry, Logbook, Other ?):
   Voltage- NA
   Frequency- NA
   Waveform- NA
   Critical Info In Signal- Volume of liquid intake, time, etc.

6. Stimuli and Calibration Requirements: None

7. On-Board Output Characteristics:
   Display- TBD
   Voltage- TBD
   Accuracy- TBD
   Resolution- TBD
   Repeatability- TBD
   Playback Required- NA
   Comparison Required (with what)- Baseline
   Processing or Computations -
   Telemetry- Yes
   Storage- of information in logbook

8. Ground Output Characteristics:
   Real Time- TBD
   Near Real Time- TBD
   Delayed (Including Physical Return)- X
   Readout Format- NA

9. Identify Advanced Evaluation Techniques which May Impose Change in Processing: None

10. Support Requirements:
    GFE- FMS
    Electrical- TBD
    Pneumatic- TBD
    Thermal- TBD
    Other (Specify)-

11. Environmental Data Requirements: at periodic intervals, e.g., 1 X/Hr
    pO_2 ____ pCO_2 ____ pH_2O ____ pN_2 ____ pTrace ____ Temp ____ "g" ____ Other ____

12. Estimated Time to Perform Measurement: TBD

13. Estimated Time to Set Up and Secure Measurement: TBD

14. Estimated Measurement Frequency: TBD

3.2 On-Board Sample Collection and Storage

MEASUREMENT SPECIFICATION NO. 3.2.1

1. Measurement Name: Blood Sampling

2. Purpose: To obtain blood samples for postflight analysis

3. Recommended Technique: Blood Samples (with and without Anticoagulants)

4. Measurement Equipment Block Diagram:

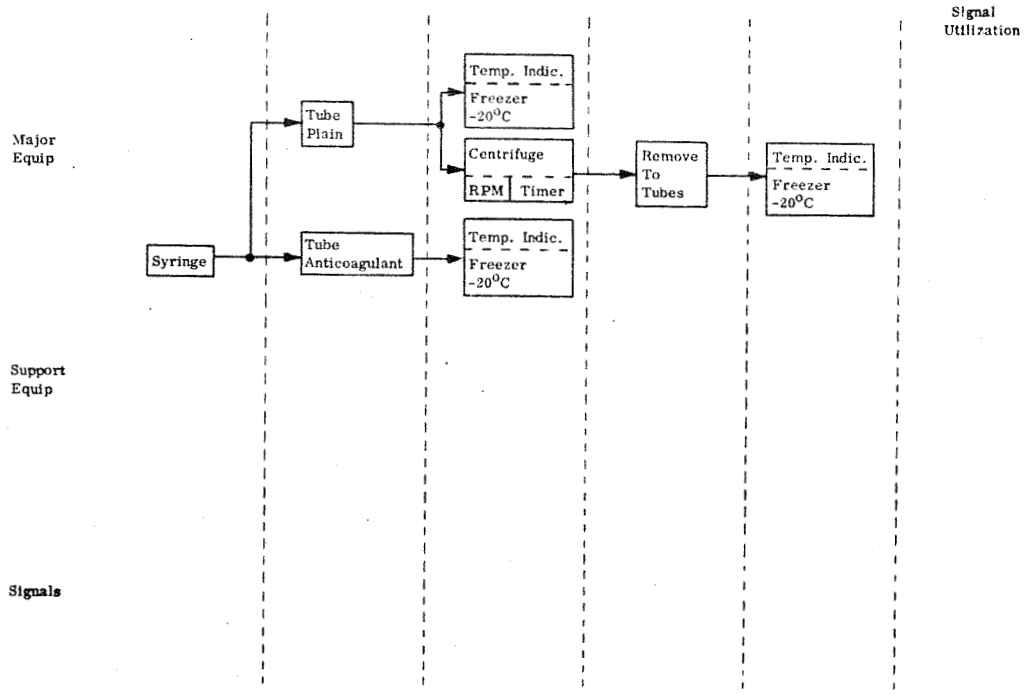

Notes: Entry in DAD S/S or log re time and fact of sampling.

5. Input Signal Characteristics (Electrical Analogue, Discrete Data Entry, Logbook, Other ?):
   Voltage- NA
   Frequency- NA
   Critical Info In Signal- NA
   Waveform NA

6. Stimuli and Calibration Requirements: None

7. On-Board Output Characteristics: TBD
   Display-
   Voltage-
   Accuracy-
   Resolution-
   Repeatability-
   Playback Required-
   Comparison Required (with what)-
   Processing or Computations -
   Telemetry
   Storage-

8. Ground Output Characteristics: TBD
   Real Time-
   Near Real Time-
   Delayed (Including Physical Return)-
   Readout Format-

9. Identify Advanced Evaluation Techniques which May Impose Change in Processing: None

10. Support Requirements:
    GFE- TBD
    Electrical- Centrifuge, Freezer
    Pneumatic- None
    Thermal- TBD
    Other (Specify)-

11. Environmental Data Requirements: Monitor at periodic intervals, eg., IX/Hr
    pO_2____ pCO_2____ pH_2O____ pN_2____ pTrace____ Temp ____ "g" ____ Other ____

12. Estimated Time to Perform Measurement: TBD
13. Estimated Time to Set Up and Secure Measurement: TBD
14. Estimated Measurement Frequency: TBD

MEASUREMENT SPECIFICATION NO. 3.2.2

1. Measurement Name: Urine Sampling

2. Purpose: To obtain samples for postflight analysis.

3. Recommended Technique: Store samples in -20° Freezer.

4. Measurement Equipment Block Diagram:

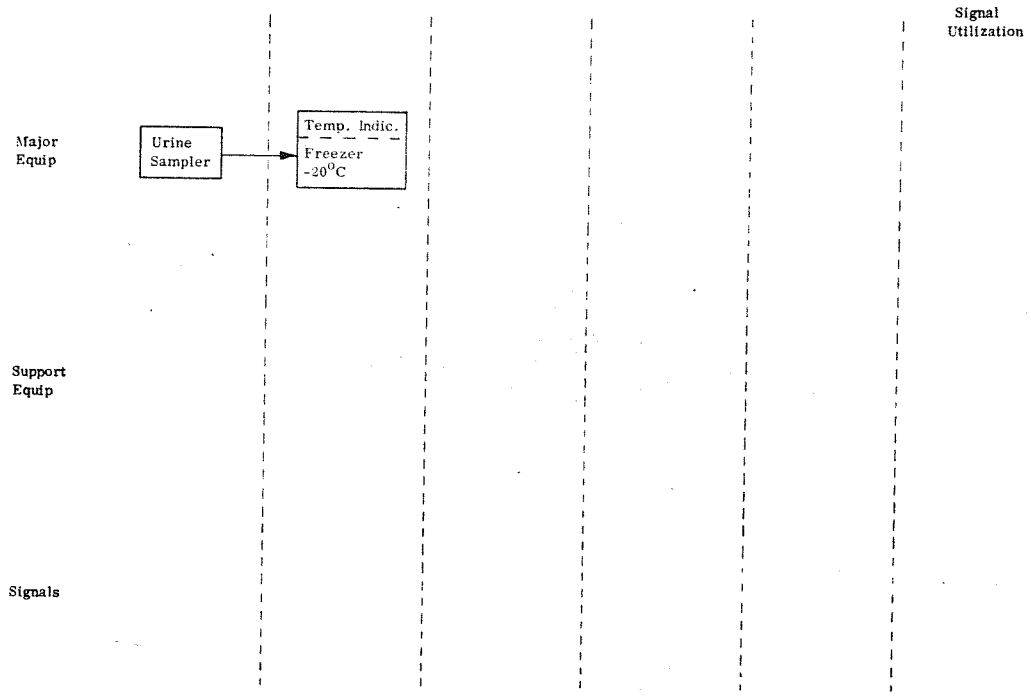

Notes: Requires DAD S/S entry of time and fact of sampling.

5. Input Signal Characteristics (Electrical Analogue, Discrete Data Entry, Logbook, Other?):
   Voltage- NA
   Frequency- NA
   Critical Info In Signal- NA
   Waveform - NA

6. Stimuli and Calibration Requirements: NA

7. On-Board Output Characteristics:
   Display- TBD
   Voltage- TBD
   Accuracy- TBD
   Resolution- TBD
   Repeatability- TBD
   Playback Required- NA
   Comparison Required (with what)- NA
   Processing or Computations - NA
   Telemetry - NA
   Storage- Of Urine Samples

8. Ground Output Characteristics:
   Real Time- TBD
   Near Real Time- TBD
   Delayed (Including Physical Return)- Phy. Return Samples and Logbook
   Readout Format- NA

9. Identify Advanced Evaluation Techniques which May Impose Change in Processing: None

10. Support Requirements:
    GFE- USVMS
    Electrical- TBD
    Pneumatic- TBD
    Thermal- TBD
    Other (Specify)-

11. Environmental Data Requirements: At periodic intervals, e.g., IX/Hr
    pO_2 Yes pCO_2 Yes pH_2O Yes pN_2 Yes pTrace Yes Temp Yes "g" Yes Other ___

12. Estimated Time to Perform Sampling:
13. Estimated Time to Set Up and Secure Sampling: TBD
14. Estimated Measurement Frequency:

MEASUREMENT SPECIFICATION NO. 3.2.3

1. Measurement Name: Feces Sampling

2. Purpose: Return of dry stool for postflight mineral analysis, and viral determination.

3. Recommended Technique: Dry Sample - dehydrated and store in -20°C Freezer.
Viral Determination - Flash freeze and store in -70°C Freezer.

4. Measurement Equipment Block Diagram:

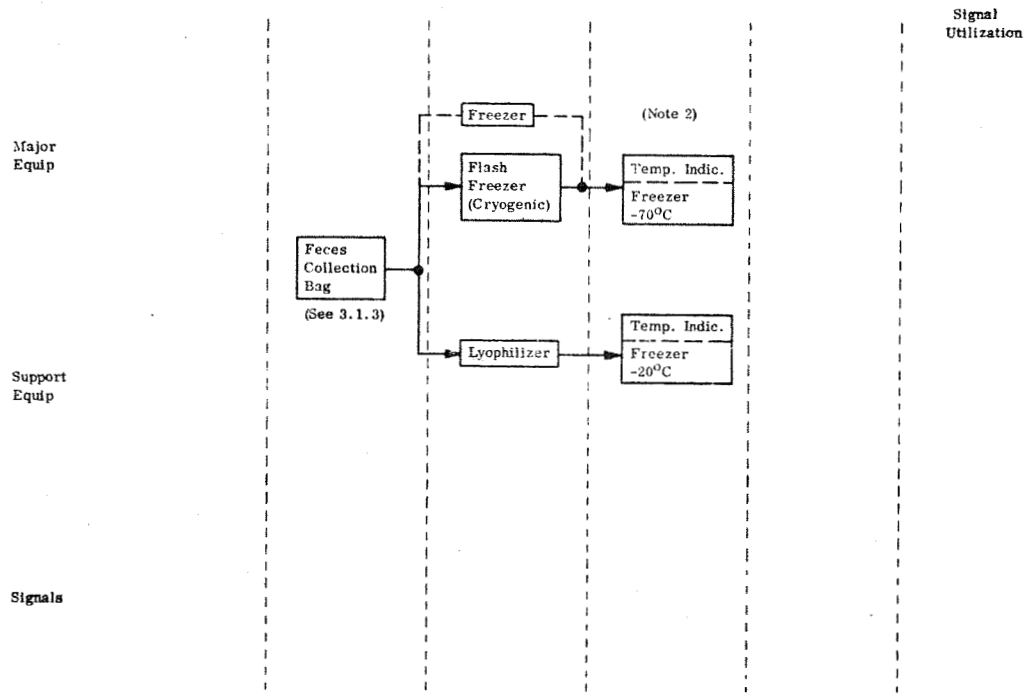

Notes: 1. Requires DAD S/S or log entry of fact and time of sampling.
2. Alternates: Flash Freezer prefered, otherwise normal freezing.

5. Input Signal Characteristics (Electrical Analogue, Discrete Data Entry, Logbook, Other ?):
Voltage- NA
Frequency- NA
Critical Info In Signal- NA
Waveform NA

6. Stimuli and Calibration Requirements: None

7. On-Board Output Characteristics:
Display- Procedure
Voltage- TBD
Accuracy- TBD
Resolution- TBD
Repeatability- TBD
Playback Required- NA
Comparison Required (with what)- NA
Processing or Computations - NA
Telemetry - NA
Storage- of dry feces samples

8. Ground Output Characteristics:
Real Time- TBD
Near Real Time- TBD
Delayed (Including Physical Return)- Phy. return of samples and Logbook
Readout Format-

9. Identify Advanced Evaluation Techniques which May Impose Change in Processing: None

10. Support Requirements:
GFE- Feces Collection Bag
Electrical- Power
Pneumatic- for Lyophilizer if used
Thermal- TBD
Other (Specify)-

11. Environmental Data Requirements: at periodic intervals, e.g., IX/Hr
pO_2 Yes pCO_2 Yes pH_2O Yes pN_2 Yes pTrace Yes Temp Yes "g" Yes Other ____

12. Estimated Time to Perform Measurement: TBD

13. Estimated Time to Set Up and Secure Measurement: TBD

14. Estimated Measurement Frequency: TBD

MEASUREMENT SPECIFICATION NO. 3.2.4

1. Measurement Name: Microflora Sampling

2. Purpose: To determine the modifications occuring in the microflora through the flight mission.

3. Recommended Technique: Preliminary culturing followed by +4°C refrigerator storage for bacteria. Flash freezing and -70°C storage for virus samples.

4. Measurement Equipment Block Diagram:

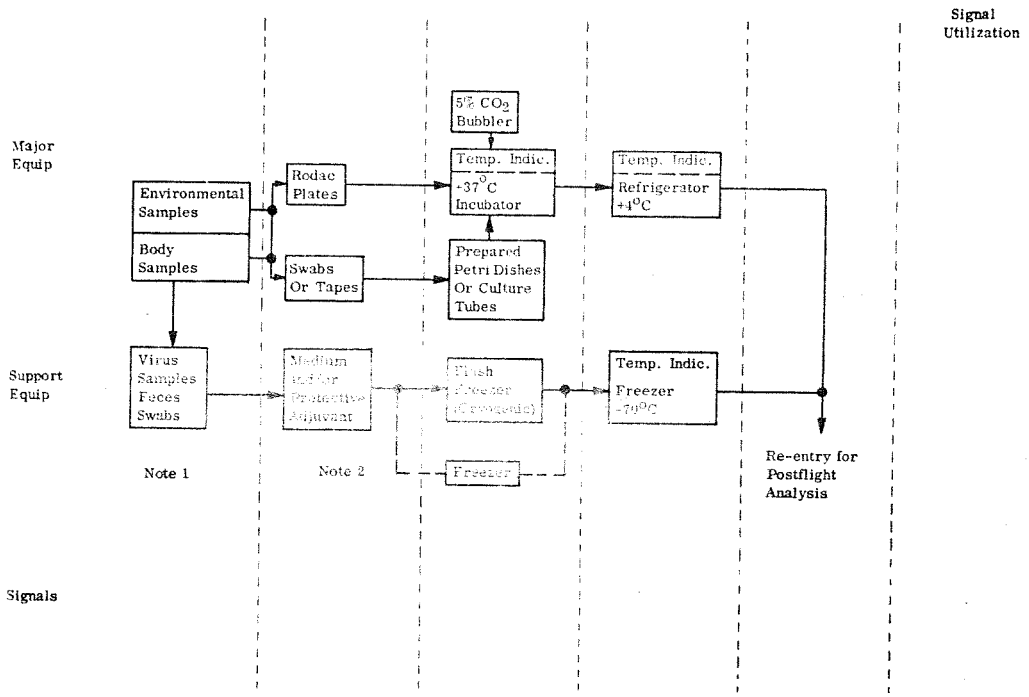

Notes:
1. Requires entry in log or DAD S/S re fact of, and time of sampling.
2. Alternate: Flash freezer preferred; otherwise normal freezing.

5. Input Signal Characteristics (Electrical Analogue, Discrete Data Entry, Logbook, Other?):
   Voltage- NA
   Frequency- NA
   Critical Info In Signal- NA
   Waveform NA

6. Stimuli and Calibration Requirements: NA

7. On-Board Output Characteristics:
   Display- Procedure
   Voltage- TBD
   Accuracy- TBD
   Resolution- TBD
   Repeatability- TBD
   Playback Required- NA
   Comparison Required (with what)- NA
   Processing or Computations - NA
   Telemetry - NA
   Storage- Cultures

8. Ground Output Characteristics:
   Real Time- TBD
   Near Real Time- TBD
   Delayed (Including Physical Return)- Samples
   Readout Format- NA

9. Identify Advanced Evaluation Techniques which May Impose Change in Processing: None

10. Support Requirements:
    GFE- Lyophilizer
    Electrical- Freezer, Refrigerator
    Pneumatic- TBD
    Thermal- TBD
    Other (Specify)-

11. Environmental Data Requirements: Monitor
    pO_2 Yes pCO_2 Yes pH_2O Yes pN_2 Yes pTrace Yes Temp Yes "g" Yes Other ___

12. Estimated Time to Perform Sampling: TBD

13. Estimated Time to Set Up and Secure Sampling: TBD

14. Estimated Measurement Frequency: TBD

92

MEASUREMENT SPECIFICATION NO. 3.2.5

1. Measurement Name: Sweat Sampling

2. Purpose: To determine mineral analysis (Postflight)

3. Recommended Technique: Freeze dry and store in -20°C Freezer.

4. Measurement Equipment Block Diagram:

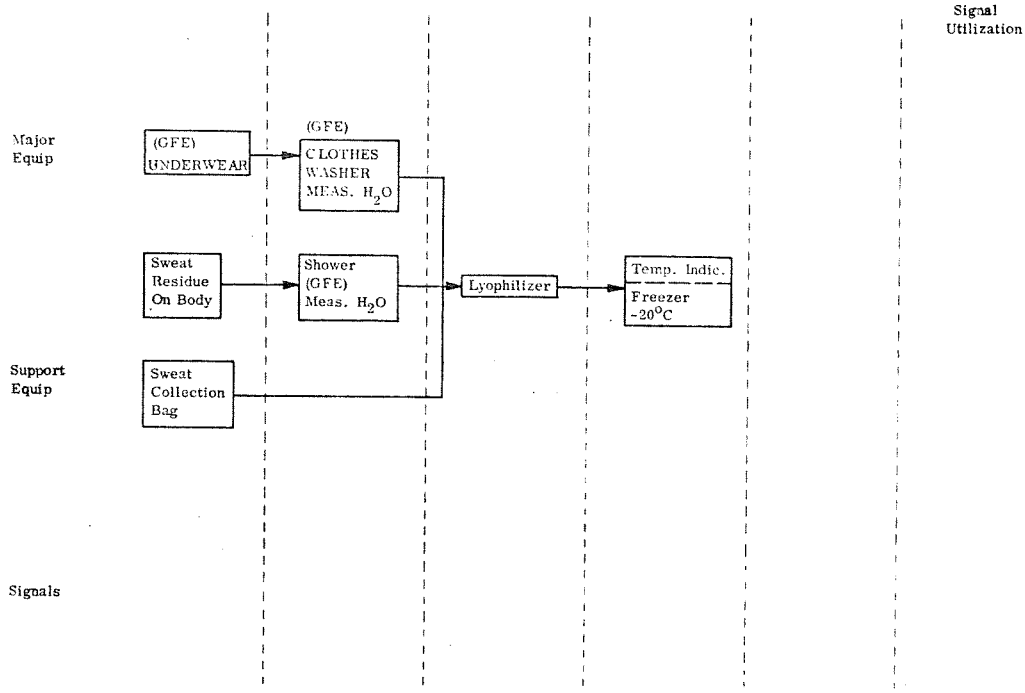

Notes: Requires entry (Log or DAD S/S) of time and fact of sampling.

5. Input Signal Characteristics (Electrical Analogue, Discrete Data Entry, Logbook, Other?):
   Voltage- NA
   Frequency- NA
   Critical Info In Signal- NA
   Waveform NA

6. Stimuli and Calibration Requirements: Heat when using sweat collection bag.

7. On-Board Output Characteristics:
   Display- Procedure
   Voltage- TBD
   Accuracy- TBD
   Resolution- TBD
   Repeatability- TBD
   Playback Required- NA
   Comparison Required (with what)- NA
   Processing or Computations - NA
   Telemetry - NA
   Storage- of freeze dry mineral from sweat

8. Ground Output Characteristics:
   Real Time- TBD
   Near Real Time- TBD
   Delayed (Including Physical Return)- Phy. return of sweat mineral sample
   Readout Format-

9. Identify Advanced Evaluation Techniques which May Impose Change in Processing: None

10. Support Requirements:
    GFE- Underware, clothes washer, shower (Meas. H_2O)
    Electrical- Power
    Pneumatic- Lyophilizer
    Thermal- For stimulus when using sweat collection bars
    Other (Specify)-

11. Environmental Data Requirements: at periodic intervals, e.g., 1X/Hr
    pO_2 Yes pCO_2 Yes pH_2O Yes pN_2 Yes pTrace Yes Temp Yes "g" Yes Other ___

12. Estimated Time to Perform Measurement: TBD

13. Estimated Time to Set Up and Secure Measurement: TBD

14. Estimated Measurement Frequency: TBD