NATIONAL AERONAUTICS AND SPACE ADMINISTRATION

(NASA-CR-151064) AERODYNAMIC HEATING RESULTS OBTAINED DURING TEST OH60 CONDUCTED IN THE AEDC VKF TUNNEL B USING THE 0.040-SCALE MODEL 83-0 OF THE SPACE SHUTTLE ORBITER FORWARD FIFTY PERCENT FUSELAGE

N77-78957

00/02 Unclas 30318

DMS-DR-2356
NASA CR-151,064

AERODYNAMIC HEATING RESULTS OBTAINED DURING TEST OH60 CONDUCTED IN THE AEDC VKF TUNNEL B USING THE 0.040-SCALE MODEL 83-0 OF THE SPACE SHUTTLE ORBITER FORWARD FIFTY PERCENT FUSELAGE

SPACE SHUTTLE

AEROTHERMODYNAMIC DATA REPORT

JUN 1977
RECEIVED
NASA STI FACILITY
INPUT BRANCH

JOHNSON SPACE CENTER

HOUSTON, TEXAS

DATA MANagement services

SPACE DIVISION CHRYSLER CORPORATION

March 1977

DMS-DR-2356
NASA CR-151,064

AERODYNAMIC HEATING RESULTS OBTAINED DURING TEST OH60 CONDUCTED IN THE AEDC VKF TUNNEL B USING THE 0.040-SCALE MODEL 83-0 OF THE SPACE SHUTTLE ORBITER FORWARD FIFTY PERCENT FUSELAGE

by

B. J. Herrera
Shuttle Aero Sciences
Rockwell International Space Division

Prepared under NASA Contract Number NAS9-13247

by

Data Management Services
Chrysler Corporation Michoud Defense-Space Division
New Orleans, La. 70189

for

Engineering Analysis Division

Johnson Space Center
National Aeronautics and Space Administration
Houston, Texas

WIND TUNNEL TEST SPECIFICS:

Test Number:	AEDC VKF V41B-B7A
NASA Series Number:	OH60
Model Number:	83-0
Test Date:	May 12, 1975
Occupancy Hours:	12

FACILITY COORDINATOR:

L. L. Trimmer
ARO, Inc.
VKF/Projects
Arnold Air Force Station
Tennessee 37389

Phone: (615) 455-2611 x7377

PROJECT ENGINEERS:

B. J. Herrera
Mail Code AD38
Rockwell International
Space Division
12214 Lakewood Boulevard
Downey, California 90241

Phone: (213) 922-4939

L. D. Carter
ARO, Inc.
VKF/Projects
Arnold Air Force Station
Tennessee 37389

Phone: (615) 455-2611 x7377

DATA MANAGEMENT SERVICES:

Prepared by: Liaison--D. A. Sarver
Operations--Maurice Moser, Jr.

Reviewed by: G. G. McDonald

Approved: J. L. Glynn, Manager
Data Operations

Concurrence: N. D. Kemp, Manager
Data Management Services

Chrysler Corporation Michoud Defense-Space Division assumes no responsibility for the data presented other than publication and distribution.

AERODYNAMIC HEATING RESULTS OBTAINED DURING TEST OH60 CONDUCTED IN THE AEDC VKF TUNNEL B USING THE 0.040-SCALE MODEL 83-0 OF THE SPACE SHUTTLE ORBITER FORWARD FIFTY PERCENT FUSELAGE

by

B. J. Herrera, Rockwell

ABSTRACT

Results of Test OH60 are presented in this report. OH60 was conducted in the AEDC VKF Tunnel B during May 1975 to investigate effects of protuberances on aerodynamic heating on the space shuttle orbiter fuselage nose, canopy, and side walls. A 0.040-scale thin skin thermocouple model (no. 83-0) of the forward 50% of the orbiter was used for this test. Protuberances and gaps associated with RCS nozzles, vents, access hatches, and cargo door hinges were simulated on the model left side. The model right side had no protuberances. Heating data were obtained using 291 thermocouples on the model. Model angle-of-attack was varied from 20° through 45° at angles-of-sideslip of 0° and 2°. Unit Reynolds numbers of 0.5 through 3.7 million per foot were investigated.

(THIS PAGE INTENTIONALLY LEFT BLANK.)

TABLE OF CONTENTS

	Page
ABSTRACT	iii
INDEX OF MODEL FIGURES	2
INTRODUCTION	3
NOMENCLATURE	4
CONFIGURATIONS INVESTIGATED	7
TEST FACILITY DESCRIPTION	8
TEST PROCEDURE	9
DATA REDUCTION	10
REFERENCES	13
TABLES	
I. TEST CONDITIONS	14
II. DATA SET/RUN NUMBER COLLATION SUMMARY	15
III. MODEL DIMENSIONAL DATA	16
IV. MODEL THERMOCOUPLE LOCATIONS	18
MODEL FIGURES	31
APPENDIX	
TABULATED SOURCE DATA (Tab. data pages 40-559)	45

INDEX OF MODEL FIGURES

Figure	Title	Page
1.	Axis systems.	31
2.	Model sketches.	
	a. Forebody Model	32
	b. Fuselage Vent No. 1	33
	c. Cargo Bay Vent No. 1	34
	d. Protuberances 43 - 4, 5, and 6	35
	e. Sublimator Vent No. 1	36
	f. Fuselage Vent Panel No. 7	37
	g. Access Hatch Window	38
	h. Fuselage Vent Panel Nos. 1 and 3	39
	i. Lower RCS Nozzles	40
	j. Upper RCS Nozzles and Z_o = 338 Line	41
	k. Canopy	42
	l. Cargo Bay Hinges	43
3.	Model Installation Photograph.	44

INTRODUCTION

Tests were conducted in the AEDC VKF Tunnel B during May 1975 to investigate effects of protuberances on the Space Shuttle Orbiter aerodynamic heating characteristics. This investigation utilized a 0.040 scale model of the forward 50 percent of the orbiter fuselage. The model had simulated door hinges, thruster nozzles, windows, access ports, vents, and various other protuberances on its left side. The model right side had no protuberances. This report presents results of this investigation (labeled OH60). Much of the information presented herein was derived from reference 1.

NOMENCLATURE

SYMBOL	MNEMONIC	DEFINITION
B	B	total model wing span, in.
b		model skin thickness, ft.
	c_p	model material specific heat, BTU/lbm-^oR
$\frac{dT_w}{dt}$	DTWDT	derivative of the model wall temperature with respect to time, ^oR/sec.
h	H	heat-transfer coefficient, $\frac{BTU}{ft^2\text{-}sec\text{-}^oR}$
$h(T_o)$	H(TO)	heat-transfer coefficient, $\frac{\dot{q}}{T_o\text{-}TW}$, $\frac{BTU}{ft^2\text{-}sec\text{-}^oR}$
$h(.9T_o)$	H(.9TO)	heat-transfer coefficient, $\frac{\dot{q}}{(0.9T_o)\text{-}TW}$, $\frac{BTU}{ft^2\text{-}sec\text{-}^oR}$
h_{ref}	HREF (HREF-FR)	reference heat-transfer coefficient based on Fay-Riddell theory, $\frac{BTU}{ft^2\text{-}sec\text{-}^oR}$ $HREF = [8.139(P01)^{0.5}(\mu_o)^{0.4}(1-P_\infty/P01)^{0.25}] \times [0.2235 + 0.0000135\ (T_o + 560)]$
LINE	LINE	canopy T/C coordinate, see Figure 2k
ℓ	L	full orbiter model centerline length, in.
M_∞	MACH NO.	freestream Mach number
P_∞	P-INF	freestream pressure, psia
P_o	PO (p_o)	tunnel stilling chamber pressure, psia
P01	P01	stagnation pressure downstream of a normal shock, psia
$\dot{q}$	QDOT	heat-transfer rate, BTU/ft^2-sec
q_∞	Q-INF	freestream dynamic pressure, psia

NOMENCLATURE (Continued)

SYMBOL	MNEMONIC	DEFINITION
RAY	RAY	canopy T/C coordinate, see Figure 2k
R_N	RN	model reference nose radius, (0.040 ft)
Re_∞	RE/FT	freestream unit Reynolds number, 10^6 ft^{-1}
	STFR	theoretical stagnation point Stanton number for a 0.040 ft. radius sphere calculated from Fay-Riddell theory
		$STFR = \frac{h_{ref}}{(\rho_\infty)(V_\infty)[0.2235 + 0.0000135\ (T_o + 560)](32.174)}$
t		time, sec
t_i		initial time, sec
T_∞	T-INF	freestream temperature, ^oR
T_o	TO	tunnel stilling chamber temperature, ^oR
T_w	TW	model wall temperature, ^oR
T_{wi}	TWI	initial wall temperature, ^oR
T/C	TC	thermocouple
$V_\infty (\bar{V})$	V-INF	freestream velocity, ft/sec
w	W	model material density, lbm/ft^3
X	X	longitudinal model coordinate, in.
X_o	XO	full scale orbiter longitudinal coordinate, in.
Y	Y	model scale span coordinate from centerline, in.
Y_o	YO	full scale orbiter span coordinate, from model centerline, in.
Z	Z	vertical model coordinate, in.
Z_o	ZO	full scale orbiter vertical coordinate, in.

NOMENCLATURE (Concluded)

SYMBOL	MNEMONIC	DEFINITION
α	ALPHA-MODEL	model angle-of-attack, deg.
αp	ALPHA-PREBEND	sting prebend angle, deg.
αs	ALPHA-SECTOR	tunnel sector pitch angle, deg.
β	BETA	model angle-of-sideslip, deg.
θ	THETA	local angular coordinate used to define sublimator vent and access hatch window T/C locations, deg.
μ_o	MU-O	stagnation air viscosity, based on T_o, lbf/sec/ft^2
μ_∞	MU-INF	freestream air viscosity, lbf-sec/ft^2
ρ_∞	RHO-INF	freestream air density, slug/ft^3
	ROLL-MODEL	model roll angle, deg.
ϕ	PHI	angular coordinate on orbiter, deg.
ψ	YAW	yaw angle, deg.
	OML	outer mold line
	CN	channel number

SUBSCRIPTS

s	stability axis system
w	wind axis system

SYMBOL	MNEMONIC	DEFINITION
	TEST CONDITION	numbering system to denote constant model position in tunnel (α, β) and constant tunnel conditions (M_∞, P_o, T_o, Re_∞)

CONFIGURATIONS INVESTIGATED

The model was a 50 percent forebody, 0.040 scale thin skin thermocouple model of the Rockwell International Space Shuttle Orbiter 140C (model 83-0) as defined by lines VL70-000-140C. Dimensional data are given in Table III. The structural and thin skin areas of the model were constructed of 17-4 PH stainless steel. The nominal skin thickness at the instrumentation areas was 0.030 in. It was constructed so that the pilot-right side had a smooth surface and the pilot-left side had protuberances which simulated the windshields, cargo bay door hinges, vents and thruster nozzles. The model was instrumented with 477 chromel - constantan thermocouples as illustrated in Figure 2. Only 291 were used in the present investigation, as indicated in Table IV.

Model components are defined as follows:

B_{60}	body
C_{10}	canopy

TEST FACILITY DESCRIPTION

Tunnel B is a closed circuit hypersonic wind tunnel with a 50-in. dia. test section. Two axisymmetric contoured nozzles are available to provide Mach numbers of 6 and 8 and the tunnel may be operated continuously over a range of pressure levels from 20 to 300 psia at $M_\infty = 6$ and 50 to 900 psia at $M_\infty = 8$ with air supplied by the VKF main compressor plant. Stagnation temperatures sufficient to avoid air liquefaction in the test section (up to 1350°R) are obtained through the use of a natural gas fired combustion heater. The entire tunnel (throat, nozzle, test section, and diffuser) is cooled by integral, external water jackets. The tunnel is equipped with a model injection system, which allows removal of the model from the test section while the tunnel remains in operation. A description of the tunnel may be found in the Test Facilities Handbook (Ref. 2).

The tunnel stilling chamber pressure was measured with a 1000-psid transducer referenced to near vacuum and having full-scale calibrated ranges of 100 and 1000 psi. The precision of this transducer is estimated to be ±0.2 percent of the calibrated range. Stilling chamber temperature was measured with a chromel-alumel thermocouple which has a precision of ±0.5 percent based on the thermocouple wire manufacturer's specification.

TEST PROCEDURE

Thermocouple outputs were recorded using the VKF digital data scanner in conjunction with a Beckman 210 digital data system. The thermocouple readings were scanned at the rate of 20 times/sec from the start of the model injection cycle until about 3 sec. after the model reached tunnel centerline. After each retraction, the model was cooled to an isothermal state using high-pressure air. To obtain shadowgraph photographs of the nose-canopy region, a sting arrangement and pitch mechanism center-of-rotation were selected to position the model above the tunnel centerline with the nose-canopy region in the tunnel forward window. For several high angle of attack groups, the model caused partial tunnel blockage and flow break-down. These data groups are indicated in the Test Summary (Table II) and are not included with the data presented.

DATA REDUCTION

The reduction of thin-skin thermocouple data normally involves only the calorimetric heat balance which, in coefficient form, is

$$h = wbc_p \frac{dT_w/dt}{T_o - T_w} \tag{1}$$

Radiation and conduction losses are neglected in this heat balance, and data reduction simply requires evaluation of dT_w/dt from the temperature-time data and determination of model properties. For the present tests, radiation effects were negligible; however, conduction effects were significant in several regions of the model. To permit identification of these regions and improve evaluation of the data, the following procedure was used.

Separation of variables and integration of Equation 1, assuming constant w, b, c_p, and T_o, yields

$$\frac{h}{wbc_p}(t - t_i) = \ell n\left[\frac{T_o - T_{wi}}{T_o - T_w}\right] \tag{2}$$

Differentiation of Eq. 2 with respect to time gives

$$\frac{h}{wbc_p} = \frac{d}{dt}\ell n\left[\frac{T_o - T_{wi}}{T_o - T_w}\right]$$

Since $\frac{h}{wbc_p}$ is a constant, plotting $\ell n\left(\frac{T_o - T_{wi}}{T_o - T_w}\right)$ versus time gives a straight line if conduction is negligible. Thus, deviations from a straight line can be interpreted as conduction effects.

The data were evaluated in this manner and generally a reasonably linear portion of the curve could be found for all thermocouples. A

linear least-squares curve fit of

$$\ell n \left(\frac{T_o - T_{wi}}{T_o - T_w} \right)$$

versus time was applied to the data beginning at the time when the model reached uniform flow and extending for a time span which was a function of the heating rate, as shown below:

Heating Rate, $^oR/sec$	Number of Data Points	Time Span, sec
$dT_w/dt > 32$	5	0.20
$16 < dT_w/dt \leq 32$	7	0.30
$8 < dT_w/dt \leq 16$	9	0.40
$4 < dT_w/dt \leq 8$	13	0.60
$2 < dT_w/dt \leq 4$	17	0.80
$1 < dT_w/dt \leq 2$	25	1.20
$dT_w/dt \leq 1$	41	2.00

The time spans given above were nominally adequate to keep the evaluation of the right side of Eq. 2 within the linear region.

In practice, the value of c_p is not constant as assumed and the relation

$$c_p = 0.0797 + (5.556 \times 10^{-5})T_w$$

was used with the value of T_w at the midpoint of the curve fit. The maximum variation of c_p over any curve fit was less than 1.2 percent; thus, the assumption of constancy was not grossly violated. A constant

value of 490.0 lbm/ft^3 was used for w (17-4 PH stainless steel) with the measured values of b for each thermocouple.

A general summary of the thin-skin thermocouple technique may be found in Reference 3.

Uncertainties of the basic tunnel flow parameters P_o, T_o, and M_∞ were estimated from repeat calibrations of the instruments and from repeatability and uniformity of the test section flow during tunnel calibrations. The individual contributions of these uncertainties were used to compute the uncertainties in the other parameters dependent on these by means of the Taylor series method of error propagation.

Parameter	Uncertainty, Percent
P_o	±0.5
T_o	±0.5
M_∞	±0.3
h_{ref}	±0.8
Re_∞	±1.2

Uncertainties in the values of heat-transfer coefficient based on the Taylor series method of error propagation are tabulated below:

h	Uncertainty, Percent
10^{-2}	5
10^{-3}	7
10^{-4}	10

Resulting tabulated data are in the appendix.

REFERENCES

1. L. D. Carter and C. E. Kaul. "Heat-Transfer Tests on the Rockwell International Space Shuttle Orbiter With and Without Simulated Protuberances." AEDC-TR-75-20.

2. Test Facilities Handbook (Tenth Edition). "von Karman Gas Dynamics Facility, Vol. 4." Arnold Engineering Development Center, May, 1974.

3. L. L. Trimmer, R. K. Matthews and T. D. Buchanan. "Measurement of Aerodynamic Heat Rates at the von Karman Facility." ICIASF '73, Institute of Electrical and Electronics Engineers, Inc., New York, 1973, pp. 35-44.

4. L. D. Carter. "Results of the OH60 Wind Tunnel Tests of the NASA/RI Space Shuttle Orbiter Forebody Model at Mach Number 8.0." AEDC-DR-75-62, July, 1975.

5. W. H. Dye. "Pretest Information for the 0.040-Scale Thin Skin Orbiter Forebody Model 83-0 in the AEDC B Facility Test OH60." SD75-SH-0115, May, 1975.

TABLE I.

TEST CONDITIONS

M_∞	P_o, psia	T_o, ^oR	h_{ref}, $\frac{BTU}{ft^2\text{-}sec\text{-}^oR}$	$Re_\infty \times 10^{-6}$, ft^{-1}
7.90	110	1,270	0.0116	0.5
7.94	210	1,270	0.0162	1.0
7.98	430	1,300	0.0230	2.0
7.99	675	1,340	0.0289	3.0
8.00	860	1,350	0.0325	3.7

COMMENTS: See Data Reduction section for a discussion of data accuracy and tolerances.

TABLE II.

TEST: OH60

DATA SET/RUN NUMBER COLLATION SUMMARY

DATE:

CONFIGURATION	α	β	M_∞	UNIT REYNOLDS NO. ~ 10^6/FT. 0.5	1.0	2.0	3.0	3.7
$B_{60}C_{10}$ ALL PENETRATIONS FILLED	20	0	8	140/141/142	22/23/24	114/47/50	75/76/77	102/103/104
	20	-2		1/2/3	25/26/27	51/52/53	78/79/80 ★	131/132/133
	25	0		4/5/6	28/29/30	54/55/5[illegible]	81/82/83	105/106/107
	30	0		7/8/9	31/32/33	57/58/59	84/85/86	108/109/110
	30	-2		10/11/12	34/35/36	60/61/62	87/88/89	134/135/136
	35	0		13/14/15	37/38/39	63/64/65	90/91/92	111/112/113
	40	0		16/17/18		68/	93/94/95	/138/139
	40	-2		19/20/21		69/70/71	96/97/98	
	45	0				72/73/74	99/ /101	
FWD UPPER RCS NOZZLES OPEN	20			118		115		
	30			119		116		
	40			120		117		
AFT-UPPER RCS NOZZLES OPEN	20			123		124		
	30			122		125		
	40			121		126		
ALL UPPER RCS NOZZLES OPEN	20						127	
	25						128	
	30						129	
	35						130	

GROUP NO. FOR SWITCH POSITION 1/2/3

GROUP NO. FOR SWITCH POSITION 2

α OR β SCHEDULES

COEFFICIENTS

SWITCH POSITION: 1 = T/C 1 THRU 106 3 = T/C 221 THRU 416 IDVAR (1) AND 145 THRU 159 IDVAR (2) NDV

2 = T/C 107 THRU 220, EXCEPT 145 THRU 159 EXCEPT 257 THRU 366

★ TAB DATA FOR GROUP 78 LTST YAW = -2°

TABLE III. MODEL DIMENSIONAL DATA

MODEL COMPONENT: BODY - B_{60}

GENERAL DESCRIPTION: Fifty percent orbiter forebody, vehicle 140C.

NOTE: This body includes a small portion of the wing glove.

MODEL SCALE: 0.040

DRAWING NUMBER: VL70-000140C

DIMENSIONS:	FULL SCALE	MODEL SCALE
Length	645.15	25.80
Max Width	330.00	13.20

TABLE III. MODEL DIMENSIONAL DATA (Concluded)

MODEL COMPONENT: CANOPY - C_{10}

GENERAL DISCRIPTION: Configuration 4 canopy and windshield as used with B_{25}, six glass panes in windshield.

MODEL SCALE: 0.040

DRAWING NUMBER: VL70-000140B, -140C, -202B

DIMENSIONS:

	FULL SCALE	MODEL SCALE
Length (X_o = 434.643 to 670), In,	235.357	9.414
Max Depth (Glass, In.)	28.00	1.12
Nose/windshield intersection, X_o =	434.643	17.386

TABLE IV. MODEL THERMOCOUPLE LOCATIONS

T/C NO.	LOCATION	Z_o (INCHES)	X_o (INCHES)	X/ℓ	r (INCHES)	θ (DEGREES)	SKIN THICKNESS (INCHES)
	FUSELAGE VENT NO.1 49-1						
1		376.63	808.5	0.4434			0.0295
2		371.63	786.5	0.4264			0.0301
3		371.63	791.5	0.4303			0.0307
4		371.63	796.5	0.4342			0.0304
5		371.63	801.5	0.4380			0.0298
6		369.13	808.5	0.4434			0.0296
7		366.63	781.5	0.4226			0.0326
8		366.63	786.5	0.4264			0.0337
9		366.63	791.5	0.4303			0.0325
10		366.63	796.5	0.4342			0.0319
11		366.63	801.5	0.4380			0.0302
12		366.63	816.5	0.4496			0.0308
13		357.13	776.5	0.4187			0.0328
14		361.63	803.5	0.4396			0.0305
15		361.63	808.5	0.4434			0.0298
16		356.63	803.5	0.4396			0.0302
17		356.63	808.5	0.4434			0.0302
18		351.63	803.5	0.4396			0.0312
19		348.34	790.0	0.4291			0.0312
	CARGO BAY VENT NO. 1 49-3						
22		397.63	749.0	0.3974			0.0310
23		397.63	754.0	0.4013			0.0312
24		397.63	759.0	0.4052			0.0302
25		397.63	764.0	0.4090			0.0294
26		397.63	769.0	0.4129			0.0293

TABLE IV. MODEL THERMOCOUPLE LOCATIONS (Continued)

T/C NO.	LOCATION	Z_o (INCHES)	X_o (INCHES)	X/ℓ	r (INCHES)	θ (DEGREES)	SKIN THICKNESS (INCHES)
27	CARGO BAY VENT NO.1 49-3	392.63	744.0	0.3936			0.0311
28		392.63	749.0	0.3974			0.0321
29		392.63	754.0	0.4013			0.0322
30		392.63	759.0	0.4052			0.0321
31		392.63	764.0	0.4090			0.0312
32		392.63	769.0	0.4129			0.0296
33		386.13	764.0	0.4090			0.0319
34		387.63	769.0	0.4129			0.0302
35		383.13	739.0	0.3897			0.0316
36		378.63	764.0	0.4090			0.0324
37		382.13	769.0	0.4129			0.0314
38		377.13	769.0	0.4129			0.0311
39		373.63	752.5	0.4001			0.0326
41	PROTUBERANCES (43 - 4,5,6, &7)	379.05	693.65	0.3546			0.0299
42		379.05	701.15	0.3604			0.0305
43		374.05	681.23	0.3450			0.0290
44		374.05	688.65	0.3508			0.0304
45		374.05	696.15	0.3508			0.0309
46		374.05	701.15	0.3604			0.0312
47		366.55	673.73	0.3392			0.0297
48		366.55	696.15	0.3566			0.0306
49		360.70	673.73	0.3392			0.0307
50		360.70	696.15	0.3566			0.0310
51		360.70	701.15	0.3604			0.0303
52		353.2	673.73	0.3392			0.0307
53		353.2	681.23	0.3450			0.0326
54		353.2	688.65	0.3508			0.0319

TABLE IV. MODEL THERMOCOUPLE LOCATIONS (Continued)

T/C NO.	LOCATION	Z_o (INCHES)	X_o (INCHES)	X/ℓ	r (INCHES)	θ (DEGREES)	SKIN THICKNESS (INCHES)
55	PROTUBERANCES (43 - 4,5,6, &7)	353.2	696.15	0.3566			0.0319
	SIMULATOR VENT 44-1						
56		371.13	627.0	0.3031	0.2	0.0	0.0288
57		369.13	632.5	0.3074	0.2	315.0	0.0273
58		363.63	634.5	0.3089	0.2	270.0	0.0295
59		358.13	632.5	0.3074	0.2	225.0	0.0294
60		356.13	627.0	0.3031	0.2	180.0	0.0311
61		358.13	621.5	0.2988	0.2	135.0	0.0283
62		363.63	619.5	0.2973	0.2	90.0	0.0274
63		369.13	621.5	0.2988	0.2	45.0	0.0292
64		376.13	627.0	0.3031	0.4	0.0	0.0271
65		378.63	634.5	0.3089	0.7	337.5	0.0304
66		372.63	636.0	0.3101	0.4	315.0	0.0282
67		370.38	643.25	0.3157	0.7	292.5	0.0314
68		363.63	639.5	0.3128	0.4	270.0	0.0283
	FUSELAGE VENT PANEL NO.7 28-9						
69		356.4	556.5	0.2487			0.0312
70		356.4	570.1	0.2591			0.0274
71		351.4	547.9	0.2419			0.0304
72		351.4	556.5	0.2487			0.0317
73		351.4	565.1	0.2552			0.0290
74		351.4	572.6	0.2610			0.0271
75		342.8	547.9	0.2419			0.0304
77		342.8	565.1	0.2552			0.0317

TABLE IV. MODEL THERMOCOUPLE LOCATIONS (Continued)

T/C NO.	LOCATION	Z_o (INCHES)	X_o (INCHES)	X/ℓ	r (INCHES)	θ (DEGREES)	SKIN THICKNESS (INCHES)
	FUSELAGE VENT PANEL NO. 7 28-9						
78	↓	342.8	572.6	0.2610			0.0307
79		334.2	547.9	0.2419			0.0286
80		334.2	556.5	0.2487			0.0305
81		334.2	565.1	0.2552			0.0312
	ACCESS HATCH WINDOW (24-4)						
83	↓	394.875	510.60	0.2131	1.075	0	0.0299
84		384.875	510.60	0.2131	0.675	↓	0.0295
85		379.875	510.60	0.2131	0.475		0.0305
87		392.83	520.88	0.2210	1.075	337.5	0.0320
88		383.59	517.06	0.2181	0.675	↓	0.0313
89		378.97	515.144	0.2166	0.475		0.0329
90		387.00	529.60	0.2278	1.075	315.0	0.0305
91		384.875	522.53	0.2223	0.675	↓	0.0307
92		376.40	519.00	0.2196	0.475		0.0316
93		378.28	535.43	0.2323	1.075	292.0	0.0286
94		374.46	521.57	0.2216	0.675	↓	0.0291
95		372.54	521.57	0.2216	0.475	270.0	0.0318
96		368.00	537.475	0.3449	1.075		0.0291
97		368.00	527.475	0.2261	0.675	↓	0.0314
98		368.00	522.475	0.2223	0.475	270.0	0.0314
100		361.54	506.19	0.2252	0.675	247.5	0.0317
102		357.03	506.055	0.2096	0.475	157.5	0.0316
103		363.46	499.63	0.2046	0.475	112.5	0.0294
105		376.40	502.203	0.2066	0.475	45.0	0.0280
106	↓	383.90	502.203	0.2066	0.675	30.0	0.0287

TABLE IV. MODEL THERMOCOUPLE LOCATIONS (Continued)

T/C NO.	LOCATION	Z_o (INCHES)	X_o (INCHES)	X/ℓ	r (INCHES)	θ (DEGREES)	SKIN THICKNESS (INCHES)
	ACCESS HATCH WINDOW (24-4)						
107		393.90	502.203	0.2066	1.075	20.0	0.0321
	FUSELAGE PANEL VENT NO. 1 & 3 28-7 AND 28-5						
108		377.5	395.88	0.1244			0.0239
109		377.5	403.38	0.1302			0.0277
110		377.5	410.88	0.1360			0.0284
111		377.5	418.38	0.1418			0.0270
112		377.5	425.88	0.1476			0.0266
113		273.5	392.13	0.1215			0.0257
114		273.5	399.63	0.1273			0.0269
115		273.5	407.13	0.1331			0.0278
116		273.5	414.63	0.1389			0.0275
117		273.5	422.13	0.1447			0.0258
118		366.0	417.25	0.1409			0.0310
119		366.0	421.25	0.1442			0.0290
120		359.5	392.13	0.1215			0.0280
121		359.5	403.57	0.1303			0.0275
122		359.5	407.9	0.1337			0.0279
	LOWER RCS NOZZLES						
124		400.0	357.8	0.0950			0.0200
125		400.0	362.8	0.0988			0.0244
126		400.0	367.8	0.1027			0.0309
127		395.0	352.8	0.0911			0.0302
128		395.0	357.8	0.0950			0.0272
129		395.0	362.8	0.0988			0.0263
130		390.0	339.8	0.0810			0.0268

TABLE IV. MODEL THERMOCOUPLE LOCATIONS (Continued)

T/C NO.	LOCATION	Z_o (INCHES)	X_o (INCHES)	X/ℓ	r (INCHES)	θ (DEGREES)	SKIN THICKNESS (INCHES)
	LOWER RCS NOZZLES						
131		390.0	345.8	0.0857			0.0331
132		390.0	359.5	0.0963			0.0261
133		383.8	345.8	0.0857			0.0272
134		377.3	347.8	0.0872			0.0300
135		374.55	351.8	0.0903			0.0269
136		374.55	359.2	0.0960			0.0249
137		370.55	347.8	0.0872			0.0293
138		370.55	355.1	0.0928			0.0258
139		366.05	340.5	0.0816			0.0286
140		362.4	355.1	0.0934			0.0285
141		362.4	360.8	0.0973			0.0296
142		355.2	342.8	0.0833			0.0244
143		355.2	353.8	0.0919			0.0225
144		349.0	357.7	0.0949			0.0295
	Z_o = 338 NOSE T/C'S (EVERY 0.2")						
145		338.0	236.0	0.0008			0.0300
146			238.0	0.0023			0.0306
147			240.5	0.0043			0.0300
148			243.75	0.0068			0.0310
149			247.25	0.0095			0.0322
150			250.75	0.0122			0.0319
151			263.25	0.0218			0.0313
152			267.5	0.0251			0.0302
153			272.0	0.0286			0.0272
154			276.25	0.0319			0.0277
155			280.75	0.0354			0.0280
156			285.0	0.0387			0.0277

TABLE IV. MODEL THERMOCOUPLE LOCATIONS (Continued)

T/C NO.	LOCATION	Z_o (INCHES)	X_o (INCHES)	X/ℓ	r (INCHES)	θ (DEGREES)	SKIN THICKNESS (INCHES)
	Z_o = 338 NOSE T/C'S (EVERY 0.2")						
157	↓	338.0	289.25	0.0420			0.0274
158		338.0	294.75	0.0462			0.0274
159		338.0	300.0	0.0503			0.0250
	UPPER RCS NOZZLES						
161	↓	-7.5	315.0	0.0619			0.0265
162		-7.5	326.7	0.0709			0.0212
163		-7.5	339.3	0.0807			0.0275
164		-7.5	357.0	0.0943			0.0292
165		-7.5	361.5	0.0978			0.0282
166		-7.5	366.0	0.1013			0.0287
167		-15.0	315.0	0.0619			0.0303
168		-15.0	326.7	0.0709			0.0235
169		-15.0	339.3	0.0807			0.0272
170		-15.0	357.0	0.0943			0.0280
171		-15.0	361.5	0.0978			0.0270
172		-15.0	366.0	0.1013			0.0292
173		-22.5	339.3	0.0807			0.0299
174		-22.5	357.0	0.0943			0.0255
175		-22.5	361.5	0.0978			0.0321
176		-22.5	366.0	0.1013			0.0305

TABLE IV. MODEL THERMOCOUPLE LOCATIONS (Continued)

T/C NO.	LOCATION	RAY	LINE	SKIN THICKNESS (INCHES)
177	CANOPY	1	4	0.0308
178		1	6	0.0440
179		2	6	0.0292
180		3	3	0.0292
181		3	4	0.0304
182		3	5	0.0319
183		4	1	0.0281
184			2	0.0306
185			3	0.0269
186			4	0.0281
187			5	0.0298
188			6	0.0521
189		5	3	0.0319
190		5	4	0.0322
191		5	5	0.0342
192		6	2	0.0316
193		6	6	0.0431
194		7	3	0.0289
195		7	4	0.0276
196		7	5	0.0294
197		8	1	0.0222
198			2	0.0260
199			3	0.0301
200			4	0.0319

TABLE IV. MODEL THERMOCOUPLE LOCATIONS (Continued)

T/C NO.	LOCATION	RAY	LINE	SKIN THICKNESS (INCHES)
201	CANOPY	8	5	0.0316
202		8	6	0.0283
203		9	3	0.0278
204		9	4	0.0348
205		9	5	0.0349
206		10	2	0.0297
207		10	6	0.0300
208		11	3	0.0301
209		11	4	0.0308
210		11	5	0.0299
211		12	1	0.0272
212			2	0.0302
213			3	0.0297
214			4	0.0314
215			5	0.0318
216			6	0.0318
217			7	0.0319
218		13	3	0.0309
219			4	0.0315
220			5	0.0308
221		14	1	0.0271
222			2	0.0276
223			6	0.0304

TABLE IV. MODEL THERMOCOUPLE LOCATIONS (Continued)

T/C NO.	LOCATION	Z_o (INCHES)	X_o (INCHES)	X/ℓ	r (INCHES)	θ (DEGREES)	SKIN THICKNESS (INCHES)
	ESCAPE HATCH & WINDOW						
224		485.0	7.6	0.1933			0.0223
225		490.0	7.6	0.1972			0.0268
226		485.0	18.0	0.1933			0.0236
227		490.0	18.0	0.1972			0.0328
228		485.0	30.6	0.1933			0.0288
229		490.0	30.6	0.1972			0.0288
232		567.0	11.0	0.2567			0.0303
233		572.0	11.0	0.2606			0.0340
234		547.5	23.0	0.2416			0.0305
235		559.5	23.0	0.2509			0.03505
236		567.0	23.0	0.2567			0.0328
237		572.0	23.0	0.2606			0.0315
	CARGO BAY HINGES - HINGE NO. 1						
238		607.3	420.0	0.2879			0.030
239		612.3	420.0	0.2917			0.030
240		602.3	415.0	0.2840			0.032
241		607.3	415.0	0.2879			0.0315
242		612.3	415.0	0.2917			0.032
243		597.3	405.0	0.2801			0.0274
244		602.3	405.0	0.2840			0.0262
	HINGE NO. 2						
245		674.8	420.0	0.3192			0.032
246		679.8	420.0	0.3439			0.032
247		669.8	415.0	0.3362			0.033
248		674.8	415.0	0.3401			0.033
249		679.8	415.0	0.3439			0.033

TABLE IV. MODEL THERMOCOUPLE LOCATIONS (Continued)

T/C NO.	LOCATION	Z_o (INCHES)	X_o (INCHES)	X/ℓ	r (INCHES)	θ (DEGREES)	SKIN THICKNESS (INCHES)
	CARGO BAY HINGES - HINGE NO. 2						
250		664.8	405.0	0.3323			0.0281
251		669.8	405.0	0.3362			0.0275
	HINGE NO. 3						
252		742.3	420.0	0.3923			0.0325
253		747.3	420.0	0.3961			0.0325
254		737.3	415.0	0.3884			0.034
257		732.3	405.0	0.3845			0.0302
258		737.3	405.0	0.3884			0.0305
	TOP CENTERLINE						
367			235.000	0.000			0.0263
368			236.000	0.0008			0.0284
369			237.500	0.0019			0.0262
370			239.750	0.0037			0.0273
371			242.500	0.0058			0.0219
372			246.250	0.0087			0.0268
373			250.250	0.0118			0.0293
374			254.50	0.0151			0.0293
375			258.50	0.0182			0.0306
376			262.75	0.0215			0.0215
377			266.75	0.0246			0.0261
378			271.00	0.0278			0.0261
379			313.75	0.0609			0.0275
380			318.50	0.0646			0.023
381			323.50	0.0684			0.029
382			328.25	0.0721			0.0293
383			333.25	0.0760			0.030
384			338.00	0.0796			0.0312

TABLE IV. MODEL THERMOCOUPLE LOCATIONS (Continued)

T/C NO.	LOCATION	Z_o (INCHES)	X_o (INCHES)	X/ℓ	r (INCHES)	θ (DEGREES)	SKIN THICKNESS (INCHES)
	TOP CENTERLINE						
385			357.00	0.0789			0.0288
386			357.00	0.0789			0.0265
387			366.75	0.1019			0.0275
388			385.00	0.1160			0.0213
389			389.50	0.1195			0.0325
390			394.25	0.1231			0.0353
391			399.00	0.1268			0.0357
392			403.75	0.1305			0.0384
393			408.00	0.1338			0.0379
394			413.00	0.1376			0.0376
395			417.50	0.1411			0.0335
396			422.25	0.1448			0.0332
397			426.75	0.1483			0.0332
398			431.50	0.1519			0.0315
399			436.25	0.1556			0.0299
400			439.63	0.1582			0.0302
401			443.00	0.1608			0.0290
402			446.50	0.1635			0.0279
403			450.25	0.1664			0.0272
404			453.75	0.1691			0.0271
405			457.50	0.1720			0.0271
406			461.00	0.1748			0.0271
407			463.75	0.1769			0.0289
408			466.75	0.1800			0.0328
409			471.75	0.1831			0.0322
410			476.00	0.1863			0.0322
411			480.00	0.1894			0.0336
412			474.75	0.1931			0.0304

TABLE IV. MODEL THERMOCOUPLE LOCATIONS (Concluded)

T/C NO.	LOCATION	Z_o (INCHES)	X_o (INCHES)	X/ℓ	r (INCHES)	θ (DEGREES)	SKIN THICKNESS (INCHES)
	TOP CENTERLINE						
413	↓		490.00	0.1972			0.0300
414			500.00	0.2049			0.0300
415			525.993	0.2250			0.0221
416			558.325	0.250			0.0262

Notes:

1. Positive directions of angles are indicated by arrows

2. For clarity, origins of wind and stability axes have been displaced from the center of gravity

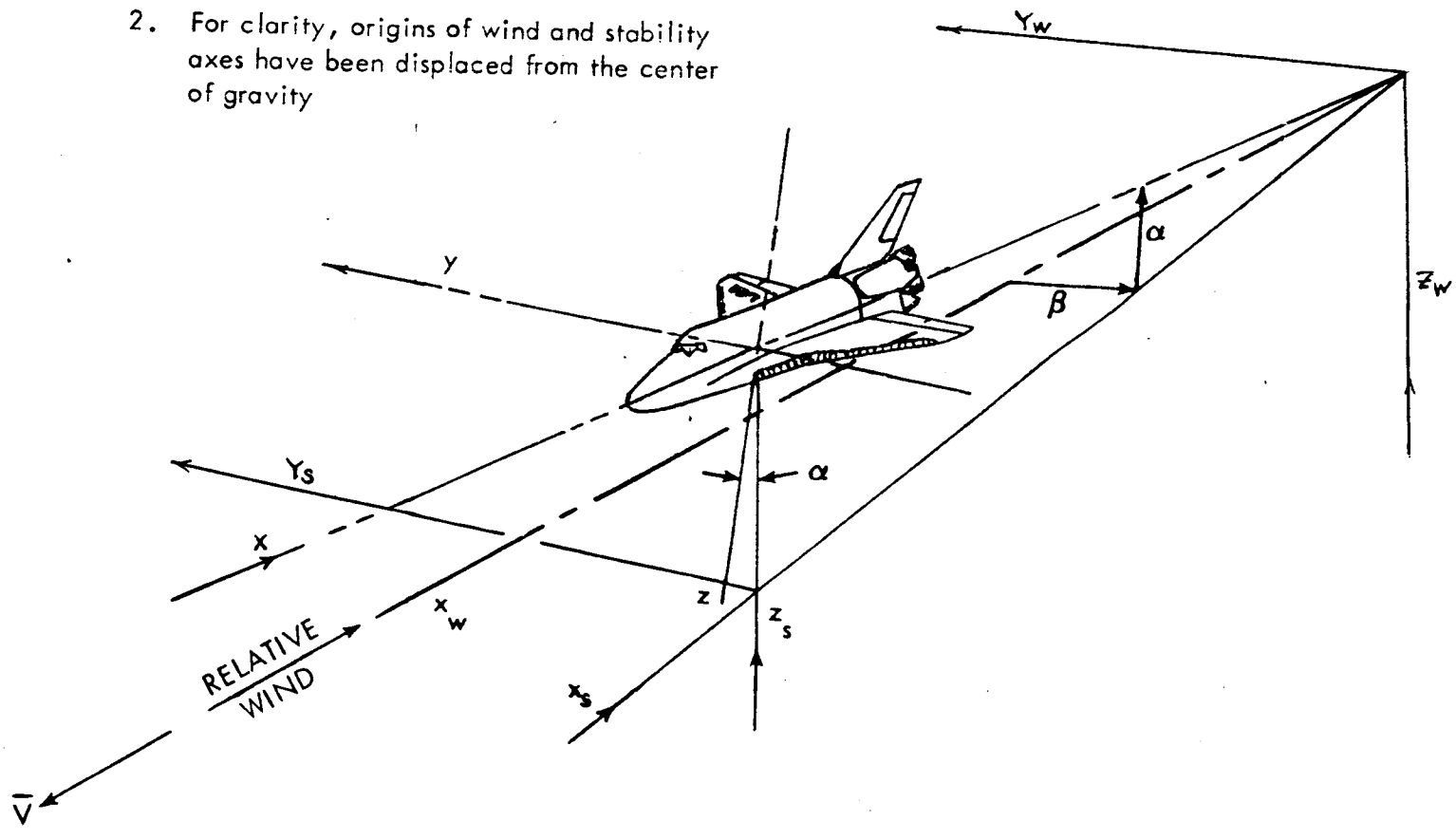

Figure 1. Axis systems.

NOTE: • All thermocouples shown on this sketch were not used in OH60

• Numbers in parentheses indicate the number of thermocouples in the dashed-line areas.

• All dimensions are in inches.

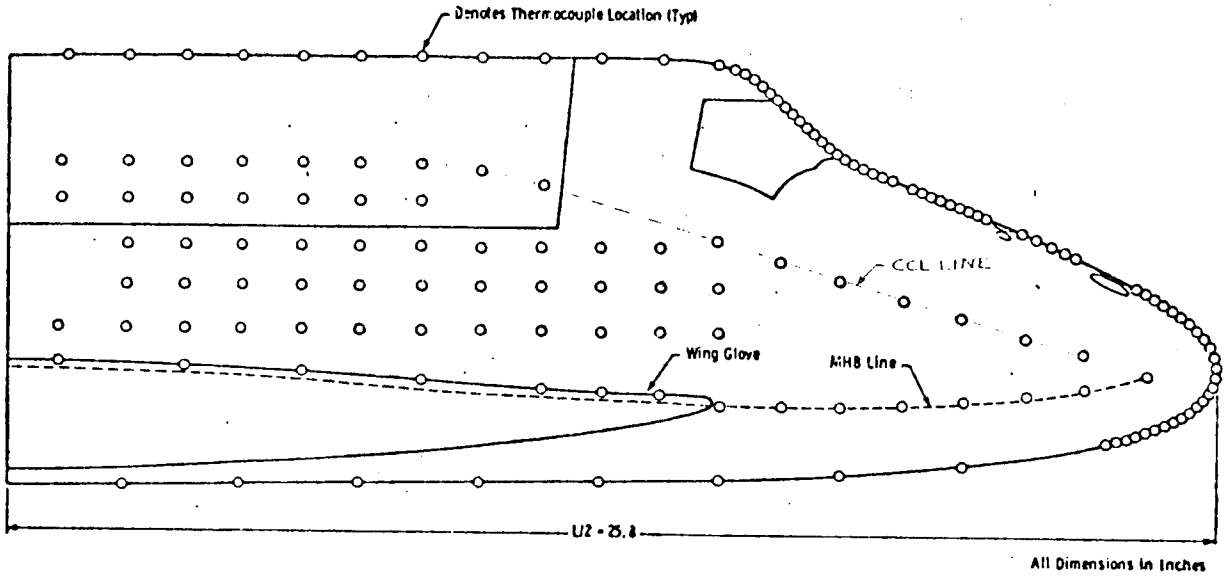

Smooth side (pilot right)

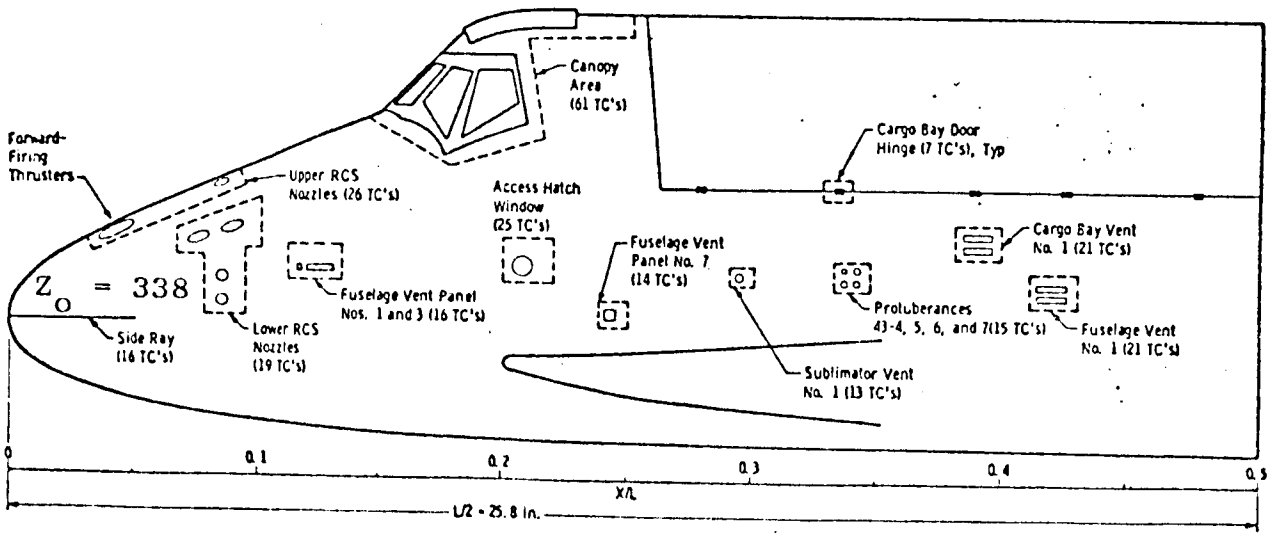

$Z_o = 338$

$X_o = 235$

Protuberance side (pilot left)

a. Forebody Model

Figure 2. Model sketches.

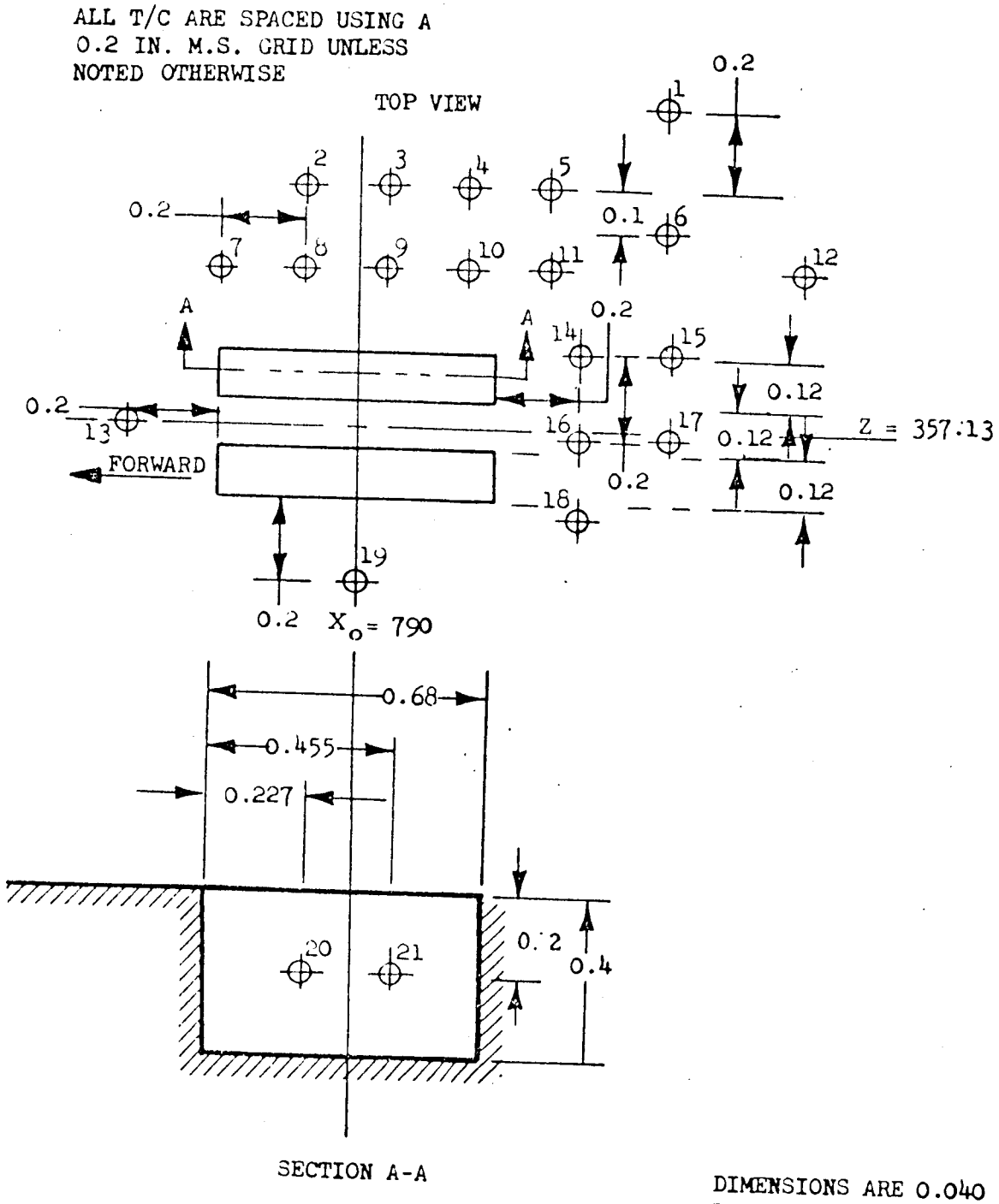

DIMENSIONS ARE 0.040 (M.S.)
LOCATIONS ARE FULL SCALE

b. Fuselage Vent No. 1
Figure 2. Continued.

NOTE: ALL T/C'S ARE LOCATED USING A 0.2 IN. M.S. GRID PATTERN UNLESS NOTED OTHERWISE.

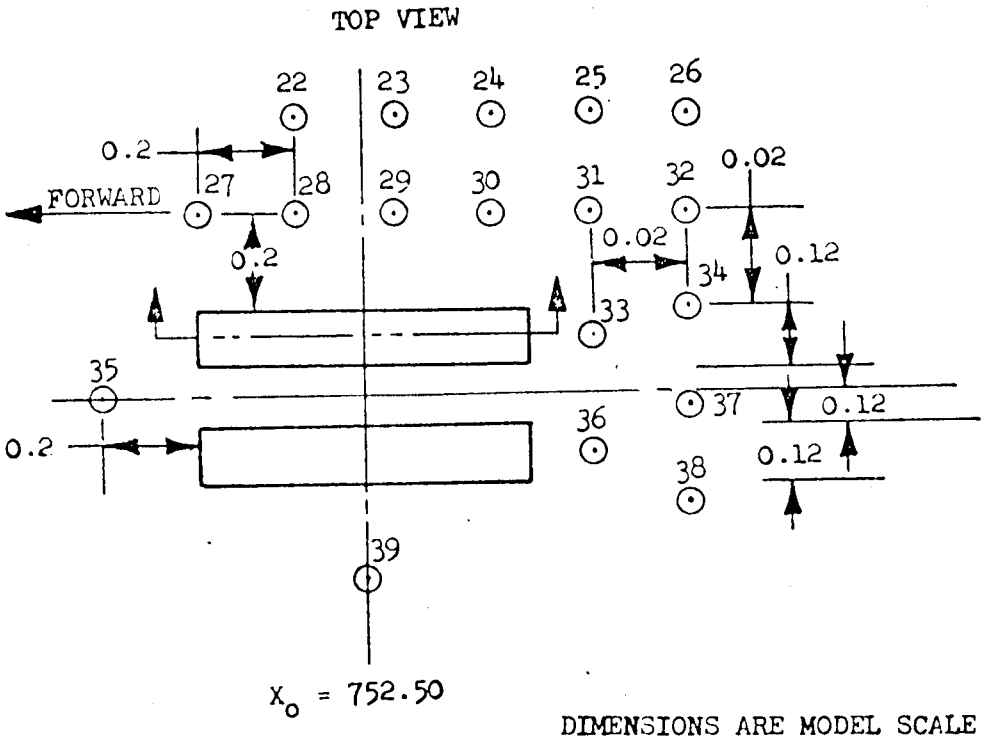

DIMENSIONS ARE MODEL SCALE (.040)
LOCATIONS ARE FULL SCALE

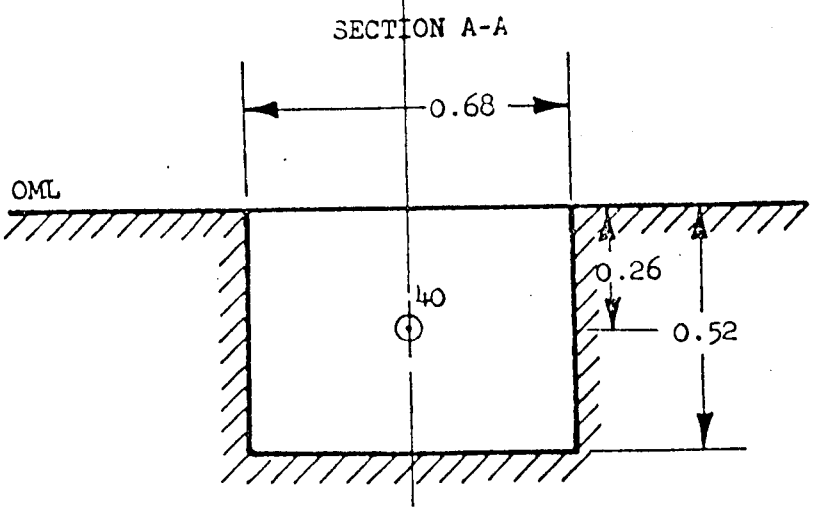

c. Cargo Bay Vent No. 1
Figure 2. Continued.

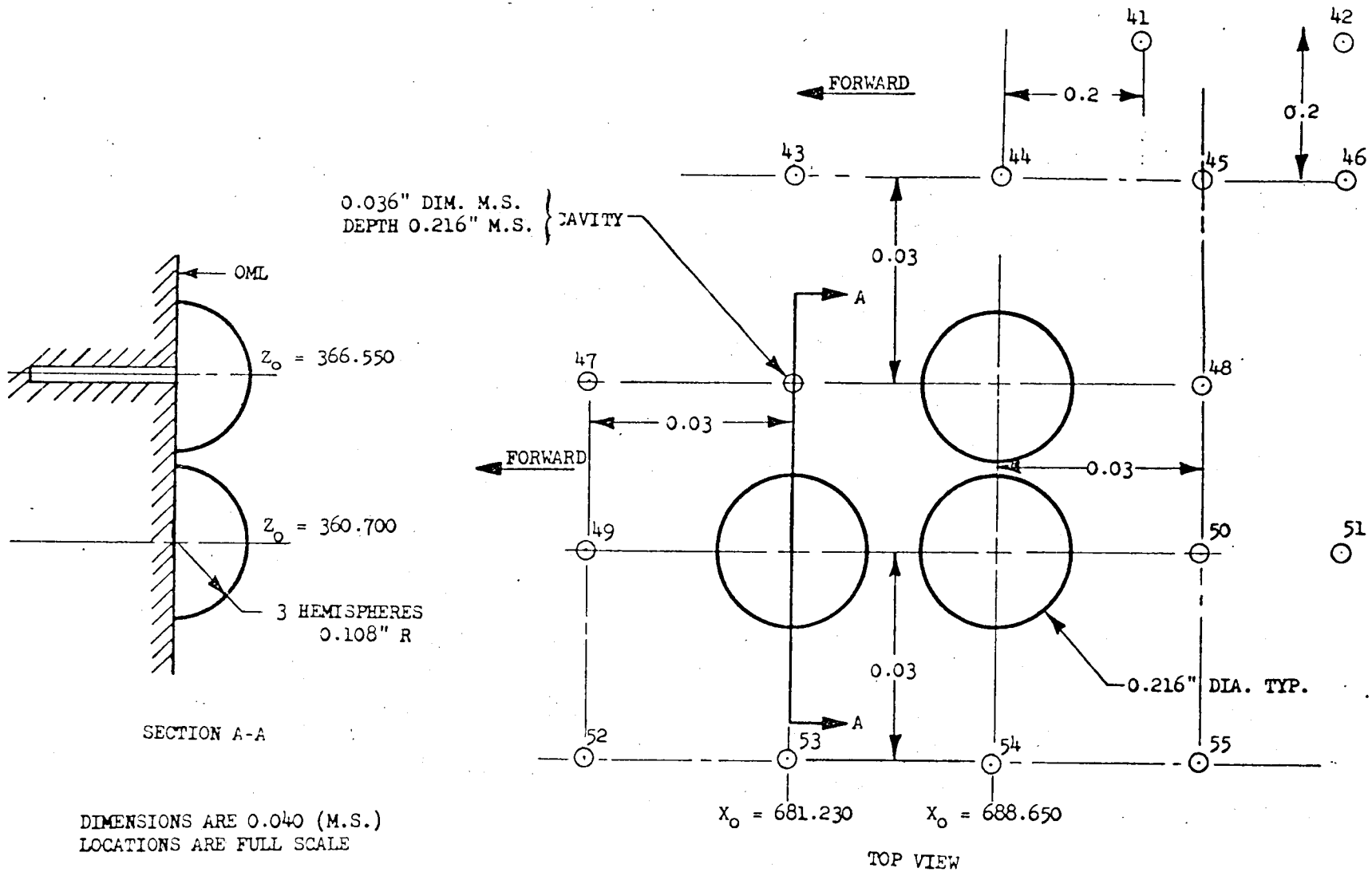

d. Protuberances 43 - 4, 5, and 6
Figure 2. Continued.

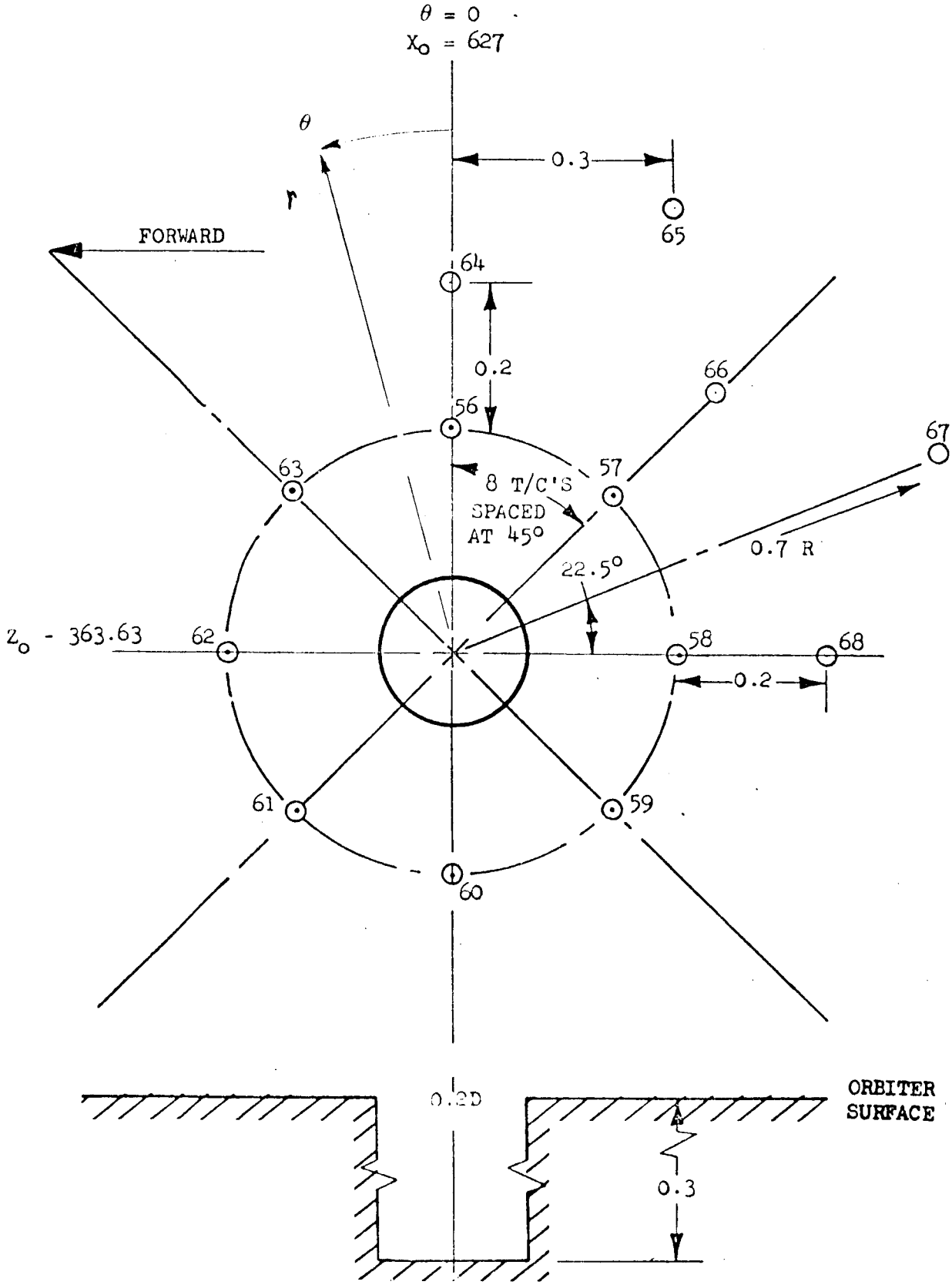

c. Sublimator Vent No. 1
Figure 2. Continued.

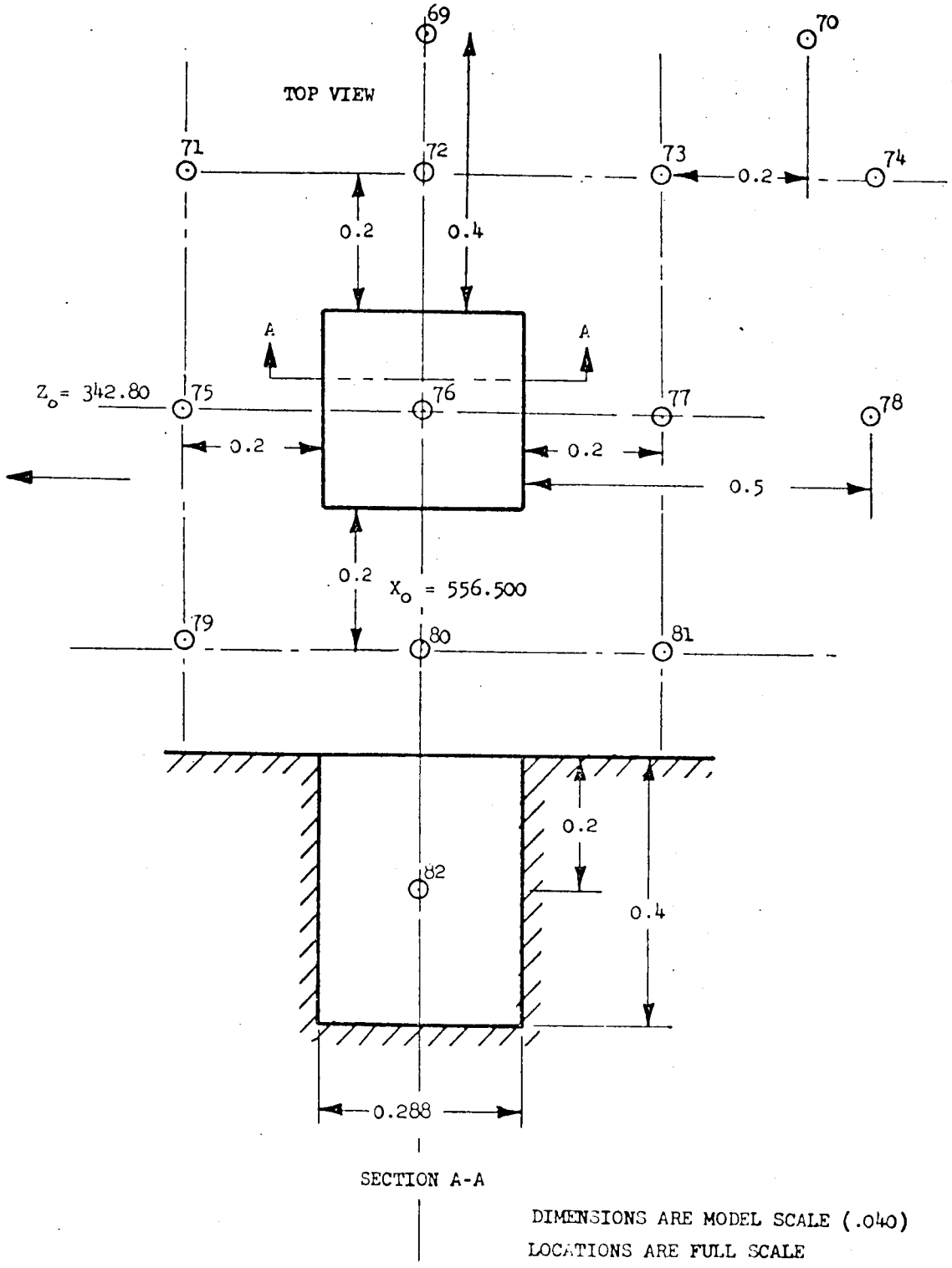

f. Fuselage Vent Panel No. 7
Figure 2. Continued.

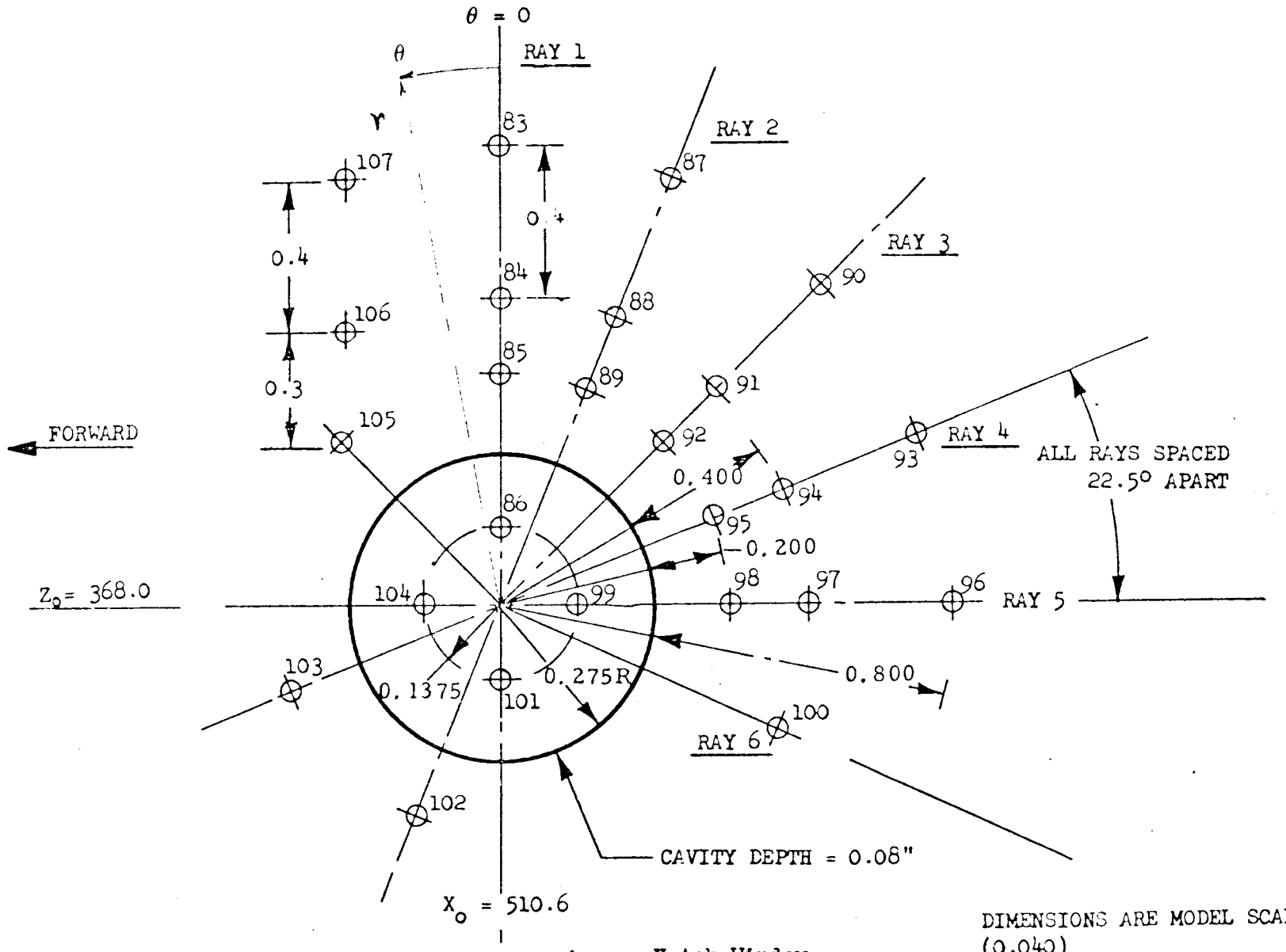

DIMENSIONS ARE MODEL SCALE
(0.040)
LOCATIONS ARE FULL SCALE

g. Access Hatch Window
Figure 2. Continued.

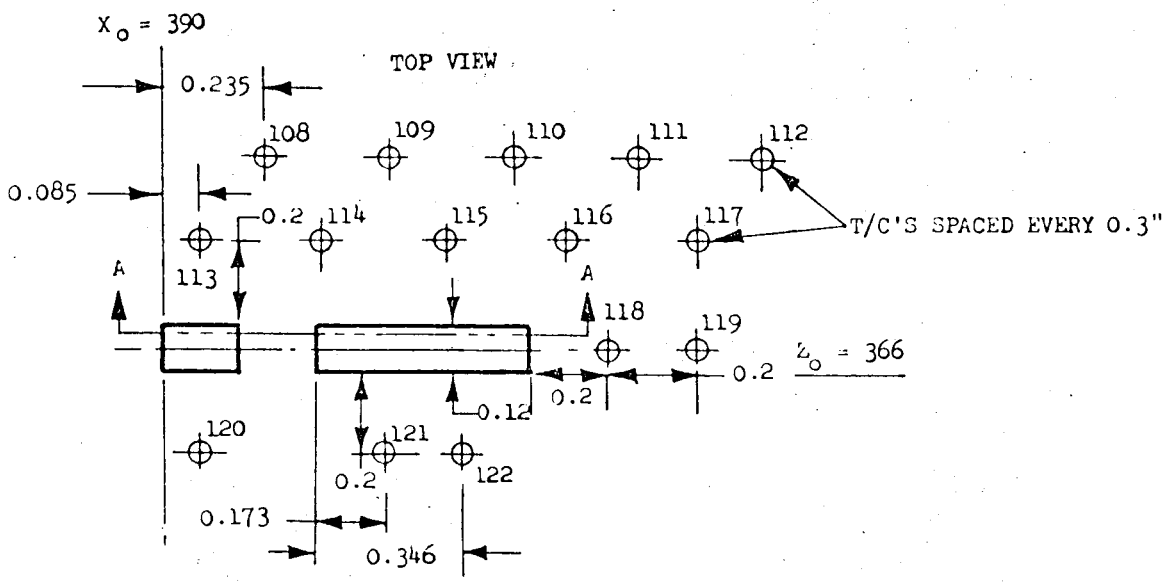

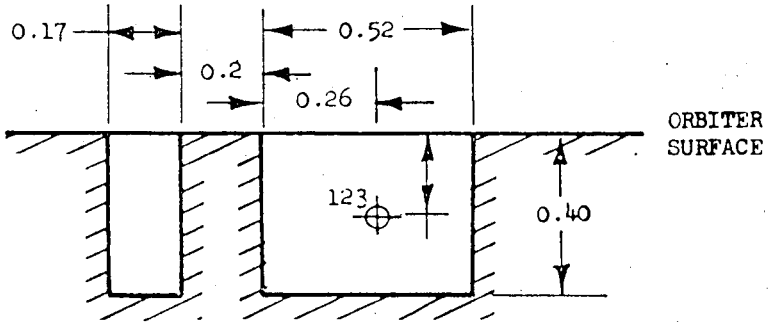

SECTION A A

DIMENSIONS ARE MODEL SCALE
(0.040)
LOCATIONS ARE FULL SCALE

h. Fuselage Vent Panel Nos. 1 and 3
Figure 2. Continued.

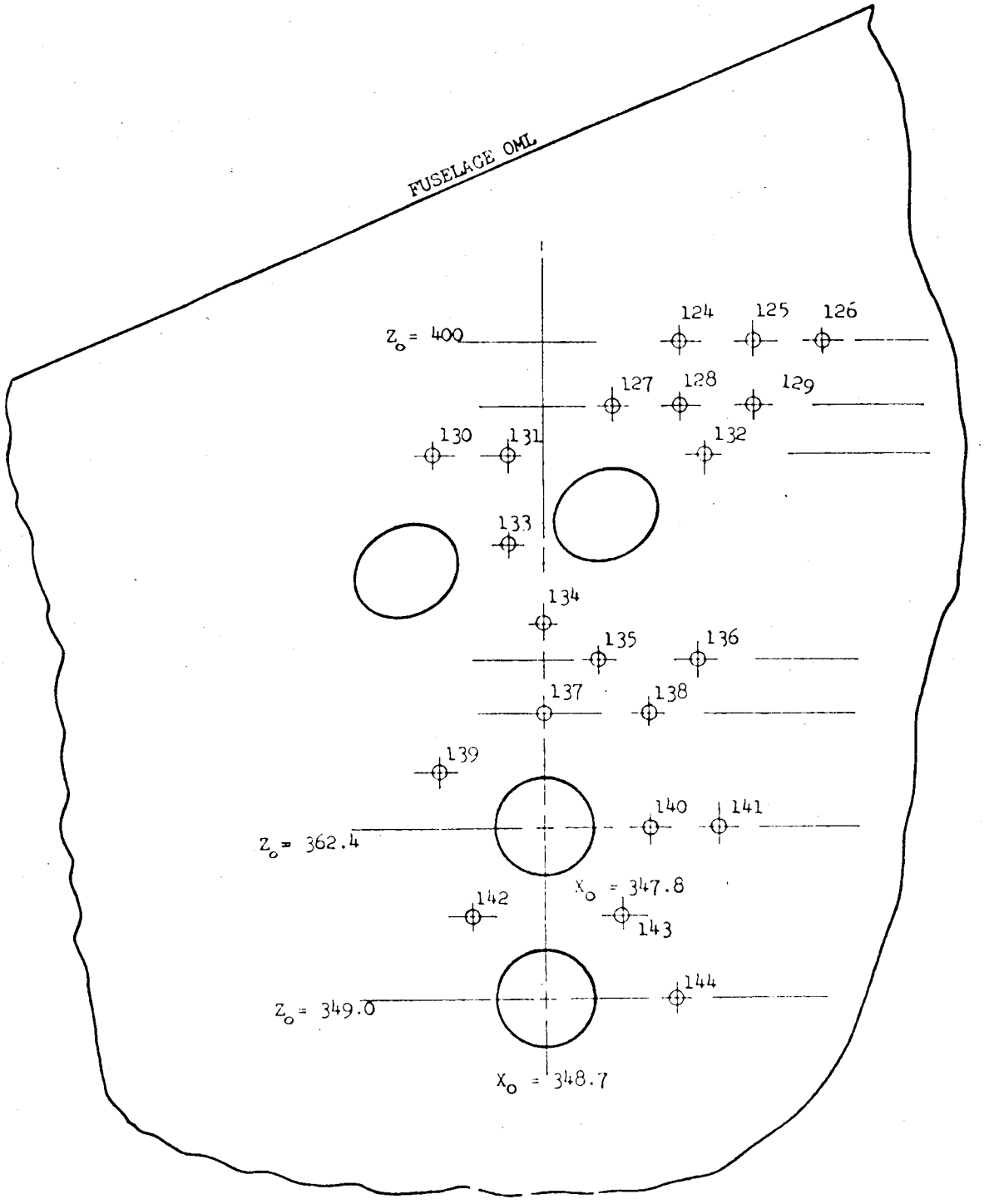

i. Lower RCS Nozzles
Figure 2. Continued.

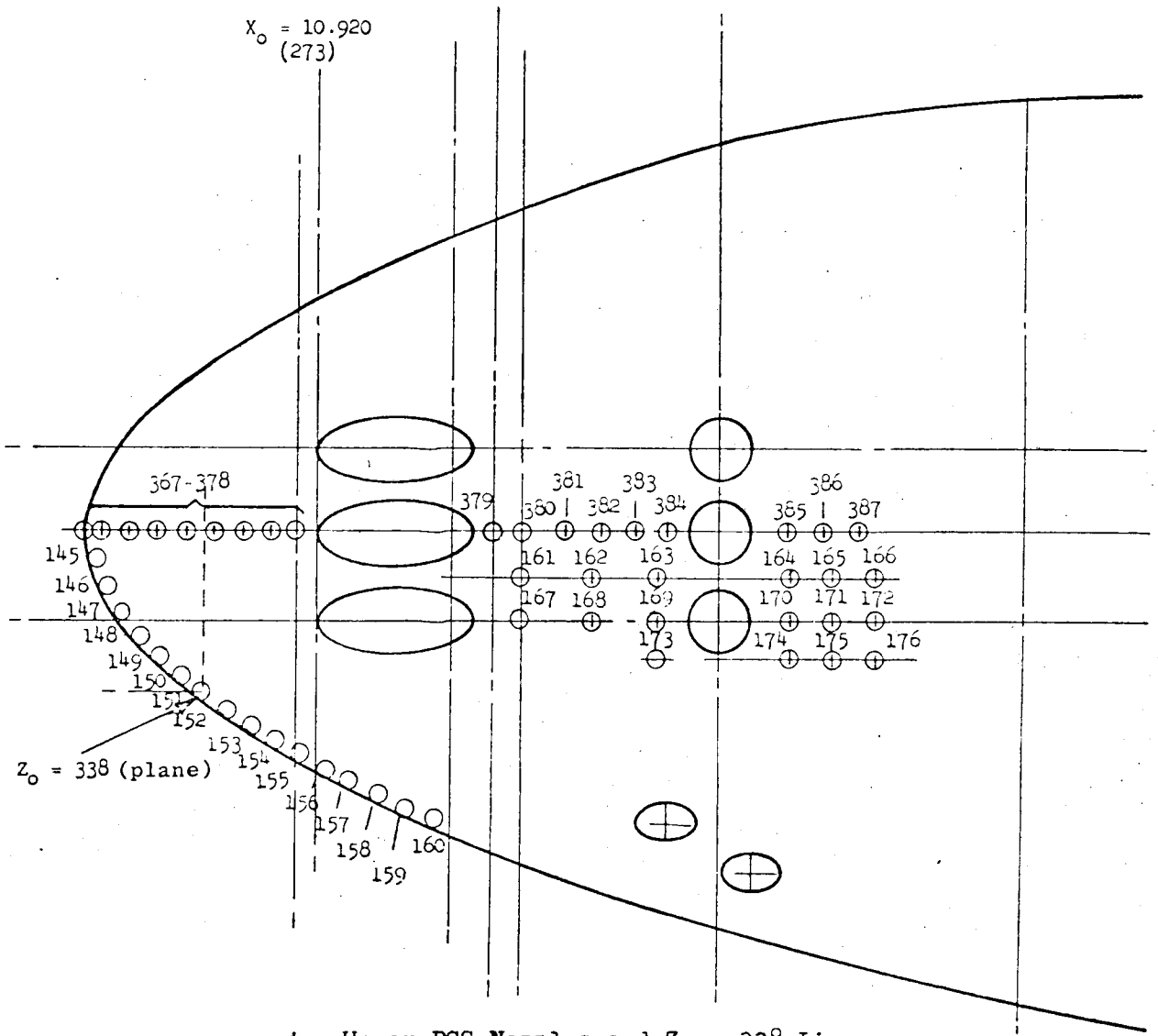

j. Upper RCS Nozzles and Z_o = 338 Line
Figure 2. Continued.

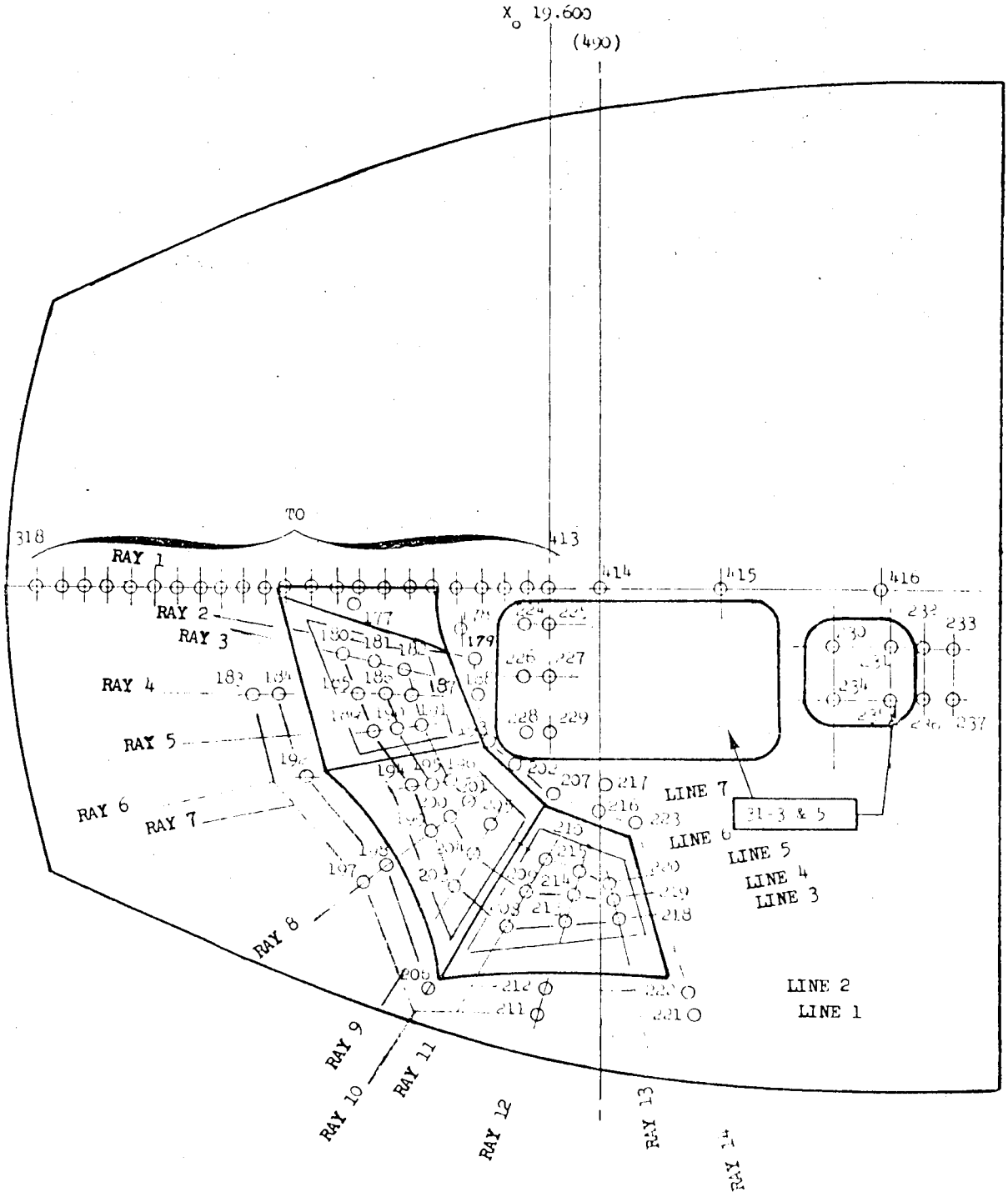

k. Canopy
Figure 2. Continued.

PROFILE VIEW

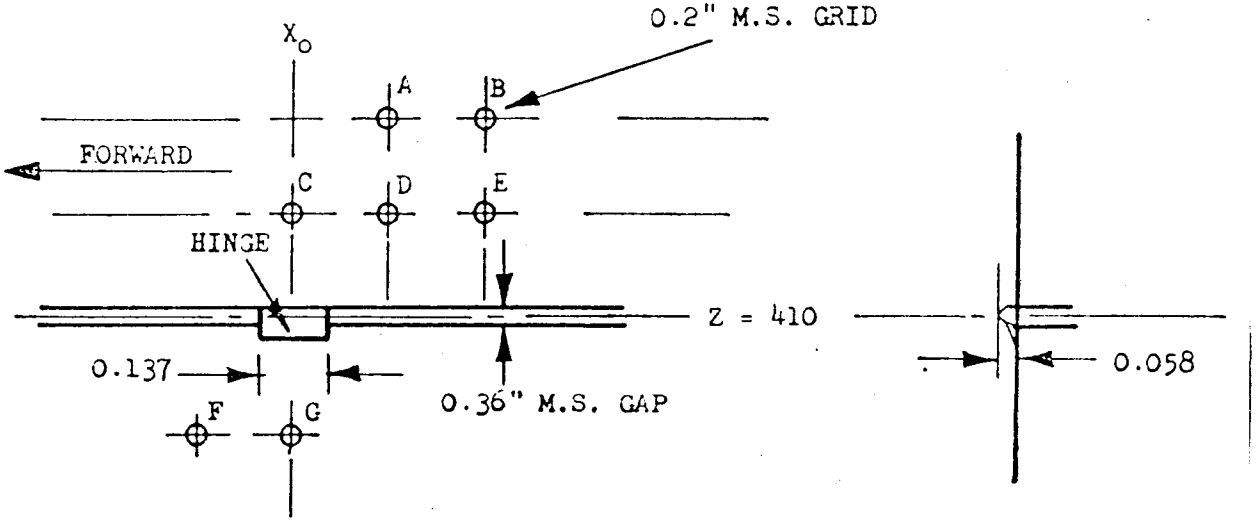

5 INSTRUMENTED HINGES @:	THERMOCOUPLES						
	A	B	C	D	E	F	G
HINGE 1 X_o = 602.3	238	239	240	241	242	243	244
HINGE 2 X_o = 669.8	245	246	247	248	249	250	251
HINGE 3 X_o = 737.3	252	253	254	255	256	257	258
HINGE 4 X_o = 783.5	259	260	261	262	263	264	265
HINGE 5 X_o = 850.6	266	267	268	269	270	271	272

NOTE: • Hinge nos. 4 and 5 not used
• All dimensions in inches

1. Cargo Bay Hinges
Figure 2. Concluded.

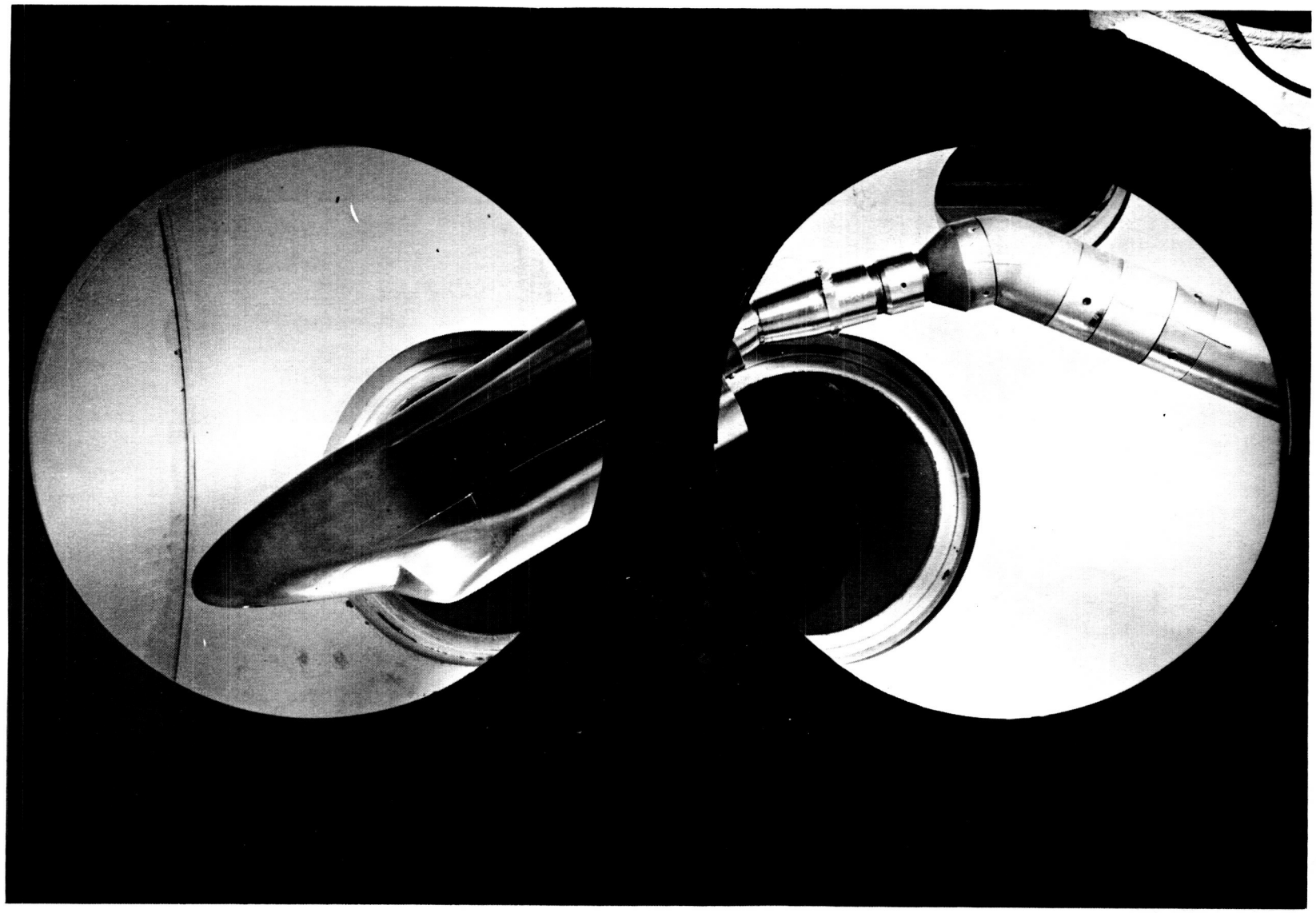

Figure 3. Model installation photograph.

APPENDIX

TABULATED SOURCE DATA

(Tab. pages 40-559)

DATE 5/12/75

AEDC(ARO.INC.) ARNOLD AFS. TENNESSEE
VON KARMAN GAS DYNAMICS FACILTTY
50 INCH HYPERSONIC TUNNEL B
V41B-B7A

GROUP	TEST CONDITION	MODEL	MACH NO	PO,PSIA	TO,DEG R	ALPHA-MODEL	ALPHA-SECTOR	ALPHA-PREBEND	ROLL MODEL	YAW
1	2	140 B	7.90	110.3	1267	20.04	10.15	30.00	191.36	2.0

T-INF (DEG R)	P-INF (PSIA)	Q-INF (PSIA)	V-INF (FT/SEC)	RHO-INF (SLUGS/FT3)	MU-INF (LB-SEC/FT2)	RE/FT (FT-1)	HREF-FR (R= .0400FT)	STFR (R= .0400FT)	SWITCH POSITION
93.5	.012	.536	3752	1.095E-05	7.564E-08	5.431E 05	1.183E-02	3.634E-02	1

TC NO	TW	DTWDT	QDOT	H(TO)	H(TO)/HREF	H(.9TO)	H(.9TO)/HREF	X/L	Z,FULL SCALE(IN)
								FUSELAGE VENT NO. 1	
1	536.6	2.734	.361	4.940E-04	.0417	5.978E-04	.0505	.4434	376.6300
2	535.3	2.863	.385	5.266E-04	.0445	6.369E-04	.0538	.4264	371.6300
3	535.2	3.088	.424	5.793E-04	.0489	7.006E-04	.0592	.4303	371.6300
4	535.6	3.170	.431	5.892E-04	.0498	7.126E-04	.0602	.4342	371.6300
5	536.5	3.361	.448	6.135E-04	.0518	7.422E-04	.0627	.4380	371.6300
6	537.6	3.616	.479	6.569E-04	.0555	7.950E-04	.0672	.4434	369.1300
7	536.4	3.425	.499	6.837E-04	.0578	8.271E-04	.0699	.4226	366.6300
8	535.4	3.108	.468	6.401E-04	.0541	7.742E-04	.0654	.4264	366.6300
9	536.5	3.574	.519	7.114E-04	.0601	8.608E-04	.0727	.4303	366.6300
10	536.5	3.768	.538	7.362E-04	.0622	8.908E-04	.0753	.4342	366.6300
11	537.5	4.122	.557	7.637E-04	.0645	9.243E-04	.0781	.4380	366.6300
12	539.1	4.291	.592	8.134E-04	.0687	9.849E-04	.0832	.4496	366.6300
13	537.4	3.071	.451	6.179E-04	.0522	7.478E-04	.0632	.4187	357.1300
14	537.8	3.695	.504	6.919E-04	.0585	8.375E-04	.0708	.4396	361.6300
15	538.7	3.789	.505	6.944E-04	.0587	8.406E-04	.0710	.4434	361.6300
16	536.8	2.113	.285	3.910E-04	.0330	4.731E-04	.0400	.4396	355.6300
17	539.0	1.829	.247	3.393E-04	.0287	4.107E-04	.0347	.4434	355.6300
18	537.1	1.368	.191	2.616E-04	.0221	3.166E-04	.0267	.4396	351.6300
19	537.9	.963	.134	1.845E-04	.0156	2.233E-04	.0189	.4291	332.6300
								CARGO BAY VENT NO. 1	
22	536.4	.914	.127	1.735E-04	.0147	2.099E-04	.0177	.3974	397.6300
23	536.2	.925	.129	1.766E-04	.0149	2.137E-04	.0181	.4013	397.6300
24	536.0	.999	.135	1.846E-04	.0156	2.234E-04	.0189	.4052	397.6300
25	536.5	.962	.126	1.732E-04	.0146	2.095E-04	.0177	.4090	397.6300
26	536.3	1.106	.145	1.984E-04	.0168	2.401E-04	.0203	.4129	397.6300
27	536.0	.919	.128	1.749E-04	.0148	2.116E-04	.0179	.3936	392.6300
28	535.0	.729	.105	1.429E-04	.0121	1.728E-04	.0146	.3974	392.6300
29	534.7	.845	.122	1.660E-04	.0140	2.008E-04	.0170	.4013	392.6300
30	534.7	.970	.139	1.900E-04	.0161	2.298E-04	.0194	.4052	392.6300
31	534.6	1.142	.159	2.175E-04	.0184	2.630E-04	.0222	.4090	392.6300
32	534.6	1.207	.160	2.180E-04	.0184	2.636E-04	.0223	.4129	392.6300
33	533.5	1.087	.155	2.112E-04	.0178	2.554E-04	.0216	.4090	386.1300
34	534.4	1.329	.179	2.449E-04	.0207	2.961E-04	.0250	.4129	387.6300
35	535.6	1.086	.153	2.098E-04	.0177	2.538E-04	.0214	.3897	383.1300
36	534.1	1.455	.211	2.875E-04	.0243	3.476E-04	.0294	.4090	378.6300
37	534.3	1.531	.215	2.931E-04	.0248	3.544E-04	.0299	.4129	382.1300
38	534.9	1.972	.274	3.745E-04	.0316	4.529E-04	.0383	.4129	377.1300
39	534.9	1.691	.246	3.366E-04	.0284	4.070E-04	.0344	.4001	373.6300
								PROTUBERANCES	
41	537.4	.750	.100	1.376E-04	.0116	1.665E-04	.0141	.3546	379.0500
42	537.9	.860	.117	1.611E-04	.0136	1.950E-04	.0165	.3604	379.0500
43	537.0	.611	.079	1.085E-04	.0092	1.313E-04	.0111	.3450	374.0500

DATE 5/12/75

AEDC(ARO,INC.) ARNOLD AFS, TENNESSEE
VON KARMAN GAS DYNAMICS FACILITY
50 INCH HYPERSONIC TUNNEL B
V418-87A

GROUP	TEST CONDITION	MODEL	MACH NO	PO,PSIA	TO,DEG R	ALPHA-MODEL	ALPHA-SECTOR	ALPHA-PREBEND	ROLL MODEL	YAW
1	2	140 B	7.90	110.3	1267	20.04	10.15	30.00	191.36	2.0

T-INF (DEG R)	P-INF (PSIA)	Q-INF (PSIA)	V-INF (FT/SEC)	RHO-INF (SLUGS/FT3)	MU-INF (LB-SEC/FT2)	RE/FT (FT-1)	HREF-FR (R= .0400FT)	STFR (R= .0400FT)	SWITCH POSITION
93.9	.012	.536	3752	-1.095E-05	7.564E-08	5.431E 05	1.183E-02	3.634E-02	1

TC NO	TW	DTWDT	QDOT	H(TO)	H(TO)/HREF	H(.9TO)	H(.9TO)/HREF
44	537.1	.849	.115	1.582E-04	.0134	1.915E-04	.0162
45	537.3	1.161	.160	2.200E-04	.0186	2.662E-04	.0225
46	537.9	1.244	.174	2.384E-04	.0201	2.885E-04	.0244
47	536.5	1.073	.143	1.952E-04	.0165	2.362E-04	.0200
48	537.1	1.338	.183	2.510E-04	.0212	3.038E-04	.0257
49	537.0	1.572	.216	2.958E-04	.0250	3.579E-04	.0302
50	537.6	1.842	.255	3.504E-04	.0296	4.241E-04	.0358
51	537.7	1.956	.265	3.638E-04	.0307	4.404E-04	.0372
52	538.0	2.602	.358	4.907E-04	.0415	5.939E-04	.0502
53	538.0	2.815	.411	5.637E-04	.0476	6.823E-04	.0576
54	537.0	.821	.117	1.646E-04	.0136	1.944E-04	.0164
55	539.1	3.169	.453	6.222E-04	.0526	7.534E-04	.0637
56	536.8	.806	.104	1.422E-04	.0120	1.721E-04	.0145
57	536.8	.826	.101	1.381E-04	.0117	1.671E-04	.0141
58	536.5	.865	.114	1.563E-04	.0132	1.891E-04	.0160
59	536.3	.853	.112	1.535E-04	.0130	1.857E-04	.0157
60	536.2	.808	.112	1.538E-04	.0130	1.861E-04	.0157
61	536.3	.846	.107	1.466E-04	.0124	1.774E-04	.0150
62	536.2	.846	.104	1.419E-04	.0120	1.716E-04	.0145
63	536.8	.842	.110	1.506E-04	.0127	1.822E-04	.0154
64	532.6	.031	.004	5.110E-06	.0004	6.176E-06	.0005
65	538.0	.754	.103	1.408E-04	.0119	1.705E-04	.0144
66	537.9	.883	.111	1.529E-04	.0129	1.851E-04	.0156
67	537.9	.791	.111	1.526E-04	.0129	1.847E-04	.0156
68	537.3	.867	.110	1.504E-04	.0127	1.820E-04	.0154

PROTUBERANCES

X/L	Z,FULL SCALE(IN)
.3508	374.0500
.3566	374.0500
.3604	374.0500
.3392	366.5500
.3566	366.5500
.3392	360.7000
.3566	360.7000
.3604	360.7000
.3392	353.2000
.3450	353.2000
.3508	353.2000
.3566	353.2000

SUBLIMATOR VENT NO. 1

X/L	Z,FULL SCALE(IN)
.3031	371.1300
.3074	369.1300
.3089	363.6300
.3074	358.1300
.3031	356.1300
.2988	358.1300
.2973	363.6300
.2988	369.1300
.3031	376.1300
.3089	378.6300
.3101	372.6300
.3157	370.3800
.3128	363.6300

DATE 5/12/75

AEDC(ARO,INC.) ARNOLD AFS, TENNESSEE
VON KARMAN GAS DYNAMICS FACILITY
50 INCH HYPERSONIC TUNNEL B
V41B-B7A

GROUP	TEST CONDITION	MODEL	MACH NO	PO,PSIA	TO,DEG R	ALPHA-MODEL	ALPHA-SECTOR	ALPHA-PREBEND	ROLL MODEL	YAW
1	2	140 B	7.90	110.3	1267	20.04	10.15	30.00	191.36	2.0

T-INF (DEG R)	P-INF (PSIA)	Q-INF (PSIA)	V-INF (FT/SEC)	RHO-INF (SLUGS/FT3)	MU-INF (LB-SEC/FT2)	RE/FT (FT-1)	HREF-FR (R= .0400FT)	STFR (R= .0400FT)	SWITCH POSITION
93.9	.012	.536	3752	1.095E-05	7.564E-06	5.431E 05	1.183E-02	3.634E-02	1

TC NO	TW	DTWDT	QDOT	H(TO)	H(TO)/HREF	H(.9TO)	H(.9TO)/HREF	X/L	Z,FULL SCALE(IN)
								FUSELAGE VENT PANEL NO. 7	
69	534.0	1.113	.155	2.117E-04	.0179	2.559E-04	.0216	.2487	356.4000
70	534.6	1.110	.136	1.855E-04	.0157	2.244E-04	.0190	.2591	356.4000
71	534.6	1.138	.155	2.111E-04	.0178	2.553E-04	.0216	.2419	351.4000
72	532.6	1.508	.213	2.906E-04	.0246	3.512E-04	.0297	.2487	351.4000
73	533.5	1.169	.151	2.065E-04	.0174	2.496E-04	.0211	.2552	351.4000
74	534.2	1.117	.135	1.846E-04	.0156	2.231E-04	.0189	.2610	351.4000
75	532.2	1.299	.176	2.399E-04	.0203	2.898E-04	.0245	.2419	342.8000
77	532.5	1.112	.157	2.143E-04	.0181	2.589E-04	.0219	.2552	342.8000
78	533.8	1.124	.154	2.104E-04	.0178	2.543E-04	.0215	.2610	342.8000
79	532.9	1.416	.181	2.463E-04	.0208	2.977E-04	.0252	.2419	334.2000
80	530.8	1.171	.159	2.163E-04	.0183	2.613E-04	.0221	.2487	334.2000
81	532.4	1.196	.166	2.267E-04	.0192	2.740E-04	.0231	.2552	334.2000
								ACCESS HATCH WINDOW	
83	539.1	1.592	.213	2.929E-04	.0247	3.546E-04	.0300	.2131	398.0000
84	536.6	1.737	.229	3.139E-04	.0265	3.798E-04	.0321	.2131	388.0000
85	535.9	1.488	.203	2.776E-04	.0235	3.358E-04	.0284	.2131	383.0000
87	537.9	1.019	.146	2.002E-04	.0169	2.423E-04	.0205	.2222	395.8000
88	536.7	1.524	.213	2.923E-04	.0247	3.537E-04	.0299	.2193	386.5000
89	535.4	2.280	.335	4.585E-04	.0387	5.546E-04	.0469	.2177	381.8000
90	537.5	1.383	.189	2.588E-04	.0219	3.132E-04	.0265	.2297	389.5000
91	536.2	1.561	.214	2.934E-04	.0248	3.549E-04	.0300	.2243	382.5000
92	535.6	1.508	.213	2.913E-04	.0246	3.524E-04	.0298	.2214	378.7000
93	536.2	1.350	.173	2.362E-04	.0200	2.858E-04	.0241	.2343	374.0000
94	535.5	1.995	.259	3.549E-04	.0300	4.292E-04	.0363	.2274	375.5000
95	535.0	1.530	.217	2.972E-04	.0251	3.594E-04	.0304	.2239	373.3000
96	534.9	1.409	.183	2.504E-04	.0212	3.028E-04	.0256	.2363	368.0000
97	534.5	1.488	.190	2.596E-04	.0219	3.139E-04	.0265	.2286	368.0000
98	534.5	1.447	.203	2.773E-04	.0234	3.353E-04	.0283	.2247	368.0000
100	533.5	1.600	.227	3.089E-04	.0261	3.735E-04	.0316	.2274	360.5000
102	534.3	1.461	.206	2.815E-04	.0238	3.404E-04	.0288	.2081	354.3000
103	535.7	1.687	.222	3.033E-04	.0256	3.668E-04	.0310	.2023	362.7000
105	536.1	1.801	.226	3.087E-04	.0261	3.734E-04	.0316	.2050	378.7000
106	537.4	1.722	.221	3.033E-04	.0256	3.670E-04	.0310	.2050	386.2000

GROUP 1 CENTERLINE TIME 2.45

CH	TC	FIT LENGTH	DTDWT	UNCERTAINTY	CH	TC	FIT LENGTH	DTDWT	UNCERTAINTY
1	1	.80	2.734	.0107	50	53	.80	2.815	.0297
2	2	.80	2.863	.0116	51	54	2.00	.821	.0145
3	3	.80	3.048	.0124	52	55	.80	3.169	.0169
4	4	.80	3.170	.0065	53	56	2.00	.806	.0141
5	5	.80	3.361	.0224	54	57	2.00	.826	.0176
6	6	.80	3.616	.0102	55	58	2.00	.865	.0125
7	7	.80	3.425	.0486	56	59	2.00	.853	.0361
8	8	.80	3.168	.0092	57	60	2.00	.808	.0141
9	9	.80	3.574	.0296	58	61	2.00	.846	.0080
10	10	.80	3.768	.0124	59	62	2.00	.846	.0190
11	11	.60	4.122	.0145	60	63	2.00	.842	.0131
12	12	.60	4.291	.0188	61	64	2.00	.031	.4877
13	13	.80	3.071	.0110	62	65	2.00	.754	.0080
14	14	.80	3.695	.0121	63	66	2.00	.883	.0113
15	15	.80	3.789	.0121	64	67	2.00	.791	.0165
16	16	.80	2.113	.0151	65	68	2.00	.867	.0136
17	17	1.20	1.829	.0304	66	69	1.20	1.113	.0177
18	18	1.20	1.368	.0161	67	70	1.20	1.110	.0183
19	19	2.00	.963	.0134	68	71	1.20	1.138	.2891
20	22	2.00	.914	.0121	69	72	1.20	1.508	.0482
21	23	2.00	.925	.0087	70	73	1.20	1.169	.0210
22	24	1.20	.999	.0187	71	74	1.20	1.117	.0269
23	25	2.00	.962	.0179	72	75	1.20	1.299	.0171
24	26	1.20	1.106	.0272	73	77	1.20	1.112	.0181
25	27	2.00	.919	.0155	74	78	1.20	1.124	.0164
26	28	2.00	.729	.0140	75	79	1.20	1.416	.0195
27	29	2.00	.845	.0134	76	80	1.20	1.171	.0249
28	30	2.00	.970	.0091	77	81	1.20	1.196	.0176
29	31	1.20	1.142	.0138	78	83	1.20	1.592	.0116
30	32	1.20	1.207	.0119	79	84	1.20	1.737	.0673
31	33	1.20	1.087	.0193	80	85	1.20	1.488	.0096
32	34	1.20	1.329	.0131	81	87	1.20	1.019	.0211
33	35	1.20	1.086	.0193	82	88	1.20	1.524	.0098
34	36	1.20	1.455	.0125	83	89	.80	2.280	.0255
35	37	1.20	1.531	.0117	84	90	1.20	1.383	.0164
36	38	1.20	1.972	.0109	85	91	1.20	1.561	.0125
37	39	1.20	1.691	.0099	86	92	1.20	1.508	.0124
38	41	2.00	.750	.0152	87	93	1.20	1.350	.0400
39	42	2.00	.860	.0139	88	94	1.20	1.995	.0112
40	43	2.00	.611	.0181	89	95	1.20	1.530	.0164
41	44	2.00	.849	.0081	90	96	1.20	1.409	.0865
42	45	1.20	1.161	.0167	91	97	1.20	1.488	.0195
43	46	1.20	1.244	.0201	92	98	1.20	1.447	.0444
44	47	1.20	1.073	.0208	93	100	1.20	1.600	.0175
45	48	1.20	1.338	.0127	94	102	1.20	1.461	.0206
46	49	1.20	1.572	.0087	95	103	1.20	1.687	.0158
47	50	1.20	1.842	.0280	96	105	1.20	1.801	.0112
48	51	.80	1.956	.0156	97	106	1.20	1.722	.0146
49	52	.80	2.602	.0114	98	0	-0	0	0
	2	.050							

BIT ON LOOP 52

DATE 5/12/75

AEDC(ARO,INC.) ARNOLD AFS, TENNESSEE
VON KARMAN GAS DYNAMICS FACILITY
50 INCH HYPERSONIC TUNNEL B
V418-B7A

GROUP	TEST CONDITION	MODEL	MACH NO	PO,PSIA	TO,DEG R	ALPHA-MODEL	ALPHA-SECTOR	ALPHA-PREBEND	ROLL MODEL	YAW
2	2	140 B	7.90	110.0	1268	20.04	10.16	30.00	191.42	2.0

T-INF (DEG R)	P-INF (PSIA)	Q-INF (PSIA)	V-INF (FT/SEC)	RHO-INF (SLUGS/FT3)	MU-INF (LB-SEC/FT2)	RE/FT (FT-1)	HREF-FR (R= .0400FT)	STFR (R= .0400FT)	SWITCH POSITION
94.0	.012	.534	3754	1.091E-05	7.571E-08	5.409E 05	1.182E-02	3.641E-02	2

TC NO	TW	DTWDT	QDOT	H(TO)	H(TO)/HREF	H(.9TO)	H(.9TO)/HREF	X/L	Z,FULL SCALE(IN)
								ACCESS HATCH WINDOW	
107	537.0	1.473	.211	2.893E-04	.0245	3.500E-04	.0296	.2050	396.2000
								FUSELAGE VENT PANEL NO. 3 AND 1	
108	537.1	3.269	.347	4.742E-04	.0401	5.737E-04	.0485	.1244	377.5000
109	536.3	2.842	.352	4.812E-04	.0407	5.821E-04	.0492	.1302	377.5000
110	536.2	2.628	.334	4.561E-04	.0386	5.517E-04	.0467	.1360	377.5000
111	536.6	2.527	.305	4.173E-04	.0353	5.048E-04	.0427	.1418	377.5000
112	536.8	2.559	.304	4.164E-04	.0352	5.037E-04	.0426	.1476	377.5000
113	535.6	3.182	.365	4.992E-04	.0422	6.037E-04	.0511	.1215	273.5000
114	535.4	2.594	.312	4.257E-04	.0360	5.148E-04	.0436	.1273	273.5000
115	535.2	2.242	.279	3.801E-04	.0322	4.597E-04	.0389	.1331	273.5000
116	535.2	2.385	.293	4.001E-04	.0338	4.838E-04	.0409	.1389	273.5000
117	535.7	2.445	.282	3.852E-04	.0326	4.659E-04	.0394	.1447	273.5000
118	534.0	1.951	.270	3.681E-04	.0311	4.450E-04	.0376	.1409	366.0000
119	534.1	2.271	.294	4.009E-04	.0339	4.847E-04	.0410	.1442	366.0000
120	5[illegible].0	2.500	.312	4.252E-04	.0360	5.139E-04	.0435	.1215	359.5000
121	532.5	2.071	.254	3.456E-04	.0292	4.176E-04	.0353	.1303	359.5000
122	532.3	2.128	.265	3.601E-04	.0305	4.351E-04	.0368	.1337	359.5000
								LOWER RCS NOZZLES	
124	540.4	2.579	.231	3.177E-04	.0269	3.847E-04	.0325	.0950	400.0000
125	539.7	2.620	.286	3.933E-04	.0333	4.762E-04	.0403	.0988	400.0000
126	5[illegible]9.3	2.214	.304	4.178E-04	.0353	5.058E-04	.0428	.1027	400.0000
127	539.6	2.504	.339	4.650E-04	.0393	5.630E-04	.0476	.0911	395.0000
128	539.2	2.613	.318	4.368E-04	.0369	5.288E-04	.0447	.0950	395.0000
129	539.3	2.710	.319	4.380E-04	.0371	5.303E-04	.0449	.0988	395.0000
130	540.7	2.660	.319	4.394E-04	.0372	5.322E-04	.0450	.0810	390.0000
131	539.7	2.600	.385	5.294E-04	.0448	6.410E-04	.0542	.0857	390.0000
132	538.8	2.895	.338	4.641E-04	.0393	5.618E-04	.0475	.0963	390.0000
133	538.9	2.365	.288	3.951E-04	.0334	4.783E-04	.0405	.0857	383.8000
134	537.4	2.571	.345	4.723E-04	.0400	5.715E-04	.0483	.0872	377.3000
135	537.8	3.371	.406	5.558E-04	.0470	6.726E-04	.0569	.0903	374.5500
136	537.4	3.572	.398	5.447E-04	.0461	6.592E-04	.0558	.0960	374.5500
137	537.5	3.323	.436	5.964E-04	.0505	7.216E-04	.0610	.0872	370.5500
138	537.3	3.607	.416	5.698E-04	.0482	6.895E-04	.0583	.0928	370.5500
139	538.1	3.270	.419	5.736E-04	.0485	6.943E-04	.0587	.0816	366.0500
140	536.5	3.320	.423	5.785E-04	.0489	6.998E-04	.0592	.0934	362.4000
141	535.6	3.063	.405	5.533E-04	.0468	6.692E-04	.0566	.0973	362.4000
142	534.4	2.359	.257	3.506E-04	.0297	4.238E-04	.0359	.0833	355.2000
143	536.1	3.666	.369	5.039E-04	.0426	6.095E-04	.0516	.0919	355.2000
144	534.7	4.188	.552	7.529E-04	.0637	9.103E-04	.0770	.0949	349.0000

DATE 5/12/75

AEDC(ARO,INC.) ARNOLD AFS, TENNESSEE
VON KARMAN GAS DYNAMICS FACILITY
50 INCH HYPERSONIC TUNNEL B
V41B-B7A

GROUP	TEST CONDITION	MODEL	MACH NO	PO,PSIA	TO,DEG R	ALPHA-MODEL	ALPHA-SECTOR	ALPHA-PREBEND	ROLL MODEL	YAW
2	2	140 H	7.90	110.0	1268	20.04	10.16	30.00	191.42	2.0

T-INF (DEG R)	P-INF (PSIA)	Q-INF (PSIA)	V-INF (FT/SEC)	RHO-INF (SLUGS/FT3)	MU-INF (LB-SEC/FT2)	RE/FT (FT-1)	HREF-FR (R= .0400FT)	STFR (R= .0400FT)	SWITCH POSITION
94.0	.012	.534	3754	1.091E-05	7.571E-08	5.409E 05	1.182E-02	3.641E-02	2

IC NO	TW	DIWDT	QDOT	H(TO)	H(TO)/HREF	H(.9TO)	H(.9TO)/HREF
161	540.8	1.885	.224	3.079E-04	.0260	3.729E-04	.0315
162	540.6	1.994	.189	2.604E-04	.0220	3.154E-04	.0267
163	540.5	1.426	.176	2.416E-04	.0204	2.926E-04	.0248
164	540.4	1.002	.131	1.803E-04	.0153	2.183E-04	.0185
165	540.6	.642	.081	1.116E-04	.0094	1.352E-04	.0114
166	540.8	.650	.084	1.151E-04	.0097	1.394E-04	.0118
167	540.9	1.808	.246	3.377E-04	.0286	4.091E-04	.0346
168	541.2	1.942	.205	2.815E-04	.0238	3.410E-04	.0288
169	540.4	1.443	.176	2.417E-04	.0204	2.927E-04	.0248
170	540.5	1.076	.135	1.856E-04	.0157	2.248E-04	.0190
171	540.6	1.179	.143	1.962E-04	.0166	2.376E-04	.0201
172	540.5	.917	.120	1.649E-04	.0140	1.997E-04	.0169
173	540.9	1.420	.190	2.618E-04	.0221	3.171E-04	.0268
174	540.5	1.128	.129	1.772E-04	.0150	2.146E-04	.0182
175	540.9	.931	.134	1.842E-04	.0156	2.231E-04	.0189
176	540.8	.802	.110	1.507E-04	.0128	1.826E-04	.0154
177	542.5	2.930	.405	5.581E-04	.0472	6.763E-04	.0572
178	544.5	5.702	1.126	1.557E-03	.1318	1.888E-03	.1598
179	546.0	7.045	1.485	2.057E-03	.1740	2.495E-03	.2111
180	539.5	1.007	.132	1.808E-04	.0153	2.188E-04	.0185
181	540.8	2.055	.280	3.851E-04	.0326	4.665E-04	.0395
182	541.8	3.628	.519	7.148E-04	.0605	8.660E-04	.0733
183	538.3	.461	.058	7.951E-05	.0067	9.624E-05	.0081
184	538.1	.438	.060	8.218E-05	.0070	9.946E-05	.0084
185	539.2	1.144	.138	1.891E-04	.0160	2.289E-04	.0194
186	540.4	2.176	.274	3.766E-04	.0319	4.561E-04	.0386
187	542.5	4.206	.562	7.751E-04	.0656	9.393E-04	.0795
188	543.3	5.191	1.214	1.675E-03	.1417	2.030E-03	.1718
189	538.9	1.133	.162	2.220E-04	.0188	2.688E-04	.0227
190	539.9	2.171	.313	4.302E-04	.0364	5.209E-04	.0441
191	540.9	4.358	.668	9.189E-04	.0777	1.113E-03	.0942

UPPER RCS NOZZLES

X/L	ZY/B
.0619	-.0160
.0709	-.0160
.0807	-.0160
.0943	-.0160
.0978	-.0160
.1013	-.0160
.0619	-.0320
.0709	-.0320
.0807	-.0320
.0943	-.0320
.0978	-.0320
.1013	-.0320
.0807	-.0480
.0943	-.0480
.0978	-.0480
.1013	-.0480

CANOPY

DATE 5/12/75

AEDC(ARO,INC.) ARNOLD AFS, TENNESSEE
VON KARMAN GAS DYNAMICS FACILITY
50 INCH HYPERSONIC TUNNEL H
V418-67A

GROUP	TEST CONDITION	MODEL	MACH NO	PO,PSIA	TO,DEG R	ALPHA-MODEL	ALPHA-SECTOR	ALPHA-PREBEND	ROLL MODEL	YAW
2	2	140 B	7.90	110.0	1268	20.04	10.16	30.00	191.42	2.0

T-INF (DEG R)	P-INF (PSIA)	Q-INF (PSIA)	V-INF (FT/SEC)	RHO-INF (SLUGS/FT3)	MU-INF (LB-SEC/FT2)	RE/FT (FT-1)	HREF-FR (R= .0400FT)	STFR (R= .0400FT)	SWITCH POSITION
94.0	.012	.534	3754	1.091E-05	7.571E-06	5.409E 05	1.182E-02	3.641E-02	2

IC NO	TW	DTWDT	QUDT	H(TO)	H(TO)/HREF	H(.9TO)	H(.9TO)/HREF
							CANOPY
192	537.5	.628	.089	1.215E-04	.0103	1.471E-04	.0124
193	542.2	5.167	.999	1.376E-03	.1164	1.668E-03	.1411
194	537.4	.795	.103	1.407E-04	.0119	1.703E-04	.0144
195	538.7	1.961	.242	3.324E-04	.0281	4.023E-04	.0340
196	539.9	3.059	.403	5.534E-04	.0468	6.702E-04	.0567
197	537.7	.382	.035	4.789E-05	.0041	5.795E-05	.0049
198	537.3	.371	.043	5.910E-05	.0050	7.151E-05	.0060
199	537.0	.385	.052	7.045E-05	.0060	8.584E-05	.0073
200	537.1	1.181	.169	2.307E-04	.0195	2.791E-04	.0236
201	539.3	3.175	.449	6.167E-04	.0522	7.466E-04	.0632
202	540.6	3.939	.500	6.869E-04	.0581	8.319E-04	.0704
203	536.5	.570	.071	9.688E-05	.0082	1.172E-04	.0099
204	536.5	1.060	.165	2.255E-04	.0191	2.728E-04	.0231
205	538.1	2.325	.363	4.975E-04	.0421	6.021E-04	.0509
206	538.3	-.165	-.022	-3.003E-05	-.0025	-3.635E-05	-.0031
207	539.3	3.292	.442	6.070E-04	.0514	7.349E-04	.0622
208	536.6	.472	.064	8.684E-05	.0073	1.051E-04	.0089
209	536.0	.664	.091	1.250E-04	.0106	1.512E-04	.0128
210	536.7	1.055	.141	1.929E-04	.0163	2.334E-04	.0197
211	537.9	1.045	.127	1.743E-04	.0147	2.109E-04	.0178
212	538.1	.792	.107	1.467E-04	.0124	1.775E-04	.0150
213	535.9	.526	.070	9.536E-05	.0081	1.153E-04	.0098
214	536.0	.747	.105	1.432E-04	.0121	1.733E-04	.0147
215	536.3	.950	.135	1.847E-04	.0156	2.234E-04	.0189
216	537.7	2.470	.351	4.813E-04	.0407	5.825E-04	.0493
217	537.4	2.149	.307	4.200E-04	.0355	5.082E-04	.0430
218	536.4	.450	.062	8.486E-05	.0072	1.026E-04	.0087
219	535.9	1.255	.177	2.414E-04	.0204	2.920E-04	.0247
220	535.9	1.036	.143	1.949E-04	.0165	2.357E-04	.0199

GROUP 2 CENTERLINE TIME 2.55

CH	TC	FIT LENGTH	DTDWT	UNCERTAINTY	CH	TC	FIT LENGTH	DTDWT	UNCERTAINTY
1	107	1.20	1.473	.0110	50	173	1.20	1.420	.0242
2	108	.80	3.269	.0066	51	174	1.20	1.128	.0251
3	109	.80	2.842	.0107	52	175	2.00	.931	.0146
4	110	.80	2.628	.0117	53	176	2.00	.802	.0106
5	111	.80	2.527	.0271	54	177	.80	2.930	.0147
6	112	.80	2.559	.0095	55	178	.60	5.702	.0082
7	113	.80	3.182	.0409	56	179	.60	7.045	.0249
8	114	.80	2.594	.0465	57	180	1.20	1.007	.0157
9	115	.80	2.242	.0463	58	181	.80	2.055	.0158
10	116	.80	2.365	.0153	59	182	.80	3.628	.0173
11	117	.80	2.445	.0208	60	183	2.00	.461	.0164
12	118	1.20	1.951	.0158	61	184	2.00	.438	.0368
13	119	.80	2.271	.0144	62	185	1.20	1.144	.0133
14	120	.80	2.500	.0166	63	186	.80	2.176	.0206
15	121	.80	2.071	.0304	64	187	.60	4.206	.0197
16	122	.80	2.128	.0227	65	188	.60	5.191	.0108
17	124	.80	2.579	.0208	66	189	1.20	1.133	.0219
18	125	.80	2.620	.0156	67	190	.80	2.171	.0164
19	126	.80	2.214	.0236	68	191	.60	4.358	.1432
20	127	.80	2.504	.0216	69	192	2.00	.628	.0350
21	128	.80	2.613	.0128	70	193	.60	5.167	.0103
22	129	.80	2.710	.0123	71	194	2.00	.795	.0273
23	130	.80	2.660	.0270	72	195	1.20	1.961	.0125
24	131	.80	2.600	.0191	73	196	.80	3.059	.0118
25	132	.80	2.895	.0171	74	197	2.00	.352	.0297
26	133	.80	2.365	.0136	75	198	2.00	.371	.0343
27	134	.80	2.571	.0096	76	199	2.00	.385	.0801
28	135	.80	3.371	.0115	77	200	1.20	1.181	.0133
29	136	.80	3.572	.0112	78	201	.80	3.175	.0115
30	137	.80	3.323	.0078	79	202	.80	3.939	.0517
31	138	.80	3.607	.0079	80	203	2.00	.570	.0140
32	139	.80	3.270	.0125	81	204	1.20	1.060	.0209
33	140	.80	3.320	.0118	82	205	.80	2.325	.0129
34	141	.80	3.063	.0085	83	206	2.00	-.165	-.1433
35	142	.80	2.359	.0117	84	207	.80	3.292	.0124
36	143	.80	3.646	.0104	85	208	2.00	.472	.0194
37	144	.60	4.188	.0089	86	209	2.00	.664	.0158
38	161	1.20	1.885	.0113	87	210	2.00	1.055	.0246
39	162	.80	1.994	.0146	88	211	2.00	1.045	.0098
40	163	1.20	1.426	.0198	89	212	2.00	.792	.0163
41	164	1.20	1.002	.0142	90	213	2.00	.526	.1361
42	165	2.00	.642	.0150	91	214	2.00	.747	.0192
43	166	2.00	.650	.0154	92	215	2.00	.950	.0288
44	167	1.20	1.808	.0101	93	216	.80	2.470	.0109
45	168	1.20	1.942	.0087	94	217	.80	2.149	.0298
46	169	1.20	1.443	.0698	95	218	2.00	.450	.0261
47	170	1.20	1.076	.0389	96	219	1.20	1.255	.0328
48	171	1.20	1.179	.0304	97	220	2.00	1.036	.0108
49	172	2.00	.917	.0109	98	0	-0	0	0

3 .050

BIT ON LOOP 53

DATE 5/12/75

AEDC(ARO,INC.) ARNOLD AFS, TENNESSEE
VON KARMAN GAS DYNAMICS FACILITY
50 INCH HYPERSONIC TUNNEL B
V41B-87A

GROUP	TEST CONDITION	MODEL	MACH NO	PO,PSIA	TO,DEG R	ALPHA-MODEL	ALPHA-SECTOR	ALPHA-PREBEND	ROLL MODEL	YAW
3	2	140 B	7.90	110.9	1269	20.06	10.13	30.00	191.42	2.0

T-INF (DEG R)	P-INF (PSIA)	Q-INF (PSIA)	V-INF (FT/SEC)	RHO-INF (SLUGS/FT3)	MU-INF (LB-SEC/FT2)	RE/FT (FT-1)	HREF-FR (R= .0400FT)	STFR (R= .0400FT)	SWITCH POSITION
94.1	.012	.539	3755	1.099E-05	7.578E-08	5.446E 05	1.187E-02	3.628E-02	3

TC NO	TW	DTWDT	QDOT	H(TO)	H(TO)/HREF	H(.9TO)	H(.9TO)/HREF	X/L	2Y/B
								CANOPY	
221	535.5	.630	.076	1.040E-04	.0088	1.258E-04	.0106		
222	534.2	.638	.079	1.070E-04	.0090	1.293E-04	.0109		
223	534.3	1.823	.248	3.370E-04	.0284	4.073E-04	.0343		
								ESCAPE HATCH AND WINDOW	
224	540.9	3.369	.337	4.625E-04	.0390	5.601E-04	.0472	.1933	.0162
225	539.7	2.403	.288	3.956E-04	.0333	4.789E-04	.0403	.1972	.0162
226	540.3	4.071	.430	5.907E-04	.0498	7.153E-04	.0603	.1933	.0384
227	538.6	2.757	.435	5.542E-04	.0467	6.707E-04	.0565	.1972	.0384
228	538.9	3.862	.438	6.820E-04	.0575	8.255E-04	.0695	.1933	.0653
229	538.4	3.068	.395	5.414E-04	.0456	6.552E-04	.0552	.1972	.0653
232	537.6	.180	.024	3.340E-05	.0028	4.041E-05	.0034	.2567	.0235
233	538.1	.198	.030	4.122E-05	.0035	4.988E-05	.0042	.2606	.0235
236	536.6	.233	.034	4.660E-05	.0039	5.637E-05	.0047	.2567	.0491
237	537.2	.243	.034	4.683E-05	.0039	5.665E-05	.0048	.2606	.0491
								CARGO BAY HINGE NO. 1	
								X/L	Z,FULL SCALE(IN)
238	537.4	.746	.100	1.369E-04	.0115	1.657E-04	.0140	.2879	420.0000
239	537.2	.673	.090	1.233E-04	.0104	1.492E-04	.0126	.2917	420.0000
240	537.0	.643	.092	1.257E-04	.0106	1.520E-04	.0128	.2840	415.0000
241	536.8	.639	.090	1.229E-04	.0104	1.487E-04	.0125	.2879	415.0000
242	536.8	.610	.087	1.192E-04	.0100	1.442E-04	.0122	.2917	415.0000
243	535.0	.830	.102	1.385E-04	.0117	1.675E-04	.0141	.2801	405.0000
244	535.0	.644	.075	1.027E-04	.0086	1.241E-04	.0105	.2840	405.0000
								CARGO BAY HINGE NO. 2	
								X/L	Z,FULL SCALE(IN)
245	537.0	.581	.083	1.136E-04	.0096	1.375E-04	.0116	.3192	420.0000
246	537.0	.575	.082	1.125E-04	.0095	1.361E-04	.0115	.3439	420.0000
247	536.6	.633	.093	1.276E-04	.0108	1.544E-04	.0130	.3362	415.0000
248	536.8	.399	.059	8.044E-05	.0068	9.730E-05	.0082	.3401	415.0000
249	536.8	.535	.079	1.080E-04	.0091	1.306E-04	.0110	.3439	415.0000
250	535.4	.616	.077	1.055E-04	.0089	1.276E-04	.0107	.3323	405.0000
251	535.4	.672	.083	1.125E-04	.0095	1.361E-04	.0115	.3362	405.0000
								CARGO BAY HINGE NO. 3	
								X/L	Z,FULL SCALE(IN)
252	536.3	.693	.101	1.375E-04	.0116	1.663E-04	.0140	.3923	420.0000
253	536.5	.680	.099	1.349E-04	.0114	1.632E-04	.0137	.3961	420.0000
254	535.8	.588	.089	1.219E-04	.0103	1.474E-04	.0124	.3884	415.0000
257	534.3	.686	.093	1.260E-04	.0106	1.523E-04	.0128	.3845	405.0000
258	534.2	.659	.090	1.222E-04	.0103	1.477E-04	.0124	.3884	405.0000

DATE 5/12/75

AEDC(ARO,INC.) ARNOLD AFS, TENNESSEE
VON KARMAN GAS DYNAMICS FACILITY
50 INCH HYPERSONIC TUNNEL B
V418-B7A

GROUP	TEST CONDITION	MODEL	MACH NO	PO,PSIA	TO,DEG R	ALPHA-MODEL	ALPHA-SECTOR	ALPHA-PREBEND	ROLL MODEL	YAW
3	2	140 B	7.90	110.9	1269	20.06	10.13	30.00	191.42	2.0

T-INF (DEG R)	P-INF (PSIA)	Q-INF (PSIA)	V-INF (FT/SEC)	RHO-INF (SLUGS/FT3)	MU-INF (LB-SEC/FT2)	RE/FT (FT-1)	HREF-FR (R= .0400FT)	STFR (R= .0400FT)	SWITCH POSITION
94.1	.012	.539	3755	1.099E-05	7.578E-08	5.446E 05	1.187E-02	3.628E-02	3

TOP CENTERLINE

TC NO	TW	DTWDT	QDOT	H(TO)	H(TO)/HREF	H(.9TO)	H(.9TO)/HREF	X/L
367	568.6	45.874	5.483	7.828E-03	.6594	9.560E-03	.8054	0
368	555.9	34.601	4.437	6.223E-03	.5242	7.570E-03	.6377	.0008
369	548.8	22.888	2.698	3.747E-03	.3156	4.548E-03	.3832	.0019
370	543.7	16.251	1.991	2.746E-03	.2313	3.328E-03	.2803	.0037
371	543.5	13.429	1.320	1.819E-03	.1533	2.205E-03	.1858	.0058
372	540.5	9.536	1.231	1.689E-03	.1423	2.046E-03	.1723	.0087
373	540.0	6.568	.842	1.183E-03	.0996	1.432E-03	.1206	.0118
374	539.4	5.188	.681	9.331E-04	.0786	1.130E-03	.0952	.0151
375	538.6	4.284	.587	8.035E-04	.0677	9.725E-04	.0819	.0182
376	539.7	3.884	.513	7.036E-04	.0593	8.519E-04	.0718	.0215
377	539.9	3.506	.452	6.209E-04	.0523	7.511E-04	.0633	.0246
378	539.5	2.922	.342	4.683E-04	.0394	5.669E-04	.0478	.0278
379	541.0	2.015	.248	3.412E-04	.0287	4.132E-04	.0348	.0609
380	540.3	1.618	.167	2.289E-04	.0193	2.771E-04	.0233	.0646
381	540.1	1.464	.190	2.609E-04	.0220	3.159E-04	.0266	.0684
382	539.5	1.279	.168	2.300E-04	.0194	2.785E-04	.0235	.0721
383	539.4	1.170	.157	2.155E-04	.0182	2.609E-04	.0220	.0760
384	539.7	.821	.115	1.574E-04	.0133	1.906E-04	.0161	.0796
385	540.1	.819	.106	1.450E-04	.0122	1.756E-04	.0148	.0789
386	540.2	.835	.099	1.361E-04	.0115	1.648E-04	.0139	.0982
387	540.3	.875	.108	1.480E-04	.0125	1.792E-04	.0151	.1019
388	540.6	.955	.091	1.251E-04	.0105	1.515E-04	.0128	.1160
389	540.0	.754	.110	1.505E-04	.0127	1.823E-04	.0154	.1195
390	539.6	.630	.100	1.366E-04	.0115	1.653E-04	.0139	.1231
391	539.2	.520	.093	1.139E-04	.0096	1.379E-04	.0116	.1268
392	539.1	.451	.078	1.062E-04	.0089	1.286E-04	.0108	.1305
393	538.8	.384	.065	8.933E-05	.0075	1.081E-04	.0091	.1338
394	538.6	.330	.055	7.598E-05	.0064	9.196E-05	.0077	.1376
395	538.6	.295	.044	6.066E-05	.0051	7.342E-05	.0062	.1411
396	538.6	.289	.043	5.876E-05	.0049	7.111E-05	.0060	.1448
397	538.8	.348	.052	7.085E-05	.0060	8.576E-05	.0072	.1483
398	538.8	-.160	-.023	-3.083E-05	-.0026	-3.731E-05	-.0031	.1519
399	540.1	.868	.116	1.595E-04	.0134	1.931E-04	.0163	.1556

DATE 5/12/75

AEDC(ARO,INC.) ARNOLD AFS, TENNESSEE
VON KARMAN GAS DYNAMICS FACILITY
50 INCH HYPERSONIC TUNNEL B
V418-B7A

GROUP	TEST CONDITION	MODEL	MACH NO	PO,PSIA	TO,DEG R	ALPHA-MODEL	ALPHA-SECTOR	ALPHA-PREBEND	ROLL MODEL	YAW
3	2	140 B	7.90	110.9	1269	20.06	10.13	30.00	191.42	2.0

T-INF (DEG R)	P-INF (PSIA)	Q-INF (PSIA)	V-INF (FT/SEC)	RHO-INF (SLUGS/FT3)	MU-INF (LB-SEC/FT2)	RE/FT (FT-1)	HREF-FR (R= .0400FT)	STFR (R= .0400FT)	SWITCH POSITION
94.1	.012	.539	3755	1.099E-05	7.578E-08	5.446E 05	1.187E-02	3.628E-02	3

TC NO	TW	DTWDT	QDOT	H(TO)	H(TO)/HREF	H(.9TO)	H(.9TO)/HREF	X/L	2Y/B
								TOP CENTERLINE	
400	540.5	1.423	.192	2.643E-04	.0223	3.200E-04	.0270	.1582	
401	540.7	1.707	.222	3.047E-04	.0257	3.690E-04	.0311	.1608	
402	540.7	1.836	.230	3.152E-04	.0266	3.817E-04	.0322	.1635	
403	542.4	3.415	.417	5.735E-04	.0483	6.948E-04	.0585	.1664	
404	542.9	3.385	.412	5.668E-04	.0477	6.869E-04	.0579	.1691	
405	543.7	3.917	.476	6.569E-04	.0553	7.962E-04	.0671	.1720	
406	543.3	4.333	.527	7.260E-04	.0612	8.799E-04	.0741	.1748	
407	543.4	4.358	.565	7.790E-04	.0656	9.441E-04	.0795	.1769	
408	543.4	4.255	.626	8.631E-04	.0727	1.046E-03	.0881	.1800	
409	542.8	3.808	.550	7.574E-04	.0638	9.178E-04	.0773	.1831	
410	542.0	3.615	.522	7.181E-04	.0605	8.700E-04	.0733	.1863	
411	541.6	2.720	.410	5.633E-04	.0475	6.823E-04	.0575	.1894	
412	541.4	2.312	.315	4.331E-04	.0365	5.245E-04	.0442	.1931	
413	540.6	1.712	.230	3.159E-04	.0266	3.826E-04	.0322	.1972	
414	540.2	1.024	.138	1.888E-04	.0159	2.287E-04	.0193	.2049	
415	538.7	.502	.050	6.803E-05	.0057	8.233E-05	.0069	.2250	
416	538.7	.276	.032	4.437E-05	.0037	5.370E-05	.0045	.2500	
								NOSE TC (Z = 338)	
145	541.4	31.549	4.286	6.057E-03	.5102	7.381E-03	.6218	.0008	.5039
146	559.4	31.766	4.311	6.075E-03	.5118	7.399E-03	.6233	.0023	.5082
147	551.4	25.153	3.400	4.739E-03	.3992	5.757E-03	.4849	.0043	.5135
148	549.2	19.582	2.732	3.796E-03	.3197	4.608E-03	.3882	.0068	.5205
149	546.2	15.207	2.200	3.044E-03	.2564	3.693E-03	.3111	.0095	.5279
150	546.5	13.934	1.998	2.765E-03	.2329	3.354E-03	.2826	.0122	.5354
151	543.9	9.755	1.370	1.890E-03	.1592	2.291E-03	.1930	.0218	.5621
152	543.3	9.358	1.268	1.748E-03	.1472	2.118E-03	.1784	.0251	.5712
153	543.2	9.633	1.176	1.620E-03	.1365	1.963E-03	.1654	.0286	.5808
154	543.0	9.204	1.144	1.576E-03	.1327	1.909E-03	.1608	.0319	.5898
155	541.8	8.458	1.062	1.460E-03	.1230	1.769E-03	.1490	.0354	.5995
156	541.7	7.865	.977	1.343E-03	.1131	1.627E-03	.1371	.0387	.6085
157	541.3	7.731	.950	1.305E-03	.1099	1.581E-03	.1332	.0420	.6176
158	539.7	8.069	.990	1.358E-03	.1144	1.644E-03	.1385	.0462	.6294
159	540.2	8.004	.896	1.230E-03	.1036	1.489E-03	.1255	.0503	.6406

GROUP 3 CENTERLINE TIME 2.60

CH	TC	FIT LENGTH	DTDWT	UNCERTAINTY	CH	TC	FIT LENGTH	DTDWT	UNCERTAINTY
1	221	2.00	.630	.0182	50	384	2.00	.821	.0222
2	222	2.00	.638	.0144	51	385	2.00	.819	.0188
3	223	1.20	1.823	.0094	52	386	2.00	.835	.0172
4	224	.80	3.369	.0068	53	387	2.00	.875	.0091
5	225	.80	2.403	.0284	54	388	2.00	.955	.0105
6	226	.60	4.071	.0152	55	389	2.00	.754	.0131
7	227	.80	2.757	.0503	56	390	2.00	.630	.0724
8	228	.80	3.862	.0098	57	391	2.00	.520	.0153
9	229	.80	3.068	.0325	58	392	2.00	.451	.0134
10	232	2.00	.180	.0500	59	393	2.00	.384	.0380
11	233	2.00	.198	.0682	60	394	2.00	.330	.0267
12	236	2.00	.233	.0604	61	395	2.00	.295	.0495
13	237	2.00	.243	.0337	62	396	2.00	.289	.0271
14	238	2.00	.746	.0155	63	397	2.00	.348	.0309
15	239	2.00	.673	.0192	64	398	2.00	-.160	-.0868
16	240	2.00	.643	.0147	65	399	2.00	.868	.0155
17	241	2.00	.639	.0349	66	400	1.20	1.423	.0174
18	242	2.00	.610	.0140	67	401	1.20	1.707	.0084
19	243	2.00	.830	.0112	68	402	.80	1.836	.2259
20	244	2.00	.644	.0264	69	403	.80	3.415	.0176
21	245	2.00	.581	.0148	70	404	.80	3.385	.0109
22	246	2.00	.575	.0156	71	405	.80	3.917	.0168
23	247	2.00	.633	.0361	72	406	.60	4.333	.0140
24	248	2.00	.399	.0409	73	407	.60	4.358	.0075
25	249	2.00	.536	.0260	74	408	.60	4.255	.0142
26	250	2.00	.616	.0169	75	409	.80	3.808	.0111
27	251	2.00	.672	.0135	76	410	.80	3.615	.0128
28	252	2.00	.693	.0106	77	411	.80	2.720	.0141
29	253	2.00	.680	.0124	78	412	.80	2.312	.0171
30	254	2.00	.588	.0141	79	413	1.20	1.712	.0613
31	257	2.00	.686	.0115	80	414	2.00	1.024	.0075
32	258	2.00	.659	.0517	81	415	2.00	.502	.0204
33	367	.20	45.874	.0054	82	416	2.00	.276	.0269
34	368	.20	34.601	.0084	83	145	.30	31.549	.0054
35	369	.30	22.888	.0062	84	146	.30	31.766	.0033
36	370	.30	16.251	.0058	85	147	.30	25.153	.0036
37	371	.40	13.429	.0053	86	148	.30	19.582	.0081
38	372	.40	9.536	.0144	87	149	.40	15.207	.0214
39	373	.60	6.568	.0083	88	150	.40	13.934	.0072
40	374	.60	5.188	.0114	89	151	.40	9.755	.0135
41	375	.60	4.284	.0110	90	152	.40	9.358	.0446
42	376	.80	3.884	.0071	91	153	.40	9.633	.0098
43	377	.80	3.506	.0123	92	154	.40	9.204	.0174
44	378	.80	2.922	.0151	93	155	.40	8.458	.0067
45	379	1.20	2.015	.0085	94	156	.60	7.865	.0093
46	380	1.20	1.618	.0120	95	157	.60	7.731	.0096
47	381	1.20	1.464	.0291	96	158	.40	8.069	.0104
48	382	1.20	1.279	.0112	97	159	.60	8.004	.0058
49	383	1.20	1.170	.0204	98	0	-0	0	0

DATE 5/12/75

AEDC(ARO,INC.) ARNOLD AFS, TENNESSEE
VON KARMAN GAS DYNAMICS FACILITY
50 INCH HYPERSONIC TUNNEL B
V41B-87A

GROUP	TEST CONDITION	MODEL	MACH NO	PO,PSIA	TO,DEG R	ALPHA-MODEL	ALPHA-SECTOR	ALPHA-PREBEND	ROLL MODEL	YAW
4	3	140 B	7.90	110.2	1269	25.06	4.94	30.00	179.88	-.0

T-INF (DEG R)	P-INF (PSIA)	Q-INF (PSIA)	V-INF (FT/SEC)	RHO-INF (SLUGS/FT3)	MU-INF (LB-SEC/FT2)	RE/FT (FT-1)	HREF-FR (R= .0400FT)	STFR (R= .0400FT)	SWITCH POSITION
94.1	.012	.535	3755	1.092E-05	7.578E-08	5.412E 05	1.183E-02	3.640E-02	1

TC NO	TW	DTWDT	QDOT	H(TO)	H(TO)/HREF	H(.9TO)	H(.9TO)/HREF	X/L	Z,FULL SCALE(IN)
								FUSELAGE VENT NO. 1	
1	535.3	1.010	.133	1.815E-04	.0153	2.195E-04	.0185	.4434	376.6300
2	534.8	.947	.127	1.734E-04	.0147	2.097E-04	.0177	.4264	371.6300
3	534.5	.834	.114	1.557E-04	.0132	1.862E-04	.0159	.4303	371.6300
4	534.7	.847	.115	1.567E-04	.0132	1.894E-04	.0160	.4342	371.6300
5	535.0	.796	.106	1.443E-04	.0122	1.745E-04	.0147	.4380	371.6300
6	535.4	.765	.104	1.415E-04	.0120	1.711E-04	.0145	.4434	369.1300
7	534.4	.621	.090	1.232E-04	.0104	1.489E-04	.0126	.4226	366.6300
8	534.4	.661	.099	1.354E-04	.0114	1.636E-04	.0138	.4264	366.6300
9	534.7	.535	.078	1.060E-04	.0090	1.282E-04	.0108	.4303	366.6300
10	534.5	.538	.077	1.044E-04	.0088	1.262E-04	.0107	.4342	366.6300
11	534.9	.586	.079	1.077E-04	.0091	1.303E-04	.0110	.4380	366.6300
12	535.3	.552	.076	1.037E-04	.0088	1.253E-04	.0106	.4496	366.6300
13	534.3	.396	.058	7.894E-05	.0067	9.542E-05	.0081	.4187	357.1300
14	534.9	.451	.062	8.382E-05	.0071	1.013E-04	.0086	.4396	361.6300
15	535.3	.445	.059	8.045E-05	.0068	9.776E-05	.0083	.4434	361.6300
16	534.7	.318	.043	5.843E-05	.0049	7.064E-05	.0060	.4396	355.6300
17	535.2	.339	.046	6.244E-05	.0053	7.550E-05	.0064	.4434	355.6300
18	530.8	.243	.034	4.589E-05	.0039	5.541E-05	.0047	.4396	351.6300
19	535.1	.197	.027	3.740E-05	.0032	4.522E-05	.0038	.4291	332.6300
								CARGO BAY VENT NO. 1	
22	535.9	1.772	.246	3.350E-04	.0283	4.052E-04	.0342	.3974	397.6300
23	535.5	1.687	.235	3.209E-04	.0271	3.881E-04	.0328	.4013	397.6300
24	536.1	1.858	.251	3.424E-04	.0289	4.141E-04	.0350	.4052	397.6300
25	536.2	1.884	.248	3.379E-04	.0286	4.087E-04	.0345	.4090	397.6300
26	536.5	2.018	.264	3.609E-04	.0305	4.365E-04	.0369	.4129	397.6300
27	535.5	1.718	.239	3.256E-04	.0275	3.937E-04	.0333	.3936	392.6300
28	534.9	1.460	.209	2.852E-04	.0241	3.448E-04	.0291	.3974	392.6300
29	534.9	1.724	.248	3.380E-04	.0286	4.086E-04	.0345	.4013	392.6300
30	535.1	1.978	.284	3.867E-04	.0327	4.675E-04	.0395	.4052	392.6300
31	535.1	2.343	.327	4.452E-04	.0376	5.383E-04	.0455	.4090	392.6300
32	535.5	2.647	.350	4.775E-04	.0403	5.773E-04	.0488	.4129	392.6300
33	535.0	2.455	.350	4.768E-04	.0403	5.765E-04	.0487	.4090	386.1300
34	536.4	3.169	.428	5.842E-04	.0494	7.066E-04	.0597	.4129	387.6300
35	536.0	2.510	.355	4.837E-04	.0409	5.850E-04	.0494	.3897	383.1300
36	535.0	1.894	.274	3.735E-04	.0316	4.516E-04	.0382	.4090	378.6300
37	535.5	2.825	.396	5.406E-04	.0457	6.537E-04	.0552	.4129	382.1300
38	535.3	1.925	.268	3.646E-04	.0308	4.409E-04	.0373	.4129	377.1300
39	534.8	1.616	.235	3.207E-04	.0271	3.877E-04	.0328	.4001	373.6300
								PROTUBERANCES	
41	535.5	1.801	.241	3.282E-04	.0277	3.969E-04	.0335	.3546	379.0500
42	536.2	2.237	.305	4.163E-04	.0352	5.035E-04	.0426	.3604	379.0500
43	534.7	1.433	.186	2.528E-04	.0214	3.057E-04	.0258	.3450	374.0500

DATE 5/12/75

AEDC(ARO,INC.) ARNOLD AFS, TENNESSEE
VON KARMAN GAS DYNAMICS FACILITY
50 INCH HYPERSONIC TUNNEL B
V41B-87A

GROUP	TEST CONDITION	MODEL	MACH NO	PO,PSIA	TO,DEG R	ALPHA-MODEL	ALPHA-SECTOR	ALPHA-PREBEND	ROLL MODEL	YAW
4	3	140 H	7.90	110.2	1269	25.06	4.94	30.00	179.88	-.0

T-INF (DEG R)	P-INF (PSIA)	Q-INF (PSIA)	V-INF (FT/SEC)	RHO-INF (SLUGS/FT3)	MU-INF (LB-SEC/FT2)	RE/FT (FT-1)	HREF-FR (R= .0400FT)	STFR (R= .0400FT)	SWITCH POSITION
94.1	.012	.535	3755	1.092E-05	7.578E-08	5.412E 05	1.183E-02	3.640E-02	1

TC NO	TW	DTWDT	QDOT	H(TO)	H(TO)/HREF	H(.9TO)	H(.9TO)/HREF
44	534.9	1.876	.255	3.472E-04	.0293	4.198E-04	.0355
45	535.9	2.637	.364	4.970E-04	.0420	6.010E-04	.0508
46	536.3	2.583	.360	4.918E-04	.0416	5.948E-04	.0503
47	534.5	2.403	.319	4.340E-04	.0367	5.247E-04	.0443
48	534.6	2.015	.275	3.751E-04	.0317	4.535E-04	.0383
49	534.4	2.615	.359	4.881E-04	.0413	5.901E-04	.0499
50	534.1	1.363	.189	2.568E-04	.0217	3.104E-04	.0262
51	534.7	1.581	.214	2.914E-04	.0246	3.523E-04	.0298
52	533.5	1.590	.218	2.963E-04	.0250	3.581E-04	.0303
53	533.2	1.256	.183	2.485E-04	.0210	3.003E-04	.0254
54	532.9	.726	.103	1.404E-04	.0119	1.697E-04	.0143
55	534.0	.903	.129	1.750E-04	.0148	2.115E-04	.0179
56	532.4	.629	.081	1.097E-04	.0093	1.326E-04	.0112
57	532.4	.716	.087	1.185E-04	.0100	1.432E-04	.0121
58	532.3	1.206	.159	2.156E-04	.0182	2.604E-04	.0220
59	532.4	1.752	.230	3.121E-04	.0264	3.771E-04	.0319
60	532.0	1.445	.201	2.721E-04	.0230	3.287E-04	.0278
61	531.6	1.161	.147	1.987E-04	.0168	2.401E-04	.0203
62	531.5	.702	.086	1.164E-04	.0098	1.406E-04	.0119
63	532.2	.668	.087	1.182E-04	.0100	1.428E-04	.0121
64	538.7	~~-.001~~	~~-.000~~	~~-1.635E-07~~	~~-.0000~~	~~-1.979E-07~~	~~-.0000~~
65	534.3	.623	.085	1.152E-04	.0097	1.392E-04	.0118
66	533.8	.724	.091	1.240E-04	.0105	1.499E-04	.0127
67	534.3	.511	.072	9.759E-05	.0082	1.180E-04	.0100
68	533.5	1.530	.193	2.628E-04	.0222	3.176E-04	.0268

PROTUBERANCES

X/L	Z,FULL SCALE(IN)
.3508	374.0500
.3566	374.0500
.3604	374.0500
.3392	366.5500
.3566	366.5500
.3392	360.7000
.3566	360.7000
.3604	360.7000
.3392	353.2000
.3450	353.2000
.3508	353.2000
.3566	353.2000

SUBLIMATOR VENT NO. 1

X/L	Z,FULL SCALE(IN)
.3031	371.1300
.3074	369.1300
.3089	363.6300
.3074	358.1300
.3031	356.1300
.2988	358.1300
.2973	363.6300
.2988	369.1300
.3031	376.1300
.3089	378.6300
.3101	372.6300
.3157	370.3800
.3128	363.6300

DATE 5/12/75

AEDC(ARO,INC.) ARNOLD AFS, TENNESSEE
VON KARMAN GAS DYNAMICS FACILITY
50 INCH HYPERSONIC TUNNEL B
V418-87A

GROUP	TEST CONDITION	MODEL	MACH NO	PO,PSIA	TO,DEG R	ALPHA-MODEL	ALPHA-SECTOR	ALPHA-PREBEND	ROLL MODEL	YAW
4	3	140 B	7.90	110.2	1269	25.06	4.94	30.00	179.88	-.0

T-INF (DEG R)	P-INF (PSIA)	Q-INF (PSIA)	V-INF (FT/SEC)	RHO-INF (SLUGS/FT3)	MU-INF (LB-SEC/FT2)	RE/FT (FT-1)	HREF-FR (R= .0400FT)	STFR (R= .0400FT)	SWITCH POSITION
94.1	.012	.535	3755	1.092E-05	7.578E-08	5.412E 05	1.183E-02	3.640E-02	1

TC NO	TW	DTWDT	QDOT	H(TO)	H(TO)/HREF	H(.9TO)	H(.9TO)/HREF	FUSELAGE VENT PANEL NO. 7 X/L	Z,FULL SCALE(IN)
69	528.9	1.060	.147	1.990E-04	.0168	2.402E-04	.0203	.2487	356.4000
70	530.2	1.015	.124	1.678E-04	.0142	2.025E-04	.0171	.2591	356.4000
71	527.5	1.134	.153	2.069E-04	.0175	2.496E-04	.0211	.2419	351.4000
72	527.6	1.364	.193	2.597E-04	.0219	3.133E-04	.0265	.2487	351.4000
73	528.5	.828	.107	1.444E-04	.0122	1.742E-04	.0147	.2552	351.4000
74	529.3	.961	.116	1.569E-04	.0133	1.894E-04	.0160	.2610	351.4000
75	525.9	.961	.130	1.748E-04	.0148	2.108E-04	.0178	.2419	342.8000
77	526.9	.886	.125	1.685E-04	.0142	2.032E-04	.0172	.2552	342.8000
78	528.5	.933	.128	1.723E-04	.0146	2.079E-04	.0176	.2610	342.8000
79	525.6	1.028	.131	1.760E-04	.0149	2.122E-04	.0179	.2419	334.2000
80	524.1	1.203	.163	2.189E-04	.0185	2.638E-04	.0223	.2487	334.2000
81	526.3	1.151	.160	2.151E-04	.0182	2.594E-04	.0219	.2552	334.2000
								ACCESS HATCH WINDOW X/L	Z,FULL SCALE(IN)
83	534.4	1.371	.183	2.493E-04	.0211	3.013E-04	.0255	.2131	398.0000
84	531.3	1.406	.185	2.510E-04	.0212	3.032E-04	.0256	.2131	388.0000
85	530.6	1.277	.174	2.352E-04	.0199	2.841E-04	.0240	.2131	383.0000
87	533.5	1.003	.143	1.949E-04	.0165	2.356E-04	.0199	.2222	395.8000
88	531.7	1.340	.187	2.538E-04	.0214	3.065E-04	.0259	.2193	386.5000
89	531.2	1.668	.245	3.316E-04	.0280	4.005E-04	.0338	.2177	381.8000
90	532.9	1.296	.176	2.397E-04	.0203	2.897E-04	.0245	.2297	389.5000
91	531.2	1.299	.178	2.410E-04	.0204	2.911E-04	.0246	.2243	382.5000
92	530.[illegible]	1.311	.185	2.501E-04	.0211	3.020E-04	.0255	.2214	378.7000
93	531.7	1.242	.158	2.149E-04	.0182	2.596E-04	.0219	.2343	374.0000
94	530.8	1.905	.247	3.349E-04	.0283	4.045E-04	.0342	.2274	375.5000
95	529.7	1.458	.207	2.764E-04	.0236	3.374E-04	.0285	.2239	373.3000
96	529.8	1.245	.161	2.185E-04	.0185	2.638E-04	.0223	.2363	368.0000
97	529.1	1.337	.170	2.303E-04	.0195	2.780E-04	.0235	.2286	360.0000
98	528.8	1.245	.174	2.354E-04	.0199	2.841E-04	.0240	.2247	368.0000
100	527.1	1.381	.195	2.626E-04	.0222	3.168E-04	.0268	.2274	360.5000
102	526.9	1.334	.188	2.529E-04	.0214	3.050E-04	.0258	.2081	354.3000
103	528.7	1.432	.188	2.533E-04	.0214	3.058E-04	.0258	.2023	362.7000
105	530.1	1.676	.209	2.831E-04	.0239	3.418E-04	.0289	.2050	378.7000
106	531.9	1.573	.201	2.733E-04	.0231	3.301E-04	.0279	.2050	386.2000

GROUP 4 CENTERLINE TIME 2.65

CH	TC	FIT LENGTH	DIDWT	UNCERTAINTY	CH	TC	FIT LENGTH	DIDWT	UNCERTAINTY
1	1	1.20	1.010	.0241	50	53	1.20	1.256	.0354
2	2	2.00	.947	.0122	51	54	2.00	.726	.0196
3	3	2.00	.834	.0103	52	55	2.00	.903	.0147
4	4	2.00	.847	.0074	53	56	2.00	.629	.0118
5	5	2.00	.796	.0267	54	57	2.00	.716	.0171
6	6	2.00	.785	.0104	55	58	1.20	1.206	.0197
7	7	2.00	.621	.0590	56	59	1.20	1.752	.0513
8	8	2.00	.661	.0139	57	60	1.20	1.445	.0129
9	9	2.00	.536	.0513	58	61	1.20	1.161	.0139
10	10	2.00	.538	.0174	59	62	2.00	.702	.0171
11	11	2.00	.586	.0271	60	63	2.00	.668	.0115
12	12	2.00	.552	.0295	61	64	2.00	-.001	-18.2651
13	13	2.00	.396	.0270	62	65	2.00	.623	.0108
14	14	2.00	.451	.0247	63	66	2.00	.724	.0152
15	15	2.00	.445	.0370	64	67	2.00	.511	.0507
16	16	2.00	.318	.0354	65	68	1.20	1.530	.0127
17	17	2.00	.339	.0468	66	69	1.20	1.060	.0195
18	18	2.00	.243	.1109	67	70	2.00	1.015	.0086
19	19	2.00	.197	.0491	68	71	1.20	1.134	.3176
20	22	1.20	1.772	.0203	69	72	1.20	1.364	.0315
21	23	1.20	1.687	.0090	70	73	2.00	.828	.0379
22	24	1.20	1.858	.0091	71	74	2.00	.961	.0171
23	25	1.20	1.884	.0241	72	75	2.00	.961	.0111
24	26	.80	2.018	.0207	73	77	2.00	.886	.0078
25	27	1.20	1.718	.0135	74	78	2.00	.933	.0131
26	28	1.20	1.460	.0127	75	79	1.20	1.028	.0243
27	29	1.20	1.724	.0086	76	80	1.20	1.203	.0177
28	30	1.20	1.978	.0097	77	81	1.20	1.151	.0207
29	31	.80	2.343	.0146	78	83	1.20	1.371	.0144
30	32	.80	2.647	.0083	79	84	1.20	1.406	.0744
31	33	.80	2.455	.0136	80	85	1.20	1.277	.0187
32	34	.80	3.169	.0118	81	87	1.20	1.003	.0189
33	35	.80	2.510	.0124	82	88	1.20	1.340	.0112
34	36	1.20	1.894	.0090	83	89	1.20	1.668	.0258
35	37	.80	2.825	.0102	84	90	1.20	1.296	.0182
36	38	1.20	1.925	.0112	85	91	1.20	1.299	.0104
37	39	1.20	1.616	.0127	86	92	1.20	1.311	.0121
38	41	1.20	1.801	.0120	87	93	1.20	1.242	.0460
39	42	.80	2.237	.0135	88	94	1.20	1.905	.0148
40	43	1.20	1.433	.0211	89	95	1.20	1.458	.0187
41	44	1.20	1.876	.0091	90	96	1.20	1.245	.0507
42	45	.80	2.637	.0158	91	97	1.20	1.337	.0238
43	46	.80	2.583	.0119	92	98	1.20	1.245	.0346
44	47	.80	2.403	.0096	93	100	1.20	1.381	.0166
45	48	.80	2.015	.0144	94	102	1.20	1.334	.0208
46	49	.80	2.615	.0148	95	103	1.20	1.432	.0222
47	50	1.20	1.363	.0390	96	105	1.20	1.676	.0138
48	51	1.20	1.581	.0121	97	106	1.20	1.573	.0080
49	52	1.20	1.590	.0111	98	0	-0	0	0
	5	.050							

BIT ON LOOP 55

DATE 5/12/75 AEDC(ARO,INC.) ARNOLD AFS, TENNESSEE

VON KARMAN GAS DYNAMICS FACILITY

50 INCH HYPERSONIC TUNNEL B

V418-87A

GROUP	TEST CONDITION	MODEL	MACH NO	PO,PSIA	TO,DEG R	ALPHA-MODEL	ALPHA-SECTOR	ALPHA-PREBEND	ROLL MODEL	YAW
5	3	140 B	7.90	110.1	1269	25.03	4.97	30.00	179.88	-.0

T-INF (DEG R)	P-INF (PSIA)	Q-INF (PSIA)	V-INF (FT/SEC)	RHO-INF (SLUGS/FT3)	MU-INF (LB-SEC/FT2)	RE/FT (FT-1)	HREF-FR (R= .0400FT)	STFR (R= .0400FT)	SWITCH POSITION
94.2	.012	.535	3756	1.091E-05	7.580E-08	5.404E 05	1.183E-02	3.642E-02	2

TC NO	TW	DTWDT	QDOT	H(TO)	H(TO)/HREF	H(.9TO)	H(.9TO)/HREF		
								ACCESS HATCH WINDOW	
								X/L	Z,FULL SCALE(IN)
107	533.0	1.431	.215	2.764E-04	.0235	3.364E-04	.0284	.2050	396.2000
								FUSELAGE VENT PANEL NO. 3 AND 1	
								X/L	Z,FULL SCALE(IN)
108	532.7	2.646	.280	3.799E-04	.0321	4.590E-04	.0388	.1244	377.5000
109	532.2	2.250	.278	3.772E-04	.0319	4.557E-04	.0385	.1302	377.5000
110	532.0	2.077	.263	3.570E-04	.0302	4.312E-04	.0365	.1360	377.5000
111	532.4	2.193	.264	3.585E-04	.0303	4.331E-04	.0366	.1418	377.5000
112	532.4	2.245	.266	3.616E-04	.0306	4.369E-04	.0369	.1476	377.5000
113	531.1	2.478	.284	3.846E-04	.0325	4.645E-04	.0393	.1215	273.5000
114	531.2	2.148	.258	3.492E-04	.0295	4.217E-04	.0356	.1273	273.5000
115	531.5	1.895	.235	3.185E-04	.0269	3.847E-04	.0325	.1331	273.5000
116	531.4	1.970	.242	3.275E-04	.0277	3.955E-04	.0334	.1389	273.5000
117	531.3	2.067	.238	3.222E-04	.0272	3.892E-04	.0329	.1447	273.5000
118	529.1	1.827	.252	3.408E-04	.0288	4.114E-04	.0348	.1409	366.0000
119	529.1	2.081	.259	3.632E-04	.0307	4.383E-04	.0371	.1442	366.0000
120	527.8	2.252	.281	3.786E-04	.0320	4.568E-04	.0386	.1215	359.5000
121	527.7	1.891	.232	3.121E-04	.0264	3.766E-04	.0318	.1303	359.5000
122	526.8	2.137	.265	3.573E-04	.0302	4.310E-04	.0364	.1337	359.5000
								LOWER RCS NOZZLES	
								X/L	Z,FULL SCALE(IN)
124	538.0	1.667	.149	2.040E-04	.0172	2.468E-04	.0209	.0950	400.0000
125	537.1	1.696	.185	2.528E-04	.0214	3.058E-04	.0259	.0988	400.0000
126	536.5	1.519	.209	2.846E-04	.0241	3.443E-04	.0291	.1027	400.0000
127	537.1	1.668	.225	3.077E-04	.0260	3.722E-04	.0315	.0911	395.0000
128	536.8	1.768	.215	2.937E-04	.0248	3.552E-04	.0300	.0950	395.0000
129	536.5	1.900	.223	3.049E-04	.0258	3.688E-04	.0312	.0988	395.0000
130	538.4	1.851	.222	3.040E-04	.0257	3.679E-04	.0311	.0810	390.0000
131	537.3	1.759	.260	3.558E-04	.0301	4.305E-04	.0364	.0857	390.0000
132	536.2	1.962	.229	3.122E-04	.0264	3.776E-04	.0319	.0963	390.0000
133	536.6	1.866	.227	3.098E-04	.0262	3.748E-04	.0317	.0857	383.8000
134	535.4	1.977	.265	3.611E-04	.0305	4.366E-04	.0369	.0872	377.3000
135	534.5	2.707	.325	4.426E-04	.0374	5.351E-04	.0452	.0903	374.5500
136	533.6	2.931	.326	4.429E-04	.0374	5.353E-04	.0453	.0960	374.5500
137	534.4	2.677	.350	4.767E-04	.0403	5.762E-04	.0487	.0872	370.5500
138	533.7	2.929	.337	4.587E-04	.0388	5.544E-04	.0469	.0928	370.5500
139	535.3	2.708	.346	4.715E-04	.0399	5.701E-04	.0482	.0816	366.0500
140	532.6	2.851	.363	4.921E-04	.0416	5.946E-04	.0503	.0934	362.4000
141	531.3	2.454	.324	4.389E-04	.0371	5.300E-04	.0448	.0973	362.4000
142	529.7	2.038	.222	2.995E-04	.0253	3.616E-04	.0306	.0833	355.2000
143	532.0	3.027	.304	4.120E-04	.0348	4.977E-04	.0421	.0919	355.2000
144	530.2	3.554	.467	6.321E-04	.0534	7.632E-04	.0645	.0949	349.0000

DATE 5/12/75

AEDC(ARO,INC.) ARNOLD AFS, TENNESSEE
VON KARMAN GAS DYNAMICS FACILITY
50 INCH HYPERSONIC TUNNEL B
V41B-87A

GROUP	TEST CONDITION	MODEL	MACH NO	PO,PSIA	TO,DEG R	ALPHA-MODEL	ALPHA-SECTOR	ALPHA-PREBEND	ROLL MODEL	YAW
5	3	140 B	7.90	110.1	1269	25.03	4.97	30.00	179.88	-.0

T-INF (DEG R)	P-INF (PSIA)	Q-INF (PSIA)	V-INF (FT/SEC)	RHO-INF (SLUGS/FT3)	MU-INF (LB-SEC/FT2)	RE/FT (FT-1)	HREF-FR (R= .0400FT)	STFR (R= .0400FT)	SWITCH POSITION
94.2	.012	.535	3756	1.091E-05	7.580E-08	5.404E 05	1.183E-02	3.642E-02	2

TC NO	TW	DTWDT	QDOT	H(TO)	H(TO)/HREF	H(.9TO)	H(.9TO)/HREF
161	540.3	1.252	.149	2.039E-04	.0172	2.468E-04	.0209
162	539.8	1.218	.116	1.585E-04	.0134	1.918E-04	.0162
163	539.5	.848	.104	1.431E-04	.0121	1.733E-04	.0146
164	539.1	.669	.088	1.198E-04	.0101	1.451E-04	.0123
165	539.3	.573	.072	9.914E-05	.0084	1.200E-04	.0101
166	539.2	.444	.057	7.811E-05	.0066	9.455E-05	.0080
167	540.3	1.159	.157	2.158E-04	.0182	2.613E-04	.0221
168	540.0	1.267	.133	1.829E-04	.0155	2.214E-04	.0187
169	539.5	.890	.108	1.485E-04	.0126	1.798E-04	.0152
170	539.2	.706	.089	1.213E-04	.0103	1.468E-04	.0124
171	538.9	.792	.096	1.311E-04	.0111	1.587E-04	.0134
172	538.4	.598	.078	1.069E-04	.0090	1.293E-04	.0109
173	539.5	.919	.123	1.686E-04	.0143	2.040E-04	.0173
174	539.0	.653	.075	1.021E-04	.0086	1.236E-04	.0104
175	538.9	.641	.092	1.261E-04	.0107	1.526E-04	.0129
176	538.8	.499	.068	9.334E-05	.0079	1.130E-04	.0096
177	540.4	1.790	.247	3.389E-04	.0286	4.103E-04	.0347
178	541.0	2.926	.577	7.923E-04	.0670	9.596E-04	.0811
179	541.7	3.615	.760	1.045E-03	.0883	1.265E-03	.1070
180	538.1	.737	.096	1.317E-04	.0111	1.594E-04	.0135
181	538.7	1.247	.170	2.323E-04	.0196	2.811E-04	.0238
182	539.1	1.755	.251	3.433E-04	.0290	4.155E-04	.0351
183	536.6	.272	.034	4.672E-05	.0039	5.651E-05	.0048
184	536.5	.262	.036	4.887E-05	.0041	5.911E-05	.0050
185	537.9	.810	.098	1.333E-04	.0113	1.613E-04	.0136
186	538.3	1.242	.156	2.136E-04	.0181	2.585E-04	.0219
187	538.9	1.967	.262	3.592E-04	.0304	4.348E-04	.0368
188	540.1	2.589	.604	8.286E-04	.0700	1.003E-03	.0848
189	537.1	.574	.082	1.118E-04	.0094	1.352E-04	.0114
190	537.7	.952	.137	1.875E-04	.0159	2.269E-04	.0192
191	537.6	1.431	.219	2.992E-04	.0253	3.620E-04	.0306

UPPER RCS NOZZLES

X/L	2Y/B
.0619	-.0160
.0709	-.0160
.0807	-.0160
.0943	-.0160
.0978	-.0160
.1013	-.0160
.0619	-.0320
.0709	-.0320
.0807	-.0320
.0943	-.0320
.0978	-.0320
.1013	-.0320
.0807	-.0480
.0943	-.0480
.0978	-.0480
.1013	-.0480

CANOPY

DATE 5/12/75

AEDC(ARO,INC.) ARNOLD AFS, TENNESSEE
VON KARMAN GAS DYNAMICS FACILITY
50 INCH HYPERSONIC TUNNEL B
V41B-87A

GROUP	TEST CONDITION	MODEL	MACH NO	PO,PSIA	TO,DEG R	ALPHA-MODEL	ALPHA-SECTOR	ALPHA-PREBEND	ROLL MODEL	YAW
5	3	140 B	7.90	110.1	1269	25.03	4.97	30.00	179.88	-.0

T-INF (DEG R)	P-INF (PSIA)	Q-INF (PSIA)	V-INF (FT/SEC)	RHO-INF (SLUGS/FT3)	MU-INF (LB-SEC/FT2)	RE/FT (FT-1)	HREF-FR (R= .0400FT)	STFR (R= .0400FT)	SWITCH POSITION
94.2	.012	.535	3756	1.091E-05	7.580E-08	5.404E 05	1.183E-02	3.642E-02	2

IC NO	TW	DIWDT	QDOT	H(TO)	H(TO)/HREF	H(.9TO)	H(.9TO)/HREF
						CANOPY	
192	535.5	.091	.013	1.753E-05	.0015	2.120E-05	.0018
193	538.4	2.277	.439	6.011E-04	.0508	7.274E-04	.0615
194	535.6	.595	.077	1.048E-04	.0089	1.267E-04	.0107
195	536.1	1.068	.132	1.798E-04	.0152	2.175E-04	.0184
196	537.1	1.311	.172	2.355E-04	.0199	2.848E-04	.0241
197	535.1	.305	.039	4.114E-05	.0035	4.974E-05	.0042
198	535.1	.298	.035	4.721E-05	.0040	5.707E-05	.0048
199	534.8	.137	.018	2.500E-05	.0021	3.023E-05	.0026
200	535.7	1.119	.160	2.175E-04	.0184	2.630E-04	.0222
201	537.0	1.676	.237	3.235E-04	.0273	3.913E-04	.0331
202	537.7	1.719	.218	2.975E-04	.0252	3.600E-04	.0304
203	534.5	.307	.038	5.182E-05	.0044	6.264E-05	.0053
204	534.8	.580	.090	1.227E-04	.0104	1.483E-04	.0125
205	536.2	1.387	.216	2.952E-04	.0250	3.570E-04	.0302
206	535.8	.511	.068	9.246E-05	.0078	1.118E-04	.0095
207	536.9	1.604	.215	2.939E-04	.0248	3.555E-04	.0301
208	534.3	.242	.032	4.418E-05	.0037	5.341E-05	.0045
209	534.4	.195	.027	3.659E-05	.0031	4.423E-05	.0037
210	534.8	.574	.077	1.044E-04	.0088	1.263E-04	.0107
211	534.5	-.410	-.050	-6.771E-05	-.0057	-8.185E-05	-.0069
212	534.7	.254	.034	4.661E-05	.0039	5.635E-05	.0048
213	534.0	.345	.046	6.216E-05	.0053	7.513E-05	.0064
214	534.0	.382	.054	7.293E-05	.0062	8.815E-05	.0075
215	534.5	.521	.074	1.007E-04	.0085	1.218E-04	.0103
216	535.[illegible]	1.278	.182	2.476E-04	.0209	2.994E-04	.0253
217	536.0	1.070	.153	2.081E-04	.0176	2.517E-04	.0213
218	533.6	.277	.038	5.198E-05	.0044	6.281E-05	.0053
219	533.5	.636	.090	1.216E-04	.0103	1.470E-04	.0124
220	534.0	.500	.069	9.348E-05	.0079	1.130E-04	.0096

GROUP 5 CENTERLINE TIME 2.70

CH	TC	FIT LENGTH	DTDWT	UNCERTAINTY	CH	TC	FIT LENGTH	DTDWT	UNCERTAINTY
1	107	1.20	1.431	.0126	50	173	2.00	.919	.0119
2	108	.80	2.646	.0108	51	174	2.00	.653	.0250
3	109	.80	2.250	.0106	52	175	2.00	.641	.0222
4	110	.80	2.077	.0174	53	176	2.00	.499	.0172
5	111	.80	2.193	.0308	54	177	1.20	1.790	.0142
6	112	.80	2.245	.0108	55	178	.80	2.926	.0156
7	113	.80	2.478	.0534	56	179	.80	3.615	.0474
8	114	.80	2.148	.0146	57	180	2.00	.737	.0103
9	115	1.20	1.895	.0231	58	181	1.20	1.247	.0153
10	116	1.20	1.970	.0106	59	182	1.20	1.755	.0206
11	117	.80	2.047	.0229	60	183	2.00	.272	.0339
12	118	1.20	1.827	.0166	61	184	2.00	.262	.0640
13	119	.80	2.081	.0146	62	185	2.00	.810	.0085
14	120	.80	2.252	.0156	63	186	1.20	1.242	.0179
15	121	1.20	1.891	.0208	64	187	1.20	1.967	.0166
16	122	.80	2.137	.0247	65	188	.80	2.589	.0155
17	124	1.20	1.667	.0192	66	189	2.00	.574	.0234
18	125	1.20	1.696	.0125	67	190	2.00	.952	.0071
19	126	1.20	1.515	.0107	68	191	1.20	1.431	.1587
20	127	1.20	1.668	.0118	69	192	2.00	.091	.2919
21	128	1.20	1.768	.0106	70	193	.80	2.277	.0167
22	129	1.20	1.900	.0104	71	194	2.00	.595	.0246
23	130	1.20	1.851	.0321	72	195	1.20	1.068	.0193
24	131	1.20	1.759	.0180	73	196	1.20	1.311	.0118
25	132	1.20	1.962	.0121	74	197	2.00	.305	.0268
26	133	1.20	1.866	.0152	75	198	2.00	.298	.0327
27	134	1.20	1.977	.0103	76	199	2.00	.137	.1386
28	135	.80	2.707	.0104	77	200	1.20	1.119	.0163
29	136	.80	2.931	.0090	78	201	1.20	1.676	.0125
30	137	.80	2.677	.0107	79	202	1.20	1.719	.0693
31	138	.80	2.929	.0075	80	203	2.00	.307	.0235
32	139	.80	2.708	.0116	81	204	2.00	.580	.0183
33	140	.80	2.851	.0086	82	205	1.20	1.387	.0117
34	141	.80	2.454	.0141	83	206	2.00	.511	.0727
35	142	.80	2.038	.0185	84	207	1.20	1.604	.0142
36	143	.80	3.027	.0091	85	208	2.00	.242	.0344
37	144	.80	3.554	.0078	86	209	2.00	.195	.0507
38	161	1.20	1.252	.0173	87	210	2.00	.574	.0395
39	162	1.20	1.218	.0122	88	211	2.00	-.410	-.0635
40	163	2.00	.848	.0131	89	212	2.00	.254	.0540
41	164	2.00	.669	.0119	90	213	2.00	.345	.1432
42	165	2.00	.573	.0175	91	214	2.00	.382	.0413
43	166	2.00	.444	.0293	92	215	2.00	.521	.0500
44	167	1.20	1.159	.0157	93	216	1.20	1.278	.0206
45	168	1.20	1.267	.0108	94	217	2.00	1.070	.0152
46	169	2.00	.890	.0091	95	218	2.00	.277	.0476
47	170	2.00	.706	.0354	96	219	2.00	.636	.0406
48	171	2.00	.792	.0123	97	220	2.00	.500	.0155
49	172	2.00	.598	.0185	98	0	-0	0	0
	6	.050							

BIT ON LOOP 56

DATE 5/12/75 AEDC(ARO,INC.) ARNOLD AFS, TENNESSEE

VON KARMAN GAS DYNAMICS FACILITY

50 INCH HYPERSONIC TUNNEL B

V41B-B7A

GROUP	TEST CONDITION	MODEL	MACH NO	PO,PSIA	TO,DEG R	ALPHA-MODEL	ALPHA-SECTOR	ALPHA-PREBEND	ROLL MODEL	YAW
6	3	140 B	7.90	110.4	1269	25.02	4.98	30.00	179.88	-.0

T-INF (DEG R)	P-INF (PSIA)	Q-INF (PSIA)	V-INF (FT/SEC)	RHO-INF (SLUGS/FT3)	MU-INF (LB-SEC/FT2)	RE/FT (FT-1)	HREF-FR (R= .0400FT)	STFR (R= .0400FT)	SWITCH POSITION
94.1	.012	.536	3755	1.094E-05	7.577E-08	5.422E 05	1.184E-02	3.636E-02	3

TC NO	TW	DTWDT	QDOT	H(TO)	H(TO)/HREF	H(.9TO)	H(.9TO)/HREF	X/L	2Y/B
								CANOPY	
221	532.5	.289	.035	4.744E-05	.0040	5.732E-05	.0048		
222	531.8	.324	.040	5.406E-05	.0046	6.530E-05	.0055		
223	531.1	.991	.134	1.821E-04	.0154	2.199E-04	.0186		
								ESCAPE HATCH AND WINDOW	
224	535.8	1.607	.160	2.185E-04	.0184	2.642E-04	.0223	.1933	.0162
225	535.2	1.223	.147	1.997E-04	.0169	2.415E-04	.0204	.1972	.0162
226	534.9	2.128	.224	3.057E-04	.0258	3.696E-04	.0312	.1933	.0384
227	534.0	1.353	.198	2.697E-04	.0228	3.260E-04	.0275	.1972	.0384
228	533.5	1.821	.234	3.184E-04	.0269	3.848E-04	.0325	.1933	.0653
229	533.6	1.448	.186	2.533E-04	.0214	3.061E-04	.0258	.1972	.0653
232	535.9	.135	.018	2.492E-05	.0021	3.013E-05	.0025	.2567	.0235
233	536.3	.161	.025	3.347E-05	.0028	4.048E-05	.0034	.2606	.0235
236	534.9	.149	.022	2.983E-05	.0025	3.607E-05	.0030	.2567	.0491
237	535.4	.144	.020	2.757E-05	.0023	3.334E-05	.0028	.2606	.0491
								CARGO BAY HINGE NO. 1	
								X/L	Z,FULL SCALE(IN)
238	535.4	.667	.089	1.219E-04	.0103	1.474E-04	.0124	.2879	420.0000
239	535.2	.620	.083	1.133E-04	.0096	1.370E-04	.0116	.2917	420.0000
240	535.1	.594	.085	1.157E-04	.0098	1.400E-04	.0118	.2840	415.0000
241	535.2	.590	.083	1.132E-04	.0096	1.369E-04	.0116	.2879	415.0000
242	532.0	.547	.078	1.059E-04	.0089	1.280E-04	.0108	.2917	415.0000
243	532.9	.799	.098	1.328E-04	.0112	1.605E-04	.0135	.2801	405.0000
244	532.9	.524	.061	8.322E-05	.0070	1.006E-04	.0085	.2840	405.0000
								CARGO BAY HINGE NO. 2	
								X/L	Z,FULL SCALE(IN)
245	535.1	.614	.088	1.197E-04	.0101	1.448E-04	.0122	.3192	420.0000
246	535.1	.643	.092	1.253E-04	.0106	1.515E-04	.0128	.3439	420.0000
247	534.8	.569	.084	1.143E-04	.0096	1.381E-04	.0117	.3362	415.0000
248	534.7	.433	.064	8.696E-05	.0073	1.051E-04	.0089	.3401	415.0000
249	534.8	.583	.086	1.171E-04	.0099	1.416E-04	.0120	.3439	415.0000
250	533.5	.704	.088	1.201E-04	.0101	1.452E-04	.0123	.3323	405.0000
251	533.6	.716	.088	1.195E-04	.0101	1.445E-04	.0122	.3362	405.0000
								CARGO BAY HINGE NO. 3	
								X/L	Z,FULL SCALE(IN)
252	534.5	.539	.078	1.065E-04	.0090	1.287E-04	.0109	.3923	420.0000
253	534.8	.591	.086	1.169E-04	.0099	1.413E-04	.0119	.3961	420.0000
254	534.2	.494	.075	1.021E-04	.0086	1.235E-04	.0104	.3884	415.0000
257	533.0	1.008	.136	1.846E-04	.0156	2.231E-04	.0188	.3845	405.0000
258	533.3	1.060	.144	1.962E-04	.0166	2.371E-04	.0200	.3884	405.0000

DATE 5/12/75

AEDC(AHO.INC.) ARNOLD AFS, TENNESSEE
VON KARMAN GAS DYNAMICS FACILITY
50 INCH HYPERSONIC TUNNEL B
V418-87A

GROUP	TEST CONDITION	MODEL	MACH NO	PO,PSIA	TO,DEG R	ALPHA-MODEL	ALPHA-SECTOR	ALPHA-PREBEND	ROLL MODEL	YAW
6	3	140 B	7.90	110.4	1269	25.02	4.98	30.00	179.88	-.0

T-INF (DEG R)	P-INF (PSIA)	Q-INF (PSIA)	V-INF (FT/SEC)	RHO-INF (SLUGS/FT3)	MU-INF (LB-SEC/FT2)	RE/FT (FT-1)	HREF-FR (R= .0400FT)	STFR (R= .0400FT)	SWITCH POSITION
94.1	.012	.536	3755	1.094E-05	7.577E-08	5.422E 05	1.184E-02	3.636E-02	3

TOP CENTERLINE

TC NO	TW	DTWDT	QDOT	H(TO)	H(TO)/HREF	H(.9TO)	H(.9TO)/HREF	X/L
367	560.3	42.978	5.115	7.219E-03	.6095	8.794E-03	.7425	0
368	548.8	31.281	3.997	5.551E-03	.4687	6.738E-03	.5689	.0008
369	540.2	19.847	2.330	3.197E-03	.2699	3.871E-03	.3269	.0019
370	536.8	14.222	1.736	2.372E-03	.2003	2.869E-03	.2422	.0037
371	535.9	11.257	1.102	1.504E-03	.1270	1.818E-03	.1535	.0058
372	534.5	7.698	.990	1.349E-03	.1139	1.630E-03	.1377	.0087
373	533.9	5.216	.683	9.288E-04	.0784	1.123E-03	.0948	.0118
374	533.6	4.073	.533	7.247E-04	.0612	8.758E-04	.0739	.0151
375	534.0	3.267	.446	6.075E-04	.0513	7.343E-04	.0620	.0182
376	534.9	2.940	.387	5.280E-04	.0446	6.383E-04	.0539	.0215
377	535.3	2.659	.342	4.666E-04	.0394	5.642E-04	.0476	.0246
378	535.4	2.160	.252	3.436E-04	.0290	4.155E-04	.0351	.0278
379	538.0	1.378	.170	2.321E-04	.0196	2.808E-04	.0237	.0609
380	537.5	1.132	.117	1.593E-04	.0135	1.928E-04	.0163	.0646
381	537.2	.990	.128	1.755E-04	.0148	2.124E-04	.0179	.0684
382	537.3	.886	.116	1.587E-04	.0134	1.920E-04	.0162	.0721
383	537.1	.782	.105	1.434E-04	.0121	1.734E-04	.0146	.0760
384	536.8	.555	.077	1.058E-04	.0089	1.280E-04	.0108	.0796
385	537.1	.553	.071	9.744E-05	.0082	1.179E-04	.0100	.0789
386	537.3	.541	.064	8.765E-05	.0074	1.060E-04	.0090	.0982
387	537.5	.601	.074	1.011E-04	.0085	1.223E-04	.0103	.1019
388	537.8	.687	.065	8.953E-05	.0076	1.083E-04	.0091	.1160
389	537.4	.549	.080	1.092E-04	.0092	1.321E-04	.0112	.1195
390	537.5	.436	.069	9.413E-05	.0079	1.139E-04	.0096	.1231
391	536.8	.399	.064	8.703E-05	.0073	1.053E-04	.0089	.1268
392	536.8	.374	.064	8.772E-05	.0074	1.061E-04	.0090	.1305
393	536.5	.352	.060	8.135E-05	.0069	9.840E-05	.0083	.1338
394	536.4	.327	.055	7.496E-05	.0063	9.067E-05	.0077	.1376
395	536.3	.252	.038	5.149E-05	.0043	6.228E-05	.0053	.1411
396	536.2	.285	.042	5.780E-05	.0049	6.991E-05	.0059	.1448
397	536.2	.320	.048	6.490E-05	.0055	7.849E-05	.0066	.1483
398	535.9	-.114	-.016	-2.185E-05	-.0018	-2.643E-05	-.0022	.1519
399	537.3	.739	.099	1.352E-04	.0114	1.635E-04	.0138	.1556

DATE 5/12/75

AEDC(ARO,INC.) ARNOLD AFS, TENNESSEE
VON KARMAN GAS DYNAMICS FACILITY
50 INCH HYPERSONIC TUNNEL B
V41R-87A

GROUP	TEST CONDITION	MODEL	MACH NO	PO,PSIA	TO,DEG R	ALPHA-MODEL	ALPHA-SECTOR	ALPHA-PREBEND	ROLL MODEL	YAW
6	3	140 B	7.90	110.4	1269	25.02	4.98	30.00	179.88	-.0

T-INF (DEG R)	P-INF (PSIA)	Q-INF (PSIA)	V-INF (FT/SEC)	RHO-INF (SLUGS/FT3)	MU-INF (LB-SEC/FT2)	RE/FT (FT-1)	HREF-FR (R= .0400FT)	STFR (R= .0400FT)	SWITCH POSITION
94.1	.012	.536	3755	1.094E-05	7.577E-08	5.422E 05	1.184E-02	3.636E-02	3

TC NO	TW	DTWDT	QDOT	H(TO)	H(TO)/HREF	H(.9TO)	H(.9TO)/HREF	X/L
								TOP CENTERLINE
400	537.2	1.203	.163	2.221E-04	.0188	2.687E-04	.0227	.1582
401	537.2	1.348	.175	2.391E-04	.0202	2.892E-04	.0244	.1608
402	537.7	1.629	.203	2.782E-04	.0235	3.366E-04	.0284	.1635
403	537.9	2.266	.276	3.773E-04	.0319	4.565E-04	.0385	.1664
404	537.9	2.091	.254	3.469E-04	.0293	4.197E-04	.0354	.1691
405	538.5	2.648	.321	4.398E-04	.0371	5.322E-04	.0449	.1720
406	537.9	2.392	.290	3.968E-04	.0335	4.801E-04	.0405	.1748
407	538.0	2.348	.304	4.155E-04	.0351	5.028E-04	.0424	.1769
408	538.0	2.240	.329	4.498E-04	.0380	5.443E-04	.0460	.1800
409	537.5	2.016	.290	3.971E-04	.0335	4.805E-04	.0406	.1831
410	537.3	1.792	.258	3.529E-04	.0298	4.269E-04	.0360	.1863
411	537.2	1.405	.211	2.885E-04	.0244	3.490E-04	.0295	.1894
412	537.2	1.131	.154	2.102E-04	.0177	2.543E-04	.0215	.1931
413	536.9	1.065	.143	1.953E-04	.0165	2.362E-04	.0199	.1972
414	536.7	.538	.072	9.850E-05	.0083	1.192E-04	.0101	.2049
415	536.2	.271	.027	3.650E-05	.0031	4.414E-05	.0037	.2250
416	536.8	.150	.018	2.404E-05	.0020	2.908E-05	.0025	.2500
								NOSE TC (Z = 338)
								X/L 2Y/B
145	553.8	28.553	3.864	5.404E-03	.4563	6.570E-03	.5547	.0008 .5039
146	551.1	29.408	3.974	5.537E-03	.4675	6.726E-03	.5679	.0023 .5082
147	543.9	22.808	3.071	4.236E-03	.3577	5.135E-03	.4336	.0043 .5135
148	541.9	17.468	2.428	3.340E-03	.2820	4.046E-03	.3416	.0068 .5205
149	539.4	13.268	1.913	2.623E-03	.2214	3.175E-03	.2681	.0095 .5279
150	540.4	11.980	1.712	2.351E-03	.1985	2.847E-03	.2404	.0122 .5354
151	538.9	8.389	1.176	1.611E-03	.1360	1.949E-03	.1646	.0218 .5621
152	538.9	8.192	1.108	1.517E-03	.1281	1.837E-03	.1551	.0251 .5712
153	538.9	7.976	.971	1.331E-03	.1123	1.611E-03	.1360	.0286 .5808
154	540.0	7.702	.956	1.311E-03	.1107	1.588E-03	.1340	.0319 .5898
155	539.2	7.358	.922	1.264E-03	.1067	1.530E-03	.1292	.0354 .5995
156	538.7	7.072	.877	1.201E-03	.1014	1.454E-03	.1227	.0387 .6085
157	538.3	6.990	.857	1.173E-03	.0991	1.420E-03	.1199	.0420 .6176
158	537.4	7.323	.898	1.227E-03	.1036	1.485E-03	.1254	.0462 .6294
159	537.0	6.913	.773	1.056E-03	.0892	1.278E-03	.1079	.0503 .6406

GROUP 6 CENTERLINE TIME 2.75

CH	TC	FIT LENGTH	DTDWT	UNCERTAINTY	CH	TC	FIT LENGTH	DTDWT	UNCERTAINTY
1	221	2.00	.285	.0338	50	384	2.00	.555	.0212
2	222	2.00	.324	.0296	51	385	2.00	.553	.0238
3	223	1.20	.991	.0222	52	386	2.00	.541	.0258
4	224	1.20	1.607	.0127	53	387	2.00	.601	.0141
5	225	1.20	1.223	.0433	54	388	2.00	.687	.0205
6	226	.80	2.128	.0147	55	389	2.00	.549	.0161
7	227	1.20	1.353	.0666	56	390	2.00	.436	.0767
8	228	1.20	1.621	.0139	57	391	2.00	.399	.0185
9	229	1.20	1.448	.0290	58	392	2.00	.374	.0192
10	232	2.00	.135	.0583	59	393	2.00	.352	.0383
11	233	2.00	.161	.2211	60	394	2.00	.327	.0255
12	236	2.00	.149	.0673	61	395	2.00	.252	.0770
13	237	2.00	.144	.0835	62	396	2.00	.285	.0335
14	238	2.00	.667	.0520	63	397	2.00	.320	.0301
15	239	2.00	.620	.0190	64	398	2.00	-.114	-.2268
16	240	2.00	.594	.0200	65	399	2.00	.739	.0204
17	241	2.00	.590	.0313	66	400	1.20	1.203	.0204
18	242	2.00	.547	.0231	67	401	1.20	1.348	.0116
19	243	2.00	.799	.0167	68	402	1.20	1.629	.1437
20	244	2.00	.524	.0312	69	403	.80	2.266	.0304
21	245	2.00	.614	.0119	70	404	.80	2.091	.0281
22	246	2.00	.643	.0118	71	405	.80	2.648	.0214
23	247	2.00	.569	.0410	72	406	.80	2.392	.0189
24	248	2.00	.433	.0283	73	407	.80	2.348	.0162
25	249	2.00	.583	.0230	74	408	.80	2.240	.0198
26	250	2.00	.704	.0180	75	409	.80	2.016	.0256
27	251	2.00	.716	.0132	76	410	1.20	1.792	.0155
28	252	2.00	.539	.0183	77	411	1.20	1.405	.0133
29	253	2.00	.591	.0210	78	412	1.20	1.131	.0137
30	254	2.00	.494	.0348	79	413	2.00	1.065	.0567
31	257	1.20	1.008	.0163	80	414	2.00	.538	.0151
32	258	1.20	1.060	.0196	81	415	2.00	.271	.0413
33	367	.20	42.978	.0016	82	416	2.00	.150	.0447
34	368	.30	31.281	.0034	83	145	.30	28.553	.0024
35	369	.30	19.847	.0027	84	146	.30	29.408	.0054
36	370	.40	14.222	.0095	85	147	.30	22.808	.0042
37	371	.40	11.257	.0034	86	148	.30	17.468	.0078
38	372	.60	7.698	.0092	87	149	.40	13.268	.0137
39	373	.60	5.216	.0086	88	150	.40	11.980	.0107
40	374	.60	4.073	.0238	89	151	.40	8.389	.0107
41	375	.80	3.267	.0062	90	152	.40	8.192	.0695
42	376	.80	2.940	.0098	91	153	.40	7.976	.0186
43	377	.80	2.659	.0165	92	154	.60	7.702	.0188
44	378	.80	2.160	.0171	93	155	.60	7.358	.0076
45	379	1.20	1.378	.0136	94	156	.60	7.072	.0126
46	380	1.20	1.132	.0177	95	157	.60	6.990	.0124
47	381	1.20	.990	.0453	96	158	.60	7.323	.0086
48	382	2.00	.886	.0113	97	159	.60	6.913	.0058
49	383	2.00	.782	.0104	98	0	-0	0	0
	7	.050							

BIT ON LOOP 55

DATE 5/12/75

AEDC(ARO,INC.) ARNOLD AFS, TENNESSEE
VON KARMAN GAS DYNAMICS FACILITY
50 INCH HYPERSONIC TUNNEL B
V41B-B7A

GROUP	TEST CONDITION	MODEL	MACH NO	PO,PSIA	TO,DEG R	ALPHA-MODEL	ALPHA-SECTOR	ALPHA-PREBEND	ROLL MODEL	YAW
7	4	140 B	7.99	109.2	1269	30.02	-.02	30.00	179.88	.0

T-INF (DEG R)	P-INF (PSIA)	Q-INF (PSIA)	V-INF (FT/SEC)	RHO-INF (SLUGS/FT3)	MU-INF (LB-SEC/FT2)	RE/FT (FT-1)	HREF-FR (R= .0400FT)	STFR (R= .0400FT)	SWITCH POSITION
94.1	.012	.530	3755	1.082E-05	7.576E-06	5.364E 05	1.178E-02	3.656E-02	1

TC NO	TW	DIWDT	GDOT	H(TO)	H(TO)/HREF	H(.9TO)	H(.9TO)/HREF	X/L	Z,FULL SCALE(IN)
								FUSELAGE VENT NO. 1	
1	535.1	.489	.065	8.794E-05	.0075	1.063E-04	.0090	.4434	376.6300
2	534.3	.445	.060	8.139E-05	.0069	9.839E-05	.0084	.4264	371.6300
3	534.1	.416	.057	7.772E-05	.0066	9.395E-05	.0080	.4303	371.6300
4	534.3	.403	.055	7.454E-05	.0063	9.011E-05	.0076	.4342	371.6300
5	534.5	.329	.044	5.964E-05	.0051	7.209E-05	.0061	.4380	371.6300
6	534.7	.387	.051	6.972E-05	.0059	8.429E-05	.0072	.4434	369.1300
7	533.3	.357	.052	7.063E-05	.0060	8.535E-05	.0072	.4226	366.6300
8	533.8	.335	.050	6.862E-05	.0058	8.294E-05	.0070	.4264	366.6300
9	533.8	.309	.045	6.097E-05	.0052	7.369E-05	.0063	.4303	366.6300
10	533.5	.308	.044	5.964E-05	.0051	7.208E-05	.0061	.4342	366.6300
11	533.8	.226	.030	4.143E-05	.0035	5.007E-05	.0043	.4380	366.6300
12	534.2	.337	.046	6.308E-05	.0054	7.626E-05	.0065	.4496	366.6300
13	532.5	.261	.038	5.197E-05	.0044	6.279E-05	.0053	.4187	357.1300
14	533.4	.276	.038	5.119E-05	.0043	6.187E-05	.0053	.4396	361.6300
15	533.6	.246	.033	4.444E-05	.0038	5.371E-05	.0046	.4434	361.6300
16	532.8	.210	.028	3.841E-05	.0033	4.641E-05	.0039	.4396	355.6300
17	533.1	.244	.033	4.479E-05	.0038	5.412E-05	.0046	.4434	355.6300
18	529.6	.156	.022	2.941E-05	.0025	3.551E-05	.0030	.4396	351.6300
19	532.6	.122	.017	2.312E-05	.0020	2.793E-05	.0024	.4291	332.6300
								CARGO BAY VENT NO. 1	
22	536.0	2.138	.296	4.043E-04	.0343	4.890E-04	.0415	.3974	397.6300
23	536.1	1.806	.252	3.438E-04	.0292	4.158E-04	.0353	.4013	397.6300
24	536.6	1.837	.248	3.390E-04	.0288	4.100E-04	.0348	.4052	397.6300
25	536.9	1.849	.243	3.322E-04	.0282	4.019E-04	.0341	.4090	397.6300
26	537.3	1.998	.262	3.580E-04	.0304	4.332E-04	.0368	.4129	397.6300
27	535.8	1.809	.251	3.431E-04	.0291	4.149E-04	.0352	.3936	392.6300
28	535.2	1.263	.181	2.470E-04	.0210	2.987E-04	.0254	.3974	392.6300
29	535.2	1.444	.208	2.832E-04	.0240	3.424E-04	.0291	.4013	392.6300
30	535.5	1.723	.247	3.372E-04	.0286	4.077E-04	.0346	.4052	392.6300
31	536.0	1.796	.250	3.418E-04	.0290	4.134E-04	.0351	.4090	392.6300
32	536.3	1.826	.242	3.299E-04	.0280	3.990E-04	.0339	.4129	392.6300
33	535.0	.939	.134	1.825E-04	.0155	2.206E-04	.0187	.4090	386.1300
34	535.9	1.371	.185	2.525E-04	.0214	3.054E-04	.0259	.4129	387.6300
35	534.7	1.190	.168	2.288E-04	.0194	2.766E-04	.0235	.3897	383.1300
36	534.5	.611	.088	1.205E-04	.0102	1.457E-04	.0124	.4090	378.6300
37	535.3	.873	.123	1.670E-04	.0142	2.020E-04	.0171	.4129	382.1300
38	534.9	.685	.095	1.298E-04	.0110	1.569E-04	.0133	.4129	377.1300
39	534.0	.559	.081	1.107E-04	.0094	1.339E-04	.0114	.4001	373.6300
								PROTUBERANCES	
41	535.3	2.437	.326	4.441E-04	.0377	5.370E-04	.0456	.3546	379.0500
42	535.3	2.232	.304	4.148E-04	.0352	5.015E-04	.0426	.3604	379.0500
43	535.0	2.086	.270	3.684E-04	.0313	4.454E-04	.0378	.3450	374.0500

DATE 5/12/75

AEDC(ARO,INC.) ARNOLD AFS, TENNESSEE
VON KARMAN GAS DYNAMICS FACILITY
50 INCH HYPERSONIC TUNNEL B
V41H-B7A

GROUP	TEST CONDITION	MODEL	MACH NO	PO,PSIA	TO,DEG R	ALPHA-MODEL	ALPHA-SECTOR	ALPHA-PREBEND	ROLL MODEL	YAW
7	4	140 B	7.90	109.2	1269	30.02	-.02	30.00	179.88	.0

T-INF (DEG R)	P-INF (PSIA)	Q-INF (PSIA)	V-INF (FT/SEC)	RHO-INF (SLUGS/FT3)	MU-INF (LB-SEC/FT2)	RE/FT (FT-1)	HREF-FR (R= .0400FT)	STFR (R= .0400FT)	SWITCH POSITION
94.1	.012	.530	3755	1.082E-05	7.576E-08	5.364E 05	1.178E-02	3.656E-02	1

TC NO	TW	DTWDT	CDOT	H(TO)	H(TO)/HREF	H(.9TO)	H(.9TO)/HREF
44	534.8	2.072	.281	3.834E-04	.0325	4.635E-04	.0394
45	534.7	1.622	.224	3.050E-04	.0259	3.688E-04	.0313
46	534.8	1.470	.205	2.793E-04	.0237	3.376E-04	.0287
47	533.7	1.784	.237	3.220E-04	.0273	3.891E-04	.0330
48	533.5	.843	.115	1.567E-04	.0133	1.894E-04	.0161
49	532.4	1.200	.164	2.232E-04	.0190	2.697E-04	.0229
50	532.9	.599	.083	1.127E-04	.0096	1.361E-04	.0116
51	532.9	.690	.093	1.268E-04	.0108	1.532E-04	.0130
52	531.5	.670	.092	1.245E-04	.0106	1.504E-04	.0128
53	531.6	.479	.070	9.453E-05	.0080	1.142E-04	.0097
54	531.7	.729	.104	1.408E-04	.0120	1.701E-04	.0144
55	532.2	.446	.064	8.623E-05	.0073	1.042E-04	.0088
56	531.7	.787	.101	1.373E-04	.0117	1.658E-04	.0141
57	531.6	1.047	.127	1.729E-04	.0147	2.089E-04	.0177
58	531.4	1.505	.198	2.686E-04	.0228	3.244E-04	.0275
59	531.3	1.591	.209	2.828E-04	.0240	3.416E-04	.0290
60	530.5	1.487	.206	2.793E-04	.0237	3.373E-04	.0286
61	530.6	1.419	.179	2.425E-04	.0206	2.928E-04	.0249
62	530.4	1.076	.131	1.779E-04	.0151	2.149E-04	.0182
63	531.4	.791	.103	1.397E-04	.0119	1.688E-04	.0143
64	537.1	~~-.025~~	~~-.003~~	~~-4.210E-06~~	~~-.0004~~	~~-5.093E-06~~	~~-.0004~~
65	533.0	.716	.097	1.321E-04	.0112	1.596E-04	.0136
66	532.6	1.022	.129	1.747E-04	.0148	2.111E-04	.0179
67	533.2	1.247	.175	2.377E-04	.0202	2.872E-04	.0244
68	532.7	1.921	.243	3.297E-04	.0280	3.984E-04	.0338

PROTUBERANCES

X/L	Z,FULL SCALE(IN)
.3508	374.0500
.3566	374.0500
.3604	374.0500
.3392	366.5500
.3566	366.5500
.3392	360.7000
.3566	360.7000
.3604	360.7000
.3392	353.2000
.3450	353.2000
.3508	353.2000
.3566	353.2000

SUBLIMATOR VENT NO. 1

X/L	Z,FULL SCALE(IN)
.3031	371.1300
.3074	369.1300
.3089	363.6300
.3074	358.1300
.3031	356.1300
.2988	358.1300
.2973	363.6300
.2988	369.1300
.3031	376.1300
.3089	378.6300
.3101	372.6300
.3157	370.3800
.3128	363.6300

DATE 5/12/75

AEDC(ARO,INC.) ARNOLD AFS, TENNESSEE
VON KARMAN GAS DYNAMICS FACILITY
50.INCH HYPERSONIC TUNNEL B
V41B-87A

GROUP	TEST CONDITION	MODEL	MACH NO	PO,PSIA	TO,DEG R	ALPHA-MODEL	ALPHA-SECTOR	ALPHA-PREBEND	ROLL MODEL	YAW
7	4	140 B	7.90	109.2	1269	30.02	-.02	30.00	179.88	.0

T-INF (DEG R)	P-INF (PSIA)	Q-INF (PSIA)	V-INF (FT/SEC)	RHO-INF (SLUGS/FT3)	MU-INF (LB-SEC/FT2)	RE/FT (FT-1)	HREF-FR (R= .0400FT)	STFR (R= .0400FT)	SWITCH POSITION
94.1	.012	.530	3755	1.082E-05	7.576E-08	5.364E 05	1.178E-02	3.656E-02	1

IC NO	TW	DTWDT	QDOT	H(TO)	H(TO)/HREF	H(.9TO)	H(.9TO)/HREF	X/L	Z,FULL SCALE(IN)
								FUSELAGE VENT PANEL NO. 7	
69	526.6	.902	.125	1.694E-04	.0144	2.045E-04	.0174	.2487	356.4000
70	529.2	.835	.122	1.379E-04	.0117	1.664E-04	.0141	.2591	356.4000
71	526.6	.924	.125	1.685E-04	.0143	2.032E-04	.0173	.2419	351.4000
72	526.9	1.203	.170	2.289E-04	.0194	2.761E-04	.0234	.2487	351.4000
73	527.8	.780	.101	1.360E-04	.0115	1.641E-04	.0139	.2552	351.4000
74	528.3	-4.599	-.555	-7.495E-04	-.0636	-9.045E-04	-.0768	.2610	351.4000
75	524.7	.914	.124	1.660E-04	.0141	2.001E-04	.0170	.2419	342.8000
77	526.4	.940	.133	1.785E-04	.0152	2.153E-04	.0183	.2552	342.8000
78	527.3	1.214	.166	2.237E-04	.0190	2.699E-04	.0229	.2610	342.8000
79	524.1	1.206	.153	2.059E-04	.0175	2.482E-04	.0211	.2419	334.2000
80	523.2	1.292	.175	2.349E-04	.0199	2.830E-04	.0240	.2487	334.2000
81	525.1	1.231	.171	2.296E-04	.0195	2.769E-04	.0235	.2552	334.2000
								ACCESS HATCH WINDOW	
83	533.1	1.435	.192	2.605E-04	.0221	3.147E-04	.0267	.2131	398.0000
84	531.4	1.410	.185	2.516E-04	.0214	3.039E-04	.0258	.2131	388.0000
85	530.8	1.240	.169	2.286E-04	.0194	2.760E-04	.0234	.2131	383.0000
87	532.8	.992	.142	1.926E-04	.0163	2.327E-04	.0198	.2222	395.8000
88	531.8	1.317	.184	2.496E-04	.0212	3.015E-04	.0256	.2193	386.5000
89	531.5	1.585	.233	3.154E-04	.0268	3.810E-04	.0323	.2177	381.8000
90	532.4	1.291	.176	2.388E-04	.0203	2.885E-04	.0245	.2297	389.5000
91	531.5	1.294	.177	2.404E-04	.0204	2.904E-04	.0247	.2243	382.5000
92	530.8	1.287	.179	2.420E-04	.0205	2.922E-04	.0248	.2214	378.7000
93	531.3	1.225	.156	2.118E-04	.0180	2.559E-04	.0217	.2343	374.0000
94	531.2	1.868	.242	3.286E-04	.0279	3.969E-04	.0337	.2274	375.5000
95	530.2	1.460	.207	2.803E-04	.0238	3.384E-04	.0287	.2239	373.3000
96	529.6	1.200	.156	2.105E-04	.0179	2.541E-04	.0216	.2363	368.0000
97	529.1	1.337	.170	2.303E-04	.0196	2.780E-04	.0236	.2286	368.0000
98	529.0	1.102	.154	2.084E-04	.0177	2.515E-04	.0214	.2247	368.0000
100	526.3	1.197	.169	2.275E-04	.0193	2.744E-04	.0233	.2274	360.5000
102	525.2	1.238	.174	2.340E-04	.0199	2.821E-04	.0239	.2081	354.3000
103	527.1	1.351	.177	2.383E-04	.0202	2.875E-04	.0244	.2023	362.7000
105	529.2	1.632	.204	2.754E-04	.0234	3.324E-04	.0282	.2050	378.7000
106	530.8	1.493	.191	2.569E-04	.0220	3.126E-04	.0265	.2050	386.2000

GROUP 7 CENTERLINE TIME 2.70

CH	TC	FIT LENGTH	DTDWT	UNCERTAINTY	CH	TC	FIT LENGTH	DTDWT	UNCERTAINTY
1	1	2.00	.485	.0209	50	53	2.00	.479	.0462
2	2	2.00	.445	.0224	51	54	2.00	.729	.0208
3	3	2.00	.416	.0226	52	55	2.00	.446	.0259
4	4	2.00	.403	.0204	53	56	2.00	.787	.0111
5	5	2.00	.329	.0790	54	57	1.20	1.047	.0214
6	6	2.00	.387	.0249	55	58	1.20	1.505	.0116
7	7	2.00	.357	.0983	56	59	1.20	1.591	.0464
8	8	2.00	.335	.0248	57	60	1.20	1.487	.0124
9	9	2.00	.309	.0745	58	61	1.20	1.419	.0113
10	10	2.00	.308	.0278	59	62	1.20	1.076	.0210
11	11	2.00	.226	.3863	60	63	2.00	.791	.0120
12	12	2.00	.337	.0829	61	64	2.00	-.025	-.3754
13	13	2.00	.261	.0274	62	65	2.00	.716	.0098
14	14	2.00	.276	.0292	63	66	1.20	1.022	.0176
15	15	2.00	.246	.0592	64	67	1.20	1.247	.0321
16	16	2.00	.210	.0406	65	68	1.20	1.921	.0102
17	17	2.00	.244	.0807	66	69	2.00	.902	.0129
18	18	2.00	.156	.1165	67	70	2.00	.835	.0087
19	19	2.00	.122	.0780	68	71	2.00	.924	.1120
20	22	.80	2.138	.0257	69	72	1.20	1.203	.0326
21	23	1.20	1.806	.0091	70	73	2.00	.780	.0128
22	24	1.20	1.837	.0129	71	74	2.00	-4.599	-1.2328
23	25	1.20	1.849	.0207	72	75	2.00	.914	.0140
24	26	.80	1.998	.0239	73	77	2.00	.940	.0104
25	27	1.20	1.805	.0113	74	78	1.20	1.214	.0226
26	28	1.20	1.263	.0189	75	79	1.20	1.206	.0274
27	29	1.20	1.444	.0139	76	80	1.20	1.292	.0244
28	30	1.20	1.723	.0107	77	81	1.20	1.231	.0179
29	31	1.20	1.796	.0105	78	83	1.20	1.435	.0129
30	32	1.20	1.826	.0101	79	84	1.20	1.410	.0770
31	33	2.00	.939	.0079	80	85	1.20	1.240	.0151
32	34	1.20	1.371	.0151	81	87	2.00	.992	.0121
33	35	1.20	1.190	.0141	82	88	1.20	1.317	.0100
34	36	2.00	.611	.0132	83	89	1.20	1.585	.0249
35	37	2.00	.872	.0108	84	90	1.20	1.291	.0145
36	38	2.00	.685	.0127	85	91	1.20	1.294	.0153
37	39	2.00	.559	.0152	86	92	1.20	1.267	.0161
38	41	.80	2.437	.0185	87	93	1.20	1.225	.0326
39	42	.80	2.232	.0119	88	94	1.20	1.868	.0115
40	43	.80	2.086	.0227	89	95	1.20	1.460	.0199
41	44	.80	2.072	.0091	90	96	1.20	1.200	.0962
42	45	1.20	1.622	.0079	91	97	1.20	1.337	.0233
43	46	1.20	1.470	.0136	92	98	1.20	1.102	.0363
44	47	1.20	1.784	.0137	93	100	1.20	1.197	.0191
45	48	2.00	.843	.0109	94	102	1.20	1.238	.0302
46	49	1.20	1.200	.0104	95	103	1.20	1.351	.0188
47	50	2.00	.599	.0392	96	105	1.20	1.632	.0131
48	51	2.00	.690	.0124	97	106	1.20	1.493	.0158
49	52	2.00	.670	.0178	98	0	-0	0	0

B .050

HIT ON LOOP 57

DATE 5/12/75

AEDC(ARO,INC.) ARNOLD AFS, TENNESSEE
VON KARMAN GAS DYNAMICS FACILITY
50 INCH HYPERSONIC TUNNEL B
V41P-87A

GROUP	TEST CONDITION	MODEL	MACH NO	PO,PSIA	TO,DEG R	ALPHA-MODEL	ALPHA-SECTOR	ALPHA-PREBEND	ROLL MODEL	YAW
8	4	140 B	7.90	110.1	1268	30.02	-.02	30.00	179.88	.0

T-INF (DEG R)	P-INF (PSIA)	Q-INF (PSIA)	V-INF (FT/SEC)	RHO-INF (SLUGS/FT3)	MU-INF (LB-SEC/FT2)	RE/FT (FT-1)	HREF-FR (R= .0400FT)	STFR (R= .0400FT)	SWITCH POSITION
95.1	.012	.535	3755	1.091E-05	7.575E-08	5.409E 05	1.183E-02	3.641E-02	2

TC NO	TW	DTWDT	QDOT	H(TO)	H(TO)/HREF	H(.9TO)	H(.9TO)/HREF	X/L	Z,FULL SCALE(IN)
								ACCESS HATCH WINDOW	
107	531.0	1.366	.196	2.651E-04	.0224	3.202E-04	.0271	.2050	396.2000
								FUSELAGE VENT PANEL NO. 3 AND 1	
108	531.3	2.514	.266	3.604E-04	.0305	4.353E-04	.0368	.1244	377.5000
109	530.8	2.244	.277	3.757E-04	.0318	4.537E-04	.0384	.1302	377.5000
110	530.5	2.226	.282	3.819E-04	.0323	4.612E-04	.0390	.1360	377.5000
111	530.8	2.239	.269	3.653E-04	.0309	4.412E-04	.0373	.1418	377.5000
112	530.7	2.276	.270	3.659E-04	.0309	4.419E-04	.0374	.1476	377.5000
113	530.1	2.275	.261	3.529E-04	.0298	4.261E-04	.0360	.1215	273.5000
114	530.0	2.291	.275	3.719E-04	.0314	4.491E-04	.0380	.1273	273.5000
115	530.3	2.145	.266	3.600E-04	.0304	4.347E-04	.0368	.1331	273.5000
116	529.7	2.239	.274	3.714E-04	.0314	4.484E-04	.0379	.1389	273.5000
117	529.7	2.347	.270	3.652E-04	.0309	4.409E-04	.0373	.1447	273.5000
118	528.0	1.851	.256	3.450E-04	.0292	4.164E-04	.0352	.1409	366.0000
119	527.8	2.186	.282	3.809E-04	.0322	4.597E-04	.0389	.1442	366.0000
120	526.7	2.312	.288	3.883E-04	.0328	4.684E-04	.0396	.1215	359.5000
121	526.3	2.026	.248	3.340E-04	.0282	4.028E-04	.0341	.1303	359.5000
122	526.0	2.189	.272	3.658E-04	.0309	4.412E-04	.0373	.1337	359.5000
								LOWER RCS NOZZLES	
124	536.0	1.388	.124	1.694E-04	.0143	2.048E-04	.0173	.0950	400.0000
125	533.5	1.399	.152	2.073E-04	.0175	2.506E-04	.0212	.0988	400.0000
126	534.5	1.123	.154	2.098E-04	.0177	2.536E-04	.0214	.1027	400.0000
127	535.9	1.342	.191	2.473E-04	.0209	2.990E-04	.0253	.0911	395.0000
128	535.2	1.395	.170	2.313E-04	.0196	2.797E-04	.0236	.0950	395.0000
129	534.8	1.456	.171	2.332E-04	.0197	2.820E-04	.0238	.0988	395.0000
130	537.5	1.441	.173	2.364E-04	.0200	2.860E-04	.0242	.0810	390.0000
131	536.6	1.398	.207	2.828E-04	.0239	3.420E-04	.0289	.0857	390.0000
132	534.8	1.568	.183	2.492E-04	.0211	3.013E-04	.0255	.0963	390.0000
133	535.8	1.353	.164	2.245E-04	.0190	2.715E-04	.0230	.0857	383.8000
134	534.6	1.745	.234	3.187E-04	.0269	3.853E-04	.0326	.0872	377.3000
135	533.9	2.442	.293	3.993E-04	.0338	4.826E-04	.0408	.0903	374.5500
136	532.7	2.684	.298	4.053E-04	.0343	4.898E-04	.0414	.0960	374.5500
137	533.9	2.433	.318	4.334E-04	.0366	5.238E-04	.0443	.0872	370.5500
138	533.0	2.790	.321	4.370E-04	.0369	5.280E-04	.0446	.0928	370.5500
139	534.9	2.418	.309	4.212E-04	.0356	5.092E-04	.0431	.0816	366.0500
140	532.1	2.658	.338	4.589E-04	.0388	5.544E-04	.0469	.0934	362.4000
141	530.7	2.495	.329	4.462E-04	.0377	5.388E-04	.0456	.0973	362.4000
142	529.7	1.946	.212	2.885E-04	.0242	3.459E-04	.0292	.0833	355.2000
143	531.6	2.871	.288	3.910E-04	.0331	4.723E-04	.0399	.0919	355.2000
144	529.7	3.459	.455	6.155E-04	.0520	7.431E-04	.0628	.0949	349.0000

DATE 5/12/75

AEDC(ARO,INC.) ARNOLD AFS, TENNESSEE
VON KARMAN GAS DYNAMICS FACILITY
50 INCH HYPERSONIC TUNNEL B
V41B-87A

GROUP	TEST CONDITION	MODEL	MACH NO	PO,PSIA	TO,DEG R	ALPHA-MODEL	ALPHA-SECTOR	ALPHA-PREBEND	ROLL MODEL	YAW
B	4	140 B	7.90	110.1	1268	30.02	-.02	30.00	179.88	.0

T-INF (DEG R)	P-INF (PSIA)	Q-INF (PSIA)	V-INF (FT/SEC)	RHO-INF (SLUGS/FT3)	MU-INF (LB-SEC/FT2)	RE/FT (FT-1)	HREF-FR (R= .0400FT)	STFR (R= .0400FT)	SWITCH POSITION
94.1	.012	.535	3755	1.091E-05	7.575E-08	5.409E 05	1.183E-02	3.641E-02	2

TC NO	TW	DTWDT	QDOT	H(TO)	H(TO)/HREF	H(.9TO)	H(.9TO)/HREF	X/L	2Y/B
								UPPER RCS NOZZLES	
161	538.6	.995	.118	1.617E-04	.0137	1.957E-04	.0166	.0619	-.0160
162	538.6	.882	.084	1.147E-04	.0097	1.388E-04	.0117	.0709	-.0160
163	538.1	.659	.081	1.110E-04	.0094	1.344E-04	.0114	.0807	-.0160
164	537.6	.524	.068	9.365E-05	.0079	1.133E-04	.0096	.0943	-.0160
165	537.4	.469	.059	8.092E-05	.0068	9.790E-05	.0083	.0978	-.0160
166	537.7	.385	.049	6.758E-05	.0057	8.177E-05	.0069	.1013	-.0160
167	538.5	.870	.118	1.616E-04	.0137	1.955E-04	.0165	.0619	-.0320
168	538.2	.911	.096	1.311E-04	.0111	1.587E-04	.0134	.0709	-.0320
169	537.5	.610	.074	1.016E-04	.0086	1.229E-04	.0104	.0807	-.0320
170	537.1	.584	.073	1.000E-04	.0085	1.210E-04	.0102	.0943	-.0320
171	536.8	.570	.069	9.411E-05	.0080	1.138E-04	.0096	.0978	-.0320
172	536.6	.470	.061	8.390E-05	.0071	1.015E-04	.0086	.1013	-.0320
173	537.5	.534	.071	9.767E-05	.0083	1.182E-04	.0100	.0807	-.0480
174	536.6	.426	.049	6.641E-05	.0056	8.033E-05	.0068	.0943	-.0480
175	536.6	.454	.065	8.904E-05	.0075	1.077E-04	.0091	.0978	-.0480
176	536.6	.327	.045	6.095E-05	.0052	7.373E-05	.0062	.1013	-.0480
								CANOPY	
177	541.2	3.311	.457	6.285E-04	.0531	7.613E-04	.0644		
178	541.9	3.634	.717	9.867E-04	.0834	1.195E-03	.1011		
179	541.5	3.202	.673	9.261E-04	.0783	1.122E-03	.0949		
180	538.1	1.198	.157	2.143E-04	.0181	2.593E-04	.0219		
181	538.9	1.509	.205	2.815E-04	.0238	3.408E-04	.0288		
182	538.8	1.348	.192	2.638E-04	.0223	3.193E-04	.0270		
183	535.6	.242	.030	4.153E-05	.0035	5.022E-05	.0042		
184	535.6	.241	.033	4.497E-05	.0038	5.439E-05	.0046		
185	537.7	1.146	.138	1.887E-04	.0160	2.284E-04	.0193		
186	538.4	1.425	.179	2.455E-04	.0208	2.972E-04	.0251		
187	539.4	1.204	.161	2.204E-04	.0186	2.668E-04	.0226		
188	540.0	1.868	.436	5.985E-04	.0506	7.247E-04	.0613		
189	536.9	.680	.097	1.326E-04	.0112	1.604E-04	.0136		
190	537.4	.878	.126	1.729E-04	.0146	2.092E-04	.0177		
191	538.1	1.033	.158	2.165E-04	.0183	2.620E-04	.0222		

DATE 5/12/75

AEDC(ARO,INC.) ARNOLD AFS, TENNESSEE
VON KARMAN GAS DYNAMICS FACILITY
50 INCH HYPERSONIC TUNNEL B
V41B-87A

GROUP	TEST CONDITION	MODEL	MACH NO	PO,PSIA	TO,DEG R	ALPHA-MODEL	ALPHA-SECTOR	ALPHA-PREBEND	ROLL MODEL	YAW
B	4	140 B	7.90	110.1	1268	30.02	-.02	30.00	179.88	.0

T-INF (DEG R)	P-INF (PSIA)	Q-INF (PSIA)	V-INF (FT/SEC)	RHO-INF (SLUGS/FT3)	MU-INF (LB-SEC/FT2)	RE/FT (FT-1)	HREF-FR (R= .0400FT)	STFR (R= .0400FT)	SWITCH POSITION
94.1	.012	.535	3755	1.091E-05	7.575E-08	5.409E 05	1.183E-02	3.641E-02	2

IC NO	TW	DT*ST	QDOT	H(TO)	H(TO)/HREF	H(.9TO)	H(.9TO)/HREF
						CANOPY	
192	534.0	.224	.032	4.376E-05	.0037	5.289E-05	.0045
193	535.2	1.317	.234	3.479E-04	.0294	4.210E-04	.0356
194	534.5	.235	.030	4.131E-05	.0035	4.994E-05	.0042
195	535.1	.472	.058	7.935E-05	.0067	9.594E-05	.0081
196	535.9	.425	.056	7.631E-05	.0065	9.229E-05	.0078
197	532.9	.224	.022	3.013E-05	.0025	3.641E-05	.0031
198	533.1	.271	.031	4.276E-05	.0036	5.168E-05	.0044
199	532.2	-.306	-.041	-5.560E-05	-.0047	-6.741E-05	-.0057
200	534.4	.566	.045	1.157E-04	.0098	1.399E-04	.0118
201	536.1	.931	.131	1.794E-04	.0152	2.170E-04	.0184
202	536.3	1.045	.132	1.806E-04	.0153	2.185E-04	.0185
203	532.7	.314	.039	5.290E-05	.0045	6.392E-05	.0054
204	533.3	.329	.051	6.959E-05	.0059	8.410E-05	.0071
205	535.3	.788	.123	1.675E-04	.0142	2.026E-04	.0171
206	532.0	.627	.083	1.129E-04	.0095	1.364E-04	.0115
207	534.0	.864	.116	1.590E-04	.0134	1.923E-04	.0163
208	532.4	.272	.036	4.957E-05	.0042	5.989E-05	.0051
209	532.7	.342	.047	6.394E-05	.0054	7.726E-05	.0065
210	533.4	.183	.024	3.330E-05	.0028	4.024E-05	.0034
211	532.4	.547	.066	9.016E-05	.0076	1.089E-04	.0092
212	532.4	.370	.050	6.774E-05	.0057	8.185E-05	.0069
213	532.3	.370	.049	6.668E-05	.0056	8.057E-05	.0068
214	532.7	.405	.057	7.716E-05	.0065	9.323E-05	.0079
215	533.0	.180	.026	3.481E-05	.0029	4.207E-05	.0036
216	534.8	.780	.111	1.511E-04	.0128	1.827E-04	.0154
217	535.1	.740	.105	1.438E-04	.0122	1.739E-04	.0147
218	531.9	.405	.056	7.584E-05	.0064	9.162E-05	.0077
219	532.1	.075	.010	1.425E-05	.0012	1.722E-05	.0015
220	532.4	.234	.032	4.376E-05	.0037	5.288E-05	.0045

GROUP 8 CENTERLINE TIME 2.80

CH	TC	FIT LENGTH	DTDWT	UNCERTAINTY	CH	TC	FIT LENGTH	DTDWT	UNCERTAINTY
1	107	1.20	1.366	.0136	50	173	2.00	.534	.0371
2	108	.80	2.514	.0137	51	174	2.00	.426	.0432
3	109	.80	2.244	.0103	52	175	2.00	.454	.0319
4	110	.80	2.226	.0102	53	176	2.00	.327	.0263
5	111	.80	2.239	.0248	54	177	.80	3.311	.0143
6	112	.80	2.276	.0137	55	178	.80	3.634	.0101
7	113	.80	2.275	.0715	56	179	.80	3.202	.0242
8	114	.80	2.291	.0160	57	180	1.20	1.198	.0141
9	115	.80	2.145	.0335	58	181	1.20	1.509	.0110
10	116	.80	2.239	.0182	59	182	1.20	1.348	.0185
11	117	.80	2.347	.0194	60	183	2.00	.242	.0363
12	118	1.20	1.851	.0170	61	184	2.00	.241	.0727
13	119	.80	2.186	.0145	62	185	1.20	1.146	.0146
14	120	.80	2.312	.0147	63	186	1.20	1.425	.0148
15	121	.80	2.026	.0163	64	187	1.20	1.204	.0182
16	122	.80	2.189	.0237	65	188	1.20	1.868	.0114
17	124	1.20	1.388	.0237	66	189	2.00	.680	.0166
18	125	1.20	1.399	.0089	67	190	2.00	.878	.0075
19	126	1.20	1.123	.0165	68	191	1.20	1.033	.1804
20	127	1.20	1.342	.0206	69	192	2.00	.228	.0963
21	128	1.20	1.395	.0116	70	193	1.20	1.317	.0174
22	129	1.20	1.456	.0164	71	194	2.00	.235	.0823
23	130	1.20	1.441	.0244	72	195	2.00	.472	.0223
24	131	1.20	1.398	.0213	73	196	2.00	.425	.0226
25	132	1.20	1.568	.0150	74	197	2.00	.224	.0384
26	133	1.20	1.353	.0098	75	198	2.00	.271	.0371
27	134	1.20	1.745	.0101	76	199	2.00	-.306	-.0818
28	135	.80	2.442	.0120	77	200	2.00	.596	.0133
29	136	.80	2.684	.0091	78	201	2.00	.930	.0095
30	137	.80	2.433	.0191	79	202	1.20	1.045	.1103
31	138	.80	2.790	.0107	80	203	2.00	.314	.1580
32	139	.80	2.418	.0105	81	204	2.00	.329	.0316
33	140	.80	2.658	.0068	82	205	2.00	.788	.0086
34	141	.80	2.495	.0176	83	206	2.00	.627	.0289
35	142	1.20	1.946	.0076	84	207	2.00	.869	.0134
36	143	.80	2.871	.0126	85	208	2.00	.272	.0307
37	144	.80	3.459	.0080	86	209	2.00	.342	.0247
38	161	2.00	.995	.0123	87	210	2.00	.163	.1061
39	162	2.00	.882	.0142	88	211	2.00	.547	.0180
40	163	2.00	.659	.0500	89	212	2.00	.370	.0364
41	164	2.00	.524	.0138	90	213	2.00	.370	.1640
42	165	2.00	.469	.0151	91	214	2.00	.405	.0423
43	166	2.00	.385	.0305	92	215	2.00	.180	.1357
44	167	2.00	.870	.0082	93	216	2.00	.780	.0126
45	168	2.00	.911	.0091	94	217	2.00	.740	.0206
46	169	2.00	.610	.0112	95	218	2.00	.405	.0283
47	170	2.00	.584	.0304	96	219	2.00	.075	.3312
48	171	2.00	.570	.0147	97	220	2.00	.234	.0404
49	172	2.00	.470	.0224	98	0	-0	0	0
	S	.050							

BIT ON LOOP 57

DATE 5/12/75

AEDC(APO,INC.) ARNOLD AFS, TENNESSEE
VON KARMAN GAS DYNAMICS FACILITY
50 INCH HYPERSONIC TUNNEL B
V41R-B7A

GROUP	TEST CONDITION	MODEL	MACH NO	PO,PSIA	TO,DEG R	ALPHA-MODEL	ALPHA-SECTOR	ALPHA-PREBEND	ROLL MODEL	YAW
9	4	140 B	7.90	111.2	1269	30.01	-.01	30.00	179.88	.0

T-INF (DEG R)	P-INF (PSIA)	Q-INF (PSIA)	V-INF (FT/SEC)	RHO-INF (SLUGS/FT3)	MU-INF (LB-SEC/FT2)	RE/FT (FT-1)	HREF-FR (R= .0400FT)	STFR (R= .0400FT)	SWITCH POSITION
94.1	.012	.540	3755	1.102E-05	7.576E-08	5.463E 05	1.189E-02	3.623E-02	3

TC NO	TW	DTWDT	QDOT	H(TO)	H(TO)/HREF	H(.9TO)	H(.9TO)/HREF	X/L	2Y/B
							CANOPY		
221	529.9	.355	.043	5.806E-05	.0049	7.010E-05	.0059		
222	528.6	.380	.047	6.315E-05	.0053	7.621E-05	.0064		
223	528.9	.636	.086	1.164E-04	.0098	1.405E-04	.0118		
							ESCAPE HATCH AND WINDOW		
224	534.6	1.859	.185	2.522E-04	.0212	3.049E-04	.0257	.1933	.0162
225	534.0	1.234	.148	2.010E-04	.0169	2.429E-04	.0204	.1972	.0162
226	533.6	1.881	.198	2.697E-04	.0227	3.260E-04	.0274	.1933	.0384
227	532.6	1.396	.204	2.776E-04	.0234	3.354E-04	.0282	.1972	.0384
228	531.4	1.209	.155	2.106E-04	.0177	2.544E-04	.0214	.1933	.0653
229	531.8	1.064	.147	1.855E-04	.0156	2.241E-04	.0189	.1972	.0653
232	534.1	.163	.022	3.003E-05	.0025	3.630E-05	.0031	.2567	.0235
233	534.7	.185	.028	3.820E-05	.0032	4.618E-05	.0039	.2606	.0235
236	533.1	.220	.032	4.373E-05	.0037	5.284E-05	.0044	.2567	.0491
237	533.7	.220	.031	4.214E-05	.0035	5.093E-05	.0043	.2606	.0491
							CARGO BAY HINGE NO. 1	X/L	Z,FULL SCALE(IN)
238	533.1	.917	.123	1.670E-04	.0141	2.018E-04	.0170	.2879	420.0000
239	533.3	.850	.114	1.548E-04	.0130	1.871E-04	.0157	.2917	420.0000
240	532.4	.794	.113	1.539E-04	.0129	1.860E-04	.0156	.2840	415.0000
241	532.6	.781	.110	1.492E-04	.0125	1.802E-04	.0152	.2879	415.0000
242	530.4	.758	.108	1.465E-04	.0123	1.769E-04	.0149	.2917	415.0000
243	531.2	.892	.109	1.477E-04	.0124	1.784E-04	.0150	.2801	405.0000
244	531.3	.797	.093	1.263E-04	.0106	1.526E-04	.0128	.2840	405.0000
							CARGO BAY HINGE NO. 2	X/L	Z,FULL SCALE(IN)
245	532.8	.726	.104	1.409E-04	.0119	1.703E-04	.0143	.3192	420.0000
246	533.1	.654	.093	1.270E-04	.0107	1.535E-04	.0129	.3439	420.0000
247	532.1	.659	.097	1.317E-04	.0111	1.591E-04	.0134	.3362	415.0000
248	532.3	.485	.071	9.707E-05	.0082	1.173E-04	.0099	.3401	415.0000
249	532.6	.553	.081	1.106E-04	.0093	1.336E-04	.0112	.3439	415.0000
250	531.4	.511	.064	8.695E-05	.0073	1.050E-04	.0088	.3323	405.0000
251	531.3	.631	.077	1.049E-04	.0088	1.267E-04	.0107	.3362	405.0000
							CARGO BAY HINGE NO. 3	X/L	Z,FULL SCALE(IN)
252	532.7	1.343	.195	2.646E-04	.0223	3.197E-04	.0269	.3923	420.0000
253	533.6	1.439	.209	2.841E-04	.0239	3.434E-04	.0289	.3961	420.0000
254	532.2	1.270	.193	2.616E-04	.0220	3.160E-04	.0266	.3884	415.0000
257	531.2	1.812	.244	3.309E-04	.0278	3.996E-04	.0336	.3845	405.0000
258	531.6	1.976	.269	3.647E-04	.0307	4.405E-04	.0371	.3884	405.0000

DATE 5/12/75

AEDC(ARO,INC.) ARNOLD AFS, TENNESSEE
VON KARMAN GAS DYNAMICS FACILITY
50 INCH HYPERSONIC TUNNEL B
V418-B7A

GROUP	TEST CONDITION	MODEL	MACH NO	PO,PSIA	TO,DEG R	ALPHA-MODEL	ALPHA-SECTOR	ALPHA-PREBEND	ROLL MODEL	YAW
9	4	140 B	7.90	111.2	1269	30.01	-.01	30.00	179.88	.0

T-INF (DEG R)	P-INF (PSIA)	Q-INF (PSIA)	V-INF (FT/SEC)	RHO-INF (SLUGS/FT3)	MU-INF (LB-SEC/FT2)	RE/FT (FT-1)	HREF-FR (R= .0400FT)	STFR (R= .0400FT)	SWITCH POSITION
94.1	.012	.540	3755	1.102E-05	7.570E-08	5.463E 05	1.189E-02	3.623E-02	3

TOP CENTERLINE

TC NO	TW	DTWDT	QDOT	H(TO)	H(TO)/HREF	H(.9TO)	H(.9TO)/HREF	X/L
367	561.1	39.697	4.727	6.680E-03	.5620	8.139E-03	.6847	0
368	550.1	27.586	3.528	4.909E-03	.4130	5.962E-03	.5016	.0008
369	543.7	17.977	2.114	2.916E-03	.2453	3.534E-03	.2973	.0019
370	540.7	13.010	1.592	2.186E-03	.1839	2.648E-03	.2228	.0037
371	538.1	9.528	.934	1.278E-03	.1075	1.547E-03	.1301	.0058
372	536.1	6.435	.829	1.131E-03	.0951	1.368E-03	.1151	.0087
373	534.8	4.163	.545	7.426E-04	.0625	8.978E-04	.0755	.0118
374	534.6	3.151	.412	5.618E-04	.0473	6.792E-04	.0571	.0151
375	533.9	2.572	.352	4.784E-04	.0402	5.783E-04	.0486	.0182
376	534.3	2.386	.314	4.281E-04	.0360	5.175E-04	.0435	.0215
377	534.7	2.072	.267	3.632E-04	.0306	4.391E-04	.0369	.0246
378	535.2	1.726	.201	2.744E-04	.0231	3.318E-04	.0279	.0278
379	535.8	1.173	.144	1.967E-04	.0165	2.379E-04	.0200	.0609
380	535.4	.997	.103	1.398E-04	.0118	1.690E-04	.0142	.0646
381	534.9	.858	.111	1.515E-04	.0127	1.832E-04	.0154	.0684
382	534.7	.745	.098	1.329E-04	.0112	1.607E-04	.0135	.0721
383	534.8	.678	.091	1.238E-04	.0104	1.496E-04	.0126	.0760
384	535.1	.450	.063	8.551E-05	.0072	1.034E-04	.0087	.0796
385	535.4	.526	.068	9.240E-05	.0078	1.117E-04	.0094	.0789
386	535.4	.579	.069	9.355E-05	.0079	1.131E-04	.0095	.0982
387	535.4	.614	.075	1.029E-04	.0087	1.245E-04	.0105	.1019
388	535.8	.796	.076	1.035E-04	.0087	1.251E-04	.0105	.1160
389	535.1	.686	.100	1.357E-04	.0114	1.641E-04	.0138	.1195
390	535.1	.591	.093	1.270E-04	.0107	1.535E-04	.0129	.1231
391	534.5	.562	.090	1.222E-04	.0103	1.477E-04	.0124	.1268
392	534.6	.571	.098	1.335E-04	.0112	1.613E-04	.0136	.1305
393	534.5	.570	.096	1.314E-04	.0111	1.588E-04	.0134	.1338
394	534.3	.565	.095	1.291E-04	.0109	1.561E-04	.0131	.1376
395	534.2	.550	.082	1.120E-04	.0094	1.353E-04	.0114	.1411
396	534.5	.566	.084	1.143E-04	.0096	1.382E-04	.0116	.1448
397	534.7	.619	.092	1.251E-04	.0105	1.512E-04	.0127	.1483
398	534.9	.361	.051	6.922E-05	.0058	8.369E-05	.0070	.1519
399	536.2	1.767	.236	3.224E-04	.0271	3.899E-04	.0328	.1556

DATE 5/12/75

AEDC(ARO,INC.) ARNOLD AFS, TENNESSEE
VON KARMAN GAS DYNAMICS FACILITY
50 INCH HYPERSONIC TUNNEL B
V41B-B7A

GROUP	TEST CONDITION	MODEL	MACH NO	PO,PSIA	TO,DEG R	ALPHA-MODEL	ALPHA-SECTOR	ALPHA-PREBEND	ROLL MODEL	YAW
9	4	140 B	7.90	111.2	1269	30.01	-.01	30.00	179.88	.0

T-INF (DEG R)	P-INF (PSIA)	Q-INF (PSIA)	V-INF (FT/SEC)	RHO-INF (SLUGS/FT3)	MU-INF (LB-SEC/FT2)	RE/FT (FT-1)	HREF-FR (R= .0400FT)	STFR (R= .0400FT)	SWITCH POSITION
94.1	.012	.540	3755	1.102E-05	7.576E-08	5.463E 05	1.189E-02	3.623E-02	3

TC NO	TW	DTWDT	QDOT	H(TO)	H(TO)/HREF	H(.9TO)	H(.9TO)/HREF	X/L	2Y/B
								TOP CENTERLINE	
400	534.6	2.761	.373	5.093E-04	.0428	6.160E-04	.0518	.1582	
401	536.5	3.043	.395	5.390E-04	.0453	6.520E-04	.0549	.1608	
402	537.5	4.093	.511	6.988E-04	.0588	8.455E-04	.0711	.1635	
403	537.1	4.525	.551	7.526E-04	.0633	9.105E-04	.0766	.1664	
404	537.4	3.982	.483	6.602E-04	.0555	7.988E-04	.0672	.1691	
405	537.9	4.428	.537	7.348E-04	.0618	8.892E-04	.0748	.1720	
406	537.3	4.226	.512	7.065E-04	.0589	8.475E-04	.0713	.1748	
407	537.5	3.760	.486	6.649E-04	.0559	8.044E-04	.0677	.1769	
408	537.2	3.373	.495	6.766E-04	.0569	8.186E-04	.0689	.1800	
409	536.5	2.932	.422	5.766E-04	.0485	6.974E-04	.0587	.1831	
410	535.7	2.714	.391	5.328E-04	.0448	6.444E-04	.0542	.1863	
411	536.2	1.916	.288	3.929E-04	.0331	4.752E-04	.0400	.1894	
412	536.1	1.529	.208	2.837E-04	.0239	3.432E-04	.0289	.1931	
413	535.0	1.048	.140	1.915E-04	.0161	2.315E-04	.0195	.1972	
414	535.1	.656	.088	1.198E-04	.0101	1.449E-04	.0122	.2049	
415	534.2	.346	.034	4.645E-05	.0039	5.615E-05	.0047	.2250	
416	535.0	.217	.025	3.466E-05	.0029	4.190E-05	.0035	.2500	
								NOSE TC (Z = 338)	
145	555.4	27.303	3.698	5.184E-03	.4362	6.306E-03	.5305	.0008	.5039
146	554.5	27.074	3.665	5.132E-03	.4317	6.240E-03	.5250	.0023	.5082
147	548.7	21.330	2.879	3.999E-03	.3364	4.854E-03	.4084	.0043	.5135
148	547.0	16.485	2.297	3.183E-03	.2678	3.862E-03	.3249	.0068	.5205
149	545.0	12.700	1.837	2.548E-03	.2135	3.077E-03	.2589	.0095	.5279
150	545.4	11.640	1.668	2.306E-03	.1940	2.797E-03	.2353	.0122	.5354
151	544.2	7.824	1.099	1.518E-03	.1277	1.840E-03	.1548	.0218	.5621
152	542.2	7.663	1.038	1.429E-03	.1202	1.731E-03	.1456	.0251	.5712
153	541.1	8.229	1.003	1.379E-03	.1160	1.670E-03	.1405	.0286	.5808
154	540.7	8.182	1.016	1.395E-03	.1174	1.690E-03	.1421	.0319	.5898
155	540.0	7.875	.988	1.355E-03	.1140	1.641E-03	.1381	.0354	.5995
156	538.3	7.175	.890	1.218E-03	.1025	1.474E-03	.1240	.0387	.6085
157	537.4	6.853	.840	1.149E-03	.0966	1.390E-03	.1169	.0420	.6176
158	536.1	7.059	.865	1.160E-03	.0993	1.427E-03	.1201	.0462	.6294
159	535.7	6.853	.766	1.045E-03	.0879	1.263E-03	.1063	.0503	.6406

GROUP 9 CENTERLINE TIME 2.80

CH	TC	FIT LENGTH	DTDWT	UNCERTAINTY	CH	TC	FIT LENGTH	DTDWT	UNCERTAINTY
1	221	2.00	.355	.0336	50	384	2.00	.450	.0493
2	222	2.00	.380	.0249	51	385	2.00	.526	.0260
3	223	2.00	.636	.0111	52	386	2.00	.579	.0264
4	224	1.20	1.859	.0099	53	387	2.00	.614	.0154
5	225	1.20	1.234	.0254	54	388	2.00	.796	.0168
6	226	1.20	1.681	.0119	55	389	2.00	.686	.0110
7	227	1.20	1.396	.0526	56	390	2.00	.591	.0549
8	228	1.20	1.209	.0116	57	391	2.00	.562	.0152
9	229	2.00	1.064	.0292	58	392	2.00	.571	.0139
10	232	2.00	.163	.0544	59	393	2.00	.570	.0232
11	233	2.00	.185	.0599	60	394	2.00	.565	.0168
12	236	2.00	.220	.0800	61	395	2.00	.550	.0316
13	237	2.00	.220	.0403	62	396	2.00	.566	.0111
14	238	2.00	.917	.0139	63	397	2.00	.619	.0161
15	239	2.00	.850	.0193	64	398	2.00	.361	.0609
16	240	2.00	.794	.0101	65	399	1.20	1.767	.0118
17	241	2.00	.781	.0264	66	400	.80	2.761	.0209
18	242	2.00	.758	.0198	67	401	.80	3.043	.0088
19	243	2.00	.892	.0112	68	402	.80	4.093	.0711
20	244	2.00	.797	.0215	69	403	.60	4.525	.0260
21	245	2.00	.726	.0114	70	404	.60	3.982	.0188
22	246	2.00	.654	.0157	71	405	.60	4.428	.0268
23	247	2.00	.659	.0379	72	406	.60	4.226	.0119
24	248	2.00	.485	.0278	73	407	.80	3.760	.0105
25	249	2.00	.553	.0226	74	408	.80	3.373	.0135
26	250	2.00	.511	.0208	75	409	.80	2.932	.0413
27	251	2.00	.631	.0136	76	410	.80	2.714	.0161
28	252	1.20	1.343	.0149	77	411	1.20	1.916	.0091
29	253	1.20	1.439	.0139	78	412	1.20	1.529	.0118
30	254	1.20	1.270	.0132	79	413	1.20	1.048	.1015
31	257	1.20	1.812	.0098	80	414	2.00	.656	.0094
32	258	1.20	1.976	.0077	81	415	2.00	.346	.0333
33	367	.20	39.697	.0041	82	416	2.00	.217	.0326
34	368	.30	27.586	.0040	83	145	.30	27.303	.0032
35	369	.30	17.977	.0306	84	146	.30	27.074	.0031
36	370	.40	13.010	.0083	85	147	.30	21.330	.0039
37	371	.40	9.528	.0062	86	148	.30	16.485	.0082
38	372	.60	6.435	.0077	87	149	.40	12.700	.0230
39	373	.60	4.163	.0104	88	150	.40	11.640	.0063
40	374	.80	3.151	.0146	89	151	.60	7.824	.0109
41	375	.80	2.572	.0115	90	152	.40	7.663	.0362
42	376	.80	2.386	.0153	91	153	.40	8.229	.0251
43	377	.80	2.072	.0151	92	154	.40	8.182	.0188
44	378	1.20	1.726	.0109	93	155	.60	7.875	.0065
45	379	1.20	1.173	.0130	94	156	.60	7.175	.0115
46	380	2.00	.997	.0098	95	157	.60	6.853	.0101
47	381	2.00	.858	.0271	96	158	.60	7.059	.0072
48	382	2.00	.745	.0341	97	159	.60	6.853	.0098
49	383	2.00	.678	.0161	98	0	-0	0	0

10 .050

HIT ON LOOP 56

DATE 5/12/75

AEDC(ARO,INC.) ARNOLD AFS, TENNESSEE
VON KARMAN GAS DYNAMICS FACILITY
50 INCH HYPERSONIC TUNNEL B
V418-87A

.ESI

GROUP	CONDITION	MODEL	MACH NO	PO,PSIA	TO,DEG R	ALPHA-MODEL	ALPHA-SECTOR	ALPHA-PREBEND	ROLL MODEL	YAW
10	5	140 H	7.90	109.6	1268	30.00	-2.05	30.00	90.00	2.0

T-INF (DEG R)	P-INF (PSIA)	Q-INF (PSIA)	V-INF (FT/SEC)	RHO-INF (SLUGS/FT3)	MU-INF (LB-SEC/FT2)	RE/FT (FT-1)	HREF-FR (R= .0400FT)	STFR (R= .0400FT)	SWITCH POSITION
94.0	.012	.532	3754	1.087E-05	7.571E-08	5.389E 05	1.180E-02	3.648E-02	1

TC NO	TW	DT=DT	QDOT	H(TO)	H(TO)/HREF	H(.9TO)	H(.9TO)/HREF	X/L	Z,FULL SCALE(IN)
								FUSELAGE VENT NO. 1	
1	533.4	.536	.071	9.608E-05	.0081	1.161E-04	.0098	.4434	376.6300
2	532.3	.521	.070	9.514E-05	.0081	1.150E-04	.0097	.4264	371.6300
3	532.2	.464	.063	8.630E-05	.0073	1.043E-04	.0088	.4303	371.6300
4	532.4	.488	.066	9.003E-05	.0076	1.088E-04	.0092	.4342	371.6300
5	532.7	.420	.056	7.592E-05	.0064	9.174E-05	.0078	.4380	371.6300
6	533.2	.430	.057	7.726E-05	.0065	9.338E-05	.0079	.4434	369.1300
7	531.7	.393	.057	7.755E-05	.0066	9.368E-05	.0079	.4226	366.6300
8	532.0	.391	.059	7.980E-05	.0068	9.642E-05	.0082	.4264	366.6300
9	532.4	.331	.048	6.534E-05	.0055	7.895E-05	.0067	.4303	366.6300
10	532.0	.337	.048	6.518E-05	.0055	7.875E-05	.0067	.4342	366.6300
11	532.4	.382	.051	6.962E-05	.0059	8.412E-05	.0071	.4380	366.6300
12	533.1	.384	.053	7.224E-05	.0061	8.731E-05	.0074	.4496	366.6300
13	531.2	.281	.041	5.579E-05	.0047	6.740E-05	.0057	.4187	357.1300
14	532.3	.297	.040	5.500E-05	.0047	6.646E-05	.0056	.4396	361.6300
15	532.9	.270	.036	4.881E-05	.0041	5.898E-05	.0050	.4434	361.6300
16	532.2	.194	.026	3.551E-05	.0030	4.290E-05	.0036	.4396	355.6300
17	532.7	.169	.023	3.091E-05	.0026	3.735E-05	.0032	.4434	355.6300
18	530.2	.208	.029	3.928E-05	.0033	4.743E-05	.0040	.4396	351.6300
19	532.4	.113	.016	2.132E-05	.0018	2.576E-05	.0022	.4291	332.6300
								CARGO BAY VENT NO. 1	
22	535.6	1.805	.250	3.415E-04	.0289	4.130E-04	.0350	.3974	397.6300
23	535.3	1.714	.239	3.263E-04	.0277	3.946E-04	.0334	.4013	397.6300
24	535.9	1.844	.249	3.401E-04	.0288	4.114E-04	.0349	.4052	397.6300
25	536.0	1.804	.237	3.239E-04	.0275	3.918E-04	.0332	.4090	397.6300
26	536.4	2.115	.277	3.787E-04	.0321	4.582E-04	.0388	.4129	397.6300
27	534.9	1.614	.224	3.059E-04	.0259	3.699E-04	.0313	.3936	392.6300
28	534.4	1.319	.189	2.579E-04	.0219	3.118E-04	.0264	.3974	392.6300
29	534.3	1.485	.214	2.913E-04	.0247	3.521E-04	.0298	.4013	392.6300
30	534.5	1.669	.239	3.263E-04	.0277	3.946E-04	.0334	.4052	392.6300
31	534.8	1.798	.251	3.419E-04	.0290	4.134E-04	.0350	.4090	392.6300
32	534.8	1.796	.238	3.241E-04	.0275	3.919E-04	.0332	.4129	392.6300
33	533.0	1.058	.151	2.050E-04	.0174	2.477E-04	.0210	.4090	386.1300
34	534.2	1.404	.149	2.582E-04	.0219	3.121E-04	.0264	.4129	387.6300
35	533.8	1.178	.166	2.265E-04	.0192	2.738E-04	.0232	.3897	383.1300
36	532.9	.703	.102	1.384E-04	.0117	1.672E-04	.0142	.4090	378.6300
37	533.2	1.007	.141	1.921E-04	.0163	2.322E-04	.0197	.4129	382.1300
38	533.2	.763	.106	1.442E-04	.0122	1.742E-04	.0148	.4129	377.1300
39	532.7	.650	.095	1.286E-04	.0109	1.554E-04	.0132	.4001	373.6300
								PROTUBERANCES	
41	535.0	2.422	.324	4.415E-04	.0374	5.338E-04	.0452	.3546	379.0500
42	535.0	2.061	.281	3.832E-04	.0325	4.634E-04	.0393	.3604	379.0500
43	534.9	2.103	.272	3.717E-04	.0315	4.494E-04	.0381	.3450	374.0500

DATE 5/12/75

AEDC(ARO,INC.) ARNOLD AFS, TENNESSEE
VON KARMAN GAS DYNAMICS FACILITY
50 INCH HYPERSONIC TUNNEL B
V41B-87A

GROUP	TEST CONDITION	MODEL	MACH NO	PO,PSIA	TO,DEG R	ALPHA-MODEL	ALPHA-SECTOR	ALPHA-PREBEND	ROLL MODEL	YAW
10	5	140 B	7.90	109.6	1268	30.00	-2.05	30.00	90.00	2.0

T-INF (DEG R)	P-INF (PSIA)	Q-INF (PSIA)	V-INF (FT/SEC)	RHO-INF (SLUGS/FT3)	MU-INF (LB-SEC/FT2)	RE/FT (FT-1)	HREF-FR (R= .0400FT)	STFR (R= .0400FT)	SWITCH POSITION
94.0	.012	.532	3754	1.087E-05	7.571E-08	5.349E 05	1.180E-02	3.648E-02	1

TC NO	TW	DTWDT	QDOT	H(TO)	H(TO)/HREF	H(.9TO)	H(.9TO)/HREF
44	534.3	2.078	.282	3.846E-04	.0326	4.650E-04	.0394
45	534.0	1.625	.224	3.057E-04	.0259	3.695E-04	.0313
46	534.2	1.494	.208	2.837E-04	.0240	3.429E-04	.0291
47	533.4	1.820	.241	3.286E-04	.0278	3.971E-04	.0337
48	532.7	.918	.125	1.705E-04	.0145	2.061E-04	.0175
49	532.1	1.225	.168	2.280E-04	.0193	2.754E-04	.0233
50	532.0	.778	.108	1.462E-04	.0124	1.766E-04	.0150
51	532.3	.708	.096	1.302E-04	.0110	1.573E-04	.0133
52	531.2	.695	.095	1.292E-04	.0110	1.561E-04	.0132
53	531.2	.609	.088	1.201E-04	.0102	1.451E-04	.0123
54	532.1	.808	.115	1.562E-04	.0132	1.887E-04	.0160
55	531.6	.493	.070	9.527E-05	.0081	1.151E-04	.0098
56	532.1	.897	.115	1.566E-04	.0133	1.892E-04	.0160
57	532.1	1.221	.149	2.021E-04	.0171	2.441E-04	.0207
58	532.3	1.714	.226	3.067E-04	.0260	3.706E-04	.0314
59	532.3	1.707	.224	3.044E-04	.0258	3.678E-04	.0312
60	531.4	1.486	.206	2.798E-04	.0237	3.380E-04	.0286
61	531.4	1.454	.183	2.491E-04	.0211	3.009E-04	.0255
62	531.0	1.102	.135	1.826E-04	.0155	2.206E-04	.0187
63	531.8	.871	.113	1.541E-04	.0131	1.862E-04	.0158
64	535.2	.025	.003	4.144E-06	.0004	5.011E-06	.0004
65	533.3	.779	.106	1.440E-04	.0122	1.740E-04	.0147
66	533.0	1.187	.149	2.034E-04	.0172	2.458E-04	.0208
67	533.8	1.578	.221	3.014E-04	.0255	3.644E-04	.0309
68	533.5	1.884	.238	3.242E-04	.0275	3.919E-04	.0332

PROTUBERANCES

X/L	Z,FULL SCALE(IN)
.3508	374.0500
.3566	374.0500
.3604	374.0500
.3392	366.5500
.3566	366.5500
.3392	360.7000
.3566	360.7000
.3604	360.7000
.3392	353.2000
.3450	353.2000
.3508	353.2000
.3566	353.2000

SUBLIMATOR VENT NO. 1

X/L	Z,FULL SCALE(IN)
.3031	371.1300
.3074	369.1300
.3089	363.6300
.3074	358.1300
.3031	356.1300
.2988	358.1300
.2973	363.6300
.2988	369.1300
.3031	376.1300
.3089	378.6300
.3101	372.6300
.3157	370.3800
.3128	363.6300

DATE 5/12/75

AEDC(ARO,INC.) ARNOLD AFS, TENNESSEE
VON KARMAN GAS DYNAMICS FACILITY
50 INCH HYPERSONIC TUNNEL B
V418-87A

GROUP	TEST CONDITION	MODEL	MACH NO	PO,PSIA	TO,DEG R	ALPHA-MODEL	ALPHA-SECTOR	ALPHA-PREBEND	ROLL MODEL	YAW
10	5	140 B	7.90	109.6	1268	30.00	-2.05	30.00	90.00	2.0

T-INF (DEG R)	P-INF (PSIA)	Q-INF (PSIA)	V-INF (FT/SEC)	RHO-INF (SLUGS/FT3)	MU-INF (LB-SEC/FT2)	RE/FT (FT-1)	HREF-FR (R= .0400FT)	STFR (R= .0400FT)	SWITCH POSITION
94.0	.012	.532	3754	1.087E-05	7.571E-08	5.389E 05	1.180E-02	3.648E-02	1

IC	NC	TW	DIWDT	QDOT	H(TO)	H(TO)/HREF	H(.9TO)	H(.9TO)/HREF	X/L	Z,FULL SCALE(IN)
									FUSELAGE VENT PANEL NO. 7	
69		529.2	.932	.129	1.753E-04	.0149	2.116E-04	.0179	.2487	356.4000
70		529.9	.845	.109	1.481E-04	.0126	1.788E-04	.0152	.2591	356.4000
71		527.0	1.074	.145	1.961E-04	.0166	2.366E-04	.0200	.2419	351.4000
72		527.3	1.258	.177	2.396E-04	.0203	2.891E-04	.0245	.2487	351.4000
73		528.8	.785	.101	1.372E-04	.0116	1.656E-04	.0140	.2552	351.4000
74		529.4	.856	.103	1.400E-04	.0119	1.690E-04	.0143	.2610	351.4000
75		525.2	.910	.123	1.658E-04	.0141	1.999E-04	.0169	.2419	342.8000
77		527.6	.975	.138	1.860E-04	.0158	2.244E-04	.0190	.2552	342.8000
78		528.7	1.216	.166	2.249E-04	.0191	2.714E-04	.0230	.2610	342.8000
79		525.5	1.091	.139	1.869E-04	.0158	2.254E-04	.0191	.2419	334.2000
80		524.3	1.238	.168	2.256E-04	.0191	2.720E-04	.0230	.2487	334.2000
81		526.6	1.251	.174	2.342E-04	.0198	2.825E-04	.0239	.2552	334.2000
									ACCESS HATCH WINDOW	
									X/L	Z,FULL SCALE(IN)
83		532.6	1.502	.200	2.726E-04	.0231	3.294E-04	.0279	.2131	398.0000
84		531.1	1.501	.197	2.680E-04	.0227	3.237E-04	.0274	.2131	388.0000
85		530.3	1.340	.182	2.470E-04	.0209	2.983E-04	.0253	.2131	383.0000
87		532.0	1.043	.149	2.023E-04	.0171	2.445E-04	.0207	.2222	395.8000
88		531.5	1.389	.194	2.633E-04	.0223	3.181E-04	.0270	.2193	386.5000
89		530.2	2.219	.325	4.410E-04	.0374	5.326E-04	.0451	.2177	381.8000
90		532.4	1.362	.185	2.521E-04	.0214	3.046E-04	.0258	.2297	389.5000
91		531.2	1.324	.181	2.460E-04	.0209	2.972E-04	.0252	.2243	382.5000
92		530.5	1.351	.190	2.581E-04	.0219	3.117E-04	.0264	.2214	378.7000
93		531.4	1.240	.158	2.148E-04	.0182	2.594E-04	.0220	.2343	374.0000
94		530.7	1.855	.241	3.265E-04	.0277	3.943E-04	.0334	.2274	375.5000
95		529.9	1.469	.208	2.821E-04	.0239	3.407E-04	.0289	.2239	373.3000
96		529.8	1.289	.167	2.266E-04	.0192	2.735E-04	.0232	.2363	368.0000
97		529.2	1.355	.173	2.336E-04	.0198	2.821E-04	.0239	.2286	368.0000
98		528.8	1.267	.177	2.397E-04	.0203	2.893E-04	.0245	.2247	368.0000
100		526.8	1.365	.193	2.599E-04	.0220	3.135E-04	.0266	.2274	360.5000
102		525.6	1.241	.174	2.350E-04	.0199	2.834E-04	.0240	.2081	354.3000
103		527.3	1.446	.189	2.556E-04	.0217	3.084E-04	.0261	.2023	362.7000
105		528.8	1.557	.194	2.628E-04	.0223	3.172E-04	.0269	.2050	378.7000
106		530.6	1.610	.206	2.793E-04	.0237	3.374E-04	.0286	.2050	386.2000

GROUP 10 CENTERLINE TIME 2.75

CH	TC	FIT LENGTH	DTDWT	UNCERTAINTY	CH	TC	FIT LENGTH	DTDWT	UNCERTAINTY
1	1	2.00	.536	.0197	50	53	2.00	.609	.0329
2	2	2.00	.521	.0191	51	54	2.00	.808	.0119
3	3	2.00	.464	.0167	52	55	2.00	.493	.0253
4	4	2.00	.488	.0200	53	56	2.00	.897	.0098
5	5	2.00	.420	.0627	54	57	1.20	1.221	.0217
6	6	2.00	.430	.0243	55	58	1.20	1.714	.0118
7	7	2.00	.393	.0992	56	59	1.20	1.707	.0442
8	8	2.00	.391	.0239	57	60	1.20	1.486	.0147
9	9	2.00	.331	.0686	58	61	1.20	1.454	.0103
10	10	2.00	.337	.0276	59	62	1.20	1.102	.0310
11	11	2.00	.380	.0277	60	63	2.00	.871	.0092
12	12	2.00	.386	.0411	61	64	2.00	.025	.6487
13	13	2.00	.281	.0246	62	65	2.00	.779	.0120
14	14	2.00	.297	.0415	63	66	1.20	1.187	.0165
15	15	2.00	.270	.0692	64	67	1.20	1.578	.0170
16	16	2.00	.194	.0631	65	68	1.20	1.884	.0092
17	17	2.00	.169	.1116	66	69	2.00	.932	.0138
18	18	2.00	.208	.0981	67	70	2.00	.895	.0083
19	19	2.00	.113	.0798	68	71	1.20	1.074	.1658
20	22	1.20	1.805	.0159	69	72	1.20	1.258	.0407
21	23	1.20	1.714	.0103	70	73	2.00	.785	.0138
22	24	1.20	1.844	.0066	71	74	2.00	.856	.0207
23	25	1.20	1.804	.0290	72	75	2.00	.910	.0106
24	26	.80	2.115	.0237	73	77	2.00	.975	.0094
25	27	1.20	1.614	.0163	74	78	1.20	1.216	.0158
26	28	1.20	1.319	.0135	75	79	1.20	1.091	.0221
27	29	1.20	1.485	.0136	76	80	1.20	1.238	.0200
28	30	1.20	1.669	.0107	77	81	1.20	1.251	.0161
29	31	1.20	1.798	.0092	78	83	1.20	1.502	.0151
30	32	1.20	1.796	.0066	79	84	1.20	1.501	.0706
31	33	1.20	1.058	.0147	80	85	1.20	1.340	.0134
32	34	1.20	1.404	.0126	81	87	1.20	1.043	.0177
33	35	1.20	1.178	.0162	82	88	1.20	1.389	.0083
34	36	2.00	.703	.0116	83	89	.80	2.219	.0324
35	37	1.20	1.007	.0198	84	90	1.20	1.362	.0204
36	38	2.00	.763	.0118	85	91	1.20	1.324	.0148
37	39	2.00	.650	.0433	86	92	1.20	1.351	.0122
38	41	.80	2.422	.0321	87	93	1.20	1.240	.0384
39	42	.80	2.061	.0205	88	94	1.20	1.855	.0099
40	43	.80	2.103	.0213	89	95	1.20	1.469	.0161
41	44	.80	2.078	.0176	90	96	1.20	1.289	.0930
42	45	1.20	1.625	.0092	91	97	1.20	1.355	.0245
43	46	1.20	1.494	.0141	92	98	1.20	1.267	.0365
44	47	1.20	1.820	.0126	93	100	1.20	1.365	.0133
45	48	2.00	.918	.0085	94	102	1.20	1.241	.0172
46	49	1.20	1.225	.0167	95	103	1.20	1.446	.0160
47	50	2.00	.778	.0413	96	105	1.20	1.557	.0169
48	51	2.00	.708	.0132	97	106	1.20	1.610	.0159
49	52	2.00	.695	.0155	98	0	-0	0	0
11		.050							

BIT ON LOOP 56

DATE 5/12/75

AEDC(ARO,INC.) ARNOLD AFS, TENNESSEE
VON KARMAN GAS DYNAMICS FACILITY
50 INCH HYPERSONIC TUNNEL B
V418-B7A

GROUP	TEST CONDITION	MODEL	MACH NO	PO,PSIA	TO,DEG R	ALPHA-MODEL	ALPHA-SECTOR	ALPHA-PREBEND	ROLL MODEL	YAW
11	5	140 B	7.90	110.0	1268	30.00	-2.05	30.00	89.94	2.1

T-INF (DEG R)	P-INF (PSIA)	Q-INF (PSIA)	V-INF (FT/SEC)	RHO-INF (SLUGS/FT3)	MU-INF (LB-SEC/FT2)	RE/FT (FT-1)	HREF-FR (R= .0400FT)	STFR (R= .0400FT)	SWITCH POSITION
94.0	.012	.534	3754	1.091E-05	7.571E-08	5.408E 05	1.182E-02	3.641E-02	2

TC NO	TW	DT*DT	QDOT	H(TO)	H(TO)/HREF	H(.9TO)	H(.9TO)/HREF	X/L	Z,FULL SCALE(IN)
								ACCESS HATCH WINDOW	
107	531.9	1.438	.206	2.748E-04	.0237	3.381E-04	.0286	.2050	396.2000
								FUSELAGE VENT PANEL NO. 3 AND 1	
108	531.6	2.539	.268	3.645E-04	.0308	4.404E-04	.0373	.1244	377.5000
109	531.3	2.205	.272	3.678E-04	.0313	4.467E-04	.0378	.1302	377.5000
110	531.1	2.093	.265	3.599E-04	.0304	4.347E-04	.0368	.1360	377.5000
111	531.4	2.230	.269	3.646E-04	.0308	4.404E-04	.0373	.1418	377.5000
112	531.4	2.269	.269	3.655E-04	.0309	4.415E-04	.0374	.1476	377.5000
113	530.2	2.394	.274	3.717E-04	.0314	4.489E-04	.0380	.1215	273.5000
114	530.6	2.316	.278	3.766E-04	.0319	4.548E-04	.0385	.1273	273.5000
115	530.6	2.135	.265	3.589E-04	.0304	4.335E-04	.0367	.1331	273.5000
116	530.5	2.205	.270	3.666E-04	.0310	4.427E-04	.0375	.1389	273.5000
117	530.9	2.359	.271	3.662E-04	.0311	4.447E-04	.0376	.1447	273.5000
118	528.9	1.792	.247	3.349E-04	.0283	4.042E-04	.0342	.1409	366.0000
119	529.0	2.151	.278	3.761E-04	.0318	4.540E-04	.0384	.1442	366.0000
120	527.6	2.340	.292	3.940E-04	.0333	4.755E-04	.0402	.1215	359.5000
121	527.5	2.040	.250	3.372E-04	.0285	4.069E-04	.0344	.1303	359.5000
122	527.2	2.181	.271	3.655E-04	.0309	4.410E-04	.0373	.1337	359.5000
								LOWER RCS NOZZLES	
124	534.2	1.289	.115	1.569E-04	.0133	1.897E-04	.0161	.0950	400.0000
125	529.6	1.297	.141	1.909E-04	.0162	2.305E-04	.0195	.0988	400.0000
126	532.6	1.159	.159	2.160E-04	.0183	2.610E-04	.0221	.1027	400.0000
127	533.6	1.314	.177	2.414E-04	.0204	2.918E-04	.0247	.0911	395.0000
128	533.0	1.411	.171	2.330E-04	.0197	2.816E-04	.0238	.0950	395.0000
129	532.7	1.455	.171	2.323E-04	.0197	2.807E-04	.0237	.0988	395.0000
130	535.1	1.359	.163	2.221E-04	.0188	2.685E-04	.0227	.0810	390.0000
131	533.9	1.359	.201	2.736E-04	.0231	3.308E-04	.0280	.0857	390.0000
132	532.4	1.575	.183	2.493E-04	.0211	3.013E-04	.0255	.0963	390.0000
133	533.0	1.315	.160	2.172E-04	.0184	2.625E-04	.0222	.0857	383.8000
134	531.9	1.805	.242	3.283E-04	.0278	3.966E-04	.0335	.0872	377.3000
135	531.6	2.431	.292	3.962E-04	.0335	4.787E-04	.0405	.0903	374.5500
136	531.1	2.600	.289	3.918E-04	.0331	4.732E-04	.0400	.0960	374.5500
137	531.6	2.477	.324	4.396E-04	.0372	5.311E-04	.0449	.0872	370.5500
138	531.3	2.698	.310	4.215E-04	.0357	5.091E-04	.0431	.0928	370.5500
139	532.7	2.572	.328	4.465E-04	.0378	5.395E-04	.0456	.0816	366.0500
140	530.8	2.711	.344	4.674E-04	.0395	5.645E-04	.0478	.0934	362.4000
141	529.7	2.571	.339	4.593E-04	.0389	5.546E-04	.0469	.0973	362.4000
142	529.1	1.963	.213	2.889E-04	.0244	3.487E-04	.0295	.0833	355.2000
143	530.8	2.983	.299	4.060E-04	.0343	4.903E-04	.0415	.0919	355.2000
144	529.9	3.540	.465	6.306E-04	.0533	7.614E-04	.0644	.0949	349.0000

DATE 5/12/75

AEDC(ARO,INC.) ARNOLD AFS, TENNESSEE
VON KARMAN GAS DYNAMICS FACILITY
50 INCH HYPERSONIC TUNNEL R
V41B-87A

GROUP	TEST CONDITION	MODEL	MACH NO	PO,PSIA	TO,DEG R	ALPHA-MODEL	ALPHA-SECTOR	ALPHA-PREBEND	ROLL MODEL	YAW
11	5	140 H	7.90	110.0	1268	30.00	-2.05	30.00	89.94	2.1

T-INF (DEG R)	P-INF (PSIA)	Q-INF (PSIA)	V-INF (FT/SEC)	RHO-INF (SLUGS/FT3)	MU-INF (LB-SEC/FT2)	RE/FT (FT-1)	HREF-FR (R= .0400FT)	STFR (R= .0400FT)	SWITCH POSITION
94.0	.012	.534	3754	1.091E-05	7.571E-08	5.408E 05	1.182E-02	3.641E-02	2

TC NO	TW	DTWDT	QDOT	H(TO)	H(TO)/HREF	H(.9TO)	H(.9TO)/HREF	X/L	2Y/B
								UPPER RCS NOZZLES	
161	537.8	.877	.104	1.424E-04	.0120	1.723E-04	.0146	.0619	-.0160
162	537.7	-4.386	-.416	-5.698E-04	-.0482	-6.895E-04	-.0583	.0709	-.0160
163	536.8	.610	.075	1.027E-04	.0087	1.242E-04	.0105	.0807	-.0160
164	536.2	.544	.071	9.711E-05	.0082	1.175E-04	.0099	.0943	-.0160
165	536.0	.506	.064	8.712E-05	.0074	1.054E-04	.0089	.0978	-.0160
166	536.4	.396	.051	6.946E-05	.0059	8.402E-05	.0071	.1013	-.0160
167	537.5	.724	.098	1.343E-04	.0114	1.625E-04	.0138	.0619	-.0320
168	537.2	.775	.081	1.115E-04	.0094	1.349E-04	.0114	.0709	-.0320
169	536.3	.575	.070	9.562E-05	.0081	1.157E-04	.0098	.0807	-.0320
170	535.5	.535	.067	9.138E-05	.0077	1.105E-04	.0093	.0943	-.0320
171	535.4	.491	.059	8.050E-05	.0068	9.784E-05	.0083	.0978	-.0320
172	535.1	.390	.051	6.944E-05	.0059	8.397E-05	.0071	.1013	-.0320
173	536.0	.479	.064	8.752E-05	.0074	1.059E-04	.0090	.0807	-.0480
174	535.1	.322	.037	5.004E-05	.0042	6.051E-05	.0051	.0943	-.0480
175	535.1	.384	.055	7.517E-05	.0064	9.089E-05	.0077	.0978	-.0480
176	535.0	.251	.034	4.666E-05	.0039	5.642E-05	.0048	.1013	-.0480
								CANOPY	
177	539.0	2.803	.386	5.302E-04	.0449	6.418E-04	.0543		
178	539.0	3.209	.632	8.672E-04	.0734	1.050E-03	.0888		
179	538.1	2.367	.497	6.806E-04	.0576	8.236E-04	.0697		
180	536.5	1.028	.134	1.834E-04	.0155	2.219E-04	.0188		
181	536.8	1.053	.143	1.958E-04	.0166	2.369E-04	.0200		
182	536.0	1.054	.150	2.054E-04	.0174	2.485E-04	.0210		
183	534.6	.191	.024	3.267E-05	.0028	3.950E-05	.0033		
184	534.4	.213	.029	3.961E-05	.0034	4.789E-05	.0041		
185	536.2	1.030	.124	1.693E-04	.0143	2.048E-04	.0173		
186	536.5	1.078	.135	1.853E-04	.0157	2.241E-04	.0190		
187	537.0	.875	.117	1.596E-04	.0135	1.931E-04	.0163		
188	536.6	1.536	.358	4.895E-04	.0414	5.921E-04	.0501		
189	535.2	.561	.080	1.092E-04	.0092	1.321E-04	.0112		
190	535.5	.687	.099	1.350E-04	.0114	1.633E-04	.0138		
191	535.1	.866	.132	1.807E-04	.0153	2.185E-04	.0185		

DATE 5/12/75

AEDC(ARO,INC.) ARNOLD AFS, TENNESSEE
VON KARMAN GAS DYNAMICS FACILITY
50 INCH HYPERSONIC TUNNEL B
V41B-87A

GROUP	TEST CONDITION	MODEL	MACH NO	PO,PSIA	TO,DEG R	ALPHA-MODEL	ALPHA-SECTOR	ALPHA-PREBEND	ROLL MODEL	YAW
11	5	140 B	7.90	110.0	1268	30.00	-2.05	30.00	89.94	2.1

T-INF (DEG R)	P-INF (PSIA)	Q-INF (PSIA)	V-INF (FT/SEC)	RHO-INF (SLUGS/FT3)	MU-INF (LB-SEC/FT2)	RE/FT (FT-1)	HREF-FR (R= .0400FT)	STFR (R= .0400FT)	SWITCH POSITION
94.0	.012	.534	3754	1.091E-05	7.571E-08	5.408E 05	1.182E-02	3.641E-02	2

TC NO	TW	DTWDT	QDOT	H(TO)	H(TO)/HREF	H(.9TO)	H(.9TO)/HREF
						CANOPY	
192	533.0	.094	.013	1.801E-05	.0015	2.177E-05	.0018
193	535.3	1.090	.210	2.867E-04	.0242	3.466E-04	.0293
194	533.4	.167	.022	2.929E-05	.0025	3.541E-05	.0030
195	533.6	.315	.039	5.283E-05	.0045	6.385E-05	.0054
196	533.9	.198	.026	3.538E-05	.0030	4.277E-05	.0036
197	531.9	.196	.019	2.637E-05	.0022	3.186E-05	.0027
198	532.5	.247	.029	3.897E-05	.0033	4.709E-05	.0040
199	531.8	-.498	-.067	-9.085E-05	-.0077	-1.098E-04	-.0093
200	533.3	.395	.056	7.651E-05	.0065	9.246E-05	.0078
201	534.1	.568	.080	1.092E-04	.0092	1.321E-04	.0112
202	534.6	.787	.100	1.357E-04	.0115	1.641E-04	.0139
203	532.4	.264	.033	4.455E-05	.0038	5.383E-05	.0046
204	532.7	.247	.038	5.214E-05	.0044	6.300E-05	.0053
205	534.0	.519	.091	1.102E-04	.0093	1.332E-04	.0113
206	531.1	.642	.085	1.154E-04	.0098	1.394E-04	.0118
207	534.4	.686	.092	1.253E-04	.0106	1.514E-04	.0128
208	532.1	.228	.031	4.165E-05	.0035	5.032E-05	.0043
209	532.6	.351	.048	6.568E-05	.0056	7.937E-05	.0067
210	532.4	.199	.027	3.616E-05	.0031	4.369E-05	.0037
211	531.6	.638	.077	1.051E-04	.0089	1.270E-04	.0107
212	532.1	.448	.060	8.207E-05	.0069	9.915E-05	.0084
213	532.0	.219	.029	3.935E-05	.0033	4.754E-05	.0040
214	532.6	.370	.052	7.053E-05	.0060	8.522E-05	.0072
215	532.4	.224	.032	4.325E-05	.0037	5.225E-05	.0044
216	533.5	.726	.103	1.404E-04	.0119	1.697E-04	.0144
217	533.4	.707	.101	1.372E-04	.0116	1.658E-04	.0140
218	531.8	.361	.050	6.767E-05	.0057	8.175E-05	.0069
219	532.1	-.183	-.026	-3.487E-05	-.0029	-4.213E-05	-.0036
220	532.3	.312	.043	5.829E-05	.0049	7.043E-05	.0060

GROUP 11 CENTERLINE TIME 2.75

CH	TC	FIT LENGTH	DTDWT	UNCERTAINTY	CH	TC	FIT LENGTH	DTDWT	UNCERTAINTY
1	107	1.20	1.438	.0098	50	173	2.00	.479	.0401
2	108	.80	2.539	.0138	51	174	2.00	.322	.0348
3	109	.80	2.295	.0192	52	175	2.00	.384	.0279
4	110	.80	2.093	.0076	53	176	2.00	.251	.0318
5	111	.80	2.230	.0269	54	177	.80	2.803	.0161
6	112	.80	2.269	.0131	55	178	.80	3.209	.0115
7	113	.80	2.394	.0792	56	179	.80	2.367	.0447
8	114	.80	2.316	.0120	57	180	1.20	1.028	.0215
9	115	.80	2.135	.0438	58	181	1.20	1.053	.0176
10	116	.80	2.205	.0202	59	182	1.20	1.054	.0290
11	117	.80	2.359	.0194	60	183	2.00	.191	.0395
12	118	1.20	1.792	.0154	61	184	2.00	.213	.0848
13	119	.80	2.151	.0157	62	185	1.20	1.030	.0166
14	120	.80	2.340	.0165	63	186	1.20	1.078	.0173
15	121	.80	2.040	.0287	64	187	2.00	.875	.0134
16	122	.80	2.181	.0226	65	188	1.20	1.536	.0113
17	124	1.20	1.289	.0333	66	189	2.00	.561	.0226
18	125	1.20	1.297	.0618	67	190	2.00	.687	.0101
19	126	1.20	1.159	.0170	68	191	2.00	.866	.1297
20	127	1.20	1.314	.0223	69	192	2.00	.094	.2340
21	128	1.20	1.411	.0127	70	193	1.20	1.090	.0189
22	129	1.20	1.455	.0140	71	194	2.00	.167	.1229
23	130	1.20	1.359	.0355	72	195	2.00	.315	.0360
24	131	1.20	1.359	.0294	73	196	2.00	.198	.0554
25	132	1.20	1.575	.0156	74	197	2.00	.196	.0468
26	133	1.20	1.315	.0144	75	198	2.00	.247	.0325
27	134	1.20	1.805	.0093	76	199	2.00	-.498	-.0702
28	135	.80	2.431	.0131	77	200	2.00	.395	.0260
29	136	.80	2.600	.0097	78	201	2.00	.568	.0149
30	137	.80	2.477	.0171	79	202	2.00	.787	.0646
31	138	.80	2.698	.0148	80	203	2.00	.264	.0730
32	139	.80	2.572	.0132	81	204	2.00	.247	.0495
33	140	.80	2.711	.0093	82	205	2.00	.519	.0159
34	141	.80	2.571	.0114	83	206	2.00	.642	.0482
35	142	1.20	1.963	.0082	84	207	2.00	.686	.0155
36	143	.80	2.983	.0103	85	208	2.00	.228	.0388
37	144	.80	3.540	.0087	86	209	2.00	.351	.0232
38	161	2.00	.877	.0173	87	210	2.00	.199	.1078
39	162	2.00	-4.396	-1.2300	88	211	2.00	.638	.0167
40	163	2.00	.610	.0305	89	212	2.00	.448	.0312
41	164	2.00	.544	.0167	90	213	2.00	.219	.2512
42	165	2.00	.506	.0193	91	214	2.00	.370	.0441
43	166	2.00	.396	.0298	92	215	2.00	.224	.1250
44	167	2.00	.724	.0132	93	216	2.00	.726	.0157
45	168	2.00	.775	.0106	94	217	2.00	.707	.0202
46	169	2.00	.575	.0177	95	218	2.00	.361	.0361
47	170	2.00	.535	.0484	96	219	2.00	-.183	-.1408
48	171	2.00	.491	.0224	97	220	2.00	.312	.0301
49	172	2.00	.390	.0261	98	0	-0	0	0
12		.050							

BIT ON LOOP 57

DATE 5/12/75

AEDC(ARO,INC.) ARNOLD AFS, TENNESSEE
VON KARMAN GAS DYNAMICS FACILITY
50 INCH HYPERSONIC TUNNEL B
V418-87A

GROUP	TEST CONDITION	MODEL	MACH NO	PO,PSIA	TO,DEG R	ALPHA-MODEL	ALPHA-SECTOR	ALPHA-PREBEND	ROLL MODEL	YAW
12	5	140 B	7.90	109.5	1268	30.00	-2.06	30.00	89.98	2.1

T-INF (DEG R)	P-INF (PSIA)	Q-INF (PSIA)	V-INF (FT/SEC)	RHO-INF (SLUGS/FT3)	MU-INF (LB-SEC/FT2)	RE/FT (FT-1)	HREF-FR (R= .0400FT)	STFR (R= .0400FT)	SWITCH POSITION
94.0	.012	.532	3754	1.086E-05	7.571E-08	5.384E 05	1.179E-02	3.650E-02	3

TC NO	TW	DT*DT	QDOT	H(TO)	H(TO)/HREF	H(.9TO)	H(.9TO)/HREF	X/L	2Y/B
								CANOPY	
221	530.3	.344	.042	5.637E-05	.0048	6.807E-05	.0058		
222	530.1	.355	.044	5.914E-05	.0050	7.142E-05	.0061		
223	531.4	.476	.065	8.763E-05	.0074	1.058E-04	.0090		
								ESCAPE HATCH AND WINDOW	
224	535.3	1.997	.199	2.716E-04	.0230	3.284E-04	.0278	.1933	.0162
225	534.9	1.342	.161	2.193E-04	.0186	2.652E-04	.0225	.1972	.0162
226	534.6	1.499	.158	2.156E-04	.0183	2.607E-04	.0221	.1933	.0384
227	533.8	1.085	.159	2.167E-04	.0184	2.620E-04	.0222	.1972	.0384
228	532.9	1.001	.129	1.752E-04	.0149	2.117E-04	.0179	.1933	.0653
229	533.4	.961	.124	1.682E-04	.0143	2.033E-04	.0172	.1972	.0653
232	534.5	.157	.021	2.899E-05	.0025	3.505E-05	.0030	.2567	.0235
233	535.0	.189	.029	3.910E-05	.0033	4.728E-05	.0040	.2606	.0235
236	533.7	.186	.027	3.715E-05	.0031	4.490E-05	.0038	.2567	.0491
237	534.2	.175	.025	3.353E-05	.0028	4.053E-05	.0034	.2606	.0491
								CARGO BAY HINGE NO. 1	
								X/L	Z,FULL SCALE(IN)
238	534.1	.766	.103	1.399E-04	.0119	1.692E-04	.0143	.2879	420.0000
239	534.0	.728	.098	1.330E-04	.0113	1.608E-04	.0136	.2917	420.0000
240	533.7	.674	.096	1.311E-04	.0111	1.585E-04	.0134	.2840	415.0000
241	533.8	.690	.097	1.321E-04	.0112	1.597E-04	.0135	.2879	415.0000
242	530.2	.715	.102	1.382E-04	.0117	1.669E-04	.0142	.2917	415.0000
243	532.0	.824	.101	1.369E-04	.0116	1.654E-04	.0140	.2801	405.0000
244	531.8	.760	.089	1.207E-04	.0102	1.458E-04	.0124	.2840	405.0000
								CARGO BAY HINGE NO. 2	
								X/L	Z,FULL SCALE(IN)
245	534.0	.548	.078	1.067E-04	.0090	1.290E-04	.0109	.3192	420.0000
246	533.9	.519	.074	1.011E-04	.0086	1.223E-04	.0104	.3439	420.0000
247	533.6	.465	.069	9.339E-05	.0079	1.129E-04	.0096	.3362	415.0000
248	533.8	.368	.054	7.390E-05	.0063	8.933E-05	.0076	.3401	415.0000
249	533.7	.425	.063	8.530E-05	.0072	1.031E-04	.0087	.3439	415.0000
250	532.9	.490	.061	8.362E-05	.0071	1.011E-04	.0086	.3323	405.0000
251	532.9	.628	.077	1.049E-04	.0089	1.267E-04	.0107	.3362	405.0000
								CARGO BAY HINGE NO. 3	
								X/L	Z,FULL SCALE(IN)
252	534.8	1.284	.186	2.543E-04	.0216	3.075E-04	.0261	.3923	420.0000
253	535.5	1.427	.207	2.830E-04	.0240	3.422E-04	.0290	.3961	420.0000
254	534.5	1.167	.177	2.416E-04	.0205	2.921E-04	.0248	.3884	415.0000
257	535.0	1.847	.249	3.401E-04	.0288	4.112E-04	.0349	.3845	405.0000
258	535.0	2.087	.284	3.881E-04	.0329	4.693E-04	.0398	.3884	405.0000

DATE 5/12/7[illegible]

AEDC(ARO,INC.) ARNOLD AFS, TENNESSEE
VON KARMAN GAS DYNAMICS FACILITY
50 INCH HYPERSONIC TUNNEL B
V418-87A

GROUP	TEST CONDITION	MODEL	MACH NO	PO,PSIA	TO,DEG R	ALPHA-MODEL	ALPHA-SECTOR	ALPHA-PREBEND	ROLL MODEL	YAW
12	5	140 B	7.90	109.5	1268	30.00	-2.06	30.00	89.98	2.1

T-INF (DEG R)	P-INF (PSIA)	U-INF (PSIA)	V-INF (FT/SEC)	RHO-INF (SLUGS/FT3)	MU-INF (LB-SEC/FT2)	RE/FT (FT-1)	HREF-FR (R= .0400FT)	STFR (R= .0400FT)	SWITCH POSITION
94.0	.012	.532	3754	1.086E-05	7.571E-08	5.384E 05	1.179E-02	3.650E-02	3

TOP CENTERLINE

IC	NC	TW	DTWDT	QDOT	H(TO)	H(TO)/HREF	H(.9TO)	H(.9TO)/HREF	X/L
367	563.7	38.078	4.540	6.448E-03	.5467	7.864E-03	.6668		0
368	551.2	26.058	3.334	4.652E-03	.3945	5.652E-03	.4793		.0008
369	544.3	17.839	2.098	2.900E-03	.2459	3.516E-03	.2981		.0019
370	540.9	12.229	1.496	2.058E-03	.1745	2.493E-03	.2114		.0037
371	538.4	8.637	.844	1.157E-03	.0981	1.400E-03	.1187		.0058
372	536.3	5.809	.748	1.023E-03	.0867	1.237E-03	.1049		.0087
373	535.4	3.797	.497	6.768E-04	.0576	8.209E-04	.0696		.0118
374	534.8	2.786	.365	4.976E-04	.0422	6.016E-04	.0510		.0151
375	534.1	2.308	.315	4.298E-04	.0364	5.196E-04	.0441		.0182
376	534.3	2.085	.275	3.746E-04	.0318	4.529E-04	.0384		.0215
377	534.9	1.887	.243	3.313E-04	.0281	4.006E-04	.0340		.0246
378	534.5	1.471	.171	2.338E-04	.0198	2.827E-04	.0240		.0278
379	535.1	.969	.119	1.624E-04	.0138	1.964E-04	.0167		.0609
380	534.4	.829	.085	1.162E-04	.0099	1.405E-04	.0119		.0646
381	534.2	.749	.097	1.322E-04	.0112	1.598E-04	.0136		.0684
382	533.5	.691	.090	1.231E-04	.0104	1.488E-04	.0126		.0721
383	533.2	.634	.085	1.156E-04	.0098	1.397E-04	.0118		.0760
384	532.9	.452	.063	8.573E-05	.0073	1.036E-04	.0088		.0796
385	533.5	.488	.063	8.545E-05	.0072	1.033E-04	.0088		.0789
386	534.1	.528	.063	8.524E-05	.0072	1.030E-04	.0087		.0982
387	534.3	.530	.065	8.880E-05	.0075	1.074E-04	.0091		.1019
388	535.5	.750	.071	9.752E-05	.0083	1.179E-04	.0100		.1160
389	535.1	.667	.097	1.322E-04	.0112	1.599E-04	.0136		.1195
390	534.9	.606	.096	1.304E-04	.0111	1.577E-04	.0134		.1231
391	534.7	.577	.092	1.256E-04	.0106	1.518E-04	.0129		.1268
392	534.9	.609	.104	1.425E-04	.0121	1.723E-04	.0146		.1305
393	534.7	.601	.102	1.388E-04	.0118	1.678E-04	.0142		.1338
394	534.7	.621	.104	1.423E-04	.0121	1.720E-04	.0146		.1376
395	534.7	.665	.099	1.356E-04	.0115	1.640E-04	.0139		.1411
396	534.9	.664	.098	1.343E-04	.0114	1.624E-04	.0138		.1448
397	535.2	.749	.111	1.517E-04	.0129	1.834E-04	.0156		.1483
398	535.8	.682	.096	1.312E-04	.0111	1.587E-04	.0135		.1519
399	536.5	2.060	.275	3.766E-04	.0319	4.555E-04	.0386		.1556

DATE 5/12/75

AEDC(ARO,INC.) ARNOLD AFS, TENNESSEE
VON KARMAN GAS DYNAMICS FACILITY
50 INCH HYPERSONIC TUNNEL B
V41A-87A

GROUP	TEST CONDITION	MODEL	MACH NO	PO,PSIA	TO,DEG R	ALPHA-MODEL	ALPHA-SECTOR	ALPHA-PREBEND	ROLL MODEL	YAW
12	5	140 B	7.90	109.5	1268	30.00	-2.06	30.00	89.98	2.1

T-INF (DEG R)	P-INF (PSIA)	Q-INF (PSIA)	V-INF (FT/SEC)	RHO-INF (SLUGS/FT3)	MU-INF (LB-SEC/FT2)	RE/FT (FT-1)	HREF-FR (R= .0400FT)	STFR (R= .0400FT)	SWITCH POSITION
94.0	.012	.532	3754	1.086E-05	7.571E-08	5.384E 05	1.179E-02	3.650E-02	3

TC NO	TW	DTWDT	QDOT	H(TO)	H(TO)/HREF	H(.9TO)	H(.9TO)/HREF	X/L	2Y/B
								TOP CENTERLINE	
400	538.0	3.194	.432	5.914E-04	.0501	7.157E-04	.0607	.1582	
401	538.0	3.527	.458	6.271E-04	.0532	7.589E-04	.0643	.1608	
402	538.5	4.174	.521	7.148E-04	.0606	8.652E-04	.0734	.1635	
403	538.8	4.818	.587	8.048E-04	.0682	9.742E-04	.0826	.1664	
404	539.3	4.583	.556	7.633E-04	.0647	9.242E-04	.0784	.1691	
405	539.7	4.695	.570	7.826E-04	.0664	9.476E-04	.0803	.1720	
406	539.0	4.545	.551	7.566E-04	.0642	9.160E-04	.0777	.1748	
407	538.5	4.061	.525	7.203E-04	.0611	8.718E-04	.0739	.1769	
408	538.4	3.764	.553	7.576E-04	.0642	9.169E-04	.0777	.1800	
409	537.4	2.989	.431	5.894E-04	.0500	7.131E-04	.0605	.1831	
410	536.3	2.580	.415	5.667E-04	.0481	6.856E-04	.0581	.1863	
411	536.8	2.023	.304	4.158E-04	.0353	5.030E-04	.0426	.1894	
412	536.5	1.651	.224	3.070E-04	.0260	3.713E-04	.0315	.1931	
413	535.5	1.236	.166	2.264E-04	.0192	2.738E-04	.0232	.1972	
414	535.4	.673	.090	1.232E-04	.0104	1.490E-04	.0126	.2049	
415	534.7	.322	.032	4.337E-05	.0037	5.244E-05	.0044	.2250	
416	535.3	.189	.022	3.013E-05	.0026	3.644E-05	.0031	.2500	
								NOSE TC (Z = 338)	
145	556.0	26.974	3.654	5.134E-03	.4353	6.247E-03	.5296	.0008	.5039
146	555.3	26.179	3.545	4.976E-03	.4219	6.053E-03	.5132	.0023	.5082
147	548.3	20.957	2.828	3.931E-03	.3333	4.772E-03	.4046	.0043	.5135
148	545.5	16.563	2.307	3.193E-03	.2708	3.873E-03	.3284	.0068	.5205
149	542.2	12.815	1.850	2.550E-03	.2162	3.090E-03	.2620	.0095	.5279
150	542.1	11.629	1.663	2.292E-03	.1943	2.777E-03	.2355	.0122	.5354
151	540.3	7.883	1.105	1.520E-03	.1288	1.840E-03	.1560	.0218	.5621
152	539.6	6.055	1.090	1.496E-03	.1269	1.812E-03	.1536	.0251	.5712
153	539.2	8.571	1.044	1.433E-03	.1215	1.734E-03	.1471	.0286	.5808
154	539.4	8.413	1.044	1.433E-03	.1215	1.734E-03	.1471	.0319	.5898
155	539.4	7.876	.988	1.356E-03	.1150	1.641E-03	.1392	.0354	.5995
156	538.1	7.265	.901	1.234E-03	.1047	1.494E-03	.1267	.0387	.6085
157	537.7	6.959	.853	1.169E-03	.0991	1.414E-03	.1199	.0420	.6176
158	536.6	6.985	.866	1.170E-03	.0992	1.416E-03	.1201	.0462	.6294
159	536.3	6.808	.761	1.040E-03	.0882	1.259E-03	.1067	.0503	.6406

GROUP 12 CENTERLINE TIME 2.80

CH	TC	FIT LENGTH	DTDWT	UNCERTAINTY	CH	TC	FIT LENGTH	DTDWT	UNCERTAINTY
1	221	2.00	.344	.0327	50	384	2.00	.452	.0535
2	222	2.00	.355	.0317	51	385	2.00	.488	.0279
3	223	2.00	.476	.0170	52	386	2.00	.528	.0189
4	224	.80	1.997	.0119	53	387	2.00	.530	.0153
5	225	1.20	1.342	.0298	54	388	2.00	.750	.0176
6	226	1.20	1.499	.0109	55	389	2.00	.667	.0158
7	227	1.20	1.086	.1002	56	390	2.00	.606	.0487
8	228	1.20	1.001	.0204	57	391	2.00	.577	.0144
9	229	2.00	.961	.0386	58	392	2.00	.609	.0148
10	232	2.00	.157	.0604	59	393	2.00	.601	.0203
11	233	2.00	.189	.1302	60	394	2.00	.621	.0157
12	236	2.00	.186	.0867	61	395	2.00	.665	.0256
13	237	2.00	.175	.0503	62	396	2.00	.664	.0105
14	238	2.00	.766	.0143	63	397	2.00	.749	.0122
15	239	2.00	.728	.0282	64	398	2.00	.682	.0314
16	240	2.00	.674	.0150	65	399	.80	2.060	.0202
17	241	2.00	.690	.0264	66	400	.80	3.194	.0121
18	242	2.00	.715	.0177	67	401	.80	3.527	.0083
19	243	2.00	.824	.0124	68	402	.60	4.174	.1676
20	244	2.00	.760	.0160	69	403	.60	4.818	.0451
21	245	2.00	.548	.0130	70	404	.60	4.583	.0107
22	246	2.00	.519	.0176	71	405	.60	4.695	.0192
23	247	2.00	.465	.0448	72	406	.60	4.545	.0134
24	248	2.00	.368	.0371	73	407	.60	4.061	.0098
25	249	2.00	.425	.0278	74	408	.80	3.764	.0134
26	250	2.00	.490	.0236	75	409	.80	2.989	.0271
27	251	2.00	.628	.0147	76	410	.80	2.880	.0144
28	252	1.20	1.284	.0106	77	411	1.20	2.023	.0099
29	253	1.20	1.427	.0120	78	412	1.20	1.651	.0117
30	254	1.20	1.167	.0133	79	413	1.20	1.236	.0875
31	257	1.20	1.847	.0100	80	414	2.00	.673	.0099
32	258	.80	2.087	.0171	81	415	2.00	.322	.0297
33	367	.20	38.078	.0053	82	416	2.00	.189	.0397
34	368	.30	26.058	.0038	83	145	.30	26.974	.0077
35	369	.30	17.839	.0082	84	146	.30	26.179	.0025
36	370	.40	12.229	.0178	85	147	.30	20.957	.0053
37	371	.40	8.667	.0072	86	148	.30	16.563	.0046
38	372	.60	5.809	.0107	87	149	.40	12.815	.0184
39	373	.80	3.797	.0086	88	150	.40	11.629	.0037
40	374	.80	2.786	.0128	89	151	.60	7.883	.0094
41	375	.80	2.308	.0114	90	152	.40	8.055	.1006
42	376	.80	2.085	.0181	91	153	.40	8.571	.0209
43	377	1.20	1.887	.0172	92	154	.40	8.413	.0132
44	378	1.20	1.471	.0138	93	155	.60	7.876	.0078
45	379	2.00	.969	.0085	94	156	.60	7.265	.0078
46	380	2.00	.829	.0104	95	157	.60	6.959	.0159
47	381	2.00	.749	.0340	96	158	.60	6.985	.0087
48	382	2.00	.691	.0136	97	159	.60	6.808	.0042
49	383	2.00	.634	.0132	98	0	-0	0	0

DATE 5/12/75

AEDC(ARO,INC.) ARNOLD AFS, TENNESSEE
VON KARMAN GAS DYNAMICS FACILITY
50 INCH HYPERSONIC TUNNEL B
V418-87A

GROUP	TEST CONDITION	MODEL	MACH NO	PO,PSIA	TO,DEG R	ALPHA-MODEL	ALPHA-SECTOR	ALPHA-PREBEND	ROLL MODEL	YAW
13	6	140 B	7.90	109.3	1268	35.05	-5.05	30.00	179.86	.0

T-INF (DEG R)	P-INF (PSIA)	Q-INF (PSIA)	V-INF (FT/SEC)	RHO-INF (SLUGS/FT3)	MU-INF (LB-SEC/FT2)	RE/FT (FT-1)	HREF-FR (R= .0400FT)	STFR (R= .0400FT)	SWITCH POSITION
94.0	.012	.531	3754	1.084E-05	7.571E-08	5.374E 05	1.178E-02	3.653E-02	1

TC NO	Tw	DTWDT	QDOT	H(TO)	H(TO)/HREF	H(.9TO)	H(.9TO)/HREF	X/L	Z,FULL SCALE(IN)
								FUSELAGE VENT NO. 1	
1	535.3	.353	.047	6.350E-05	.0054	7.691E-05	.0065	.4434	376.6300
2	534.8	.345	.046	6.336E-05	.0054	7.661E-05	.0065	.4264	371.6300
3	534.7	.317	.044	5.939E-05	.0050	7.180E-05	.0061	.4303	371.6300
4	534.7	.318	.043	5.856E-05	.0050	7.129E-05	.0061	.4342	371.6300
5	534.8	.338	.045	6.147E-05	.0052	7.433E-05	.0063	.4380	371.6300
6	535.1	.293	.039	5.291E-05	.0045	6.398E-05	.0054	.4434	369.1300
7	534.3	.264	.038	5.244E-05	.0045	6.340E-05	.0054	.4226	366.6300
8	534.7	.268	.040	5.499E-05	.0047	6.649E-05	.0056	.4264	366.6300
9	534.6	.255	.037	5.043E-05	.0043	6.098E-05	.0052	.4303	366.6300
10	534.5	.221	.031	4.288E-05	.0036	5.184E-05	.0044	.4342	366.6300
11	534.7	.288	.039	5.298E-05	.0045	6.406E-05	.0054	.4380	366.6300
12	534.9	.251	.034	4.707E-05	.0040	5.691E-05	.0048	.4496	366.6300
13	534.1	.184	.027	3.670E-05	.0031	4.437E-05	.0038	.4187	357.1300
14	534.5	.127	.017	2.364E-05	.0020	2.858E-05	.0024	.4396	361.6300
15	534.6	.215	.029	3.909E-05	.0033	4.727E-05	.0040	.4434	361.6300
16	534.3	-.021	-.003	-3.892E-06	-.0003	-4.705E-06	-.0004	.4396	355.6300
17	534.3	-.026	-.004	-4.817E-06	-.0004	-5.824E-06	-.0005	.4434	355.6300
18	531.1	.043	.006	8.196E-06	.0007	9.900E-06	.0008	.4396	351.6300
19	534.4	.035	.005	6.557E-06	.0006	7.927E-06	.0007	.4291	332.6300
								CARGO BAY VENT NO. 1	
								X/L	Z,FULL SCALE(IN)
22	536.1	1.255	.174	2.378E-04	.0202	2.876E-04	.0244	.3974	397.6300
23	536.4	1.428	.199	2.723E-04	.0231	3.294E-04	.0280	.4013	397.6300
24	536.7	1.458	.197	2.694E-04	.0229	3.259E-04	.0277	.4052	397.6300
25	536.8	1.272	.167	2.268E-04	.0194	2.768E-04	.0235	.4090	397.6300
26	536.6	1.249	.164	2.238E-04	.0190	2.707E-04	.0230	.4129	397.6300
27	535.9	1.330	.185	2.527E-04	.0214	3.057E-04	.0259	.3936	392.6300
28	535.1	1.233	.177	2.414E-04	.0205	2.919E-04	.0248	.3974	392.6300
29	535.2	1.225	.176	2.406E-04	.0204	2.909E-04	.0247	.4013	392.6300
30	535.5	1.104	.158	2.164E-04	.0184	2.617E-04	.0222	.4052	392.6300
31	535.7	1.076	.150	2.051E-04	.0174	2.480E-04	.0210	.4090	392.6300
32	535.8	1.067	.141	1.929E-04	.0164	2.333E-04	.0198	.4129	392.6300
33	535.2	.632	.090	1.230E-04	.0104	1.487E-04	.0126	.4090	386.1300
34	536.1	.831	.112	1.533E-04	.0130	1.854E-04	.0157	.4129	387.6300
35	535.2	.756	.107	1.457E-04	.0124	1.762E-04	.0150	.3897	383.1300
36	535.0	.462	.067	9.137E-05	.0078	1.105E-04	.0094	.4090	378.6300
37	535.6	.640	.090	1.227E-04	.0104	1.484E-04	.0126	.4129	382.1300
38	535.3	.515	.072	9.761E-05	.0083	1.183E-04	.0100	.4129	377.1300
39	534.7	.408	.059	8.096E-05	.0069	9.789E-05	.0083	.4001	373.6300
								PROTUBERANCES	
								X/L	Z,FULL SCALE(IN)
41	534.8	1.271	.170	2.316E-04	.0197	2.800E-04	.0238	.3546	379.0500
42	534.7	.955	.130	1.776E-04	.0151	2.147E-04	.0182	.3604	379.0500
43	534.5	1.244	.161	2.198E-04	.0187	2.657E-04	.0226	.3450	374.0500

DATE 5/12/75

AEDC(ARO,INC.) ARNOLD AFS, TENNESSEE
VON KARMAN GAS DYNAMICS FACILITY
50 INCH HYPERSONIC TUNNEL B
V41B-B7A

GROUP	TEST CONDITION	MODEL	MACH NO	PO,PSIA	TO,DEG R	ALPHA-MODEL	ALPHA-SECTOR	ALPHA-PREBEND	ROLL MODEL	YAW
13	6	140 B	7.90	109.3	1268	35.05	-5.05	30.00	179.86	.0

T-INF (DEG R)	P-INF (PSIA)	Q-INF (PSIA)	V-INF (FT/SEC)	RHO-INF (SLUGS/FT3)	MU-INF (LB-SEC/FT2)	RE/FT (FT-1)	HREF-FR (R= .0400FT)	STFR (R= .0400FT)	SWITCH POSITION
94.0	.012	.531	3754	1.084E-05	7.571E-08	5.374E 05	1.178E-02	3.653E-02	1

TC NO	TW	DTWDT	QDOT	H(TO)	H(TO)/HREF	H(.9TO)	H(.9TO)/HREF	PROTUBERANCES X/L	Z,FULL SCALE(IN)
44	534.8	1.016	.138	1.882E-04	.0160	2.276E-04	.0193	.3508	374.0500
45	534.6	.804	.111	1.514E-04	.0129	1.831E-04	.0155	.3566	374.0500
46	534.6	.787	.110	1.496E-04	.0127	1.809E-04	.0154	.3604	374.0500
47	533.6	1.026	.136	1.852E-04	.0157	2.239E-04	.0190	.3392	366.5500
48	533.8	.569	.078	1.060E-04	.0090	1.281E-04	.0109	.3566	366.5500
49	533.3	.779	.107	1.454E-04	.0123	1.757E-04	.0149	.3392	360.7000
50	533.2	.516	.071	9.714E-05	.0082	1.174E-04	.0100	.3566	360.7000
51	533.5	.507	.069	9.349E-05	.0079	1.130E-04	.0096	.3604	360.7000
52	532.6	.510	.070	9.501E-05	.0081	1.148E-04	.0097	.3392	353.2000
53	532.5	.444	.065	8.786E-05	.0075	1.062E-04	.0090	.3450	353.2000
54	532.3	1.158	.165	2.241E-04	.0190	2.708E-04	.0230	.3508	353.2000
55	533.0	.441	.063	8.537E-05	.0072	1.032E-04	.0088	.3566	353.2000
								SUBLIMATOR VENT NO. 1 X/L	Z,FULL SCALE(IN)
56	532.6	1.204	.155	2.104E-04	.0179	2.543E-04	.0216	.3031	371.1300
57	533.1	1.508	.184	2.502E-04	.0212	3.023E-04	.0257	.3074	369.1300
58	533.1	1.669	.220	2.992E-04	.0254	3.616E-04	.0307	.3089	363.6300
59	532.6	1.346	.177	2.402E-04	.0204	2.903E-04	.0246	.3074	358.1300
60	532.1	1.266	.176	2.368E-04	.0203	2.885E-04	.0245	.3031	356.1300
61	532.3	1.469	.185	2.521E-04	.0214	3.046E-04	.0259	.2988	358.1300
62	532.1	1.401	.171	2.328E-04	.0198	2.813E-04	.0239	.2973	363.6300
63	532.3	1.224	.159	2.167E-04	.0184	2.619E-04	.0222	.2988	369.1300
64	536.2	~~.011~~	~~.061~~	~~1.842E-04~~	~~.0002~~	~~2.228E-04~~	~~.0002~~	.3031	376.1300
65	533.4	1.146	.156	2.119E-04	.0180	2.561E-04	.0217	.3089	378.6300
66	533.9	1.374	.173	2.357E-04	.0200	2.849E-04	.0242	.3101	372.6300
67	533.7	1.858	.260	3.548E-04	.0301	4.289E-04	.0364	.3157	370.3800
68	534.2	1.611	.204	2.775E-04	.0235	3.354E-04	.0285	.3128	363.6300

DATE 5/12/75

AEDC(ARO,INC.) ARNOLD AFS, TENNESSEE
VON KARMAN GAS DYNAMICS FACILITY
50 INCH HYPERSONIC TUNNEL B
V41B-87A

GROUP	TEST CONDITION	MODEL	MACH NO	PO,PSIA	TO,DEG R	ALPHA-MODEL	ALPHA-SECTOR	ALPHA-PREBEND	ROLL MODEL	YAW
13	6	140 B	7.90	109.3	1268	35.05	-5.05	30.00	179.86	.0

T-INF (DEG R)	P-INF (PSIA)	Q-INF (PSIA)	V-INF (FT/SEC)	RHO-INF (SLUGS/FT3)	MU-INF (LB-SEC/FT2)	RE/FT (FT-1)	HREF-FR (R= .0400FT)	STFR (R= .0400FT)	SWITCH POSITION
94.0	.012	.531	3754	1.084E-05	7.571E-08	5.374E 05	1.178E-02	3.653E-02	1

TC NO	TW	DTWDT	CDOT	H(TO)	H(TO)/HREF	H(.9TO)	H(.9TO)/HREF	X/L	Z,FULL SCALE(IN)
								FUSELAGE VENT PANEL NO. 7	
69	529.6	.983	.137	1.851E-04	.0157	2.235E-04	.0190	.2487	356.4000
70	530.3	.899	.110	1.489E-04	.0126	1.798E-04	.0153	.2591	356.4000
71	528.7	.936	.127	1.714E-04	.0145	2.069E-04	.0176	.2419	351.4000
72	529.5	.845	.119	1.616E-04	.0137	1.951E-04	.0166	.2487	351.4000
73	529.3	.989	.128	1.730E-04	.0147	2.089E-04	.0177	.2552	351.4000
74	529.8	1.135	.137	1.858E-04	.0158	2.243E-04	.0190	.2610	351.4000
75	527.2	.991	.134	1.810E-04	.0154	2.184E-04	.0185	.2419	342.8000
77	529.0	1.179	.166	2.253E-04	.0191	2.720E-04	.0231	.2552	342.8000
78	530.1	1.337	.183	2.480E-04	.0210	2.994E-04	.0254	.2610	342.8000
79	527.9	1.203	.153	2.071E-04	.0176	2.499E-04	.0212	.2419	334.2000
80	527.4	2.093	.284	3.838E-04	.0326	4.630E-04	.0393	.2487	334.2000
81	528.7	1.207	.168	2.270E-04	.0193	2.739E-04	.0232	.2552	334.2000
								ACCESS HATCH WINDOW	
83	531.1	1.370	.183	2.480E-04	.0211	2.996E-04	.0254	.2131	398.0000
84	531.0	1.708	.225	3.050E-04	.0259	3.683E-04	.0313	.2131	388.0000
85	529.9	1.284	.174	2.364E-04	.0201	2.855E-04	.0242	.2131	383.0000
87	531.2	.972	.139	1.883E-04	.0160	2.274E-04	.0193	.2222	395.8000
88	530.9	1.297	.181	2.456E-04	.0208	2.966E-04	.0252	.2193	386.5000
89	530.0	1.338	.196	2.659E-04	.0226	3.211E-04	.0272	.2177	381.8000
90	531.4	1.269	.173	2.345E-04	.0199	2.832E-04	.0240	.2297	389.5000
91	530.9	1.303	.178	2.420E-04	.0205	2.923E-04	.0248	.2243	382.5000
92	530.6	1.180	.166	2.254E-04	.0191	2.722E-04	.0231	.2214	378.7000
93	531.0	1.163	.148	2.013E-04	.0171	2.431E-04	.0206	.2343	374.0000
94	531.0	1.420	.184	2.501E-04	.0212	3.020E-04	.0256	.2274	375.5000
95	530.2	1.277	.181	2.455E-04	.0208	2.964E-04	.0252	.2239	373.3000
96	529.6	1.169	.152	2.053E-04	.0174	2.479E-04	.0210	.2363	368.0000
97	529.4	1.231	.157	2.124E-04	.0180	2.564E-04	.0218	.2286	368.0000
98	529.2	1.209	.149	2.289E-04	.0194	2.764E-04	.0235	.2247	368.0000
100	527.5	1.226	.173	2.336E-04	.0198	2.819E-04	.0239	.2274	360.5000
102	526.1	1.080	.152	2.046E-04	.0174	2.468E-04	.0209	.2081	354.3000
103	526.7	1.256	.164	2.217E-04	.0188	2.674E-04	.0227	.2023	362.7000
105	529.0	1.221	.152	2.061E-04	.0175	2.488E-04	.0211	.2050	378.7000
106	529.3	1.593	.204	2.758E-04	.0234	3.330E-04	.0283	.2050	386.2000

GROUP 13 CENTERLINE TIME 2.80

CH	TC	FIT LENGTH	DTDWT	UNCERTAINTY	CH	TC	FIT LENGTH	DTDWT	UNCERTAINTY
1	1	2.00	.353	.0239	50	53	2.00	.444	.0171
2	2	2.00	.345	.0211	51	54	1.20	1.158	.0249
3	3	2.00	.317	.0306	52	55	2.00	.441	.0350
4	4	2.00	.318	.0296	53	56	1.20	1.204	.0151
5	5	2.00	.338	.0490	54	57	1.20	1.508	.0152
6	6	2.00	.293	.0300	55	58	1.20	1.669	.0143
7	7	2.00	.254	.1933	56	59	1.20	1.346	.0488
8	8	2.00	.268	.0328	57	60	1.20	1.266	.0112
9	9	2.00	.255	.0617	58	61	1.20	1.469	.0106
10	10	2.00	.221	.0310	59	62	1.20	1.401	.0193
11	11	2.00	.288	.0450	60	63	1.20	1.224	.0157
12	12	2.00	.251	.0529	61	64	2.00	-.011	-1.2327
13	13	2.00	.184	.0423	62	65	1.20	1.146	.0123
14	14	2.00	.127	.0884	63	66	1.20	1.374	.0169
15	15	2.00	.215	.0730	64	67	1.20	1.858	.0193
16	16	2.00	-.021	-.5455	65	68	1.20	1.611	.0114
17	17	2.00	-.026	-.6174	66	69	2.00	.983	.0152
18	18	2.00	.043	.3002	67	70	2.00	.899	.0100
19	19	2.00	.035	.2217	68	71	1.20	.936	.2978
20	22	1.20	1.255	.0126	69	72	2.00	.845	.0313
21	23	1.20	1.428	.0273	70	73	1.20	.989	.0197
22	24	1.20	1.458	.0205	71	74	1.20	1.135	.0373
23	25	1.20	1.272	.0370	72	75	1.20	.991	.0263
24	26	1.20	1.249	.0228	73	77	1.20	1.179	.0185
25	27	1.20	1.330	.0173	74	78	1.20	1.337	.0161
26	28	1.20	1.233	.0141	75	79	1.20	1.203	.0205
27	29	1.20	1.225	.0144	76	80	.80	2.093	.0266
28	30	1.20	1.134	.0168	77	81	1.20	1.207	.0128
29	31	1.20	1.076	.0124	78	83	1.20	1.370	.0126
30	32	1.20	1.067	.0211	79	84	1.20	1.708	.0692
31	33	2.00	.632	.0126	80	85	1.20	1.284	.0129
32	34	2.00	.831	.0107	81	87	2.00	.972	.0102
33	35	2.00	.756	.0131	82	88	1.20	1.297	.0147
34	36	2.00	.452	.0164	83	89	1.20	1.338	.0164
35	37	2.00	.640	.0135	84	90	1.20	1.269	.0176
36	38	2.00	.515	.0182	85	91	1.20	1.303	.0137
37	39	2.00	.408	.0185	86	92	1.20	1.180	.0179
38	41	1.20	1.271	.0152	87	93	1.20	1.163	.0395
39	42	2.00	.955	.0175	88	94	1.20	1.420	.0129
40	43	1.20	1.244	.0190	89	95	1.20	1.277	.0176
41	44	2.00	1.016	.0078	90	96	1.20	1.169	.0585
42	45	2.00	.804	.0086	91	97	1.20	1.231	.0276
43	46	2.00	.787	.0179	92	98	1.20	1.209	.0393
44	47	1.20	1.026	.0220	93	100	1.20	1.226	.0243
45	48	2.00	.569	.0148	94	102	1.20	1.080	.0281
46	49	2.00	.779	.0114	95	103	1.20	1.256	.0259
47	50	2.00	.516	.0494	96	105	1.20	1.221	.0231
48	51	2.00	.507	.0172	97	106	1.20	1.593	.0107
49	52	2.00	.510	.0204	98	0	-0	0	0

14 .050

BIT ON LOOP 59

DATE 5/12/75

AEDC(ARO,INC.) ARNOLD AFS, TENNESSEE
VON KARMAN GAS DYNAMICS FACILITY
50 INCH HYPERSONIC TUNNEL B
V41B-87A

GROUP	TEST CONDITION	MODEL	MACH NO	PO,PSIA	TO,DEG R	ALPHA-MODEL	ALPHA-SECTOR	ALPHA-PREBEND	ROLL MODEL	YAW
14	6	140 B	7.90	108.8	1268	35.05	-5.05	30.00	179.88	.0

T-INF (DEG R)	P-INF (PSIA)	Q-INF (PSIA)	V-INF (FT/SEC)	RHO-INF (SLUGS/FT3)	MU-INF (LB-SEC/FT2)	RE/FT (FT-1)	HREF-FR (R= .0400FT)	STFR (R= .0400FT)	SWITCH POSITION
94.1	.012	.528	3754	1.079E-05	7.572E-08	5.348E 05	1.176E-02	3.662E-02	2

TC NO	TW	DIWDT	QDOT	H(TO)	H(TO)/HREF	H(.9TO)	H(.9TO)/HREF		
								ACCESS HATCH WINDOW	
								X/L	Z,FULL SCALE(IN)
107	529.3	1.453	.208	2.812E-04	.0239	3.395E-04	.0289	.2050	396.2000
								FUSELAGE VENT PANEL NO. 3 AND 1	
								X/L	Z,FULL SCALE(IN)
108	529.6	2.604	.275	3.724E-04	.0317	4.496E-04	.0382	.1244	377.5000
109	529.1	2.236	.276	3.735E-04	.0318	4.508E-04	.0383	.1302	377.5000
110	529.0	2.178	.276	3.729E-04	.0317	4.501E-04	.0383	.1360	377.5000
111	529.1	2.152	.259	3.503E-04	.0298	4.228E-04	.0360	.1418	377.5000
112	529.0	2.322	.275	3.724E-04	.0317	4.495E-04	.0382	.1476	377.5000
113	529.1	2.406	.275	3.728E-04	.0317	4.501E-04	.0383	.1215	273.5000
114	528.8	2.289	.274	3.710E-04	.0316	4.479E-04	.0381	.1273	273.5000
115	528.7	2.211	.274	3.703E-04	.0315	4.469E-04	.0380	.1331	273.5000
116	528.4	2.089	.256	3.459E-04	.0294	4.174E-04	.0355	.1389	273.5000
117	528.6	2.279	.252	3.542E-04	.0301	4.276E-04	.0364	.1447	273.5000
118	527.5	1.807	.249	3.368E-04	.0286	4.064E-04	.0346	.1409	366.0000
119	527.2	2.086	.259	3.635E-04	.0309	4.386E-04	.0373	.1442	366.0000
120	526.8	2.242	.279	3.768E-04	.0321	4.546E-04	.0387	.1215	359.5000
121	526.8	1.920	.235	3.169E-04	.0270	3.823E-04	.0325	.1303	359.5000
122	526.4	1.888	.234	3.160E-04	.0269	3.812E-04	.0324	.1337	359.5000
								LOWER RCS NOZZLES	
								X/L	Z,FULL SCALE(IN)
124	532.6	1.045	.093	1.269E-04	.0108	1.533E-04	.0130	.0950	400.0000
125	529.2	1.037	.113	1.526E-04	.0130	1.842E-04	.0157	.0988	400.0000
126	531.7	.855	.117	1.590E-04	.0135	1.920E-04	.0163	.1027	400.0000
127	532.6	1.067	.144	1.956E-04	.0166	2.364E-04	.0201	.0911	395.0000
128	532.2	1.108	.135	1.828E-04	.0156	2.209E-04	.0188	.0950	395.0000
129	531.8	1.177	.138	1.876E-04	.0160	2.267E-04	.0193	.0988	395.0000
130	534.1	1.136	.136	1.853E-04	.0158	2.241E-04	.0191	.0810	390.0000
131	533.3	1.198	.177	2.409E-04	.0205	2.911E-04	.0248	.0857	390.0000
132	531.9	1.313	.153	2.077E-04	.0177	2.509E-04	.0213	.0963	390.0000
133	533.1	1.219	.148	2.014E-04	.0171	2.433E-04	.0207	.0857	383.8000
134	532.2	1.547	.207	2.815E-04	.0239	3.401E-04	.0289	.0872	377.3000
135	531.7	2.175	.261	3.544E-04	.0301	4.281E-04	.0364	.0903	374.5500
136	530.7	2.435	.270	3.667E-04	.0313	4.429E-04	.0377	.0960	374.5500
137	532.0	2.260	.295	4.014E-04	.0341	4.849E-04	.0412	.0872	370.5500
138	531.2	2.395	.276	3.740E-04	.0318	4.518E-04	.0384	.0928	370.5500
139	533.1	2.381	.304	4.137E-04	.0352	5.000E-04	.0425	.0816	366.0500
140	530.9	2.540	.323	4.379E-04	.0372	5.288E-04	.0450	.0934	362.4000
141	529.5	2.464	.325	4.401E-04	.0374	5.313E-04	.0452	.0973	362.4000
142	530.2	1.857	.202	2.738E-04	.0233	3.306E-04	.0281	.0833	355.2000
143	530.9	2.807	.282	3.821E-04	.0325	4.615E-04	.0393	.0919	355.2000
144	529.8	3.398	.447	6.052E-04	.0515	7.307E-04	.0622	.0949	349.0000

DATE 5/12/75

AEDC(ARO,INC.) ARNOLD AFS, TENNESSEE
VON KARMAN GAS DYNAMICS FACILITY
50 INCH HYPERSONIC TUNNEL B
V41A-B7A

GROUP	TEST CONDITION	MODEL	MACH NO	PO,PSIA	TO,DEG R	ALPHA-MODEL	ALPHA-SECTOR	ALPHA-PREBEND	ROLL MODEL	YAW
14	6	140 B	7.90	108.8	1268	35.05	-5.05	30.00	179.88	.0

T-INF (DEG R)	P-INF (PSIA)	Q-INF (PSIA)	V-INF (FT/SEC)	RHO-INF (SLUGS/FT3)	MU-INF (LB-SEC/FT2)	RE/FT (FT-1)	HREF-FR (R= .0400FT)	SIFR (R= .0400FT)	SWITCH POSITION
94.1	.012	.528	3754	1.079E-05	7.572E-08	5.348E 05	1.176E-02	3.662E-02	2

TC NO	TW	DTWDT	QDOT	H(TO)	H(TO)/HREF	H(.9TO)	H(.9TO)/HREF	X/L	2Y/B
								UPPER RCS NOZZLES	
161	536.2	.804	.095	1.302E-04	.0111	1.575E-04	.0134	.0619	-.0160
162	535.6	.942	.089	1.219E-04	.0104	1.474E-04	.0125	.0709	-.0160
163	535.1	.719	.088	1.205E-04	.0103	1.458E-04	.0124	.0807	-.0160
164	535.1	.580	.076	1.032E-04	.0088	1.248E-04	.0106	.0943	-.0160
165	535.1	.357	.045	6.145E-05	.0052	7.430E-05	.0063	.0978	-.0160
166	535.3	.465	.060	8.141E-05	.0069	9.844E-05	.0084	.1013	-.0160
167	535.7	.613	.083	1.133E-04	.0096	1.370E-04	.0117	.0619	-.0320
168	535.4	.648	.068	9.296E-05	.0079	1.124E-04	.0096	.0709	-.0320
169	534.7	.458	.056	7.587E-05	.0065	9.173E-05	.0078	.0807	-.0320
170	534.2	.383	.048	6.530E-05	.0056	7.894E-05	.0067	.0943	-.0320
171	534.1	.480	.058	7.894E-05	.0067	9.543E-05	.0081	.0978	-.0320
172	533.9	.406	.053	7.208E-05	.0061	8.713E-05	.0074	.1013	-.0320
173	534.2	.445	.059	8.094E-05	.0069	9.784E-05	.0083	.0807	-.0480
174	533.6	.274	.031	4.247E-05	.0036	5.134E-05	.0044	.0943	-.0480
175	533.5	.191	.027	3.733E-05	.0032	4.512E-05	.0038	.0978	-.0480
176	533.5	.230	.031	4.265E-05	.0036	5.155E-05	.0044	.1013	-.0480
								CANOPY	
177	540.4	4.170	.575	7.909E-04	.0673	9.578E-04	.0815		
178	540.6	4.092	.807	1.109E-03	.0943	1.343E-03	.1143		
179	539.7	2.708	.569	7.810E-04	.0664	9.456E-04	.0804		
180	538.4	1.936	.253	3.468E-04	.0295	4.197E-04	.0357		
181	538.4	1.703	.232	3.176E-04	.0270	3.845E-04	.0327		
182	537.5	.866	.124	1.692E-04	.0144	2.048E-04	.0174		
183	535.0	.328	.041	5.624E-05	.0048	6.800E-05	.0058		
184	535.1	.356	.049	6.650E-05	.0057	8.041E-05	.0068		
185	537.7	1.759	.212	2.900E-04	.0247	3.509E-04	.0298		
186	538.1	1.802	.227	3.104E-04	.0264	3.756E-04	.0320		
187	537.5	1.519	.203	2.772E-04	.0236	3.355E-04	.0285		
188	538.0	1.182	.276	3.776E-04	.0321	4.569E-04	.0389		
189	536.6	.951	.136	1.855E-04	.0158	2.244E-04	.0191		
190	536.6	1.343	.193	2.645E-04	.0225	3.200E-04	.0272		
191	536.5	.840	.128	1.756E-04	.0149	2.124E-04	.0181		

DATE 5/12/75

AEDC(ARO,INC.) ARNOLD AFS, TENNESSEE
VON KARMAN GAS DYNAMICS FACILITY
50 INCH HYPERSONIC TUNNEL B
V41H-87A

GROUP	TEST CONDITION	MODEL	MACH NO	PO,PSIA	TO,DEG R	ALPHA-MODEL	ALPHA-SECTOR	ALPHA-PREBEND	ROLL MODEL	YAW
14	6	140 B	7.90	108.8	1268	35.05	-5.05	30.00	179.88	.0

T-INF (DEG R)	P-INF (PSIA)	Q-INF (PSIA)	V-INF (FT/SEC)	RHO-INF (SLUGS/FT3)	MU-INF (LB-SEC/FT2)	RE/FT (FT-1)	HREF-FR (R= .0400FT)	STFR (R= .0400FT)	SWITCH POSITION
94.1	.012	.528	3754	1.079E-05	7.572E-08	5.348E 05	1.176E-02	3.662E-02	2

TC NO	TW	DIWDT	QDOT	H(TO)	H(TO)/HREF	H(.9TO)	H(.9TO)/HREF
						CANOPY	
192	533.0	.075	.011	1.448E-05	.0012	1.749E-05	.0015
193	536.5	.706	.136	1.601E-04	.0158	2.252E-04	.0192
194	533.5	.191	.025	3.355E-05	.0029	4.055E-05	.0034
195	533.8	.361	.045	6.064E-05	.0052	7.330E-05	.0062
196	534.5	.276	.036	4.947E-05	.0042	5.981E-05	.0051
197	530.7	.199	.020	2.677E-05	.0023	3.234E-05	.0028
198	531.3	.206	.024	3.242E-05	.0028	3.917E-05	.0033
199	532.4	.366	.049	6.676E-05	.0057	8.066E-05	.0069
200	533.2	.476	.068	9.232E-05	.0079	1.116E-04	.0095
201	534.1	.430	.061	8.272E-05	.0070	1.000E-04	.0085
202	535.1	.336	.043	5.800E-05	.0049	7.014E-05	.0060
203	531.1	.240	.030	4.031E-05	.0034	4.869E-05	.0041
204	532.1	.347	.054	7.329E-05	.0062	8.854E-05	.0075
205	533.6	.525	.082	1.113E-04	.0095	1.346E-04	.0114
206	530.8	-.408	-.054	-7.328E-05	-.0062	-8.850E-05	-.0075
207	534.4	.594	.080	1.086E-04	.0092	1.313E-04	.0112
208	530.7	.197	.026	3.588E-05	.0031	4.333E-05	.0037
209	531.5	.162	.022	3.019E-05	.0026	3.647E-05	.0031
210	532.1	.219	.029	3.968E-05	.0034	4.795E-05	.0041
211	529.5	.425	.052	6.974E-05	.0059	8.419E-05	.0072
212	530.6	.387	.052	7.062E-05	.0060	8.529E-05	.0073
213	530.6	.277	.037	4.977E-05	.0042	6.010E-05	.0051
214	531.4	.377	.053	7.172E-05	.0061	8.663E-05	.0074
215	531.7	.245	.035	4.722E-05	.0040	5.705E-05	.0049
216	533.6	.607	.086	1.173E-04	.0100	1.418E-04	.0121
217	533.7	.540	.077	1.047E-04	.0089	1.266E-04	.0108
218	530.3	.234	.032	4.370E-05	.0037	5.276E-05	.0045
219	531.5	.923	.130	1.761E-04	.0150	2.127E-04	.0181
220	531.4	.284	.039	5.295E-05	.0045	6.396E-05	.0054

GROUP 14 CENTERLINE TIME 2.90

CH	TC	FIT LENGTH	DTDWT	UNCERTAINTY	CH	TC	FIT LENGTH	DTDWT	UNCERTAINTY
1	107	1.20	1.453	.0124	50	173	2.00	.445	.0376
2	108	.80	2.604	.0116	51	174	2.00	.274	.0480
3	109	.80	2.236	.0155	52	175	2.00	.191	.0575
4	110	.80	2.178	.0144	53	176	2.00	.230	.0434
5	111	.80	2.152	.0322	54	177	.60	4.170	.0149
6	112	.80	2.322	.0115	55	178	.60	4.092	.0115
7	113	.80	2.466	.0624	56	179	.80	2.708	.0457
8	114	.80	2.285	.0080	57	180	1.20	1.936	.0112
9	115	.80	2.211	.0293	58	181	1.20	1.703	.0096
10	116	.80	2.089	.0187	59	182	2.00	.866	.0158
11	117	.80	2.279	.0194	60	183	2.00	.328	.0309
12	118	1.20	1.807	.0153	61	184	2.00	.356	.0503
13	119	.80	2.046	.0142	62	185	1.20	1.759	.0085
14	120	.80	2.242	.0227	63	186	1.20	1.802	.0094
15	121	1.20	1.920	.0221	64	187	1.20	1.519	.0124
16	122	1.20	1.888	.0139	65	188	1.20	1.182	.0145
17	124	1.20	1.045	.0246	66	189	2.00	.951	.0149
18	125	2.00	1.037	.0140	67	190	1.20	1.343	.0146
19	126	2.00	.855	.0128	68	191	2.00	.840	.1586
20	127	1.20	1.067	.0212	69	192	2.00	.075	.3498
21	128	1.20	1.108	.0136	70	193	2.00	.706	.0155
22	129	1.20	1.177	.0139	71	194	2.00	.191	.1097
23	130	1.20	1.136	.0505	72	195	2.00	.361	.0243
24	131	1.20	1.196	.0199	73	196	2.00	.276	.0432
25	132	1.20	1.313	.0203	74	197	2.00	.199	.0556
26	133	1.20	1.219	.0146	75	198	2.00	.206	.0620
27	134	1.20	1.547	.0134	76	199	2.00	.366	.0376
28	135	.80	2.175	.0138	77	200	2.00	.476	.0181
29	136	.80	2.435	.0105	78	201	2.00	.430	.0219
30	137	.80	2.260	.0178	79	202	2.00	.336	.1672
31	138	.80	2.395	.0101	80	203	2.00	.240	.0354
32	139	.80	2.341	.0140	81	204	2.00	.347	.0234
33	140	.80	2.540	.0117	82	205	2.00	.525	.0177
34	141	.80	2.464	.0108	83	206	2.00	-.408	-.0889
35	142	1.20	1.857	.0109	84	207	2.00	.594	.0181
36	143	.80	2.807	.0130	85	208	2.00	.197	.0527
37	144	.80	3.398	.0074	86	209	2.00	.162	.0760
38	161	2.00	.804	.0134	87	210	2.00	.219	.1063
39	162	2.00	.942	.0151	88	211	2.00	.425	.0573
40	163	2.00	.715	.0230	89	212	2.00	.387	.0255
41	164	2.00	.580	.0114	90	213	2.00	.277	.1246
42	165	2.00	.357	.0230	91	214	2.00	.377	.0416
43	166	2.00	.465	.0296	92	215	2.00	.245	.1001
44	167	2.00	.613	.0149	93	216	2.00	.607	.0176
45	168	2.00	.648	.0111	94	217	2.00	.540	.0371
46	169	2.00	.458	.0168	95	218	2.00	.234	.0633
47	170	2.00	.383	.0452	96	219	2.00	.923	.0240
48	171	2.00	.480	.0214	97	220	2.00	.284	.0372
49	172	2.00	.406	.0246	98	0	-0	0	0

15 .050

BIT ON LOOP 60

DATE 5/12/75

AEDC(ARO,INC.) ARNOLD AFS, TENNESSEE
VON KARMAN GAS DYNAMICS FACILITY
50 INCH HYPERSONIC TUNNEL B
V418-B7A

GROUP	TEST CONDITION	MODEL	MACH NO	PO,PSIA	TO,DEG R	ALPHA-MODEL	ALPHA-SECTOR	ALPHA-PREBEND	ROLL MODEL	YAW
15	6	140 B	7.90	110.0	1269	35.01	-5.01	30.00	179.88	.0

T-INF (DEG R)	P-INF (PSIA)	Q-INF (PSIA)	V-INF (FT/SEC)	RHO-INF (SLUGS/FT3)	MU-INF (LB-SEC/FT2)	RE/FT (FT-1)	HREF-FR (R= .0400FT)	STFR (R= .0400FT)	SWITCH POSITION
94.1	.012	.534	3755	1.090E-05	7.576E-08	5.403E 05	1.182E-02	3.643E-02	3

TC NO	TW	DI#DT	QDOT	H(TO)	H(TO)/HREF	H(.9TO)	H(.9TO)/HREF	X/L	2Y/B
								CANOPY	
221	528.9	.276	.033	4.504E-05	.0038	5.437E-05	.0046		
222	528.2	.283	.035	4.704E-05	.0040	5.677E-05	.0048		
223	528.6	.593	.080	1.084E-04	.0092	1.308E-04	.0111		
								ESCAPE HATCH AND WINDOW	
224	534.2	2.402	.239	3.257E-04	.0275	3.937E-04	.0333	.1933	.0162
225	533.9	1.747	.209	2.845E-04	.0241	3.438E-04	.0291	.1972	.0162
226	532.7	1.522	.160	2.179E-04	.0184	2.632E-04	.0223	.1933	.0384
227	531.7	1.060	.155	2.104E-04	.0178	2.541E-04	.0215	.1972	.0384
228	530.5	.622	.080	1.082E-04	.0092	1.307E-04	.0111	.1933	.0653
229	531.6	.633	.081	1.101E-04	.0093	1.329E-04	.0112	.1972	.0653
232	533.2	.112	.015	2.082E-05	.0017	2.492E-05	.0021	.2567	.0235
233	533.6	.144	.022	2.969E-05	.0025	3.588E-05	.0030	.2606	.0235
236	532.3	.044	.006	8.779E-06	.0007	1.061E-05	.0009	.2567	.0491
237	532.7	.143	.020	2.731E-05	.0023	3.300E-05	.0028	.2606	.0491
								CARGO BAY HINGE NO. 1	
								X/L	Z,FULL SCALE(IN)
238	532.9	.794	.106	1.444E-04	.0122	1.745E-04	.0148	.2879	420.0000
239	533.0	.779	.104	1.418E-04	.0120	1.713E-04	.0145	.2917	420.0000
240	532.4	.655	.094	1.270E-04	.0107	1.535E-04	.0130	.2840	415.0000
241	532.6	.688	.097	1.314E-04	.0111	1.588E-04	.0134	.2879	415.0000
242	529.2	.660	.094	1.273E-04	.0108	1.536E-04	.0130	.2917	415.0000
243	531.1	.715	.087	1.184E-04	.0100	1.430E-04	.0121	.2801	405.0000
244	531.0	.682	.080	1.081E-04	.0091	1.305E-04	.0110	.2840	405.0000
								CARGO BAY HINGE NO. 2	
								X/L	Z,FULL SCALE(IN)
245	533.0	.596	.085	1.158E-04	.0098	1.399E-04	.0118	.3192	420.0000
246	533.2	.639	.091	1.240E-04	.0105	1.499E-04	.0127	.3439	420.0000
247	532.6	.586	.086	1.172E-04	.0099	1.417E-04	.0120	.3362	415.0000
248	532.8	.684	.101	1.370E-04	.0116	1.655E-04	.0140	.3401	415.0000
249	533.2	.594	.087	1.189E-04	.0101	1.437E-04	.0122	.3439	415.0000
250	532.4	1.100	.138	1.874E-04	.0159	2.264E-04	.0192	.3323	405.0000
251	532.2	1.087	.133	1.812E-04	.0153	2.189E-04	.0185	.3362	405.0000
								CARGO BAY HINGE NO. 3	
								X/L	Z,FULL SCALE(IN)
252	534.0	1.582	.230	3.125E-04	.0264	3.778E-04	.0320	.3923	420.0000
253	534.9	1.892	.275	3.743E-04	.0317	4.526E-04	.0383	.3961	420.0000
254	533.6	1.478	.224	3.052E-04	.0258	3.688E-04	.0312	.3884	415.0000
257	532.6	2.009	.271	3.677E-04	.0311	4.443E-04	.0376	.3845	405.0000
258	532.6	1.536	.209	2.840E-04	.0240	3.432E-04	.0290	.3884	405.0000

DATE 5/12/75

AEDC(ARO,INC.) ARNOLD AFS, TENNESSEE
VON KARMAN GAS DYNAMICS FACILITY
50 INCH HYPERSONIC TUNNEL B
V41B-B7A

GROUP	TEST CONDITION	MODEL	MACH NO	PO,PSIA	TO,DEG R	ALPHA-MODEL	ALPHA-SECTOR	ALPHA-PREBEND	ROLL MODEL	YAW
15	6	140 B	7.90	110.0	1269	35.01	-5.01	30.00	179.88	.0

T-INF (DEG R)	P-INF (PSIA)	Q-INF (PSIA)	V-INF (FT/SEC)	RHO-INF (SLUGS/FT3)	MU-INF (LB-SEC/FT2)	RE/FT (FT-1)	HREF-FR (R= .0400FT)	STFR (R= .0400FT)	SWITCH POSITION
94.1	.012	.534	3755	1.090E-05	7.576E-08	5.403E 05	1.182E-02	3.643E-02	3

TC NO	TW	DTWDT	QDOT	H(TO)	H(TO)/HREF	H(.9TO)	H(.9TO)/HREF	TOP CENTERLINE X/L
367	557.9	35.835	4.250	5.994E-03	.5070	7.296E-03	.6172	0
368	547.6	23.738	3.031	4.204E-03	.3556	5.101E-03	.4315	.0008
369	542.9	16.921	1.989	2.740E-03	.2318	3.321E-03	.2809	.0019
370	540.2	11.641	1.424	1.954E-03	.1653	2.367E-03	.2002	.0037
371	538.2	7.677	.752	1.030E-03	.0871	1.247E-03	.1054	.0058
372	535.7	5.000	.644	8.782E-04	.0743	1.062E-03	.0898	.0087
373	534.8	3.298	.432	5.863E-04	.0498	7.113E-04	.0602	.0118
374	534.3	2.557	.335	4.556E-04	.0385	5.508E-04	.0466	.0151
375	534.5	1.957	.267	3.643E-04	.0308	4.404E-04	.0372	.0182
376	534.9	1.527	.201	2.742E-04	.0232	3.316E-04	.0280	.0215
377	534.9	1.581	.203	2.772E-04	.0234	3.351E-04	.0283	.0246
378	534.7	1.273	.148	2.023E-04	.0171	2.446E-04	.0207	.0278
379	535.0	.861	.106	1.443E-04	.0122	1.744E-04	.0148	.0609
380	534.3	.741	.076	1.037E-04	.0088	1.253E-04	.0106	.0646
381	533.9	.652	.084	1.150E-04	.0097	1.390E-04	.0118	.0684
382	533.7	.585	.077	1.041E-04	.0088	1.258E-04	.0106	.0721
383	533.5	.590	.079	1.074E-04	.0091	1.298E-04	.0110	.0760
384	533.5	.591	.082	1.120E-04	.0095	1.354E-04	.0114	.0796
385	533.8	.520	.067	9.095E-05	.0077	1.099E-04	.0093	.0789
386	533.9	.523	.062	8.425E-05	.0071	1.018E-04	.0086	.0982
387	534.1	.644	.079	1.077E-04	.0091	1.302E-04	.0110	.1019
388	534.6	1.035	.099	1.342E-04	.0114	1.622E-04	.0137	.1160
389	534.6	.933	.135	1.845E-04	.0156	2.230E-04	.0189	.1195
390	534.4	.786	.124	1.688E-04	.0143	2.041E-04	.0173	.1231
391	534.3	.862	.138	1.872E-04	.0158	2.263E-04	.0191	.1268
392	534.5	.900	.154	2.102E-04	.0178	2.541E-04	.0215	.1305
393	534.4	.955	.162	2.201E-04	.0186	2.660E-04	.0225	.1338
394	534.1	1.059	.178	2.421E-04	.0205	2.926E-04	.0248	.1376
395	534.3	1.058	.158	2.157E-04	.0182	2.607E-04	.0221	.1411
396	534.4	1.157	.172	2.336E-04	.0198	2.824E-04	.0239	.1448
397	534.5	1.256	.186	2.537E-04	.0215	3.067E-04	.0259	.1483
398	534.7	2.131	.300	4.086E-04	.0346	4.940E-04	.0418	.1519
399	536.8	3.141	.420	5.739E-04	.0485	6.942E-04	.0587	.1556

DATE 5/12/75

AEDC(ARO,INC.) ARNOLD AFS, TENNESSEE
VON KARMAN GAS DYNAMICS FACILITY
50 INCH HYPERSONIC TUNNEL B
V418-87A

GROUP	TEST CONDITION	MODEL	MACH NO	PO,PSIA	TO,DEG R	ALPHA-MODEL	ALPHA-SECTOR	ALPHA-PREBEND	ROLL MODEL	YAW
15	6	140 B	7.90	110.0	1269	35.01	-5.01	30.00	179.88	.0

T-INF (DEG R)	P-INF (PSIA)	Q-INF (PSIA)	V-INF (FT/SEC)	RHO-INF (SLUGS/FT3)	MU-INF (LB-SEC/FT2)	RE/FT (FT-1)	HREF-FR (R= .0400FT)	STFR (R= .0400FT)	SWITCH POSITION
94.1	.012	.534	3755	1.090E-05	7.576E-08	5.403E 05	1.182E-02	3.643E-02	3

TC NO	TW	DT*DT	QDOT	H(TO)	H(TO)/HREF	H(.9TO)	H(.9TO)/HREF	X/L	2Y/B
								TOP CENTERLINE	
400	537.9	4.871	.658	9.008E-04	.0762	1.090E-03	.0922	.1582	
401	537.7	5.323	.641	9.448E-04	.0799	1.143E-03	.0967	.1608	
402	537.7	5.622	.702	9.602E-04	.0812	1.162E-03	.0983	.1635	
403	538.5	5.913	.720	9.859E-04	.0834	1.193E-03	.1009	.1664	
404	538.7	5.853	.710	9.727E-04	.0823	1.177E-03	.0996	.1691	
405	539.1	6.003	.728	9.964E-04	.0845	1.209E-03	.1022	.1720	
406	537.9	5.785	.702	9.661E-04	.0812	1.162E-03	.0983	.1748	
407	537.8	4.923	.637	8.711E-04	.0737	1.054E-03	.0892	.1769	
408	537.1	4.446	.652	8.916E-04	.0754	1.079E-03	.0912	.1800	
409	536.3	3.561	.513	7.000E-04	.0592	8.467E-04	.0716	.1831	
410	536.8	3.174	.457	6.246E-04	.0528	7.556E-04	.0639	.1863	
411	535.5	2.292	.344	4.695E-04	.0397	5.677E-04	.0480	.1894	
412	535.5	1.849	.251	3.427E-04	.0290	4.144E-04	.0351	.1931	
413	534.8	1.241	.166	2.267E-04	.0192	2.741E-04	.0232	.1972	
414	534.7	.700	.094	1.277E-04	.0108	1.544E-04	.0131	.2049	
415	533.7	.283	.028	3.794E-05	.0032	4.586E-05	.0039	.2250	
416	534.1	.122	.014	1.944E-05	.0016	2.350E-05	.0020	.2500	
								NOSE TC (Z = 338)	
145	553.5	23.520	3.182	4.449E-03	.3764	5.409E-03	.4575	.0008	.5039
146	552.8	24.842	3.360	4.694E-03	.3971	5.705E-03	.4826	.0023	.5082
147	547.8	19.782	2.669	3.702E-03	.3132	4.493E-03	.3800	.0043	.5135
148	547.4	15.125	2.148	2.923E-03	.2472	3.547E-03	.3000	.0068	.5205
149	544.8	11.373	1.644	2.272E-03	.1921	2.754E-03	.2330	.0095	.5279
150	544.3	9.918	1.420	1.961E-03	.1659	2.377E-03	.2011	.0122	.5354
151	544.4	7.103	.998	1.378E-03	.1166	1.671E-03	.1413	.0218	.5621
152	543.9	7.544	1.023	1.411E-03	.1194	1.710E-03	.1447	.0251	.5712
153	543.7	7.924	.967	1.334E-03	.1129	1.617E-03	.1368	.0286	.5808
154	543.0	7.872	.979	1.348E-03	.1140	1.634E-03	.1382	.0319	.5898
155	541.7	7.070	.888	1.221E-03	.1033	1.479E-03	.1251	.0354	.5995
156	540.6	6.401	.794	1.091E-03	.0923	1.321E-03	.1118	.0387	.6085
157	540.0	6.332	.777	1.067E-03	.0902	1.291E-03	.1092	.0420	.6176
158	539.4	7.041	.864	1.185E-03	.1002	1.434E-03	.1213	.0462	.6294
159	538.4	6.379	.714	9.775E-04	.0827	1.183E-03	.1001	.0503	.6406

GROUP 15 CENTERLINE TIME 2.95

CH	TC	FIT LENGTH	DTDWT	UNCERTAINTY	CH	TC	FIT LENGTH	DTDWT	UNCERTAINTY
1	221	2.00	.276	.0266	50	384	2.00	.591	.0366
2	222	2.00	.283	.0261	51	385	2.00	.520	.0311
3	223	2.00	.593	.0130	52	386	2.00	.523	.0206
4	224	.80	2.402	.0157	53	387	2.00	.644	.0128
5	225	1.20	1.747	.0323	54	388	1.20	1.035	.0156
6	226	1.20	1.522	.0110	55	389	2.00	.933	.0099
7	227	1.20	1.060	.0800	56	390	2.00	.786	.0340
8	228	2.00	.622	.0139	57	391	2.00	.862	.0080
9	229	2.00	.633	.0343	58	392	2.00	.900	.0088
10	232	2.00	.112	.0713	59	393	2.00	.955	.0134
11	233	2.00	.144	.0838	60	394	1.20	1.059	.0185
12	236	2.00	.044	.2464	61	395	1.20	1.058	.0340
13	237	2.00	.143	.0665	62	396	1.20	1.157	.0147
14	238	2.00	.794	.0138	63	397	1.20	1.256	.0151
15	239	2.00	.779	.0181	64	398	.80	2.131	.0321
16	240	2.00	.655	.0406	65	399	.80	3.141	.0085
17	241	2.00	.688	.0377	66	400	.60	4.871	.0150
18	242	2.00	.660	.0255	67	401	.60	5.323	.0059
19	243	2.00	.715	.0181	68	402	.60	5.622	.0648
20	244	2.00	.682	.0229	69	403	.60	5.913	.0301
21	245	2.00	.596	.0122	70	404	.60	5.853	.0110
22	246	2.00	.639	.0142	71	405	.60	6.003	.0171
23	247	2.00	.596	.0426	72	406	.60	5.785	.0094
24	248	2.00	.684	.0209	73	407	.60	4.923	.0110
25	249	2.00	.594	.0197	74	408	.60	4.446	.0124
26	250	1.20	1.100	.0189	75	409	.80	3.561	.0126
27	251	1.20	1.087	.0144	76	410	.80	3.174	.0109
28	252	1.20	1.582	.0136	77	411	.80	2.292	.0152
29	253	1.20	1.892	.0079	78	412	1.20	1.849	.0105
30	254	1.20	1.478	.0139	79	413	1.20	1.241	.0879
31	257	.80	2.009	.0179	80	414	2.00	.700	.0121
32	258	1.20	1.536	.0141	81	415	2.00	.283	.0302
33	367	.20	35.835	.0073	82	416	2.00	.122	.0514
34	368	.30	23.738	.0059	83	145	.30	23.520	.0072
35	369	.30	16.921	.0065	84	146	.30	24.842	.0045
36	370	.40	11.641	.0122	85	147	.30	19.782	.0095
37	371	.60	7.677	.0057	86	148	.40	15.125	.0046
38	372	.60	5.000	.0119	87	149	.40	11.373	.0180
39	373	.80	3.298	.0121	88	150	.40	9.919	.0116
40	374	.80	2.557	.0185	89	151	.60	7.103	.0097
41	375	1.20	1.957	.0078	90	152	.60	7.544	.0231
42	376	1.20	1.527	.0096	91	153	.60	7.924	.0113
43	377	1.20	1.581	.0164	92	154	.40	7.872	.0337
44	378	1.20	1.273	.0182	93	155	.60	7.070	.0077
45	379	2.00	.861	.0094	94	156	.60	6.401	.0152
46	380	2.00	.741	.0122	95	157	.60	6.332	.0121
47	381	2.00	.652	.0361	96	158	.60	7.041	.0151
48	382	2.00	.585	.0186	97	159	.60	6.379	.0061
49	383	2.00	.590	.0186	98	0	-0	0	0

16 .050

BIT ON LOOP 61

DATE 5/12/75

AEDC(ARO,INC.) ARNOLD AFS, TENNESSEE
VON KARMAN GAS DYNAMICS FACILITY
50 INCH HYPERSONIC TUNNEL B
V41B-87A

GROUP	TEST CONDITION	MODEL	MACH NO	PO,PSIA	TO,DEG R	ALPHA-MODEL	ALPHA-SECTOR	ALPHA-PREBEND	ROLL MODEL	YAW
16	7	140 B	7.90	109.9	1269	40.05	-10.05	30.00	179.88	.0

T-INF (DEG R)	P-INF (PSIA)	Q-INF (PSIA)	V-INF (FT/SEC)	RHO-INF (SLUGS/FT3)	MU-INF (LB-SEC/FT2)	RE/FT (FT-1)	HREF-FR (R= .0400FT)	STFR (R= .0400FT)	SWITCH POSITION
94.1	.012	.534	3755	1.089E-05	7.576E-08	5.398E 05	1.182E-02	3.644E-02	1

TC NO	TW	DTWDT	COOT	H(TO)	H(TO)/HREF	H(.9TO)	H(.9TO)/HREF
1	531.5	.283	.037	5.043E-05	.0043	6.092E-05	.0052
2	530.3	.300	.040	5.447E-05	.0046	6.577E-05	.0056
3	530.2	.296	.040	5.477E-05	.0046	6.613E-05	.0056
4	530.4	.271	.037	4.969E-05	.0042	6.000E-05	.0051
5	530.2	.261	.035	4.709E-05	.0040	5.686E-05	.0048
6	531.5	.230	.030	4.118E-05	.0035	4.974E-05	.0042
7	530.2	.244	.035	4.800E-05	.0041	5.796E-05	.0049
8	530.2	.256	.039	5.216E-05	.0044	6.298E-05	.0053
9	530.2	.239	.035	4.687E-05	.0040	5.660E-05	.0048
10	530.3	.194	.028	3.727E-05	.0032	4.501E-05	.0038
11	531.8	.191	.026	3.492E-05	.0030	4.217E-05	.0036
12	531.7	.161	.022	3.000E-05	.0025	3.624E-05	.0031
13	530.8	.108	.016	2.139E-05	.0018	2.583E-05	.0022
14	530.9	.212	.029	3.902E-05	.0033	4.713E-05	.0040
15	531.6	.162	.022	2.924E-05	.0025	3.532E-05	.0030
16	531.2	.172	.023	3.145E-05	.0027	3.798E-05	.0032
17	532.0	.105	.014	1.927E-05	.0016	2.328E-05	.0020
18	529.1	.077	.011	1.452E-05	.0012	1.753E-05	.0015
19	532.4	.048	.007	9.127E-06	.0008	1.103E-05	.0009
22	534.0	1.235	.171	2.327E-04	.0197	2.813E-04	.0238
23	533.7	1.156	.161	2.190E-04	.0185	2.647E-04	.0224
24	533.8	1.034	.139	1.898E-04	.0161	2.294E-04	.0194
25	533.7	1.019	.134	1.820E-04	.0154	2.200E-04	.0186
26	534.4	.920	.120	1.640E-04	.0139	1.982E-04	.0168
27	533.2	1.068	.148	2.017E-04	.0171	2.437E-04	.0206
28	532.8	.796	.114	1.550E-04	.0131	1.873E-04	.0158
29	532.3	.820	.118	1.599E-04	.0135	1.932E-04	.0164
30	532.5	.825	.118	1.605E-04	.0136	1.939E-04	.0164
31	532.6	.838	.117	1.586E-04	.0134	1.916E-04	.0162
32	532.6	.836	.110	1.500E-04	.0127	1.812E-04	.0153
33	531.2	.469	.067	9.053E-05	.0077	1.093E-04	.0093
34	532.1	.683	.092	1.249E-04	.0106	1.509E-04	.0128
35	532.4	.570	.080	1.092E-04	.0092	1.320E-04	.0112
36	530.8	.349	.050	6.824E-05	.0058	8.241E-05	.0070
37	531.3	.479	.067	9.090E-05	.0077	1.098E-04	.0093
38	531.1	.380	.053	7.150E-05	.0061	8.635E-05	.0073
39	530.9	.306	.044	6.021E-05	.0051	7.271E-05	.0062
41	532.9	.904	.121	1.639E-04	.0139	1.981E-04	.0168
42	533.2	.724	.099	1.341E-04	.0113	1.621E-04	.0137
43	532.8	.909	.118	1.599E-04	.0135	1.933E-04	.0164

FUSELAGE VENT NO. 1

X/L	Z,FULL SCALE(IN)
.4434	376.6300
.4264	371.6300
.4303	371.6300
.4342	371.6300
.4380	371.6300
.4434	369.1300
.4226	366.6300
.4264	366.6300
.4303	366.6300
.4342	366.6300
.4380	366.6300
.4496	366.6300
.4187	357.1300
.4396	361.6300
.4434	361.6300
.4396	355.6300
.4434	355.6300
.4396	351.6300
.4291	332.6300

CARGO BAY VENT NO. 1

X/L	Z,FULL SCALE(IN)
.3974	397.6300
.4013	397.6300
.4052	397.6300
.4090	397.6300
.4129	397.6300
.3936	392.6300
.3974	392.6300
.4013	392.6300
.4052	392.6300
.4090	392.6300
.4129	392.6300
.4090	386.1300
.4129	387.6300
.3897	383.1300
.4090	378.6300
.4129	382.1300
.4129	377.1300
.4001	373.6300

PROTUBERANCES

X/L	Z,FULL SCALE(IN)
.3546	379.0500
.3604	379.0500
.3450	374.0500

DATE 5/12/75

AEDC(ARO,INC.) ARNOLD AFS, TENNESSEE
VON KARMAN GAS DYNAMICS FACILITY
50 INCH HYPERSONIC TUNNEL B
V418-87A

GROUP	TEST CONDITION	MODEL	MACH NO	PO,PSIA	TO,DEG R	ALPHA-MODEL	ALPHA-SECTOR	ALPHA-PREBEND	ROLL MODEL	YAW
16	7	140 B	7.90	109.9	1269	40.05	-10.05	30.00	179.88	.0

T-INF (DEG R)	P-INF (PSIA)	Q-INF (PSIA)	V-INF (FT/SEC)	RHO-INF (SLUGS/FT3)	MU-INF (LB-SEC/FT2)	RE/FT (FT-1)	HREF-FR (R= .0400FT)	STFR (R= .0400FT)	SWITCH POSITION
94.1	.012	.534	3755	1.089E-05	7.576E-08	5.398E 05	1.182E-02	3.644E-02	1

TC NO	TW	DTWDT	QDOT	H(TO)	H(TO)/HREF	H(.9TO)	H(.9TO)/HREF
44	532.3	.808	.110	1.488E-04	.0126	1.798E-04	.0152
45	532.1	.760	.105	1.422E-04	.0120	1.717E-04	.0145
46	532.6	.744	.104	1.407E-04	.0119	1.700E-04	.0144
47	531.7	.754	.100	1.356E-04	.0115	1.638E-04	.0139
48	531.4	.543	.074	1.005E-04	.0085	1.214E-04	.0103
49	531.3	.619	.085	1.149E-04	.0097	1.388E-04	.0117
50	531.0	.520	.072	9.752E-05	.0083	1.178E-04	.0100
51	531.5	.439	.059	8.048E-05	.0068	9.721E-05	.0082
52	530.8	.424	.058	7.857E-05	.0066	9.489E-05	.0080
53	530.6	.400	.058	7.877E-05	.0067	9.512E-05	.0080
54	531.7	1.524	.217	2.942E-04	.0249	3.554E-04	.0301
55	531.3	.363	.052	6.996E-05	.0059	8.450E-05	.0072
56	531.7	1.472	.189	2.566E-04	.0217	3.100E-04	.0262
57	532.0	1.591	.194	2.630E-04	.0223	3.178E-04	.0269
58	531.4	1.289	.170	2.301E-04	.0195	2.779E-04	.0235
59	531.2	1.036	.136	1.842E-04	.0156	2.224E-04	.0188
60	530.6	1.011	.140	1.900E-04	.0161	2.294E-04	.0194
61	530.9	1.240	.157	2.121E-04	.0180	2.562E-04	.0217
62	531.0	1.426	.174	2.362E-04	.0200	2.853E-04	.0241
63	531.5	1.471	.192	2.599E-04	.0220	3.139E-04	.0266
64	537.2	~~.026~~	~~.003~~	~~4.355E-06~~	~~.0004~~	~~5.281E-06~~	~~.0004~~
65	532.9	1.527	.207	2.816E-04	.0238	3.402E-04	.0288
66	533.1	1.846	.232	3.159E-04	.0267	3.818E-04	.0323
67	533.3	1.366	.191	2.604E-04	.0220	3.147E-04	.0266
68	532.3	1.338	.169	2.294E-04	.0194	2.772E-04	.0235

PROTUBERANCES

X/L	Z,FULL SCALE(IN)
.3508	374.0500
.3566	374.0500
.3604	374.0500
.3392	366.5500
.3566	366.5500
.3392	360.7000
.3566	360.7000
.3604	360.7000
.3392	353.2000
.3450	353.2000
.3508	353.2000
.3566	353.2000

SUBLIMATOR VENT NO. 1

X/L	Z,FULL SCALE(IN)
.3031	371.1300
.3074	369.1300
.3089	363.6300
.3074	358.1300
.3031	356.1300
.2988	358.1300
.2973	363.6300
.2988	369.1300
.3031	376.1300
.3089	378.6300
.3101	372.6300
.3157	370.3800
.3128	363.6300

DATE 5/12/75

AEDC(ARO,INC.) ARNOLD AFS, TENNESSEE
VON KARMAN GAS DYNAMICS FACILITY
50 INCH HYPERSONIC TUNNEL B
V418-B7A

GROUP	TEST CONDITION	MODEL	MACH NO	PO,PSIA	TO,DEG R	ALPHA-MODEL	ALPHA-SECTOR	ALPHA-PREBEND	ROLL MODEL	YAW
16	7	140 B	7.90	109.9	1269	40.05	-10.05	30.00	179.88	.0

T-INF (DEG R)	P-INF (PSIA)	Q-INF (PSIA)	V-INF (FT/SEC)	RHO-INF (SLUGS/FT3)	MU-INF (LB-SEC/FT2)	RE/FT (FT-1)	HREF-FR (R= .0400FT)	STFR (R= .0400FT)	SWITCH POSITION
94.1	.012	.534	3755	1.089E-05	7.576E-08	5.398E 05	1.182E-02	3.644E-02	1

TC NO	TW	DTWDT	QDOT	H(TO)	H(TO)/HREF	H(.9TO)	H(.9TO)/HREF	X/L	Z,FULL SCALE(IN)
								FUSELAGE VENT PANEL NO. 7	
69	527.5	.991	.138	1.857E-04	.0157	2.240E-04	.0190	.2487	356.4000
70	528.4	1.102	.135	1.817E-04	.0154	2.193E-04	.0186	.2591	356.4000
71	525.4	1.036	.140	1.887E-04	.0160	2.276E-04	.0193	.2419	351.4000
72	526.4	.995	.140	1.890E-04	.0160	2.279E-04	.0193	.2487	351.4000
73	527.4	1.226	.158	2.135E-04	.0181	2.576E-04	.0218	.2552	351.4000
74	528.4	1.257	.152	2.049E-04	.0173	2.473E-04	.0209	.2610	351.4000
75	525.4	1.031	.139	1.876E-04	.0159	2.262E-04	.0191	.2419	342.8000
77	526.9	1.010	.142	1.921E-04	.0163	2.317E-04	.0196	.2552	342.8000
78	528.2	1.332	.182	2.458E-04	.0208	2.966E-04	.0251	.2610	342.8000
79	526.4	1.272	.162	2.180E-04	.0184	2.629E-04	.0222	.2419	334.2000
80	525.2	.483	.066	8.815E-05	.0075	1.063E-04	.0090	.2487	334.2000
81	526.5	1.198	.166	2.240E-04	.0190	2.702E-04	.0229	.2552	334.2000
								ACCESS HATCH WINDOW	
								X/L	Z,FULL SCALE(IN)
83	530.1	1.569	.209	2.831E-04	.0240	3.418E-04	.0289	.2131	398.0000
84	528.9	1.408	.185	2.501E-04	.0212	3.019E-04	.0256	.2131	388.0000
85	528.2	1.268	.172	2.325E-04	.0197	2.806E-04	.0237	.2131	383.0000
87	529.6	1.027	.146	1.981E-04	.0168	2.392E-04	.0202	.2222	395.8000
88	529.1	1.360	.190	2.563E-04	.0217	3.094E-04	.0262	.2193	386.5000
89	527.6	1.508	.221	2.980E-04	.0252	3.595E-04	.0304	.2177	381.8000
90	529.9	1.332	.181	2.451E-04	.0207	2.959E-04	.0250	.2297	389.5000
91	528.9	1.327	.182	2.454E-04	.0208	2.962E-04	.0251	.2243	382.5000
92	526.2	1.213	.171	2.306E-04	.0195	2.783E-04	.0235	.2214	378.7000
93	529.0	1.223	.156	2.107E-04	.0178	2.543E-04	.0215	.2343	374.0000
94	528.1	1.480	.192	2.590E-04	.0219	3.125E-04	.0264	.2274	375.5000
95	527.8	1.153	.163	2.203E-04	.0186	2.658E-04	.0225	.2239	373.3000
96	528.0	1.320	.171	2.309E-04	.0195	2.787E-04	.0236	.2363	368.0000
97	527.6	1.318	.168	2.264E-04	.0192	2.732E-04	.0231	.2286	368.0000
98	527.3	1.279	.179	2.411E-04	.0204	2.909E-04	.0246	.2247	368.0000
100	525.8	1.311	.185	2.488E-04	.0211	3.000E-04	.0254	.2274	360.5000
102	525.2	1.289	.181	2.437E-04	.0206	2.938E-04	.0249	.2081	354.3000
103	526.3	1.400	.183	2.466E-04	.0209	2.974E-04	.0252	.2023	362.7000
105	527.8	.974	.121	1.639E-04	.0139	1.977E-04	.0167	.2050	378.7000
106	528.5	1.534	.196	2.649E-04	.0224	3.197E-04	.0271	.2050	386.2000

GROUP 16 CENTERLINE TIME 3.00

CH	TC	FIT LENGTH	DTDWT	UNCERTAINTY	CH	TC	FIT LENGTH	DTDWT	UNCERTAINTY
1	1	2.00	.283	.0331	50	53	2.00	.400	.0463
2	2	2.00	.300	.0329	51	54	1.20	1.524	.0163
3	3	2.00	.296	.0270	52	55	2.00	.363	.0362
4	4	2.00	.271	.0300	53	56	1.20	1.472	.0110
5	5	2.00	.261	.0850	54	57	1.20	1.591	.0150
6	6	2.00	.230	.0356	55	58	1.20	1.289	.0180
7	7	2.00	.244	.2022	56	59	1.20	1.036	.0491
8	8	2.00	.256	.0397	57	60	1.20	1.011	.0178
9	9	2.00	.239	.1803	58	61	1.20	1.240	.0140
10	10	2.00	.194	.0669	59	62	1.20	1.426	.0213
11	11	2.00	.191	.0993	60	63	1.20	1.471	.0099
12	12	2.00	.161	.1021	61	64	2.00	.026	.6945
13	13	2.00	.108	.0593	62	65	1.20	1.527	.0096
14	14	2.00	.212	.0453	63	66	1.20	1.846	.0117
15	15	2.00	.162	.1086	64	67	1.20	1.366	.0295
16	16	2.00	.172	.0585	65	68	1.20	1.338	.0175
17	17	2.00	.105	.1545	66	69	1.20	.991	.0275
18	18	2.00	.077	.2222	67	70	1.20	1.102	.0168
19	19	2.00	.048	.1836	68	71	1.20	1.038	.2412
20	22	1.20	1.235	.0188	69	72	2.00	.995	.0283
21	23	1.20	1.156	.0136	70	73	1.20	1.226	.0155
22	24	1.20	1.034	.0162	71	74	1.20	1.257	.0293
23	25	1.20	1.019	.0452	72	75	1.20	1.031	.0281
24	26	2.00	.920	.0130	73	77	1.20	1.010	.0178
25	27	1.20	1.068	.0207	74	78	1.20	1.332	.0153
26	28	2.00	.746	.0122	75	79	1.20	1.272	.0145
27	29	2.00	.820	.0095	76	80	2.00	.483	.0686
28	30	2.00	.825	.0114	77	81	1.20	1.198	.0137
29	31	2.00	.838	.0091	78	83	1.20	1.569	.0114
30	32	2.00	.836	.0109	79	84	1.20	1.408	.0776
31	33	2.00	.469	.0159	80	85	1.20	1.268	.0192
32	34	2.00	.623	.0151	81	87	1.20	1.027	.0170
33	35	2.00	.570	.0156	82	88	1.20	1.360	.0094
34	36	2.00	.349	.0234	83	89	1.20	1.508	.0245
35	37	2.00	.479	.0152	84	90	1.20	1.332	.0174
36	38	2.00	.380	.0199	85	91	1.20	1.327	.0117
37	39	2.00	.306	.0238	86	92	1.20	1.213	.0110
38	41	2.00	.904	.0099	87	93	1.20	1.223	.0345
39	42	2.00	.724	.0194	88	94	1.20	1.480	.0100
40	43	2.00	.909	.0166	89	95	1.20	1.153	.0266
41	44	2.00	.808	.0092	90	96	1.20	1.320	.0596
42	45	2.00	.760	.0194	91	97	1.20	1.318	.0220
43	46	2.00	.744	.0201	92	98	1.20	1.279	.0518
44	47	2.00	.754	.0156	93	100	1.20	1.311	.0204
45	48	2.00	.543	.0176	94	102	1.20	1.289	.0253
46	49	2.00	.619	.0120	95	103	1.20	1.400	.0215
47	50	2.00	.520	.0477	96	105	2.00	.974	.0287
48	51	2.00	.439	.0183	97	106	1.20	1.534	.0111
49	52	2.00	.424	.0247	98	0	-0	0	0

17 .050

BIT ON LOOP 61

DATE 5/12/75

AEDC(ARO,INC.) ARNOLD AFS, TENNESSEE
VON KARMAN GAS DYNAMICS FACILITY
50 INCH HYPERSONIC TUNNEL B
V41B-B7A

GROUP	TFSI CONDITION	MODEL	MACH NO	PO,PSIA	TO,DEG R	ALPHA-MODEL	ALPHA-SECTOR	ALPHA-PREBEND	ROLL MODEL	YAW
17	7	140 B	7.90	110.1	1270	40.05	-10.05	30.00	179.92	.0

T-INF (DEG R)	P-INF (PSIA)	Q-INF (PSIA)	V-INF (FT/SEC)	RHO-INF (SLUGS/FT3)	MU-INF (LB-SEC/FT2)	RE/FT (FT-1)	HREF-FR (R= .0400FT)	STFR (R= .0400FT)	SWITCH POSITION
94.2	.012	.535	3756	1.090E-05	7.581E-08	5.403E 05	1.183E-02	3.643E-02	2

IC NO	TW	DTWDT	QDOT	H(TO)	H(TO)/HREF	H(.9TO)	H(.9TO)/HREF		
								ACCESS HATCH WINDOW	
								X/L	Z,FULL SCALE(IN)
107	529.4	1.441	.226	2.764E-04	.0235	3.360E-04	.0284	.2050	396.2000
								FUSELAGE VENT PANEL NO. 3 AND 1	
								X/L	Z,FULL SCALE(IN)
108	530.5	2.479	.262	3.545E-04	.0300	4.280E-04	.0362	.1244	377.5000
109	529.9	2.233	.276	3.727E-04	.0315	4.500E-04	.0380	.1302	377.5000
110	529.7	2.178	.276	3.726E-04	.0315	4.498E-04	.0380	.1360	377.5000
111	529.8	2.316	.279	3.767E-04	.0318	4.548E-04	.0384	.1418	377.5000
112	529.6	2.222	.263	3.559E-04	.0301	4.296E-04	.0363	.1476	377.5000
113	530.1	2.432	.279	3.767E-04	.0318	4.548E-04	.0385	.1215	273.5000
114	529.7	2.295	.275	3.718E-04	.0314	4.488E-04	.0379	.1273	273.5000
115	529.6	2.194	.272	3.673E-04	.0311	4.434E-04	.0375	.1331	273.5000
116	529.1	2.016	.247	3.336E-04	.0282	4.026E-04	.0340	.1389	273.5000
117	529.4	2.160	.248	3.354E-04	.0284	4.048E-04	.0342	.1447	273.5000
118	528.9	1.700	.235	3.165E-04	.0268	3.819E-04	.0323	.1409	366.0000
119	528.3	1.965	.254	3.424E-04	.0289	4.132E-04	.0349	.1442	366.0000
120	527.9	2.078	.259	3.493E-04	.0295	4.214E-04	.0356	.1215	359.5000
121	527.7	1.774	.217	2.928E-04	.0248	3.532E-04	.0299	.1303	359.5000
122	527.4	1.874	.233	3.136E-04	.0265	3.783E-04	.0320	.1337	359.5000
								LOWER RCS NOZZLES	
								X/L	Z,FULL SCALE(IN)
124	533.3	.754	.067	9.149E-05	.0077	1.106E-04	.0093	.0950	400.0000
125	530.0	.950	.103	1.396E-04	.0118	1.686E-04	.0143	.0988	400.0000
126	531.9	.740	.101	1.373E-04	.0116	1.659E-04	.0140	.1027	400.0000
127	533.6	.518	.070	9.491E-05	.0080	1.147E-04	.0097	.0911	395.0000
128	533.0	.934	.113	1.539E-04	.0130	1.860E-04	.0157	.0950	395.0000
129	532.6	.994	.117	1.584E-04	.0134	1.913E-04	.0162	.0988	395.0000
130	534.5	1.032	.124	1.681E-04	.0142	2.032E-04	.0172	.0810	390.0000
131	533.9	.712	.105	1.431E-04	.0121	1.729E-04	.0146	.0857	390.0000
132	532.5	1.180	.137	1.864E-04	.0158	2.252E-04	.0190	.0963	390.0000
133	533.5	.934	.113	1.541E-04	.0130	1.863E-04	.0157	.0857	383.8000
134	532.8	1.468	.197	2.667E-04	.0226	3.223E-04	.0272	.0872	377.3000
135	532.7	1.960	.235	3.194E-04	.0270	3.859E-04	.0326	.0903	374.5500
136	531.8	2.266	.252	3.412E-04	.0288	4.121E-04	.0348	.0960	374.5500
137	533.1	2.207	.249	3.919E-04	.0331	4.736E-04	.0400	.0872	370.5500
138	532.4	2.459	.283	3.841E-04	.0325	4.640E-04	.0392	.0928	370.5500
139	534.5	2.106	.269	3.659E-04	.0309	4.423E-04	.0374	.0816	366.0500
140	532.4	2.567	.326	4.428E-04	.0374	5.350E-04	.0452	.0934	362.4000
141	531.0	2.315	.306	4.138E-04	.0350	4.997E-04	.0422	.0973	362.4000
142	531.3	1.708	.186	2.517E-04	.0213	3.040E-04	.0257	.0833	355.2000
143	532.5	2.879	.289	3.922E-04	.0332	4.738E-04	.0401	.0919	355.2000
144	531.5	3.188	.419	5.684E-04	.0481	6.865E-04	.0580	.0949	349.0000

DATE 5/12/75

AEDC(ARO,INC.) ARNOLD AFS, TENNESSEE
VON KARMAN GAS DYNAMICS FACILITY
50 INCH HYPERSONIC TUNNEL B
V418-B7A

GROUP	TEST CONDITION	MODEL	MACH NO	PO,PSIA	TO,DEG R	ALPHA-MODEL	ALPHA-SECTOR	ALPHA-PREBEND	ROLL MODEL	YAW
17	7	140 B	7.90	110.1	1270	40.05	-10.05	30.00	179.92	.0

T-INF (DEG R)	P-INF (PSIA)	Q-INF (PSIA)	V-INF (FT/SEC)	RHO-INF (SLUGS/FT3)	MU-INF (LB-SEC/FT2)	RE/FT (FT-1)	HREF-FR (R= .0400FT)	STFR (R= .0400FT)	SWITCH POSITION
94.2	.012	.535	3756	1.090E-05	7.581E-08	5.403E 05	1.183E-02	3.643E-02	2

TC NO	TW	DTWDT	QDOT	H(TO)	H(TO)/HREF	H(.9TO)	H(.9TO)/HREF
161	536.4	.705	.083	1.139E-04	.0096	1.377E-04	.0116
162	536.1	.401	.038	5.180E-05	.0044	6.264E-05	.0053
163	535.4	.590	.073	9.881E-05	.0084	1.195E-04	.0101
164	535.3	.744	.097	1.322E-04	.0112	1.598E-04	.0135
165	535.4	.725	.091	1.245E-04	.0105	1.506E-04	.0127
166	535.4	.657	.084	1.147E-04	.0097	1.387E-04	.0117
167	535.8	.443	.060	8.184E-05	.0069	9.896E-05	.0084
168	535.5	.490	.051	7.005E-05	.0059	8.469E-05	.0072
169	534.7	.357	.043	5.909E-05	.0050	7.143E-05	.0060
170	534.2	.393	.049	6.687E-05	.0057	8.082E-05	.0068
171	534.1	.561	.068	9.124E-05	.0078	1.111E-04	.0094
172	533.7	.469	.061	8.313E-05	.0070	1.005E-04	.0085
173	533.9	.166	.022	3.012E-05	.0025	3.641E-05	.0031
174	533.2	.176	.020	2.715E-05	.0023	3.280E-05	.0028
175	533.0	.099	.014	1.924E-05	.0016	2.325E-05	.0020
176	533.1	.216	.029	3.984E-05	.0034	4.814E-05	.0041
177	540.0	4.218	.582	7.977E-04	.0674	9.657E-04	.0816
178	539.8	3.663	.722	9.893E-04	.0836	1.198E-03	.1012
179	537.8	2.369	.497	6.794E-04	.0574	8.221E-04	.0695
180	538.0	2.390	.312	4.270E-04	.0361	5.166E-04	.0437
181	537.7	1.752	.238	3.257E-04	.0275	3.940E-04	.0333
182	536.3	.859	.123	1.672E-04	.0141	2.022E-04	.0171
183	534.8	.536	.067	9.162E-05	.0077	1.108E-04	.0094
184	534.9	.517	.071	9.618E-05	.0081	1.163E-04	.0098
185	536.8	1.996	.240	3.277E-04	.0277	3.964E-04	.0335
186	537.3	2.027	.255	3.480E-04	.0294	4.209E-04	.0356
187	536.2	.880	.117	1.598E-04	.0135	1.933E-04	.0163
188	536.4	1.067	.249	3.390E-04	.0287	4.100E-04	.0347
189	535.3	1.073	.153	2.084E-04	.0176	2.519E-04	.0213
190	535.8	1.441	.207	2.827E-04	.0239	3.418E-04	.0289
191	535.6	1.125	.172	2.344E-04	.0198	2.834E-04	.0240

UPPER RCS NOZZLES

X/L	2Y/B
.0619	-.0160
.0709	-.0160
.0807	-.0160
.0943	-.0160
.0978	-.0160
.1013	-.0160
.0619	-.0320
.0709	-.0320
.0807	-.0320
.0943	-.0320
.0978	-.0320
.1013	-.0320
.0807	-.0480
.0943	-.0480
.0978	-.0480
.1013	-.0480

CANOPY

DATE 5/12/75

AEDC(ARO,INC.) ARNOLD AFS, TENNESSEE
VON KARMAN GAS DYNAMICS FACILITY
50 INCH HYPERSONIC TUNNEL B
V418-87A

GROUP	TEST CONDITION	MODEL	MACH NO	PO,PSIA	TO,DEG R	ALPHA-MODEL	ALPHA-SECTOR	ALPHA-PREBEND	ROLL MODEL	YAW
17	7	140 B	7.90	110.1	1270	40.05	-10.05	30.00	179.92	.0

T-INF (DEG R)	P-INF (PSIA)	Q-INF (PSIA)	V-INF (FT/SEC)	RHO-INF (SLUGS/FT3)	MU-INF (LB-SEC/FT2)	RE/FT (FT-1)	HREF-FR (R= .0400FT)	STFR (R= .0400FT)	SWITCH POSITION
94.2	.012	.535	3756	1.090E-05	7.581E-06	5.403E 05	1.183E-02	3.643E-02	2

TC NO	TW	DTWDT	GDOT	H(TO)	H(TO)/HREF	H(.9TO)	H(.9TO)/HREF
						CANOPY	
192	533.0	.264	.037	5.055E-05	.0043	6.108E-05	.0052
193	534.5	.484	.043	1.269E-04	.0107	1.534E-04	.0130
194	532.6	.287	.037	5.016E-05	.0042	6.060E-05	.0051
195	532.8	.340	.042	5.689E-05	.0048	6.874E-05	.0058
196	533.1	.230	.030	4.094E-05	.0035	4.946E-05	.0042
197	530.1	.185	.018	2.477E-05	.0021	2.991E-05	.0025
198	530.9	.181	.021	2.847E-05	.0024	3.438E-05	.0029
199	530.7	.663	.089	1.205E-04	.0102	1.454E-04	.0123
200	532.5	.666	.095	1.287E-04	.0109	1.555E-04	.0131
201	533.0	.441	.062	8.450E-05	.0071	1.021E-04	.0086
202	533.4	.878	.111	1.507E-04	.0127	1.821E-04	.0154
203	530.6	.256	.032	4.301E-05	.0036	5.193E-05	.0044
204	531.5	.491	.076	1.032E-04	.0087	1.246E-04	.0105
205	532.7	.600	.093	1.268E-04	.0107	1.532E-04	.0130
206	529.4	-.084	-.011	-1.505E-05	-.0013	-1.816E-05	-.0015
207	533.5	.776	.104	1.413E-04	.0119	1.708E-04	.0144
208	530.1	.202	.027	3.670E-05	.0031	4.431E-05	.0037
209	531.2	.380	.052	7.076E-05	.0060	8.546E-05	.0072
210	531.3	.271	.036	4.901E-05	.0041	5.919E-05	.0050
211	530.4	.164	.020	2.684E-05	.0023	3.240E-05	.0027
212	530.3	.371	.050	6.752E-05	.0057	8.151E-05	.0069
213	530.1	.243	.032	4.347E-05	.0037	5.249E-05	.0044
214	530.9	.550	.077	1.043E-04	.0088	1.259E-04	.0106
215	530.9	.308	.044	5.916E-05	.0050	7.143E-05	.0060
216	532.7	.756	.107	1.456E-04	.0123	1.759E-04	.0149
217	532.9	.690	.098	1.333E-04	.0113	1.611E-04	.0136
218	529.9	.227	.031	4.235E-05	.0036	5.113E-05	.0043
219	530.9	1.086	.152	2.064E-04	.0175	2.493E-04	.0211
220	530.6	.391	.054	7.257E-05	.0061	8.763E-05	.0074

GROUP 17 CENTERLINE TIME 3.00

CH	TC	FIT LENGTH	DTDWT	UNCERTAINTY	CH	TC	FIT LENGTH	DTDWT	UNCERTAINTY
1	107	1.20	1.441	.0139	50	173	2.00	.166	.0603
2	108	.80	2.479	.0174	51	174	2.00	.176	.0896
3	109	.80	2.233	.0104	52	175	2.00	.099	.1502
4	110	.80	2.178	.0133	53	176	2.00	.216	.0393
5	111	.80	2.316	.0384	54	177	.60	4.218	.0214
6	112	.80	2.222	.0107	55	178	.80	3.663	.0094
7	113	.80	2.432	.0614	56	179	.80	2.369	.0423
8	114	.80	2.295	.0140	57	180	.80	2.390	.0171
9	115	.80	2.194	.0574	58	181	1.20	1.752	.0107
10	116	.80	2.016	.0213	59	182	2.00	.859	.0176
11	117	.80	2.160	.0178	60	183	2.00	.536	.0169
12	118	1.20	1.700	.0125	61	184	2.00	.517	.0351
13	119	1.20	1.965	.0096	62	185	.80	1.996	.0215
14	120	.80	2.078	.0186	63	186	.80	2.027	.0128
15	121	1.20	1.774	.0179	64	187	2.00	.880	.0280
16	122	1.20	1.874	.0141	65	188	1.20	1.067	.0308
17	124	2.00	.754	.0280	66	189	1.20	1.073	.0301
18	125	2.00	.950	.0173	67	190	1.20	1.441	.0140
19	126	2.00	.740	.0177	68	191	1.20	1.125	.1870
20	127	2.00	.518	.0324	69	192	2.00	.264	.0719
21	128	2.00	.934	.0080	70	193	2.00	.484	.0231
22	129	2.00	.994	.0079	71	194	2.00	.287	.0649
23	130	1.20	1.032	.0432	72	195	2.00	.340	.0361
24	131	2.00	.712	.0214	73	196	2.00	.230	.0461
25	132	1.20	1.180	.0231	74	197	2.00	.185	.0727
26	133	2.00	.934	.0128	75	198	2.00	.181	.0681
27	134	1.20	1.468	.0136	76	199	2.00	.663	.0443
28	135	.80	1.960	.0795	77	200	2.00	.666	.0122
29	136	.80	2.266	.0098	78	201	2.00	.441	.0237
30	137	.80	2.207	.0224	79	202	2.00	.878	.0629
31	138	.80	2.459	.0101	80	203	2.00	.256	.0314
32	139	.80	2.106	.0198	81	204	2.00	.491	.0220
33	140	.80	2.567	.0141	82	205	2.00	.600	.0116
34	141	.80	2.315	.0231	83	206	2.00	-.084	-.3458
35	142	1.20	1.708	.0135	84	207	2.00	.776	.0147
36	143	.80	2.879	.0103	85	208	2.00	.202	.0540
37	144	.80	3.188	.0124	86	209	2.00	.360	.0236
38	161	2.00	.705	.0142	87	210	2.00	.271	.0731
39	162	2.00	.401	.0351	88	211	2.00	.164	.0461
40	163	2.00	.590	.0233	89	212	2.00	.371	.0390
41	164	2.00	.744	.0105	90	213	2.00	.243	.1578
42	165	2.00	.725	.0105	91	214	2.00	.550	.0284
43	166	2.00	.657	.0167	92	215	2.00	.308	.0684
44	167	2.00	.443	.0216	93	216	2.00	.756	.0175
45	168	2.00	.490	.0147	94	217	2.00	.690	.0202
46	169	2.00	.357	.0232	95	218	2.00	.227	.0601
47	170	2.00	.393	.0431	96	219	1.20	1.086	.0251
48	171	2.00	.561	.0208	97	220	2.00	.391	.0252
49	172	2.00	.469	.0201	98	0	-0	0	0
18		.050							

BIT ON LOOP 58

DATE 5/12/75

AEDC(ARO,INC.) ARNOLD AFS, TENNESSEE
VON KARMAN GAS DYNAMICS FACILITY
50 INCH HYPERSONIC TUNNEL B
V418-87A

GROUP	TEST CONDITION	MODEL	MACH NO	PO,PSIA	TO,DEG R	ALPHA-MODEL	ALPHA-SECTOR	ALPHA-PREBEND	ROLL MODEL	YAW
18	7	140 B	7.90	110.0	1270	40.03	-10.03	30.00	179.92	.0

T-INF (DEG R)	P-INF (PSIA)	Q-INF (PSIA)	V-INF (FT/SEC)	RHO-INF (SLUGS/FT3)	MU-INF (LB-SEC/FT2)	RE/FT (FT-1)	HREF-FR (R= .0400FT)	STFR (R= .0400FT)	SWITCH POSITION
94.2	.012	.534	3757	1.089E-05	7.585E-08	5.394E 05	1.182E-02	3.645E-02	3

TC NO	TW	DTWDT	QDOT	H(TO)	H(TO)/HREF	H(.9TO)	H(.9TO)/HREF	X/L	2Y/B
								CANOPY	
221	528.0	.245	.030	3.960E-05	.0034	4.802E-05	.0041		
222	527.3	.269	.033	4.444E-05	.0038	5.361E-05	.0045		
223	527.0	.657	.089	1.197E-04	.0101	1.444E-04	.0122		
								ESCAPE HATCH AND WINDOW	
224	532.4	2.291	.228	3.090E-04	.0261	3.732E-04	.0316	.1933	.0162
225	532.1	1.518	.182	2.459E-04	.0208	2.970E-04	.0251	.1972	.0162
226	530.3	1.054	.111	1.498E-04	.0127	1.808E-04	.0153	.1933	.0384
227	529.4	.799	.117	1.577E-04	.0133	1.903E-04	.0161	.1972	.0384
228	528.1	.395	.051	6.818E-05	.0058	8.226E-05	.0070	.1933	.0653
229	528.3	.291	.037	5.032E-05	.0043	6.072E-05	.0051	.1972	.0653
232	532.3	.162	.022	2.975E-05	.0025	3.594E-05	.0030	.2567	.0235
233	532.8	.213	.032	4.376E-05	.0037	5.287E-05	.0045	.2606	.0235
236	531.2	.214	.031	4.235E-05	.0036	5.114E-05	.0043	.2567	.0491
237	531.8	.232	.033	4.407E-05	.0037	5.323E-05	.0045	.2606	.0491
								CARGO BAY HINGE NO. 1	
								X/L	Z,FULL SCALE(IN)
238	532.5	.766	.103	1.391E-04	.0118	1.680E-04	.0142	.2879	420.0000
239	532.3	.677	.091	1.229E-04	.0104	1.484E-04	.0126	.2917	420.0000
240	532.1	.614	.088	1.188E-04	.0100	1.435E-04	.0121	.2840	415.0000
241	532.2	.642	.090	1.222E-04	.0103	1.477E-04	.0125	.2879	415.0000
242	529.6	.604	.086	1.163E-04	.0098	1.403E-04	.0119	.2917	415.0000
243	530.2	.784	.096	1.295E-04	.0109	1.563E-04	.0132	.2801	405.0000
244	530.2	.730	.085	1.152E-04	.0097	1.391E-04	.0118	.2840	405.0000
								CARGO BAY HINGE NO. 2	
								X/L	Z,FULL SCALE(IN)
245	532.7	1.075	.154	2.062E-04	.0176	2.515E-04	.0213	.3192	420.0000
246	533.1	1.134	.162	2.197E-04	.0186	2.655E-04	.0225	.3439	420.0000
247	532.7	.863	.127	1.722E-04	.0146	2.081E-04	.0176	.3362	415.0000
248	533.3	.909	.134	1.817E-04	.0154	2.196E-04	.0186	.3401	415.0000
249	532.7	1.027	.151	2.052E-04	.0173	2.478E-04	.0210	.3439	415.0000
250	532.3	1.443	.181	2.452E-04	.0207	2.962E-04	.0251	.3323	405.0000
251	532.2	1.616	.198	2.687E-04	.0227	3.246E-04	.0275	.3362	405.0000
								CARGO BAY HINGE NO. 3	
								X/L	Z,FULL SCALE(IN)
252	533.8	1.718	.249	3.386E-04	.0286	4.091E-04	.0346	.3923	420.0000
253	533.4	1.277	.185	2.516E-04	.0213	3.040E-04	.0257	.3961	420.0000
254	533.0	1.423	.216	2.930E-04	.0248	3.539E-04	.0299	.3884	415.0000
257	531.2	.911	.123	1.660E-04	.0140	2.004E-04	.0169	.3845	405.0000
258	530.9	1.066	.145	1.962E-04	.0166	2.369E-04	.0200	.3884	405.0000

DATE 5/12/75

AEDC(ARO,INC.) ARNOLD AFS, TENNESSEE
VON KARMAN GAS DYNAMICS FACILITY
50 INCH HYPERSONIC TUNNEL B
V41B-87A

GROUP	TEST CONDITION	MODEL	MACH NO	PO,PSIA	TO,DEG R	ALPHA-MODEL	ALPHA-SECTOR	ALPHA-PREBEND	ROLL MODEL	YAW
18	7	140 B	7.90	110.0	1270	40.03	-10.03	30.00	179.92	.0

T-INF (DEG R)	P-INF (PSIA)	Q-INF (PSIA)	V-INF (FT/SEC)	RHO-INF (SLUGS/FT3)	MU-INF (LB-SEC/FT2)	RE/FT (FT-1)	HREF-FR (R= .0400FT)	STFR (R= .0400FT)	SWITCH POSITION
94.2	.012	.534	3757	1.089E-05	7.585E-08	5.394E 05	1.182E-02	3.645E-02	3

TOP CENTERLINE

TC NO	TW	DTWDT	QDOT	H(TO)	H(TO)/HREF	H(.9TO)	H(.9TO)/HREF	X/L
367	550.6	32.368	3.834	5.327E-03	.4505	6.469E-03	.5471	0
368	538.6	20.192	2.587	3.510E-03	.2968	4.248E-03	.3592	.0008
369	537.1	16.565	1.941	2.648E-03	.2239	3.203E-03	.2709	.0019
370	533.7	10.768	1.313	1.782E-03	.1507	2.154E-03	.1821	.0037
371	531.5	6.124	.598	8.098E-04	.0685	9.780E-04	.0827	.0058
372	530.5	3.876	.498	6.728E-04	.0569	8.123E-04	.0687	.0087
373	530.4	2.472	.323	4.365E-04	.0369	5.269E-04	.0446	.0118
374	531.0	1.809	.236	3.197E-04	.0270	3.861E-04	.0327	.0151
375	531.0	1.539	.210	2.840E-04	.0240	3.429E-04	.0290	.0182
376	531.7	1.428	.188	2.545E-04	.0215	3.074E-04	.0260	.0215
377	532.3	1.245	.160	2.168E-04	.0183	2.619E-04	.0221	.0246
378	532.6	1.028	.120	1.623E-04	.0137	1.960E-04	.0166	.0278
379	534.5	.767	.094	1.280E-04	.0108	1.547E-04	.0131	.0609
380	534.1	.681	.070	9.500E-05	.0080	1.148E-04	.0097	.0646
381	533.7	.697	.090	1.226E-04	.0104	1.482E-04	.0125	.0684
382	533.3	.646	.084	1.146E-04	.0097	1.384E-04	.0117	.0721
383	533.2	.621	.083	1.128E-04	.0095	1.363E-04	.0115	.0760
384	533.2	.508	.071	9.601E-05	.0081	1.160E-04	.0098	.0796
385	533.6	.738	.095	1.289E-04	.0109	1.557E-04	.0132	.0789
386	533.5	.981	.116	1.575E-04	.0133	1.903E-04	.0161	.0982
387	534.1	.963	.118	1.607E-04	.0136	1.942E-04	.0164	.1019
388	534.8	1.634	.155	2.114E-04	.0179	2.556E-04	.0216	.1160
389	534.3	1.419	.206	2.799E-04	.0237	3.382E-04	.0286	.1195
390	533.9	1.408	.222	3.015E-04	.0255	3.643E-04	.0308	.1231
391	534.0	1.323	.211	2.866E-04	.0242	3.464E-04	.0293	.1268
392	534.1	1.378	.236	3.212E-04	.0272	3.881E-04	.0328	.1305
393	533.9	1.423	.241	3.270E-04	.0277	3.952E-04	.0334	.1338
394	533.9	1.527	.256	3.481E-04	.0294	4.207E-04	.0356	.1376
395	533.9	1.540	.230	3.129E-04	.0265	3.781E-04	.0320	.1411
396	534.0	1.600	.237	3.221E-04	.0272	3.893E-04	.0329	.1448
397	534.3	1.638	.243	3.300E-04	.0279	3.988E-04	.0337	.1483
398	534.6	1.903	.268	3.641E-04	.0308	4.401E-04	.0372	.1519
399	536.3	3.767	.504	6.861E-04	.0580	8.297E-04	.0702	.1556

DATE 5/12/75

AEDC(ARO,INC.) ARNOLD AFS, TENNESSEE
VON KARMAN GAS DYNAMICS FACILITY
50 INCH HYPERSONIC TUNNEL B
V418-87A

GROUP	TEST CONDITION	MODEL	MACH NO	PO,PSIA	TO,DEG R	ALPHA-MODEL	ALPHA-SECTOR	ALPHA-PREBEND	ROLL MODEL	YAW
18	7	140 B	7.90	110.0	1270	40.03	-10.03	30.00	179.92	.0

T-INF (DEG R)	P-INF (PSIA)	Q-INF (PSIA)	V-INF (FT/SEC)	RHO-INF (SLUGS/FT3)	MU-INF (LB-SEC/FT2)	RE/FT (FT-1)	HREF-FR (R= .0400FT)	STFR (R= .0400FT)	SWITCH POSITION
94.2	.012	.534	3757	1.089E-05	7.585E-06	5.394E 05	1.182E-02	3.645E-02	3

TC NO	TW	DT#DT	QDOT	H(TO)	H(TO)/HREF	H(.9TO)	H(.9TO)/HREF	X/L	2Y/B
								TOP CENTERLINE	
400	537.3	5.682	.768	1.048E-03	.0886	1.267E-03	.1072	.1582	
401	537.3	6.247	.810	1.106E-03	.0935	1.338E-03	.1131	.1608	
402	538.6	7.068	.883	1.207E-03	.1020	1.460E-03	.1235	.1635	
403	537.8	7.285	.887	1.211E-03	.1024	1.465E-03	.1239	.1664	
404	538.2	6.612	.802	1.095E-03	.0926	1.325E-03	.1121	.1691	
405	536.1	6.327	.767	1.048E-03	.0886	1.268E-03	.1072	.1720	
406	537.3	6.231	.755	1.031E-03	.0872	1.247E-03	.1054	.1748	
407	536.7	5.429	.702	9.565E-04	.0809	1.157E-03	.0978	.1769	
408	535.2	4.986	.731	9.962E-04	.0842	1.205E-03	.1019	.1800	
409	534.9	4.016	.578	7.859E-04	.0665	9.500E-04	.0803	.1831	
410	534.3	3.540	.509	6.917E-04	.0585	8.360E-04	.0707	.1863	
411	534.4	2.693	.404	5.494E-04	.0465	6.640E-04	.0562	.1894	
412	534.1	2.122	.288	3.915E-04	.0331	4.731E-04	.0400	.1931	
413	533.1	1.642	.220	2.983E-04	.0252	3.604E-04	.0305	.1972	
414	533.5	.871	.117	1.583E-04	.0134	1.913E-04	.0162	.2049	
415	532.8	.388	.038	5.185E-05	.0044	6.263E-05	.0053	.2250	
416	533.3	.270	.032	4.288E-05	.0036	5.181E-05	.0044	.2500	
								NOSE TC (Z = 338)	
145	544.6	22.989	3.097	4.268E-03	.3609	5.174E-03	.4375	.0008	.5039
146	544.6	23.219	3.128	4.311E-03	.3645	5.225E-03	.4419	.0023	.5082
147	540.0	18.257	2.453	3.360E-03	.2841	4.067E-03	.3440	.0043	.5135
148	540.1	14.982	2.061	2.850E-03	.2410	3.450E-03	.2918	.0068	.5205
149	537.8	10.584	1.525	2.082E-03	.1761	2.519E-03	.2130	.0095	.5279
150	538.5	9.871	1.409	1.926E-03	.1629	2.331E-03	.1971	.0122	.5354
151	539.7	6.762	.948	1.298E-03	.1097	1.571E-03	.1328	.0218	.5621
152	540.4	7.185	.972	1.332E-03	.1127	1.613E-03	.1364	.0251	.5712
153	541.3	7.721	.941	1.291E-03	.1092	1.564E-03	.1323	.0286	.5808
154	541.0	7.341	.911	1.250E-03	.1057	1.513E-03	.1280	.0319	.5898
155	540.1	6.689	.839	1.149E-03	.0972	1.391E-03	.1177	.0354	.5995
156	539.5	6.125	.760	1.040E-03	.0879	1.259E-03	.1064	.0387	.6085
157	539.3	6.042	.741	1.014E-03	.0858	1.228E-03	.1038	.0420	.6176
158	538.1	6.026	.739	1.009E-03	.0853	1.221E-03	.1033	.0462	.6294
159	537.9	5.981	.669	9.137E-04	.0773	1.105E-03	.0935	.0503	.6406

GROUP 18 CENTERLINE TIME 2.85

CH	TC	FIT LENGTH	DTDWT	UNCERTAINTY	CH	TC	FIT LENGTH	DTDWT	UNCERTAINTY
1	221	2.00	.245	.0383	50	384	2.00	.508	.0452
2	222	2.00	.249	.0389	51	385	2.00	.738	.0192
3	223	2.00	.657	.0125	52	386	1.20	.981	.0235
4	224	.80	2.291	.0155	53	387	2.00	.963	.0078
5	225	1.20	1.518	.0355	54	388	1.20	1.634	.0144
6	226	1.20	1.054	.0121	55	389	1.20	1.419	.0162
7	227	2.00	.799	.0684	56	390	1.20	1.408	.0458
8	228	2.00	.395	.0203	57	391	1.20	1.323	.0118
9	229	2.00	.291	.0828	58	392	1.20	1.378	.0094
10	232	2.00	.162	.0597	59	393	1.20	1.423	.0231
11	233	2.00	.213	.0740	60	394	1.20	1.527	.0141
12	236	2.00	.214	.0689	61	395	1.20	1.540	.0250
13	237	2.00	.232	.0303	62	396	1.20	1.600	.0111
14	238	2.00	.766	.0157	63	397	1.20	1.638	.0159
15	239	2.00	.677	.0263	64	398	1.20	1.903	.0103
16	240	2.00	.614	.0206	65	399	.80	3.767	.0089
17	241	2.00	.642	.0270	66	400	.60	5.682	.0089
18	242	2.00	.604	.0189	67	401	.60	6.247	.0061
19	243	2.00	.784	.0160	68	402	.60	7.068	.0603
20	244	2.00	.730	.0247	69	403	.60	7.285	.0292
21	245	1.20	1.075	.0166	70	404	.60	6.612	.0113
22	246	1.20	1.134	.0145	71	405	.60	6.327	.0153
23	247	2.00	.863	.0249	72	406	.60	6.231	.0091
24	248	2.00	.909	.0194	73	407	.60	5.429	.0075
25	249	1.20	1.027	.0235	74	408	.60	4.986	.0099
26	250	1.20	1.443	.0121	75	409	.60	4.016	.0133
27	251	1.20	1.616	.0115	76	410	.80	3.540	.0126
28	252	1.20	1.718	.0137	77	411	.80	2.693	.0087
29	253	1.20	1.277	.0146	78	412	.80	2.122	.0134
30	254	1.20	1.423	.0117	79	413	1.20	1.642	.0688
31	257	2.00	.911	.0083	80	414	2.00	.871	.0100
32	258	1.20	1.066	.0180	81	415	2.00	.388	.0356
33	367	.30	32.368	.0029	82	416	2.00	.270	.0309
34	368	.30	20.192	.0054	83	145	.30	22.989	.0068
35	369	.40	16.565	.0059	84	146	.30	23.219	.0034
36	370	.40	10.768	.0059	85	147	.30	18.257	.0056
37	371	.60	6.124	.0078	86	148	.40	14.982	.0071
38	372	.80	3.876	.0122	87	149	.40	10.564	.0182
39	373	.80	2.472	.0151	88	150	.40	9.871	.0060
40	374	1.20	1.809	.0162	89	151	.60	6.762	.0089
41	375	1.20	1.539	.0091	90	152	.60	7.185	.0247
42	376	1.20	1.428	.0116	91	153	.60	7.721	.0106
43	377	1.20	1.245	.0186	92	154	.60	7.341	.0194
44	378	1.20	1.028	.0201	93	155	.60	6.689	.0032
45	379	2.00	.767	.0093	94	156	.60	6.125	.0177
46	380	2.00	.681	.0106	95	157	.60	6.042	.0112
47	381	2.00	.697	.0438	96	158	.60	6.026	.0116
48	382	2.00	.646	.0171	97	159	.60	5.981	.0047
49	383	2.00	.621	.0111	98	0	-0	0	0

19 .050

BIT ON LOOP 59

DATE 5/12/75

AEDC(ARO,INC.) ARNOLD AFS, TENNESSEE
VON KARMAN GAS DYNAMICS FACILITY
50 INCH HYPERSONIC TUNNEL B
V41B-87A

GROUP	TEST CONDITION	MODEL	MACH NO	PO,PSIA	TO,DEG R	ALPHA-MODEL	ALPHA-SECTOR	ALPHA-PREBEND	ROLL MODEL	YAW
19	8	140 B	7.90	110.1	1271	40.04	-10.24	30.00	168.55	2.0

T-INF (DEG R)	P-INF (PSIA)	Q-INF (PSIA)	V-INF (FT/SEC)	RHO-INF (SLUGS/FT3)	MU-INF (LB-SEC/FT2)	RE/FT (FT-1)	HREF-FR (R= .0400FT)	STFR (R= .0400FT)	SWITCH POSITION
94.2	.012	.535	3758	1.089E-05	7.588E-08	5.396E 05	1.183E-02	3.644E-02	1

TC NO	TW	DTWDT	QDOT	H(TO)	H(TO)/HREF	H(.9TO)	H(.9TO)/HREF	X/L	Z,FULL SCALE(IN)
								FUSELAGE VENT NO. 1	
1	533.1	.435	.057	7.770E-05	.0066	9.387E-05	.0079	.4434	376.6300
2	532.1	.400	.054	7.270E-05	.0061	8.781E-05	.0074	.4264	371.6300
3	532.0	.363	.050	6.740E-05	.0057	8.141E-05	.0069	.4303	371.6300
4	532.2	.363	.049	6.666E-05	.0056	8.052E-05	.0068	.4342	371.6300
5	532.6	.323	.043	5.820E-05	.0049	7.031E-05	.0059	.4380	371.6300
6	533.2	.356	.047	6.378E-05	.0054	7.705E-05	.0065	.4434	369.1300
7	532.0	.237	.034	4.657E-05	.0039	5.624E-05	.0048	.4226	366.6300
8	532.0	.296	.045	6.030E-05	.0051	7.283E-05	.0062	.4264	366.6300
9	532.0	.161	.023	3.161E-05	.0027	3.818E-05	.0032	.4303	366.6300
10	532.0	.247	.035	4.767E-05	.0040	5.757E-05	.0049	.4342	366.6300
11	532.6	.223	.030	4.064E-05	.0034	4.909E-05	.0041	.4380	366.6300
12	533.2	.285	.039	5.313E-05	.0045	6.419E-05	.0054	.4496	366.6300
13	532.3	.187	.027	3.708E-05	.0031	4.479E-05	.0038	.4187	357.1300
14	532.6	.214	.029	3.949E-05	.0033	4.770E-05	.0040	.4396	361.6300
15	533.1	.210	.028	3.795E-05	.0032	4.584E-05	.0039	.4434	361.6300
16	532.7	.177	.024	3.230E-05	.0027	3.902E-05	.0033	.4396	355.6300
17	533.3	.126	.017	2.295E-05	.0019	2.773E-05	.0023	.4434	355.6300
18	531.1	.072	.010	1.351E-05	.0011	1.632E-05	.0014	.4396	351.6300
19	533.6	.107	.015	2.021E-05	.0017	2.442E-05	.0021	.4291	332.6300
								CARGO BAY VENT NO. 1	
								X/L	Z,FULL SCALE(IN)
22	534.7	1.743	.241	3.279E-04	.0277	3.964E-04	.0335	.3974	397.6300
23	534.3	1.665	.232	3.152E-04	.0266	3.809E-04	.0322	.4013	397.6300
24	534.4	1.541	.208	2.823E-04	.0239	3.412E-04	.0288	.4052	397.6300
25	534.3	1.475	.194	2.632E-04	.0222	3.180E-04	.0269	.4090	397.6300
26	534.5	1.246	.163	2.215E-04	.0187	2.677E-04	.0226	.4129	397.6300
27	533.7	1.558	.216	2.936E-04	.0248	3.548E-04	.0300	.3936	392.6300
28	532.6	1.199	.172	2.328E-04	.0197	2.812E-04	.0238	.3974	392.6300
29	532.5	1.170	.168	2.277E-04	.0193	2.751E-04	.0233	.4013	392.6300
30	532.8	1.306	.187	2.537E-04	.0214	3.064E-04	.0259	.4052	392.6300
31	533.1	1.317	.183	2.487E-04	.0210	3.004E-04	.0254	.4090	392.6300
32	533.3	1.302	.172	2.333E-04	.0197	2.819E-04	.0238	.4129	392.6300
33	532.2	.768	.109	1.480E-04	.0125	1.787E-04	.0151	.4090	386.1300
34	533.1	1.068	.144	1.951E-04	.0165	2.358E-04	.0199	.4129	387.6300
35	533.1	.923	.130	1.764E-04	.0149	2.132E-04	.0180	.3897	383.1300
36	532.0	.560	.081	1.096E-04	.0093	1.324E-04	.0112	.4090	378.6300
37	532.6	.783	.110	1.487E-04	.0126	1.796E-04	.0152	.4129	382.1300
38	532.6	.609	.085	1.145E-04	.0097	1.384E-04	.0117	.4129	377.1300
39	532.0	.502	.073	9.876E-05	.0083	1.193E-04	.0101	.4001	373.6300
								PROTUBERANCES	
								X/L	Z,FULL SCALE(IN)
41	533.4	1.286	.172	2.328E-04	.0197	2.813E-04	.0238	.3546	379.0500
42	533.5	1.063	.145	1.964E-04	.0166	2.373E-04	.0201	.3604	379.0500
43	533.3	1.327	.172	2.330E-04	.0197	2.816E-04	.0238	.3450	374.0500

DATE 5/12/75

AEDC(ARO,INC.) ARNOLD AFS, TENNESSEE
VON KARMAN GAS DYNAMICS FACILITY
50 INCH HYPERSONIC TUNNEL B
V41B-87A

GROUP	TEST CONDITION	MODEL	MACH NO	PO,PSIA	TO,DEG R	ALPHA-MODEL	ALPHA-SECTOR	ALPHA-PREBEND	ROLL MODEL	YAW
19	8	140 B	7.90	110.1	1271	40.04	-10.24	30.00	168.55	2.0

T-INF (DEG R)	P-INF (PSIA)	Q-INF (PSIA)	V-INF (FT/SEC)	RHO-INF (SLUGS/FT3)	MU-INF (LB-SEC/FT2)	RE/FT (FT-1)	HREF-FR (R= .0400FT)	STFR (R= .0400FT)	SWITCH POSITION
94.2	.012	.535	3758	1.089E-05	7.588E-08	5.396E 05	1.183E-02	3.644E-02	1

TC NO	TW	DTWDT	QDOT	H(TO)	H(TO)/HREF	H(.9TO)	H(.9TO)/HREF
44	533.0	1.152	.156	2.119E-04	.0179	2.560E-04	.0216
45	533.2	.974	.134	1.823E-04	.0154	2.202E-04	.0186
46	533.0	1.023	.142	1.931E-04	.0163	2.333E-04	.0197
47	532.4	1.102	.146	1.978E-04	.0167	2.390E-04	.0202
48	532.5	.725	.099	1.342E-04	.0113	1.621E-04	.0137
49	532.3	.875	.120	1.623E-04	.0137	1.960E-04	.0166
50	532.1	-1.096	-.152	-2.053E-04	-.0174	-2.479E-04	-.0210
51	532.4	.585	.079	1.071E-04	.0091	1.293E-04	.0109
52	531.6	.558	.076	1.035E-04	.0087	1.250E-04	.0106
53	531.4	.415	.060	8.162E-05	.0069	9.856E-05	.0083
54	532.1	1.678	.239	3.234E-04	.0273	3.906E-04	.0330
55	532.1	.327	.047	6.307E-05	.0053	7.618E-05	.0064
56	532.2	1.756	.226	3.056E-04	.0258	3.691E-04	.0312
57	532.4	2.058	.251	3.397E-04	.0287	4.103E-04	.0347
58	532.6	1.940	.255	3.461E-04	.0293	4.181E-04	.0353
59	531.8	1.545	.203	2.742E-04	.0232	3.312E-04	.0280
60	531.4	1.395	.193	2.617E-04	.0221	3.160E-04	.0267
61	531.8	1.718	.217	2.936E-04	.0248	3.546E-04	.0300
62	531.7	1.822	.223	3.014E-04	.0255	3.640E-04	.0308
63	532.0	1.714	.223	3.022E-04	.0255	3.650E-04	.0309
64	537.6	~~.029~~	~~.003~~	~~4.732E-06~~	~~.0004~~	~~5.749E-06~~	~~.0005~~
65	533.1	1.677	.228	3.086E-04	.0261	3.728E-04	.0315
66	533.4	2.232	.281	3.812E-04	.0322	4.606E-04	.0389
67	533.5	1.501	.210	2.854E-04	.0241	3.449E-04	.0292
68	533.3	2.135	.270	3.658E-04	.0309	4.420E-04	.0374

PROTUBERANCES

X/L	Z,FULL SCALE(IN)
.3508	374.0500
.3566	374.0500
.3604	374.0500
.3392	366.5500
.3566	366.5500
.3392	360.7000
.3566	360.7000
.3604	360.7000
.3392	353.2000
.3450	353.2000
.3508	353.2000
.3566	353.2000

SUBLIMATOR VENT NO. 1

X/L	Z,FULL SCALE(IN)
.3031	371.1300
.3074	369.1300
.3089	363.6300
.3074	358.1300
.3031	356.1300
.2988	358.1300
.2973	363.6300
.2988	369.1300
.3031	376.1300
.3089	378.6300
.3101	372.6300
.3157	370.3800
.3128	363.6300

DATE 5/12/75

AEDC(ARO,INC.) ARNOLD AFS, TENNESSEE
VON KARMAN GAS DYNAMICS FACILITY
50 INCH HYPERSONIC TUNNEL B
V418-87A

GROUP	TEST CONDITION	MODEL	MACH NO	PO,PSIA	TO,DEG R	ALPHA-MODEL	ALPHA-SECTOR	ALPHA-PREBEND	ROLL MODEL	YAW
19	8	140 H	7.90	110.1	1271	40.04	-10.24	30.00	168.55	2.0

T-INF (DEG R)	P-INF (PSIA)	Q-INF (PSIA)	V-INF (FT/SEC)	RHO-INF (SLUGS/FT3)	MU-INF (LB-SEC/FT2)	RE/FT (FT-1)	HREF-FR (H= .0400FT)	STFR (R= .0400FT)	SWITCH POSITION
94.2	.012	.535	3758	1.089E-05	7.588E-08	5.396E 05	1.183E-02	3.644E-02	1

IC NO	TW	DT*DT	QDOT	H(TO)	H(TO)/HREF	H(.9TO)	H(.9TO)/HREF	X/L	Z,FULL SCALE(IN)
								FUSELAGE VENT PANEL NO. 7	
69	528.4	1.075	.149	2.012E-04	.0170	2.427E-04	.0205	.2487	356.4000
70	529.0	1.204	.147	1.982E-04	.0168	2.392E-04	.0202	.2591	356.4000
71	527.2	1.397	.189	2.543E-04	.0215	3.068E-04	.0259	.2419	351.4000
72	527.7	1.136	.160	2.158E-04	.0182	2.603E-04	.0220	.2487	351.4000
73	528.4	1.183	.153	2.059E-04	.0174	2.485E-04	.0210	.2552	351.4000
74	529.1	1.410	.170	2.295E-04	.0194	2.769E-04	.0234	.2610	351.4000
75	526.2	1.210	.164	2.199E-04	.0186	2.651E-04	.0224	.2419	342.8000
77	528.2	1.332	.188	2.533E-04	.0214	3.056E-04	.0258	.2552	342.8000
78	529.3	1.685	.230	3.108E-04	.0263	3.751E-04	.0317	.2610	342.8000
79	527.0	1.494	.190	2.556E-04	.0216	3.083E-04	.0261	.2419	334.2000
80	526.0	1.257	.171	2.290E-04	.0194	2.761E-04	.0233	.2487	334.2000
81	527.6	1.428	.198	2.670E-04	.0226	3.221E-04	.0272	.2552	334.2000
								ACCESS HATCH WINDOW	
83	530.5	1.611	.215	2.901E-04	.0245	3.502E-04	.0296	.2131	398.0000
84	529.2	1.858	.244	3.297E-04	.0279	3.979E-04	.0336	.2131	388.0000
85	529.1	1.392	.189	2.551E-04	.0216	3.079E-04	.0260	.2131	383.0000
87	529.9	1.188	.169	2.266E-04	.0193	2.759E-04	.0233	.2222	395.8000
88	530.1	1.569	.219	2.955E-04	.0250	3.567E-04	.0302	.2193	386.5000
89	530.0	.844	.124	1.670E-04	.0141	2.016E-04	.0170	.2177	381.8000
90	530.0	1.462	.199	2.687E-04	.0227	3.244E-04	.0274	.2297	389.5000
91	530.0	1.556	.213	2.874E-04	.0243	3.469E-04	.0293	.2243	382.5000
92	529.8	1.433	.202	2.723E-04	.0230	3.287E-04	.0278	.2214	378.7000
93	530.1	1.412	.180	2.430E-04	.0205	2.933E-04	.0248	.2343	374.0000
94	530.5	1.438	.187	2.521E-04	.0213	3.043E-04	.0257	.2274	375.5000
95	529.5	1.377	.195	2.631E-04	.0222	3.176E-04	.0268	.2239	373.3000
96	528.8	1.288	.167	2.250E-04	.0190	2.715E-04	.0230	.2363	368.0000
97	528.6	1.471	.187	2.524E-04	.0213	3.046E-04	.0257	.2286	368.0000
98	528.4	1.249	.175	2.354E-04	.0199	2.840E-04	.0240	.2247	368.0000
100	526.7	1.357	.191	2.574E-04	.0218	3.104E-04	.0262	.2274	360.5000
102	525.7	1.371	.193	2.586E-04	.0219	3.118E-04	.0264	.2081	354.3000
103	526.7	1.482	.194	2.606E-04	.0220	3.143E-04	.0266	.2023	362.7000
105	527.8	2.092	.261	3.511E-04	.0297	4.236E-04	.0358	.2050	378.7000
106	529.0	1.741	.223	3.001E-04	.0254	3.621E-04	.0306	.2050	386.2000

GROUP 19 CENTERLINE TIME 2.90

CH	TC	FIT LENGTH	DTDWT	UNCERTAINTY	CH	TC	FIT LENGTH	DTDWT	UNCERTAINTY
1	1	2.00	.435	.0237	50	53	2.00	.415	.0330
2	2	2.00	.400	.0254	51	54	1.20	1.678	.0151
3	3	2.00	.363	.0255	52	55	2.00	.327	.0396
4	4	2.00	.363	.0232	53	56	1.20	1.756	.0093
5	5	2.00	.323	.0570	54	57	.80	2.058	.0183
6	6	2.00	.356	.0225	55	58	1.20	1.940	.0099
7	7	2.00	.237	.2047	56	59	1.20	1.545	.0534
8	8	2.00	.296	.0356	57	60	1.20	1.395	.0139
9	9	2.00	.161	.4532	58	61	1.20	1.718	.0078
10	10	2.00	.247	.0322	59	62	1.20	1.822	.0167
11	11	2.00	.223	.0914	60	63	1.20	1.714	.0099
12	12	2.00	.295	.0370	61	64	2.00	-.029	-.6016
13	13	2.00	.187	.0376	62	65	1.20	1.677	.0086
14	14	2.00	.214	.0390	63	66	.80	2.232	.0246
15	15	2.00	.210	.0843	64	67	1.20	1.501	.0177
16	16	2.00	.177	.0527	65	68	.80	2.135	.0182
17	17	2.00	.126	.1513	66	69	1.20	1.075	.0194
18	18	2.00	.072	.1233	67	70	1.20	1.204	.0151
19	19	2.00	.107	.1009	68	71	1.20	1.397	.1331
20	22	1.20	1.743	.0272	69	72	1.20	1.136	.0492
21	23	1.20	1.665	.0107	70	73	1.20	1.183	.0216
22	24	1.20	1.541	.0113	71	74	1.20	1.410	.0256
23	25	1.20	1.475	.0371	72	75	1.20	1.210	.0148
24	26	1.20	1.246	.0229	73	77	1.20	1.332	.0172
25	27	1.20	1.558	.0193	74	78	1.20	1.685	.0162
26	28	1.20	1.195	.0166	75	79	1.20	1.494	.0204
27	29	1.20	1.170	.0173	76	80	1.20	1.257	.0212
28	30	1.20	1.306	.0128	77	81	1.20	1.428	.0143
29	31	1.20	1.317	.0134	78	83	1.20	1.611	.0147
30	32	1.20	1.302	.0098	79	84	1.20	1.858	.0644
31	33	2.00	.768	.0084	80	85	1.20	1.392	.0156
32	34	1.20	1.068	.0180	81	87	1.20	1.188	.0154
33	35	2.00	.923	.0115	82	88	1.20	1.569	.0097
34	36	2.00	.560	.0121	83	89	2.00	.844	.0208
35	37	2.00	.783	.0073	84	90	1.20	1.462	.0190
36	38	2.00	.605	.0133	85	91	1.20	1.556	.0148
37	39	2.00	.502	.0148	86	92	1.20	1.433	.0104
38	41	1.20	1.286	.0193	87	93	1.20	1.412	.0331
39	42	1.20	1.063	.0279	88	94	1.20	1.438	.0156
40	43	1.20	1.327	.0277	89	95	1.20	1.377	.0230
41	44	1.20	1.152	.0115	90	96	1.20	1.288	.0657
42	45	2.00	.974	.0090	91	97	1.20	1.471	.0220
43	46	1.20	1.023	.0279	92	98	1.20	1.249	.0382
44	47	1.20	1.102	.0182	93	100	1.20	1.357	.0156
45	48	2.00	.725	.0113	94	102	1.20	1.371	.0230
46	49	2.00	.875	.0097	95	103	1.20	1.482	.0256
47	50	2.00	-1.096	-2.1487	96	105	.80	2.092	.0243
48	51	2.00	.585	.0183	97	106	1.20	1.741	.0123
49	52	2.00	.558	.0181	98	0	-0	0	0
20		.050							

HIT ON LOOP 59

DATE 5/12/75

AEDC(AHO,INC.) ARNOLD AFS, TENNESSEE
VON KARMAN GAS DYNAMICS FACILITY
50 INCH HYPERSONIC TUNNEL B
V418-87A

GROUP	TEST CONDITION	MODEL	MACH NO	PO,PSIA	TO,DEG R	ALPHA-MODEL	ALPHA-SECTOR	ALPHA-PREBEND	ROLL MODEL	TAW
20	8	140 B	7.90	109.8	1271	40.04	-10.24	30.00	168.55	2.0

T-INF (DEG R)	P-INF (PSIA)	Q-INF (PSIA)	V-INF (FT/SEC)	RHO-INF (SLUGS/FT3)	MU-INF (LB-SEC/FT2)	RE/FT (FT-1)	HREF-FR (R= .0400FT)	STFR (R= .0400FT)	SWITCH POSITION
94.9	.012	.533	3758	1.086E-05	7.589E-08	5.380E 05	1.181E-02	3.650E-02	2

TC NO	TW	DT*DT	QDOT	H(TO)	H(TO)/HREF	H(.9TO)	H(.9TO)/HREF	X/L	Z,FULL SCALE(IN)
								ACCESS HATCH WINDOW	
107	529.3	1.627	.233	3.137E-04	.0266	3.786E-04	.0320	.2050	396.2000
								FUSELAGE VENT PANEL NO. 3 AND 1	
								X/L	Z,FULL SCALE(IN)
108	530.9	2.761	.292	3.943E-04	.0334	4.761E-04	.0403	.1244	377.5000
109	530.3	2.459	.304	4.101E-04	.0347	4.950E-04	.0419	.1302	377.5000
110	530.0	2.466	.312	4.213E-04	.0357	5.085E-04	.0430	.1360	377.5000
111	530.3	2.440	.294	3.963E-04	.0335	4.783E-04	.0405	.1418	377.5000
112	529.7	2.514	.298	4.022E-04	.0340	4.854E-04	.0411	.1476	377.5000
113	530.3	2.807	.322	4.343E-04	.0368	5.243E-04	.0444	.1215	273.5000
114	530.0	2.496	.299	4.040E-04	.0342	4.877E-04	.0413	.1273	273.5000
115	529.7	2.352	.291	3.931E-04	.0333	4.744E-04	.0402	.1331	273.5000
116	529.4	2.337	.286	3.863E-04	.0327	4.662E-04	.0395	.1389	273.5000
117	529.4	2.540	.292	3.938E-04	.0333	4.753E-04	.0402	.1447	273.5000
118	528.5	1.849	.255	3.440E-04	.0291	4.150E-04	.0351	.1409	366.0000
119	528.2	2.195	.283	3.817E-04	.0323	4.606E-04	.0390	.1442	366.0000
120	528.2	2.287	.285	3.840E-04	.0325	4.633E-04	.0392	.1215	359.5000
121	527.7	2.072	.254	3.414E-04	.0289	4.118E-04	.0349	.1303	359.5000
122	527.1	2.084	.259	3.479E-04	.0294	4.196E-04	.0355	.1337	359.5000
								LOWER RCS NOZZLES	
								X/L	Z,FULL SCALE(IN)
124	532.9	.868	.077	1.050E-04	.0089	1.269E-04	.0107	.0950	400.0000
125	530.1	.977	.106	1.434E-04	.0121	1.731E-04	.0147	.0988	400.0000
126	531.9	.809	.111	1.500E-04	.0127	1.811E-04	.0153	.1027	400.0000
127	533.0	1.011	.136	1.847E-04	.0156	2.232E-04	.0189	.0911	395.0000
128	532.6	1.037	.126	1.705E-04	.0144	2.059E-04	.0174	.0950	395.0000
129	532.2	1.132	.133	1.798E-04	.0152	2.172E-04	.0184	.0988	395.0000
130	534.8	1.149	.138	1.869E-04	.0158	2.259E-04	.0191	.0810	390.0000
131	533.8	1.152	.170	2.311E-04	.0196	2.793E-04	.0236	.0857	390.0000
132	532.7	1.345	.157	2.123E-04	.0180	2.564E-04	.0217	.0963	390.0000
133	533.9	1.170	.142	1.928E-04	.0163	2.330E-04	.0197	.0857	383.8000
134	533.4	1.587	.213	2.882E-04	.0244	3.482E-04	.0295	.0872	377.3000
135	533.0	2.371	.285	3.859E-04	.0327	4.662E-04	.0395	.0903	374.5500
136	532.2	2.567	.285	3.862E-04	.0327	4.664E-04	.0395	.0960	374.5500
137	533.5	2.400	.314	4.259E-04	.0361	5.146E-04	.0436	.0872	370.5500
138	532.8	2.762	.318	4.310E-04	.0365	5.206E-04	.0441	.0928	370.5500
139	534.8	2.365	.302	4.105E-04	.0347	4.962E-04	.0420	.0816	366.0500
140	532.6	2.879	.366	4.960E-04	.0420	5.992E-04	.0507	.0934	362.4000
141	531.3	2.593	.342	4.628E-04	.0392	5.588E-04	.0473	.0973	362.4000
142	531.5	1.880	.205	2.768E-04	.0234	3.343E-04	.0283	.0833	355.2000
143	532.9	3.199	.321	4.354E-04	.0369	5.260E-04	.0445	.0919	355.2000
144	531.9	3.602	.474	6.414E-04	.0543	7.747E-04	.0656	.0949	349.0000

DATE 5/12/75

AEDC(ARO,INC.) ARNOLD AFS, TENNESSEE
VON KARMAN GAS DYNAMICS FACILITY
50 INCH HYPERSONIC TUNNEL B
V41R-87A

GROUP	TEST CONDITION	MODEL	MACH NO	PO,PSIA	TO,DEG R	ALPHA-MODEL	ALPHA-SECTOR	ALPHA-PREBEND	ROLL MODEL	YAW
20	8	140 B	7.90	109.8	1271	40.04	-10.24	30.00	168.55	2.0

T-INF (DEG R)	P-INF (PSIA)	Q-INF (PSIA)	V-INF (FT/SEC)	RHO-INF (SLUGS/FT3)	MU-INF (LB-SEC/FT2)	RE/FT (FT-1)	HREF-FR (R= .0400FT)	STFR (R= .0400FT)	SWITCH POSITION
94.3	.012	.533	3758	1.086E-05	7.589E-08	5.380E 05	1.181E-02	3.650E-02	2

TC NO	TW	DTWDT	QDOT	H(TO)	H(TO)/HREF	H(.9TO)	H(.9TO)/HREF
161	535.6	.653	.077	1.053E-04	.0089	1.272E-04	.0108
162	535.1	.772	.073	9.941E-05	.0084	1.202E-04	.0102
163	534.6	.615	.076	1.026E-04	.0087	1.241E-04	.0105
164	534.6	.581	.076	1.029E-04	.0087	1.244E-04	.0105
165	534.6	.380	.048	6.503E-05	.0055	7.860E-05	.0067
166	534.6	.503	.064	8.758E-05	.0074	1.059E-04	.0090
167	535.1	.400	.054	7.359E-05	.0062	8.895E-05	.0075
168	534.7	.421	.044	6.007E-05	.0051	7.260E-05	.0061
169	534.1	.316	.038	5.217E-05	.0044	6.305E-05	.0053
170	533.5	.242	.030	4.097E-05	.0035	4.950E-05	.0042
171	533.3	.332	.040	5.426E-05	.0046	6.555E-05	.0055
172	532.8	.289	.038	5.096E-05	.0043	6.156E-05	.0052
173	533.5	.361	.048	6.542E-05	.0055	7.905E-05	.0067
174	532.6	.128	.015	1.967E-05	.0017	2.376E-05	.0020
175	532.4	.086	.012	1.675E-05	.0014	2.023E-05	.0017
176	532.4	.141	.019	2.603E-05	.0022	3.144E-05	.0027
177	537.4	1.404	.193	2.638E-04	.0223	3.191E-04	.0270
178	537.4	1.528	.301	4.100E-04	.0347	4.959E-04	.0420
179	536.1	.921	.193	2.628E-04	.0222	3.177E-04	.0269
180	536.6	1.439	.188	2.560E-04	.0217	3.096E-04	.0262
181	536.5	1.357	.185	2.513E-04	.0213	3.038E-04	.0257
182	535.7	.795	.113	1.543E-04	.0131	1.866E-04	.0158
183	533.9	.283	.035	4.812E-05	.0041	5.815E-05	.0049
184	534.1	.268	.037	4.964E-05	.0042	5.998E-05	.0051
185	536.0	1.534	.184	2.510E-04	.0212	3.035E-04	.0257
186	536.4	1.701	.214	2.910E-04	.0246	3.519E-04	.0298
187	535.7	1.636	.218	2.964E-04	.0251	3.584E-04	.0303
188	535.2	.461	.107	1.460E-04	.0124	1.765E-04	.0149
189	535.0	.851	.121	1.649E-04	.0140	1.993E-04	.0169
190	535.1	1.271	.193	2.485E-04	.0210	3.004E-04	.0254
191	535.0	.855	.131	1.775E-04	.0150	2.145E-04	.0182

UPPER RCS NOZZLES

X/L	2Y/B
.0619	-.0160
.0709	-.0160
.0807	-.0160
.0943	-.0160
.0978	-.0160
.1013	-.0160
.0619	-.0320
.0709	-.0320
.0807	-.0320
.0943	-.0320
.0978	-.0320
.1013	-.0320
.0807	-.0480
.0943	-.0480
.0978	-.0480
.1013	-.0480

CANOPY

DATE 5/12/75

AEDC(ARO,INC.) ARNOLD AFS, TENNESSEE
VON KARMAN GAS DYNAMICS FACILITY
50 INCH HYPERSONIC TUNNEL B
V41B-B7A

GROUP	TEST CONDITION	MODEL	MACH NO	PO,PSIA	TO,DEG R	ALPHA-MODEL	ALPHA-SECTOR	ALPHA-PREBEND	ROLL MODEL	YAW
20	8	140 B	7.90	109.9	1271	40.04	-10.24	30.00	168.55	2.0

T-INF (DEG R)	P-INF (PSIA)	Q-INF (PSIA)	V-INF (FT/SEC)	RHO-INF (SLUGS/FT3)	MU-INF (LB-SEC/FT2)	RE/FT (FT-1)	HREF-FR (R= .0400FT)	STFR (R= .0400FT)	SWITCH POSITION
94.3	.012	.533	3758	1.086E-05	7.589E-08	5.380E 05	1.181E-02	3.650E-02	2

CANOPY

TC NO	TW	DTWDT	QDOT	H(TO)	H(TO)/HREF	H(.9TO)	H(.9TO)/HREF
192	532.1	.074	.010	1.407E-05	.0012	1.699E-05	.0014
193	534.3	.515	.099	1.346E-04	.0114	1.627E-04	.0138
194	532.2	.208	.027	3.599E-05	.0030	4.347E-05	.0037
195	532.4	.359	.044	5.984E-05	.0051	7.234E-05	.0061
196	533.1	.312	.041	5.555E-05	.0047	6.711E-05	.0057
197	529.7	.177	.017	2.359E-05	.0020	2.847E-05	.0024
198	530.4	.193	.022	3.028E-05	.0026	3.655E-05	.0031
199	531.6	.360	.048	6.533E-05	.0055	7.889E-05	.0067
200	532.2	.502	.071	9.679E-05	.0082	1.169E-04	.0099
201	532.9	.543	.077	1.038E-04	.0088	1.254E-04	.0106
202	533.3	.420	.053	7.189E-05	.0061	8.685E-05	.0074
203	530.4	.199	.025	3.325E-05	.0028	4.014E-05	.0034
204	531.4	.355	.055	7.455E-05	.0063	9.002E-05	.0076
205	532.7	.655	.102	1.383E-04	.0117	1.671E-04	.0141
206	529.8	-.353	-.047	-6.304E-05	-.0053	-7.609E-05	-.0064
207	533.0	.595	.080	1.080E-04	.0091	1.305E-04	.0110
208	530.2	.283	.038	5.123E-05	.0043	6.184E-05	.0052
209	530.9	.122	.017	2.263E-05	.0019	2.733E-05	.0023
210	531.5	.290	.039	5.238E-05	.0044	6.326E-05	.0054
211	528.6	.376	.046	6.134E-05	.0052	7.401E-05	.0063
212	530.0	.437	.059	7.935E-05	.0067	9.578E-05	.0081
213	530.1	.261	.035	4.660E-05	.0039	5.625E-05	.0048
214	530.7	.285	.040	5.389E-05	.0046	6.506E-05	.0055
215	531.3	.385	.055	7.378E-05	.0062	8.909E-05	.0075
216	532.2	.495	.070	9.510E-05	.0080	1.149E-04	.0097
217	532.2	.508	.072	9.791E-05	.0083	1.183E-04	.0100
218	529.7	.121	.017	2.244E-05	.0019	2.708E-05	.0023
219	530.7	.838	.118	1.540E-04	.0135	1.920E-04	.0162
220	530.9	.419	.057	7.769E-05	.0066	9.379E-05	.0079

GROUP 20 CENTERLINE TIME 2.90

CH	TC	FIT LENGTH	DTDWT	UNCERTAINTY	CH	TC	FIT LENGTH	DTDWT	UNCERTAINTY
1	107	1.20	1.627	.0113	50	173	2.00	.361	.0386
2	108	.80	2.761	.0079	51	174	2.00	.128	.1073
3	109	.80	2.459	.0117	52	175	2.00	.086	.1624
4	110	.80	2.466	.0112	53	176	2.00	.141	.0662
5	111	.80	2.440	.0284	54	177	1.20	1.404	.0167
6	112	.80	2.514	.0115	55	178	1.20	1.528	.0177
7	113	.80	2.807	.0582	56	179	1.20	.921	.0829
8	114	.80	2.496	.0151	57	180	1.20	1.439	.0122
9	115	.80	2.352	.0368	58	181	1.20	1.357	.0154
10	116	.80	2.337	.0135	59	182	2.00	.795	.0168
11	117	.80	2.540	.0246	60	183	2.00	.283	.0291
12	118	1.20	1.849	.0159	61	184	2.00	.268	.0602
13	119	.80	2.195	.0146	62	185	1.20	1.534	.0113
14	120	.80	2.287	.0176	63	186	1.20	1.701	.0101
15	121	.80	2.072	.0299	64	187	1.20	1.636	.0165
16	122	.80	2.084	.0202	65	188	2.00	.461	.0254
17	124	2.00	.868	.0206	66	189	2.00	.851	.0152
18	125	2.00	.977	.0134	67	190	1.20	1.271	.0111
19	126	2.00	.809	.0161	68	191	2.00	.855	.0804
20	127	1.20	1.011	.0235	69	192	2.00	.074	.3783
21	128	1.20	1.037	.0103	70	193	2.00	.515	.0224
22	129	1.20	1.132	.0165	71	194	2.00	.206	.0799
23	130	1.20	1.149	.0422	72	195	2.00	.359	.0324
24	131	1.20	1.152	.0268	73	196	2.00	.312	.0374
25	132	1.20	1.345	.0218	74	197	2.00	.177	.0687
26	133	1.20	1.170	.0145	75	198	2.00	.193	.0550
27	134	1.20	1.587	.0144	76	199	2.00	.360	.0287
28	135	.80	2.371	.0148	77	200	2.00	.502	.0147
29	136	.80	2.567	.0112	78	201	2.00	.543	.0182
30	137	.80	2.400	.0140	79	202	2.00	.420	.1314
31	138	.80	2.762	.0093	80	203	2.00	.199	.0417
32	139	.80	2.365	.0161	81	204	2.00	.355	.0288
33	140	.80	2.679	.0082	82	205	2.00	.655	.0117
34	141	.80	2.593	.0123	83	206	2.00	-.353	-.1011
35	142	1.20	1.880	.0123	84	207	2.00	.595	.0194
36	143	.80	3.199	.0111	85	208	2.00	.283	.0319
37	144	.80	3.602	.0071	86	209	2.00	.122	.0849
38	161	2.00	.653	.0148	87	210	2.00	.290	.0777
39	162	2.00	.772	.0188	88	211	2.00	.376	.0732
40	163	2.00	.615	.0243	89	212	2.00	.437	.0337
41	164	2.00	.581	.0120	90	213	2.00	.261	.1403
42	165	2.00	.380	.0233	91	214	2.00	.285	.0543
43	166	2.00	.503	.0281	92	215	2.00	.385	.0600
44	167	2.00	.400	.0214	93	216	2.00	.495	.0195
45	168	2.00	.421	.0186	94	217	2.00	.508	.0306
46	169	2.00	.316	.0282	95	218	2.00	.121	.1029
47	170	2.00	.242	.0892	96	219	2.00	.838	.0267
48	171	2.00	.332	.0325	97	220	2.00	.419	.0212
49	172	2.00	.289	.0686	98	0	-0	0	0
21		.050							

HIT ON LOOP 60

DATE 5/12/75

AEDC(ARO,INC.) ARNOLD AFS, TENNESSEE
VON KARMAN GAS DYNAMICS FACILITY
50 INCH HYPERSONIC TUNNEL B
V41A-B7A

GROUP	TEST CONDITION	MODEL	MACH NO	PO,PSIA	TO,DEG R	ALPHA-MODEL	ALPHA-SECTOR	ALPHA-PREBEND	ROLL MODEL	YAW
21	8	140 B	7.90	110.5	1272	40.04	-10.24	30.00	168.55	2.0

T-INF (DEG R)	P-INF (PSIA)	Q-INF (PSIA)	V-INF (FT/SEC)	RHO-INF (SLUGS/FT3)	MU-INF (LB-SEC/FT2)	RE/FT (FT-1)	HREF-FR (R= .0400FT)	STFR (R= .0400FT)	SWITCH POSITION
94.3	.012	.537	3759	1.093E-05	7.593E-08	5.410E 05	1.185E-02	3.639E-02	3

TC NO	TW	DTWDT	QDOT	H(TO)	H(TO)/HREF	H(.9TO)	H(.9TO)/HREF		
								CANOPY	
221	527.9	.352	.042	5.710E-05	.0048	6.88BE-05	.005B		
222	527.2	.406	.050	6.704E-05	.0057	8.085E-05	.0068		
223	526.3	.390	.053	7.079E-05	.0060	8.535E-05	.0072		
								ESCAPE HATCH AND WINDOW	
								X/L	2Y/B
224	530.8	1.301	.135	1.826E-04	.0154	2.205E-04	.0186	.1933	.0162
225	530.5	1.146	.137	1.848E-04	.0156	2.231E-04	.0188	.1972	.0162
226	529.0	.624	.066	8.835E-05	.0075	1.066E-04	.0090	.1933	.0384
227	528.1	.507	.074	9.965E-05	.0084	1.202E-04	.0101	.1972	.0384
228	527.6	.494	.063	8.517E-05	.0072	1.027E-04	.0087	.1933	.0653
229	527.9	.418	.054	7.202E-05	.0061	8.687E-05	.0073	.1972	.0653
232	531.4	.077	.010	1.406E-05	.0012	1.698E-05	.0014	.2567	.0235
233	532.0	.117	.018	2.408E-05	.0020	2.908E-05	.0025	.2606	.0235
236	530.8	.228	.033	4.492E-05	.0038	5.423E-05	.0046	.2567	.0491
237	531.3	.266	.037	5.047E-05	.0043	6.094E-05	.0051	.2606	.0491
								CARGO BAY HINGE NO. 1	
								X/L	Z,FULL SCALE(IN)
238	532.3	.884	.118	1.601E-04	.0135	1.934E-04	.0163	.2879	420.0000
239	532.2	.789	.106	1.428E-04	.0120	1.725E-04	.0146	.2917	420.0000
240	531.8	.711	.102	1.372E-04	.0116	1.657E-04	.0140	.2840	415.0000
241	531.7	.698	.098	1.325E-04	.0112	1.600E-04	.0135	.2879	415.0000
242	529.2	.659	.094	1.265E-04	.0107	1.526E-04	.0129	.2917	415.0000
243	530.0	.916	.112	1.508E-04	.0127	1.821E-04	.0154	.2801	405.0000
244	530.2	.793	.093	1.250E-04	.0105	1.508E-04	.0127	.2840	405.0000
								CARGO BAY HINGE NO. 2	
								X/L	Z,FULL SCALE(IN)
245	532.4	1.091	.156	2.107E-04	.0178	2.544E-04	.0215	.3192	420.0000
246	532.9	1.196	.171	2.312E-04	.0195	2.792E-04	.0236	.3439	420.0000
247	532.2	.904	.133	1.801E-04	.0152	2.175E-04	.0183	.3362	415.0000
248	532.6	1.065	.157	2.122E-04	.0179	2.563E-04	.0216	.3401	415.0000
249	532.4	1.102	.162	2.195E-04	.0185	2.651E-04	.0224	.3439	415.0000
250	532.0	1.478	.185	2.499E-04	.0211	3.018E-04	.0255	.3323	405.0000
251	531.9	1.635	.201	2.712E-04	.0229	3.275E-04	.0276	.3362	405.0000
								CARGO BAY HINGE NO. 3	
								X/L	Z,FULL SCALE(IN)
252	533.3	2.257	.327	4.435E-04	.0374	5.358E-04	.0452	.3923	420.0000
253	534.1	2.403	.349	4.729E-04	.0399	5.714E-04	.0482	.3961	420.0000
254	532.8	2.064	.313	4.239E-04	.0358	5.121E-04	.0432	.3884	415.0000
257	531.1	1.732	.233	3.151E-04	.0266	3.804E-04	.0321	.3845	405.0000
258	530.4	1.395	.190	2.559E-04	.0216	3.089E-04	.0261	.3884	405.0000

DATE 5/12/75

AEDC(ARO,INC.) ARNOLD AFS, TENNESSEE
VON KARMAN GAS DYNAMICS FACILITY
50 INCH HYPERSONIC TUNNEL B
V41A-B7A

GROUP	TEST CONDITION	MODEL	MACH NO	PO,PSIA	TO,DEG R	ALPHA-MODEL	ALPHA-SECTOR	ALPHA-PREBEND	ROLL MODEL	YAW
21	P	140 B	7.90	110.5	1272	40.04	-10.24	30.00	168.55	2.0

T-INF (DEG R)	P-INF (PSIA)	Q-INF (PSIA)	V-INF (FT/SEC)	RHO-INF (SLUGS/FT3)	MU-INF (LB-SEC/FT2)	RE/FT (FT-1)	HREF-FR (R= .0400FT)	STFR (R= .0400FT)	SWITCH POSITION
94.3	.012	.537	3759	1.093E-05	7.593E-06	5.410E 05	1.185E-02	3.639E-02	3

IC NO	TW	DT*DT	QDOT	H(TO)	H(TO)/HREF	H(.9TO)	H(.9TO)/HREF	TOP CENTERLINE X/L
367	551.5	32.259	3.823	5.309E-03	.4479	6.448E-03	.5439	0
368	539.4	20.477	2.604	3.557E-03	.3000	4.304E-03	.3631	.0008
369	536.1	16.451	1.927	2.620E-03	.2210	3.168E-03	.2672	.0019
370	532.6	10.334	1.259	1.704E-03	.1437	2.058E-03	.1736	.0037
371	530.8	5.815	.568	7.665E-04	.0647	9.253E-04	.0781	.0058
372	529.7	3.826	.441	6.618E-04	.0558	7.988E-04	.0674	.0087
373	529.3	2.518	.329	4.428E-04	.0374	5.343E-04	.0451	.0118
374	529.7	1.863	.246	3.314E-04	.0280	3.999E-04	.0337	.0151
375	529.7	1.603	.219	2.946E-04	.0249	3.555E-04	.0300	.0182
376	530.3	1.453	.191	2.578E-04	.0217	3.111E-04	.0262	.0215
377	530.8	1.197	.154	2.074E-04	.0175	2.504E-04	.0211	.0246
378	531.4	1.005	.117	1.581E-04	.0133	1.909E-04	.0161	.0278
379	532.9	.818	.100	1.359E-04	.0115	1.642E-04	.0139	.0609
380	532.3	.710	.073	9.860E-05	.0083	1.191E-04	.0100	.0646
381	532.0	.697	.090	1.219E-04	.0103	1.472E-04	.0124	.0684
382	531.6	.634	.083	1.120E-04	.0094	1.353E-04	.0114	.0721
383	531.6	.618	.083	1.117E-04	.0094	1.348E-04	.0114	.0760
384	531.7	.489	.058	9.195E-05	.0078	1.110E-04	.0094	.0796
385	532.3	.736	.095	1.279E-04	.0108	1.545E-04	.0130	.0789
386	532.7	.897	.106	1.436E-04	.0121	1.734E-04	.0146	.0982
387	532.9	.973	.119	1.617E-04	.0136	1.954E-04	.0165	.1019
388	533.6	1.614	.153	2.080E-04	.0175	2.513E-04	.0212	.1160
389	533.0	1.419	.206	2.788E-04	.0235	3.367E-04	.0284	.1195
390	532.7	1.182	.186	2.520E-04	.0213	3.044E-04	.0257	.1231
391	532.6	1.315	.209	2.834E-04	.0239	3.423E-04	.0289	.1268
392	532.6	1.338	.229	3.104E-04	.0262	3.749E-04	.0316	.1305
393	532.5	1.414	.239	3.237E-04	.0273	3.910E-04	.0330	.1338
394	532.4	1.456	.244	3.305E-04	.0279	3.992E-04	.0337	.1376
395	532.3	1.456	.218	2.944E-04	.0248	3.556E-04	.0300	.1411
396	532.6	1.538	.228	3.083E-04	.0260	3.724E-04	.0314	.1448
397	532.9	1.650	.245	3.311E-04	.0279	3.999E-04	.0337	.1483
398	533.4	1.834	.258	3.494E-04	.0295	4.221E-04	.0356	.1519
399	535.1	3.744	.500	6.793E-04	.0573	8.210E-04	.0693	.1556

DATE 5/12/75

AEDC(ARO,INC.) ARNOLD AFS, TENNESSEE
VON KARMAN GAS DYNAMICS FACILITY
50 INCH HYPERSONIC TUNNEL B
V41B-B7A

GROUP	TEST CONDITION	MODEL	MACH NO	PO,PSIA	TO,DEG R	ALPHA-MODEL	ALPHA-SECTOR	ALPHA-PREBEND	ROLL MODEL	YAW
21	P	140 B	7.90	110.5	1272	40.04	-10.24	30.00	168.55	2.0

T-INF (DEG R)	P-INF (PSIA)	Q-INF (PSIA)	V-INF (FT/SEC)	RHO-INF (SLUGS/FT3)	MU-INF (LB-SEC/FT2)	RE/FT (FT-1)	HREF-FR (R= .0400FT)	STFR (R= .0400FT)	SWITCH POSITION
94.3	.012	.537	3759	1.093E-05	7.593E-08	5.410E 05	1.185E-02	3.639E-02	3

TC NO	TW	DTWDT	QDOT	H(TO)	H(TO)/HREF	H(.9TO)	H(.9TO)/HREF	X/L
								TOP CENTERLINE
400	535.1	4.425	.597	8.108E-04	.0684	9.801E-04	.0827	.1582
401	534.7	3.885	.503	6.830E-04	.0576	8.254E-04	.0696	.1608
402	534.4	3.934	.490	6.651E-04	.0561	8.037E-04	.0678	.1635
403	534.4	3.832	.466	6.316E-04	.0533	7.633E-04	.0644	.1664
404	535.1	3.952	.480	6.513E-04	.0549	7.872E-04	.0664	.1691
405	535.6	4.856	.588	7.993E-04	.0674	9.663E-04	.0815	.1720
406	534.5	4.275	.518	7.022E-04	.0592	8.486E-04	.0716	.1748
407	534.4	4.034	.521	7.065E-04	.0596	8.537E-04	.0720	.1769
408	534.5	4.062	.595	8.075E-04	.0681	9.759E-04	.0823	.1800
409	534.0	3.518	.576	6.859E-04	.0579	8.286E-04	.0699	.1831
410	533.2	3.440	.494	6.696E-04	.0565	8.089E-04	.0682	.1863
411	533.3	2.601	.390	5.284E-04	.0446	6.384E-04	.0539	.1894
412	533.1	2.118	.287	3.892E-04	.0328	4.701E-04	.0397	.1931
413	533.1	1.531	.205	2.771E-04	.0234	3.346E-04	.0282	.1972
414	532.4	.857	.115	1.551E-04	.0131	1.874E-04	.0158	.2049
415	531.6	.295	.029	3.928E-05	.0033	4.743E-05	.0040	.2250
416	532.3	.116	.014	1.842E-05	.0016	2.224E-05	.0019	.2500
								NOSE TC (Z = 338)
								X/L 2Y/B
145	546.1	23.043	3.106	4.282E-03	.3613	5.192E-03	.4380	.0008 .5039
146	545.2	24.447	3.296	4.543E-03	.3833	5.509E-03	.4647	.0023 .5082
147	541.1	19.608	2.636	3.639E-03	.3045	4.370E-03	.3686	.0043 .5135
148	541.1	15.667	2.177	2.980E-03	.2514	3.608E-03	.3044	.0068 .5205
149	538.4	11.335	1.634	2.228E-03	.1880	2.696E-03	.2274	.0095 .5279
150	539.1	10.544	1.506	2.056E-03	.1735	2.488E-03	.2099	.0122 .5354
151	540.0	7.069	.991	1.355E-03	.1143	1.640E-03	.1383	.0218 .5621
152	540.7	7.489	1.013	1.387E-03	.1170	1.679E-03	.1416	.0251 .5712
153	540.8	8.528	1.039	1.422E-03	.1200	1.722E-03	.1453	.0286 .5808
154	541.0	8.139	1.010	1.383E-03	.1167	1.674E-03	.1413	.0319 .5898
155	540.0	7.302	.916	1.252E-03	.1056	1.515E-03	.1278	.0354 .5995
156	539.2	6.665	.827	1.129E-03	.0952	1.366E-03	.1152	.0387 .6085
157	538.8	6.617	.812	1.108E-03	.0934	1.340E-03	.1131	.0420 .6176
158	537.8	6.692	.820	1.118E-03	.0943	1.353E-03	.1141	.0462 .6294
159	537.6	6.636	.742	1.011E-03	.0853	1.223E-03	.1032	.0503 .6406

GROUP 21 CENTERLINE TIME 2.95

CH	TC	FIT LENGTH	DTDWT	UNCERTAINTY	CH	TC	FIT LENGTH	DTDWT	UNCERTAINTY
1	221	2.00	.332	.0269	50	384	2.00	.489	.0360
2	222	2.00	.406	.0269	51	385	2.00	.736	.0239
3	223	2.00	.390	.0233	52	386	2.00	.897	.0123
4	224	1.20	1.361	.0159	53	387	2.00	.973	.0083
5	225	1.20	1.146	.0455	54	388	1.20	1.614	.0160
6	226	2.00	.624	.0129	55	389	1.20	1.419	.0173
7	227	2.00	.507	.0872	56	390	1.20	1.182	.0722
8	228	2.00	.494	.0227	57	391	1.20	1.315	.0137
9	229	2.00	.418	.0382	58	392	1.20	1.338	.0133
10	232	2.00	.077	.0981	59	393	1.20	1.414	.0179
11	233	2.00	.117	.0767	60	394	1.20	1.456	.0127
12	236	2.00	.228	.0818	61	395	1.20	1.456	.0209
13	237	2.00	.266	.0451	62	396	1.20	1.538	.0098
14	238	2.00	.884	.0374	63	397	1.20	1.650	.0148
15	239	2.00	.785	.0178	64	398	1.20	1.834	.0169
16	240	2.00	.711	.0190	65	399	.80	3.744	.0082
17	241	2.00	.698	.0252	66	400	.60	4.425	.0157
18	242	2.00	.659	.0218	67	401	.80	3.885	.0068
19	243	2.00	.916	.0162	68	402	.60	3.934	.0531
20	244	2.00	.793	.0181	69	403	.80	3.832	.0427
21	245	1.20	1.091	.0155	70	404	.80	3.962	.0159
22	246	1.20	1.196	.0136	71	405	.60	4.856	.0209
23	247	2.00	.904	.0274	72	406	.60	4.275	.0123
24	248	1.20	1.065	.0284	73	407	.60	4.034	.0103
25	249	1.20	1.102	.0193	74	408	.60	4.062	.0133
26	250	1.20	1.475	.0093	75	409	.80	3.518	.0112
27	251	1.20	1.635	.0102	76	410	.80	3.440	.0137
28	252	.80	2.287	.0118	77	411	.80	2.601	.0105
29	253	.80	2.403	.0129	78	412	.80	2.118	.0145
30	254	.80	2.064	.0197	79	413	1.20	1.531	.0740
31	257	1.20	1.732	.0110	80	414	2.00	.857	.0103
32	258	1.20	1.395	.0141	81	415	2.00	.295	.0308
33	367	.30	32.259	.0023	82	416	2.00	.116	.0641
34	368	.30	20.477	.0032	83	145	.30	23.043	.0075
35	369	.40	16.451	.0044	84	146	.30	24.447	.0090
36	370	.40	10.334	.0053	85	147	.30	19.608	.0037
37	371	.60	5.815	.0060	86	148	.40	15.667	.0033
38	372	.80	3.626	.0097	87	149	.40	11.335	.0249
39	373	.80	2.518	.0128	88	150	.40	10.544	.0106
40	374	1.20	1.883	.0150	89	151	.60	7.069	.0091
41	375	1.20	1.603	.0094	90	152	.60	7.489	.0206
42	376	1.20	1.453	.0112	91	153	.40	8.528	.0148
43	377	1.20	1.197	.0181	92	154	.60	8.139	.0142
44	378	2.00	1.005	.0092	93	155	.60	7.302	.0066
45	379	2.00	.818	.0109	94	156	.60	6.665	.0113
46	380	2.00	.710	.0100	95	157	.60	6.617	.0094
47	381	2.00	.697	.0293	96	158	.60	6.692	.0096
48	382	2.00	.634	.0183	97	159	.60	6.636	.0084
49	383	2.00	.618	.0156	98	0	-0	0	0

DATE 5/12/75

AEDC(AHO,INC.) ARNOLD AFS, TENNESSEE
VON KARMAN GAS DYNAMICS FACILITY
50 INCH HYPERSONIC TUNNEL R
V41B-87A

GROUP	TEST CONDITION	MODEL	MACH NO	PO,PSIA	TO,DEG R	ALPHA-MODEL	ALPHA-SECTOR	ALPHA-PREBEND	ROLL MODEL	YAW
22	9	140 B	7.94	209.5	1266	20.09	9.91	30.00	179.98	-.0

T-INF (DEG R)	P-INF (PSIA)	Q-INF (PSIA)	V-INF (FT/SEC)	RHO-INF (SLUGS/FT3)	MU-INF (LB-SEC/FT2)	RE/FT (FT-1)	HREF-FR (R= .0400FT)	STFR (R= .0400FT)	SWITCH POSITION
93.0	.023	.994	3753	2.032E-05	7.491E-08	1.018E 06	1.612E-02	2.668E-02	1

TC NO	TW	DTWDT	QDOT	H(TO)	H(TO)/HREF	H(.9TO)	H(.9TO)/HREF	X/L	Z,FULL SCALE(IN)
								FUSELAGE VENT NO. 1	
1	539.8	4.180	.552	7.603E-04	.0472	9.209E-04	.0571	.4434	376.6300
2	540.6	4.354	.588	8.101E-04	.0502	9.813E-04	.0609	.4264	371.6300
3	540.6	4.883	.672	9.256E-04	.0574	1.121E-03	.0695	.4303	371.6300
4	540.8	4.956	.675	9.308E-04	.0577	1.128E-03	.0699	.4342	371.6300
5	541.4	5.384	.719	9.922E-04	.0615	1.202E-03	.0746	.4380	371.6300
6	541.6	5.632	.747	1.031E-03	.0640	1.250E-03	.0775	.4434	369.1300
7	541.0	5.497	.803	1.107E-03	.0687	1.342E-03	.0832	.4226	366.6300
8	540.6	4.682	.707	9.744E-04	.0604	1.180E-03	.0732	.4264	366.6300
9	543.0	5.023	.732	1.011E-03	.0627	1.225E-03	.0760	.4303	366.6300
10	541.2	5.010	.716	9.679E-04	.0613	1.197E-03	.0742	.4342	366.6300
11	542.0	5.376	.728	1.006E-03	.0624	1.219E-03	.0756	.4380	366.6300
12	543.4	4.278	.590	8.134E-04	.0504	9.853E-04	.0611	.4496	366.6300
13	538.9	2.408	.354	4.862E-04	.0302	5.887E-04	.0365	.4187	357.1300
14	539.7	2.900	.396	5.454E-04	.0338	6.605E-04	.0410	.4396	361.6300
15	539.1	2.773	.379	5.089E-04	.0316	6.162E-04	.0382	.4434	361.6300
16	538.2	1.303	.176	2.418E-04	.0150	2.928E-04	.0182	.4396	355.6300
17	537.9	1.170	.158	2.171E-04	.0135	2.628E-04	.0163	.4434	355.6300
18	535.5	1.026	.143	1.959E-04	.0121	2.369E-04	.0147	.4396	351.6300
19	537.9	.668	.093	1.281E-04	.0079	1.550E-04	.0096	.4291	332.6300
								CARGO BAY VENT NO. 1	
22	536.3	1.569	.217	2.979E-04	.0185	3.605E-04	.0224	.3974	397.6300
23	536.7	1.630	.227	3.117E-04	.0193	3.771E-04	.0234	.4013	397.6300
24	537.1	1.676	.226	3.105E-04	.0193	3.757E-04	.0233	.4052	397.6300
25	537.0	1.530	.201	2.759E-04	.0171	3.339E-04	.0207	.4090	397.6300
26	537.1	1.797	.235	3.230E-04	.0200	3.909E-04	.0242	.4129	397.6300
27	536.9	1.634	.227	3.116E-04	.0193	3.771E-04	.0234	.3936	392.6300
28	536.4	1.698	.244	3.339E-04	.0207	4.040E-04	.0251	.3974	392.6300
29	536.6	1.759	.253	3.472E-04	.0215	4.201E-04	.0261	.4013	392.6300
30	536.5	1.638	.235	3.221E-04	.0200	3.898E-04	.0242	.4052	392.6300
31	536.7	1.576	.220	3.014E-04	.0187	3.647E-04	.0226	.4090	392.6300
32	536.6	1.560	.207	2.831E-04	.0176	3.425E-04	.0212	.4129	392.6300
33	536.8	1.396	.199	2.731E-04	.0169	3.305E-04	.0205	.4090	386.1300
34	537.5	1.687	.228	3.128E-04	.0194	3.786E-04	.0235	.4129	387.6300
35	537.2	1.455	.206	2.821E-04	.0175	3.414E-04	.0212	.3897	383.1300
36	538.0	2.149	.312	4.280E-04	.0265	5.181E-04	.0321	.4090	378.6300
37	538.0	2.241	.315	4.323E-04	.0268	5.233E-04	.0325	.4129	382.1300
38	538.9	2.922	.407	5.595E-04	.0347	6.775E-04	.0420	.4129	377.1300
39	538.5	2.595	.379	5.204E-04	.0323	6.301E-04	.0391	.4001	373.6300
								PROTUBERANCES	
41	535.6	1.213	.162	2.219E-04	.0138	2.684E-04	.0166	.3546	379.0500
42	536.2	1.778	.242	3.321E-04	.0206	4.018E-04	.0249	.3604	379.0500
43	536.1	1.003	.130	1.782E-04	.0110	2.155E-04	.0134	.3450	374.0500

DATE 5/12/75

AEDC(ARO,INC.) ARNOLD AFS, TENNESSEE
VON KARMAN GAS DYNAMICS FACILITY
50 INCH HYPERSONIC TUNNEL B
V41B-87A

GROUP	TEST CONDITION	MODEL	MACH NO	PO,PSIA	TO,DEG R	ALPHA-MODEL	ALPHA-SECTOR	ALPHA-PREBEND	ROLL MODEL	YAW
22	9	140 B	7.94	209.5	1266	20.09	9.91	30.00	179.98	-.0

T-INF (DEG R)	P-INF (PSIA)	Q-INF (PSIA)	V-INF (FT/SEC)	RHO-INF (SLUGS/FT3)	MU-INF (LB-SEC/FT2)	RE/FT (FT-1)	HREF-FR (R= .0400FT)	STFR (R= .0400FT)	SWITCH POSITION
93.0	.023	.994	3753	2.032E-05	7.491E-08	1.018E 06	1.612E-02	2.668E-02	1

TC NO	TW	DTWDT	QDOT	H(TO)	H(TO)/HREF	H(.9TO)	H(.9TO)/HREF	PROTUBERANCES X/L	PROTUBERANCES Z,FULL SCALE(IN)
44	536.2	1.446	.197	2.693E-04	.0167	3.258E-04	.0202	.3508	374.0500
45	537.6	2.181	.301	4.138E-04	.0257	5.008E-04	.0311	.3566	374.0500
46	537.6	2.376	.332	4.552E-04	.0282	5.509E-04	.0342	.3604	374.0500
47	536.5	1.660	.220	3.021E-04	.0187	3.655E-04	.0227	.3392	366.5500
48	537.7	2.332	.319	4.383E-04	.0272	5.305E-04	.0329	.3566	366.5500
49	537.0	2.311	.317	4.350E-04	.0270	5.265E-04	.0326	.3392	360.7000
50	537.5	2.583	.358	4.917E-04	.0305	5.951E-04	.0369	.3566	360.7000
51	538.1	3.033	.411	5.649E-04	.0350	6.838E-04	.0424	.3604	360.7000
52	539.0	4.092	.562	7.734E-04	.0480	9.365E-04	.0581	.3392	353.2000
53	539.2	4.551	.664	9.138E-04	.0567	1.107E-03	.0686	.3450	353.2000
54	534.9	1.050	.150	2.046E-04	.0127	2.475E-04	.0153	.3508	353.2000
55	540.1	5.066	.724	9.970E-04	.0618	1.208E-03	.0749	.3566	353.2000

TC NO	TW	DTWDT	QDOT	H(TO)	H(TO)/HREF	H(.9TO)	H(.9TO)/HREF	SUBLIMATOR VENT NO. 1 X/L	SUBLIMATOR VENT NO. 1 Z,FULL SCALE(IN)
56	535.5	.989	.127	1.742E-04	.0108	2.108E-04	.0131	.3031	371.1300
57	535.5	1.012	.123	1.689E-04	.0105	2.044E-04	.0127	.3074	369.1300
58	535.5	.858	.113	1.549E-04	.0096	1.873E-04	.0116	.3089	363.6300
59	535.8	1.141	.150	2.053E-04	.0127	2.484E-04	.0154	.3074	358.1300
60	535.9	.978	.136	1.863E-04	.0116	2.253E-04	.0140	.3031	356.1300
61	535.6	.858	.109	1.486E-04	.0092	1.798E-04	.0111	.2988	358.1300
62	535.5	.946	.116	1.586E-04	.0098	1.919E-04	.0119	.2973	363.6300
63	534.9	1.060	.138	1.891E-04	.0117	2.287E-04	.0142	.2988	369.1300
64	532.7	~~.002~~	~~.000~~	~~2.950E-07~~	~~.0000~~	~~3.566E-07~~	~~.0000~~	.3031	376.1300
65	535.7	.922	.125	1.715E-04	.0106	2.074E-04	.0129	.3089	378.6300
66	535.8	1.038	.131	1.791E-04	.0111	2.167E-04	.0134	.3101	372.6300
67	535.7	.795	.112	1.528E-04	.0095	1.849E-04	.0115	.3157	370.3800
68	536.4	.975	.123	1.691E-04	.0105	2.046E-04	.0127	.3128	363.6300

DATE 5/12/75

AEDC(ARO,INC.) ARNOLD AFS, TENNESSEE
VON KARMAN GAS DYNAMICS FACILITY
50 INCH HYPERSONIC TUNNEL B
V418-B7A

GROUP	TEST CONDITION	MODEL	MACH NO	PO,PSIA	TO,DEG R	ALPHA-MODEL	ALPHA-SECTOR	ALPHA-PREBEND	ROLL MODEL	YAW
22	5	140 B	7.94	209.5	1266	20.09	9.91	30.00	179.98	-.0

T-INF (DEG R)	P-INF (PSIA)	Q-INF (PSIA)	V-INF (FT/SEC)	RHO-INF (SLUGS/FT3)	MU-INF (LB-SEC/FT2)	RE/FT (FT-1)	HREF-FR (R= .0400FT)	STFR (R= .0400FT)	SWITCH POSITION
93.0	.023	.994	3753	2.032E-05	7.491E-08	1.018E 06	1.512E-02	2.668E-02	1

IC NO	TW	(TW-TO)/TO	QDOT	H(TO)	H(TO)/HREF	H(.9TO)	H(.9TO)/HREF	X/L	Z,FULL SCALE(IN)
								FUSELAGE VENT PANEL NO. 7	
69	534.9	1.386	.193	2.642E-04	.0164	3.195E-04	.0198	.2487	356.4000
70	534.9	1.271	.156	2.127E-04	.0132	2.573E-04	.0160	.2591	356.4000
71	534.6	1.268	.172	2.354E-04	.0146	2.847E-04	.0177	.2419	351.4000
72	535.0	1.253	.178	2.428E-04	.0151	2.937E-04	.0182	.2487	351.4000
73	534.9	1.308	.169	2.317E-04	.0144	2.802E-04	.0174	.2552	351.4000
74	535.1	1.387	.158	2.297E-04	.0142	2.778E-04	.0172	.2610	351.4000
75	534.5	1.355	.184	2.515E-04	.0156	3.041E-04	.0189	.2419	342.8000
77	535.0	1.411	.200	2.734E-04	.0170	3.306E-04	.0205	.2552	342.8000
78	535.6	1.306	.179	2.453E-04	.0152	2.968E-04	.0184	.2610	342.8000
79	535.2	1.455	.186	2.543E-04	.0158	3.076E-04	.0191	.2419	334.2000
80	534.5	1.555	.212	2.895E-04	.0180	3.501E-04	.0217	.2487	334.2000
81	534.3	1.246	.174	2.377E-04	.0147	2.874E-04	.0178	.2552	334.2000
								ACCESS HATCH WINDOW	
83	533.8	1.696	.226	3.092E-04	.0192	3.738E-04	.0232	.2131	398.0000
84	534.3	1.815	.239	3.267E-04	.0203	3.951E-04	.0245	.2131	388.0000
85	534.1	1.618	.220	3.010E-04	.0187	3.639E-04	.0226	.2131	383.0000
87	533.2	1.193	.170	2.325E-04	.0144	2.811E-04	.0174	.2222	395.8000
88	534.3	1.655	.231	3.161E-04	.0196	3.822E-04	.0237	.2193	386.5000
89	534.1	1.821	.268	3.655E-04	.0227	4.420E-04	.0274	.2177	381.8000
90	534.3	1.573	.214	2.928E-04	.0182	3.541E-04	.0220	.2297	389.5000
91	534.6	1.703	.234	3.191E-04	.0198	3.859E-04	.0239	.2243	382.5000
92	534.6	1.541	.218	2.974E-04	.0184	3.596E-04	.0223	.2214	378.7000
93	534.5	1.585	.222	2.767E-04	.0172	3.346E-04	.0208	.2343	374.0000
94	535.6	1.859	.242	3.310E-04	.0205	4.004E-04	.0248	.2274	375.5000
95	534.9	1.606	.228	3.120E-04	.0193	3.773E-04	.0234	.2239	373.3000
96	534.9	1.501	.195	2.668E-04	.0165	3.227E-04	.0200	.2363	368.0000
97	534.7	1.717	.219	2.998E-04	.0186	3.626E-04	.0225	.2286	368.0000
98	534.6	1.671	.234	3.203E-04	.0199	3.873E-04	.0240	.2247	368.0000
100	534.3	1.593	.226	3.082E-04	.0191	3.727E-04	.0231	.2274	360.5000
102	533.8	1.536	.217	2.958E-04	.0183	3.577E-04	.0222	.2081	354.3000
103	533.7	1.765	.232	3.164E-04	.0196	3.825E-04	.0237	.2023	362.7000
105	533.8	1.348	.169	2.301E-04	.0143	2.782E-04	.0173	.2050	378.7000
106	533.4	2.034	.261	3.557E-04	.0221	4.300E-04	.0267	.2050	386.2000

GROUP 22 CENTERLINE TIME 2.50

CH	TC	FIT LENGTH	DTDWT	UNCERTAINTY	CH	TC	FIT LENGTH	DTDWT	UNCERTAINTY
1	1	.60	4.180	.0080	50	53	.60	4.551	.0061
2	2	.60	4.358	.0078	51	54	1.20	1.050	.0271
3	3	.60	4.883	.0108	52	55	.60	5.066	.0182
4	4	.60	4.956	.0079	53	56	2.00	.989	.0106
5	5	.60	5.384	.0193	54	57	1.20	1.012	.0233
6	6	.60	5.632	.0067	55	58	2.00	.858	.0125
7	7	.60	5.497	.0586	56	59	1.20	1.141	.0409
8	8	.60	4.642	.0088	57	60	2.00	.978	.0067
9	9	.60	5.023	.0201	58	61	2.00	.858	.0079
10	10	.60	5.010	.0108	59	62	2.00	.946	.0168
11	11	.60	5.378	.0118	60	63	1.20	1.060	.0309
12	12	.60	4.278	.0163	61	64	2.00	-.002	-9.4695
13	13	.80	2.408	.0093	62	65	2.00	.922	.0085
14	14	.80	2.900	.0111	63	66	1.20	1.038	.0149
15	15	.80	2.773	.0187	64	67	2.00	.795	.0213
16	16	1.20	1.303	.0142	65	68	2.00	.975	.0087
17	17	1.20	1.170	.0378	66	69	1.20	1.386	.0202
18	18	1.20	1.026	.0242	67	70	1.20	1.271	.0135
19	19	2.00	.668	.0174	68	71	1.20	1.268	.1380
20	22	1.20	1.569	.0207	69	72	1.20	1.253	.0429
21	23	1.20	1.630	.0119	70	73	1.20	1.308	.0181
22	24	1.20	1.676	.0110	71	74	1.20	1.387	.0257
23	25	1.20	1.530	.0218	72	75	1.20	1.355	.0187
24	26	1.20	1.797	.0120	73	77	1.20	1.411	.0154
25	27	1.20	1.634	.0145	74	78	1.20	1.306	.0132
26	28	1.20	1.698	.0118	75	79	1.20	1.455	.0162
27	29	1.20	1.759	.0123	76	80	1.20	1.555	.0281
28	30	1.20	1.638	.0123	77	81	1.20	1.248	.0130
29	31	1.20	1.576	.0107	78	83	1.20	1.696	.0094
30	32	1.20	1.560	.0171	79	84	1.20	1.815	.0628
31	33	1.20	1.396	.0096	80	85	1.20	1.618	.0115
32	34	1.20	1.687	.0120	81	87	1.20	1.193	.0164
33	35	1.20	1.455	.0113	82	88	1.20	1.655	.0124
34	36	.80	2.149	.0125	83	89	1.20	1.821	.0143
35	37	.80	2.241	.0126	84	90	1.20	1.573	.0192
36	38	.80	2.922	.0118	85	91	1.20	1.703	.0108
37	39	.80	2.595	.0097	86	92	1.20	1.541	.0124
38	41	1.20	1.213	.0213	87	93	1.20	1.585	.0319
39	42	1.20	1.778	.0122	88	94	1.20	1.859	.0094
40	43	2.00	1.003	.0131	89	95	1.20	1.606	.0141
41	44	1.20	1.446	.0118	90	96	1.20	1.501	.0938
42	45	.80	2.181	.0160	91	97	1.20	1.717	.0211
43	46	.80	2.376	.0162	92	98	1.20	1.671	.0303
44	47	1.20	1.660	.0107	93	100	1.20	1.593	.0105
45	48	.80	2.332	.0106	94	102	1.20	1.536	.0159
46	49	.80	2.311	.0097	95	103	1.20	1.765	.0186
47	50	.80	2.583	.0269	96	105	1.20	1.348	.0222
48	51	.80	3.033	.0122	97	106	.80	2.034	.0187
49	52	.60	4.092	.0114	98	0	-0	0	0
23		.050							

BIT ON LOOP 51

DATE 5/12/75

AEDC(ARO,INC.) ARNOLD AFS, TENNESSEE
VON KARMAN GAS DYNAMICS FACILITY
50 INCH HYPERSONIC TUNNEL B
V41B-87A

GROUP	TEST CONDITION	MODEL	MACH NO	PO,PSIA	TO,DEG R	ALPHA-MODEL	ALPHA-SECTOR	ALPHA-PREBEND	ROLL MODEL	YAW
23	5	140 B	7.94	209.3	1266	20.04	9.96	30.00	179.98	-.0

T-INF (DEG R)	P-INF (PSIA)	Q-INF (PSIA)	V-INF (FT/SEC)	RHO-INF (SLUGS/FT3)	MU-INF (LB-SEC/FT2)	RE/FT (FT-1)	HREF-FR (R= .0400FT)	STFR (R= .0400FT)	SWITCH POSITION
93.0	.023	.993	3752	2.030E-05	7.489E-08	1.017E 06	1.612E-02	2.669E-02	2

TC NO	TW	DT*DT	QDOT	H(TO)	H(TO)/HREF	H(.9TO)	H(.9TO)/HREF	X/L	Z,FULL SCALE(IN)
ACCESS HATCH WINDOW									
107	531.8	1.709	.245	3.334E-04	.0207	4.028E-04	.0250	.2050	396.2000
FUSELAGE VENT PANEL NO. 3 AND 1									
108	533.4	3.711	.393	5.361E-04	.0333	6.481E-04	.0402	.1244	377.5000
109	532.4	3.074	.380	5.180E-04	.0321	6.260E-04	.0388	.1302	377.5000
110	532.1	2.849	.361	4.920E-04	.0305	5.946E-04	.0369	.1360	377.5000
111	532.3	2.781	.335	4.566E-04	.0283	5.518E-04	.0342	.1418	377.5000
112	532.3	2.805	.333	4.538E-04	.0282	5.485E-04	.0340	.1476	377.5000
113	532.2	3.755	.431	5.869E-04	.0364	7.093E-04	.0440	.1215	273.5000
114	532.4	3.038	.365	4.970E-04	.0308	6.007E-04	.0373	.1273	273.5000
115	532.0	2.805	.348	4.739E-04	.0294	5.727E-04	.0355	.1331	273.5000
116	531.9	2.579	.316	4.311E-04	.0267	5.209E-04	.0323	.1389	273.5000
117	532.2	2.747	.316	4.311E-04	.0267	5.209E-04	.0323	.1447	273.5000
118	531.2	2.213	.306	4.164E-04	.0258	5.031E-04	.0312	.1409	366.0000
119	531.5	2.487	.322	4.380E-04	.0272	5.293E-04	.0328	.1442	366.0000
120	531.4	2.668	.333	4.535E-04	.0281	5.480E-04	.0340	.1215	359.5000
121	531.0	2.312	.284	3.858E-04	.0239	4.660E-04	.0289	.1303	359.5000
122	530.8	2.582	.321	4.369E-04	.0271	5.278E-04	.0327	.1337	359.5000
LOWER RCS NOZZLES									
124	534.6	2.949	.264	3.603E-04	.0224	4.358E-04	.0270	.0950	400.0000
125	531.8	2.934	.319	4.351E-04	.0270	5.257E-04	.0326	.0988	400.0000
126	533.5	2.631	.361	4.924E-04	.0306	5.953E-04	.0369	.1027	400.0000
127	534.1	2.739	.369	5.047E-04	.0313	6.103E-04	.0379	.0911	395.0000
128	534.1	2.911	.354	4.832E-04	.0300	5.843E-04	.0363	.0950	395.0000
129	534.1	3.110	.365	4.991E-04	.0310	6.035E-04	.0374	.0988	395.0000
130	535.3	3.145	.377	5.155E-04	.0320	6.235E-04	.0387	.0810	390.0000
131	534.3	2.909	.430	5.879E-04	.0365	7.109E-04	.0441	.0857	390.0000
132	534.2	3.207	.374	5.109E-04	.0317	6.178E-04	.0383	.0963	390.0000
133	534.3	2.789	.339	4.631E-04	.0287	5.600E-04	.0348	.0857	383.8000
134	533.5	2.847	.381	5.207E-04	.0323	6.295E-04	.0391	.0872	377.3000
135	533.8	3.977	.478	6.525E-04	.0405	7.889E-04	.0489	.0903	374.5500
136	533.6	4.118	.458	6.251E-04	.0388	7.557E-04	.0469	.0960	374.5500
137	534.1	3.901	.510	6.975E-04	.0433	8.434E-04	.0523	.0872	370.5500
138	533.7	4.208	.485	6.621E-04	.0411	8.005E-04	.0497	.0928	370.5500
139	534.8	3.811	.487	6.662E-04	.0413	8.057E-04	.0500	.0816	366.0500
140	534.1	3.947	.502	6.865E-04	.0426	8.301E-04	.0515	.0934	362.4000
141	533.1	3.602	.476	6.495E-04	.0403	7.851E-04	.0487	.0973	362.4000
142	532.5	2.905	.316	4.313E-04	.0268	5.212E-04	.0323	.0833	355.2000
143	533.8	4.361	.438	5.964E-04	.0371	7.235E-04	.0449	.0919	355.2000
144	533.2	4.806	.633	8.637E-04	.0536	1.044E-03	.0648	.0949	349.0000

DATE 5/12/75

AEDC(ARO,INC.) ARNOLD AFS, TENNESSEE
VON KARMAN GAS DYNAMICS FACILITY
50 INCH HYPERSONIC TUNNEL B
V41R-87A

GROUP	TEST CONDITION	MODEL	MACH NO	PO,PSIA	TO,DEG R	ALPHA-MODEL	ALPHA-SECTOR	ALPHA-PREBEND	ROLL MODEL	YAW
23	5	140 B	7.94	209.3	1266	20.04	9.96	30.00	179.98	-.0

T-INF (DEG R)	P-INF (PSIA)	Q-INF (PSIA)	V-INF (FT/SEC)	RHO-INF (SLUGS/FT3)	MU-INF (LB-SEC/FT2)	RE/FT (FT-1)	HREF-FR (R= .0400FT)	STFR (R= .0400FT)	SWITCH POSITION
93.0	.023	.993	3752	2.030E-05	7.489E-08	1.017E 06	1.612E-02	2.669E-02	2

IC NC	TW	DTWDT	QDOT	H(TO)	H(TO)/HREF	H(.9TO)	H(.9TO)/HREF
161	535.6	2.386	.283	3.870E-04	.0240	4.681E-04	.0290
162	535.6	2.293	.217	2.975E-04	.0185	3.599E-04	.0223
163	535.1	1.493	.183	2.510E-04	.0156	3.036E-04	.0188
164	534.6	1.158	.151	2.065E-04	.0128	2.498E-04	.0155
165	535.0	.843	.106	1.453E-04	.0090	1.758E-04	.0109
166	534.7	.690	.088	1.210E-04	.0075	1.463E-04	.0091
167	535.3	2.265	.3[illegible]7	4.197E-04	.0260	5.077E-04	.0315
168	535.6	2.489	.261	3.579E-04	.0222	4.330E-04	.0269
169	534.7	1.628	.198	2.705E-04	.0168	3.271E-04	.0203
170	534.4	1.360	.170	2.326E-04	.0144	2.812E-04	.0175
171	534.3	1.396	.168	2.301E-04	.0143	2.782E-04	.0173
172	533.6	1.138	.148	2.027E-04	.0126	2.450E-04	.0152
173	534.4	1.817	.243	3.318E-04	.0206	4.013E-04	.0249
174	533.8	1.469	.167	2.284E-04	.0142	2.761E-04	.0171
175	533.8	1.279	.183	2.503E-04	.0155	3.026E-04	.0188
176	533.6	1.050	.143	1.952E-04	.0121	2.359E-04	.0146
177	537.7	2.754	.379	5.211E-04	.0323	6.308E-04	.0391
178	540.1	5.539	1.092	1.504E-03	.0933	1.822E-03	.1131
179	542.4	8.970	1.887	2.608E-03	.1618	3.161E-03	.1961
180	535.7	1.281	.167	2.289E-04	.0142	2.769E-04	.0172
181	537.1	2.509	.341	4.681E-04	.0290	5.665E-04	.0351
182	538.6	4.888	.698	9.596E-04	.0595	1.162E-03	.0721
183	534.4	.801	.101	1.375E-04	.0085	1.663E-04	.0103
184	534.6	.852	.116	1.593E-04	.0099	1.926E-04	.0120
185	535.7	1.564	.188	2.575E-04	.0160	3.115E-04	.0193
186	537.3	2.768	.348	4.774E-04	.0296	5.778E-04	.0359
187	538.9	5.382	.718	9.878E-04	.0613	1.196E-03	.0742
188	540.5	6.634	1.549	2.135E-03	.1325	2.586E-03	.1605
189	535.8	1.533	.219	2.993E-04	.0186	3.621E-04	.0225
190	537.0	2.954	.425	5.836E-04	.0362	7.062E-04	.0438
191	538.2	5.160	.790	1.065E-03	.0673	1.314E-03	.0815

UPPER RCS NOZZLES

X/L	ZY/B
.0619	-.0160
.0709	-.0160
.0807	-.0160
.0943	-.0160
.0978	-.0160
.1013	-.0160
.0619	-.0320
.0709	-.0320
.0807	-.0320
.0943	-.0320
.0978	-.0320
.1013	-.0320
.0807	-.0480
.0943	-.0480
.0978	-.0480
.1013	-.0480

CANOPY

DATE 5/12/75

AEDC(APO,INC.) ARNOLD AFS, TENNESSEE
VON KARMAN GAS DYNAMICS FACILITY
50 INCH HYPERSONIC TUNNEL B
V41B-B7A

GROUP	TEST CONDITION	MODEL	MACH NO	PO,PSIA	TO,DEG R	ALPHA-MODEL	ALPHA-SECTOR	ALPHA-PREBEND	ROLL MODEL	YAW
23	9	140 B	7.94	209.3	1266	20.04	9.96	30.00	179.98	-.0

T-INF (DEG R)	P-INF (PSIA)	Q-INF (PSIA)	V-INF (FT/SEC)	RHO-INF (SLUGS/FT3)	MU-INF (LB-SEC/FT2)	RE/FT (FT-1)	HREF-FR (R= .0400FT)	STFR (R= .0400FT)	SWITCH POSITION
93.0	.023	.993	3752	2.030E-05	7.489E-08	1.017E 06	1.612E-02	2.669E-02	2

TC NO	TW	DTWDT	QDOT	H(TO)	H(TO)/HREF	H(.9TO)	H(.9TO)/HREF
							CANOPY
192	534.0	.846	.119	1.631E-04	.0101	1.972E-04	.0122
193	539.1	6.130	1.183	1.628E-03	.1010	1.971E-03	.1223
194	534.3	1.431	.185	2.526E-04	.0157	3.054E-04	.0190
195	536.5	3.470	.428	5.871E-04	.0364	7.104E-04	.0441
196	537.5	4.043	.532	7.300E-04	.0453	8.835E-04	.0548
197	532.0	.430	.043	5.799E-05	.0036	7.008E-05	.0043
198	532.6	.478	.055	7.560E-05	.0047	9.138E-05	.0057
199	533.8	.988	.133	1.814E-04	.0113	2.193E-04	.0136
200	534.9	2.380	.339	4.640E-04	.0288	5.612E-04	.0348
201	537.7	5.284	.747	1.026E-03	.0637	1.242E-03	.0771
202	537.9	4.904	.621	8.529E-04	.0529	1.032E-03	.0641
203	532.9	.816	.101	1.381E-04	.0086	1.669E-04	.0104
204	533.7	1.298	.202	2.754E-04	.0171	3.329E-04	.0207
205	536.3	4.307	.672	9.210E-04	.0571	1.114E-03	.0691
206	532.4	.149	.019	2.530E-05	.0016	3.057E-05	.0019
207	536.6	4.176	.560	7.681E-04	.0477	9.294E-04	.0577
208	532.2	.543	.073	9.946E-05	.0062	1.202E-04	.0075
209	532.9	.520	.071	9.752E-05	.0061	1.179E-04	.0073
210	533.8	1.391	.186	2.536E-04	.0157	3.066E-04	.0190
211	530.8	-.154	-.019	-2.548E-05	-.0016	-3.078E-05	-.0019
212	531.9	.447	.060	8.197E-05	.0051	9.905E-05	.0061
213	532.4	.725	.096	1.310E-04	.0081	1.584E-04	.0098
214	533.2	.914	.129	1.748E-04	.0108	2.113E-04	.0131
215	533.9	1.486	.211	2.884E-04	.0179	3.487E-04	.0216
216	535.3	2.982	.424	5.801E-04	.0360	7.016E-04	.0435
217	534.9	2.453	.350	4.762E-04	.0297	5.784E-04	.0359
218	532.4	.712	.098	1.339E-04	.0083	1.618E-04	.0100
219	532.5	1.430	.201	2.741E-04	.0170	3.312E-04	.0206
220	533.5	1.685	.232	3.164E-04	.0196	3.825E-04	.0237

GROUP 23 CENTERLINE TIME 2.50

CH	TC	FIT LENGTH	DTDWT	UNCERTAINTY	CH	TC	FIT LENGTH	DTDWT	UNCERTAINTY
1	107	1.20	1.709	.0089	50	173	1.20	1.817	.0139
2	108	.80	3.711	.0070	51	174	1.20	1.469	.0227
3	109	.80	3.074	.0098	52	175	1.20	1.279	.0182
4	110	.80	2.849	.0114	53	176	1.20	1.050	.0168
5	111	.80	2.781	.0277	54	177	.80	2.754	.0130
6	112	.80	2.805	.0140	55	178	.60	5.539	.0099
7	113	.80	3.755	.0472	56	179	.40	8.970	.0377
8	114	.80	3.038	.0089	57	180	1.20	1.281	.0130
9	115	.80	2.805	.0281	58	181	.80	2.509	.0117
10	116	.80	2.579	.0129	59	182	.60	4.888	.0166
11	117	.80	2.747	.0180	60	183	2.00	.801	.0130
12	118	.80	2.213	.0260	61	184	2.00	.852	.0173
13	119	.80	2.487	.0160	62	185	1.20	1.564	.0124
14	120	.80	2.668	.0139	63	186	.80	2.768	.0128
15	121	.80	2.312	.0288	64	187	.60	5.382	.0123
16	122	.80	2.582	.0143	65	188	.60	6.634	.0080
17	124	.80	2.949	.0210	66	189	1.20	1.533	.0170
18	125	.80	2.934	.0142	67	190	.80	2.954	.0085
19	126	.80	2.631	.0176	68	191	.60	5.160	.0895
20	127	.80	2.739	.0162	69	192	2.00	.846	.0297
21	128	.80	2.911	.0081	70	193	.60	6.130	.0085
22	129	.80	3.110	.0114	71	194	1.20	1.431	.0214
23	130	.80	3.145	.0252	72	195	.80	3.470	.0129
24	131	.80	2.909	.0216	73	196	.60	4.043	.0118
25	132	.80	3.207	.0114	74	197	2.00	.430	.0283
26	133	.80	2.759	.0107	75	198	2.00	.478	.0257
27	134	.80	2.847	.0107	76	199	2.00	.988	.0196
28	135	.60	3.977	.0145	77	200	.80	2.380	.0173
29	136	.60	4.118	.0098	78	201	.60	5.284	.0118
30	137	.80	3.901	.0094	79	202	.60	4.904	.0590
31	138	.60	4.208	.0101	80	203	2.00	.816	.0087
32	139	.80	3.811	.0099	81	204	1.20	1.298	.0109
33	140	.80	3.947	.0068	82	205	.60	4.307	.0112
34	141	.80	3.602	.0060	83	206	2.00	.140	.3369
35	142	.80	2.905	.0105	84	207	.60	4.176	.0168
36	143	.60	4.361	.0155	85	208	2.00	.543	.0182
37	144	.60	4.806	.0113	86	209	2.00	.520	.0185
38	161	.80	2.386	.0217	87	210	1.20	1.391	.0311
39	162	.80	2.293	.0101	88	211	2.00	-.154	-.2678
40	163	1.20	1.493	.0154	89	212	2.00	.447	.0318
41	164	1.20	1.158	.0123	90	213	2.00	.725	.0808
42	165	2.00	.843	.0134	91	214	2.00	.914	.0152
43	166	2.00	.690	.0171	92	215	1.20	1.486	.0280
44	167	.80	2.265	.0135	93	216	.80	2.982	.0097
45	168	.80	2.489	.0157	94	217	.80	2.453	.0177
46	169	1.20	1.628	.0130	95	218	2.00	.712	.0269
47	170	1.20	1.360	.0421	96	219	1.20	1.430	.0283
48	171	1.20	1.396	.0126	97	220	1.20	1.685	.0113
49	172	1.20	1.138	.0208	98	0	-0	0	0
	24	.050							

BIT ON LOOP 51

DATE 5/12/75

AEDC(ARO,INC.) ARNOLD AFS, TENNESSEE
VON KARMAN GAS DYNAMICS FACILITY
50 INCH HYPERSONIC TUNNEL B
V41A-B7A

GROUP	TEST CONDITION	MODEL	MACH NO	PO,PSIA	TO,DEG R	ALPHA-MODEL	ALPHA-SECTOR	ALPHA-PREBEND	ROLL MODEL	YAW
24	9	140 B	7.94	210.5	1269	20.06	9.94	30.00	179.98	-.0

T-INF (DEG R)	P-INF (PSIA)	Q-INF (PSIA)	V-INF (FT/SEC)	RHO-INF (SLUGS/FT3)	MU-INF (LB-SEC/FT2)	RE/FT (FT-1)	HREF-FR (R= .0400FT)	STFR (R= .0400FT)	SWITCH POSITION
93.2	.023	.999	3757	2.037E-05	7.507E-08	1.020E 06	1.617E-02	2.665E-02	3

TC NO	TW	DIWDT	QDOT	H(TO)	H(TO)/HREF	H(.9TO)	H(.9TO)/HREF		
								CANOPY	
221	529.2	.412	.050	6.733E-05	.0042	8.127E-05	.0050		
222	528.6	.685	.084	1.137E-04	.0070	1.372E-04	.0085		
223	526.3	2.351	.318	4.262E-04	.0265	5.164E-04	.0319		
								ESCAPE HATCH AND WINDOW	
								X/L	2Y/B
224	530.8	3.407	.339	4.590E-04	.0284	5.543E-04	.0343	.1933	.0162
225	529.8	2.599	.310	4.200E-04	.0260	5.071E-04	.0314	.1972	.0162
226	530.5	5.178	.545	7.379E-04	.0456	8.910E-04	.0551	.1933	.0384
227	528.7	3.241	.473	6.397E-04	.0396	7.721E-04	.0477	.1972	.0384
228	528.9	4.630	.594	8.027E-04	.0496	9.689E-04	.0599	.1933	.0653
229	529.1	3.776	.484	6.549E-04	.0405	7.905E-04	.0489	.1972	.0653
232	530.3	.220	.030	4.023E-05	.0025	4.858E-05	.0030	.2567	.0235
233	530.9	.248	.038	5.102E-05	.0032	6.161E-05	.0038	.2606	.0235
236	529.4	.194	.028	3.837E-05	.0024	4.632E-05	.0029	.2567	.0491
237	530.0	.304	.043	5.769E-05	.0036	6.965E-05	.0043	.2606	.0491
								CARGO BAY HINGE NO. 1	
								X/L	Z,FULL SCALE(IN)
238	533.0	.873	.117	1.588E-04	.0098	1.919E-04	.0119	.2879	420.0000
239	533.0	.799	.107	1.454E-04	.0090	1.757E-04	.0109	.2917	420.0000
240	532.8	.823	.118	1.597E-04	.0099	1.930E-04	.0119	.2840	415.0000
241	532.9	.755	.106	1.443E-04	.0089	1.743E-04	.0108	.2879	415.0000
242	530.8	.727	.104	1.406E-04	.0087	1.698E-04	.0105	.2917	415.0000
243	531.6	.861	.105	1.428E-04	.0088	1.725E-04	.0107	.2801	405.0000
244	531.6	.736	.086	1.167E-04	.0072	1.409E-04	.0087	.2840	405.0000
								CARGO BAY HINGE NO. 2	
								X/L	Z,FULL SCALE(IN)
245	533.2	.687	.098	1.333E-04	.0082	1.611E-04	.0100	.3192	420.0000
246	533.2	.694	.099	1.349E-04	.0083	1.630E-04	.0101	.3439	420.0000
247	532.9	.562	.083	1.126E-04	.0070	1.360E-04	.0084	.3362	415.0000
248	533.2	.689	.101	1.379E-04	.0085	1.666E-04	.0103	.3401	415.0000
249	533.1	.653	.096	1.308E-04	.0081	1.580E-04	.0098	.3439	415.0000
250	532.5	.857	.107	1.460E-04	.0090	1.764E-04	.0109	.3323	405.0000
251	532.4	.883	.108	1.471E-04	.0091	1.777E-04	.0110	.3362	405.0000
								CARGO BAY HINGE NO. 3	
								X/L	Z,FULL SCALE(IN)
252	532.4	.819	.119	1.613E-04	.0100	1.948E-04	.0120	.3923	420.0000
253	532.4	.795	.115	1.565E-04	.0097	1.891E-04	.0117	.3961	420.0000
254	532.2	.673	.102	1.366E-04	.0086	1.674E-04	.0104	.3884	415.0000
257	531.0	.620	.084	1.132E-04	.0070	1.367E-04	.0085	.3845	405.0000
258	530.8	.624	.085	1.151E-04	.0071	1.389E-04	.0086	.3884	405.0000

DATE 5/12/75

AEDC(ARO,INC.) ARNOLD AFS, TENNESSEE
VON KARMAN GAS DYNAMICS FACILITY
50 INCH HYPERSONIC TUNNEL B
V41B-B7A

GROUP	TEST CONDITION	MODEL	MACH NO	PO,PSIA	TO,DEG R	ALPHA-MODEL	ALPHA-SECTOR	ALPHA-PREBEND	ROLL MODEL	YAW
24	5	140 B	7.94	210.5	1269	20.06	9.94	30.00	179.98	-.0

T-INF (DEG R)	P-INF (PSIA)	Q-INF (PSIA)	V-INF (FT/SEC)	RHO-INF (SLUGS/FT3)	MU-INF (LB-SEC/FT2)	RE/FT (FT-1)	HREF-FR (H= .0400FT)	STFR (R= .0400FT)	SWITCH POSITION
93.2	.023	.999	3757	2.037E-05	7.507E-08	1.020E 06	1.617E-02	2.665E-02	3

TC NO	TW	DIWDT	QDOT	H(TO)	H(TO)/HREF	H(.9TO)	H(.9TO)/HREF	TOP CENTERLINE X/L
367	573.6	61.618	7.383	1.062E-02	.6568	1.299E-02	.8035	0
368	558.8	46.460	5.967	8.404E-03	.5198	1.023E-02	.6328	.0008
369	551.1	30.905	3.647	5.082E-03	.3143	6.173E-03	.3818	.0019
370	545.4	22.253	2.729	3.772E-03	.2333	4.574E-03	.2829	.0037
371	544.1	18.921	1.860	2.566E-03	.1587	3.111E-03	.1924	.0058
372	540.9	13.044	1.684	2.313E-03	.1430	2.801E-03	.1732	.0087
373	539.0	9.084	1.192	1.633E-03	.1010	1.977E-03	.1222	.0118
374	538.4	7.356	.965	1.321E-03	.0817	1.598E-03	.0988	.0151
375	536.7	5.726	.784	1.070E-03	.0662	1.295E-03	.0801	.0182
376	536.7	5.074	.669	9.143E-04	.0565	1.106E-03	.0684	.0215
377	536.7	4.814	.620	8.459E-04	.0524	1.024E-03	.0634	.0246
378	535.3	4.034	.470	6.414E-04	.0397	7.756E-04	.0480	.0278
379	533.9	2.699	.331	4.510E-04	.0279	5.451E-04	.0337	.0609
380	532.7	2.230	.229	3.109E-04	.0192	3.756E-04	.0232	.0646
381	532.4	1.990	.258	3.498E-04	.0216	4.226E-04	.0261	.0684
382	531.5	1.583	.217	2.866E-04	.0174	3.390E-04	.0210	.0721
383	531.1	1.468	.196	2.663E-04	.0165	3.216E-04	.0199	.0760
384	530.7	1.283	.179	2.419E-04	.0150	2.921E-04	.0181	.0796
385	530.5	1.166	.150	2.027E-04	.0125	2.448E-04	.0151	.0789
386	530.5	1.216	.144	1.947E-04	.0120	2.351E-04	.0145	.0982
387	530.8	1.089	.134	1.810E-04	.0112	2.185E-04	.0135	.1019
388	531.1	.842	.080	1.084E-04	.0067	1.310E-04	.0081	.1160
389	530.5	.649	.094	1.273E-04	.0079	1.537E-04	.0095	.1195
390	530.1	.525	.083	1.118E-04	.0069	1.349E-04	.0083	.1231
391	529.6	.388	.062	8.339E-05	.0052	1.007E-04	.0062	.1268
392	529.5	.366	.063	8.465E-05	.0052	1.022E-04	.0063	.1305
393	529.3	.355	.060	8.103E-05	.0050	9.781E-05	.0060	.1338
394	529.2	.375	.063	8.499E-05	.0053	1.026E-04	.0063	.1376
395	529.1	.420	.063	8.482E-05	.0052	1.024E-04	.0063	.1411
396	529.2	.452	.067	9.045E-05	.0056	1.092E-04	.0068	.1448
397	529.3	.573	.085	1.145E-04	.0071	1.382E-04	.0086	.1483
398	530.0	.596	.084	1.132E-04	.0070	1.367E-04	.0085	.1519
399	530.3	1.129	.151	2.038E-04	.0126	2.461E-04	.0152	.1556

DATE 5/12/75

AEDC(ARO,INC.) ARNOLD AFS, TENNESSEE
VON KARMAN GAS DYNAMICS FACILITY
50 INCH HYPERSONIC TUNNEL B
V41R-B7A

GROUP	TEST CONDITION	MODEL	MACH NO	PO,PSIA	TO,DEG R	ALPHA-MODEL	ALPHA-SECTOR	ALPHA-PREBEND	ROLL MODEL	YAW
24	5	140 H	7.94	210.5	1269	20.06	9.94	30.00	179.98	-.0

T-INF (DEG R)	P-INF (PSIA)	Q-INF (PSIA)	V-INF (FT/SEC)	RHO-INF (SLUGS/FT3)	MU-INF (LB-SEC/FT2)	RE/FT (FT-1)	HREF-FR (R= .0400FT)	STFR (R= .0400FT)	SWITCH POSITION
93.2	.023	.999	3757	2.037E-05	7.507E-08	1.020E 06	1.617E-02	2.665E-02	3

TC NO	TW	DTWDT	QDOT	H(TO)	H(TO)/HREF	H(.9TO)	H(.9TO)/HREF	X/L	2Y/B
								TOP CENTERLINE	
400	533.8	1.608	.217	2.934E-04	.0181	3.543E-04	.0219	.1582	
401	531.1	1.895	.246	3.328E-04	.0206	4.019E-04	.0249	.1608	
402	531.5	3.448	.429	5.820E-04	.0360	7.029E-04	.0435	.1635	
403	532.4	3.480	.422	5.735E-04	.0355	6.928E-04	.0428	.1664	
404	533.2	4.346	.526	7.148E-04	.0442	8.637E-04	.0534	.1691	
405	534.4	5.311	.643	8.754E-04	.0541	1.058E-03	.0654	.1720	
406	533.7	5.230	.633	8.609E-04	.0532	1.040E-03	.0643	.1748	
407	534.1	5.117	.661	8.990E-04	.0556	1.087E-03	.0672	.1769	
408	534.1	5.426	.795	1.082E-03	.0669	1.308E-03	.0809	.1800	
409	533.0	4.706	.676	9.191E-04	.0568	1.111E-03	.0687	.1831	
410	533.4	3.047	.438	5.956E-04	.0368	7.198E-04	.0445	.1863	
411	532.0	3.114	.467	6.336E-04	.0392	7.654E-04	.0473	.1894	
412	531.7	2.583	.350	4.752E-04	.0294	5.740E-04	.0355	.1931	
413	53 .0	1.677	.224	3.039E-04	.0188	3.671E-04	.0227	.1972	
414	531.2	1.051	.141	1.907E-04	.0118	2.303E-04	.0142	.2049	
415	530.6	.486	.048	6.482E-05	.0040	7.827E-05	.0048	.2250	
416	531.4	.264	.031	4.199E-05	.0026	5.059E-05	.0031	.2500	
								NOSE TC (Z = 338)	
								X/L	2Y/B
145	561.1	40.005	5.433	7.677E-03	.4748	9.353E-03	.5785	.0008	.5039
146	561.1	41.739	5.669	8.011E-03	.4954	9.761E-03	.6037	.0023	.5082
147	553.6	33.041	4.488	6.239E-03	.3858	7.582E-03	.4689	.0043	.5135
148	550.5	24.976	3.487	4.854E-03	.3002	5.895E-03	.3646	.0068	.5205
149	545.6	18.983	2.746	3.796E-03	.2348	4.604E-03	.2847	.0095	.5279
150	544.6	17.193	2.463	3.400E-03	.2103	4.123E-03	.2550	.0122	.5354
151	542.4	11.841	1.662	2.288E-03	.1415	2.773E-03	.1715	.0218	.5621
152	541.6	12.095	1.638	2.252E-03	.1393	2.728E-03	.1687	.0251	.5712
153	541.0	11.522	1.405	1.930E-03	.1194	2.337E-03	.1446	.0286	.5808
154	540.6	10.957	1.360	1.868E-03	.1155	2.262E-03	.1399	.0319	.5898
155	539.1	10.105	1.267	1.736E-03	.1074	2.102E-03	.1300	.0354	.5995
156	538.2	9.622	1.193	1.632E-03	.1010	1.976E-03	.1222	.0387	.6085
157	537.9	9.614	1.179	1.613E-03	.0997	1.951E-03	.1207	.0420	.6176
158	538.1	8.707	1.068	1.461E-03	.0904	1.768E-03	.1094	.0462	.6294
159	536.8	9.514	1.064	1.453E-03	.0899	1.758E-03	.1087	.0503	.6406

GROUP 24 CENTERLINE TIME 2.50

CH	TC	FIT LENGTH	DTDWT	UNCERTAINTY	CH	TC	FIT LENGTH	DTDWT	UNCERTAINTY
1	221	2.00	.412	.0208	50	384	1.20	1.283	.0256
2	222	2.00	.685	.0185	51	385	1.20	1.166	.0224
3	223	.80	2.351	.0182	52	386	1.20	1.216	.0251
4	224	.80	3.407	.0127	53	387	1.20	1.089	.0142
5	225	.80	2.599	.0241	54	388	2.00	.842	.0135
6	226	.60	5.178	.0114	55	389	2.00	.649	.0136
7	227	.80	3.241	.0581	56	390	2.00	.525	.0750
8	228	.60	4.630	.0094	57	391	2.00	.388	.0249
9	229	.80	3.776	.0221	58	392	2.00	.366	.0228
10	232	2.00	.220	.0390	59	393	2.00	.355	.0456
11	233	2.00	.248	.0476	60	394	2.00	.375	.0203
12	236	2.00	.194	.0835	61	395	2.00	.420	.0347
13	237	2.00	.304	.0353	62	396	2.00	.452	.0175
14	238	2.00	.873	.0146	63	397	2.00	.573	.0167
15	239	2.00	.749	.0224	64	398	2.00	.596	.0229
16	240	2.00	.823	.0121	65	399	1.20	1.129	.0218
17	241	2.00	.755	.0245	66	400	1.20	1.608	.0187
18	242	2.00	.727	.0218	67	401	1.20	1.898	.0102
19	243	2.00	.861	.0129	68	402	.80	3.448	.0894
20	244	2.00	.736	.0164	69	403	.80	3.480	.0230
21	245	2.00	.687	.0127	70	404	.60	4.346	.0141
22	246	2.00	.694	.0114	71	405	.60	5.311	.0169
23	247	2.00	.562	.0359	72	406	.60	5.230	.0067
24	248	2.00	.689	.0199	73	407	.60	5.117	.0094
25	249	2.00	.653	.0204	74	408	.60	5.426	.0088
26	250	2.00	.857	.0127	75	409	.60	4.706	.0092
27	251	2.00	.883	.0103	76	410	.80	3.047	.0219
28	252	2.00	.819	.0113	77	411	.80	3.114	.0126
29	253	2.00	.795	.0096	78	412	.80	2.583	.0158
30	254	2.00	.673	.0145	79	413	1.20	1.677	.0667
31	257	2.00	.620	.0150	80	414	2.00	1.051	.0092
32	258	2.00	.624	.0126	81	415	2.00	.486	.0223
33	367	.20	61.618	.0017	82	416	2.00	.264	.0290
34	368	.20	46.460	.0064	83	145	.20	40.005	.0075
35	369	.30	30.905	.0051	84	146	.20	41.739	.0070
36	370	.30	22.253	.0046	85	147	.20	33.041	.0248
37	371	.30	18.921	.0037	86	148	.30	24.976	.0034
38	372	.40	13.044	.0089	87	149	.30	18.983	.0152
39	373	.40	9.084	.0102	88	150	.30	17.193	.0077
40	374	.60	7.356	.0097	89	151	.40	11.841	.0108
41	375	.60	5.726	.0061	90	152	.40	12.095	.0676
42	376	.60	5.074	.0088	91	153	.40	11.522	.0089
43	377	.60	4.814	.0127	92	154	.40	10.957	.0164
44	378	.60	4.034	.0164	93	155	.40	10.105	.0109
45	379	.80	2.699	.0141	94	156	.40	9.622	.0176
46	380	.80	2.230	.0119	95	157	.40	9.614	.0106
47	381	1.20	1.990	.0231	96	158	.40	8.707	.0114
48	382	1.20	1.583	.0122	97	159	.40	9.514	.0077
49	383	1.20	1.468	.0114	98	0	-0	0	0

25 .050

811 CN LOOP 52

DATE 5/12/75

AEDC(ARO,INC.) ARNOLD AFS, TENNESSEE
VON KARMAN GAS DYNAMICS FACILITY
50 INCH HYPERSONIC TUNNEL B
V418-B7A

GROUP	TEST CONDITION	MODEL	MACH NO	PO,PSIA	TO,DEG R	ALPHA-MODEL	ALPHA-SECTOR	ALPHA-PREBEND	ROLL MODEL	YAW
25	10	140 B	7.94	210.8	1270	20.05	10.15	30.00	191.38	2.0

T-INF (DEG R)	P-INF (PSIA)	Q-INF (PSIA)	V-INF (FT/SEC)	RHO-INF (SLUGS/FT3)	MU-INF (LB-SEC/FT2)	RE/FT (FT-1)	HREF-FR (R= .0400FT)	STFR (R= .0400FT)	SWITCH POSITION
93.3	.023	1.001	3759	2.038E-05	7.515E-08	1.019E 06	1.618E-02	2.664E-02	1

TC NO	TW	DTWDT	QDOT	H(TO)	H(TO)/HREF	H(.9TO)	H(.9TO)/HREF	X/L	Z,FULL SCALE(IN)
								FUSELAGE VENT NO. 1	
1	534.6	3.194	.421	5.722E-04	.0354	6.916E-04	.0427	.4434	376.6300
2	534.4	3.308	.445	6.044E-04	.0373	7.306E-04	.0451	.4264	371.6300
3	534.3	3.462	.475	6.451E-04	.0399	7.796E-04	.0482	.4303	371.6300
4	534.5	3.576	.496	6.660E-04	.0408	7.978E-04	.0493	.4342	371.6300
5	534.8	3.797	.506	6.874E-04	.0425	8.309E-04	.0513	.4380	371.6300
6	534.9	4.023	.532	7.235E-04	.0447	8.746E-04	.0540	.4434	369.1300
7	534.3	4.111	.549	8.133E-04	.0503	9.829E-04	.0607	.4226	366.6300
8	534.3	3.485	.525	7.128E-04	.0440	8.615E-04	.0532	.4264	366.6300
9	535.4	3.908	.568	7.725E-04	.0477	9.339E-04	.0577	.4303	366.6300
10	534.9	4.445	.634	8.617E-04	.0532	1.042E-03	.0644	.4342	366.6300
11	535.8	4.858	.656	8.929E-04	.0552	1.080E-03	.0667	.4380	366.6300
12	536.6	5.523	.761	1.037E-03	.0641	1.254E-03	.0775	.4496	366.6300
13	536.2	6.113	.896	1.221E-03	.0755	1.477E-03	.0913	.4187	357.1300
14	537.1	6.160	.840	1.146E-03	.0708	1.387E-03	.0857	.4396	361.6300
15	537.4	6.911	.921	1.257E-03	.0777	1.521E-03	.0940	.4434	361.6300
16	535.0	4.543	.613	8.338E-04	.0515	1.008E-03	.0623	.4396	355.6300
17	534.5	3.574	.482	6.554E-04	.0405	7.922E-04	.0489	.4434	355.6300
18	530.8	2.605	.362	4.900E-04	.0303	5.917E-04	.0366	.4396	351.6300
19	532.5	1.881	.262	3.550E-04	.0219	4.289E-04	.0265	.4291	332.6300
								CARGO BAY VENT NO. 1	
22	532.8	1.178	.163	2.210E-04	.0137	2.670E-04	.0165	.3974	397.6300
23	533.3	1.759	.245	3.325E-04	.0205	4.017E-04	.0248	.4013	397.6300
24	533.5	1.820	.245	3.331E-04	.0206	4.025E-04	.0249	.4052	397.6300
25	533.6	1.645	.216	2.931E-04	.0181	3.542E-04	.0219	.4090	397.6300
26	533.5	1.816	.238	3.224E-04	.0199	3.896E-04	.0241	.4129	397.6300
27	533.5	1.947	.270	3.670E-04	.0227	4.434E-04	.0274	.3936	392.6300
28	532.4	1.908	.273	3.705E-04	.0229	4.475E-04	.0277	.3974	392.6300
29	532.3	1.850	.266	3.603E-04	.0223	4.352E-04	.0269	.4013	392.6300
30	532.6	1.810	.259	3.516E-04	.0217	4.247E-04	.0262	.4052	392.6300
31	533.0	1.980	.276	3.741E-04	.0231	4.519E-04	.0279	.4090	392.6300
32	532.7	2.092	.276	3.748E-04	.0232	4.528E-04	.0280	.4129	392.6300
33	532.2	1.394	.199	2.696E-04	.0167	3.256E-04	.0201	.4090	386.1300
34	533.2	1.759	.237	3.217E-04	.0199	3.887E-04	.0240	.4129	387.6300
35	533.1	2.086	.294	3.991E-04	.0247	4.822E-04	.0298	.3897	383.1300
36	532.8	1.784	.258	3.499E-04	.0216	4.227E-04	.0261	.4090	378.6300
37	532.9	1.810	.254	3.440E-04	.0213	4.157E-04	.0257	.4129	382.1300
38	533.3	2.396	.333	4.514E-04	.0279	5.454E-04	.0337	.4129	377.1300
39	532.6	2.037	.296	4.018E-04	.0248	4.854E-04	.0300	.4001	373.6300
								PROTUBERANCES	
41	532.0	1.119	.149	2.021E-04	.0125	2.441E-04	.0151	.3546	379.0500
42	532.1	1.203	.164	2.217E-04	.0137	2.678E-04	.0165	.3604	379.0500
43	530.9	.916	.118	1.602E-04	.0099	1.934E-04	.0119	.3450	374.0500

DATE 5/12/75

AEDC(ARO,INC.) ARNOLD AFS, TENNESSEE
VON KARMAN GAS DYNAMICS FACILITY
50 INCH HYPERSONIC TUNNEL B
V41B-B7A

GROUP	TEST CONDITION	MODEL	MACH NO	PO,PSIA	TO,DEG R	ALPHA-MODEL	ALPHA-SECTOR	ALPHA-PREBEND	ROLL MODEL	YAW
25	10	140 B	7.94	210.8	1270	20.05	10.15	30.00	191.38	2.0

T-INF (DEG R)	P-INF (PSIA)	Q-INF (PSIA)	V-INF (FT/SEC)	RHO-INF (SLUGS/FT3)	MU-INF (LB-SEC/FT2)	RE/FT (FT-1)	HREF-FR (R= .0400FT)	STFR (R= .0400FT)	SWITCH POSITION
93.3	.023	1.001	3759	2.038E-05	7.515E-08	1.019E 06	1.618E-02	2.664E-02	1

TC NO	TW	DTWDT	QDOT	H(TO)	H(TO)/HREF	H(.9TO)	H(.9TO)/HREF
44	531.3	1.383	.187	2.537E-04	.0157	3.064E-04	.0189
45	533.2	2.781	.384	5.205E-04	.0322	6.289E-04	.0389
46	533.9	3.165	.441	5.990E-04	.0370	7.238E-04	.0447
47	529.9	1.324	.175	2.367E-04	.0146	2.858E-04	.0177
48	531.9	2.730	.373	5.048E-04	.0312	6.098E-04	.0377
49	529.4	2.255	.318	4.164E-04	.0257	5.026E-04	.0311
50	531.5	2.603	.360	4.872E-04	.0301	5.884E-04	.0364
51	531.0	2.422	.327	4.428E-04	.0274	5.346E-04	.0330
52	529.6	3.301	.452	6.097E-04	.0377	7.359E-04	.0455
53	529.5	3.435	.499	6.736E-04	.0416	8.130E-04	.0502
54	529.8	1.204	.171	2.311E-04	.0143	2.789E-04	.0172
55	530.5	3.402	.484	6.540E-04	.0404	7.895E-04	.0488
56	529.3	1.113	.143	1.927E-04	.0119	2.325E-04	.0144
57	529.1	1.165	.142	1.911E-04	.0118	2.306E-04	.0142
58	528.0	1.127	.148	1.994E-04	.0123	2.405E-04	.0149
59	526.9	1.090	.143	1.919E-04	.0119	2.314E-04	.0143
60	526.4	.969	.134	1.862E-04	.0111	2.173E-04	.0134
61	527.0	1.173	.148	1.988E-04	.0123	2.398E-04	.0148
62	527.9	1.146	.140	1.884E-04	.0116	2.273E-04	.0140
63	529.0	1.167	.152	2.048E-04	.0127	2.471E-04	.0153
64	530.2	~~.027~~	~~.003~~	~~7.604E-06~~	~~.0003~~	~~5.389E-06~~	~~.0003~~
65	531.1	1.017	.138	1.866E-04	.0115	2.253E-04	.0139
66	530.7	1.136	.143	1.932E-04	.0119	2.333E-04	.0144
67	529.5	1.295	.181	2.446E-04	.0151	2.952E-04	.0182
68	529.0	1.065	.134	1.811E-04	.0112	2.186E-04	.0135

PROTUBERANCES

X/L	Z,FULL SCALE(IN)
.3508	374.0500
.3566	374.0500
.3604	374.0500
.3392	366.5500
.3566	366.5500
.3392	360.7000
.3566	360.7000
.3604	360.7000
.3392	353.2000
.3450	353.2000
.3508	353.2000
.3566	353.2000

SUBLIMATOR VENT NO. 1

X/L	Z,FULL SCALE(IN)
.3031	371.1300
.3074	369.1300
.3089	363.6300
.3074	358.1300
.3031	356.1300
.2988	358.1300
.2973	363.6300
.2988	369.1300
.3031	376.1300
.3089	378.6300
.3101	372.6300
.3157	370.3800
.3128	363.6300

DATE 5/12/75

AEDC(ARO,INC.) ARNOLD AFS, TENNESSEE
VON KARMAN GAS DYNAMICS FACILITY
50 INCH HYPERSONIC TUNNEL H
V41H-87A

GROUP	TEST CONDITION	MODEL	MACH NO	PO,PSIA	TO,DEG R	ALPHA-MODEL	ALPHA-SECTOR	ALPHA-PREBEND	ROLL MODEL	YAW
25	10	140 H	7.94	210.8	1270	20.05	10.15	30.00	191.38	2.0

T-INF (DEG R)	P-INF (PSIA)	Q-INF (PSIA)	V-INF (FT/SEC)	RHO-INF (SLUGS/FT3)	MU-INF (LB-SEC/FT2)	RE/FT (FT-1)	HREF-FR (R= .0400FT)	STFR (R= .0400FT)	SWITCH POSITION
93.3	.023	1.001	3759	2.038E-05	7.515E-08	1.019E 06	1.618E-02	2.664E-02	1

TC NO	TW	DTWDT	QDOT	H(TO)	H(TO)/HREF	H(.9TO)	H(.9TO)/HREF	X/L	Z,FULL SCALE(IN)
								FUSELAGE VENT PANEL NO. 7	
69	527.8	1.611	.224	3.013E-04	.0186	3.635E-04	.0225	.2487	356.4000
70	528.0	1.507	.194	2.478E-04	.0153	2.989E-04	.0185	.2591	356.4000
71	526.1	1.903	.257	3.458E-04	.0214	4.170E-04	.0258	.2419	351.4000
72	526.8	1.636	.231	3.104E-04	.0192	3.744E-04	.0231	.2487	351.4000
73	526.9	1.580	.204	2.743E-04	.0169	3.308E-04	.0204	.2552	351.4000
74	527.0	1.598	.193	2.593E-04	.0160	3.128E-04	.0193	.2610	351.4000
75	524.8	1.848	.250	3.350E-04	.0207	4.039E-04	.0250	.2419	342.8000
77	525.1	1.425	.201	2.695E-04	.0167	3.249E-04	.0201	.2552	342.8000
78	525.9	1.550	.212	2.844E-04	.0176	3.429E-04	.0212	.2610	342.8000
79	523.9	2.074	.264	3.531E-04	.0218	4.256E-04	.0263	.2419	334.2000
80	522.2	2.228	.302	4.032E-04	.0249	4.857E-04	.0300	.2487	334.2000
81	523.1	1.532	.212	2.842E-04	.0176	3.425E-04	.0212	.2552	334.2000
								ACCESS HATCH WINDOW	
								X/L	Z,FULL SCALE(IN)
83	531.7	1.989	.265	3.592E-04	.0222	4.338E-04	.0268	.2131	398.0000
84	530.7	2.940	.387	5.230E-04	.0323	6.314E-04	.0390	.2131	388.0000
85	529.3	2.019	.274	3.704E-04	.0229	4.470E-04	.0276	.2131	383.0000
87	539.8	1.365	.195	2.634E-04	.0163	3.180E-04	.0197	.2222	395.8000
88	536.2	2.117	.295	3.991E-04	.0247	4.818E-04	.0298	.2193	386.5000
89	529.6	1.925	.282	3.811E-04	.0235	4.599E-04	.0284	.2177	381.8000
90	531.2	1.834	.249	3.376E-04	.0209	4.077E-04	.0252	.2297	389.5000
91	530.0	2.096	.287	3.873E-04	.0239	4.676E-04	.0289	.2243	382.5000
92	530.0	1.834	.258	3.490E-04	.0216	4.213E-04	.0260	.2214	378.7000
93	530.0	1.777	.227	3.064E-04	.0189	3.699E-04	.0229	.2343	374.0000
94	530.5	2.019	.262	3.541E-04	.0219	4.275E-04	.0264	.2274	375.5000
95	529.6	1.969	.279	3.768E-04	.0233	4.548E-04	.0281	.2239	373.3000
96	529.4	1.535	.199	2.657E-04	.0166	3.243E-04	.0200	.2363	368.0000
97	528.4	2.089	.266	3.587E-04	.0222	4.329E-04	.0267	.2286	368.0000
98	528.4	1.980	.277	3.733E-04	.0231	4.505E-04	.0278	.2247	368.0000
100	526.2	2.044	.288	3.873E-04	.0239	4.671E-04	.0289	.2274	360.5000
102	526.1	1.957	.275	3.696E-04	.0228	4.457E-04	.0275	.2081	354.3000
103	527.2	2.297	.301	4.046E-04	.0250	4.880E-04	.0302	.2023	362.7000
105	529.5	2.475	.309	4.169E-04	.0258	5.032E-04	.0311	.2050	378.7000
106	529.9	2.509	.321	4.335E-04	.0268	5.233E-04	.0323	.2050	386.2000

GROUP 25 CENTERLINE TIME 2.55

CH	TC	FIT LENGTH	DTDWT	UNCERTAINTY	CH	TC	FIT LENGTH	DTDWT	UNCERTAINTY
1	1	.80	3.194	.0090	50	53	.80	3.435	.0108
2	2	.80	3.308	.0097	51	54	1.20	1.204	.0228
3	3	.80	3.462	.0064	52	55	.80	3.402	.0156
4	4	.80	3.576	.0060	53	56	1.20	1.113	.0157
5	5	.80	3.797	.0187	54	57	1.20	1.165	.0201
6	6	.60	4.023	.0150	55	58	1.20	1.127	.0222
7	7	.80	4.111	.0665	56	59	1.20	1.090	.0787
8	8	.80	3.485	.0099	57	60	2.00	.969	.0088
9	9	.80	3.908	.0158	58	61	1.20	1.173	.0141
10	10	.60	4.445	.0122	59	62	1.20	1.146	.0271
11	11	.60	4.858	.0087	60	63	1.20	1.167	.0130
12	12	.60	5.523	.0088	61	64	2.00	-.027	-.6827
13	13	.60	6.113	.0074	62	65	1.20	1.017	.0145
14	14	.60	6.160	.0122	63	66	1.20	1.136	.0213
15	15	.60	6.911	.0142	64	67	1.20	1.295	.0157
16	16	.60	4.543	.0126	65	68	1.20	1.065	.0244
17	17	.80	3.574	.0217	66	69	1.20	1.611	.0196
18	18	.80	2.605	.0175	67	70	1.20	1.507	.0131
19	19	1.20	1.881	.0107	68	71	1.20	1.903	.0968
20	22	1.20	1.178	.0200	69	72	1.20	1.636	.0265
21	23	1.20	1.759	.0094	70	73	1.20	1.580	.0168
22	24	1.20	1.820	.0093	71	74	1.20	1.598	.0250
23	25	1.20	1.645	.0274	72	75	1.20	1.848	.0181
24	26	1.20	1.816	.0183	73	77	1.20	1.425	.0177
25	27	1.20	1.947	.0145	74	78	1.20	1.550	.0153
26	28	1.20	1.908	.0540	75	79	.80	2.074	.0201
27	29	1.20	1.850	.0116	76	80	.80	2.228	.0228
28	30	1.20	1.810	.0097	77	81	1.20	1.532	.0110
29	31	1.20	1.980	.0077	78	83	1.20	1.989	.0107
30	32	.80	2.092	.0205	79	84	.80	2.940	.0761
31	33	1.20	1.398	.0154	80	85	.80	2.019	.0153
32	34	1.20	1.759	.0101	81	87	1.20	1.365	.0142
33	35	.80	2.086	.0131	82	88	.80	2.117	.0085
34	36	1.20	1.784	.0097	83	89	1.20	1.925	.0108
35	37	1.20	1.810	.0101	84	90	1.20	1.834	.0118
36	38	.80	2.396	.0111	85	91	.80	2.096	.0178
37	39	.80	2.037	.0135	86	92	1.20	1.834	.0114
38	41	2.00	1.119	.0137	87	93	1.20	1.777	.0317
39	42	1.20	1.203	.0260	88	94	1.20	2.019	.0118
40	43	2.00	.916	.0168	89	95	1.20	1.969	.0096
41	44	1.20	1.383	.0145	90	96	1.20	1.535	.0705
42	45	.80	2.781	.0177	91	97	.80	2.089	.0291
43	46	.80	3.165	.0199	92	98	1.20	1.980	.0280
44	47	1.20	1.324	.0199	93	100	.80	2.044	.0159
45	48	.80	2.730	.0147	94	102	1.20	1.957	.0142
46	49	.80	2.255	.0178	95	103	.80	2.297	.0176
47	50	.80	2.603	.0322	96	105	.80	2.475	.0148
48	51	.80	2.422	.0148	97	106	.80	2.509	.0146
49	52	.80	3.301	.0140	98	0	-0	0	0
26		.050							

BIT ON LOOP 52

DATE 5/12/75

AEDC(ARO,INC.) ARNOLD AFS, TENNESSEE
VON KARMAN GAS DYNAMICS FACILITY
50 INCH HYPERSONIC TUNNEL B
V-18-B/A

GROUP	TEST CONDITION	MODEL	MACH NO	PO,PSIA	TO,DEG R	ALPHA-MODEL	ALPHA-SECTOR	ALPHA-PREBEND	ROLL MODEL	YAW
26	10	140 B	7.94	211.0	1271	20.06	10.14	30.00	191.42	2.0

T-INF (DEG R)	P-INF (PSIA)	Q-INF (PSIA)	V-INF (FT/SEC)	RHO-INF (SLUGS/FT3)	MU-INF (LB-SEC/FT2)	RE/FT (FT-1)	HREF-FR (R= .0400FT)	STFR (R= .0400FT)	SWITCH POSITION
93.4	.023	1.002	3760	2.039E-05	7.519E-08	1.020E 06	1.619E-02	2.664E-02	2

TC NO	TW	DT*DT	QDOT	H(TO)	H(TO)/HREF	H(.9TO)	H(.9TO)/HREF	X/L	Z,FULL SCALE(IN)
								ACCESS HATCH WINDOW	
107	528.5	2.044	.292	3.937E-04	.0243	4.750E-04	.0293	.2050	396.2000
								FUSELAGE VENT PANEL NO. 3 AND 1	
108	529.7	4.629	.486	6.583E-04	.0407	7.945E-04	.0491	.1244	377.5000
109	529.0	3.758	.454	6.251E-04	.0386	7.543E-04	.0466	.1302	377.5000
110	528.6	3.344	.423	5.699E-04	.0352	6.876E-04	.0425	.1360	377.5000
111	528.7	3.334	.401	5.402E-04	.0334	6.519E-04	.0403	.1418	377.5000
112	528.7	3.296	.390	5.262E-04	.0325	6.349E-04	.0392	.1476	377.5000
113	528.4	4.198	.480	6.468E-04	.0399	7.804E-04	.0482	.1215	273.5000
114	528.3	3.675	.440	5.928E-04	.0366	7.152E-04	.0442	.1273	273.5000
115	528.1	3.094	.383	5.155E-04	.0318	6.219E-04	.0384	.1331	273.5000
116	527.6	3.230	.395	5.320E-04	.0329	6.417E-04	.0396	.1389	273.5000
117	528.1	3.276	.376	5.066E-04	.0313	6.112E-04	.0377	.1447	273.5000
118	525.7	2.691	.371	4.978E-04	.0307	6.001E-04	.0371	.1409	366.0000
119	526.3	3.219	.415	5.578E-04	.0344	6.726E-04	.0415	.1442	366.0000
120	525.9	3.428	.427	5.730E-04	.0354	6.909E-04	.0427	.1215	359.5000
121	524.8	2.991	.366	4.900E-04	.0303	5.907E-04	.0365	.1303	359.5000
122	524.8	2.969	.368	4.935E-04	.0305	5.948E-04	.0367	.1337	359.5000
								LOWER RCS NOZZLES	
124	535.1	3.375	.392	4.100E-04	.0253	4.956E-04	.0306	.0950	400.0000
125	531.5	3.589	.391	5.283E-04	.0326	6.380E-04	.0394	.0988	400.0000
126	532.8	3.109	.426	5.772E-04	.0356	6.973E-04	.0431	.1027	400.0000
127	534.1	2.836	.393	5.192E-04	.0321	6.274E-04	.0387	.0911	395.0000
128	533.6	3.508	.426	5.778E-04	.0357	6.981E-04	.0431	.0950	395.0000
129	533.3	3.670	.431	5.842E-04	.0361	7.058E-04	.0436	.0988	395.0000
130	536.4	3.675	.440	5.995E-04	.0370	7.250E-04	.0448	.0810	390.0000
131	534.4	3.183	.471	6.391E-04	.0395	7.724E-04	.0477	.0857	390.0000
132	533.3	3.895	.454	6.153E-04	.0380	7.433E-04	.0459	.0963	390.0000
133	533.7	3.268	.397	5.384E-04	.0332	6.505E-04	.0402	.0857	383.8000
134	532.4	3.697	.495	6.702E-04	.0414	8.095E-04	.0500	.0872	377.3000
135	532.4	4.792	.575	7.789E-04	.0481	9.409E-04	.0581	.0903	374.5500
136	531.7	4.932	.548	7.410E-04	.0458	8.949E-04	.0553	.0960	374.5500
137	532.5	4.612	.603	8.167E-04	.0504	9.865E-04	.0609	.0872	370.5500
138	531.8	4.889	.563	7.613E-04	.0470	9.194E-04	.0568	.0928	370.5500
139	533.9	4.542	.580	7.871E-04	.0486	9.511E-04	.0587	.0816	366.0500
140	531.2	4.526	.575	7.777E-04	.0480	9.391E-04	.0580	.0934	362.4000
141	529.7	4.313	.569	7.675E-04	.0474	9.264E-04	.0572	.0973	362.4000
142	527.4	3.349	.364	4.892E-04	.0302	5.901E-04	.0364	.0833	355.2000
143	530.9	4.990	.501	6.766E-04	.0418	8.169E-04	.0504	.0919	355.2000
144	529.4	5.708	.750	1.012E-03	.0625	1.221E-03	.0754	.0949	349.0000

DATE 5/12/75

AEDC(ARO,INC.) ARNOLD AFS, TENNESSEE
VON KARMAN GAS DYNAMICS FACILITY
50 INCH HYPERSONIC TUNNEL B
V418-87A

GROUP	TEST CONDITION	MODEL	MACH NO	PO,PSIA	TO,DEG R	ALPHA-MODEL	ALPHA-SECTOR	ALPHA-PREBEND	ROLL MODEL	YAW
26	10	140 B	7.94	211.0	1271	20.06	10.14	30.00	191.42	2.0

T-INF (DEG R)	P-INF (PSIA)	Q-INF (PSIA)	V-INF (FT/SEC)	RHO-INF (SLUGS/FT3)	MU-INF (LB-SEC/FT2)	RE/FT (FT-1)	HREF-FR (R= .0400FT)	STFR (R= .0400FT)	SWITCH POSITION
93.4	.023	1.002	3760	2.039E-05	7.519E-08	1.020E 06	1.619E-02	2.664E-02	2

TC NO	TW	DTWDT	QDOT	H(TO)	H(TO)/HREF	H(.9TO)	H(.9TO)/HREF	X/L	2Y/B
								UPPER RCS NOZZLES	
161	538.2	2.498	.296	4.044E-04	.0250	4.892E-04	.0302	.0619	-.0160
162	537.4	2.028	.192	2.622E-04	.0162	3.172E-04	.0196	.0709	-.0160
163	536.3	1.771	.218	2.964E-04	.0183	3.584E-04	.0221	.0807	-.0160
164	534.9	1.343	.175	2.380E-04	.0147	2.877E-04	.0178	.0943	-.0160
165	534.5	1.040	.131	1.779E-04	.0110	2.150E-04	.0133	.0978	-.0160
166	534.4	.813	.104	1.415E-04	.0087	1.710E-04	.0106	.1013	-.0160
167	538.2	2.407	.326	4.455E-04	.0275	5.389E-04	.0333	.0619	-.0320
168	537.6	2.564	.270	3.677E-04	.0227	4.448E-04	.0275	.0709	-.0320
169	535.8	1.859	.226	3.075E-04	.0190	3.718E-04	.0230	.0807	-.0320
170	534.8	1.544	.193	2.624E-04	.0162	3.171E-04	.0196	.0943	-.0320
171	534.4	1.636	.197	2.679E-04	.0165	3.238E-04	.0200	.0978	-.0320
172	533.5	1.336	.174	2.361E-04	.0146	2.853E-04	.0176	.1013	-.0320
173	535.9	1.944	.260	3.535E-04	.0218	4.274E-04	.0264	.0807	-.0480
174	534.3	1.539	.175	2.380E-04	.0147	2.876E-04	.0178	.0943	-.0480
175	533.7	1.416	.203	2.753E-04	.0170	3.327E-04	.0205	.0978	-.0480
176	533.5	1.193	.163	2.204E-04	.0136	2.663E-04	.0164	.1013	-.0480
								CANOPY	
177	540.4	6.090	.840	1.151E-03	.0711	1.393E-03	.0860		
178	543.4	10.319	2.037	2.801E-03	.1730	3.394E-03	.2096		
179	546.8	14.022	2.956	4.062E-03	.2521	4.951E-03	.3058		
180	536.4	1.933	.252	3.437E-04	.0212	4.156E-04	.0257		
181	538.5	4.181	.569	7.768E-04	.0480	9.399E-04	.0580		
182	541.0	7.634	1.091	1.495E-03	.0923	1.810E-03	.1118		
183	534.5	1.643	.206	2.800E-04	.0173	3.384E-04	.0209		
184	534.7	1.720	.235	3.194E-04	.0197	3.860E-04	.0238		
185	536.3	2.392	.288	3.916E-04	.0242	4.735E-04	.0292		
186	539.2	4.833	.608	8.311E-04	.0513	1.006E-03	.0621		
187	541.5	8.757	1.170	1.604E-03	.0990	1.942E-03	.1199		
188	542.4	9.916	2.317	3.181E-03	.1964	3.853E-03	.2380		
189	535.9	2.301	.328	4.465E-04	.0276	5.399E-04	.0333		
190	538.5	4.849	.699	9.542E-04	.0589	1.155E-03	.0713		
191	540.1	8.247	1.264	1.729E-03	.1068	2.093E-03	.1293		

DATE 5/12/75

AEDC(ARO,INC.) ARNOLD AFS, TENNESSEE
VON KARMAN GAS DYNAMICS FACILITY
50 INCH HYPERSONIC TUNNEL B
V418-87A

GROUP	TEST CONDITION	MODEL	MACH NO	PO,PSIA	TO,DEG R	ALPHA-MODEL	ALPHA-SECTOR	ALPHA-PREBEND	ROLL MODEL	YAW
26	10	140 B	7.94	211.0	1271	20.06	10.14	30.00	191.42	2.0

T-INF (DEG R)	P-INF (PSIA)	Q-INF (PSIA)	V-INF (FT/SEC)	RHO-INF (SLUGS/FT3)	MU-INF (LB-SEC/FT2)	RE/FT (FT-1)	HREF-FR (R= .0400FT)	STFR (R= .0400FT)	SWITCH POSITION
92.4	.023	1.002	3760	2.039E-05	7.519E-08	1.020E 06	1.619E-02	2.664E-02	2

CANOPY

IC	NC	TW	DTWDT	QDOT	H(TO)	H(TO)/HREF	H(.9TO)	H(.9TO)/HREF
192	533.2	.664	.094	1.270E-04	.0078	1.535E-04	.0095	
193	540.2	8.599	1.660	2.273E-03	.1403	2.751E-03	.1699	
194	533.5	1.054	.136	1.844E-04	.0114	2.228E-04	.0138	
195	536.2	2.925	.361	4.913E-04	.0303	5.940E-04	.0367	
196	538.0	4.874	.641	8.749E-04	.0540	1.058E-03	.0654	
197	530.9	.480	.048	6.421E-05	.0040	7.753E-05	.0048	
198	531.4	.523	.061	8.196E-05	.0051	9.897E-05	.0061	
199	531.6	1.660	.223	3.015E-04	.0186	3.641E-04	.0225	
200	534.2	1.941	.277	3.754E-04	.0232	4.536E-04	.0280	
201	537.7	5.757	.814	1.110E-03	.0686	1.343E-03	.0829	
202	538.5	6.625	.839	1.146E-03	.0708	1.386E-03	.0856	
203	531.4	.825	.102	1.384E-04	.0085	1.671E-04	.0103	
204	535.0	1.750	.272	3.684E-04	.0228	4.450E-04	.0275	
205	536.2	4.764	.743	1.012E-03	.0625	1.223E-03	.0756	
206	530.6	.941	.125	1.683E-04	.0104	2.032E-04	.0125	
207	534.8	4.826	.648	8.821E-04	.0545	1.067E-03	.0659	
208	530.5	.556	.075	1.007E-04	.0062	1.216E-04	.0075	
209	531.8	.926	.127	1.722E-04	.0106	2.080E-04	.0128	
210	532.3	1.281	.171	2.314E-04	.0143	2.795E-04	.0173	
211	531.1	.846	.103	1.386E-04	.0086	1.674E-04	.0103	
212	530.8	.779	.105	1.417E-04	.0088	1.711E-04	.0106	
213	530.9	.665	.088	1.190E-04	.0074	1.437E-04	.0089	
214	531.4	1.156	.162	2.189E-04	.0135	2.643E-04	.0163	
215	532.0	1.186	.168	2.278E-04	.0141	2.751E-04	.0170	
216	535.2	3.490	.496	6.741E-04	.0416	8.148E-04	.0503	
217	534.9	2.966	.423	5.744E-04	.0355	6.943E-04	.0429	
218	530.5	.783	.108	1.458E-04	.0090	1.760E-04	.0109	
219	531.7	1.317	.185	2.503E-04	.0155	3.022E-04	.0187	
220	531.7	1.343	.184	2.495E-04	.0154	3.014E-04	.0186	

GROUP 26 CENTERLINE TIME 2.55

CH	TC	FIT LENGTH	DTDWT	UNCERTAINTY	CH	TC	FIT LENGTH	DTDWT	UNCERTAINTY
1	107	.80	2.044	.0206	50	173	1.20	1.944	.0112
2	108	.60	4.620	.0159	51	174	1.20	1.539	.0223
3	109	.80	3.758	.0086	52	175	1.20	1.416	.0190
4	110	.80	3.344	.0099	53	176	1.20	1.193	.0169
5	111	.80	3.334	.0363	54	177	.60	6.090	.0108
6	112	.80	3.296	.0098	55	178	.40	10.319	.0063
7	113	.60	4.196	.1014	56	179	.40	14.022	.0191
8	114	.80	3.675	.0056	57	180	1.20	1.933	.0121
9	115	.80	3.094	.0281	58	181	.60	4.181	.0105
10	116	.80	3.230	.0118	59	182	.60	7.634	.0082
11	117	.80	3.276	.0177	60	183	1.20	1.643	.0120
12	118	.80	2.691	.0191	61	184	1.20	1.720	.0177
13	119	.80	3.219	.0102	62	185	.80	2.392	.0119
14	120	.80	3.428	.0092	63	186	.60	4.833	.0130
15	121	.80	2.991	.0122	64	187	.40	8.757	.0131
16	122	.80	2.969	.0223	65	188	.40	9.916	.0070
17	124	.80	3.375	.0248	66	189	.80	2.301	.0391
18	125	.80	3.589	.0124	67	190	.60	4.849	.0111
19	126	.80	3.119	.0123	68	191	.40	8.247	.0706
20	127	.80	2.836	.0191	69	192	2.00	.664	.0367
21	128	.80	3.508	.0074	70	193	.40	8.599	.0177
22	129	.80	3.670	.0113	71	194	1.20	1.054	.0385
23	130	.80	3.675	.0161	72	195	.80	2.925	.0075
24	131	.80	3.183	.0150	73	196	.60	4.874	.0109
25	132	.80	3.895	.0118	74	197	2.00	.480	.0213
26	133	.80	3.268	.0091	75	198	2.00	.523	.0239
27	134	.80	3.697	.0147	76	199	1.20	1.660	.0231
28	135	.60	4.792	.0124	77	200	1.20	1.941	.0097
29	136	.60	4.932	.0106	78	201	.60	5.757	.0079
30	137	.60	4.612	.0092	79	202	.60	6.625	.0504
31	138	.60	4.889	.0086	80	203	2.00	.825	.0115
32	139	.60	4.542	.0124	81	204	1.20	1.750	.0110
33	140	.60	4.526	.0083	82	205	.60	4.764	.0087
34	141	.60	4.313	.0108	83	206	2.00	.941	.0118
35	142	.80	3.349	.0086	84	207	.60	4.826	.0109
36	143	.60	4.990	.0104	85	208	2.00	.556	.0175
37	144	.60	5.708	.0077	86	209	2.00	.926	.0117
38	161	.80	2.498	.0195	87	210	1.20	1.281	.0239
39	162	.80	2.028	.0241	88	211	2.00	.846	.0145
40	163	1.20	1.771	.0130	89	212	2.00	.779	.0151
41	164	1.20	1.343	.0102	90	213	2.00	.665	.0941
42	165	1.20	1.040	.0135	91	214	1.20	1.156	.0265
43	166	2.00	.813	.0174	92	215	1.20	1.186	.0458
44	167	.80	2.407	.0148	93	216	.80	3.490	.0092
45	168	.80	2.564	.0081	94	217	.80	2.966	.0154
46	169	1.20	1.859	.0125	95	218	2.00	.783	.0139
47	170	1.20	1.544	.0321	96	219	1.20	1.317	.0181
48	171	1.20	1.636	.0130	97	220	1.20	1.343	.0158
49	172	1.20	1.336	.0160	98	0	-0	0	0

27 .050

BIT ON LOOP 52

DATE 5/12/75

AEDC(ARO,INC.) ARNOLD AFS, TENNESSEE
VON KARMAN GAS DYNAMICS FACILITY
50 INCH HYPERSONIC TUNNEL B
V41B-H7A

GROUP	TEST CONDITION	MODEL	MACH NO	PO,PSIA	TO,DEG R	ALPHA-MODEL	ALPHA-SECTOR	ALPHA-PREBEND	ROLL MODEL	YAW
27	10	140 B	7.94	212.4	1271	20.05	10.14	30.00	191.38	2.0

T-INF (DEG R)	P-INF (PSIA)	Q-INF (PSIA)	V-INF (FT/SEC)	RHO-INF (SLUGS/FT3)	MU-INF (LB-SEC/FT2)	RE/FT (FT-1)	HREF-FR (R= .0400FT)	STFR (R= .0400FT)	SWITCH POSITION
93.4	.023	1.008	3759	2.053E-05	7.517E-08	1.027E 06	1.625E-02	2.655E-02	3

IC NO	TW	DT*DT	QDOT	H(TO)	H(TO)/HREF	H(.9TO)	H(.9TO)/HREF		
								CANOPY	
221	528.3	.564	.068	9.171E-05	.0056	1.107E-04	.0068		
222	527.8	.679	.093	1.123E-04	.0069	1.354E-04	.0083		
223	529.5	2.597	.352	4.747E-04	.0292	5.729E-04	.0353		
								ESCAPE HATCH AND WINDOW	
								X/L	2Y/B
224	537.0	5.362	.535	7.290E-04	.0449	8.817E-04	.0543	.1933	.0162
225	535.8	3.541	.424	5.773E-04	.0355	6.980E-04	.0430	.1972	.0162
226	537.3	6.847	.723	9.856E-04	.0607	1.192E-03	.0734	.1933	.0384
227	534.1	4.370	.640	8.692E-04	.0535	1.050E-03	.0647	.1972	.0384
228	535.2	6.020	.775	1.053E-03	.0648	1.273E-03	.0784	.1933	.0653
229	534.6	4.368	.565	7.670E-04	.0472	9.270E-04	.0571	.1972	.0653
232	531.7	.261	.035	4.756E-05	.0029	5.744E-05	.0035	.2567	.0235
233	532.1	.277	.042	5.689E-05	.0035	6.871E-05	.0042	.2606	.0235
236	530.8	.253	.037	4.996E-05	.0031	6.031E-05	.0037	.2567	.0491
237	531.1	.285	.040	5.410E-05	.0033	6.532E-05	.0040	.2606	.0491
								CARGO BAY HINGE NO. 1	
								X/L	Z,FULL SCALE(IN)
238	531.0	1.022	.137	1.849E-04	.0114	2.233E-04	.0137	.2879	420.0000
239	531.	.933	.125	1.687E-04	.0104	2.037E-04	.0125	.2917	420.0000
240	531.1	.834	.119	1.609E-04	.0099	1.942E-04	.0120	.2840	415.0000
241	530.7	1.060	.149	2.012E-04	.0124	2.429E-04	.0150	.2879	415.0000
242	528.6	1.020	.145	1.960E-04	.0121	2.364E-04	.0146	.2917	415.0000
243	528.3	1.113	.136	1.830E-04	.0113	2.208E-04	.0136	.2801	405.0000
244	528.8	.711	.093	1.119E-04	.0069	1.351E-04	.0083	.2840	405.0000
								CARGO BAY HINGE NO. 2	
								X/L	Z,FULL SCALE(IN)
245	531.2	.782	.112	1.509E-04	.0093	1.822E-04	.0112	.3192	420.0000
246	531.3	.796	.114	1.536E-04	.0095	1.854E-04	.0114	.3439	420.0000
247	530.8	.755	.111	1.501E-04	.0092	1.812E-04	.0112	.3362	415.0000
248	530.9	.563	.083	1.119E-04	.0069	1.351E-04	.0083	.3401	415.0000
249	531.3	.804	.118	1.601E-04	.0099	1.933E-04	.0119	.3439	415.0000
250	529.6	.957	.120	1.617E-04	.0100	1.951E-04	.0120	.3323	405.0000
251	529.6	.985	.121	1.630E-04	.0100	1.967E-04	.0121	.3362	405.0000
								CARGO BAY HINGE NO. 3	
								X/L	Z,FULL SCALE(IN)
252	530.9	.906	.131	1.775E-04	.0109	2.144E-04	.0132	.3923	420.0000
253	530.8	.941	.136	1.842E-04	.0113	2.224E-04	.0137	.3961	420.0000
254	530.5	.816	.124	1.672E-04	.0103	2.018E-04	.0124	.3884	415.0000
257	528.8	.985	.132	1.785E-04	.0110	2.154E-04	.0133	.3845	405.0000
258	529.2	.865	.118	1.585E-04	.0098	1.913E-04	.0118	.3884	405.0000

DATE 5/12/75

AEDC(ARO,INC.) ARNOLD AFS, TENNESSEE
VON KARMAN GAS DYNAMICS FACILITY
50 INCH HYPERSONIC TUNNEL B
V41B-87A

GROUP	TEST CONDITION	MODEL	MACH NO	PO,PSIA	TO,DEG R	ALPHA-MODEL	ALPHA-SECTOR	ALPHA-PREBEND	ROLL MODEL	YAW
27	10	140 B	7.94	212.4	1271	20.05	10.14	30.00	191.38	2.0

T-INF (DEG R)	P-INF (PSIA)	Q-INF (PSIA)	V-INF (FT/SEC)	RHO-INF (SLUGS/FT3)	MU-INF (LB-SEC/FT2)	RE/FT (FT-1)	HREF-FR (R= .0400FT)	STFR (R= .0400FT)	SWITCH POSITION
93.4	.023	1.008	3759	2.053E-05	7.517E-08	1.027E 06	1.625E-02	2.655E-02	3

TOP CENTERLINE

IC NO	TW	DTWDT	QDOT	H(TO)	H(TO)/HREF	H(.9TO)	H(.9TO)/HREF	X/L
367	571.5	62.396	7.468	1.068E-02	.6575	1.305E-02	.8035	0
368	556.1	47.181	6.051	8.469E-03	.5213	1.030E-02	.6341	.0008
369	548.1	31.605	3.724	5.155E-03	.3173	6.255E-03	.3850	.0019
370	542.5	22.216	2.720	3.736E-03	.2300	4.526E-03	.2786	.0037
371	541.4	18.749	1.941	2.524E-03	.1554	3.056E-03	.1881	.0058
372	538.8	13.383	1.725	2.358E-03	.1451	2.853E-03	.1756	.0087
373	537.7	9.204	1.207	1.646E-03	.1013	1.992E-03	.1226	.0118
374	537.8	7.139	.936	1.277E-03	.0786	1.545E-03	.0951	.0151
375	537.0	5.771	.790	1.077E-03	.0663	1.302E-03	.0802	.0182
376	537.9	5.183	.684	9.338E-04	.0575	1.130E-03	.0695	.0215
377	538.1	4.767	.614	8.369E-04	.0516	1.015E-03	.0625	.0246
378	537.8	3.993	.466	6.364E-04	.0392	7.699E-04	.0474	.0278
379	538.3	2.729	.336	4.586E-04	.0282	5.549E-04	.0342	.0609
380	537.1	2.132	.219	2.990E-04	.0184	3.617E-04	.0223	.0646
381	537.0	1.952	.253	3.452E-04	.0212	4.175E-04	.0257	.0684
382	536.1	1.695	.222	3.022E-04	.0186	3.654E-04	.0225	.0721
383	535.5	1.557	.209	2.839E-04	.0175	3.433E-04	.0211	.0760
384	535.2	1.091	.152	2.068E-04	.0127	2.500E-04	.0154	.0796
385	534.8	1.096	.141	1.916E-04	.0118	2.316E-04	.0143	.0789
386	534.6	1.063	.126	1.710E-04	.0105	2.067E-04	.0127	.0982
387	534.5	1.116	.137	1.863E-04	.0115	2.252E-04	.0139	.1019
388	533.8	.981	.093	1.266E-04	.0078	1.530E-04	.0094	.1160
389	533.7	.738	.107	1.453E-04	.0089	1.756E-04	.0108	.1195
390	533.2	.569	.090	1.216E-04	.0075	1.470E-04	.0090	.1231
391	533.2	.572	.091	1.235E-04	.0076	1.493E-04	.0092	.1268
392	533.5	.646	.111	1.502E-04	.0092	1.815E-04	.0112	.1305
393	533.4	.723	.122	1.659E-04	.0102	2.004E-04	.0123	.1338
394	533.4	.755	.127	1.720E-04	.0106	2.078E-04	.0128	.1376
395	533.4	.687	.103	1.393E-04	.0086	1.683E-04	.0104	.1411
396	533.6	.707	.105	1.422E-04	.0088	1.718E-04	.0106	.1448
397	534.0	.717	.106	1.444E-04	.0089	1.745E-04	.0107	.1483
398	533.7	.231	.032	4.410E-05	.0027	5.329E-05	.0033	.1519
399	535.0	1.297	.173	2.355E-04	.0145	2.846E-04	.0175	.1556

DATE 5/12/75

AEDC(ARO,INC.) ARNOLD AFS, TENNESSEE
VON KARMAN GAS DYNAMICS FACILITY
50 INCH HYPERSONIC TUNNEL B
V418-B7A

GROUP	TEST CONDITION	MODEL	MACH NO	PO,PSIA	TO,DEG R	ALPHA-MODEL	ALPHA-SECTOR	ALPHA-PREBEND	ROLL MODEL	YAW
27	10	140 B	7.94	212.4	1271	20.05	10.14	30.00	191.38	2.0

T-INF (DEG R)	P-INF (PSIA)	Q-INF (PSIA)	V-INF (FT/SEC)	RHO-INF (SLUGS/FT3)	MU-INF (LB-SEC/FT2)	RE/FT (FT-1)	HREF-FR (R= .0400FT)	STFR (R= .0400FT)	SWITCH POSITION
93.4	.023	1.008	3759	2.053E-05	7.517E-08	1.027E 06	1.625E-02	2.655E-02	3

TOP CENTERLINE

TC NO	TW	DTWDT	QDOT	H(TO)	H(TO)/HREF	H(.9TO)	H(.9TO)/HREF	X/L
400	536.0	2.418	.326	4.443E-04	.0274	5.373E-04	.0331	.1582
401	536.4	3.019	.392	5.333E-04	.0328	6.449E-04	.0397	.1608
402	537.4	4.372	.546	7.442E-04	.0458	9.002E-04	.0554	.1635
403	539.4	5.915	.720	9.853E-04	.0607	1.193E-03	.0734	.1664
404	540.0	6.521	.792	1.083E-03	.0667	1.312E-03	.0807	.1691
405	541.2	7.070	.859	1.177E-03	.0725	1.426E-03	.0878	.1720
406	541.1	8.032	.976	1.337E-03	.0823	1.619E-03	.0997	.1748
407	541.0	7.580	.982	1.346E-03	.0828	1.629E-03	.1003	.1769
408	540.6	7.249	1.065	1.459E-03	.0898	1.767E-03	.1088	.1800
409	539.1	6.030	.869	1.188E-03	.0732	1.438E-03	.0885	.1831
410	538.2	5.269	.759	1.037E-03	.0638	1.254E-03	.0772	.1863
411	537.4	3.933	.591	8.064E-04	.0496	9.754E-04	.0600	.1894
412	537.4	3.272	.445	6.068E-04	.0374	7.340E-04	.0452	.1931
413	536.1	2.512	.337	4.586E-04	.0282	5.545E-04	.0341	.1972
414	535.2	1.421	.191	2.591E-04	.0159	3.132E-04	.0193	.2049
415	533.5	.629	.062	8.418E-05	.0052	1.017E-04	.0063	.2250
416	532.8	.363	.042	5.758E-05	.0035	6.956E-05	.0043	.2500

NOSE TC (Z = 338)

TC NO	TW	DTWDT	QDOT	H(TO)	H(TO)/HREF	H(.9TO)	H(.9TO)/HREF	X/L	2Y/B
145	561.8	42.394	5.760	8.126E-03	.5002	9.901E-03	.6094	.0008	.5039
146	560.1	44.249	6.007	8.455E-03	.5204	1.030E-02	.6338	.0023	.5082
147	551.7	35.563	4.807	6.687E-03	.4116	8.122E-03	.4999	.0043	.5135
148	550.8	27.176	3.794	5.272E-03	.3245	6.402E-03	.3940	.0068	.5205
149	546.5	20.365	2.947	4.070E-03	.2505	4.936E-03	.3038	.0095	.5279
150	547.9	19.006	2.727	3.773E-03	.2322	4.577E-03	.2817	.0122	.5354
151	546.6	13.493	1.898	2.622E-03	.1614	3.180E-03	.1957	.0218	.5621
152	545.7	12.155	1.649	2.275E-03	.1400	2.759E-03	.1698	.0251	.5712
153	545.8	12.836	1.569	2.164E-03	.1332	2.624E-03	.1615	.0286	.5808
154	545.5	12.548	1.561	2.153E-03	.1325	2.610E-03	.1607	.0319	.5898
155	544.1	11.436	1.437	1.978E-03	.1218	2.398E-03	.1476	.0354	.5995
156	543.2	10.671	1.326	1.823E-03	.1122	2.209E-03	.1360	.0387	.6085
157	542.8	10.526	1.294	1.778E-03	.1094	2.154E-03	.1326	.0420	.6176
158	541.8	10.880	1.337	1.834E-03	.1129	2.221E-03	.1367	.0462	.6294
159	541.1	10.904	1.222	1.675E-03	.1031	2.028E-03	.1248	.0503	.6406

GROUP 27 CENTERLINE TIME 2.55

CH	TC	FIT LENGTH	DTDWT	UNCERTAINTY	CH	TC	FIT LENGTH	DTDWT	UNCERTAINTY
1	221	2.00	.564	.0183	50	384	1.20	1.091	.0353
2	222	2.00	.679	.0151	51	385	1.20	1.096	.0270
3	223	.80	2.597	.0128	52	386	1.20	1.063	.0224
4	224	.60	5.362	.0088	53	387	1.20	1.116	.0106
5	225	.80	3.541	.0209	54	388	1.20	.981	.0248
6	226	.60	6.847	.0057	55	389	2.00	.738	.0140
7	227	.60	4.370	.0770	56	390	2.00	.569	.0619
8	228	.60	6.020	.0100	57	391	2.00	.572	.0181
9	229	.60	4.388	.0241	58	392	2.00	.646	.0141
10	232	2.00	.260	.0371	59	393	2.00	.723	.0176
11	233	2.00	.277	.0561	60	394	2.00	.755	.0133
12	236	2.00	.253	.0476	61	395	2.00	.687	.0217
13	237	2.00	.285	.0337	62	396	2.00	.707	.0133
14	238	1.20	1.022	.0297	63	397	2.00	.717	.0135
15	239	2.00	.933	.0185	64	398	2.00	.231	.1061
16	240	2.00	.834	.0175	65	399	1.20	1.297	.0150
17	241	1.20	1.060	.0367	66	400	.80	2.418	.0193
18	242	1.20	1.020	.0262	67	401	.80	3.019	.0127
19	243	1.20	1.113	.0232	68	402	.60	4.372	.0648
20	244	2.00	.711	.0254	69	403	.60	5.915	.0105
21	245	2.00	.782	.0104	70	404	.60	6.521	.0128
22	246	2.00	.796	.0109	71	405	.60	7.070	.0218
23	247	2.00	.755	.0255	72	406	.60	8.032	.0055
24	248	2.00	.563	.0216	73	407	.60	7.580	.0054
25	249	2.00	.804	.0169	74	408	.60	7.249	.0121
26	250	2.00	.957	.0111	75	409	.60	6.030	.0089
27	251	2.00	.985	.0094	76	410	.60	5.269	.0150
28	252	2.00	.906	.0218	77	411	.60	3.933	.0143
29	253	2.00	.941	.0202	78	412	.80	3.272	.0084
30	254	2.00	.816	.0149	79	413	.80	2.512	.0776
31	257	1.20	.985	.0377	80	414	1.20	1.421	.0124
32	258	2.00	.865	.0128	81	415	2.00	.629	.0165
33	367	.20	62.398	.0022	82	416	2.00	.363	.0193
34	368	.20	47.181	.0032	83	145	.20	42.394	.0048
35	369	.30	31.695	.0036	84	146	.20	44.249	.0036
36	370	.30	22.216	.0083	85	147	.20	35.563	.0076
37	371	.30	18.749	.0044	86	148	.30	27.176	.0043
38	372	.40	13.383	.0066	87	149	.30	20.365	.0117
39	373	.40	9.204	.0081	88	150	.30	19.006	.0075
40	374	.60	7.139	.0103	89	151	.40	13.493	.0101
41	375	.60	5.771	.0052	90	152	.40	12.155	.0630
42	376	.60	5.183	.0129	91	153	.40	12.836	.0139
43	377	.60	4.767	.0161	92	154	.40	12.548	.0189
44	378	.60	3.993	.0162	93	155	.40	11.436	.0050
45	379	.80	2.729	.0087	94	156	.40	10.671	.0117
46	380	.80	2.132	.0153	95	157	.40	10.526	.0091
47	381	1.20	1.952	.0248	96	158	.40	10.880	.0097
48	382	1.20	1.695	.0146	97	159	.40	10.904	.0060
49	383	1.20	1.557	.0133	98	0	-0	0	0

28 .050

BIT ON LOOP 52

DATE 5/12/75

AEDC(ARO,INC.) ARNOLD AFS, TENNESSEE
VON KARMAN GAS DYNAMICS FACILITY
50 INCH HYPERSONIC TUNNEL B
V41R-B7A

GROUP	TEST CONDITION	MODEL	MACH NO	PO,PSIA	TO,DEG R	ALPHA-MODEL	ALPHA-SECTOR	ALPHA-PREBEND	ROLL MODEL	YAW
28	11	140 B	7.94	209.5	1270	25.07	4.93	30.00	179.98	-.0

T-INF (DEG R)	P-INF (PSIA)	Q-INF (PSIA)	V-INF (FT/SEC)	RHO-INF (SLUGS/FT3)	MU-INF (LB-SEC/FT2)	RE/FT (FT-1)	HREF-FR (R= .0400FT)	STFR (R= .0400FT)	SWITCH POSITION
93.3	.023	.594	3759	2.025E-05	7.515E-08	1.013E 06	1.613E-02	2.673E-02	1

TC NO	TW	DTWDT	QDOT	H(TO)	H(TO)/HREF	H(.9TO)	H(.9TO)/HREF
						FUSELAGE VENT NO. 1	
						X/L	Z,FULL SCALE(IN)
1	532.7	1.861	.245	3.323E-04	.0206	4.014E-04	.0249	.4434	376.6300
2	532.0	1.594	.214	2.900E-04	.0180	3.503E-04	.0217	.4264	371.6300
3	531.7	1.339	.183	2.483E-04	.0154	2.999E-04	.0186	.4303	371.6300
4	531.9	1.335	.181	2.452E-04	.0152	2.961E-04	.0184	.4342	371.6300
5	532.0	1.372	.182	2.472E-04	.0153	2.985E-04	.0185	.4380	371.6300
6	532.0	1.184	.156	2.117E-04	.0131	2.557E-04	.0159	.4434	369.1300
7	530.4	.881	.128	1.731E-04	.0107	2.090E-04	.0130	.4226	366.6300
8	531.4	1.048	.157	2.132E-04	.0132	2.574E-04	.0160	.4264	366.6300
9	532.0	.969	.141	1.904E-04	.0118	2.299E-04	.0143	.4303	366.6300
10	531.7	.807	.115	1.555E-04	.0096	1.879E-04	.0116	.4342	366.6300
11	531.9	.878	.118	1.601E-04	.0099	1.934E-04	.0120	.4380	366.6300
12	531.3	.719	.099	1.337E-04	.0083	1.614E-04	.0100	.4496	366.6300
13	529.9	.563	.082	1.112E-04	.0069	1.342E-04	.0083	.4187	357.1300
14	531.1	.643	.087	1.183E-04	.0073	1.428E-04	.0089	.4396	361.6300
15	531.1	.617	.082	1.110E-04	.0069	1.340E-04	.0083	.4434	361.6300
16	530.5	.500	.067	9.101E-05	.0056	1.099E-04	.0068	.4396	355.6300
17	529.7	.450	.061	8.174E-05	.0051	9.866E-05	.0061	.4434	355.6300
18	527.5	.480	.067	8.985E-05	.0056	1.084E-04	.0067	.4396	351.6300
19	528.9	.248	.034	4.654E-05	.0029	5.616E-05	.0035	.4291	332.6300
						CARGO BAY VENT NO. 1	
						X/L	Z,FULL SCALE(IN)
22	531.8	1.969	.272	3.687E-04	.0229	4.452E-04	.0276	.3974	397.6300
23	532.0	1.994	.278	3.759E-04	.0233	4.541E-04	.0281	.4013	397.6300
24	532.3	2.006	.270	3.663E-04	.0227	4.424E-04	.0274	.4052	397.6300
25	532.4	1.953	.256	3.472E-04	.0215	4.194E-04	.0260	.4090	397.6300
26	532.7	2.323	.304	4.119E-04	.0255	4.976E-04	.0308	.4129	397.6300
27	531.3	2.039	.283	3.828E-04	.0237	4.623E-04	.0287	.3936	392.6300
28	531.4	1.822	.261	3.531E-04	.0219	4.265E-04	.0264	.3974	392.6300
29	531.4	1.904	.273	3.700E-04	.0229	4.468E-04	.0277	.4013	392.6300
30	531.1	2.051	.294	3.972E-04	.0246	4.797E-04	.0297	.4052	392.6300
31	531.7	2.415	.336	4.551E-04	.0282	5.497E-04	.0341	.4090	392.6300
32	532.1	2.843	.375	5.087E-04	.0315	6.145E-04	.0381	.4129	392.6300
33	532.4	3.365	.479	6.493E-04	.0402	7.843E-04	.0486	.4090	386.1300
34	533.6	3.868	.522	7.082E-04	.0439	8.558E-04	.0530	.4129	387.6300
35	531.8	2.794	.394	5.334E-04	.0331	6.442E-04	.0399	.3897	383.1300
36	533.6	4.063	.588	7.980E-04	.0495	9.642E-04	.0598	.4090	378.6300
37	534.1	5.102	.715	9.719E-04	.0602	1.175E-03	.0728	.4129	382.1300
38	533.4	4.193	.582	7.902E-04	.0490	9.548E-04	.0592	.4129	377.1300
39	532.6	3.591	.522	7.084E-04	.0439	8.558E-04	.0530	.4001	373.6300
						PROTUBERANCES	
						X/L	Z,FULL SCALE(IN)
41	531.0	2.952	.394	5.324E-04	.0330	6.428E-04	.0398	.3546	379.0500
42	533.3	4.065	.554	7.512E-04	.0466	9.076E-04	.0563	.3604	379.0500
43	529.6	2.087	.270	3.642E-04	.0226	4.396E-04	.0272	.3450	374.0500

DATE 5/12/75

AEDC(ARO,INC.) ARNOLD AFS, TENNESSEE
VON KARMAN GAS DYNAMICS FACILITY
50 INCH HYPERSONIC TUNNEL B
V41B-87A

GROUP	TEST CONDITION	MODEL	MACH NO	PO,PSIA	TO,DEG R	ALPHA-MODEL	ALPHA-SECTOR	ALPHA-PREBEND	ROLL MODEL	YAW
28	11	140 B	7.94	209.5	1270	25.07	4.93	30.00	179.98	-.0

T-INF (DEG R)	P-INF (PSIA)	Q-INF (PSIA)	V-INF (FT/SEC)	RHO-INF (SLUGS/FT3)	MU-INF (LB-SEC/FT2)	RE/FT (FT-1)	HREF-FR (R= .0400FT)	STFR (R= .0400FT)	SWITCH POSITION
93.3	.023	.994	3759	2.025E-05	7.515E-08	1.013E 06	1.613E-02	2.673E-02	1

TC NO	TW	DTWUT	GDOT	H(TO)	H(TO)/HREF	H(.9TO)	H(.9TO)/HREF
44	530.8	3.419	.463	6.268E-04	.0389	7.568E-04	.0469
45	532.2	4.445	.613	8.304E-04	.0515	1.003E-03	.0622
46	531.6	3.765	.524	7.093E-04	.0440	8.567E-04	.0531
47	529.3	3.466	.459	6.190E-04	.0384	7.471E-04	.0463
48	530.7	3.438	.469	6.343E-04	.0393	7.659E-04	.0475
49	529.7	4.956	.677	9.146E-04	.0567	1.104E-03	.0684
50	528.7	2.577	.356	4.799E-04	.0297	5.790E-04	.0359
51	530.0	3.215	.434	5.865E-04	.0364	7.080E-04	.0439
52	527.5	2.962	.405	5.450E-04	.0338	6.574E-04	.0407
53	526.9	2.485	.340	4.849E-04	.0301	5.849E-04	.0363
54	527.4	1.080	.153	2.064E-04	.0128	2.489E-04	.0154
55	527.4	1.805	.256	3.449E-04	.0214	4.161E-04	.0258
56	526.9	.821	.105	1.416E-04	.0088	1.707E-04	.0106
57	526.7	.802	.097	1.310E-04	.0081	1.580E-04	.0098
58	526.2	1.441	.189	2.541E-04	.0157	3.064E-04	.0190
59	526.0	2.389	.312	4.197E-04	.0260	5.061E-04	.0314
60	525.7	1.918	.265	3.562E-04	.0221	4.295E-04	.0266
61	525.4	1.347	.169	2.276E-04	.0141	2.744E-04	.0170
62	525.4	.791	.096	1.294E-04	.0080	1.560E-04	.0097
63	526.7	.901	.117	1.574E-04	.0098	1.898E-04	.0118
64	535.5	~~.027~~	~~.013~~	~~4.442E-06~~	~~.0003~~	~~5.371E-06~~	~~.0003~~
65	528.9	.941	.127	1.720E-04	.0107	2.075E-04	.0129
66	528.0	.821	.103	1.389E-04	.0086	1.676E-04	.0104
67	528.2	.922	.129	1.737E-04	.0108	2.096E-04	.0130
68	527.5	1.723	.217	2.923E-04	.0181	3.526E-04	.0219

PROTUBERANCES

X/L	Z,FULL SCALE(IN)
.3508	374.0500
.3566	374.0500
.3604	374.0500
.3392	366.5500
.3566	366.5500
.3392	360.7000
.3566	360.7000
.3604	360.7000
.3392	353.2000
.3450	353.2000
.3508	353.2000
.3566	353.2000

SUBLIMATOR VENT NO. 1

X/L	Z,FULL SCALE(IN)
.3031	371.1300
.3074	369.1300
.3089	363.6300
.3074	358.1300
.3031	356.1300
.2988	358.1300
.2973	363.6300
.2988	369.1300
.3031	376.1300
.3089	378.6300
.3101	372.6300
.3157	370.3800
.3128	363.6300

DATE 5/12/75

AEDC(ARO,INC.) ARNOLD AFS, TENNESSEE
VON KARMAN GAS DYNAMICS FACILITY
50 INCH HYPERSONIC TUNNEL B
V418-87A

GROUP	TEST CONDITION	MODEL	MACH NO	PO,PSIA	TO,DEG R	ALPHA-MODEL	ALPHA-SECTOR	ALPHA-PREBEND	ROLL MODEL	YAW
28	11	140 B	7.94	209.5	1270	25.07	4.93	30.00	179.98	-.0

T-INF (DEG R)	P-INF (PSIA)	Q-INF (PSIA)	V-INF (FT/SEC)	RHO-INF (SLUGS/FT3)	MU-INF (LB-SEC/FT2)	RE/FT (FT-1)	HREF-FR (R= .0400FT)	STFR (R= .0400FT)	SWITCH POSITION
93.3	.023	.594	3759	2.025E-05	7.515E-06	1.013E 06	1.613E-02	2.673E-02	1

FUSELAGE VENT PANEL NO. 7

IC NO	TW	DTWDT	QDOT	H(TO)	H(TO)/HREF	H(.9TO)	H(.9TO)/HREF	X/L	Z,FULL SCALE(IN)
69	524.5	1.442	.200	2.681E-04	.0166	3.231E-04	.0200	.2487	356.4000
70	525.0	1.379	.188	2.254E-04	.0140	2.717E-04	.0168	.2591	356.4000
71	522.8	1.400	.189	2.528E-04	.0157	3.046E-04	.0189	.2419	351.4000
72	522.7	1.181	.166	2.224E-04	.0138	2.679E-04	.0166	.2487	351.4000
73	523.8	1.441	.185	2.488E-04	.0154	2.998E-04	.0186	.2552	351.4000
74	524.3	1.395	.168	2.252E-04	.0140	2.714E-04	.0168	.2610	351.4000
75	520.8	1.399	.189	2.518E-04	.0156	3.032E-04	.0188	.2419	342.8000
77	522.4	.838	.118	1.578E-04	.0098	1.901E-04	.0118	.2552	342.8000
78	523.0	1.088	.148	1.986E-04	.0123	2.392E-04	.0148	.2610	342.8000
79	520.4	1.289	.164	2.181E-04	.0135	2.626E-04	.0163	.2419	334.2000
80	519.2	.624	.084	1.124E-04	.0070	1.352E-04	.0084	.2487	334.2000
81	520.7	1.619	.224	2.990E-04	.0185	3.600E-04	.0223	.2552	334.2000

ACCESS HATCH WINDOW

IC NO	TW	DTWDT	QDOT	H(TO)	H(TO)/HREF	H(.9TO)	H(.9TO)/HREF	X/L	Z,FULL SCALE(IN)
83	528.7	1.983	.264	3.561E-04	.0221	4.297E-04	.0266	.2131	398.0000
84	526.8	1.870	.245	3.302E-04	.0205	3.983E-04	.0247	.2131	388.0000
85	526.3	1.752	.238	3.195E-04	.0198	3.852E-04	.0239	.2131	383.0000
87	527.9	1.278	.182	2.453E-04	.0152	2.960E-04	.0183	.2222	395.8000
88	527.3	1.865	.260	3.497E-04	.0217	4.218E-04	.0261	.2193	386.5000
89	525.6	1.890	.277	3.714E-04	.0230	4.478E-04	.0278	.2177	381.8000
90	528.1	1.677	.228	3.068E-04	.0190	3.702E-04	.0229	.2297	389.5000
91	527.0	1.847	.252	3.395E-04	.0210	4.095E-04	.0254	.2243	382.5000
92	526.3	1.750	.246	3.307E-04	.0205	3.988E-04	.0247	.2214	378.7000
93	527.2	1.706	.217	2.923E-04	.0181	3.526E-04	.0219	.2343	374.0000
94	525.8	2.000	.259	3.478E-04	.0216	4.193E-04	.0260	.2274	375.5000
95	525.7	1.716	.243	3.260E-04	.0202	3.931E-04	.0244	.2239	373.3000
96	525.8	1.615	.209	2.808E-04	.0174	3.385E-04	.0210	.2363	368.0000
97	525.2	1.900	.242	3.243E-04	.0201	3.909E-04	.0242	.2286	368.0000
98	525.0	1.816	.253	3.401E-04	.0211	4.100E-04	.0254	.2247	368.0000
100	522.6	1.841	.259	3.466E-04	.0215	4.175E-04	.0259	.2274	360.5000
102	521.9	1.863	.261	3.492E-04	.0216	4.205E-04	.0261	.2081	354.3000
103	523.2	2.147	.280	3.752E-04	.0233	4.521E-04	.0280	.2023	362.7000
105	525.5	1.332	.166	2.227E-04	.0138	2.685E-04	.0166	.2050	378.7000
106	526.6	2.195	.280	3.768E-04	.0234	4.545E-04	.0282	.2050	386.2000

GROUP 28 CENTERLINE TIME 2.55

CH	TC	FIT LENGTH	DTDWT	UNCERTAINTY	CH	TC	FIT LENGTH	DTDWT	UNCERTAINTY
1	1	1.20	1.861	.0068	50	53	.80	2.485	.0238
2	2	1.20	1.594	.0131	51	54	1.20	1.080	.0357
3	3	1.20	1.339	.0099	52	55	1.20	1.805	.0185
4	4	1.20	1.335	.0129	53	56	2.00	.821	.0115
5	5	1.20	1.372	.0323	54	57	2.00	.802	.0156
6	6	1.20	1.184	.0124	55	58	1.20	1.441	.0148
7	7	2.00	.881	.0832	56	59	.80	2.389	.0468
8	8	1.20	1.048	.0140	57	60	1.20	1.918	.0103
9	9	2.00	.969	.0547	58	61	1.20	1.347	.0136
10	10	2.00	.807	.0137	59	62	2.00	.791	.0212
11	11	2.00	.878	.0164	60	63	2.00	.901	.0097
12	12	2.00	.719	.0225	61	64	2.00	.027	.5091
13	13	2.00	.563	.0172	62	65	2.00	.941	.0075
14	14	2.00	.643	.0244	63	66	2.00	.821	.0100
15	15	2.00	.617	.0263	64	67	2.00	.922	.0126
16	16	2.00	.500	.0263	65	68	1.20	1.723	.0133
17	17	2.00	.450	.0505	66	69	1.20	1.442	.0196
18	18	2.00	.480	.0946	67	70	1.20	1.379	.0115
19	19	2.00	.248	.0399	68	71	1.20	1.400	.1224
20	22	.80	1.969	.0139	69	72	1.20	1.181	.0274
21	23	1.20	1.994	.0077	70	73	1.20	1.441	.0168
22	24	1.20	2.006	.0087	71	74	1.20	1.395	.0314
23	25	1.20	1.953	.0245	72	75	1.20	1.399	.0206
24	26	.80	2.323	.0206	73	77	2.00	.838	.0134
25	27	.80	2.039	.0200	74	78	1.20	1.088	.0187
26	28	1.20	1.822	.0104	75	79	1.20	1.289	.0204
27	29	1.20	1.904	.0096	76	80	2.00	.624	.0560
28	30	.80	2.051	.0145	77	81	1.20	1.619	.0105
29	31	.80	2.415	.0136	78	83	1.20	1.983	.0082
30	32	.80	2.843	.0181	79	84	.80	1.870	.1085
31	33	.80	3.365	.0092	80	85	1.20	1.752	.0078
32	34	.80	3.868	.0074	81	87	1.20	1.278	.0188
33	35	.80	2.794	.0081	82	88	1.20	1.865	.0087
34	36	.80	4.063	.0137	83	89	1.20	1.890	.0177
35	37	.60	5.102	.0104	84	90	1.20	1.677	.0153
36	38	.60	4.193	.0147	85	91	1.20	1.847	.0095
37	39	.60	3.591	.0075	86	92	1.20	1.750	.0116
38	41	.80	2.952	.0159	87	93	1.20	1.706	.0327
39	42	.80	4.065	.0129	88	94	.80	2.000	.0168
40	43	.80	2.087	.0240	89	95	1.20	1.716	.0222
41	44	.80	3.419	.0080	90	96	1.20	1.615	.0773
42	45	.60	4.445	.0066	91	97	1.20	1.900	.0261
43	46	.80	3.765	.0159	92	98	1.20	1.816	.0225
44	47	.80	3.466	.0110	93	100	1.20	1.841	.0122
45	48	.80	3.438	.0109	94	102	1.20	1.863	.0187
46	49	.60	4.950	.0092	95	103	.80	2.147	.0222
47	50	.80	2.577	.0304	96	105	1.20	1.332	.0308
48	51	.80	3.215	.0138	97	106	.80	2.195	.0152
49	52	.80	2.962	.0136	98	0	-0	0	0
29		.050							

BIT ON LOOP 53

DATE 5/12/75

AEDC(ARO,INC.) ARNOLD AFS, TENNESSEE
VON KARMAN GAS DYNAMICS FACILITY
50 INCH HYPERSONIC TUNNEL B
V418-B7A

GROUP	TEST CONDITION	MODEL	MACH NO	PO,PSIA	TO,DEG R	ALPHA-MODEL	ALPHA-SECTOR	ALPHA-PREBEND	ROLL MODEL	YAW
29	11	140 B	7.94	209.5	1270	25.05	4.95	30.00	180.00	-.0

T-INF (DEG R)	P-INF (PSIA)	Q-INF (PSIA)	V-INF (FT/SEC)	RHO-INF (SLUGS/FT3)	MU-INF (LB-SEC/FT2)	RE/FT (FT-1)	HREF-FR (R= .0400FT)	STFR (R= .0400FT)	SWITCH POSITION
93.4	.623	.994	3759	2.025E-05	7.516E-08	1.013E 06	1.613E-02	2.673E-02	2

TC NO	TW	DTWDT	QDOT	H(TO)	H(TO)/HREF	H(.9TO)	H(.9TO)/HREF	X/L	Z,FULL SCALE(IN)
								ACCESS HATCH WINDOW	
107	526.7	1.970	.281	3.783E-04	.0234	4.563E-04	.0283	.2050	396.2000
								FUSELAGE VENT PANEL NO. 3 AND 1	
108	527.9	3.531	.373	5.017E-04	.0311	6.053E-04	.0375	.1244	377.5000
109	526.9	3.071	.379	5.091E-04	.0316	6.140E-04	.0381	.1302	377.5000
110	526.5	2.914	.368	4.950E-04	.0307	5.969E-04	.0370	.1360	377.5000
111	526.7	2.921	.351	4.718E-04	.0292	5.690E-04	.0353	.1418	377.5000
112	526.6	3.100	.367	4.931E-04	.0306	5.947E-04	.0369	.1476	377.5000
113	525.7	2.879	.329	4.418E-04	.0274	5.326E-04	.0330	.1215	273.5000
114	526.3	3.020	.361	4.856E-04	.0301	5.856E-04	.0363	.1273	273.5000
115	526.1	2.797	.346	4.646E-04	.0288	5.602E-04	.0347	.1331	273.5000
116	525.6	2.829	.346	4.644E-04	.0288	5.600E-04	.0347	.1389	273.5000
117	525.9	3.103	.356	4.782E-04	.0296	5.766E-04	.0357	.1447	273.5000
118	523.6	2.613	.360	4.818E-04	.0299	5.805E-04	.0360	.1409	366.0000
119	523.9	2.998	.386	5.175E-04	.0321	6.236E-04	.0387	.1442	366.0000
120	523.8	3.012	.375	5.017E-04	.0311	6.046E-04	.0375	.1215	359.5000
121	522.8	2.651	.324	4.330E-04	.0268	5.216E-04	.0323	.1303	359.5000
122	522.3	2.828	.350	4.682E-04	.0290	5.640E-04	.0350	.1337	359.5000
								LOWER RCS NOZZLES	
124	533.8	2.406	.215	2.917E-04	.0181	3.525E-04	.0219	.0950	400.0000
125	532.7	2.373	.258	3.503E-04	.0217	4.232E-04	.0262	.0988	400.0000
126	532.0	2.062	.282	3.825E-04	.0237	4.620E-04	.0286	.1027	400.0000
127	533.5	2.353	.317	4.306E-04	.0267	5.203E-04	.0322	.0911	395.0000
128	532.9	2.501	.304	4.116E-04	.0255	4.973E-04	.0308	.0950	395.0000
129	532.3	2.573	.302	4.091E-04	.0254	4.942E-04	.0306	.0988	395.0000
130	536.1	2.475	.297	4.039E-04	.0250	4.883E-04	.0303	.0810	390.0000
131	534.3	2.472	.365	4.964E-04	.0308	6.000E-04	.0372	.0857	390.0000
132	532.3	2.730	.318	4.308E-04	.0267	5.203E-04	.0323	.0963	390.0000
133	533.7	2.340	.284	3.857E-04	.0239	4.660E-04	.0289	.0857	383.8000
134	532.0	2.808	.376	5.090E-04	.0315	6.147E-04	.0381	.0872	377.3000
135	531.8	3.771	.452	6.126E-04	.0380	7.399E-04	.0459	.0903	374.5500
136	530.8	3.949	.438	5.926E-04	.0367	7.155E-04	.0443	.0960	374.5500
137	532.0	3.744	.489	6.628E-04	.0411	8.005E-04	.0496	.0872	370.5500
138	531.1	3.969	.457	6.176E-04	.0383	7.458E-04	.0462	.0928	370.5500
139	533.6	3.765	.481	6.525E-04	.0404	7.884E-04	.0489	.0816	366.0500
140	530.2	3.843	.488	6.594E-04	.0409	7.961E-04	.0493	.0934	362.4000
141	528.6	3.495	.461	6.211E-04	.0385	7.494E-04	.0465	.0973	362.4000
142	526.5	2.843	.309	4.148E-04	.0257	5.003E-04	.0310	.0833	355.2000
143	529.6	4.331	.434	5.860E-04	.0363	7.073E-04	.0438	.0919	355.2000
144	527.9	4.916	.646	8.694E-04	.0539	1.049E-03	.0650	.0949	349.0000

DATE 5/12/75

AEDC(ARO,INC.) ARNOLD AFS, TENNESSEE
VON KARMAN GAS DYNAMICS FACILITY
50 INCH HYPERSONIC TUNNEL B
V418-87A

GROUP	TEST CONDITION	MODEL	MACH NO	PO,PSIA	TO,DEG R	ALPHA-MODEL	ALPHA-SECTOR	ALPHA-PREBEND	ROLL MODEL	YAW
29	11	140 B	7.94	209.5	1270	25.05	4.95	30.00	180.00	-.0

T-INF (DEG R)	P-INF (PSIA)	Q-INF (PSIA)	V-INF (FT/SEC)	RHO-INF (SLUGS/FT3)	MU-INF (LB-SEC/FT2)	RE/FT (FT-1)	HREF-FR (R= .0400FT)	STFR (R= .0400FT)	SWITCH POSITION
93.4	.023	.994	3759	2.025E-05	7.516E-08	1.013E 06	1.613E-02	2.673E-02	2

TC NO	TW	DTWDT	QDOT	H(TO)	H(TO)/HREF	H(.9TO)	H(.9TO)/HREF	X/L	2Y/B
								UPPER RCS NOZZLES	
161	538.2	1.670	.198	2.706E-04	.0168	3.274E-04	.0203	.0619	-.0160
162	537.4	1.839	.174	2.379E-04	.0147	2.878E-04	.0178	.0709	-.0160
163	536.0	1.327	.163	2.221E-04	.0138	2.685E-04	.0166	.0807	-.0160
164	535.2	.871	.114	1.546E-04	.0096	1.868E-04	.0116	.0943	-.0160
165	534.7	.510	.064	8.733E-05	.0054	1.056E-04	.0065	.0978	-.0160
166	534.6	.540	.069	9.406E-05	.0058	1.137E-04	.0070	.1013	-.0160
167	538.4	1.615	.219	2.993E-04	.0185	3.621E-04	.0224	.0619	-.0320
168	537.7	1.671	.176	2.397E-04	.0149	2.900E-04	.0180	.0709	-.0320
169	535.9	1.199	.146	1.985E-04	.0123	2.401E-04	.0149	.0807	-.0320
170	535.2	.949	.119	1.615E-04	.0100	1.952E-04	.0121	.0943	-.0320
171	534.6	.951	.115	1.559E-04	.0097	1.884E-04	.0117	.0978	-.0320
172	533.8	.757	.099	1.339E-04	.0083	1.619E-04	.0100	.1013	-.0320
173	536.3	1.303	.174	2.372E-04	.0147	2.868E-04	.0178	.0807	-.0480
174	534.8	.865	.099	1.340E-04	.0083	1.620E-04	.0100	.0943	-.0480
175	534.4	.681	.098	1.327E-04	.0082	1.604E-04	.0099	.0978	-.0480
176	533.9	.620	.084	1.146E-04	.0071	1.385E-04	.0086	.1013	-.0480
								CANOPY	
177	537.1	2.814	.388	5.286E-04	.0328	6.393E-04	.0396		
178	538.6	4.519	.890	1.216E-03	.0754	1.472E-03	.0912		
179	540.3	5.940	1.248	1.709E-03	.1059	2.069E-03	.1283		
180	534.7	1.329	.173	2.356E-04	.0146	2.848E-04	.0177		
181	535.4	2.074	.282	3.833E-04	.0238	4.635E-04	.0287		
182	536.5	3.245	.463	6.307E-04	.0391	7.627E-04	.0473		
183	532.0	.369	.046	6.273E-05	.0039	7.576E-05	.0047		
184	532.3	.435	.059	8.053E-05	.0050	9.728E-05	.0060		
185	534.1	1.276	.153	2.082E-04	.0129	2.516E-04	.0156		
186	535.1	1.990	.250	3.399E-04	.0211	4.108E-04	.0255		
187	537.1	3.864	.515	7.024E-04	.0435	8.496E-04	.0527		
188	537.6	4.218	.983	1.342E-03	.0832	1.623E-03	.1006		
189	533.5	.882	.126	1.704E-04	.0106	2.059E-04	.0128		
190	534.3	1.446	.208	2.825E-04	.0175	3.414E-04	.0212		
191	535.6	2.920	.446	6.073E-04	.0376	7.343E-04	.0455		

DATE 5/12/75

AEDC(ARO,INC.) ARNOLD AFS, TENNESSEE
VON KARMAN GAS DYNAMICS FACILITY
50 INCH HYPERSONIC TUNNEL B
V41R-B7A

GROUP	TEST CONDITION	MODEL	MACH NO	PO,PSIA	TO,DEG R	ALPHA-MODEL	ALPHA-SECTOR	ALPHA-PREBEND	ROLL MODEL	YAW
29	11	140 H	7.94	209.5	1270	25.05	4.95	30.00	180.00	-.0

T-INF (DEG R)	P-INF (PSIA)	Q-INF (PSIA)	V-INF (FT/SEC)	RHO-INF (SLUGS/FT3)	MU-INF (LB-SEC/FT2)	RE/FT (FT-1)	HREF-FR (H= .0400FT)	STFR (R= .0400FT)	SWITCH POSITION
93.4	.023	.594	3759	2.025E-05	7.516E-08	1.013E 06	1.613E-02	2.673E-02	2

IC NO	TW	DTWDT	QDOT	H(TO)	H(TO)/HREF	H(.9TO)	H(.9TO)/HREF
							CANOPY
192	530.9	.344	.049	6.560E-05	.0041	7.920E-05	.0049
193	536.4	3.536	.682	9.288E-04	.0576	1.123E-03	.0696
194	531.9	.836	.108	1.459E-04	.0090	1.763E-04	.0109
195	533.3	2.128	.262	3.557E-04	.0220	4.298E-04	.0266
196	534.2	2.355	.309	4.200E-04	.0260	5.075E-04	.0315
197	529.3	.457	.045	6.106E-05	.0038	7.369E-05	.0046
198	529.8	.494	.058	7.784E-05	.0048	9.400E-05	.0058
199	530.9	.525	.070	9.520E-05	.0059	1.149E-04	.0071
200	532.3	1.807	.257	3.484E-04	.0216	4.208E-04	.0261
201	534.2	2.994	.423	5.740E-04	.0356	6.937E-04	.0430
202	535.0	2.686	.340	4.618E-04	.0286	5.582E-04	.0346
203	530.1	.895	.111	1.497E-04	.0093	1.807E-04	.0112
204	530.7	.835	.130	1.752E-04	.0109	2.115E-04	.0131
205	532.7	2.326	.302	4.910E-04	.0304	5.931E-04	.0368
206	528.1	-.511	-.068	-9.097E-05	-.0056	-1.097E-04	-.0068
207	533.8	2.686	.360	4.885E-04	.0303	5.903E-04	.0366
208	528.7	-4.289	-.575	-7.751E-04	-.0480	-9.353E-04	-.0580
209	529.1	.360	.049	6.662E-05	.0041	8.040E-05	.0050
210	530.5	.778	.104	1.402E-04	.0087	1.692E-04	.0105
211	527.5	.672	.081	1.096E-04	.0068	1.322E-04	.0082
212	528.4	.371	.050	6.728E-05	.0042	8.118E-05	.0050
213	529.0	.441	.058	7.871E-05	.0049	9.499E-05	.0059
214	529.1	.468	.065	8.824E-05	.0055	1.065E-04	.0066
215	530.0	.754	.107	1.444E-04	.0089	1.743E-04	.0108
216	532.3	2.034	.289	3.910E-04	.0242	4.723E-04	.0293
217	532.4	1.576	.224	3.040E-04	.0188	3.672E-04	.0228
218	528.3	.482	.066	8.927E-05	.0055	1.077E-04	.0067
219	529.2	1.145	.161	2.167E-04	.0134	2.616E-04	.0162
220	529.8	.818	.112	1.516E-04	.0094	1.830E-04	.0113

GROUP 29 CENTERLINE TIME 2.60

CH	TC	FIT LENGTH	DTDWT	UNCERTAINTY	CH	TC	FIT LENGTH	DTDWT	UNCERTAINTY
1	107	1.20	1.970	.0073	50	173	1.20	1.303	.0217
2	108	.80	3.531	.0087	51	174	2.00	.865	.0180
3	109	.80	3.071	.0134	52	175	2.00	.681	.0237
4	110	.80	2.914	.0104	53	176	2.00	.620	.0144
5	111	.80	2.921	.0215	54	177	.80	2.814	.0147
6	112	.80	3.100	.0068	55	178	.60	4.519	.0095
7	113	.80	2.879	.0936	56	179	.60	5.940	.0259
8	114	.80	3.020	.0089	57	180	1.20	1.329	.0167
9	115	.80	2.797	.0219	58	181	.80	2.074	.0147
10	116	.80	2.829	.0106	59	182	.80	3.245	.0177
11	117	.80	3.103	.0143	60	183	2.00	.369	.0228
12	118	.80	2.613	.0261	61	184	2.00	.435	.0363
13	119	.80	2.998	.0116	62	185	1.20	1.276	.0141
14	120	.80	3.012	.0133	63	186	.80	1.990	.0122
15	121	.80	2.651	.0222	64	187	.80	3.864	.0127
16	122	.80	2.828	.0202	65	188	.60	4.218	.0129
17	124	.80	2.406	.0243	66	189	2.00	.882	.0140
18	125	.80	2.373	.0122	67	190	1.20	1.446	.0111
19	126	.80	2.062	.0227	68	191	.80	2.920	.1076
20	127	.80	2.353	.0235	69	192	2.00	.344	.0701
21	128	.80	2.591	.0145	70	193	.80	3.538	.0105
22	129	.80	2.573	.0117	71	194	2.00	.836	.0221
23	130	.80	2.475	.0314	72	195	.80	2.128	.0170
24	131	.80	2.472	.0148	73	196	.80	2.355	.0143
25	132	.80	2.730	.0121	74	197	2.00	.457	.0230
26	133	.80	2.340	.0192	75	198	2.00	.498	.0215
27	134	.80	2.898	.0119	76	199	2.00	.525	.0607
28	135	.80	3.771	.0088	77	200	1.20	1.807	.0092
29	136	.80	3.945	.0061	78	201	.80	2.994	.0127
30	137	.80	3.744	.0069	79	202	.80	2.686	.0768
31	138	.80	3.969	.0060	80	203	2.00	.895	.0097
32	139	.80	3.765	.0081	81	204	2.00	.835	.0112
33	140	.80	3.843	.0059	82	205	.80	2.326	.0093
34	141	.80	3.495	.0083	83	206	2.00	-.511	-.0439
35	142	.80	2.843	.0086	84	207	.80	2.686	.0144
36	143	.60	4.331	.0113	85	208	2.00	-4.289	-1.2669
37	144	.60	4.916	.0092	86	209	2.00	.360	.0378
38	161	1.20	1.670	.0111	87	210	2.00	.778	.0281
39	162	1.20	1.839	.0108	88	211	2.00	.672	.0176
40	163	1.20	1.327	.0209	89	212	2.00	.371	.0351
41	164	2.00	.871	.0100	90	213	2.00	.441	.1211
42	165	2.00	.510	.0204	91	214	2.00	.468	.0329
43	166	2.00	.540	.0243	92	215	2.00	.754	.0524
44	167	1.20	1.615	.0124	93	216	.80	2.034	.0146
45	168	1.20	1.671	.0112	94	217	1.20	1.576	.0131
46	169	1.20	1.199	.0141	95	218	2.00	.482	.0250
47	170	2.00	.949	.0185	96	219	1.20	1.145	.0372
48	171	2.00	.951	.0113	97	220	2.00	.818	.0132
49	172	2.00	.757	.0132	98	0	-0	0	0
30		.050							

BIT ON LOOP 52

DATE 5/12/75

AEDC(ARO,INC.) ARNOLD AFS, TENNESSEE
VON KARMAN GAS DYNAMICS FACILITY
50 INCH HYPERSONIC TUNNEL B
V41A-87A

GROUP	TEST CONDITION	MODEL	MACH NO	PO,PSIA	TO,DEG R	ALPHA-MODEL	ALPHA-SECTOR	ALPHA-PREBEND	ROLL MODEL	YAW
30	11	140 B	7.94	209.5	1271	25.04	4.96	30.00	180.00	-.0

T-INF (DEG R)	P-INF (PSIA)	Q-INF (PSIA)	V-INF (FT/SEC)	RHO-INF (SLUGS/FT3)	MU-INF (LB-SEC/FT2)	RE/FT (FT-1)	HREF-FR (R= .0400FT)	STFR (R= .0400FT)	SWITCH POSITION
93.4	.023	.994	3760	2.024E-05	7.518E-08	1.012E 06	1.613E-02	2.673E-02	3

TC NO	TW	DTWDT	QDOT	H(TO)	H(TO)/HREF	H(.9TO)	H(.9TO)/HREF	X/L	2Y/B
								CANOPY	
221	525.5	.323	.039	5.231E-05	.0032	6.307E-05	.0039		
222	525.3	.482	.059	7.929E-05	.0049	9.558E-05	.0059		
223	526.4	1.814	.245	3.296E-04	.0204	3.975E-04	.0246		
								ESCAPE HATCH AND WINDOW	
224	531.5	2.253	.224	3.032E-04	.0188	3.661E-04	.0227	.1933	.0162
225	531.0	1.473	.176	2.380E-04	.0148	2.874E-04	.0178	.1972	.0162
226	531.4	3.353	.353	4.773E-04	.0296	5.764E-04	.0357	.1933	.0384
227	528.3	2.603	.380	5.121E-04	.0317	6.178E-04	.0383	.1972	.0384
228	529.3	2.919	.375	5.052E-04	.0313	6.097E-04	.0378	.1933	.0653
229	529.1	2.302	.295	3.982E-04	.0247	4.805E-04	.0298	.1972	.0653
232	530.0	.177	.024	3.231E-05	.0020	3.900E-05	.0024	.2567	.0235
233	530.4	.156	.024	3.193E-05	.0020	3.854E-05	.0024	.2606	.0235
236	528.9	.145	.021	2.854E-05	.0018	3.443E-05	.0021	.2567	.0491
237	529.4	.195	.027	3.694E-05	.0023	4.458E-05	.0028	.2606	.0491
								CARGO BAY HINGE NO. 1	
								X/L	Z,FULL SCALE(IN)
238	529.2	1.045	.140	1.883E-04	.0117	2.272E-04	.0141	.2879	420.0000
239	529.7	.986	.132	1.779E-04	.0110	2.147E-04	.0133	.2917	420.0000
240	529.2	.839	.120	1.613E-04	.0100	1.946E-04	.0121	.2840	415.0000
241	529.1	.950	.133	1.797E-04	.0111	2.169E-04	.0134	.2879	415.0000
242	529.2	.849	.121	1.632E-04	.0101	1.970E-04	.0122	.2917	415.0000
243	526.7	1.158	.141	1.897E-04	.0118	2.287E-04	.0142	.2801	405.0000
244	526.9	.587	.068	9.194E-05	.0057	1.109E-04	.0069	.2840	405.0000
								CARGO BAY HINGE NO. 2	
								X/L	Z,FULL SCALE(IN)
245	529.6	.927	.132	1.783E-04	.0111	2.152E-04	.0133	.3192	420.0000
246	529.8	.973	.139	1.872E-04	.0116	2.260E-04	.0140	.3439	420.0000
247	529.2	.862	.127	1.709E-04	.0106	2.063E-04	.0128	.3362	415.0000
248	529.2	.748	.110	1.484E-04	.0092	1.790E-04	.0111	.3401	415.0000
249	529.3	1.020	.150	2.023E-04	.0125	2.441E-04	.0151	.3439	415.0000
250	527.7	1.194	.148	1.992E-04	.0123	2.404E-04	.0149	.3323	405.0000
251	527.7	1.183	.145	1.948E-04	.0121	2.350E-04	.0146	.3362	405.0000
								CARGO BAY HINGE NO. 3	
								X/L	Z,FULL SCALE(IN)
252	528.9	.674	.098	1.314E-04	.0081	1.586E-04	.0098	.3923	420.0000
253	529.4	.740	.107	1.446E-04	.0090	1.745E-04	.0108	.3961	420.0000
254	528.4	.611	.092	1.245E-04	.0077	1.502E-04	.0093	.3884	415.0000
257	527.0	1.433	.193	2.590E-04	.0161	3.124E-04	.0194	.3845	405.0000
258	527.7	1.715	.233	3.133E-04	.0194	3.779E-04	.0234	.3884	405.0000

DATE 5/12/75

AEDC(ARO,INC.) ARNOLD AFS, TENNESSEE
VON KARMAN GAS DYNAMICS FACILITY
50 INCH HYPERSONIC TUNNEL B
V418-B7A

GROUP	TEST CONDITION	MODEL	MACH NO	PO,PSIA	TO,DEG R	ALPHA-MODEL	ALPHA-SECTOR	ALPHA-PREBEND	ROLL MODEL	YAW
30	11	140 B	7.94	209.5	1271	25.04	4.96	30.00	180.00	-.0

T-INF (DEG R)	P-INF (PSIA)	Q-INF (PSIA)	V-INF (FT/SEC)	RHO-INF (SLUGS/FT3)	MU-INF (LB-SEC/FT2)	RE/FT (FT-1)	HREF-FR (R= .0400FT)	STFR (R= .0400FT)	SWITCH POSITION
93.4	.023	.994	3760	2.024E-05	7.518E-08	1.012E 06	1.613E-02	2.673E-02	3

TOP CENTERLINE

TC NO	TW	DTWDT	QDOT	H(TO)	H(TO)/HREF	H(.9TO)	H(.9TO)/HREF	X/L
367	570.6	58.116	6.953	9.929E-03	.6154	1.213E-02	.7518	0
368	554.2	43.162	5.530	7.718E-03	.4783	9.381E-03	.5814	.0008
369	546.0	26.921	3.109	4.373E-03	.2710	5.302E-03	.3286	.0019
370	540.5	19.515	2.387	3.269E-03	.2026	3.957E-03	.2453	.0037
371	539.3	15.910	1.560	2.133E-03	.1322	2.581E-03	.1600	.0058
372	535.8	10.774	1.387	1.887E-03	.1169	2.281E-03	.1414	.0087
373	535.2	7.117	.932	1.267E-03	.0785	1.531E-03	.0949	.0118
374	534.2	5.666	.741	1.007E-03	.0624	1.216E-03	.0754	.0151
375	533.6	4.474	.611	8.293E-04	.0514	1.002E-03	.0621	.0182
376	534.5	4.019	.530	7.193E-04	.0446	8.693E-04	.0539	.0215
377	535.1	3.676	.473	6.431E-04	.0399	7.774E-04	.0482	.0246
378	535.1	3.088	.360	4.895E-04	.0303	5.917E-04	.0367	.0278
379	536.1	1.942	.239	3.250E-04	.0201	3.929E-04	.0244	.0609
380	535.0	1.562	.161	2.182E-04	.0135	2.638E-04	.0163	.0646
381	534.4	1.389	.180	2.444E-04	.0151	2.953E-04	.0183	.0684
382	533.7	1.170	.153	2.077E-04	.0129	2.509E-04	.0156	.0721
383	533.4	1.116	.149	2.026E-04	.0126	2.448E-04	.0152	.0760
384	533.4	.863	.120	1.631E-04	.0101	1.970E-04	.0122	.0796
385	533.4	.787	.101	1.372E-04	.0085	1.658E-04	.0103	.0789
386	533.4	.758	.090	1.216E-04	.0075	1.469E-04	.0091	.0982
387	533.4	.839	.103	1.397E-04	.0087	1.688E-04	.0105	.1019
388	533.0	.940	.089	1.211E-04	.0075	1.463E-04	.0091	.1160
389	532.3	.766	.111	1.504E-04	.0093	1.816E-04	.0113	.1195
390	531.9	.641	.101	1.367E-04	.0085	1.651E-04	.0102	.1231
391	531.4	.517	.082	1.113E-04	.0069	1.344E-04	.0083	.1268
392	531.3	.457	.078	1.057E-04	.0066	1.277E-04	.0079	.1305
393	531.0	.438	.074	1.000E-04	.0062	1.208E-04	.0075	.1338
394	530.8	.390	.065	8.846E-05	.0055	1.068E-04	.0066	.1376
395	530.7	.321	.048	6.485E-05	.0040	7.830E-05	.0049	.1411
396	530.8	.339	.050	6.789E-05	.0042	8.197E-05	.0051	.1448
397	531.0	.346	.051	6.931E-05	.0043	8.368E-05	.0052	.1483
398	530.7	.386	.054	7.334E-05	.0045	8.855E-05	.0055	.1519
399	532.8	1.459	.195	2.638E-04	.0164	3.187E-04	.0198	.1556

DATE 5/12/75

AEDC(ARO,INC.) ARNOLD AFS, TENNESSEE
VON KARMAN GAS DYNAMICS FACILITY
50 INCH HYPERSONIC TUNNEL B
V41B-87A

GROUP	TEST CONDITION	MODEL	MACH NO	PO,PSIA	TO,DEG R	ALPHA-MODEL	ALPHA-SECTOR	ALPHA-PREBEND	ROLL MODEL	YAW
30	11	140 B	7.94	209.5	1271	25.04	4.96	30.00	180.00	-.0

T-INF (DEG R)	P-INF (PSIA)	Q-INF (PSIA)	V-INF (FT/SEC)	RHO-INF (SLUGS/FT3)	MU-INF (LB-SEC/FT2)	RE/FT (FT-1)	HREF-FR (R= .0400FT)	STFR (R= .0400FT)	SWITCH POSITION
93.4	.023	.594	3760	2.024E-05	7.518E-08	1.012E 06	1.613E-02	2.673E-02	3

TC NO	TW	DTWDT	QDOT	H(TO)	H(TO)/HREF	H(.9TO)	H(.9TO)/HREF	X/L
								TOP CENTERLINE
400	532.9	2.239	.302	4.088E-04	.0253	4.939E-04	.0306	.1582
401	533.1	2.581	.334	4.530E-04	.0281	5.473E-04	.0339	.1608
402	533.8	2.805	.349	4.742E-04	.0294	5.730E-04	.0355	.1635
403	534.5	3.385	.411	5.587E-04	.0346	6.752E-04	.0418	.1664
404	534.7	3.717	.450	6.113E-04	.0379	7.389E-04	.0458	.1691
405	535.2	4.254	.515	7.003E-04	.0434	8.465E-04	.0525	.1720
406	534.8	3.796	.460	6.245E-04	.0387	7.548E-04	.0468	.1748
407	534.7	3.519	.454	6.173E-04	.0383	7.461E-04	.0462	.1769
408	534.8	3.537	.518	7.042E-04	.0436	8.511E-04	.0528	.1800
409	534.0	2.922	.420	5.703E-04	.0353	6.892E-04	.0427	.1831
410	533.3	2.559	.368	4.989E-04	.0309	6.027E-04	.0374	.1863
411	532.9	2.029	.304	4.123E-04	.0256	4.981E-04	.0309	.1894
412	533.2	1.553	.211	2.857E-04	.0177	3.452E-04	.0214	.1931
413	532.1	1.567	.210	2.839E-04	.0176	3.429E-04	.0212	.1972
414	532.2	.676	.091	1.226E-04	.0076	1.480E-04	.0092	.2049
415	531.1	.338	.033	4.508E-05	.0028	5.443E-05	.0034	.2250
416	531.1	.209	.024	3.304E-05	.0020	3.990E-05	.0025	.2500
								NOSE TC (Z = 338)
								X/L 2Y/B
145	560.0	38.265	5.194	7.308E-03	.4529	8.899E-03	.5516	.0008 .5039
146	558.9	40.215	5.456	7.664E-03	.4750	9.329E-03	.5782	.0023 .5082
147	551.9	32.211	4.355	6.058E-03	.3754	7.358E-03	.4561	.0043 .5135
148	549.4	24.449	3.411	4.729E-03	.2931	5.740E-03	.3557	.0068 .5205
149	545.3	18.245	2.639	3.637E-03	.2254	4.409E-03	.2733	.0095 .5279
150	547.4	15.981	2.292	3.169E-03	.1964	3.844E-03	.2383	.0122 .5354
151	545.5	11.558	1.625	2.241E-03	.1389	2.717E-03	.1684	.0218 .5621
152	544.5	11.941	1.619	2.229E-03	.1382	2.702E-03	.1675	.0251 .5712
153	544.3	11.061	1.351	1.859E-03	.1152	2.253E-03	.1397	.0286 .5808
154	544.3	10.629	1.322	1.819E-03	.1128	2.205E-03	.1367	.0319 .5898
155	543.0	10.368	1.302	1.789E-03	.1109	2.168E-03	.1344	.0354 .5995
156	542.2	9.756	1.212	1.663E-03	.1031	2.015E-03	.1249	.0387 .6085
157	541.4	9.626	1.182	1.621E-03	.1005	1.963E-03	.1217	.0420 .6176
158	540.6	10.290	1.263	1.730E-03	.1072	2.095E-03	.1298	.0462 .6294
159	539.8	9.746	1.091	1.493E-03	.0925	1.807E-03	.1120	.0503 .6406

GROUP 30 CENTERLINE TIME 2.55

CH	TC	FIT LENGTH	DTDWT	UNCERTAINTY	CH	TC	FIT LENGTH	DTDWT	UNCERTAINTY
1	221	2.00	.323	.0353	50	384	2.00	.863	.0116
2	222	2.00	.482	.0218	51	385	2.00	.787	.0177
3	223	1.20	1.814	.0133	52	386	2.00	.758	.0201
4	224	.80	2.253	.0109	53	387	2.00	.839	.0119
5	225	1.20	1.473	.0202	54	388	2.00	.940	.0128
6	226	.80	3.353	.0120	55	389	2.00	.766	.0121
7	227	.80	2.603	.1410	56	390	2.00	.641	.0479
8	228	.80	2.919	.0396	57	391	2.00	.517	.0148
9	229	.80	2.302	.0295	58	392	2.00	.457	.0157
10	232	2.00	.177	.0510	59	393	2.00	.438	.0304
11	233	2.00	.156	.0894	60	394	2.00	.390	.0184
12	236	2.00	.145	.0681	61	395	2.00	.321	.0400
13	237	2.00	.195	.0358	62	396	2.00	.339	.0254
14	238	1.20	1.045	.0197	63	397	2.00	.346	.0274
15	239	2.00	.986	.0142	64	398	2.00	.386	.0734
16	240	2.00	.639	.0163	65	399	1.20	1.459	.0163
17	241	1.20	.950	.0610	66	400	.80	2.238	.0192
18	242	2.00	.849	.0125	67	401	.80	2.581	.0138
19	243	1.20	1.158	.0181	68	402	.80	2.805	.1404
20	244	2.00	.587	.0292	69	403	.80	3.385	.0223
21	245	2.00	.927	.0088	70	404	.80	3.717	.0095
22	246	2.00	.973	.0097	71	405	.60	4.254	.0204
23	247	2.00	.862	.0263	72	406	.80	3.796	.0093
24	248	2.00	.748	.0147	73	407	.80	3.519	.0088
25	249	1.20	1.020	.0333	74	408	.80	3.537	.0133
26	250	1.20	1.184	.0151	75	409	.80	2.922	.0160
27	251	1.20	1.183	.0196	76	410	.80	2.559	.0153
28	252	2.00	.674	.0124	77	411	.80	2.029	.0149
29	253	2.00	.740	.0103	78	412	1.20	1.553	.0126
30	254	2.00	.611	.0141	79	413	1.20	1.567	.0772
31	257	1.20	1.433	.0112	80	414	2.00	.676	.0103
32	258	1.20	1.715	.0132	81	415	2.00	.338	.0297
33	367	.20	58.116	.0027	82	416	2.00	.209	.0371
34	368	.20	43.162	.0053	83	145	.20	38.265	.0075
35	369	.30	26.921	.0052	84	146	.20	40.215	.0062
36	370	.30	19.515	.0066	85	147	.30	32.211	.0038
37	371	.40	15.910	.0063	86	148	.30	24.449	.0051
38	372	.40	10.774	.0094	87	149	.30	18.245	.0133
39	373	.60	7.117	.0066	88	150	.40	15.981	.0056
40	374	.60	5.666	.0144	89	151	.40	11.558	.0097
41	375	.60	4.474	.0096	90	152	.40	11.941	.0343
42	376	.80	4.015	.0125	91	153	.40	11.061	.0113
43	377	.80	3.676	.0160	92	154	.40	10.629	.0203
44	378	.80	3.088	.0088	93	155	.40	10.368	.0085
45	379	1.20	1.942	.0094	94	156	.40	9.756	.0144
46	380	1.20	1.562	.0114	95	157	.40	9.626	.0121
47	381	1.20	1.389	.0260	96	158	.40	10.290	.0144
48	382	1.20	1.170	.0211	97	159	.40	9.746	.0130
49	383	1.20	1.116	.0150	98	0	-0	0	0

DATE 5/12/75

AEDC(APO,INC.) ARNOLD AFS, TENNESSEE
VON KARMAN GAS DYNAMICS FACILITY
50 INCH HYPERSONIC TUNNEL B
V41A-B7A

GROUP	TEST CONDITION	MODEL	MACH NO	PO,PSIA	TO,DEG R	ALPHA-MODEL	ALPHA-SECTOR	ALPHA-PREBEND	ROLL MODEL	YAW
31	12	140 B	7.94	208.7	1271	30.04	-.04	30.00	179.98	.0

T-INF (DEG R)	P-INF (PSIA)	Q-INF (PSIA)	V-INF (FT/SEC)	RHO-INF (SLUGS/FT3)	MU-INF (LB-SEC/FT2)	RE/FT (FT-1)	HREF-FR (R= .0400FT)	STFR (R= .0400FT)	SWITCH POSITION
93.4	.022	.991	3760	2.016E-05	7.520E-08	1.008E 06	1.610E-02	2.679E-02	1

TC NO	TW	DT*DT	CDOT	H(TO)	H(TO)/HREF	H(.9TO)	H(.9TO)/HREF	X/L	Z,FULL SCALE(IN)
								FUSELAGE VENT NO. 1	
1	530.4	.723	.095	1.284E-04	.0080	1.550E-04	.0096	.4434	376.6300
2	529.3	.680	.091	1.229E-04	.0076	1.483E-04	.0092	.4264	371.6300
3	529.0	.608	.083	1.121E-04	.0070	1.353E-04	.0084	.4303	371.6300
4	529.2	.606	.082	1.105E-04	.0069	1.334E-04	.0083	.4342	371.6300
5	529.5	.556	.074	9.954E-05	.0062	1.201E-04	.0075	.4380	371.6300
6	529.7	.538	.071	9.573E-05	.0059	1.155E-04	.0072	.4434	369.1300
7	526.7	.194	.028	3.785E-05	.0024	4.564E-05	.0028	.4226	366.6300
8	528.6	.469	.070	9.480E-05	.0059	1.144E-04	.0071	.4264	366.6300
9	528.3	.306	.044	5.966E-05	.0037	7.197E-05	.0045	.4303	366.6300
10	528.4	.369	.052	7.057E-05	.0044	8.514E-05	.0053	.4342	366.6300
11	528.7	.437	.059	7.919E-05	.0049	9.555E-05	.0059	.4380	366.6300
12	529.2	.407	.056	7.520E-05	.0047	9.074E-05	.0056	.4496	366.6300
13	527.0	.315	.046	6.173E-05	.0038	7.445E-05	.0046	.4187	357.1300
14	528.3	.274	.037	5.009E-05	.0031	6.043E-05	.0038	.4396	361.6300
15	528.4	.329	.044	5.879E-05	.0037	7.092E-05	.0044	.4434	361.6300
16	527.5	.153	.021	2.766E-05	.0017	3.336E-05	.0021	.4396	355.6300
17	527.6	.127	.017	2.290E-05	.0014	2.762E-05	.0017	.4434	355.6300
18	527.0	.203	.028	3.780E-05	.0023	4.559E-05	.0028	.4396	351.6300
19	526.6	.166	.023	3.095E-05	.0019	3.732E-05	.0023	.4291	332.6300
								CARGO BAY VENT NO. 1	
22	531.7	1.816	.251	3.398E-04	.0211	4.103E-04	.0255	.3974	397.6300
23	531.3	1.961	.273	3.689E-04	.0229	4.454E-04	.0277	.4013	397.6300
24	532.0	2.492	.336	4.544E-04	.0282	5.487E-04	.0341	.4052	397.6300
25	532.6	2.731	.358	4.851E-04	.0301	5.860E-04	.0364	.4090	397.6300
26	533.3	3.102	.406	5.500E-04	.0342	6.645E-04	.0413	.4129	397.6300
27	530.9	2.096	.291	3.927E-04	.0244	4.741E-04	.0294	.3936	392.6300
28	530.5	2.060	.295	3.981E-04	.0247	4.806E-04	.0298	.3974	392.6300
29	531.2	2.479	.356	4.812E-04	.0299	5.810E-04	.0361	.4013	392.6300
30	531.6	2.763	.396	5.351E-04	.0332	6.461E-04	.0401	.4052	392.6300
31	532.2	3.169	.441	5.971E-04	.0371	7.211E-04	.0448	.4090	392.6300
32	532.5	3.357	.443	6.004E-04	.0373	7.252E-04	.0450	.4129	392.6300
33	530.9	1.817	.258	3.492E-04	.0217	4.216E-04	.0262	.4090	386.1300
34	532.0	2.492	.336	4.543E-04	.0282	5.487E-04	.0341	.4129	387.6300
35	530.7	2.210	.311	4.205E-04	.0261	5.076E-04	.0315	.3897	383.1300
36	529.8	1.139	.165	2.220E-04	.0138	2.679E-04	.0166	.4090	378.6300
37	530.7	1.543	.216	2.917E-04	.0181	3.522E-04	.0219	.4129	382.1300
38	530.0	1.200	.166	2.245E-04	.0139	2.709E-04	.0168	.4129	377.1300
39	529.7	.941	.137	1.845E-04	.0115	2.226E-04	.0138	.4001	373.6300
								PROTUBERANCES	
41	531.0	3.530	.471	6.360E-04	.0395	7.679E-04	.0477	.3546	379.0500
42	531.3	2.905	.395	5.342E-04	.0332	6.450E-04	.0401	.3604	379.0500
43	530.3	3.333	.431	5.816E-04	.0361	7.020E-04	.0436	.3450	374.0500

DATE 5/12/75

AEDC(ARO,INC.) ARNOLD AFS, TENNESSEE
VON KARMAN GAS DYNAMICS FACILITY
50 INCH HYPERSONIC TUNNEL B
V41B-B7A

GROUP	TEST CONDITION	MODEL	MACH NO	PO,PSIA	TO,DEG R	ALPHA-MODEL	ALPHA-SECTOR	ALPHA-PREBEND	ROLL MODEL	YAW
31	12	140 B	7.94	208.7	1271	30.04	-.04	30.00	179.98	.0

T-INF (DEG R)	P-INF (PSIA)	Q-INF (PSIA)	V-INF (FT/SEC)	RHO-INF (SLUGS/FT3)	MU-INF (LB-SEC/FT2)	RE/FT (FT-1)	HREF-FR (R= .0400FT)	STFR (R= .0400FT)	SWITCH POSITION
93.4	.022	.991	3760	2.016E-05	7.520E-08	1.008E 06	1.610E-02	2.679E-02	1

TC NO	TW	DTWDT	GDOT	H(TO)	H(TO)/HREF	H(.9TO)	H(.9TO)/HREF
44	530.6	3.374	.457	6.175E-04	.0383	7.455E-04	.0463
45	530.2	2.758	.380	5.127E-04	.0318	6.188E-04	.0384
46	529.9	2.549	.354	4.782E-04	.0297	5.771E-04	.0358
47	528.8	3.208	.423	5.703E-04	.0354	6.881E-04	.0427
48	527.7	1.307	.178	2.396E-04	.0149	2.890E-04	.0179
49	526.7	2.219	.303	4.071E-04	.0253	4.910E-04	.0305
50	526.7	1.039	.142	1.908E-04	.0118	2.301E-04	.0143
51	526.9	1.029	.147	1.974E-04	.0123	2.380E-04	.0148
52	525.2	1.090	.149	1.995E-04	.0124	2.405E-04	.0149
53	525.3	.921	.133	1.790E-04	.0111	2.158E-04	.0134
54	526.1	.835	.119	1.591E-04	.0099	1.919E-04	.0119
55	525.7	.657	.093	1.250E-04	.0078	1.507E-04	.0094
56	525.9	.917	.117	1.576E-04	.0098	1.900E-04	.0118
57	525.8	1.258	.153	2.049E-04	.0127	2.471E-04	.0153
58	525.5	2.047	.268	3.601E-04	.0224	4.341E-04	.0270
59	525.7	2.412	.315	4.230E-04	.0263	5.100E-04	.0317
60	524.5	2.400	.332	4.443E-04	.0276	5.354E-04	.0332
61	524.4	2.072	.261	3.490E-04	.0217	4.206E-04	.0261
62	524.3	1.336	.163	2.178E-04	.0135	2.625E-04	.0163
63	525.5	.912	.118	1.589E-04	.0099	1.916E-04	.0119
64	531.8	~~.000~~	~~.001~~	~~7.825E-07~~	~~.0000~~	~~9.514E-07~~	~~.0001~~
65	527.5	.781	.106	1.421E-04	.0088	1.714E-04	.0106
66	527.0	1.111	.139	1.874E-04	.0116	2.260E-04	.0140
67	526.7	1.667	.233	3.129E-04	.0194	3.774E-04	.0234
68	527.1	2.273	.286	3.648E-04	.0239	4.641E-04	.0288

PROTUBERANCES

X/L	Z,FULL SCALE(IN)
.3508	374.0500
.3566	374.0500
.3604	374.0500
.3392	366.5500
.3566	366.5500
.3392	360.7000
.3566	360.7000
.3604	360.7000
.3392	353.2000
.3450	353.2000
.3508	353.2000
.3566	353.2000

SUBLIMATOR VENT NO. 1

X/L	Z,FULL SCALE(IN)
.3031	371.1300
.3074	369.1300
.3089	363.6300
.3074	358.1300
.3031	356.1300
.2988	358.1300
.2973	363.6300
.2988	369.1300
.3031	376.1300
.3089	378.6300
.3101	372.6300
.3157	370.3800
.3128	363.6300

DATE 5/1[illegible]/75

AEDC(ARO,INC.) ARNOLD AFS, TENNESSEE
VON KARMAN GAS DYNAMICS FACILITY
50 INCH HYPERSONIC TUNNEL B
V41H-B7A

GROUP	TEST CONDITION	MODEL	MACH NO	PO,PSIA	TO,DEG R	ALPHA-MODEL	ALPHA-SECTOR	ALPHA-PREBEND	ROLL MODEL	YAW
31	12	140 B	7.94	208.7	1271	30.04	-.04	30.00	179.98	.0

T-INF (DEG R)	P-INF (PSIA)	Q-INF (PSIA)	V-INF (FT/SEC)	RHO-INF (SLUGS/FT3)	MU-INF (LB-SEC/FT2)	RE/FT (FT-1)	HREF-FR (R= .0400FT)	STFR (R= .0400FT)	SWITCH POSITION
93.4	.822	.591	3760	2.016E-05	7.520E-08	1.008E 06	1.610E-02	2.679E-02	1

TC NO	TW	DTWDT	QDOT	H(TO)	H(TO)/HREF	H(.9TO)	H(.9TO)/HREF	X/L	Z,FULL SCALE(IN)
								FUSELAGE VENT PANEL NO. 7	
69	522.4	1.107	.153	2.048E-04	.0127	2.467E-04	.0153	.2487	356.4000
70	523.0	1.097	.134	1.785E-04	.0111	2.151E-04	.0134	.2591	356.4000
71	522.1	1.108	.149	1.990E-04	.0124	2.395E-04	.0149	.2419	351.4000
72	521.2	1.133	.159	2.125E-04	.0132	2.559E-04	.0159	.2487	351.4000
73	521.5	1.154	.149	1.982E-04	.0123	2.386E-04	.0148	.2552	351.4000
74	522.1	1.077	.130	1.730E-04	.0107	2.084E-04	.0129	.2610	351.4000
75	518.2	1.271	.171	2.274E-04	.0141	2.736E-04	.0170	.2419	342.8000
77	519.9	1.073	.151	2.008E-04	.0125	2.417E-04	.0150	.2552	342.8000
78	521.5	1.564	.213	2.842E-04	.0176	3.423E-04	.0213	.2610	342.8000
79	519.3	1.504	.190	2.530E-04	.0157	3.043E-04	.0189	.2419	334.2000
80	517.3	1.900	.257	3.402E-04	.0211	4.092E-04	.0254	.2487	334.2000
81	519.0	1.877	.250	3.451E-04	.0214	4.153E-04	.0258	.2552	334.2000
								ACCESS HATCH WINDOW	
83	527.6	1.922	.256	3.441E-04	.0214	4.150E-04	.0258	.2131	398.0000
84	525.3	2.653	.348	4.666E-04	.0290	5.625E-04	.0349	.2131	388.0000
85	525.1	1.786	.242	3.245E-04	.0202	3.912E-04	.0243	.2131	383.0000
87	526.7	1.386	.197	2.652E-04	.0165	3.198E-04	.0199	.2222	395.8000
88	526.2	1.882	.262	3.519E-04	.0218	4.243E-04	.0263	.2193	386.5000
89	525.1	1.499	.219	2.939E-04	.0183	3.543E-04	.0220	.2177	381.8000
90	527.0	1.799	.244	3.282E-04	.0204	3.958E-04	.0246	.2297	389.5000
91	525.8	1.831	.250	3.355E-04	.0208	4.045E-04	.0251	.2243	382.5000
92	525.3	1.643	.231	3.094E-04	.0192	3.730E-04	.0232	.2214	378.7000
93	525.9	1.661	.211	2.836E-04	.0176	3.419E-04	.0212	.2343	374.0000
94	525.7	1.705	.221	2.959E-04	.0184	3.568E-04	.0222	.2274	375.5000
95	524.5	1.794	.253	3.396E-04	.0211	4.092E-04	.0254	.2239	373.3000
96	523.4	1.559	.202	2.696E-04	.0167	3.248E-04	.0202	.2363	368.0000
97	523.4	1.862	.237	3.153E-04	.0196	3.811E-04	.0237	.2286	368.0000
98	523.1	1.810	.252	3.374E-04	.0210	4.065E-04	.0252	.2247	368.0000
100	520.4	1.716	.241	3.213E-04	.0200	3.868E-04	.0240	.2274	360.5000
102	519.6	1.744	.244	3.251E-04	.0202	3.913E-04	.0243	.2081	354.3000
103	521.5	1.873	.244	3.261E-04	.0202	3.927E-04	.0244	.2023	362.7000
105	524.3	2.516	.313	4.191E-04	.0260	5.051E-04	.0314	.2050	378.7000
106	525.2	2.192	.280	3.750E-04	.0233	4.520E-04	.0281	.2050	386.2000

GROUP 31 CENTERLINE TIME 2.60

CH	TC	FIT LENGTH	DTDWT	UNCERTAINTY	CH	TC	FIT LENGTH	DTDWT	UNCERTAINTY
1	1	2.00	.723	.0165	50	53	2.00	.921	.0113
2	2	2.00	.680	.0140	51	54	2.00	.835	.0160
3	3	2.00	.608	.0150	52	55	2.00	.657	.0241
4	4	2.00	.606	.0137	53	56	2.00	.917	.0093
5	5	2.00	.556	.0364	54	57	1.20	1.258	.0230
6	6	2.00	.538	.0162	55	58	.80	2.047	.0250
7	7	2.00	.194	.4919	56	59	.80	2.412	.0539
8	8	2.00	.469	.0172	57	60	.80	2.400	.0206
9	9	2.00	.306	.2750	58	61	.80	2.072	.0172
10	10	2.00	.369	.0250	59	62	1.20	1.336	.0221
11	11	2.00	.437	.0298	60	63	2.00	.912	.0087
12	12	2.00	.407	.0349	61	64	2.00	-.005	-3.8635
13	13	2.00	.315	.0269	62	65	2.00	.781	.0114
14	14	2.00	.274	.0463	63	66	1.20	1.111	.0178
15	15	2.00	.329	.0564	64	67	1.20	1.667	.0153
16	16	2.00	.153	.0833	65	68	.80	2.273	.0339
17	17	2.00	.127	.1746	66	69	1.20	1.107	.0251
18	18	2.00	.203	.0522	67	70	1.20	1.097	.0177
19	19	2.00	.166	.0630	68	71	2.00	1.108	.0874
20	22	1.20	1.816	.0122	69	72	1.20	1.133	.0251
21	23	.80	1.961	.0162	70	73	1.20	1.154	.0244
22	24	.80	2.492	.0146	71	74	1.20	1.077	.0463
23	25	.80	2.731	.0282	72	75	1.20	1.271	.0171
24	26	.80	3.102	.0123	73	77	1.20	1.073	.0163
25	27	.80	2.096	.0172	74	78	1.20	1.564	.0176
26	28	.80	2.060	.0211	75	79	1.20	1.504	.0200
27	29	.80	2.479	.0124	76	80	1.20	1.900	.0186
28	30	.80	2.763	.0075	77	81	1.20	1.877	.0120
29	31	.80	3.169	.0071	78	83	1.20	1.922	.0098
30	32	.80	3.357	.0094	79	84	.80	2.653	.0819
31	33	1.20	1.817	.0099	80	85	1.20	1.786	.0102
32	34	.80	2.492	.0135	81	87	1.20	1.386	.0165
33	35	.80	2.210	.0231	82	88	1.20	1.882	.0096
34	36	1.20	1.139	.0175	83	89	1.20	1.499	.0250
35	37	1.20	1.543	.0128	84	90	1.20	1.799	.0141
36	38	1.20	1.200	.0143	85	91	1.20	1.831	.0087
37	39	2.00	.941	.0108	86	92	1.20	1.643	.0140
38	41	.80	3.530	.0135	87	93	1.20	1.661	.0256
39	42	.80	2.905	.0135	88	94	1.20	1.705	.0139
40	43	.80	3.332	.0166	89	95	1.20	1.794	.0163
41	44	.80	3.374	.0103	90	96	1.20	1.559	.0617
42	45	.80	2.758	.0162	91	97	1.20	1.862	.0151
43	46	.80	2.549	.0192	92	98	1.20	1.810	.0282
44	47	.80	3.200	.0085	93	100	1.20	1.716	.0082
45	48	1.20	1.307	.0121	94	102	1.20	1.744	.0195
46	49	.80	2.218	.0162	95	103	1.20	1.873	.0134
47	50	1.20	1.030	.0405	96	105	.80	2.516	.0182
48	51	1.20	1.045	.0177	97	106	.80	2.192	.0138
49	52	1.20	1.090	.0218	98	0	-0	0	0

32 .050

BIT ON LOOP 55

DATE 5/12/75 AEDC(ARO,INC.) ARNOLD AFS, TENNESSEE

VON KARMAN GAS DYNAMICS FACILITY

50 INCH HYPERSONIC TUNNEL B

V41H-87A

GROUP	TEST CONDITION	MODEL	MACH NO	PO,PSIA	TO,DEG R	ALPHA-MODEL	ALPHA-SECTOR	ALPHA-PREBEND	ROLL MODEL	YAW
32	12	140 B	7.94	210.7	1271	30.05	-.05	30.00	179.98	.0

T-INF (DEG R)	P-INF (PSIA)	Q-INF (PSIA)	V-INF (FT/SEC)	RHO-INF (SLUGS/FT3)	MU-INF (LB-SEC/FT2)	RE/FT (FT-1)	HREF-FR (R= .0400FT)	STFR (R= .0400FT)	SWITCH POSITION
93.4	.023	1.000	3760	2.035E-05	7.521E-08	1.018E 06	1.618E-02	2.666E-02	2

TC NO	TW	DIWDT	GDOT	H(TO)	H(TO)/HREF	H(.9TO)	H(.9TO)/HREF	X/L	Z,FULL SCALE(IN)
								ACCESS HATCH WINDOW	
107	526.3	1.938	.277	3.714E-04	.0229	4.478E-04	.0277	.2050	396.2000
								FUSELAGE VENT PANEL NO. 3 AND 1	
108	528.4	3.569	.377	5.070E-04	.0313	6.117E-04	.0378	.1244	377.5000
109	527.5	3.141	.387	5.207E-04	.0322	6.280E-04	.0388	.1302	377.5000
110	527.2	3.054	.306	5.188E-04	.0321	6.257E-04	.0387	.1360	377.5000
111	527.2	3.018	.363	4.874E-04	.0301	5.878E-04	.0363	.1418	377.5000
112	526.7	3.298	.390	5.242E-04	.0324	6.322E-04	.0391	.1476	377.5000
113	525.5	3.083	.352	4.724E-04	.0292	5.694E-04	.0352	.1215	273.5000
114	527.[illegible]	3.169	.379	5.096E-04	.0315	6.146E-04	.0380	.1273	273.5000
115	526.9	3.097	.377	5.062E-04	.0313	6.105E-04	.0377	.1331	273.5000
116	526.2	3.019	.369	4.956E-04	.0306	5.976E-04	.0369	.1389	273.5000
117	526.5	3.279	.376	5.054E-04	.0312	6.094E-04	.0377	.1447	273.5000
118	524.3	2.772	.342	5.112E-04	.0316	6.160E-04	.0381	.1409	366.0000
119	524.3	3.095	.399	5.340E-04	.0330	6.435E-04	.0398	.1442	366.0000
120	524.3	3.126	.389	5.207E-04	.0322	6.275E-04	.0388	.1215	359.5000
121	523.4	2.814	.344	4.595E-04	.0284	5.536E-04	.0342	.1303	359.5000
122	523.1	2.806	.348	4.646E-04	.0287	5.597E-04	.0346	.1337	359.5000
								LOWER RCS NOZZLES	
124	533.8	1.844	.165	2.232E-04	.0138	2.697E-04	.0167	.0950	400.0000
125	532.5	1.793	.195	2.642E-04	.0163	3.192E-04	.0197	.0988	400.0000
126	531.6	1.509	.207	2.794E-04	.0173	3.374E-04	.0208	.1027	400.0000
127	534.0	1.632	.220	2.985E-04	.0184	3.607E-04	.0223	.0911	395.0000
128	532.9	1.911	.232	3.143E-04	.0194	3.796E-04	.0235	.0950	395.0000
129	531.9	1.997	.234	3.169E-04	.0196	3.827E-04	.0237	.0988	395.0000
130	535.9	2.201	.264	3.545E-04	.0222	4.334E-04	.0268	.0810	390.0000
131	534.6	1.655	.245	3.322E-04	.0205	4.015E-04	.0248	.0857	390.0000
132	532.1	2.254	.262	3.551E-04	.0219	4.289E-04	.0265	.0963	390.0000
133	533.9	1.741	.212	2.868E-04	.0177	3.466E-04	.0214	.0857	383.8000
134	532.5	2.352	.315	4.262E-04	.0263	5.148E-04	.0318	.0872	377.3000
135	532.2	3.409	.409	5.537E-04	.0342	6.687E-04	.0413	.0903	374.5500
136	530.9	3.628	.403	5.441E-04	.0336	6.569E-04	.0406	.0960	374.5500
137	532.7	3.415	.447	6.046E-04	.0374	7.303E-04	.0451	.0872	370.5500
138	531.4	3.686	.424	5.733E-04	.0354	6.923E-04	.0428	.0928	370.5500
139	534.3	3.412	.436	5.914E-04	.0365	7.147E-04	.0442	.0816	366.0500
140	530.8	3.598	.457	6.174E-04	.0382	7.454E-04	.0461	.0934	362.4000
141	529.0	3.408	.449	6.054E-04	.0374	7.305E-04	.0451	.0973	362.4000
142	527.6	2.753	.299	4.020E-04	.0248	4.849E-04	.0300	.0833	355.2000
143	530.6	4.066	.498	5.506E-04	.0340	6.647E-04	.0411	.0919	355.2000
144	528.6	4.652	.611	8.228E-04	.0508	9.928E-04	.0613	.0949	349.0000

DATE 5/12/75

AEDC(ARO,INC.) ARNOLD AFS, TENNESSEE
VON KARMAN GAS DYNAMICS FACILITY
50 INCH HYPERSONIC TUNNEL B
V41B-B7A

GROUP	TEST CONDITION	MODEL	MACH NO	PO,PSIA	TO,DEG R	ALPHA-MODEL	ALPHA-SECTOR	ALPHA-PREBEND	ROLL MODEL	YAW
32	12	140 B	7.94	210.7	1271	30.05	-.05	30.00	179.98	.0

T-INF (DEG R)	P-INF (PSIA)	Q-INF (PSIA)	V-INF (FT/SEC)	RHO-INF (SLUGS/FT3)	MU-INF (LB-SEC/FT2)	RE/FT (FT-1)	HREF-FR (R= .0400FT)	STFR (R= .0400FT)	SWITCH POSITION
93.4	.023	1.000	3760	2.035E-05	7.521E-08	1.018E 06	1.618E-02	2.666E-02	2

TC NO	TW	DTWDT	QDOT	H(TO)	H(TO)/HREF	H(.9TO)	H(.9TO)/HREF	X/L	2Y/B
								UPPER RCS NOZZLES	
161	537.3	1.227	.145	1.942E-04	.0122	2.397E-04	.0148	.0619	-.0160
162	537.0	1.184	.112	1.529E-04	.0095	1.850E-04	.0114	.0709	-.0160
163	536.0	.853	.105	1.426E-04	.0088	1.724E-04	.0107	.0807	-.0160
164	535.0	.728	.095	1.289E-04	.0080	1.558E-04	.0096	.0943	-.0160
165	534.7	.653	.082	1.117E-04	.0069	1.350E-04	.0083	.0978	-.0160
166	534.5	.498	.064	8.671E-05	.0054	1.048E-04	.0065	.1013	-.0160
167	537.4	1.082	.147	1.998E-04	.0123	2.417E-04	.0149	.0619	-.0320
168	536.8	1.209	.127	1.730E-04	.0107	2.092E-04	.0129	.0709	-.0320
169	535.6	.830	.111	1.371E-04	.0085	1.657E-04	.0102	.0807	-.0320
170	534.5	.652	.082	1.107E-04	.0068	1.338E-04	.0083	.0943	-.0320
171	534.0	.805	.097	1.316E-04	.0081	1.591E-04	.0098	.0978	-.0320
172	533.2	.628	.082	1.109E-04	.0069	1.339E-04	.0083	.1013	-.0320
173	535.4	.584	.078	1.061E-04	.0066	1.282E-04	.0079	.0807	-.0480
174	534.0	.503	.057	7.763E-05	.0048	9.380E-05	.0058	.0943	-.0480
175	533.3	.411	.059	7.972E-05	.0049	9.631E-05	.0060	.0978	-.0480
176	533.2	.443	.060	8.163E-05	.0050	9.861E-05	.0061	.1013	-.0480
								CANOPY	
177	539.2	5.246	.723	9.882E-04	.0611	1.196E-03	.0739		
178	540.2	5.982	1.179	1.613E-03	.0997	1.953E-03	.1207		
179	540.5	6.373	1.339	1.833E-03	.1132	2.219E-03	.1371		
180	536.7	2.839	.371	5.047E-04	.0312	6.103E-04	.0377		
181	536.3	2.080	.243	3.846E-04	.0238	4.650E-04	.0287		
182	536.1	2.121	.302	4.114E-04	.0254	4.974E-04	.0307		
183	532.6	.318	.040	5.393E-05	.0033	6.514E-05	.0040		
184	532.9	.333	.046	6.166E-05	.0038	7.449E-05	.0046		
185	535.5	2.446	.294	3.957E-04	.0247	4.832E-04	.0299		
186	535.8	2.034	.256	3.474E-04	.0215	4.200E-04	.0260		
187	536.8	1.522	.203	2.762E-04	.0171	3.340E-04	.0206		
188	537.9	3.629	.846	1.154E-03	.0713	1.396E-03	.0862		
189	534.2	1.113	.159	2.151E-04	.0133	2.599E-04	.0161		
190	534.4	1.099	.158	2.144E-04	.0133	2.592E-04	.0160		
191	535.6	1.606	.246	3.338E-04	.0206	4.035E-04	.0249		

DATE 5/12/75

AEDC(ARO,INC.) ARNOLD AFS, TENNESSEE
VON KARMAN GAS DYNAMICS FACILITY
50 INCH HYPERSONIC TUNNEL B
V41R-87A

GROUP	TEST CONDITION	MODEL	MACH NO	PO,PSIA	TO,DEG R	ALPHA-MODEL	ALPHA-SECTOR	ALPHA-PREBEND	ROLL MODEL	YAW
32	12	140 B	7.44	210.7	1271	30.05	-.05	30.00	179.98	.0

T-INF (DEG R)	P-INF (PSIA)	Q-INF (PSIA)	V-INF (FT/SEC)	RHO-INF (SLUGS/FT3)	MU-INF (LB-SEC/FT2)	RE/FT (FT-1)	HREF-FR (R= .0400FT)	STFR (R= .0400FT)	SWITCH POSITION
93.4	.023	1.000	3760	2.035E-05	7.521E-08	1.018E 06	1.618E-02	2.666E-02	2

CANOPY

IC NO	TW	D(WDT	GDCT	H(TO)	H(TO)/HREF	H(.9TO)	H(.9TO)/HREF
192	531.7	.403	.057	7.681E-05	.0047	9.275E-05	.0057
193	535.8	1.954	.376	5.117E-04	.0316	6.187E-04	.0382
194	531.3	.167	.021	2.902E-05	.0018	3.504E-05	.0022
195	532.1	.426	.052	7.045E-05	.0044	8.569E-05	.0053
196	533.2	.660	.087	1.174E-04	.0073	1.418E-04	.0088
197	529.0	.403	.040	5.363E-05	.0033	6.472E-05	.0040
198	529.6	.339	.039	5.291E-05	.0033	6.386E-05	.0039
199	529.1	.222	.030	4.007E-05	.0025	4.835E-05	.0030
200	531.4	.665	.095	1.279E-04	.0079	1.545E-04	.0095
201	533.9	1.671	.236	3.197E-04	.0198	3.863E-04	.0239
202	533.9	1.509	.191	2.586E-04	.0160	3.125E-04	.0193
203	529.1	.265	.033	4.425E-05	.0027	5.339E-05	.0033
204	529.9	.299	.046	6.234E-05	.0039	7.524E-05	.0046
205	532.8	2.077	.324	4.381E-04	.0271	5.292E-04	.0327
206	527.8	-.206	-.027	-3.669E-05	-.0023	-4.426E-05	-.0027
207	533.0	1.277	.171	2.316E-04	.0143	2.797E-04	.0173
208	528.6	.325	.044	5.869E-05	.0036	7.081E-05	.0044
209	530.0	.582	.080	1.078E-04	.0067	1.301E-04	.0080
210	530.2	.337	.045	6.052E-05	.0037	7.305E-05	.0045
211	528.4	.252	.031	4.108E-05	.0025	4.956E-05	.0031
212	528.4	.425	.057	7.694E-05	.0048	9.282E-05	.0057
213	529.0	.551	.073	9.815E-05	.0061	1.184E-04	.0073
214	529.7	1.012	.142	1.909E-04	.0118	2.303E-04	.0142
215	529.9	.410	.058	7.843E-05	.0048	9.467E-05	.0059
216	532.3	1.015	.144	1.948E-04	.0120	2.353E-04	.0145
217	532.5	.972	.138	1.872E-04	.0116	2.262E-04	.0140
218	528.5	.450	.062	8.331E-05	.0051	1.005E-04	.0062
219	529.6	1.568	.220	2.968E-04	.0183	3.582E-04	.0221
220	529.6	.603	.083	1.116E-04	.0069	1.347E-04	.0083

GROUP 32 CENTERLINE TIME 2.70

CH	TC	FIT LENGTH	DTDWT	UNCERTAINTY	CH	TC	FIT LENGTH	DTDWT	UNCERTAINTY
1	107	1.20	1.938	.0114	50	173	2.00	.584	.0218
2	108	.80	3.569	.0122	51	174	2.00	.503	.0262
3	109	.80	3.141	.0125	52	175	2.00	.411	.0325
4	110	.80	3.054	.0096	53	176	2.00	.443	.0195
5	111	.80	3.018	.0291	54	177	.60	5.246	.0130
6	112	.80	3.298	.0099	55	178	.60	5.982	.0092
7	113	.80	3.083	.1185	56	179	.60	6.373	.0258
8	114	.80	3.169	.0088	57	180	.80	2.839	.0161
9	115	.80	3.047	.0263	58	181	.60	2.080	.0160
10	116	.80	3.019	.0109	59	182	.80	2.121	.0269
11	117	.80	3.279	.0126	60	183	2.00	.318	.0220
12	118	.80	2.772	.0181	61	184	2.00	.333	.0495
13	119	.80	3.095	.0126	62	185	.80	2.446	.0087
14	120	.80	3.126	.0124	63	186	.80	2.034	.0169
15	121	.80	2.814	.0242	64	187	1.20	1.522	.0173
16	122	.80	2.806	.0144	65	188	.80	3.629	.0118
17	124	1.20	1.844	.0244	66	189	1.20	1.113	.0234
18	125	1.20	1.793	.0088	67	190	1.20	1.099	.0138
19	126	1.20	1.509	.0138	68	191	1.20	1.606	.1074
20	127	1.20	1.632	.0206	69	192	2.00	.403	.0411
21	128	1.20	1.911	.0093	70	193	1.20	1.954	.0100
22	129	.80	1.997	.0120	71	194	2.00	.167	.1143
23	130	.80	2.261	.0344	72	195	2.00	.426	.0237
24	131	1.20	1.655	.0188	73	196	2.00	.660	.0148
25	132	.80	2.254	.0157	74	197	2.00	.403	.0318
26	133	1.20	1.741	.0106	75	198	2.00	.339	.0340
27	134	.80	2.352	.0155	76	199	2.00	.222	.1108
28	135	.80	3.409	.0080	77	200	2.00	.665	.0134
29	136	.80	3.628	.0112	78	201	1.20	1.671	.0135
30	137	.80	3.415	.0092	79	202	1.20	1.509	.0733
31	138	.80	3.686	.0095	80	203	2.00	.265	.0283
32	139	.80	3.412	.0065	81	204	2.00	.298	.0402
33	140	.80	3.598	.0106	82	205	.80	2.077	.0119
34	141	.80	3.408	.0093	83	206	2.00	-.206	-.1012
35	142	.80	2.753	.0092	84	207	1.20	1.277	.0162
36	143	.60	4.066	.0167	85	208	2.00	.325	.0250
37	144	.60	4.652	.0080	86	209	2.00	.582	.0159
38	161	1.20	1.227	.0169	87	210	2.00	.337	.0782
39	162	1.20	1.184	.0266	88	211	2.00	.252	.0634
40	163	2.00	.853	.0193	89	212	2.00	.425	.0369
41	164	2.00	.728	.0100	90	213	2.00	.551	.0949
42	165	2.00	.653	.0131	91	214	1.20	1.012	.0394
43	166	2.00	.498	.0251	92	215	2.00	.410	.0644
44	167	1.20	1.082	.0174	93	216	2.00	1.015	.0100
45	168	1.20	1.209	.0166	94	217	2.00	.972	.0126
46	169	2.00	.830	.0117	95	218	2.00	.450	.0301
47	170	2.00	.652	.0299	96	219	1.20	1.568	.0177
48	171	2.00	.805	.0104	97	220	2.00	.603	.0157
49	172	2.00	.628	.0172	98	0	-0	0	0

33 .050

BIT ON LOOP 53

DATE 5/12/75 AEDC(ARO,INC.) ARNOLD AFS, TENNESSEE

VON KARMAN GAS DYNAMICS FACILITY

50 INCH HYPERSONIC TUNNEL B

V418-B7A

GROUP	TEST CONDITION	MODEL	MACH NO	PO,PSIA	TO,DEG R	ALPHA-MODEL	ALPHA-SECTOR	ALPHA-PREBEND	ROLL MODEL	YAW
33	12	140 B	7.94	211.5	1272	30.05	-.05	30.00	179.98	.0

T-INF (DEG R)	P-INF (PSIA)	Q-INF (PSIA)	V-INF (FT/SEC)	RHO-INF (SLUGS/FT3)	MU-INF (LB-SEC/FT2)	RE/FT (FT-1)	HREF-FR (R= .0400FT)	STFR (R= .0400FT)	SWITCH POSITION
93.4	.023	1.004	3761	2.042E-05	7.524E-08	1.021E 06	1.621E-02	2.662E-02	3

TC NO	TW	DT*DT	QDOT	H(TO)	H(TO)/HREF	H(.9TO)	H(.9TO)/HREF	X/L	2Y/B
								CANOPY	
221	521.5	.459	.055	7.353E-05	.0045	8.853E-05	.0055		
222	519.9	.759	.093	1.236E-04	.0076	1.488E-04	.0092		
223	519.9	1.034	.139	1.855E-04	.0114	2.232E-04	.0138		
								ESCAPE HATCH AND WINDOW	
224	526.0	2.662	.264	3.540E-04	.0218	4.268E-04	.0263	.1933	.0162
225	525.8	1.794	.214	2.873E-04	.0177	3.463E-04	.0214	.1972	.0162
226	525.6	3.503	.368	4.927E-04	.0304	5.939E-04	.0366	.1933	.0384
227	522.9	2.483	.362	4.829E-04	.0298	5.817E-04	.0359	.1972	.0384
228	522.8	1.976	.253	3.373E-04	.0208	4.063E-04	.0251	.1933	.0653
229	523.2	1.911	.244	3.266E-04	.0201	3.935E-04	.0243	.1972	.0653
232	526.6	.228	.031	4.129E-05	.0025	4.979E-05	.0031	.2567	.0235
233	527.3	.272	.041	5.519E-05	.0034	6.657E-05	.0041	.2606	.0235
236	525.8	.195	.028	3.816E-05	.0024	4.600E-05	.0028	.2567	.0491
237	526.2	.211	.030	3.972E-05	.0025	4.789E-05	.0030	.2606	.0491
								CARGO BAY HINGE NO. 1	
								X/L	Z,FULL SCALE(IN)
238	524.7	1.437	.192	2.505E-04	.0158	3.091E-04	.0191	.2879	420.0000
239	525.7	1.459	.195	2.610E-04	.0161	3.146E-04	.0194	.2917	420.0000
240	524.0	1.266	.180	2.408E-04	.0149	2.902E-04	.0179	.2840	415.0000
241	524.6	1.388	.194	2.602E-04	.0160	3.136E-04	.0193	.2879	415.0000
242	525.2	1.216	.173	2.318E-04	.0143	2.794E-04	.0172	.2917	415.0000
243	522.8	1.462	.178	2.375E-04	.0146	2.860E-04	.0176	.2801	405.0000
244	522.8	1.275	.148	1.981E-04	.0122	2.386E-04	.0147	.2840	405.0000
								CARGO BAY HINGE NO. 2	
								X/L	Z,FULL SCALE(IN)
245	525.3	1.165	.166	2.223E-04	.0137	2.679E-04	.0165	.3192	420.0000
246	525.7	1.075	.153	2.050E-04	.0126	2.472E-04	.0152	.3439	420.0000
247	524.7	1.138	.157	2.235E-04	.0138	2.693E-04	.0166	.3362	415.0000
248	524.5	1.188	.174	2.332E-04	.0144	2.810E-04	.0173	.3401	415.0000
249	525.5	.795	.117	1.563E-04	.0096	1.884E-04	.0116	.3439	415.0000
250	523.6	1.215	.152	2.027E-04	.0125	2.442E-04	.0151	.3323	405.0000
251	523.8	.909	.111	1.484E-04	.0092	1.788E-04	.0110	.3362	405.0000
								CARGO BAY HINGE NO. 3	
								X/L	Z,FULL SCALE(IN)
252	525.8	1.906	.275	3.693E-04	.0228	4.451E-04	.0275	.3923	420.0000
253	526.7	2.240	.324	4.347E-04	.0268	5.242E-04	.0323	.3961	420.0000
254	525.2	1.653	.250	3.346E-04	.0206	4.033E-04	.0249	.3884	415.0000
257	522.3	2.172	.291	3.885E-04	.0240	4.679E-04	.0289	.3845	405.0000
258	522.8	2.640	.357	4.773E-04	.0294	5.749E-04	.0355	.3884	405.0000

DATE 5/12/75

AEDC(ARO,INC.) ARNOLD AFS, TENNESSEE
VON KARMAN GAS DYNAMICS FACILITY
50 INCH HYPERSONIC TUNNEL B
V41B-87A

GROUP	TEST CONDITION	MODEL	MACH NO	PO,PSIA	TO,DEG R	ALPHA-MODEL	ALPHA-SECTOR	ALPHA-PREBEND	ROLL MODEL	YAW
33	12	140 B	7.94	211.5	1272	30.05	-.05	30.00	179.98	.0

T-INF (DEG R)	P-INF (PSIA)	Q-INF (PSIA)	V-INF (FT/SEC)	RHO-INF (SLUGS/FT3)	MU-INF (LB-SEC/FT2)	RE/FT (FT-1)	HREF-FR (R= .0400FT)	STFR (R= .0400FT)	SWITCH POSITION
93.4	.023	1.004	3761	2.042E-05	7.524E-08	1.021E 06	1.621E-02	2.662E-02	3

TOP CENTERLINE

TC NO	TW	DTWDT	QDOT	H(TO)	H(TO)/HREF	H(.9TO)	H(.9TO)/HREF	X/L
367	555.7	55.286	6.565	9.109E-03	.5655	1.115E-02	.6876	0
368	540.3	38.373	4.842	6.675E-03	.4117	8.080E-03	.4983	.0008
369	536.8	27.329	3.222	4.357E-03	.2687	5.269E-03	.3249	.0019
370	532.4	20.612	2.511	3.396E-03	.2095	4.102E-03	.2530	.0037
371	529.8	14.262	1.392	1.876E-03	.1157	2.264E-03	.1397	.0058
372	527.0	9.462	1.213	1.628E-03	.1004	1.964E-03	.1211	.0087
373	526.5	5.964	.777	1.043E-03	.0643	1.258E-03	.0776	.0118
374	526.4	4.472	.563	7.620E-04	.0482	9.429E-04	.0582	.0151
375	526.7	3.685	.502	6.734E-04	.0415	8.120E-04	.0501	.0182
376	527.9	3.261	.428	5.758E-04	.0355	6.946E-04	.0428	.0215
377	528.5	2.940	.377	5.074E-04	.0313	6.122E-04	.0378	.0246
378	529.3	2.439	.294	3.819E-04	.0236	4.609E-04	.0284	.0278
379	530.9	1.486	.182	2.459E-04	.0152	2.969E-04	.0183	.0609
380	529.7	1.289	.132	1.781E-04	.0110	2.149E-04	.0133	.0646
381	529.3	1.125	.145	1.958E-04	.0121	2.363E-04	.0146	.0684
382	529.1	1.002	.131	1.761E-04	.0109	2.125E-04	.0131	.0721
383	529.5	.912	.122	1.643E-04	.0101	1.983E-04	.0122	.0760
384	529.7	.920	.128	1.724E-04	.0106	2.080E-04	.0128	.0796
385	529.7	.744	.095	1.286E-04	.0079	1.552E-04	.0096	.0789
386	529.4	.807	.095	1.284E-04	.0079	1.549E-04	.0096	.0982
387	529.4	.880	.108	1.453E-04	.0090	1.753E-04	.0108	.1019
388	528.7	1.197	.114	1.529E-04	.0094	1.845E-04	.0114	.1160
389	527.9	.998	.144	1.941E-04	.0120	2.341E-04	.0144	.1195
390	527.9	.888	.140	1.876E-04	.0116	2.263E-04	.0140	.1231
391	527.6	.862	.137	1.842E-04	.0114	2.221E-04	.0137	.1268
392	527.6	.847	.145	1.946E-04	.0120	2.347E-04	.0145	.1305
393	527.5	.893	.151	2.024E-04	.0125	2.442E-04	.0151	.1338
394	527.2	.961	.161	2.160E-04	.0133	2.605E-04	.0161	.1376
395	527.0	.987	.147	1.975E-04	.0122	2.382E-04	.0147	.1411
396	526.8	1.021	.151	2.025E-04	.0125	2.442E-04	.0151	.1448
397	526.8	1.005	.149	1.994E-04	.0123	2.404E-04	.0148	.1483
398	526.7	1.831	.257	3.445E-04	.0212	4.154E-04	.0256	.1519
399	529.8	3.549	.473	6.373E-04	.0393	7.692E-04	.0474	.1556

DATE 5/12/75

AEDC(ARO,INC.) ARNOLD AFS, TENNESSEE
VON KARMAN GAS DYNAMICS FACILITY
50 INCH HYPERSONIC TUNNEL B
V41B-B/A

GROUP	TEST CONDITION	MODEL	MACH NO	PO,PSIA	TO,DEG R	ALPHA-MODEL	ALPHA-SECTOR	ALPHA-PREBEND	ROLL MODEL	YAW
33	12	140.B	7.94	211.5	1272	30.05	-.05	30.00	179.98	.0

T-INF (DEG R)	P-INF (PSIA)	Q-INF (PSIA)	V-INF (FT/SEC)	RHO-INF (SLUGS/FT3)	MU-INF (LB-SEC/FT2)	RE/FT (FT-1)	HREF-FR (R= .0400FT)	STFR (R= .0400FT)	SWITCH POSITION
93.4	.023	1.004	3761	2.042E-05	7.524E-08	1.021E 06	1.621E-02	2.662E-02	3

TC NO	TW	DTWDT	QDOT	H(TO)	H(TO)/HREF	H(.9TO)	H(.9TO)/HREF	X/L
								TOP CENTERLINE
400	530.4	5.416	.729	9.836E-04	.0607	1.187E-03	.0732	.1582
401	530.0	5.829	.753	1.016E-03	.0626	1.226E-03	.0756	.1608
402	529.8	7.497	.932	1.256E-03	.0775	1.516E-03	.0935	.1635
403	530.7	6.341	.769	1.038E-03	.0640	1.253E-03	.0773	.1664
404	530.7	6.768	.818	1.104E-03	.0681	1.332E-03	.0822	.1691
405	531.4	7.109	.859	1.161E-03	.0716	1.401E-03	.0864	.1720
406	529.7	6.225	.752	1.013E-03	.0625	1.223E-03	.0754	.1748
407	529.7	5.347	.689	9.280E-04	.0572	1.120E-03	.0691	.1769
408	529.1	4.706	.688	9.261E-04	.0571	1.117E-03	.0689	.1800
409	528.5	3.694	.530	7.127E-04	.0440	8.599E-04	.0530	.1831
410	529.2	2.924	.419	5.649E-04	.0348	6.816E-04	.0420	.1863
411	527.6	2.255	.337	4.534E-04	.0280	5.468E-04	.0337	.1894
412	527.9	1.792	.243	3.261E-04	.0201	3.933E-04	.0243	.1931
413	527.8	1.383	.185	2.483E-04	.0153	2.995E-04	.0185	.1972
414	527.1	.799	.107	1.433E-04	.0088	1.728E-04	.0107	.2049
415	525.8	.489	.048	6.438E-05	.0040	7.761E-05	.0048	.2250
416	527.3	.311	.036	4.872E-05	.0030	5.876E-05	.0036	.2500
								NOSE TC (Z = 338)
								X/L 2Y/B
145	547.6	37.972	5.122	7.074E-03	.4363	8.580E-03	.5292	.0008 .5039
146	545.5	38.855	5.236	7.210E-03	.4447	8.740E-03	.5391	.0023 .5082
147	539.5	31.181	4.189	5.722E-03	.3529	6.924E-03	.4271	.0043 .5135
148	537.8	23.576	3.270	4.456E-03	.2748	5.389E-03	.3324	.0068 .5205
149	534.2	17.831	2.564	3.477E-03	.2145	4.202E-03	.2591	.0095 .5279
150	536.7	14.190	2.024	2.754E-03	.1699	3.330E-03	.2054	.0122 .5354
151	537.2	10.319	1.445	1.967E-03	.1213	2.379E-03	.1467	.0218 .5621
152	536.4	10.482	1.415	1.925E-03	.1187	2.327E-03	.1435	.0251 .5712
153	536.0	11.215	1.364	1.854E-03	.1143	2.241E-03	.1382	.0286 .5808
154	536.3	11.212	1.389	1.888E-03	.1165	2.283E-03	.1408	.0319 .5898
155	535.4	10.589	1.325	1.800E-03	.1110	2.175E-03	.1342	.0354 .5995
156	534.1	9.674	1.197	1.622E-03	.1001	1.960E-03	.1209	.0387 .6085
157	533.6	9.648	1.180	1.599E-03	.0986	1.932E-03	.1191	.0420 .6176
158	532.4	9.470	1.158	1.566E-03	.0966	1.892E-03	.1167	.0462 .6294
159	532.0	9.601	1.071	1.448E-03	.0893	1.748E-03	.1078	.0503 .6406

GROUP 33 CENTERLINE TIME 2.60

CH	TC	FIT LENGTH	DTDWT	UNCERTAINTY	CH	TC	FIT LENGTH	DTDWT	UNCERTAINTY
1	221	2.00	.459	.0222	50	384	2.00	.920	.0159
2	222	2.00	.759	.0106	51	385	2.00	.744	.0158
3	223	1.20	1.034	.0110	52	386	2.00	.807	.0350
4	224	.80	2.062	.0132	53	387	2.00	.880	.0103
5	225	1.20	1.798	.0206	54	388	1.20	1.197	.0138
6	226	.80	3.503	.0066	55	389	1.20	.998	.0252
7	227	.80	2.493	.0946	56	390	2.00	.888	.0431
8	228	1.20	1.976	.0050	57	391	2.00	.862	.0085
9	229	1.20	1.911	.0231	58	392	2.00	.847	.0091
10	232	2.00	.228	.0362	59	393	2.00	.893	.0160
11	233	2.00	.272	.0786	60	394	2.00	.961	.0100
12	236	2.00	.195	.0949	61	395	2.00	.987	.0181
13	237	2.00	.211	.0486	62	396	1.20	1.021	.0150
14	238	1.20	1.437	.0200	63	397	1.20	1.005	.0188
15	239	1.20	1.459	.0229	64	398	1.20	1.831	.0264
16	240	1.20	1.266	.0212	65	399	.80	3.549	.0100
17	241	1.20	1.388	.0380	66	400	.60	5.416	.0118
18	242	1.20	1.216	.0188	67	401	.60	5.829	.0080
19	243	1.20	1.462	.0175	68	402	.60	7.497	.0834
20	244	1.20	1.275	.0138	69	403	.60	6.341	.0230
21	245	1.20	1.166	.0174	70	404	.60	6.768	.0052
22	246	1.20	1.075	.0161	71	405	.60	7.109	.0128
23	247	1.20	1.138	.0478	72	406	.60	6.225	.0090
24	248	1.20	1.188	.0230	73	407	.60	5.347	.0098
25	249	2.00	.795	.0150	74	408	.60	4.706	.0135
26	250	1.20	1.215	.0221	75	409	.80	3.694	.0127
27	251	2.00	.909	.0123	76	410	.80	2.924	.0138
28	252	1.20	1.906	.0098	77	411	.80	2.255	.0140
29	253	.80	2.240	.0101	78	412	1.20	1.792	.0091
30	254	1.20	1.653	.0144	79	413	1.20	1.383	.0840
31	257	.80	2.172	.0143	80	414	2.00	.799	.0114
32	258	.80	2.640	.0124	81	415	2.00	.489	.0199
33	367	.20	55.286	.0040	82	416	2.00	.311	.0191
34	368	.20	38.373	.0028	83	145	.20	37.972	.0068
35	369	.30	27.329	.0041	84	146	.20	38.855	.0038
36	370	.30	20.612	.0087	85	147	.30	31.181	.0053
37	371	.40	14.242	.0032	86	148	.30	23.576	.0025
38	372	.40	9.462	.0134	87	149	.30	17.831	.0083
39	373	.60	5.964	.0046	88	150	.40	14.190	.0098
40	374	.60	4.472	.0102	89	151	.40	10.319	.0124
41	375	.80	3.685	.0093	90	152	.40	10.482	.0533
42	376	.80	3.261	.0109	91	153	.40	11.215	.0107
43	377	.80	2.940	.0165	92	154	.40	11.212	.0210
44	378	.80	2.439	.0121	93	155	.40	10.589	.0068
45	379	1.20	1.486	.0071	94	156	.40	9.674	.0098
46	380	1.20	1.289	.0135	95	157	.40	9.648	.0089
47	381	1.20	1.125	.0444	96	158	.40	9.470	.0136
48	382	1.20	1.002	.0207	97	159	.40	9.601	.0091
49	383	2.00	.912	.0112	98	0	-0	0	0
34		.050							

BIT ON LOOP 53

DATE 5/12/75

AEDC(ARO,INC.) ARNOLD AFS, TENNESSEE
VON KARMAN GAS DYNAMICS FACILITY
50 INCH HYPERSONIC TUNNEL B
V41B-B7A

GROUP	TEST CONDITION	MODEL	MACH NO	PO,PSIA	TO,DEG R	ALPHA-MODEL	ALPHA-SECTOR	ALPHA-PREBEND	ROLL MODEL	YAW
34	13	140 B	7.94	207.4	1272	30.00	-2.02	30.00	90.00	2.0

T-INF (DEG R)	P-INF (PSIA)	Q-INF (PSIA)	V-INF (FT/SEC)	RHO-INF (SLUGS/FT3)	MU-INF (LB-SEC/FT2)	RE/FT (FT-1)	HREF-FR (R= .0400FT)	STFR (R= .0400FT)	SWITCH POSITION
93.4	.022	.984	3761	2.003E-05	7.523E-08	1.001E 06	1.606E-02	2.688E-02	1

TC NO	TW	DTWDT	QDOT	H(TO)	H(TO)/HREF	H(.9TO)	H(.9TO)/HREF	X/L	Z,FULL SCALE(IN)
								FUSELAGE VENT NO. 1	
1	526.4	.755	.099	1.334E-04	.0083	1.609E-04	.0100	.4434	376.6300
2	526.9	.744	.100	1.338E-04	.0083	1.613E-04	.0100	.4264	371.6300
3	526.6	.679	.093	1.245E-04	.0078	1.501E-04	.0093	.4303	371.6300
4	526.9	.680	.092	1.236E-04	.0077	1.490E-04	.0093	.4342	371.6300
5	527.2	.701	.093	1.249E-04	.0078	1.506E-04	.0094	.4380	371.6300
6	527.8	.606	.080	1.074E-04	.0067	1.296E-04	.0081	.4434	369.1300
7	525.0	.474	.069	9.198E-05	.0057	1.109E-04	.0069	.4226	366.6300
8	526.2	.534	.080	1.073E-04	.0067	1.294E-04	.0081	.4264	366.6300
9	526.3	.584	.094	1.133E-04	.0071	1.366E-04	.0085	.4303	366.6300
10	526.0	.431	.081	8.204E-05	.0051	9.891E-05	.0062	.4342	366.6300
11	526.7	.469	.063	8.467E-05	.0053	1.021E-04	.0064	.4380	366.6300
12	527.5	.340	.047	6.256E-05	.0039	7.546E-05	.0047	.4496	366.6300
13	525.2	.299	.044	5.849E-05	.0036	7.051E-05	.0044	.4187	357.1300
14	526.1	.372	.051	6.774E-05	.0042	8.168E-05	.0051	.4396	361.6300
15	526.9	.381	.051	6.793E-05	.0042	8.191E-05	.0051	.4434	361.6300
16	525.6	.353	.047	6.361E-05	.0040	7.668E-05	.0048	.4396	355.6300
17	526.1	.310	.042	5.580E-05	.0035	6.728E-05	.0042	.4434	355.6300
18	525.9	.193	.027	3.600E-05	.0022	4.340E-05	.0027	.4396	351.6300
19	525.4	.084	.012	1.564E-05	.0010	1.885E-05	.0012	.4291	332.6300
								CARGO BAY VENT NO. 1	
								X/L	Z,FULL SCALE(IN)
22	529.9	2.339	.323	4.357E-04	.0271	5.259E-04	.0328	.3974	397.6300
23	530.1	2.301	.320	4.315E-04	.0269	5.208E-04	.0324	.4013	397.6300
24	531.1	2.717	.366	4.940E-04	.0308	5.965E-04	.0372	.4052	397.6300
25	531.5	2.975	.390	5.270E-04	.0328	6.364E-04	.0396	.4090	397.6300
26	532.4	3.538	.463	6.257E-04	.0390	7.557E-04	.0471	.4129	397.6300
27	529.3	2.186	.303	4.081E-04	.0254	4.924E-04	.0307	.3936	392.6300
28	529.6	2.292	.328	4.418E-04	.0275	5.332E-04	.0332	.3974	392.6300
29	529.9	2.775	.398	5.368E-04	.0334	6.479E-04	.0404	.4013	392.6300
30	530.1	3.064	.438	5.911E-04	.0368	7.135E-04	.0444	.4052	392.6300
31	530.6	3.275	.466	6.148E-04	.0383	7.421E-04	.0462	.4090	392.6300
32	530.8	3.283	.433	5.849E-04	.0364	7.061E-04	.0440	.4129	392.6300
33	528.6	1.817	.258	3.474E-04	.0216	4.191E-04	.0261	.4090	386.1300
34	529.8	2.580	.347	4.680E-04	.0292	5.649E-04	.0352	.4129	387.6300
35	529.0	2.239	.315	4.244E-04	.0264	5.121E-04	.0319	.3897	383.1300
36	527.3	1.151	.166	2.230E-04	.0139	2.689E-04	.0168	.4090	378.6300
37	528.3	1.606	.225	3.021E-04	.0188	3.644E-04	.0227	.4129	382.1300
38	527.6	1.238	.171	2.304E-04	.0143	2.779E-04	.0173	.4129	377.1300
39	526.8	1.067	.155	2.078E-04	.0129	2.506E-04	.0156	.4001	373.6300
								PROTUBERANCES	
								X/L	Z,FULL SCALE(IN)
41	530.5	3.767	.502	6.776E-04	.0422	8.179E-04	.0509	.3546	379.0500
42	530.7	3.986	.542	7.316E-04	.0456	8.831E-04	.0550	.3604	379.0500
43	530.0	3.933	.508	6.855E-04	.0427	8.273E-04	.0515	.3450	374.0500

DATE 5/12/75

AEDC(ARO,INC.) ARNOLD AFS, TENNESSEE
VON KARMAN GAS DYNAMICS FACILITY
50 INCH HYPERSONIC TUNNEL B
V418-87A

GROUP	TEST CONDITION	MODEL	MACH NO	PO,PSIA	TO,DEG R	ALPHA-MODEL	ALPHA-SECTOR	ALPHA-PREBEND	ROLL MODEL	YAW
34	13	140 B	7.44	207.4	1272	30.00	-2.02	30.00	90.00	2.0

T-INF (DEG R)	P-INF (PSIA)	Q-INF (PSIA)	V-INF (FT/SEC)	RHO-INF (SLUGS/FT3)	MU-INF (LB-SEC/FT2)	RE/FT (FT-1)	HREF-FR (R= .0400FT)	STFR (R= .0400FT)	SWITCH POSITION
93.4	.022	.984	3761	2.003E-05	7.523E-08	1.001E 06	1.606E-02	2.688E-02	1

TC NO	TW	DTWDT	QDOT	H(TO)	H(TO)/HREF	H(.9TO)	H(.9TO)/HREF
44	529.9	3.609	.489	6.592E-04	.0411	7.956E-04	.0496
45	529.0	2.583	.356	4.788E-04	.0298	5.777E-04	.0360
46	529.0	2.536	.352	4.747E-04	.0296	5.727E-04	.0357
47	528.2	3.304	.437	5.876E-04	.0366	7.089E-04	.0442
48	526.5	1.442	.196	2.634E-04	.0164	3.176E-04	.0198
49	526.0	2.173	.297	3.980E-04	.0248	4.798E-04	.0299
50	525.8	1.083	.149	2.002E-04	.0125	2.413E-04	.0150
51	525.8	1.110	.150	2.005E-04	.0125	2.417E-04	.0151
52	524.2	1.228	.168	2.241E-04	.0140	2.701E-04	.0168
53	524.3	1.034	.150	2.004E-04	.0125	2.415E-04	.0150
54	525.1	1.017	.144	1.932E-04	.0120	2.328E-04	.0145
55	524.8	.768	.109	1.459E-04	.0091	1.758E-04	.0109
56	524.9	1.098	.141	1.882E-04	.0117	2.268E-04	.0141
57	525.3	1.519	.184	2.471E-04	.0154	2.978E-04	.0185
58	525.1	2.365	.310	4.155E-04	.0259	5.007E-04	.0312
59	525.7	2.964	.387	5.195E-04	.0324	6.262E-04	.0390
60	524.2	2.639	.365	4.879E-04	.0304	5.879E-04	.0366
61	523.9	2.243	.282	3.771E-04	.0235	4.544E-04	.0283
62	523.6	1.515	.184	2.465E-04	.0154	2.970E-04	.0185
63	524.4	1.202	.156	2.088E-04	.0130	2.517E-04	.0157
64	530.1	[illegible]	[illegible]	[illegible]	[illegible]	[illegible]	[illegible]
65	526.7	.966	.131	1.754E-04	.0109	2.114E-04	.0132
66	526.3	1.457	.183	2.453E-04	.0153	2.957E-04	.0184
67	527.4	1.924	.269	3.613E-04	.0225	4.357E-04	.0271
68	526.5	2.936	.370	4.961E-04	.0309	5.983E-04	.0373

PROTUBERANCES

X/L	Z,FULL SCALE(IN)
.3508	374.0500
.3566	374.0500
.3604	374.0500
.3392	366.5500
.3566	366.5500
.3392	360.7000
.3566	360.7000
.3604	360.7000
.3392	353.2000
.3450	353.2000
.3508	353.2000
.3566	353.2000

SUBLIMATOR VENT NO. 1

X/L	Z,FULL SCALE(IN)
.3031	371.1300
.3074	369.1300
.3089	363.6300
.3074	358.1300
.3031	356.1300
.2988	358.1300
.2973	363.6300
.2988	369.1300
.3031	376.1300
.3089	378.6300
.3101	372.6300
.3157	370.3800
.3128	363.6300

DATE 5/12/75

AEDC(ARO,INC.) ARNOLD AFS, TENNESSEE
VON KARMAN GAS DYNAMICS FACILITY
50 INCH HYPERSONIC TUNNEL B
V41B-87A

GROUP	TEST CONDITION	MODEL	MACH NO	PO,PSIA	TO,DEG R	ALPHA-MODEL	ALPHA-SECTOR	ALPHA-PREBEND	ROLL MODEL	YAW
34	13	140 B	7.94	207.4	1272	30.00	-2.02	30.00	90.00	2.0

T-INF (DEG R)	P-INF (PSIA)	Q-INF (PSIA)	V-INF (FT/SEC)	RHO-INF (SLUGS/FT3)	MU-INF (LB-SEC/FT2)	RE/FT (FT-1)	HREF-FR (R= .0400FT)	SIFR (R= .0400FT)	SWITCH POSITION
93.4	.022	.984	3761	2.003E-05	7.523E-08	1.001E 06	1.606E-02	2.688E-02	1

TC NO	TW	DT/DT	QDOT	H(TO)	H(TO)/HREF	H(.9TO)	H(.9TO)/HREF	X/L	Z,FULL SCALE(IN)
								FUSELAGE VENT PANEL NO. 7	
69	521.2	1.271	.176	2.344E-04	.0146	2.822E-04	.0176	.2487	356.4000
70	522.3	1.120	.136	1.818E-04	.0113	2.189E-04	.0136	.2591	356.4000
71	518.7	1.101	.148	1.970E-04	.0123	2.371E-04	.0148	.2419	351.4000
72	519.4	1.050	.148	1.961E-04	.0122	2.360E-04	.0147	.2487	351.4000
73	520.6	1.207	.155	2.069E-04	.0129	2.489E-04	.0155	.2552	351.4000
74	521.1	1.245	.150	1.996E-04	.0124	2.403E-04	.0150	.2610	351.4000
75	516.5	1.302	.175	2.321E-04	.0145	2.791E-04	.0174	.2419	342.8000
77	519.2	1.330	.187	2.484E-04	.0155	2.990E-04	.0186	.2552	342.8000
78	520.8	1.763	.240	3.198E-04	.0199	3.850E-04	.0240	.2610	342.8000
79	516.6	1.513	.192	2.538E-04	.0158	3.052E-04	.0190	.2419	334.2000
80	517.1	.565	.076	1.011E-04	.0063	1.216E-04	.0076	.2487	334.2000
81	517.9	1.977	.273	3.625E-04	.0226	4.361E-04	.0272	.2552	334.2000
								ACCESS HATCH WINDOW	
								X/L	Z,FULL SCALE(IN)
83	526.2	2.091	.278	3.731E-04	.0232	4.499E-04	.0280	.2131	398.0000
84	525.5	1.756	.230	3.088E-04	.0192	3.722E-04	.0232	.2131	388.0000
85	523.9	1.909	.259	3.460E-04	.0216	4.170E-04	.0260	.2131	383.0000
87	525.7	1.398	.199	2.667E-04	.0166	3.215E-04	.0200	.2222	395.8000
88	525.4	1.924	.268	3.589E-04	.0224	4.326E-04	.0269	.2193	386.5000
89	524.0	1.518	.222	2.969E-04	.0185	3.577E-04	.0223	.2177	381.8000
90	526.3	1.833	.249	3.337E-04	.0208	4.023E-04	.0251	.2297	389.5000
91	524.5	2.098	.286	3.832E-04	.0239	4.618E-04	.0288	.2243	382.5000
92	523.8	1.825	.256	3.427E-04	.0213	4.129E-04	.0257	.2214	378.7000
93	525.1	1.741	.221	2.966E-04	.0185	3.575E-04	.0223	.2343	374.0000
94	523.1	2.363	.305	4.080E-04	.0254	4.915E-04	.0306	.2274	375.5000
95	523.2	1.701	.240	3.209E-04	.0200	3.866E-04	.0241	.2239	373.3000
96	522.6	1.592	.216	2.747E-04	.0171	3.309E-04	.0206	.2363	368.0000
97	522.5	1.792	.228	3.038E-04	.0189	3.659E-04	.0228	.2286	368.0000
98	522.1	1.650	.230	3.069E-04	.0191	3.696E-04	.0230	.2247	368.0000
100	519.0	1.650	.232	3.060E-04	.0192	3.706E-04	.0231	.2274	360.5000
102	517.9	1.635	.229	3.036E-04	.0189	3.653E-04	.0228	.2081	354.3000
103	520.1	1.929	.252	3.347E-04	.0208	4.029E-04	.0251	.2023	362.7000
105	523.9	1.600	.199	2.662E-04	.0166	3.208E-04	.0200	.2050	378.7000
106	524.3	2.396	.306	4.089E-04	.0255	4.927E-04	.0307	.2050	386.2000

GROUP 34 CENTERLINE TIME 2.60

CH	TC	FIT LENGTH	DTDWT	UNCERTAINTY	CH	TC	FIT LENGTH	DTDWT	UNCERTAINTY
1	1	2.00	.755	.0288	50	53	1.20	1.034	.0399
2	2	2.00	.744	.0103	51	54	1.20	1.017	.0273
3	3	2.00	.679	.0153	52	55	2.00	.768	.0191
4	4	2.00	.680	.0154	53	56	1.20	1.098	.0219
5	5	2.00	.701	.0287	54	57	1.20	1.519	.0175
6	6	2.00	.606	.0122	55	58	.80	2.365	.0171
7	7	2.00	.474	.2028	56	59	.80	2.964	.0695
8	8	2.00	.534	.0160	57	60	.80	2.639	.0133
9	9	2.00	.584	.0983	58	61	.80	2.243	.0117
10	10	2.00	.431	.0229	59	62	1.20	1.515	.0197
11	11	2.00	.469	.0288	60	63	1.20	1.202	.0171
12	12	2.00	.340	.0340	61	64	2.00	-5.217	-1.0481
13	13	2.00	.299	.0268	62	65	2.00	.966	.0075
14	14	2.00	.372	.0248	63	66	1.20	1.457	.0160
15	15	2.00	.341	.0400	64	67	1.20	1.924	.0155
16	16	2.00	.353	.0314	65	68	.80	2.936	.0134
17	17	2.00	.310	.0538	66	69	1.20	1.271	.0205
18	18	2.00	.193	.0337	67	70	1.20	1.120	.0143
19	19	2.00	.084	.1330	68	71	1.20	1.101	.2086
20	22	.80	2.339	.0286	69	72	1.20	1.050	.0378
21	23	.80	2.301	.0158	70	73	1.20	1.207	.0188
22	24	.80	2.717	.0134	71	74	1.20	1.246	.0496
23	25	.80	2.975	.0196	72	75	1.20	1.302	.0164
24	26	.80	3.538	.0151	73	77	1.20	1.330	.0177
25	27	.80	2.186	.0197	74	78	1.20	1.763	.0138
26	28	.80	2.292	.0265	75	79	1.20	1.513	.0146
27	29	.80	2.775	.0104	76	80	2.00	.565	.0619
28	30	.80	3.064	.0145	77	81	1.20	1.977	.0094
29	31	.80	3.275	.0079	78	83	.80	2.091	.0161
30	32	.80	3.253	.0104	79	84	1.20	1.756	.0625
31	33	1.20	1.817	.0105	80	85	1.20	1.909	.0099
32	34	.80	2.580	.0111	81	87	1.20	1.398	.0159
33	35	.80	2.239	.0121	82	88	1.20	1.924	.0089
34	36	1.20	1.151	.0116	83	89	2.00	1.518	.0318
35	37	1.20	1.606	.0084	84	90	1.20	1.833	.0165
36	38	1.20	1.238	.0163	85	91	.80	2.098	.0075
37	39	1.20	1.067	.0126	86	92	1.20	1.825	.0135
38	41	.80	3.767	.0131	87	93	1.20	1.741	.0231
39	42	.80	3.986	.0156	88	94	.80	2.363	.0167
40	43	.80	3.933	.0103	89	95	1.20	1.701	.0142
41	44	.80	3.609	.0082	90	96	1.20	1.592	.0563
42	45	.80	2.583	.0098	91	97	1.20	1.792	.0167
43	46	.80	2.536	.0223	92	98	1.20	1.650	.0400
44	47	.80	3.304	.0128	93	100	1.20	1.650	.0173
45	48	1.20	1.442	.0162	94	102	1.20	1.635	.0157
46	49	.80	2.173	.0167	95	103	1.20	1.929	.0137
47	50	2.00	1.083	.0186	96	105	1.20	1.600	.0344
48	51	1.20	1.110	.0158	97	106	.80	2.396	.0168
49	52	1.20	1.228	.0217	98	0	-0	0	0
35		.050							

BIT ON LOOP 53

DATE 5/12/75

AEDC(ARO,INC.) ARNOLD AFS, TENNESSEE
VON KARMAN GAS DYNAMICS FACILITY
50 INCH HYPERSONIC TUNNEL B
V41A-B7A

GROUP	TEST CONDITION	MODEL	MACH NO	PO,PSIA	TO,DEG R	ALPHA-MODEL	ALPHA-SECTOR	ALPHA-PREBEND	ROLL MODEL	YAW
35	13	140 H	7.94	211.3	1273	30.00	-2.01	30.00	89.88	2.0

T-INF (DEG R)	P-INF (PSIA)	Q-INF (PSIA)	V-INF (FT/SEC)	RHO-INF (SLUGS/FT3)	MU-INF (LB-SEC/FT2)	RE/FT (FT-1)	HREF-FR (R= .0400FT)	STFR (R= .0400FT)	SWITCH POSITION
93.5	.023	1.003	3762	2.039E-05	7.529E-08	1.019E 06	1.621E-02	2.664E-02	2

IC NO	TW	DI#DT	QDOT	H(TO)	H(TO)/HREF	H(.9TO)	H(.9TO)/HREF	X/L	Z,FULL SCALE(IN)
								ACCESS HATCH WINDOW	
107	525.0	1.987	.244	3.800E-04	.0234	4.581E-04	.0283	.2050	396.2000
								FUSELAGE VENT PANEL NO. 3 AND 1	
108	526.4	3.722	.392	5.263E-04	.0325	6.346E-04	.0392	.1244	377.5000
109	526.1	3.190	.393	5.264E-04	.0325	6.346E-04	.0392	.1302	377.5000
110	525.9	3.038	.384	5.139E-04	.0317	6.195E-04	.0382	.1360	377.5000
111	526.4	3.124	.375	5.029E-04	.0310	6.063E-04	.0374	.1418	377.5000
112	525.9	3.257	.385	5.161E-04	.0318	6.221E-04	.0384	.1476	377.5000
113	524.2	3.547	.405	5.413E-04	.0334	6.522E-04	.0402	.1215	273.5000
114	525.2	3.195	.382	5.112E-04	.0315	6.162E-04	.0380	.1273	273.5000
115	525.4	3.054	.377	5.052E-04	.0312	6.089E-04	.0376	.1331	273.5000
116	524.9	3.098	.379	5.065E-04	.0312	6.104E-04	.0377	.1389	273.5000
117	525.3	3.332	.382	5.115E-04	.0316	6.165E-04	.0380	.1447	273.5000
118	522.3	2.612	.359	4.792E-04	.0296	5.771E-04	.0356	.1409	366.0000
119	522.9	3.052	.393	5.242E-04	.0323	6.314E-04	.0390	.1442	366.0000
120	522.1	3.298	.410	5.463E-04	.0337	6.578E-04	.0406	.1215	359.5000
121	521.4	2.856	.349	4.639E-04	.0286	5.586E-04	.0345	.1303	359.5000
122	521.1	2.965	.367	4.884E-04	.0301	5.880E-04	.0363	.1337	359.5000
								LOWER RCS NOZZLES	
124	530.4	1.713	.153	2.058E-04	.0127	2.484E-04	.0153	.0950	400.0000
125	529.1	1.644	.179	2.404E-04	.0148	2.901E-04	.0179	.0988	400.0000
126	528.2	1.488	.203	2.733E-04	.0169	3.297E-04	.0203	.1027	400.0000
127	529.9	1.715	.231	3.107E-04	.0192	3.750E-04	.0231	.0911	395.0000
128	529.1	1.856	.225	3.024E-04	.0187	3.649E-04	.0225	.0950	395.0000
129	528.6	1.965	.230	3.094E-04	.0191	3.733E-04	.0230	.0988	395.0000
130	532.1	1.896	.227	3.061E-04	.0189	3.696E-04	.0228	.0810	390.0000
131	530.6	1.838	.270	3.639E-04	.0224	4.392E-04	.0271	.0857	390.0000
132	528.1	2.136	.248	3.334E-04	.0206	4.021E-04	.0248	.0963	390.0000
133	529.6	1.794	.217	2.927E-04	.0181	3.531E-04	.0218	.0857	383.8000
134	528.1	2.538	.339	4.554E-04	.0281	5.493E-04	.0339	.0872	377.3000
135	526.1	3.422	.410	5.505E-04	.0340	6.640E-04	.0410	.0903	374.5500
136	527.0	3.721	.412	5.531E-04	.0341	6.669E-04	.0411	.0960	374.5500
137	528.4	3.446	.450	6.041E-04	.0373	7.287E-04	.0450	.0872	370.5500
138	527.5	3.870	.444	5.965E-04	.0368	7.194E-04	.0444	.0928	370.5500
139	529.8	3.579	.456	6.141E-04	.0379	7.410E-04	.0457	.0816	366.0500
140	527.0	3.860	.490	6.566E-04	.0405	7.917E-04	.0488	.0934	362.4000
141	525.3	3.544	.466	6.241E-04	.0385	7.522E-04	.0464	.0973	362.4000
142	524.3	2.834	.307	4.108E-04	.0253	4.949E-04	.0305	.0833	355.2000
143	526.8	4.298	.430	5.770E-04	.0356	6.957E-04	.0429	.0919	355.2000
144	525.6	4.961	.651	8.712E-04	.0538	1.050E-03	.0648	.0949	349.0000

DATE 5/12/75

AEDC(ARO,INC.) ARNOLD AFS, TENNESSEE
VON KARMAN GAS DYNAMICS FACILITY
50 INCH HYPERSONIC TUNNEL B
V41B-87A

GROUP	TEST CONDITION	MODEL	MACH NO	PO,PSIA	TO,DEG R	ALPHA-MODEL	ALPHA-SECTOR	ALPHA-PREBEND	ROLL MODEL	YAW
35	13	140 B	7.94	211.3	1273	30.00	-2.01	30.00	89.88	2.0

T-INF (DEG R)	P-INF (PSIA)	Q-INF (PSIA)	V-INF (FT/SEC)	RHO-INF (SLUGS/FT3)	MU-INF (LB-SEC/FT2)	RE/FT (FT-1)	HREF-FR (R= .0400FT)	STFR (R= .0400FT)	SWITCH POSITION
93.5	.023	1.003	3762	2.039E-05	7.529E-08	1.019E 06	1.621E-02	2.664E-02	2

TC NC	TW	DT=DT	QDOT	H(TO)	H(TO)/HREF	H(.9TO)	H(.9TO)/HREF	X/L	2Y/B
								UPPER RCS NOZZLES	
161	534.9	1.208	.143	1.939E-04	.0120	2.344E-04	.0145	.0619	-.0160
162	534.4	1.030	.098	1.321E-04	.0082	1.596E-04	.0098	.0709	-.0160
163	533.5	.725	.049	1.205E-04	.0074	1.455E-04	.0090	.0807	-.0160
164	532.6	.734	.096	1.292E-04	.0080	1.561E-04	.0096	.0943	-.0160
165	532.4	.738	.093	1.255E-04	.0077	1.515E-04	.0093	.0978	-.0160
166	532.4	.543	.069	9.348E-05	.0058	1.134E-04	.0070	.1013	-.0160
167	535.1	.996	.135	1.829E-04	.0113	2.210E-04	.0136	.0619	-.0320
168	534.1	1.027	.178	1.460E-04	.0090	1.763E-04	.0109	.0709	-.0320
169	533.0	.779	.095	1.279E-04	.0079	1.545E-04	.0095	.0807	-.0320
170	532.3	.685	.086	1.156E-04	.0071	1.397E-04	.0086	.0943	-.0320
171	531.6	.702	.085	1.140E-04	.0070	1.377E-04	.0085	.0978	-.0320
172	531.0	.510	.066	8.948E-05	.0055	1.080E-04	.0067	.1013	-.0320
173	532.8	.596	.080	1.075E-04	.0066	1.298E-04	.0080	.0807	-.0480
174	531.4	.413	.047	6.331E-05	.0039	7.643E-05	.0047	.0943	-.0480
175	530.9	.428	.061	8.252E-05	.0051	9.962E-05	.0061	.0978	-.0480
176	530.8	.306	.042	5.605E-05	.0035	6.766E-05	.0042	.1013	-.0480
								CANOPY	
177	536.7	4.630	.638	8.666E-04	.0535	1.048E-03	.0646		
178	538.5	6.700	1.320	1.798E-03	.1109	2.175E-03	.1342		
179	536.7	4.776	1.002	1.361E-03	.0840	1.646E-03	.1016		
180	534.5	2.306	.301	4.075E-04	.0251	4.923E-04	.0304		
181	533.8	1.593	.216	2.928E-04	.0181	3.537E-04	.0218		
182	532.9	1.464	.208	2.818E-04	.0174	3.404E-04	.0210		
183	530.5	.266	.033	4.488E-05	.0028	5.417E-05	.0033		
184	530.6	.351	.048	6.447E-05	.0040	7.782E-05	.0048		
185	533.4	2.187	.263	3.554E-04	.0219	4.293E-04	.0265		
186	533.7	1.631	.205	2.769E-04	.0171	3.345E-04	.0206		
187	533.6	1.632	.217	2.938E-04	.0181	3.549E-04	.0219		
188	534.0	2.394	.557	7.541E-04	.0465	9.111E-04	.0562		
189	532.0	1.096	.156	2.106E-04	.0130	2.544E-04	.0157		
190	532.4	.948	.136	1.840E-04	.0114	2.222E-04	.0137		
191	532.4	1.240	.189	2.556E-04	.0158	3.087E-04	.0190		

DATE 5/12/75

AEDC(ARO,INC.) ARNOLD AFS, TENNESSEE
VON KARMAN GAS DYNAMICS FACILITY
50 INCH HYPERSONIC TUNNEL B
V41R-87A

GROUP	TEST CONDITION	MODEL	MACH NO	PO,PSIA	TO,DEG R	ALPHA-MODEL	ALPHA-SECTOR	ALPHA-PREBEND	ROLL MODEL	YAW
35	13	140 B	7.94	211.3	1273	30.00	-2.01	30.00	89.88	2.0

T-INF (DEG R)	P-INF (PSIA)	Q-INF (PSIA)	V-INF (FT/SEC)	RHO-INF (SLUGS/FT3)	MU-INF (LB-SEC/FT2)	RE/FT (FT-1)	HREF-FR (R= .0400FT)	STFR (R= .0400FT)	SWITCH POSITION
92.5	.023	1.003	3762	2.039E-05	7.529E-08	1.019E 06	1.621E-02	2.664E-02	2

TC NO	TW	DTWDT	GDOT	H(TO)	H(TO)/HREF	H(.9TO)	H(.9TO)/HREF
						CANOPY	
192	529.3	.544	.077	1.031E-04	.0064	1.244E-04	.0077
193	532.5	1.402	.270	3.643E-04	.0225	4.399E-04	.0271
194	529.4	.101	.013	1.754E-05	.0011	2.116E-05	.0013
195	529.9	.248	.030	4.101E-05	.0025	4.949E-05	.0031
196	530.3	.362	.047	6.386E-05	.0039	7.708E-05	.0048
197	527.2	.394	.039	5.220E-05	.0032	6.295E-05	.0039
198	528.0	.368	.043	5.724E-05	.0035	6.904E-05	.0043
199	527.5	.413	.055	7.424E-05	.0046	8.953E-05	.0055
200	529.5	.284	.040	5.428E-05	.0033	6.550E-05	.0040
201	530.2	.613	.086	1.164E-04	.0072	1.405E-04	.0087
202	531.2	1.152	.145	1.960E-04	.0121	2.367E-04	.0146
203	528.1	.367	.045	6.106E-05	.0038	7.365E-05	.0045
204	528.8	.306	.047	6.378E-05	.0039	7.695E-05	.0047
205	531.1	.913	.142	1.916E-04	.0118	2.312E-04	.0143
206	525.5	1.337	.177	2.364E-04	.0146	2.849E-04	.0176
207	531.2	1.133	.152	2.045E-04	.0126	2.468E-04	.0152
208	527.5	.394	.053	7.081E-05	.0044	8.540E-05	.0053
209	528.5	.387	.053	7.137E-05	.0044	8.610E-05	.0053
210	528.8	.358	.048	6.413E-05	.0040	7.737E-05	.0048
211	526.3	1.114	.135	1.806E-04	.0111	2.177E-04	.0134
212	526.6	.635	.085	1.145E-04	.0071	1.380E-04	.0085
213	527.9	.527	.070	9.352E-05	.0058	1.128E-04	.0070
214	528.4	.401	.056	7.537E-05	.0047	9.092E-05	.0056
215	529.0	.482	.068	9.181E-05	.0057	1.108E-04	.0068
216	530.5	1.087	.154	2.076E-04	.0128	2.505E-04	.0155
217	530.7	.820	.117	1.572E-04	.0097	1.898E-04	.0117
218	527.8	.501	.069	9.254E-05	.0057	1.116E-04	.0069
219	528.1	.650	.091	1.225E-04	.0076	1.478E-04	.0091
220	528.9	.589	.081	1.086E-04	.0067	1.310E-04	.0081

GROUP 35 CENTERLINE TIME 2.60

CH	TC	FIT LENGTH	DTDWT	UNCERTAINTY	CH	TC	FIT LENGTH	DTDWT	UNCERTAINTY
1	107	1.20	1.987	.0105	50	173	2.00	.596	.0431
2	108	.80	3.722	.0099	51	174	2.00	.413	.0355
3	109	.80	3.190	.0131	52	175	2.00	.428	.0295
4	110	.80	3.038	.0139	53	176	2.00	.306	.0299
5	111	.80	3.124	.0309	54	177	.60	4.630	.0156
6	112	.80	3.257	.0079	55	178	.60	6.700	.0083
7	113	.80	3.547	.0802	56	179	.60	4.776	.0450
8	114	.80	3.195	.0110	57	180	.80	2.306	.0089
9	115	.80	3.054	.0341	58	181	1.20	1.593	.0086
10	116	.80	3.098	.0100	59	182	1.20	1.464	.0216
11	117	.80	3.332	.0134	60	183	2.00	.266	.0241
12	118	.80	2.612	.0198	61	184	2.00	.351	.0458
13	119	.80	3.052	.0097	62	185	.80	2.187	.0100
14	120	.80	3.298	.0122	63	186	1.20	1.631	.0129
15	121	.80	2.656	.0151	64	187	1.20	1.632	.0141
16	122	.80	2.965	.0169	65	188	.80	2.394	.0124
17	124	1.20	1.713	.0239	66	189	1.20	1.096	.0228
18	125	1.20	1.644	.0210	67	190	2.00	.948	.0075
19	126	1.20	1.488	.0155	68	191	1.20	1.240	.1669
20	127	1.20	1.715	.0132	69	192	2.00	.544	.0497
21	128	1.20	1.856	.0068	70	193	1.20	1.402	.0161
22	129	1.20	1.965	.0078	71	194	2.00	.101	.1863
23	130	1.20	1.896	.0268	72	195	2.00	.248	.0431
24	131	1.20	1.830	.0104	73	196	2.00	.362	.0369
25	132	.80	2.136	.0189	74	197	2.00	.394	.0654
26	133	1.20	1.794	.0111	75	198	2.00	.368	.0329
27	134	.80	2.538	.0098	76	199	2.00	.413	.0554
28	135	.80	3.422	.0081	77	200	2.00	.284	.0339
29	136	.80	3.721	.0073	78	201	2.00	.613	.0119
30	137	.80	3.446	.0087	79	202	1.20	1.152	.0907
31	138	.80	3.870	.0108	80	203	2.00	.367	.0234
32	139	.80	3.579	.0133	81	204	2.00	.306	.0283
33	140	.80	3.860	.0075	82	205	2.00	.913	.0091
34	141	.80	3.544	.0118	83	206	1.20	1.337	.0207
35	142	.80	2.834	.0158	84	207	1.20	1.133	.0173
36	143	.60	4.298	.0103	85	208	2.00	.394	.0175
37	144	.60	4.961	.0074	86	209	2.00	.387	.0188
38	161	1.20	1.218	.0215	87	210	2.00	.358	.0761
39	162	1.20	1.030	.0199	88	211	2.00	1.114	.0141
40	163	2.00	.725	.0193	89	212	2.00	.635	.0224
41	164	2.00	.734	.0099	90	213	2.00	.527	.0816
42	165	2.00	.738	.0122	91	214	2.00	.401	.0411
43	166	2.00	.543	.0180	92	215	2.00	.482	.0467
44	167	2.00	.996	.0089	93	216	1.20	1.087	.0207
45	168	1.20	1.027	.0149	94	217	2.00	.820	.0149
46	169	2.00	.779	.0100	95	218	2.00	.501	.0421
47	170	2.00	.685	.0328	96	219	2.00	.650	.0328
48	171	2.00	.702	.0150	97	220	2.00	.589	.0121
49	172	2.00	.510	.0203	98	0	-0	0	0
36		.050							

BIT ON LOOP 53

DATE 5/12/75

AEDC(ARO,INC.) ARNOLD AFS, TENNESSEE
VON KARMAN GAS DYNAMICS FACILITY
50 INCH HYPERSONIC TUNNEL B
V41B-87A

GROUP	TEST CONDITION	MODEL	MACH NO	PO,PSIA	TO,DEG R	ALPHA-MODEL	ALPHA-SECTOR	ALPHA-PREBEND	ROLL MODEL	YAW
36	13	140 B	7.94	211.5	1273	30.00	-2.03	30.00	89.86	2.0

T-INF (DEG R)	P-INF (PSIA)	Q-INF (PSIA)	V-INF (FT/SEC)	RHO-INF (SLUGS/FT3)	MU-INF (LB-SEC/FT2)	RE/FT (FT-1)	HREF-FR (R= .0400FT)	STFR (R= .0400FT)	SWITCH POSITION
93.5	.023	1.004	3763	2.040E-05	7.531E-06	1.020E 06	1.622E-02	2.663E-02	3

TC NO	TW	DTWDT	QDOT	H(TO)	H(TO)/HREF	H(.9TO)	H(.9TO)/HREF	X/L	2Y/B
								CANOPY	
221	523.6	.300	.036	4.815E-05	.0030	5.801E-05	.0036		
222	523.4	.461	.057	7.544E-05	.0047	9.088E-05	.0056		
223	524.5	.678	.119	1.586E-04	.0098	1.911E-04	.0118		
								ESCAPE HATCH AND WINDOW	
224	529.3	3.707	.368	4.952E-04	.0305	5.975E-04	.0368	.1933	.0162
225	527.8	2.261	.272	3.652E-04	.0225	4.404E-04	.0272	.1972	.0162
226	528.0	2.881	.303	4.063E-04	.0251	4.901E-04	.0302	.1933	.0384
227	525.9	1.909	.278	3.728E-04	.0230	4.493E-04	.0277	.1972	.0384
228	525.6	1.394	.179	2.389E-04	.0147	2.880E-04	.0178	.1933	.0653
229	525.9	1.320	.169	2.263E-04	.0140	2.728E-04	.0168	.1972	.0653
232	528.4	.227	.031	4.118E-05	.0025	4.967E-05	.0031	.2567	.0235
233	529.0	.263	.040	5.348E-05	.0033	6.452E-05	.0040	.2606	.0235
236	527.6	.215	.031	4.210E-05	.0026	5.077E-05	.0031	.2567	.0491
237	528.1	.238	.033	4.473E-05	.0028	5.395E-05	.0033	.2606	.0491
								CARGO BAY HINGE NO. 1	
								X/L	Z,FULL SCALE(IN)
238	529.0	1.198	.160	2.152E-04	.0133	2.597E-04	.0160	.2879	420.0000
239	528.9	1.223	.163	2.197E-04	.0135	2.650E-04	.0163	.2917	420.0000
240	529.0	.915	.130	1.753E-04	.0108	2.115E-04	.0130	.2840	415.0000
241	528.9	1.103	.155	2.081E-04	.0128	2.510E-04	.0155	.2879	415.0000
242	528.6	1.012	.144	1.938E-04	.0119	2.337E-04	.0144	.2917	415.0000
243	527.2	1.242	.151	2.031E-04	.0125	2.449E-04	.0151	.2801	405.0000
244	527.3	.659	.077	1.031E-04	.0064	1.243E-04	.0077	.2840	405.0000
								CARGO BAY HINGE NO. 2	
								X/L	Z,FULL SCALE(IN)
245	529.3	.780	.111	1.494E-04	.0092	1.803E-04	.0111	.3192	420.0000
246	529.2	.729	.104	1.398E-04	.0086	1.687E-04	.0104	.3439	420.0000
247	528.9	.641	.094	1.267E-04	.0078	1.529E-04	.0094	.3362	415.0000
248	528.7	.509	.075	1.006E-04	.0062	1.213E-04	.0075	.3401	415.0000
249	529.0	.634	.093	1.253E-04	.0077	1.512E-04	.0093	.3439	415.0000
250	528.1	.799	.100	1.342E-04	.0083	1.619E-04	.0100	.3323	405.0000
251	528.3	.856	.105	1.408E-04	.0087	1.698E-04	.0105	.3362	405.0000
								CARGO BAY HINGE NO. 3	
								X/L	Z,FULL SCALE(IN)
252	530.8	1.835	.266	3.582E-04	.0221	4.324E-04	.0267	.3923	420.0000
253	531.6	1.950	.233	3.814E-04	.0235	4.604E-04	.0284	.3961	420.0000
254	530.4	1.579	.239	3.222E-04	.0199	3.889E-04	.0240	.3884	415.0000
257	530.4	2.191	.295	3.973E-04	.0245	4.795E-04	.0296	.3845	405.0000
258	531.3	2.607	.355	4.782E-04	.0295	5.772E-04	.0356	.3884	405.0000

DATE 5/12/75

AEDC(ARO,INC.) ARNOLD AFS, TENNESSEE
VON KARMAN GAS DYNAMICS FACILITY
50 INCH HYPERSONIC TUNNEL B
V41B-B7A

GROUP	TEST CONDITION	MODEL	MACH NO	PO,PSIA	TO,DEG R	ALPHA-MODEL	ALPHA-SECTOR	ALPHA-PREBEND	ROLL MODEL	YAW
36	13	140 B	7.94	211.5	1273	30.00	-2.03	30.00	89.86	2.0

T-INF (DEG R)	P-INF (PSIA)	Q-INF (PSIA)	V-INF (FT/SEC)	RHO-INF (SLUGS/FT3)	MU-INF (LB-SEC/FT2)	RE/FT (FT-1)	HREF-FR (R= .0400FT)	STFR (R= .0400FT)	SWITCH POSITION
93.5	.023	1.004	3763	2.040E-05	7.531E-08	1.020E 06	1.622E-02	2.663E-02	3

TOP CENTERLINE

TC NO	TW	DTWDT	QDOT	H(TO)	H(TO)/HREF	H(.9TO)	H(.9TO)/HREF	X/L
367	569.9	51.769	6.191	8.606E-03	.5431	1.075E-02	.6631	0
368	551.8	36.950	4.729	6.557E-03	.4044	7.963E-03	.4910	.0008
369	547.6	27.623	3.254	4.487E-03	.2767	5.442E-03	.3356	.0019
370	540.5	18.992	2.323	3.172E-03	.1956	3.840E-03	.2368	.0037
371	536.7	12.480	1.222	1.660E-03	.1024	2.007E-03	.1238	.0058
372	533.2	8.400	1.040	1.460E-03	.0900	1.763E-03	.1087	.0087
373	532.3	5.180	.677	9.143E-04	.0564	1.104E-03	.0681	.0118
374	531.3	3.883	.587	6.842E-04	.0422	8.259E-04	.0509	.0151
375	531.0	3.194	.436	5.874E-04	.0362	7.090E-04	.0437	.0182
376	531.4	2.815	.370	4.995E-04	.0308	6.030E-04	.0372	.0215
377	531.5	2.537	.326	4.395E-04	.0271	5.306E-04	.0327	.0246
378	531.2	2.129	.248	3.341E-04	.0206	4.033E-04	.0249	.0278
379	530.6	1.322	.162	2.184E-04	.0135	2.636E-04	.0163	.0609
380	529.4	1.165	.119	1.606E-04	.0099	1.938E-04	.0120	.0646
381	528.6	1.029	.133	1.785E-04	.0110	2.153E-04	.0133	.0684
382	528.3	.939	.123	1.646E-04	.0101	1.985E-04	.0122	.0721
383	527.8	.847	.113	1.519E-04	.0094	1.832E-04	.0113	.0760
384	527.3	.721	.100	1.343E-04	.0083	1.619E-04	.0100	.0796
385	527.9	.663	.085	1.141E-04	.0070	1.376E-04	.0085	.0789
386	528.1	.718	.085	1.137E-04	.0070	1.372E-04	.0085	.0982
387	528.7	.804	.098	1.323E-04	.0082	1.596E-04	.0098	.1019
388	529.3	1.190	.113	1.519E-04	.0094	1.832E-04	.0113	.1160
389	528.6	1.056	.153	2.054E-04	.0127	2.478E-04	.0153	.1195
390	528.5	1.066	.168	2.250E-04	.0139	2.714E-04	.0167	.1231
391	528.5	.946	.150	2.021E-04	.0125	2.438E-04	.0150	.1268
392	528.6	.977	.167	2.246E-04	.0138	2.709E-04	.0167	.1305
393	528.0	1.059	.179	2.398E-04	.0148	2.893E-04	.0178	.1338
394	528.0	1.090	.183	2.450E-04	.0151	2.955E-04	.0182	.1376
395	527.9	1.076	.161	2.155E-04	.0133	2.599E-04	.0160	.1411
396	528.3	1.227	.181	2.437E-04	.0150	2.939E-04	.0181	.1448
397	528.7	1.267	.187	2.517E-04	.0155	3.036E-04	.0187	.1483
398	528.5	1.344	.189	2.532E-04	.0156	3.055E-04	.0188	.1519
399	532.2	4.245	.566	7.646E-04	.0471	9.232E-04	.0569	.1556

DATE 5/12/75

AEDC(ARO,INC.) ARNOLD AFS, TENNESSEE
VON KARMAN GAS DYNAMICS FACILITY
50 INCH HYPERSONIC TUNNEL B
V41B-87A

GROUP	TEST CONDITION	MODEL	MACH NO	PO,PSIA	TO,DEG R	ALPHA-MODEL	ALPHA-SECTOR	ALPHA-PREBEND	ROLL MODEL	YAW
36	13	140 B	7.94	211.5	1273	30.00	-2.03	30.00	89.86	2.0

T-INF (DEG R)	P-INF (PSIA)	Q-INF (PSIA)	V-INF (FT/SEC)	RHO-INF (SLUGS/FT3)	MU-INF (LB-SEC/FT2)	RE/FT (FT-1)	HREF-FR (R= .0400FT)	STFR (R= .0400FT)	SWITCH POSITION
93.5	.023	1.004	3763	2.040E-05	7.531E-08	1.020E 06	1.622E-02	2.663E-02	3

TC NO	TW	DT*DT	QDOT	H(TO)	H(TO)/HREF	H(.9TO)	H(.9TO)/HREF	X/L
								TOP CENTERLINE
400	533.8	5.856	.790	1.068E-03	.0659	1.291E-03	.0796	.1582
401	533.5	6.069	.786	1.063E-03	.0655	1.284E-03	.0792	.1608
402	534.8	6.618	.825	1.118E-03	.0689	1.350E-03	.0833	.1635
403	535.0	7.011	.852	1.155E-03	.0712	1.395E-03	.0860	.1664
404	534.8	7.119	.862	1.168E-03	.0720	1.411E-03	.0870	.1691
405	535.1	7.235	.876	1.187E-03	.0732	1.435E-03	.0885	.1720
406	533.8	6.507	.787	1.065E-03	.0657	1.287E-03	.0794	.1748
407	532.9	5.479	.706	9.535E-04	.0588	1.152E-03	.0710	.1769
408	532.0	4.754	.696	9.369E-04	.0579	1.134E-03	.0699	.1800
409	531.0	3.653	.525	7.070E-04	.0436	8.535E-04	.0526	.1831
410	529.8	3.115	.447	6.016E-04	.0371	7.260E-04	.0448	.1863
411	529.4	2.476	.371	4.985E-04	.0307	6.014E-04	.0371	.1894
412	529.5	1.653	.265	3.559E-04	.0219	4.295E-04	.0265	.1931
413	528.3	1.760	.235	3.157E-04	.0195	3.808E-04	.0235	.1972
414	528.5	.749	.100	1.344E-04	.0083	1.621E-04	.0100	.2049
415	528.1	.342	.034	4.520E-05	.0028	5.451E-05	.0034	.2250
416	529.1	.213	.025	3.335E-05	.0021	4.024E-05	.0025	.2500
								NOSE TC (Z = 338)
								X/L 2Y/B
145	558.2	33.798	4.584	6.414E-03	.3955	7.803E-03	.4812	.0008 .5039
146	558.0	37.229	5.049	7.061E-03	.4355	8.591E-03	.5298	.0023 .5082
147	550.7	30.515	4.123	5.708E-03	.3520	6.930E-03	.4273	.0043 .5135
148	547.2	23.867	3.326	4.584E-03	.2827	5.559E-03	.3428	.0068 .5205
149	541.2	17.301	2.447	3.413E-03	.2104	4.131E-03	.2548	.0095 .5279
150	542.8	15.337	2.175	3.006E-03	.1854	3.641E-03	.2245	.0122 .5354
151	539.7	10.525	1.475	2.012E-03	.1241	2.435E-03	.1502	.0218 .5621
152	538.7	11.381	1.539	2.096E-03	.1292	2.535E-03	.1563	.0251 .5712
153	539.3	11.245	1.376	1.875E-03	.1156	2.269E-03	.1399	.0286 .5808
154	539.8	11.113	1.379	1.881E-03	.1160	2.276E-03	.1403	.0319 .5898
155	538.5	10.781	1.351	1.840E-03	.1135	2.226E-03	.1372	.0354 .5995
156	537.0	9.653	1.196	1.625E-03	.1002	1.965E-03	.1212	.0387 .6085
157	536.7	9.478	1.161	1.577E-03	.0973	1.907E-03	.1176	.0420 .6176
158	536.1	9.926	1.216	1.650E-03	.1018	1.995E-03	.1230	.0462 .6294
159	535.2	9.578	1.070	1.450E-03	.0894	1.753E-03	.1081	.0503 .6406

GROUP 36 CENTERLINE TIME 2.60

CH	TC	FIT LENGTH	DTDWT	UNCERTAINTY	CH	TC	FIT LENGTH	DTDWT	UNCERTAINTY
1	221	2.00	.300	.0363	50	384	2.00	.721	.0155
2	222	2.00	.461	.0195	51	385	2.00	.663	.0205
3	223	2.00	.878	.0154	52	386	2.00	.718	.0204
4	224	.80	3.707	.0089	53	387	2.00	.804	.0108
5	225	.80	2.281	.0335	54	388	1.20	1.190	.0190
6	226	.80	2.881	.0121	55	389	1.20	1.056	.0193
7	227	.80	1.909	.1280	56	390	1.20	1.066	.0694
8	228	1.20	1.394	.0126	57	391	2.00	.946	.0107
9	229	1.20	1.320	.0313	58	392	2.00	.977	.0088
10	232	2.00	.227	.0385	59	393	1.20	1.059	.0226
11	233	2.00	.263	.0558	60	394	1.20	1.090	.0133
12	236	2.00	.215	.0471	61	395	1.20	1.076	.0399
13	237	2.00	.238	.0383	62	396	1.20	1.227	.0135
14	238	1.20	1.158	.0117	63	397	1.20	1.267	.0164
15	239	1.20	1.223	.0270	64	398	1.20	1.344	.0301
16	240	2.00	.915	.0128	65	399	.60	4.245	.0126
17	241	1.20	1.103	.0306	66	400	.60	5.856	.0059
18	242	1.20	1.012	.0200	67	401	.60	6.069	.0065
19	243	1.20	1.242	.0192	68	402	.60	6.618	.0520
20	244	2.00	.659	.0214	69	403	.60	7.011	.0187
21	245	2.00	.780	.0109	70	404	.60	7.119	.0105
22	246	2.00	.729	.0108	71	405	.60	7.235	.0189
23	247	2.00	.641	.0405	72	406	.60	6.507	.0080
24	248	2.00	.509	.0261	73	407	.60	5.470	.0083
25	249	2.00	.634	.0218	74	408	.60	4.754	.0168
26	250	2.00	.799	.0111	75	409	.80	3.653	.0113
27	251	2.00	.856	.0153	76	410	.80	3.116	.0164
28	252	1.20	1.835	.0145	77	411	.80	2.476	.0170
29	253	1.20	1.950	.0079	78	412	1.20	1.953	.0111
30	254	1.20	1.579	.0139	79	413	1.20	1.760	.0708
31	257	.80	2.191	.0143	80	414	2.00	.749	.0116
32	258	.80	2.607	.0166	81	415	2.00	.342	.0328
33	367	.20	51.769	.0014	82	416	2.00	.213	.0328
34	368	.20	36.950	.0051	83	145	.20	33.796	.0049
35	369	.30	27.623	.0069	84	146	.20	37.229	.0058
36	370	.30	18.992	.0097	85	147	.30	30.515	.0060
37	371	.40	12.480	.0058	86	148	.30	23.867	.0030
38	372	.40	8.400	.0107	87	149	.30	17.301	.0243
39	373	.60	5.180	.0103	88	150	.40	15.337	.0044
40	374	.60	3.883	.0262	89	151	.40	10.525	.0101
41	375	.80	3.194	.0094	90	152	.40	11.381	.0445
42	376	.80	2.815	.0096	91	153	.40	11.295	.0141
43	377	.80	2.537	.0217	92	154	.40	11.113	.0253
44	378	.80	2.129	.0170	93	155	.40	10.781	.0060
45	379	1.20	1.322	.0129	94	156	.40	9.653	.0152
46	380	1.20	1.165	.0163	95	157	.40	9.478	.0081
47	381	1.20	1.029	.0402	96	158	.40	9.926	.0131
48	382	2.00	.939	.0108	97	159	.40	9.578	.0118
49	383	2.00	.847	.0139	98	0	-0	0	0
37		.050							

BIT ON LOOP 53

DATE 5/12/75

AEDC(ARO,INC.) ARNOLD AFS, TENNESSEE
VON KARMAN GAS DYNAMICS FACILITY
50 INCH HYPERSONIC TUNNEL B
V41B-B7A

GROUP	TEST CONDITION	MODEL	MACH NO	PO,PSIA	TO,DEG R	ALPHA-MODEL	ALPHA-SECTOR	ALPHA-PREBEND	ROLL MODEL	YAW
37	14	140 B	7.94	209.8	1273	35.05	-5.05	30.00	179.88	.0

T-INF (DEG R)	P-INF (PSIA)	Q-INF (PSIA)	V-INF (FT/SEC)	RHO-INF (SLUGS/FT3)	MU-INF (LB-SEC/FT2)	RE/FT (FT-1)	HREF-FR (R= .0400FT)	STFR (R= .0400FT)	SWITCH POSITION
93.5	.023	.996	3763	2.024E-05	7.531E-08	1.011E 06	1.615E-02	2.674E-02	1

TC NO	TW	DTWDT	QDOT	H(TO)	H(TO)/HREF	H(.9TO)	H(.9TO)/HREF
							FUSELAGE VENT NO. 1
							X/L Z,FULL SCALE(IN)
1	531.7	.422	.056	7.486E-05	.0046	9.041E-05	.0056
2	531.6	.414	.056	7.499E-05	.0046	9.054E-05	.0056
3	531.3	.344	.047	6.356E-05	.0039	7.673E-05	.0048
4	531.3	.362	.049	6.614E-05	.0041	7.985E-05	.0049
5	531.4	.387	.051	6.937E-05	.0043	8.375E-05	.0052
6	531.5	.327	.043	5.816E-05	.0036	7.021E-05	.0043
7	530.7	.263	.038	5.156E-05	.0032	6.223E-05	.0039
8	531.4	.306	.046	6.209E-05	.0038	7.496E-05	.0046
9	531.3	.323	.047	6.317E-05	.0039	7.626E-05	.0047
10	531.1	.216	.031	4.136E-05	.0026	4.992E-05	.0031
11	531.2	.208	.028	3.777E-05	.0023	4.560E-05	.0028
12	530.9	.118	.016	2.176E-05	.0013	2.627E-05	.0016
13	530.5	.139	.020	2.738E-05	.0017	3.304E-05	.0020
14	530.8	.136	.019	2.494E-05	.0015	3.011E-05	.0019
15	531.0	.192	.025	3.434E-05	.0021	4.145E-05	.0026
16	530.5	.154	.021	2.799E-05	.0017	3.379E-05	.0021
17	530.5	.122	.016	2.217E-05	.0014	2.676E-05	.0017
18	530.5	.062	.009	1.166E-05	.0007	1.408E-05	.0009
19	530.4	-.015	-.002	-2.814E-06	-.0002	-3.396E-06	-.0002
							CARGO BAY VENT NO. 1
							X/L Z,FULL SCALE(IN)
22	533.6	2.715	.376	5.083E-04	.0315	6.141E-04	.0380
23	533.7	2.790	.389	5.259E-04	.0326	6.352E-04	.0393
24	534.0	2.839	.383	5.182E-04	.0321	6.260E-04	.0388
25	533.9	2.649	.348	4.707E-04	.0291	5.686E-04	.0352
26	534.4	2.760	.361	4.891E-04	.0303	5.909E-04	.0366
27	533.3	2.468	.343	4.632E-04	.0287	5.595E-04	.0346
28	533.1	2.163	.310	4.189E-04	.0259	5.060E-04	.0313
29	532.8	2.101	.302	4.080E-04	.0253	4.927E-04	.0305
30	532.7	2.175	.312	4.210E-04	.0261	5.085E-04	.0315
31	532.9	2.092	.291	3.937E-04	.0244	4.755E-04	.0294
32	533.3	1.954	.258	3.491E-04	.0216	4.216E-04	.0261
33	532.6	1.000	.142	1.924E-04	.0119	2.323E-04	.0144
34	533.1	1.342	.181	2.445E-04	.0151	2.954E-04	.0183
35	532.3	1.458	.206	2.775E-04	.0172	3.351E-04	.0208
36	532.2	.612	.088	1.194E-04	.0074	1.442E-04	.0089
37	532.8	.902	.126	1.707E-04	.0106	2.062E-04	.0128
38	532.4	.673	.093	1.262E-04	.0078	1.524E-04	.0094
39	531.8	.529	.077	1.039E-04	.0064	1.254E-04	.0078
							PROTUBERANCES
							X/L Z,FULL SCALE(IN)
41	531.4	2.143	.286	3.854E-04	.0239	4.652E-04	.0288
42	531.0	2.087	.284	3.825E-04	.0237	4.617E-04	.0286
43	531.5	2.548	.330	4.445E-04	.0275	5.367E-04	.0332

X/L	Z,FULL SCALE(IN)
.4434	376.6300
.4264	371.6300
.4303	371.6300
.4342	371.6300
.4380	371.6300
.4434	369.1300
.4226	366.6300
.4264	366.6300
.4303	366.6300
.4342	366.6300
.4380	366.6300
.4496	366.6300
.4187	357.1300
.4396	361.6300
.4434	361.6300
.4396	355.6300
.4434	355.6300
.4396	351.6300
.4291	332.6300
.3974	397.6300
.4013	397.6300
.4052	397.6300
.4090	397.6300
.4129	397.6300
.3936	392.6300
.3974	392.6300
.4013	392.6300
.4052	392.6300
.4090	392.6300
.4129	392.6300
.4090	386.1300
.4129	387.6300
.3897	383.1300
.4090	378.6300
.4129	382.1300
.4129	377.1300
.4001	373.6300
.3546	379.0500
.3604	379.0500
.3450	374.0500

DATE 5/12/75

AEDC(ARO,INC.) ARNOLD AFS, TENNESSEE
VON KARMAN GAS DYNAMICS FACILITY
50 INCH HYPERSONIC TUNNEL B
V41B-87A

GROUP	TEST CONDITION	MODEL	MACH NO	PO,PSIA	TO,DEG R	ALPHA-MODEL	ALPHA-SECTOR	ALPHA-PREBEND	ROLL MODEL	YAW
37	14	140 B	7.94	209.8	1273	35.05	-5.05	30.00	179.88	.0

T-INF (DEG R)	P-INF (PSIA)	Q-INF (PSIA)	V-INF (FT/SEC)	RHO-INF (SLUGS/FT3)	MU-INF (LB-SEC/FT2)	RE/FT (FT-1)	HREF-FR (R= .0400FT)	STFR (R= .0400FT)	SWITCH POSITION
93.5	.023	.996	3763	2.024E-05	7.531E-08	1.011E 06	1.615E-02	2.674E-02	1

TC NO	TW	DTWDT	QDOT	H(TO)	H(TO)/HREF	H(.9TO)	H(.9TO)/HREF	X/L	Z,FULL SCALE(IN)
								PROTUBERANCES	
44	531.2	1.799	.244	3.288E-04	.0204	3.969E-04	.0246	.3508	374.0500
45	530.4	1.154	.159	2.140E-04	.0133	2.583E-04	.0160	.3566	374.0500
46	530.7	1.283	.178	2.405E-04	.0149	2.903E-04	.0180	.3604	374.0500
47	530.4	1.699	.225	3.030E-04	.0188	3.657E-04	.0226	.3392	366.5500
48	530.2	.956	.130	1.755E-04	.0109	2.118E-04	.0131	.3566	366.5500
49	529.8	1.316	.180	2.423E-04	.0150	2.923E-04	.0181	.3392	360.7000
50	529.6	.749	.103	1.392E-04	.0086	1.680E-04	.0104	.3566	360.7000
51	529.9	.822	.111	1.494E-04	.0092	1.803E-04	.0112	.3604	360.7000
52	529.0	.785	.107	1.442E-04	.0089	1.740E-04	.0108	.3392	353.2000
53	529.0	.647	.094	1.263E-04	.0078	1.524E-04	.0094	.3450	353.2000
54	528.7	1.402	.199	2.676E-04	.0166	3.229E-04	.0200	.3508	353.2000
55	529.1	.498	.071	9.509E-05	.0059	1.147E-04	.0071	.3566	353.2000
								SUBLIMATOR VENT NO. 1	
								X/L	Z,FULL SCALE(IN)
56	529.1	1.585	.203	2.734E-04	.0169	3.299E-04	.0204	.3031	371.1300
57	529.6	2.080	.253	3.405E-04	.0211	4.108E-04	.0254	.3074	369.1300
58	530.0	2.719	.357	4.812E-04	.0298	5.807E-04	.0360	.3089	363.6300
59	530.0	2.414	.316	4.258E-04	.0264	5.139E-04	.0318	.3074	358.1300
60	529.3	2.192	.304	4.084E-04	.0253	4.927E-04	.0305	.3031	356.1300
61	529.3	2.308	.291	3.914E-04	.0242	4.722E-04	.0292	.2988	358.1300
62	529.2	1.902	.232	3.121E-04	.0193	3.766E-04	.0233	.2973	363.6300
63	528.9	1.536	.200	2.685E-04	.0166	3.240E-04	.0201	.2988	369.1300
64	531.4	~~-.010~~	~~.001~~	~~-1.646E-06~~	~~.0001~~	~~-2.036E-06~~	~~.0001~~	.3031	376.1300
65	529.7	1.466	.199	2.671E-04	.0165	3.224E-04	.0200	.3089	378.6300
66	530.4	1.931	.243	3.269E-04	.0202	3.946E-04	.0244	.3101	372.6300
67	531.4	2.591	.363	4.893E-04	.0303	5.907E-04	.0366	.3157	370.3800
68	531.2	2.815	.355	4.790E-04	.0297	5.782E-04	.0358	.3128	363.6300

DATE 5/12/75 AEDC(ARO,INC.) ARNOLD AFS, TENNESSEE

VON KARMAN GAS DYNAMICS FACILITY

50 INCH HYPERSONIC TUNNEL B

V41R-87A

GROUP	TEST CONDITION	MODEL	MACH NO	PO,PSIA	TO,DEG R	ALPHA-MODEL	ALPHA-SECTOR	ALPHA-PREBEND	ROLL MODEL	YAW
37	14	140 B	7.94	209.8	1273	35.05	-5.05	30.00	179.88	.0

T-INF (DEG R)	P-INF (PSIA)	Q-INF (PSIA)	V-INF (FT/SEC)	RHO-INF (SLUGS/FT3)	MU-INF (LB-SEC/FT2)	RE/FT (FT-1)	HREF-FR (H= .0400FT)	STFR (R= .0400FT)	SWITCH POSITION
93.5	.023	.996	3763	2.024E-05	7.531E-08	1.011E 06	1.615E-02	2.674E-02	1

TC NO	TW	DTWDT	QDOT	H(TO)	H(TO)/HREF	H(.9TO)	H(.9TO)/HREF	X/L	Z,FULL SCALE(IN)
								FUSELAGE VENT PANEL NO. 7	
69	526.8	1.263	.176	2.361E-04	.0146	2.847E-04	.0176	.2487	356.4000
70	527.2	1.222	.149	1.999E-04	.0124	2.410E-04	.0149	.2591	356.4000
71	525.7	1.233	.167	2.231E-04	.0138	2.690E-04	.0167	.2419	351.4000
72	526.1	1.119	.158	2.113E-04	.0131	2.547E-04	.0158	.2487	351.4000
73	527.1	1.308	.169	2.262E-04	.0140	2.728E-04	.0169	.2552	351.4000
74	527.5	1.454	.175	2.352E-04	.0146	2.837E-04	.0176	.2610	351.4000
75	525.1	1.353	.183	2.446E-04	.0151	2.947E-04	.0182	.2419	342.8000
77	527.4	1.534	.216	2.903E-04	.0180	3.500E-04	.0217	.2552	342.8000
78	528.1	1.825	.249	3.349E-04	.0207	4.040E-04	.0250	.2610	342.8000
79	525.9	1.632	.208	2.780E-04	.0172	3.351E-04	.0207	.2419	334.2000
80	526.2	1.291	.175	2.346E-04	.0145	2.828E-04	.0175	.2487	334.2000
81	526.3	1.785	.248	3.318E-04	.0205	4.000E-04	.0248	.2552	334.2000
								ACCESS HATCH WINDOW	
								X/L	Z,FULL SCALE(IN)
83	526.5	2.093	.278	3.730E-04	.0231	4.497E-04	.0278	.2131	398.0000
84	527.1	1.862	.244	3.277E-04	.0203	3.951E-04	.0245	.2131	388.0000
85	526.4	1.779	.241	3.234E-04	.0200	3.898E-04	.0241	.2131	383.0000
87	526.7	1.482	.211	2.828E-04	.0175	3.410E-04	.0211	.2222	395.8000
88	527.4	1.903	.265	3.557E-04	.0220	4.289E-04	.0266	.2193	386.5000
89	526.9	1.232	.180	2.417E-04	.0150	2.914E-04	.0180	.2177	381.8000
90	527.8	1.812	.246	3.302E-04	.0204	3.982E-04	.0247	.2297	389.5000
91	527.6	1.923	.263	3.525E-04	.0218	4.251E-04	.0263	.2243	382.5000
92	527.0	1.743	.245	3.287E-04	.0203	3.963E-04	.0245	.2214	378.7000
93	527.8	1.661	.211	2.838E-04	.0176	3.423E-04	.0212	.2343	374.0000
94	526.4	2.223	.288	3.855E-04	.0239	4.648E-04	.0288	.2274	375.5000
95	526.9	1.664	.235	3.156E-04	.0195	3.805E-04	.0236	.2239	373.3000
96	527.0	1.661	.215	2.884E-04	.0179	3.477E-04	.0215	.2363	368.0000
97	526.6	1.779	.226	3.034E-04	.0188	3.657E-04	.0226	.2286	368.0000
98	526.2	1.502	.210	2.809E-04	.0174	3.387E-04	.0210	.2247	368.0000
100	524.9	1.561	.220	2.941E-04	.0182	3.545E-04	.0219	.2274	360.5000
102	523.3	1.546	.217	2.896E-04	.0179	3.488E-04	.0216	.2081	354.3000
103	523.9	1.855	.242	3.235E-04	.0200	3.898E-04	.0241	.2023	362.7000
105	526.1	1.816	.226	3.028E-04	.0187	3.650E-04	.0226	.2050	378.7000
106	525.5	2.118	.270	3.617E-04	.0224	4.359E-04	.0270	.2050	386.2000

GROUP 37 CENTERLINE TIME 2.60

CH	TC	FIT LENGTH	DTDWT	UNCERTAINTY	CH	TC	FIT LENGTH	DTDWT	UNCERTAINTY
1	1	2.00	.422	.0207	50	53	2.00	.647	.0255
2	2	2.00	.414	.0200	51	54	1.20	1.402	.0186
3	3	2.00	.344	.0922	52	55	2.00	.498	.0258
4	4	2.00	.352	.0212	53	56	1.20	1.585	.0097
5	5	2.00	.387	.0611	54	57	.80	2.080	.0243
6	6	2.00	.327	.0283	55	58	.80	2.719	.0166
7	7	2.00	.263	.1985	56	59	.80	2.414	.0511
8	8	2.00	.306	.0331	57	60	.80	2.192	.0136
9	9	2.00	.323	.0549	58	61	.80	2.308	.0125
10	10	2.00	.216	.0454	59	62	1.20	1.902	.0170
11	11	2.00	.208	.0561	60	63	1.20	1.536	.0095
12	12	2.00	.118	.1161	61	64	2.00	-.010	-.7882
13	13	2.00	.139	.0550	62	65	1.20	1.466	.0088
14	14	2.00	.136	.0731	63	66	1.20	1.931	.0085
15	15	2.00	.192	.0592	64	67	.80	2.591	.0165
16	16	2.00	.154	.0909	65	68	.80	2.815	.0119
17	17	2.00	.122	.1538	66	69	1.20	1.269	.0243
18	18	2.00	.062	.1205	67	70	1.20	1.222	.0145
19	19	2.00	-.015	-.9241	68	71	1.20	1.233	.1566
20	22	.80	2.715	.0175	69	72	1.20	1.119	.0442
21	23	.80	2.790	.0096	70	73	1.20	1.308	.0148
22	24	.80	2.839	.0130	71	74	1.20	1.454	.0198
23	25	.80	2.649	.0219	72	75	1.20	1.353	.0171
24	26	.80	2.760	.0169	73	77	1.20	1.534	.0097
25	27	.80	2.468	.0172	74	78	1.20	1.825	.0119
26	28	.80	2.163	.0179	75	79	1.20	1.632	.0107
27	29	.80	2.101	.0171	76	80	1.20	1.291	.0382
28	30	.80	2.175	.0157	77	81	1.20	1.785	.0104
29	31	.80	2.092	.0169	78	83	.80	2.093	.0178
30	32	1.20	1.954	.0085	79	84	1.20	1.862	.0559
31	33	2.00	1.000	.0084	80	85	1.20	1.779	.0084
32	34	1.20	1.342	.0169	81	87	1.20	1.482	.0157
33	35	1.20	1.458	.0109	82	88	1.20	1.903	.0087
34	36	2.00	.612	.0122	83	89	2.00	1.232	.0358
35	37	2.00	.902	.0091	84	90	1.20	1.812	.0122
36	38	2.00	.673	.0126	85	91	1.20	1.923	.0146
37	39	2.00	.529	.0138	86	92	1.20	1.743	.0122
38	41	.80	2.143	.0156	87	93	1.20	1.661	.0280
39	42	.80	2.087	.0192	88	94	.80	2.223	.0095
40	43	.80	2.548	.0161	89	95	1.20	1.664	.0160
41	44	1.20	1.799	.0098	90	96	1.20	1.661	.0740
42	45	1.20	1.154	.0163	91	97	1.20	1.779	.0133
43	46	1.20	1.283	.0221	92	98	1.20	1.502	.0322
44	47	1.20	1.699	.0117	93	100	1.20	1.561	.0149
45	48	2.00	.956	.0110	94	102	1.20	1.546	.0215
46	49	1.20	1.316	.0199	95	103	1.20	1.855	.0179
47	50	2.00	.749	.0271	96	105	1.20	1.816	.0267
48	51	2.00	.822	.0139	97	106	.80	2.118	.0189
49	52	2.00	.785	.0117	98	0	-0	0	0

38 .050

HIT ON LOOP 54

DATE 5/12/75

AEDC(ARO,INC.) ARNOLD AFS, TENNESSEE
VON KARMAN GAS DYNAMICS FACILITY
50 INCH HYPERSONIC TUNNEL B
V41B-B7A

GROUP	TEST CONDITION	MODEL	MACH NO	PO,PSIA	TO,DEG R	ALPHA-MODEL	ALPHA-SECTOR	ALPHA-PREBEND	ROLL MODEL	YAW
38	14	140 B	7.94	211.5	1273	35.05	-5.05	30.00	179.88	.0

T-INF (DEG R)	P-INF (PSIA)	Q-INF (PSIA)	V-INF (FT/SEC)	RHO-INF (SLUGS/FT3)	MU-INF (LB-SEC/FT2)	RE/FT (FT-1)	HREF-FR (R= .0400FT)	STFR (R= .0400FT)	SWITCH POSITION
93.5	.023	1.004	3763	2.040E-05	7.531E-08	1.020E 06	1.622E-02	2.663E-02	2

IC NO	TW	DTWDT	QDOT	H(TO)	H(TO)/HREF	H(.9TO)	H(.9TO)/HREF	X/L	Z,FULL SCALE(IN)
								ACCESS HATCH WINDOW	
107	525.2	1.868	.287	3.566E-04	.0220	4.298E-04	.0265	.2050	396.2000
								FUSELAGE VENT PANEL NO. 3 AND 1	
108	526.2	3.657	.366	5.164E-04	.0318	6.225E-04	.0384	.1244	377.5000
109	525.5	3.171	.391	5.227E-04	.0322	6.300E-04	.0388	.1302	377.5000
110	525.4	3.151	.398	5.323E-04	.0328	6.416E-04	.0396	.1360	377.5000
111	525.6	3.041	.365	4.886E-04	.0301	5.889E-04	.0363	.1418	377.5000
112	525.5	3.212	.380	5.083E-04	.0313	6.127E-04	.0378	.1476	377.5000
113	525.7	3.374	.386	5.160E-04	.0318	6.219E-04	.0384	.1215	273.5000
114	525.7	3.175	.380	5.083E-04	.0313	6.127E-04	.0378	.1273	273.5000
115	525.8	2.973	.367	4.915E-04	.0303	5.925E-04	.0365	.1331	273.5000
116	525.3	3.002	.367	4.910E-04	.0303	5.918E-04	.0365	.1389	273.5000
117	525.6	3.259	.374	5.003E-04	.0309	6.030E-04	.0372	.1447	273.5000
118	524.4	2.706	.373	4.981E-04	.0307	6.002E-04	.0370	.1409	366.0000
119	524.8	2.961	.382	5.102E-04	.0315	6.149E-04	.0379	.1442	366.0000
120	524.8	3.090	.385	5.141E-04	.0317	6.195E-04	.0382	.1215	359.5000
121	524.5	2.772	.339	4.526E-04	.0279	5.454E-04	.0336	.1303	359.5000
122	524.4	2.654	.329	4.396E-04	.0271	5.296E-04	.0327	.1337	359.5000
								LOWER RCS NOZZLES	
124	527.5	1.201	.187	1.433E-04	.0088	1.728E-04	.0107	.0950	400.0000
125	526.7	1.388	.151	2.020E-04	.0125	2.435E-04	.0150	.0988	400.0000
126	526.3	1.163	.159	2.127E-04	.0131	2.564E-04	.0158	.1027	400.0000
127	527.5	1.303	.175	2.349E-04	.0145	2.833E-04	.0175	.0911	395.0000
128	527.0	1.559	.189	2.529E-04	.0156	3.050E-04	.0188	.0950	395.0000
129	526.8	1.681	.197	2.635E-04	.0163	3.178E-04	.0196	.0988	395.0000
130	529.6	1.598	.191	2.568E-04	.0158	3.099E-04	.0191	.0810	390.0000
131	527.9	1.487	.219	2.941E-04	.0181	3.547E-04	.0219	.0857	390.0000
132	527.1	1.882	.219	2.931E-04	.0181	3.535E-04	.0218	.0963	390.0000
133	527.7	1.779	.215	2.891E-04	.0178	3.486E-04	.0215	.0857	383.8000
134	527.0	2.455	.328	4.395E-04	.0271	5.299E-04	.0327	.0872	377.3000
135	527.5	3.166	.379	5.086E-04	.0314	6.133E-04	.0378	.0903	374.5500
136	526.9	3.414	.378	5.071E-04	.0313	6.115E-04	.0377	.0960	374.5500
137	527.9	3.155	.412	5.524E-04	.0341	6.663E-04	.0411	.0872	370.5500
138	527.5	3.569	.410	5.498E-04	.0339	6.631E-04	.0409	.0928	370.5500
139	529.5	3.261	.416	5.591E-04	.0345	6.746E-04	.0416	.0816	366.0500
140	527.8	3.542	.449	6.031E-04	.0372	7.273E-04	.0448	.0934	362.4000
141	526.6	3.408	.449	6.014E-04	.0371	7.251E-04	.0447	.0973	362.4000
142	527.2	2.656	.288	3.868E-04	.0239	4.664E-04	.0288	.0833	355.2000
143	527.9	4.133	.414	5.558E-04	.0343	6.703E-04	.0413	.0919	355.2000
144	527.6	4.674	.614	8.235E-04	.0508	9.932E-04	.0612	.0949	349.0000

DATE 5/12/75

AEDC(ARO,INC.) ARNOLD AFS, TENNESSEE
VON KARMAN GAS DYNAMICS FACILITY
50 INCH HYPERSONIC TUNNEL H
V41H-B7A

GROUP	TEST CONDITION	MODEL	MACH NO	PO,PSIA	TO,DEG R	ALPHA-MODEL	ALPHA-SECTOR	ALPHA-PREBEND	ROLL MODEL	YAW
38	14	140 B	7.94	211.5	1273	35.05	-5.05	30.00	179.88	.0

T-INF (DEG R)	P-INF (PSIA)	Q-INF (PSIA)	V-INF (FT/SEC)	RHO-INF (SLUGS/FT3)	MU-INF (LB-SEC/FT2)	RE/FT (FT-1)	HREF-FR (R= .0400FT)	STFR (R= .0400FT)	SWITCH POSITION
93.5	.023	1.004	3763	2.040E-05	7.531E-08	1.020E 06	1.622E-02	2.663E-02	2

TC NO	TW	DTWDT	QDOT	H(TO)	H(TO)/HREF	H(.9TO)	H(.9TO)/HREF	X/L	2Y/B
								UPPER RCS NOZZLES	
161	532.0	1.074	.127	1.713E-04	.0106	2.069E-04	.0128	.0619	-.0160
162	531.4	1.089	.103	1.389E-04	.0086	1.677E-04	.0103	.0709	-.0160
163	530.8	.818	.100	1.352E-04	.0083	1.632E-04	.0101	.0807	-.0160
164	530.4	.881	.115	1.545E-04	.0095	1.865E-04	.0115	.0943	-.0160
165	530.6	.816	.103	1.382E-04	.0085	1.668E-04	.0103	.0978	-.0160
166	530.5	.773	.099	1.332E-04	.0082	1.607E-04	.0099	.1013	-.0160
167	531.8	.774	.105	1.412E-04	.0087	1.705E-04	.0105	.0619	-.0320
168	531.4	.859	.090	1.215E-04	.0075	1.466E-04	.0090	.0709	-.0320
169	530.2	.690	.084	1.126E-04	.0069	1.359E-04	.0084	.0807	-.0320
170	529.5	.689	.086	1.157E-04	.0071	1.396E-04	.0086	.0943	-.0320
171	529.2	.772	.093	1.249E-04	.0077	1.507E-04	.0093	.0978	-.0320
172	528.8	.671	.087	1.173E-04	.0072	1.415E-04	.0087	.1013	-.0320
173	529.3	.387	.052	6.928E-05	.0043	8.359E-05	.0052	.0807	-.0480
174	528.4	.290	.033	4.425E-05	.0027	5.338E-05	.0033	.0943	-.0480
175	528.1	.377	.054	7.235E-05	.0045	8.727E-05	.0054	.0978	-.0480
176	528.1	.319	.043	5.820E-05	.0036	7.020E-05	.0043	.1013	-.0480
								CANOPY	
177	536.1	6.797	.936	1.270E-03	.0783	1.536E-03	.0947		
178	537.7	9.746	1.919	2.610E-03	.1609	3.156E-03	.1946		
179	535.6	5.312	1.114	1.510E-03	.0931	1.825E-03	.1126		
180	533.5	3.735	.487	6.586E-04	.0406	7.955E-04	.0491		
181	532.5	2.668	.362	4.888E-04	.0301	5.903E-04	.0364		
182	530.8	1.062	.151	2.036E-04	.0126	2.458E-04	.0152		
183	528.8	.645	.081	1.084E-04	.0067	1.308E-04	.0081		
184	529.1	.741	.101	1.358E-04	.0084	1.638E-04	.0101		
185	531.7	2.949	.354	4.774E-04	.0294	5.763E-04	.0355		
186	532.0	2.756	.346	4.664E-04	.0288	5.631E-04	.0347		
187	530.8	1.529	.203	2.738E-04	.0169	3.305E-04	.0204		
188	532.1	2.016	.469	6.326E-04	.0390	7.639E-04	.0471		
189	529.6	1.480	.210	2.831E-04	.0175	3.416E-04	.0211		
190	530.3	1.831	.263	3.539E-04	.0218	4.271E-04	.0263		
191	530.2	1.133	.173	2.326E-04	.0143	2.808E-04	.0173		

DATE 5/12/75

AEDC(ARO,INC.) ARNOLD AFS, TENNESSEE
VON KARMAN GAS DYNAMICS FACILITY
50 INCH HYPERSONIC TUNNEL B
V41A-B7A

GROUP	TEST CONDITION	MODEL	MACH NO	PO,PSIA	TO,DEG R	ALPHA-MODEL	ALPHA-SECTOR	ALPHA-PREBEND	ROLL MODEL	YAW
39	14	140 B	7.94	211.5	1273	35.05	-5.05	30.00	179.88	.0

T-INF (DEG R)	P-INF (PSIA)	Q-INF (PSIA)	V-INF (FT/SEC)	RHO-INF (SLUGS/FT3)	MU-INF (LB-SEC/FT2)	RE/FT (FT-1)	HREF-FR (R= .0400FT)	STFR (R= .0400FT)	SWITCH POSITION
93.5	.023	1.004	3763	2.040E-05	7.531E-08	1.020E 06	1.622E-02	2.663E-02	2

CANOPY

TC NO	TW	DIWDT	QDOT	H(TO)	H(TO)/HREF	H(.9TO)	H(.9TO)/HREF
192	527.3	.289	.041	5.445E-05	.0034	6.566E-05	.0040
193	530.2	.941	.181	2.434E-04	.0150	2.937E-04	.0181
194	526.7	.316	.041	5.451E-05	.0034	6.572E-05	.0041
195	527.2	.347	.043	5.717E-05	.0035	6.894E-05	.0043
196	527.9	.688	.090	1.209E-04	.0075	1.458E-04	.0090
197	524.9	.389	.038	5.137E-05	.0032	6.191E-05	.0038
198	525.5	.359	.041	5.547E-05	.0034	6.686E-05	.0041
199	525.7	1.017	.136	1.821E-04	.0112	2.195E-04	.0135
200	526.7	.579	.092	1.102E-04	.0068	1.328E-04	.0082
201	528.2	.861	.121	1.626E-04	.0100	1.962E-04	.0121
202	529.0	.769	.097	1.301E-04	.0080	1.569E-04	.0097
203	524.9	.354	.044	5.846E-05	.0036	7.045E-05	.0043
204	525.8	.484	.075	1.004E-04	.0062	1.210E-04	.0075
205	527.5	1.022	.159	2.130E-04	.0131	2.569E-04	.0158
206	524.2	.660	.087	1.163E-04	.0072	1.401E-04	.0086
207	528.5	1.328	.177	2.383E-04	.0147	2.874E-04	.0177
208	524.6	.372	.050	6.643E-05	.0041	8.005E-05	.0049
209	525.6	.480	.066	8.807E-05	.0054	1.061E-04	.0065
210	525.7	.297	.039	5.282E-05	.0033	6.366E-05	.0039
211	525.4	.535	.065	8.663E-05	.0053	1.044E-04	.0064
212	525.3	.456	.061	8.193E-05	.0051	9.874E-05	.0061
213	524.9	.607	.080	1.071E-04	.0066	1.290E-04	.0080
214	525.6	.783	.109	1.462E-04	.0090	1.762E-04	.0109
215	525.4	.375	.053	7.094E-05	.0044	8.550E-05	.0053
216	528.0	1.182	.167	2.247E-04	.0139	2.710E-04	.0167
217	528.1	1.042	.148	1.987E-04	.0123	2.397E-04	.0148
218	524.5	.456	.063	8.367E-05	.0052	1.008E-04	.0062
219	525.9	.417	.058	7.817E-05	.0048	9.423E-05	.0058
220	525.4	.479	.066	8.781E-05	.0054	1.058E-04	.0065

GROUP 38 CENTERLINE TIME 2.65

CH	TC	FIT LENGTH	DTDWT	UNCERTAINTY	CH	TC	FIT LENGTH	DTDWT	UNCERTAINTY
1	107	.80	1.862	.1048	50	173	2.00	.387	.0219
2	108	.80	3.657	.0093	51	174	2.00	.290	.0466
3	109	.80	3.171	.0099	52	175	2.00	.377	.0352
4	110	.80	3.151	.0104	53	176	2.00	.319	.0263
5	111	.80	3.041	.0231	54	177	.60	6.797	.0083
6	112	.80	3.212	.0089	55	178	.40	9.746	.0140
7	113	.80	3.374	.0638	56	179	.60	5.312	.0322
8	114	.80	3.175	.0110	57	180	.80	3.735	.0136
9	115	.80	2.970	.0240	58	181	.80	2.668	.0171
10	116	.80	3.002	.0072	59	182	1.20	1.062	.0264
11	117	.80	3.259	.0113	60	183	2.00	.645	.0134
12	118	.80	2.796	.0169	61	184	2.00	.741	.0273
13	119	.80	2.961	.0180	62	185	.80	2.949	.0117
14	120	.80	3.040	.0125	63	186	.80	2.756	.0104
15	121	.80	2.772	.0196	64	187	1.20	1.529	.0160
16	122	.80	2.654	.0131	65	188	.80	2.016	.0157
17	124	1.20	1.200	.0370	66	189	1.20	1.480	.0215
18	125	1.20	1.348	.0127	67	190	1.20	1.831	.0096
19	126	1.20	1.163	.0231	68	191	1.20	1.133	.1711
20	127	1.20	1.303	.0169	69	192	2.00	.289	.0850
21	128	1.20	1.559	.0118	70	193	2.00	.941	.0148
22	129	1.20	1.680	.0130	71	194	2.00	.316	.0511
23	130	1.20	1.558	.0208	72	195	2.00	.347	.0359
24	131	1.20	1.487	.0213	73	196	2.00	.688	.0146
25	132	1.20	1.882	.0097	74	197	2.00	.389	.0345
26	133	1.20	1.779	.0137	75	198	2.00	.359	.0382
27	134	.80	2.455	.0140	76	199	1.20	1.017	.0294
28	135	.80	3.166	.0105	77	200	2.00	.579	.0158
29	136	.80	3.414	.0075	78	201	2.00	.861	.0121
30	137	.80	3.155	.0149	79	202	2.00	.768	.0692
31	138	.80	3.559	.0076	80	203	2.00	.354	.0306
32	139	.80	3.261	.0116	81	204	2.00	.484	.0240
33	140	.80	3.542	.0101	82	205	1.20	1.022	.0157
34	141	.80	3.408	.0085	83	206	2.00	.660	.0219
35	142	.80	2.656	.0101	84	207	1.20	1.328	.0170
36	143	.80	4.133	.0113	85	208	2.00	.372	.0269
37	144	.80	4.674	.0061	86	209	2.00	.480	.0156
38	161	1.20	1.074	.0181	87	210	2.00	.297	.0719
39	162	2.00	1.089	.0098	88	211	2.00	.535	.0336
40	163	2.00	.818	.0181	89	212	2.00	.456	.0307
41	164	2.00	.881	.0097	90	213	2.00	.607	.1034
42	165	2.00	.816	.0129	91	214	2.00	.783	.0195
43	166	2.00	.773	.0187	92	215	2.00	.375	.0909
44	167	2.00	.774	.0127	93	216	1.20	1.182	.0195
45	168	2.00	.859	.0093	94	217	1.20	1.042	.0288
46	169	2.00	.690	.0111	95	218	2.00	.456	.0438
47	170	2.00	.685	.0236	96	219	2.00	.417	.0400
48	171	2.00	.772	.0128	97	220	2.00	.479	.0257
49	172	2.00	.671	.0152	98	0	-0	0	0
39		.050							

HIT ON LOOP 54

DATE 5/12/75

AEDC(ARO,INC.) ARNOLD AFS, TENNESSEE
VON KARMAN GAS DYNAMICS FACILITY
50 INCH HYPERSONIC TUNNEL B
V41B-B7A

GROUP	TEST CONDITION	MODEL	MACH NO	PO,PSIA	TO,DEG R	ALPHA-MODEL	ALPHA-SECTOR	ALPHA-PREBEND	ROLL MODEL	YAW
39	14	140 B	7.94	211.5	1273	35.04	-5.04	30.00	179.88	.0

T-INF (DEG R)	P-INF (PSIA)	Q-INF (PSIA)	V-INF (FT/SEC)	RHO-INF (SLUGS/FT3)	MU-INF (LB-SEC/FT2)	RE/FT (FT-1)	HREF-FR (R= .0400FT)	STFR (R= .0400FT)	SWITCH POSITION
93.5	.023	1.004	3762	2.041E-05	7.529E-08	1.020E 06	1.622E-02	2.663E-02	3

TC NO	TW	DTWDT	QDOT	H(TO)	H(TO)/HREF	H(.9TO)	H(.9TO)/HREF	X/L	2Y/B
							CANOPY		
221	523.5	.275	.033	4.420E-05	.0027	5.325E-05	.0033		
222	522.5	.405	.050	6.622E-05	.0041	7.976E-05	.0049		
223	522.9	1.070	.144	1.927E-04	.0119	2.321E-04	.0143		
							ESCAPE HATCH AND WINDOW		
224	529.7	4.024	.430	5.383E-04	.0332	6.496E-04	.0401	.1933	.0162
225	528.6	2.413	.288	3.871E-04	.0239	4.670E-04	.0288	.1972	.0162
226	527.8	3.188	.335	4.497E-04	.0277	5.423E-04	.0334	.1933	.0384
227	526.6	2.245	.328	4.341E-04	.0271	5.295E-04	.0327	.1972	.0384
228	524.2	.757	.097	1.295E-04	.0080	1.561E-04	.0096	.1933	.0653
229	524.4	.701	.090	1.199E-04	.0074	1.445E-04	.0089	.1972	.0653
232	527.9	.147	.020	2.659E-05	.0016	3.207E-05	.0020	.2567	.0235
233	528.3	.115	.017	2.331E-05	.0014	2.812E-05	.0017	.2606	.0235
236	526.9	.162	.024	3.166E-05	.0020	3.817E-05	.0024	.2567	.0491
237	527.4	.148	.021	2.782E-05	.0017	3.355E-05	.0021	.2606	.0491
							CARGO BAY HINGE NO. 1		
								X/L	Z,FULL SCALE(IN)
238	528.7	1.100	.147	1.976E-04	.0122	2.384E-04	.0147	.2879	420.0000
239	529.0	1.271	.170	2.284E-04	.0141	2.756E-04	.0170	.2917	420.0000
240	528.6	.921	.131	1.765E-04	.0109	2.129E-04	.0131	.2840	415.0000
241	528.9	1.105	.155	2.085E-04	.0129	2.515E-04	.0155	.2879	415.0000
242	528.4	1.002	.143	1.919E-04	.0118	2.315E-04	.0143	.2917	415.0000
243	527.5	1.151	.140	1.884E-04	.0116	2.272E-04	.0140	.2801	405.0000
244	528.0	.919	.107	1.440E-04	.0089	1.737E-04	.0107	.2840	405.0000
							CARGO BAY HINGE NO. 2		
								X/L	Z,FULL SCALE(IN)
245	529.3	.744	.106	1.427E-04	.0088	1.721E-04	.0106	.3192	420.0000
246	529.6	.831	.119	1.596E-04	.0098	1.925E-04	.0119	.3439	420.0000
247	528.9	.661	.097	1.306E-04	.0081	1.575E-04	.0097	.3362	415.0000
248	529.4	.603	.089	1.192E-04	.0074	1.439E-04	.0089	.3401	415.0000
249	529.6	.803	.118	1.590E-04	.0098	1.918E-04	.0118	.3439	415.0000
250	529.2	1.168	.146	1.967E-04	.0121	2.373E-04	.0146	.3323	405.0000
251	529.2	1.419	.174	2.336E-04	.0144	2.822E-04	.0174	.3362	405.0000
							CARGO BAY HINGE NO. 3		
								X/L	Z,FULL SCALE(IN)
252	530.4	2.213	.321	4.320E-04	.0266	5.213E-04	.0322	.3923	420.0000
253	532.7	3.721	.540	7.295E-04	.0450	8.810E-04	.0543	.3961	420.0000
254	530.5	2.329	.353	4.757E-04	.0293	5.742E-04	.0354	.3884	415.0000
257	532.0	3.758	.506	6.837E-04	.0422	8.255E-04	.0509	.3845	405.0000
258	531.3	2.546	.346	4.672E-04	.0288	5.640E-04	.0348	.3884	405.0000

DATE 5/12/75

AEDC(ARO,INC.) ARNOLD AFS, TENNESSEE
VON KARMAN GAS DYNAMICS FACILITY
50 INCH HYPERSONIC TUNNEL B
V41B-B7A

GROUP	TEST CONDITION	MODEL	MACH NO	PO,PSIA	TO,DEG R	ALPHA-MODEL	ALPHA-SECTOR	ALPHA-PREBEND	ROLL MODEL	YAW
39	14	140 B	7.94	211.5	1273	35.04	-5.04	30.00	179.88	.0

T-INF (DEG R)	P-INF (PSIA)	Q-INF (PSIA)	V-INF (FT/SEC)	RHO-INF (SLUGS/FT3)	MU-INF (LB-SEC/FT2)	RE/FT (FT-1)	HREF-FR (R= .0400FT)	STFR (R= .0400FT)	SWITCH POSITION
93.5	.023	1.004	3762	2.041E-05	7.524E-08	1.020E 06	1.622E-02	2.663E-02	3

TOP CENTERLINE

TC NO	TW	DT*DT	QDOT	H(TO)	H(TO)/HREF	H(.9TO)	H(.9TO)/HREF	X/L
367	562.6	49.556	5.905	8.317E-03	.5129	1.013E-02	.6249	0
368	546.6	33.444	4.269	5.880E-03	.3626	7.129E-03	.4397	.0008
369	547.3	27.133	3.196	4.407E-03	.2718	5.345E-03	.3296	.0019
370	539.8	18.378	2.247	3.067E-03	.1891	3.711E-03	.2289	.0037
371	535.4	11.221	1.098	1.490E-03	.0919	1.800E-03	.1110	.0058
372	533.5	7.357	.946	1.280E-03	.0789	1.546E-03	.0954	.0087
373	532.2	4.546	.681	6.115E-04	.0500	9.800E-04	.0604	.0118
374	531.9	3.376	.441	5.958E-04	.0367	7.194E-04	.0444	.0151
375	531.4	2.761	.377	5.084E-04	.0314	6.138E-04	.0378	.0182
376	531.9	2.502	.329	4.446E-04	.0274	5.369E-04	.0331	.0215
377	532.2	2.236	.287	3.881E-04	.0239	4.686E-04	.0289	.0246
378	532.3	1.891	.220	2.975E-04	.0183	3.593E-04	.0222	.0278
379	531.3	1.166	.143	1.929E-04	.0119	2.329E-04	.0144	.0609
380	530.4	1.027	.105	1.419E-04	.0088	1.713E-04	.0106	.0646
381	529.8	1.033	.133	1.797E-04	.0111	2.169E-04	.0134	.0684
382	529.4	.895	.117	1.572E-04	.0097	1.897E-04	.0117	.0721
383	529.1	.832	.111	1.496E-04	.0092	1.805E-04	.0111	.0760
384	528.9	.547	.083	1.115E-04	.0069	1.345E-04	.0083	.0796
385	528.9	.793	.102	1.367E-04	.0084	1.649E-04	.0102	.0789
386	529.2	.953	.113	1.514E-04	.0093	1.827E-04	.0113	.0982
387	528.9	1.052	.129	1.732E-04	.0107	2.090E-04	.0129	.1019
388	529.8	1.786	.170	2.282E-04	.0141	2.754E-04	.0170	.1160
389	529.2	1.601	.232	3.119E-04	.0192	3.763E-04	.0232	.1195
390	529.1	1.465	.230	3.099E-04	.0191	3.739E-04	.0231	.1231
391	528.9	1.468	.233	3.139E-04	.0194	3.787E-04	.0234	.1268
392	529.1	1.571	.269	3.615E-04	.0223	4.362E-04	.0269	.1305
393	528.9	1.683	.284	3.821E-04	.0236	4.609E-04	.0284	.1338
394	528.9	1.827	.306	4.114E-04	.0254	4.963E-04	.0306	.1376
395	529.0	1.901	.284	3.815E-04	.0235	4.603E-04	.0284	.1411
396	528.9	2.067	.306	4.110E-04	.0253	4.959E-04	.0306	.1448
397	529.3	2.186	.323	4.350E-04	.0268	5.249E-04	.0324	.1483
398	529.7	2.392	.336	4.520E-04	.0279	5.454E-04	.0336	.1519
399	532.8	5.997	.800	1.082E-03	.0667	1.307E-03	.0806	.1556

DATE 5/12/75

AEDC(ARO,INC.) ARNOLD AFS, TENNESSEE
VON KARMAN GAS DYNAMICS FACILITY
50 INCH HYPERSONIC TUNNEL B
V418-B7A

GROUP	TEST CONDITION	MODEL	MACH NO	PO,PSIA	TO,DEG R	ALPHA-MODEL	ALPHA-SECTOR	ALPHA-PREBEND	ROLL MODEL	YAW
39	14	140 B	7.94	211.5	1273	35.04	-5.04	30.00	179.88	.0

T-INF (DEG R)	P-INF (PSIA)	Q-INF (PSIA)	V-INF (FT/SEC)	RHO-INF (SLUGS/FT3)	MU-INF (LB-SEC/FT2)	RE/FT (FT-1)	HREF-FR (R= .0400FT)	STFR (R= .0400FT)	SWITCH POSITION
93.5	.023	1.004	3762	2.041E-05	7.529E-08	1.020E 06	1.622E-02	2.663E-02	3

TOP CENTERLINE

TC NO	TW	DTWDT	QDOT	H(TO)	H(TO)/HREF	H(.9TO)	H(.9TO)/HREF	X/L
400	534.5	7.988	1.073	1.460E-03	.0900	1.764E-03	.1088	.1582
401	533.2	8.417	1.090	1.474E-03	.0909	1.780E-03	.1098	.1608
402	533.7	8.048	1.073	1.357E-03	.0837	1.639E-03	.1011	.1635
403	534.2	8.991	1.092	1.479E-03	.0912	1.787E-03	.1102	.1664
404	533.8	8.354	1.011	1.328E-03	.0844	1.653E-03	.1019	.1691
405	534.0	8.215	.994	1.346E-03	.0830	1.626E-03	.1003	.1720
406	533.1	7.252	.877	1.186E-03	.0732	1.433E-03	.0884	.1748
407	532.2	5.905	.762	1.029E-03	.0634	1.242E-03	.0766	.1769
408	531.6	4.967	.727	9.807E-04	.0605	1.184E-03	.0730	.1800
409	530.8	3.702	.532	7.166E-04	.0442	8.650E-04	.0533	.1831
410	529.5	3.512	.504	6.754E-04	.0418	8.187E-04	.0505	.1863
411	529.8	2.353	.352	4.742E-04	.0292	5.723E-04	.0353	.1894
412	530.2	1.837	.249	3.352E-04	.0207	4.046E-04	.0250	.1931
413	529.0	1.283	.171	2.300E-04	.0142	2.775E-04	.0171	.1972
414	529.4	.710	.095	1.277E-04	.0079	1.541E-04	.0095	.2049
415	528.6	.339	.033	4.488E-05	.0028	5.414E-05	.0033	.2250
416	528.9	.243	.028	3.812E-05	.0024	4.599E-05	.0028	.2500

NOSE TC (Z = 338)

TC NO	TW	DTWDT	QDOT	H(TO)	H(TO)/HREF	H(.9TO)	H(.9TO)/HREF	X/L	2Y/B
145	553.8	35.054	4.744	6.599E-03	.4070	8.019E-03	.4945	.0008	.5039
146	554.1	35.102	4.751	6.613E-03	.4078	8.037E-03	.4956	.0023	.5082
147	549.2	28.952	3.909	5.403E-03	.3332	6.557E-03	.4043	.0043	.5135
148	548.1	23.021	3.210	4.430E-03	.2732	5.375E-03	.3314	.0068	.5205
149	543.8	15.886	2.296	3.150E-03	.1943	3.817E-03	.2354	.0095	.5279
150	545.7	14.810	2.122	2.920E-03	.1801	3.540E-03	.2183	.0122	.5354
151	544.3	10.141	1.425	1.957E-03	.1207	2.371E-03	.1462	.0218	.5621
152	543.7	9.628	1.305	1.790E-03	.1104	2.169E-03	.1338	.0251	.5712
153	544.3	11.042	1.348	1.851E-03	.1142	2.243E-03	.1383	.0286	.5808
154	544.6	10.775	1.340	1.841E-03	.1135	2.231E-03	.1376	.0319	.5898
155	542.7	9.703	1.219	1.670E-03	.1030	2.022E-03	.1247	.0354	.5995
156	541.4	9.097	1.130	1.545E-03	.0953	1.870E-03	.1153	.0387	.6085
157	541.2	9.047	1.117	1.528E-03	.0942	1.849E-03	.1140	.0420	.6176
158	539.9	8.921	1.095	1.494E-03	.0921	1.808E-03	.1115	.0462	.6294
159	539.5	9.002	1.008	1.375E-03	.0848	1.664E-03	.1026	.0503	.6406

GROUP 39 CENTERLINE TIME 2.65

CH	TC	FIT LENGTH	DTDWT	UNCERTAINTY	CH	TC	FIT LENGTH	DTDWT	UNCERTAINTY
1	221	2.00	.275	.0422	50	384	2.00	.597	.0329
2	222	2.00	.405	.0236	51	385	2.00	.793	.0177
3	223	1.20	1.070	.0211	52	386	2.00	.953	.0147
4	224	.80	4.024	.0076	53	387	1.20	1.052	.0132
5	225	.80	2.413	.0346	54	388	1.20	1.786	.0119
6	226	.80	3.188	.0093	55	389	1.20	1.601	.0155
7	227	.80	2.245	.0601	56	390	1.20	1.465	.0440
8	228	2.00	.757	.0155	57	391	1.20	1.468	.0118
9	229	2.00	.701	.0394	58	392	1.20	1.571	.0145
10	232	2.00	.147	.0595	59	393	1.20	1.683	.0168
11	233	2.00	.115	.1673	60	394	1.20	1.827	.0072
12	236	2.00	.162	.0999	61	395	1.20	1.901	.0153
13	237	2.00	.148	.0578	62	396	.80	2.067	.0128
14	238	1.20	1.100	.0236	63	397	.80	2.186	.0172
15	239	1.20	1.271	.0221	64	398	.80	2.392	.0137
16	240	2.00	.921	.0115	65	399	.60	5.997	.0064
17	241	1.20	1.105	.0458	66	400	.60	7.988	.0089
18	242	1.20	1.002	.0128	67	401	.40	8.417	.0092
19	243	1.20	1.151	.0214	68	402	.40	8.048	.0770
20	244	2.00	.919	.0174	69	403	.40	8.991	.0336
21	245	2.00	.744	.0127	70	404	.40	8.354	.0086
22	246	2.00	.831	.0111	71	405	.40	8.215	.0193
23	247	2.00	.661	.0268	72	406	.60	7.252	.0075
24	248	2.00	.603	.0272	73	407	.60	5.906	.0115
25	249	2.00	.803	.0153	74	408	.60	4.967	.0189
26	250	1.20	1.168	.0190	75	409	.80	3.702	.0131
27	251	1.20	1.419	.0129	76	410	.80	3.512	.0128
28	252	.80	2.213	.0106	77	411	.80	2.353	.0193
29	253	.80	3.721	.0068	78	412	1.20	1.837	.0093
30	254	.80	2.329	.0176	79	413	1.20	1.280	.0891
31	257	.80	3.758	.0073	80	414	2.00	.710	.0118
32	258	.80	2.546	.0122	81	415	2.00	.339	.0372
33	367	.20	49.556	.0030	82	416	2.00	.243	.0266
34	368	.20	33.444	.0049	83	145	.20	35.054	.0073
35	369	.30	27.133	.0071	84	146	.20	35.102	.0004
36	370	.30	18.378	.0040	85	147	.30	28.952	.0033
37	371	.40	11.221	.0042	86	148	.30	23.021	.0060
38	372	.60	7.357	.0072	87	149	.30	15.886	.0208
39	373	.60	4.596	.0102	88	150	.40	14.810	.0112
40	374	.80	3.376	.0143	89	151	.40	10.141	.0081
41	375	.80	2.741	.0117	90	152	.40	9.628	.0324
42	376	.80	2.512	.0126	91	153	.40	11.042	.0129
43	377	.80	2.236	.0328	92	154	.40	10.775	.0306
44	378	1.20	1.891	.0110	93	155	.40	9.703	.0103
45	379	1.20	1.166	.0151	94	156	.40	9.097	.0168
46	380	1.20	1.027	.0174	95	157	.40	9.097	.0167
47	381	1.20	1.033	.0577	96	158	.40	8.921	.0102
48	382	2.00	.895	.0131	97	159	.40	9.002	.0051
49	383	2.00	.832	.0100	98	0	-0	0	0
40		.050							

HIT ON LOOP 54

DATE 5/12/75

AEDC(ARO,INC.) ARNOLD AFS, TENNESSEE
VON KARMAN GAS DYNAMICS FACILITY
50 INCH HYPERSONIC TUNNEL B
V41B-87A

GROUP	TEST CONDITION	MODEL	MACH NO	PO,PSIA	TO,DEG R	ALPHA-MODEL	ALPHA-SECTOR	ALPHA-PREBEND	ROLL MODEL	YAW
49	18	140 B	7.98	432.0	1300	20.05	9.95	30.00	179.94	-.0

T-INF (DEG R)	P-INF (PSIA)	Q-INF (PSIA)	V-INF (FT/SEC)	RHO-INF (SLUGS/FT3)	MU-INF (LB-SEC/FT2)	RE/FT (FT-1)	HREF-FR (R= .0400FT)	STFR (R= .0400FT)	SWITCH POSITION
94.6	.045	2.005	3804	3.987E-05	7.620E-08	1.991E 06	2.300E-02	1.909E-02	2

TC NO	TW	DTWDT	QDOT	H(TO)	H(TO)/HREF	H(.9TO)	H(.9TO)/HREF	X/L	Z,FULL SCALE(IN)
ACCESS HATCH WINDOW									
107	533.9	2.794	.400	5.228E-04	.0227	6.296E-04	.0274	.2050	396.2000
FUSELAGE VENT PANEL NO. 3 AND 1									
108	536.7	5.713	.605	7.932E-04	.0345	9.560E-04	.0416	.1244	377.5000
109	535.0	4.639	.574	7.504E-04	.0326	9.040E-04	.0393	.1302	377.5000
110	534.5	4.263	.541	7.065E-04	.0307	8.510E-04	.0370	.1360	377.5000
111	534.8	4.093	.494	6.453E-04	.0281	7.773E-04	.0338	.1418	377.5000
112	535.5	4.239	.510	6.669E-04	.0290	8.035E-04	.0349	.1476	377.5000
113	537.0	5.461	.628	8.228E-04	.0358	9.917E-04	.0431	.1215	273.5000
114	536.1	4.663	.561	7.342E-04	.0319	8.847E-04	.0385	.1273	273.5000
115	535.8	4.116	.511	6.692E-04	.0291	8.064E-04	.0351	.1331	273.5000
116	535.9	3.964	.487	6.377E-04	.0277	7.685E-04	.0334	.1389	273.5000
117	536.7	4.135	.477	6.250E-04	.0272	7.533E-04	.0328	.1447	273.5000
118	537.3	3.437	.477	6.249E-04	.0272	7.533E-04	.0327	.1409	366.0000
119	537.8	4.093	.531	6.968E-04	.0303	8.400E-04	.0365	.1442	366.0000
120	539.3	4.428	.555	7.298E-04	.0317	8.802E-04	.0383	.1215	359.5000
121	539.5	3.661	.451	5.927E-04	.0258	7.149E-04	.0311	.1303	359.5000
122	540.0	3.848	.481	6.328E-04	.0275	7.634E-04	.0332	.1337	359.5000
LOWER RCS NOZZLES									
124	534.2	4.381	.391	5.111E-04	.0222	6.156E-04	.0268	.0950	400.0000
125	533.8	4.289	.467	6.098E-04	.0265	7.344E-04	.0319	.0988	400.0000
126	534.3	3.707	.508	6.638E-04	.0289	7.995E-04	.0348	.1027	400.0000
127	533.5	3.987	.538	7.013E-04	.0305	8.445E-04	.0367	.0911	395.0000
128	533.6	4.224	.513	6.693E-04	.0291	8.060E-04	.0350	.0950	395.0000
129	534.2	4.352	.511	6.676E-04	.0290	8.042E-04	.0350	.0988	395.0000
130	534.4	4.602	.551	7.195E-04	.0313	8.667E-04	.0377	.0810	390.0000
131	533.6	4.227	.625	8.152E-04	.0354	9.817E-04	.0427	.0857	390.0000
132	535.3	5.576	.650	8.505E-04	.0370	1.025E-03	.0445	.0963	390.0000
133	534.0	4.018	.488	6.371E-04	.0277	7.673E-04	.0334	.0857	383.8000
134	533.5	4.576	.613	7.996E-04	.0348	9.629E-04	.0419	.0872	377.3000
135	535.8	6.013	.723	9.460E-04	.0411	1.140E-03	.0496	.0903	374.5500
136	537.3	6.449	.718	9.419E-04	.0410	1.135E-03	.0494	.0960	374.5500
137	535.5	5.761	.754	9.867E-04	.0429	1.189E-03	.0517	.0872	370.5500
138	537.2	6.424	.741	9.719E-04	.0423	1.172E-03	.0509	.0928	370.5500
139	536.6	5.681	.727	9.516E-04	.0414	1.147E-03	.0499	.0816	366.0500
140	538.5	6.278	.801	1.052E-03	.0457	1.268E-03	.0551	.0934	362.4000
141	538.7	5.580	.739	9.712E-04	.0422	1.171E-03	.0509	.0973	362.4000
142	540.5	4.556	.498	6.558E-04	.0285	7.912E-04	.0344	.0833	355.2000
143	539.5	6.622	.667	8.774E-04	.0381	1.058E-03	.0460	.0919	355.2000
144	542.0	7.272	.962	1.269E-03	.0552	1.531E-03	.0666	.0949	349.0000

DATE 5/12/75

AEDC(ARO,INC.) ARNOLD AFS, TENNESSEE
VON KARMAN GAS DYNAMICS FACILITY
50 INCH HYPERSONIC TUNNEL B
V418-87A

GROUP	TEST CONDITION	MODEL	MACH NO	PO,PSIA	TO,DEG R	ALPHA-MODEL	ALPHA-SECTOR	ALPHA-PREBEND	ROLL MODEL	YAW
49	18	140 B	7.98	432.0	1300	20.05	9.95	30.00	179.94	-.0

T-INF (DEG R)	P-INF (PSIA)	Q-INF (PSIA)	V-INF (FT/SEC)	RHO-INF (SLUGS/FT3)	MU-INF (LB-SEC/FT2)	RE/FT (FT-1)	HREF-FR (R= .0400FT)	STFR (R= .0400FT)	SWITCH POSITION
94.6	.045	2.005	3804	3.987E-05	7.620E-08	1.991E 06	2.300E-02	1.909E-02	2

TC NO	TW	DTWDT	QDOT	H(TO)	H(TO)/HREF	H(.9TO)	H(.9TO)/HREF	X/L	2Y/B
								UPPER RCS NOZZLES	
161	536.6	3.428	.406	5.320E-04	.0231	6.412E-04	.0279	.0619	-.0160
162	536.8	3.260	.369	4.050E-04	.0176	4.882E-04	.0212	.0709	-.0160
163	535.6	2.355	.249	3.787E-04	.0165	4.563E-04	.0198	.0807	-.0160
164	535.1	1.706	.223	2.910E-04	.0127	3.506E-04	.0152	.0943	-.0160
165	535.0	1.351	.170	2.225E-04	.0097	2.681E-04	.0117	.0978	-.0160
166	535.3	.885	.113	1.484E-04	.0065	1.788E-04	.0078	.1013	-.0160
167	535.4	3.377	.457	5.981E-04	.0260	7.207E-04	.0313	.0619	-.0320
168	535.6	3.630	.391	4.988E-04	.0217	6.011E-04	.0261	.0709	-.0320
169	534.3	2.388	.290	3.789E-04	.0165	4.564E-04	.0198	.0807	-.0320
170	534.0	2.036	.255	3.324E-04	.0145	4.003E-04	.0174	.0943	-.0320
171	533.9	2.032	.245	3.198E-04	.0139	3.851E-04	.0167	.0978	-.0320
172	533.5	1.505	.196	2.559E-04	.0111	3.082E-04	.0134	.1013	-.0320
173	533.5	2.520	.336	4.389E-04	.0191	5.286E-04	.0230	.0807	-.0480
174	532.8	2.208	.251	3.276E-04	.0142	3.944E-04	.0171	.0943	-.0480
175	533.1	1.891	.271	3.534E-04	.0154	4.255E-04	.0185	.0978	-.0480
176	532.9	1.412	.192	2.505E-04	.0109	3.016E-04	.0131	.1013	-.0480
								CANOPY	
177	542.8	6.546	.904	1.194E-03	.0519	1.442E-03	.0627		
178	546.7	13.359	2.640	3.504E-03	.1524	4.235E-03	.1841		
179	551.1	18.395	3.886	5.189E-03	.2256	6.279E-03	.2730		
180	538.6	2.999	.392	5.147E-04	.0224	6.207E-04	.0270		
181	541.9	6.251	.852	1.124E-03	.0489	1.356E-03	.0590		
182	545.3	13.179	1.888	2.502E-03	.1088	3.022E-03	.1314		
183	545.2	2.024	.254	3.322E-04	.0144	4.003E-04	.0174		
184	535.4	2.312	.316	4.135E-04	.0180	4.982E-04	.0217		
185	538.7	4.132	.498	6.535E-04	.0284	7.881E-04	.0343		
186	542.8	8.415	1.061	1.401E-03	.0609	1.691E-03	.0735		
187	549.3	15.640	2.098	2.794E-03	.1215	3.379E-03	.1469		
188	547.0	15.885	3.720	4.940E-03	.2148	5.971E-03	.2596		
189	539.3	5.114	.731	9.603E-04	.0418	1.158E-03	.0504		
190	543.2	10.352	1.496	1.976E-03	.0859	2.386E-03	.1037		
191	546.0	17.743	2.727	3.616E-03	.1572	4.369E-03	.1900		

DATE 5/12/75

AEDC(ARO,INC.) ARNOLD AFS, TENNESSEE
VON KARMAN GAS DYNAMICS FACILITY
50 INCH HYPERSONIC TUNNEL B
V41R-B7A

GROUP	TEST CONDITION	MODEL	MACH NO	PO,PSIA	TO,DEG R	ALPHA-MODEL	ALPHA-SECTOR	ALPHA-PREBEND	ROLL MODEL	YAW
49	18	140 B	7.98	432.0	1300	20.05	9.95	30.00	179.94	-.0

T-INF (DEG R)	P-INF (PSIA)	Q-INF (PSIA)	V-INF (FT/SEC)	RHO-INF (SLUGS/FT3)	MU-INF (LB-SEC/FT2)	RE/FT (FT-1)	HREF-FR (R= .0400FT)	STFR (R= .0400FT)	SWITCH POSITION
94.6	.045	2.005	3804	3.987E-05	7.620E-08	1.991E 06	2.300E-02	1.909E-02	2

CANOPY

IC NO	TW	DTWDT	QDOT	H(TO)	H(TO)/HREF	H(.9TO)	H(.9TO)/HREF
192	534.4	2.568	.362	4.734E-04	.0206	5.702E-04	.0248
193	544.5	14.175	2.743	3.631E-03	.1578	4.385E-03	.1906
194	536.1	3.128	.494	5.289E-04	.0230	6.374E-04	.0277
195	541.2	7.658	.947	1.248E-03	.0543	1.507E-03	.0655
196	543.5	11.192	1.476	1.952E-03	.0848	2.357E-03	.1025
197	531.1	.618	.061	7.956E-05	.0035	9.575E-05	.0042
198	531.7	.819	.095	1.236E-04	.0054	1.488E-04	.0065
199	532.0	1.300	.175	2.272E-04	.0099	2.735E-04	.0119
200	535.6	4.035	.575	7.526E-04	.0327	9.069E-04	.0394
201	543.4	13.502	1.915	2.531E-03	.1100	3.056E-03	.1328
202	542.4	11.758	1.492	1.970E-03	.0856	2.378E-03	.1034
203	531.9	1.515	.188	2.447E-04	.0106	2.945E-04	.0128
204	534.0	2.680	.417	5.438E-04	.0236	6.549E-04	.0285
205	540.5	10.944	1.711	2.253E-03	.0980	2.718E-03	.1182
206	530.6	.989	.131	1.702E-04	.0074	2.049E-04	.0089
207	538.8	8.079	1.085	1.425E-03	.0620	1.719E-03	.0747
208	531.1	1.461	.196	2.551E-04	.0111	3.070E-04	.0133
209	531.4	1.514	.208	2.706E-04	.0118	3.257E-04	.0142
210	533.1	2.812	.375	4.894E-04	.0213	5.893E-04	.0256
211	531.0	.852	.103	1.344E-04	.0058	1.617E-04	.0070
212	531.2	1.124	.151	1.969E-04	.0086	2.370E-04	.0103
213	531.4	2.575	.341	4.437E-04	.0193	5.340E-04	.0232
214	532.3	2.610	.366	4.763E-04	.0207	5.734E-04	.0249
215	534.4	3.845	.546	7.135E-04	.0310	8.594E-04	.0374
216	536.6	5.788	.823	1.078E-03	.0469	1.299E-03	.0565
217	537.0	5.345	.763	9.994E-04	.0434	1.205E-03	.0524
218	531.4	2.551	.352	4.574E-04	.0199	5.505E-04	.0239
219	532.7	3.292	.463	6.031E-04	.0262	7.262E-04	.0316
220	533.7	4.487	.617	8.053E-04	.0350	9.698E-04	.0422

GROUP 49 CENTERLINE TIME 2.55

CH	TC	FIT LENGTH	DTDWT	UNCERTAINTY	CH	TC	FIT LENGTH	DTDWT	UNCERTAINTY
1	107	.80	2.794	.0102	50	173	.80	2.520	.0280
2	108	.60	5.713	.0061	51	174	.80	2.208	.0158
3	109	.60	4.639	.0097	52	175	1.20	1.891	.0181
4	110	.60	4.263	.0118	53	176	1.20	1.412	.0116
5	111	.60	4.093	.0373	54	177	.60	6.546	.0081
6	112	.60	4.289	.0106	55	178	.40	13.350	.0095
7	113	.60	5.461	.0313	56	179	.30	18.395	.0298
8	114	.60	4.663	.0097	57	180	.80	2.999	.0119
9	115	.60	4.116	.0096	58	181	.60	6.251	.0056
10	116	.80	3.964	.0083	59	182	.40	13.179	.0081
11	117	.60	4.135	.0182	60	183	1.20	2.024	.0096
12	118	.80	3.437	.0156	61	184	.80	2.312	.0305
13	119	.60	4.093	.0114	62	185	.60	4.132	.0092
14	120	.60	4.478	.0142	63	186	.40	8.415	.0125
15	121	.80	3.661	.0165	64	187	.40	15.640	.0053
16	122	.80	3.848	.0106	65	188	.40	15.885	.0082
17	124	.60	4.381	.0241	66	189	.60	5.114	.0132
18	125	.60	4.289	.0127	67	190	.40	10.352	.0035
19	126	.80	3.707	.0105	68	191	.30	17.743	.0413
20	127	.60	3.987	.0171	69	192	.80	2.568	.0313
21	128	.60	4.224	.0113	70	193	.40	14.175	.0073
22	129	.60	4.352	.0091	71	194	.80	3.128	.0233
23	130	.60	4.602	.0187	72	195	.60	7.658	.0092
24	131	.60	4.227	.0202	73	196	.40	11.192	.0083
25	132	.60	5.576	.0134	74	197	2.00	.618	.0179
26	133	.60	4.018	.0141	75	198	2.00	.819	.0129
27	134	.60	4.576	.0123	76	199	1.20	1.300	.0254
28	135	.60	6.013	.0065	77	200	.60	4.035	.0112
29	136	.60	6.449	.0045	78	201	.40	13.502	.0073
30	137	.60	5.761	.0126	79	202	.40	11.758	.0414
31	138	.60	6.424	.0069	80	203	1.20	1.515	.0154
32	139	.60	5.681	.0134	81	204	.80	2.680	.0155
33	140	.60	6.278	.0077	82	205	.40	10.944	.0063
34	141	.60	5.580	.0070	83	206	2.00	.969	.0148
35	142	.60	4.556	.0116	84	207	.40	8.079	.0087
36	143	.60	6.022	.0083	85	208	1.20	1.461	.0092
37	144	.60	7.272	.0064	86	209	1.20	1.514	.0175
38	161	.80	3.428	.0101	87	210	.80	2.812	.0329
39	162	.80	3.260	.0084	88	211	2.00	.852	.0120
40	163	.80	2.355	.0240	89	212	1.20	1.124	.0237
41	164	1.20	1.706	.0088	90	213	.80	2.575	.0855
42	165	1.20	1.351	.0120	91	214	.80	2.610	.0258
43	166	2.00	.885	.0156	92	215	.80	3.845	.0294
44	167	.80	3.377	.0101	93	216	.60	5.788	.0088
45	168	.80	3.630	.0080	94	217	.60	5.345	.0172
46	169	.80	2.388	.0126	95	218	.80	2.551	.0105
47	170	.80	2.036	.0300	96	219	.80	3.292	.0167
48	171	.80	2.032	.0183	97	220	.60	4.487	.0055
49	172	1.20	1.505	.0164	98	0	-0	0	0
50		.050							

BIT ON LOOP 52

DATE 5/12/75

AEDC(ARO,INC.) ARNOLD AFS, TENNESSEE
VON KARMAN GAS DYNAMICS FACILITY
50 INCH HYPERSONIC TUNNEL B
V41R-B7A

GROUP	TEST CONDITION	MODEL	MACH NO	PO,PSIA	TO,DEG R	ALPHA-MODEL	ALPHA-SECTOR	ALPHA-PREBEND	ROLL MODEL	YAW
50	18	140 B	7.98	432.4	1305	20.03	9.97	30.00	179.88	-.0

T-INF (DEG R)	P-INF (PSIA)	Q-INF (PSIA)	V-INF (FT/SEC)	RHO-INF (SLUGS/FT3)	MU-INF (LB-SEC/FT2)	RE/FT (FT-1)	HREF-FR (R= .0400FT)	STFR (R= .0400FT)	SWITCH POSITION
95.0	.045	2.007	3811	3.976E-05	7.649E-08	1.981E 06	2.303E-02	1.913E-02	3

TC NO	TW	DTWDT	QDOT	H(TO)	H(TO)/HREF	H(.9TO)	H(.9TO)/HREF
221	530.9	1.066	.129	1.665E-04	.0072	2.002E-04	.0087
222	531.3	1.794	.221	2.854E-04	.0124	3.433E-04	.0149
223	533.2	4.110	.558	7.226E-04	.0314	8.697E-04	.0378
224	541.1	7.059	.766	9.236E-04	.0401	1.114E-03	.0484
225	539.1	4.958	.595	7.767E-04	.0337	9.363E-04	.0407
226	541.0	9.775	1.034	1.353E-03	.0588	1.632E-03	.0709
227	538.2	5.691	.835	1.090E-03	.0473	1.313E-03	.0570
228	539.3	9.779	1.261	1.647E-03	.0715	1.985E-03	.0862
229	539.4	7.544	.973	1.271E-03	.0552	1.532E-03	.0665
232	533.2	.373	.050	6.541E-05	.0028	7.872E-05	.0034
233	533.5	.446	.068	8.772E-05	.0038	1.056E-04	.0046
236	532.6	.383	.056	7.253E-05	.0031	8.727E-05	.0038
237	532.9	.518	.073	9.434E-05	.0041	1.135E-04	.0049
238	534.2	1.280	.172	2.225E-04	.0097	2.679E-04	.0116
239	534.2	1.341	.180	2.331E-04	.0101	2.806E-04	.0122
240	534.0	1.141	.163	2.114E-04	.0092	2.545E-04	.0111
241	534.5	1.327	.187	2.424E-04	.0105	2.918E-04	.0127
242	535.1	1.549	.221	2.876E-04	.0125	3.463E-04	.0150
243	534.9	1.422	.174	2.201E-04	.0098	2.722E-04	.0118
244	535.1	1.176	.138	1.789E-04	.0078	2.154E-04	.0094
245	535.1	1.163	.166	2.100E-04	.0094	2.601E-04	.0113
246	535.6	1.216	.174	2.201E-04	.0098	2.723E-04	.0118
247	535.7	.963	.142	1.847E-04	.0080	2.224E-04	.0097
248	535.7	1.200	.177	2.301E-04	.0100	2.771E-04	.0120
249	536.2	1.404	.207	2.695E-04	.0117	3.246E-04	.0141
250	537.1	1.520	.191	2.488E-04	.0108	2.998E-04	.0130
251	536.8	1.568	.193	2.511E-04	.0109	3.025E-04	.0131
252	535.9	1.558	.226	2.943E-04	.0128	3.545E-04	.0154
253	536.2	1.585	.230	2.996E-04	.0130	3.608E-04	.0157
254	536.0	1.306	.199	2.582E-04	.0112	3.109E-04	.0135
257	537.0	1.268	.171	2.230E-04	.0097	2.686E-04	.0117
258	536.9	1.235	.168	2.193E-04	.0095	2.642E-04	.0115

CANOPY

ESCAPE HATCH AND WINDOW

X/L	2Y/H
.1933	.0162
.1972	.0162
.1933	.0384
.1972	.0384
.1933	.0653
.1972	.0653
.2567	.0235
.2606	.0235
.2567	.0491
.2606	.0491

CARGO BAY HINGE NO. 1

X/L	Z,FULL SCALE(IN)
.2879	420.0000
.2917	420.0000
.2840	415.0000
.2879	415.0000
.2917	415.0000
.2801	405.0000
.2840	405.0000

CARGO BAY HINGE NO. 2

X/L	Z,FULL SCALE(IN)
.3192	420.0000
.3439	420.0000
.3362	415.0000
.3401	415.0000
.3439	415.0000
.3323	405.0000
.3362	405.0000

CARGO BAY HINGE NO. 3

X/L	Z,FULL SCALE(IN)
.3923	420.0000
.3961	420.0000
.3884	415.0000
.3845	405.0000
.3884	405.0000

DATE 5/12/75

AEDC(APO,INC.) ARNOLD AFS, TENNESSEE
VON KARMAN GAS DYNAMICS FACILITY
50 INCH HYPERSONIC TUNNEL B
V41A-87A

GROUP	TEST CONDITION	MODEL	MACH NO	PO,PSIA	TO,DEG R	ALPHA-MODEL	ALPHA-SECTOR	ALPHA-PREBEND	ROLL MODEL	YAW
50	18	140 B	7.98	432.4	1305	20.03	9.97	30.00	179.88	-.0

T-INF (DEG R)	P-INF (PSIA)	Q-INF (PSIA)	V-INF (FT/SEC)	RHO-INF (SLUGS/FT3)	MU-INF (LB-SEC/FT2)	RE/FT (FT-1)	HREF-FR (R= .0400FT)	STFR (R= .0400FT)	SWITCH POSITION
95.0	.045	2.307	3811	3.976E-05	7.649E-08	1.981E 06	2.303E-02	1.913E-02	3

TOP CENTERLINE

IC NO	TW	DIWDT	QDOT	H(TO)	H(TO)/HREF	H(.9TO)	H(.9TO)/HREF	X/L
367	595.7	87.968	14.656	1.502E-02	.6525	1.841E-02	.7996	0
368	573.1	69.195	8.951	1.223E-02	.5312	1.489E-02	.6464	.0008
369	558.6	45.871	5.434	7.281E-03	.3162	8.823E-03	.3832	.0019
370	550.2	33.387	4.124	5.436E-03	.2361	6.574E-03	.2855	.0037
371	549.5	28.197	2.780	3.679E-03	.1598	4.448E-03	.1931	.0058
372	543.7	19.983	2.583	3.393E-03	.1474	4.095E-03	.1778	.0087
373	542.2	13.519	1.775	2.327E-03	.1011	2.808E-03	.1219	.0118
374	540.9	10.786	1.416	1.854E-03	.0805	2.236E-03	.0971	.0151
375	539.2	8.571	1.174	1.534E-03	.0666	1.849E-03	.0803	.0182
376	540.7	7.685	1.016	1.329E-03	.0577	1.603E-03	.0696	.0215
377	540.8	7.242	.935	1.223E-03	.0531	1.475E-03	.0641	.0246
378	540.0	6.230	.798	9.521E-04	.0413	1.148E-03	.0499	.0278
379	539.1	3.974	.489	6.369E-04	.0277	7.701E-04	.0334	.0609
380	537.5	3.161	.325	4.239E-04	.0184	5.107E-04	.0222	.0646
381	536.7	2.935	.351	4.954E-04	.0215	5.968E-04	.0259	.0684
382	535.8	2.365	.310	4.027E-04	.0175	4.849E-04	.0211	.0721
383	535.4	2.193	.294	3.821E-04	.0166	4.601E-04	.0200	.0760
384	535.6	1.899	.265	3.442E-04	.0149	4.145E-04	.0180	.0796
385	535.0	1.593	.205	2.662E-04	.0116	3.206E-04	.0139	.0789
386	534.9	1.661	.197	2.554E-04	.0111	3.075E-04	.0134	.0982
387	534.6	1.449	.178	2.312E-04	.0100	2.763E-04	.0121	.1019
388	534.6	.809	.077	9.998E-05	.0043	1.204E-04	.0052	.1160
389	534.2	.598	.087	1.127E-04	.0049	1.357E-04	.0059	.1195
390	533.9	.545	.086	1.114E-04	.0048	1.341E-04	.0058	.1231
391	533.7	.544	.087	1.123E-04	.0049	1.352E-04	.0059	.1268
392	533.9	.581	.100	1.292E-04	.0056	1.555E-04	.0068	.1305
393	533.8	.591	.100	1.298E-04	.0056	1.562E-04	.0068	.1338
394	534.1	.687	.115	1.497E-04	.0065	1.802E-04	.0078	.1376
395	534.3	.794	.119	1.542E-04	.0067	1.856E-04	.0081	.1411
396	534.9	.956	.142	1.841E-04	.0080	2.216E-04	.0096	.1448
397	535.1	1.217	.181	2.345E-04	.0102	2.824E-04	.0123	.1483
398	536.5	1.431	.202	2.624E-04	.0114	3.160E-04	.0137	.1519
399	537.7	1.961	.262	3.419E-04	.0148	4.120E-04	.0179	.1556

DATE 5/12/75

AEDC(ARO,INC.) ARNOLD AFS, TENNESSEE
VON KARMAN GAS DYNAMICS FACILITY
50 INCH HYPERSONIC TUNNEL B
V41H-B7A

RUN	TEST CONDITION	MODEL	MACH NO	PO,PSIA	TO,DEG R	ALPHA-MODEL	ALPHA-SECTOR	ALPHA-PREBEND	ROLL MODEL	YAW
50	15	140 B	7.98	432.4	1305	20.03	9.97	30.00	179.86	-.0

T-INF (DEG R)	P-INF (PSIA)	Q-INF (PSIA)	V-INF (FT/SEC)	RHO-INF (SLUGS/FT3)	MU-INF (LB-SEC/FT2)	RE/FT (FT-1)	HREF-FR (R= .0400FT)	STFR (R= .0400FT)	SWITCH POSITION
95.0	.045	2.007	3811	3.976E-05	7.649E-08	1.981E 06	2.303E-02	1.913E-02	3

TC NO	TW	DTWDT	QDOT	H(TO)	H(TO)/HREF	H(.9TO)	H(.9TO)/HREF	TOP CENTERLINE X/L
400	539.7	3.023	.469	5.337E-04	.0232	6.433E-04	.0279	.1582
401	539.7	3.694	.479	6.281E-04	.0272	7.548E-04	.0328	.1608
402	541.7	5.732	.717	9.345E-04	.0408	1.133E-03	.0492	.1635
403	543.4	7.439	.908	1.192E-03	.0518	1.439E-03	.0625	.1664
404	544.4	8.556	1.040	1.433E-03	.0622	1.729E-03	.0751	.1691
405	545.3	10.622	1.294	1.705E-03	.0740	2.059E-03	.0894	.1720
406	545.5	10.755	1.311	1.726E-03	.0749	2.084E-03	.0905	.1748
407	545.7	10.255	1.331	1.754E-03	.0762	2.118E-03	.0920	.1769
408	545.4	10.043	1.480	1.948E-03	.0846	2.352E-03	.1021	.1800
409	543.[illegible]	5.388	1.212	1.590E-03	.0691	1.919E-03	.0833	.1831
410	543.5	6.444	.931	1.223E-03	.0531	1.476E-03	.0641	.1863
411	541.3	5.470	.824	1.079E-03	.0468	1.301E-03	.0565	.1894
412	542.6	4.344	.592	7.741E-04	.0336	9.335E-04	.0405	.1931
413	539.2	3.401	.457	5.967E-04	.0259	7.192E-04	.0312	.1972
414	537.5	1.747	.234	3.057E-04	.0133	3.683E-04	.0160	.2049
415	535.5	.911	.040	1.170E-04	.0051	1.409E-04	.0061	.2250
416	534.3	.439	.057	7.430E-05	.0032	8.944E-05	.0039	.2500
								NOSE TC (Z = 338) X/L 2Y/B
145	577.5	59.179	9.174	1.114E-02	.4838	1.358E-02	.5895	.0008 .5039
146	577.7	61.812	9.474	1.168E-02	.5074	1.425E-02	.6187	.0023 .5082
147	567.9	51.572	7.029	9.536E-03	.4141	1.159E-02	.5032	.0043 .5135
148	562.4	38.784	5.447	7.336E-03	.3186	8.900E-03	.3865	.0068 .5205
149	558.[illegible]	28.953	4.215	5.645E-03	.2451	6.840E-03	.2971	.0095 .5279
150	558.5	24.992	3.604	4.830E-03	.2097	5.853E-03	.2542	.0122 .5354
151	557.6	17.456	2.459	3.304E-03	.1435	4.003E-03	.1739	.0218 .5621
152	556.5	17.437	2.379	3.178E-03	.1380	3.850E-03	.1672	.0251 .5712
153	555.[illegible]	17.075	2.098	2.805E-03	.1218	3.397E-03	.1475	.0286 .5808
154	555.[illegible]	16.897	2.114	2.823E-03	.1226	3.419E-03	.1485	.0319 .5898
155	555.0	15.045	1.902	2.540E-03	.1103	3.076E-03	.1336	.0354 .5995
156	554.7	14.071	1.759	2.345E-03	.1018	2.838E-03	.1233	.0387 .6085
157	555.[illegible]	14.068	1.740	2.320E-03	.1007	2.809E-03	.1220	.0420 .6176
158	555.2	13.698	1.694	2.260E-03	.0981	2.736E-03	.1188	.0462 .6294
159	554.[illegible]	14.595	1.647	2.195E-03	.0953	2.657E-03	.1154	.0503 .6406

GROUP 50 CENTERLINE TIME 2.55

CH	TC	FIT LENGTH	DTDWT	UNCERTAINTY	CH	TC	FIT LENGTH	DTDWT	UNCERTAINTY
1	221	1.20	1.066	.0294	50	384	1.20	1.899	.0209
2	222	1.20	1.794	.0107	51	385	1.20	1.593	.0191
3	223	.60	4.110	.0116	52	386	1.20	1.661	.0139
4	224	.60	7.059	.0086	53	387	1.20	1.449	.0125
5	225	.60	4.958	.0264	54	388	2.00	.809	.0158
6	226	.40	9.775	.0079	55	389	2.00	.598	.0173
7	227	.60	5.691	.0416	56	390	2.00	.545	.0611
8	228	.40	9.779	.0134	57	391	2.00	.544	.0145
9	229	.60	7.544	.0123	58	392	2.00	.581	.0124
10	232	2.00	.373	.0251	59	393	2.00	.591	.0219
11	233	2.00	.446	.0275	60	394	2.00	.687	.0121
12	236	2.00	.343	.0395	61	395	2.00	.794	.0192
13	237	2.00	.518	.0201	62	396	2.00	.956	.0087
14	238	1.20	1.280	.0143	63	397	1.20	1.217	.0162
15	239	1.20	1.341	.0242	64	398	1.20	1.431	.0152
16	240	1.20	1.141	.0172	65	399	1.20	1.961	.0095
17	241	1.20	1.327	.0220	66	400	.80	3.023	.0179
18	242	1.20	1.549	.0159	67	401	.80	3.689	.0076
19	243	1.20	1.422	.0193	68	402	.60	5.732	.0664
20	244	1.20	1.176	.0175	69	403	.60	7.439	.0083
21	245	1.20	1.163	.0327	70	404	.40	8.956	.0111
22	246	1.20	1.216	.0264	71	405	.40	10.622	.0132
23	247	2.00	.963	.0209	72	406	.40	10.765	.0090
24	248	1.20	1.290	.0241	73	407	.40	10.255	.0073
25	249	1.20	1.404	.0164	74	408	.40	10.043	.0067
26	250	1.20	1.520	.0155	75	409	.40	8.388	.0093
27	251	1.20	1.568	.0142	76	410	.60	6.444	.0136
28	252	1.20	1.558	.0123	77	411	.60	5.470	.0126
29	253	1.20	1.585	.0097	78	412	.60	4.344	.0150
30	254	1.20	1.306	.0202	79	413	.80	3.401	.0550
31	257	1.20	1.268	.0133	80	414	1.20	1.747	.0114
32	258	1.20	1.235	.0152	81	415	2.00	.911	.0127
33	367	.20	87.968	.0025	82	416	2.00	.489	.0144
34	368	.20	69.195	.0026	83	145	.20	59.179	.0039
35	369	.20	45.871	.0039	84	146	.20	61.812	.0057
36	370	.20	33.387	.0067	85	147	.20	51.572	.0046
37	371	.30	28.197	.0047	86	148	.20	38.784	.0025
38	372	.30	19.983	.0059	87	149	.30	28.953	.0031
39	373	.40	13.509	.0063	88	150	.30	24.982	.0041
40	374	.40	10.786	.0106	89	151	.30	17.456	.0124
41	375	.40	8.571	.0085	90	152	.30	17.437	.0612
42	376	.60	7.685	.0050	91	153	.30	17.075	.0153
43	377	.60	7.242	.0127	92	154	.30	16.897	.0301
44	378	.60	6.230	.0093	93	155	.40	15.045	.0054
45	379	.80	3.974	.0069	94	156	.40	14.071	.0103
46	380	.80	3.161	.0128	95	157	.40	14.068	.0074
47	381	.80	2.935	.0307	96	158	.40	13.698	.0074
48	382	.80	2.365	.0174	97	159	.40	14.595	.0060
49	383	.80	2.193	.0172	98	0	-0	0	0
51		.050							

BIT ON LOOP 52

DATE 5/12/73

AEDC(ARO,INC.) ARNOLD AFS, TENNESSEE
VON KARMAN GAS DYNAMICS FACILITY
50 INCH HYPERSONIC TUNNEL B
V41B-87A

GROUP	TEST CONDITION	MODEL	MACH NO	PO,PSIA	TO,DEG R	ALPHA-MODEL	ALPHA-SECTOR	ALPHA-PREBEND	ROLL MODEL	YAW
51	19	140 B	7.98	431.4	1311	20.05	10.14	30.00	191.38	2.0

T-INF (DEG R)	P-INF (PSIA)	Q-INF (PSIA)	V-INF (FT/SEC)	RHO-INF (SLUGS/FT3)	MU-INF (LB-SEC/FT2)	RE/FT (FT-1)	HREF-FR (R= .0400FT)	STFR (R= .0400FT)	SWITCH POSITION
92.5	.045	2.002	3820	3.947E-05	7.686E-08	1.962E 06	2.302E-02	1.921E-02	1

IC NO	TW	DTWDT	QDOT	H(TO)	H(TO)/HREF	H(.9TO)	H(.9TO)/HREF
FUSELAGE VENT NO. 1							
1	542.4	4.874	.645	8.382E-04	.0365	1.012E-03	.0440
2	543.4	5.071	.655	8.919E-04	.0387	1.076E-03	.0467
3	543.2	5.240	.722	9.387E-04	.0408	1.133E-03	.0492
4	543.3	5.404	.737	9.599E-04	.0417	1.158E-03	.0503
5	544.6	5.592	.748	9.747E-04	.0423	1.176E-03	.0511
6	545.0	5.919	.767	1.027E-03	.0446	1.239E-03	.0538
7	544.9	6.235	.913	1.191E-03	.0517	1.437E-03	.0624
8	543.8	5.077	.768	1.000E-03	.0434	1.206E-03	.0524
9	545.7	5.702	.833	1.087E-03	.0472	1.312E-03	.0570
10	545.4	6.046	.856	1.131E-03	.0491	1.365E-03	.0593
11	546.5	6.718	.912	1.193E-03	.0518	1.440E-03	.0625
12	548.3	7.144	.990	1.297E-03	.0564	1.566E-03	.0680
13	551.8	9.082	1.342	1.768E-03	.0768	2.136E-03	.0928
14	549.1	8.381	1.150	1.518E-03	.0656	1.823E-03	.0792
15	550.4	9.063	1.216	1.598E-03	.0694	1.931E-03	.0839
16	551.5	7.587	1.032	1.359E-03	.0590	1.642E-03	.0713
17	551.5	6.410	.872	1.148E-03	.0499	1.388E-03	.0603
18	550.9	4.777	.671	8.828E-04	.0384	1.067E-03	.0463
19	552.3	3.173	.446	5.879E-04	.0255	7.107E-04	.0309
CARGO BAY VENT NO. 1							
22	540.1	3.013	.502	6.507E-04	.0283	7.840E-04	.0341
23	540.3	4.619	.646	8.370E-04	.0364	1.008E-03	.0438
24	540.9	5.457	.739	9.587E-04	.0416	1.155E-03	.0502
25	540.5	5.035	.663	8.605E-04	.0374	1.037E-03	.0450
26	540.4	4.975	.653	8.479E-04	.0368	1.022E-03	.0444
27	541.5	5.305	.740	9.609E-04	.0417	1.158E-03	.0503
28	541.3	5.229	.752	9.770E-04	.0424	1.178E-03	.0512
29	540.5	4.925	.711	9.219E-04	.0400	1.111E-03	.0483
30	539.8	5.173	.744	9.642E-04	.0419	1.162E-03	.0505
31	540.1	5.153	.720	9.339E-04	.0406	1.125E-03	.0489
32	540.4	4.980	.660	8.567E-04	.0372	1.032E-03	.0448
33	539.3	2.662	.340	4.926E-04	.0214	5.934E-04	.0258
34	540.3	3.354	.454	5.866E-04	.0256	7.093E-04	.0308
35	544.0	5.727	.812	1.059E-03	.0460	1.277E-03	.0555
36	540.6	2.499	.363	4.708E-04	.0205	5.673E-04	.0246
37	539.9	2.512	.353	4.580E-04	.0199	5.518E-04	.0240
38	542.0	3.688	.514	6.686E-04	.0290	8.060E-04	.0350
39	542.5	2.915	.426	5.543E-04	.0241	6.683E-04	.0290
PROTUBERANCES							
41	540.6	2.936	.393	5.105E-04	.0222	6.152E-04	.0267
42	543.1	5.166	.707	9.203E-04	.0400	1.110E-03	.0482
43	546.7	1.679	.218	2.832E-04	.0123	3.412E-04	.0148

	X/L	Z,FULL SCALE(IN)
FUSELAGE VENT NO. 1		
1	.4434	376.6300
2	.4264	371.6300
3	.4303	371.6300
4	.4342	371.6300
5	.4380	371.6300
6	.4434	369.1300
7	.4226	366.6300
8	.4264	366.6300
9	.4303	366.6300
10	.4342	366.6300
11	.4380	366.6300
12	.4496	366.6300
13	.4187	357.1300
14	.4396	361.6300
15	.4434	361.6300
16	.4396	355.6300
17	.4434	355.6300
18	.4396	351.6300
19	.4291	332.6300
CARGO BAY VENT NO. 1		
22	.3974	397.6300
23	.4013	397.6300
24	.4052	397.6300
25	.4090	397.6300
26	.4129	397.6300
27	.3936	392.6300
28	.3974	392.6300
29	.4013	392.6300
30	.4052	392.6300
31	.4090	392.6300
32	.4129	392.6300
33	.4090	386.1300
34	.4129	387.6300
35	.3897	383.1300
36	.4090	378.6300
37	.4129	382.1300
38	.4129	377.1300
39	.4001	373.6300
PROTUBERANCES		
41	.3546	379.0500
42	.3604	379.0500
43	.3450	374.0500

DATE 5/12/75

AEDC(ARO,INC.) ARNOLD AFS, TENNESSEE
VON KARMAN GAS DYNAMICS FACILITY
50 INCH HYPERSONIC TUNNEL B
V41B-87A

GROUP	TEST CONDITION	MODEL	MACH NO	PO,PSIA	TO,DEG R	ALPHA-MODEL	ALPHA-SECTOR	ALPHA-PREBEND	ROLL MODEL	YAW
51	19	140 B	7.98	431.4	1311	20.05	10.14	30.00	191.38	2.0

T-INF (DEG R)	P-INF (PSIA)	Q-INF (PSIA)	V-INF (FT/SEC)	RHO-INF (SLUGS/FT3)	MU-INF (LB-SEC/FT2)	RE/FT (FT-1)	HREF-FR (R= .0400FT)	STFR (R= .0400FT)	SWITCH POSITION
95.5	.045	2.002	3820	3.947E-05	7.686E-08	1.962E 06	2.302E-02	1.921E-02	1

TC NO	TW	DTWDT	QDOT	H(TO)	H(TO)/HREF	H(.9TO)	H(.9TO)/HREF
44	542.1	4.265	.581	7.559E-04	.0328	9.113E-04	.0396
45	548.5	8.345	1.160	1.521E-03	.0661	1.836E-03	.0798
46	547.9	9.217	1.293	1.694E-03	.0736	2.046E-03	.0889
47	542.6	2.214	.295	3.837E-04	.0167	4.626E-04	.0201
48	546.3	6.099	.839	1.096E-03	.0476	1.323E-03	.0575
49	545.1	3.931	.542	7.073E-04	.0307	8.534E-04	.0371
50	550.0	6.681	.933	1.225E-03	.0532	1.480E-03	.0643
51	546.9	4.889	.666	8.713E-04	.0378	1.052E-03	.0457
52	548.5	4.925	.680	8.917E-04	.0387	1.077E-03	.0468
53	548.1	5.016	.736	9.639E-04	.0419	1.164E-03	.0506
54	538.5	2.002	.286	3.699E-04	.0161	4.455E-04	.0194
55	548.8	4.474	.642	8.421E-04	.0366	1.017E-03	.0442
56	539.9	1.793	.231	2.998E-04	.0130	3.612E-04	.0157
57	541.1	1.937	.237	3.077E-04	.0134	3.709E-04	.0161
58	543.1	1.892	.250	3.260E-04	.0142	3.931E-04	.0171
59	544.7	1.674	.221	2.882E-04	.0125	3.477E-04	.0151
60	544.7	1.536	.214	2.798E-04	.0122	3.375E-04	.0147
61	544.0	1.887	.240	3.124E-04	.0136	3.768E-04	.0164
62	541.9	1.915	.235	3.057E-04	.0133	3.685E-04	.0160
63	540.4	1.872	.245	3.178E-04	.0138	3.829E-04	.0166
64	536.4	~~-.006~~	~~.001~~	~~-9.295E-07~~	~~-.0000~~	~~-1.113E-06~~	~~-.0000~~
65	539.1	1.781	.242	3.140E-04	.0136	3.782E-04	.0164
66	540.7	2.015	.255	3.305E-04	.0144	3.982E-04	.0173
67	542.2	1.615	.227	2.956E-04	.0128	3.564E-04	.0155
68	543.9	2.038	.259	3.373E-04	.0147	4.068E-04	.0177

PROTUBERANCES

X/L	Z,FULL SCALE(IN)
.3508	374.0500
.3566	374.0500
.3604	374.0500
.3392	366.5500
.3566	366.5500
.3392	360.7000
.3566	360.7000
.3604	360.7000
.3392	353.2000
.3450	353.2000
.3508	353.2000
.3566	353.2000

SUBLIMATOR VENT NO. 1

X/L	Z,FULL SCALE(IN)
.3031	371.1300
.3074	369.1300
.3089	363.6300
.3074	358.1300
.3031	356.1300
.2988	358.1300
.2973	363.6300
.2988	369.1300
.3031	376.1300
.3089	378.6300
.3101	372.6300
.3157	370.3800
.3128	363.6300

DATE 5/12/75

AEDC(ARO,INC.) ARNOLD AFS, TENNESSEE
VON KARMAN GAS DYNAMICS FACILITY
50 INCH HYPERSONIC TUNNEL B
V41H-B7A

GROUP	TEST CONDITION	MODEL	MACH NO	PO,PSIA	TO,DEG R	ALPHA-MODEL	ALPHA-SECTOR	ALPHA-PREBEND	ROLL MODEL	YAW
51	19	140 B	7.98	431.4	1311	20.05	10.14	30.00	191.38	2.0

T-INF (DEG R)	P-INF (PSIA)	Q-INF (PSIA)	V-INF (FT/SEC)	RHO-INF (SLUGS/FT3)	MU-INF (LB-SEC/FT2)	RE/FT (FT-1)	HREF-FR (R= .0400FT)	STFR (R= .0400FT)	SWITCH POSITION
95.5	.045	2.002	3820	3.947E-05	7.686E-08	1.962E 06	2.302E-02	1.921E-02	1

TC NO	TW	DTWDT	CDOT	H(TO)	H(TO)/HREF	H(.9TO)	H(.9TO)/HREF	X/L	Z,FULL SCALE(IN)
								FUSELAGE VENT PANEL NO. 7	
69	538.8	2.575	.360	4.659E-04	.0202	5.611E-04	.0244	.2487	356.4000
70	539.0	2.449	.360	3.890E-04	.0169	4.686E-04	.0204	.2591	356.4000
71	540.4	2.772	.378	4.897E-04	.0213	5.901E-04	.0256	.2419	351.4000
72	540.1	2.474	.351	4.556E-04	.0198	5.489E-04	.0238	.2487	351.4000
73	540.4	2.429	.316	4.093E-04	.0178	4.932E-04	.0214	.2552	351.4000
74	540.7	2.484	.302	3.916E-04	.0170	4.718E-04	.0205	.2610	351.4000
75	543.1	2.743	.374	4.870E-04	.0212	5.873E-04	.0255	.2419	342.8000
77	542.8	2.221	.316	4.109E-04	.0179	4.955E-04	.0215	.2552	342.8000
78	543.5	2.394	.330	4.295E-04	.0187	5.180E-04	.0225	.2610	342.8000
79	546.3	2.772	.356	4.657E-04	.0202	5.620E-04	.0244	.2419	334.2000
80	543.9	2.272	.311	4.053E-04	.0176	4.889E-04	.0212	.2487	334.2000
81	545.1	2.264	.317	4.141E-04	.0180	4.996E-04	.0217	.2552	334.2000
								ACCESS HATCH WINDOW	
83	535.0	3.366	.449	5.743E-04	.0251	6.959E-04	.0302	.2131	398.0000
84	535.7	3.694	.487	6.280E-04	.0273	7.558E-04	.0328	.2131	388.0000
85	535.7	3.236	.441	5.669E-04	.0247	6.847E-04	.0297	.2131	383.0000
87	533.2	2.333	.383	4.283E-04	.0186	5.151E-04	.0224	.2222	395.8000
88	535.3	3.277	.458	5.907E-04	.0257	7.108E-04	.0309	.2193	386.5000
89	536.4	2.789	.410	5.294E-04	.0230	6.372E-04	.0277	.2177	381.8000
90	534.9	2.979	.406	5.229E-04	.0227	6.292E-04	.0273	.2297	389.5000
91	535.6	3.273	.449	5.790E-04	.0252	6.968E-04	.0303	.2243	382.5000
92	536.6	3.026	.428	5.519E-04	.0240	6.644E-04	.0289	.2214	378.7000
93	535.6	2.944	.376	4.852E-04	.0211	5.839E-04	.0254	.2343	374.0000
94	537.6	3.304	.430	5.560E-04	.0242	6.694E-04	.0291	.2274	375.5000
95	537.2	3.086	.439	5.672E-04	.0246	6.829E-04	.0297	.2239	373.3000
96	537.2	2.544	.331	4.278E-04	.0186	5.150E-04	.0224	.2363	368.0000
97	537.4	3.162	.405	5.231E-04	.0227	6.299E-04	.0274	.2286	368.0000
98	537.6	3.155	.443	5.728E-04	.0249	6.897E-04	.0300	.2247	368.0000
100	540.1	3.023	.429	5.566E-04	.0242	6.707E-04	.0291	.2274	360.5000
102	541.4	3.133	.444	5.765E-04	.0250	6.949E-04	.0302	.2081	354.3000
103	539.9	3.413	.449	5.826E-04	.0253	7.019E-04	.0305	.2023	362.7000
105	537.2	3.881	.486	6.279E-04	.0273	7.560E-04	.0328	.2050	378.7000
106	536.5	3.821	.490	6.328E-04	.0275	7.618E-04	.0331	.2050	386.2000

GROUP 51 CENTERLINE TIME 2.55

CH	TC	FIT LENGTH	DTDWT	UNCERTAINTY	CH	TC	FIT LENGTH	DTDWT	UNCERTAINTY
1	1	.60	4.873	.0109	50	53	.60	5.016	.0224
2	2	.60	5.071	.0109	51	54	.80	2.002	.0247
3	3	.60	5.240	.0094	52	55	.60	4.474	.0138
4	4	.60	5.404	.0107	53	56	1.20	1.793	.0105
5	5	.60	5.592	.0190	54	57	1.20	1.937	.0136
6	6	.60	5.919	.0066	55	58	1.20	1.892	.0122
7	7	.60	6.235	.0414	56	59	1.20	1.674	.0561
8	8	.60	5.077	.0138	57	60	1.20	1.536	.0162
9	9	.60	5.702	.0195	58	61	1.20	1.887	.0078
10	10	.60	6.046	.0076	59	62	1.20	1.915	.0159
11	11	.60	6.718	.0123	60	63	1.20	1.872	.0097
12	12	.60	7.144	.0064	61	64	2.00	-.006	-2.7865
13	13	.40	9.082	.0124	62	65	1.20	1.781	.0090
14	14	.40	8.341	.0172	63	66	1.20	2.015	.0116
15	15	.40	9.063	.0161	64	67	1.20	1.615	.0214
16	16	.60	7.587	.0058	65	68	.80	2.038	.0191
17	17	.60	6.410	.0116	66	69	.80	2.576	.0202
18	18	.60	4.777	.0137	67	70	.80	2.449	.0081
19	19	.80	3.173	.0142	68	71	.80	2.772	.1154
20	22	.80	3.613	.0147	69	72	.80	2.474	.0252
21	23	.60	4.619	.0088	70	73	.80	2.429	.0115
22	24	.60	5.457	.0077	71	74	.80	2.484	.0336
23	25	.60	5.035	.0240	72	75	.80	2.743	.0162
24	26	.60	4.975	.0133	73	77	.80	2.221	.0141
25	27	.60	5.365	.0092	74	78	.80	2.394	.0186
26	28	.60	5.229	.0112	75	79	.80	2.772	.0125
27	29	.60	4.925	.0083	76	80	.80	2.272	.0211
28	30	.60	5.173	.0132	77	81	.80	2.264	.0137
29	31	.60	5.153	.0067	78	83	.80	3.360	.0084
30	32	.60	4.980	.0098	79	84	.80	3.694	.0504
31	33	.80	2.662	.0101	80	85	.80	3.236	.0092
32	34	.80	3.354	.0084	81	87	.80	2.333	.0176
33	35	.60	5.727	.0075	82	88	.80	3.277	.0103
34	36	.80	2.499	.0126	83	89	.80	2.789	.0147
35	37	.80	2.512	.0160	84	90	.80	2.979	.0162
36	38	.80	3.688	.0072	85	91	.80	3.273	.0117
37	39	.80	2.915	.0121	86	92	.80	3.026	.0130
38	41	.80	2.936	.0144	87	93	.80	2.944	.0231
39	42	.60	5.166	.0123	88	94	.80	3.304	.0087
40	43	1.20	1.679	.0224	89	95	.80	3.086	.0168
41	44	.60	4.265	.0090	90	96	.80	2.544	.0643
42	45	.60	8.345	.0096	91	97	.80	3.162	.0176
43	46	.40	9.217	.0184	92	98	.80	3.155	.0285
44	47	.80	2.214	.0128	93	100	.80	3.023	.0108
45	48	.60	6.099	.0095	94	102	.80	3.133	.0175
46	49	.80	3.931	.0104	95	103	.80	3.413	.0176
47	50	.60	6.681	.0130	96	105	.80	3.881	.0127
48	51	.60	4.885	.0105	97	106	.80	3.821	.0121
49	52	.60	4.925	.0117	98	0	-0	0	0
52		.050							

BIT ON LOOP 52

DATE 5/12/75

AEDC(ARO,INC.) ARNOLD AFS, TENNESSEE
VON KARMAN GAS DYNAMICS FACILITY
50 INCH HYPERSONIC TUNNEL H
V41H-87A

GROUP	TEST CONDITION	MODEL	MACH NO	PO,PSIA	TO,DEG R	ALPHA-MODEL	ALPHA-SECTOR	ALPHA-PREBEND	ROLL MODEL	YAW
52	19	140 B	7.98	430.9	1315	20.05	10.15	30.00	191.38	2.0

T-INF (DEG R)	P-INF (PSIA)	Q-INF (PSIA)	V-INF (FT/SEC)	RHO-INF (SLUGS/FT3)	MU-INF (LB-SEC/FT2)	RE/FT (FT-1)	HREF-FR (R= .0400FT)	STFR (R= .0400FT)	SWITCH POSITION
95.8	.045	2.000	3826	3.931E-05	7.709E-08	1.951E 06	2.302E-02	1.925E-02	2

TC NO	TW	DTWDT	QDOT	H(TO)	H(TO)/HREF	H(.9TO)	H(.9TO)/HREF	X/L	Z,FULL SCALE(IN)
								ACCESS HATCH WINDOW	
107	534.3	3.315	.475	6.086E-04	.0264	7.318E-04	.0318	.2050	396.2000
								FUSELAGE VENT PANEL NO. 3 AND 1	
108	538.1	6.935	.736	9.465E-04	.0411	1.139E-03	.0495	.1244	377.5000
109	536.9	5.778	.716	9.182E-04	.0399	1.105E-03	.0480	.1302	377.5000
110	535.4	5.300	.673	8.626E-04	.0375	1.038E-03	.0451	.1360	377.5000
111	535.8	5.075	.612	7.857E-04	.0341	9.452E-04	.0411	.1418	377.5000
112	536.7	4.811	.572	7.350E-04	.0319	8.845E-04	.0384	.1476	377.5000
113	537.8	6.348	.730	9.388E-04	.0408	1.130E-03	.0491	.1215	273.5000
114	537.0	5.650	.690	8.735E-04	.0379	1.051E-03	.0457	.1273	273.5000
115	536.4	4.991	.620	7.965E-04	.0346	9.583E-04	.0416	.1331	273.5000
116	536.3	4.783	.588	7.550E-04	.0328	9.083E-04	.0395	.1389	273.5000
117	537.8	5.066	.585	7.523E-04	.0327	9.054E-04	.0393	.1447	273.5000
118	537.8	4.179	.579	7.453E-04	.0324	8.971E-04	.0390	.1409	366.0000
119	539.1	4.905	.637	8.206E-04	.0356	9.880E-04	.0429	.1442	366.0000
120	540.7	5.080	.637	8.229E-04	.0358	9.912E-04	.0431	.1215	359.5000
121	540.1	4.623	.569	7.347E-04	.0319	8.848E-04	.0384	.1303	359.5000
122	540.6	4.618	.577	7.452E-04	.0324	8.976E-04	.0390	.1337	359.5000
								LOWER RCS NOZZLES	
124	537.8	5.231	.468	6.022E-04	.0262	7.248E-04	.0315	.0950	400.0000
125	536.8	5.138	.561	7.203E-04	.0313	8.667E-04	.0377	.0988	400.0000
126	536.5	4.370	.600	7.704E-04	.0335	9.269E-04	.0403	.1027	400.0000
127	537.1	4.897	.662	8.501E-04	.0369	1.023E-03	.0444	.0911	395.0000
128	536.7	4.899	.596	7.653E-04	.0332	9.208E-04	.0400	.0950	395.0000
129	537.2	5.302	.624	8.016E-04	.0348	9.647E-04	.0419	.0988	395.0000
130	539.7	5.715	.686	8.845E-04	.0384	1.065E-03	.0463	.0810	390.0000
131	537.7	5.012	.742	9.545E-04	.0415	1.149E-03	.0499	.0857	390.0000
132	538.2	6.601	.771	9.923E-04	.0431	1.194E-03	.0519	.0963	390.0000
133	537.9	5.050	.615	7.906E-04	.0343	9.516E-04	.0413	.0857	383.8000
134	536.7	5.473	.734	9.431E-04	.0410	1.135E-03	.0493	.0872	377.3000
135	538.7	7.104	.855	1.102E-03	.0479	1.326E-03	.0576	.0903	374.5500
136	539.6	7.662	.854	1.102E-03	.0479	1.327E-03	.0576	.0960	374.5500
137	539.7	6.845	.898	1.156E-03	.0502	1.392E-03	.0605	.0872	370.5500
138	539.8	7.657	.885	1.141E-03	.0496	1.374E-03	.0597	.0928	370.5500
139	540.5	6.841	.877	1.131E-03	.0492	1.363E-03	.0592	.0816	366.0500
140	541.0	7.152	.914	1.180E-03	.0513	1.421E-03	.0617	.0934	362.4000
141	540.7	6.503	.863	1.114E-03	.0484	1.341E-03	.0583	.0973	362.4000
142	542.8	5.342	.555	7.570E-04	.0329	9.124E-04	.0396	.0833	355.2000
143	542.3	7.825	.790	1.022E-03	.0444	1.231E-03	.0535	.0919	355.2000
144	543.9	8.650	1.145	1.485E-03	.0645	1.790E-03	.0778	.0949	349.0000

DATE 5/12/75

AEDC(ARO,INC.) ARNOLD AFS, TENNESSEE
VON KARMAN GAS DYNAMICS FACILITY
50 INCH HYPERSONIC TUNNEL B
V41B-87A

GROUP	TEST CONDITION	MODEL	MACH NO	PO,PSIA	TO,DEG R	ALPHA-MODEL	ALPHA-SECTOR	ALPHA-PREBEND	ROLL MODEL	YAW
52	19	140 B	7.98	430.9	1315	20.05	10.15	30.00	191.38	2.0

T-INF (DEG R)	P-INF (PSIA)	Q-INF (PSIA)	V-INF (FT/SEC)	RHO-INF (SLUGS/FT3)	MU-INF (LB-SEC/FT2)	RE/FT (FT-1)	HREF-FR (R= .0400FT)	STFR (R= .0400FT)	SWITCH POSITION
95.8	.045	2.000	3826	3.931E-05	7.709E-08	1.951E 06	2.302E-02	1.925E-02	2

TC NO	TW	DTWDT	QDOT	H(TO)	H(TO)/HREF	H(.9TO)	H(.9TO)/HREF
161	541.1	3.622	.430	5.557E-04	.0241	6.695E-04	.0291
162	540.7	3.778	.359	4.634E-04	.0201	5.582E-04	.0242
163	538.6	2.718	.335	4.307E-04	.0187	5.186E-04	.0225
164	537.5	1.953	.255	3.279E-04	.0142	3.947E-04	.0171
165	537.2	1.481	.197	2.401E-04	.0104	2.890E-04	.0126
166	537.2	1.217	.156	2.008E-04	.0087	2.417E-04	.0105
167	541.1	3.555	.483	6.236E-04	.0271	7.512E-04	.0326
168	540.8	3.882	.409	5.278E-04	.0229	6.358E-04	.0276
169	538.0	2.600	.317	4.072E-04	.0177	4.902E-04	.0213
170	537.0	2.270	.294	3.652E-04	.0159	4.395E-04	.0191
171	536.6	2.408	.291	3.731E-04	.0162	4.490E-04	.0195
172	536.0	1.893	.247	3.170E-04	.0138	3.814E-04	.0166
173	538.5	2.902	.388	4.999E-04	.0217	6.018E-04	.0261
174	536.5	2.447	.279	3.563E-04	.0156	4.311E-04	.0187
175	535.8	2.097	.311	3.859E-04	.0168	4.643E-04	.0202
176	535.8	1.756	.239	3.071E-04	.0133	3.694E-04	.0160
177	547.8	14.798	2.050	2.671E-03	.1160	3.223E-03	.1400
178	551.7	22.778	4.516	5.914E-03	.2569	7.145E-03	.3104
179	557.1	28.240	5.994	7.893E-03	.3429	9.550E-03	.4149
180	540.1	4.885	.639	8.243E-04	.0358	9.928E-04	.0431
181	544.7	10.670	1.456	1.890E-03	.0821	2.279E-03	.0990
182	549.7	22.313	3.204	4.185E-03	.1818	5.054E-03	.2195
183	536.4	3.341	.420	5.389E-04	.0234	6.484E-04	.0282
184	537.0	3.611	.494	6.351E-04	.0276	7.642E-04	.0332
185	540.8	6.487	.782	1.010E-03	.0439	1.216E-03	.0528
186	547.0	14.427	1.822	2.372E-03	.1031	2.862E-03	.1243
187	557.1	27.907	3.758	4.956E-03	.2153	5.996E-03	.2605
188	548.1	18.916	4.433	5.778E-03	.2510	6.973E-03	.3029
189	540.2	6.286	.898	1.159E-03	.0504	1.396E-03	.0606
190	545.9	14.265	2.064	2.682E-03	.1165	3.235E-03	.1406
191	552.3	25.657	3.955	5.184E-03	.2252	6.264E-03	.2721

UPPER RCS NOZZLES

X/L	2Y/B
.0619	-.0160
.0709	-.0160
.0807	-.0160
.0943	-.0160
.0978	-.0160
.1013	-.0160
.0619	-.0320
.0709	-.0320
.0807	-.0320
.0943	-.0320
.0978	-.0320
.1013	-.0320
.0807	-.0480
.0943	-.0480
.0978	-.0480
.1013	-.0480

CANOPY

DATE 5/12/75

AEDC(ARO,INC.) ARNOLD AFS, TENNESSEE
VON KARMAN GAS DYNAMICS FACILITY
50 INCH HYPERSONIC TUNNEL B
V41B-B7A

GROUP	TEST CONDITION	MODEL	MACH NO	PO,PSIA	TO,DEG R	ALPHA-MODEL	ALPHA-SECTOR	ALPHA-PREBEND	ROLL MODEL	YAW
52	19	140 H	7.98	430.9	1315	20.05	10.15	30.00	191.38	2.0

T-INF (DEG R)	P-INF (PSIA)	Q-INF (PSIA)	V-INF (FT/SEC)	RHO-INF (SLUGS/FT3)	MU-INF (LB-SEC/FT2)	RE/FT (FT-1)	HREF-FR (R= .0400FT)	STFR (R= .0400FT)	SWITCH POSITION
95.8	.045	2.000	3826	3.931E-05	7.709E-08	1.951E 06	2.302E-02	1.925E-02	2

CANOPY

TC NO	TW	DTWDT	QDOT	H(TO)	H(TO)/HREF	H(.9TO)	H(.9TO)/HREF
192	534.2	1.474	.268	2.664E-04	.0116	3.203E-04	.0139
193	545.4	15.941	3.086	4.009E-03	.1742	4.835E-03	.2100
194	535.8	2.760	.357	4.574E-04	.0199	5.503E-04	.0239
195	540.5	6.964	.861	1.112E-03	.0483	1.339E-03	.0582
196	544.9	12.203	1.611	2.091E-03	.0908	2.522E-03	.1096
197	532.2	1.119	.111	1.415E-04	.0061	1.701E-04	.0074
198	532.4	1.241	.144	1.839E-04	.0080	2.210E-04	.0096
199	533.3	1.258	.169	2.162E-04	.0094	2.600E-04	.0113
200	535.7	3.525	.503	6.448E-04	.0280	7.757E-04	.0337
201	543.1	14.023	1.988	2.575E-03	.1118	3.103E-03	.1348
202	543.4	12.550	1.594	2.065E-03	.0897	2.489E-03	.1081
203	532.9	2.117	.263	3.354E-04	.0146	4.032E-04	.0175
204	534.8	3.480	.541	6.933E-04	.0301	8.339E-04	.0362
205	542.0	13.006	2.035	2.632E-03	.1144	3.172E-03	.1378
206	532.4	1.280	.170	2.167E-04	.0094	2.604E-04	.0113
207	539.1	8.517	1.144	1.474E-03	.0640	1.775E-03	.0771
208	531.7	2.192	.293	3.739E-04	.0162	4.493E-04	.0195
209	531.9	1.984	.273	3.480E-04	.0151	4.182E-04	.0182
210	533.1	2.399	.320	4.093E-04	.0178	4.921E-04	.0214
211	531.1	1.360	.165	2.104E-04	.0091	2.528E-04	.0110
212	532.3	1.912	.258	3.290E-04	.0143	3.954E-04	.0172
213	533.3	3.701	.491	6.275E-04	.0273	7.544E-04	.0328
214	533.4	3.475	.437	6.231E-04	.0271	7.491E-04	.0325
215	533.7	2.930	.416	5.324E-04	.0231	6.401E-04	.0278
216	536.6	5.970	.849	1.090E-03	.0474	1.312E-03	.0570
217	536.4	5.234	.747	9.586E-04	.0416	1.153E-03	.0501
218	532.7	4.684	.646	8.253E-04	.0359	9.921E-04	.0431
219	534.4	5.087	.716	9.166E-04	.0398	1.102E-03	.0479
220	533.9	4.328	.595	7.617E-04	.0331	9.159E-04	.0398

GROUP 52 CENTERLINE TIME 2.55

CH	TC	FIT LENGTH	DTDWT	UNCERTAINTY	CH	TC	FIT LENGTH	DTDWT	UNCERTAINTY
1	107	.80	3.315	.0099	50	173	.80	2.902	.0241
2	108	.60	6.935	.0055	51	174	.80	2.447	.0228
3	109	.60	5.778	.0060	52	175	.80	2.097	.0225
4	110	.60	5.300	.0090	53	176	1.20	1.756	.0100
5	111	.60	5.075	.0245	54	177	.40	14.798	.0050
6	112	.60	4.811	.0421	55	178	.30	22.778	.0039
7	113	.60	6.348	.0493	56	179	.30	28.240	.0149
8	114	.60	5.650	.0108	57	180	.60	4.885	.0070
9	115	.60	4.991	.0175	58	181	.40	10.670	.0059
10	116	.60	4.783	.0128	59	182	.30	22.313	.0102
11	117	.60	5.066	.0166	60	183	.80	3.341	.0097
12	118	.60	4.178	.0180	61	184	.80	3.611	.0209
13	119	.60	4.905	.0095	62	185	.60	6.487	.0093
14	120	.60	5.080	.0162	63	186	.40	14.427	.0042
15	121	.60	4.623	.0202	64	187	.30	27.907	.0097
16	122	.60	4.618	.0079	65	188	.30	18.916	.0067
17	124	.60	5.231	.0200	66	189	.60	6.286	.0141
18	125	.60	5.138	.0102	67	190	.40	14.265	.0050
19	126	.60	4.370	.0111	68	191	.30	25.657	.0325
20	127	.60	4.897	.0147	69	192	1.20	1.474	.0299
21	128	.60	4.895	.0086	70	193	.40	15.941	.0081
22	129	.60	5.302	.0090	71	194	.80	2.760	.0272
23	130	.60	5.715	.0136	72	195	.60	6.964	.0078
24	131	.60	5.012	.0183	73	196	.40	12.203	.0040
25	132	.60	6.601	.0103	74	197	1.20	1.119	.0188
26	133	.60	5.050	.0087	75	198	1.20	1.241	.0172
27	134	.60	5.473	.0082	76	199	1.20	1.258	.0204
28	135	.60	7.104	.0071	77	200	.80	3.525	.0097
29	136	.60	7.662	.0067	78	201	.40	14.023	.0067
30	137	.60	6.845	.0075	79	202	.40	12.550	.0413
31	138	.60	7.657	.0066	80	203	.80	2.117	.0161
32	139	.60	6.841	.0080	81	204	.80	3.480	.0127
33	140	.60	7.152	.0047	82	205	.40	13.006	.0056
34	141	.60	6.503	.0067	83	206	1.20	1.280	.0228
35	142	.60	5.342	.0103	84	207	.40	8.517	.0147
36	143	.60	7.825	.0057	85	208	.80	2.182	.0117
37	144	.40	8.650	.0088	86	209	.80	1.984	.0287
38	161	.80	3.622	.0115	87	210	.80	2.399	.0266
39	162	.80	3.778	.0103	88	211	1.20	1.360	.0124
40	163	.80	2.718	.0185	89	212	1.20	1.912	.0189
41	164	1.20	1.953	.0068	90	213	.80	3.701	.0501
42	165	1.20	1.481	.0103	91	214	.80	3.475	.0199
43	166	1.20	1.217	.0271	92	215	.80	2.930	.0245
44	167	.80	3.555	.0108	93	216	.60	5.970	.0059
45	168	.80	3.882	.0096	94	217	.60	5.234	.0106
46	169	.80	2.600	.0597	95	218	.60	4.684	.0107
47	170	.80	2.270	.0342	96	219	.60	5.087	.0116
48	171	.80	2.406	.0118	97	220	.60	4.328	.0151
49	172	1.20	1.893	.0100	98	0	-0	0	0
53		.050							

BIT ON LOOP 53

DATE 5/12/75

AEDC(ARO,INC.) ARNOLD AFS, TENNESSEE
VON KARMAN GAS DYNAMICS FACILITY
50 INCH HYPERSONIC TUNNEL B
V41H-B7A

GROUP	TEST CONDITION	MODEL	MACH NO	PO,PSIA	TO,DEG R	ALPHA-MODEL	ALPHA-SECTOR	ALPHA-PREBEND	ROLL MODEL	YAW
53	19	140 B	7.98	433.0	1318	20.03	10.17	30.00	191.38	2.0

T-INF (DEG R)	P-INF (PSIA)	Q-INF (PSIA)	V-INF (FT/SEC)	RHO-INF (SLUGS/FT3)	MU-INF (LB-SEC/FT2)	RE/FT (FT-1)	HREF-FR (R= .0400FT)	STFR (R= .0400FT)	SWITCH POSITION
95.9	.045	2.010	3830	3.943E-05	7.724E-08	1.955E 06	2.308E-02	1.923E-02	3

TC NO	TW	DTWDT	QDOT	H(TO)	H(TO)/HREF	H(.9TO)	H(.9TO)/HREF	X/L	2Y/B
						CANOPY			
221	531.3	1.012	.122	1.556E-04	.0067	1.869E-04	.0081		
222	532.1	2.885	.355	4.522E-04	.0196	5.433E-04	.0235		
223	533.6	4.695	.637	8.126E-04	.0352	9.768E-04	.0423		
						ESCAPE HATCH AND WINDOW			
224	542.5	9.725	.973	1.255E-03	.0544	1.512E-03	.0655	.1933	.0162
225	540.5	6.484	.779	1.002E-03	.0434	1.206E-03	.0523	.1972	.0162
226	543.3	12.345	1.317	1.688E-03	.0731	2.034E-03	.0881	.1933	.0384
227	539.6	7.404	1.088	1.398E-03	.0605	1.683E-03	.0729	.1972	.0384
228	540.5	11.008	1.421	1.828E-03	.0792	2.201E-03	.0953	.1933	.0653
229	539.6	8.178	1.055	1.356E-03	.0587	1.632E-03	.0707	.1972	.0653
232	533.3	.414	.056	7.134E-05	.0031	8.574E-05	.0037	.2567	.0235
233	533.7	.485	.074	9.390E-05	.0041	1.129E-04	.0049	.2606	.0235
236	532.5	.393	.057	7.316E-05	.0032	8.791E-05	.0038	.2567	.0491
237	532.7	.434	.061	7.771E-05	.0034	9.338E-05	.0040	.2606	.0491
						CARGO BAY HINGE NO. 1		X/L	Z,FULL SCALE(IN)
238	534.0	1.595	.214	2.726E-04	.0118	3.277E-04	.0142	.2879	420.0000
239	534.3	1.688	.226	2.886E-04	.0125	3.469E-04	.0150	.2917	420.0000
240	533.8	1.366	.195	2.490E-04	.0108	2.993E-04	.0130	.2840	415.0000
241	534.4	1.672	.235	3.002E-04	.0130	3.609E-04	.0156	.2879	415.0000
242	535.0	2.352	.336	4.296E-04	.0186	5.165E-04	.0224	.2917	415.0000
243	534.8	1.703	.208	2.662E-04	.0115	3.201E-04	.0139	.2801	405.0000
244	534.4	1.363	.159	2.036E-04	.0088	2.448E-04	.0106	.2840	405.0000
						CARGO BAY HINGE NO. 2		X/L	Z,FULL SCALE(IN)
245	534.9	1.331	.190	2.430E-04	.0105	2.921E-04	.0127	.3192	420.0000
246	535.1	1.453	.208	2.654E-04	.0115	3.191E-04	.0138	.3439	420.0000
247	534.9	1.182	.174	2.225E-04	.0096	2.676E-04	.0116	.3362	415.0000
248	535.0	1.447	.213	2.725E-04	.0118	3.277E-04	.0142	.3401	415.0000
249	536.2	1.796	.265	3.390E-04	.0147	4.077E-04	.0177	.3439	415.0000
250	536.5	1.863	.235	3.004E-04	.0130	3.613E-04	.0157	.3323	405.0000
251	536.5	1.737	.214	2.734E-04	.0118	3.289E-04	.0142	.3362	405.0000
						CARGO BAY HINGE NO. 3		X/L	Z,FULL SCALE(IN)
252	535.7	1.611	.234	2.992E-04	.0130	3.598E-04	.0156	.3923	420.0000
253	535.9	1.724	.250	3.203E-04	.0139	3.853E-04	.0167	.3961	420.0000
254	535.7	1.398	.212	2.717E-04	.0118	3.267E-04	.0142	.3884	415.0000
257	537.1	1.464	.198	2.534E-04	.0110	3.048E-04	.0132	.3845	405.0000
258	537.0	1.474	.201	2.575E-04	.0112	3.098E-04	.0134	.3884	405.0000

DATE 5/12/75

AEDC(ARO,INC.) ARNOLD AFS, TENNESSEE
VON KARMAN GAS DYNAMICS FACILITY
50 INCH HYPERSONIC TUNNEL B
V41B-87A

GROUP	TEST CONDITION	MODEL	MACH NO	PO,PSIA	TO,DEG R	ALPHA-MODEL	ALPHA-SECTOR	ALPHA-PREBEND	ROLL MODEL	YAW
53	19	140 B	7.98	433.0	1318	20.03	10.17	30.00	191.38	2.0

T-INF (DEG R)	P-INF (PSIA)	Q-INF (PSIA)	V-INF (FT/SEC)	RHO-INF (SLUGS/FT3)	MU-INF (LB-SEC/FT2)	RE/FT (FT-1)	HREF-FR (R= .0400FT)	STFR (R= .0400FT)	SWITCH POSITION
95.9	.045	2.010	3830	3.943E-05	7.724E-08	1.955E 06	2.308E-02	1.923E-02	3

TC NO	TW	DTWDT	QDOT	H(TO)	H(TO)/HREF	H(.9TO)	H(.9TO)/HREF	TOP CENTERLINE X/L
367	597.1	89.546	10.854	1.506E-02	.6524	1.843E-02	.7984	0
368	573.7	70.471	9.118	1.225E-02	.5309	1.489E-02	.6452	.0008
369	558.8	46.893	5.556	7.320E-03	.3171	8.859E-03	.3838	.0019
370	550.1	34.255	4.211	5.465E-03	.2376	6.621E-03	.2868	.0037
371	549.6	28.826	2.842	3.699E-03	.1603	4.465E-03	.1934	.0058
372	544.0	20.234	2.616	3.360E-03	.1464	4.074E-03	.1765	.0087
373	542.2	13.669	1.796	2.316E-03	.1003	2.790E-03	.1209	.0118
374	541.4	10.765	1.414	1.821E-03	.0789	2.193E-03	.0950	.0151
375	540.3	8.792	1.255	1.550E-03	.0672	1.867E-03	.0809	.0182
376	542.4	7.768	1.028	1.326E-03	.0574	1.597E-03	.0692	.0215
377	542.5	7.287	.941	1.214E-03	.0526	1.463E-03	.0634	.0246
378	542.1	6.336	.742	9.560E-04	.0414	1.152E-03	.0499	.0278
379	542.6	3.932	.485	6.257E-04	.0271	7.538E-04	.0327	.0609
380	540.8	3.179	.328	4.217E-04	.0183	5.079E-04	.0220	.0646
381	540.2	2.981	.387	4.982E-04	.0216	5.998E-04	.0260	.0684
382	539.2	2.419	.317	4.076E-04	.0177	4.906E-04	.0213	.0721
383	538.6	2.255	.303	3.887E-04	.0168	4.678E-04	.0203	.0760
384	538.4	1.910	.267	3.422E-04	.0148	4.119E-04	.0178	.0796
385	538.0	1.620	.209	2.677E-04	.0116	3.221E-04	.0140	.0789
386	538.0	1.758	.208	2.673E-04	.0116	3.217E-04	.0139	.0982
387	537.9	1.643	.202	2.592E-04	.0112	3.119E-04	.0135	.1019
388	537.2	1.231	.117	1.503E-04	.0065	1.808E-04	.0078	.1160
389	536.9	.890	.129	1.656E-04	.0072	1.992E-04	.0086	.1195
390	536.6	.751	.119	1.518E-04	.0066	1.827E-04	.0079	.1231
391	536.4	.821	.131	1.676E-04	.0073	2.016E-04	.0087	.1268
392	536.6	1.142	.196	2.511E-04	.0109	3.020E-04	.0131	.1305
393	536.7	1.351	.229	2.932E-04	.0127	3.527E-04	.0153	.1338
394	536.8	1.444	.243	3.109E-04	.0135	3.741E-04	.0162	.1376
395	536.9	1.401	.210	2.689E-04	.0116	3.234E-04	.0140	.1411
396	537.2	1.474	.219	2.805E-04	.0122	3.374E-04	.0146	.1448
397	537.7	1.543	.229	2.937E-04	.0127	3.534E-04	.0153	.1483
398	537.7	1.796	.253	3.246E-04	.0141	3.905E-04	.0169	.1519
399	540.3	2.809	.376	4.841E-04	.0210	5.828E-04	.0253	.1556

DATE 5/12/75

AEDC(ARO,INC.) ARNOLD AFS, TENNESSEE
VON KARMAN GAS DYNAMICS FACILITY
50 INCH HYPERSONIC TUNNEL B
V418-B7A

GROUP	TEST CONDITION	MODEL	MACH NO	PO,PSIA	TO,DEG R	ALPHA-MODEL	ALPHA-SECTOR	ALPHA-PREBEND	ROLL MODEL	YAW
53	19	140 B	7.98	433.0	1318	20.03	10.17	30.00	191.38	2.0

T-INF (DEG R)	P-INF (PSIA)	Q-INF (PSIA)	V-INF (FT/SEC)	RHO-INF (SLUGS/FT3)	MU-INF (LB-SEC/FT2)	RE/FT (FT-1)	HREF-FR (R= .0400FT)	STFR (R= .0400FT)	SWITCH POSITION
95.9	.045	2.010	3830	3.943E-05	7.724E-08	1.955E 06	2.308E-02	1.923E-02	3

TC NO	TW	DTWDT	QDOT	H(TO)	H(TO)/HREF	H(.9TO)	H(.9TO)/HREF	X/L
TOP CENTERLINE								
400	542.6	5.261	.713	9.194E-04	.0398	1.108E-03	.0480	.1582
401	543.5	6.581	.855	1.106E-03	.0479	1.333E-03	.0577	.1608
402	545.3	10.005	1.261	1.633E-03	.0707	1.968E-03	.0853	.1635
403	548.2	12.075	1.478	1.922E-03	.0833	2.319E-03	.1005	.1664
404	549.2	13.708	1.672	2.175E-03	.0942	2.625E-03	.1137	.1691
405	550.4	14.445	1.763	2.297E-03	.0995	2.773E-03	.1201	.1720
406	549.8	15.035	1.834	2.389E-03	.1035	2.883E-03	.1249	.1748
407	549.4	13.891	1.887	2.351E-03	.1019	2.838E-03	.1230	.1769
408	548.1	12.453	1.837	2.387E-03	.1034	2.880E-03	.1248	.1800
409	545.2	10.253	1.483	1.919E-03	.0831	2.314E-03	.1002	.1831
410	545.7	8.919	1.290	1.671E-03	.0724	2.015E-03	.0873	.1863
411	543.5	7.127	1.075	1.388E-03	.0601	1.672E-03	.0724	.1894
412	542.5	5.985	.816	1.053E-03	.0456	1.268E-03	.0549	.1931
413	540.8	4.746	.638	8.211E-04	.0356	9.888E-04	.0428	.1972
414	538.9	2.486	.334	4.287E-04	.0186	5.160E-04	.0224	.2049
415	536.3	1.160	.115	1.487E-04	.0064	1.764E-04	.0076	.2250
416	534.8	.579	.068	8.658E-05	.0038	1.041E-04	.0045	.2500
NOSE TC (Z = 338)								X/L 2Y/B
145	580.4	62.057	8.510	1.154E-02	.5000	1.405E-02	.6088	.0008 .5039
146	581.2	64.639	8.868	1.204E-02	.5215	1.466E-02	.6351	.0023 .5082
147	569.2	56.284	7.676	1.025E-02	.4442	1.244E-02	.5391	.0043 .5135
148	563.4	41.807	5.874	7.787E-03	.3374	9.435E-03	.4088	.0068 .5205
149	558.8	30.975	4.510	5.942E-03	.2574	7.191E-03	.3115	.0095 .5279
150	560.5	27.517	3.973	5.246E-03	.2273	6.351E-03	.2751	.0122 .5354
151	559.1	19.199	2.718	3.583E-03	.1552	4.336E-03	.1878	.0218 .5621
152	558.9	20.881	2.852	3.758E-03	.1628	4.547E-03	.1970	.0251 .5712
153	559.2	19.177	2.359	3.110E-03	.1347	3.764E-03	.1631	.0286 .5808
154	559.3	18.471	2.314	3.051E-03	.1322	3.693E-03	.1600	.0319 .5898
155	558.4	16.393	2.075	2.732E-03	.1184	3.306E-03	.1432	.0354 .5995
156	558.1	15.845	1.984	2.612E-03	.1132	3.160E-03	.1369	.0387 .6085
157	558.5	15.985	1.980	2.608E-03	.1130	3.156E-03	.1367	.0420 .6176
158	558.3	15.785	1.955	2.575E-03	.1115	3.115E-03	.1350	.0462 .6294
159	557.6	16.488	1.863	2.451E-03	.1062	2.964E-03	.1284	.0503 .6406

GROUP 53 CENTERLINE TIME 2.60

CH	TC	FIT LENGTH	DTDWT	UNCERTAINTY	CH	TC	FIT LENGTH	DTDWT	UNCERTAINTY
1	221	2.00	1.012	.0108	50	384	1.20	1.910	.0123
2	222	.80	2.885	.0085	51	385	1.20	1.620	.0173
3	223	.60	4.695	.0153	52	386	1.20	1.758	.0133
4	224	.40	9.725	.0070	53	387	1.20	1.643	.0106
5	225	.60	6.484	.0098	54	388	1.20	1.231	.0186
6	226	.40	12.345	.0063	55	389	2.00	.890	.0097
7	227	.60	7.434	.0415	56	390	2.00	.751	.0540
8	228	.40	11.008	.0057	57	391	2.00	.821	.0106
9	229	.40	8.178	.0210	58	392	1.20	1.142	.0132
10	232	2.00	.414	.0205	59	393	1.20	1.351	.0221
11	233	2.00	.485	.0233	60	394	1.20	1.444	.0097
12	236	2.00	.393	.0379	61	395	1.20	1.401	.0172
13	237	2.00	.434	.0176	62	396	1.20	1.474	.0146
14	238	1.20	1.595	.0147	63	397	1.20	1.543	.0147
15	239	1.20	1.688	.0185	64	398	1.20	1.796	.0152
16	240	1.20	1.366	.0111	65	399	.80	2.809	.0150
17	241	1.20	1.672	.0196	66	400	.60	5.261	.0171
18	242	.80	2.352	.0133	67	401	.60	6.581	.0077
19	243	1.20	1.703	.0133	68	402	.40	10.065	.0858
20	244	1.20	1.363	.0178	69	403	.40	12.075	.0343
21	245	1.20	1.331	.0120	70	404	.40	13.708	.0076
22	246	1.20	1.453	.0118	71	405	.40	14.445	.0130
23	247	1.20	1.122	.0247	72	406	.40	15.035	.0073
24	248	1.20	1.447	.0170	73	407	.40	13.891	.0073
25	249	1.20	1.796	.0169	74	408	.40	12.453	.0070
26	250	1.20	1.868	.0125	75	409	.40	10.253	.0079
27	251	1.20	1.737	.0142	76	410	.40	8.919	.0126
28	252	1.20	1.611	.0118	77	411	.60	7.127	.0069
29	253	1.20	1.724	.0086	78	412	.60	5.985	.0048
30	254	1.20	1.398	.0146	79	413	.60	4.746	.0604
31	257	1.20	1.464	.0124	80	414	.80	2.486	.0118
32	258	1.20	1.474	.0116	81	415	1.20	1.160	.0229
33	367	.20	89.546	.0043	82	416	2.00	.579	.0131
34	368	.20	70.471	.0017	83	145	.20	62.057	.0023
35	369	.20	46.893	.0023	84	146	.20	64.639	.0024
36	370	.20	34.255	.0038	85	147	.20	56.284	.0028
37	371	.30	28.826	.0028	86	148	.20	41.807	.0068
38	372	.30	20.234	.0068	87	149	.30	30.975	.0076
39	373	.40	13.669	.0080	88	150	.30	27.517	.0074
40	374	.40	10.765	.0118	89	151	.30	19.199	.0102
41	375	.40	8.742	.0049	90	152	.30	20.881	.0144
42	376	.60	7.768	.0065	91	153	.30	19.177	.0117
43	377	.60	7.287	.0116	92	154	.30	18.471	.0150
44	378	.60	6.336	.0094	93	155	.30	16.393	.0066
45	379	.80	3.932	.0081	94	156	.40	15.845	.0059
46	380	.80	3.179	.0112	95	157	.40	15.985	.0109
47	381	.80	2.981	.0208	96	158	.40	15.785	.0096
48	382	.80	2.415	.0110	97	159	.30	16.488	.0182
49	383	.80	2.255	.0143	98	0	-0	0	0
54		.050							

HIT ON LOOP 51

DATE 5/12/75

AEDC(ARO,INC.) ARNOLD AFS, TENNESSEE
VON KARMAN GAS DYNAMICS FACILITY
50 INCH HYPERSONIC TUNNEL B
V41B-87A

GROUP	TEST CONDITION	MODEL	MACH NO	PO,PSIA	TO,DEG R	ALPHA-MODEL	ALPHA-SECTOR	ALPHA-PREBEND	ROLL MODEL	YAW
54	20	140 B	7.98	430.5	1315	25.05	4.95	30.00	179.98	-.0

T-INF (DEG R)	P-INF (PSIA)	Q-INF (PSIA)	V-INF (FT/SEC)	RHO-INF (SLUGS/FT3)	MU-INF (LB-SEC/FT2)	RE/FT (FT-1)	HREF-FR (R= .0400FT)	STFR (R= .0400FT)	SWITCH POSITION
95.8	.045	1.998	3826	3.927E-05	7.710E-08	1.949E 06	2.301E-02	1.926E-02	1

TC NO	TW	DTWDT	QDOT	H(TO)	H(TO)/HREF	H(.9TO)	H(.9TO)/HREF
1	540.6	6.841	.964	1.167E-03	.0507	1.406E-03	.0611
2	540.2	5.737	.774	9.978E-04	.0434	1.202E-03	.0522
3	538.5	4.633	.637	8.195E-04	.0356	9.865E-04	.0429
4	538.5	4.620	.629	8.092E-04	.0352	9.742E-04	.0423
5	538.5	4.056	.541	6.964E-04	.0303	8.383E-04	.0364
6	539.1	3.694	.490	6.306E-04	.0274	7.593E-04	.0330
7	538.1	2.694	.383	5.058E-04	.0220	6.088E-04	.0265
8	538.0	3.197	.482	6.202E-04	.0270	7.465E-04	.0324
9	538.1	2.563	.373	4.796E-04	.0208	5.773E-04	.0251
10	537.9	2.309	.330	4.239E-04	.0184	5.102E-04	.0222
11	538.6	2.547	.344	4.433E-04	.0193	5.337E-04	.0232
12	539.1	1.985	.274	3.528E-04	.0153	4.247E-04	.0185
13	538.9	1.305	.192	2.469E-04	.0107	2.972E-04	.0129
14	538.7	1.692	.231	2.974E-04	.0129	3.580E-04	.0156
15	539.0	1.628	.217	2.797E-04	.0122	3.368E-04	.0146
16	538.8	1.053	.142	1.834E-04	.0080	2.208E-04	.0096
17	539.4	.842	.114	1.467E-04	.0064	1.766E-04	.0077
18	540.0	.734	.103	1.324E-04	.0058	1.594E-04	.0069
19	540.9	.589	.082	1.064E-04	.0046	1.282E-04	.0056
22	537.5	4.964	.698	8.851E-04	.0385	1.065E-03	.0463
23	537.3	4.595	.641	8.242E-04	.0358	9.919E-04	.0431
24	537.6	4.467	.604	7.761E-04	.0337	9.340E-04	.0406
25	537.0	3.907	.514	6.600E-04	.0287	7.942E-04	.0345
26	537.1	3.674	.481	6.186E-04	.0269	7.444E-04	.0324
27	537.7	4.604	.641	8.237E-04	.0358	9.914E-04	.0431
28	537.4	4.245	.610	7.835E-04	.0341	9.429E-04	.0410
29	536.9	3.692	.532	6.829E-04	.0297	8.218E-04	.0357
30	536.1	3.607	.518	6.643E-04	.0289	7.992E-04	.0347
31	536.5	3.600	.502	6.449E-04	.0280	7.759E-04	.0337
32	536.7	3.755	.497	6.382E-04	.0277	7.680E-04	.0334
33	536.8	3.501	.499	6.415E-04	.0279	7.719E-04	.0336
34	537.4	4.001	.541	6.949E-04	.0302	8.362E-04	.0363
35	538.2	4.206	.595	7.653E-04	.0333	9.213E-04	.0400
36	540.3	6.626	.962	1.241E-03	.0539	1.495E-03	.0650
37	539.3	5.987	.842	1.085E-03	.0471	1.306E-03	.0568
38	542.2	9.313	1.299	1.680E-03	.0730	2.024E-03	.0880
39	542.6	8.121	1.188	1.537E-03	.0668	1.852E-03	.0805
41	538.7	5.932	.794	1.022E-03	.0444	1.231E-03	.0535
42	541.8	7.642	1.045	1.351E-03	.0587	1.628E-03	.0707
43	537.1	3.295	.427	5.491E-04	.0239	6.608E-04	.0287

FUSELAGE VENT NO. 1

X/L	Z,FULL SCALE(IN)
.4434	376.6300
.4264	371.6300
.4303	371.6300
.4342	371.6300
.4380	371.6300
.4434	369.1300
.4226	366.6300
.4264	366.6300
.4303	366.6300
.4342	366.6300
.4380	366.6300
.4496	366.6300
.4187	357.1300
.4396	361.6300
.4434	361.6300
.4396	355.6300
.4434	355.6300
.4396	351.6300
.4291	332.6300

CARGO BAY VENT NO. 1

X/L	Z,FULL SCALE(IN)
.3974	397.6300
.4013	397.6300
.4052	397.6300
.4090	397.6300
.4129	397.6300
.3936	392.6300
.3974	392.6300
.4013	392.6300
.4052	392.6300
.4090	392.6300
.4129	392.6300
.4090	386.1300
.4129	387.6300
.3897	383.1300
.4090	378.6300
.4129	382.1300
.4129	377.1300
.4001	373.6300

PROTUBERANCES

X/L	Z,FULL SCALE(IN)
.3546	379.0500
.3604	379.0500
.3450	374.0500

DATE 5/12/75

AEDC(ARO,INC.) ARNOLD AFS, TENNESSEE
VON KARMAN GAS DYNAMICS FACILITY
50 INCH HYPERSONIC TUNNEL B
V41B-87A

GROUP	TEST CONDITION	MODEL	MACH NO	PO,PSIA	TO,DEG R	ALPHA-MODEL	ALPHA-SECTOR	ALPHA-PREBEND	ROLL MODEL	YAW
54	20	140 B	7.98	430.5	1315	25.05	4.95	30.00	179.98	-.0

T-INF (DEG R)	P-INF (PSIA)	Q-INF (PSIA)	V-INF (FT/SEC)	RHO-INF (SLUGS/FT3)	MU-INF (LB-SEC/FT2)	RE/FT (FT-1)	HREF-FR (R= .0400FT)	STFR (R= .0400FT)	SWITCH POSITION
95.8	.045	1.998	3826	3.927E-05	7.710E-08	1.949E 06	2.301E-02	1.926E-02	1

IC NO	TW	DTWDT	QDOT	H(TO)	H(TO)/HREF	H(.9TO)	H(.9TO)/HREF
44	539.5	6.167	.840	1.082E-03	.0470	1.303E-03	.0566
45	542.8	7.765	1.076	1.393E-03	.0606	1.679E-03	.0730
46	540.7	6.692	.936	1.208E-03	.0525	1.455E-03	.0632
47	538.7	4.972	.661	8.512E-04	.0370	1.025E-03	.0445
48	540.5	5.356	.734	9.478E-04	.0412	1.142E-03	.0496
49	540.9	8.107	1.115	1.440E-03	.0626	1.735E-03	.0754
50	543.2	7.934	1.104	1.429E-03	.0621	1.723E-03	.0749
51	545.3	9.739	1.325	1.721E-03	.0748	2.076E-03	.0902
52	543.3	7.597	1.034	1.339E-03	.0582	1.615E-03	.0702
53	540.9	6.590	.963	1.243E-03	.0540	1.498E-03	.0651
54	534.9	2.223	.317	4.060E-04	.0176	4.883E-04	.0212
55	542.4	6.421	.919	1.188E-03	.0516	1.432E-03	.0622
56	534.9	1.625	.209	2.679E-04	.0116	3.222E-04	.0140
57	535.0	1.234	.151	1.935E-04	.0084	2.327E-04	.0101
58	536.7	2.352	.310	3.984E-04	.0173	4.794E-04	.0208
59	539.2	3.923	.516	6.654E-04	.0289	8.011E-04	.0348
60	538.5	3.331	.464	5.969E-04	.0259	7.186E-04	.0312
61	536.8	2.137	.270	3.474E-04	.0151	4.181E-04	.0182
62	535.1	1.187	.145	1.862E-04	.0081	2.240E-04	.0097
63	535.5	1.815	.237	3.037E-04	.0132	3.653E-04	.0159
64	529.7	~~.017~~	~~.002~~	~~2.651E-06~~	~~.0001~~	~~3.064E-06~~	~~.0001~~
65	535.4	2.182	.296	3.800E-04	.0165	4.571E-04	.0199
66	535.2	1.460	.194	2.359E-04	.0103	2.837E-04	.0123
67	535.9	1.779	.250	3.204E-04	.0139	3.854E-04	.0168
68	538.4	2.930	.371	4.776E-04	.0208	5.749E-04	.0250

PROTUBERANCES

X/L	Z,FULL SCALE(IN)
.3508	374.0500
.3566	374.0500
.3604	374.0500
.3392	366.5500
.3566	366.5500
.3392	360.7000
.3566	360.7000
.3604	360.7000
.3392	353.2000
.3450	353.2000
.3508	353.2000
.3566	353.2000

SUBLIMATOR VENT NO. 1

X/L	Z,FULL SCALE(IN)
.3031	371.1300
.3074	369.1300
.3089	363.6300
.3074	358.1300
.3031	356.1300
.2988	358.1300
.2973	363.6300
.2988	369.1300
.3031	376.1300
.3089	378.6300
.3101	372.6300
.3157	370.3800
.3128	363.6300

DATE 5/12/75

AEDC(ARO,INC.) ARNOLD AFS, TENNESSEE
VON KARMAN GAS DYNAMICS FACILITY
50 INCH HYPERSONIC TUNNEL B
V418-87A

GROUP	TEST CONDITION	MODEL	MACH NO	PO,PSIA	TO,DEG R	ALPHA-MODEL	ALPHA-SECTOR	ALPHA-PREBEND	ROLL MODEL	YAW
54	20	140 B	7.98	430.5	1315	25.05	4.95	30.00	179.98	-.0

T-INF (DEG R)	P-INF (PSIA)	Q-INF (PSIA)	V-INF (FT/SEC)	RHO-INF (SLUGS/FT3)	MU-INF (LB-SEC/FT2)	RE/FT (FT-1)	HREF-FR (R= .0400FT)	STFR (R= .0400FT)	SWITCH POSITION
95.8	.045	1.998	3826	3.927E-05	7.710E-08	1.949E 06	2.301E-02	1.926E-02	1

IC	NC	TW	DTWDT	QDOT	H(TO)	H(TO)/HREF	H(.9TO)	H(.9TO)/HREF	X/L	Z,FULL SCALE(IN)
									FUSELAGE VENT PANEL NO. 7	
69		534.9	2.312	.322	4.129E-04	.0179	4.966E-04	.0216	.2487	356.4000
70		534.8	2.231	.279	3.578E-04	.0155	4.303E-04	.0187	.2591	356.4000
71		534.9	2.987	.426	5.199E-04	.0226	6.253E-04	.0272	.2419	351.4000
72		535.1	2.001	.293	3.633E-04	.0158	4.369E-04	.0190	.2487	351.4000
73		535.1	2.207	.286	3.665E-04	.0159	4.409E-04	.0192	.2552	351.4000
74		535.5	2.332	.282	3.622E-04	.0157	4.357E-04	.0189	.2610	351.4000
75		535.3	2.215	.331	3.858E-04	.0168	4.640E-04	.0202	.2419	342.8000
77		536.0	1.662	.235	3.022E-04	.0131	3.635E-04	.0158	.2552	342.8000
78		536.2	1.814	.250	3.205E-04	.0139	3.855E-04	.0168	.2610	342.8000
79		536.9	1.954	.250	3.211E-04	.0140	3.864E-04	.0168	.2419	334.2000
80		535.9	1.731	.236	3.027E-04	.0132	3.642E-04	.0158	.2487	334.2000
81		536.5	2.595	.382	4.649E-04	.0202	5.593E-04	.0243	.2552	334.2000
									ACCESS HATCH WINDOW	
83		532.7	2.981	.398	5.083E-04	.0221	6.110E-04	.0266	.2131	398.0000
84		534.1	3.151	.415	5.314E-04	.0231	6.390E-04	.0278	.2131	388.0000
85		533.4	2.731	.372	4.756E-04	.0207	5.718E-04	.0249	.2131	383.0000
87		531.4	2.039	.291	3.712E-04	.0161	4.461E-04	.0194	.2222	395.8000
88		533.4	2.898	.405	5.179E-04	.0225	6.227E-04	.0271	.2193	386.5000
89		534.3	2.906	.427	5.467E-04	.0238	6.575E-04	.0286	.2177	381.8000
90		533.2	2.743	.374	4.775E-04	.0208	5.741E-04	.0250	.2297	389.5000
91		533.8	2.948	.404	5.171E-04	.0225	6.217E-04	.0270	.2243	382.5000
92		534.3	2.623	.370	4.740E-04	.0206	5.700E-04	.0248	.2214	378.7000
93		534.0	2.574	.329	4.208E-04	.0183	5.060E-04	.0220	.2343	374.0000
94		534.4	2.520	.328	4.195E-04	.0182	5.044E-04	.0219	.2274	375.5000
95		534.7	2.885	.410	5.249E-04	.0228	6.313E-04	.0274	.2239	373.3000
96		534.2	2.991	.369	4.977E-04	.0216	5.985E-04	.0260	.2363	368.0000
97		534.9	3.138	.401	5.138E-04	.0223	6.179E-04	.0269	.2286	368.0000
98		534.5	2.888	.405	5.188E-04	.0225	6.239E-04	.0271	.2247	368.0000
100		535.0	3.063	.434	5.559E-04	.0242	6.686E-04	.0291	.2274	360.5000
102		534.9	2.926	.413	5.294E-04	.0230	6.367E-04	.0277	.2081	354.3000
103		534.4	3.181	.418	5.350E-04	.0233	6.433E-04	.0280	.2023	362.7000
105		533.5	3.262	.408	5.216E-04	.0227	6.270E-04	.0273	.2050	378.7000
106		533.3	3.363	.431	5.510E-04	.0239	6.624E-04	.0288	.2050	386.2000

GROUP 54 CENTERLINE TIME 2.50

CH	TC	FIT LENGTH	DTDWT	UNCERTAINTY	CH	TC	FIT LENGTH	DTDWT	UNCERTAINTY
1	1	.60	6.841	.0060	50	53	.60	6.590	.0115
2	2	.60	5.737	.0092	51	54	.80	2.223	.0220
3	3	.60	4.633	.0067	52	55	.60	6.421	.0097
4	4	.60	4.620	.0072	53	56	1.20	1.625	.0111
5	5	.60	4.056	.0321	54	57	1.20	1.238	.0188
6	6	.80	3.694	.0103	55	58	.80	2.352	.0170
7	7	.80	2.694	.0547	56	59	.80	3.923	.0449
8	8	.80	3.197	.0117	57	60	.80	3.331	.0096
9	9	.80	2.563	.0267	58	61	.80	2.137	.0128
10	10	.80	2.309	.0151	59	62	1.20	1.187	.0210
11	11	.80	2.547	.0166	60	63	1.20	1.815	.0094
12	12	1.20	1.946	.0168	61	64	2.00	-.017	-.6266
13	13	1.20	1.305	.0501	62	65	.80	2.182	.0148
14	14	1.20	1.692	.0147	63	66	1.20	1.460	.0111
15	15	1.20	1.628	.0220	64	67	1.20	1.779	.0133
16	16	1.20	1.053	.0151	65	68	.80	2.930	.0068
17	17	2.00	.842	.0238	66	69	.80	2.312	.0177
18	18	2.00	.734	.0099	67	70	.80	2.281	.0134
19	19	2.00	.589	.0248	68	71	.80	2.987	.0720
20	22	.60	4.964	.0086	69	72	1.20	2.001	.0148
21	23	.60	4.595	.0084	70	73	.80	2.207	.0197
22	24	.60	4.467	.0113	71	74	.80	2.332	.0246
23	25	.80	3.907	.0150	72	75	.80	2.215	.0154
24	26	.80	3.674	.0108	73	77	1.20	1.662	.0131
25	27	.60	4.604	.0146	74	78	1.20	1.819	.0150
26	28	.60	4.245	.0152	75	79	1.20	1.954	.0147
27	29	.80	3.692	.0112	76	80	1.20	1.731	.0140
28	30	.80	3.607	.0073	77	81	.80	2.595	.0140
29	31	.80	3.600	.0088	78	83	.80	2.981	.0112
30	32	.80	3.755	.0084	79	84	.80	3.151	.0633
31	33	.80	3.501	.0096	80	85	.80	2.731	.0116
32	34	.60	4.001	.0073	81	87	.80	2.039	.0161
33	35	.60	4.236	.0068	82	88	.80	2.898	.0112
34	36	.60	6.626	.0063	83	89	.80	2.906	.0125
35	37	.60	5.937	.0080	84	90	.80	2.743	.0105
36	38	.40	9.313	.0093	85	91	.80	2.948	.0082
37	39	.60	8.121	.0034	86	92	.80	2.623	.0118
38	41	.60	5.932	.0135	87	93	.80	2.574	.0353
39	42	.60	7.642	.0067	88	94	.80	2.520	.0278
40	43	.80	3.295	.0142	89	95	.80	2.885	.0208
41	44	.60	6.167	.0064	90	96	.80	2.991	.0986
42	45	.60	7.765	.0077	91	97	.80	3.138	.0172
43	46	.60	6.692	.0100	92	98	.80	2.888	.0287
44	47	.60	4.972	.0102	93	100	.80	3.063	.0125
45	48	.60	5.356	.0069	94	102	.80	2.926	.0203
46	49	.40	8.107	.0123	95	103	.80	3.181	.0123
47	50	.60	7.934	.0129	96	105	.80	3.262	.0100
48	51	.40	9.739	.0075	97	106	.80	3.363	.0106
49	52	.60	7.507	.0081	98	0	-0	0	0
55		.050							

BIT ON LOOP 51

DATE 5/12/75

AEDC(APO,INC.) ARNOLD AFS, TENNESSEE
VON KARMAN GAS DYNAMICS FACILITY
50 INCH HYPERSONIC TUNNEL B
V41B-B7A

GROUP	TEST CONDITION	MODEL	MACH NO	PO,PSIA	TO,DEG R	ALPHA-MODEL	ALPHA-SECTOR	ALPHA-PREBEND	ROLL MODEL	YAW
55	20	140 B	7.98	430.0	1314	25.05	4.95	30.00	179.94	-.0

T-INF (DEG R)	P-INF (PSIA)	Q-INF (PSIA)	V-INF (FT/SEC)	RHO-INF (SLUGS/FT3)	MU-INF (LB-SEC/FT2)	RE/FT (FT-1)	HREF-FR (R= .0400FT)	SIFR (R= .0400FT)	SWITCH POSITION
95.6	.045	1.996	3824	3.928E-05	7.699E-08	1.951E 06	2.299E-02	1.926E-02	2

TC NO	TW	DTWDT	QDOT	H(TO)	H(TO)/HREF	H(.9TO)	H(.9TO)/HREF		
								ACCESS HATCH WINDOW	
								X/L	Z*FULL SCALE(IN)
107	532.1	2.893	.414	5.301E-04	.0231	6.373E-04	.0277	.2050	396.2000
								FUSELAGE VENT PANEL NO. 3 AND 1	
								X/L	Z,FULL SCALE(IN)
108	534.2	5.304	.561	7.204E-04	.0313	8.664E-04	.0377	.1244	377.5000
109	532.9	4.483	.554	7.099E-04	.0309	8.536E-04	.0371	.1302	377.5000
110	532.7	4.399	.558	7.140E-04	.0311	8.584E-04	.0373	.1360	377.5000
111	533.2	4.397	.530	6.791E-04	.0295	8.166E-04	.0355	.1418	377.5000
112	533.7	4.666	.554	7.105E-04	.0309	8.544E-04	.0372	.1476	377.5000
113	533.9	4.739	.544	6.976E-04	.0303	8.390E-04	.0365	.1215	273.5000
114	533.4	4.627	.556	7.123E-04	.0310	8.565E-04	.0373	.1273	273.5000
115	533.4	4.207	.522	6.694E-04	.0291	8.049E-04	.0350	.1331	273.5000
116	533.2	4.407	.541	6.932E-04	.0302	8.336E-04	.0363	.1389	273.5000
117	534.4	4.653	.536	6.882E-04	.0299	8.278E-04	.0360	.1447	273.5000
118	533.9	3.904	.541	6.933E-04	.0302	8.338E-04	.0363	.1409	366.0000
119	534.5	4.429	.574	7.363E-04	.0320	8.856E-04	.0385	.1442	366.0000
120	535.0	4.638	.580	7.452E-04	.0324	8.964E-04	.0390	.1215	359.5000
121	534.5	4.080	.501	6.434E-04	.0280	7.738E-04	.0337	.1303	359.5000
122	534.9	4.313	.538	6.905E-04	.0300	8.306E-04	.0361	.1337	359.5000
								LOWER RCS NOZZLES	
								X/L	Z,FULL SCALE(IN)
124	533.6	3.379	.302	3.868E-04	.0168	4.651E-04	.0202	.0950	400.0000
125	532.7	3.385	.369	4.721E-04	.0205	5.676E-04	.0247	.0988	400.0000
126	532.8	3.262	.447	5.724E-04	.0249	6.882E-04	.0299	.1027	400.0000
127	533.0	3.100	.418	5.353E-04	.0233	6.437E-04	.0280	.0911	395.0000
128	532.5	3.489	.420	5.375E-04	.0234	6.462E-04	.0281	.0950	395.0000
129	533.0	4.069	.478	6.119E-04	.0266	7.357E-04	.0320	.0988	395.0000
130	533.9	3.752	.449	5.759E-04	.0251	6.926E-04	.0301	.0810	390.0000
131	532.7	3.473	.513	6.569E-04	.0286	7.898E-04	.0344	.0857	390.0000
132	533.9	5.377	.627	8.038E-04	.0350	9.666E-04	.0420	.0963	390.0000
133	532.7	3.638	.442	5.656E-04	.0246	6.860E-04	.0296	.0857	383.8000
134	532.1	4.463	.597	7.644E-04	.0333	9.189E-04	.0400	.0872	377.3000
135	533.8	5.774	.694	8.895E-04	.0387	1.070E-03	.0465	.0903	374.5500
136	534.5	5.995	.667	8.560E-04	.0372	1.030E-03	.0448	.0960	374.5500
137	533.8	5.605	.733	9.405E-04	.0409	1.131E-03	.0492	.0872	370.5500
138	534.5	6.093	.702	9.014E-04	.0392	1.084E-03	.0472	.0928	370.5500
139	534.9	5.643	.721	9.259E-04	.0403	1.114E-03	.0484	.0816	366.0500
140	535.2	5.761	.734	9.426E-04	.0410	1.134E-03	.0493	.0934	362.4000
141	534.7	5.273	.697	8.952E-04	.0389	1.077E-03	.0468	.0973	362.4000
142	534.6	4.333	.472	6.064E-04	.0264	7.294E-04	.0317	.0833	355.2000
143	535.9	6.460	.650	8.354E-04	.0363	1.005E-03	.0437	.0919	355.2000
144	536.9	7.201	.950	1.223E-03	.0532	1.472E-03	.0640	.0949	349.0000

DATE 5/12/75

AEDC(ARO,INC.) ARNOLD AFS, TENNESSEE
VON KARMAN GAS DYNAMICS FACILITY
50 INCH HYPERSONIC TUNNEL H
V418-87A

GROUP	TEST CONDITION	MODEL	MACH NO	PO,PSIA	TO,DEG R	ALPHA-MODEL	ALPHA-SECTOR	ALPHA-PREBEND	ROLL MODEL	YAW
55	20	140 H	7.98	430.0	1314	25.05	4.95	30.00	179.94	-.0

T-INF (DEG R)	P-INF (PSIA)	Q-INF (PSIA)	V-INF (FT/SEC)	RHO-INF (SLUGS/FT3)	MU-INF (LB-SEC/FT2)	RE/FT (FT-1)	HREF-FR (R= .0400FT)	STFR (R= .0400FT)	SWITCH POSITION
95.6	.045	1.996	3824	3.928E-05	7.699E-08	1.951E 06	2.299E-02	1.926E-02	2

TC NO	TW	DTWDT	QDOT	H(TO)	H(TO)/HREF	H(.9TO)	H(.9TO)/HREF
							UPPER RCS NOZZLES X/L 2Y/B
161	534.2	2.340	.277	3.553E-04	.0155	4.273E-04	.0186 .0619 -.0160
162	534.5	2.222	.210	2.700E-04	.0117	3.248E-04	.0141 .0709 -.0160
163	533.6	1.618	.199	2.545E-04	.0111	3.064E-04	.0133 .0807 -.0160
164	533.3	1.267	.165	2.116E-04	.0092	2.545E-04	.0111 .0943 -.0160
165	533.5	1.026	.129	1.655E-04	.0072	1.990E-04	.0087 .0978 -.0160
166	533.2	.766	.098	1.260E-04	.0055	1.515E-04	.0066 .1013 -.0160
167	533.6	2.333	.316	4.047E-04	.0176	4.867E-04	.0212 .0619 -.0320
168	533.9	2.407	.253	3.239E-04	.0141	3.896E-04	.0169 .0709 -.0320
169	533.1	1.769	.215	2.752E-04	.0120	3.308E-04	.0144 .0807 -.0320
170	532.7	1.359	.170	2.175E-04	.0095	2.615E-04	.0114 .0943 -.0320
171	532.7	1.460	.176	2.253E-04	.0098	2.709E-04	.0118 .0978 -.0320
172	532.2	1.133	.148	1.889E-04	.0082	2.271E-04	.0099 .1013 -.0320
173	532.5	1.661	.222	2.838E-04	.0123	3.411E-04	.0148 .0807 -.0480
174	532.1	1.315	.150	1.914E-04	.0083	2.301E-04	.0100 .0943 -.0480
175	532.0	1.093	.157	2.003E-04	.0087	2.407E-04	.0105 .0978 -.0480
176	532.3	.905	.123	1.576E-04	.0069	1.895E-04	.0082 .1013 -.0480
							CANOPY
177	538.8	5.255	.725	9.352E-04	.0407	1.126E-03	.0490
178	541.1	7.571	1.493	1.933E-03	.0841	2.329E-03	.1013
179	546.3	14.131	2.978	3.882E-03	.1689	4.684E-03	.2037
180	535.6	2.460	.321	4.127E-04	.0180	4.965E-04	.0216
181	537.4	4.077	.554	7.144E-04	.0311	8.599E-04	.0374
182	540.1	7.897	1.129	1.459E-03	.0635	1.757E-03	.0764
183	532.5	.932	.117	1.495E-04	.0065	1.798E-04	.0078
184	532.7	1.179	.161	2.062E-04	.0090	2.480E-04	.0108
185	534.8	2.111	.254	3.257E-04	.0142	3.918E-04	.0170
186	537.2	3.974	.499	6.434E-04	.0280	7.744E-04	.0337
187	540.3	7.669	1.024	1.324E-03	.0576	1.595E-03	.0694
188	541.2	9.864	2.303	2.982E-03	.1297	3.593E-03	.1563
189	534.4	1.802	.257	3.295E-04	.0143	3.963E-04	.0172
190	536.5	3.638	.524	6.742E-04	.0293	8.113E-04	.0353
191	539.1	7.020	1.075	1.388E-03	.0604	1.671E-03	.0727

DATE 5/12/75

AEDC(ARO,INC.) ARNOLD AFS, TENNESSEE
VON KARMAN GAS DYNAMICS FACILITY
50 INCH HYPERSONIC TUNNEL B
V41B-87A

GROUP	TEST CONDITION	MODEL	MACH NO	PO,PSIA	TO,DEG R	ALPHA-MODEL	ALPHA-SECTOR	ALPHA-PREBEND	ROLL MODEL	YAW
55	20	140 B	7.98	430.0	1314	25.05	4.95	30.00	179.94	-.0

T-INF (DEG R)	P-INF (PSIA)	Q-INF (PSIA)	V-INF (FT/SEC)	RHO-INF (SLUGS/FT3)	MU-INF (LB-SEC/FT2)	RE/FT (FT-1)	HREF-FR (R= .0400FT)	STFR (R= .0400FT)	SWITCH POSITION
95.6	.045	1.996	3824	3.928E-05	7.699E-08	1.951E 06	2.299E-02	1.926E-02	2

TC NO	TW	DTWDT	QDOT	H(TO)	H(TO)/HREF	H(.9TO)	H(.9TO)/HREF
						CANOPY	
192	532.3	1.130	.159	2.039E-04	.0089	2.452E-04	.0107
193	539.5	9.652	1.863	2.407E-03	.1047	2.899E-03	.1261
194	532.5	2.215	.246	3.658E-04	.0159	4.397E-04	.0191
195	537.9	5.788	.715	9.201E-04	.0400	1.107E-03	.0482
196	538.9	8.201	1.080	1.394E-03	.0606	1.678E-03	.0730
197	530.6	.899	.089	1.137E-04	.0049	1.366E-04	.0059
198	530.8	1.065	.123	1.578E-04	.0069	1.896E-04	.0082
199	531.0	1.860	.250	3.190E-04	.0139	3.834E-04	.0167
200	534.1	3.632	.518	6.639E-04	.0289	7.985E-04	.0347
201	538.6	9.266	1.311	1.691E-03	.0736	2.036E-03	.0886
202	538.6	7.919	1.003	1.294E-03	.0563	1.559E-03	.0678
203	530.7	1.300	.161	2.058E-04	.0090	2.473E-04	.0108
204	532.0	1.874	.291	3.723E-04	.0162	4.476E-04	.0195
205	536.4	6.486	1.012	1.302E-03	.0566	1.567E-03	.0682
206	529.8	.487	.064	8.225E-05	.0036	9.881E-05	.0043
207	537.2	6.732	.923	1.184E-03	.0506	1.400E-03	.0609
208	529.9	.754	.101	1.291E-04	.0056	1.552E-04	.0067
209	530.8	.912	.125	1.600E-04	.0070	1.923E-04	.0084
210	531.2	1.339	.179	2.282E-04	.0099	2.742E-04	.0119
211	530.2	.460	.056	7.121E-05	.0031	8.555E-05	.0037
212	529.9	.659	.089	1.131E-04	.0049	1.359E-04	.0059
213	530.0	.982	.130	1.659E-04	.0072	1.994E-04	.0087
214	530.9	1.570	.220	2.809E-04	.0122	3.375E-04	.0147
215	531.6	1.867	.265	3.387E-04	.0147	4.071E-04	.0177
216	534.7	4.629	.658	8.443E-04	.0367	1.016E-03	.0442
217	534.7	3.889	.554	7.116E-04	.0310	8.559E-04	.0372
218	529.6	1.075	.148	1.889E-04	.0082	2.269E-04	.0099
219	531.1	2.136	.299	3.824E-04	.0166	4.596E-04	.0200
220	531.3	2.261	.311	3.970E-04	.0173	4.771E-04	.0208

GROUP 55 CENTERLINE TIME 2.50

CH	TC	FIT LENGTH	DTDWT	UNCERTAINTY	CH	TC	FIT LENGTH	DTDWT	UNCERTAINTY
1	107	.80	2.893	.0142	50	173	1.20	1.661	.0104
2	108	.60	5.304	.0088	51	174	1.20	1.315	.0238
3	109	.60	4.483	.0091	52	175	1.20	1.093	.0230
4	110	.60	4.399	.0110	53	176	2.00	.905	.0100
5	111	.60	4.397	.0264	54	177	.60	5.255	.0118
6	112	.60	4.666	.0178	55	178	.60	7.571	.0077
7	113	.60	4.739	.0450	56	179	.40	14.131	.0377
8	114	.60	4.627	.0104	57	180	.80	2.460	.0167
9	115	.60	4.207	.0230	58	181	.60	4.077	.0101
10	116	.60	4.407	.0128	59	182	.60	7.897	.0095
11	117	.60	4.653	.0130	60	183	2.00	.932	.0097
12	118	.80	3.904	.0064	61	184	1.20	1.179	.0337
13	119	.60	4.429	.0144	62	185	.80	2.111	.0136
14	120	.60	4.638	.0126	63	186	.60	3.974	.0078
15	121	.60	4.050	.0162	64	187	.60	7.669	.0098
16	122	.60	4.313	.0111	65	188	.40	9.864	.0143
17	124	.80	3.379	.0260	66	189	1.20	1.802	.0145
18	125	.80	3.385	.0092	67	190	.80	3.638	.0091
19	126	.20	3.262	.0146	68	191	.60	7.020	.0845
20	127	.80	3.100	.0146	69	192	1.20	1.130	.0258
21	128	.80	3.455	.0094	70	193	.40	9.652	.0060
22	129	.60	4.069	.0115	71	194	.80	2.215	.0306
23	130	.80	3.752	.0181	72	195	.60	5.788	.0125
24	131	.80	3.473	.0136	73	196	.40	8.201	.0131
25	132	.60	5.377	.0085	74	197	2.00	.899	.0142
26	133	.80	3.638	.0103	75	198	1.20	1.065	.0276
27	134	.60	4.463	.0079	76	199	1.20	1.860	.0140
28	135	.60	5.774	.0406	77	200	.80	3.632	.0065
29	136	.60	5.995	.0036	78	201	.40	9.266	.0110
30	137	.60	5.605	.0106	79	202	.40	7.919	.0620
31	138	.60	6.093	.0058	80	203	1.20	1.300	.0124
32	139	.60	5.643	.0114	81	204	1.20	1.874	.0118
33	140	.60	5.761	.0117	82	205	.60	6.486	.0056
34	141	.60	5.273	.0066	83	206	2.00	.487	.0294
35	142	.60	4.333	.0115	84	207	.60	6.732	.0085
36	143	.60	6.460	.0089	85	208	2.00	.754	.0113
37	144	.60	7.201	.0066	86	209	2.00	.912	.0110
38	161	.80	2.340	.0192	87	210	1.20	1.339	.0433
39	162	.80	2.222	.0164	88	211	2.00	.460	.0177
40	163	1.20	1.618	.0226	89	212	2.00	.659	.0259
41	164	1.20	1.267	.0125	90	213	2.00	.982	.0635
42	165	1.20	1.026	.0172	91	214	1.20	1.570	.0248
43	166	2.00	.766	.0431	92	215	1.20	1.867	.0331
44	167	.80	2.333	.0139	93	216	.60	4.629	.0091
45	168	.80	2.407	.0103	94	217	.80	3.889	.0158
46	169	1.20	1.769	.0116	95	218	1.20	1.075	.0297
47	170	1.20	1.355	.0288	96	219	.80	2.130	.0212
48	171	1.20	1.460	.0124	97	220	.80	2.261	.0156
49	172	1.20	1.133	.0166	98	0	-0	0	0

56 .050

all CN LOOP 52

DATE 5/12/75

AEDC(ARO,INC.) ARNOLD AFS, TENNESSEE
VON KARMAN GAS DYNAMICS FACILTTY
50 INCH HYPERSONIC TUNNEL B
V41B-B7A

GROUP	TEST CONDITION	MODEL	MACH NO	PO,PSIA	TO,DEG R	ALPHA-MODEL	ALPHA-SECTOR	ALPHA-PREBEND	ROLL MODEL	YAW
56	20	140 B	7.98	430.4	1312	25.08	4.92	30.00	179.94	-.0

T-INF (DEG R)	P-INF (PSIA)	Q-INF (PSIA)	V-INF (FT/SEC)	RHO-INF (SLUGS/FT3)	MU-INF (LB-SEC/FT2)	RE/FT (FT-1)	HREF-FR (R= .0400FT)	STFR (R= .0400FT)	SWITCH POSITION
95.5	.045	1.997	3821	3.936E-05	7.689E-08	1.956E 06	2.299E-02	1.923E-02	3

TC NO	TW	DTWDT	QDOT	H(TO)	H(TO)/HREF	H(.9TO)	H(.9TO)/HREF	X/L	Z/B
								CANOPY	
221	528.3	.516	.062	7.952E-05	.0035	9.551E-05	.0042		
222	528.3	.890	.109	1.397E-04	.0061	1.677E-04	.0073		
223	531.1	3.686	.500	6.400E-04	.0278	7.693E-04	.0335		
								ESCAPE HATCH AND WINDOW	
224	536.0	3.610	.360	4.639E-04	.0202	5.583E-04	.0243	.1933	.0162
225	534.9	2.627	.315	4.049E-04	.0176	4.872E-04	.0212	.1972	.0162
226	537.2	6.601	.697	8.995E-04	.0391	1.083E-03	.0471	.1933	.0384
227	534.1	3.841	.563	7.233E-04	.0315	8.701E-04	.0378	.1972	.0384
228	535.8	6.976	.898	1.157E-03	.0503	1.393E-03	.0606	.1933	.0653
229	535.3	5.555	.715	9.207E-04	.0400	1.108E-03	.0482	.1972	.0653
232	531.1	.235	.032	4.088E-05	.0018	4.914E-05	.0021	.2567	.0235
233	531.3	.323	.049	6.275E-05	.0027	7.543E-05	.0033	.2606	.0235
236	530.2	.287	.042	5.363E-05	.0023	6.445E-05	.0028	.2567	.0491
237	530.6	.240	.041	5.215E-05	.0023	6.267E-05	.0027	.2606	.0491
								CARGO BAY HINGE NO. 1	
								X/L	Z,FULL SCALE(IN)
238	532.2	1.673	.224	2.872E-04	.0125	3.453E-04	.0150	.2879	420.0000
239	532.3	2.103	.241	3.611E-04	.0157	4.341E-04	.0189	.2917	420.0000
240	532.1	1.384	.198	2.534E-04	.0110	3.047E-04	.0133	.2840	415.0000
241	533.0	1.812	.255	3.270E-04	.0142	3.933E-04	.0171	.2879	415.0000
242	533.0	2.257	.322	4.139E-04	.0180	4.977E-04	.0216	.2917	415.0000
243	532.8	1.789	.219	2.808E-04	.0122	3.376E-04	.0147	.2801	405.0000
244	532.7	1.500	.175	2.251E-04	.0098	2.707E-04	.0118	.2840	405.0000
								CARGO BAY HINGE NO. 2	
								X/L	Z,FULL SCALE(IN)
245	533.0	1.663	.238	3.050E-04	.0133	3.668E-04	.0160	.3192	420.0000
246	533.4	1.878	.258	3.446E-04	.0150	4.144E-04	.0180	.3439	420.0000
247	533.0	1.454	.214	2.749E-04	.0120	3.305E-04	.0144	.3362	415.0000
248	533.5	1.776	.202	3.382E-04	.0146	4.043E-04	.0176	.3401	415.0000
249	534.1	2.245	.331	4.254E-04	.0185	5.117E-04	.0223	.3439	415.0000
250	534.2	2.259	.284	3.646E-04	.0159	4.386E-04	.0191	.3323	405.0000
251	534.2	2.335	.287	3.687E-04	.0160	4.435E-04	.0193	.3362	405.0000
								CARGO BAY HINGE NO. 3	
								X/L	Z,FULL SCALE(IN)
252	533.0	1.323	.192	2.464E-04	.0107	2.964E-04	.0129	.3923	420.0000
253	534.0	1.883	.273	3.513E-04	.0153	4.225E-04	.0184	.3961	420.0000
254	533.3	1.333	.202	2.599E-04	.0113	3.126E-04	.0136	.3884	415.0000
257	534.8	2.510	.339	4.359E-04	.0190	5.244E-04	.0228	.3845	405.0000
258	535.5	3.041	.415	5.339E-04	.0232	6.424E-04	.0279	.3884	405.0000

DATE 5/12/75

AEDC(ARO,INC.) ARNOLD AFS, TENNESSEE
VON KARMAN GAS DYNAMICS FACILITY
50 INCH HYPERSONIC TUNNEL B
V418-B7A

GROUP	TEST CONDITION	MODEL	MACH NO	PO,PSIA	TO,DEG R	ALPHA-MODEL	ALPHA-SECTOR	ALPHA-PREBEND	ROLL MODEL	YAW
56	2C	140 B	7.98	430.4	1312	25.08	4.92	30.00	179.94	-.0

T-INF (DEG R)	P-INF (PSIA)	Q-INF (PSIA)	V-INF (FT/SEC)	RHO-INF (SLUGS/FT3)	MU-INF (LB-SEC/FT2)	RE/FT (FT-1)	HREF-FR (R= .0400FT)	STFR (R= .0400FT)	SWITCH POSITION
95.5	.045	1.997	3821	3.936E-05	7.684E-08	1.956E 06	2.299E-02	1.923E-02	3

TC NO	TW	DTWDT	QDOT	H(TO)	H(TO)/HREF	H(.9TO)	H(.9TO)/HREF	TOP CENTERLINE X/L
367	591.3	83.655	10.111	1.403E-02	.6102	1.715E-02	.7460	0
368	567.9	63.222	8.157	1.096E-02	.4768	1.331E-02	.5788	.0008
369	554.3	39.693	4.692	6.193E-03	.2693	7.491E-03	.3257	.0019
370	547.8	28.935	3.553	4.650E-03	.2022	5.613E-03	.2441	.0037
371	545.0	24.310	2.391	3.118E-03	.1356	3.761E-03	.1636	.0058
372	539.7	16.354	2.110	2.732E-03	.1188	3.291E-03	.1431	.0087
373	538.2	10.507	1.378	1.781E-03	.0774	2.144E-03	.0932	.0118
374	537.0	8.411	1.102	1.423E-03	.0619	1.712E-03	.0745	.0151
375	536.2	6.934	.949	1.223E-03	.0532	1.472E-03	.0640	.0182
376	536.8	6.036	.796	1.027E-03	.0447	1.237E-03	.0538	.0215
377	537.1	5.372	.692	8.931E-04	.0388	1.075E-03	.0468	.0246
378	536.3	4.752	.555	7.150E-04	.0311	8.606E-04	.0374	.0278
379	535.5	2.791	.343	4.419E-04	.0192	5.318E-04	.0231	.0609
380	534.3	2.244	.231	2.965E-04	.0129	3.567E-04	.0155	.0646
381	534.1	2.082	.270	3.467E-04	.0151	4.171E-04	.0181	.0684
382	533.5	1.706	.223	2.868E-04	.0125	3.449E-04	.0150	.0721
383	533.2	1.549	.207	2.664E-04	.0116	3.204E-04	.0139	.0760
384	533.0	1.397	.195	2.497E-04	.0109	3.003E-04	.0131	.0796
385	533.0	1.147	.147	1.893E-04	.0082	2.276E-04	.0099	.0789
386	533.0	1.236	.146	1.877E-04	.0082	2.257E-04	.0098	.0982
387	533.0	1.221	.150	1.925E-04	.0084	2.315E-04	.0101	.1019
388	533.2	1.316	.125	1.607E-04	.0070	1.932E-04	.0084	.1160
389	532.5	1.093	.159	2.035E-04	.0088	2.447E-04	.0106	.1195
390	532.3	.907	.143	1.832E-04	.0080	2.203E-04	.0096	.1231
391	532.1	.768	.122	1.570E-04	.0068	1.887E-04	.0082	.1268
392	532.1	.693	.119	1.523E-04	.0066	1.831E-04	.0080	.1305
393	531.9	.639	.108	1.385E-04	.0060	1.665E-04	.0072	.1338
394	531.8	.589	.099	1.267E-04	.0055	1.523E-04	.0066	.1376
395	531.9	.545	.081	1.043E-04	.0045	1.254E-04	.0055	.1411
396	532.2	.536	.079	1.019E-04	.0044	1.225E-04	.0053	.1448
397	532.6	.713	.106	1.356E-04	.0059	1.631E-04	.0071	.1483
398	533.7	1.370	.193	2.476E-04	.0108	2.978E-04	.0129	.1519
399	535.9	3.018	.403	5.198E-04	.0226	6.255E-04	.0272	.1556

DATE 5/12/75

AEDC(ARO,INC.) ARNOLD AFS, TENNESSEE
VON KARMAN GAS DYNAMICS FACILITY
50 INCH HYPERSONIC TUNNEL B
V41H-B7A

GROUP	TEST CONDITION	MODEL	MACH NO	PO,PSIA	TO,DEG R	ALPHA-MODEL	ALPHA-SECTOR	ALPHA-PREBEND	ROLL MODEL	YAW
56	20	140 B	7.98	430.4	1312	25.08	4.92	30.00	179.94	-.0

T-INF (DEG R)	P-INF (PSIA)	Q-INF (PSIA)	V-INF (FT/SEC)	RHO-INF (SLUGS/FT3)	MU-INF (LB-SEC/FT2)	RE/FT (FT-1)	HREF-FR (R= .0400FT)	STFR (R= .0400FT)	SWITCH POSITION
95.5	.045	1.997	3821	3.936E-05	7.689E-08	1.956E 06	2.299E-02	1.923E-02	3

TOP CENTERLINE

TC NO	TW	DT*DT	QDOT	H(TO)	H(TO)/HREF	H(.9TO)	H(.9TO)/HREF	X/L
400	537.9	4.314	.533	7.521E-04	.0327	9.054E-04	.0394	.1582
401	537.2	4.908	.637	8.218E-04	.0357	9.893E-04	.0430	.1608
402	536.4	5.884	.735	9.501E-04	.0413	1.144E-03	.0498	.1635
403	539.9	6.637	.808	1.046E-03	.0455	1.259E-03	.0548	.1664
404	539.9	6.657	.808	1.047E-03	.0455	1.261E-03	.0548	.1691
405	540.9	7.480	.909	1.178E-03	.0512	1.420E-03	.0618	.1720
406	539.6	6.533	.793	1.027E-03	.0446	1.237E-03	.0538	.1748
407	539.2	5.962	.772	9.985E-04	.0434	1.203E-03	.0523	.1769
408	539.4	5.760	.846	1.095E-03	.0476	1.319E-03	.0574	.1800
409	537.8	4.604	.663	8.569E-04	.0373	1.032E-03	.0449	.1831
410	536.7	3.849	.554	7.148E-04	.0311	8.605E-04	.0374	.1863
411	536.5	2.895	.435	5.609E-04	.0244	6.752E-04	.0294	.1894
412	536.3	2.210	.300	3.873E-04	.0168	4.662E-04	.0203	.1931
413	535.1	1.882	.252	3.248E-04	.0141	3.908E-04	.0170	.1972
414	535.0	1.009	.135	1.740E-04	.0076	2.094E-04	.0091	.2041
415	533.0	.579	.057	7.337E-05	.0032	8.823E-05	.0038	.2250
416	532.1	.357	.042	5.357E-05	.0023	6.441E-05	.0028	.2500

NOSE TC (Z = 338)

TC NO	TW	DT*DT	QDOT	H(TO)	H(TO)/HREF	H(.9TO)	H(.9TO)/HREF	X/L	2Y/B
145	574.2	56.828	7.769	1.053E-02	.4580	1.281E-02	.5571	.0008	.5039
146	575.6	58.082	7.946	1.079E-02	.4693	1.313E-02	.5711	.0023	.5082
147	564.7	49.235	6.699	8.966E-03	.3899	1.088E-02	.4730	.0043	.5135
148	559.6	37.378	5.242	6.968E-03	.3030	8.439E-03	.3670	.0068	.5205
149	554.3	26.497	3.850	5.081E-03	.2210	6.145E-03	.2673	.0095	.5279
150	554.4	24.040	3.460	4.568E-03	.1987	5.525E-03	.2403	.0122	.5354
151	551.8	17.404	2.455	3.229E-03	.1404	3.903E-03	.1697	.0218	.5621
152	550.8	16.939	2.394	3.027E-03	.1317	3.658E-03	.1591	.0251	.5712
153	550.5	16.962	2.078	2.729E-03	.1187	3.297E-03	.1434	.0286	.5808
154	550.1	16.279	2.030	2.665E-03	.1159	3.220E-03	.1400	.0319	.5898
155	549.9	15.783	1.990	2.611E-03	.1135	3.154E-03	.1372	.0354	.5995
156	548.9	14.947	1.863	2.442E-03	.1062	2.949E-03	.1282	.0387	.6085
157	548.8	14.919	1.839	2.410E-03	.1048	2.911E-03	.1266	.0420	.6176
158	547.9	15.233	1.877	2.457E-03	.1069	2.967E-03	.1290	.0462	.6294
159	547.9	14.940	1.680	2.199E-03	.0956	2.655E-03	.1155	.0503	.6406

GROUP 56 CENTERLINE TIME 2.55

CH	TC	FIT LENGTH	DTDWT	UNCERTAINTY	CH	TC	FIT LENGTH	DTDWT	UNCERTAINTY
1	221	2.00	.516	.0214	50	384	1.20	1.397	.0354
2	222	2.00	.890	.0114	51	385	1.20	1.147	.0206
3	223	.80	3.646	.0102	52	386	1.20	1.236	.0170
4	224	.80	3.610	.0093	53	387	1.20	1.221	.0120
5	225	.80	2.627	.0362	54	388	1.20	1.316	.0196
6	226	.60	6.601	.0061	55	389	1.20	1.093	.0232
7	227	.60	3.841	.0714	56	390	2.00	.907	.0369
8	228	.60	6.976	.0049	57	391	2.00	.768	.0093
9	229	.60	5.555	.0130	58	392	2.00	.693	.0123
10	232	2.00	.236	.0511	59	393	2.00	.639	.0239
11	233	2.00	.323	.0426	60	394	2.00	.589	.0118
12	236	2.00	.287	.0595	61	395	2.00	.545	.0340
13	237	2.00	.290	.0314	62	396	2.00	.536	.0155
14	238	1.20	1.673	.0125	63	397	2.00	.713	.0154
15	239	.80	2.103	.0239	64	398	1.20	1.370	.0178
16	240	1.20	1.394	.0370	65	399	.80	3.018	.0141
17	241	1.20	1.612	.0257	66	400	.60	4.314	.0152
18	242	.80	2.257	.0200	67	401	.60	4.908	.0070
19	243	1.20	1.749	.0111	68	402	.60	5.884	.1364
20	244	1.20	1.500	.0227	69	403	.60	6.637	.0151
21	245	1.20	1.663	.0113	70	404	.60	6.657	.0068
22	246	1.20	1.878	.0100	71	405	.60	7.480	.0124
23	247	1.20	1.454	.0284	72	406	.60	6.533	.0093
24	248	1.20	1.776	.0185	73	407	.60	5.962	.0065
25	249	.80	2.245	.0190	74	408	.60	5.760	.0145
26	250	.80	2.259	.0166	75	409	.60	4.604	.0136
27	251	.80	2.335	.0137	76	410	.60	3.848	.0106
28	252	1.20	1.323	.0119	77	411	.80	2.895	.0265
29	253	1.20	1.883	.0070	78	412	.80	2.210	.0159
30	254	1.20	1.333	.0145	79	413	1.20	1.882	.0626
31	257	.80	2.510	.0122	80	414	2.00	1.009	.0084
32	258	.80	3.041	.0113	81	415	2.00	.579	.0172
33	367	.20	83.655	.0026	82	416	2.00	.357	.0219
34	368	.20	63.222	.0013	83	145	.20	56.828	.0029
35	369	.20	39.693	.0037	84	146	.20	58.082	.0034
36	370	.30	28.935	.0040	85	147	.20	49.235	.0014
37	371	.30	24.310	.0131	86	148	.20	37.378	.0027
38	372	.30	16.354	.0058	87	149	.30	26.497	.0077
39	373	.40	10.507	.0061	88	150	.30	24.040	.0051
40	374	.40	8.411	.0140	89	151	.30	17.404	.0106
41	375	.60	6.934	.0047	90	152	.30	16.939	.0515
42	376	.60	6.036	.0081	91	153	.30	16.962	.0151
43	377	.60	5.372	.0150	92	154	.30	16.279	.0170
44	378	.60	4.752	.0152	93	155	.40	15.783	.0049
45	379	.80	2.791	.0092	94	156	.40	14.947	.0067
46	380	.80	2.244	.0165	95	157	.40	14.919	.0142
47	381	.80	2.082	.0549	96	158	.40	15.233	.0059
48	382	1.20	1.706	.0123	97	159	.40	14.940	.0050
49	383	1.20	1.549	.0140	98	0	-0	0	0
57		.050							

HIT ON LOOP 53

DATE 5/12/75

AEDC(ARO,INC.) ARNOLD AFS, TENNESSEE
VON KARMAN GAS DYNAMICS FACILITY
50 INCH HYPERSONIC TUNNEL B
V41B-B7A

GROUP	TEST CONDITION	MODEL	MACH NO	PO,PSIA	TO,DEG R	ALPHA-MODEL	ALPHA-SECTOR	ALPHA-PREBEND	ROLL MODEL	YAW
57	21	140 B	7.98	430.8	1311	30.09	-.09	30.00	179.94	.0

T-INF (DEG R)	P-INF (PSIA)	Q-INF (PSIA)	V-INF (FT/SEC)	RHO-INF (SLUGS/FT3)	MU-INF (LB-SEC/FT2)	RE/FT (FT-1)	HREF-FR (R= .0400FT)	STFR (R= .0400FT)	SWITCH POSITION
95.4	.045	1.999	3819	3.944E-05	7.681E-08	1.961E 06	2.300E-02	1.921E-02	1

IC	NC	TW	DTWDT	QDOT	H(TO)	H(TO)/HREF	H(.9TO)	H(.9TO)/HREF
FUSELAGE VENT NO. 1								
1	537.4	1.943	.190	2.462E-04	.0107	2.965E-04	.0129	
2	537.7	1.227	.165	2.138E-04	.0093	2.575E-04	.0112	
3	537.5	1.118	.154	1.986E-04	.0086	2.391E-04	.0104	
4	537.4	1.116	.152	1.962E-04	.0085	2.363E-04	.0103	
5	537.4	1.125	.150	1.940E-04	.0084	2.336E-04	.0102	
6	537.5	1.018	.135	1.744E-04	.0076	2.100E-04	.0091	
7	537.9	.731	.107	1.381E-04	.0060	1.663E-04	.0072	
8	538.2	.873	.132	1.704E-04	.0074	2.053E-04	.0089	
9	538.3	.757	.110	1.426E-04	.0062	1.717E-04	.0075	
10	538.1	.672	.096	1.242E-04	.0054	1.496E-04	.0065	
11	538.2	.744	.101	1.303E-04	.0057	1.569E-04	.0068	
12	538.0	.634	.087	1.132E-04	.0049	1.363E-04	.0059	
13	539.6	.412	.061	7.857E-05	.0034	9.466E-05	.0041	
14	538.6	.573	.078	1.014E-04	.0044	1.221E-04	.0053	
15	538.8	.580	.077	1.002E-04	.0044	1.207E-04	.0052	
16	539.5	.400	.054	7.020E-05	.0031	8.457E-05	.0037	
17	539.8	.336	.046	5.904E-05	.0026	7.114E-05	.0031	
18	540.5	.275	.038	4.997E-05	.0022	6.022E-05	.0026	
19	541.7	.182	.025	3.308E-05	.0014	3.987E-05	.0017	
CARGO BAY VENT NO. 1								
22	539.3	2.674	.371	4.804E-04	.0209	5.786E-04	.0252	
23	538.2	2.590	.362	4.682E-04	.0204	5.639E-04	.0245	
24	539.1	3.247	.439	5.691E-04	.0247	6.856E-04	.0298	
25	539.4	3.721	.490	6.353E-04	.0276	7.654E-04	.0333	
26	540.2	4.365	.573	7.438E-04	.0323	8.962E-04	.0390	
27	539.8	2.601	.362	4.694E-04	.0204	5.655E-04	.0246	
28	539.4	2.863	.414	5.375E-04	.0234	6.476E-04	.0282	
29	540.0	3.559	.513	6.663E-04	.0290	8.028E-04	.0349	
30	539.6	4.293	.617	8.005E-04	.0348	9.644E-04	.0419	
31	540.1	4.896	.684	8.882E-04	.0386	1.070E-03	.0465	
32	539.9	4.864	.645	8.370E-04	.0364	1.008E-03	.0438	
33	540.7	3.986	.570	7.401E-04	.0322	8.919E-04	.0388	
34	541.2	5.202	.704	9.154E-04	.0398	1.103E-03	.0480	
35	542.3	4.548	.645	8.389E-04	.0365	1.011E-03	.0440	
36	539.7	2.389	.347	4.497E-04	.0196	5.418E-04	.0236	
37	540.3	3.854	.542	7.039E-04	.0306	8.483E-04	.0369	
38	539.3	2.466	.343	4.453E-04	.0194	5.365E-04	.0233	
39	540.4	1.927	.281	3.654E-04	.0159	4.404E-04	.0191	
PROTUBERANCES								
41	539.3	4.922	.659	8.545E-04	.0372	1.029E-03	.0448	
42	540.6	5.273	.721	9.359E-04	.0407	1.128E-03	.0490	
43	539.3	4.750	.617	7.999E-04	.0348	9.636E-04	.0419	

	X/L	Z,FULL SCALE(IN)
FUSELAGE VENT NO. 1		
1	.4434	376.6300
2	.4264	371.6300
3	.4303	371.6300
4	.4342	371.6300
5	.4380	371.6300
6	.4434	369.1300
7	.4226	366.6300
8	.4264	366.6300
9	.4303	366.6300
10	.4342	366.6300
11	.4380	366.6300
12	.4496	366.6300
13	.4187	357.1300
14	.4396	361.6300
15	.4434	361.6300
16	.4396	355.6300
17	.4434	355.6300
18	.4396	351.6300
19	.4291	332.6300
CARGO BAY VENT NO. 1		
22	.3974	397.6300
23	.4013	397.6300
24	.4052	397.6300
25	.4090	397.6300
26	.4129	397.6300
27	.3936	392.6300
28	.3974	392.6300
29	.4013	392.6300
30	.4052	392.6300
31	.4090	392.6300
32	.4129	392.6300
33	.4090	386.1300
34	.4129	387.6300
35	.3897	383.1300
36	.4090	378.6300
37	.4129	382.1300
38	.4129	377.1300
39	.4001	373.6300
PROTUBERANCES		
41	.3546	379.0500
42	.3604	379.0500
43	.3450	374.0500

DATE 5/12/75

AEDC(ARO,INC.) ARNOLD AFS, TENNESSEE
VON KARMAN GAS DYNAMICS FACILITY
50 INCH HYPERSONIC TUNNEL B
V418-87A

GROUP	TEST CONDITION	MODEL	MACH NO	PO,PSIA	TO,DEG R	ALPHA-MODEL	ALPHA-SECTOR	ALPHA-PREBEND	ROLL MODEL	YAW
57	21	140 B	7.98	430.8	1311	30.09	-.09	30.00	179.94	.0

T-INF (DEG R)	P-INF (PSIA)	Q-INF (PSIA)	V-INF (FT/SEC)	RHO-INF (SLUGS/FT3)	MU-INF (LB-SEC/FT2)	RE/FT (FT-1)	HREF-FR (R= .0400FT)	STFR (R= .0400FT)	SWITCH POSITION
95.4	.045	1.599	3819	3.944E-05	7.681E-08	1.961E 06	2.300E-02	1.921E-02	1

IC NO	TW	DTWDT	QDOT	H(TO)	H(TO)/HREF	H(.9TO)	H(.9TO)/HREF
44	539.7	5.253	.715	9.280E-04	.0403	1.118E-03	.0486
45	539.9	4.580	.634	8.226E-04	.0358	9.911E-04	.0431
46	540.7	4.580	.640	8.318E-04	.0362	1.002E-03	.0436
47	541.6	6.325	.842	1.095E-03	.0476	1.320E-03	.0574
48	538.6	2.774	.380	4.922E-04	.0214	5.929E-04	.0258
49	540.6	4.619	.635	8.253E-04	.0359	9.945E-04	.0432
50	539.0	2.166	.301	3.897E-04	.0169	4.695E-04	.0204
51	539.9	2.174	.295	3.832E-04	.0167	4.618E-04	.0201
52	539.9	2.010	.276	3.587E-04	.0156	4.322E-04	.0188
53	539.8	1.915	.280	3.627E-04	.0158	4.371E-04	.0190
54	534.4	1.251	.178	2.297E-04	.0100	2.764E-04	.0120
55	540.1	1.393	.199	2.583E-04	.0112	3.113E-04	.0135

PROTUBERANCES

X/L	Z,FULL SCALE(IN)
.3508	374.0500
.3566	374.0500
.3604	374.0500
.3392	366.5500
.3566	366.5500
.3392	360.7000
.3566	360.7000
.3604	360.7000
.3392	353.2000
.3450	353.2000
.3508	353.2000
.3566	353.2000

IC NO	TW	DTWDT	QDOT	H(TO)	H(TO)/HREF	H(.9TO)	H(.9TO)/HREF
56	535.0	1.424	.183	2.304E-04	.0103	2.844E-04	.0124
57	536.4	1.836	.224	2.896E-04	.0126	3.486E-04	.0152
58	538.4	3.228	.426	5.521E-04	.0240	6.649E-04	.0289
59	540.2	4.088	.539	6.997E-04	.0304	8.433E-04	.0367
60	540.6	3.666	.511	6.635E-04	.0288	7.996E-04	.0348
61	539.1	2.942	.373	4.832E-04	.0210	5.821E-04	.0253
62	536.9	1.828	.224	2.895E-04	.0126	3.486E-04	.0152
63	535.4	1.419	.185	2.389E-04	.0104	2.876E-04	.0125
64	534.1	~~-.013~~	~~-.002~~	~~2.008E-06~~	~~.0001~~	~~2.416E-06~~	~~.0001~~
65	534.9	1.159	.157	2.029E-04	.0088	2.442E-04	.0106
66	536.1	1.686	.213	2.745E-04	.0119	3.305E-04	.0144
67	538.5	2.479	.348	4.514E-04	.0196	5.437E-04	.0236
68	540.3	3.668	.465	6.038E-04	.0263	7.276E-04	.0316

SUBLIMATOR VENT NO. 1

X/L	Z,FULL SCALE(IN)
.3031	371.1300
.3074	369.1300
.3089	363.6300
.3074	358.1300
.3031	356.1300
.2988	358.1300
.2973	363.6300
.2988	369.1300
.3031	376.1300
.3089	378.6300
.3101	372.6300
.3157	370.3800
.3128	363.6300

DATE 5/12/75

AEDC(ARO,INC.) ARNOLD AFS, TENNESSEE
VON KARMAN GAS DYNAMICS FACILITY
50 INCH HYPERSONIC TUNNEL B
V41B-B7A

GROUP	TEST CONDITION	MODEL	MACH NO	PO,PSIA	TO,DEG R	ALPHA-MODEL	ALPHA-SECTOR	ALPHA-PREBEND	ROLL MODEL	YAW
57	21	140 B	7.98	430.8	1311	30.09	-.09	30.00	179.94	.0

T-INF (DEG R)	P-INF (PSIA)	Q-INF (PSIA)	V-INF (FT/SEC)	RHO-INF (SLUGS/FT3)	MU-INF (LB-SEC/FT2)	RE/FT (FT-1)	HREF-FR (R= .0400FT)	STFR (R= .0400FT)	SWITCH POSITION
95.4	.045	1.999	3819	3.944E-05	7.681E-06	1.961E 06	2.300E-02	1.921E-02	1

TC NO	TW	DIWDT	QDOT	H(TO)	H(TO)/HREF	H(.9TO)	H(.9TO)/HREF	X/L	Z,FULL SCALE(IN)
								FUSELAGE VENT PANEL NO. 7	
69	534.5	1.792	.250	3.219E-04	.0140	3.873E-04	.0168	.2487	356.4000
70	534.5	1.715	.210	2.710E-04	.0118	3.261E-04	.0142	.2591	356.4000
71	534.7	1.366	.186	2.392E-04	.0104	2.878E-04	.0125	.2419	351.4000
72	534.4	1.595	.226	2.911E-04	.0127	3.502E-04	.0152	.2487	351.4000
73	535.3	1.760	.228	2.942E-04	.0128	3.540E-04	.0154	.2552	351.4000
74	535.5	1.785	.216	2.790E-04	.0121	3.358E-04	.0146	.2610	351.4000
75	537.0	1.875	.255	3.296E-04	.0143	3.968E-04	.0173	.2419	342.8000
77	537.2	1.813	.257	3.323E-04	.0144	4.001E-04	.0174	.2552	342.8000
78	537.8	2.404	.330	4.274E-04	.0186	5.147E-04	.0224	.2610	342.8000
79	539.6	2.234	.286	3.712E-04	.0161	4.473E-04	.0194	.2419	334.2000
80	538.8	1.808	.247	3.198E-04	.0139	3.853E-04	.0167	.2487	334.2000
81	539.7	3.026	.423	5.485E-04	.0238	6.609E-04	.0287	.2552	334.2000
								ACCESS HATCH WINDOW	
83	532.8	3.296	.440	5.655E-04	.0246	6.801E-04	.0296	.2131	398.0000
84	532.9	3.372	.444	5.710E-04	.0248	6.867E-04	.0299	.2131	388.0000
85	532.6	2.996	.408	5.241E-04	.0228	6.303E-04	.0274	.2131	383.0000
87	531.3	2.202	.314	4.033E-04	.0175	4.848E-04	.0211	.2222	395.8000
88	532.5	3.125	.437	5.610E-04	.0244	6.746E-04	.0293	.2193	386.5000
89	531.7	2.799	.411	5.273E-04	.0229	6.340E-04	.0276	.2177	381.8000
90	532.5	2.983	.406	5.218E-04	.0227	6.275E-04	.0273	.2297	389.5000
91	532.6	3.171	.434	5.585E-04	.0243	6.717E-04	.0292	.2243	382.5000
92	533.0	2.868	.405	5.203E-04	.0226	6.258E-04	.0272	.2214	378.7000
93	533.0	2.768	.353	4.544E-04	.0198	5.466E-04	.0238	.2343	374.0000
94	533.1	3.185	.414	5.321E-04	.0231	6.399E-04	.0278	.2274	375.5000
95	533.3	2.774	.394	5.068E-04	.0220	6.096E-04	.0265	.2239	373.3000
96	533.8	2.649	.344	4.431E-04	.0193	5.331E-04	.0232	.2363	368.0000
97	534.0	2.849	.364	4.685E-04	.0204	5.636E-04	.0245	.2286	368.0000
98	533.8	2.799	.342	5.053E-04	.0220	6.079E-04	.0264	.2247	368.0000
100	535.0	2.526	.358	4.613E-04	.0201	5.551E-04	.0241	.2274	360.5000
102	536.1	2.609	.369	4.759E-04	.0207	5.728E-04	.0249	.2081	354.3000
103	535.3	3.163	.416	5.360E-04	.0233	6.451E-04	.0280	.2023	362.7000
105	534.4	2.878	.360	4.637E-04	.0202	5.579E-04	.0243	.2050	378.7000
106	533.7	3.559	.456	5.871E-04	.0255	7.062E-04	.0307	.2050	386.2000

GROUP 57 CENTERLINE TIME 2.60

CH	TC	FIT LENGTH	DTDWT	UNCERTAINTY	CH	TC	FIT LENGTH	DTDWT	UNCERTAINTY
1	1	1.20	1.443	.0115	50	53	1.20	1.915	.0206
2	2	1.20	1.227	.0130	51	54	1.20	1.251	.0241
3	3	1.20	1.118	.0145	52	55	1.20	1.393	.0230
4	4	1.20	1.116	.0137	53	56	1.20	1.424	.0129
5	5	1.20	1.125	.0456	54	57	1.20	1.836	.0134
6	6	1.20	1.018	.0148	55	58	.80	3.228	.0127
7	7	2.00	.731	.0654	56	59	.60	4.088	.0325
8	8	2.00	.873	.0113	57	60	.80	3.666	.0078
9	9	2.00	.757	.0177	58	61	.80	2.942	.0104
10	10	2.00	.672	.0165	59	62	1.20	1.828	.0182
11	11	2.00	.744	.0182	60	63	1.20	1.419	.0152
12	12	2.00	.634	.0219	61	64	2.00	-.013	-.9585
13	13	2.00	.412	.0179	62	65	1.20	1.159	.0116
14	14	2.00	.573	.0181	63	66	1.20	1.686	.0144
15	15	2.00	.580	.0269	64	67	.80	2.479	.0178
16	16	2.00	.400	.0204	65	68	.80	3.668	.0106
17	17	2.00	.336	.0991	66	69	1.20	1.792	.0148
18	18	2.00	.275	.0328	67	70	1.20	1.718	.0084
19	19	2.00	.162	.0639	68	71	.80	1.366	.2384
20	22	.80	2.674	.0176	69	72	1.20	1.595	.0173
21	23	.80	2.590	.0116	70	73	1.20	1.760	.0147
22	24	.80	3.247	.0086	71	74	1.20	1.785	.0287
23	25	.80	3.721	.0219	72	75	1.20	1.875	.0104
24	26	.60	4.365	.0137	73	77	1.20	1.813	.0094
25	27	.80	2.601	.0151	74	78	.80	2.404	.0149
26	28	.80	2.883	.0117	75	79	.80	2.234	.0220
27	29	.80	3.559	.0114	76	80	1.20	1.808	.0157
28	30	.60	4.293	.0129	77	81	.80	3.026	.0137
29	31	.60	4.896	.0117	78	83	.80	3.296	.0102
30	32	.60	4.864	.0116	79	84	.80	3.372	.0603
31	33	.80	3.986	.0070	80	85	.80	2.996	.0108
32	34	.60	5.202	.0096	81	87	.80	2.202	.0098
33	35	.60	4.548	.0101	82	88	.80	3.125	.0074
34	36	.80	2.389	.0149	83	89	.80	2.799	.0138
35	37	.80	3.854	.0108	84	90	.80	2.983	.0108
36	38	.80	2.466	.0145	85	91	.80	3.171	.0100
37	39	1.20	1.927	.0090	86	92	.80	2.868	.0147
38	41	.60	4.922	.0127	87	93	.80	2.768	.0327
39	42	.60	5.273	.0093	88	94	.80	3.185	.0090
40	43	.60	4.750	.0171	89	95	.80	2.774	.0182
41	44	.60	5.253	.0118	90	96	.80	2.649	.0996
42	45	.60	4.520	.0068	91	97	.80	2.849	.0228
43	46	.60	4.580	.0191	92	98	.80	2.799	.0399
44	47	.60	6.325	.0102	93	100	.80	2.526	.0178
45	48	.80	2.774	.0142	94	102	.80	2.609	.0187
46	49	.60	4.619	.0128	95	103	.80	3.163	.0134
47	50	.80	2.166	.0447	96	105	.80	2.878	.0285
48	51	.80	2.176	.0186	97	106	.80	3.559	.0095
49	52	.80	2.010	.0145	98	0	-0	0	0
	58	.050							

BIT ON LOOP 54

DATE 5/12/75

AEDC(ARO,INC.) ARNOLD AFS, TENNESSEE
VON KARMAN GAS DYNAMICS FACILITY
50 INCH HYPERSONIC TUNNEL B
V41B-B7A

GROUP	TEST CONDITION	MODEL	MACH NO	PO,PSIA	TO,DEG R	ALPHA-MODEL	ALPHA-SECTOR	ALPHA-PREBEND	ROLL MODEL	YAW
58	21	140 B	7.98	430.3	1310	30.08	-.08	30.00	179.94	.0

T-INF (DEG R)	P-INF (PSIA)	Q-INF (PSIA)	V-INF (FT/SEC)	RHO-INF (SLUGS/FT3)	MU-INF (LB-SEC/FT2)	RE/FT (FT-1)	HREF-FR (R= .0400FT)	STFR (R= .0400FT)	SWITCH POSITION
95.3	.045	1.997	3818	3.942E-05	7.676E-06	1.961E 06	2.299E-02	1.922E-02	2

TC NO	TW	DTWDT	QDOT	H(TO)	H(TO)/HREF	H(.9TO)	H(.9TO)/HREF	X/L	Z,FULL SCALE(IN)
								ACCESS HATCH WINDOW	
107	532.4	3.222	.462	5.939E-04	.0258	7.142E-04	.0311	.2050	396.2000
								FUSELAGE VENT PANEL NO. 3 AND 1	
108	534.6	5.494	.582	7.5[illegible]6E-04	.0327	9.032E-04	.0393	.1244	377.5000
109	533.2	4.866	.602	7.749E-04	.0337	9.322E-04	.0406	.1302	377.5000
110	532.9	4.642	.548	7.576E-04	.0330	9.113E-04	.0396	.1360	377.5000
111	533.6	4.646	.560	7.218E-04	.0314	8.683E-04	.0378	.1418	377.5000
112	534.3	5.073	.603	7.774E-04	.0338	9.354E-04	.0407	.1476	377.5000
113	535.2	5.365	.616	7.956E-04	.0346	9.575E-04	.0417	.1215	273.5000
114	534.3	4.865	.544	7.538E-04	.0328	9.071E-04	.0395	.1273	273.5000
115	534.0	4.436	.551	7.102E-04	.0309	8.544E-04	.0372	.1331	273.5000
116	534.0	4.684	.575	7.416E-04	.0323	8.922E-04	.0388	.1389	273.5000
117	535.3	5.221	.632	7.775E-04	.0338	9.357E-04	.0407	.1447	273.5000
118	535.3	4.266	.591	7.632E-04	.0332	9.186E-04	.0400	.1409	366.0000
119	536.2	4.649	.603	7.794E-04	.0339	9.382E-04	.0408	.1442	366.0000
120	537.6	4.712	.590	7.646E-04	.0333	9.208E-04	.0401	.1215	359.5000
121	537.2	4.262	.524	6.789E-04	.0295	8.175E-04	.0356	.1303	359.5000
122	537.5	4.297	.536	6.947E-04	.0302	8.366E-04	.0364	.1337	359.5000
								LOWER RCS NOZZLES	
124	533.2	2.452	.219	2.820E-04	.0123	3.392E-04	.0148	.0950	400.0000
125	532.7	2.630	.286	3.686E-04	.0160	4.434E-04	.0193	.0988	400.0000
126	533.0	2.616	.359	4.617E-04	.0201	5.553E-04	.0242	.1027	400.0000
127	532.7	2.517	.339	4.367E-04	.0190	5.252E-04	.0228	.0911	395.0000
128	532.6	2.806	.341	4.384E-04	.0191	5.273E-04	.0229	.0950	395.0000
129	533.5	3.331	.391	5.040E-04	.0219	6.063E-04	.0264	.0988	395.0000
130	535.3	3.264	.391	5.048E-04	.0220	6.076E-04	.0264	.0810	390.0000
131	533.4	2.887	.427	5.496E-04	.0239	6.612E-04	.0288	.0857	390.0000
132	534.1	4.335	.565	6.516E-04	.0283	7.840E-04	.0341	.0963	390.0000
133	533.8	3.250	.395	5.089E-04	.0221	6.123E-04	.0266	.0857	383.8000
134	533.9	3.893	.522	6.723E-04	.0293	8.089E-04	.0352	.0872	377.3000
135	534.9	5.265	.633	8.168E-04	.0355	9.830E-04	.0428	.0903	374.5500
136	535.9	5.637	.627	8.111E-04	.0353	9.763E-04	.0425	.0960	374.5500
137	535.2	5.205	.642	8.801E-04	.0383	1.059E-03	.0461	.0872	370.5500
138	536.1	5.715	.659	8.521E-04	.0371	1.026E-03	.0446	.0928	370.5500
139	536.9	5.348	.684	8.852E-04	.0385	1.066E-03	.0464	.0816	366.0500
140	537.4	5.566	.710	9.189E-04	.0400	1.107E-03	.0481	.0934	362.4000
141	537.4	4.962	.660	8.543E-04	.0372	1.029E-03	.0448	.0973	362.4000
142	538.4	4.287	.468	6.072E-04	.0264	7.314E-04	.0318	.0833	355.2000
143	538.6	6.270	.631	8.190E-04	.0356	9.866E-04	.0429	.0919	355.2000
144	540.6	7.020	.928	1.207E-03	.0525	1.454E-03	.0633	.0949	349.0000

DATE 5/12/75

AEDC(ARO,INC.) ARNOLD AFS, TENNESSEE
VON KARMAN GAS DYNAMICS FACILITY
50 INCH HYPERSONIC TUNNEL B
V41B-87A

GROUP	TEST CONDITION	MODEL	MACH NO	PO,PSIA	TO,DEG R	ALPHA-MODEL	ALPHA-SECTOR	ALPHA-PREBEND	ROLL MODEL	YAW
58	21	140 B	7.98	430.3	1310	30.08	-.08	30.00	179.94	.0

T-INF (DEG R)	P-INF (PSIA)	Q-INF (PSIA)	V-INF (FT/SEC)	RHO-INF (SLUGS/FT3)	MU-INF (LB-SEC/FT2)	RE/FT (FT-1)	HREF-FR (R= .0400FT)	STFR (R= .0400FT)	SWITCH POSITION
95.3	.045	1.597	3818	3.942E-05	7.676E-08	1.961E 06	2.299E-02	1.922E-02	2

IC NO	TW	DTWDT	QDOT	H(TO)	H(TO)/HREF	H(.9TO)	H(.9TO)/HREF
161	537.5	1.843	.215	2.829E-04	.0123	3.407E-04	.0148
162	536.4	1.897	.180	2.326E-04	.0101	2.800E-04	.0122
163	535.1	1.359	.167	2.156E-04	.0094	2.595E-04	.0113
164	534.3	1.112	.145	1.871E-04	.0081	2.251E-04	.0098
165	535.0	1.056	.133	1.718E-04	.0075	2.068E-04	.0090
166	534.9	.856	.110	1.418E-04	.0062	1.706E-04	.0074
167	537.1	1.577	.214	2.767E-04	.0120	3.331E-04	.0145
168	536.5	1.795	.189	2.440E-04	.0106	2.938E-04	.0128
169	534.6	1.294	.157	2.029E-04	.0088	2.441E-04	.0106
170	533.6	1.099	.137	1.771E-04	.0077	2.131E-04	.0093
171	533.3	1.200	.145	1.863E-04	.0081	2.241E-04	.0098
172	532.7	1.003	.131	1.683E-04	.0073	2.024E-04	.0088
173	534.5	.952	.127	1.641E-04	.0071	1.975E-04	.0086
174	533.0	.727	.083	1.066E-04	.0046	1.282E-04	.0056
175	532.7	.724	.104	1.335E-04	.0058	1.605E-04	.0070
176	532.5	.606	.082	1.061E-04	.0046	1.276E-04	.0056
177	541.2	8.534	1.178	1.533E-03	.0667	1.848E-03	.0804
178	544.1	11.459	2.261	2.954E-03	.1285	3.564E-03	.1550
179	548.3	18.348	3.871	5.084E-03	.2212	6.141E-03	.2672
180	539.2	5.807	.759	9.854E-04	.0429	1.187E-03	.0516
181	536.9	2.500	.340	4.398E-04	.0191	5.295E-04	.0230
182	539.5	6.281	.897	1.165E-03	.0507	1.404E-03	.0611
183	531.7	.557	.070	8.978E-05	.0039	1.080E-04	.0047
184	532.1	.718	.098	1.260E-04	.0055	1.515E-04	.0066
185	536.5	4.106	.494	6.388E-04	.0278	7.691E-04	.0335
186	536.4	2.415	.303	3.924E-04	.0171	4.725E-04	.0206
187	539.2	5.878	.784	1.018E-03	.0443	1.227E-03	.0534
188	542.2	10.066	2.352	3.065E-03	.1333	3.695E-03	.1608
189	534.7	2.011	.287	3.698E-04	.0161	4.450E-04	.0194
190	534.4	1.492	.215	2.768E-04	.0120	3.330E-04	.0145
191	536.5	3.346	.512	6.620E-04	.0288	7.970E-04	.0347

UPPER RCS NOZZLES

X/L	2Y/B
.0619	-.0160
.0709	-.0160
.0807	-.0160
.0943	-.0160
.0978	-.0160
.1013	-.0160
.0619	-.0320
.0709	-.0320
.0807	-.0320
.0943	-.0320
.0978	-.0320
.1013	-.0320
.0807	-.0480
.0943	-.0480
.0978	-.0480
.1013	-.0480

CANOPY

DATE 5/12/75

AEDC(ARO,INC.) ARNOLD AFS, TENNESSEE
VON KARMAN GAS DYNAMICS FACILITY
50 INCH HYPERSONIC TUNNEL B
V418-87A

GROUP	TEST CONDITION	MODEL	MACH NO	PO,PSIA	TO,DEG R	ALPHA-MODEL	ALPHA-SECTOR	ALPHA-PREBEND	ROLL MODEL	YAW
58	21	140 B	7.98	430.3	1310	30.08	-.08	30.00	179.94	.0

T-INF (DEG R)	P-INF (PSIA)	Q-INF (PSIA)	V-INF (FT/SEC)	RHO-INF (SLUGS/FT3)	MU-INF (LB-SEC/FT2)	RE/FT (FT-1)	HREF-FR (R= .0400FT)	STFR (R= .0400FT)	SWITCH POSITION
95.3	.045	1.597	3818	3.942E-05	7.676E-08	1.961E 06	2.299E-02	1.922E-02	2

CANOPY

IC NO	TW	DTWDT	QDOT	H(TO)	H(TO)/HREF	H(.9TO)	H(.9TO)/HREF
192	530.7	.234	.033	4.231E-05	.0018	5.087E-05	.0022
193	536.9	4.037	.776	1.007E-03	.0438	1.212E-03	.0527
194	530.3	.309	.040	5.114E-05	.0022	6.147E-05	.0027
195	531.5	.616	.076	9.744E-05	.0042	1.172E-04	.0051
196	533.2	1.256	.164	2.113E-04	.0092	2.541E-04	.0111
197	529.4	.579	.057	7.342E-05	.0032	8.823E-05	.0038
198	529.3	.461	.053	6.838E-05	.0030	8.217E-05	.0036
199	530.0	.587	.079	1.010E-04	.0044	1.214E-04	.0053
200	531.1	1.409	.200	2.575E-04	.0112	3.095E-04	.0135
201	534.4	3.463	.489	6.306E-04	.0274	7.588E-04	.0330
202	534.5	2.088	.264	3.406E-04	.0148	4.099E-04	.0178
203	528.9	.830	.103	1.317E-04	.0057	1.582E-04	.0069
204	529.6	1.196	.186	2.378E-04	.0103	2.858E-04	.0124
205	533.4	4.452	.694	8.936E-04	.0389	1.075E-03	.0468
206	530.0	.887	.117	1.506E-04	.0066	1.810E-04	.0079
207	535.0	3.933	.527	6.806E-04	.0296	8.191E-04	.0356
208	528.3	.664	.089	1.139E-04	.0050	1.369E-04	.0060
209	528.8	.804	.110	1.412E-04	.0061	1.696E-04	.0074
210	529.3	.708	.094	1.208E-04	.0053	1.452E-04	.0063
211	529.3	-.015	-.002	-2.276E-06	-.0001	-2.735E-06	-.0001
212	529.0	.603	.081	1.039E-04	.0045	1.248E-04	.0054
213	528.5	1.114	.147	1.887E-04	.0082	2.267E-04	.0099
214	528.8	1.430	.200	2.562E-04	.0111	3.079E-04	.0134
215	529.4	.965	.137	1.753E-04	.0076	2.107E-04	.0092
216	533.2	3.159	.448	5.776E-04	.0251	6.948E-04	.0302
217	532.7	2.221	.316	4.089E-04	.0177	4.894E-04	.0213
218	527.7	1.059	.146	1.862E-04	.0081	2.237E-04	.0097
219	528.6	1.557	.218	2.796E-04	.0122	3.359E-04	.0146
220	529.1	1.508	.207	2.651E-04	.0115	3.185E-04	.0139

GROUP 58 CENTERLINE TIME 2.65

CH	TC	FIT LENGTH	DTDWT	UNCERTAINTY	CH	TC	FIT LENGTH	DTDWT	UNCERTAINTY
1	107	.80	3.222	.0073	50	173	2.00	.952	.0094
2	108	.80	5.494	.0078	51	174	2.00	.727	.0220
3	109	.60	4.866	.0062	52	175	2.00	.724	.0164
4	110	.60	4.642	.0091	53	176	2.00	.696	.0253
5	111	.60	4.646	.0413	54	177	.40	8.534	.0163
6	112	.60	5.073	.0074	55	178	.40	11.450	.0091
7	113	.60	5.365	.0338	56	179	.30	18.348	.0139
8	114	.60	4.865	.0080	57	180	.60	5.807	.0223
9	115	.60	4.436	.0207	58	181	.80	2.500	.0098
10	116	.60	4.684	.0082	59	182	.60	6.281	.0104
11	117	.60	5.221	.0133	60	183	2.00	.557	.0151
12	118	.60	4.266	.0139	61	184	2.00	.718	.0293
13	119	.60	4.649	.0083	62	185	.60	4.106	.0100
14	120	.60	4.712	.0093	63	186	.80	2.415	.0171
15	121	.60	4.262	.0177	64	187	.60	5.878	.0126
16	122	.60	4.297	.0118	65	188	.40	10.066	.0075
17	124	.80	2.452	.0339	66	189	1.20	2.011	.0144
18	125	.80	2.630	.0142	67	190	1.20	1.492	.0134
19	126	.80	2.616	.0135	68	191	.80	3.346	.0817
20	127	.80	2.517	.0160	69	192	2.00	.234	.1191
21	128	.80	2.806	.0083	70	193	.60	4.037	.0134
22	129	.80	3.331	.0081	71	194	2.00	.309	.0668
23	130	.80	3.264	.0204	72	195	2.00	.616	.0247
24	131	.80	2.887	.0141	73	196	1.20	1.250	.0126
25	132	.60	4.335	.0172	74	197	2.00	.579	.0225
26	133	.80	3.250	.0126	75	198	2.00	.461	.0190
27	134	.80	3.893	.0073	76	199	2.00	.587	.0224
28	135	.60	5.265	.0071	77	200	1.20	1.409	.0102
29	136	.60	5.637	.0090	78	201	.80	3.463	.0073
30	137	.60	5.205	.0054	79	202	.80	2.088	.0855
31	138	.60	5.715	.0084	80	203	2.00	.830	.0095
32	139	.60	5.348	.0107	81	204	1.20	1.196	.0173
33	140	.60	5.566	.0079	82	205	.60	4.452	.0154
34	141	.60	4.982	.0107	83	206	2.00	.887	.0146
35	142	.60	4.287	.0123	84	207	.80	3.933	.0093
36	143	.60	6.270	.0094	85	208	2.00	.664	.0146
37	144	.60	7.020	.0068	86	209	2.00	.804	.0098
38	161	1.20	1.843	.0135	87	210	2.00	.708	.0336
39	162	1.20	1.897	.0088	88	211	2.00	-.015	-1.2715
40	163	1.20	1.359	.0193	89	212	2.00	.603	.0249
41	164	1.20	1.112	.0145	90	213	2.00	1.114	.0473
42	165	2.00	1.056	.0101	91	214	1.20	1.430	.0243
43	166	2.00	.856	.0137	92	215	2.00	.965	.0215
44	167	1.20	1.577	.0118	93	216	.80	3.159	.0106
45	168	1.20	1.795	.0103	94	217	.80	2.221	.0219
46	169	1.20	1.294	.0116	95	218	1.20	1.059	.0309
47	170	1.20	1.099	.0508	96	219	1.20	1.557	.0152
48	171	1.20	1.200	.0153	97	220	1.20	1.508	.0375
49	172	1.20	1.003	.0192	98	0	-0	0	0

59 .050

BIT ON LOOP 54

DATE 5/12/75

AEDC(ARO,INC.) ARNOLD AFS, TENNESSEE
VON KARMAN GAS DYNAMICS FACILITY
50 INCH HYPERSONIC TUNNEL B
V418-B7A

GROUP	TEST CONDITION	MODEL	MACH NO	PO,PSIA	TO,DEG R	ALPHA-MODEL	ALPHA-SECTOR	ALPHA-PREBEND	ROLL MODEL	YAW
59	21	140 B	7.98	430.6	1309	30.08	-.08	30.00	179.94	.0

T-INF (DEG R)	P-INF (PSIA)	Q-INF (PSIA)	V-INF (FT/SEC)	RHO-INF (SLUGS/FT3)	MU-INF (LB-SEC/FT2)	RE/FT (FT-1)	HREF-FR (R= .0400FT)	STFR (R= .0400FT)	SWITCH POSITION
95.3	.045	1.998	3816	3.949E-05	7.669E-08	1.965E 06	2.299E-02	1.920E-02	3

TC NO	TW	DTWDT	QDOT	H(TO)	H(TO)/HREF	H(.9TO)	H(.9TO)/HREF	X/L	2Y/B
								CANOPY	
221	527.8	.670	.081	1.036E-04	.0045	1.244E-04	.0054		
222	527.2	1.295	.159	2.036E-04	.0089	2.445E-04	.0106		
223	527.8	2.363	.320	4.096E-04	.0178	4.921E-04	.0214		
								ESCAPE HATCH AND WINDOW	
224	534.8	3.854	.344	4.963E-04	.0216	5.974E-04	.0260	.1933	.0162
225	533.5	2.461	.294	3.799E-04	.0165	4.571E-04	.0199	.1972	.0162
226	535.4	8.226	.868	1.122E-03	.0488	1.351E-03	.0588	.1933	.0384
227	533.3	4.803	.703	9.073E-04	.0395	1.092E-03	.0475	.1972	.0384
228	531.3	4.322	.555	7.143E-04	.0311	8.589E-04	.0374	.1933	.0653
229	532.1	4.277	.550	7.078E-04	.0308	8.513E-04	.0370	.1972	.0653
232	530.7	.294	.040	5.115E-05	.0022	6.149E-05	.0027	.2567	.0235
233	531.0	.350	.053	6.832E-05	.0030	8.214E-05	.0036	.2606	.0235
236	529.9	.382	.056	7.167E-05	.0031	8.615E-05	.0037	.2567	.0491
237	530.4	.414	.058	7.466E-05	.0032	8.976E-05	.0039	.2606	.0491
								CARGO BAY HINGE NO. 1	
								X/L	Z,FULL SCALE(IN)
238	532.1	1.864	.249	3.213E-04	.0140	3.864E-04	.0168	.2879	420.0000
239	532.5	2.519	.337	4.347E-04	.0189	5.229E-04	.0227	.2917	420.0000
240	531.8	1.526	.218	2.804E-04	.0122	3.372E-04	.0147	.2840	415.0000
241	532.8	2.212	.311	4.010E-04	.0174	4.823E-04	.0210	.2879	415.0000
242	532.9	2.505	.358	4.614E-04	.0201	5.550E-04	.0241	.2917	415.0000
243	532.8	1.897	.232	2.990E-04	.0130	3.596E-04	.0156	.2801	405.0000
244	532.5	1.366	.160	2.058E-04	.0090	2.476E-04	.0108	.2840	405.0000
								CARGO BAY HINGE NO. 2	
								X/L	Z,FULL SCALE(IN)
245	533.0	1.614	.231	2.974E-04	.0129	3.577E-04	.0156	.3192	420.0000
246	533.1	1.483	.212	2.732E-04	.0119	3.287E-04	.0143	.3439	420.0000
247	532.9	1.410	.208	2.678E-04	.0116	3.221E-04	.0140	.3362	415.0000
248	532.7	1.239	.182	2.352E-04	.0102	2.829E-04	.0123	.3401	415.0000
249	533.4	1.224	.180	2.326E-04	.0101	2.799E-04	.0122	.3439	415.0000
250	533.0	1.057	.133	1.710E-04	.0074	2.057E-04	.0089	.3323	405.0000
251	533.1	1.110	.136	1.758E-04	.0076	2.115E-04	.0092	.3362	405.0000
								CARGO BAY HINGE NO. 3	
								X/L	Z,FULL SCALE(IN)
252	534.1	2.580	.374	4.836E-04	.0210	5.819E-04	.0253	.3923	420.0000
253	535.8	3.644	.529	6.851E-04	.0298	8.247E-04	.0359	.3961	420.0000
254	534.0	2.239	.340	4.390E-04	.0191	5.282E-04	.0230	.3884	415.0000
257	535.1	2.840	.383	4.956E-04	.0216	5.965E-04	.0259	.3845	405.0000
258	536.1	3.630	.495	6.409E-04	.0279	7.716E-04	.0336	.3884	405.0000

DATE 5/12/75

AEDC(ARO,INC.) ARNOLD AFS, TENNESSEE
VON KARMAN GAS DYNAMICS FACILITY
50 INCH HYPERSONIC TUNNEL B
V418-87A

GROUP	TEST CONDITION	MODEL	MACH NO	PO,PSIA	TO,DEG R	ALPHA-MODEL	ALPHA-SECTOR	ALPHA-PREBEND	ROLL MODEL	YAW
59	21	140 B	7.98	430.6	1309	30.08	-.08	30.00	179.94	.0

T-INF (DEG R)	P-INF (PSIA)	Q-INF (PSIA)	V-INF (FT/SEC)	RHO-INF (SLUGS/FT3)	MU-INF (LB-SEC/FT2)	RE/FT (FT-1)	HREF-FR (R= .0400FT)	STFR (R= .0400FT)	SWITCH POSITION
95.3	.045	1.998	3816	3.949E-05	7.669E-08	1.965E 06	2.299E-02	1.920E-02	3

TOP CENTERLINE

TC NO	TW	DTWDT	QDOT	H(TO)	H(TO)/HREF	H(.9TO)	H(.9TO)/HREF	X/L
367	562.6	77.968	9.383	1.293E-02	.5622	1.577E-02	.6859	0
368	560.0	56.437	7.252	9.689E-03	.4214	1.174E-02	.5107	.0008
369	553.4	41.998	4.962	6.571E-03	.2858	7.949E-03	.3457	.0019
370	547.8	31.732	3.896	5.121E-03	.2228	6.185E-03	.2690	.0037
371	541.7	21.322	2.093	2.730E-03	.1187	3.292E-03	.1432	.0058
372	537.8	13.679	1.763	2.287E-03	.0995	2.755E-03	.1198	.0087
373	535.8	8.391	1.099	1.422E-03	.0619	1.712E-03	.0745	.0118
374	536.2	6.532	.856	1.108E-03	.0482	1.334E-03	.0580	.0151
375	535.5	5.360	.733	9.482E-04	.0412	1.141E-03	.0497	.0182
376	536.7	4.602	.607	7.865E-04	.0342	9.470E-04	.0412	.0215
377	537.1	4.181	.539	6.982E-04	.0304	8.409E-04	.0366	.0246
378	537.7	3.663	.428	5.549E-04	.0241	6.684E-04	.0291	.0278
379	537.4	2.026	.249	3.232E-04	.0141	3.893E-04	.0169	.0609
380	536.0	1.750	.180	2.329E-04	.0101	2.804E-04	.0122	.0646
381	535.1	1.609	.208	2.695E-04	.0117	3.244E-04	.0141	.0684
382	534.5	1.353	.177	2.287E-04	.0099	2.752E-04	.0120	.0721
383	534.1	1.217	.163	2.106E-04	.0092	2.535E-04	.0110	.0760
384	533.7	1.054	.147	1.896E-04	.0082	2.281E-04	.0099	.0796
385	534.0	1.010	.130	1.678E-04	.0073	2.019E-04	.0088	.0789
386	533.6	1.098	.130	1.676E-04	.0073	2.016E-04	.0088	.0982
387	533.7	1.189	.146	1.884E-04	.0082	2.267E-04	.0099	.1019
388	534.0	1.675	.159	2.057E-04	.0089	2.475E-04	.0108	.1160
389	533.3	1.490	.216	2.788E-04	.0121	3.354E-04	.0146	.1195
390	532.7	1.388	.219	2.820E-04	.0123	3.392E-04	.0148	.1231
391	532.7	1.363	.217	2.799E-04	.0122	3.367E-04	.0146	.1268
392	532.9	1.419	.243	3.136E-04	.0136	3.772E-04	.0164	.1305
393	532.7	1.519	.257	3.311E-04	.0144	3.983E-04	.0173	.1338
394	532.7	1.630	.274	3.526E-04	.0153	4.241E-04	.0184	.1376
395	532.8	1.668	.249	3.214E-04	.0140	3.867E-04	.0168	.1411
396	533.3	1.749	.259	3.344E-04	.0145	4.023E-04	.0175	.1448
397	533.6	1.688	.250	3.230E-04	.0140	3.886E-04	.0169	.1483
398	533.1	2.627	.369	4.764E-04	.0207	5.731E-04	.0249	.1519
399	539.3	7.153	.958	1.245E-03	.0542	1.500E-03	.0653	.1556

DATE 5/12/75

AEDC(ARO,INC.) ARNOLD AFS, TENNESSEE
VON KARMAN GAS DYNAMICS FACILITY
50 INCH HYPERSONIC TUNNEL B
V418-87A

RUN	TEST CONDITION	MODEL	MACH NO	PO,PSIA	TO,DEG R	ALPHA-MODEL	ALPHA-SECTOR	ALPHA-PREBEND	ROLL MODEL	YAW
59	21	140 B	7.98	430.6	1309	30.08	-.08	30.00	179.94	.0

T-INF (DEG R)	P-INF (PSIA)	Q-INF (PSIA)	V-INF (FT/SEC)	RHO-INF (SLUGS/FT3)	MU-INF (LB-SEC/FT2)	RE/FT (FT-1)	HREF-FR (R= .0400FT)	STFR (R= .0400FT)	SWITCH POSITION
95.3	.045	1.998	3816	3.949E-05	7.669E-08	1.965E 06	2.299E-02	1.920E-02	3

TC NO	TW	DTWDT	GDOT	H(TO)	H(TO)/HREF	H(.9TO)	H(.9TO)/HREF	X/L
								TOP CENTERLINE
400	539.8	9.375	1.268	1.650E-03	.0718	1.988E-03	.0865	.1582
401	539.3	9.683	1.257	1.635E-03	.0711	1.970E-03	.0857	.1608
402	540.4	10.320	1.290	1.680E-03	.0731	2.024E-03	.0881	.1635
403	540.7	10.182	1.241	1.616E-03	.0703	1.949E-03	.0848	.1664
404	540.2	9.598	1.165	1.517E-03	.0660	1.828E-03	.0795	.1691
405	540.7	9.475	1.151	1.499E-03	.0652	1.806E-03	.0786	.1720
406	539.8	7.996	.970	1.260E-03	.0548	1.519E-03	.0661	.1748
407	538.6	6.509	.842	1.094E-03	.0476	1.318E-03	.0573	.1769
408	538.1	5.767	.846	1.099E-03	.0478	1.323E-03	.0576	.1800
409	536.6	4.271	.615	7.907E-04	.0347	9.593E-04	.0417	.1831
410	535.1	3.753	.540	6.935E-04	.0304	8.422E-04	.0366	.1863
411	535.3	2.574	.387	5.000E-04	.0217	6.018E-04	.0262	.1894
412	535.1	1.973	.268	3.406E-04	.0151	4.171E-04	.0181	.1931
413	534.3	1.770	.237	3.003E-04	.0133	3.686E-04	.0160	.1972
414	534.3	.835	.112	1.444E-04	.0063	1.738E-04	.0076	.2049
415	532.5	.495	.049	6.291E-05	.0027	7.567E-05	.0033	.2250
416	531.8	.281	.033	4.235E-05	.0018	5.092E-05	.0022	.2500
								NOSE TC (Z = 338)
								X/L 2Y/B
145	568.5	52.022	7.092	9.584E-03	.4169	1.164E-02	.5064	.0008 .5039
146	570.3	56.082	7.652	1.037E-02	.4509	1.260E-02	.5481	.0023 .5082
147	560.8	46.666	6.337	8.476E-03	.3687	1.027E-02	.4469	.0043 .5135
148	558.2	35.563	4.994	6.642E-03	.2889	8.045E-03	.3500	.0068 .5205
149	553.8	25.589	3.716	4.923E-03	.2142	5.956E-03	.2591	.0095 .5279
150	555.3	22.333	3.216	4.270E-03	.1857	5.168E-03	.2248	.0122 .5354
151	555.8	15.543	2.197	2.919E-03	.1270	3.533E-03	.1537	.0218 .5621
152	554.3	14.926	2.034	2.697E-03	.1173	3.263E-03	.1419	.0251 .5712
153	554.7	15.942	1.957	2.596E-03	.1129	3.141E-03	.1366	.0286 .5808
154	555.0	16.396	2.050	2.721E-03	.1183	3.292E-03	.1432	.0319 .5898
155	555.4	15.899	2.010	2.668E-03	.1161	3.230E-03	.1405	.0354 .5995
156	553.9	14.472	1.808	2.396E-03	.1042	2.899E-03	.1261	.0387 .6085
157	553.8	14.015	1.732	2.295E-03	.0998	2.777E-03	.1208	.0420 .6176
158	553.6	13.980	1.728	2.289E-03	.0995	2.768E-03	.1204	.0462 .6294
159	552.7	13.582	1.531	2.025E-03	.0881	2.449E-03	.1065	.0503 .6406

GROUP 59 CENTERLINE TIME 2.65

CH	TC	FIT LENGTH	DTDWT	UNCERTAINTY	CH	TC	FIT LENGTH	DTDWT	UNCERTAINTY
1	221	2.00	.670	.0163	50	384	1.20	1.054	.0164
2	222	1.20	1.295	.0197	51	385	2.00	1.010	.0143
3	223	.80	2.363	.0136	52	386	1.20	1.098	.0260
4	224	.80	3.854	.0106	53	387	1.20	1.189	.0206
5	225	.80	2.461	.0556	54	388	1.20	1.675	.0158
6	226	.40	8.226	.0422	55	389	1.20	1.490	.0141
7	227	.60	4.813	.0490	56	390	1.20	1.388	.0612
8	228	.60	4.322	.0099	57	391	1.20	1.363	.0124
9	229	.60	4.277	.0184	58	392	1.20	1.419	.0122
10	232	2.00	.294	.0271	59	393	1.20	1.519	.0127
11	233	2.00	.350	.0331	60	394	1.20	1.630	.0105
12	236	2.00	.382	.0227	61	395	1.20	1.668	.0168
13	237	2.00	.414	.0184	62	396	1.20	1.749	.0105
14	238	1.20	1.864	.0077	63	397	1.20	1.688	.0130
15	239	.80	2.519	.0225	64	398	.80	2.627	.0161
16	240	1.20	1.526	.0170	65	399	.60	7.153	.0063
17	241	.80	2.212	.0389	66	400	.40	9.375	.0084
18	242	.80	2.505	.0127	67	401	.40	9.683	.0068
19	243	1.20	1.897	.0104	68	402	.40	10.320	.0692
20	244	1.20	1.366	.0155	69	403	.40	10.182	.0074
21	245	1.20	1.614	.0117	70	404	.40	9.598	.0065
22	246	1.20	1.483	.0148	71	405	.40	9.475	.0126
23	247	1.20	1.410	.0261	72	406	.40	7.996	.0089
24	248	1.20	1.239	.0271	73	407	.60	6.509	.0089
25	249	1.20	1.224	.0244	74	408	.60	5.767	.0112
26	250	1.20	1.057	.0240	75	409	.60	4.271	.0163
27	251	1.20	1.110	.0175	76	410	.80	3.753	.0137
28	252	.80	2.580	.0072	77	411	.80	2.574	.0154
29	253	.80	3.644	.0099	78	412	.80	1.973	.0147
30	254	.80	2.239	.0134	79	413	1.20	1.770	.0706
31	257	.80	2.840	.0118	80	414	2.00	.835	.0140
32	258	.80	3.630	.0099	81	415	2.00	.495	.0172
33	367	.20	77.968	.0019	82	416	2.00	.281	.0262
34	368	.20	56.437	.0029	83	145	.20	52.022	.0045
35	369	.20	41.998	.0105	84	146	.20	56.082	.0057
36	370	.30	31.732	.0054	85	147	.20	46.666	.0021
37	371	.30	21.322	.0035	86	148	.20	35.563	.0055
38	372	.40	13.679	.0079	87	149	.30	25.589	.0141
39	373	.40	8.391	.0117	88	150	.30	22.333	.0053
40	374	.60	6.532	.0100	89	151	.40	15.543	.0068
41	375	.60	5.360	.0068	90	152	.30	14.926	.0537
42	376	.60	4.602	.0090	91	153	.30	15.942	.0079
43	377	.60	4.181	.0186	92	154	.30	16.396	.0183
44	378	.80	3.663	.0096	93	155	.40	15.899	.0043
45	379	1.20	2.026	.0088	94	156	.40	14.472	.0053
46	380	1.20	1.750	.0096	95	157	.40	14.015	.0100
47	381	1.20	1.609	.0324	96	158	.40	13.980	.0054
48	382	1.20	1.353	.0144	97	159	.40	13.582	.0056
49	383	1.20	1.217	.0193	98	0	-0	0	0

42 .050

BIT ON LOOP 52

DATE 5/12/75

AEDC(APO,INC.) ARNOLD AFS, TENNESSEE
VON KARMAN GAS DYNAMICS FACILITY
50 INCH HYPERSONIC TUNNEL B
V41B-87A

GROUP	TEST CONDITION	MODEL	MACH NO	PO,PSIA	TO,DEG R	ALPHA-MODEL	ALPHA-SECTOR	ALPHA-PREBEND	ROLL MODEL	YAW
60	22	140 B	7.98	430.5	1308	30.00	-1.96	30.00	89.88	2.0

T-INF (DEG R)	P-INF (PSIA)	Q-INF (PSIA)	V-INF (FT/SEC)	RHO-INF (SLUGS/FT3)	MU-INF (LB-SEC/FT2)	RE/FT (FT-1)	HREF-FR (R= .0400FT)	STFR (R= .0400FT)	SWITCH POSITION
95.2	.045	1.998	3816	3.949E-05	7.666E-08	1.966E 06	2.299E-02	1.920E-02	1

TC NO	TW	DTWOT	QDOT	H(TO)	H(TO)/HREF	H(.9TO)	H(.9TO)/HREF	X/L	Z,FULL SCALE(IN)
								FUSELAGE VENT NO. 1	
1	539.5	1.655	.219	2.846E-04	.0124	3.429E-04	.0149	.4434	376.6300
2	539.2	1.389	.147	2.435E-04	.0106	2.935E-04	.0128	.4264	371.6300
3	538.9	1.293	.178	2.310E-04	.0101	2.784E-04	.0121	.4303	371.6300
4	538.9	1.291	.176	2.285E-04	.0099	2.754E-04	.0120	.4342	371.6300
5	539.2	1.207	.141	2.095E-04	.0091	2.525E-04	.0110	.4380	371.6300
6	539.5	1.088	.144	1.876E-04	.0082	2.261E-04	.0098	.4434	369.1300
7	539.3	.851	.124	1.617E-04	.0070	1.948E-04	.0085	.4226	366.6300
8	539.4	.980	.148	1.924E-04	.0084	2.318E-04	.0101	.4264	366.6300
9	539.4	.837	.122	1.585E-04	.0069	1.910E-04	.0083	.4303	366.6300
10	539.3	.764	.109	1.419E-04	.0062	1.710E-04	.0074	.4342	366.6300
11	539.8	.757	.102	1.332E-04	.0058	1.606E-04	.0070	.4380	366.6300
12	540.3	.713	.098	1.282E-04	.0056	1.545E-04	.0067	.4496	366.6300
13	541.4	.448	.066	8.600E-05	.0037	1.037E-04	.0045	.4187	357.1300
14	540.2	.470	.064	8.301E-05	.0036	1.008E-04	.0044	.4396	361.6300
15	540.6	.568	.076	9.879E-05	.0043	1.191E-04	.0052	.4434	361.6300
16	541.0	.342	.046	6.036E-05	.0026	7.277E-05	.0032	.4396	355.6300
17	541.9	.331	.045	5.847E-05	.0025	7.050E-05	.0031	.4434	355.6300
18	542.7	.273	.038	4.998E-05	.0022	6.028E-05	.0026	.4396	351.6300
19	543.9	.166	.023	3.043E-05	.0013	3.672E-05	.0016	.4291	332.6300
								CARGO BAY VENT NO. 1	
22	540.1	2.815	.391	5.091E-04	.0221	6.136E-04	.0267	.3974	397.6300
23	540.3	2.919	.408	5.315E-04	.0231	6.406E-04	.0279	.4013	397.6300
24	541.6	3.795	.514	6.705E-04	.0292	8.084E-04	.0352	.4052	397.6300
25	542.0	3.973	.524	6.837E-04	.0297	8.245E-04	.0359	.4090	397.6300
26	542.4	4.697	.617	8.062E-04	.0351	9.723E-04	.0423	.4129	397.6300
27	541.1	2.999	.414	5.451E-04	.0237	6.572E-04	.0286	.3936	392.6300
28	541.3	3.407	.490	6.393E-04	.0278	7.708E-04	.0335	.3974	392.6300
29	542.1	4.194	.606	7.906E-04	.0344	9.535E-04	.0415	.4013	392.6300
30	542.0	4.733	.681	8.895E-04	.0387	1.073E-03	.0467	.4052	392.6300
31	542.3	4.968	.695	9.080E-04	.0395	1.095E-03	.0476	.4090	392.6300
32	542.0	4.931	.654	8.544E-04	.0372	1.030E-03	.0448	.4129	392.6300
33	542.2	4.203	.601	7.851E-04	.0342	9.468E-04	.0412	.4090	386.1300
34	543.7	5.447	.738	9.660E-04	.0420	1.165E-03	.0507	.4129	387.6300
35	544.5	4.824	.684	8.904E-04	.0390	1.082E-03	.0471	.3897	383.1300
36	541.2	2.655	.386	5.029E-04	.0219	6.064E-04	.0264	.4090	378.6300
37	542.0	4.158	.586	7.644E-04	.0333	9.218E-04	.0401	.4129	382.1300
38	541.2	2.738	.382	4.977E-04	.0217	6.000E-04	.0261	.4129	377.1300
39	541.5	2.170	.317	4.138E-04	.0180	4.990E-04	.0217	.4001	373.6300
								PROTUBERANCES	
41	542.5	5.174	.694	9.065E-04	.0394	1.093E-03	.0476	.3546	379.0500
42	543.1	5.350	.732	9.570E-04	.0416	1.154E-03	.0502	.3604	379.0500
43	542.6	4.893	.636	8.315E-04	.0362	1.003E-03	.0436	.3450	374.0500

DATE 5/12/75

AEDC(ARO,INC.) ARNOLD AFS, TENNESSEE
VON KARMAN GAS DYNAMICS FACILITY
50 INCH HYPERSONIC TUNNEL B
V41H-B7A

GROUP	TEST CONDITION	MODEL	MACH NO	PO,PSIA	TO,DEG R	ALPHA-MODEL	ALPHA-SECTOR	ALPHA-PREBEND	ROLL MODEL	YAW
60	22	140 B	7.98	430.5	1308	30.00	-1.96	30.00	89.88	2.0

T-INF (DEG R)	P-INF (PSIA)	Q-INF (PSIA)	V-INF (FT/SEC)	RHO-INF (SLUGS/FT3)	MU-INF (LB-SEC/FT2)	RE/FT (FT-1)	HREF-FR (R= .0400FT)	STFR (R= .0400FT)	SWITCH POSITION
95.2	.045	1.598	3816	3.949E-05	7.666E-08	1.966E 06	2.299E-02	1.920E-02	1

TC NO	TW	DTWDT	QDOT	H(TO)	H(TO)/HREF	H(.9TO)	H(.9TO)/HREF
44	543.4	5.306	.724	9.466E-04	.0412	1.142E-03	.0497
45	543.2	4.413	.612	8.000E-04	.0348	9.650E-04	.0420
46	543.5	4.767	.667	8.730E-04	.0380	1.053E-03	.0458
47	545.3	6.091	.813	1.065E-03	.0463	1.286E-03	.0559
48	542.5	3.366	.465	6.071E-04	.0264	7.322E-04	.0319
49	543.9	4.556	.628	8.215E-04	.0357	9.912E-04	.0431
50	542.4	2.597	.361	4.716E-04	.0205	5.688E-04	.0247
51	542.8	2.543	.346	4.516E-04	.0196	5.447E-04	.0237
52	542.9	2.087	.287	3.757E-04	.0163	4.532E-04	.0197
53	542.5	2.027	.296	3.872E-04	.0168	4.670E-04	.0203
54	536.9	1.501	.214	2.777E-04	.0121	3.344E-04	.0145
55	543.2	1.538	.220	2.878E-04	.0125	3.471E-04	.0151
56	537.9	1.632	.210	2.731E-04	.0119	3.290E-04	.0143
57	539.2	2.252	.275	3.581E-04	.0156	4.315E-04	.0188
58	541.9	3.421	.452	5.906E-04	.0257	7.122E-04	.0310
59	544.5	4.593	.606	7.939E-04	.0345	9.580E-04	.0417
60	544.2	3.829	.535	6.999E-04	.0304	8.445E-04	.0367
61	542.6	3.180	.404	5.273E-04	.0229	6.360E-04	.0277
62	539.5	2.195	.249	3.505E-04	.0153	4.224E-04	.0184
63	538.1	1.635	.214	2.775E-04	.0121	3.343E-04	.0145
64	539.2	.038	.005	5.920E-06	.0003	7.134E-06	.0003
65	537.1	1.342	.192	2.367E-04	.0103	2.851E-04	.0124
66	538.6	2.014	.254	3.304E-04	.0144	3.980E-04	.0173
67	540.6	2.686	.378	4.924E-04	.0214	5.936E-04	.0258
68	543.6	4.108	.522	6.825E-04	.0297	8.234E-04	.0358

PROTUBERANCES

X/L	Z,FULL SCALE(IN)
.3508	374.0500
.3566	374.0500
.3604	374.0500
.3392	366.5500
.3566	366.5500
.3392	360.7000
.3566	360.7000
.3604	360.7000
.3392	353.2000
.3450	353.2000
.3508	353.2000
.3566	353.2000

SUBLIMATOR VENT NO. 1

X/L	Z,FULL SCALE(IN)
.3031	371.1300
.3074	369.1300
.3089	363.6300
.3074	358.1300
.3031	356.1300
.2988	358.1300
.2973	363.6300
.2988	369.1300
.3031	376.1300
.3089	378.6300
.3101	372.6300
.3157	370.3800
.3128	363.6300

DATE 5/12/75

AEDC(ARO,INC.) ARNOLD AFS, TENNESSEE
VON KARMAN GAS DYNAMICS FACILITY
50 INCH HYPERSONIC TUNNEL B
V41B-87A

GROUP	TEST CONDITION	MODEL	MACH NO	PO,PSIA	TO,DEG R	ALPHA-MODEL	ALPHA-SECTOR	ALPHA-PREBEND	ROLL MODEL	YAW
60	22	140 B	7.98	430.5	1308	30.00	-1.96	30.00	89.88	2.0

T-INF (DEG R)	P-INF (PSIA)	Q-INF (PSIA)	V-INF (FT/SEC)	RHO-INF (SLUGS/FT3)	MU-INF (LB-SEC/FT2)	RE/FT (FT-1)	HREF-FR (R= .0400FT)	STFR (R= .0400FT)	SWITCH POSITION
95.2	.045	1.598	3816	3.949E-05	7.666E-08	1.966E 06	2.299E-02	1.920E-02	1

TC NO	TW	DTWDT	QDOT	H(TO)	H(TO)/HREF	H(.9TO)	H(.9TO)/HREF	X/L	Z,FULL SCALE(IN)
								FUSELAGE VENT PANEL NO. 7	
69	537.5	1.919	.298	3.477E-04	.0151	4.188E-04	.0182	.2487	356.4000
70	537.5	1.732	.212	2.756E-04	.0120	3.319E-04	.0144	.2591	356.4000
71	538.0	1.934	.263	3.418E-04	.0149	4.117E-04	.0179	.2419	351.4000
72	538.5	1.699	.241	3.133E-04	.0136	3.774E-04	.0164	.2487	351.4000
73	538.5	1.864	.242	3.145E-04	.0137	3.789E-04	.0165	.2552	351.4000
74	538.7	1.853	.225	2.922E-04	.0127	3.520E-04	.0153	.2610	351.4000
75	540.7	1.953	.266	3.466E-04	.0151	4.179E-04	.0182	.2419	342.8000
77	540.6	2.186	.311	4.047E-04	.0176	4.878E-04	.0212	.2552	342.8000
78	541.7	2.672	.368	4.799E-04	.0209	5.787E-04	.0252	.2610	342.8000
79	543.2	2.245	.288	3.767E-04	.0164	4.544E-04	.0198	.2419	334.2000
80	543.2	2.508	.343	4.489E-04	.0195	5.415E-04	.0236	.2487	334.2000
81	543.9	3.107	.435	5.695E-04	.0248	6.871E-04	.0299	.2552	334.2000
								ACCESS HATCH WINDOW	
								X/L	Z,FULL SCALE(IN)
83	536.0	3.223	.431	5.580E-04	.0243	6.719E-04	.0292	.2131	398.0000
84	537.3	3.365	.444	5.762E-04	.0251	6.940E-04	.0302	.2131	388.0000
85	536.4	2.879	.393	5.088E-04	.0221	6.126E-04	.0267	.2131	383.0000
87	533.6	2.343	.335	4.322E-04	.0188	5.201E-04	.0226	.2222	395.8000
88	536.2	3.155	.441	5.719E-04	.0249	6.886E-04	.0300	.2193	386.5000
89	536.3	3.167	.466	6.038E-04	.0263	7.270E-04	.0316	.2177	381.8000
90	535.6	3.021	.412	5.333E-04	.0232	6.420E-04	.0279	.2297	389.5000
91	536.5	3.141	.431	5.588E-04	.0243	6.729E-04	.0293	.2243	382.5000
92	537.0	2.796	.395	5.126E-04	.0223	6.174E-04	.0269	.2214	378.7000
93	536.2	2.846	.364	4.715E-04	.0205	5.677E-04	.0247	.2343	374.0000
94	538.0	2.988	.389	5.053E-04	.0220	6.087E-04	.0265	.2274	375.5000
95	537.5	2.826	.412	5.217E-04	.0227	6.284E-04	.0273	.2239	373.3000
96	537.2	2.503	.326	4.228E-04	.0184	5.092E-04	.0222	.2363	368.0000
97	537.8	2.867	.367	4.763E-04	.0207	5.738E-04	.0250	.2286	368.0000
98	537.5	2.600	.365	4.740E-04	.0206	5.709E-04	.0248	.2247	368.0000
100	538.9	2.593	.368	4.784E-04	.0208	5.764E-04	.0251	.2274	360.5000
102	539.8	2.336	.331	4.305E-04	.0187	5.188E-04	.0226	.2081	354.3000
103	538.9	2.942	.387	5.036E-04	.0219	6.068E-04	.0264	.2023	362.7000
105	537.6	2.921	.366	4.750E-04	.0207	5.721E-04	.0249	.2050	378.7000
106	537.3	3.534	.454	5.887E-04	.0256	7.090E-04	.0308	.2050	386.2000

GROUP 60 CENTERLINE TIME 2.75

CH	TC	FIT LENGTH	DTDWT	UNCERTAINTY	CH	TC	FIT LENGTH	DTDWT	UNCERTAINTY
1	1	1.20	1.655	.0075	50	53	.80	2.027	.0138
2	2	1.20	1.389	.0131	51	54	1.20	1.501	.0247
3	3	1.20	1.293	.0109	52	55	1.20	1.538	.0150
4	4	1.20	1.291	.0121	53	56	1.20	1.632	.0103
5	5	1.20	1.267	.0408	54	57	.80	2.252	.0199
6	6	1.20	1.088	.0112	55	58	.80	3.421	.0126
7	7	2.00	.851	.0592	56	59	.60	4.593	.0407
8	8	2.00	.980	.0068	57	60	.80	3.829	.0062
9	9	2.00	.837	.0165	58	61	.80	3.180	.0092
10	10	2.00	.764	.0109	59	62	.80	2.195	.0259
11	11	2.00	.757	.0156	60	63	1.20	1.635	.0100
12	12	2.00	.713	.0186	61	64	2.00	.038	.5807
13	13	2.00	.448	.0194	62	65	1.20	1.342	.0089
14	14	2.00	.470	.0213	63	66	.80	2.014	.0220
15	15	2.00	.568	.0324	64	67	.80	2.686	.0113
16	16	2.00	.342	.0236	65	68	.60	4.108	.0149
17	17	2.00	.331	.0687	66	69	1.20	1.919	.0195
18	18	2.00	.273	.0577	67	70	1.20	1.732	.0091
19	19	2.00	.166	.0493	68	71	.80	1.934	.2079
20	22	.80	2.815	.0157	69	72	1.20	1.699	.0325
21	23	.80	2.919	.0110	70	73	1.20	1.864	.0118
22	24	.80	3.795	.0073	71	74	1.20	1.853	.0199
23	25	.80	3.973	.0146	72	75	1.20	1.953	.0120
24	26	.60	4.697	.0125	73	77	.80	2.186	.0096
25	27	.80	2.999	.0105	74	78	.80	2.672	.0192
26	28	.80	3.407	.0109	75	79	.80	2.245	.0162
27	29	.60	4.194	.0145	76	80	.80	2.508	.0185
28	30	.60	4.733	.0109	77	81	.80	3.107	.0089
29	31	.60	4.968	.0096	78	83	.80	3.223	.0130
30	32	.60	4.931	.0098	79	84	.80	3.365	.0624
31	33	.60	4.283	.0132	80	85	.80	2.879	.0144
32	34	.60	5.447	.0078	81	87	.80	2.343	.0195
33	35	.60	4.824	.0108	82	88	.80	3.155	.0104
34	36	.80	2.655	.0091	83	89	.80	3.167	.0124
35	37	.60	4.158	.0083	84	90	.80	3.021	.0107
36	38	.80	2.738	.0110	85	91	.80	3.141	.0158
37	39	.80	2.170	.0146	86	92	.80	2.796	.0144
38	41	.60	5.174	.0132	87	93	.80	2.846	.0316
39	42	.60	5.350	.0091	88	94	.80	2.988	.0089
40	43	.60	4.893	.0142	89	95	.80	2.826	.0237
41	44	.60	5.306	.0093	90	96	.80	2.503	.0762
42	45	.60	4.413	.0067	91	97	.80	2.867	.0213
43	46	.60	4.767	.0159	92	98	.80	2.600	.0366
44	47	.60	6.091	.0087	93	100	.80	2.593	.0154
45	48	.80	3.386	.0089	94	102	.80	2.336	.0168
46	49	.60	4.556	.0090	95	103	.80	2.942	.0203
47	50	.80	2.597	.0306	96	105	.80	2.921	.0122
48	51	.80	2.543	.0133	97	106	.80	3.534	.0079
49	52	.80	2.087	.0133	98	0	-0	0	0
	61	.050							

BIT ON LOOP 56

DATE 5/12/75

AEDC(ARO,INC.) ARNOLD AFS, TENNESSEE
VON KARMAN GAS DYNAMICS FACILITY
50 INCH HYPERSONIC TUNNEL B
V41B-B7A

GROUP	TEST CONDITION	MODEL	MACH NO	PO,PSIA	TO,DEG R	ALPHA-MODEL	ALPHA-SECTOR	ALPHA-PREBEND	ROLL MODEL	YAW
61	22	140 B	7.98	429.6	1308	30.00	-1.99	30.00	89.92	2.0

T-INF (DEG R)	P-INF (PSIA)	Q-INF (PSIA)	V-INF (FT/SEC)	RHO-INF (SLUGS/FT3)	MU-INF (LB-SEC/FT2)	RE/FT (FT-1)	HREF-FR (R= .0400FT)	STFR (R= .0400FT)	SWITCH POSITION
95.2	.045	1.994	3815	3.942E-05	7.664E-08	1.962E 06	2.296E-02	1.922E-02	2

TC NO	TW	DTWDT	QDOT	H(TO)	H(TO)/HREF	H(.9TO)	H(.9TO)/HREF
ACCESS HATCH WINDOW							
						X/L	Z,FULL SCALE(IN)
107	537.1	3.095	.445	5.773E-04	.0251	6.953E-04	.0303
						.2050	396.2000
FUSELAGE VENT PANEL NO. 3 AND 1							
						X/L	Z,FULL SCALE(IN)
108	540.5	5.494	.593	7.604E-04	.0331	9.167E-04	.0399
109	538.8	4.918	.610	7.932E-04	.0345	9.558E-04	.0416
110	538.6	4.860	.620	8.067E-04	.0351	9.720E-04	.0423
111	539.3	5.097	.616	8.021E-04	.0349	9.666E-04	.0421
112	540.1	5.072	.634	7.873E-04	.0343	9.490E-04	.0413
113	541.6	5.343	.616	8.035E-04	.0350	9.689E-04	.0422
114	540.2	4.919	.593	7.724E-04	.0336	9.310E-04	.0405
115	539.8	4.661	.583	7.591E-04	.0331	9.149E-04	.0398
116	540.0	4.777	.589	7.666E-04	.0334	9.240E-04	.0402
117	541.6	5.111	.591	7.716E-04	.0336	9.304E-04	.0405
118	541.2	4.099	.568	7.415E-04	.0323	8.941E-04	.0389
119	542.5	4.732	.615	8.044E-04	.0350	9.702E-04	.0423
120	544.2	4.719	.593	7.769E-04	.0338	9.375E-04	.0408
121	543.5	4.279	.528	6.911E-04	.0301	8.338E-04	.0363
122	544.0	4.275	.535	7.010E-04	.0305	8.458E-04	.0368
LOWER RCS NOZZLES							
						X/L	Z,FULL SCALE(IN)
124	535.3	2.227	.199	2.577E-04	.0112	3.103E-04	.0135
125	534.8	2.423	.264	3.417E-04	.0149	4.113E-04	.0179
126	535.2	2.457	.337	4.363E-04	.0190	5.252E-04	.0229
127	534.9	2.234	.301	3.901E-04	.0170	4.695E-04	.0204
128	535.0	2.717	.339	4.273E-04	.0186	5.143E-04	.0224
129	536.2	3.247	.392	4.949E-04	.0216	5.959E-04	.0260
130	537.6	2.819	.338	4.365E-04	.0191	5.282E-04	.0230
131	535.6	2.709	.401	5.191E-04	.0226	6.250E-04	.0272
132	537.0	4.224	.493	6.430E-04	.0279	7.707E-04	.0336
133	535.9	3.088	.375	4.865E-04	.0212	5.858E-04	.0255
134	536.4	4.064	.545	7.069E-04	.0308	8.512E-04	.0371
135	538.3	5.235	.630	8.191E-04	.0357	9.869E-04	.0430
136	539.9	5.370	.599	7.801E-04	.0340	9.403E-04	.0410
137	539.5	5.303	.703	9.145E-04	.0398	1.102E-03	.0480
138	540.0	5.748	.664	8.654E-04	.0377	1.043E-03	.0454
139	540.5	5.309	.680	8.869E-04	.0386	1.069E-03	.0466
140	541.7	5.585	.714	9.317E-04	.0406	1.123E-03	.0489
141	542.1	5.176	.687	8.974E-04	.0391	1.082E-03	.0471
142	543.4	4.022	.440	5.701E-04	.0251	6.950E-04	.0303
143	543.4	6.265	.633	8.277E-04	.0360	9.985E-04	.0435
144	546.8	6.991	.927	1.218E-03	.0531	1.471E-03	.0641

X/L	Z,FULL SCALE(IN)
.1244	377.5000
.1302	377.5000
.1360	377.5000
.1418	377.5000
.1476	377.5000
.1215	273.5000
.1273	273.5000
.1331	273.5000
.1389	273.5000
.1447	273.5000
.1409	366.0000
.1442	366.0000
.1215	359.5000
.1303	359.5000
.1337	359.5000
.0950	400.0000
.0988	400.0000
.1027	400.0000
.0911	395.0000
.0950	395.0000
.0988	395.0000
.0810	390.0000
.0857	390.0000
.0963	390.0000
.0857	383.8000
.0872	377.3000
.0903	374.5500
.0960	374.5500
.0872	370.5500
.0928	370.5500
.0816	366.0500
.0934	362.4000
.0973	362.4000
.0833	355.2000
.0919	355.2000
.0949	349.0000

DATE 5/12/75

AEDC(ARO,INC.) ARNOLD AFS, TENNESSEE
VON KARMAN GAS DYNAMICS FACILITY
50 INCH HYPERSONIC TUNNEL B
V41B-87A

GROUP	TEST CONDITION	MODEL	MACH NO	PO,PSIA	TO,DEG R	ALPHA-MODEL	ALPHA-SECTOR	ALPHA-PREBEND	ROLL MODEL	YAW
61	22	140 B	7.98	429.6	1308	30.00	-1.99	30.00	89.92	2.0

T-INF (DEG R)	P-INF (PSIA)	U-INF (PSIA)	V-INF (FT/SEC)	RHO-INF (SLUGS/FT3)	MU-INF (LB-SEC/FT2)	RE/FT (FT-1)	HREF-FR (H= .0400FT)	STFR (R= .0400FT)	SWITCH POSITION
95.2	.045	1.594	3815	3.942E-05	7.664E-08	1.962E 06	2.296E-02	1.922E-02	2

IC NO	TW	DTWDT	GDOT	H(TO)	H(TO)/HREF	H(.9TO)	H(.9TO)/HREF	X/L	2Y/B
								UPPER RCS NOZZLES	
161	539.3	1.834	.218	2.832E-04	.0123	3.413E-04	.0149	.0619	-.0160
162	537.4	1.751	.166	2.156E-04	.0094	2.597E-04	.0113	.0709	-.0160
163	535.2	1.377	.169	2.191E-04	.0095	2.637E-04	.0115	.0807	-.0160
164	534.2	1.181	.154	1.992E-04	.0087	2.397E-04	.0104	.0943	-.0160
165	534.8	1.069	.135	1.743E-04	.0076	2.098E-04	.0091	.0978	-.0160
166	534.8	1.006	.129	1.673E-04	.0073	2.014E-04	.0088	.1013	-.0160
167	539.4	1.481	.201	2.615E-04	.0114	3.151E-04	.0137	.0619	-.0320
168	538.0	1.671	.176	2.263E-04	.0099	2.750E-04	.0120	.0709	-.0320
169	535.2	1.264	.154	1.988E-04	.0087	2.394E-04	.0104	.0807	-.0320
170	533.8	1.028	.129	1.661E-04	.0072	1.999E-04	.0087	.0943	-.0320
171	533.6	1.125	.136	1.752E-04	.0076	2.109E-04	.0092	.0978	-.0320
172	533.3	.922	.120	1.553E-04	.0068	1.868E-04	.0081	.1013	-.0320
173	535.7	.873	.117	1.512E-04	.0066	1.820E-04	.0079	.0807	-.0480
174	533.7	.604	.069	8.889E-05	.0039	1.070E-04	.0047	.0943	-.0480
175	533.3	.614	.088	1.136E-04	.0049	1.367E-04	.0060	.0978	-.0480
176	533.0	.525	.072	9.230E-05	.0040	1.110E-04	.0048	.1013	-.0480
								CANOPY	
177	542.7	9.872	1.364	1.783E-03	.0777	2.151E-03	.0937		
178	549.7	19.157	3.794	5.006E-03	.2180	6.049E-03	.2635		
179	547.9	15.471	3.263	4.295E-03	.1871	5.188E-03	.2260		
180	537.9	4.202	.549	7.132E-04	.0311	8.592E-04	.0374		
181	536.4	2.791	.379	4.920E-04	.0214	5.924E-04	.0258		
182	534.7	2.008	.286	3.702E-04	.0161	4.456E-04	.0194		
183	530.9	.470	.059	7.580E-05	.0033	9.115E-05	.0040		
184	531.2	.572	.076	1.005E-04	.0044	1.209E-04	.0053		
185	536.3	3.666	.441	5.717E-04	.0249	6.884E-04	.0300		
186	535.9	2.741	.344	4.460E-04	.0194	5.370E-04	.0234		
187	535.0	2.616	.348	4.509E-04	.0196	5.428E-04	.0236		
188	538.2	5.799	1.352	1.757E-03	.0765	2.117E-03	.0922		
189	533.9	1.920	.274	3.535E-04	.0154	4.254E-04	.0185		
190	533.6	1.618	.233	3.004E-04	.0131	3.615E-04	.0157		
191	534.5	2.408	.368	4.759E-04	.0207	5.727E-04	.0249		

DATE 5/12/75

AEDC(AHO,INC.) ARNOLD AFS, TENNESSEE
VON KARMAN GAS DYNAMICS FACILITY
50 INCH HYPERSONIC TUNNEL B
V41A-B7A

GROUP	TEST CONDITION	MODEL	MACH NO	PO,PSIA	TO,DEG R	ALPHA-MODEL	ALPHA-SECTOR	ALPHA-PREBEND	ROLL MODEL	YAW
61	22	140 B	7.98	429.6	1308	30.00	-1.99	30.00	89.92	2.0

T-INF (DEG R)	P-INF (PSIA)	Q-INF (PSIA)	V-INF (FT/SEC)	RHO-INF (SLUGS/FT3)	MU-INF (LB-SEC/FT2)	RE/FT (FT-1)	HREF-FR (R= .0400FT)	STFR (R= .0400FT)	SWITCH POSITION
95.2	.045	1.994	3815	3.942E-05	7.664E-08	1.962E 06	2.296E-02	1.922E-02	2

TC NO	TW	DTW/DT	QDOT	H(TO)	H(TO)/HREF	H(.9TO)	H(.9TO)/HREF
						CANOPY	
192	530.6	.239	.034	4.327E-05	.0019	5.202E-05	.0023
193	534.1	2.493	.481	6.216E-04	.0271	7.480E-04	.0326
194	530.3	.325	.042	5.388E-05	.0023	6.477E-05	.0028
195	531.2	.524	.064	8.303E-05	.0036	9.984E-05	.0043
196	532.1	1.060	.140	1.807E-04	.0079	2.173E-04	.0095
197	530.9	.601	.060	7.663E-05	.0033	9.214E-05	.0040
198	530.6	.535	.062	7.980E-05	.0035	9.595E-05	.0042
199	530.0	1.018	.137	1.756E-04	.0076	2.111E-04	.0092
200	531.8	1.378	.196	2.527E-04	.0110	3.039E-04	.0132
201	533.3	1.805	.255	3.269E-04	.0143	3.957E-04	.0172
202	534.1	2.508	.317	4.097E-04	.0178	4.930E-04	.0215
203	530.3	.625	.081	1.043E-04	.0045	1.254E-04	.0055
204	530.4	1.165	.181	2.326E-04	.0101	2.797E-04	.0122
205	533.0	2.497	.389	5.022E-04	.0219	6.042E-04	.0263
206	530.6	.566	.075	9.643E-05	.0042	1.159E-04	.0050
207	534.0	2.929	.392	5.073E-04	.0221	6.104E-04	.0266
208	529.9	.608	.082	1.048E-04	.0046	1.260E-04	.0055
209	530.2	.716	.098	1.264E-04	.0055	1.519E-04	.0066
210	530.3	.835	.111	1.432E-04	.0062	1.722E-04	.0075
211	531.5	.775	.094	1.212E-04	.0053	1.457E-04	.0063
212	530.8	.651	.088	1.129E-04	.0049	1.358E-04	.0059
213	530.1	.788	.104	1.342E-04	.0058	1.614E-04	.0070
214	530.1	1.111	.155	2.000E-04	.0087	2.404E-04	.0105
215	530.1	1.029	.146	1.875E-04	.0082	2.254E-04	.0098
216	532.4	2.343	.332	4.289E-04	.0187	5.159E-04	.0225
217	532.7	2.343	.333	4.303E-04	.0187	5.177E-04	.0225
218	529.6	.806	.111	1.426E-04	.0062	1.714E-04	.0075
219	530.7	1.115	.157	2.015E-04	.0088	2.423E-04	.0106
220	530.5	1.467	.201	2.592E-04	.0113	3.117E-04	.0136

GROUP 61 CENTERLINE TIME 2.75

CH	TC	FIT LENGTH	DTDWT	UNCERTAINTY	CH	TC	FIT LENGTH	DTDWT	UNCERTAINTY
1	107	.80	3.098	.0138	50	173	2.00	.873	.0100
2	108	.60	5.494	.0090	51	174	2.00	.604	.0226
3	109	.60	4.918	.0108	52	175	2.00	.614	.0264
4	110	.60	4.880	.0088	53	176	2.00	.525	.0135
5	111	.60	5.097	.0138	54	177	.40	9.872	.0110
6	112	.60	5.072	.0080	55	178	.30	19.157	.0086
7	113	.60	5.343	.0381	56	179	.40	15.471	.0223
8	114	.60	4.919	.0092	57	180	.60	4.202	.0157
9	115	.60	4.681	.0100	58	181	.80	2.791	.0091
10	116	.60	4.777	.0088	59	182	.80	2.008	.0281
11	117	.60	5.111	.0171	60	183	2.00	.470	.0220
12	118	.60	4.090	.0151	61	184	2.00	.572	.0306
13	119	.60	4.732	.0094	62	185	.80	3.666	.0076
14	120	.60	4.719	.0110	63	186	.80	2.741	.0412
15	121	.60	4.279	.0220	64	187	.80	2.616	.0193
16	122	.60	4.275	.0129	65	188	.60	5.799	.0076
17	124	.80	2.227	.0311	66	189	1.20	1.920	.0144
18	125	.80	2.423	.0134	67	190	1.20	1.618	.0076
19	126	.80	2.457	.0147	68	191	.80	2.408	.1564
20	127	.80	2.234	.0185	69	192	2.00	.239	.0608
21	128	.80	2.717	.0126	70	193	.80	2.498	.0169
22	129	.80	3.247	.0083	71	194	2.00	.325	.0565
23	130	.80	2.316	.0385	72	195	2.00	.524	.0186
24	131	.80	2.709	.0133	73	196	2.00	1.068	.0136
25	132	.60	4.224	.0158	74	197	2.00	.601	.0145
26	133	.80	3.088	.0082	75	198	2.00	.535	.0222
27	134	.80	4.064	.0088	76	199	1.20	1.018	.0280
28	135	.60	5.235	.0101	77	200	1.20	1.378	.0143
29	136	.60	5.370	.0088	78	201	1.20	1.805	.0093
30	137	.60	5.363	.0117	79	202	.80	2.508	.0813
31	138	.60	5.748	.0069	80	203	2.00	.655	.0148
32	139	.60	5.309	.0089	81	204	1.20	1.165	.0184
33	140	.60	5.589	.0069	82	205	.80	2.497	.0107
34	141	.60	5.176	.0106	83	206	2.00	.566	.0169
35	142	.60	4.022	.0175	84	207	.80	2.929	.0144
36	143	.60	6.265	.0058	85	208	2.00	.608	.0150
37	144	.60	6.491	.0052	86	209	2.00	.716	.0089
38	161	1.20	1.834	.0125	87	210	2.00	.835	.0261
39	162	1.20	1.751	.0142	88	211	2.00	.775	.0090
40	163	1.20	1.377	.0186	89	212	2.00	.651	.0157
41	164	1.20	1.181	.0143	90	213	2.00	.788	.0607
42	165	1.20	1.069	.0152	91	214	1.20	1.111	.0346
43	166	1.20	1.008	.0340	92	215	1.20	1.029	.0398
44	167	1.20	1.481	.0145	93	216	.80	2.343	.0165
45	168	1.20	1.671	.0096	94	217	.80	2.343	.0220
46	169	1.20	1.264	.0118	95	218	2.00	.806	.0170
47	170	1.20	1.028	.0404	96	219	1.20	1.115	.0199
48	171	1.20	1.125	.0164	97	220	1.20	1.467	.0143
49	172	2.00	.922	.0101	98	0	-0	0	0
62		.050							

HIT ON LOOP 56

DATE 5/12/75

AEDC(ARO,INC.) ARNOLD AFS, TENNESSEE
VON KARMAN GAS DYNAMICS FACILITY
50 INCH HYPERSONIC TUNNEL H
V418-B7A

GROUP	TEST CONDITION	MODEL	MACH NO	PO,PSIA	TO,DEG R	ALPHA-MODEL	ALPHA-SECTOR	ALPHA-PREBEND	ROLL MODEL	YAW
62	22	140 B	7.98	429.1	1307	30.00	-2.00	30.00	89.94	2.0

T-INF (DEG R)	P-INF (PSIA)	Q-INF (PSIA)	V-INF (FT/SEC)	RHO-INF (SLUGS/FT3)	MU-INF (LB-SEC/FT2)	RE/FT (FT-1)	HREF-FR (R= .0400FT)	STFR (R= .0400FT)	SWITCH POSITION
95.2	.045	1.991	3815	3.938E-05	7.663E-08	1.960E 06	2.295E-02	1.923E-02	3

TC NO	TW	DTWDT	QDOT	H(TO)	H(TO)/HREF	H(.9TO)	H(.9TO)/HREF	X/L	2Y/B
								CANOPY	
221	530.5	.440	.053	6.849E-05	.0030	8.234E-05	.0036		
222	530.2	.853	.105	1.350E-04	.0059	1.623E-04	.0071		
223	527.5	1.733	.235	3.007E-04	.0131	3.612E-04	.0157		
								ESCAPE HATCH AND WINDOW	
224	532.6	6.041	.661	7.759E-04	.0338	9.334E-04	.0407	.1933	.0162
225	530.7	3.627	.433	5.578E-04	.0243	6.707E-04	.0292	.1972	.0162
226	533.5	8.662	.913	1.179E-03	.0514	1.419E-03	.0618	.1933	.0384
227	531.2	5.477	.681	1.032E-03	.0450	1.241E-03	.0541	.1972	.0384
228	527.9	2.454	.315	4.035E-04	.0176	4.848E-04	.0211	.1933	.0653
229	528.4	2.582	.331	4.251E-04	.0185	5.108E-04	.0223	.1972	.0653
232	529.5	.458	.062	7.944E-05	.0035	9.549E-05	.0042	.2567	.0235
233	530.3	.520	.079	1.014E-04	.0044	1.219E-04	.0053	.2606	.0235
236	528.9	.435	.064	8.159E-05	.0036	9.806E-05	.0043	.2567	.0491
237	529.6	.459	.064	8.285E-05	.0036	9.959E-05	.0043	.2606	.0491
								CARGO BAY HINGE NO. 1	
								X/L	Z,FULL SCALE(IN)
238	535.6	1.918	.257	3.331E-04	.0145	4.011E-04	.0175	.2879	420.0000
239	536.5	2.703	.363	4.703E-04	.0205	5.663E-04	.0247	.2917	420.0000
240	535.4	1.608	.230	2.978E-04	.0130	3.585E-04	.0156	.2840	415.0000
241	536.8	2.105	.297	3.849E-04	.0168	4.635E-04	.0202	.2879	415.0000
242	536.8	2.353	.337	4.369E-04	.0190	5.262E-04	.0229	.2917	415.0000
243	537.5	1.808	.222	2.877E-04	.0125	3.466E-04	.0151	.2801	405.0000
244	536.9	1.477	.173	2.246E-04	.0098	2.705E-04	.0118	.2840	405.0000
								CARGO BAY HINGE NO. 2	
								X/L	Z,FULL SCALE(IN)
245	535.9	1.272	.182	2.358E-04	.0103	2.839E-04	.0124	.3192	420.0000
246	536.2	1.244	.178	2.308E-04	.0101	2.779E-04	.0121	.3439	420.0000
247	536.6	.981	.145	1.878E-04	.0082	2.261E-04	.0099	.3362	415.0000
248	536.1	1.110	.164	2.123E-04	.0093	2.557E-04	.0111	.3401	415.0000
249	537.4	.947	.140	1.815E-04	.0079	2.186E-04	.0095	.3439	415.0000
250	537.6	1.244	.156	2.031E-04	.0089	2.447E-04	.0107	.3323	405.0000
251	537.8	1.306	.161	2.088E-04	.0091	2.516E-04	.0110	.3362	405.0000
								CARGO BAY HINGE NO. 3	
								X/L	Z,FULL SCALE(IN)
252	538.0	2.711	.394	5.123E-04	.0223	6.172E-04	.0269	.3923	420.0000
253	539.8	3.725	.542	7.063E-04	.0308	8.513E-04	.0371	.3961	420.0000
254	538.1	2.261	.344	4.471E-04	.0195	5.386E-04	.0235	.3884	415.0000
257	540.7	3.132	.424	5.528E-04	.0241	6.664E-04	.0290	.3845	405.0000
258	541.8	4.227	.578	7.550E-04	.0329	9.105E-04	.0397	.3884	405.0000

DATE 5/12/75

AEDC(ARO,INC.) ARNOLD AFS, TENNESSEE
VON KARMAN GAS DYNAMICS FACILITY
50 INCH HYPERSONIC TUNNEL B
V41B-87A

GROUP	TEST CONDITION	MODEL	MACH NO	PO,PSIA	TO,DEG R	ALPHA-MODEL	ALPHA-SECTOR	ALPHA-PREBEND	ROLL MODEL	YAW
62	22	140 B	7.98	429.1	1307	30.00	-2.00	30.00	89.94	2.0

T-INF (DEG R)	P-INF (PSIA)	Q-INF (PSIA)	V-INF (FT/SEC)	RHO-INF (SLUGS/FT3)	MU-INF (LB-SEC/FT2)	RE/FT (FT-1)	HREF-FR (R= .0400FT)	STFR (R= .0400FT)	SWITCH POSITION
95.2	.045	1.991	3815	3.938E-05	7.663E-08	1.960E 06	2.295E-02	1.923E-02	3

TC NO	TW	DTWDT	QDOT	H(TO)	H(TO)/HREF	H(.9TO)	H(.9TO)/HREF	TOP CENTERLINE X/L
367	594.7	73.559	8.906	1.249E-02	.5445	1.530E-02	.6668	0
368	568.3	52.547	6.781	9.173E-03	.3998	1.114E-02	.4857	.0008
369	555.7	37.265	4.408	5.863E-03	.2555	7.098E-03	.3093	.0019
370	550.7	28.164	3.463	4.575E-03	.1994	5.531E-03	.2410	.0037
371	544.8	19.350	1.903	2.495E-03	.1087	3.011E-03	.1312	.0058
372	540.3	12.737	1.643	2.142E-03	.0934	2.582E-03	.1125	.0087
373	537.7	7.963	1.044	1.356E-03	.0591	1.634E-03	.0712	.0118
374	538.5	6.141	.805	1.047E-03	.0456	1.262E-03	.0550	.0151
375	538.2	5.002	.685	8.905E-04	.0388	1.073E-03	.0468	.0182
376	539.6	4.267	.566	7.376E-04	.0321	8.889E-04	.0387	.0215
377	540.0	3.959	.511	6.654E-04	.0290	8.021E-04	.0350	.0246
378	540.4	3.428	.431	5.225E-04	.0228	6.298E-04	.0274	.0278
379	539.1	1.950	.240	3.124E-04	.0136	3.765E-04	.0164	.0609
380	537.0	1.666	.171	2.224E-04	.0097	2.679E-04	.0117	.0646
381	535.8	1.725	.224	2.898E-04	.0126	3.490E-04	.0152	.0684
382	534.2	1.344	.176	2.274E-04	.0099	2.737E-04	.0119	.0721
383	533.3	1.282	.172	2.218E-04	.0097	2.669E-04	.0116	.0760
384	532.3	1.122	.156	2.015E-04	.0088	2.424E-04	.0106	.0796
385	532.2	1.117	.144	1.852E-04	.0081	2.228E-04	.0097	.0789
386	532.6	1.333	.158	2.035E-04	.0089	2.448E-04	.0107	.0982
387	533.0	1.357	.167	2.151E-04	.0094	2.587E-04	.0113	.1019
388	533.4	1.958	.186	2.406E-04	.0105	2.895E-04	.0126	.1160
389	532.5	1.813	.263	3.393E-04	.0148	4.081E-04	.0178	.1195
390	532.0	1.687	.266	3.428E-04	.0149	4.121E-04	.0180	.1231
391	531.6	1.615	.257	3.314E-04	.0144	3.985E-04	.0174	.1268
392	531.7	1.708	.292	3.770E-04	.0164	4.534E-04	.0198	.1305
393	531.4	1.813	.306	3.949E-04	.0172	4.749E-04	.0207	.1338
394	531.4	1.953	.327	4.219E-04	.0184	5.074E-04	.0221	.1376
395	531.4	2.077	.310	3.998E-04	.0174	4.808E-04	.0210	.1411
396	531.4	2.183	.323	4.166E-04	.0182	5.010E-04	.0218	.1448
397	531.8	2.154	.319	4.111E-04	.0179	4.945E-04	.0215	.1483
398	532.0	3.101	.436	5.619E-04	.0245	6.758E-04	.0295	.1519
399	539.2	7.880	1.055	1.373E-03	.0598	1.655E-03	.0721	.1556

DATE 5/12/75

AEDC(ARO,INC.) ARNOLD AFS, TENNESSEE
VON KARMAN GAS DYNAMICS FACILITY
50 INCH HYPERSONIC TUNNEL B
V41B-B7A

GROUP	TEST CONDITION	MODEL	MACH NO	PO,PSIA	TO,DEG R	ALPHA-MODEL	ALPHA-SECTOR	ALPHA-PREBEND	ROLL MODEL	YAW
62	22	140 B	7.98	429.1	1307	30.00	-2.00	30.00	89.94	2.0

T-INF (DEG R)	P-INF (PSIA)	Q-INF (PSIA)	V-INF (FT/SEC)	RHO-INF (SLUGS/FT3)	MU-INF (LB-SEC/FT2)	RE/FT (FT-1)	HREF-FR (R= .0400FT)	STFR (R= .0400FT)	SWITCH POSITION
95.2	.045	1.991	3815	3.938E-05	7.663E-08	1.960E 06	2.295E-02	1.923E-02	3

TC NO	TW	DTWDT	QDOT	H(TO)	H(TO)/HREF	H(.9TO)	H(.9TO)/HREF	X/L	2Y/B
								TOP CENTERLINE	
400	539.7	9.630	1.303	1.696E-03	.0739	2.045E-03	.0891	.1582	
401	538.9	9.626	1.250	1.626E-03	.0709	1.959E-03	.0854	.1608	
402	540.0	10.390	1.299	1.692E-03	.0737	2.039E-03	.0889	.1635	
403	539.7	10.160	1.238	1.612E-03	.0703	1.943E-03	.0847	.1664	
404	538.6	9.609	1.166	1.516E-03	.0661	1.827E-03	.0796	.1691	
405	538.5	8.951	1.086	1.412E-03	.0615	1.701E-03	.0741	.1720	
406	536.3	7.893	.956	1.240E-03	.0540	1.493E-03	.0651	.1748	
407	536.1	7.033	.919	1.178E-03	.0513	1.419E-03	.0618	.1769	
408	534.8	5.751	.843	1.091E-03	.0475	1.313E-03	.0572	.1800	
409	533.0	4.525	.650	8.398E-04	.0366	1.010E-03	.0440	.1831	
410	533.7	3.819	.549	7.097E-04	.0309	8.540E-04	.0372	.1863	
411	531.8	3.021	.453	5.838E-04	.0254	7.022E-04	.0306	.1894	
412	531.4	2.446	.332	4.274E-04	.0186	5.140E-04	.0224	.1931	
413	531.2	1.801	.241	3.104E-04	.0135	3.733E-04	.0163	.1972	
414	530.6	.979	.131	1.685E-04	.0073	2.026E-04	.0088	.2049	
415	530.0	.522	.051	6.613E-05	.0029	7.950E-05	.0035	.2250	
416	530.3	.289	.034	4.341E-05	.0019	5.219E-05	.0023	.2500	
								NOSE TC (Z = 338)	
145	578.3	51.786	7.094	9.728E-03	.4240	1.185E-02	.5166	.0008	.5039
146	580.5	54.259	7.441	1.024E-02	.4461	1.248E-02	.5439	.0023	.5082
147	570.2	45.855	6.257	8.486E-03	.3698	1.032E-02	.4495	.0043	.5135
148	565.3	35.588	5.005	6.744E-03	.2939	8.187E-03	.3568	.0068	.5205
149	559.0	25.302	3.685	4.923E-03	.2145	5.964E-03	.2599	.0095	.5279
150	561.3	22.319	3.224	4.320E-03	.1883	5.238E-03	.2283	.0122	.5354
151	563.4	14.938	2.119	2.848E-03	.1241	3.455E-03	.1506	.0218	.5621
152	563.3	17.533	2.400	3.225E-03	.1406	3.913E-03	.1705	.0251	.5712
153	564.9	16.441	2.028	2.732E-03	.1190	3.315E-03	.1445	.0286	.5808
154	566.6	16.459	2.070	2.794E-03	.1217	3.392E-03	.1478	.0319	.5898
155	566.5	15.440	1.963	2.648E-03	.1154	3.216E-03	.1401	.0354	.5995
156	565.0	14.023	1.762	2.373E-03	.1034	2.881E-03	.1255	.0387	.6085
157	565.3	13.509	1.679	2.263E-03	.0986	2.747E-03	.1197	.0420	.6176
158	565.1	13.071	1.625	2.188E-03	.0954	2.656E-03	.1158	.0462	.6294
159	564.8	13.487	1.529	2.059E-03	.0897	2.499E-03	.1089	.0503	.6406

GROUP 62 CENTERLINE TIME 2.75

CH	TC	FIT LENGTH	DTD#T	UNCERTAINTY	CH	TC	FIT LENGTH	DTD#T	UNCERTAINTY
1	221	2.00	.440	.0211	50	384	1.20	1.122	.0169
2	222	2.00	.853	.0107	51	385	1.20	1.117	.0231
3	223	1.20	1.733	.0086	52	386	1.20	1.333	.0155
4	224	.60	6.041	.0065	53	387	1.20	1.357	.0141
5	225	.80	3.627	.0244	54	388	1.20	1.958	.0150
6	226	.40	8.662	.0161	55	389	1.20	1.813	.0106
7	227	.60	5.477	.0409	56	390	1.20	1.687	.0546
8	228	.80	2.454	.0091	57	391	1.20	1.615	.0114
9	229	.80	2.582	.0197	58	392	1.20	1.708	.0182
10	232	2.00	.458	.0183	59	393	1.20	1.813	.0170
11	233	2.00	.520	.0199	60	394	1.20	1.953	.0100
12	236	2.00	.435	.0307	61	395	1.20	2.077	.0179
13	237	2.00	.459	.0179	62	396	.80	2.183	.0104
14	238	1.20	1.918	.0110	63	397	.80	2.154	.0151
15	239	.80	2.703	.0252	64	398	.80	3.101	.0143
16	240	1.20	1.608	.0144	65	399	.60	7.880	.0073
17	241	.80	2.105	.0404	66	400	.40	9.630	.0150
18	242	.80	2.353	.0124	67	401	.40	9.626	.0083
19	243	1.20	1.808	.0249	68	402	.40	10.390	.1074
20	244	1.20	1.477	.0214	69	403	.40	10.160	.0167
21	245	1.20	1.272	.0125	70	404	.40	9.609	.0110
22	246	1.20	1.244	.0168	71	405	.40	8.951	.0155
23	247	2.00	.981	.0252	72	406	.40	7.893	.0146
24	248	1.20	1.110	.0301	73	407	.60	7.033	.0085
25	249	2.00	.947	.0152	74	408	.60	5.751	.0132
26	250	1.20	1.244	.0181	75	409	.60	4.525	.0149
27	251	1.20	1.306	.0147	76	410	.80	3.819	.0119
28	252	.80	2.711	.0131	77	411	.80	3.021	.0091
29	253	.80	3.725	.0101	78	412	.80	2.446	.0117
30	254	.80	2.261	.0161	79	413	1.20	1.801	.0547
31	257	.80	3.132	.0107	80	414	2.00	.979	.0081
32	258	.60	4.227	.0124	81	415	2.00	.522	.0236
33	367	.20	73.559	.0040	82	416	2.00	.289	.0260
34	368	.20	52.547	.0017	83	145	.20	51.786	.0035
35	369	.20	37.265	.0080	84	146	.20	54.259	.0017
36	370	.30	28.164	.0071	85	147	.20	45.855	.0015
37	371	.30	19.350	.0046	86	148	.20	35.588	.0052
38	372	.40	12.737	.0075	87	149	.30	25.302	.0096
39	373	.40	7.963	.0092	88	150	.30	22.319	.0052
40	374	.60	6.141	.0085	89	151	.40	14.938	.0060
41	375	.60	5.002	.0104	90	152	.30	17.533	.0419
42	376	.60	4.287	.0131	91	153	.30	16.441	.0116
43	377	.60	3.959	.0183	92	154	.30	16.459	.0121
44	378	.80	3.428	.0136	93	155	.40	15.440	.0054
45	379	1.20	1.950	.0120	94	156	.40	14.023	.0067
46	380	1.20	1.666	.0116	95	157	.40	13.509	.0111
47	381	1.20	1.725	.0229	96	158	.40	13.071	.0089
48	382	1.20	1.344	.0153	97	159	.40	13.487	.0077
49	383	1.20	1.282	.0188	98	0	-0	0	0
63		.050							

BIT ON LOOP 55

DATE 5/12/75

AEDC(ARO,INC.) ARNOLD AFS, TENNESSEE
VON KARMAN GAS DYNAMICS FACILITY
50 INCH HYPERSONIC TUNNEL B
V41B-B7A

GROUP	TEST CONDITION	MODEL	MACH NO	PO,PSIA	TO,DEG R	ALPHA-MODEL	ALPHA-SECTOR	ALPHA-PREBEND	ROLL MODEL	YAW
63	23	140 B	7.98	429.8	1308	35.07	-5.07	30.00	179.98	.0

T-INF (DEG R)	P-INF (PSIA)	Q-INF (PSIA)	V-INF (FT/SEC)	RHO-INF (SLUGS/FT3)	MU-INF (LB-SEC/FT2)	RE/FT (FT-1)	HREF-FR (R= .0400FT)	STFR (R= .0400FT)	SWITCH POSITION
95.2	.045	1.995	3815	3.944E-05	7.664E-08	1.963E 06	2.297E-02	1.921E-02	1

TC NO	TW	DTWDT	QDOT	H(TO)	H(TO)/HREF	H(.9TO)	H(.9TO)/HREF	X/L	Z,FULL SCALE(IN)
								FUSELAGE VENT NO. 1	
1	540.8	.891	.118	1.537E-04	.0067	1.853E-04	.0081	.4434	376.6300
2	541.0	.796	.107	1.401E-04	.0061	1.689E-04	.0074	.4264	371.6300
3	540.6	.729	.100	1.307E-04	.0057	1.575E-04	.0069	.4303	371.6300
4	540.5	.718	.098	1.276E-04	.0056	1.538E-04	.0067	.4342	371.6300
5	540.9	.741	.099	1.291E-04	.0056	1.557E-04	.0068	.4380	371.6300
6	541.5	.691	.092	1.197E-04	.0052	1.443E-04	.0063	.4434	369.1300
7	541.7	.570	.083	1.089E-04	.0047	1.313E-04	.0057	.4226	366.6300
8	541.2	.606	.091	1.194E-04	.0052	1.439E-04	.0063	.4264	366.6300
9	541.4	.538	.078	1.023E-04	.0045	1.234E-04	.0054	.4303	366.6300
10	541.3	.453	.065	8.449E-05	.0037	1.019E-04	.0044	.4342	366.6300
11	541.7	.563	.076	9.948E-05	.0043	1.200E-04	.0052	.4380	366.6300
12	542.3	.442	.061	7.982E-05	.0035	9.627E-05	.0042	.4496	366.6300
13	544.8	.257	.038	4.968E-05	.0022	5.996E-05	.0026	.4187	357.1300
14	542.8	.333	.046	5.954E-05	.0026	7.182E-05	.0031	.4396	361.6300
15	543.4	.332	.044	5.812E-05	.0025	7.012E-05	.0031	.4434	361.6300
16	544.5	.194	.026	3.451E-05	.0015	4.165E-05	.0018	.4396	355.6300
17	545.7	.173	.024	3.085E-05	.0013	3.724E-05	.0016	.4434	355.6300
18	546.8	.101	.014	1.866E-05	.0008	2.253E-05	.0010	.4396	351.6300
19	548.6	.072	.010	1.331E-05	.0006	1.607E-05	.0007	.4291	332.6300
								CARGO BAY VENT NO. 1	
22	543.9	3.801	.529	6.926E-04	.0302	8.357E-04	.0364	.3974	397.6300
23	542.9	3.252	.455	5.951E-04	.0259	7.178E-04	.0313	.4013	397.6300
24	542.6	3.742	.537	6.626E-04	.0289	7.992E-04	.0348	.4052	397.6300
25	542.2	3.971	.524	6.841E-04	.0298	8.250E-04	.0359	.4090	397.6300
26	543.4	5.133	.675	8.830E-04	.0384	1.065E-03	.0464	.4129	397.6300
27	544.3	3.828	.534	7.000E-04	.0305	8.447E-04	.0368	.3936	392.6300
28	542.9	3.021	.435	5.688E-04	.0248	6.862E-04	.0299	.3974	392.6300
29	542.5	3.603	.520	6.800E-04	.0296	8.201E-04	.0357	.4013	392.6300
30	542.0	4.312	.621	8.105E-04	.0353	9.775E-04	.0426	.4052	392.6300
31	542.3	5.002	.700	9.145E-04	.0398	1.103E-03	.0480	.4090	392.6300
32	542.4	5.787	.768	1.004E-03	.0437	1.211E-03	.0527	.4129	392.6300
33	541.8	2.856	.419	5.334E-04	.0232	6.433E-04	.0280	.4090	386.1300
34	542.7	3.833	.519	6.787E-04	.0296	8.186E-04	.0356	.4129	387.6300
35	544.1	2.890	.410	5.368E-04	.0234	6.478E-04	.0282	.3897	383.1300
36	542.2	1.427	.207	2.709E-04	.0118	3.267E-04	.0142	.4090	378.6300
37	541.8	2.215	.312	4.072E-04	.0177	4.910E-04	.0214	.4129	382.1300
38	542.2	1.523	.212	2.775E-04	.0121	3.347E-04	.0146	.4129	377.1300
39	543.2	1.204	.176	2.303E-04	.0100	2.779E-04	.0121	.4001	373.6300
								PROTUBERANCES	
41	544.1	3.605	.484	6.337E-04	.0276	7.647E-04	.0333	.3546	379.0500
42	544.5	3.318	.454	5.953E-04	.0259	7.184E-04	.0313	.3604	379.0500
43	545.3	3.668	.478	6.267E-04	.0273	7.564E-04	.0329	.3450	374.0500

DATE 5/12/75

AEDC(ARO,INC.) ARNOLD AFS, TENNESSEE
VON KARMAN GAS DYNAMICS FACILITY
50 INCH HYPERSONIC TUNNEL H
V418-B7A

GROUP	TEST CONDITION	MODEL	MACH NO	PO,PSIA	TO,DEG R	ALPHA-MODEL	ALPHA-SECTOR	ALPHA-PREBEND	ROLL MODEL	YAW
63	23	140 B	7.98	429.8	1308	35.07	-5.07	30.00	179.98	.0

T-INF (DEG R)	P-INF (PSIA)	Q-INF (PSIA)	V-INF (FT/SEC)	RHO-INF (SLUGS/FT3)	MU-INF (LB-SEC/FT2)	RE/FT (FT-1)	HREF-HR (H= .0400FT)	STFR (R= .0400FT)	SWITCH POSITION
95.2	.045	1.995	3815	3.944E-05	7.664E-08	1.963E 06	2.297E-02	1.921E-02	1

TC NO	TW	DTWDT	QDOT	H(TO)	H(TO)/HREF	H(.9TO)	H(.9TO)/HREF
44	544.0	3.070	.419	5.486E-04	.0239	6.619E-04	.0288
45	543.1	2.419	.335	4.385E-04	.0191	5.290E-04	.0230
46	544.9	3.570	.500	6.557E-04	.0286	7.913E-04	.0345
47	545.3	2.910	.388	5.092E-04	.0222	6.146E-04	.0268
48	544.9	2.625	.361	4.729E-04	.0206	5.707E-04	.0249
49	545.4	2.296	.317	4.154E-04	.0181	5.014E-04	.0218
50	545.3	2.048	.285	3.740E-04	.0163	4.514E-04	.0197
51	546.1	1.908	.260	3.411E-04	.0149	4.118E-04	.0179
52	546.7	1.420	.196	2.576E-04	.0112	3.111E-04	.0135
53	546.4	1.361	.199	2.619E-04	.0114	3.162E-04	.0138
54	540.6	2.208	.316	4.115E-04	.0179	4.961E-04	.0216
55	547.1	1.144	.164	2.157E-04	.0094	2.605E-04	.0113
56	541.8	2.430	.314	4.097E-04	.0178	4.940E-04	.0215
57	543.6	2.966	.363	4.756E-04	.0207	5.738E-04	.0250
58	546.0	4.069	.539	7.081E-04	.0308	8.549E-04	.0372
59	549.3	3.981	.527	6.946E-04	.0302	8.393E-04	.0365
60	548.6	3.580	.501	6.600E-04	.0287	7.973E-04	.0347
61	547.3	3.498	.445	5.854E-04	.0255	7.069E-04	.0308
62	544.4	2.860	.352	4.610E-04	.0201	5.564E-04	.0242
63	542.4	2.296	.301	3.929E-04	.0171	4.739E-04	.0206
64	~~541.2~~	~~.008~~	~~.001~~	~~1.278E-06~~	~~.0001~~	~~1.541E-06~~	~~.0001~~
65	540.9	2.131	.290	3.787E-04	.0165	4.566E-04	.0199
66	542.9	2.835	.359	4.690E-04	.0204	5.658E-04	.0246
67	545.6	3.580	.505	6.629E-04	.0289	8.003E-04	.0348
68	548.0	4.525	.576	7.582E-04	.0330	9.159E-04	.0399

PROTUBERANCES

X/L	Z,FULL SCALE(IN)
.3508	374.0500
.3566	374.0500
.3604	374.0500
.3392	366.5500
.3566	366.5500
.3392	360.7000
.3566	360.7000
.3604	360.7000
.3392	353.2000
.3450	353.2000
.3508	353.2000
.3566	353.2000

SUBLIMATOR VENT NO. 1

X/L	Z,FULL SCALE(IN)
.3031	371.1300
.3074	369.1300
.3089	363.6300
.3074	358.1300
.3031	356.1300
.2988	358.1300
.2973	363.6300
.2988	369.1300
.3031	376.1300
.3089	378.6300
.3101	372.6300
.3157	370.3800
.3128	363.6300

DATE 5/12/75

AEDC(ARO,INC.) ARNOLD AFS, TENNESSEE
VON KARMAN GAS DYNAMICS FACILITY
50 INCH HYPERSONIC TUNNEL B
V41B-87A

GROUP	TEST CONDITION	MODEL	MACH NO	PO,PSIA	TO,DEG R	ALPHA-MODEL	ALPHA-SECTOR	ALPHA-PREBEND	ROLL MODEL	YAW
63	23	140 B	7.98	429.8	1308	35.07	-5.07	30.00	179.98	.0

T-INF (DEG R)	P-INF (PSIA)	Q-INF (PSIA)	V-INF (FT/SEC)	RHO-INF (SLUGS/FT3)	MU-INF (LB-SEC/FT2)	RE/FT (FT-1)	HREF-FR (R= .0400FT)	STFR (R= .0400FT)	SWITCH POSITION
95.2	.045	1.995	3815	3.944E-05	7.664E-08	1.963E 06	2.297E-02	1.921E-02	1

TC NO	TW	DTWDT	QUOT	H(TO)	H(TO)/HREF	H(.9TO)	H(.9TO)/HREF	X/L	Z,FULL SCALE(IN)
								FUSELAGE VENT PANEL NO. 7	
69	541.7	1.940	.271	3.542E-04	.0154	4.272E-04	.0186	.2487	356.4000
70	541.4	1.823	.224	2.922E-04	.0127	3.524E-04	.0153	.2591	356.4000
71	543.6	2.391	.326	4.270E-04	.0186	5.151E-04	.0224	.2419	351.4000
72	542.3	1.802	.256	3.346E-04	.0146	4.036E-04	.0176	.2487	351.4000
73	542.9	1.853	.241	3.152E-04	.0137	3.802E-04	.0166	.2552	351.4000
74	543.0	2.044	.249	3.250E-04	.0142	3.921E-04	.0171	.2610	351.4000
75	545.8	1.916	.262	3.436E-04	.0150	4.148E-04	.0181	.2419	342.8000
77	545.5	2.171	.309	4.056E-04	.0177	4.896E-04	.0213	.2552	342.8000
78	546.5	2.790	.385	5.056E-04	.0220	6.105E-04	.0266	.2610	342.8000
79	549.1	2.421	.312	4.108E-04	.0179	4.963E-04	.0216	.2419	334.2000
80	546.7	2.276	.312	4.101E-04	.0179	4.952E-04	.0216	.2487	334.2000
81	548.5	2.805	.394	5.186E-04	.0226	6.265E-04	.0273	.2552	334.2000
								ACCESS HATCH WINDOW	
								X/L	Z,FULL SCALE(IN)
83	537.6	3.163	.423	5.495E-04	.0239	6.619E-04	.0288	.2131	398.0000
84	538.3	3.187	.421	5.469E-04	.0238	6.589E-04	.0287	.2131	388.0000
85	538.5	2.828	.386	5.020E-04	.0219	6.048E-04	.0263	.2131	383.0000
87	535.8	2.221	.318	4.117E-04	.0179	4.957E-04	.0216	.2222	395.8000
88	538.0	3.002	.420	5.462E-04	.0238	6.580E-04	.0287	.2193	386.5000
89	537.8	2.945	.434	5.632E-04	.0245	6.785E-04	.0295	.2177	381.8000
90	537.6	2.764	.377	4.897E-04	.0213	5.899E-04	.0257	.2297	389.5000
91	538.4	2.938	.404	5.248E-04	.0229	6.323E-04	.0275	.2243	382.5000
92	539.1	2.659	.376	4.885E-04	.0213	5.899E-04	.0257	.2214	378.7000
93	538.3	2.425	.310	4.035E-04	.0176	4.861E-04	.0212	.2343	374.0000
94	539.3	2.891	.377	4.903E-04	.0213	5.908E-04	.0257	.2274	375.5000
95	539.6	2.499	.356	4.634E-04	.0202	5.585E-04	.0243	.2239	373.3000
96	540.5	2.265	.295	3.849E-04	.0168	4.640E-04	.0202	.2363	368.0000
97	540.6	2.594	.332	4.333E-04	.0189	5.224E-04	.0227	.2286	368.0000
98	540.3	2.447	.344	4.486E-04	.0195	5.408E-04	.0235	.2247	368.0000
100	542.9	2.535	.361	4.715E-04	.0205	5.687E-04	.0248	.2274	360.5000
102	544.1	2.418	.343	4.491E-04	.0196	5.420E-04	.0236	.2081	354.3000
103	542.4	2.740	.361	4.721E-04	.0206	5.693E-04	.0248	.2023	362.7000
105	539.6	2.847	.357	4.649E-04	.0202	5.603E-04	.0244	.2050	378.7000
106	539.2	3.344	.430	5.592E-04	.0243	6.738E-04	.0293	.2050	386.2000

GROUP 63 CENTERLINE TIME 2.70

CH	TC	FIT LENGTH	DTDWT	UNCERTAINTY	CH	TC	FIT LENGTH	DTDWT	UNCERTAINTY
1	1	2.00	.891	.0082	50	53	1.20	1.361	.0272
2	2	2.00	.796	.0113	51	54	.80	2.208	.0233
3	3	2.00	.729	.0098	52	55	1.20	1.144	.0226
4	4	2.00	.718	.0127	53	56	.80	2.430	.0110
5	5	2.00	.741	.0342	54	57	.80	2.966	.0146
6	6	2.00	.691	.0121	55	58	.60	4.069	.0128
7	7	2.00	.570	.0529	56	59	.80	3.981	.0366
8	8	2.00	.606	.0142	57	60	.80	3.580	.0147
9	9	2.00	.538	.0314	58	61	.80	3.498	.0086
10	10	2.00	.453	.0211	59	62	.80	2.860	.0147
11	11	2.00	.563	.0243	60	63	.80	2.296	.0201
12	12	2.00	.442	.0330	61	64	2.00	.008	2.1362
13	13	2.00	.257	.0310	62	65	.80	2.131	.0140
14	14	2.00	.333	.0334	63	66	.80	2.835	.0102
15	15	2.00	.332	.0449	64	67	.80	3.580	.0095
16	16	2.00	.194	.0551	65	68	.60	4.525	.0145
17	17	2.00	.173	.1259	66	69	1.20	1.940	.0151
18	18	2.00	.101	.0717	67	70	1.20	1.823	.0087
19	19	2.00	.072	.1541	68	71	.80	2.391	.1465
20	22	.80	3.861	.0084	69	72	1.20	1.802	.0211
21	23	.80	3.252	.0104	70	73	1.20	1.853	.0156
22	24	.80	3.742	.0054	71	74	.80	2.044	.0345
23	25	.60	3.971	.0214	72	75	1.20	1.916	.0116
24	26	.60	5.133	.0140	73	77	.80	2.171	.0123
25	27	.80	3.828	.0099	74	78	.80	2.790	.0124
26	28	.80	3.021	.0089	75	79	.80	2.421	.0152
27	29	.80	3.603	.0128	76	80	.80	2.276	.0208
28	30	.60	4.312	.0140	77	81	.80	2.805	.0117
29	31	.60	5.002	.0074	78	83	.80	3.163	.0097
30	32	.60	5.787	.0111	79	84	.80	3.187	.0563
31	33	.80	2.856	.0095	80	85	.80	2.828	.0112
32	34	.80	3.833	.0095	81	87	.80	2.221	.0122
33	35	.80	2.890	.0111	82	88	.80	3.002	.0134
34	36	1.20	1.427	.0134	83	89	.80	2.945	.0146
35	37	.80	2.215	.0142	84	90	.80	2.764	.0143
36	38	1.20	1.523	.0146	85	91	.80	2.938	.0106
37	39	1.20	1.204	.0130	86	92	.80	2.659	.0120
38	41	.80	3.605	.0111	87	93	.80	2.425	.0223
39	42	.80	3.318	.0129	88	94	.80	2.891	.0154
40	43	.80	3.668	.0233	89	95	.80	2.499	.0114
41	44	.80	3.070	.0044	90	96	.80	2.265	.1019
42	45	.80	2.415	.0110	91	97	.80	2.594	.0192
43	46	.80	3.570	.0208	92	98	.80	2.447	.0318
44	47	.80	2.910	.0125	93	100	.80	2.535	.0133
45	48	.80	2.625	.0110	94	102	.80	2.418	.0223
46	49	.80	2.296	.0117	95	103	.80	2.740	.0144
47	50	.80	2.048	.0276	96	105	.80	2.847	.0170
48	51	1.20	1.908	.0093	97	106	.80	3.344	.0125
49	52	1.20	1.420	.0150	98	0	-0	0	0
64		.050							

BIT ON LOOP 57

DATE 5/12/75

AEDC(ARO,INC.) ARNOLD AFS, TENNESSEE
VON KARMAN GAS DYNAMICS FACILITY
50 INCH HYPERSONIC TUNNEL B
V41B-B7A

GROUP	TEST CONDITION	MODEL	MACH NO	PO,PSIA	TO,DEG R	ALPHA-MODEL	ALPHA-SECTOR	ALPHA-PREBEND	ROLL MODEL	YAW
64	23	140 B	7.98	429.8	1308	35.07	-5.07	30.00	179.98	.0

T-INF (DEG R)	P-INF (PSIA)	Q-INF (PSIA)	V-INF (FT/SEC)	RHO-INF (SLUGS/FT3)	MU-INF (LB-SEC/FT2)	RE/FT (FT-1)	HREF-FR (R= .0400FT)	STFR (R= .0400FT)	SWITCH POSITION
95.2	.045	1.995	3815	3.944E-05	7.664E-08	1.963E 06	2.297E-02	1.921E-02	2

TC NO	TW	DTWDT	QDOT	H(TO)	H(TO)/HREF	H(.9TO)	H(.9TO)/HREF		
								ACCESS HATCH WINDOW	
								X/L	Z,FULL SCALE(IN)
107	536.9	3.111	.447	5.745E-04	.0252	6.979E-04	.0304	.2050	396.2000
								FUSELAGE VENT PANEL NO. 3 AND 1	
								X/L	Z,FULL SCALE(IN)
108	539.4	5.634	.598	7.783E-04	.0339	9.380E-04	.0408	.1244	377.5000
109	537.9	4.957	.614	7.982E-04	.0348	9.616E-04	.0419	.1302	377.5000
110	537.7	4.718	.600	7.786E-04	.0339	9.379E-04	.0408	.1360	377.5000
111	538.3	4.816	.592	7.505E-04	.0329	9.114E-04	.0397	.1418	377.5000
112	539.3	4.900	.584	7.595E-04	.0331	9.153E-04	.0399	.1476	377.5000
113	540.5	5.375	.619	8.072E-04	.0351	9.732E-04	.0424	.1215	273.5000
114	539.5	5.009	.603	7.855E-04	.0342	9.466E-04	.0412	.1273	273.5000
115	539.2	4.524	.583	7.329E-04	.0319	8.832E-04	.0385	.1331	273.5000
116	539.0	4.635	.571	7.425E-04	.0323	8.947E-04	.0390	.1389	273.5000
117	540.5	4.904	.587	7.391E-04	.0322	8.910E-04	.0388	.1447	273.5000
118	541.3	3.870	.538	7.017E-04	.0306	8.461E-04	.0368	.1409	366.0000
119	542.2	4.355	.566	7.399E-04	.0322	8.923E-04	.0389	.1442	366.0000
120	544.4	4.766	.599	7.850E-04	.0342	9.473E-04	.0412	.1215	359.5000
121	544.3	4.030	.498	6.518E-04	.0284	7.865E-04	.0342	.1303	359.5000
122	544.9	4.021	.514	6.605E-04	.0288	7.972E-04	.0347	.1337	359.5000
								LOWER RCS NOZZLES	
								X/L	Z,FULL SCALE(IN)
124	535.3	1.815	.162	2.100E-04	.0091	2.528E-04	.0110	.0950	400.0000
125	535.0	2.000	.218	2.822E-04	.0123	3.397E-04	.0148	.0988	400.0000
126	535.1	1.879	.258	3.336E-04	.0145	4.016E-04	.0175	.1027	400.0000
127	535.3	1.880	.255	3.296E-04	.0144	3.968E-04	.0173	.0911	395.0000
128	534.9	2.252	.274	3.542E-04	.0154	4.263E-04	.0186	.0950	395.0000
129	535.7	2.768	.325	4.215E-04	.0184	5.075E-04	.0221	.0988	395.0000
130	537.3	2.234	.268	3.477E-04	.0151	4.188E-04	.0182	.0810	390.0000
131	535.9	2.254	.334	4.323E-04	.0188	5.204E-04	.0227	.0857	390.0000
132	536.7	3.562	.416	5.392E-04	.0235	6.494E-04	.0283	.0963	390.0000
133	536.3	2.585	.314	4.076E-04	.0177	4.908E-04	.0214	.0857	383.8000
134	536.6	3.388	.455	5.896E-04	.0257	7.100E-04	.0309	.0872	377.3000
135	538.1	4.648	.560	7.272E-04	.0317	8.760E-04	.0381	.0903	374.5500
136	539.4	4.974	.555	7.219E-04	.0314	8.699E-04	.0379	.0960	374.5500
137	538.7	4.782	.627	8.157E-04	.0355	9.829E-04	.0428	.0872	370.5500
138	539.8	5.234	.665	7.878E-04	.0343	9.495E-04	.0413	.0928	370.5500
139	540.8	4.965	.636	8.297E-04	.0361	1.000E-03	.0436	.0816	366.0500
140	541.9	5.274	.674	8.801E-04	.0383	1.061E-03	.0462	.0934	362.4000
141	542.3	5.030	.668	8.724E-04	.0380	1.052E-03	.0458	.0973	362.4000
142	545.7	3.843	.421	5.529E-04	.0241	6.674E-04	.0291	.0833	355.2000
143	544.0	6.030	.609	7.973E-04	.0347	9.621E-04	.0419	.0919	355.2000
144	547.2	6.792	.901	1.185E-03	.0516	1.431E-03	.0623	.0949	349.0000

DATE 5/12/75

AEDC(ARO,INC.) ARNOLD AFS, TENNESSEE
VON KARMAN GAS DYNAMICS FACILITY
50 INCH HYPERSONIC TUNNEL H
V41B-87A

GROUP	TEST CONDITION	MODEL	MACH NO	PO,PSIA	TO,DEG R	ALPHA-MODEL	ALPHA-SECTOR	ALPHA-PREBEND	ROLL MODEL	YAW
64	23	140 B	7.98	429.8	1308	35.07	-5.07	30.00	179.98	.0

T-INF (DEG R)	P-INF (PSIA)	Q-INF (PSIA)	V-INF (FT/SEC)	RHO-INF (SLUGS/FT3)	MU-INF (LB-SEC/FT2)	RE/FT (FT-1)	HREF-FR (R= .0400FT)	STFR (R= .0400FT)	SWITCH POSITION
95.2	.045	1.995	3815	3.944E-05	7.664E-08	1.963E 06	2.297E-02	1.921E-02	2

TC NO	TW	DTWDT	QDOT	H(TO)	H(TO)/HREF	H(.9TO)	H(.9TO)/HREF	UPPER RCS NOZZLES X/L	2Y/B
161	538.2	1.571	.186	2.422E-04	.0105	2.918E-04	.0127	.0619	-.0160
162	537.7	1.544	.146	1.903E-04	.0083	2.292E-04	.0100	.0709	-.0160
163	536.1	1.285	.158	2.048E-04	.0089	2.466E-04	.0107	.0807	-.0160
164	535.1	1.526	.199	2.577E-04	.0112	3.103E-04	.0135	.0943	-.0160
165	535.1	1.484	.187	2.421E-04	.0105	2.915E-04	.0127	.0978	-.0160
166	535.4	1.406	.180	2.335E-04	.0102	2.811E-04	.0122	.1013	-.0160
167	536.2	1.134	.154	1.998E-04	.0087	2.408E-04	.0105	.0619	-.0320
168	537.6	1.292	.136	1.764E-04	.0077	2.125E-04	.0093	.0709	-.0320
169	535.6	1.101	.134	1.733E-04	.0075	2.087E-04	.0091	.0807	-.0320
170	534.6	1.207	.151	1.953E-04	.0085	2.350E-04	.0102	.0943	-.0320
171	534.3	1.436	.173	2.239E-04	.0097	2.694E-04	.0117	.0978	-.0320
172	533.8	1.302	.170	2.194E-04	.0096	2.641E-04	.0115	.1013	-.0320
173	535.4	.589	.079	1.019E-04	.0044	1.226E-04	.0053	.0807	-.0480
174	533.7	.454	.052	6.683E-05	.0029	8.042E-05	.0035	.0943	-.0480
175	533.5	.576	.083	1.066E-04	.0046	1.282E-04	.0056	.0978	-.0480
176	533.4	.598	.081	1.052E-04	.0046	1.266E-04	.0055	.1013	-.0480
								CANOPY	
177	542.7	12.211	1.687	2.206E-03	.0960	2.660E-03	.1158		
178	545.1	15.933	3.148	4.129E-03	.1798	4.983E-03	.2170		
179	545.1	14.533	3.051	4.014E-03	.1748	4.845E-03	.2110		
180	540.9	7.413	.970	1.265E-03	.0551	1.525E-03	.0664		
181	538.0	4.253	.579	7.518E-04	.0327	9.057E-04	.0394		
182	535.5	1.752	.250	3.235E-04	.0141	3.895E-04	.0170		
183	533.2	.881	.110	1.427E-04	.0062	1.716E-04	.0075		
184	533.2	.938	.128	1.654E-04	.0072	1.990E-04	.0087		
185	538.0	5.755	.693	9.000E-04	.0392	1.084E-03	.0472		
186	537.3	4.246	.534	6.928E-04	.0302	8.345E-04	.0363		
187	536.4	1.958	.261	3.383E-04	.0147	4.073E-04	.0177		
188	537.0	4.565	1.064	1.380E-03	.0601	1.662E-03	.0724		
189	535.1	3.032	.432	5.594E-04	.0244	6.733E-04	.0293		
190	534.6	2.709	.390	5.042E-04	.0220	6.068E-04	.0264		
191	534.6	2.295	.351	4.536E-04	.0197	5.459E-04	.0238		

DATE 5/12/75

AEDC(ARO,INC.) ARNOLD AFS, TENNESSEE
VON KARMAN GAS DYNAMICS FACILITY
50 INCH HYPERSONIC TUNNEL B
V41B-B7A

GROUP	TEST CONDITION	MODEL	MACH NO	PO,PSIA	TO,DEG R	ALPHA-MODEL	ALPHA-SECTOR	ALPHA-PREBEND	ROLL MODEL	YAW
64	23	140 B	7.98	429.8	1308	35.07	-5.07	30.00	179.98	.0

T-INF (DEG R)	P-INF (PSIA)	Q-INF (PSIA)	V-INF (FT/SEC)	RHO-INF (SLUGS/FT3)	MU-INF (LB-SEC/FT2)	RE/FT (FT-1)	HREF-FR (R= .0400FT)	STFR (R= .0400FT)	SWITCH POSITION
95.2	.045	1.995	3815	3.944E-05	7.664E-08	1.963E 06	2.297E-02	1.921E-02	2

CANOPY

IC NO	TW	DIWDT	QDOT	H(TO)	H(TO)/HREF	H(.9TO)	H(.9TO)/HREF
192	531.1	.523	.073	9.441E-05	.0041	1.135E-04	.0049
193	534.3	2.008	.347	4.998E-04	.0218	6.015E-04	.0262
194	531.1	.812	.079	1.018E-04	.0044	1.222E-04	.0053
195	531.7	1.094	.135	1.736E-04	.0076	2.088E-04	.0091
196	531.6	1.033	.136	1.747E-04	.0076	2.101E-04	.0091
197	531.4	.496	.049	6.329E-05	.0028	7.612E-05	.0033
198	531.1	.594	.069	8.872E-05	.0039	1.067E-04	.0046
199	529.1	1.119	.150	1.927E-04	.0084	2.316E-04	.0101
200	532.0	2.701	.384	4.955E-04	.0216	5.960E-04	.0260
201	532.5	2.274	.321	4.137E-04	.0180	4.976E-04	.0217
202	532.7	1.504	.190	2.450E-04	.0107	2.948E-04	.0128
203	530.0	.715	.089	1.140E-04	.0050	1.370E-04	.0060
204	530.2	1.356	.210	2.705E-04	.0118	3.252E-04	.0142
205	531.6	2.309	.359	4.632E-04	.0202	5.570E-04	.0243
206	532.0	.936	.124	1.599E-04	.0070	1.923E-04	.0084
207	533.2	3.163	.424	5.469E-04	.0238	6.579E-04	.0286
208	530.0	.729	.098	1.257E-04	.0055	1.511E-04	.0066
209	529.3	.853	.117	1.504E-04	.0065	1.807E-04	.0079
210	528.6	.602	.080	1.029E-04	.0045	1.237E-04	.0054
211	531.8	.794	.096	1.241E-04	.0054	1.493E-04	.0065
212	531.1	.707	.095	1.226E-04	.0053	1.475E-04	.0064
213	529.3	1.212	.160	2.061E-04	.0090	2.477E-04	.0108
214	529.4	1.417	.198	2.547E-04	.0111	3.061E-04	.0133
215	529.1	.714	.101	1.299E-04	.0057	1.561E-04	.0068
216	532.6	3.587	.509	6.558E-04	.0286	7.900E-04	.0344
217	531.4	2.042	.291	3.742E-04	.0163	4.501E-04	.0196
218	528.9	.725	.100	1.281E-04	.0056	1.539E-04	.0067
219	529.3	1.691	.237	3.048E-04	.0133	3.663E-04	.0160
220	528.8	1.080	.148	1.903E-04	.0083	2.287E-04	.0100

GROUP 64 CENTERLINE TIME 2.80

CH	TC	FIT LENGTH	DTUWT	UNCERTAINTY	CH	TC	FIT LENGTH	DTUWT	UNCERTAINTY
1	107	.80	3.111	.0110	50	173	2.00	.589	.0386
2	108	.60	5.634	.0097	51	174	2.00	.454	.0281
3	109	.60	4.957	.0065	52	175	2.00	.576	.0197
4	110	.60	4.718	.0151	53	176	2.00	.598	.0126
5	111	.60	4.816	.0310	54	177	.40	12.211	.0102
6	112	.60	4.900	.0098	55	178	.40	15.933	.0038
7	113	.60	5.375	.0297	56	179	.40	14.533	.0253
8	114	.60	5.065	.0105	57	180	.60	7.413	.0089
9	115	.60	4.524	.0166	58	181	.60	4.253	.0104
10	116	.60	4.635	.0131	59	182	1.20	1.752	.0283
11	117	.60	4.904	.0156	60	183	2.00	.881	.0097
12	118	.80	3.870	.0146	61	184	2.00	.938	.0174
13	119	.60	4.355	.0091	62	185	.60	5.755	.0072
14	120	.60	4.766	.0115	63	186	.60	4.246	.0150
15	121	.80	4.030	.0123	64	187	1.20	1.958	.0150
16	122	.80	4.021	.0153	65	188	.60	4.565	.0153
17	124	1.20	1.815	.0201	66	189	.80	3.032	.0155
18	125	1.20	2.000	.0085	67	190	.80	2.709	.0123
19	126	1.20	1.879	.0109	68	191	.80	2.295	.1180
20	127	1.20	1.886	.0202	69	192	2.00	.520	.0529
21	128	.80	2.252	.0093	70	193	.80	2.008	.0139
22	129	.80	2.768	.0110	71	194	2.00	.612	.0327
23	130	.80	2.234	.0402	72	195	1.20	1.094	.0215
24	131	.80	2.254	.0256	73	196	1.20	1.033	.0147
25	132	.80	3.562	.0118	74	197	2.00	.496	.0221
26	133	.80	2.585	.0143	75	198	2.00	.594	.0184
27	134	.80	3.388	.0091	76	199	1.20	1.119	.0239
28	135	.60	4.648	.0131	77	200	.80	2.701	.0146
29	136	.60	4.974	.0091	78	201	.80	2.274	.0136
30	137	.60	4.782	.0112	79	202	1.20	1.504	.0743
31	138	.60	5.234	.0081	80	203	2.00	.715	.0115
32	139	.60	4.965	.0083	81	204	1.20	1.356	.0159
33	140	.60	5.274	.0059	82	205	.80	2.309	.0110
34	141	.60	5.030	.0072	83	206	2.00	.936	.0148
35	142	.80	3.843	.0088	84	207	.80	3.163	.0128
36	143	.60	6.030	.0071	85	208	2.00	.729	.0130
37	144	.60	6.792	.0075	86	209	2.00	.853	.0119
38	161	1.20	1.571	.0145	87	210	2.00	.602	.0497
39	162	1.20	1.544	.0123	88	211	2.00	.794	.0119
40	163	1.20	1.245	.0259	89	212	2.00	.707	.0163
41	164	1.20	1.526	.0092	90	213	1.20	1.212	.0770
42	165	1.20	1.484	.0127	91	214	1.20	1.417	.0221
43	166	1.20	1.436	.0213	92	215	2.00	.714	.0389
44	167	1.20	1.134	.0142	93	216	.80	3.587	.0096
45	168	1.20	1.292	.0135	94	217	.80	2.042	.0239
46	169	1.20	1.101	.0155	95	218	2.00	.725	.0179
47	170	1.20	1.257	.0404	96	219	1.20	1.691	.0161
48	171	1.20	1.436	.0133	97	220	1.20	1.080	.0163
49	172	1.20	1.302	.0145	98	0	-0	0	0
65		.050							

BIT ON LOOP 55

DATE 5/12/75

AEDC(ARO,INC.) ARNOLD AFS, TENNESSEE
VON KARMAN GAS DYNAMICS FACILITY
50 INCH HYPERSONIC TUNNEL B
V41A-B7A

GROUP	TEST CONDITION	MODEL	MACH NO	PO,PSIA	TO,DEG R	ALPHA-MODEL	ALPHA-SECTOR	ALPHA-PREBEND	ROLL MODEL	YAW
65	23	140 B	7.98	429.2	1307	35.09	-5.09	30.00	179.98	.0

T-INF (DEG R)	P-INF (PSIA)	Q-INF (PSIA)	V-INF (FT/SEC)	RHO-INF (SLUGS/FT3)	MU-INF (LB-SEC/FT2)	RE/FT (FT-1)	HREF-FR (R= .0400FT)	STFR (R= .0400FT)	SWITCH POSITION
95.2	.045	1.592	3815	3.939E-05	7.662E-08	1.961E 06	2.295E-02	1.922E-02	3

TC NO	TW	DTWDT	QDOT	H(TO)	H(TO)/HREF	H(.9TO)	H(.9TO)/HREF		
								CANOPY	
221	530.2	.567	.069	8.816E-05	.0038	1.060E-04	.0046		
222	529.2	1.071	.132	1.693E-04	.0074	2.035E-04	.0089		
223	528.5	3.411	.462	5.929E-04	.0258	7.125E-04	.0310		
								ESCAPE HATCH AND WINDOW	
								X/L	2Y/B
224	533.6	4.947	.493	8.367E-04	.0277	7.662E-04	.0334	.1933	.0162
225	532.5	3.088	.369	4.767E-04	.0208	5.734E-04	.0250	.1972	.0162
226	532.9	5.488	.578	7.465E-04	.0325	8.981E-04	.0391	.1933	.0384
227	531.5	3.578	.523	6.748E-04	.0294	8.116E-04	.0354	.1972	.0384
228	528.6	1.397	.179	2.301E-04	.0100	2.765E-04	.0121	.1933	.0653
229	528.7	1.093	.140	1.801E-04	.0078	2.165E-04	.0094	.1972	.0653
232	530.5	.207	.028	3.602E-05	.0016	4.331E-05	.0019	.2567	.0235
233	530.5	.236	.036	4.606E-05	.0020	5.538E-05	.0024	.2606	.0235
236	529.9	.281	.041	5.280E-05	.0023	6.347E-05	.0028	.2567	.0491
237	530.4	.306	.043	5.526E-05	.0024	6.645E-05	.0029	.2606	.0491
								CARGO BAY HINGE NO. 1	
								X/L	Z,FULL SCALE(IN)
238	534.8	1.983	.266	3.440E-04	.0150	4.141E-04	.0180	.2879	420.0000
239	535.7	2.638	.381	4.932E-04	.0215	5.938E-04	.0259	.2917	420.0000
240	534.6	1.548	.221	2.863E-04	.0125	3.446E-04	.0150	.2840	415.0000
241	535.9	2.335	.329	4.202E-04	.0186	5.132E-04	.0224	.2879	415.0000
242	535.4	2.377	.340	4.403E-04	.0192	5.301E-04	.0231	.2917	415.0000
243	535.9	1.729	.212	2.745E-04	.0120	3.305E-04	.0144	.2801	405.0000
244	535.5	1.249	.146	1.895E-04	.0083	2.282E-04	.0099	.2840	405.0000
								CARGO BAY HINGE NO. 2	
								X/L	Z,FULL SCALE(IN)
245	535.3	1.292	.185	2.393E-04	.0104	2.881E-04	.0126	.3192	420.0000
246	536.6	1.683	.241	3.124E-04	.0136	3.763E-04	.0164	.3439	420.0000
247	535.5	1.097	.162	2.096E-04	.0091	2.523E-04	.0110	.3362	415.0000
248	536.1	1.447	.213	2.767E-04	.0121	3.332E-04	.0145	.3401	415.0000
249	537.2	1.662	.245	3.185E-04	.0139	3.836E-04	.0167	.3439	415.0000
250	537.3	2.091	.263	3.413E-04	.0149	4.111E-04	.0179	.3323	405.0000
251	537.7	2.362	.291	3.776E-04	.0165	4.549E-04	.0198	.3362	405.0000
								CARGO BAY HINGE NO. 3	
								X/L	Z,FULL SCALE(IN)
252	537.5	3.707	.539	7.001E-04	.0305	8.433E-04	.0367	.3923	420.0000
253	542.0	7.848	1.144	1.494E-03	.0651	1.802E-03	.0785	.3961	420.0000
254	538.4	4.403	.670	8.714E-04	.0380	1.050E-03	.0458	.3884	415.0000
257	541.5	6.477	.877	1.145E-03	.0499	1.381E-03	.0602	.3845	405.0000
258	541.5	5.365	.734	9.578E-04	.0417	1.155E-03	.0503	.3884	405.0000

DATE 5/12/75

AEDC(ARO,INC.) ARNOLD AFS, TENNESSEE
VON KARMAN GAS DYNAMICS FACILITY
50 INCH HYPERSONIC TUNNEL B
V41B-B7A

GROUP	TEST CONDITION	MODEL	MACH NO	PO,PSIA	TO,DEG R	ALPHA-MODEL	ALPHA-SECTOR	ALPHA-PREBEND	ROLL MODEL	YAW
65	23	140 B	7.98	429.2	1307	35.09	-5.09	30.00	179.98	.0

T-INF (DEG R)	P-INF (PSIA)	Q-INF (PSIA)	V-INF (FT/SEC)	RHO-INF (SLUGS/FT3)	MU-INF (LB-SEC/FT2)	RE/FT (FT-1)	HREF-FR (R= .0400FT)	STFR (R= .0400FT)	SWITCH POSITION
95.2	.045	1.592	3815	3.939E-05	7.662E-08	1.961E 06	2.295E-02	1.922E-02	3

IC NO	TW	D(WDT	QDOT	H(TO)	H(TO)/HREF	H(.9TO)	H(.9TO)/HREF
367	575.9	72.105	8.649	1.182E-02	.5152	1.440E-02	.6273
368	553.9	49.796	6.379	8.467E-03	.3690	1.025E-02	.4464
369	549.9	42.999	5.072	6.676E-03	.2918	8.093E-03	.3527
370	544.9	29.619	3.631	4.763E-03	.2075	5.749E-03	.2505
371	538.3	17.603	1.725	2.244E-03	.0978	2.703E-03	.1178
372	535.2	11.267	1.450	1.878E-03	.0818	2.261E-03	.0985
373	534.3	6.750	.883	1.143E-03	.0498	1.375E-03	.0599
374	534.3	5.231	.685	8.856E-04	.0386	1.066E-03	.0464
375	534.2	4.262	.583	7.535E-04	.0328	9.068E-04	.0395
376	535.8	3.705	.488	6.331E-04	.0276	7.623E-04	.0332
377	536.2	3.343	.430	5.582E-04	.0243	6.721E-04	.0293
378	536.6	2.916	.340	4.415E-04	.0192	5.317E-04	.0232
379	537.4	1.699	.209	2.714E-04	.0118	3.269E-04	.0142
380	536.4	1.518	.156	2.025E-04	.0088	2.438E-04	.0106
381	535.8	1.443	.187	2.424E-04	.0106	2.918E-04	.0127
382	535.0	1.304	.171	2.210E-04	.0096	2.660E-04	.0116
383	534.4	1.221	.164	2.117E-04	.0092	2.548E-04	.0111
384	534.0	1.080	.150	1.946E-04	.0085	2.341E-04	.0102
385	534.3	1.300	.167	2.164E-04	.0094	2.604E-04	.0113
386	534.5	1.528	.181	2.341E-04	.0102	2.817E-04	.0123
387	534.7	1.730	.213	2.751E-04	.0120	3.311E-04	.0144
388	534.9	2.956	.281	3.642E-04	.0159	4.384E-04	.0191
389	534.2	2.502	.353	4.678E-04	.0205	5.654E-04	.0246
390	534.1	2.313	.355	4.715E-04	.0205	5.674E-04	.0247
391	533.7	2.302	.367	4.743E-04	.0207	5.707E-04	.0249
392	533.9	2.468	.423	5.472E-04	.0238	6.586E-04	.0287
393	533.7	2.664	.451	5.829E-04	.0254	7.014E-04	.0306
394	533.8	2.949	.495	6.400E-04	.0279	7.702E-04	.0336
395	533.7	3.045	.455	5.887E-04	.0257	7.084E-04	.0309
396	534.0	3.154	.468	6.048E-04	.0264	7.278E-04	.0317
397	534.6	3.206	.476	6.154E-04	.0268	7.407E-04	.0323
398	533.9	3.678	.517	6.690E-04	.0292	8.051E-04	.0351
399	539.7	9.339	1.251	1.629E-03	.0710	1.964E-03	.0856

TOP CENTERLINE

X/L
0
.0008
.0019
.0037
.0058
.0087
.0118
.0151
.0182
.0215
.0246
.0278
.0609
.0646
.0684
.0721
.0760
.0796
.0789
.0982
.1019
.1160
.1195
.1231
.1268
.1305
.1338
.1376
.1411
.1448
.1483
.1519
.1556

DATE 5/12/78

AEDC(ARO,INC.) ARNOLD AFS, TENNESSEE
VON KARMAN GAS DYNAMICS FACILITY
50 INCH HYPERSONIC TUNNEL B
V41B-87A

GROUP	TEST CONDITION	MODEL	MACH NO	PO,PSIA	TO,DEG R	ALPHA-MODEL	ALPHA-SECTOR	ALPHA-PREBEND	ROLL MODEL	YAW
65	23	140 B	7.98	429.2	1307	35.09	-5.09	30.00	179.98	.0

T-INF (DEG R)	P-INF (PSIA)	Q-INF (PSIA)	V-INF (FT/SEC)	RHO-INF (SLUGS/FT3)	MU-INF (LB-SEC/FT2)	RE/FT (FT-1)	HREF-FR (R= .0400FT)	STFR (R= .0400FT)	SWITCH POSITION
95.2	.045	1.992	3815	3.939E-05	7.662E-08	1.961E 06	2.295E-02	1.922E-02	3

TOP CENTERLINE

TC NO	TW	DTWDT	QDOT	H(TO)	H(TO)/HREF	H(.9TO)	H(.9TO)/HREF	X/L
400	540.2	10.720	1.450	1.891E-03	.0824	2.279E-03	.0993	.1582
401	539.2	10.287	1.336	1.739E-03	.0758	2.096E-03	.0913	.1608
402	539.0	10.604	1.325	1.724E-03	.0751	2.078E-03	.0905	.1635
403	539.4	9.480	1.155	1.504E-03	.0655	1.812E-03	.0790	.1664
404	538.4	8.868	1.076	1.399E-03	.0610	1.685E-03	.0734	.1691
405	538.5	8.847	1.073	1.396E-03	.0608	1.682E-03	.0733	.1720
406	537.5	7.367	.893	1.160E-03	.0506	1.398E-03	.0609	.1748
407	536.7	6.094	.788	1.022E-03	.0445	1.231E-03	.0536	.1769
408	536.1	5.749	.843	1.093E-03	.0476	1.316E-03	.0574	.1800
409	534.5	4.141	.596	7.707E-04	.0336	9.276E-04	.0404	.1831
410	533.7	3.776	.543	7.018E-04	.0306	8.445E-04	.0368	.1863
411	533.5	2.688	.403	5.211E-04	.0227	6.271E-04	.0273	.1894
412	533.3	2.099	.285	3.680E-04	.0160	4.428E-04	.0193	.1931
413	533.0	1.864	.250	3.223E-04	.0140	3.878E-04	.0169	.1972
414	532.5	.849	.114	1.467E-04	.0064	1.764E-04	.0077	.2049
415	531.5	.378	.037	4.809E-05	.0021	5.784E-05	.0025	.2250
416	531.3	.311	.036	4.685E-05	.0020	5.634E-05	.0025	.2500

NOSE TC (Z = 338)

TC NO	TW	DTWDT	QDOT	H(TO)	H(TO)/HREF	H(.9TO)	H(.9TO)/HREF	X/L	2Y/B
145	563.8	48.476	6.593	8.868E-03	.3864	1.076E-02	.4688	.0008	.5039
146	566.1	53.462	7.279	9.820E-03	.4279	1.192E-02	.5196	.0023	.5082
147	558.3	44.276	6.005	8.018E-03	.3494	9.713E-03	.4233	.0043	.5135
148	556.5	34.226	4.743	6.384E-03	.2782	7.730E-03	.3368	.0068	.5205
149	551.6	24.333	3.530	4.671E-03	.2036	5.649E-03	.2461	.0095	.5279
150	553.5	21.008	3.022	4.010E-03	.1747	4.851E-03	.2114	.0122	.5354
151	555.7	14.318	2.024	2.692E-03	.1173	3.259E-03	.1420	.0218	.5621
152	555.9	15.034	2.090	2.779E-03	.1189	3.303E-03	.1439	.0251	.5712
153	558.2	16.388	2.015	2.690E-03	.1172	3.258E-03	.1420	.0286	.5808
154	559.5	16.341	2.054	2.746E-03	.1197	3.328E-03	.1450	.0319	.5898
155	558.1	14.019	1.775	2.369E-03	.1032	2.869E-03	.1250	.0354	.5995
156	557.4	13.108	1.641	2.188E-03	.0953	2.650E-03	.1155	.0387	.6085
157	557.7	12.824	1.588	2.119E-03	.0923	2.566E-03	.1118	.0420	.6176
158	558.1	12.636	1.565	2.089E-03	.0910	2.531E-03	.1103	.0462	.6294
159	557.5	12.671	1.432	1.909E-03	.0832	2.312E-03	.1008	.0503	.6406

GROUP 65 CENTERLINE TIME 2.70

CH	TC	FIT LENGTH	DTDWT	UNCERTAINTY	CH	TC	FIT LENGTH	DTDWT	UNCERTAINTY
1	221	2.00	.567	.0205	50	384	1.20	1.080	.0117
2	222	1.20	1.071	.0192	51	385	1.20	1.300	.0240
3	223	.80	3.411	.0082	52	386	1.20	1.528	.0158
4	224	.60	4.947	.0098	53	387	1.20	1.730	.0094
5	225	.80	3.048	.0232	54	388	.80	2.956	.0141
6	226	.60	5.488	.0085	55	389	.80	2.502	.0112
7	227	.80	3.578	.0364	56	390	.80	2.313	.0516
8	228	1.20	1.397	.0110	57	391	.80	2.302	.0131
9	229	1.20	1.093	.0292	58	392	.80	2.468	.0103
10	232	2.00	.207	.0365	59	393	.80	2.604	.0186
11	233	2.00	.236	.0443	60	394	.80	2.949	.0111
12	236	2.00	.281	.0522	61	395	.80	3.045	.0196
13	237	2.00	.306	.0310	62	396	.80	3.154	.0088
14	238	1.20	1.983	.0092	63	397	.80	3.206	.0137
15	239	.80	2.838	.0151	64	398	.80	3.678	.0142
16	240	1.20	1.548	.0144	65	399	.40	9.339	.0145
17	241	.80	2.335	.0315	66	400	.40	10.720	.0116
18	242	.80	2.377	.0173	67	401	.40	10.287	.0055
19	243	1.20	1.729	.0165	68	402	.40	10.604	.0593
20	244	1.20	1.249	.0246	69	403	.40	9.480	.0097
21	245	1.20	1.292	.0103	70	404	.40	8.868	.0083
22	246	1.20	1.683	.0131	71	405	.40	8.847	.0264
23	247	1.20	1.097	.0304	72	406	.60	7.367	.0081
24	248	1.20	1.447	.0245	73	407	.60	6.094	.0093
25	249	1.20	1.662	.0231	74	408	.60	5.749	.0106
26	250	.80	2.091	.0152	75	409	.60	4.141	.0204
27	251	.80	2.362	.0116	76	410	.60	3.776	.0154
28	252	.80	3.717	.0091	77	411	.80	2.688	.0149
29	253	.60	7.848	.0089	78	412	.80	2.099	.0128
30	254	.60	4.403	.0114	79	413	1.20	1.864	.0705
31	257	.60	6.477	.0071	80	414	2.00	.849	.0105
32	266	.60	5.365	.0082	81	415	2.00	.378	.0250
33	367	.20	72.105	.0031	82	416	2.00	.311	.0298
34	368	.20	49.796	.0024	83	145	.20	48.476	.0042
35	369	.20	42.999	.0090	84	146	.20	53.462	.0014
36	370	.30	29.619	.0057	85	147	.20	44.276	.0044
37	371	.30	17.603	.0074	86	148	.20	34.226	.0044
38	372	.40	11.267	.0060	87	149	.30	24.333	.0089
39	373	.60	6.750	.0119	88	150	.30	21.008	.0034
40	374	.60	5.231	.0162	89	151	.40	14.318	.0075
41	375	.60	4.262	.0100	90	152	.40	15.034	.0499
42	376	.80	3.705	.0068	91	153	.30	16.368	.0117
43	377	.80	3.343	.0218	92	154	.40	16.391	.0112
44	378	.80	2.916	.0113	93	155	.40	14.019	.0056
45	379	1.20	1.699	.0086	94	156	.40	13.108	.0088
46	380	1.20	1.518	.0132	95	157	.40	12.824	.0119
47	381	1.20	1.443	.0217	96	158	.40	12.636	.0125
48	382	1.20	1.304	.0148	97	159	.40	12.671	.0038
49	383	1.20	1.221	.0166	98	0	-0	0	0
66		.050							

BIT ON LOOP 55

DATE 5/12/75

AEDC(ARO,INC.) ARNOLD AFS, TENNESSEE
VON KARMAN GAS DYNAMICS FACILITY
50 INCH HYPERSONIC TUNNEL B
V41B-B7A

GROUP	TEST CONDITION	MODEL	MACH NO	PO,PSIA	TO,DEG R	ALPHA-MODEL	ALPHA-SECTOR	ALPHA-PREBEND	ROLL MODEL	YAW
68	24	140 B	7.98	430.8	1304	40.08	-10.08	30.00	180.00	.0

T-INF (DEG R)	P-INF (PSIA)	Q-INF (PSIA)	V-INF (FT/SEC)	RHO-INF (SLUGS/FT3)	MU-INF (LB-SEC/FT2)	RE/FT (FT-1)	HREF-FR (R= .0400FT)	STFR (R= .0400FT)	SWITCH POSITION
94.9	.045	1.999	3809	3.965E-05	7.641E-08	1.977E 06	2.298E-02	1.915E-02	3

TC NO	TW	DTWDT	QDOT	H(TO)	H(TO)/HREF	H(.9TO)	H(.9TO)/HREF		
								CANOPY	
221	532.9	.296	.036	4.642E-05	.0020	5.587E-05	.0024		
222	533.3	.598	.074	9.568E-05	.0042	1.152E-04	.0050		
223	533.9	2.316	.314	4.064E-04	.0178	4.917E-04	.0214		
								ESCAPE HATCH AND WINDOW	
								X/L	2Y/B
224	537.6	4.291	.428	5.589E-04	.0243	6.735E-04	.0293	.1933	.0162
225	536.5	2.796	.335	4.368E-04	.0190	5.262E-04	.0229	.1972	.0162
226	536.1	1.993	.210	2.739E-04	.0119	3.300E-04	.0144	.1933	.0384
227	534.7	1.436	.210	2.737E-04	.0119	3.295E-04	.0143	.1972	.0384
228	533.6	.733	.094	1.225E-04	.0053	1.474E-04	.0064	.1933	.0653
229	533.9	.605	.078	1.011E-04	.0044	1.217E-04	.0053	.1972	.0653
232	533.5	.187	.025	3.285E-05	.0014	3.954E-05	.0017	.2567	.0235
233	533.6	.229	.035	4.520E-05	.0020	5.441E-05	.0024	.2606	.0235
236	533.4	.451	.066	8.580E-05	.0037	1.033E-04	.0045	.2567	.0491
237	533.7	.532	.075	9.723E-05	.0042	1.171E-04	.0051	.2606	.0491
								CARGO BAY HINGE NO. 1	
								X/L	Z,FULL SCALE(IN)
238	537.0	1.895	.254	3.316E-04	.0144	3.996E-04	.0174	.2879	420.0000
239	538.1	2.570	.345	4.506E-04	.0196	5.431E-04	.0236	.2917	420.0000
240	536.8	1.405	.201	2.622E-04	.0114	3.159E-04	.0137	.2840	415.0000
241	538.3	2.238	.316	4.123E-04	.0179	4.969E-04	.0216	.2879	415.0000
242	537.4	1.767	.253	3.302E-04	.0144	3.979E-04	.0173	.2917	415.0000
243	538.3	1.673	.205	2.680E-04	.0117	3.231E-04	.0141	.2801	405.0000
244	538.2	1.228	.144	1.881E-04	.0082	2.266E-04	.0099	.2840	405.0000
								CARGO BAY HINGE NO. 2	
								X/L	Z,FULL SCALE(IN)
245	538.5	3.163	.453	5.921E-04	.0258	7.137E-04	.0311	.3192	420.0000
246	541.1	4.651	.667	8.746E-04	.0381	1.055E-03	.0459	.3439	420.0000
247	538.4	2.267	.335	4.376E-04	.0190	5.274E-04	.0229	.3362	415.0000
248	540.5	3.565	.527	6.917E-04	.0301	8.330E-04	.0362	.3401	415.0000
249	540.4	3.365	.497	6.518E-04	.0284	7.861E-04	.0342	.3439	415.0000
250	540.5	3.067	.346	5.060E-04	.0220	6.103E-04	.0266	.3323	405.0000
251	540.5	3.083	.380	4.977E-04	.0217	6.003E-04	.0261	.3362	405.0000
								CARGO BAY HINGE NO. 3	
								X/L	Z,FULL SCALE(IN)
252	541.8	6.435	.938	1.231E-03	.0536	1.485E-03	.0646	.3923	420.0000
253	541.9	5.449	.794	1.042E-03	.0454	1.257E-03	.0547	.3961	420.0000
254	542.1	5.796	.884	1.160E-03	.0505	1.400E-03	.0609	.3884	415.0000
257	541.3	2.967	.402	5.268E-04	.0229	6.355E-04	.0277	.3845	405.0000
258	540.8	2.671	.365	4.785E-04	.0208	5.772E-04	.0251	.3884	405.0000

DATE 5/12/75

AEDC(ARO,INC.) ARNOLD AFS, TENNESSEE
VON KARMAN GAS DYNAMICS FACILITY
50 INCH HYPERSONIC TUNNEL B
V41B-B7A

GROUP	TEST CONDITION	MODEL	MACH NO	PO,PSIA	TO,DEG R	ALPHA-MODEL	ALPHA-SECTOR	ALPHA-PREBEND	ROLL MODEL	YAW
6A	24	140 B	7.98	430.8	1304	40.08	-10.08	30.00	180.00	.0

T-INF (DEG R)	P-INF (PSIA)	Q-INF (PSIA)	V-INF (FT/SEC)	RHO-INF (SLUGS/FT3)	MU-INF (LB-SEC/FT2)	RE/FT (FT-1)	HREF-FR (R= .0400FT)	STFR (R= .0400FT)	SWITCH POSITION
94.9	.045	1.599	3809	3.965E-05	7.641E-08	1.977E 06	2.298E-02	1.915E-02	3

TOP CENTERLINE

TC NO	TW	DTWDT	QDOT	H(TO)	H(TO)/HREF	H(.9TO)	H(.9TO)/HREF	X/L
367	575.9	63.649	7.635	1.049E-02	.4565	1.278E-02	.5561	0
368	554.2	42.405	5.433	7.250E-03	.3155	8.776E-03	.3819	.0008
369	548.9	29.515	3.479	4.610E-03	.2006	5.572E-03	.2425	.0019
370	544.4	21.658	2.654	3.496E-03	.1521	4.220E-03	.1837	.0037
371	539.6	13.951	1.368	1.791E-03	.0779	2.159E-03	.0940	.0058
372	535.9	9.038	1.164	1.516E-03	.0660	1.826E-03	.0794	.0087
373	534.8	5.136	.672	8.744E-04	.0381	1.053E-03	.0458	.0118
374	534.9	4.495	.589	7.655E-04	.0333	9.218E-04	.0401	.0151
375	534.9	3.364	.460	5.983E-04	.0260	7.204E-04	.0313	.0182
376	535.7	2.859	.377	4.904E-04	.0214	5.912E-04	.0257	.0215
377	536.5	2.615	.337	4.390E-04	.0191	5.289E-04	.0230	.0246
378	537.0	2.333	.272	3.553E-04	.0155	4.281E-04	.0186	.0278
379	539.7	1.607	.148	2.591E-04	.0113	3.125E-04	.0136	.0609
380	539.3	1.527	.157	2.058E-04	.0090	2.481E-04	.0108	.0646
381	539.3	1.484	.193	2.520E-04	.0110	3.039E-04	.0132	.0684
382	538.9	1.514	.199	2.597E-04	.0113	3.131E-04	.0136	.0721
383	538.9	1.549	.208	2.720E-04	.0118	3.279E-04	.0143	.0760
384	538.7	1.482	.207	2.707E-04	.0118	3.263E-04	.0142	.0796
385	539.7	2.413	.311	4.075E-04	.0177	4.913E-04	.0214	.0789
386	539.8	2.475	.294	3.846E-04	.0167	4.637E-04	.0202	.0982
387	539.9	2.806	.346	4.525E-04	.0197	5.457E-04	.0237	.1019
388	540.8	4.429	.423	5.541E-04	.0241	6.683E-04	.0291	.1160
389	540.3	3.704	.539	7.066E-04	.0307	8.521E-04	.0371	.1195
390	540.0	3.509	.555	7.266E-04	.0316	8.761E-04	.0381	.1231
391	539.8	3.203	.512	6.705E-04	.0292	8.085E-04	.0352	.1268
392	539.9	3.181	.547	7.165E-04	.0312	8.639E-04	.0376	.1305
393	539.6	3.280	.557	7.287E-04	.0317	8.786E-04	.0382	.1338
394	539.6	3.342	.563	7.366E-04	.0321	8.881E-04	.0386	.1376
395	539.2	3.106	.466	6.096E-04	.0265	7.349E-04	.0320	.1411
396	539.3	3.100	.461	6.030E-04	.0262	7.270E-04	.0316	.1448
397	539.6	2.957	.440	5.754E-04	.0250	6.937E-04	.0302	.1483
398	538.5	3.091	.436	5.695E-04	.0248	6.865E-04	.0299	.1519
399	544.3	7.438	.998	1.315E-03	.0572	1.587E-03	.0691	.1556

DATE 5/12/75

AEDC(ARO,INC.) ARNOLD AFS, TENNESSEE
VON KARMAN GAS DYNAMICS FACILITY
50 INCH HYPERSONIC TUNNEL B
V41R-87A

GROUP	TEST CONDITION	MODEL	MACH NO	PO,PSIA	TO,DEG R	ALPHA-MODEL	ALPHA-SECTOR	ALPHA-PREBEND	ROLL MODEL	YAW
68	24	140 M	7.98	430.8	1304	40.08	-10.08	30.00	180.00	.0

T-INF (DEG R)	P-INF (PSIA)	Q-INF (PSIA)	V-INF (FT/SEC)	RHO-INF (SLUGS/FT3)	MU-INF (LB-SEC/FT2)	RE/FT (FT-1)	HREF-FR (R= .0400FT)	STFR (R= .0400FT)	SWITCH POSITION
94.9	.045	1.999	3809	3.965E-05	7.641E-08	1.977E 06	2.298E-02	1.915E-02	3

TC NO	TW	DT=DT	QDOT	H(TO)	H(TO)/HREF	H(.9TO)	H(.9TO)/HREF	X/L
								TOP CENTERLINE
400	544.7	10.098	1.369	1.834E-03	.0785	2.178E-03	.0948	.1582
401	543.8	9.294	1.210	1.592E-03	.0693	1.921E-03	.0836	.1608
402	543.4	8.687	1.113	1.463E-03	.0637	1.766E-03	.0769	.1635
403	543.7	8.902	1.087	1.430E-03	.0622	1.726E-03	.0751	.1664
404	543.0	8.893	1.082	1.422E-03	.0619	1.716E-03	.0747	.1691
405	543.9	9.957	1.211	1.594E-03	.0694	1.924E-03	.0837	.1720
406	543.4	10.246	1.246	1.639E-03	.0713	1.978E-03	.0861	.1748
407	543.1	9.612	1.246	1.639E-03	.0713	1.977E-03	.0861	.1769
408	542.2	8.943	1.315	1.727E-03	.0752	2.084E-03	.0907	.1800
409	540.5	7.089	1.023	1.340E-03	.0583	1.616E-03	.0703	.1831
410	539.5	6.209	.896	1.172E-03	.0510	1.414E-03	.0615	.1863
411	538.6	4.511	.678	8.868E-04	.0386	1.069E-03	.0465	.1894
412	538.0	3.257	.443	5.787E-04	.0252	6.975E-04	.0304	.1931
413	536.6	2.555	.343	4.467E-04	.0194	5.382E-04	.0234	.1972
414	536.0	1.064	.143	1.859E-04	.0081	2.239E-04	.0097	.2049
415	535.1	.425	.042	5.454E-05	.0024	6.568E-05	.0029	.2250
416	534.4	.215	.025	3.276E-05	.0014	3.944E-05	.0017	.2500
								NOSE TC (Z = 338)
								X/L 2Y/B
145	564.3	43.332	5.895	7.973E-03	.3469	9.679E-03	.4212	.0008 .5039
146	567.9	48.561	6.618	8.995E-03	.3914	1.093E-02	.4757	.0023 .5082
147	560.7	39.230	5.327	7.170E-03	.3120	8.696E-03	.3784	.0043 .5135
148	560.0	31.694	4.446	5.978E-03	.2601	7.249E-03	.3154	.0068 .5205
149	552.0	21.796	3.163	4.208E-03	.1831	5.091E-03	.2215	.0095 .5279
150	553.0	18.551	2.688	3.555E-03	.1547	4.302E-03	.1872	.0122 .5354
151	555.4	12.911	1.824	2.438E-03	.1061	2.952E-03	.1285	.0218 .5621
152	557.1	14.325	1.955	2.618E-03	.1139	3.172E-03	.1380	.0251 .5712
153	559.3	15.595	1.919	2.578E-03	.1122	3.125E-03	.1360	.0286 .5808
154	558.6	14.241	1.784	2.394E-03	.1042	2.902E-03	.1263	.0319 .5898
155	559.1	13.142	1.664	2.235E-03	.0973	2.710E-03	.1179	.0354 .5995
156	558.5	12.326	1.544	2.072E-03	.0902	2.511E-03	.1093	.0387 .6085
157	559.2	11.788	1.461	1.962E-03	.0854	2.379E-03	.1035	.0420 .6176
158	560.3	11.864	1.471	1.979E-03	.0861	2.400E-03	.1044	.0462 .6294
159	560.2	11.837	1.339	1.801E-03	.0784	2.184E-03	.0950	.0503 .6406

GROUP 68 CENTERLINE TIME 2.75

CH	TC	FIT LENGTH	DTDWT	UNCERTAINTY	CH	TC	FIT LENGTH	DTDWT	UNCERTAINTY
1	221	2.00	.276	.0373	50	384	1.20	1.482	.0127
2	222	2.00	.598	.0168	51	385	.80	2.413	.0235
3	223	.80	2.316	.0136	52	386	.80	2.475	.0166
4	224	.60	4.291	.0083	53	387	.80	2.806	.0101
5	225	.80	2.796	.0205	54	388	.60	4.429	.0173
6	226	1.20	1.993	.0163	55	389	.80	3.704	.0122
7	227	1.20	1.436	.0514	56	390	.80	3.509	.0298
8	228	2.00	.733	.0127	57	391	.80	3.203	.0101
9	229	2.00	.605	.0524	58	392	.80	3.181	.0105
10	232	2.00	.187	.0486	59	393	.80	3.280	.0135
11	233	2.00	.229	.0529	60	394	.80	3.342	.0098
12	236	2.00	.451	.0217	61	395	.80	3.106	.0136
13	237	2.00	.532	.0123	62	396	.80	3.100	.0106
14	238	1.20	1.895	.0112	63	397	.80	2.957	.0101
15	239	.80	2.570	.0249	64	398	.80	3.091	.0102
16	240	1.20	1.405	.0154	65	399	.60	7.438	.0059
17	241	.80	2.238	.0323	66	400	.40	10.098	.0188
18	242	1.20	1.767	.0079	67	401	.40	9.294	.0058
19	243	1.20	1.673	.0131	68	402	.40	8.887	.0689
20	244	1.20	1.228	.0192	69	403	.40	8.902	.0143
21	245	.80	3.163	.0078	70	404	.40	8.898	.0087
22	246	.60	4.651	.0145	71	405	.40	9.957	.0229
23	247	.80	2.257	.0270	72	406	.40	10.246	.0109
24	248	.80	3.565	.0164	73	407	.40	9.612	.0072
25	249	.80	3.365	.0123	74	408	.40	8.943	.0144
26	250	.80	3.067	.0185	75	409	.60	7.089	.0078
27	251	.80	3.093	.0068	76	410	.60	6.209	.0108
28	252	.60	6.435	.0098	77	411	.60	4.511	.0114
29	253	.60	5.449	.0115	78	412	.80	3.257	.0127
30	254	.60	5.796	.0161	79	413	.80	2.555	.0880
31	257	.80	2.967	.0082	80	414	1.20	1.064	.0172
32	258	.80	2.871	.0111	81	415	2.00	.425	.0184
33	367	.20	63.649	.0049	82	416	2.00	.215	.0337
34	368	.20	42.405	.0035	83	145	.20	43.332	.0043
35	369	.30	29.515	.0090	84	146	.20	48.561	.0048
36	370	.30	21.658	.0065	85	147	.20	39.230	.0056
37	371	.40	13.951	.0041	86	148	.30	31.694	.0036
38	372	.40	9.038	.0094	87	149	.30	21.796	.0104
39	373	.60	5.136	.0096	88	150	.30	18.551	.0065
40	374	.60	4.495	.0152	89	151	.40	12.911	.0114
41	375	.80	3.364	.0089	90	152	.40	14.325	.0177
42	376	.80	2.859	.0091	91	153	.40	15.595	.0105
43	377	.80	2.615	.0279	92	154	.40	14.241	.0069
44	378	.80	2.333	.0185	93	155	.40	13.142	.0076
45	379	1.20	1.607	.0101	94	156	.40	12.326	.0049
46	380	1.20	1.527	.0142	95	157	.40	11.788	.0080
47	381	1.20	1.484	.0335	96	158	.40	11.864	.0070
48	382	1.20	1.514	.0097	97	159	.40	11.837	
49	383	1.20	1.549	.0129	98	0	-0	0	0
69		.050							

HIT ON LOOP 55

DATE 5/12/75

AEDC(ARO,INC.) ARNOLD AFS, TENNESSEE
VON KARMAN GAS DYNAMICS FACILITY
50 INCH HYPERSONIC TUNNEL B
V41B-B7A

GROUP	TEST CONDITION	MODEL	MACH NO	PO,PSIA	TO,DEG R	ALPHA-MODEL	ALPHA-SECTOR	ALPHA-PREBEND	ROLL MODEL	YAW
69	25	140 B	7.98	429.9	1305	39.92	-10.12	30.00	168.50	2.0

T-INF (DEG R)	P-INF (PSIA)	Q-INF (PSIA)	V-INF (FT/SEC)	RHO-INF (SLUGS/FT3)	MU-INF (LB-SEC/FT2)	RE/FT (FT-1)	HREF-FR (R= .0400FT)	STFR (R= .0400FT)	SWITCH POSITION
95.0	.045	1.995	3811	3.953E-05	7.648E-08	1.970E 06	2.296E-02	1.918E-02	1

IC NO	TW	DTWDT	QDOT	H(TO)	H(TO)/HREF	H(.9TO)	H(.9TO)/HREF
						FUSELAGE VENT NO. 1	
						X/L	Z,FULL SCALE(IN)
1	541.2	1.919	.254	3.323E-04	.0145	4.008E-04	.0175	.4434	376.6300
2	540.3	1.661	.224	2.931E-04	.0128	3.534E-04	.0154	.4264	371.6300
3	540.0	1.405	.193	2.527E-04	.0110	3.047E-04	.0133	.4303	371.6300
4	540.2	1.396	.190	2.467E-04	.0108	2.998E-04	.0131	.4342	371.6300
5	540.7	1.352	.181	2.364E-04	.0103	2.850E-04	.0124	.4380	371.6300
6	541.9	1.241	.165	2.159E-04	.0094	2.605E-04	.0113	.4434	369.1300
7	541.2	1.064	.155	2.036E-04	.0089	2.455E-04	.0107	.4226	366.6300
8	540.3	1.108	.167	2.169E-04	.0095	2.639E-04	.0115	.4264	366.6300
9	540.9	.895	.130	1.767E-04	.0074	2.059E-04	.0090	.4303	366.6300
10	541.3	.822	.118	1.540E-04	.0067	1.858E-04	.0081	.4342	366.6300
11	542.1	.863	.117	1.532E-04	.0067	1.849E-04	.0080	.4380	366.6300
12	544.2	.754	.104	1.371E-04	.0060	1.655E-04	.0072	.4496	366.6300
13	546.2	.448	.066	8.708E-05	.0038	1.052E-04	.0046	.4187	357.1300
14	544.0	.568	.078	1.022E-04	.0045	1.234E-04	.0054	.4396	361.6300
15	545.4	.614	.082	1.082E-04	.0047	1.307E-04	.0057	.4434	361.6300
16	546.4	.294	.040	5.262E-05	.0023	6.356E-05	.0028	.4396	355.6300
17	548.6	.284	.039	5.102E-05	.0022	6.166E-05	.0027	.4434	355.6300
18	550.0	.222	.031	4.140E-05	.0018	5.005E-05	.0022	.4396	351.6300
19	552.3	.125	.018	2.347E-05	.0010	2.839E-05	.0012	.4291	332.6300
						CARGO BAY VENT NO. 1			
						X/L	Z,FULL SCALE(IN)		
22	542.7	5.488	.763	1.001E-03	.0436	1.208E-03	.0526	.3974	397.6300
23	540.1	4.247	.594	7.763E-04	.0338	9.361E-04	.0408	.4013	397.6300
24	539.8	4.016	.543	7.101E-04	.0309	8.561E-04	.0373	.4052	397.6300
25	540.1	4.303	.567	7.411E-04	.0323	8.935E-04	.0389	.4090	397.6300
26	541.1	5.088	.668	8.749E-04	.0381	1.055E-03	.0460	.4129	397.6300
27	542.2	5.184	.723	9.480E-04	.0413	1.144E-03	.0498	.3936	392.6300
28	539.5	3.789	.545	7.118E-04	.0310	8.581E-04	.0374	.3974	392.6300
29	539.6	3.966	.572	7.475E-04	.0326	9.012E-04	.0392	.4013	392.6300
30	539.5	4.551	.654	8.549E-04	.0372	1.031E-03	.0449	.4052	392.6300
31	540.1	5.092	.712	9.308E-04	.0405	1.122E-03	.0489	.4090	392.6300
32	540.4	5.408	.717	9.384E-04	.0409	1.132E-03	.0493	.4129	392.6300
33	539.7	3.963	.566	7.400E-04	.0322	8.922E-04	.0389	.4090	386.1300
34	541.1	5.201	.704	9.220E-04	.0402	1.112E-03	.0484	.4129	387.6300
35	542.8	3.616	.513	6.727E-04	.0293	8.116E-04	.0354	.3897	383.1300
36	540.4	3.070	.446	5.830E-04	.0254	7.030E-04	.0306	.4090	378.6300
37	540.5	4.308	.606	7.930E-04	.0345	9.563E-04	.0417	.4129	382.1300
38	541.0	3.256	.454	5.942E-04	.0259	7.167E-04	.0312	.4129	377.1300
39	541.9	2.622	.383	5.024E-04	.0219	6.061E-04	.0264	.4001	373.6300
						PROTUBERANCES			
						X/L	Z,FULL SCALE(IN)		
41	543.8	3.683	.494	6.495E-04	.0283	7.839E-04	.0341	.3546	379.0500
42	543.9	4.270	.585	7.682E-04	.0335	9.272E-04	.0404	.3604	379.0500
43	544.7	3.551	.462	6.084E-04	.0265	7.345E-04	.0320	.3450	374.0500

DATE 5/12/75

AEDC(ARO,INC.) ARNOLD AFS, TENNESSEE
VON KARMAN GAS DYNAMICS FACILITY
50 INCH HYPERSONIC TUNNEL B
V41B-B7A

GROUP	TEST CONDITION	MODEL	MACH NO	PO,PSIA	TO,DEG R	ALPHA-MODEL	ALPHA-SECTOR	ALPHA-PREBEND	ROLL MODEL	YAW
69	25	140 B	7.98	429.9	1305	39.92	-10.12	30.00	168.50	2.0

T-INF (DEG R)	P-INF (PSIA)	Q-INF (PSIA)	V-INF (FT/SEC)	RHO-INF (SLUGS/FT3)	MU-INF (LB-SEC/FT2)	RE/FT (FT-1)	HREF-FR (R= .0400FT)	STFR (R= .0400FT)	SWITCH POSITION
95.0	.045	1.995	3811	3.953E-05	7.648E-06	1.970E 06	2.296E-02	1.918E-02	1

TC NO	TW	DTWDT	QDOT	H(TO)	H(TO)/HREF	H(.9TO)	H(.9TO)/HREF
44	543.8	2.993	.408	5.305E-04	.0234	6.475E-04	.0282
45	544.1	4.157	.577	7.579E-04	.0330	9.148E-04	.0398
46	548.5	6.741	.946	1.231E-03	.0545	1.512E-03	.0669
47	545.7	3.070	.410	5.346E-04	.0235	6.515E-04	.0284
48	548.0	5.246	.722	9.540E-04	.0416	1.153E-03	.0502
49	546.4	2.972	.410	5.406E-04	.0235	6.530E-04	.0284
50	547.8	3.556	.496	6.548E-04	.0285	7.912E-04	.0345
51	547.9	3.232	.440	5.819E-04	.0253	7.031E-04	.0306
52	548.1	1.916	.265	3.497E-04	.0152	4.226E-04	.0184
53	547.7	2.211	.324	4.262E-04	.0186	5.173E-04	.0225
54	541.3	3.508	.502	6.570E-04	.0286	7.924E-04	.0345
55	549.1	1.642	.236	3.120E-04	.0136	3.771E-04	.0164
56	542.2	3.459	.447	5.658E-04	.0255	7.067E-04	.0308
57	544.3	4.048	.496	6.522E-04	.0284	7.873E-04	.0343
58	546.8	5.039	.668	8.816E-04	.0384	1.065E-03	.0464
59	549.2	4.175	.552	7.310E-04	.0318	8.836E-04	.0385
60	548.7	4.070	.570	7.533E-04	.0328	9.104E-04	.0397
61	547.6	4.411	.561	7.414E-04	.0323	8.958E-04	.0390
62	544.9	3.884	.478	6.269E-04	.0274	7.593E-04	.0331
63	542.8	3.456	.453	5.941E-04	.0259	7.168E-04	.0312
64	[illegible]	[illegible]	[illegible]	[illegible]	[illegible]	[illegible]	[illegible]
65	541.3	3.317	.452	5.921E-04	.0258	7.142E-04	.0311
66	543.7	3.961	.501	6.588E-04	.0287	7.951E-04	.0346
67	545.5	4.612	.651	8.568E-04	.0373	1.035E-03	.0451
68	549.0	5.001	.637	8.427E-04	.0367	1.018E-03	.0444

PROTUBERANCES

X/L	Z,FULL SCALE(IN)
.3508	374.0500
.3566	374.0500
.3604	374.0500
.3392	366.5500
.3566	366.5500
.3392	360.7000
.3566	360.7000
.3604	360.7000
.3392	353.2000
.3450	353.2000
.3508	353.2000
.3566	353.2000

SUBLIMATOR VENT NO. 1

X/L	Z,FULL SCALE(IN)
.3031	371.1300
.3074	369.1300
.3089	363.6300
.3074	358.1300
.3031	356.1300
.2988	358.1300
.2973	363.6300
.2988	369.1300
.3031	376.1300
.3089	378.6300
.3101	372.6300
.3157	370.3800
.3128	363.6300

DATE 5/12/75

AEDC(ARO,INC.) ARNOLD AFS, TENNESSEE
VON KARMAN GAS DYNAMICS FACILITY
50 INCH HYPERSONIC TUNNEL B
V41B-87A

GROUP	TEST CONDITION	MODEL	MACH NO	PJ,PSIA	TO,DEG R	ALPHA-MODEL	ALPHA-SECTOR	ALPHA-PREBEND	ROLL MODEL	YAW
69	25	140 B	7.96	429.9	1305	39.92	-10.12	30.00	168.50	2.0

T-INF (DEG R)	P-INF (PSIA)	Q-INF (PSIA)	V-INF (FT/SEC)	RHO-INF (SLUGS/FT3)	MU-INF (LB-SEC/FT2)	RE/FT (FT-1)	HREF-FR (R= .0400FT)	STFR (R= .0400FT)	SWITCH POSITION
95.0	.045	1.995	3811	3.953E-05	7.648E-08	1.970E 06	2.296E-02	1.918E-02	1

IC NO	TW	DIWDT	QDOT	H(TO)	H(TO)/HREF	H(.9TO)	H(.9TO)/HREF
69	539.0	2.338	.327	4.265E-04	.0186	5.141E-04	.0224
70	539.5	2.439	.299	3.912E-04	.0170	4.716E-04	.0205
71	541.3	2.012	.275	3.601E-04	.0157	4.343E-04	.0189
72	540.4	2.166	.308	4.025E-04	.0175	4.854E-04	.0211
73	540.9	2.665	.346	4.534E-04	.0197	5.468E-04	.0238
74	542.0	2.877	.350	4.583E-04	.0200	5.529E-04	.0241
75	543.2	2.405	.328	4.307E-04	.0188	5.198E-04	.0226
77	543.9	3.012	.429	5.633E-04	.0245	6.799E-04	.0296
78	545.7	3.440	.474	6.251E-04	.0272	7.548E-04	.0329
79	547.5	3.306	.425	5.615E-04	.0245	6.784E-04	.0295
80	546.1	3.327	.455	6.010E-04	.0262	7.259E-04	.0316
81	547.5	3.272	.459	6.061E-04	.0264	7.323E-04	.0319
83	535.9	3.528	.471	6.132E-04	.0267	7.386E-04	.0322
84	536.8	3.628	.479	6.232E-04	.0271	7.507E-04	.0327
85	536.2	2.998	.439	5.319E-04	.0232	6.407E-04	.0279
87	533.6	2.396	.342	4.440E-04	.0193	5.344E-04	.0233
88	535.8	3.222	.451	5.863E-04	.0255	7.061E-04	.0308
89	535.9	2.874	.423	5.498E-04	.0239	6.622E-04	.0288
90	535.4	3.094	.422	5.482E-04	.0239	6.602E-04	.0288
91	536.2	3.160	.434	5.644E-04	.0246	6.798E-04	.0296
92	537.0	2.760	.390	5.081E-04	.0221	6.121E-04	.0267
93	536.0	2.883	.369	4.794E-04	.0209	5.774E-04	.0251
94	537.7	3.109	.425	5.277E-04	.0230	6.359E-04	.0277
95	537.7	2.975	.423	5.519E-04	.0240	6.650E-04	.0290
96	537.9	2.537	.330	4.307E-04	.0188	5.190E-04	.0226
97	538.3	3.084	.395	5.150E-04	.0224	6.207E-04	.0270
98	538.0	2.775	.390	5.086E-04	.0222	6.128E-04	.0267
100	540.4	2.885	.410	5.361E-04	.0233	6.464E-04	.0282
102	541.5	2.633	.373	4.887E-04	.0213	5.894E-04	.0257
103	539.8	3.090	.447	5.320E-04	.0232	6.413E-04	.0279
105	538.3	3.389	.425	5.541E-04	.0241	6.678E-04	.0291
106	537.0	3.666	.471	6.130E-04	.0267	7.385E-04	.0322

FUSELAGE VENT PANEL NO. 7

X/L	Z,FULL SCALE(IN)
.2487	356.4000
.2591	356.4000
.2419	351.4000
.2487	351.4000
.2552	351.4000
.2610	351.4000
.2419	342.8000
.2552	342.8000
.2610	342.8000
.2419	334.2000
.2487	334.2000
.2552	334.2000

ACCESS HATCH WINDOW

X/L	Z,FULL SCALE(IN)
.2131	398.0000
.2131	388.0000
.2131	383.0000
.2222	395.8000
.2193	386.5000
.2177	381.8000
.2297	389.5000
.2243	382.5000
.2214	378.7000
.2343	374.0000
.2274	375.5000
.2239	373.3000
.2363	368.0000
.2286	368.0000
.2247	368.0000
.2274	360.5000
.2081	354.3000
.2023	362.7000
.2050	378.7000
.2050	386.2000

GROUP 69 CENTERLINE TIME 2.70

CH	TC	FIT LENGTH	DIDWT	UNCERTAINTY	CH	TC	FIT LENGTH	DIDWT	UNCERTAINTY
1	1	1.20	1.919	.0107	50	53	.80	2.211	.0112
2	2	1.20	1.661	.0109	51	54	.80	3.508	.0143
3	3	1.20	1.495	.0126	52	55	1.20	1.642	.0131
4	4	1.20	1.396	.0116	53	56	.80	3.459	.0082
5	5	1.20	1.352	.0315	54	57	.80	4.048	.0102
6	6	1.20	1.241	.0155	55	58	.60	5.039	.0127
7	7	1.20	1.064	.0767	56	59	.60	4.175	.0448
8	8	1.20	1.108	.0170	57	60	.60	4.070	.0149
9	9	2.00	.895	.0170	58	61	.60	4.411	.0088
10	10	2.00	.822	.0064	59	62	.80	3.884	.0135
11	11	2.00	.863	.0132	60	63	.80	3.456	.0100
12	12	2.00	.754	.0165	61	64	2.00	-.038	-.3903
13	13	2.00	.442	.0176	62	65	.80	3.317	.0078
14	14	2.00	.568	.0191	63	66	.80	3.961	.0070
15	15	2.00	.614	.0309	64	67	.60	4.612	.0146
16	16	2.00	.244	.0354	65	68	.60	5.001	.0074
17	17	2.00	.284	.0603	66	69	.80	2.338	.0210
18	18	2.00	.222	.0358	67	70	.80	2.439	.0142
19	19	2.00	.126	.0875	68	71	.80	2.018	.1927
20	22	.60	5.488	.0102	69	72	.80	2.166	.0275
21	23	.60	4.247	.0128	70	73	.80	2.665	.0147
22	24	.60	4.016	.0141	71	74	.80	2.877	.0225
23	25	.60	4.303	.0222	72	75	.80	2.405	.0120
24	26	.60	5.088	.0166	73	77	.80	3.012	.0081
25	27	.60	5.184	.0180	74	78	.80	3.440	.0102
26	28	.80	3.789	.0096	75	79	.80	3.306	.0148
27	29	.80	3.966	.0100	76	80	.80	3.327	.0126
28	30	.60	4.551	.0150	77	81	.80	3.272	.0146
29	31	.60	5.092	.0086	78	83	.80	3.528	.0096
30	32	.60	5.408	.0110	79	84	.80	3.628	.0602
31	33	.80	3.963	.0102	80	85	.80	2.998	.0109
32	34	.60	5.201	.0058	81	87	.80	2.396	.0130
33	35	.80	3.616	.0093	82	88	.80	3.222	.0072
34	36	.80	3.070	.0090	83	89	.80	2.874	.0138
35	37	.60	4.308	.0099	84	90	.80	3.094	.0097
36	38	.80	3.256	.0101	85	91	.80	3.160	.0091
37	39	.80	2.622	.0119	86	92	.80	2.760	.0108
38	41	.80	3.683	.0093	87	93	.80	2.883	.0229
39	42	.60	4.270	.0156	88	94	.80	3.109	.0081
40	43	.80	3.551	.0104	89	95	.80	2.975	.0160
41	44	.80	2.993	.0074	90	96	.80	2.537	.0987
42	45	.60	4.157	.0107	91	97	.80	3.084	.0235
43	46	.60	6.741	.0158	92	98	.80	2.775	.0430
44	47	.80	3.070	.0106	93	100	.80	2.885	.0127
45	48	.60	5.246	.0142	94	102	.80	2.633	.0173
46	49	.80	2.972	.0090	95	103	.80	3.090	.0259
47	50	.80	3.556	.0226	96	105	.80	3.389	.0083
48	51	.80	3.232	.0113	97	106	.80	3.666	.0105
49	52	1.20	1.916	.0114	98	0	-0	0	0

70 .050

BIT ON LOOP 56

DATE 5/12/75

AEDC(ARO,INC.) ARNOLD AFS, TENNESSEE
VON KARMAN GAS DYNAMICS FACILITY
50 INCH HYPERSONIC TUNNEL H
V41B-B7A

GROUP	TEST CONDITION	MODEL	MACH NO	PO,PSIA	TO,DEG R	ALPHA-MODEL	ALPHA-SECTOR	ALPHA-PREBEND	ROLL MODEL	YAW
70	25	140 B	7.98	430.2	1305	39.87	-10.07	30.00	168.48	2.0

T-INF (DEG R)	P-INF (PSIA)	Q-INF (PSIA)	V-INF (FT/SEC)	RHO-INF (SLUGS/FT3)	MU-INF (LB-SEC/FT2)	RE/FT (FT-1)	HREF-FR (R= .0400FT)	STFR (R= .0400FT)	SWITCH POSITION
95.0	.045	1.597	3812	3.955E-05	7.650E-08	1.970E 06	2.297E-02	1.918E-02	2

TC NO	TW	DT*DT	QDOT	H(TO)	H(TO)/HREF	H(.9TO)	H(.9TO)/HREF	X/L	Z*FULL SCALE(IN)
								ACCESS HATCH WINDOW	
107	535.8	3.481	.500	6.492E-04	.0283	7.818E-04	.0340	.2050	396.2000
								FUSELAGE VENT PANEL NO. 3 AND 1	
108	537.5	5.910	.627	8.163E-04	.0355	9.835E-04	.0428	.1244	377.5000
109	536.0	5.109	.633	8.225E-04	.0358	9.905E-04	.0431	.1302	377.5000
110	535.8	4.921	.625	8.120E-04	.0354	9.779E-04	.0426	.1360	377.5000
111	536.5	4.915	.593	7.720E-04	.0336	9.298E-04	.0405	.1418	377.5000
112	537.5	4.957	.590	7.683E-04	.0335	9.257E-04	.0403	.1476	377.5000
113	537.9	5.743	.660	8.607E-04	.0375	1.037E-03	.0452	.1215	273.5000
114	537.1	5.130	.617	8.037E-04	.0350	9.682E-04	.0422	.1273	273.5000
115	536.9	4.602	.572	7.447E-04	.0324	8.972E-04	.0391	.1331	273.5000
116	536.9	4.605	.566	7.373E-04	.0321	8.882E-04	.0387	.1389	273.5000
117	538.8	4.948	.571	7.456E-04	.0325	8.987E-04	.0391	.1447	273.5000
118	539.0	3.962	.550	7.177E-04	.0312	8.650E-04	.0377	.1409	366.0000
119	539.9	4.484	.582	7.611E-04	.0331	9.176E-04	.0399	.1442	366.0000
120	540.9	4.745	.595	7.791E-04	.0339	9.395E-04	.0409	.1215	359.5000
121	541.0	3.999	.493	6.449E-04	.0281	7.778E-04	.0339	.1303	359.5000
122	541.7	4.011	.502	6.571E-04	.0286	7.925E-04	.0345	.1337	359.5000
								LOWER RCS NOZZLES	
124	530.9	1.424	.177	1.640E-04	.0071	1.973E-04	.0086	.0950	400.0000
125	531.3	1.797	.196	2.527E-04	.0110	3.040E-04	.0132	.0988	400.0000
126	531.5	1.606	.220	2.842E-04	.0124	3.418E-04	.0149	.1027	400.0000
127	530.5	1.367	.184	2.376E-04	.0103	2.857E-04	.0124	.0911	395.0000
128	531.0	2.096	.254	3.283E-04	.0143	3.949E-04	.0172	.0950	395.0000
129	531.9	2.524	.296	3.830E-04	.0167	4.608E-04	.0201	.0988	395.0000
130	531.8	1.965	.235	3.038E-04	.0132	3.655E-04	.0159	.0810	390.0000
131	530.8	1.814	.208	3.457E-04	.0151	4.158E-04	.0181	.0857	390.0000
132	532.7	3.484	.423	5.223E-04	.0227	6.285E-04	.0274	.0963	390.0000
133	531.2	2.440	.296	3.824E-04	.0166	4.600E-04	.0200	.0857	383.8000
134	532.0	3.484	.406	6.030E-04	.0263	7.255E-04	.0316	.0872	377.3000
135	534.0	4.730	.568	7.308E-04	.0321	8.869E-04	.0386	.0903	374.5500
136	535.4	5.248	.584	7.586E-04	.0330	9.135E-04	.0398	.0960	374.5500
137	534.0	4.724	.618	8.015E-04	.0349	9.648E-04	.0420	.0872	370.5500
138	535.7	5.480	.632	8.213E-04	.0358	9.891E-04	.0431	.0928	370.5500
139	535.2	5.008	.640	8.313E-04	.0362	1.001E-03	.0436	.0816	366.0500
140	537.6	5.683	.725	9.439E-04	.0411	1.137E-03	.0495	.0934	362.4000
141	537.8	5.380	.713	9.286E-04	.0404	1.119E-03	.0487	.0973	362.4000
142	540.3	4.075	.445	5.823E-04	.0254	7.022E-04	.0306	.0833	355.2000
143	539.3	6.455	.650	8.491E-04	.0370	1.024E-03	.0446	.0919	355.2000
144	542.0	7.162	.947	1.241E-03	.0540	1.497E-03	.0652	.0949	349.0000

DATE 5/12/75

AEDC(ARO,INC.) ARNOLD AFS, TENNESSEE
VON KARMAN GAS DYNAMICS FACILITY
50 INCH HYPERSONIC TUNNEL B
V41B-87A

GROUP	TEST CONDITION	MODEL	MACH NO	PO,PSIA	TO,DEG R	ALPHA-MODEL	ALPHA-SECTOR	ALPHA-PREBEND	ROLL MODEL	YAW
70	25	140 B	7.98	430.2	1305	39.87	-10.07	30.00	168.48	2.0

T-INF (DEG R)	P-INF (PSIA)	Q-INF (PSIA)	V-INF (FT/SEC)	RHO-INF (SLUGS/FT3)	MU-INF (LB-SEC/FT2)	RE/FT (FT-1)	HREF-FR (R= .0400FT)	STFR (R= .0400FT)	SWITCH POSITION
95.0	.045	1.997	3812	3.955E-05	7.650E-06	1.970E 06	2.297E-02	1.918E-02	2

TC NO	TW	DTWDT	QDOT	H(TO)	H(TO)/HREF	H(.9TO)	H(.9TO)/HREF
161	531.6	1.372	.162	2.096E-04	.0091	2.522E-04	.0110
162	531.6	1.573	.149	1.923E-04	.0084	2.313E-04	.0101
163	531.5	1.532	.188	2.428E-04	.0106	2.921E-04	.0127
164	532.3	1.935	.252	3.263E-04	.0142	3.926E-04	.0171
165	533.2	1.718	.216	2.801E-04	.0122	3.371E-04	.0147
166	533.4	1.686	.216	2.799E-04	.0122	3.368E-04	.0147
167	531.0	.681	.092	1.188E-04	.0052	1.429E-04	.0062
168	531.3	.856	.090	1.159E-04	.0050	1.394E-04	.0061
169	530.6	.669	.081	1.047E-04	.0046	1.260E-04	.0055
170	530.9	.823	.103	1.327E-04	.0058	1.597E-04	.0070
171	531.1	.906	.119	1.410E-04	.0061	1.696E-04	.0074
172	530.7	.740	.096	1.243E-04	.0054	1.495E-04	.0065
173	529.6	.289	.038	4.958E-05	.0022	5.961E-05	.0026
174	529.6	.223	.025	3.263E-05	.0014	3.923E-05	.0017
175	529.8	.333	.048	6.141E-05	.0027	7.383E-05	.0032
176	530.0	.249	.034	4.375E-05	.0019	5.260E-05	.0023
177	537.1	7.664	1.056	1.375E-03	.0598	1.656E-03	.0721
178	534.2	4.323	.849	1.102E-03	.0480	1.326E-03	.0577
179	532.7	2.819	.590	7.639E-04	.0333	9.192E-04	.0400
180	535.3	5.131	.670	8.697E-04	.0379	1.047E-03	.0456
181	533.3	3.413	.463	6.001E-04	.0261	7.222E-04	.0314
182	531.3	1.933	.275	3.554E-04	.0155	4.275E-04	.0186
183	529.4	.368	.046	5.932E-05	.0026	7.132E-05	.0031
184	529.3	.391	.053	6.870E-05	.0030	8.259E-05	.0036
185	533.4	4.885	.587	7.602E-04	.0331	9.149E-04	.0398
186	533.9	5.319	.667	8.654E-04	.0377	1.042E-03	.0454
187	531.6	2.970	.395	5.103E-04	.0222	6.139E-04	.0267
188	531.1	1.909	.444	5.731E-04	.0249	6.893E-04	.0300
189	530.4	2.315	.329	4.249E-04	.0185	5.110E-04	.0222
190	531.3	3.388	.487	6.287E-04	.0274	7.562E-04	.0329
191	530.0	2.890	.441	5.683E-04	.0247	6.833E-04	.0297

UPPER RCS NOZZLES

X/L	2Y/B
.0619	-.0160
.0709	-.0160
.0807	-.0160
.0943	-.0160
.0978	-.0160
.1013	-.0160
.0619	-.0320
.0709	-.0320
.0807	-.0320
.0943	-.0320
.0978	-.0320
.1013	-.0320
.0807	-.0480
.0943	-.0480
.0978	-.0480
.1013	-.0480

CANOPY

DATE 5/12/75

AEDC(ARO,INC.) ARNOLD AFS, TENNESSEE
VON KARMAN GAS DYNAMICS FACILITY
50 INCH HYPERSONIC TUNNEL B
V41B-B7A

GROUP	TEST CONDITION	MODEL	MACH NO	PO,PSIA	TO,DEG R	ALPHA-MODEL	ALPHA-SECTOR	ALPHA-PREBEND	ROLL MODEL	YAW
70	25	140 B	7.98	430.2	1305	34.87	-10.07	30.00	168.48	2.0

T-INF (DEG R)	P-INF (PSIA)	Q-INF (PSIA)	V-INF (FT/SEC)	RHO-INF (SLUGS/FT3)	MU-INF (LB-SEC/FT2)	RE/FT (FT-1)	HREF-FR (R= .0400FT)	STFR (R= .0400FT)	SWITCH POSITION
95.0	.045	1.597	3812	3.955E-05	7.650E-08	1.970E 06	2.297E-02	1.918E-02	2

IC NO	TW	DTW/DT	QDOT	H(TO)	H(TO)/HREF	H(.9TO)	H(.9TO)/HREF
							CANOPY
192	523.1	.145	.021	2.672E-05	.0012	3.212E-05	.0014
193	529.6	1.848	.355	4.577E-04	.0199	5.504E-04	.0240
194	527.7	.729	.094	1.207E-04	.0053	1.450E-04	.0063
195	528.5	1.539	.189	2.435E-04	.0106	2.927E-04	.0127
196	529.2	1.533	.261	2.583E-04	.0112	3.105E-04	.0135
197	529.0	.401	.040	5.106E-05	.0022	6.139E-05	.0027
198	528.5	.453	.052	6.749E-05	.0029	8.112E-05	.0035
199	527.7	1.027	.138	1.770E-04	.0077	2.127E-04	.0093
200	528.4	2.020	.247	3.694E-04	.0161	4.440E-04	.0193
201	529.5	2.960	.417	5.374E-04	.0234	6.461E-04	.0281
202	530.2	2.645	.334	4.306E-04	.0187	5.178E-04	.0225
203	527.6	.612	.076	9.741E-05	.0042	1.171E-04	.0051
204	527.2	.853	.132	1.699E-04	.0074	2.041E-04	.0089
205	528.5	2.517	.371	5.037E-04	.0219	6.054E-04	.0264
206	530.1	.815	.138	1.391E-04	.0061	1.673E-04	.0073
207	529.2	2.845	.380	4.900E-04	.0213	5.891E-04	.0256
208	527.5	.418	.056	7.210E-05	.0031	8.663E-05	.0038
209	527.0	.978	.134	1.723E-04	.0075	2.070E-04	.0090
210	526.2	1.037	.138	1.772E-04	.0077	2.128E-04	.0093
211	530.8	.714	.087	1.119E-04	.0049	1.345E-04	.0059
212	529.8	.796	.107	1.361E-04	.0060	1.661E-04	.0072
213	527.0	.494	.065	8.342E-05	.0037	1.008E-04	.0044
214	527.0	1.147	.150	2.059E-04	.0090	2.474E-04	.0108
215	527.1	1.618	.229	2.944E-04	.0128	3.537E-04	.0154
216	528.1	2.096	.297	3.820E-04	.0166	4.591E-04	.0200
217	529.2	2.805	.399	5.138E-04	.0224	6.176E-04	.0269
218	526.4	.545	.075	9.615E-05	.0042	1.155E-04	.0050
219	527.1	.710	.099	1.278E-04	.0056	1.536E-04	.0067
220	526.6	1.473	.212	2.593E-04	.0113	3.115E-04	.0136

GROUP 70 CENTERLINE TIME 2.75

CH	TC	FIT LENGTH	DTDWT	UNCERTAINTY	CH	TC	FIT LENGTH	DTDWT	UNCERTAINTY
1	107	.80	3.481	.0105	50	173	2.00	.289	.0292
2	108	.60	5.910	.0042	51	174	2.00	.223	.0766
3	109	.60	5.109	.0103	52	175	2.00	.333	.0495
4	110	.60	4.921	.0079	53	176	2.00	.249	.0386
5	111	.60	4.915	.0173	54	177	.60	7.664	.0087
6	112	.60	4.957	.0081	55	178	.60	4.323	.0117
7	113	.60	5.742	.0308	56	179	.80	2.819	.0407
8	114	.60	5.130	.0088	57	180	.60	5.131	.0076
9	115	.60	4.602	.0144	58	181	.80	3.413	.0076
10	116	.60	4.635	.0108	59	182	1.20	1.933	.0167
11	117	.60	4.948	.0121	60	183	2.00	.368	.0344
12	118	.80	3.962	.0181	61	184	2.00	.391	.0492
13	119	.60	4.484	.0109	62	185	.60	4.885	.0086
14	120	.60	4.745	.0103	63	186	.60	5.319	.0114
15	121	.80	3.999	.0166	64	187	.80	2.970	.0115
16	122	.80	4.011	.0106	65	188	1.20	1.909	.0105
17	124	1.20	1.424	.0307	66	189	.80	2.315	.0188
18	125	1.20	1.797	.0108	67	190	.80	3.388	.0082
19	126	1.20	1.606	.0154	68	191	.80	2.890	.0836
20	127	1.20	1.367	.0439	69	192	2.00	.148	.1636
21	128	.80	2.096	.0119	70	193	1.20	1.848	.0124
22	129	.80	2.524	.0103	71	194	2.00	.729	.0227
23	130	1.20	1.445	.0162	72	195	1.20	1.539	.0145
24	131	1.20	1.614	.0299	73	196	1.20	1.533	.0130
25	132	.80	3.464	.0163	74	197	2.00	.401	.0262
26	133	.80	2.440	.0182	75	198	2.00	.453	.0327
27	134	.80	3.484	.0089	76	199	1.20	1.027	.0331
28	135	.60	4.730	.0118	77	200	.80	2.020	.0210
29	136	.60	5.248	.0092	78	201	.80	2.960	.0099
30	137	.60	4.724	.0151	79	202	.80	2.645	.0748
31	138	.60	5.480	.0082	80	203	2.00	.612	.0166
32	139	.60	5.008	.0101	81	204	2.00	.853	.0124
33	140	.60	5.683	.0072	82	205	.80	2.517	.0129
34	141	.60	5.380	.0074	83	206	2.00	.815	.0128
35	142	.60	4.075	.0113	84	207	.80	2.845	.0150
36	143	.60	6.455	.0064	85	208	2.00	.418	.0225
37	144	.60	7.162	.0030	86	209	1.20	.978	.0160
38	161	1.20	1.372	.0160	87	210	1.20	1.037	.0441
39	162	1.20	1.573	.0101	88	211	2.00	.714	.0181
40	163	1.20	1.532	.0156	89	212	2.00	.796	.0183
41	164	1.20	1.936	.0069	90	213	2.00	.494	.0979
42	165	1.20	1.718	.0127	91	214	1.20	1.147	.0344
43	166	1.20	1.686	.0183	92	215	1.20	1.618	.0341
44	167	2.00	.681	.0150	93	216	.80	2.096	.0122
45	168	2.00	.856	.0125	94	217	.80	2.805	.0178
46	169	2.00	.669	.0135	95	218	2.00	.545	.0272
47	170	2.00	.823	.0235	96	219	2.00	.710	.0225
48	171	2.00	.906	.0112	97	220	1.20	1.473	.0145
49	172	2.00	.740	.0130	98	0	-0	0	0

71 .050

BIT ON LOOP 56

DATE 5/12/75

AEDC(ARO,INC.) ARNOLD AFS, TENNESSEE
VON KARMAN GAS DYNAMICS FACILITY
50 INCH HYPERSONIC TUNNEL B
V41B-87A

GROUP	TEST CONDITION	MODEL	MACH NO	PO,PSIA	TO,DEG R	ALPHA-MODEL	ALPHA-SECTOR	ALPHA-PREBEND	ROLL MODEL	YAW
71	25	140 B	7.98	430.9	1305	39.90	-10.10	30.00	168.48	2.0

T-INF (DEG R)	P-INF (PSIA)	Q-INF (PSIA)	V-INF (FT/SEC)	RHO-INF (SLUGS/FT3)	MU-INF (LB-SEC/FT2)	RE/FT (FT-1)	HREF-FR (R= .0400FT)	STFR (R= .0400FT)	SWITCH POSITION
95.0	.045	2.000	3811	3.962E-05	7.650E-08	1.974E 06	2.299E-02	1.916E-02	3

TC NO	TW	DT*DT	QDOT	H(TO)	H(TO)/HREF	H(.9TO)	H(.9TO)/HREF	X/L	2Y/B
							CANOPY		
221	528.9	.538	.065	6.367E-05	.0036	1.006E-04	.0044		
222	527.7	.504	.062	7.963E-05	.0035	9.570E-05	.0042		
223	525.3	1.362	.184	2.302E-04	.0103	2.836E-04	.0123		
							ESCAPE HATCH AND WINDOW		
224	530.5	2.722	.271	3.494E-04	.0152	4.202E-04	.0183	.1933	.0162
225	530.3	1.921	.229	2.962E-04	.0129	3.562E-04	.0155	.1972	.0162
226	528.2	1.407	.148	1.903E-04	.0083	2.287E-04	.0099	.1933	.0384
227	527.5	.898	.131	1.685E-04	.0073	2.025E-04	.0088	.1972	.0384
228	526.2	1.427	.183	2.347E-04	.0102	2.819E-04	.0123	.1933	.0653
229	526.5	1.369	.175	2.253E-04	.0098	2.707E-04	.0118	.1972	.0653
232	530.2	.266	.036	4.631E-05	.0020	5.569E-05	.0024	.2567	.0235
233	530.6	.341	.052	6.667E-05	.0029	8.019E-05	.0035	.2606	.0235
235	529.6	.594	.087	1.120E-04	.0049	1.346E-04	.0059	.2567	.0491
237	530.4	.651	.091	1.180E-04	.0051	1.419E-04	.0062	.2606	.0491
							CARGO BAY HINGE NO. 1	X/L	Z,FULL SCALE(IN)
238	535.1	2.381	.319	4.146E-04	.0180	4.992E-04	.0217	.2879	420.0000
239	537.9	3.454	.464	6.042E-04	.0263	7.280E-04	.0317	.2917	420.0000
240	535.3	1.788	.256	3.321E-04	.0144	3.999E-04	.0174	.2840	415.0000
241	537.5	2.789	.393	5.120E-04	.0223	6.169E-04	.0268	.2879	415.0000
242	536.3	2.443	.349	4.546E-04	.0198	5.475E-04	.0238	.2917	415.0000
243	536.6	1.764	.216	2.813E-04	.0122	3.388E-04	.0147	.2801	405.0000
244	536.6	1.486	.174	2.265E-04	.0099	2.728E-04	.0119	.2840	405.0000
							CARGO BAY HINGE NO. 2	X/L	Z,FULL SCALE(IN)
245	537.5	3.421	.490	6.361E-04	.0278	7.688E-04	.0334	.3192	420.0000
246	541.0	5.853	.839	1.098E-03	.0478	1.325E-03	.0576	.3439	420.0000
247	537.8	2.627	.388	5.053E-04	.0220	6.088E-04	.0265	.3362	415.0000
248	540.3	4.481	.662	8.662E-04	.0377	1.044E-03	.0454	.3401	415.0000
249	540.4	4.772	.706	9.226E-04	.0401	1.112E-03	.0484	.3439	415.0000
250	540.3	3.262	.411	5.369E-04	.0234	6.474E-04	.0282	.3323	405.0000
251	540.0	3.354	.413	5.399E-04	.0235	6.509E-04	.0283	.3362	405.0000
							CARGO BAY HINGE NO. 3	X/L	Z,FULL SCALE(IN)
252	540.1	5.618	.818	1.069E-03	.0465	1.289E-03	.0561	.3923	420.0000
253	543.3	9.344	1.353	1.789E-03	.0778	2.159E-03	.0939	.3961	420.0000
254	541.7	6.457	.984	1.289E-03	.0561	1.555E-03	.0677	.3884	415.0000
257	544.5	7.274	.986	1.297E-03	.0564	1.565E-03	.0681	.3845	405.0000
258	543.1	6.069	.830	1.090E-03	.0474	1.315E-03	.0572	.3884	405.0000

DATE 5/12/75

AEDC(ARO,INC.) ARNOLD AFS, TENNESSEE
VON KARMAN GAS DYNAMICS FACILITY
50 INCH HYPERSONIC TUNNEL B
V41B-87A

GROUP	TEST CONDITION	MODEL	MACH NO	PO,PSIA	TO,DEG R	ALPHA-MODEL	ALPHA-SECTOR	ALPHA-PREBEND	ROLL MODEL	YAW
71	25	140 B	7.98	430.9	1305	39.90	-10.10	30.00	168.48	2.0

T-INF (DEG R)	P-INF (PSIA)	Q-INF (PSIA)	V-INF (FT/SEC)	RHO-INF (SLUGS/FT3)	MU-INF (LB-SEC/FT2)	RE/FT (FT-1)	HREF-FR (R= .0400FT)	STFR (R= .0400FT)	SWITCH POSITION
95.0	.045	2.000	3811	3.962E-05	7.650E-08	1.974E 06	2.299E-02	1.916E-02	3

TC NO	TW	DTWDT	QDOT	H(TO)	H(TO)/HREF	H(.9TO)	H(.9TO)/HREF	TOP CENTERLINE X/L
367	573.5	64.579	7.737	1.057E-02	.4600	1.287E-02	.5599	0
368	552.2	42.597	5.453	7.242E-03	.3150	8.761E-03	.3811	.0008
369	546.5	34.705	4.087	5.387E-03	.2344	6.507E-03	.2831	.0019
370	541.8	21.589	2.642	3.462E-03	.1506	4.176E-03	.1817	.0037
371	537.3	13.337	1.307	1.702E-03	.0740	2.050E-03	.0892	.0058
372	533.8	9.023	1.160	1.505E-03	.0654	1.811E-03	.0788	.0087
373	532.8	5.349	.699	9.056E-04	.0394	1.090E-03	.0474	.0118
374	532.4	4.403	.576	7.450E-04	.0324	8.964E-04	.0390	.0151
375	532.1	3.569	.487	6.303E-04	.0274	7.583E-04	.0330	.0182
376	532.1	2.977	.392	5.070E-04	.0221	6.099E-04	.0265	.0215
377	532.5	2.716	.349	4.518E-04	.0197	5.437E-04	.0237	.0246
378	532.2	2.357	.274	3.550E-04	.0154	4.272E-04	.0186	.0278
379	532.2	1.736	.213	2.755E-04	.0120	3.315E-04	.0144	.0609
380	531.5	1.618	.166	2.143E-04	.0093	2.578E-04	.0112	.0646
381	531.2	1.613	.209	2.696E-04	.0117	3.243E-04	.0141	.0684
382	530.8	1.487	.194	2.508E-04	.0109	3.017E-04	.0131	.0721
383	530.6	1.533	.205	2.648E-04	.0115	3.184E-04	.0139	.0760
384	530.5	1.515	.211	2.720E-04	.0118	3.272E-04	.0142	.0796
385	531.5	2.431	.312	4.036E-04	.0176	4.855E-04	.0211	.0789
386	532.0	2.780	.329	4.251E-04	.0185	5.114E-04	.0222	.0982
387	532.5	2.898	.356	4.603E-04	.0200	5.538E-04	.0241	.1019
388	534.3	4.487	.427	5.538E-04	.0241	6.667E-04	.0290	.1160
389	533.7	3.812	.553	7.171E-04	.0312	8.632E-04	.0376	.1195
390	533.6	3.368	.531	6.880E-04	.0299	8.281E-04	.0360	.1231
391	533.0	3.339	.532	6.842E-04	.0300	8.294E-04	.0361	.1268
392	533.0	3.254	.558	7.223E-04	.0314	8.693E-04	.0378	.1305
393	532.7	3.381	.572	7.404E-04	.0322	8.909E-04	.0388	.1338
394	532.6	3.338	.560	7.250E-04	.0315	8.724E-04	.0379	.1376
395	532.3	3.144	.470	6.081E-04	.0265	7.317E-04	.0318	.1411
396	532.5	3.302	.489	6.331E-04	.0275	7.618E-04	.0331	.1448
397	532.8	3.218	.477	6.174E-04	.0269	7.430E-04	.0323	.1483
398	532.9	3.224	.453	5.869E-04	.0255	7.063E-04	.0307	.1519
399	538.0	8.108	1.085	1.414E-03	.0615	1.704E-03	.0741	.1556

DATE 5/12/75

AEDC(ARO,INC.) ARNOLD AFS, TENNESSEE
VON KARMAN GAS DYNAMICS FACILITY
50 INCH HYPERSONIC TUNNEL B
V41R-87A

GROUP	TEST CONDITION	MODEL	MACH NO	PO,PSIA	TO,DEG R	ALPHA-MODEL	ALPHA-SECTOR	ALPHA-PREBEND	ROLL MODEL	YAW
71	25	140 B	7.98	430.9	1305	39.90	-10.10	30.00	168.48	2.0

T-INF (DEG R)	P-INF (PSIA)	Q-INF (PSIA)	V-INF (FT/SEC)	RHO-INF (SLUGS/FT3)	MU-INF (LB-SEC/FT2)	RE/FT (FT-1)	HREF-FR (R= .0400FT)	STFR (R= .0400FT)	SWITCH POSITION
95.0	.045	2.000	3811	3.962E-05	7.650E-08	1.974E 06	2.299E-02	1.916E-02	3

TC NO	TW	DTWDT	QDOT	H(TO)	H(TO)/HREF	H(.9TO)	H(.9TO)/HREF	X/L
								TOP CENTERLINE
400	539.7	11.778	1.593	2.081E-03	.0905	2.509E-03	.1092	.1582
401	539.8	12.769	1.659	2.187E-03	.0943	2.613E-03	.1137	.1608
402	541.4	15.006	1.877	2.457E-03	.1069	2.964E-03	.1289	.1635
403	541.8	14.768	1.861	2.359E-03	.1026	2.846E-03	.1238	.1664
404	541.6	14.731	1.790	2.344E-03	.1020	2.827E-03	.1230	.1691
405	541.2	13.499	1.640	2.147E-03	.0934	2.589E-03	.1126	.1720
406	539.5	13.126	1.593	2.081E-03	.0905	2.508E-03	.1091	.1746
407	538.1	10.939	1.415	1.844E-03	.0802	2.223E-03	.0967	.1769
408	536.9	9.817	1.440	1.875E-03	.0816	2.258E-03	.0982	.1800
409	535.2	7.558	1.087	1.412E-03	.0614	1.701E-03	.0740	.1831
410	534.1	5.887	.847	1.098E-03	.0478	1.322E-03	.0575	.1863
411	533.3	4.644	.697	9.024E-04	.0393	1.086E-03	.0472	.1894
412	532.8	3.413	.463	5.995E-04	.0261	7.214E-04	.0314	.1931
413	531.5	2.253	.391	3.897E-04	.0170	4.687E-04	.0204	.1972
414	531.0	1.000	.134	1.729E-04	.0075	2.079E-04	.0090	.2049
415	530.5	.360	.035	4.576E-05	.0020	5.504E-05	.0024	.2250
416	530.8	.186	.022	2.804E-05	.0012	3.373E-05	.0015	.2500

TC NO	TW	DTWDT	QDOT	H(TO)	H(TO)/HREF	H(.9TO)	H(.9TO)/HREF	NOSE TC (Z = 338) X/L	2Y/B
145	561.7	44.705	6.074	8.169E-03	.3554	9.909E-03	.4311	.0008	.5039
146	567.5	50.891	6.934	9.400E-03	.4089	1.142E-02	.4968	.0023	.5082
147	559.2	39.805	5.401	7.241E-03	.3150	8.776E-03	.3818	.0043	.5135
148	556.6	33.728	4.723	6.309E-03	.2745	7.641E-03	.3324	.0068	.5205
149	550.1	23.058	3.430	4.543E-03	.1976	5.492E-03	.2389	.0095	.5279
150	550.0	20.340	2.921	3.868E-03	.1683	4.677E-03	.2034	.0122	.5354
151	551.0	14.395	2.030	2.691E-03	.1171	3.254E-03	.1416	.0218	.5621
152	551.1	15.196	2.067	2.741E-03	.1193	3.315E-03	.1442	.0251	.5712
153	553.0	17.147	2.103	2.796E-03	.1216	3.383E-03	.1472	.0286	.5808
154	552.6	16.086	2.009	2.670E-03	.1161	3.230E-03	.1405	.0319	.5898
155	551.8	14.610	1.843	2.447E-03	.1064	2.960E-03	.1287	.0354	.5995
156	550.6	13.416	1.674	2.218E-03	.0965	2.682E-03	.1167	.0387	.6085
157	550.7	13.084	1.615	2.140E-03	.0931	2.588E-03	.1126	.0420	.6176
158	550.0	12.760	1.577	2.088E-03	.0908	2.524E-03	.1098	.0462	.6294
159	550.5	13.203	1.486	1.970E-03	.0857	2.382E-03	.1036	.0503	.6406

GROUP 71 CENTERLINE TIME 2.75

CH	TC	FIT LENGTH	DTDWT	UNCERTAINTY	CH	TC	FIT LENGTH	DTDWT	UNCERTAINTY
1	221	2.00	.538	.0174	50	384	1.20	1.515	.0296
2	222	2.00	.504	.0190	51	385	.80	2.431	.0189
3	223	1.20	1.362	.0138	52	386	.80	2.780	.0157
4	224	.80	2.722	.0169	53	387	.80	2.898	.0102
5	225	1.20	1.921	.0223	54	388	.60	4.487	.0119
6	226	1.20	1.487	.0103	55	389	.80	3.812	.0108
7	227	2.00	.898	.0373	56	390	.80	3.368	.0360
8	228	1.20	1.427	.0151	57	391	.80	3.339	.0095
9	229	1.20	1.369	.0277	58	392	.80	3.254	.0110
10	232	2.00	.266	.0395	59	393	.80	3.381	.0171
11	233	2.00	.341	.0380	60	394	.80	3.338	.0098
12	236	2.00	.594	.0278	61	395	.80	3.144	.0190
13	237	2.00	.651	.0114	62	396	.80	3.302	.0104
14	238	.80	2.381	.0148	63	397	.80	3.218	.0068
15	239	.80	3.454	.0146	64	398	.80	3.224	.0122
16	240	1.20	1.788	.0155	65	399	.60	8.108	.0079
17	241	.80	2.789	.0273	66	400	.40	11.778	.0137
18	242	.80	2.443	.0161	67	401	.40	12.769	.0060
19	243	1.20	1.764	.0158	68	402	.40	15.006	.0639
20	244	1.20	1.486	.0164	69	403	.40	14.768	.0088
21	245	.80	3.421	.0079	70	404	.40	14.731	.0058
22	246	.60	5.853	.0066	71	405	.40	13.499	.0166
23	247	.80	2.627	.0230	72	406	.40	13.126	.0088
24	248	.60	4.481	.0137	73	407	.40	10.939	.0065
25	249	.60	4.772	.0175	74	408	.40	9.817	.0057
26	250	.80	3.262	.0114	75	409	.60	7.558	.0133
27	251	.80	3.354	.0110	76	410	.60	5.887	.0080
28	252	.60	5.618	.0129	77	411	.60	4.644	.0097
29	253	.40	9.344	.0057	78	412	.80	3.413	.0088
30	254	.60	6.457	.0080	79	413	.80	2.253	.0796
31	257	.60	7.274	.0072	80	414	1.20	1.000	.0130
32	258	.60	6.069	.0100	81	415	2.00	.360	.0262
33	367	.20	64.579	.0033	82	416	2.00	.186	.0414
34	368	.20	42.597	.0036	83	145	.20	44.705	.0065
35	369	.20	34.765	.0135	84	146	.20	50.891	.0062
36	370	.30	21.589	.0093	85	147	.20	39.805	.0061
37	371	.40	13.337	.0040	86	148	.20	33.728	.0059
38	372	.40	9.023	.0137	87	149	.30	23.658	.0122
39	373	.50	5.349	.0120	88	150	.30	20.340	.0068
40	374	.60	4.403	.0157	89	151	.40	14.395	.0050
41	375	.80	3.569	.0123	90	152	.30	15.196	.0448
42	376	.80	2.977	.0105	91	153	.30	17.147	.0152
43	377	.80	2.716	.0126	92	154	.40	16.086	.0188
44	378	.80	2.357	.0169	93	155	.40	14.610	.0058
45	379	1.20	1.736	.0101	94	156	.40	13.416	.0070
46	380	1.20	1.616	.0110	95	157	.40	13.084	.0061
47	381	1.20	1.613	.0290	96	158	.40	12.780	.0080
48	382	1.20	1.487	.0181	97	159	.40	13.203	.0069
49	383	1.20	1.533	.0121	98	0	-0	0	0
72		.050							

BIT ON LOOP 56

DATE 5/12/75

AEDC(ARO,INC.) ARNOLD AFS, TENNESSEE
VON KARMAN GAS DYNAMICS FACILITY
50 INCH HYPERSONIC TUNNEL B
V41B-B7A

GROUP	TEST CONDITION	MODEL	MACH NO	PO,PSIA	TO,DEG R	ALPHA-MODEL	ALPHA-SECTOR	ALPHA-PREBEND	ROLL MODEL	YAW
72	26	140 B	7.98	429.8	1305	45.09	-15.09	30.00	180.00	.0

T-INF (DEG R)	P-INF (PSIA)	Q-INF (PSIA)	V-INF (FT/SEC)	RHO-INF (SLUGS/FT3)	MU-INF (LB-SEC/FT2)	RE/FT (FT-1)	HREF-FR (R= .0400FT)	STFR (R= .0400FT)	SWITCH POSITION
95.0	.045	1.995	3812	3.951E-05	7.650E-06	1.969E 06	2.296E-02	1.919E-02	1

TC NO	TW	DT*DT	QDOT	H(TO)	H(TO)/HREF	H(.9TO)	H(.9TO)/HREF	X/L	Z,FULL SCALE(IN)
								FUSELAGE VENT NO. 1	
1	542.5	.597	.079	1.036E-04	.0045	1.250E-04	.0054	.4434	376.6300
2	542.3	.524	.071	9.349E-05	.0041	1.128E-04	.0049	.4264	371.6300
3	542.3	.509	.070	9.177E-05	.0040	1.107E-04	.0048	.4303	371.6300
4	542.3	.495	.067	8.844E-05	.0039	1.067E-04	.0046	.4342	371.6300
5	543.0	.477	.064	8.359E-05	.0036	1.009E-04	.0044	.4380	371.6300
6	543.9	.491	.065	8.565E-05	.0037	1.034E-04	.0045	.4434	369.1300
7	544.0	.374	.055	7.285E-05	.0032	8.793E-05	.0038	.4226	366.6300
8	543.0	.408	.062	8.095E-05	.0035	9.768E-05	.0043	.4264	366.6300
9	543.1	.333	.049	6.375E-05	.0028	7.692E-05	.0034	.4303	366.6300
10	543.6	.283	.041	5.319E-05	.0023	6.419E-05	.0028	.4342	366.6300
11	544.2	.339	.046	6.036E-05	.0026	7.286E-05	.0032	.4380	366.6300
12	546.2	.327	.045	5.956E-05	.0026	7.192E-05	.0031	.4496	366.6300
13	549.0	.154	.023	3.009E-05	.0013	3.636E-05	.0016	.4187	357.1300
14	546.4	.206	.028	3.718E-05	.0016	4.491E-05	.0020	.4396	361.6300
15	547.8	.302	.040	5.340E-05	.0023	6.452E-05	.0028	.4434	361.6300
16	549.0	.127	.017	2.278E-05	.0010	2.753E-05	.0012	.4396	355.6300
17	551.1	.206	.028	3.710E-05	.0016	4.487E-05	.0020	.4434	355.6300
18	553.0	.176	.025	3.286E-05	.0014	3.976E-05	.0017	.4396	351.6300
19	555.7	.062	.009	1.166E-05	.0005	1.412E-05	.0006	.4291	332.6300
								CARGO BAY VENT NO. 1	
22	544.5	5.505	.766	1.007E-03	.0439	1.216E-03	.0530	.3974	397.6300
23	543.5	5.206	.729	9.569E-04	.0417	1.155E-03	.0503	.4013	397.6300
24	543.2	3.705	.502	6.589E-04	.0287	7.951E-04	.0346	.4052	397.6300
25	542.5	3.081	.426	5.326E-04	.0232	6.426E-04	.0280	.4090	397.6300
26	543.6	3.937	.518	6.797E-04	.0296	8.203E-04	.0357	.4129	397.6300
27	544.3	4.689	.655	8.605E-04	.0375	1.039E-03	.0452	.3936	392.6300
28	543.7	3.822	.551	7.230E-04	.0315	8.726E-04	.0380	.3974	392.6300
29	542.7	2.843	.411	5.384E-04	.0235	6.496E-04	.0283	.4013	392.6300
30	542.1	2.760	.397	5.206E-04	.0227	6.281E-04	.0274	.4052	392.6300
31	542.4	3.055	.427	5.604E-04	.0244	6.761E-04	.0294	.4090	392.6300
32	542.6	3.366	.447	5.859E-04	.0255	7.069E-04	.0308	.4129	392.6300
33	541.8	1.564	.224	2.930E-04	.0128	3.534E-04	.0154	.4090	386.1300
34	542.3	2.198	.298	3.902E-04	.0170	4.707E-04	.0205	.4129	387.6300
35	544.9	2.333	.331	4.354E-04	.0190	5.256E-04	.0229	.3897	383.1300
36	542.5	.782	.114	1.490E-04	.0065	1.798E-04	.0078	.4090	378.6300
37	542.0	1.258	.177	2.321E-04	.0101	2.800E-04	.0122	.4129	382.1300
38	543.0	.841	.117	1.539E-04	.0067	1.858E-04	.0081	.4129	377.1300
39	544.2	.664	.097	1.278E-04	.0056	1.542E-04	.0067	.4001	373.6300
								PROTUBERANCES	
41	544.5	3.205	.430	5.656E-04	.0246	6.827E-04	.0297	.3546	379.0500
42	546.0	3.933	.539	7.099E-04	.0309	8.573E-04	.0373	.3604	379.0500
43	544.9	2.522	.328	4.321E-04	.0188	5.216E-04	.0227	.3450	374.0500

DATE 5/12/75

AEDC(ARO,INC.) ARNOLD AFS, TENNESSEE
VON KARMAN GAS DYNAMICS FACILITY
50 INCH HYPERSONIC TUNNEL H
V41R-R7A

GROUP	TEST CONDITION	MODEL	MACH NO	PO,PSIA	TO,DEG R	ALPHA-MODEL	ALPHA-SECTOR	ALPHA-PREBEND	ROLL MODEL	YAW
72	26	140 B	7.98	429.8	1305	45.09	-15.09	30.00	180.00	.0

T-INF (DEG R)	P-INF (PSIA)	Q-INF (PSIA)	V-INF (FT/SEC)	RHO-INF (SLUGS/FT3)	MU-INF (LB-SEC/FT2)	RE/FT (FT-1)	HREF-FR (R= .0400FT)	STFR (R= .0400FT)	SWITCH POSITION
95.0	.045	1.595	3812	3.951E-05	7.650E-08	1.969E 06	2.296E-02	1.919E-02	1

IC NO	TW	DTWDT	QDOT	H(TO)	H(TO)/HREF	H(.9TO)	H(.9TO)/HREF
44	544.9	2.656	.363	4.769E-04	.0208	5.758E-04	.0251
45	546.6	3.094	.430	5.663E-04	.0247	6.840E-04	.0298
46	548.7	3.928	.551	7.289E-04	.0317	8.808E-04	.0384
47	547.1	2.502	.334	4.407E-04	.0192	5.323E-04	.0232
48	548.0	2.657	.366	4.828E-04	.0210	5.834E-04	.0254
49	548.3	2.237	.309	4.082E-04	.0178	4.933E-04	.0215
50	549.0	1.574	.220	2.903E-04	.0126	3.509E-04	.0153
51	549.0	1.409	.192	2.541E-04	.0111	3.071E-04	.0134
52	550.3	1.195	.165	2.189E-04	.0095	2.646E-04	.0115
53	550.0	1.224	.180	2.380E-04	.0104	2.877E-04	.0125
54	543.0	3.264	.467	6.128E-04	.0267	7.394E-04	.0322
55	551.3	.675	.097	1.287E-04	.0056	1.556E-04	.0068
56	544.0	3.228	.417	5.482E-04	.0239	6.617E-04	.0288
57	545.6	3.074	.377	4.964E-04	.0216	5.993E-04	.0261
58	547.5	2.807	.372	4.914E-04	.0214	5.937E-04	.0259
59	550.0	2.354	.312	4.127E-04	.0180	4.989E-04	.0217
60	550.0	2.399	.336	4.447E-04	.0194	5.377E-04	.0234
61	549.0	2.657	.338	4.475E-04	.0195	5.408E-04	.0236
62	545.5	3.002	.370	4.872E-04	.0212	5.884E-04	.0256
63	544.6	3.149	.413	5.427E-04	.0236	6.552E-04	.0285
64	540.1	.005	.001	6.443E-07	.0000	1.018E-06	.0000
65	543.1	3.187	.435	5.704E-04	.0248	6.883E-04	.0300
66	545.1	3.382	.428	5.635E-04	.0245	6.803E-04	.0296
67	546.3	2.853	.413	5.304E-04	.0231	6.406E-04	.0279
68	549.0	2.537	.323	4.272E-04	.0186	5.164E-04	.0225

PROTUBERANCES

X/L	Z,FULL SCALE(IN)
.3508	374.0500
.3566	374.0500
.3604	374.0500
.3392	366.5500
.3566	366.5500
.3392	360.7000
.3566	360.7000
.3604	360.7000
.3392	353.2000
.3450	353.2000
.3508	353.2000
.3566	353.2000

SUBLIMATOR VENT NO. 1

X/L	Z,FULL SCALE(IN)
.3031	371.1300
.3074	369.1300
.3089	363.6300
.3074	358.1300
.3031	356.1300
.2988	358.1300
.2973	363.6300
.2988	369.1300
.3031	376.1300
.3089	378.6300
.3101	372.6300
.3157	370.3800
.3128	363.6300

DATE 5/12/75

AEDC(ARO,INC.) ARNOLD AFS, TENNESSEE
VON KARMAN GAS DYNAMICS FACILITY
50 INCH HYPERSONIC TUNNEL B
V41B-87A

GROUP	TEST CONDITION	MODEL	MACH NO	PO,PSIA	TO,DEG R	ALPHA-MODEL	ALPHA-SECTOR	ALPHA-PREBEND	ROLL MODEL	YAW
72	26	140 B	7.98	429.8	1305	45.09	-15.09	30.00	180.00	.0

T-INF (DEG R)	P-INF (PSIA)	Q-INF (PSIA)	V-INF (FT/SEC)	RHO-INF (SLUGS/FT3)	MU-INF (LB-SEC/FT2)	RE/FT (FT-1)	HREF-FR (R= .0400FT)	STFR (R= .0400FT)	SWITCH POSITION
95.0	.045	1.995	3812	3.951E-05	7.650E-08	1.969E 06	2.296E-02	1.919E-02	1

TC NO	TW	DTWDT	QDOT	H(TO)	H(TO)/HREF	H(.9TO)	H(.9TO)/HREF
69	541.6	2.014	.282	3.689E-04	.0161	4.450E-04	.0194
70	542.0	2.452	.331	3.947E-04	.0172	4.762E-04	.0207
71	543.7	1.590	.217	2.849E-04	.0124	3.439E-04	.0150
72	542.8	1.910	.272	3.562E-04	.0155	4.298E-04	.0187
73	543.8	2.597	.338	4.439E-04	.0193	5.357E-04	.0233
74	544.7	2.832	.345	4.531E-04	.0197	5.470E-04	.0238
75	546.4	2.254	.308	4.058E-04	.0177	4.901E-04	.0213
77	547.4	2.549	.363	4.794E-04	.0209	5.791E-04	.0252
78	548.3	2.852	.394	5.204E-04	.0227	6.289E-04	.0274
79	551.3	2.725	.351	4.658E-04	.0203	5.633E-04	.0245
80	550.1	2.291	.315	4.167E-04	.0181	5.038E-04	.0219
81	550.6	2.472	.347	4.603E-04	.0200	5.565E-04	.0242
83	535.8	3.105	.415	5.393E-04	.0235	6.495E-04	.0283
84	536.9	3.114	.411	5.347E-04	.0233	6.442E-04	.0281
85	536.9	2.540	.347	4.510E-04	.0196	5.433E-04	.0237
87	533.9	2.093	.299	3.877E-04	.0169	4.667E-04	.0203
88	536.3	2.839	.397	5.166E-04	.0225	6.223E-04	.0271
89	537.6	2.549	.375	4.868E-04	.0213	5.890E-04	.0257
90	535.8	2.679	.365	4.747E-04	.0207	5.717E-04	.0249
91	536.8	2.703	.371	4.829E-04	.0210	5.817E-04	.0253
92	537.6	2.403	.340	4.426E-04	.0193	5.333E-04	.0232
93	536.9	2.462	.315	4.099E-04	.0179	4.938E-04	.0215
94	537.5	2.380	.310	4.036E-04	.0176	4.863E-04	.0212
95	538.3	2.585	.368	4.748E-04	.0209	5.782E-04	.0252
96	539.4	2.355	.307	4.007E-04	.0175	4.830E-04	.0210
97	539.7	2.722	.349	4.555E-04	.0198	5.492E-04	.0239
98	539.2	2.597	.365	4.766E-04	.0208	5.744E-04	.0250
100	542.5	2.543	.362	4.740E-04	.0206	5.719E-04	.0249
102	543.2	2.221	.315	4.132E-04	.0180	4.986E-04	.0217
103	541.0	2.641	.348	4.555E-04	.0198	5.493E-04	.0239
105	538.2	3.044	.381	4.973E-04	.0217	5.993E-04	.0261
106	537.4	3.157	.405	5.280E-04	.0230	6.361E-04	.0277

FUSELAGE VENT PANEL NO. 7

X/L	Z,FULL SCALE(IN)
.2487	356.4000
.2591	356.4000
.2419	351.4000
.2487	351.4000
.2552	351.4000
.2610	351.4000
.2419	342.8000
.2552	342.8000
.2610	342.8000
.2419	334.2000
.2487	334.2000
.2552	334.2000

ACCESS HATCH WINDOW

X/L	Z,FULL SCALE(IN)
.2131	398.0000
.2131	388.0000
.2131	383.0000
.2222	395.8000
.2193	386.5000
.2177	381.8000
.2297	389.5000
.2243	382.5000
.2214	378.7000
.2343	374.0000
.2274	375.5000
.2239	373.3000
.2363	368.0000
.2286	368.0000
.2247	368.0000
.2274	360.5000
.2081	354.3000
.2023	362.7000
.2050	378.7000
.2050	386.2000

GROUP 72 CENTERLINE TIME 2.75

CH	TC	FIT LENGTH	DTDWT	UNCERTAINTY	CH	TC	FIT LENGTH	DTDWT	UNCERTAINTY
1	1	2.00	.597	.0120	50	53	1.20	1.224	.0212
2	2	2.00	.528	.0139	51	54	.80	3.264	.0194
3	3	2.00	.509	.0142	52	55	2.00	.675	.0218
4	4	2.00	.495	.0207	53	56	.80	3.228	.0129
5	5	2.00	.477	.0358	54	57	.80	3.074	.0124
6	6	2.00	.491	.0167	55	58	.80	2.807	.0129
7	7	2.00	.379	.1228	56	59	.80	2.354	.0658
8	8	2.00	.408	.0234	57	60	.80	2.399	.0114
9	9	2.00	.333	.0456	58	61	.80	2.657	.0109
10	10	2.00	.243	.0348	59	62	.80	3.002	.0137
11	11	2.00	.339	.0971	60	63	.80	3.149	.0097
12	12	2.00	.327	.0520	61	64	2.00	-.005	-3.1379
13	13	2.00	.154	.0658	62	65	.80	3.187	.0087
14	14	2.00	.206	.0660	63	66	.80	3.382	.0087
15	15	2.00	.302	.0607	64	67	.80	2.853	.0167
16	16	2.00	.127	.1730	65	68	.80	2.537	.0124
17	17	2.00	.236	.1192	66	69	1.20	2.014	.0119
18	18	2.00	.176	.0544	67	70	.80	2.452	.0127
19	19	2.00	.062	.1987	68	71	1.20	1.590	.1460
20	22	.60	5.555	.0114	69	72	1.20	1.910	.0200
21	23	.60	5.206	.0088	70	73	.80	2.597	.0174
22	24	.80	3.765	.0119	71	74	.80	2.832	.0314
23	25	.80	3.081	.0205	72	75	.80	2.254	.0145
24	26	.80	3.937	.0126	73	77	.80	2.549	.0170
25	27	.60	4.689	.0154	74	78	.80	2.852	.0189
26	28	.80	3.822	.0116	75	79	.80	2.725	.0187
27	29	.80	2.843	.0125	76	80	.80	2.291	.0208
28	30	.80	2.760	.0111	77	81	.80	2.472	.0130
29	31	.80	3.055	.0117	78	83	.80	3.105	.0103
30	32	.80	3.366	.0121	79	84	.80	3.114	.0633
31	33	1.20	1.564	.0108	80	85	.80	2.540	.0120
32	34	.80	2.198	.0171	81	87	.80	2.093	.0168
33	35	.80	2.333	.0144	82	88	.80	2.839	.0089
34	36	2.00	.782	.0098	83	89	.80	2.549	.0108
35	37	1.20	1.298	.0116	84	90	.80	2.679	.0108
36	38	2.00	.841	.0102	85	91	.80	2.703	.0079
37	39	2.00	.664	.0134	86	92	.80	2.403	.0111
38	41	.80	3.255	.0123	87	93	.80	2.462	.0282
39	42	.60	3.933	.0104	88	94	.80	2.380	.0263
40	43	.80	2.522	.0163	89	95	.80	2.585	.0170
41	44	.80	2.656	.0102	90	96	.80	2.355	.0735
42	45	.80	3.094	.0128	91	97	.80	2.722	.0151
43	46	.80	3.928	.0178	92	98	.80	2.597	.0336
44	47	.80	2.562	.0118	93	100	.80	2.543	.0271
45	48	.80	2.657	.0145	94	102	.80	2.221	.0227
46	49	.80	2.237	.0104	95	103	.80	2.641	.0139
47	50	1.20	1.574	.0241	96	105	.80	3.044	.0115
48	51	1.20	1.409	.0150	97	106	.80	3.157	.0091
49	52	1.20	1.195	.0169	98	0	-0	0	0
73		.050							

BIT ON LOOP 58

DATE 5/12/75

AEDC(ARO,INC.) ARNOLD AFS, TENNESSEE
VON KARMAN GAS DYNAMICS FACILITY
50 INCH HYPERSONIC TUNNEL B
V41R-87A

ORDER	TEST CONDITION	MODEL	MACH NO	PO,PSIA	TO,DEG R	ALPHA-MODEL	ALPHA-SECTOR	ALPHA-PREBEND	ROLL MODEL	YAW
73	26	140 B	7.98	431.0	1305	45.07	-15.07	30.00	180.00	.0

T-INF (DEG R)	P-INF (PSIA)	Q-INF (PSIA)	V-INF (FT/SEC)	RHO-INF (SLUGS/FT3)	MU-INF (LB-SEC/FT2)	RE/FT (FT-1)	HREF-FR (R= .0400FT)	STFR (R= .0400FT)	SWITCH POSITION
55.0	.045	2.000	3811	3.963E-05	7.648E-08	1.975E 06	2.299E-02	1.916E-02	2

TC NO	TW	DTWDT	QDOT	H(TO)	H(TO)/HREF	H(.9TO)	H(.9TO)/HREF
							ACCESS HATCH WINDOW
							X/L Z,FULL SCALE(IN)
107	536.2	3.034	.435	5.664E-04	.0246	6.822E-04	.0297 .2050 396.2000
							FUSELAGE VENT PANEL NO. 3 AND 1
							X/L Z,FULL SCALE(IN)
108	538.1	4.969	.527	6.875E-04	.0299	8.285E-04	.0360 .1244 377.5000
109	536.7	4.206	.521	6.763E-04	.0295	8.171E-04	.0355 .1302 377.5000
110	536.9	3.946	.531	6.527E-04	.0284	7.863E-04	.0342 .1360 377.5000
111	537.5	4.042	.498	6.364E-04	.0277	7.667E-04	.0334 .1418 377.5000
112	538.2	4.337	.516	6.735E-04	.0293	8.117E-04	.0353 .1476 377.5000
113	536.9	4.565	.525	6.858E-04	.0298	8.266E-04	.0360 .1215 273.5000
114	537.9	4.329	.521	6.794E-04	.0296	8.187E-04	.0356 .1273 273.5000
115	537.7	3.717	.462	6.028E-04	.0262	7.264E-04	.0316 .1331 273.5000
116	538.1	3.842	.473	6.168E-04	.0268	7.433E-04	.0323 .1389 273.5000
117	539.4	4.223	.468	6.374E-04	.0277	7.684E-04	.0334 .1447 273.5000
118	540.0	3.249	.451	5.900E-04	.0257	7.114E-04	.0309 .1409 366.0000
119	541.3	3.890	.506	6.624E-04	.0288	7.989E-04	.0348 .1442 366.0000
120	542.4	3.752	.471	6.180E-04	.0269	7.457E-04	.0324 .1215 359.5000
121	542.1	3.197	.394	5.169E-04	.0225	6.236E-04	.0271 .1303 359.5000
122	542.7	3.262	.408	5.358E-04	.0233	6.465E-04	.0281 .1337 359.5000
							LOWER RCS NOZZLES
							X/L Z,FULL SCALE(IN)
124	531.5	1.111	.099	1.281E-04	.0056	1.542E-04	.0067 .0950 400.0000
125	531.7	1.316	.143	1.852E-04	.0081	2.229E-04	.0097 .0988 400.0000
126	531.7	1.155	.158	2.046E-04	.0089	2.462E-04	.0107 .1027 400.0000
127	531.5	1.202	.162	2.093E-04	.0091	2.518E-04	.0110 .0911 395.0000
128	532.4	1.691	.225	2.658E-04	.0116	3.198E-04	.0139 .0950 395.0000
129	532.9	1.832	.215	2.786E-04	.0121	3.353E-04	.0146 .0988 395.0000
130	532.8	1.449	.173	2.245E-04	.0098	2.701E-04	.0117 .0810 390.0000
131	532.2	1.563	.231	2.988E-04	.0130	3.596E-04	.0156 .0857 390.0000
132	533.4	2.555	.298	3.859E-04	.0168	4.645E-04	.0202 .0963 390.0000
133	533.2	1.826	.222	2.874E-04	.0125	3.458E-04	.0150 .0857 383.8000
134	533.7	2.628	.352	4.566E-04	.0199	5.496E-04	.0239 .0872 377.3000
135	535.8	3.964	.477	6.198E-04	.0270	7.465E-04	.0325 .0903 374.5500
136	536.7	4.346	.484	6.300E-04	.0274	7.589E-04	.0330 .0960 374.5500
137	535.9	4.192	.549	7.142E-04	.0311	8.602E-04	.0374 .0872 370.5500
138	537.2	4.639	.535	6.975E-04	.0303	8.403E-04	.0366 .0928 370.5500
139	537.2	4.149	.531	6.916E-04	.0301	8.332E-04	.0362 .0816 366.0500
140	539.3	4.874	.622	8.126E-04	.0353	9.795E-04	.0426 .0934 362.4000
141	539.4	4.514	.598	7.818E-04	.0340	9.425E-04	.0410 .0973 362.4000
142	543.2	3.433	.376	4.935E-04	.0215	5.955E-04	.0259 .0833 355.2000
143	541.2	5.345	.539	7.059E-04	.0307	8.514E-04	.0370 .0919 355.2000
144	544.0	5.881	.779	1.024E-03	.0445	1.236E-03	.0537 .0949 349.0000

DATE 5/12/75

AEDC(ARO,INC.) ARNOLD AFS, TENNESSEE
VON KARMAN GAS DYNAMICS FACILITY
50 INCH HYPERSONIC TUNNEL B
V41B-87A

GROUP	TEST CONDITION	MODEL	MACH NO	PO,PSIA	TO,DEG R	ALPHA-MODEL	ALPHA-SECTOR	ALPHA-PREBEND	ROLL MODEL	YAW
73	26	140 B	7.98	431.0	1305	45.07	-15.07	30.00	180.00	.0

T-INF (DEG R)	P-INF (PSIA)	Q-INF (PSIA)	V-INF (FT/SEC)	RHO-INF (SLUGS/FT3)	MU-INF (LB-SEC/FT2)	RE/FT (FT-1)	HREF-FR (R= .0400FT)	STFR (R= .0400FT)	SWITCH POSITION
95.0	.045	2.000	3811	3.963E-05	7.648E-08	1.975E 06	2.299E-02	1.916E-02	2

IC NO	TW	DTWDT	QDOT	H(TO)	H(TO)/HREF	H(.9TO)	H(.9TO)/HREF	X/L	2Y/B
								UPPER RCS NOZZLES	
161	534.5	1.735	.205	2.666E-04	.0116	3.210E-04	.0140	.0619	-.0160
162	534.4	2.129	.202	2.617E-04	.0114	3.151E-04	.0137	.0709	-.0160
163	533.7	2.258	.277	3.596E-04	.0156	4.328E-04	.0188	.0807	-.0160
164	534.2	3.124	.407	5.268E-04	.0230	6.365E-04	.0277	.0943	-.0160
165	534.6	2.575	.324	4.212E-04	.0183	5.071E-04	.0221	.0978	-.0160
166	534.5	2.424	.311	4.035E-04	.0176	4.858E-04	.0211	.1013	-.0160
167	533.4	.616	.083	1.081E-04	.0047	1.301E-04	.0057	.0619	-.0320
168	533.6	.991	.104	1.349E-04	.0059	1.623E-04	.0071	.0709	-.0320
169	531.9	1.050	.127	1.648E-04	.0072	1.983E-04	.0086	.0807	-.0320
170	531.9	1.424	.178	2.301E-04	.0100	2.769E-04	.0120	.0943	-.0320
171	532.1	1.613	.194	2.515E-04	.0109	3.026E-04	.0132	.0978	-.0320
172	531.6	1.481	.193	2.494E-04	.0108	3.000E-04	.0131	.1013	-.0320
173	531.0	.353	.047	6.079E-05	.0026	7.312E-05	.0032	.0807	-.0480
174	530.3	.430	.049	6.305E-05	.0027	7.582E-05	.0033	.0943	-.0480
175	530.4	.469	.067	8.666E-05	.0038	1.042E-04	.0045	.0978	-.0480
176	530.4	.653	.089	1.146E-04	.0050	1.379E-04	.0060	.1013	-.0480
								CANOPY	
177	539.5	9.811	1.353	1.769E-03	.0769	2.132E-03	.0927		
178	538.4	9.486	1.868	2.438E-03	.1060	2.938E-03	.1278		
179	534.8	4.307	.982	1.172E-03	.0510	1.411E-03	.0614		
180	538.2	7.219	.943	1.231E-03	.0535	1.483E-03	.0645		
181	539.2	9.509	1.294	1.691E-03	.0735	2.038E-03	.0887		
182	533.1	3.327	.474	6.140E-04	.0267	7.389E-04	.0321		
183	531.1	.972	.122	1.574E-04	.0068	1.894E-04	.0082		
184	531.0	.943	.129	1.664E-04	.0072	2.001E-04	.0087		
185	534.5	4.789	.575	7.471E-04	.0325	8.995E-04	.0391		
186	537.2	7.607	.956	1.246E-03	.0542	1.501E-03	.0653		
187	532.7	3.482	.463	5.997E-04	.0261	7.217E-04	.0314		
188	531.3	1.570	.365	4.715E-04	.0205	5.672E-04	.0247		
189	531.0	1.987	.283	3.654E-04	.0159	4.395E-04	.0191		
190	533.2	6.060	.871	1.129E-03	.0491	1.359E-03	.0591		
191	531.5	3.800	.580	7.496E-04	.0326	9.017E-04	.0392		

DATE 5/12/75

AEDC(ARO,INC.) ARNOLD AFS, TENNESSEE
VON KARMAN GAS DYNAMICS FACILITY
50 INCH HYPERSONIC TUNNEL B
V41A-87A

GROUP	TEST CONDITION	MODEL	MACH NO	PO,PSIA	TO,DEG R	ALPHA-MODEL	ALPHA-SECTOR	ALPHA-PREBEND	ROLL MODEL	YAW
73	26	140 B	7.98	431.0	1305	45.07	-15.07	30.00	180.00	.0

T-INF (DEG R)	P-INF (PSIA)	Q-INF (PSIA)	V-INF (FT/SEC)	RHO-INF (SLUGS/FT3)	MU-INF (LB-SEC/FT2)	RE/FT (FT-1)	HREF-FR (R= .0400FT)	STFR (R= .0400FT)	SWITCH POSITION
95.0	.045	2.000	3811	3.963E-05	7.648E-08	1.975E 06	2.299E-02	1.916E-02	2

IC NO	TW	DTWDT	QDOT	H(TO)	H(TO)/HREF	H(.9TO)	H(.9TO)/HREF
							CANOPY
192	529.8	.801	.113	1.455E-04	.0063	1.750E-04	.0076
193	529.5	1.026	.197	2.542E-04	.0111	3.056E-04	.0133
194	528.9	1.034	.133	1.716E-04	.0075	2.063E-04	.0090
195	529.2	1.525	.188	2.419E-04	.0105	2.908E-04	.0126
196	529.9	1.797	.235	3.038E-04	.0132	3.653E-04	.0159
197	529.2	.306	.030	3.902E-05	.0017	4.691E-05	.0020
198	529.0	.381	.044	5.690E-05	.0025	6.840E-05	.0030
199	528.7	.706	.095	1.220E-04	.0053	1.466E-04	.0064
200	528.6	1.303	.185	2.385E-04	.0104	2.866E-04	.0125
201	530.0	2.603	.367	4.732E-04	.0206	5.690E-04	.0248
202	528.3	1.060	.134	1.720E-04	.0075	2.068E-04	.0090
203	528.3	.567	.070	9.041E-05	.0039	1.087E-04	.0047
204	527.8	.782	.121	1.559E-04	.0068	1.873E-04	.0081
205	529.0	1.883	.293	3.774E-04	.0164	4.537E-04	.0197
206	530.8	.262	.035	4.486E-05	.0020	5.396E-05	.0023
207	530.4	3.196	.427	5.519E-04	.0240	6.637E-04	.0289
208	527.5	.631	.085	1.087E-04	.0047	1.307E-04	.0057
209	527.5	.627	.086	1.106E-04	.0048	1.329E-04	.0058
210	527.1	.759	.101	1.299E-04	.0057	1.561E-04	.0068
211	529.2	.232	.028	3.626E-05	.0016	4.359E-05	.0019
212	529.3	.503	.068	8.723E-05	.0038	1.049E-04	.0046
213	527.9	.632	.084	1.076E-04	.0047	1.293E-04	.0056
214	527.8	.958	.134	1.724E-04	.0075	2.072E-04	.0090
215	527.1	1.052	.149	1.915E-04	.0083	2.301E-04	.0100
216	529.2	2.737	.388	4.999E-04	.0217	6.011E-04	.0261
217	529.4	2.808	.399	5.148E-04	.0224	6.189E-04	.0269
218	527.3	.475	.065	8.395E-05	.0037	1.009E-04	.0044
219	527.1	1.135	.159	2.046E-04	.0089	2.459E-04	.0107
220	527.4	1.440	.197	2.539E-04	.0110	3.051E-04	.0133

GROUP 73 CENTERLINE TIME 2.65

CH	TC	FIT LENGTH	DTDWT	UNCERTAINTY	CH	TC	FIT LENGTH	DTDWT	UNCERTAINTY
1	107	.80	3.034	.0155	50	173	2.00	.353	.0329
2	108	.60	4.969	.0063	51	174	2.00	.430	.0283
3	109	.60	4.206	.0057	52	175	2.00	.469	.0216
4	110	.80	3.946	.0102	53	176	2.00	.653	.0184
5	111	.80	4.042	.0163	54	177	.40	9.811	.0134
6	112	.60	4.337	.0079	55	178	.40	9.486	.0113
7	113	.60	4.565	.0511	56	179	.60	4.307	.0440
8	114	.60	4.329	.0107	57	180	.60	7.219	.0060
9	115	.80	3.717	.0196	58	181	.40	9.509	.0081
10	116	.80	3.842	.0073	59	182	.80	3.327	.0107
11	117	.60	4.223	.0098	60	183	2.00	.972	.0126
12	118	.80	3.249	.0147	61	184	2.00	.943	.0214
13	119	.80	3.890	.0286	62	185	.60	4.789	.0120
14	120	.80	3.752	.0125	63	186	.60	7.607	.0076
15	121	.80	3.197	.0216	64	187	.80	3.482	.0186
16	122	.80	3.262	.0120	65	188	1.20	1.570	.0118
17	124	1.20	1.111	.0378	66	189	.80	1.987	.0264
18	125	1.20	1.316	.0127	67	190	.60	6.060	.0130
19	126	1.20	1.155	.0170	68	191	.80	3.800	.0753
20	127	1.20	1.202	.0268	69	192	2.00	.801	.0311
21	128	1.20	1.691	.0097	70	193	1.20	1.026	.0237
22	129	1.20	1.832	.0108	71	194	1.20	1.034	.0408
23	130	1.20	1.449	.0258	72	195	1.20	1.525	.0121
24	131	1.20	1.563	.0234	73	196	1.20	1.797	.0106
25	132	.80	2.555	.0188	74	197	2.00	.306	.0343
26	133	1.20	1.826	.0141	75	198	2.00	.381	.0351
27	134	.80	2.628	.0131	76	199	2.00	.706	.0165
28	135	.80	3.964	.0095	77	200	1.20	1.303	.0235
29	136	.60	4.346	.0136	78	201	.80	2.603	.0140
30	137	.60	4.192	.0116	79	202	1.20	1.060	.1059
31	138	.60	4.639	.0071	80	203	2.00	.567	.0147
32	139	.60	4.149	.0085	81	204	2.00	.782	.0118
33	140	.60	4.874	.0123	82	205	1.20	1.883	.0063
34	141	.60	4.514	.0119	83	206	2.00	.262	.0618
35	142	.80	3.433	.0108	84	207	.80	3.196	.0133
36	143	.60	5.345	.0085	85	208	2.00	.631	.0186
37	144	.60	5.881	.0062	86	209	2.00	.627	.0104
38	161	1.20	1.735	.0122	87	210	2.00	.759	.0361
39	162	.80	2.129	.0153	88	211	2.00	.232	.0727
40	163	.80	2.258	.0162	89	212	2.00	.503	.0216
41	164	.80	3.124	.0100	90	213	2.00	.632	.0841
42	165	.80	2.575	.0106	91	214	2.00	.958	.0133
43	166	.80	2.424	.0208	92	215	1.20	1.052	.0492
44	167	2.00	.616	.0151	93	216	.80	2.737	.0526
45	168	2.00	.991	.0075	94	217	.80	2.808	.0171
46	169	1.20	1.050	.0177	95	218	2.00	.475	.1033
47	170	1.20	1.424	.0260	96	219	1.20	1.135	.0206
48	171	1.20	1.613	.0120	97	220	1.20	1.440	.0167
49	172	1.20	1.481	.0151	98	0	-0	0	0

74 .050

BIT ON LOOP 58

DATE 5/12/75

AEDC(ARO,INC.) ARNOLD AFS, TENNESSEE
VON KARMAN GAS DYNAMICS FACILITY
50 INCH HYPERSONIC TUNNEL B
V41B-B7A

GROUP	TEST CONDITION	MODEL	MACH NO	PO,PSIA	TO,DEG R	ALPHA-MODEL	ALPHA-SECTOR	ALPHA-PREBEND	ROLL MODEL	YAW
74	26	140 B	7.98	429.2	1304	45.12	-15.12	30.00	180.00	.0

T-INF (DEG R)	P-INF (PSIA)	Q-INF (PSIA)	V-INF (FT/SEC)	RHO-INF (SLUGS/FT3)	MU-INF (LB-SEC/FT2)	RE/FT (FT-1)	HREF-FR (R= .0400FT)	STFR (R= .0400FT)	SWITCH POSITION
94.9	.045	1.992	3810	3.949E-05	7.643E-08	1.969E 06	2.294E-02	1.919E-02	3

TC NO	TW	DTWDT	QDOT	H(TO)	H(TO)/HREF	H(.9TO)	H(.9TO)/HREF
						CANOPY	
221	528.9	.300	.036	4.672E-05	.0020	5.617E-05	.0024
222	528.0	.393	.048	6.221E-05	.0027	7.477E-05	.0033
223	527.0	1.774	.240	3.089E-04	.0135	3.712E-04	.0162
						ESCAPE HATCH AND WINDOW	
224	533.2	4.682	.466	6.048E-04	.0264	7.279E-04	.0317
225	532.0	3.247	.388	5.030E-04	.0219	6.052E-04	.0264
226	529.7	1.487	.156	2.021E-04	.0088	2.430E-04	.0106
227	528.8	1.113	.163	2.097E-04	.0091	2.521E-04	.0110
228	526.8	.737	.094	1.215E-04	.0053	1.460E-04	.0064
229	527.4	.589	.076	9.731E-05	.0042	1.169E-04	.0051
232	530.0	.255	.034	4.452E-05	.0019	5.354E-05	.0023
233	530.3	.313	.047	6.124E-05	.0027	7.365E-05	.0032
236	529.4	.432	.063	8.151E-05	.0036	9.802E-05	.0043
237	530.0	.480	.067	8.714E-05	.0038	1.048E-04	.0046
						CARGO BAY HINGE NO. 1	
238	535.8	2.315	.310	4.042E-04	.0176	4.868E-04	.0212
239	536.6	2.402	.322	4.199E-04	.0183	5.059E-04	.0221
240	535.4	1.546	.221	2.877E-04	.0125	3.465E-04	.0151
241	537.3	1.959	.276	3.601E-04	.0157	4.339E-04	.0189
242	535.7	1.609	.230	2.996E-04	.0131	3.608E-04	.0157
243	536.5	1.484	.182	2.369E-04	.0103	2.853E-04	.0124
244	536.2	1.264	.148	1.928E-04	.0084	2.323E-04	.0101
						CARGO BAY HINGE NO. 2	
245	538.5	3.791	.543	7.093E-04	.0309	8.549E-04	.0373
246	541.2	5.330	.765	1.002E-03	.0437	1.209E-03	.0527
247	538.0	2.672	.345	5.153E-04	.0225	6.210E-04	.0271
248	540.4	4.240	.627	8.212E-04	.0358	9.903E-04	.0432
249	540.4	3.766	.557	7.292E-04	.0318	8.794E-04	.0383
250	540.1	3.308	.416	5.451E-04	.0238	6.573E-04	.0287
251	540.3	3.456	.426	5.576E-04	.0243	6.724E-04	.0293
						CARGO BAY HINGE NO. 3	
252	539.2	4.031	.587	7.670E-04	.0334	9.247E-04	.0403
253	541.6	5.436	.792	1.039E-03	.0453	1.253E-03	.0546
254	539.2	3.092	.471	6.155E-04	.0268	7.420E-04	.0323
257	540.7	2.812	.381	4.987E-04	.0217	6.014E-04	.0262
258	541.6	3.690	.505	6.618E-04	.0289	7.984E-04	.0348

X/L	2Y/B
.1933	.0162
.1972	.0162
.1933	.0384
.1972	.0384
.1933	.0653
.1972	.0653
.2567	.0235
.2606	.0235
.2567	.0491
.2606	.0491

X/L	Z,FULL SCALE(IN)
.2879	420.0000
.2917	420.0000
.2840	415.0000
.2879	415.0000
.2917	415.0000
.2801	405.0000
.2840	405.0000

X/L	Z,FULL SCALE(IN)
.3192	420.0000
.3439	420.0000
.3362	415.0000
.3401	415.0000
.3439	415.0000
.3323	405.0000
.3362	405.0000

X/L	Z,FULL SCALE(IN)
.3923	420.0000
.3961	420.0000
.3884	415.0000
.3845	405.0000
.3884	405.0000

DATE 5/12/75

AEDC(ARO,INC.) ARNOLD AFS, TENNESSEE
VON KARMAN GAS DYNAMICS FACILITY
50 INCH HYPERSONIC TUNNEL B
V41B-87A

GROUP	TEST CONDITION	MODEL	MACH NO	PO,PSIA	TO,DEG R	ALPHA-MODEL	ALPHA-SECTOR	ALPHA-PREBEND	ROLL MODEL	YAW
74	26	140 B	7.98	429.2	1304	45.12	-15.12	30.00	180.00	.0

T-INF (DEG R)	P-INF (PSIA)	Q-INF (PSIA)	V-INF (FT/SEC)	RHO-INF (SLUGS/FT3)	MU-INF (LB-SEC/FT2)	RE/FT (FT-1)	HREF-FR (H= .0400FT)	STFR (R= .0400FT)	SWITCH POSITION
94.9	.045	1.992	3810	3.949E-05	7.643E-06	1.969E 06	2.294E-02	1.919E-02	3

TC NO	TW	DTWDT	QDOT	H(TO)	H(TO)/HREF	H(.9TO)	H(.9TO)/HREF	TOP CENTERLINE X/L
367	568.7	53.937	6.447	8.768E-03	.3823	1.066E-02	.4647	0
368	549.5	35.074	4.494	5.944E-03	.2591	7.186E-03	.3133	.0008
369	548.9	26.391	3.111	4.121E-03	.1796	4.981E-03	.2171	.0019
370	542.2	16.065	1.957	2.582E-03	.1126	3.115E-03	.1358	.0037
371	536.6	10.429	1.021	1.331E-03	.0580	1.603E-03	.0699	.0058
372	534.4	7.016	.993	1.173E-03	.0511	1.412E-03	.0616	.0087
373	532.1	4.205	.550	7.121E-04	.0310	8.569E-04	.0374	.0118
374	533.0	3.604	.471	6.115E-04	.0267	7.360E-04	.0321	.0151
375	532.8	3.033	.414	5.371E-04	.0234	6.464E-04	.0282	.0182
376	533.3	2.439	.321	4.168E-04	.0182	5.017E-04	.0219	.0215
377	533.2	2.317	.298	3.868E-04	.0169	4.653E-04	.0203	.0246
378	533.2	2.179	.254	3.294E-04	.0144	3.965E-04	.0173	.0278
379	534.4	2.058	.253	3.285E-04	.0143	3.956E-04	.0172	.0609
380	533.8	2.013	.207	2.684E-04	.0117	3.232E-04	.0141	.0646
381	533.7	2.222	.288	3.736E-04	.0163	4.497E-04	.0196	.0684
382	533.3	2.214	.290	3.758E-04	.0164	4.523E-04	.0197	.0721
383	533.2	2.399	.321	4.168E-04	.0182	5.016E-04	.0219	.0760
384	532.9	2.436	.339	4.399E-04	.0192	5.294E-04	.0231	.0796
385	534.1	3.917	.504	6.545E-04	.0285	7.879E-04	.0344	.0789
386	534.2	3.604	.427	5.541E-04	.0242	6.671E-04	.0291	.0982
387	534.6	3.633	.446	5.802E-04	.0253	6.986E-04	.0305	.1019
388	535.4	4.771	.454	5.910E-04	.0258	7.118E-04	.0310	.1160
389	534.7	3.710	.539	7.002E-04	.0305	8.431E-04	.0368	.1195
390	534.4	3.232	.510	6.622E-04	.0289	7.973E-04	.0348	.1231
391	533.9	2.924	.466	6.054E-04	.0264	7.288E-04	.0318	.1268
392	533.9	2.851	.499	6.350E-04	.0277	7.645E-04	.0333	.1305
393	533.7	2.935	.497	6.448E-04	.0281	7.762E-04	.0338	.1338
394	533.6	3.028	.508	6.599E-04	.0288	7.944E-04	.0346	.1376
395	533.5	2.831	.423	5.495E-04	.0240	6.615E-04	.0288	.1411
396	533.6	2.781	.412	5.352E-04	.0233	6.442E-04	.0281	.1448
397	533.9	2.756	.409	5.306E-04	.0231	6.387E-04	.0278	.1483
398	533.5	3.191	.449	5.824E-04	.0254	7.011E-04	.0306	.1519
399	540.0	8.009	1.073	1.404E-03	.0612	1.693E-03	.0738	.1556

DATE 5/12/75

AEDC(ARO,INC.) ARNOLD AFS, TENNESSEE
VON KARMAN GAS DYNAMICS FACILITY
50 INCH HYPERSONIC TUNNEL B
V41B-B7A

GROUP	TEST CONDITION	MODEL	MACH NO	PO,PSIA	TO,DEG R	ALPHA-MODEL	ALPHA-SECTOR	ALPHA-PREBEND	ROLL MODEL	YAW
74	26	140 B	7.98	429.2	1304	45.12	-15.12	30.00	180.00	.0

T-INF (DEG R)	P-INF (PSIA)	Q-INF (PSIA)	V-INF (FT/SEC)	RHO-INF (SLUGS/FT3)	MU-INF (LB-SEC/FT2)	RE/FT (FT-1)	HREF-FR (R= .0400FT)	SIFR (R= .0400FT)	SWITCH POSITION
94.9	.045	1.992	3810	3.949E-05	7.643E-08	1.969E 06	2.294E-02	1.919E-02	3

TC NO	TW	DTWDT	QDOT	H(TO)	H(TO)/HREF	H(.9TO)	H(.9TO)/HREF	X/L
								TOP CENTERLINE
400	541.5	11.667	1.607	2.107E-03	.0919	2.542E-03	.1108	.1582
401	540.5	11.724	1.524	1.997E-03	.0870	2.408E-03	.1050	.1608
402	540.5	11.394	1.495	1.867E-03	.0814	2.252E-03	.0982	.1635
403	541.6	12.003	1.454	1.920E-03	.0837	2.316E-03	.1010	.1664
404	540.7	11.640	1.414	1.852E-03	.0807	2.234E-03	.0974	.1691
405	541.9	12.776	1.552	2.037E-03	.0888	2.458E-03	.1071	.1720
406	541.6	13.347	1.622	2.127E-03	.0927	2.566E-03	.1119	.1748
407	541.3	13.449	1.742	2.285E-03	.0996	2.756E-03	.1201	.1769
408	540.5	12.672	1.852	2.440E-03	.1064	2.942E-03	.1283	.1800
409	537.7	10.508	1.514	1.976E-03	.0861	2.381E-03	.1038	.1831
410	537.8	9.484	1.366	1.783E-03	.0778	2.149E-03	.0937	.1863
411	536.3	6.991	1.050	1.368E-03	.0597	1.648E-03	.0719	.1894
412	534.6	5.259	.714	9.283E-04	.0405	1.118E-03	.0487	.1931
413	533.5	3.827	.513	6.654E-04	.0290	8.009E-04	.0349	.1972
414	532.3	1.574	.211	2.730E-04	.0119	3.285E-04	.0143	.2049
415	530.1	.561	.055	7.139E-05	.0031	8.586E-05	.0037	.2250
416	530.9	.285	.033	4.310E-05	.0019	5.184E-05	.0023	.2500
								NOSE TC (Z = 338)
								X/L 2Y/B
145	558.1	36.692	4.976	6.672E-03	.2909	8.086E-03	.3525	.0008 .5039
146	563.1	40.475	5.503	7.428E-03	.3238	9.015E-03	.3930	.0023 .5082
147	558.5	36.274	4.920	6.601E-03	.2878	8.000E-03	.3488	.0043 .5135
148	555.0	28.425	3.977	5.311E-03	.2315	6.430E-03	.2803	.0068 .5205
149	549.8	20.740	3.006	3.986E-03	.1738	4.820E-03	.2101	.0095 .5279
150	549.7	16.751	2.465	3.149E-03	.1390	3.856E-03	.1681	.0122 .5354
151	551.2	11.881	1.675	2.226E-03	.0970	2.692E-03	.1174	.0218 .5621
152	552.7	14.718	2.014	2.667E-03	.1162	3.228E-03	.1407	.0251 .5712
153	553.5	13.918	1.787	2.275E-03	.0992	2.754E-03	.1201	.0286 .5808
154	553.7	12.768	1.595	2.126E-03	.0927	2.574E-03	.1122	.0319 .5898
155	553.3	12.035	1.520	2.025E-03	.0883	2.450E-03	.1068	.0354 .5995
156	552.3	11.083	1.384	1.841E-03	.0803	2.228E-03	.0971	.0387 .6085
157	552.5	10.595	1.309	1.742E-03	.0759	2.107E-03	.0919	.0420 .6176
158	553.1	10.658	1.317	1.754E-03	.0765	2.122E-03	.0925	.0462 .6294
159	552.5	10.878	1.226	1.631E-03	.0711	1.974E-03	.0860	.0503 .6406

GROUP 74 CENTERLINE TIME 2.85

CH	TC	FIT LENGTH	DTDWT	UNCERTAINTY	CH	TC	FIT LENGTH	DTDWT	UNCERTAINTY
1	221	2.00	.380	.0309	50	384	.80	2.436	.0108
2	222	2.00	.343	.0552	51	385	.80	3.917	.0156
3	223	1.20	1.774	.0105	52	386	.80	3.604	.0160
4	224	.60	4.682	.0162	53	387	.80	3.633	.0093
5	225	.80	3.247	.0176	54	388	.60	4.771	.0141
6	226	1.20	1.487	.0083	55	389	.80	3.710	.0097
7	227	1.20	1.113	.0592	56	390	.80	3.232	.0344
8	228	2.00	.737	.0112	57	391	.80	2.924	.0115
9	229	2.00	.589	.0279	58	392	.80	2.851	.0111
10	232	2.00	.255	.0398	59	393	.80	2.935	.0160
11	233	2.00	.313	.0425	60	394	.80	3.028	.0092
12	235	2.00	.432	.0347	61	395	.80	2.831	.0142
13	237	2.00	.480	.0168	62	396	.80	2.781	.0118
14	238	.80	2.315	.0098	63	397	.80	2.756	.0215
15	239	.80	2.402	.0183	64	398	.80	3.191	.0083
16	240	1.20	1.546	.0166	65	399	.60	8.009	.0060
17	241	1.20	1.455	.0235	66	400	.40	11.867	.0077
18	242	1.20	1.609	.0084	67	401	.40	11.728	.0091
19	243	1.20	1.484	.0134	68	402	.40	11.394	.0481
20	244	1.20	1.264	.0165	69	403	.40	12.003	.0105
21	245	.80	3.791	.0068	70	404	.40	11.640	.0162
22	246	.60	5.330	.0094	71	405	.40	12.776	.0102
23	247	.80	2.672	.0209	72	406	.40	13.347	.0086
24	248	.60	4.240	.0117	73	407	.40	13.449	.0088
25	249	.60	3.766	.0114	74	408	.40	12.672	.0042
26	250	.80	3.308	.0107	75	409	.40	10.508	.0129
27	251	.80	3.456	.0066	76	410	.40	9.484	.0171
28	252	.60	4.031	.0096	77	411	.60	6.991	.0064
29	253	.60	5.436	.0101	78	412	.60	5.259	.0107
30	254	.60	3.032	.0166	79	413	.80	3.827	.0541
31	257	.80	2.812	.0092	80	414	1.20	1.574	.0122
32	258	.80	3.690	.0097	81	415	2.00	.561	.0249
33	367	.20	53.937	.0019	82	416	2.00	.285	.0279
34	368	.20	35.078	.0023	83	145	.20	36.692	.0044
35	369	.30	26.391	.0075	84	146	.20	40.475	.0054
36	370	.40	16.065	.0037	85	147	.20	36.274	.0071
37	371	.40	10.429	.0071	86	148	.30	28.425	.0066
38	372	.60	7.016	.0102	87	149	.30	20.740	.0117
39	373	.60	4.205	.0139	88	150	.30	16.751	.0087
40	374	.80	3.604	.0157	89	151	.40	11.881	.0028
41	375	.80	3.033	.0165	90	152	.40	14.718	.0350
42	376	.80	2.439	.0176	91	153	.40	13.918	.0108
43	377	.80	2.317	.0312	92	154	.40	12.768	.0169
44	378	.80	2.179	.0173	93	155	.40	12.035	.0040
45	379	.80	2.058	.0126	94	156	.40	11.083	.0098
46	380	.80	2.013	.0124	95	157	.40	10.595	.0079
47	381	.80	2.222	.0208	96	158	.40	10.658	.0081
48	382	.80	2.214	.0188	97	159	.40	10.878	.0098
49	383	.80	2.399	.0132	98	0	-0	0	0

Page numbers 292-295 are blank.

DATE 5/12/75

AEDC(ARO,INC.) ARNOLD AFS, TENNESSEE
VON KARMAN GAS DYNAMICS FACILITY
50 INCH HYPERSONIC TUNNEL B
V41B-B7A

GROUP	TEST CONDITION	MODEL	MACH NO	PO,PSIA	TO,DEG R	ALPHA-MODEL	ALPHA-SECTOR	ALPHA-PREBEND	ROLL MODEL	YAW
75	27	140 B	7.99	675.1	1335	20.04	9.96	30.00	180.00	-.0

T-INF (DEG R)	P-INF (PSIA)	Q-INF (PSIA)	V-INF (FT/SEC)	RHO-INF (SLUGS/FT3)	MU-INF (LB-SEC/FT2)	RE/FT (FT-1)	HREF-FR (R= .0400FT)	STFR (R= .0400FT)	SWITCH POSITION
97.0	.070	3.115	3855	6.032E-05	7.806E-06	2.979E 06	2.880E-02	1.557E-02	1

TC NO	TW	DTWDT	QDOT	H(TO)	H(TO)/HREF	H(.9TO)	H(.9TO)/HREF
1	540.8	6.496	.859	1.081E-03	.0375	1.300E-03	.0451
2	541.2	6.639	.896	1.128E-03	.0392	1.357E-03	.0471
3	540.9	6.806	.936	1.179E-03	.0409	1.418E-03	.0492
4	541.0	6.892	.939	1.183E-03	.0411	1.422E-03	.0494
5	541.7	7.218	.964	1.216E-03	.0422	1.462E-03	.0507
6	542.5	7.546	1.002	1.264E-03	.0439	1.520E-03	.0528
7	542.4	7.279	1.064	1.343E-03	.0466	1.615E-03	.0561
8	540.8	6.428	.971	1.222E-03	.0424	1.469E-03	.0510
9	543.0	7.239	1.056	1.333E-03	.0463	1.603E-03	.0557
10	542.8	7.644	1.094	1.381E-03	.0479	1.661E-03	.0577
11	543.5	8.382	1.136	1.435E-03	.0498	1.727E-03	.0599
12	544.6	8.316	1.150	1.455E-03	.0505	1.751E-03	.0608
13	544.4	6.786	.999	1.264E-03	.0439	1.521E-03	.0528
14	544.8	7.497	1.027	1.299E-03	.0451	1.564E-03	.0543
15	544.8	7.542	1.049	1.277E-03	.0443	1.537E-03	.0534
16	542.5	3.841	.520	6.566E-04	.0228	7.896E-04	.0274
17	542.4	3.075	.416	5.255E-04	.0182	6.320E-04	.0219
18	542.4	2.117	.296	3.737E-04	.0130	4.494E-04	.0156
19	543.4	1.466	.205	2.593E-04	.0090	3.119E-04	.0108
22	539.1	6.161	.855	1.075E-03	.0373	1.291E-03	.0448
23	539.2	6.847	.957	1.202E-03	.0417	1.445E-03	.0502
24	539.3	7.086	.958	1.205E-03	.0418	1.447E-03	.0503
25	539.2	6.527	.859	1.080E-03	.0375	1.298E-03	.0450
26	540.0	7.151	.939	1.181E-03	.0410	1.419E-03	.0493
27	540.1	7.098	.989	1.244E-03	.0432	1.495E-03	.0519
28	538.9	6.700	.963	1.210E-03	.0420	1.453E-03	.0505
29	539.6	6.677	.963	1.211E-03	.0420	1.455E-03	.0505
30	538.9	6.914	.994	1.248E-03	.0433	1.500E-03	.0521
31	538.0	6.361	.888	1.115E-03	.0387	1.339E-03	.0465
32	537.4	5.505	.729	9.141E-04	.0317	1.098E-03	.0381
33	537.1	4.040	.576	7.225E-04	.0251	8.677E-04	.0301
34	538.4	5.001	.676	8.467E-04	.0295	1.020E-03	.0354
35	540.9	6.569	.930	1.172E-03	.0407	1.409E-03	.0489
36	538.3	4.558	.661	8.297E-04	.0288	9.967E-04	.0346
37	538.4	5.173	.727	9.128E-04	.0317	1.097E-03	.0381
38	539.5	5.392	.751	9.441E-04	.0328	1.135E-03	.0394
39	539.6	5.029	.734	9.232E-04	.0321	1.109E-03	.0385
41	537.9	5.127	.686	8.606E-04	.0299	1.034E-03	.0359
42	541.2	7.797	1.066	1.343E-03	.0466	1.614E-03	.0560
43	536.8	2.937	.381	4.773E-04	.0166	5.731E-04	.0199

FUSELAGE VENT NO. 1

X/L	Z,FULL SCALE(IN)
.4434	376.6300
.4264	371.6300
.4303	371.6300
.4342	371.6300
.4380	371.6300
.4434	369.1300
.4226	366.6300
.4264	366.6300
.4303	366.6300
.4342	366.6300
.4380	366.6300
.4496	366.6300
.4187	357.1300
.4396	361.6300
.4434	361.6300
.4396	355.6300
.4434	355.6300
.4396	351.6300
.4291	332.6300

CARGO BAY VENT NO. 1

X/L	Z,FULL SCALE(IN)
.3974	397.6300
.4013	397.6300
.4052	397.6300
.4090	397.6300
.4129	397.6300
.3936	392.6300
.3974	392.6300
.4013	392.6300
.4052	392.6300
.4090	392.6300
.4129	392.6300
.4090	386.1300
.4129	387.6300
.3897	383.1300
.4090	378.6300
.4129	382.1300
.4129	377.1300
.4001	373.6300

PROTUBERANCES

X/L	Z,FULL SCALE(IN)
.3546	379.0500
.3604	379.0500
.3450	374.0500

DATE 5/12/75

AEDC(ARO,INC.) ARNOLD AFS, TENNESSEE
VON KARMAN GAS DYNAMICS FACILITY
50 INCH HYPERSONIC TUNNEL B
V41B-B/A

GROUP	TEST CONDITION	MODEL	MACH NO	PO,PSIA	TO,DEG R	ALPHA-MODEL	ALPHA-SECTOR	ALPHA-PREBEND	ROLL MODEL	YAW
75	27	140 B	7.99	675.1	1335	20.04	9.96	30.00	180.00	-.0

T-INF (DEG R)	P-INF (PSIA)	Q-INF (PSIA)	V-INF (FT/SEC)	RHO-INF (SLUGS/FT3)	MU-INF (LB-SEC/FT2)	RE/FT (FT-1)	HREF-FR (R= .0400FT)	STFR (R= .0400FT)	SWITCH POSITION
97.0	.070	3.115	3855	6.032E-05	7.806E-08	2.979E 06	2.880E-02	1.557E-02	1

TC NO	TW	DTWDT	QDOT	H(TO)	H(TO)/HREF	H(.9TO)	H(.9TO)/HREF
44	539.4	6.558	.893	1.182E-03	.0390	1.349E-03	.0468
45	544.8	10.183	1.413	1.788E-03	.0621	2.152E-03	.0747
46	543.1	9.815	1.374	1.735E-03	.0602	2.087E-03	.0725
47	538.0	3.982	.529	6.640E-04	.0231	7.977E-04	.0277
48	542.6	8.134	1.116	1.409E-03	.0489	1.694E-03	.0588
49	539.4	5.467	.752	9.448E-04	.0328	1.135E-03	.0394
50	544.9	9.008	1.254	1.587E-03	.0551	1.910E-03	.0663
51	543.0	7.175	.975	1.232E-03	.0428	1.481E-03	.0514
52	543.4	7.586	1.045	1.320E-03	.0458	1.588E-03	.0551
53	542.0	7.942	1.161	1.464E-03	.0508	1.761E-03	.0611
54	535.7	3.131	.446	5.586E-04	.0194	6.706E-04	.0233
55	542.9	7.130	1.020	1.288E-03	.0447	1.550E-03	.0538

PROTUBERANCES

X/L	Z,FULL SCALE(IN)
.3508	374.0500
.3566	374.0500
.3604	374.0500
.3392	366.5500
.3566	366.5500
.3392	360.7000
.3566	360.7000
.3604	360.7000
.3392	353.2000
.3450	353.2000
.3508	353.2000
.3566	353.2000

TC NO	TW	DTWDT	QDOT	H(TO)	H(TO)/HREF	H(.9TO)	H(.9TO)/HREF
56	535.8	2.976	.383	4.794E-04	.0166	5.755E-04	.0200
57	537.0	3.177	.398	4.861E-04	.0169	5.838E-04	.0203
58	537.2	2.976	.393	4.924E-04	.0171	5.914E-04	.0205
59	538.3	2.892	.381	4.778E-04	.0166	5.740E-04	.0199
60	537.4	2.270	.316	3.960E-04	.0137	4.756E-04	.0165
61	537.8	2.974	.377	4.724E-04	.0164	5.674E-04	.0197
62	537.1	3.169	.388	4.868E-04	.0169	5.847E-04	.0203
63	536.4	3.048	.398	4.984E-04	.0173	5.984E-04	.0208
64	524.7	-.008	-.001	-1.171E-06	-.0000	-1.403E-06	-.0000
65	536.1	2.807	.381	4.775E-04	.0166	5.733E-04	.0199
66	537.1	3.171	.400	5.013E-04	.0174	6.020E-04	.0209
67	538.0	3.530	.496	6.224E-04	.0216	7.476E-04	.0260
68	537.9	2.856	.362	4.538E-04	.0158	5.451E-04	.0189

SUBLIMATOR VENT NO. 1

X/L	Z,FULL SCALE(IN)
.3031	371.1300
.3074	369.1300
.3089	363.6300
.3074	358.1300
.3031	356.1300
.2988	358.1300
.2973	363.6300
.2988	369.1300
.3031	376.1300
.3089	378.6300
.3101	372.6300
.3157	370.3800
.3128	363.6300

DATE 5/12/75

AEDC(ARO,INC.) ARNOLD AFS, TENNESSEE
VON KARMAN GAS DYNAMICS FACILITY
50 INCH HYPERSONIC TUNNEL B
V41B-B7A

GROUP	TEST CONDITION	MODEL	MACH NO	PO,PSIA	TO,DEG R	ALPHA-MODEL	ALPHA-SECTOR	ALPHA-PREBEND	ROLL MODEL	YAW
75	27	140 B	7.99	675.1	1335	20.04	9.96	30.00	180.00	-.0

T-INF (DEG R)	P-INF (PSIA)	Q-INF (PSIA)	V-INF (FT/SEC)	RHO-INF (SLUGS/FT3)	MU-INF (LB-SEC/FT2)	RE/FT (FT-1)	HREF-FR (R= .0400FT)	STFR (H= .0400FT)	SWITCH POSITION
97.0	.070	3.115	3855	6.032E-05	7.806E-08	2.979E 06	2.880E-02	1.557E-02	1

IC NO	TW	DTWDT	QDOT	H(TO)	H(TO)/HREF	H(.9TO)	H(.9TO)/HREF	X/L	Z,FULL SCALE(IN)
								FUSELAGE VENT PANEL NO. 7	
69	535.5	3.398	.474	5.927E-04	.0206	7.116E-04	.0247	.2487	356.4000
70	535.6	3.496	.428	5.357E-04	.0186	6.431E-04	.0223	.2591	356.4000
71	536.6	4.056	.551	6.907E-04	.0240	8.294E-04	.0288	.2419	351.4000
72	536.4	3.453	.489	6.130E-04	.0213	7.361E-04	.0256	.2487	351.4000
73	536.4	3.626	.470	5.888E-04	.0204	7.070E-04	.0245	.2552	351.4000
74	536.7	3.755	.455	5.702E-04	.0198	6.847E-04	.0238	.2610	351.4000
75	536.9	4.115	.560	7.011E-04	.0243	8.420E-04	.0292	.2419	342.8000
77	537.2	3.621	.513	6.436E-04	.0223	7.729E-04	.0268	.2552	342.8000
78	537.9	3.820	.525	6.583E-04	.0229	7.908E-04	.0275	.2610	342.8000
79	538.1	4.399	.563	7.067E-04	.0245	8.490E-04	.0295	.2419	334.2000
80	537.3	3.662	.500	6.264E-04	.0217	7.523E-04	.0261	.2487	334.2000
81	536.8	3.167	.442	5.537E-04	.0192	6.650E-04	.0231	.2552	334.2000
								ACCESS HATCH WINDOW	
								X/L	Z,FULL SCALE(IN)
83	533.1	3.528	.471	5.873E-04	.0204	7.046E-04	.0245	.2131	398.0000
84	533.9	3.680	.485	6.053E-04	.0210	7.263E-04	.0252	.2131	388.0000
85	533.5	3.231	.440	5.490E-04	.0191	6.587E-04	.0229	.2131	383.0000
87	531.5	2.310	.330	4.104E-04	.0142	4.921E-04	.0171	.2222	395.8000
88	533.5	3.386	.473	5.905E-04	.0205	7.085E-04	.0246	.2193	386.5000
89	533.5	3.174	.466	5.818E-04	.0202	6.981E-04	.0242	.2177	381.8000
90	533.3	3.115	.424	5.292E-04	.0184	6.349E-04	.0220	.2297	389.5000
91	533.7	3.364	.461	5.756E-04	.0200	6.906E-04	.0240	.2243	382.5000
92	534.3	3.027	.427	5.337E-04	.0185	6.404E-04	.0222	.2214	378.7000
93	533.7	3.017	.385	4.809E-04	.0167	5.770E-04	.0200	.2343	374.0000
94	535.2	3.585	.466	5.829E-04	.0202	6.996E-04	.0243	.2274	375.5000
95	534.6	3.179	.452	5.643E-04	.0196	6.772E-04	.0235	.2239	373.3000
96	534.6	2.935	.382	4.767E-04	.0166	5.722E-04	.0199	.2363	368.0000
97	534.7	3.405	.435	5.441E-04	.0189	6.531E-04	.0227	.2286	368.0000
98	534.7	3.383	.475	5.930E-04	.0206	7.117E-04	.0247	.2247	368.0000
100	535.3	3.420	.485	6.060E-04	.0210	7.274E-04	.0253	.2274	360.5000
102	535.2	3.242	.458	5.725E-04	.0199	6.873E-04	.0239	.2081	354.3000
103	534.6	3.562	.470	5.878E-04	.0204	7.055E-04	.0245	.2023	362.7000
105	534.5	3.457	.432	5.403E-04	.0188	6.484E-04	.0225	.2050	378.7000
106	533.7	3.982	.510	6.370E-04	.0221	7.643E-04	.0265	.2050	386.2000

GROUP 75 CENTERLINE TIME 2.55

CH	TC	FIT LENGTH	DTDWT	UNCERTAINTY	CH	TC	FIT LENGTH	DTDWT	UNCERTAINTY
1	1	.60	6.496	.0168	50	53	.40	7.942	.0145
2	2	.60	6.639	.0064	51	54	.80	3.131	.0167
3	3	.60	6.806	.0055	52	55	.60	7.130	.0076
4	4	.60	6.892	.0062	53	56	.80	2.976	.0116
5	5	.60	7.218	.0151	54	57	.80	3.177	.0149
6	6	.60	7.546	.0067	55	58	.80	2.976	.0137
7	7	.60	7.279	.0269	56	59	.80	2.892	.0698
8	8	.60	6.428	.0058	57	60	.80	2.270	.0139
9	9	.60	7.239	.0052	58	61	.80	2.974	.0057
10	10	.60	7.644	.0062	59	62	.80	3.169	.0125
11	11	.40	8.382	.0103	60	63	.80	3.048	.0093
12	12	.40	8.316	.0114	61	64	2.00	-.008	-2.3990
13	13	.60	6.786	.0065	62	65	.80	2.807	.0146
14	14	.60	7.497	.0048	63	66	.80	3.171	.0095
15	15	.60	7.542	.0095	64	67	.80	3.530	.0094
16	16	.80	3.841	.0094	65	68	.80	2.856	.0141
17	17	.80	3.075	.0137	66	69	.80	3.398	.0143
18	18	.80	2.117	.0167	67	70	.80	3.496	.0081
19	19	1.20	1.466	.0140	68	71	.80	4.056	.0685
20	22	.60	6.161	.0057	69	72	.80	3.453	.0182
21	23	.60	6.847	.0070	70	73	.80	3.626	.0094
22	24	.60	7.086	.0082	71	74	.80	3.755	.0134
23	25	.60	6.527	.0113	72	75	.60	4.115	.0147
24	26	.60	7.151	.0114	73	77	.80	3.621	.0108
25	27	.60	7.098	.0113	74	78	.80	3.820	.0098
26	28	.60	6.700	.0067	75	79	.60	4.399	.0194
27	29	.60	6.677	.0103	76	80	.80	3.662	.0155
28	30	.60	6.914	.0098	77	81	.80	3.167	.0084
29	31	.60	6.361	.0094	78	83	.80	3.528	.0087
30	32	.60	5.505	.0146	79	84	.80	3.680	.0549
31	33	.60	4.040	.0108	80	85	.80	3.231	.0104
32	34	.60	5.001	.0134	81	87	.80	2.310	.0150
33	35	.60	6.569	.0077	82	88	.80	3.386	.0067
34	36	.60	4.558	.0093	83	89	.80	3.174	.0137
35	37	.60	5.173	.0081	84	90	.80	3.115	.0117
36	38	.60	5.342	.0054	85	91	.80	3.364	.0123
37	39	.60	5.029	.0078	86	92	.80	3.027	.0114
38	41	.60	5.127	.0140	87	93	.80	3.017	.0196
39	42	.60	7.797	.0046	88	94	.80	3.585	.0081
40	43	.80	2.937	.0156	89	95	.80	3.179	.0149
41	44	.60	6.558	.0072	90	96	.80	2.935	.0691
42	45	.40	10.183	.0107	91	97	.80	3.408	.0206
43	46	.40	9.815	.0121	92	98	.80	3.383	.0233
44	47	.60	3.982	.0144	93	100	.80	3.420	.0120
45	48	.40	8.134	.0057	94	102	.80	3.242	.0112
46	49	.60	5.467	.0120	95	103	.80	3.582	.0162
47	50	.40	9.008	.0264	96	105	.80	3.457	.0142
48	51	.60	7.175	.0058	97	106	.80	3.982	.0104
49	52	.60	7.586	.0058	98	0	-0	0	0
	76	.050							

BIT ON LOOP 54

DATE 5/12/75

AEDC(ARO,INC.) ARNOLD AFS, TENNESSEE
VON KARMAN GAS DYNAMICS FACILITY
50 INCH HYPERSONIC TUNNEL H
V41H-B7A

GROUP	TEST CONDITION	MODEL	MACH NO	PO,PSIA	TO,DEG R	ALPHA-MODEL	ALPHA-SECTOR	ALPHA-PREBEND	ROLL MODEL	YAW
76	27	140 B	7.99	673.9	1339	20.03	9.97	30.00	180.00	-.0

T-INF (DEG R)	P-INF (PSIA)	Q-INF (PSIA)	V-INF (FT/SEC)	RHO-INF (SLUGS/FT3)	MU-INF (LB-SEC/FT2)	RE/FT (FT-1)	HREF-FR (R= .0400FT)	STFR (R= .0400FT)	SWITCH POSITION
97.3	.070	3.110	3862	6.001E-05	7.833E-06	2.959E 06	2.879E-02	1.561E-02	2

IC NO	TW	DTWDT	QDOT	H(TO)	H(TO)/HREF	H(.9TO)	H(.9TO)/HREF	X/L	Z,FULL SCALE(IN)
								ACCESS HATCH WINDOW	
107	531.4	3.571	.511	6.326E-04	.0220	7.583E-04	.0263	.2050	396.2000
								FUSELAGE VENT PANEL NO. 3 AND 1	
								X/L	Z,FULL SCALE(IN)
108	533.5	7.398	.783	9.713E-04	.0337	1.165E-03	.0405	.1244	377.5000
109	531.3	6.180	.763	9.446E-04	.0328	1.132E-03	.0393	.1302	377.5000
110	530.9	5.432	.688	8.506E-04	.0295	1.020E-03	.0354	.1360	377.5000
111	531.4	5.518	.664	8.222E-04	.0286	9.856E-04	.0342	.1418	377.5000
112	532.2	5.448	.647	8.011E-04	.0278	9.605E-04	.0334	.1476	377.5000
113	533.0	6.848	.786	9.741E-04	.0338	1.168E-03	.0406	.1215	273.5000
114	531.7	5.952	.714	8.843E-04	.0307	1.060E-03	.0368	.1273	273.5000
115	531.3	4.983	.618	7.645E-04	.0265	9.163E-04	.0318	.1331	273.5000
116	531.1	5.036	.618	7.640E-04	.0265	9.158E-04	.0318	.1389	273.5000
117	532.8	5.596	.644	7.988E-04	.0277	9.579E-04	.0333	.1447	273.5000
118	532.1	4.771	.660	8.173E-04	.0284	9.799E-04	.0340	.1409	366.0000
119	533.5	5.325	.690	8.555E-04	.0297	1.026E-03	.0356	.1442	366.0000
120	533.5	5.496	.687	8.531E-04	.0296	1.023E-03	.0355	.1215	359.5000
121	533.3	4.975	.611	7.576E-04	.0263	9.085E-04	.0316	.1303	359.5000
122	534.0	5.001	.623	7.736E-04	.0269	9.279E-04	.0322	.1337	359.5000
								LOWER RCS NOZZLES	
								X/L	Z,FULL SCALE(IN)
124	532.9	5.640	.504	6.243E-04	.0217	7.486E-04	.0260	.0950	400.0000
125	531.7	5.496	.598	7.406E-04	.0257	8.879E-04	.0308	.0988	400.0000
126	531.7	4.851	.664	8.224E-04	.0286	9.859E-04	.0342	.1027	400.0000
127	531.2	4.879	.657	8.130E-04	.0282	9.745E-04	.0338	.0911	395.0000
128	531.0	5.310	.644	7.967E-04	.0277	9.549E-04	.0332	.0950	395.0000
129	531.8	5.806	.641	8.433E-04	.0293	1.011E-03	.0351	.0988	395.0000
130	533.0	5.950	.712	8.825E-04	.0306	1.058E-03	.0368	.0810	390.0000
131	530.8	5.305	.783	9.691E-04	.0336	1.160E-03	.0403	.0857	390.0000
132	532.8	7.276	.848	1.051E-03	.0365	1.260E-03	.0438	.0963	390.0000
133	530.8	5.409	.656	8.112E-04	.0282	9.722E-04	.0338	.0857	383.8000
134	529.8	6.128	.819	1.012E-03	.0351	1.213E-03	.0421	.0872	377.3000
135	532.3	7.859	.943	1.169E-03	.0406	1.401E-03	.0487	.0903	374.5500
136	532.9	8.665	.963	1.194E-03	.0415	1.432E-03	.0497	.0960	374.5500
137	531.8	7.690	1.005	1.244E-03	.0432	1.492E-03	.0518	.0872	370.5500
138	532.6	8.825	1.016	1.259E-03	.0437	1.510E-03	.0524	.0928	370.5500
139	533.0	7.568	.966	1.198E-03	.0416	1.436E-03	.0499	.0816	366.0500
140	533.3	8.238	1.048	1.300E-03	.0452	1.559E-03	.0542	.0934	362.4000
141	533.6	7.313	.967	1.199E-03	.0417	1.439E-03	.0500	.0973	362.4000
142	533.5	6.224	.678	8.412E-04	.0292	1.009E-03	.0350	.0833	355.2000
143	533.8	8.718	.876	1.087E-03	.0378	1.304E-03	.0453	.0919	355.2000
144	535.5	9.533	1.257	1.564E-03	.0543	1.876E-03	.0652	.0949	349.0000

DATE 5/12/75

AEDC(ARO,INC.) ARNOLD AFS, TENNESSEE
VON KARMAN GAS DYNAMICS FACILITY
50 INCH HYPERSONIC TUNNEL H
V41B-87A

GROUP	TEST CONDITION	MODEL	MACH NO	PO,PSIA	TO,DEG R	ALPHA-MODEL	ALPHA-SECTOR	ALPHA-PREBEND	ROLL MODEL	YAW
76	27	140 H	7.99	673.9	1339	20.03	9.97	30.00	180.00	-.0

T-INF (DEG R)	P-INF (PSIA)	Q-INF (PSIA)	V-INF (FT/SEC)	RHO-INF (SLUGS/FT3)	MU-INF (LB-SEC/FT2)	RE/FT (FT-1)	HREF-FR (R= .0400FT)	STFR (R= .0400FT)	SWITCH POSITION
97.3	.070	3.110	3862	6.001E-05	7.833E-08	2.959E 06	2.879E-02	1.561E-02	2

TC NO	TW	DTWDT	QDOT	H(TO)	H(TO)/HREF	H(.9TO)	H(.9TO)/HREF	X/L	2Y/B
								UPPER RCS NOZZLES	
161	534.1	4.497	.532	6.609E-04	.0230	7.927E-04	.0275	.0619	-.0160
162	533.9	4.296	.407	5.049E-04	.0175	6.056E-04	.0210	.0709	-.0160
163	532.6	3.064	.376	4.661E-04	.0162	5.589E-04	.0194	.0807	-.0160
164	531.8	2.353	.306	3.794E-04	.0132	4.549E-04	.0158	.0943	-.0160
165	532.1	1.765	.222	2.751E-04	.0096	3.298E-04	.0115	.0978	-.0160
166	531.7	1.191	.153	1.868E-04	.0066	2.264E-04	.0079	.1013	-.0160
167	533.9	4.312	.583	7.243E-04	.0252	8.688E-04	.0302	.0619	-.0320
168	534.1	4.718	.495	6.149E-04	.0214	7.375E-04	.0256	.0709	-.0320
169	532.2	3.276	.398	4.925E-04	.0171	5.905E-04	.0205	.0807	-.0320
170	531.8	2.745	.343	4.246E-04	.0147	5.090E-04	.0177	.0943	-.0320
171	531.9	2.735	.330	4.081E-04	.0142	4.893E-04	.0170	.0978	-.0320
172	531.2	1.858	.242	2.993E-04	.0104	3.588E-04	.0125	.1013	-.0320
173	532.5	3.413	.455	5.644E-04	.0196	6.767E-04	.0235	.0807	-.0480
174	531.5	2.772	.315	3.902E-04	.0136	4.678E-04	.0162	.0943	-.0480
175	531.2	2.483	.355	4.398E-04	.0153	5.272E-04	.0183	.0978	-.0480
176	531.2	1.798	.243	3.012E-04	.0105	3.611E-04	.0125	.1013	-.0480
								CANOPY	
177	544.5	13.602	1.881	2.366E-03	.0822	2.845E-03	.0988		
178	552.3	26.938	5.342	6.766E-03	.2357	8.178E-03	.2840		
179	557.9	33.694	7.143	9.139E-03	.3174	1.103E-02	.3830		
180	537.4	5.328	.696	8.677E-04	.0301	1.042E-03	.0362		
181	543.3	12.391	1.690	2.123E-03	.0737	2.552E-03	.0886		
182	550.6	27.765	3.989	5.057E-03	.1756	6.091E-03	.2115		
183	532.0	3.710	.465	5.760E-04	.0200	6.905E-04	.0240		
184	532.3	4.328	.591	7.321E-04	.0254	8.777E-04	.0305		
185	538.6	7.824	.942	1.176E-03	.0409	1.413E-03	.0491		
186	546.6	18.377	2.321	2.927E-03	.1017	3.523E-03	.1223		
187	556.7	34.828	4.689	5.990E-03	.2080	7.227E-03	.2510		
188	548.9	24.672	5.784	7.316E-03	.2541	8.808E-03	.3059		
189	539.4	9.591	1.370	1.713E-03	.0595	2.057E-03	.0714		
190	547.4	21.335	3.089	3.900E-03	.1354	4.694E-03	.1630		
191	555.4	44.690	6.900	8.800E-03	.3056	1.061E-02	.3686		

DATE 5/12/75

AEDC(ARO,INC.) ARNOLD AFS, TENNESSEE
VON KARMAN GAS DYNAMICS FACILITY
50 INCH HYPERSONIC TUNNEL B
V41B-87A

GROUP	TEST CONDITION	MODEL	MACH NO	PO,PSIA	TO,DEG R	ALPHA-MODEL	ALPHA-SECTOR	ALPHA-PREBEND	ROLL MODEL	YAW
76	27	140 B	7.99	673.9	1339	20.03	9.97	30.00	180.00	-.0

T-INF (DEG R)	P-INF (PSIA)	Q-INF (PSIA)	V-INF (FT/SEC)	RHO-INF (SLUGS/FT3)	MU-INF (LB-SEC/FT2)	RE/FT (FT-1)	HREF-FR (R= .0400FT)	STFR (R= .0400FT)	SWITCH POSITION
97.3	.070	3.118	3862	6.001E-05	7.833E-08	2.959E 06	2.879E-02	1.561E-02	2

IC NO	TW	DTWDT	QDOT	H(TO)	H(TO)/HREF	H(.9TO)	H(.9TO)/HREF
						CANOPY	
192	532.8	3.806	.537	6.655E-04	.0231	7.980E-04	.0277
193	543.4	19.139	3.702	4.650E-03	.1615	5.590E-03	.1941
194	535.1	5.855	.756	9.399E-04	.0326	1.128E-03	.0392
195	545.0	16.753	2.077	2.614E-03	.0908	3.144E-03	.1092
196	552.3	26.456	3.506	4.454E-03	.1547	5.367E-03	.1864
197	529.0	1.143	.113	1.395E-04	.0048	1.671E-04	.0058
198	529.3	1.495	.173	2.137E-04	.0074	2.560E-04	.0089
199	530.3	2.875	.386	4.768E-04	.0166	5.714E-04	.0198
200	535.1	6.284	.846	1.114E-03	.0387	1.336E-03	.0464
201	548.3	25.561	3.633	4.592E-03	.1595	5.528E-03	.1920
202	544.5	18.700	2.376	2.979E-03	.1038	3.594E-03	.1248
203	530.2	2.595	.321	3.973E-04	.0138	4.761E-04	.0165
204	533.6	5.130	.797	9.850E-04	.0343	1.186E-03	.0412
205	543.8	21.188	3.319	4.171E-03	.1449	5.016E-03	.1742
206	528.9	1.259	.167	2.054E-04	.0071	2.461E-04	.0085
207	538.8	12.279	1.649	2.060E-03	.0715	2.474E-03	.0859
208	529.7	3.249	.436	5.382E-04	.0187	6.449E-04	.0224
209	530.2	3.357	.461	5.695E-04	.0198	6.825E-04	.0237
210	532.8	6.507	.868	1.077E-03	.0374	1.291E-03	.0448
211	530.3	1.851	.224	2.774E-04	.0096	3.324E-04	.0115
212	529.4	2.486	.335	4.133E-04	.0144	4.952E-04	.0172
213	530.5	4.471	.592	7.319E-04	.0254	8.771E-04	.0305
214	531.9	6.144	.861	1.066E-03	.0370	1.278E-03	.0444
215	534.5	9.008	1.280	1.590E-03	.0552	1.907E-03	.0662
216	535.0	8.256	1.173	1.458E-03	.0506	1.750E-03	.0608
217	536.2	8.917	1.272	1.583E-03	.0550	1.900E-03	.0660
218	535.8	4.995	.698	8.510E-04	.0296	1.020E-03	.0354
219	533.8	8.588	1.207	1.498E-03	.0520	1.797E-03	.0624
220	534.1	10.315	1.419	1.762E-03	.0612	2.113E-03	.0734

GROUP 76 CENTERLINE TIME 2.05

CH	TC	FIT LENGTH	DTDWT	UNCERTAINTY	CH	TC	FIT LENGTH	DTDWT	UNCERTAINTY
1	107	.80	3.571	.0140	50	173	.80	3.413	.0099
2	108	.60	7.398	.0064	51	174	.80	2.772	.0202
3	109	.60	6.150	.0317	52	175	.80	2.483	.0176
4	110	.60	5.432	.0075	53	176	1.20	1.790	.0094
5	111	.60	5.518	.0187	54	177	.40	13.602	.0087
6	112	.60	5.448	.0093	55	178	.30	26.938	.0057
7	113	.60	6.848	.0305	56	179	.20	33.694	.0311
8	114	.60	5.952	.0061	57	180	.60	5.328	.0099
9	115	.60	4.993	.0197	58	181	.40	12.391	.0051
10	116	.60	5.036	.0053	59	182	.30	27.765	.0047
11	117	.60	5.596	.0109	60	183	.80	3.710	.0076
12	118	.60	4.771	.0152	61	184	.60	4.328	.0192
13	119	.60	5.325	.0103	62	185	.60	7.824	.0045
14	120	.60	5.496	.0088	63	186	.30	18.377	.0090
15	121	.60	4.975	.0205	64	187	.20	34.828	.0024
16	122	.60	5.001	.0111	65	188	.30	24.672	.0013
17	124	.60	5.640	.0198	66	189	.40	9.591	.0152
18	125	.60	5.498	.0095	67	190	.30	21.335	.0053
19	126	.60	4.851	.0128	68	191	.20	44.690	.0574
20	127	.60	4.879	.0144	69	192	.80	3.806	.0149
21	128	.60	5.310	.0074	70	193	.30	19.139	.0095
22	129	.60	5.858	.0092	71	194	.60	5.855	.0117
23	130	.60	5.950	.0140	72	195	.40	16.753	.0074
24	131	.60	5.325	.0122	73	196	.30	26.456	.0072
25	132	.60	7.276	.0103	74	197	1.20	1.143	.0200
26	133	.60	5.409	.0064	75	198	1.20	1.495	.0210
27	134	.60	6.178	.0114	76	199	.80	2.875	.0209
28	135	.60	7.855	.0041	77	200	.60	6.284	.0086
29	136	.40	8.665	.0084	78	201	.30	25.561	.0053
30	137	.60	7.090	.0083	79	202	.30	18.700	.0440
31	138	.40	8.825	.0083	80	203	.80	2.595	.0132
32	139	.60	7.568	.0074	81	204	.60	5.130	.0099
33	140	.40	8.238	.0085	82	205	.30	21.188	.0066
34	141	.60	7.313	.0080	83	206	1.20	1.259	.0154
35	142	.60	6.224	.0113	84	207	.40	12.279	.0083
36	143	.40	8.718	.0114	85	208	.80	3.249	.0067
37	144	.40	9.533	.0066	86	209	.80	3.357	.0107
38	161	.60	4.497	.0121	87	210	.60	6.507	.0138
39	162	.60	4.296	.0120	88	211	1.20	1.851	.0105
40	163	.80	3.064	.0138	89	212	.80	2.486	.0203
41	164	.80	2.353	.0134	90	213	.60	4.471	.0676
42	165	1.20	1.765	.0116	91	214	.60	6.144	.0148
43	166	1.20	1.191	.0314	92	215	.40	9.008	.0263
44	167	.60	4.312	.0114	93	216	.40	8.256	.0121
45	168	.60	4.718	.0109	94	217	.40	8.917	.0102
46	169	.80	3.276	.0113	95	218	.60	4.995	.0179
47	170	.80	2.745	.0265	96	219	.40	8.580	.0086
48	171	.80	2.736	.0127	97	220	.40	10.315	.0084
49	172	1.20	1.858	.0127	98	0	-0	0	0
	77	.050							

BIT ON LOOP 54

DATE 5/12/75

AEDC(ARO,INC.) ARNOLD AFS, TENNESSEE
VON KARMAN GAS DYNAMICS FACILITY
50 INCH HYPERSONIC TUNNEL B
V418-87A

GROUP	TEST CONDITION	RODFL	MACH NO	PO,PSIA	TO,DEG R	ALPHA-MODEL	ALPHA-SECTOR	ALPHA-PREBEND	ROLL MODEL	YAW
77	27	140 B	7.99	.674.8	1341	20.06	9.94	30.00	179.98	-.0

T-INF (DEG R)	P-INF (PSIA)	Q-INF (PSIA)	V-INF (FT/SEC)	RHO-INF (SLUGS/FT3)	MU-INF (LB-SEC/FT2)	RE/FT (FT-1)	HREF-FR (R= .0400FT)	STFR (R= .0400FT)	SWITCH POSITION
97.4	.078	3.114	3864	6.002E-05	7.842E-08	2.957E 06	2.882E-02	1.561E-02	3

TC NO	TW	DTWDT	QDOT	H(TO)	H(TO)/HREF	H(.9TO)	H(.9TO)/HREF	X/L	2Y/B
								CANOPY	
221	529.4	1.944	.235	2.892E-04	.0100	3.464E-04	.0120		
222	530.4	3.888	.478	5.902E-04	.0205	7.071E-04	.0245		
223	530.4	5.373	.728	8.990E-04	.0312	1.077E-03	.0374		
								ESCAPE HATCH AND WINDOW	
224	541.8	12.890	1.259	1.613E-03	.0560	1.938E-03	.0672	.1933	.0162
225	538.4	8.511	1.021	1.272E-03	.0441	1.527E-03	.0530	.1972	.0162
226	541.6	15.006	1.587	1.985E-03	.0689	2.385E-03	.0828	.1933	.0384
227	537.3	8.685	1.275	1.585E-03	.0550	1.903E-03	.0660	.1972	.0384
228	538.0	13.147	1.694	2.110E-03	.0732	2.533E-03	.0879	.1933	.0653
229	537.1	9.584	1.235	1.536E-03	.0533	1.843E-03	.0640	.1972	.0653
232	530.5	.509	.068	8.341E-05	.0029	9.995E-05	.0035	.2567	.0235
233	541.1	.610	.092	1.142E-04	.0040	1.368E-04	.0047	.2606	.0235
236	530.3	.602	.088	1.085E-04	.0038	1.300E-04	.0045	.2567	.0491
237	530.5	.679	.095	1.176E-04	.0041	1.410E-04	.0049	.2606	.0491
								CARGO BAY HINGE NO. 1	
								X/L	Z,FULL SCALE(IN)
238	532.0	1.683	.225	2.784E-04	.0097	3.337E-04	.0116	.2879	420.0000
239	532.2	1.954	.262	3.234E-04	.0112	3.877E-04	.0135	.2917	420.0000
240	531.6	1.515	.216	2.673E-04	.0093	3.204E-04	.0111	.2840	415.0000
241	532.3	2.143	.301	3.724E-04	.0129	4.464E-04	.0155	.2879	415.0000
242	533.6	2.815	.402	4.982E-04	.0173	5.974E-04	.0207	.2917	415.0000
243	532.7	1.845	.225	2.792E-04	.0097	3.347E-04	.0116	.2801	405.0000
244	532.2	1.586	.195	2.293E-04	.0080	2.748E-04	.0095	.2840	405.0000
								CARGO BAY HINGE NO. 2	
								X/L	Z,FULL SCALE(IN)
245	533.3	1.704	.243	3.013E-04	.0105	3.613E-04	.0125	.3192	420.0000
246	533.6	1.976	.282	3.497E-04	.0121	4.193E-04	.0145	.3439	420.0000
247	533.4	1.651	.243	3.011E-04	.0104	3.610E-04	.0125	.3362	415.0000
248	533.5	2.244	.331	4.094E-04	.0142	4.909E-04	.0170	.3401	415.0000
249	534.9	3.065	.451	5.598E-04	.0194	6.715E-04	.0233	.3439	415.0000
250	535.0	2.975	.373	4.634E-04	.0161	5.559E-04	.0193	.3323	405.0000
251	534.7	2.701	.332	4.116E-04	.0143	4.937E-04	.0171	.3362	405.0000
								CARGO BAY HINGE NO. 3	
								X/L	Z,FULL SCALE(IN)
252	534.7	3.258	.473	5.868E-04	.0204	7.038E-04	.0244	.3923	420.0000
253	535.4	3.885	.564	7.005E-04	.0243	8.404E-04	.0292	.3961	420.0000
254	535.1	3.487	.530	6.575E-04	.0228	7.887E-04	.0274	.3884	415.0000
257	536.1	3.945	.533	6.618E-04	.0230	7.941E-04	.0276	.3845	405.0000
258	535.9	3.679	.502	6.231E-04	.0216	7.476E-04	.0259	.3884	405.0000

DATE 5/12/75

AEDC(ARO,INC.) ARNOLD AFS, TENNESSEE
VON KARMAN GAS DYNAMICS FACILITY
50 INCH HYPERSONIC TUNNEL B
V41H-87A

GROUP	TEST CONDITION	MODEL	MACH NO	PO,PSIA	TO,DEG R	ALPHA-MODEL	ALPHA-SECTOR	ALPHA-PREBEND	ROLL MODEL	YAW
77	27	140 B	7.99	674.8	1341	20.06	9.94	30.00	179.98	-.0

T-INF (DEG R)	P-INF (PSIA)	Q-INF (PSIA)	V-INF (FT/SEC)	RHO-INF (SLUGS/FT3)	MU-INF (LB-SEC/FT2)	RE/FT (FT-1)	HREF-FR (R= .0400FT)	STFR (R= .0400FT)	SWITCH POSITION
97.4	.070	3.114	3864	6.002E-05	7.842E-08	2.957E 06	2.882E-02	1.561E-02	3

TOP CENTERLINE

IC NO	TW	DTWDT	QDOT	H(TO)	H(TO)/HREF	H(.9TO)	H(.9TO)/HREF	X/L
367	610.9	112.604	13.742	1.862E-02	.6531	2.306E-02	.8001	0
368	581.7	88.968	11.556	1.522E-02	.5281	1.848E-02	.6414	.0008
369	563.0	60.290	7.158	9.201E-03	.3193	1.112E-02	.3858	.0019
370	552.2	42.739	5.259	6.668E-03	.2314	8.033E-03	.2787	.0037
371	550.0	36.972	3.645	4.609E-03	.1599	5.549E-03	.1926	.0058
372	544.5	26.362	3.409	4.280E-03	.1485	5.146E-03	.1786	.0087
373	540.9	17.484	2.296	2.869E-03	.0996	3.447E-03	.1196	.0118
374	540.3	14.162	1.859	2.322E-03	.0806	2.789E-03	.0968	.0151
375	538.3	11.580	1.586	1.976E-03	.0686	2.372E-03	.0823	.0182
376	539.7	10.191	1.347	1.680E-03	.0583	2.018E-03	.0700	.0215
377	539.5	9.751	1.258	1.569E-03	.0545	1.885E-03	.0654	.0246
378	538.8	8.597	1.005	1.252E-03	.0434	1.503E-03	.0522	.0278
379	537.3	5.134	.632	7.858E-04	.0273	9.432E-04	.0327	.0609
380	535.3	4.265	.438	5.441E-04	.0189	6.527E-04	.0226	.0646
381	535.0	3.854	.499	6.197E-04	.0215	7.434E-04	.0258	.0684
382	533.8	3.113	.407	5.045E-04	.0175	6.050E-04	.0210	.0721
383	533.1	2.913	.390	4.828E-04	.0168	5.768E-04	.0201	.0760
384	532.4	2.621	.365	4.512E-04	.0157	5.409E-04	.0188	.0796
385	532.3	2.582	.332	4.103E-04	.0142	4.918E-04	.0171	.0789
386	532.3	2.281	.270	3.335E-04	.0116	3.998E-04	.0139	.0982
387	532.3	2.054	.252	3.117E-04	.0108	3.736E-04	.0130	.1019
388	532.5	.955	.091	1.123E-04	.0039	1.346E-04	.0047	.1160
389	531.8	.777	.113	1.393E-04	.0048	1.670E-04	.0058	.1195
390	531.6	.671	.106	1.304E-04	.0045	1.563E-04	.0054	.1231
391	531.4	.833	.133	1.638E-04	.0057	1.963E-04	.0068	.1268
392	531.7	.877	.150	1.856E-04	.0064	2.224E-04	.0077	.1305
393	531.6	.866	.146	1.809E-04	.0063	2.168E-04	.0075	.1338
394	531.7	.917	.154	1.900E-04	.0066	2.278E-04	.0079	.1376
395	531.9	1.014	.152	1.873E-04	.0065	2.245E-04	.0078	.1411
396	532.1	1.154	.171	2.113E-04	.0073	2.533E-04	.0088	.1448
397	532.9	1.463	.217	2.683E-04	.0093	3.217E-04	.0112	.1483
398	533.5	2.370	.333	4.128E-04	.0143	4.950E-04	.0172	.1519
399	537.3	2.868	.384	4.773E-04	.0166	5.729E-04	.0199	.1556

DATE 5/12/75

AEDC(ARO,INC.) ARNOLD AFS, TENNESSEE
VON KARMAN GAS DYNAMICS FACILITY
50 INCH HYPERSONIC TUNNEL B
V418-B7A

GROUP	TEST CONDITION	MODEL	MACH NO	PO,PSIA	TO,DEG R	ALPHA-MODEL	ALPHA-SECTOR	ALPHA-PREBEND	ROLL MODEL	YAW
77	27	140 B	7.99	674.8	1341	20.06	9.94	30.00	179.98	-.0

T-INF (DEG R)	P-INF (PSIA)	Q-INF (PSIA)	V-INF (FT/SEC)	RHO-INF (SLUGS/FT3)	MU-INF (LB-SEC/FT2)	RE/FT (FT-1)	HREF-FR (R= .0400FT)	STFR (R= .0400FT)	SWITCH POSITION
97.4	.070	3.114	3864	6.002E-05	7.842E-08	2.957E 06	2.882E-02	1.561E-02	3

IC NO	TW	DTWDT	QDOT	H(10)	H(TO)/HREF	H(.9TO)	H(.9TO)/HREF	X/L
								TOP CENTERLINE
400	549.7	5.201	.704	8.760E-04	.0305	1.054E-03	.0366	.1582
401	549.5	6.645	.863	1.079E-03	.0374	1.296E-03	.0450	.1608
402	549.3	8.937	1.119	1.403E-03	.0487	1.686E-03	.0585	.1635
403	547.0	14.534	1.777	2.238E-03	.0777	2.693E-03	.0935	.1664
404	548.8	17.538	2.139	2.700E-03	.0937	3.250E-03	.1128	.1691
405	551.5	20.501	2.503	3.171E-03	.1100	3.820E-03	.1325	.1720
406	550.6	21.163	2.583	3.268E-03	.1134	3.936E-03	.1366	.1748
407	550.5	20.325	2.646	3.348E-03	.1162	4.033E-03	.1399	.1769
408	549.6	19.156	2.828	3.574E-03	.1240	4.303E-03	.1493	.1800
409	544.2	15.775	2.293	2.872E-03	.0996	3.455E-03	.1199	.1831
410	546.6	13.258	1.919	2.416E-03	.0838	2.906E-03	.1008	.1863
411	543.0	10.497	1.583	1.983E-03	.0688	2.383E-03	.0827	.1894
412	541.8	8.722	1.197	1.498E-03	.0520	1.800E-03	.0624	.1931
413	540.6	6.802	.914	1.142E-03	.0396	1.372E-03	.0476	.1972
414	537.1	3.202	.430	5.346E-04	.0185	6.416E-04	.0223	.2049
415	534.0	1.443	.142	1.765E-04	.0061	2.117E-04	.0073	.2250
416	532.1	.818	.090	1.183E-04	.0041	1.418E-04	.0049	.2500
								NOSE IC (Z = 338)
								X/L 2Y/B
145	588.6	75.279	10.365	1.378E-02	.4780	1.676E-02	.5817	.0008 .5039
146	588.9	78.091	10.754	1.430E-02	.4962	1.740E-02	.6038	.0023 .5082
147	574.3	65.822	8.993	1.174E-02	.4073	1.423E-02	.4936	.0043 .5135
148	566.4	49.864	7.017	9.059E-03	.3143	1.096E-02	.3802	.0068 .5205
149	557.6	36.222	5.271	6.729E-03	.2335	8.118E-03	.2817	.0095 .5279
150	559.0	31.771	4.584	5.862E-03	.2034	7.075E-03	.2455	.0122 .5354
151	556.5	23.117	3.268	4.166E-03	.1446	5.025E-03	.1744	.0218 .5621
152	555.5	22.597	3.081	3.922E-03	.1361	4.730E-03	.1641	.0251 .5712
153	555.2	22.788	3.098	3.581E-03	.1236	4.294E-03	.1490	.0286 .5808
154	554.9	21.755	2.720	3.460E-03	.1201	4.172E-03	.1448	.0319 .5898
155	553.6	19.728	2.491	3.161E-03	.1097	3.809E-03	.1322	.0354 .5995
156	551.5	18.501	2.309	2.925E-03	.1015	3.523E-03	.1222	.0387 .6085
157	551.5	18.251	2.253	2.854E-03	.0990	3.438E-03	.1193	.0420 .6176
158	551.1	18.819	2.323	2.941E-03	.1020	3.542E-03	.1229	.0462 .6294
159	551.3	19.150	2.157	2.731E-03	.0948	3.290E-03	.1142	.0503 .6406

GROUP 77 CENTERLINE TIME 2.65

CH	TC	FIT LENGTH	DTDWT	UNCERTAINTY	CH	TC	FIT LENGTH	DTDWT	UNCERTAINTY
1	221	1.20	1.944	.0100	50	384	.80	2.621	.0145
2	222	.80	3.888	.0115	51	385	.80	2.582	.0284
3	223	.60	5.373	.0098	52	386	.80	2.281	.0163
4	224	.40	12.890	.0057	53	387	.80	2.054	.0692
5	225	.40	8.511	.0199	54	388	2.00	.955	.0120
6	226	.40	15.000	.0039	55	389	2.00	.777	.0113
7	227	.40	8.699	.0314	56	390	2.00	.671	.0656
8	228	.40	13.147	.0058	57	391	2.00	.833	.0091
9	229	.40	9.584	.0147	58	392	2.00	.877	.0089
10	232	2.00	.500	.0180	59	393	2.00	.866	.0155
11	233	2.00	.610	.0255	60	394	2.00	.917	.0089
12	236	2.00	.802	.0405	61	395	2.00	1.014	.0163
13	237	2.00	.679	.0143	62	396	1.20	1.154	.0143
14	238	1.20	1.683	.0102	63	397	1.20	1.463	.0138
15	239	1.20	1.954	.0175	64	398	.80	2.370	.0269
16	240	1.20	1.515	.0106	65	399	.80	2.868	.0156
17	241	.80	2.143	.0302	66	400	.60	5.201	.0114
18	242	.80	2.815	.0167	67	401	.60	6.645	.0061
19	243	1.20	1.845	.0128	68	402	.40	8.937	.0935
20	244	1.20	1.586	.0151	69	403	.40	14.534	.0147
21	245	1.20	1.704	.0108	70	404	.30	17.538	.0095
22	246	1.20	1.976	.0091	71	405	.30	20.501	.0095
23	247	1.20	1.650	.0183	72	406	.30	21.163	.0064
24	248	.80	2.244	.0287	73	407	.30	20.325	.0041
25	249	.80	3.060	.0142	74	408	.30	19.156	.0062
26	250	.80	2.975	.0106	75	409	.40	15.775	.0084
27	251	.80	2.711	.0115	76	410	.40	13.258	.0134
28	252	.80	3.268	.0114	77	411	.40	10.497	.0066
29	253	.80	3.885	.0095	78	412	.40	8.782	.0108
30	254	.80	3.487	.0101	79	413	.60	6.802	.0480
31	257	.80	3.945	.0076	80	414	.80	3.202	.0073
32	258	.80	3.679	.0096	81	415	1.20	1.443	.0180
33	367	.20	112.604	.0035	82	416	2.00	.818	.0089
34	368	.20	68.950	.0025	83	145	.20	75.279	.0025
35	369	.20	60.290	.0041	84	146	.20	79.091	.0018
36	37	.20	42.739	.0022	85	147	.20	65.822	.0061
37	371	.20	36.972	.0069	86	148	.20	49.864	.0022
38	372	.30	26.362	.0058	87	149	.20	36.222	.0084
39	373	.30	17.484	.0014	88	150	.30	31.771	.0110
40	374	.40	14.162	.0089	89	151	.30	23.117	.0056
41	375	.40	11.540	.0073	90	152	.30	22.597	.0255
42	376	.40	10.191	.0071	91	153	.30	22.788	.0052
43	377	.40	9.751	.0127	92	154	.30	21.755	.0168
44	378	.40	8.597	.0097	93	155	.30	19.728	.0044
45	379	.60	5.134	.0075	94	156	.30	18.501	.0062
46	380	.60	4.265	.0120	95	157	.30	18.251	.0103
47	381	.80	3.854	.0145	96	158	.30	18.819	.0061
48	382	.80	3.113	.0127	97	159	.30	19.150	.0078
49	383	.80	2.913	.0100	98	0	-0	0	0
78		.050							

HIT ON LOOP 57

DATE 5/12/75

AEDC(ARO,INC.) ARNOLD AFS, TENNESSEE
VON KARMAN GAS DYNAMICS FACILITY
50 INCH HYPERSONIC TUNNEL B
V41R-B/A

GROUP	TEST CONDITION	MODEL	MACH NO	PO,PSIA	TO,DEG R	ALPHA-MODEL	ALPHA-SECTOR	ALPHA-PREBEND	ROLL MODEL	YAW
7R	22	140 B	7.99	674.7	1341	20.06	10.14	30.00	168.48	-2.0

T-INF (DEG R)	P-INF (PSIA)	Q-INF (PSIA)	V-INF (FT/SEC)	RHO-INF (SLUGS/FT3)	MU-INF (LB-SEC/FT2)	RE/FT (FT-1)	HREF-FR (R= .0400FT)	STFR (R= .0400FT)	SWITCH POSITION
97.4	.070	3.113	3845	5.999E-05	7.845E-06	2.955E 06	2.882E-02	1.562E-02	1

TC NO	TW	DTWDT	QDOT	H(TO)	H(TO)/HREF	H(.9TO)	H(.9TO)/HREF	X/L	Z,FULL SCALE(IN)
								FUSELAGE VENT NO. 1	
1	543.3	7.689	1.012	1.275E-03	.0442	1.532E-03	.0532	.4434	376.6300
2	543.7	8.176	1.114	1.384E-03	.0480	1.664E-03	.0577	.4264	371.6300
3	543.5	8.804	1.213	1.520E-03	.0527	1.827E-03	.0634	.4303	371.6300
4	543.6	8.823	1.204	1.509E-03	.0523	1.814E-03	.0629	.4342	371.6300
5	544.1	8.868	1.186	1.488E-03	.0516	1.789E-03	.0621	.4380	371.6300
6	544.4	8.533	1.134	1.423E-03	.0494	1.710E-03	.0594	.4434	369.1300
7	545.5	7.525	1.102	1.385E-03	.0481	1.666E-03	.0578	.4226	366.6300
8	543.1	8.838	1.033	1.294E-03	.0449	1.555E-03	.0539	.4264	366.6300
9	544.5	6.990	1.020	1.280E-03	.0444	1.539E-03	.0534	.4303	366.6300
10	542.8	5.915	.847	1.060E-03	.0368	1.274E-03	.0442	.4342	366.6300
11	543.6	5.985	.811	1.017E-03	.0353	1.222E-03	.0424	.4380	366.6300
12	542.5	3.988	.551	6.895E-04	.0239	8.286E-04	.0288	.4496	366.6300
13	542.7	2.017	.297	3.715E-04	.0129	4.464E-04	.0155	.4187	357.1300
14	541.5	2.687	.367	4.595E-04	.0159	5.521E-04	.0192	.4396	361.6300
15	542.0	2.326	.311	3.888E-04	.0135	4.672E-04	.0162	.4434	361.6300
16	542.3	1.367	.185	2.317E-04	.0080	2.785E-04	.0097	.4396	355.6300
17	542.9	1.137	.154	1.929E-04	.0067	2.319E-04	.0080	.4434	355.6300
18	544.0	.952	.133	1.671E-04	.0058	2.009E-04	.0070	.4396	351.6300
19	545.5	.685	.096	1.206E-04	.0042	1.450E-04	.0050	.4291	332.6300
								CARGO BAY VENT NO. 1	
22	540.9	5.860	.814	1.017E-03	.0353	1.221E-03	.0424	.3974	397.6300
23	539.6	5.688	.792	9.877E-04	.0343	1.186E-03	.0412	.4013	397.6300
24	543.5	5.845	.791	9.875E-04	.0343	1.186E-03	.0412	.4052	397.6300
25	540.1	5.462	.719	8.977E-04	.0311	1.078E-03	.0374	.4090	397.6300
26	540.0	5.284	.694	8.653E-04	.0300	1.039E-03	.0361	.4129	397.6300
27	540.5	5.674	.791	9.870E-04	.0342	1.186E-03	.0411	.3936	392.6300
28	540.9	5.377	.774	9.663E-04	.0335	1.161E-03	.0403	.3974	392.6300
29	540.6	5.414	.781	9.754E-04	.0338	1.172E-03	.0407	.4013	392.6300
30	539.3	5.106	.734	9.149E-04	.0317	1.099E-03	.0381	.4052	392.6300
31	537.9	4.282	.548	7.439E-04	.0258	8.930E-04	.0310	.4090	392.6300
32	537.8	4.026	.533	6.635E-04	.0230	7.965E-04	.0276	.4129	392.6300
33	539.0	3.682	.526	6.553E-04	.0227	7.868E-04	.0273	.4090	386.1300
34	539.5	4.403	.595	7.424E-04	.0258	8.915E-04	.0309	.4129	387.6300
35	541.7	5.083	.720	9.004E-04	.0312	1.082E-03	.0375	.3897	383.1300
36	540.6	4.622	.671	8.378E-04	.0291	1.006E-03	.0349	.4090	378.6300
37	540.3	5.137	.723	9.021E-04	.0313	1.083E-03	.0376	.4129	382.1300
38	541.6	5.569	.776	9.706E-04	.0337	1.166E-03	.0405	.4129	377.1300
39	542.4	5.145	.752	9.414E-04	.0327	1.131E-03	.0393	.4001	373.6300
								PROTUBERANCES	
41	539.3	5.164	.691	8.620E-04	.0299	1.035E-03	.0359	.3546	379.0500
42	543.5	7.732	1.058	1.326E-03	.0460	1.594E-03	.0553	.3604	379.0500
43	538.1	3.174	.412	5.127E-04	.0178	6.155E-04	.0214	.3450	374.0500

DATE 5/12/75

AEDC(ARO,INC.) ARNOLD AFS, TENNESSEE
VON KARMAN GAS DYNAMICS FACILITY
50 INCH HYPERSONIC TUNNEL B
V41B-87A

GROUP	TEST CONDITION	MODEL	MACH NO	PO,PSIA	TO,DEG R	ALPHA-MODEL	ALPHA-SECTOR	ALPHA-PREBEND	ROLL MODEL	YAW
7B	2B	140 B	7.99	674.7	1341	20.06	10.14	30.00	168.48	-2.0

T-INF (DEG R)	P-INF (PSIA)	Q-INF (PSIA)	V-INF (FT/SEC)	RHO-INF (SLUGS/FT3)	MU-INF (LB-SEC/FT2)	RE/FT (FT-1)	HREF-FR (R= .0400FT)	STFR (R= .0400FT)	SWITCH POSITION
97.4	.070	3.113	3865	5.999E-05	7.845E-08	2.955E 06	2.882E-02	1.562E-02	1

TC NO	TW	DTWDT	QDOT	H(TO)	H(TO)/HREF	H(.9TO)	H(.9TO)/HREF
44	540.5	5.903	.834	1.004E-03	.0348	1.206E-03	.0418
45	545.8	8.223	1.142	1.435E-03	.0498	1.726E-03	.0599
46	543.5	7.529	1.054	1.321E-03	.0458	1.588E-03	.0551
47	540.2	4.222	.592	7.010E-04	.0243	8.420E-04	.0292
48	544.1	6.738	.925	1.161E-03	.0403	1.395E-03	.0484
49	542.5	6.411	.883	1.105E-03	.0383	1.328E-03	.0461
50	547.1	9.345	1.302	1.639E-03	.0569	1.972E-03	.0684
51	546.6	8.899	1.212	1.525E-03	.0529	1.834E-03	.0636
52	547.9	10.020	1.394	1.743E-03	.0605	2.098E-03	.0728
53	547.4	10.113	1.442	1.867E-03	.0648	2.246E-03	.0779
54	535.7	2.744	.391	4.856E-04	.0168	5.826E-04	.0202
55	546.4	6.793	.974	1.225E-03	.0425	1.473E-03	.0511
56	546.4	2.821	.363	4.512E-04	.0157	5.414E-04	.0188
57	537.9	3.049	.372	4.635E-04	.0161	5.563E-04	.0193
58	538.0	1.934	.255	3.178E-04	.0110	3.815E-04	.0132
59	540.9	2.852	.376	4.694E-04	.0163	5.639E-04	.0196
60	540.2	2.637	.367	4.586E-04	.0159	5.508E-04	.0191
61	538.5	1.859	.235	2.933E-04	.0102	3.521E-04	.0122
62	538.1	2.867	.352	4.377E-04	.0152	5.254E-04	.0182
63	536.8	2.773	.362	4.501E-04	.0156	5.402E-04	.0187
64	537.2	~~.01~~	~~-0.2~~	~~-2.076E-06~~	~~-.0001~~	~~-2.492E-06~~	~~-.0001~~
65	536.1	2.420	.329	4.084E-04	.0142	4.900E-04	.0170
66	537.8	3.272	.413	5.137E-04	.0178	6.166E-04	.0214
67	537.6	2.305	.324	4.027E-04	.0140	4.834E-04	.0168
68	539.4	2.159	.274	3.412E-04	.0118	4.097E-04	.0142

PROTUBERANCES

X/L	Z,FULL SCALE(IN)
.3508	374.0500
.3566	374.0500
.3604	374.0500
.3392	366.5500
.3566	366.5500
.3392	360.7000
.3566	360.7000
.3604	360.7000
.3392	353.2000
.3450	353.2000
.3508	353.2000
.3566	353.2000

SUBLIMATOR VENT NO. 1

X/L	Z,FULL SCALE(IN)
.3031	371.1300
.3074	369.1300
.3089	363.6300
.3074	358.1300
.3031	356.1300
.2988	358.1300
.2973	363.6300
.2988	369.1300
.3031	376.1300
.3089	378.6300
.3101	372.6300
.3157	370.3800
.3128	363.6300

DATE 5/12/75

AEDC(ARO,INC.) ARNOLD AFS, TENNESSEE
VON KARMAN GAS DYNAMICS FACILITY
50 INCH HYPERSONIC TUNNEL B
V418-B7A

GROUP	TEST CONDITION	MODEL	MACH NO	PO,PSIA	TO,DEG R	ALPHA-MODEL	ALPHA-SECTOR	ALPHA-PREBEND	ROLL MODEL	YAW
74	28	146 B	7.99	674.7	1341	20.06	10.14	30.00	168.48	-2.0

T-INF (DEG R)	P-INF (PSIA)	Q-INF (PSIA)	V-INF (FT/SEC)	RHO-INF (SLUGS/FT3)	MU-INF (LB-SEC/FT2)	RE/FT (FT-1)	HREF-FR (R= .0400FT)	STFR (R= .0400FT)	SWITCH POSITION
97.4	.076	3.113	3865	5.999E-05	7.845E-08	2.955E 06	2.882E-02	1.562E-02	1

TC NO	TW	DTWDT	QDOT	H(TO)	H(TO)/HREF	H(.9TO)	H(.9TO)/HREF
69	535.2	3.025	.422	5.236E-04	.0182	6.281E-04	.0218
70	535.4	3.115	.341	4.731E-04	.0164	5.675E-04	.0197
71	536.4	3.296	.448	5.565E-04	.0193	6.678E-04	.0232
72	535.5	3.077	.436	5.408E-04	.0188	6.488E-04	.0225
73	536.8	3.094	.401	4.985E-04	.0173	5.982E-04	.0208
74	537.1	3.137	.377	4.682E-04	.0162	5.619E-04	.0195
75	538.1	3.210	.437	5.436E-04	.0189	6.526E-04	.0226
77	538.0	2.654	.376	4.685E-04	.0163	5.624E-04	.0195
78	538.8	2.747	.378	4.704E-04	.0163	5.647E-04	.0196
79	540.2	2.659	.341	4.252E-04	.0148	5.107E-04	.0177
80	538.7	2.101	.287	3.574E-04	.0124	4.291E-04	.0149
81	538.5	2.257	.315	3.928E-04	.0136	4.716E-04	.0164
FUSELAGE VENT PANEL NO. 7							
						X/L	Z,FULL SCALE(IN)
						.2487	356.4000
						.2591	356.4000
						.2419	351.4000
						.2487	351.4000
						.2552	351.4000
						.2610	351.4000
						.2419	342.8000
						.2552	342.8000
						.2610	342.8000
						.2419	334.2000
						.2487	334.2000
						.2552	334.2000
83	531.9	3.059	.418	5.041E-04	.0175	6.042E-04	.0210
84	532.4	3.354	.442	5.462E-04	.0190	6.548E-04	.0227
85	532.0	2.873	.341	4.825E-04	.0167	5.783E-04	.0201
87	530.6	1.981	.233	3.485E-04	.0121	4.176E-04	.0145
88	531.7	2.948	.412	5.083E-04	.0176	6.092E-04	.0211
89	532.5	2.454	.360	4.453E-04	.0155	5.338E-04	.0185
90	531.6	2.756	.375	4.630E-04	.0161	5.549E-04	.0193
91	532.0	3.004	.411	5.083E-04	.0176	6.092E-04	.0211
92	532.4	2.750	.399	4.811E-04	.0167	5.767E-04	.0200
93	532.1	2.751	.351	4.337E-04	.0150	5.199E-04	.0180
94	532.2	3.206	.416	5.143E-04	.0178	6.164E-04	.0214
95	533.1	2.942	.419	5.165E-04	.0179	6.193E-04	.0215
96	534.1	2.786	.361	4.474E-04	.0155	5.366E-04	.0186
97	534.2	3.313	.423	5.243E-04	.0182	6.287E-04	.0218
98	533.7	3.095	.434	5.373E-04	.0186	6.443E-04	.0224
100	535.9	3.467	.491	6.098E-04	.0212	7.316E-04	.0254
102	534.8	3.106	.439	5.456E-04	.0189	6.547E-04	.0227
103	535.3	3.247	.427	5.291E-04	.0184	6.347E-04	.0220
105	533.9	3.581	.448	5.544E-04	.0192	6.649E-04	.0231
106	533.0	3.414	.437	5.409E-04	.0188	6.485E-04	.0225
ACCESS HATCH WINDOW							
						X/L	Z,FULL SCALE(IN)
						.2131	398.0000
						.2131	388.0000
						.2131	383.0000
						.2222	395.8000
						.2193	386.5000
						.2177	381.8000
						.2297	389.5000
						.2243	382.5000
						.2214	378.7000
						.2343	374.0000
						.2274	375.5000
						.2239	373.3000
						.2363	368.0000
						.2286	368.0000
						.2247	368.0000
						.2274	360.5000
						.2081	354.3000
						.2023	362.7000
						.2050	378.7000
						.2050	386.2000

GROUP 78 CENTERLINE TIME 2.80

CH	TC	FIT LENGTH	DIO*T	UNCERTAINTY	CH	TC	FIT LENGTH	DIO*T	UNCERTAINTY
1	1	.60	7.688	.0060	50	53	.40	10.113	.0070
2	2	.40	8.176	.0062	51	54	.80	2.744	.0136
3	3	.40	8.834	.0102	52	55	.60	6.793	.0106
4	4	.40	8.822	.0133	53	56	.80	2.821	.0123
5	5	.40	8.868	.0143	54	57	.80	3.049	.0147
6	6	.40	8.533	.0089	55	58	1.20	1.934	.0093
7	7	.60	7.528	.0364	56	59	.80	2.852	.0505
8	8	.60	6.830	.0059	57	60	.80	2.637	.0133
9	9	.60	6.990	.0098	58	61	1.20	1.859	.0110
10	10	.60	5.918	.0091	59	62	.80	2.867	.0150
11	11	.60	5.985	.0125	60	63	.80	2.773	.0136
12	12	.60	3.988	.0173	61	64	2.00	-.014	-1.4045
13	13	.60	2.017	.0104	62	65	.80	2.420	.0092
14	14	.80	2.687	.0140	63	66	.80	3.272	.0045
15	15	.80	2.326	.0207	64	67	.80	2.305	.0208
16	16	1.20	1.367	.0147	65	68	.80	2.159	.0116
17	17	1.20	1.137	.0422	66	69	.80	3.028	.0132
18	18	2.00	.952	.0106	67	70	.80	3.115	.0070
19	19	2.00	.685	.0200	68	71	.80	3.296	.0716
20	22	.60	5.860	.0123	69	72	.80	3.077	.0377
21	23	.60	5.668	.0049	70	73	.80	3.094	.0202
22	24	.60	5.845	.0042	71	74	.80	3.107	.0187
23	25	.60	5.462	.0159	72	75	.80	3.210	.0108
24	26	.60	5.284	.0164	73	77	.80	2.654	.0120
25	27	.60	5.674	.0122	74	78	.80	2.747	.0189
26	28	.60	5.377	.0101	75	79	.80	2.659	.0214
27	29	.60	5.414	.0071	76	80	.80	2.101	.0133
28	30	.60	5.106	.0095	77	81	.80	2.257	.0130
29	31	.60	4.282	.0129	78	83	.80	3.059	.0114
30	32	.60	4.026	.0110	79	84	.80	3.354	.0603
31	33	.80	3.692	.0091	80	85	.80	2.870	.0118
32	34	.60	4.403	.0127	81	87	1.20	1.981	.0081
33	35	.60	5.083	.0141	82	88	.80	2.948	.0106
34	36	.60	4.622	.0084	83	89	.80	2.454	.0195
35	37	.60	5.137	.0112	84	90	.80	2.756	.0137
36	38	.60	5.568	.0090	85	91	.80	3.004	.0124
37	39	.60	5.145	.0065	86	92	.80	2.760	.0137
38	41	.60	5.164	.0089	87	93	.80	2.751	.0335
39	42	.60	7.732	.0073	88	94	.80	3.206	.0078
40	43	.80	3.174	.0150	89	95	.80	2.942	.0238
41	44	.60	5.903	.0038	90	96	.80	2.780	.0490
42	45	.60	8.223	.0075	91	97	.80	3.313	.0193
43	46	.60	7.529	.0099	92	98	.80	3.096	.0217
44	47	.60	4.222	.0123	93	100	.80	3.467	.0112
45	48	.60	6.738	.0069	94	102	.80	3.106	.0226
46	49	.60	6.411	.0068	95	103	.80	3.247	.0123
47	50	.40	9.345	.0141	96	105	.80	3.581	.0141
48	51	.40	8.849	.0092	97	106	.80	3.414	.0094
49	52	.40	10.020	.0134	98	0	-0	0	0

79 .050

BIT ON LOOP 57

DATE 5/12/75

AEDC(ARO,INC.) ARNOLD AFS, TENNESSEE
VON KARMAN GAS DYNAMICS FACILITY
50 INCH HYPERSONIC TUNNEL B
V41B-87A

GROUP	TEST CONDITION	MODEL	MACH NO	PO,PSIA	TO,DEG R	ALPHA-MODEL	ALPHA-SECTOR	ALPHA-PREHEND	ROLL MODEL	YAW
79	28	140 B	7.99	674.0	1341	20.04	10.16	30.00	191.38	2.0

T-INF (DEG R)	P-INF (PSIA)	Q-INF (PSIA)	V-INF (FT/SEC)	RHO-INF (SLUGS/FT3)	MU-INF (LB-SEC/FT2)	RE/FT (FT-1)	HREF-FR (R= .0400FT)	STFR (R= .0400FT)	SWITCH POSITION
97.4	.070	3.110	3864	5.995E-05	7.841E-08	2.954E 06	2.880E-02	1.562E-02	2

IC NO	TW	DTWDT	QDOT	H(TO)	H(TO)/HREF	H(.9TO)	H(.9TO)/HREF		
								ACCESS HATCH WINDOW	
								X/L	Z,FULL SCALE(IN)
107	531.2	4.305	.616	7.610E-04	.0264	9.120E-04	.0317	.2050	396.2000
								FUSELAGE VENT PANEL NO. 3 AND 1	
								X/L	Z,FULL SCALE(IN)
108	534.1	8.763	.928	1.150E-03	.0399	1.379E-03	.0479	.1244	377.5000
109	532.5	7.287	.901	1.114E-03	.0387	1.336E-03	.0464	.1302	377.5000
110	532.1	6.735	.853	1.055E-03	.0366	1.265E-03	.0439	.1360	377.5000
111	532.7	6.602	.795	9.842E-04	.0342	1.180E-03	.0410	.1418	377.5000
112	533.5	6.450	.766	9.488E-04	.0329	1.138E-03	.0395	.1476	377.5000
113	533.6	8.778	1.087	1.248E-03	.0433	1.496E-03	.0519	.1215	273.5000
114	533.0	7.169	.861	1.065E-03	.0370	1.278E-03	.0444	.1273	273.5000
115	532.4	6.227	.780	9.646E-04	.0335	1.156E-03	.0401	.1331	273.5000
116	532.2	6.177	.758	9.373E-04	.0325	1.124E-03	.0390	.1389	273.5000
117	534.4	6.615	.762	9.452E-04	.0328	1.134E-03	.0394	.1447	273.5000
118	533.4	5.587	.762	9.439E-04	.0328	1.132E-03	.0393	.1409	366.0000
119	535.0	6.254	.810	1.006E-03	.0349	1.206E-03	.0419	.1442	366.0000
120	535.3	6.383	.799	9.913E-04	.0344	1.189E-03	.0413	.1215	359.5000
121	534.8	5.920	.727	9.023E-04	.0313	1.082E-03	.0376	.1303	359.5000
122	535.9	6.041	.753	9.350E-04	.0325	1.122E-03	.0389	.1337	359.5000
								LOWER RCS NOZZLES	
								X/L	Z,FULL SCALE(IN)
124	534.1	6.802	.608	7.530E-04	.0261	9.031E-04	.0314	.0950	400.0000
125	532.7	6.497	.708	8.754E-04	.0304	1.050E-03	.0364	.0988	400.0000
126	532.3	5.695	.780	9.647E-04	.0335	1.157E-03	.0402	.1027	400.0000
127	532.5	6.306	.850	1.051E-03	.0365	1.260E-03	.0438	.0911	395.0000
128	532.1	6.214	.754	9.323E-04	.0324	1.118E-03	.0388	.0950	395.0000
129	532.7	6.816	.800	9.899E-04	.0344	1.187E-03	.0412	.0988	395.0000
130	535.7	7.290	.873	1.084E-03	.0376	1.301E-03	.0452	.0810	390.0000
131	532.7	6.474	.956	1.183E-03	.0411	1.419E-03	.0493	.0857	390.0000
132	533.2	9.017	1.051	1.301E-03	.0452	1.560E-03	.0541	.0963	390.0000
133	532.9	6.652	.808	9.995E-04	.0347	1.198E-03	.0416	.0857	383.8000
134	531.7	7.210	.965	1.192E-03	.0414	1.429E-03	.0496	.0872	377.3000
135	532.9	9.434	1.133	1.402E-03	.0487	1.661E-03	.0584	.0903	374.5500
136	534.0	10.185	1.133	1.404E-03	.0487	1.683E-03	.0584	.0960	374.5500
137	532.7	9.083	1.187	1.469E-03	.0510	1.761E-03	.0612	.0872	370.5500
138	533.9	10.196	1.175	1.456E-03	.0505	1.746E-03	.0606	.0928	370.5500
139	534.6	8.896	1.137	1.410E-03	.0490	1.691E-03	.0587	.0816	366.0500
140	534.9	9.567	1.218	1.511E-03	.0525	1.813E-03	.0629	.0934	362.4000
141	534.1	8.596	1.136	1.408E-03	.0489	1.689E-03	.0586	.0973	362.4000
142	535.9	6.999	.763	9.484E-04	.0329	1.138E-03	.0395	.0833	355.2000
143	535.9	10.265	1.033	1.283E-03	.0445	1.539E-03	.0534	.0919	355.2000
144	538.0	11.371	1.501	1.870E-03	.0649	2.244E-03	.0779	.0949	349.0000

DATE 5/12/75

AEDC(ARO,INC.) ARNOLD AFS, TENNESSEE
VON KARMAN GAS DYNAMICS FACILITY
50 INCH HYPERSONIC TUNNEL H
V418-87A

GROUP	TEST CONDITION	MODEL	MACH NO	PO,PSIA	TO,DEG R	ALPHA-MODEL	ALPHA-SECTOR	ALPHA-PREBEND	ROLL MODEL	YAW
79	28	140 B	7.99	674.0	1341	20.04	10.16	30.00	191.38	2.0

T-INF (DEG R)	P-INF (PSIA)	Q-INF (PSIA)	V-INF (FT/SEC)	RHO-INF (SLUGS/FT3)	MU-INF (LB-SEC/FT2)	RE/FT (FT-1)	HREF-FR (R= .0400FT)	STFR (R= .0400FT)	SWITCH POSITION
97.4	.070	3.118	3864	5.995E-05	7.841E-08	2.954E 06	2.880E-02	1.562E-02	2

PC NO	TW	DTWDT	QDOT	H(TO)	H(TO)/HREF	H(.9TO)	H(.9TO)/HREF
161	538.1	4.818	.571	7.118E-04	.0247	8.545E-04	.0297
162	537.1	4.809	.456	5.673E-04	.0197	6.809E-04	.0236
163	534.2	3.378	.415	5.144E-04	.0179	6.170E-04	.0214
164	532.2	2.749	.358	4.429E-04	.0154	5.309E-04	.0184
165	532.7	2.104	.265	3.277E-04	.0114	3.929E-04	.0136
166	532.5	1.664	.213	2.637E-04	.0092	3.161E-04	.0110
167	538.3	4.691	.636	7.926E-04	.0275	9.515E-04	.0330
168	537.6	4.950	.520	6.479E-04	.0225	7.777E-04	.0270
169	533.9	3.511	.426	5.285E-04	.0183	6.338E-04	.0220
170	532.6	3.288	.411	5.084E-04	.0177	6.095E-04	.0212
171	532.7	3.303	.398	4.924E-04	.0171	5.903E-04	.0205
172	531.6	2.629	.342	4.230E-04	.0147	5.070E-04	.0176
173	535.3	4.033	.539	6.689E-04	.0232	8.025E-04	.0279
174	532.9	3.431	.391	4.833E-04	.0168	5.795E-04	.0201
175	532.2	3.002	.430	5.316E-04	.0185	6.372E-04	.0221
176	531.5	2.400	.326	4.034E-04	.0140	4.835E-04	.0168
177	549.4	29.412	4.077	5.151E-03	.1788	6.202E-03	.2153
178	551.1	34.270	6.743	8.600E-03	.2986	1.036E-02	.3597
179	555.1	38.064	8.058	1.025E-02	.3560	1.236E-02	.4293
180	535.4	7.604	.992	1.232E-03	.0428	1.478E-03	.0513
181	542.3	19.313	2.633	3.297E-03	.1145	3.962E-03	.1376
182	550.5	41.821	6.008	7.601E-03	.2639	9.154E-03	.3178
183	529.0	4.698	.588	7.243E-04	.0251	8.676E-04	.0301
184	529.7	5.730	.781	9.632E-04	.0334	1.154E-03	.0401
185	535.2	10.233	1.236	1.534E-03	.0533	1.841E-03	.0639
186	546.8	25.395	3.287	4.039E-03	.1402	4.859E-03	.1687
187	553.0	52.329	7.067	9.085E-03	.3154	1.098E-02	.3811
188	545.5	27.158	6.356	7.991E-03	.2775	9.612E-03	.3337
189	534.7	10.209	1.455	1.805E-03	.0627	2.165E-03	.0752
190	544.8	25.666	3.711	4.661E-03	.1618	5.606E-03	.1946
191	554.9	51.965	8.021	1.020E-02	.3543	1.230E-02	.4272

UPPER RCS NOZZLES

X/L	2Y/B
.0619	-.0160
.0709	-.0160
.0807	-.0160
.0943	-.0160
.0978	-.0160
.1013	-.0160
.0619	-.0320
.0709	-.0320
.0807	-.0320
.0943	-.0320
.0978	-.0320
.1013	-.0320
.0807	-.0480
.0943	-.0480
.0978	-.0480
.1013	-.0480

CANOPY

DATE 5/12/75

AEDC(ARO,INC.) ARNOLD AFS, TENNESSEE
VON KARMAN GAS DYNAMICS FACILITY
50 INCH HYPERSONIC TUNNEL B
V41B-B7A

GROUP	TEST CONDITION	MODEL	MACH NO	PO,PSIA	TO,DEG R	ALPHA-MODEL	ALPHA-SECTOR	ALPHA-PREBEND	ROLL MODEL	YAW
74	28	140 B	7.99	674.0	1341	20.04	10.16	30.00	191.38	2.0

T-INF (DEG R)	P-INF (PSIA)	Q-INF (PSIA)	V-INF (FT/SEC)	RHO-INF (SLUGS/FT3)	MU-INF (LB-SEC/FT2)	RE/FT (FT-1)	HREF-FR (R= .0400FT)	STFR (R= .0400FT)	SWITCH POSITION
97.4	.076	3.110	3864	5.995E-05	7.841E-08	2.954E 06	2.880E-02	1.562E-02	2

IC NO	TW	DTWDT	QDOT	H(TO)	H(TO)/HREF	H(.9TO)	H(.9TO)/HREF
						CANOPY	
192	527.3	1.745	.253	3.103E-04	.0108	3.716E-04	.0129
193	539.0	20.903	4.034	5.030E-03	.1746	6.040E-03	.2097
194	528.5	4.271	.550	6.768E-04	.0235	8.106E-04	.0281
195	535.0	11.659	1.438	1.786E-03	.0620	2.143E-03	.0744
196	544.1	22.660	3.940	3.753E-03	.1303	4.513E-03	.1567
197	527.4	2.323	.230	2.824E-04	.0098	3.381E-04	.0117
198	527.3	2.760	.319	3.926E-04	.0136	4.700E-04	.0163
199	527.1	2.530	.339	4.164E-04	.0145	4.986E-04	.0173
200	530.2	5.666	.806	9.936E-04	.0345	1.191E-03	.0413
201	540.1	22.694	3.213	4.012E-03	.1393	4.818E-03	.1673
202	539.7	19.837	2.514	3.138E-03	.1090	3.769E-03	.1309
203	528.5	5.023	.622	7.655E-04	.0266	9.168E-04	.0318
204	531.5	9.079	1.409	1.741E-03	.0605	2.087E-03	.0725
205	539.4	21.611	3.378	4.214E-03	.1463	5.061E-03	.1757
206	528.7	2.223	.294	3.621E-04	.0126	4.337E-04	.0151
207	533.7	12.882	1.726	2.138E-03	.0742	2.564E-03	.0890
208	527.3	3.100	.415	5.104E-04	.0177	6.111E-04	.0212
209	527.0	4.500	.617	7.577E-04	.0263	9.071E-04	.0315
210	528.7	6.957	.926	1.141E-03	.0396	1.366E-03	.0474
211	528.7	.903	.119	1.347E-04	.0047	1.613E-04	.0056
212	528.0	1.599	.215	2.645E-04	.0092	3.168E-04	.0110
213	529.1	5.148	.681	8.391E-04	.0291	1.005E-03	.0349
214	529.7	8.645	1.238	1.526E-03	.0530	1.828E-03	.0635
215	531.5	10.948	1.553	1.918E-03	.0666	2.299E-03	.0798
216	529.2	8.606	1.220	1.504E-03	.0522	1.802E-03	.0625
217	530.6	7.830	1.114	1.374E-03	.0477	1.647E-03	.0572
218	529.2	6.924	.954	1.175E-03	.0408	1.407E-03	.0489
219	532.3	12.937	1.818	2.249E-03	.0781	2.696E-03	.0936
220	534.0	15.760	2.168	2.686E-03	.0933	3.222E-03	.1119

GROUP 79 CENTERLINE TIME 2.60

CH	TC	FIT LENGTH	DTDWT	UNCERTAINTY	CH	TC	FIT LENGTH	DTDWT	UNCERTAINTY
1	107	.60	4.365	.0118	50	173	.80	4.033	.0123
2	108	.40	8.763	.0081	51	174	.80	3.431	.0171
3	109	.60	7.287	.0056	52	175	.80	3.002	.0142
4	110	.60	6.735	.0073	53	176	.80	2.400	.0169
5	111	.60	6.632	.0094	54	177	.30	29.412	.0039
6	112	.60	6.450	.0042	55	178	.20	34.270	.0022
7	113	.40	8.778	.0570	56	179	.20	38.064	.0251
8	114	.60	7.169	.0078	57	180	.60	7.604	.0147
9	115	.60	6.287	.0115	58	181	.30	19.313	.0056
10	116	.60	6.177	.0053	59	182	.20	41.821	.0071
11	117	.60	6.615	.0111	60	183	.60	4.698	.0074
12	118	.60	5.507	.0170	61	184	.60	5.730	.0110
13	119	.60	6.254	.0065	62	185	.40	10.283	.0054
14	120	.60	6.383	.0076	63	186	.30	25.395	.0045
15	121	.60	5.920	.0110	64	187	.20	52.329	.0019
16	122	.60	6.041	.0047	65	188	.30	27.158	.0066
17	124	.60	6.802	.0312	66	189	.40	10.209	.0133
18	125	.60	6.437	.0090	67	190	.30	25.666	.0034
19	126	.60	5.695	.0073	68	191	.20	51.965	.0246
20	127	.60	6.306	.0072	69	192	1.20	1.795	.0398
21	128	.60	6.214	.0060	70	193	.30	20.903	.0063
22	129	.60	6.816	.0049	71	194	.60	4.271	.0129
23	130	.60	7.290	.0138	72	195	.40	11.659	.0055
24	131	.60	6.474	.0123	73	196	.30	22.660	.0070
25	132	.40	9.017	.0103	74	197	.80	2.323	.0186
26	133	.60	6.652	.0098	75	198	.80	2.760	.0119
27	134	.60	7.210	.0051	76	199	.80	2.530	.0158
28	135	.40	9.434	.0094	77	200	.60	5.666	.0087
29	136	.40	10.185	.0070	78	201	.30	22.694	.0077
30	137	.40	9.080	.0054	79	202	.30	19.837	.0378
31	138	.40	10.196	.0106	80	203	.60	5.023	.0104
32	139	.40	8.898	.0105	81	204	.40	9.079	.0097
33	140	.40	9.567	.0068	82	205	.30	21.611	.0070
34	141	.40	8.596	.0134	83	206	.80	2.223	.0188
35	142	.60	6.999	.0083	84	207	.40	12.882	.0087
36	143	.40	10.268	.0061	85	208	.80	3.100	.0106
37	144	.40	11.371	.0029	86	209	.60	4.500	.0115
38	161	.60	4.818	.0144	87	210	.60	6.957	.0158
39	162	.60	4.809	.0097	88	211	2.00	.903	.0157
40	163	.80	3.378	.0132	89	212	1.20	1.599	.0215
41	164	.80	2.749	.0083	90	213	.60	5.148	.0655
42	165	.80	2.104	.0161	91	214	.40	8.845	.0150
43	166	1.20	1.664	.0189	92	215	.40	10.948	.0147
44	167	.60	4.691	.0122	93	216	.40	8.606	.0084
45	168	.60	4.950	.0056	94	217	.60	7.830	.0121
46	169	.80	3.511	.0104	95	218	.60	6.928	.0102
47	170	.80	3.288	.0212	96	219	.40	12.937	.0103
48	171	.80	3.303	.0132	97	220	.40	15.760	.0036
49	172	.80	2.628	.0172	98	0	-0	0	0
RO		.050							

BIT ON LOOP 57

DATE 5/12/75

AEDC(ARO,INC.) ARNOLD AFS, TENNESSEE
VON KARMAN GAS DYNAMICS FACILITY
50 INCH HYPERSONIC TUNNEL R
V418-8/A

GROUP	TEST CONDITION	MODEL	MACH NO	PO,PSIA	TO,DEG R	ALPHA-MODEL	ALPHA-SECTOR	ALPHA-PREBEND	ROLL MODEL	YAW
8C	28	140 B	7.99	676.7	1340	20.06	10.14	30.00	191.38	2.0

T-INF (DEG R)	P-INF (PSIA)	Q-INF (PSIA)	V-INF (FT/SEC)	RHO-INF (SLUGS/FT3)	MU-INF (LB-SEC/FT2)	RE/FT (FT-1)	HREF-FR (R= .0400FT)	STFR (R= .0400FT)	SWITCH POSITION
97.4	.076	3.123	3863	6.022E-05	7.838E-08	2.968E 06	2.886E-02	1.559E-02	3

TC NO	TW	DTWDT	QDOT	H(TO)	H(TO)/HREF	H(.9TO)	H(.9TO)/HREF		
								CANOPY	
221	526.6	1.137	.137	1.664E-04	.0058	2.016E-04	.0070		
222	527.5	3.304	.406	4.994E-04	.0173	5.980E-04	.0207		
223	527.9	6.432	.871	1.072E-03	.0371	1.283E-03	.0445		
								ESCAPE HATCH AND WINDOW	
								X/L	ZY/B
224	539.2	12.861	1.274	1.673E-03	.0555	1.925E-03	.0667	.1933	.0162
225	535.6	8.435	1.010	1.256E-03	.0435	1.506E-03	.0522	.1972	.0162
226	533.3	17.255	1.823	2.275E-03	.0788	2.731E-03	.0946	.1933	.0384
227	534.8	9.761	1.433	1.779E-03	.0616	2.134E-03	.0740	.1972	.0384
228	535.8	14.774	1.933	2.365E-03	.0819	2.837E-03	.0983	.1933	.0653
229	535.0	11.445	1.479	1.837E-03	.0636	2.204E-03	.0764	.1972	.0653
232	529.1	.583	.079	9.773E-05	.0034	1.173E-04	.0041	.2567	.0235
233	529.7	.762	.115	1.424E-04	.0049	1.707E-04	.0059	.2606	.0235
236	527.7	.443	.072	8.805E-05	.0031	1.054E-04	.0037	.2567	.0491
237	528.4	.609	.045	1.053E-04	.0036	1.261E-04	.0044	.2606	.0491
								CARGO BAY HINGE NO. 1	
								X/L	Z,FULL SCALE(IN)
238	531.2	1.966	.263	3.250E-04	.0113	3.896E-04	.0135	.2879	420.0000
239	531.0	2.277	.375	3.762E-04	.0130	4.509E-04	.0156	.2917	420.0000
240	531.0	1.754	.250	3.042E-04	.0107	3.706E-04	.0128	.2840	415.0000
241	531.3	2.504	.360	4.452E-04	.0154	5.337E-04	.0185	.2879	415.0000
242	533.1	3.935	.562	6.963E-04	.0241	8.350E-04	.0289	.2917	415.0000
243	531.0	2.105	.257	3.177E-04	.0110	3.808E-04	.0132	.2801	405.0000
244	530.9	1.658	.194	2.393E-04	.0083	2.868E-04	.0099	.2840	405.0000
								CARGO BAY HINGE NO. 2	
								X/L	Z,FULL SCALE(IN)
245	532.0	1.742	.249	3.076E-04	.0107	3.687E-04	.0128	.3192	420.0000
246	532.5	1.982	.283	3.503E-04	.0121	4.200E-04	.0146	.3439	420.0000
247	532.1	1.628	.240	2.966E-04	.0103	3.556E-04	.0123	.3362	415.0000
248	532.0	2.164	.319	3.941E-04	.0137	4.725E-04	.0164	.3401	415.0000
249	533.8	3.061	.451	5.592E-04	.0194	6.706E-04	.0232	.3439	415.0000
250	532.8	2.345	.300	3.720E-04	.0129	4.460E-04	.0155	.3323	405.0000
251	532.9	2.362	.290	3.590E-04	.0124	4.304E-04	.0149	.3362	405.0000
								CARGO BAY HINGE NO. 3	
								X/L	Z,FULL SCALE(IN)
252	532.5	2.121	.348	3.808E-04	.0132	4.566E-04	.0158	.3923	420.0000
253	532.9	2.356	.342	4.232E-04	.0147	5.074E-04	.0176	.3961	420.0000
254	532.9	1.876	.285	3.525E-04	.0122	4.227E-04	.0146	.3884	415.0000
257	533.5	2.272	.306	3.746E-04	.0132	4.552E-04	.0158	.3845	405.0000
258	533.7	2.614	.356	4.413E-04	.0153	5.293E-04	.0183	.3884	405.0000

DATE 5/12/75

AEDC(ARO,INC.) ARNOLD AFS, TENNESSEE
VON KARMAN GAS DYNAMICS FACILITY
50 INCH HYPERSONIC TUNNEL B
V418-B7A

GROUP	TEST CONDITION	MODEL	MACH NO	PO,PSIA	TO,DEG R	ALPHA-MODEL	ALPHA-SECTOR	ALPHA-PREBEND	ROLL MODEL	YAW
80	28	140 B	7.99	676.7	1340	20.06	10.14	30.00	191.38	2.0

T-INF (DEG R)	P-INF (PSIA)	Q-INF (PSIA)	V-INF (FT/SEC)	RHO-INF (SLUGS/FT3)	MU-INF (LB-SEC/FT2)	RE/FT (FT-1)	HREF-FR (R= .0400FT)	STFR (R= .0400FT)	SWITCH POSITION
97.4	.070	3.123	3863	6.022E-05	7.838E-08	2.968E 06	2.886E-02	1.559E-02	3

TC NO	TW	DTWDT	QDOT	H(TO)	H(TO)/HREF	H(.9TO)	H(.9TO)/HREF	TOP CENTERLINE X/L
367	610.4	112.343	13.707	1.878E-02	.6507	2.300E-02	.7970	0
368	581.0	89.203	11.584	1.525E-02	.5286	1.852E-02	.6419	.0008
369	561.9	60.252	7.150	9.185E-03	.3183	1.110E-02	.3845	.0019
370	551.1	43.791	5.385	6.823E-03	.2364	8.219E-03	.2848	.0037
371	548.8	37.090	3.655	4.617E-03	.1600	5.558E-03	.1926	.0058
372	543.2	26.344	3.4[illegible]4	4.271E-03	.1480	5.134E-03	.1779	.0087
373	539.7	17.643	2.315	2.892E-03	.1002	3.473E-03	.1204	.0118
374	539.5	13.868	1.820	2.273E-03	.0788	2.729E-03	.0946	.0151
375	537.7	11.549	1.581	1.970E-03	.0683	2.365E-03	.0819	.0182
376	539.3	10.227	1.351	1.687E-03	.0584	2.025E-03	.0702	.0215
377	539.5	9.625	1.242	1.550E-03	.0537	1.862E-03	.0645	.0246
378	539.6	8.555	1.040	1.249E-03	.0433	1.500E-03	.0520	.0278
379	538.8	5.098	.628	7.829E-04	.0271	9.401E-04	.0326	.0609
380	536.6	4.085	.420	5.227E-04	.0181	6.273E-04	.0217	.0646
381	536.2	3.814	.494	6.148E-04	.0213	7.378E-04	.0256	.0684
382	534.7	3.128	.449	5.082E-04	.0176	6.097E-04	.0211	.0721
383	534.0	2.841	.381	4.721E-04	.0164	5.662E-04	.0196	.0760
384	533.4	2.554	.356	4.408E-04	.0153	5.286E-04	.0183	.0796
385	533.3	2.516	.324	4.008E-04	.0139	4.806E-04	.0167	.0789
386	533.2	2.339	.277	3.428E-04	.0119	4.111E-04	.0142	.0982
387	533.3	2.114	.250	3.215E-04	.0111	3.856E-04	.0134	.1019
388	533.4	1.539	.146	1.814E-04	.0063	2.175E-04	.0075	.1160
389	532.3	1.120	.162	2.009E-04	.0070	2.409E-04	.0083	.1195
390	532.1	.827	.130	1.612E-04	.0056	1.932E-04	.0067	.1231
391	531.7	1.054	.173	2.134E-04	.0074	2.558E-04	.0089	.1268
392	532.4	1.623	.278	3.442E-04	.0119	4.126E-04	.0143	.1305
393	532.3	1.857	.314	3.886E-04	.0135	4.658E-04	.0161	.1338
394	532.4	1.944	.326	4.036E-04	.0140	4.838E-04	.0168	.1376
395	532.4	1.868	.279	3.457E-04	.0120	4.144E-04	.0144	.1411
396	532.5	1.999	.296	3.666E-04	.0127	4.395E-04	.0152	.1448
397	533.2	2.124	.315	3.900E-04	.0135	4.677E-04	.0162	.1483
398	533.4	2.712	.341	4.726E-04	.0164	5.668E-04	.0196	.1519
399	537.8	4.528	.606	7.548E-04	.0262	9.062E-04	.0314	.1556

DATE 5/12/75

AEDC(ARO,INC.) ARNOLD AFS, TENNESSEE
VON KARMAN GAS DYNAMICS FACILITY
50 INCH HYPERSONIC TUNNEL B
V41R-B7A

GROUP	TEST CONDITION	MODEL	MACH NO	PO,PSIA	TO,DEG R	ALPHA-MODEL	ALPHA-SECTOR	ALPHA-PREBEND	ROLL MODEL	YAW
80	28	140 B	7.99	676.7	1340	20.06	10.14	30.00	191.38	2.0

T-INF (DEG R)	P-INF (PSIA)	Q-INF (PSIA)	V-INF (FT/SEC)	RHO-INF (SLUGS/FT3)	MU-INF (LB-SEC/FT2)	RE/FT (FT-1)	HREF-FR (R= .0400FT)	STFR (R= .0400FT)	SWITCH POSITION
97.4	.070	3.123	3863	6.022E-05	7.838E-06	2.968E 06	2.886E-02	1.559E-02	3

TC NO	TW	DTWDT	QDOT	H(TO)	H(TO)/HREF	H(.9TO)	H(.9TO)/HREF	X/L	2Y/B
								TOP CENTERLINE	
400	541.3	9.525	1.287	1.610E-03	.0558	1.935E-03	.0670	.1582	
401	542.3	11.781	1.532	1.920E-03	.0665	2.307E-03	.0799	.1608	
402	546.5	14.798	1.855	2.333E-03	.0808	2.806E-03	.0972	.1635	
403	548.4	20.521	2.512	3.173E-03	.1099	3.820E-03	.1324	.1664	
404	549.0	21.061	2.558	3.245E-03	.1125	3.907E-03	.1354	.1691	
405	550.3	22.207	2.710	3.430E-03	.1189	4.131E-03	.1431	.1720	
406	549.3	21.954	2.678	3.385E-03	.1173	4.075E-03	.1412	.1748	
407	548.2	20.364	2.647	3.342E-03	.1158	4.022E-03	.1394	.1769	
408	547.0	18.606	2.743	3.458E-03	.1198	4.161E-03	.1442	.1800	
409	543.8	15.289	2.208	2.772E-03	.0961	3.333E-03	.1155	.1831	
410	543.6	13.079	1.880	2.372E-03	.0822	2.852E-03	.0988	.1863	
411	540.5	9.933	1.495	1.869E-03	.0648	2.246E-03	.0778	.1894	
412	539.1	7.940	1.081	1.349E-03	.0467	1.620E-03	.0561	.1931	
413	538.2	6.176	.829	1.034E-03	.0358	1.241E-03	.0430	.1972	
414	535.3	3.151	.422	5.247E-04	.0182	6.296E-04	.0218	.2049	
415	532.6	1.415	.140	1.728E-04	.0060	2.072E-04	.0072	.2250	
416	530.9	.748	.047	1.079E-04	.0037	1.294E-04	.0045	.2500	
								NOSE TC (Z = 338)	
								X/L	2Y/B
145	588.5	77.399	10.657	1.417E-02	.4911	1.725E-02	.5976	.0008	.5039
146	590.1	82.509	11.369	1.515E-02	.5251	1.845E-02	.6393	.0023	.5082
147	575.5	69.728	9.539	1.247E-02	.4322	1.512E-02	.5240	.0043	.5135
148	567.2	53.659	7.554	9.770E-03	.3386	1.182E-02	.4096	.0068	.5205
149	558.1	39.259	5.714	7.303E-03	.2531	8.813E-03	.3054	.0095	.5279
150	559.5	35.550	5.130	6.569E-03	.2276	7.930E-03	.2748	.0122	.5354
151	558.8	25.144	3.559	4.553E-03	.1578	5.496E-03	.1904	.0218	.5621
152	557.5	25.246	3.440	4.404E-03	.1526	5.314E-03	.1841	.0251	.5712
153	558.1	24.701	3.037	3.863E-03	.1345	4.685E-03	.1624	.0286	.5808
154	558.4	23.699	2.968	3.795E-03	.1315	4.580E-03	.1587	.0319	.5898
155	556.5	21.640	2.737	3.491E-03	.1210	4.211E-03	.1459	.0354	.5995
156	555.2	20.748	2.594	3.304E-03	.1145	3.984E-03	.1381	.0387	.6085
157	555.2	20.291	2.510	3.196E-03	.1108	3.854E-03	.1336	.0420	.6176
158	555.6	20.658	2.556	3.256E-03	.1128	3.927E-03	.1361	.0462	.6294
159	555.2	21.330	2.407	3.065E-03	.1062	3.696E-03	.1281	.0503	.6406

GROUP 80 CENTERLINE TIME 2.80

CH	TC	FIT LENGTH	DTDWT	UNCERTAINTY	CH	TC	FIT LENGTH	DTDWT	UNCERTAINTY
1	221	1.20	1.137	.0203	50	384	.80	2.554	.0095
2	222	.80	3.334	.0129	51	385	.80	2.516	.0217
3	223	.60	6.432	.0057	52	386	.80	2.339	.0212
4	224	.40	12.861	.0069	53	387	.80	2.114	.0154
5	225	.40	8.436	.0212	54	388	1.20	1.539	.0181
6	226	.30	17.256	.0038	x 55	389	1.20	1.120	.0188
7	227	.40	9.781	.0583	56	390	2.00	.827	.0545
8	228	.40	14.775	.0047	57	391	1.20	1.064	.0152
9	229	.40	11.495	.0112	58	392	1.20	1.623	.0094
10	232	2.00	.599	.0142	59	393	1.20	1.857	.0171
11	233	2.00	.762	.0259	60	394	1.20	1.944	.0097
12	236	2.00	.490	.0254	61	395	1.20	1.868	.0163
13	237	2.00	.679	.0145	62	396	.80	1.999	.0135
14	238	1.20	1.966	.0104	63	397	.80	2.124	.0191
15	239	.80	2.277	.0232	64	398	.80	2.712	.0126
16	240	1.20	1.754	.0120	65	399	.60	4.528	.0110
17	241	.80	2.564	.0239	66	400	.40	9.505	.0111
18	242	.80	3.935	.0124	67	401	.40	11.760	.0041
19	243	.80	2.185	.0126	68	402	.40	14.798	.0426
20	244	1.20	1.658	.0138	69	403	.30	20.521	.0060
21	245	1.20	1.742	.0101	70	404	.30	21.061	.0043
22	246	1.20	1.942	.0083	71	405	.30	22.207	.0096
23	247	1.20	1.628	.0324	72	406	.30	21.954	.0071
24	248	.80	2.154	.0439	73	407	.30	20.364	.0053
25	249	.80	3.061	.0177	74	408	.30	18.606	.0052
26	250	.80	2.345	.0142	75	409	.40	15.280	.0082
27	251	.80	2.362	.0143	76	410	.40	13.079	.0100
28	252	.80	2.171	.0138	77	411	.40	9.933	.0071
29	253	.80	2.356	.0124	78	412	.40	7.940	.0070
30	254	1.20	1.876	.0144	79	413	.60	6.176	.0526
31	257	.80	2.272	.0144	80	414	.80	3.151	.0144
32	258	.80	2.614	.0137	81	415	1.20	1.415	.0147
33	367	.20	112.340	.0014	82	416	2.00	.748	.0129
34	368	.20	89.203	.0010	83	145	.20	77.399	.0046
x 35	369	.20	60.252	.0015	84	146	.20	82.509	.0025
36	370	.20	43.791	.0015	85	147	.20	69.728	.0042
37	371	.20	37.090	.0032	86	148	.20	53.659	.0033
38	372	.30	26.344	.0060	87	149	.20	39.252	.0182
39	373	.30	17.643	.0097	88	150	.20	35.550	.0100
40	374	.40	13.868	.0045	89	151	.30	25.144	.0049
41	375	.40	11.549	.0077	90	152	.30	25.246	.0066
42	376	.40	10.227	.0089	91	153	.30	24.701	.0093
43	377	.40	9.625	.0172	92	154	.30	23.699	.0136
44	378	.40	8.555	.0074	93	155	.30	21.640	.0053
x 45	379	.60	5.098	.0087	94	156	.30	20.748	.0046
46	380	.60	4.095	.0158	95	157	.30	20.291	.0072
47	381	.80	3.814	.0222	96	158	.30	20.658	.0037
48	382	.80	3.128	.0110	97	159	.30	21.330	.0055
49	383	.80	2.641	.0133	98	0	-0	0	0

B1 .050

HIT ON LOOP 58

DATE 5/12/75

AEDC(ARO,INC.) ARNOLD AFS, TENNESSEE
VON KARMAN GAS DYNAMICS FACILITY
50 INCH HYPERSONIC TUNNEL B
V41A-87A

GROUP	TEST CONDITION	MODEL	MACH NO	PO,PSIA	TO,DEG R	ALPHA-MODEL	ALPHA-SECTOR	ALPHA-PREBEND	ROLL MODEL	YAW
B1	29	140 B	7.99	674.3	1339	25.07	4.93	30.00	180.00	-.0

T-INF (DEG R)	P-INF (PSIA)	Q-INF (PSIA)	V-INF (FT/SEC)	RHO-INF (SLUGS/FT3)	MU-INF (LB-SEC/FT2)	RE/FT (FT-1)	HREF-FR (R= .0400FT)	SIFR (R= .0400FT)	SWITCH POSITION
97.3	.070	3.111	3861	6.006E-05	7.830E-08	2.962E 06	2.880E-02	1.560E-02	1

IC	SC	TW	DTWGT	QDOT	H(TO)	H(TO)/HREF	H(.9TO)	H(.9TO)/HREF	X/L	Z,FULL SCALE(IN)
									FUSELAGE VENT NO. 1	
1	544.3	13.255	1.755	2.209E-03	.0767	2.656E-03	.0922		.4434	376.6300
2	543.8	10.682	1.470	1.849E-03	.0642	2.223E-03	.0772		.4264	371.6300
3	540.6	9.733	1.339	1.677E-03	.0582	2.015E-03	.0700		.4303	371.6300
4	540.3	9.344	1.273	1.593E-03	.0553	1.914E-03	.0665		.4342	371.6300
5	540.4	7.941	1.080	1.328E-03	.0461	1.595E-03	.0554		.4380	371.6300
6	540.3	6.592	.874	1.095E-03	.0380	1.315E-03	.0457		.4434	369.1300
7	538.5	5.553	.810	1.012E-03	.0351	1.216E-03	.0422		.4226	366.6300
8	538.1	5.580	.842	1.051E-03	.0365	1.262E-03	.0438		.4264	366.6300
9	538.6	4.771	.694	8.670E-04	.0301	1.041E-03	.0362		.4303	366.6300
10	538.1	4.092	.594	7.294E-04	.0253	8.758E-04	.0304		.4342	366.6300
11	539.3	4.201	.588	7.104E-04	.0247	8.532E-04	.0296		.4380	366.6300
12	539.6	2.727	.376	4.706E-04	.0163	5.653E-04	.0196		.4496	366.6300
13	541.2	1.969	.290	3.629E-04	.0126	4.361E-04	.0151		.4187	357.1300
14	539.5	2.475	.338	4.229E-04	.0147	5.079E-04	.0176		.4396	361.6300
15	540.1	2.154	.288	3.605E-04	.0125	4.331E-04	.0150		.4434	361.6300
16	540.8	1.320	.179	2.237E-04	.0078	2.689E-04	.0093		.4396	355.6300
17	542.0	1.102	.149	1.872E-04	.0065	2.250E-04	.0078		.4434	355.6300
18	543.4	.983	.138	1.730E-04	.0060	2.080E-04	.0072		.4396	351.6300
19	545.8	.800	.112	1.412E-04	.0049	1.699E-04	.0059		.4291	332.6300
									CARGO BAY VENT NO. 1	
									X/L	Z,FULL SCALE(IN)
22	539.6	7.594	1.054	1.319E-03	.0458	1.584E-03	.0550		.3974	397.6300
23	538.8	7.547	1.054	1.317E-03	.0457	1.582E-03	.0549		.4013	397.6300
24	539.0	7.121	.953	1.203E-03	.0418	1.445E-03	.0502		.4052	397.6300
25	537.1	5.534	.737	9.169E-04	.0319	1.103E-03	.0383		.4090	397.6300
26	536.1	4.594	.640	7.969E-04	.0277	9.564E-04	.0332		.4129	397.6300
27	539.7	7.083	1.073	1.339E-03	.0465	1.608E-03	.0558		.3936	392.6300
28	535.5	6.514	.936	1.169E-03	.0406	1.404E-03	.0488		.3974	392.6300
29	536.9	5.479	.749	9.835E-04	.0341	1.181E-03	.0410		.4013	392.6300
30	535.5	4.945	.709	8.829E-04	.0307	1.060E-03	.0368		.4052	392.6300
31	535.3	4.566	.637	7.921E-04	.0275	9.504E-04	.0330		.4090	392.6300
32	535.7	4.675	.618	7.699E-04	.0267	9.239E-04	.0321		.4129	392.6300
33	535.6	3.794	.541	6.733E-04	.0234	8.080E-04	.0281		.4090	386.1300
34	536.3	4.523	.611	7.608E-04	.0264	9.131E-04	.0317		.4129	387.6300
35	538.5	5.097	.721	9.011E-04	.0313	1.082E-03	.0376		.3897	383.1300
36	538.5	6.275	.910	1.137E-03	.0395	1.365E-03	.0474		.4090	378.6300
37	537.6	5.923	.832	1.038E-03	.0360	1.246E-03	.0433		.4129	382.1300
38	540.3	9.000	1.254	1.570E-03	.0545	1.886E-03	.0655		.4129	377.1300
39	541.5	7.802	1.140	1.430E-03	.0496	1.718E-03	.0597		.4001	373.6300
									PROTUBERANCES	
									X/L	Z,FULL SCALE(IN)
41	539.7	8.120	1.087	1.360E-03	.0472	1.634E-03	.0567		.3546	379.0500
42	543.3	9.956	1.363	1.712E-03	.0595	2.059E-03	.0715		.3604	379.0500
43	537.3	4.448	.577	7.198E-04	.0250	8.641E-04	.0300		.3450	374.0500

DATE 5/12/75

AEDC(ARO,INC.) ARNOLD AFS, TENNESSEE
VON KARMAN GAS DYNAMICS FACILITY
50 INCH HYPERSONIC TUNNEL B
V41B-87A

GROUP	TEST CONDITION	MODEL	MACH NO	PO,PSIA	TO,DEG R	ALPHA-MODEL	ALPHA-SECTOR	ALPHA-PREBEND	ROLL MODEL	YAW
81	29	140 B	7.99	674.3	1339	25.07	4.93	30.00	180.00	-.0

T-INF (DEG R)	P-INF (PSIA)	Q-INF (PSIA)	V-INF (FT/SEC)	RHO-INF (SLUGS/FT3)	MU-INF (LB-SEC/FT2)	RE/FT (FT-1)	HREF-FR (R= .0400FT)	SIFR (R= .0400FT)	SWITCH POSITION
97.3	.070	3.111	3861	6.006E-05	7.830E-08	2.962E 06	2.880E-02	1.560E-02	1

TC NO	TW	DTWDT	QDOT	H(TO)	H(TO)/HREF	H(.9TO)	H(.9TO)/HREF
44	540.6	8.575	1.168	1.463E-03	.0508	1.758E-03	.0610
45	544.1	9.911	1.375	1.729E-03	.0600	2.079E-03	.0722
46	542.4	9.033	1.264	1.587E-03	.0551	1.907E-03	.0662
47	539.5	5.917	.787	9.843E-04	.0342	1.182E-03	.0411
48	544.0	8.737	1.200	1.510E-03	.0524	1.815E-03	.0630
49	542.0	9.193	1.266	1.588E-03	.0551	1.908E-03	.0663
50	548.7	13.102	1.827	2.312E-03	.0803	2.784E-03	.0966
51	550.8	14.363	1.960	2.487E-03	.0863	2.995E-03	.1040
52	548.5	11.212	1.548	1.959E-03	.0680	2.358E-03	.0819
53	546.0	9.542	1.347	1.759E-03	.0611	2.116E-03	.0735
54	535.3	4.016	.572	7.122E-04	.0247	8.546E-04	.0297
55	546.4	9.609	1.373	1.738E-03	.0603	2.091E-03	.0726
56	534.5	2.748	.353	4.394E-04	.0153	5.271E-04	.0183
57	534.5	1.990	.243	3.017E-04	.0105	3.620E-04	.0126
58	537.6	3.554	.489	5.853E-04	.0203	7.027E-04	.0244
59	540.5	5.346	.704	8.818E-04	.0306	1.059E-03	.0368
60	539.7	4.339	.604	7.562E-04	.0263	9.083E-04	.0315
61	537.9	3.199	.405	5.056E-04	.0176	6.071E-04	.0211
62	535.0	1.964	.241	2.991E-04	.0104	3.589E-04	.0125
63	535.2	3.155	.412	5.121E-04	.0178	6.145E-04	.0213
64	[illegible]	[illegible]	[illegible]	2.725E-07	.0000	3.236E-07	.0000
65	535.8	3.759	.511	6.359E-04	.0221	7.631E-04	.0265
66	535.0	2.544	.321	3.986E-04	.0138	4.783E-04	.0166
67	536.3	2.683	.377	4.692E-04	.0163	5.631E-04	.0196
68	539.5	4.171	.529	6.612E-04	.0230	7.942E-04	.0276

PROTUBERANCES

X/L	Z,FULL SCALE(IN)
.3508	374.0500
.3566	374.0500
.3604	374.0500
.3392	366.5500
.3566	366.5500
.3392	360.7000
.3566	360.7000
.3604	360.7000
.3392	353.2000
.3450	353.2000
.3508	353.2000
.3566	353.2000

SUBLIMATOR VENT NO. 1

X/L	Z,FULL SCALE(IN)
.3031	371.1300
.3074	369.1300
.3089	363.6300
.3074	358.1300
.3031	356.1300
.2988	358.1300
.2973	363.6300
.2988	369.1300
.3031	376.1300
.3089	378.6300
.3101	372.6300
.3157	370.3800
.3128	363.6300

DATE 5/12/75

AEDC(APO,INC.) ARNOLD AFS, TENNESSEE
VON KARMAN GAS DYNAMICS FACILITY
50 INCH HYPERSONIC TUNNEL R
V418-87A

GROUP	TEST CONDITION	MODEL	MACH NO	PO,PSIA	TO,DEG R	ALPHA-MODEL	ALPHA-SECTOR	ALPHA-PREBEND	ROLL MODEL	YAW
51	29	140 R	7.99	674.3	1339	25.07	4.93	30.00	180.00	-.0

T-INF (DEG R)	P-INF (PSIA)	Q-INF (PSIA)	V-INF (FT/SEC)	RHO-INF (SLUGS/FT3)	MU-INF (LB-SEC/FT2)	RE/FT (FT-1)	HREF-FR (R= .0400FT)	STFR (R= .0400FT)	SWITCH POSITION
97.3	.076	3.111	3861	6.006E-05	7.830E-08	2.962E 06	2.880E-02	1.560E-02	1

TC NO	TW	DTWDT	QDOT	H(TO)	H(TO)/HREF	H(.9TO)	H(.9TO)/HREF	X/L	Z,FULL SCALE(IN)
								FUSELAGE VENT PANEL NO. 7	
69	533.2	4.294	.598	7.420E-04	.0258	8.899E-04	.0309	.2487	356.4000
70	533.5	3.846	.470	5.841E-04	.0203	7.005E-04	.0243	.2591	356.4000
71	533.9	4.412	.599	7.439E-04	.0258	8.923E-04	.0310	.2419	351.4000
72	533.9	3.768	.533	6.624E-04	.0230	7.946E-04	.0276	.2487	351.4000
73	533.8	3.588	.465	5.770E-04	.0200	6.921E-04	.0240	.2552	351.4000
74	534.5	3.544	.429	5.332E-04	.0185	6.397E-04	.0222	.2610	351.4000
75	534.7	3.462	.470	5.846E-04	.0203	7.013E-04	.0243	.2419	342.8000
77	534.0	2.418	.342	4.252E-04	.0148	5.100E-04	.0177	.2552	342.8000
78	535.1	2.600	.357	4.436E-04	.0154	5.323E-04	.0185	.2610	342.8000
79	536.6	2.995	.383	4.773E-04	.0166	5.729E-04	.0199	.2419	334.2000
80	535.2	3.251	.443	5.512E-04	.0191	6.613E-04	.0230	.2487	334.2000
81	537.4	3.879	.541	6.753E-04	.0234	8.107E-04	.0281	.2552	334.2000
								ACCESS HATCH WINDOW	
								X/L	Z,FULL SCALE(IN)
83	531.0	4.012	.535	6.619E-04	.0230	7.934E-04	.0275	.2131	398.0000
84	532.2	5.034	.663	8.212E-04	.0285	9.847E-04	.0342	.2131	388.0000
85	531.6	5.010	.682	8.441E-04	.0293	1.012E-03	.0351	.2131	383.0000
87	529.7	3.540	.525	6.251E-04	.0217	7.490E-04	.0260	.2222	395.8000
88	531.5	5.210	.727	9.006E-04	.0313	1.080E-03	.0375	.2193	386.5000
89	531.6	5.261	.772	9.562E-04	.0332	1.146E-03	.0398	.2177	381.8000
90	531.7	5.114	.696	8.618E-04	.0299	1.033E-03	.0359	.2297	389.5000
91	532.1	5.917	.810	1.004E-03	.0349	1.204E-03	.0418	.2243	382.5000
92	532.9	5.448	.768	9.531E-04	.0331	1.143E-03	.0397	.2214	378.7000
93	532.7	5.676	.725	8.965E-04	.0312	1.077E-03	.0374	.2343	374.0000
94	534.3	6.576	.855	1.062E-03	.0369	1.274E-03	.0442	.2274	375.5000
95	533.8	6.075	.863	1.071E-03	.0372	1.285E-03	.0446	.2239	373.3000
96	533.4	6.478	.842	1.045E-03	.0363	1.254E-03	.0435	.2363	368.0000
97	534.3	6.470	.826	1.027E-03	.0357	1.232E-03	.0428	.2286	368.0000
98	533.9	6.195	.869	1.079E-03	.0375	1.294E-03	.0449	.2247	368.0000
100	535.5	6.300	.893	1.111E-03	.0386	1.333E-03	.0463	.2274	360.5000
102	536.6	5.993	.847	1.055E-03	.0366	1.267E-03	.0440	.2081	354.3000
103	535.3	6.230	.818	1.018E-03	.0354	1.222E-03	.0424	.2023	362.7000
105	533.8	5.294	.662	8.220E-04	.0285	9.859E-04	.0342	.2050	378.7000
106	532.3	5.167	.662	8.202E-04	.0285	9.834E-04	.0341	.2050	386.2000

GROUP 81 CENTERLINE TIME 2.45

CH	TC	FIT LENGTH	DTUWT	UNCERTAINTY	CH	TC	FIT LENGTH	DTUWT	UNCERTAINTY
1	1	.40	13.255	.0166	50	53	.40	9.542	.0069
2	2	.40	10.882	.0292	51	54	.80	4.016	.0119
3	3	.40	9.733	.0087	52	55	.40	9.609	.0118
4	4	.40	9.344	.0092	53	56	.80	2.748	.0096
5	5	.60	7.941	.0102	54	57	.80	1.990	.0242
6	6	.60	6.592	.0070	55	58	.80	3.554	.0106
7	7	.60	5.553	.0020	56	59	.60	5.346	.0257
8	8	.60	5.580	.0109	57	60	.60	4.339	.0098
9	9	.60	4.771	.0144	58	61	.80	3.199	.0089
10	10	.80	4.032	.0120	59	62	1.20	1.964	.0187
11	11	.60	4.201	.0182	60	63	.80	3.155	.0083
12	12	.80	2.727	.0178	61	64	2.00	.002	5.1182
13	13	1.20	1.969	.0073	62	65	.80	3.759	.0109
14	14	.80	2.475	.0115	63	66	.80	2.544	.0130
15	15	.80	2.158	.0199	64	67	.80	2.683	.0150
16	16	1.20	1.320	.0139	65	68	.60	4.171	.0140
17	17	1.20	1.102	.0423	66	69	.60	4.294	.0144
18	18	2.00	.993	.0080	67	70	.80	3.846	.0089
19	19	2.00	.800	.0170	68	71	.60	4.412	.1256
20	22	.60	7.594	.0058	69	72	.80	3.768	.0191
21	23	.60	7.547	.0041	70	73	.80	3.588	.0116
22	24	.60	7.121	.0087	71	74	.80	3.544	.0193
23	25	.60	5.664	.0165	72	75	.80	3.462	.0056
24	26	.60	4.884	.0121	73	77	.80	2.418	.0134
25	27	.60	7.683	.0077	74	78	.80	2.600	.0165
26	28	.60	6.514	.0067	75	79	.80	2.995	.0158
27	29	.60	5.479	.0102	76	80	.80	3.251	.0145
28	30	.60	4.945	.0093	77	81	.80	3.879	.0074
29	31	.60	4.566	.0105	78	83	.60	4.012	.0107
30	32	.60	4.675	.0153	79	84	.60	5.034	.0622
31	33	.80	3.794	.0122	80	85	.60	5.010	.0105
32	34	.60	4.523	.0119	81	87	.80	3.548	.0056
33	35	.60	5.097	.0083	82	88	.60	5.210	.0079
34	36	.60	6.275	.0056	83	89	.60	5.261	.0078
35	37	.60	5.923	.0079	84	90	.60	5.114	.0126
36	38	.40	9.000	.0118	85	91	.60	5.917	.0090
37	39	.60	7.802	.0054	86	92	.60	5.448	.0086
38	41	.40	8.120	.0088	87	93	.60	5.676	.0251
39	42	.40	9.956	.0079	88	94	.60	6.576	.0051
40	43	.60	4.448	.0182	89	95	.60	6.075	.0093
41	44	.40	8.575	.0058	90	96	.60	6.478	.0658
42	45	.40	9.911	.0106	91	97	.60	6.470	.0163
43	46	.40	9.033	.0158	92	98	.60	6.195	.0221
44	47	.60	5.917	.0096	93	100	.60	6.300	.0122
45	48	.40	8.737	.0089	94	102	.60	5.993	.0156
46	49	.40	9.193	.0106	95	103	.60	6.230	.0080
47	50	.40	13.102	.0137	96	105	.60	5.294	.0076
48	51	.40	14.363	.0047	97	106	.60	5.167	.0094
49	52	.40	11.212	.0046	98	0	-0	0	0
82		.050							

BIT ON LOOP 60

DATE 5/12/75

AFDC(ARO,INC.) ARNOLD AFS, TENNESSEE
VON KARMAN GAS DYNAMICS FACILITY
50 INCH HYPERSONIC TUNNEL B
V41B-87A

GROUP	TEST CONDITION	MODEL	MACH NO	PO,PSIA	TO,DEG R	ALPHA-MODEL	ALPHA-SECTOR	ALPHA-PREBEND	ROLL MODEL	YAW
82	26	140 B	7.99	673.5	1339	25.04	4.96	30.00	179.98	-.0

T-INF (DEG R)	P-INF (PSIA)	Q-INF (PSIA)	V-INF (FT/SEC)	RHO-INF (SLUGS/FT3)	MU-INF (LB-SEC/FT2)	RE/FT (FT-1)	HREF-FR (R= .0400FT)	STFR (R= .0400FT)	SWITCH POSITION
97.2	.079	3.108	3860	6.002E-05	7.828E-08	2.960E 06	2.678E-02	1.561E-02	2

TC NO	TW	QTWOT	QOOT	H(TO)	H(TO)/HREF	H(.9TO)	H(.9TO)/HREF	X/L	Z,FULL SCALE(IN)
								ACCESS HATCH WINDOW	
107	530.9	3.866	.553	6.851E-04	.0238	8.212E-04	.0285	.2050	396.2000
								FUSELAGE VENT PANEL NO. 3 AND 1	
								X/L	Z,FULL SCALE(IN)
108	533.5	6.888	.729	9.053E-04	.0314	1.086E-03	.0377	.1244	377.5000
109	531.4	5.953	.736	9.118E-04	.0317	1.093E-03	.0380	.1302	377.5000
110	531.4	5.700	.722	8.944E-04	.0311	1.072E-03	.0372	.1360	377.5000
111	532.3	5.947	.715	8.884E-04	.0309	1.065E-03	.0370	.1418	377.5000
112	533.2	6.199	.736	9.140E-04	.0318	1.096E-03	.0381	.1476	377.5000
113	533.5	6.314	.725	9.000E-04	.0313	1.079E-03	.0375	.1215	273.5000
114	532.3	5.943	.713	8.847E-04	.0307	1.061E-03	.0369	.1273	273.5000
115	532.3	5.715	.709	8.792E-04	.0305	1.054E-03	.0366	.1331	273.5000
116	532.1	5.899	.724	8.973E-04	.0312	1.076E-03	.0374	.1389	273.5000
117	534.3	6.453	.744	9.247E-04	.0321	1.109E-03	.0385	.1447	273.5000
118	533.2	5.125	.709	8.806E-04	.0306	1.056E-03	.0367	.1409	366.0000
119	534.5	6.055	.746	9.775E-04	.0340	1.173E-03	.0407	.1442	366.0000
120	535.8	5.962	.746	9.294E-04	.0323	1.115E-03	.0387	.1215	359.5000
121	535.0	5.345	.657	8.172E-04	.0284	9.806E-04	.0341	.1303	359.5000
122	535.7	5.423	.676	8.423E-04	.0293	1.011E-03	.0351	.1337	359.5000
								LOWER RCS NOZZLES	
								X/L	Z,FULL SCALE(IN)
124	533.2	4.505	.402	4.996E-04	.0174	5.991E-04	.0208	.0950	400.0000
125	532.0	4.472	.437	6.035E-04	.0210	7.236E-04	.0251	.0988	400.0000
126	532.1	4.240	.521	7.201E-04	.0250	8.634E-04	.0300	.1027	400.0000
127	532.0	4.234	.579	7.180E-04	.0249	8.610E-04	.0299	.0911	395.0000
128	531.6	4.584	.556	6.832E-04	.0239	8.263E-04	.0287	.0950	395.0000
129	532.6	5.297	.622	7.713E-04	.0268	9.249E-04	.0321	.0988	395.0000
130	535.3	5.201	.623	7.754E-04	.0269	9.304E-04	.0323	.0810	390.0000
131	532.9	4.615	.682	8.402E-04	.0294	1.015E-03	.0353	.0857	390.0000
132	533.7	6.958	.812	1.009E-03	.0350	1.210E-03	.0420	.0963	390.0000
133	532.8	5.016	.679	7.557E-04	.0263	9.062E-04	.0315	.0857	383.8000
134	532.1	5.892	.789	9.778E-04	.0340	1.172E-03	.0407	.0872	377.3000
135	534.0	7.555	.918	1.128E-03	.0392	1.353E-03	.0470	.0903	374.5500
136	534.9	7.890	.878	1.092E-03	.0379	1.310E-03	.0455	.0960	374.5500
137	534.0	7.415	.970	1.206E-03	.0419	1.447E-03	.0503	.0872	370.5500
138	534.9	8.043	.927	1.154E-03	.0401	1.384E-03	.0481	.0928	370.5500
139	536.3	7.479	.956	1.192E-03	.0414	1.431E-03	.0497	.0816	366.0500
140	535.9	7.498	.955	1.190E-03	.0413	1.428E-03	.0496	.0934	362.4000
141	535.3	6.842	.905	1.127E-03	.0391	1.352E-03	.0470	.0973	362.4000
142	536.7	5.649	.616	7.686E-04	.0267	9.226E-04	.0321	.0833	355.2000
143	536.4	8.332	.838	1.045E-03	.0363	1.254E-03	.0436	.0919	355.2000
144	538.5	9.390	1.240	1.550E-03	.0538	1.861E-03	.0646	.0949	349.0000

DATE 5/12/75

AEDC(ARO,INC.) ARNOLD AFS, TENNESSEE
VON KARMAN GAS DYNAMICS FACILITY
50 INCH HYPERSONIC TUNNEL B
V418-87A

GROUP	TEST CONDITION	MODEL	MACH NO	PO,PSIA	TO,DEG R	ALPHA-MODEL	ALPHA-SECTOR	ALPHA-PREBEND	ROLL MODEL	YAW
82	29	140 B	7.99	673.5	1339	25.04	4.96	30.00	179.98	-.0

T-INF (DEG R)	P-INF (PSIA)	Q-INF (PSIA)	V-INF (FT/SEC)	RHO-INF (SLUGS/FT3)	MU-INF (LB-SEC/FT2)	RE/FT (FT-1)	HREF-FR (R= .0400FT)	STFR (R= .0400FT)	SWITCH POSITION
97.2	.076	3.108	3860	6.002E-05	7.828E-08	2.960E 06	2.878E-02.	1.561E-02	2

IC NO	TW	DTWDT	QDOT	H(TO)	H(TO)/HREF	H(.9TO)	H(.9TO)/HREF	X/L	2Y/B
								UPPER RCS NOZZLES	
161	538.5	3.208	.381	4.756E-04	.0165	5.712E-04	.0198	.0619	-.0160
162	537.4	3.218	.305	3.809E-04	.0132	4.573E-04	.0159	.0709	-.0160
163	534.4	2.110	.259	3.223E-04	.0112	3.867E-04	.0134	.0807	-.0160
164	533.2	1.710	.223	2.767E-04	.0096	3.319E-04	.0115	.0943	-.0160
165	533.6	1.343	.169	2.100E-04	.0073	2.519E-04	.0088	.0978	-.0160
166	533.5	1.051	.135	1.672E-04	.0058	2.006E-04	.0070	.1013	-.0160
167	538.8	2.971	.403	5.039E-04	.0175	6.052E-04	.0210	.0619	-.0320
168	537.6	3.182	.335	4.177E-04	.0145	5.015E-04	.0174	.0709	-.0320
169	534.3	2.231	.271	3.370E-04	.0117	4.043E-04	.0140	.0807	-.0320
170	533.2	1.865	.233	2.895E-04	.0101	3.472E-04	.0121	.0943	-.0320
171	533.0	1.945	.234	2.910E-04	.0101	3.489E-04	.0121	.0978	-.0320
172	532.1	1.547	.202	2.499E-04	.0087	2.996E-04	.0104	.1013	-.0320
173	535.5	2.413	.323	4.016E-04	.0140	4.819E-04	.0167	.0807	-.0480
174	533.1	1.741	.198	2.461E-04	.0085	2.951E-04	.0103	.0943	-.0480
175	532.6	1.596	.229	2.837E-04	.0099	3.401E-04	.0118	.0978	-.0480
176	532.0	1.336	.182	2.253E-04	.0078	2.701E-04	.0094	.1013	-.0480
								CANOPY	
177	541.5	8.955	1.236	1.551E-03	.0539	1.864E-03	.0648		
178	545.8	15.539	3.072	3.875E-03	.1346	4.662E-03	.1620		
179	554.8	26.398	5.587	7.129E-03	.2476	8.597E-03	.2987		
180	537.3	5.562	.727	9.066E-04	.0315	1.088E-03	.0378		
181	540.6	10.060	1.370	1.717E-03	.0597	2.063E-03	.0717		
182	545.9	21.442	3.073	3.877E-03	.1347	4.665E-03	.1620		
183	530.2	1.758	.220	2.724E-04	.0095	3.265E-04	.0113		
184	530.3	2.136	.291	3.605E-04	.0125	4.320E-04	.0150		
185	534.9	3.852	.463	5.760E-04	.0200	6.912E-04	.0240		
186	539.4	8.686	1.093	1.367E-03	.0475	1.643E-03	.0571		
187	547.6	20.011	2.682	3.390E-03	.1178	4.081E-03	.1418		
188	544.2	17.571	4.109	5.173E-03	.1797	6.222E-03	.2161		
189	534.0	4.273	.609	7.565E-04	.0263	9.075E-04	.0315		
190	538.7	9.516	1.372	1.715E-03	.0596	2.060E-03	.0715		
191	544.5	17.903	2.749	3.462E-03	.1203	4.163E-03	.1446		

DATE 5/12/79

AEDC(ARO,INC.) ARNOLD AFS, TENNESSEE
VON KARMAN GAS DYNAMICS FACILITY
50 INCH HYPERSONIC TUNNEL B
V418-87A

GROUP	TEST CONDITION	MODEL	MACH NO	PO,PSIA	TO,DEG R	ALPHA-MODEL	ALPHA-SECTOR	ALPHA-PREBEND	ROLL MODEL	YAW
82	29	140 B	7.99	673.5	1339	25.04	4.96	30.00	179.98	-.0

T-INF (DEG R)	P-INF (PSIA)	Q-INF (PSIA)	V-INF (FT/SEC)	RHO-INF (SLUGS/FT3)	MU-INF (LB-SEC/FT2)	RE/FT (FT-1)	HREF-FR (R= .0400FT)	STFR (R= .0400FT)	SWITCH POSITION
97.2	.070	3.108	3860	6.002E-05	7.826E-08	2.960E 06	2.878E-02	1.561E-02	2

IC NO	TW	DIWOT	QDOT	H(TO)	H(TO)/HREF	H(.9TO)	H(.9TO)/HREF
						CANOPY	
192	530.1	2.374	.334	4.136E-04	.0144	4.956E-04	.0172
193	541.8	15.689	3.032	3.805E-03	.1322	4.573E-03	.1589
194	531.6	4.428	.571	7.073E-04	.0246	8.480E-04	.0295
195	538.5	10.953	1.353	1.691E-03	.0588	2.031E-03	.0706
196	543.5	17.602	2.322	2.921E-03	.1015	3.512E-03	.1220
197	527.5	1.321	.131	1.609E-04	.0056	1.927E-04	.0067
198	527.8	1.634	.159	2.332E-04	.0081	2.794E-04	.0097
199	528.1	2.777	.372	4.543E-04	.0160	5.501E-04	.0191
200	532.4	5.627	.801	9.935E-04	.0345	1.191E-03	.0414
201	541.3	17.044	2.414	3.028E-03	.1052	3.639E-03	.1264
202	541.1	15.444	1.959	2.456E-03	.0853	2.951E-03	.1025
203	527.4	1.733	.222	2.735E-04	.0095	3.276E-04	.0114
204	529.3	3.094	.480	5.926E-04	.0206	7.101E-04	.0247
205	536.6	11.255	1.757	2.190E-03	.0761	2.629E-03	.0913
206	528.1	.633	.034	1.032E-04	.0036	1.236E-04	.0043
207	536.0	10.315	1.343	1.724E-03	.0599	2.069E-03	.0719
208	526.1	1.213	.162	1.998E-04	.0069	2.392E-04	.0083
209	526.6	1.786	.245	3.018E-04	.0105	3.613E-04	.0126
210	527.6	2.294	.305	3.765E-04	.0131	4.509E-04	.0157
211	527.6	.744	.090	1.111E-04	.0039	1.331E-04	.0046
212	526.8	1.032	.139	1.707E-04	.0059	2.044E-04	.0071
213	526.4	2.137	.292	3.476E-04	.0121	4.162E-04	.0145
214	527.9	3.304	.452	5.697E-04	.0198	6.824E-04	.0237
215	528.7	3.422	.495	5.985E-04	.0208	7.170E-04	.0249
216	533.2	7.062	1.002	1.245E-03	.0432	1.493E-03	.0519
217	533.2	6.222	.896	1.100E-03	.0382	1.319E-03	.0458
218	526.3	2.005	.276	3.392E-04	.0118	4.062E-04	.0141
219	528.0	3.955	.554	6.834E-04	.0237	8.186E-04	.0284
220	529.2	4.924	.676	8.346E-04	.0290	9.999E-04	.0347

GROUP 82 CENTERLINE TIME 2.95

CH	TC	FIT LENGTH	DTDWT	UNCERTAINTY	CH	TC	FIT LENGTH	DTDWT	UNCERTAINTY
1	107	.80	3.866	.0121	50	173	.80	2.413	.0298
2	108	.60	6.858	.0075	51	174	1.20	1.741	.0180
3	109	.60	5.958	.0091	52	175	1.20	1.596	.0173
4	110	.60	5.710	.0073	53	176	1.20	1.336	.0176
5	111	.60	5.947	.0191	54	177	.40	8.955	.0229
6	112	.60	6.199	.0075	55	178	.40	15.539	.0052
7	113	.60	6.314	.0401	56	179	.30	26.398	.0150
8	114	.60	5.943	.0076	57	180	.60	5.562	.0071
9	115	.60	5.715	.0217	58	181	.40	10.060	.0065
10	116	.60	5.859	.0074	59	182	.30	21.442	.0088
11	117	.60	6.453	.0232	60	183	1.20	1.758	.0135
12	118	.60	5.125	.0150	61	184	.80	2.136	.0293
13	119	.60	6.065	.0099	62	185	.80	3.852	.0098
14	120	.60	5.962	.0107	63	186	.40	8.686	.0060
15	121	.60	5.345	.0166	64	187	.30	20.011	.0122
16	122	.60	5.423	.0090	65	188	.30	17.571	.0073
17	124	.60	4.566	.0183	66	189	.60	4.273	.0122
18	125	.60	4.472	.0126	67	190	.40	9.516	.0094
19	126	.60	4.240	.0188	68	191	.30	17.903	.0702
20	127	.60	4.294	.0152	69	192	.80	2.374	.0338
21	128	.60	4.584	.0119	70	193	.40	15.689	.0066
22	129	.60	5.297	.0077	71	194	.60	4.428	.0182
23	130	.60	5.201	.0240	72	195	.40	10.953	.0110
24	131	.60	4.015	.0108	73	196	.30	17.602	.0084
25	132	.60	6.968	.0127	74	197	1.20	1.321	.0134
26	133	.60	5.016	.0117	75	198	1.20	1.634	.0157
27	134	.60	5.892	.0057	76	199	.80	2.777	.0184
28	135	.60	7.555	.0057	77	200	.60	5.627	.0075
29	136	.60	7.890	.0072	78	201	.30	17.044	.0032
30	137	.60	7.415	.0068	79	202	.40	15.444	.0311
31	138	.60	8.043	.0050	80	203	1.20	1.793	.0097
32	139	.60	7.479	.0105	81	204	.80	3.094	.0133
33	140	.60	7.498	.0070	82	205	.40	11.255	.0090
34	141	.60	6.642	.0052	83	206	2.00	.633	.0269
35	142	.60	5.649	.0144	84	207	.40	10.315	.0094
36	143	.40	8.332	.0084	85	208	1.20	1.213	.0175
37	144	.40	9.340	.0095	86	209	1.20	1.768	.0098
38	161	.80	3.208	.0086	87	210	.80	2.294	.0375
39	162	.80	3.218	.0118	88	211	2.00	.744	.0151
40	163	.80	2.110	.0224	89	212	1.20	1.032	.0328
41	164	1.20	1.710	.0112	90	213	.80	2.137	.0883
42	165	1.20	1.343	.0171	91	214	.80	3.304	.0109
43	166	1.20	1.051	.0300	92	215	.80	3.422	.0208
44	167	.80	2.971	.0104	93	216	.60	7.062	.0097
45	168	.80	3.182	.0090	94	217	.60	6.222	.0133
46	169	.80	2.231	.0153	95	218	1.20	2.005	.0131
47	170	1.20	1.865	.0202	96	219	.80	3.950	.0137
48	171	1.20	1.945	.0115	97	220	.60	4.924	.0072
49	172	1.20	1.547	.0151	98	0	-0	0	0

83 .050

BIT ON LOOP 59

DATE 5/12/75

AEDC(ARO,INC.) ARNOLD AFS, TENNESSEE
VON KARMAN GAS DYNAMICS FACILITY
50 INCH HYPERSONIC TUNNEL B
V41B-B7A

GROUP	TEST CONDITION	MODEL	MACH NO	PO,PSIA	TO,DEG R	ALPHA-MODEL	ALPHA-SECTOR	ALPHA-PREBEND	ROLL MODEL	YAW
63	29	140 B	7.99	675.0	1339	25.05	4.95	30.00	179.98	-.0

T-INF (DEG R)	P-INF (PSIA)	Q-INF (PSIA)	V-INF (FT/SEC)	RHO-INF (SLUGS/FT3)	MU-INF (LB-SEC/FT2)	RE/FT (FT-1)	HREF-FR (R= .0400FT)	STFR (R= .0400FT)	SWITCH POSITION
97.3	.070	3.11E	3862	6.011E-05	7.833E-06	2.963E 06	2.882E-02	1.560E-02	3

IC NO	T*	DTWDT	QDOT	H(TO)	H(TO)/HREF	H(.9TO)	H(.9TO)/HREF
						CANOPY	
221	525.6	-4.397	-.530	-6.511E-04	-.0226	-7.793E-04	-.0270
222	524.9	1.369	.168	2.082E-04	.0072	2.408E-04	.0086
223	526.2	5.627	.761	9.357E-04	.0325	1.120E-03	.0389
						ESCAPE HATCH AND WINDOW	
						X/L	2Y/B
224	534.5	7.074	.785	8.756E-04	.0304	1.050E-03	.0364	.1933	.0162
225	532.5	4.581	.548	6.799E-04	.0236	8.142E-04	.0283	.1972	.0162
226	534.0	10.200	1.075	1.335E-03	.0463	1.601E-03	.0555	.1933	.0384
227	533.5	6.159	.900	1.118E-03	.0386	1.334E-03	.0463	.1972	.0384
228	531.7	10.932	1.444	1.738E-03	.0603	2.084E-03	.0723	.1933	.0653
229	531.4	8.313	1.058	1.321E-03	.0459	1.584E-03	.0550	.1972	.0653
232	528.1	.413	.055	6.817E-05	.0024	8.164E-05	.0028	.2567	.0235
233	528.7	.519	.079	9.695E-05	.0034	1.161E-04	.0040	.2606	.0235
235	526.7	.335	.049	6.036E-05	.0021	7.227E-05	.0025	.2567	.0491
237	527.3	.403	.057	6.964E-05	.0024	8.340E-05	.0029	.2606	.0491
						CARGO BAY HINGE NO. 1	
						X/L	Z,FULL SCALE(IN)
238	531.4	3.250	.435	5.382E-04	.0187	6.451E-04	.0224	.2879	420.0000
239	532.0	4.137	.554	6.857E-04	.0238	8.221E-04	.0285	.2917	420.0000
240	531.3	2.974	.424	5.252E-04	.0182	6.296E-04	.0218	.2840	415.0000
241	533.0	4.466	.628	7.786E-04	.0270	9.336E-04	.0324	.2879	415.0000
242	534.3	5.362	.766	9.518E-04	.0330	1.142E-03	.0396	.2917	415.0000
243	532.6	3.625	.443	5.495E-04	.0191	6.589E-04	.0229	.2801	405.0000
244	532.1	3.026	.354	4.381E-04	.0152	5.252E-04	.0182	.2840	405.0000
						CARGO BAY HINGE NO. 2	
						X/L	Z,FULL SCALE(IN)
245	532.8	3.063	.438	5.424E-04	.0188	6.504E-04	.0226	.3192	420.0000
246	533.3	3.362	.470	5.959E-04	.0207	7.146E-04	.0248	.3439	420.0000
247	533.0	2.905	.428	5.305E-04	.0184	6.362E-04	.0221	.3362	415.0000
248	533.8	3.422	.504	6.259E-04	.0217	7.508E-04	.0261	.3401	415.0000
249	535.2	4.575	.675	8.387E-04	.0291	1.006E-03	.0349	.3439	415.0000
250	535.1	3.826	.480	5.972E-04	.0207	7.166E-04	.0249	.3323	405.0000
251	534.5	3.995	.491	6.097E-04	.0212	7.314E-04	.0254	.3362	405.0000
						CARGO BAY HINGE NO. 3	
						X/L	Z,FULL SCALE(IN)
252	533.4	2.959	.429	5.326E-04	.0185	6.387E-04	.0222	.3923	420.0000
253	534.1	3.842	.558	6.925E-04	.0240	8.306E-04	.0288	.3961	420.0000
254	533.5	2.915	.443	5.490E-04	.0191	6.585E-04	.0228	.3884	415.0000
257	535.6	4.048	.546	6.796E-04	.0236	8.155E-04	.0283	.3845	405.0000
258	535.5	4.411	.601	7.479E-04	.0260	8.974E-04	.0311	.3884	405.0000

DATE 5/12/75

AEDC(ARO,INC.) ARNOLD AFS, TENNESSEE
VON KARMAN GAS DYNAMICS FACILITY
50 INCH HYPERSONIC TUNNEL B
V41H-87A

GROUP	TEST CONDITION	MODEL	MACH NO	PO,PSIA	TO,DEG R	ALPHA-MODEL	ALPHA-SECTOR	ALPHA-PREBEND	ROLL MODEL	YAW
83	29	140 B	7.99	675.0	1339	25.05	4.95	30.00	179.98	-.0

T-INF (DEG R)	P-INF (PSIA)	Q-INF (PSIA)	V-INF (FT/SEC)	RHO-INF (SLUGS/FT3)	MU-INF (LB-SEC/FT2)	RE/FT (FT-1)	HREF-FR (R= .0400FT)	STFR (R= .0400FT)	SWITCH POSITION
97.3	.070	3.115	3862	6.011E-05	7.833E-08	2.963E 06	2.882E-02	1.560E-02	3

TOP CENTERLINE

IC NO	TW	DTWDT	QDOT	H(TO)	H(TO)/HREF	H(.9TO)	H(.9TO)/HREF	X/L
367	628.3	106.124	12.935	1.769E-02	.6139	2.166E-02	.7516	0
368	577.3	80.683	10.459	1.372E-02	.4762	1.665E-02	.5777	.0008
369	558.4	52.549	6.225	7.970E-03	.2766	9.620E-03	.3338	.0019
370	549.1	36.692	4.568	5.703E-03	.1979	6.867E-03	.2383	.0037
371	548.4	29.877	2.943	3.721E-03	.1291	4.479E-03	.1554	.0058
372	541.8	21.405	2.764	3.465E-03	.1202	4.164E-03	.1445	.0087
373	539.6	13.806	1.812	2.265E-03	.0786	2.721E-03	.0944	.0118
374	538.7	11.074	1.452	1.814E-03	.0629	2.179E-03	.0756	.0151
375	537.2	9.188	1.258	1.568E-03	.0544	1.882E-03	.0653	.0182
376	539.0	7.813	1.032	1.289E-03	.0447	1.548E-03	.0537	.0215
377	539.6	7.129	.919	1.150E-03	.0399	1.381E-03	.0479	.0246
378	539.4	6.376	.745	9.314E-04	.0323	1.119E-03	.0388	.0278
379	537.7	3.558	.438	5.459E-04	.0199	6.554E-04	.0227	.0609
380	535.7	3.002	.309	3.840E-04	.0133	4.608E-04	.0160	.0646
381	534.7	2.735	.354	4.403E-04	.0153	5.283E-04	.0183	.0684
382	533.4	2.169	.234	3.520E-04	.0122	4.221E-04	.0146	.0721
383	532.6	2.104	.242	3.491E-04	.0121	4.185E-04	.0145	.0760
384	532.4	1.851	.258	3.193E-04	.0111	3.829E-04	.0133	.0796
385	532.2	1.780	.229	2.834E-04	.0098	3.397E-04	.0118	.0789
386	532.0	1.734	.205	2.539E-04	.0088	3.045E-04	.0106	.0982
387	532.2	1.659	.204	2.521E-04	.0087	3.023E-04	.0105	.1019
388	532.5	1.707	.162	2.011E-04	.0070	2.411E-04	.0084	.1160
389	531.4	1.351	.196	2.424E-04	.0084	2.906E-04	.0101	.1195
390	530.7	1.111	.175	2.162E-04	.0075	2.591E-04	.0090	.1231
391	530.9	.999	.159	1.966E-04	.0068	2.357E-04	.0082	.1268
392	530.8	.950	.163	2.011E-04	.0070	2.410E-04	.0084	.1305
393	530.6	.903	.153	1.887E-04	.0065	2.261E-04	.0078	.1338
394	530.4	.870	.146	1.803E-04	.0063	2.161E-04	.0075	.1376
395	530.2	.803	.120	1.482E-04	.0051	1.776E-04	.0062	.1411
396	530.5	.793	.117	1.450E-04	.0050	1.738E-04	.0060	.1448
397	530.6	1.057	.156	1.934E-04	.0067	2.318E-04	.0080	.1483
398	532.3	2.206	.310	3.841E-04	.0133	4.605E-04	.0160	.1519
399	536.0	4.753	.635	7.908E-04	.0274	9.490E-04	.0329	.1556

DATE 5/12/75

AEDC(ARO,INC.) ARNOLD AFS, TENNESSEE
VON KARMAN GAS DYNAMICS FACILITY
50 INCH HYPERSONIC TUNNEL B
V41B-87A

GROUP	TEST CONDITION	MODEL	MACH NO	PO,PSIA	TO,DEG R	ALPHA-MODEL	ALPHA-SECTOR	ALPHA-PREBEND	ROLL MODEL	YAW
63	29	140 B	7.99	675.0	1339	25.05	4.95	30.00	179.98	-.0

T-INF (DEG R)	P-INF (PSIA)	Q-INF (PSIA)	V-INF (FT/SEC)	RHO-INF (SLUGS/FT3)	MU-INF (LB-SEC/FT2)	RE/FT (FT-1)	HREF-FR (R= .0400FT)	STFR (R= .0400FT)	SWITCH POSITION
97.3	.070	3.115	3862	6.011E-05	7.833E-08	2.963E 06	2.882E-02	1.560E-02	3

TC NO	TW	DTWDT	QDOT	H(TO)	H(TO)/HREF	H(.9TO)	H(.9TO)/HREF	X/L
								TOP CENTERLINE
400	538.2	6.920	.935	1.167E-03	.0405	1.401E-03	.0486	.1582
401	538.4	7.843	1.018	1.271E-03	.0441	1.526E-03	.0529	.1608
402	538.8	9.384	1.172	1.464E-03	.0508	1.758E-03	.0610	.1635
403	539.6	9.495	1.157	1.446E-03	.0502	1.737E-03	.0603	.1664
404	540.4	10.244	1.244	1.557E-03	.0540	1.870E-03	.0649	.1691
405	541.9	11.171	1.357	1.702E-03	.0591	2.046E-03	.0710	.1720
406	539.6	9.671	1.174	1.467E-03	.0509	1.763E-03	.0612	.1748
407	539.2	8.623	1.116	1.394E-03	.0484	1.675E-03	.0581	.1769
408	538.8	8.331	1.223	1.528E-03	.0530	1.835E-03	.0637	.1800
409	537.2	6.669	.963	1.201E-03	.0417	1.442E-03	.0500	.1831
410	537.1	5.061	.729	9.084E-04	.0315	1.090E-03	.0378	.1863
411	535.0	4.202	.631	7.841E-04	.0272	9.407E-04	.0326	.1894
412	534.9	3.464	.471	5.848E-04	.0203	7.017E-04	.0243	.1931
413	533.7	2.624	.352	4.363E-04	.0151	5.233E-04	.0182	.1972
414	533.1	1.515	.203	2.517E-04	.0087	3.018E-04	.0105	.2049
415	531.4	.893	.088	1.089E-04	.0038	1.306E-04	.0045	.2250
416	529.9	.528	.062	7.621E-05	.0026	9.132E-05	.0032	.2500
								NOSE TC (Z = 338)
								X/L 2Y/B
145	585.7	71.183	6.787	1.298E-02	.4505	1.579E-02	.5479	.0008 .5039
146	587.2	73.984	10.140	1.353E-02	.4696	1.646E-02	.5713	.0023 .5082
147	574.4	61.105	8.355	1.092E-02	.3789	1.324E-02	.4594	.0043 .5135
148	567.2	48.433	6.818	8.830E-03	.3064	1.068E-02	.3707	.0068 .5205
149	558.1	34.629	5.041	6.451E-03	.2239	7.786E-03	.2702	.0095 .5279
150	560.2	31.270	4.514	5.793E-03	.2010	6.996E-03	.2428	.0122 .5354
151	559.5	21.928	3.115	3.981E-03	.1381	4.806E-03	.1668	.0218 .5621
152	559.2	21.622	2.953	3.765E-03	.1313	4.570E-03	.1586	.0251 .5712
153	559.2	21.435	2.837	3.340E-03	.1173	4.080E-03	.1416	.0286 .5808
154	559.0	20.755	2.600	3.332E-03	.1156	4.022E-03	.1396	.0319 .5898
155	557.9	19.945	2.524	3.230E-03	.1121	3.898E-03	.1353	.0354 .5995
156	556.9	18.777	2.350	3.003E-03	.1042	3.623E-03	.1257	.0387 .6085
157	557.1	19.501	2.414	3.066E-03	.1071	3.723E-03	.1292	.0420 .6176
158	557.5	19.122	2.368	3.028E-03	.1051	3.654E-03	.1268	.0462 .6294
159	556.2	19.287	2.178	2.780E-03	.0965	3.354E-03	.1164	.0503 .6406

GROUP B3 CENTERLINE TIME 2.90

CH	TC	FIT LENGTH	DTDWT	UNCERTAINTY	CH	TC	FIT LENGTH	DTDWT	UNCERTAINTY
1	221	2.00	-4.397	-1.2465	50	384	1.20	1.851	.0188
2	222	1.20	1.369	.0104	51	385	1.20	1.780	.0202
3	223	.60	5.627	.0124	52	386	1.20	1.734	.0153
4	224	.60	7.074	.0124	53	387	1.20	1.659	.0093
5	225	.60	4.581	.0280	54	388	1.20	1.707	.0147
6	226	.40	10.200	.0053	55	389	1.20	1.351	.0166
7	227	.60	6.156	.0487	56	390	1.20	1.111	.0678
8	228	.40	10.932	.0109	57	391	2.00	.999	.0077
9	229	.40	8.313	.0171	58	392	2.00	.950	.0083
10	232	2.00	.410	.0191	59	393	2.00	.903	.0116
11	233	2.00	.519	.0545	60	394	2.00	.870	.0089
12	236	2.00	.336	.0358	61	395	2.00	.803	.0181
13	237	2.00	.403	.0235	62	396	2.00	.793	.0101
14	238	.60	3.250	.0106	63	397	1.20	1.057	.0222
15	239	.60	4.137	.0160	64	398	.80	2.206	.0177
16	240	.80	2.974	.0129	65	399	.60	4.753	.0140
17	241	.60	4.466	.0160	66	400	.60	6.920	.0096
18	242	.60	5.362	.0105	67	401	.60	7.843	.0050
19	243	.80	3.626	.0125	68	402	.40	9.384	.0554
20	244	.80	3.026	.0167	69	403	.40	9.495	.0180
21	245	.80	3.063	.0071	70	404	.40	10.244	.0117
22	246	.80	3.362	.0072	71	405	.40	11.171	.0211
23	247	.80	2.965	.0216	72	406	.40	9.671	.0056
24	248	.80	3.422	.0143	73	407	.40	8.623	.0089
25	249	.60	4.575	.0129	74	408	.40	8.331	.0134
26	250	.80	3.826	.0073	75	409	.60	6.689	.0050
27	251	.60	3.995	.0128	76	410	.60	5.061	.0187
28	252	.80	2.959	.0111	77	411	.60	4.202	.0144
29	253	.80	3.642	.0072	78	412	.80	3.464	.0093
30	254	.80	2.915	.0142	79	413	.80	2.624	.0720
31	257	.80	4.048	.0076	80	414	1.20	1.515	.0100
32	258	.60	4.411	.0113	81	415	2.00	.893	.0210
33	367	.20	106.124	.0030	82	416	2.00	.528	.0198
34	368	.20	80.683	.0019	83	145	.20	71.183	.0041
35	369	.20	52.549	.0030	84	146	.20	73.984	.0025
36	370	.20	36.692	.0018	85	147	.20	61.105	.0023
37	371	.30	29.877	.0040	86	148	.20	48.433	.0035
38	372	.30	21.405	.0069	87	149	.20	34.629	.0186
39	373	.40	13.806	.0056	88	150	.30	31.270	.0034
40	374	.40	11.074	.0082	89	151	.30	21.928	.0047
41	375	.40	9.188	.0054	90	152	.30	21.622	.0255
42	376	.60	7.813	.0051	91	153	.30	21.436	.0034
43	377	.60	7.129	.0149	92	154	.30	20.755	.0107
44	378	.60	6.376	.0079	93	155	.30	19.945	.0049
45	379	.80	3.558	.0105	94	156	.30	19.777	.0184
46	380	.80	3.002	.0080	95	157	.30	19.501	.0088
47	381	.80	2.735	.0240	96	158	.30	19.122	.0064
48	382	.80	2.169	.0153	97	159	.30	19.287	.0048
49	383	.80	2.194	.0192	98	0	-0	0	0

DATE 5/12/75

AEDC(ARO,INC.) ARNOLD AFS, TENNESSEE
VON KARMAN GAS DYNAMICS FACILITY
50 INCH HYPERSONIC TUNNEL B
V41H-87A

GROUP	TEST CONDITION	MODEL	MACH NO	PO,PSIA	TO,DEG R	ALPHA-MODEL	ALPHA-SECTOR	ALPHA-PREBEND	ROLL MODEL	YAW
E4	30	140 B	7.99	674.4	1341	30.12	-.12	30.00	179.98	.0

T-INF (DEG R)	P-INF (PSIA)	Q-INF (PSIA)	V-INF (FT/SEC)	RHO-INF (SLUGS/FT3)	MU-INF (LB-SEC/FT2)	RE/FT (FT-1)	HREF-FR (R= .0400FT)	STFR (R= .0400FT)	SWITCH POSITION
97.4	.673	3.112	3865	5.996E-05	7.845E-08	2.954E 06	2.881E-02	1.562E-02	1

TC NO	TW	DTWDT	QDOT	H(TO)	H(TO)/HREF	H(.9TO)	H(.9TO)/HREF	X/L	Z,FULL SCALE(IN)
								FUSELAGE VENT NO. 1	
1	535.5	3.941	.520	6.448E-04	.0224	7.735E-04	.0268	.4434	376.6300
2	534.9	3.475	.468	5.799E-04	.0201	6.955E-04	.0241	.4264	371.6300
3	534.1	2.797	.383	4.749E-04	.0165	5.695E-04	.0198	.4303	371.6300
4	534.1	2.775	.377	4.666E-04	.0162	5.596E-04	.0194	.4342	371.6300
5	534.6	2.832	.377	4.672E-04	.0162	5.603E-04	.0194	.4380	371.6300
6	535.7	2.557	.338	4.197E-04	.0146	5.036E-04	.0175	.4434	369.1300
7	534.8	1.818	.265	3.281E-04	.0114	3.936E-04	.0137	.4226	366.6300
8	534.0	2.092	.315	3.898E-04	.0135	4.675E-04	.0162	.4264	366.6300
9	534.7	1.599	.232	2.878E-04	.0100	3.452E-04	.0120	.4303	366.6300
10	534.7	1.529	.218	2.701E-04	.0094	3.240E-04	.0112	.4342	366.6300
11	535.7	1.735	.234	2.908E-04	.0101	3.489E-04	.0121	.4380	366.6300
12	537.4	1.459	.201	2.500E-04	.0087	3.000E-04	.0104	.4496	366.6300
13	539.5	.797	.117	1.459E-04	.0051	1.753E-04	.0061	.4187	357.1300
14	537.1	1.088	.148	1.846E-04	.0064	2.215E-04	.0077	.4396	361.6300
15	538.4	1.129	.151	1.875E-04	.0065	2.251E-04	.0078	.4434	361.6300
16	539.7	.711	.096	1.200E-04	.0042	1.441E-04	.0050	.4396	355.6300
17	541.8	.731	.099	1.238E-04	.0043	1.487E-04	.0052	.4434	355.6300
18	543.1	.530	.074	9.287E-05	.0032	1.116E-04	.0039	.4396	351.6300
19	545.5	.307	.043	5.402E-05	.0019	6.497E-05	.0023	.4291	332.6300
								CARGO BAY VENT NO. 1	
22	537.9	5.819	.867	1.004E-03	.0349	1.206E-03	.0418	.3974	397.6300
23	535.3	4.746	.662	8.208E-04	.0285	9.846E-04	.0342	.4013	397.6300
24	535.7	4.918	.684	8.236E-04	.0286	9.881E-04	.0343	.4052	397.6300
25	536.1	5.431	.714	8.863E-04	.0308	1.063E-03	.0369	.4090	397.6300
26	537.8	6.831	.896	1.114E-03	.0387	1.338E-03	.0464	.4129	397.6300
27	536.5	5.064	.704	8.753E-04	.0304	1.050E-03	.0365	.3936	392.6300
28	535.4	4.374	.626	7.792E-04	.0270	9.347E-04	.0324	.3974	392.6300
29	535.3	5.391	.776	9.639E-04	.0335	1.157E-03	.0401	.4013	392.6300
30	536.4	6.319	.907	1.127E-03	.0391	1.352E-03	.0469	.4052	392.6300
31	537.2	7.775	1.085	1.349E-03	.0468	1.619E-03	.0562	.4090	392.6300
32	536.9	8.485	1.123	1.396E-03	.0485	1.675E-03	.0581	.4129	392.6300
33	537.8	7.716	1.101	1.370E-03	.0476	1.645E-03	.0571	.4090	386.1300
34	538.5	9.005	1.217	1.516E-03	.0526	1.820E-03	.0632	.4129	387.6300
35	540.7	7.083	1.033	1.253E-03	.0435	1.505E-03	.0522	.3897	383.1300
36	538.1	6.417	.930	1.158E-03	.0402	1.390E-03	.0483	.4090	378.6300
37	538.5	9.044	1.271	1.583E-03	.0549	1.901E-03	.0660	.4129	382.1300
38	537.8	6.445	.897	1.116E-03	.0387	1.339E-03	.0465	.4129	377.1300
39	539.8	5.367	.783	9.758E-04	.0339	1.172E-03	.0407	.4001	373.6300
								PROTUBERANCES	
41	540.0	7.372	.997	1.232E-03	.0428	1.480E-03	.0513	.3546	379.0500
42	541.5	7.841	1.072	1.340E-03	.0465	1.610E-03	.0559	.3604	379.0500
43	538.1	5.636	.731	9.104E-04	.0316	1.093E-03	.0379	.3450	374.0500

DATE 5/12/75

AEDC(ARO,INC.) ARNOLD AFS, TENNESSEE
VON KARMAN GAS DYNAMICS FACILITY
50 INCH HYPERSONIC TUNNEL B
V41B-B7A

GROUP	TEST CONDITION	MODEL	MACH NO	PO,PSIA	TO,DEG R	ALPHA-MODEL	ALPHA-SECTOR	ALPHA-PREBEND	ROLL MODEL	YAW
84	30	140 B	7.99	674.4	1341	30.12	-.12	30.00	179.98	.0

T-INF (DEG R)	P-INF (PSIA)	Q-INF (PSIA)	V-INF (FT/SEC)	RHO-INF (SLUGS/FT3)	MU-INF (LB-SEC/FT2)	RE/FT (FT-1)	HREF-FR (R= .0400FT)	STFR (R= .0400FT)	SWITCH POSITION
97.4	.070	3.112	3865	5.996E-05	7.845E-08	2.954E 06	2.881E-02	1.562E-02	1

TC NO	TW	DTWDT	QDOT	H(TO)	H(TO)/HREF	H(.9TO)	H(.9TO)/HREF
44	539.2	7.431	1.012	1.262E-03	.0438	1.516E-03	.0526
45	541.7	7.947	1.101	1.376E-03	.0478	1.654E-03	.0574
46	541.5	8.656	1.211	1.514E-03	.0526	1.820E-03	.0632
47	541.6	8.884	1.183	1.479E-03	.0513	1.777E-03	.0617
48	542.3	7.116	.977	1.222E-03	.0424	1.468E-03	.0510
49	542.9	9.218	1.269	1.590E-03	.0552	1.910E-03	.0663
50	542.5	5.951	.828	1.036E-03	.0359	1.245E-03	.0432
51	543.1	5.952	.809	1.013E-03	.0352	1.218E-03	.0423
52	542.8	4.371	.602	7.526E-04	.0261	9.043E-04	.0314
53	542.0	4.587	.671	8.388E-04	.0291	1.009E-03	.0350
54	532.9	2.329	.332	4.101E-04	.0142	4.916E-04	.0171
55	543.0	3.522	.504	6.313E-04	.0219	7.588E-04	.0263

PROTUBERANCES

								X/L	Z,FULL SCALE(IN)
44	539.2	7.431	1.012	1.262E-03	.0438	1.516E-03	.0526	.3508	374.0500
45	541.7	7.947	1.101	1.376E-03	.0478	1.654E-03	.0574	.3566	374.0500
46	541.5	8.656	1.211	1.514E-03	.0526	1.820E-03	.0632	.3604	374.0500
47	541.6	8.884	1.183	1.479E-03	.0513	1.777E-03	.0617	.3392	366.5500
48	542.3	7.116	.977	1.222E-03	.0424	1.468E-03	.0510	.3566	366.5500
49	542.9	9.218	1.269	1.590E-03	.0552	1.910E-03	.0663	.3392	360.7000
50	542.5	5.951	.828	1.036E-03	.0359	1.245E-03	.0432	.3566	360.7000
51	543.1	5.952	.809	1.013E-03	.0352	1.218E-03	.0423	.3604	360.7000
52	542.8	4.371	.602	7.526E-04	.0261	9.043E-04	.0314	.3392	353.2000
53	542.0	4.587	.671	8.388E-04	.0291	1.009E-03	.0350	.3450	353.2000
54	532.9	2.329	.332	4.101E-04	.0142	4.916E-04	.0171	.3508	353.2000
55	543.0	3.522	.504	6.313E-04	.0219	7.588E-04	.0263	.3566	353.2000

SUBLIMATOR VENT NO. 1

								X/L	Z,FULL SCALE(IN)
56	533.8	2.687	.346	4.278E-04	.0148	5.130E-04	.0178	.3031	371.1300
57	535.3	3.687	.450	5.584E-04	.0194	6.699E-04	.0233	.3074	369.1300
58	538.5	5.352	.707	8.801E-04	.0305	1.057E-03	.0367	.3089	363.6300
59	542.4	6.805	.897	1.123E-03	.0390	1.350E-03	.0468	.3074	358.1300
60	541.7	6.011	.836	1.048E-03	.0364	1.259E-03	.0437	.3031	356.1300
61	539.6	4.881	.619	7.715E-04	.0268	9.265E-04	.0322	.2988	358.1300
62	536.4	3.631	.445	5.523E-04	.0192	6.628E-04	.0230	.2973	363.6300
63	534.3	2.721	.355	4.376E-04	.0153	5.272E-04	.0183	.2988	369.1300
64	[illegible]	[illegible]	[illegible]	[illegible]	.0001	[illegible]	.0001	.3031	376.1300
65	533.6	2.205	.299	3.706E-04	.0129	4.443E-04	.0154	.3089	378.6300
66	535.8	3.361	.424	5.258E-04	.0182	6.308E-04	.0219	.3101	372.6300
67	538.2	4.161	.585	7.279E-04	.0253	8.738E-04	.0303	.3157	370.3800
68	541.3	5.990	.760	9.496E-04	.0330	1.141E-03	.0396	.3128	363.6300

DATE 5/12/75

AEDC(ARO,INC.) ARNOLD AFS, TENNESSEE
VON KARMAN GAS DYNAMICS FACILITY
50 INCH HYPERSONIC TUNNEL B
V41B-87A

GROUP	TEST CONDITION	MODEL	MACH NO	PO,PSIA	TO,DEG R	ALPHA-MODEL	ALPHA-SECTOR	ALPHA-PREBEND	ROLL MODEL	YAW
64	39	140 B	7.99	674.4	1341	30.12	-.12	30.00	179.98	.0

T-INF (DEG R)	P-INF (PSIA)	Q-INF (PSIA)	V-INF (FT/SEC)	RHO-INF (SLUGS/FT3)	MU-INF (LB-SEC/FT2)	RE/FT (FT-1)	HREF-FR (R= .0400FT)	STFR (R= .0400FT)	SWITCH POSITION
97.4	.276	3.112	3865	5.996E-05	7.845E-06	2.954E 06	2.881E-02	1.562E-02	1

PC NO	TW	QTAOT	CDOT	H(TO)	H(TO)/HREF	H(.9TO)	H(.9TO)/HREF
						FUSELAGE VENT PANEL NO. 7	
						X/L	Z,FULL SCALE(IN)
69	531.3	2.976	.414	5.111E-04	.0177	6.125E-04	.0213	.2487	356.4000
70	531.5	2.753	.335	4.154E-04	.0144	4.979E-04	.0173	.2591	356.4000
71	533.2	3.455	.536	6.630E-04	.0230	7.950E-04	.0276	.2419	351.4000
72	531.4	2.939	.416	5.132E-04	.0178	6.152E-04	.0213	.2487	351.4000
73	532.1	2.581	.373	4.606E-04	.0160	5.521E-04	.0192	.2552	351.4000
74	532.5	2.715	.329	4.063E-04	.0141	4.872E-04	.0169	.2610	351.4000
75	534.5	3.151	.428	5.303E-04	.0184	6.360E-04	.0221	.2419	342.8000
77	534.3	3.138	.444	5.505E-04	.0191	6.603E-04	.0229	.2552	342.8000
78	534.4	3.922	.538	6.688E-04	.0232	8.025E-04	.0279	.2610	342.8000
79	534.0	3.830	.471	5.802E-04	.0203	7.037E-04	.0244	.2419	334.2000
80	537.1	4.001	.548	6.786E-04	.0236	8.144E-04	.0283	.2487	334.2000
81	539.3	5.047	.715	8.790E-04	.0305	1.056E-03	.0366	.2552	334.2000
						ACCESS HATCH WINDOW	
						X/L	Z,FULL SCALE(IN)
83	531.6	5.849	.749	9.631E-04	.0334	1.154E-03	.0401	.2131	398.0000
84	531.5	6.971	.917	1.133E-03	.0393	1.357E-03	.0471	.2131	388.0000
85	531.0	6.035	.829	1.023E-03	.0355	1.226E-03	.0425	.2131	393.0000
87	529.0	4.646	.662	8.152E-04	.0283	9.764E-04	.0339	.2222	395.8000
88	531.2	6.572	.917	1.132E-03	.0393	1.356E-03	.0471	.2193	386.5000
89	531.7	5.913	.858	1.072E-03	.0372	1.285E-03	.0446	.2177	381.8000
90	531.3	6.313	.859	1.060E-03	.0368	1.270E-03	.0441	.2297	389.5000
91	531.3	6.869	.932	1.151E-03	.0399	1.379E-03	.0479	.2243	382.5000
92	531.5	6.255	.882	1.089E-03	.0378	1.305E-03	.0453	.2214	378.7000
93	531.4	5.850	.746	9.212E-04	.0320	1.104E-03	.0383	.2343	374.0000
94	533.3	6.784	.879	1.088E-03	.0378	1.304E-03	.0453	.2274	375.5000
95	532.5	6.349	.901	1.114E-03	.0387	1.335E-03	.0463	.2239	373.3000
96	531.7	5.044	.655	8.085E-04	.0281	9.691E-04	.0336	.2363	368.0000
97	532.7	6.084	.777	9.602E-04	.0333	1.151E-03	.0400	.2286	368.0000
98	532.2	6.015	.843	1.041E-03	.0361	1.248E-03	.0433	.2247	368.0000
100	533.7	5.029	.712	8.812E-04	.0306	1.057E-03	.0367	.2274	360.5000
102	535.7	5.141	.726	9.010E-04	.0313	1.081E-03	.0375	.2081	354.3000
103	535.3	6.081	.799	9.910E-04	.0344	1.189E-03	.0413	.2023	362.7000
105	533.6	6.809	.851	1.054E-03	.0366	1.263E-03	.0438	.2050	378.7000
106	532.5	6.849	.877	1.085E-03	.0377	1.301E-03	.0451	.2050	386.2000

GROUP R4 CENTERLINE TIME 2.90

CH	TC	FIT LENGTH	DTDWT	UNCERTAINTY	CH	TC	FIT LENGTH	DTDWT	UNCERTAINTY
1	1	.80	3.941	.0079	50	53	.60	4.587	.0273
2	2	.80	3.478	.0105	51	54	.80	2.329	.0288
3	3	.80	2.797	.0128	52	55	.80	3.522	.0125
4	4	.80	2.775	.0105	53	56	.80	2.687	.0106
5	5	.80	2.832	.0263	54	57	.80	3.687	.0143
6	6	.80	2.557	.0134	55	58	.60	5.352	.0138
7	7	1.20	1.818	.0612	56	59	.60	6.805	.0225
8	8	.80	2.092	.0144	57	60	.60	6.011	.0063
9	9	1.20	1.595	.0219	58	61	.60	4.861	.0108
10	10	1.20	1.529	.0184	59	62	.80	3.630	.0179
11	11	1.20	1.738	.0123	60	63	.80	2.721	.0147
12	12	1.20	1.455	.0160	61	64	2.00	-.023	-.8497
13	13	2.00	.797	.0101	62	65	.80	2.205	.0123
14	14	1.20	1.088	.0164	63	66	.80	3.361	.0115
15	15	1.20	1.129	.0325	64	67	.60	4.161	.0094
16	16	2.00	.711	.0154	65	68	.60	5.990	.0085
17	17	2.00	.731	.0242	66	69	.80	2.976	.0189
18	18	2.00	.530	.0136	67	70	.80	2.753	.0070
19	19	2.00	.387	.0390	68	71	.80	3.950	.0803
20	22	.60	5.819	.0167	69	72	.80	2.938	.0279
21	23	.60	4.746	.0065	70	73	.80	2.881	.0104
22	24	.60	4.916	.0117	71	74	.80	2.716	.0278
23	25	.60	5.431	.0178	72	75	.80	3.151	.0102
24	26	.60	6.831	.0130	73	77	.80	3.138	.0119
25	27	.60	5.064	.0167	74	78	.80	3.922	.0104
26	28	.60	4.378	.0100	75	79	.80	3.680	.0158
27	29	.60	5.391	.0108	76	80	.80	4.001	.0117
28	30	.60	6.319	.0071	77	81	.60	5.047	.0094
29	31	.60	7.775	.0059	78	83	.60	5.849	.0050
30	32	.40	8.485	.0117	79	84	.60	6.971	.0367
31	33	.60	7.716	.0058	80	85	.60	6.096	.0080
32	34	.40	9.005	.0127	81	87	.60	4.646	.0151
33	35	.60	7.083	.0060	82	88	.60	6.572	.0078
34	36	.60	6.417	.0083	83	89	.60	5.913	.0135
35	37	.40	9.044	.0068	84	90	.60	6.313	.0115
36	38	.60	6.445	.0082	85	91	.60	6.809	.0056
37	39	.60	5.367	.0080	86	92	.60	6.255	.0092
38	41	.60	7.372	.0085	87	93	.60	5.850	.0173
39	42	.60	7.841	.0053	88	94	.60	6.768	.0075
40	43	.60	5.636	.0114	89	95	.60	6.349	.0151
41	44	.60	7.431	.0061	90	96	.60	5.044	.0444
42	45	.60	7.947	.0063	91	97	.60	6.084	.0160
43	46	.40	8.656	.0136	92	98	.60	6.015	.0166
44	47	.40	8.894	.0096	93	100	.60	5.029	.0106
45	48	.60	7.116	.0071	94	102	.60	5.140	.0207
46	49	.40	9.218	.0110	95	103	.60	6.081	.0157
47	50	.60	5.951	.0107	96	105	.60	6.809	.0108
48	51	.60	5.952	.0064	97	106	.60	6.849	.0083
49	52	.60	4.371	.0144	98	0	-0	0	0

85 .050

BIT ON LOOP 61

DATE 5/12/75

AEDC(ARO,INC.) ARNOLD AFS, TENNESSEE
VON KARMAN GAS DYNAMICS FACILITY
50 INCH HYPERSONIC TUNNEL B
V41R-87A

GROUP	TEST CONDITION	MODEL	MACH NO	PO,PSIA	TO,DEG R	ALPHA-MODEL	ALPHA-SECTOR	ALPHA-PREBEND	ROLL MODEL	YAW
85	30	140.6	7.99	675.2	1343	30.07	-.07	30.00	179.98	.0

T-INF (DEG R)	P-INF (PSIA)	Q-INF (PSIA)	V-INF (FT/SEC)	RHO-INF (SLUGS/FT3)	MU-INF (LB-SEC/FT2)	RE/FT (FT-1)	HREF-FR (R= .0400FT)	STFR (R= .0400FT)	SWITCH POSITION
97.5	.070	3.116	3867	5.997E-05	7.852E-08	2.953E 06	2.884E-02	1.562E-02	2

TC NO	TW	DT*CT	QDOT	H(TO)	H(TO)/HREF	H(.9TO)	H(.9TO)/HREF	X/L	Z,FULL SCALE(IN)
								ACCESS HATCH WINDOW	
107	530.6	5.212	.746	9.184E-04	.0318	1.100E-03	.0382	.2050	396.2000
								FUSELAGE VENT PANEL NO. 3 AND 1	
								X/L	Z,FULL SCALE(IN)
108	531.7	7.195	.761	9.379E-04	.0325	1.124E-03	.0390	.1244	377.5000
109	529.8	6.244	.771	9.480E-04	.0329	1.135E-03	.0394	.1302	377.5000
110	529.6	6.034	.764	9.397E-04	.0326	1.126E-03	.0390	.1360	377.5000
111	530.5	6.342	.763	9.397E-04	.0326	1.126E-03	.0390	.1418	377.5000
112	531.9	6.790	.806	9.936E-04	.0345	1.191E-03	.0413	.1476	377.5000
113	531.6	6.860	.786	9.694E-04	.0336	1.162E-03	.0403	.1215	273.5000
114	530.7	6.233	.748	9.204E-04	.0319	1.103E-03	.0382	.1273	273.5000
115	530.5	5.815	.721	8.873E-04	.0308	1.063E-03	.0369	.1331	273.5000
116	530.7	6.246	.766	9.429E-04	.0327	1.130E-03	.0392	.1389	273.5000
117	532.8	6.645	.765	9.447E-04	.0328	1.132E-03	.0393	.1447	273.5000
118	532.1	5.317	.735	9.070E-04	.0315	1.087E-03	.0377	.1409	366.0000
119	533.7	6.156	.797	9.850E-04	.0342	1.181E-03	.0410	.1442	366.0000
120	534.5	6.116	.765	9.463E-04	.0328	1.135E-03	.0394	.1215	359.5000
121	534.3	5.622	.691	8.541E-04	.0296	1.024E-03	.0355	.1303	359.5000
122	534.8	5.653	.735	8.719E-04	.0302	1.046E-03	.0363	.1337	359.5000
								LOWER RCS NOZZLES	
								X/L	Z,FULL SCALE(IN)
124	529.4	3.215	.287	3.522E-04	.0122	4.218E-04	.0146	.0950	400.0000
125	528.5	3.290	.358	4.391E-04	.0152	5.259E-04	.0182	.0988	400.0000
126	529.1	3.363	.450	5.652E-04	.0196	6.770E-04	.0235	.1027	400.0000
127	528.7	3.238	.435	5.349E-04	.0185	6.405E-04	.0222	.0911	395.0000
128	528.4	3.504	.424	5.211E-04	.0181	6.239E-04	.0216	.0950	395.0000
129	529.1	4.324	.577	6.220E-04	.0216	7.456E-04	.0259	.0988	395.0000
130	532.0	4.076	.447	6.011E-04	.0208	7.204E-04	.0250	.0810	390.0000
131	529.3	3.795	.560	6.880E-04	.0239	8.240E-04	.0286	.0857	390.0000
132	530.2	5.899	.686	8.445E-04	.0293	1.012E-03	.0351	.0963	390.0000
133	529.9	4.045	.490	6.032E-04	.0209	7.225E-04	.0251	.0857	383.8000
134	528.9	5.112	.683	8.393E-04	.0291	1.005E-03	.0349	.0872	377.3000
135	530.8	6.843	.821	1.011E-03	.0350	1.211E-03	.0420	.0903	374.5500
136	532.1	7.203	.800	9.870E-04	.0342	1.183E-03	.0410	.0960	374.5500
137	531.0	6.978	.912	1.123E-03	.0389	1.346E-03	.0467	.0872	370.5500
138	532.1	7.513	.865	1.067E-03	.0370	1.278E-03	.0443	.0928	370.5500
139	533.2	7.089	.965	1.118E-03	.0388	1.340E-03	.0465	.0816	366.0500
140	533.4	7.442	.947	1.170E-03	.0406	1.403E-03	.0486	.0934	362.4000
141	533.4	6.779	.896	1.107E-03	.0384	1.327E-03	.0460	.0973	362.4000
142	534.8	5.532	.603	7.464E-04	.0259	8.951E-04	.0310	.0833	355.2000
143	534.1	8.152	.819	1.013E-03	.0351	1.215E-03	.0421	.0919	355.2000
144	536.7	9.237	1.219	1.512E-03	.0524	1.814E-03	.0629	.0949	349.0000

DATE 5/12/75

AEDC(ARO,INC.) ARNOLD AFS, TENNESSEE
VON KARMAN GAS DYNAMICS FACILITY
50 INCH HYPERSONIC TUNNEL B
V41B-87A

GROUP	TEST CONDITION	MODEL	MACH NO	PO,PSIA	TO,DEG R	ALPHA-MODEL	ALPHA-SECTOR	ALPHA-PREBEND	ROLL MODEL	YAW
85	30	140 B	7.99	675.2	1343	30.07	-.07	30.00	179.98	.0

T-INF (DEG R)	P-INF (PSIA)	Q-INF (PSIA)	V-INF (FT/SEC)	RHO-INF (SLUGS/FT3)	MU-INF (LB-SEC/FT2)	RE/FT (FT-1)	HREF-FR (R= .0400FT)	STFR (R= .0400FT)	SWITCH POSITION
97.5	.070	3.116	3867	5.997E-05	7.852E-08	2.953E 06	2.884E-02	1.562E-02	2

TC NO	TW	DTWDT	QDOT	H(TO)	H(TO)/HREF	H(.9TO)	H(.9TO)/HREF
161	535.0	2.534	.301	3.720E-04	.0129	4.461E-04	.0155
162	533.6	2.422	.229	2.833E-04	.0098	3.396E-04	.0118
163	531.9	1.843	.226	2.788E-04	.0097	3.341E-04	.0116
164	531.1	1.596	.208	2.560E-04	.0089	3.067E-04	.0106
165	532.0	1.443	.182	2.239E-04	.0078	2.684E-04	.0093
166	532.0	1.320	.169	2.084E-04	.0072	2.497E-04	.0087
167	535.0	2.159	.292	3.619E-04	.0126	4.341E-04	.0151
168	534.0	2.301	.241	2.985E-04	.0104	3.579E-04	.0124
169	531.7	1.776	.215	2.656E-04	.0092	3.183E-04	.0110
170	530.5	1.412	.176	2.170E-04	.0075	2.600E-04	.0090
171	530.4	1.615	.194	2.392E-04	.0083	2.866E-04	.0099
172	529.9	1.377	.179	2.204E-04	.0076	2.640E-04	.0092
173	531.9	1.368	.182	2.249E-04	.0078	2.696E-04	.0093
174	530.2	.882	.100	1.233E-04	.0043	1.478E-04	.0051
175	529.9	.933	.133	1.641E-04	.0057	1.966E-04	.0068
176	529.7	.871	.118	1.455E-04	.0050	1.743E-04	.0060
177	538.5	10.777	1.486	1.847E-03	.0641	2.217E-03	.0769
178	541.7	14.210	2.803	3.499E-03	.1213	4.203E-03	.1458
179	549.1	27.172	5.735	7.225E-03	.2506	8.696E-03	.3016
180	535.5	6.781	.885	1.097E-03	.0380	1.316E-03	.0456
181	533.1	4.352	.591	7.293E-04	.0253	8.743E-04	.0303
182	539.1	17.250	3.464	3.065E-03	.1063	3.680E-03	.1276
183	526.9	.932	.117	1.428E-04	.0050	1.710E-04	.0059
184	526.6	1.006	.137	1.678E-04	.0058	2.009E-04	.0070
185	532.5	5.360	.643	7.941E-04	.0275	9.518E-04	.0330
186	532.1	4.320	.542	6.680E-04	.0232	8.006E-04	.0278
187	536.6	11.433	1.524	1.890E-03	.0655	2.268E-03	.0786
188	543.6	21.109	4.935	6.175E-03	.2141	7.422E-03	.2574
189	529.4	2.740	.389	4.788E-04	.0166	5.735E-04	.0199
190	529.9	3.384	.486	5.974E-04	.0207	7.157E-04	.0248
191	531.7	6.253	.954	1.176E-03	.0408	1.409E-03	.0489

UPPER RCS NOZZLES

X/L	2Y/B
.0619	-.0160
.0709	-.0160
.0807	-.0160
.0943	-.0160
.0978	-.0160
.1013	-.0160
.0619	-.0320
.0709	-.0320
.0807	-.0320
.0943	-.0320
.0978	-.0320
.1013	-.0320
.0807	-.0480
.0943	-.0480
.0978	-.0480
.1013	-.0480

CANOPY

DATE 5/12/75

AEDC(ARO,INC.) ARNOLD AFS, TENNESSEE
VON KARMAN GAS DYNAMICS FACILITY
50 INCH HYPERSONIC TUNNEL B
V41B-67A

GROUP	TEST CONDITION	MODEL	MACH NO	PO,PSIA	TO,DEG R	ALPHA-MODEL	ALPHA-SECTOR	ALPHA-PREBEND	ROLL MODEL	YAW
85	30	140 B	7.99	675.2	1343	30.07	-.07	30.00	179.98	.0

T-INF (DEG R)	P-INF (PSIA)	Q-INF (PSIA)	V-INF (FT/SEC)	RHO-INF (SLUGS/FT3)	MU-INF (LB-SEC/FT2)	RE/FT (FT-1)	HREF-FR (R= .0400FT)	STFR (R= .0400FT)	SWITCH POSITION
97.5	.070	3.116	3867	5.997E-05	7.852E-08	2.953E 06	2.884E-02	1.562E-02	2

CANOPY

TC NO	TW	DTWDT	QDOT	H(TO)	H(TO)/HREF	H(.9TO)	H(.9TO)/HREF
152	524.9	.502	.071	8.627E-05	.0030	1.032E-04	.0036
153	533.2	7.698	1.481	1.829E-03	.0634	2.193E-03	.0760
154	525.5	1.083	.139	1.703E-04	.0059	2.037E-04	.0071
155	527.2	2.426	.298	3.653E-04	.0127	4.373E-04	.0152
156	529.4	3.974	.521	6.400E-04	.0222	7.665E-04	.0266
157	525.9	.854	.094	1.030E-04	.0036	1.233E-04	.0043
158	524.2	1.069	.124	1.509E-04	.0052	1.805E-04	.0063
159	524.5	1.241	.166	2.028E-04	.0070	2.426E-04	.0084
200	526.6	3.471	.493	6.035E-04	.0209	7.224E-04	.0251
201	531.5	7.259	1.023	1.261E-03	.0437	1.511E-03	.0524
202	531.1	5.689	.718	8.845E-04	.0307	1.060E-03	.0368
203	523.2	1.193	.147	1.798E-04	.0062	2.150E-04	.0075
204	524.2	2.186	.338	4.130E-04	.0143	4.940E-04	.0171
205	528.3	5.324	.827	1.016E-03	.0352	1.216E-03	.0422
206	526.0	.592	.078	9.566E-05	.0033	1.145E-04	.0040
207	530.1	6.281	.840	1.033E-03	.0358	1.238E-03	.0429
208	522.8	1.078	.144	1.757E-04	.0061	2.101E-04	.0073
209	522.7	1.146	.157	1.911E-04	.0066	2.285E-04	.0079
210	523.0	1.166	.155	1.888E-04	.0065	2.258E-04	.0078
211	524.0	.420	.051	6.198E-05	.0021	7.413E-05	.0026
212	524.2	1.070	.144	1.753E-04	.0061	2.098E-04	.0073
213	523.3	1.565	.206	2.520E-04	.0087	3.013E-04	.0105
214	523.3	2.305	.322	3.925E-04	.0136	4.695E-04	.0163
215	523.5	1.677	.237	2.892E-04	.0100	3.458E-04	.0120
216	527.6	4.829	.684	8.366E-04	.0291	1.004E-03	.0348
217	528.7	5.120	.728	8.945E-04	.0310	1.071E-03	.0371
218	522.5	1.503	.206	2.513E-04	.0087	3.005E-04	.0104
219	523.3	2.828	.346	4.827E-04	.0167	5.773E-04	.0200
220	523.6	2.515	.344	4.201E-04	.0146	5.024E-04	.0174

GROUP 85 CENTERLINE TIME 3.00

CH	TC	FIT LENGTH	DTDWT	UNCERTAINTY	CH	TC	FIT LENGTH	DTDWT	UNCERTAINTY
1	107	.60	5.212	.0078	50	173	1.20	1.368	.0177
2	108	.60	7.195	.0055	51	174	2.00	.882	.0149
3	109	.60	6.244	.0084	52	175	2.00	.933	.0121
4	110	.60	6.039	.0087	53	176	2.00	.871	.0111
5	111	.60	6.342	.0162	54	177	.40	10.777	.0142
6	112	.60	6.790	.0053	55	178	.40	14.210	.0066
7	113	.60	6.860	.0540	56	179	.30	27.172	.0192
8	114	.60	6.233	.0088	57	180	.60	6.781	.0125
9	115	.60	5.816	.0192	58	181	.60	4.352	.0094
10	116	.60	6.246	.0078	59	182	.30	17.250	.0142
11	117	.60	6.645	.0118	60	183	2.00	.932	.0098
12	118	.60	5.317	.0206	61	184	1.20	1.006	.0280
13	119	.60	6.156	.0096	62	185	.60	5.360	.0138
14	120	.60	6.116	.0102	63	186	.60	4.320	.0138
15	121	.60	5.622	.0105	64	187	.40	11.433	.0164
16	122	.60	5.653	.0070	65	188	.30	21.109	.0069
17	124	.80	3.215	.0213	66	189	.80	2.740	.0157
18	125	.80	3.230	.0116	67	190	.80	3.384	.0096
19	126	.80	3.363	.0093	68	191	.60	6.253	.1042
20	127	.80	3.248	.0106	69	192	2.00	.502	.0418
21	128	.60	3.504	.0120	70	193	.60	7.698	.0108
22	129	.60	4.324	.0083	71	194	2.00	1.083	.0158
23	130	.80	4.076	.0155	72	195	.80	2.426	.0158
24	131	.60	3.795	.0136	73	196	.80	3.974	.0078
25	132	.60	5.899	.0082	74	197	2.00	.854	.0133
26	133	.80	4.045	.0110	75	198	1.20	1.069	.0277
27	134	.60	5.112	.0099	76	199	1.20	1.241	.0196
28	135	.60	6.843	.0086	77	200	.80	3.471	.0087
29	136	.60	7.203	.0064	78	201	.60	7.259	.0085
30	137	.60	6.978	.0078	79	202	.60	5.689	.0511
31	138	.60	7.513	.0043	80	203	1.20	1.193	.0173
32	139	.60	7.089	.0069	81	204	.80	2.186	.0159
33	140	.60	7.442	.0098	82	205	.60	5.324	.0071
34	141	.60	6.779	.0081	83	206	2.00	.592	.0287
35	142	.60	5.532	.0125	84	207	.60	6.281	.0125
36	143	.40	8.152	.0114	85	208	1.20	1.078	.0187
37	144	.40	9.237	.0103	86	209	1.20	1.146	.0195
38	161	.80	2.538	.0154	87	210	1.20	1.166	.0492
39	162	.80	2.422	.0117	88	211	2.00	.920	.0426
40	163	1.20	1.843	.0171	89	212	1.20	1.070	.0235
41	164	1.20	1.596	.0109	90	213	1.20	1.565	.0717
42	165	1.20	1.443	.0118	91	214	.80	2.306	.0241
43	166	1.20	1.320	.0271	92	215	1.20	1.677	.0247
44	167	.80	2.159	.0181	93	216	.60	4.829	.0115
45	168	.80	2.301	.0143	94	217	.60	5.126	.0139
46	169	1.20	1.776	.0099	95	218	1.20	1.503	.0178
47	170	1.20	1.412	.0334	96	219	.80	2.828	.0135
48	171	1.20	1.615	.0184	97	220	.80	2.515	.0116
49	172	1.20	1.377	.0180	98	0	-0	0	0

86 .050

HIT ON LOOP 61

DATE 5/12/75

AEDC(ARO,INC.) ARNOLD AFS, TENNESSEE
VON KARMAN GAS DYNAMICS FACILITY
50 INCH HYPERSONIC TUNNEL B
V41R-87A

GROUP	TEST CONDITION	MODEL	MACH NO	PO,PSIA	TO,DEG R	ALPHA-MODEL	ALPHA-SECTOR	ALPHA-PREBEND	ROLL MODEL	YAW
86	30	140 B	7.99	672.9	1343	30.08	-.08	30.00	179.98	.0

T-INF (DEG R)	P-INF (PSIA)	Q-INF (PSIA)	V-INF (FT/SEC)	RHO-INF (SLUGS/FT3)	MU-INF (LB-SEC/FT2)	RE/FT (FT-1)	HREF-FR (R= .0400FT)	STFR (R= .0400FT)	SWITCH POSITION
97.5	.069	3.105	3867	5.970E-05	7.852E-08	2.943E 06	2.879E-02	1.565E-02	3

TC NO	TW	DTW/DT	GDOT	H(TO)	H(TO)/HREF	H(.9TO)	H(.9TO)/HREF
						CANOPY	
221	523.4	1.019	.123	1.498E-04	.0052	1.792E-04	.0062
222	523.6	1.768	.217	2.646E-04	.0092	3.164E-04	.0110
223	523.0	3.463	.467	5.702E-04	.0198	6.819E-04	.0237
						ESCAPE HATCH AND WINDOW	
						X/L	2Y/B
224	530.3	4.890	.486	5.982E-04	.0208	7.166E-04	.0249
225	529.0	3.273	.341	4.801E-04	.0167	5.749E-04	.0200
226	531.2	10.605	1.116	1.375E-03	.0478	1.648E-03	.0572
227	528.1	6.921	1.011	1.241E-03	.0431	1.486E-03	.0516
228	527.4	7.420	.951	1.166E-03	.0405	1.396E-03	.0485
229	528.2	7.118	.913	1.121E-03	.0389	1.342E-03	.0466
232	526.4	.369	.050	6.029E-05	.0021	7.300E-05	.0025
233	527.0	.405	.061	7.513E-05	.0026	8.993E-05	.0031
236	525.6	.563	.082	1.004E-04	.0035	1.202E-04	.0042
237	526.3	.731	.102	1.255E-04	.0044	1.502E-04	.0052
						CARGO BAY HINGE NO. 1	
						X/L	Z,FULL SCALE(IN)
238	531.0	3.659	.489	6.029E-04	.0209	7.224E-04	.0251
239	532.4	5.004	.670	8.267E-04	.0287	9.909E-04	.0344
240	530.8	3.351	.478	5.888E-04	.0205	7.054E-04	.0245
241	533.1	4.771	.671	8.285E-04	.0288	9.932E-04	.0345
242	533.8	5.754	.822	1.016E-03	.0353	1.219E-03	.0423
243	531.7	3.466	.424	5.224E-04	.0181	6.260E-04	.0217
244	531.1	2.837	.331	4.083E-04	.0142	4.892E-04	.0170
						CARGO BAY HINGE NO. 2	
						X/L	Z,FULL SCALE(IN)
245	532.5	3.331	.476	5.870E-04	.0204	7.036E-04	.0244
246	532.8	3.135	.448	5.527E-04	.0192	6.625E-04	.0230
247	532.3	2.737	.403	4.972E-04	.0173	5.959E-04	.0207
248	532.6	2.761	.407	5.019E-04	.0174	6.016E-04	.0209
249	533.0	2.430	.358	4.419E-04	.0154	5.298E-04	.0184
250	532.9	2.109	.265	3.266E-04	.0113	3.915E-04	.0136
251	532.8	2.346	.288	3.554E-04	.0123	4.260E-04	.0148
						CARGO BAY HINGE NO. 3	
						X/L	Z,FULL SCALE(IN)
252	533.4	3.910	.567	7.010E-04	.0243	8.404E-04	.0292
253	534.8	5.661	.822	1.017E-03	.0353	1.220E-03	.0424
254	533.5	3.761	.571	7.054E-04	.0245	8.457E-04	.0294
257	534.2	4.308	.591	7.186E-04	.0250	8.617E-04	.0299
258	535.0	5.199	.769	8.770E-04	.0305	1.052E-03	.0365

DATE 5/12/75

AEDC(ARO,INC.) ARNOLD AFS, TENNESSEE
VON KARMAN GAS DYNAMICS FACILITY
50 INCH HYPERSONIC TUNNEL B
V41B-87A

GROUP	TEST CONDITION	MODEL	MACH NO	PO,PSIA	TO,DEG R	ALPHA-MODEL	ALPHA-SECTOR	ALPHA-PREBEND	ROLL MODEL	YAW
66	30	140 B	7.99	672.9	1343	30.08	-.08	30.00	179.98	.0

T-INF (DEG R)	P-INF (PSIA)	Q-INF (PSIA)	V-INF (FT/SEC)	RHO-INF (SLUGS/FT3)	MU-INF (LB-SEC/FT2)	RE/FT (FT-1)	HREF-FR (R= .0400FT)	STFR (R= .0400FT)	SWITCH POSITION
97.5	.069	3.105	3867	5.978E-05	7.852E-08	2.943E 06	2.879E-02	1.565E-02	3

TOP CENTERLINE

IC NC	TW	DTWDT	QDOT	H(TO)	H(TO)/HREF	H(.9TO)	H(.9TO)/HREF	X/L
367	600.5	100.490	12.202	1.644E-02	.5710	2.007E-02	.6971	0
368	569.0	73.230	9.453	1.222E-02	.4243	1.478E-02	.5134	.0008
369	552.4	52.697	6.223	7.873E-03	.2735	9.484E-03	.3295	.0019
370	545.2	36.991	4.535	5.686E-03	.1975	6.837E-03	.2375	.0037
371	542.3	26.873	2.639	3.297E-03	.1145	3.961E-03	.1376	.0058
372	536.1	17.975	2.314	2.869E-03	.0997	3.442E-03	.1196	.0087
373	533.5	11.661	1.525	1.885E-03	.0655	2.260E-03	.0785	.0118
374	533.3	9.108	1.191	1.471E-03	.0511	1.763E-03	.0612	.0151
375	532.9	7.103	.970	1.198E-03	.0416	1.436E-03	.0499	.0182
376	533.9	5.994	.790	9.762E-04	.0339	1.170E-03	.0407	.0215
377	534.3	5.404	.695	8.598E-04	.0299	1.031E-03	.0358	.0246
378	534.7	4.892	.570	7.058E-04	.0245	8.464E-04	.0294	.0278
379	534.3	2.655	.326	4.033E-04	.0140	4.836E-04	.0168	.0609
380	532.7	2.285	.235	2.895E-04	.0101	3.471E-04	.0121	.0646
381	531.8	2.076	.269	3.312E-04	.0115	3.969E-04	.0138	.0684
382	531.1	1.786	.233	2.875E-04	.0100	3.445E-04	.0120	.0721
383	530.5	1.644	.220	2.706E-04	.0094	3.242E-04	.0113	.0760
384	530.1	1.446	.201	2.474E-04	.0086	2.963E-04	.0103	.0796
385	530.3	1.598	.205	2.525E-04	.0088	3.025E-04	.0105	.0789
386	530.3	1.568	.185	2.279E-04	.0079	2.730E-04	.0095	.0982
387	530.7	1.641	.241	2.478E-04	.0086	2.969E-04	.0103	.1019
388	531.2	2.313	.220	2.707E-04	.0094	3.243E-04	.0113	.1160
389	530.4	1.981	.287	3.533E-04	.0123	4.233E-04	.0147	.1195
390	530.2	1.773	.279	3.434E-04	.0119	4.114E-04	.0143	.1231
391	529.9	1.831	.291	3.584E-04	.0124	4.293E-04	.0149	.1268
392	530.1	1.944	.333	4.094E-04	.0142	4.904E-04	.0170	.1305
393	529.6	2.039	.344	4.234E-04	.0147	5.072E-04	.0176	.1338
394	529.6	2.280	.382	4.696E-04	.0163	5.625E-04	.0195	.1376
395	529.5	2.302	.344	4.226E-04	.0147	5.062E-04	.0176	.1411
396	529.9	2.478	.367	4.510E-04	.0157	5.402E-04	.0188	.1448
397	530.0	2.525	.374	4.597E-04	.0160	5.507E-04	.0191	.1483
398	531.2	3.908	.549	6.764E-04	.0235	8.105E-04	.0282	.1519
399	538.6	11.032	1.477	1.836E-03	.0638	2.204E-03	.0766	.1556

DATE 5/12/75

AEDC(ARO,INC.) ARNOLD AFS, TENNESSEE
VON KARMAN GAS DYNAMICS FACILITY
50 INCH HYPERSONIC TUNNEL B
V41B-87A

GROUP	TEST CONDITION	MODEL	MACH NO	PO,PSIA	TO,DEG R	ALPHA-MODEL	ALPHA-SECTOR	ALPHA-PREBEND	ROLL MODEL	YAW
85	30	140 B	7.99	672.9	1343	30.08	-.08	30.00	179.98	.0

T-INF (DEG R)	P-INF (PSIA)	Q-INF (PSIA)	V-INF (FT/SEC)	RHO-INF (SLUGS/FT3)	MU-INF (LB-SEC/FT2)	RE/FT (FT-1)	HREF-FR (R= .0400FT)	STFR (R= .0400FT)	SWITCH POSITION
97.5	.064	3.105	3867	5.978E-05	7.852E-08	2.943E 06	2.879E-02	1.565E-02	3

TC NO	TW	DTWDT	QDOT	H(TO)	H(TO)/HREF	H(.9TO)	H(.9TO)/HREF	X/L	2Y/B
								TOP CENTERLINE	
400	541.6	13.305	1.800	2.243E-03	.0779	2.693E-03	.0935	.1582	
401	539.2	13.375	1.737	2.161E-03	.0751	2.595E-03	.0901	.1608	
402	539.5	15.056	1.881	2.341E-03	.0813	2.811E-03	.0976	.1635	
403	539.6	13.292	1.619	2.016E-03	.0700	2.420E-03	.0841	.1664	
404	539.5	12.488	1.516	1.886E-03	.0655	2.265E-03	.0787	.1691	
405	539.5	12.045	1.462	1.820E-03	.0632	2.185E-03	.0759	.1720	
406	537.2	10.533	1.277	1.585E-03	.0550	1.902E-03	.0661	.1748	
407	536.1	8.907	1.151	1.427E-03	.0496	1.711E-03	.0594	.1769	
408	535.6	7.496	1.099	1.361E-03	.0473	1.633E-03	.0567	.1800	
409	533.2	5.571	.831	9.892E-04	.0344	1.186E-03	.0412	.1831	
410	533.5	4.626	.665	8.217E-04	.0285	9.852E-04	.0342	.1863	
411	531.5	3.396	.496	6.107E-04	.0212	7.318E-04	.0254	.1894	
412	531.2	2.713	.388	4.531E-04	.0157	5.429E-04	.0189	.1931	
413	531.1	1.930	.258	3.181E-04	.0110	3.811E-04	.0132	.1972	
414	529.9	1.143	.153	1.880E-04	.0065	2.251E-04	.0078	.2049	
415	529.1	.739	.073	8.936E-05	.0031	1.070E-04	.0037	.2250	
416	528.1	.395	.046	5.653E-05	.0020	6.769E-05	.0024	.2500	
								NOSE TC (Z = 338)	
145	579.8	66.952	9.179	1.203E-02	.4178	1.460E-02	.5071	.0008	.5039
146	582.0	71.503	9.813	1.290E-02	.4481	1.566E-02	.5441	.0023	.5082
147	570.4	62.283	8.499	1.100E-02	.3822	1.332E-02	.4626	.0043	.5135
148	564.2	48.327	6.793	8.724E-03	.3030	1.054E-02	.3662	.0068	.5205
149	553.6	35.573	5.166	6.546E-03	.2274	7.888E-03	.2740	.0095	.5279
150	554.9	29.967	4.314	5.476E-03	.1902	6.600E-03	.2293	.0122	.5354
151	554.0	20.419	2.883	3.655E-03	.1270	4.405E-03	.1530	.0218	.5621
152	553.3	20.745	2.825	3.579E-03	.1243	4.312E-03	.1498	.0251	.5712
153	554.3	20.664	2.536	3.216E-03	.1117	3.876E-03	.1347	.0286	.5808
154	555.5	21.704	2.714	3.447E-03	.1197	4.156E-03	.1444	.0319	.5898
155	554.7	20.615	2.605	3.305E-03	.1148	3.984E-03	.1384	.0354	.5995
156	553.1	19.039	2.378	3.011E-03	.1046	3.628E-03	.1260	.0387	.6085
157	552.7	18.629	2.301	2.912E-03	.1012	3.509E-03	.1219	.0420	.6176
158	552.2	18.066	2.232	2.825E-03	.0981	3.403E-03	.1182	.0462	.6294
159	551.7	17.623	1.985	2.509E-03	.0872	3.022E-03	.1050	.0503	.6406

GROUP 86 CENTERLINE TIME 3.00

CH	TC	FIT LENGTH	DTU*T	UNCERTAINTY	CH	TC	FIT LENGTH	DTU*T	UNCERTAINTY
1	221	1.20	1.015	.0276	50	384	1.20	1.446	.0223
2	222	1.20	1.768	.0128	51	385	1.20	1.598	.0201
3	223	.80	3.462	.0125	52	386	1.20	1.568	.0198
4	224	.60	4.890	.0092	53	387	1.20	1.641	.0105
5	225	.80	3.273	.0244	54	388	.80	2.313	.0202
6	226	.40	10.685	.0060	55	389	.80	1.981	.0156
7	227	.60	6.921	.0447	56	390	1.20	1.773	.0419
8	228	.60	7.420	.0095	57	391	1.20	1.831	.0113
9	229	.60	7.118	.0154	58	392	1.20	1.944	.0080
10	232	2.00	.369	.0251	59	393	.80	2.039	.0208
11	233	2.00	.405	.0357	60	394	.80	2.280	.0148
12	236	2.00	.543	.0212	61	395	.80	2.302	.0223
13	237	2.00	.731	.0134	62	396	.80	2.478	.0152
14	238	.80	3.659	.0094	63	397	.80	2.525	.0178
15	239	.60	5.004	.0160	64	398	.60	3.908	.0183
16	240	.80	3.351	.0064	65	399	.40	11.032	.0060
17	241	.60	4.771	.0187	66	400	.40	13.305	.0108
18	242	.60	5.754	.0121	67	401	.40	13.375	.0028
19	243	.80	3.466	.0090	68	402	.40	15.056	.0580
20	244	.80	2.837	.0134	69	403	.40	13.292	.0221
21	245	.80	3.331	.0141	70	404	.40	12.488	.0117
22	246	.80	3.135	.0148	71	405	.40	12.045	.0078
23	247	.80	2.737	.0257	72	406	.40	10.533	.0062
24	248	.80	2.761	.0147	73	407	.40	8.907	.0094
25	249	.80	2.430	.0269	74	408	.60	7.496	.0066
26	250	.80	2.109	.0177	75	409	.60	5.571	.0083
27	251	.80	2.346	.0190	76	410	.60	4.626	.0127
28	252	.80	3.910	.0063	77	411	.80	3.306	.0131
29	253	.60	5.661	.0071	78	412	.80	2.713	.0114
30	254	.80	3.761	.0087	79	413	1.20	1.930	.0525
31	257	.60	4.308	.0074	80	414	1.20	1.143	.0137
32	258	.60	5.199	.0066	81	415	2.00	.739	.0178
33	367	.20	100.490	.0028	82	416	2.00	.395	.0176
34	368	.20	73.230	.0010	83	145	.20	66.952	.0065
35	369	.20	52.697	.0046	84	146	.20	71.503	.0036
36	370	.20	36.991	.0064	85	147	.20	62.263	.0031
37	371	.30	26.873	.0037	86	148	.20	48.327	.0021
38	372	.30	17.975	.0099	87	149	.20	35.573	.0096
39	373	.40	11.661	.0071	88	150	.30	29.967	.0015
40	374	.40	9.108	.0179	89	151	.30	20.419	.0050
41	375	.60	7.103	.0072	90	152	.30	20.745	.0284
42	376	.60	5.994	.0118	91	153	.30	20.664	.0105
43	377	.60	5.404	.0190	92	154	.30	21.704	.0189
44	378	.60	4.892	.0141	93	155	.30	20.615	.0058
45	379	.80	2.655	.0089	94	156	.30	19.039	.0107
46	380	.80	2.285	.0143	95	157	.30	18.629	.0063
47	381	.80	2.076	.0296	96	158	.30	18.066	.0097
48	382	1.20	1.786	.0098	97	159	.30	17.623	.0042
49	383	1.20	1.644	.0145	98	0	-0	0	0
87		.050							

BIT ON LOOP 61

DATE 5/12/75

AEDC(ARO,INC.) ARNOLD AFS, TENNESSEE
VON KARMAN GAS DYNAMICS FACILITY
50 INCH HYPERSONIC TUNNEL B
V41B-87A

GROUP	TEST CONDITION	MODEL	MACH NO	PO,PSIA	TO,DEG R	ALPHA-MODEL	ALPHA-SECTOR	ALPHA-PREBEND	ROLL MODEL	YAW
87	31	140 B	7.99	674.8	1338	30.00	-2.01	30.00	90.06	2.0

T-INF (DEG R)	P-INF (PSIA)	Q-INF (PSIA)	V-INF (FT/SEC)	RHO-INF (SLUGS/FT3)	MU-INF (LB-SEC/FT2)	RE/FT (FT-1)	HREF-FR (R= .0400FT)	STFR (R= .0400FT)	SWITCH POSITION
97.2	.070	3.114	3860	6.013E-05	7.827E-08	2.966E 06	2.881E-02	1.559E-02	1

TC NO	TW	DTWDT	QDOT	H(TO)	H(TO)/HREF	H(.9TO)	H(.9TO)/HREF	X/L	Z,FULL SCALE(IN)
								FUSELAGE VENT NO. 1	
1	538.4	4.957	.655	8.188E-04	.0284	9.835E-04	.0341	.4434	376.6300
2	537.5	4.174	.562	7.070E-04	.0244	8.428E-04	.0293	.4264	371.6300
3	537.1	3.435	.472	5.886E-04	.0204	7.066E-04	.0245	.4303	371.6300
4	537.4	3.441	.468	5.842E-04	.0203	7.014E-04	.0243	.4342	371.6300
5	538.0	3.257	.434	5.427E-04	.0188	6.516E-04	.0226	.4380	371.6300
6	539.0	2.927	.368	4.651E-04	.0168	5.827E-04	.0202	.4434	369.1300
7	536.6	2.201	.321	4.002E-04	.0139	4.804E-04	.0167	.4226	366.6300
8	536.7	2.563	.346	4.818E-04	.0167	5.783E-04	.0201	.4264	366.6300
9	537.4	1.957	.284	3.552E-04	.0123	4.264E-04	.0148	.4303	366.6300
10	537.6	1.824	.260	3.250E-04	.0113	3.902E-04	.0135	.4342	366.6300
11	538.7	2.007	.271	3.343E-04	.0118	4.075E-04	.0141	.4380	366.6300
12	540.6	1.543	.213	2.669E-04	.0093	3.207E-04	.0111	.4496	366.6300
13	542.4	.829	.122	1.532E-04	.0053	1.842E-04	.0064	.4187	357.1300
14	540.0	1.159	.168	1.964E-04	.0069	2.383E-04	.0083	.4396	361.6300
15	541.6	1.276	.170	2.139E-04	.0074	2.571E-04	.0089	.4434	361.6300
16	542.7	.628	.085	1.070E-04	.0037	1.286E-04	.0045	.4396	355.6300
17	544.9	.651	.088	1.112E-04	.0039	1.337E-04	.0046	.4434	355.6300
18	546.4	.547	.077	9.681E-05	.0034	1.165E-04	.0040	.4396	351.6300
19	548.7	.311	.044	5.530E-05	.0019	6.658E-05	.0023	.4291	332.6300
								CARGO BAY VENT NO. 1	
22	537.5	5.437	.754	9.413E-04	.0327	1.130E-03	.0392	.3974	397.6300
23	535.9	4.843	.675	8.416E-04	.0292	1.010E-03	.0351	.4013	397.6300
24	537.1	5.519	.746	9.304E-04	.0323	1.117E-03	.0388	.4052	397.6300
25	537.8	6.120	.805	1.005E-03	.0349	1.207E-03	.0419	.4090	397.6300
26	539.3	7.521	.987	1.235E-03	.0429	1.483E-03	.0515	.4129	397.6300
27	537.1	5.043	.701	8.754E-04	.0304	1.051E-03	.0365	.3936	392.6300
28	536.2	4.926	.707	8.812E-04	.0306	1.058E-03	.0367	.3974	392.6300
29	537.5	6.072	.875	1.092E-03	.0379	1.311E-03	.0455	.4013	392.6300
30	537.9	7.021	1.038	1.259E-03	.0437	1.512E-03	.0525	.4052	392.6300
31	538.7	8.065	1.126	1.409E-03	.0489	1.692E-03	.0587	.4090	392.6300
32	538.5	8.349	1.106	1.383E-03	.0480	1.661E-03	.0576	.4129	392.6300
33	538.6	7.210	1.030	1.287E-03	.0447	1.546E-03	.0537	.4090	386.1300
34	539.8	8.585	1.161	1.454E-03	.0505	1.747E-03	.0606	.4129	387.6300
35	542.6	7.320	1.037	1.302E-03	.0452	1.565E-03	.0543	.3897	383.1300
36	540.6	7.267	1.055	1.322E-03	.0459	1.589E-03	.0551	.4090	378.6300
37	541.3	9.811	1.381	1.732E-03	.0601	2.082E-03	.0723	.4129	382.1300
38	540.9	7.769	1.093	1.358E-03	.0471	1.632E-03	.0566	.4129	377.1300
39	541.1	6.200	.966	1.136E-03	.0394	1.365E-03	.0474	.4001	373.6300
								PROTUBERANCES	
41	542.7	7.596	1.019	1.260E-03	.0444	1.539E-03	.0534	.3546	379.0500
42	543.0	7.931	1.085	1.364E-03	.0474	1.640E-03	.0569	.3604	379.0500
43	541.1	6.174	.862	1.006E-03	.0349	1.209E-03	.0420	.3450	374.0500

DATE 5/12/75

AEDC(ARO,INC.) ARNOLD AFS, TENNESSEE
VON KARMAN GAS DYNAMICS FACILITY
50 INCH HYPERSONIC TUNNEL B
V41H-87A

GROUP	TEST CONDITION	MODEL	MACH NO	PO,PSIA	TO,DEG R	ALPHA-MODEL	ALPHA-SECTOR	ALPHA-PREHEND	ROLL MODEL	YAW
87	31	140 B	7.99	674.8	1338	30.00	-2.01	30.00	90.06	2.0

T-INF (DEG R)	P-INF (PSIA)	Q-INF (PSIA)	V-INF (FT/SEC)	RHO-INF (SLUGS/FT3)	MU-INF (LB-SEC/FT2)	RE/FT (FT-1)	HREF-FR (R= .0400FT)	STFR (R= .0400FT)	SWITCH POSITION
97.2	.676	3.114	3860	6.013E-05	7.827E-08	2.966E 06	2.881E-02	1.559E-02	1

IC NO	TW	DIWDT	QDOT	H(TO)	H(TO)/HREF	H(.9TO)	H(.9TO)/HREF
44	543.2	7.471	1.019	1.281E-03	.0445	1.541E-03	.0535
45	544.5	7.766	1.077	1.357E-03	.0471	1.632E-03	.0567
46	544.8	9.020	1.254	1.592E-03	.0553	1.915E-03	.0665
47	544.8	9.127	1.217	1.534E-03	.0532	1.845E-03	.0640
48	545.9	7.996	1.099	1.387E-03	.0481	1.669E-03	.0579
49	546.0	8.855	1.221	1.541E-03	.0535	1.855E-03	.0644
50	547.2	7.170	.999	1.263E-03	.0438	1.520E-03	.0528
51	547.1	7.029	.957	1.210E-03	.0420	1.456E-03	.0505
52	544.8	4.440	.612	7.712E-04	.0268	9.276E-04	.0322
53	545.4	5.124	.750	9.462E-04	.0328	1.138E-03	.0395
54	544.8	2.817	.401	4.995E-04	.0173	5.993E-04	.0208
55	545.8	3.947	.566	7.136E-04	.0248	8.585E-04	.0298
56	536.0	3.265	.420	5.239E-04	.0182	6.288E-04	.0218
57	538.4	4.057	.496	6.196E-04	.0215	7.441E-04	.0258
58	541.3	5.691	.753	9.440E-04	.0328	1.135E-03	.0394
59	545.1	6.725	.888	1.119E-03	.0388	1.346E-03	.0467
60	544.2	6.097	.851	1.072E-03	.0372	1.289E-03	.0447
61	542.0	5.223	.663	8.321E-04	.0289	1.000E-03	.0347
62	538.5	3.961	.486	6.073E-04	.0211	7.294E-04	.0253
63	536.1	3.106	.405	5.054E-04	.0175	6.065E-04	.0211
64	533.7	-.674	-.003	-3.510E-06	-.0001	-4.208E-06	-.0001
65	535.1	2.827	.384	4.781E-04	.0166	5.736E-04	.0199
66	537.9	3.767	.475	5.937E-04	.0206	7.129E-04	.0247
67	539.6	4.757	.669	8.375E-04	.0291	1.046E-03	.0349
68	543.9	6.253	.794	9.997E-04	.0347	1.202E-03	.0417

PROTUBERANCES

X/L	Z,FULL SCALE(IN)
.3508	374.0500
.3566	374.0500
.3604	374.0500
.3392	366.5500
.3566	366.5500
.3392	360.7000
.3566	360.7000
.3604	360.7000
.3392	353.2000
.3450	353.2000
.3508	353.2000
.3566	353.2000

SUBLIMATOR VENT NO. 1

X/L	Z,FULL SCALE(IN)
.3031	371.1300
.3074	369.1300
.3089	363.6300
.3074	358.1300
.3031	356.1300
.2988	358.1300
.2973	363.6300
.2988	369.1300
.3031	376.1300
.3089	378.6300
.3101	372.6300
.3157	370.3800
.3128	363.6300

DATE 5/12/75

AEDC(ARO,INC.) ARNOLD AFS, TENNESSEE
VON KARMAN GAS DYNAMICS FACILITY
50 INCH HYPERSONIC TUNNEL B
V418-B7A

SERIES	TEST CONDITION	MODEL	MACH NO	PO,PSIA	TO,DEG R	ALPHA-MODEL	ALPHA-SECTOR	ALPHA-PREBEND	ROLL MODEL	YAW
87	31	140 B	7.99	674.8	1338	30.00	-2.01	30.00	90.06	2.0

T-INF (DEG R)	P-INF (PSIA)	Q-INF (PSIA)	V-INF (FT/SEC)	RHO-INF (SLUGS/FT3)	MU-INF (LB-SEC/FT2)	RE/FT (FT-1)	HREF-FR (R= .0400FT)	STFR (R= .0400FT)	SWITCH POSITION
97.2	.076	3.114	3860	6.013E-05	7.927E-08	2.966E 06	2.881E-02	1.559E-02	1

TC NO	TW	DT.DT	QDOT	H(TO)	H(TO)/HREF	H(.9TO)	H(.9TO)/HREF
69	532.9	3.059	.426	5.288E-04	.0184	6.342E-04	.0220
70	533.2	2.888	.351	4.354E-04	.0151	5.223E-04	.0181
71	533.3	2.889	.392	4.874E-04	.0169	5.847E-04	.0203
72	533.9	2.940	.416	5.173E-04	.0180	6.206E-04	.0215
73	534.3	2.955	.383	4.757E-04	.0165	5.707E-04	.0198
74	534.5	2.956	.358	4.452E-04	.0155	5.341E-04	.0185
75	536.0	3.236	.440	5.481E-04	.0190	6.578E-04	.0228
77	536.3	3.399	.482	6.007E-04	.0208	7.210E-04	.0250
78	538.3	4.432	.635	7.559E-04	.0262	9.078E-04	.0315
79	539.0	3.711	.475	5.942E-04	.0206	7.137E-04	.0248
80	539.7	4.637	.633	7.917E-04	.0275	9.508E-04	.0330
81	540.7	5.188	.725	9.046E-04	.0316	1.093E-03	.0379
83	534.9	7.070	.945	1.175E-03	.0408	1.410E-03	.0490
84	536.7	8.449	1.115	1.390E-03	.0483	1.669E-03	.0579
85	535.4	7.262	.990	1.233E-03	.0428	1.479E-03	.0513
87	531.2	5.813	.830	1.028E-03	.0357	1.232E-03	.0428
88	535.5	7.875	1.102	1.372E-03	.0476	1.647E-03	.0572
89	535.3	7.364	1.083	1.348E-03	.0468	1.617E-03	.0561
90	535.2	7.535	1.027	1.279E-03	.0444	1.534E-03	.0533
91	535.5	7.904	1.085	1.351E-03	.0469	1.621E-03	.0563
92	536.2	7.085	1.021	1.248E-03	.0433	1.498E-03	.0520
93	534.7	6.607	.844	1.059E-03	.0365	1.260E-03	.0437
94	537.0	7.369	.962	1.200E-03	.0417	1.441E-03	.0500
95	536.3	6.870	.977	1.218E-03	.0423	1.462E-03	.0507
96	534.2	5.892	.740	9.199E-04	.0319	1.104E-03	.0383
97	535.4	6.349	.817	1.018E-03	.0353	1.221E-03	.0424
98	535.5	6.098	.856	1.066E-03	.0370	1.279E-03	.0444
100	535.8	5.051	.716	8.917E-04	.0310	1.070E-03	.0371
102	537.3	5.019	.709	8.855E-04	.0307	1.063E-03	.0369
103	537.5	6.459	.849	1.061E-03	.0368	1.273E-03	.0442
105	538.0	7.587	.951	1.188E-03	.0412	1.426E-03	.0495
106	536.9	8.165	1.048	1.308E-03	.0454	1.570E-03	.0545

FUSELAGE VENT PANEL NO. 7

X/L	Z,FULL SCALE(IN)
.2487	356.4000
.2591	356.4000
.2419	351.4000
.2487	351.4000
.2552	351.4000
.2610	351.4000
.2419	342.8000
.2552	342.8000
.2610	342.8000
.2419	334.2000
.2487	334.2000
.2552	334.2000

ACCESS HATCH WINDOW

X/L	Z,FULL SCALE(IN)
.2131	398.0000
.2131	388.0000
.2131	383.0000
.2222	395.8000
.2193	386.5000
.2177	381.8000
.2297	389.5000
.2243	382.5000
.2214	378.7000
.2343	374.0000
.2274	375.5000
.2239	373.3000
.2363	368.0000
.2286	368.0000
.2247	368.0000
.2274	360.5000
.2081	354.3000
.2023	362.7000
.2050	378.7000
.2050	386.2000

GROUP 87 CENTERLINE TIME 3.00

CH	TC	FIT LENGTH	DTDWT	UNCERTAINTY	CH	TC	FIT LENGTH	DTDWT	UNCERTAINTY
1	1	.60	4.957	.0120	50	53	.60	5.124	.0086
2	2	.60	4.174	.0112	51	54	.80	2.817	.0179
3	3	.80	3.445	.0131	52	55	.60	3.947	.0170
4	4	.80	3.441	.0108	53	56	.80	3.265	.0126
5	5	.80	3.257	.0236	54	57	.80	4.057	.0150
6	6	.80	2.927	.0103	55	58	.60	5.691	.0064
7	7	.80	2.201	.1183	56	59	.60	6.725	.0307
8	8	.80	2.583	.0137	57	60	.60	6.097	.0065
9	9	1.20	1.957	.0166	58	61	.60	5.223	.0101
10	10	1.20	1.824	.0096	59	62	.80	3.961	.0178
11	11	1.20	2.087	.0120	60	63	.80	3.106	.0114
12	12	1.20	1.543	.0134	61	64	2.00	-.024	-1.0459
13	13	2.00	.829	.0104	62	65	.80	2.827	.0101
14	14	1.20	1.159	.0198	63	66	.80	3.767	.0088
15	15	1.20	1.276	.0350	64	67	.60	4.757	.0145
16	16	2.00	.628	.0136	65	68	.60	6.253	.0079
17	17	2.00	.651	.0341	66	69	.80	3.059	.0189
18	18	2.00	.547	.0121	67	70	.80	2.866	.0114
19	19	2.00	.311	.0289	68	71	.80	2.889	.1212
20	22	.60	5.437	.0119	69	72	.80	2.940	.0262
21	23	.60	4.843	.0075	70	73	.80	2.955	.0129
22	24	.60	5.519	.0216	71	74	.80	2.956	.0204
23	25	.60	6.120	.0213	72	75	.80	3.236	.0128
24	26	.60	7.521	.0091	73	77	.80	3.399	.0098
25	27	.60	5.043	.0117	74	78	.60	4.402	.0157
26	28	.60	4.926	.0089	75	79	.80	3.710	.0127
27	29	.60	6.072	.0048	76	80	.60	4.637	.0272
28	30	.60	7.021	.0074	77	81	.60	5.188	.0088
29	31	.60	8.065	.0062	78	83	.60	7.070	.0066
30	32	.40	8.349	.0136	79	84	.40	8.449	.0684
31	33	.60	7.210	.0053	80	85	.60	7.262	.0054
32	34	.40	8.585	.0087	81	87	.60	5.813	.0064
33	35	.60	7.320	.0069	82	88	.60	7.875	.0049
34	36	.60	7.267	.0076	83	89	.60	7.364	.0072
35	37	.40	9.811	.0043	84	90	.60	7.536	.0062
36	38	.60	7.769	.0065	85	91	.60	7.904	.0068
37	39	.60	6.200	.0104	86	92	.60	7.088	.0081
38	41	.60	7.596	.0071	87	93	.60	6.607	.0137
39	42	.60	7.931	.0051	88	94	.60	7.389	.0067
40	43	.60	6.174	.0118	89	95	.60	6.870	.0068
41	44	.60	7.471	.0064	90	96	.60	5.692	.0411
42	45	.60	7.766	.0055	91	97	.60	6.389	.0146
43	46	.40	9.020	.0148	92	98	.60	6.098	.0263
44	47	.40	9.127	.0078	93	100	.60	5.051	.0115
45	48	.40	7.996	.0093	94	102	.60	5.019	.0126
46	49	.40	8.855	.0068	95	103	.60	6.459	.0089
47	50	.60	7.170	.0137	96	105	.60	7.587	.0076
48	51	.60	7.029	.0081	97	106	.60	8.165	.0067
49	52	.60	4.440	.0128	98	0	-0	0	0

BP .050

BIT ON LOOP 61

DATE 5/12/75

AEDC(ARO,INC.) ARNOLD AFS, TENNESSEE
VON KARMAN GAS DYNAMICS FACILITY
50 INCH HYPERSONIC TUNNEL B
V41B-B7A

GROUP	TEST CONDITION	MODEL	MACH NO	PO,PSIA	TO,DEG R	ALPHA-MODEL	ALPHA-SECTOR	ALPHA-PREBEND	ROLL MODEL	YAW
88	31	140 B	7.99	674.0	1337	30.00	-2.01	30.00	90.05	2.0

T-INF (DEG R)	P-INF (PSIA)	U-INF (PSIA)	V-INF (FT/SEC)	RHO-INF (SLUGS/FT3)	MU-INF (LB-SEC/FT2)	RE/FT (FT-1)	HREF-FR (R= .0400FT)	STFR (R= .0400FT)	SWITCH POSITION
97.1	.070	3.110	3858	6.015E-05	7.816E-08	2.969E 06	2.879E-02	1.559E-02	2

TC NO	TW	DTWDT	QDOT	H(TO)	H(TO)/HREF	H(.9TO)	H(.9TO)/HREF	X/L	Z,FULL SCALE(IN)
								ACCESS HATCH WINDOW	
107	534.7	5.921	.849	1.059E-03	.0368	1.271E-03	.0441	.2050	396.2000
								FUSELAGE VENT PANEL NO. 3 AND 1	
								X/L	Z,FULL SCALE(IN)
108	534.0	7.138	.755	9.413E-04	.0327	1.129E-03	.0392	.1244	377.5000
109	532.3	6.376	.798	9.798E-04	.0340	1.175E-03	.0408	.1302	377.5000
110	532.5	6.101	.773	9.616E-04	.0334	1.153E-03	.0401	.1360	377.5000
111	534.0	6.406	.772	9.624E-04	.0334	1.155E-03	.0401	.1418	377.5000
112	535.2	6.588	.783	9.771E-04	.0339	1.173E-03	.0407	.1476	377.5000
113	533.4	6.734	.773	9.620E-04	.0334	1.154E-03	.0401	.1215	273.5000
114	532.7	6.308	.757	9.421E-04	.0327	1.130E-03	.0393	.1273	273.5000
115	533.2	5.933	.736	9.167E-04	.0318	1.100E-03	.0382	.1331	273.5000
116	533.6	6.274	.770	9.594E-04	.0333	1.151E-03	.0400	.1389	273.5000
117	536.0	6.605	.762	9.518E-04	.0331	1.142E-03	.0397	.1447	273.5000
118	533.8	5.177	.717	8.927E-04	.0310	1.071E-03	.0372	.1409	366.0000
119	536.1	5.999	.778	9.715E-04	.0337	1.166E-03	.0405	.1442	366.0000
120	535.1	6.097	.763	9.519E-04	.0331	1.142E-03	.0397	.1215	359.5000
121	534.6	5.248	.645	8.040E-04	.0279	9.648E-04	.0335	.1303	359.5000
122	535.7	5.311	.662	8.271E-04	.0287	9.928E-04	.0345	.1337	359.5000
								LOWER RCS NOZZLES	
								X/L	Z,FULL SCALE(IN)
124	527.7	2.814	.251	3.098E-04	.0108	3.711E-04	.0129	.0950	400.0000
125	527.0	3.068	.333	4.115E-04	.0143	4.929E-04	.0171	.0988	400.0000
126	527.3	3.059	.418	5.104E-04	.0179	6.186E-04	.0215	.1027	400.0000
127	526.9	3.047	.409	5.057E-04	.0176	6.057E-04	.0210	.0911	395.0000
128	526.7	3.418	.414	5.108E-04	.0177	6.117E-04	.0213	.0950	395.0000
129	527.5	4.265	.499	6.173E-04	.0214	7.395E-04	.0257	.0988	395.0000
130	528.9	3.641	.435	5.381E-04	.0187	6.448E-04	.0224	.0810	390.0000
131	527.4	3.348	.493	6.094E-04	.0212	7.300E-04	.0254	.0857	390.0000
132	529.0	5.593	.650	8.052E-04	.0280	9.649E-04	.0335	.0963	390.0000
133	527.2	3.624	.439	5.420E-04	.0188	6.492E-04	.0226	.0857	383.8000
134	526.5	5.136	.686	8.463E-04	.0294	1.013E-03	.0352	.0872	377.3000
135	529.1	6.648	.797	9.865E-04	.0343	1.182E-03	.0411	.0903	374.5500
136	530.4	7.064	.784	9.727E-04	.0338	1.166E-03	.0405	.0960	374.5500
137	528.8	8.803	.888	1.099E-03	.0382	1.317E-03	.0457	.0872	370.5500
138	530.4	7.302	.840	1.042E-03	.0362	1.249E-03	.0434	.0928	370.5500
139	530.4	7.015	.894	1.109E-03	.0385	1.330E-03	.0462	.0816	366.0500
140	531.5	7.288	.926	1.150E-03	.0400	1.379E-03	.0479	.0934	362.4000
141	531.2	6.714	.846	1.100E-03	.0382	1.319E-03	.0458	.0973	362.4000
142	532.7	5.406	.589	7.324E-04	.0254	8.784E-04	.0305	.0833	355.2000
143	533.1	8.038	.807	1.005E-03	.0349	1.205E-03	.0419	.0919	355.2000
144	535.5	9.169	1.209	1.509E-03	.0524	1.811E-03	.0629	.0949	349.0000

DATE 5/12/75

AEDC(ARO,INC.) ARNOLD AFS, TENNESSEE
VON KARMAN GAS DYNAMICS FACILITY
50 INCH HYPERSONIC TUNNEL B
V41B-87A

GROUP	TEST CONDITION	MODEL	MACH NO	PO,PSIA	TO,DEG R	ALPHA-MODEL	ALPHA-SECTOR	ALPHA-PREBEND	ROLL MODEL	YAW
88	31	140 B	7.99	674.0	1337	30.00	-2.01	30.00	90.05	2.0

T-INF (DEG R)	P-INF (PSIA)	Q-INF (PSIA)	V-INF (FT/SEC)	RHO-INF (SLUGS/FT3)	MU-INF (LB-SEC/FT2)	RE/FT (FT-1)	HREF-FR (R= .0400FT)	STFR (R= .0400FT)	SWITCH POSITION
97.1	.070	3.110	3858	6.015E-05	7.816E-08	2.969E 06	2.879E-02	1.559E-02	2

IC	KC	TW	DTWDT	QDOT	H(TO)	H(TO)/HREF	H(.9TO)	H(.9TO)/HREF	X/L	2Y/B
									UPPER RCS NOZZLES	
161		532.0	2.438	.288	3.502E-04	.0124	4.296E-04	.0149	.0619	-.0160
162		531.4	2.275	.215	2.671E-04	.0093	3.203E-04	.0111	.0709	-.0160
163		529.6	1.644	.201	2.497E-04	.0087	2.992E-04	.0104	.0807	-.0160
164		529.1	1.706	.222	2.747E-04	.0095	3.292E-04	.0114	.0943	-.0160
165		529.8	1.550	.195	2.414E-04	.0084	2.893E-04	.0101	.0978	-.0160
166		530.0	1.331	.170	2.111E-04	.0073	2.530E-04	.0088	.1013	-.0160
167		531.7	1.878	.254	3.154E-04	.0110	3.782E-04	.0131	.0619	-.0320
168		530.9	1.948	.254	2.534E-04	.0088	3.038E-04	.0106	.0709	-.0320
169		528.9	1.534	.186	2.301E-04	.0080	2.757E-04	.0096	.0807	-.0320
170		528.3	1.476	.184	2.276E-04	.0079	2.727E-04	.0095	.0943	-.0320
171		528.5	1.576	.189	2.344E-04	.0081	2.809E-04	.0098	.0978	-.0320
172		527.9	1.253	.163	2.014E-04	.0070	2.413E-04	.0084	.1013	-.0320
173		529.0	.954	.127	1.573E-04	.0055	1.885E-04	.0065	.0807	-.0480
174		527.2	.701	.080	9.836E-05	.0034	1.178E-04	.0041	.0943	-.0480
175		527.2	.707	.101	1.247E-04	.0043	1.494E-04	.0052	.0978	-.0480
176		527.1	.665	.090	1.115E-04	.0039	1.335E-04	.0046	.1013	-.0480
									CANOPY	
177		546.7	19.048	2.637	3.338E-03	.1160	4.018E-03	.1396		
178		549.4	24.789	4.909	6.236E-03	.2167	7.512E-03	.2610		
179		557.1	27.457	5.819	7.465E-03	.2593	9.010E-03	.3130		
180		537.2	6.019	.786	9.835E-04	.0342	1.181E-03	.0410		
181		534.9	4.165	.566	7.056E-04	.0245	8.468E-04	.0294		
182		533.8	3.931	.560	6.975E-04	.0242	8.368E-04	.0291		
183		527.7	.877	.110	1.356E-04	.0047	1.625E-04	.0056		
184		527.9	.996	.136	1.678E-04	.0058	2.010E-04	.0070		
185		534.3	5.184	.623	7.765E-04	.0270	9.317E-04	.0324		
186		534.6	4.641	.583	7.263E-04	.0252	8.716E-04	.0303		
187		536.2	5.306	.707	8.833E-04	.0307	1.060E-03	.0368		
188		537.6	10.727	2.500	3.130E-03	.1087	3.758E-03	.1306		
189		530.3	2.615	.372	4.611E-04	.0160	5.527E-04	.0192		
190		530.7	3.026	.434	5.390E-04	.0187	6.461E-04	.0224		
191		532.7	5.013	.765	9.518E-04	.0331	1.142E-03	.0397		

DATE 5/12/75

AEDC(ARO,INC.) ARNOLD AFS, TENNESSEE
VON KARMAN GAS DYNAMICS FACILITY
50 INCH HYPERSONIC TUNNEL A
V41B-B7A

GROUP	TEST CONDITION	MODEL	MACH NO	PO,PSIA	TO,DEG R	ALPHA-MODEL	ALPHA-SECTOR	ALPHA-PREBEND	ROLL MODEL	YAW
68	31	140 B	7.99	674.0	1337	30.00	-2.01	30.00	90.05	2.0

T-INF (DEG R)	P-INF (PSIA)	Q-INF (PSIA)	V-INF (FT/SEC)	RHO-INF (SLUGS/FT3)	MU-INF (LB-SEC/FT2)	RE/FT (FT-1)	HREF-FR (R= .0400FT)	STFR (R= .0400FT)	SWITCH POSITION
57.1	.070	3.118	3858	6.015E-05	7.816E-08	2.969E 06	2.879E-02	1.559E-02	2

IC NO	TW	DT*DT	QDOT	H(TO)	H(TO)/HREF	H(.9TO)	H(.9TO)/HREF
						CANOPY	
192	525.9	.670	.094	1.162E-04	.0040	1.391E-04	.0048
193	53[illegible].9	3.882	.746	9.259E-04	.0322	1.110E-03	.0386
194	526.4	.873	.112	1.345E-04	.0048	1.659E-04	.0058
195	528.0	1.561	.192	2.373E-04	.0082	2.842E-04	.0099
196	529.2	2.889	.378	4.688E-04	.0163	5.618E-04	.0195
197	525.3	.680	.067	8.278E-05	.0029	9.911E-05	.0034
198	525.7	.818	.095	1.167E-04	.0041	1.397E-04	.0049
199	525.4	1.426	.191	2.353E-04	.0082	2.817E-04	.0098
200	528.1	2.159	.307	3.792E-04	.0132	4.543E-04	.0158
201	531.4	4.048	.570	7.084E-04	.0246	8.494E-04	.0295
202	532.9	5.705	.721	8.966E-04	.0311	1.075E-03	.0374
203	525.9	.958	.118	1.462E-04	.0051	1.750E-04	.0061
204	526.8	1.617	.250	3.092E-04	.0107	3.703E-04	.0129
205	530.2	3.535	.550	6.818E-04	.0237	8.173E-04	.0284
206	525.5	1.081	.143	1.761E-04	.0061	2.108E-04	.0073
207	530.8	4.322	.578	7.175E-04	.0249	8.601E-04	.0299
208	525.4	.906	.121	1.495E-04	.0052	1.789E-04	.0062
209	525.1	1.137	.156	1.918E-04	.0067	2.297E-04	.0080
210	525.4	1.303	.173	2.136E-04	.0074	2.557E-04	.0089
211	525.6	1.206	.146	1.799E-04	.0062	2.154E-04	.0075
212	525.5	1.032	.139	1.708E-04	.0059	2.046E-04	.0071
213	525.7	1.164	.154	1.896E-04	.0066	2.271E-04	.0079
214	526.3	1.793	.250	3.091E-04	.0107	3.701E-04	.0129
215	526.1	2.010	.284	3.508E-04	.0122	4.201E-04	.0146
216	529.0	3.426	.485	6.010E-04	.0209	7.202E-04	.0250
217	529.8	4.296	.611	7.571E-04	.0263	9.074E-04	.0315
218	525.1	1.164	.160	1.971E-04	.0068	2.360E-04	.0082
219	525.7	1.996	.280	3.449E-04	.0120	4.129E-04	.0143
220	526.6	2.529	.347	4.279E-04	.0149	5.124E-04	.0178

GROUP 88 CENTERLINE TIME 3.00

CH	TC	FIT LENGTH	DTDWT	UNCERTAINTY	CH	TC	FIT LENGTH	DTDWT	UNCERTAINTY
1	107	.60	5.921	.0092	50	173	2.00	.954	.0248
2	108	.60	7.138	.0089	51	174	2.00	.701	.0254
3	109	.60	6.376	.0085	52	175	2.00	.707	.0191
4	110	.60	6.101	.0045	53	176	2.00	.665	.0121
5	111	.60	6.406	.0140	54	177	.30	19.048	.0072
6	112	.60	6.588	.0092	55	178	.30	24.789	.0074
7	113	.60	6.734	.0361	56	179	.30	27.457	.0205
8	114	.60	6.338	.0090	57	180	.60	6.019	.0075
9	115	.60	5.995	.0202	58	181	.60	4.165	.0088
10	116	.60	6.274	.0101	59	182	.60	3.931	.0179
11	117	.60	6.606	.0100	60	183	2.00	.877	.0109
12	118	.60	5.177	.0175	61	184	2.00	.996	.0177
13	119	.60	5.995	.0061	62	185	.60	5.184	.0065
14	120	.60	6.097	.0071	63	186	.60	4.641	.0144
15	121	.60	5.248	.0113	64	187	.60	5.306	.0170
16	122	.60	5.311	.0120	65	188	.40	10.727	.0110
17	124	.80	2.814	.0242	66	189	.80	2.615	.0185
18	125	.80	3.068	.0087	67	190	.80	3.026	.0077
19	126	.80	3.059	.0187	68	191	.60	5.013	.0675
20	127	.80	3.047	.0174	69	192	2.00	.670	.0343
21	128	.80	3.418	.0061	70	193	.60	3.882	.0157
22	129	.60	4.265	.0129	71	194	2.00	.873	.0277
23	130	.80	3.641	.0147	72	195	1.20	1.561	.0137
24	131	.80	3.348	.0117	73	196	.80	2.889	.0109
25	132	.80	5.593	.0081	74	197	2.00	.680	.0181
26	133	.80	3.624	.0119	75	198	2.00	.818	.0143
27	134	.60	5.136	.0075	76	199	1.20	1.426	.0178
28	135	.60	6.648	.0082	77	200	.80	2.159	.0178
29	136	.60	7.064	.0054	78	201	.80	4.048	.0091
30	137	.60	6.803	.0055	79	202	.60	5.705	.0528
31	138	.60	7.362	.0071	80	203	2.00	.958	.0086
32	139	.60	7.015	.0077	81	204	1.20	1.617	.0135
33	140	.60	7.286	.0061	82	205	.80	3.535	.0093
34	141	.60	6.714	.0047	83	206	1.20	1.081	.0284
35	142	.60	5.476	.0148	84	207	.60	4.322	.0135
36	143	.60	8.038	.0072	85	208	2.00	.906	.0110
37	144	.40	9.169	.0079	86	209	1.20	1.137	.0195
38	161	.80	2.438	.0204	87	210	1.20	1.303	.0366
39	162	.80	2.275	.0170	88	211	1.20	1.206	.0139
40	163	1.20	1.644	.0183	89	212	1.20	1.032	.0210
41	164	1.20	1.786	.0099	90	213	1.20	1.164	.1172
42	165	1.20	1.550	.0119	91	214	1.20	1.793	.0195
43	166	1.20	1.331	.0230	92	215	.80	2.010	.0628
44	167	1.20	1.878	.0113	93	216	.80	3.426	.0143
45	168	.80	1.948	.0128	94	217	.60	4.296	.0239
46	169	1.20	1.534	.0117	95	218	1.20	1.164	.0327
47	170	1.20	1.476	.0312	96	219	.80	1.996	.0165
48	171	1.20	1.576	.0102	97	220	.80	2.529	.0125
49	172	1.20	1.253	.0143	98	0	-0	0	0

AS .050

BIT ON LOOP 60

DATE 5/12/79

AEDC(ARO,INC.) ARNOLD AFS, TENNESSEE
VON KARMAN GAS DYNAMICS FACILITY
50 INCH HYPERSONIC TUNNEL B
V41B-87A

GROUP	TEST CONDITION	MODEL	MACH NO	PO,PSIA	TO,DEG R	ALPHA-MODEL	ALPHA-SECTOR	ALPHA-PREBEND	ROLL MODEL	YAW
69	31	140 B	7.99	673.5	1336	30.00	-2.01	30.00	90.05	2.0

T-INF (DEG R)	P-INF (PSIA)	Q-INF (PSIA)	V-INF (FT/SEC)	RHO-INF (SLUGS/FT3)	MU-INF (LB-SEC/FT2)	RE/FT (FT-1)	HREF-FR (R= .0400FT)	STFR (R= .0400FT)	SWITCH POSITION
97.0	.070	3.108	3856	6.015E-05	7.811E-08	2.970E 06	2.877E-02	1.559E-02	3

TC NO	TW	DTWDT	QDOT	H(TO)	H(TO)/HREF	H(.9TO)	H(.9TO)/HREF
221	525.3	.623	.075	9.256E-05	.0032	1.108E-04	.0039
222	525.2	1.142	.140	1.728E-04	.0060	2.069E-04	.0072
223	525.2	2.666	.350	4.453E-04	.0155	5.332E-04	.0185
224	532.6	6.834	.680	8.468E-04	.0294	1.016E-03	.0353
225	529.5	4.262	.509	6.313E-04	.0219	7.566E-04	.0263
226	537.5	13.700	1.447	1.812E-03	.0630	2.176E-03	.0756
227	531.7	9.159	1.340	1.667E-03	.0579	1.999E-03	.0695
228	528.5	4.011	.514	6.373E-04	.0221	7.637E-04	.0265
229	529.2	3.916	.502	6.229E-04	.0216	7.466E-04	.0259
232	526.2	.539	.073	8.979E-05	.0031	1.075E-04	.0037
233	527.0	.640	.097	1.196E-04	.0042	1.433E-04	.0050
236	525.8	.609	.089	1.097E-04	.0038	1.314E-04	.0046
237	526.5	.700	.098	1.213E-04	.0042	1.453E-04	.0050
238	533.5	3.881	.520	6.480E-04	.0225	7.774E-04	.0270
239	535.3	5.441	.729	9.113E-04	.0317	1.094E-03	.0380
240	534.0	3.544	.526	6.316E-04	.0220	7.579E-04	.0263
241	536.8	4.905	.641	8.649E-04	.0301	1.039E-03	.0361
242	537.1	5.602	.812	1.004E-03	.0349	1.206E-03	.0419
243	535.1	3.543	.434	5.418E-04	.0188	6.503E-04	.0226
244	534.4	2.679	.314	3.913E-04	.0136	4.696E-04	.0163
245	533.6	2.488	.355	4.432E-04	.0154	5.317E-04	.0185
246	533.8	2.563	.366	4.567E-04	.0159	5.480E-04	.0190
247	533.5	2.014	.247	3.698E-04	.0129	4.437E-04	.0154
248	533.9	2.164	.319	3.977E-04	.0138	4.772E-04	.0166
249	535.8	2.797	.413	5.157E-04	.0179	6.190E-04	.0215
250	536.0	2.602	.327	4.087E-04	.0142	4.906E-04	.0171
251	536.3	2.897	.356	4.455E-04	.0155	5.349E-04	.0186
252	536.0	4.214	.612	7.655E-04	.0266	9.190E-04	.0319
253	538.3	6.248	.939	1.140E-03	.0396	1.369E-03	.0476
254	536.5	4.085	.621	7.771E-04	.0270	9.330E-04	.0324
257	539.5	4.616	.624	7.840E-04	.0272	9.421E-04	.0327
258	541.0	5.917	.809	1.018E-03	.0354	1.223E-03	.0425

CANOPY

ESCAPE HATCH AND WINDOW

X/L	2Y/B
.1933	.0162
.1972	.0162
.1933	.0384
.1972	.0384
.1933	.0653
.1972	.0653
.2567	.0235
.2606	.0235
.2567	.0491
.2606	.0491

CARGO BAY HINGE NO. 1

X/L	Z,FULL SCALE(IN)
.2879	420.0000
.2917	420.0000
.2840	415.0000
.2879	415.0000
.2917	415.0000
.2801	405.0000
.2840	405.0000

CARGO BAY HINGE NO. 2

X/L	Z,FULL SCALE(IN)
.3192	420.0000
.3439	420.0000
.3362	415.0000
.3401	415.0000
.3439	415.0000
.3323	405.0000
.3362	405.0000

CARGO BAY HINGE NO. 3

X/L	Z,FULL SCALE(IN)
.3923	420.0000
.3961	420.0000
.3884	415.0000
.3845	405.0000
.3884	405.0000

DATE 5/12/75

AEDC(ARO,INC.) ARNOLD AFS, TENNESSEE
VON KARMAN GAS DYNAMICS FACILITY
50 INCH HYPERSONIC TUNNEL A
V41B-B7A

GROUP	TEST CONDITION	MODEL	MACH NO	PO,PSIA	TO,DEG R	ALPHA-MODEL	ALPHA-SECTOR	ALPHA-PREBEND	ROLL MODEL	YAW
69	31	140 B	7.99	673.5	1336	30.00	-2.01	30.00	90.05	2.0

T-INF (DEG R)	P-INF (PSIA)	Q-INF (PSIA)	V-INF (FT/SEC)	RHO-INF (SLUGS/FT3)	MU-INF (LB-SEC/FT2)	RE/FT (FT-1)	HREF-FR (R= .0400FT)	STFR (R= .0400FT)	SWITCH POSITION
97.0	.076	3.108	3856	6.015E-05	7.811E-08	2.970E 06	2.877E-02	1.559E-02	3

TOP CENTERLINE

TC NO	TW	DTWDT	CDOT	H(TO)	H(TO)/HREF	H(.9TO)	H(.9TO)/HREF	X/L
367	619.4	92.039	11.279	1.575E-02	.5472	1.936E-02	.6727	0
368	583.9	67.562	8.786	1.169E-02	.4061	1.421E-02	.4938	.0008
369	565.8	45.920	5.452	7.053E-03	.2451	8.526E-03	.2963	.0019
370	552.7	33.060	4.069	5.197E-03	.1806	6.265E-03	.2177	.0037
371	549.2	23.856	2.351	2.989E-03	.1039	3.601E-03	.1251	.0058
372	541.9	16.645	2.149	2.708E-03	.0941	3.255E-03	.1131	.0087
373	537.9	10.293	1.349	1.691E-03	.0588	2.032E-03	.0706	.0118
374	536.5	8.345	1.093	1.368E-03	.0475	1.642E-03	.0571	.0151
375	535.3	6.627	.916	1.132E-03	.0393	1.359E-03	.0472	.0182
376	535.6	5.628	.742	9.274E-04	.0322	1.113E-03	.0387	.0215
377	535.2	5.110	.658	8.215E-04	.0285	9.860E-04	.0343	.0246
378	534.4	4.278	.499	6.224E-04	.0216	7.469E-04	.0260	.0278
379	531.5	2.609	.320	3.979E-04	.0138	4.771E-04	.0166	.0609
380	529.8	2.276	.233	2.895E-04	.0101	3.470E-04	.0121	.0646
381	528.9	2.206	.285	3.532E-04	.0123	4.233E-04	.0147	.0684
382	528.0	1.859	.243	3.003E-04	.0104	3.598E-04	.0125	.0721
383	527.4	1.692	.226	2.795E-04	.0097	3.348E-04	.0116	.0760
384	526.8	1.508	.209	2.588E-04	.0090	3.100E-04	.0108	.0796
385	527.8	1.647	.211	2.614E-04	.0091	3.132E-04	.0109	.0789
386	528.0	1.719	.203	2.511E-04	.0087	3.009E-04	.0105	.0982
387	528.5	1.897	.232	2.879E-04	.0100	3.450E-04	.0120	.1019
388	540.0	2.656	.252	3.129E-04	.0109	3.751E-04	.0130	.1160
389	529.2	2.424	.351	4.352E-04	.0151	5.216E-04	.0181	.1195
390	528.8	2.473	.389	4.819E-04	.0167	5.775E-04	.0201	.1231
391	528.5	2.257	.359	4.445E-04	.0154	5.326E-04	.0185	.1268
392	528.8	2.425	.415	5.140E-04	.0179	6.160E-04	.0214	.1305
393	528.8	2.571	.434	5.378E-04	.0187	6.445E-04	.0224	.1338
394	529.0	2.760	.462	5.730E-04	.0199	6.867E-04	.0239	.1376
395	529.2	2.977	.444	5.508E-04	.0191	6.601E-04	.0229	.1411
396	529.9	3.075	.455	5.646E-04	.0196	6.768E-04	.0235	.1448
397	530.5	3.180	.471	5.845E-04	.0203	7.007E-04	.0244	.1483
398	530.6	4.275	.600	7.456E-04	.0259	8.939E-04	.0311	.1519
399	541.1	11.473	1.537	1.935E-03	.0672	2.326E-03	.0808	.1556

DATE 5/12/75

AEDC(ARO,INC.) ARNOLD AFS, TENNESSEE
VON KARMAN GAS DYNAMICS FACILITY
50 INCH HYPERSONIC TUNNEL B
V41B-B7A

GROUP	TEST CONDITION	MODEL	MACH NO	PO,PSIA	TO,DEG R	ALPHA-MODEL	ALPHA-SECTOR	ALPHA-PREBEND	ROLL MODEL	YAW
69	31	149 B	7.99	673.5	1336	30.00	-2.01	30.00	90.05	2.0

T-INF (DEG R)	P-INF (PSIA)	Q-INF (PSIA)	V-INF (FT/SEC)	RHO-INF (SLUGS/FT3)	MU-INF (LB-SEC/FT2)	RE/FT (FT-1)	HREF-FR (R= .0400FT)	STFR (R= .0400FT)	SWITCH POSITION
97.0	.070	3.108	3856	6.015E-05	7.811E-08	2.970E 06	2.877E-02	1.559E-02	3

TC NO	TW	DTWDT	QDOT	H(TO)	H(TO)/HREF	H(.9TO)	H(.9TO)/HREF	X/L
								TOP CENTERLINE
400	542.4	12.577	1.704	2.147E-03	.0746	2.582E-03	.0897	.1582
401	541.3	12.285	1.597	2.010E-03	.0699	2.416E-03	.0840	.1608
402	542.0	13.060	1.634	2.058E-03	.0715	2.475E-03	.0860	.1635
403	541.5	11.936	1.455	1.831E-03	.0636	2.202E-03	.0765	.1664
404	540.6	11.436	1.395	1.754E-03	.0610	2.108E-03	.0733	.1691
405	541.2	11.216	1.362	1.715E-03	.0596	2.061E-03	.0716	.1720
406	538.5	10.435	1.266	1.588E-03	.0552	1.907E-03	.0663	.1748
407	537.1	9.040	1.169	1.463E-03	.0509	1.757E-03	.0611	.1769
408	535.9	7.916	1.161	1.451E-03	.0504	1.742E-03	.0605	.1800
409	533.9	5.939	.854	1.065E-03	.0370	1.278E-03	.0444	.1831
410	532.5	5.017	.721	8.976E-04	.0312	1.077E-03	.0374	.1863
411	531.4	4.184	.627	7.796E-04	.0271	9.348E-04	.0325	.1894
412	531.2	3.376	.458	5.688E-04	.0198	6.821E-04	.0237	.1931
413	529.8	2.922	.391	4.847E-04	.0168	5.810E-04	.0202	.1972
414	528.5	1.440	.192	2.382E-04	.0083	2.855E-04	.0099	.2049
415	527.4	.804	.079	9.783E-05	.0034	1.172E-04	.0041	.2250
416	527.2	.426	.050	6.137E-05	.0021	7.352E-05	.0026	.2500
								NOSE TC (Z = 338)
								X/L 2Y/B
145	593.5	63.777	8.803	1.166E-02	.4121	1.446E-02	.5026	.0008 .5039
146	598.0	67.262	9.304	1.261E-02	.4383	1.540E-02	.5352	.0023 .5082
147	585.8	58.258	8.011	1.068E-02	.3712	1.300E-02	.4517	.0043 .5135
148	577.0	47.743	6.754	8.902E-03	.3094	1.080E-02	.3755	.0068 .5205
149	561.7	33.862	4.938	6.379E-03	.2217	7.710E-03	.2679	.0095 .5279
150	562.8	29.109	4.208	5.444E-03	.1892	6.581E-03	.2287	.0122 .5354
151	557.0	19.726	2.789	3.581E-03	.1245	4.323E-03	.1502	.0218 .5621
152	556.2	21.851	3.040	3.823E-03	.1329	4.614E-03	.1603	.0251 .5712
153	557.2	21.896	2.641	3.457E-03	.1201	4.172E-03	.1450	.0286 .5808
154	558.7	22.511	2.820	3.629E-03	.1261	4.382E-03	.1523	.0319 .5898
155	556.2	21.083	2.666	3.420E-03	.1189	4.127E-03	.1434	.0354 .5995
156	554.1	19.184	2.397	3.067E-03	.1066	3.700E-03	.1286	.0387 .6085
157	553.6	18.422	2.277	2.911E-03	.1012	3.510E-03	.1220	.0420 .6176
158	553.2	18.387	2.272	2.903E-03	.1009	3.501E-03	.1217	.0462 .6294
159	552.4	17.857	2.012	2.569E-03	.0893	3.097E-03	.1076	.0503 .6406

GROUP 89 CENTERLINE TIME 2.95

CH	TC	FIT LENGTH	DTDWT	UNCERTAINTY	CH	TC	FIT LENGTH	DTDWT	UNCERTAINTY
1	221	2.00	.623	.0141	50	384	1.20	1.508	.0116
2	222	1.20	1.142	.0184	51	385	1.20	1.647	.0182
3	223	.80	2.666	.0124	52	386	1.20	1.719	.0161
4	224	.60	6.834	.0051	53	387	1.20	1.897	.0119
5	225	.60	4.262	.0250	54	388	.80	2.656	.0193
6	226	.40	13.700	.0043	55	389	.80	2.424	.0198
7	227	.40	9.159	.0738	56	390	.80	2.473	.0467
8	228	.60	4.011	.0134	57	391	.80	2.257	.0130
9	229	.80	3.916	.0249	58	392	.80	2.425	.0090
10	232	2.00	.539	.0145	59	393	.80	2.571	.0174
11	233	2.00	.640	.0276	60	394	.80	2.760	.0121
12	236	2.00	.609	.0172	61	395	.80	2.977	.0170
13	237	2.00	.700	.0125	62	396	.80	3.075	.0093
14	238	.60	3.881	.0116	63	397	.80	3.180	.0156
15	239	.60	5.441	.0153	64	398	.60	4.275	.0160
16	240	.80	3.544	.0087	65	399	.40	11.473	.0071
17	241	.60	4.985	.0310	66	400	.40	12.577	.0095
18	242	.60	5.602	.0089	67	401	.40	12.285	.0042
19	243	.80	3.543	.0112	68	402	.40	13.060	.0660
20	244	.80	2.679	.0122	69	403	.40	11.930	.0155
21	245	.80	2.488	.0119	70	404	.40	11.486	.0080
22	246	.80	2.563	.0108	71	405	.40	11.216	.0111
23	247	.80	2.014	.0288	72	406	.40	10.435	.0113
24	248	.80	2.164	.0204	73	407	.40	9.040	.0139
25	249	.80	2.747	.0193	74	408	.40	7.916	.0121
26	250	.80	2.602	.0145	75	409	.60	5.939	.0096
27	251	.80	2.897	.0242	76	410	.60	5.017	.0083
28	252	.60	4.214	.0163	77	411	.60	4.184	.0129
29	253	.60	6.248	.0075	78	412	.80	3.376	.0109
30	254	.60	4.085	.0157	79	413	.80	2.922	.0740
31	257	.60	4.616	.0115	80	414	1.20	1.440	.0138
32	258	.60	5.917	.0068	81	415	2.00	.804	.0123
33	367	.20	92.039	.0018	82	416	2.00	.426	.0161
34	368	.20	67.562	.0034	83	145	.20	63.777	.0031
35	369	.20	45.920	.0066	84	146	.20	67.262	.0037
36	370	.20	33.060	.0048	85	147	.20	58.258	.0020
37	371	.30	23.856	.0048	86	148	.20	47.743	.0013
38	372	.30	16.645	.0095	87	149	.20	33.862	.0094
39	373	.40	10.293	.0058	88	150	.30	29.109	.0040
40	374	.40	8.345	.0155	89	151	.30	19.720	.0123
41	375	.60	6.627	.0068	90	152	.30	21.851	.0273
42	376	.60	5.628	.0073	91	153	.30	21.896	.0051
43	377	.60	5.110	.0252	92	154	.30	22.511	.0121
44	378	.60	4.278	.0129	93	155	.30	21.083	.0061
45	379	.80	2.689	.0170	94	156	.30	19.184	.0080
46	380	.80	2.276	.0115	95	157	.30	18.422	.0143
47	381	.80	2.206	.0333	96	158	.30	18.387	.0084
48	382	1.20	1.859	.0124	97	159	.30	17.857	.0067
49	383	1.20	1.692	.0149	98	0	-0	0	0
	90	.050							

HIT ON LOOP 62

DATE 5/12/75

AEDC(ARO,INC.) ARNOLD AFS, TENNESSEE
VON KARMAN GAS DYNAMICS FACILITY
50 INCH HYPERSONIC TUNNEL B
V41B-B7A

GROUP	TEST CONDITION	MODEL	MACH NO	PO,PSIA	TO,DEG R	ALPHA-MODEL	ALPHA-SECTOR	ALPHA-PREBEND	ROLL MODEL	YAW
50	32	140 B	7.99	676.7	1336	35.11	-5.11	30.00	179.88	.0

T-INF (DEG R)	P-INF (PSIA)	Q-INF (PSIA)	V-INF (FT/SEC)	RHO-INF (SLUGS/FT3)	MU-INF (LB-SEC/FT2)	RE/FT (FT-1)	HREF-FR (R= .0400FT)	STFR (R= .0400FT)	SWITCH POSITION
97.0	.076	3.123	3856	6.043E-05	7.810E-08	2.984E 06	2.884E-02	1.555E-02	1

TC	NC	TW	DTWDT	QDOT	H(TO)	H(TO)/HREF	H(.9TO)	H(.9TO)/HREF
1	541.9	2.045	.271	3.409E-04	.0118	4.098E-04	.0142
2	541.-	2.054	.277	3.492E-04	.0121	4.199E-04	.0146
3	541.8	1.761	.242	3.053E-04	.0106	3.671E-04	.0127
4	541.9	1.718	.234	2.951E-04	.0102	3.547E-04	.0123
5	542.1	1.584	.212	2.668E-04	.0092	3.208E-04	.0111
6	543.0	1.456	.193	2.440E-04	.0085	2.934E-04	.0102
7	542.8	1.061	.155	1.956E-04	.0068	2.353E-04	.0082
8	541.9	1.474	.223	2.807E-04	.0097	3.375E-04	.0117
9	542.1	1.133	.165	2.080E-04	.0072	2.501E-04	.0087
10	542.8	.994	.143	1.861E-04	.0062	2.166E-04	.0075
11	543.3	1.052	.144	1.811E-04	.0063	2.178E-04	.0076
12	545.2	.884	.122	1.548E-04	.0054	1.862E-04	.0065
13	548.0	.582	.086	1.069E-04	.0038	1.312E-04	.0045
14	545.3	.677	.093	1.173E-04	.0041	1.412E-04	.0049
15	546.7	.751	.101	1.275E-04	.0044	1.535E-04	.0053
16	547.7	.385	.052	6.628E-05	.0023	7.981E-05	.0028
17	549.5	.405	.055	7.008E-05	.0024	8.442E-05	.0029
18	551.5	.242	.034	4.337E-05	.0015	5.228E-05	.0018
19	554.1	.066	.009	1.185E-05	.0004	1.429E-05	.0005
22	542.5	6.962	.958	1.220E-03	.0423	1.468E-03	.0509
23	542.8	7.962	1.114	1.405E-03	.0487	1.690E-03	.0586
24	542.9	7.400	1.002	1.264E-03	.0438	1.521E-03	.0527
25	541.3	6.188	.814	1.025E-03	.0356	1.233E-03	.0427
26	542.2	6.766	.849	1.121E-03	.0389	1.347E-03	.0467
27	543.5	7.434	1.037	1.310E-03	.0454	1.575E-03	.0546
28	543.7	7.136	1.028	1.298E-03	.0450	1.561E-03	.0541
29	542.3	6.514	.941	1.186E-03	.0411	1.426E-03	.0494
30	540.5	6.393	.920	1.157E-03	.0401	1.391E-03	.0482
31	541.1	7.255	1.015	1.277E-03	.0443	1.535E-03	.0532
32	541.6	8.660	1.149	1.447E-03	.0502	1.740E-03	.0603
33	542.3	7.037	1.007	1.259E-03	.0440	1.526E-03	.0529
34	542.8	9.221	1.250	1.578E-03	.0547	1.899E-03	.0658
35	545.7	6.796	.965	1.221E-03	.0423	1.470E-03	.0510
36	542.8	5.239	.762	9.604E-04	.0333	1.155E-03	.0400
37	543.8	7.707	1.086	1.372E-03	.0476	1.650E-03	.0572
38	543.6	4.945	.690	8.715E-04	.0302	1.048E-03	.0363
39	544.2	4.013	.587	7.420E-04	.0257	8.927E-04	.0310
41	545.4	6.991	.939	1.188E-03	.0412	1.430E-03	.0496
42	545.5	6.894	.945	1.195E-03	.0414	1.439E-03	.0499
43	546.9	6.947	.986	1.148E-03	.0398	1.382E-03	.0479

FUSELAGE VENT NO. 1

X/L	Z,FULL SCALE(IN)
.4434	376.6300
.4264	371.6300
.4303	371.6300
.4342	371.6300
.4380	371.6300
.4434	369.1300
.4226	366.6300
.4264	366.6300
.4303	366.6300
.4342	366.6300
.4380	366.6300
.4496	366.6300
.4187	357.1300
.4396	361.6300
.4434	361.6300
.4396	355.6300
.4434	355.6300
.4396	351.6300
.4291	332.6300

CARGO BAY VENT NO. 1

X/L	Z,FULL SCALE(IN)
.3974	397.6300
.4013	397.6300
.4052	397.6300
.4090	397.6300
.4129	397.6300
.3936	392.6300
.3974	392.6300
.4013	392.6300
.4052	392.6300
.4090	392.6300
.4129	392.6300
.4090	386.1300
.4129	387.6300
.3897	383.1300
.4090	378.6300
.4129	382.1300
.4129	377.1300
.4001	373.6300

PROTUBERANCES

X/L	Z,FULL SCALE(IN)
.3546	379.0500
.3604	379.0500
.3450	374.0500

DATE 5/12/75

AEDC(ARO,INC.) ARNOLD AFS, TENNESSEE
VON KARMAN GAS DYNAMICS FACILITY
50 INCH HYPERSONIC TUNNEL H
V418-B/A

GROUP	TEST CONDITION	MODEL	MACH NO	PO,PSIA	TO,DEG R	ALPHA-MODEL	ALPHA-SECTOR	ALPHA-PREBEND	ROLL MODEL	YAW
50	32	140 H	7.99	676.7	1336	35.11	-5.11	30.00	179.88	.0

T-INF (DEG R)	P-INF (PSIA)	Q-INF (PSIA)	V-INF (FT/SEC)	RHO-INF (SLUGS/FT3)	MU-INF (LB-SEC/FT2)	RE/FT (FT-1)	HREF-FR (R= .0400FT)	STFR (R= .0400FT)	SWITCH POSITION
97.0	.070	3.123	3656	6.043E-05	7.810E-08	2.984E 06	2.884E-02	1.555E-02	1

TC NO	TW	DTWDT	QDOT	H(TO)	H(TO)/HREF	H(.9TO)	H(.9TO)/HREF
44	546.0	5.957	.814	1.030E-03	.0357	1.240E-03	.0430
45	545.2	5.174	.718	9.084E-04	.0315	1.093E-03	.0379
46	547.2	6.981	.979	1.242E-03	.0431	1.495E-03	.0518
47	547.9	5.699	.788	1.000E-03	.0347	1.205E-03	.0418
48	549.3	6.220	.857	1.089E-03	.0378	1.312E-03	.0455
49	548.1	4.734	.654	8.301E-04	.0288	9.996E-04	.0347
50	550.1	5.231	.730	9.295E-04	.0322	1.120E-03	.0388
51	550.0	5.064	.691	8.793E-04	.0305	1.059E-03	.0367
52	550.1	2.983	.412	5.248E-04	.0182	6.323E-04	.0219
53	550.8	3.478	.511	6.506E-04	.0226	7.840E-04	.0272
54	540.0	3.836	.548	6.846E-04	.0239	8.288E-04	.0287
55	551.3	2.741	.344	5.022E-04	.0174	6.052E-04	.0210
56	541.6	4.081	.527	6.635E-04	.0230	7.976E-04	.0277
57	544.3	4.878	.598	7.554E-04	.0262	9.088E-04	.0315
58	547.8	6.347	.842	1.069E-03	.0371	1.287E-03	.0446
59	551.8	6.339	.840	1.071E-03	.0372	1.291E-03	.0448
60	551.0	6.045	.847	1.079E-03	.0374	1.301E-03	.0451
61	549.2	5.809	.740	9.408E-04	.0326	1.133E-03	.0393
62	544.9	4.763	.586	7.411E-04	.0257	8.917E-04	.0309
63	542.5	3.923	.514	6.478E-04	.0225	7.790E-04	.0270
64	~~533.1~~	~~-.004~~	~~-.001~~	~~-6.491E-07~~	~~-.0000~~	~~-7.796E-07~~	~~-.0000~~
65	540.3	3.698	.504	6.332E-04	.0220	7.610E-04	.0264
66	543.0	4.744	.600	7.572E-04	.0263	9.106E-04	.0316
67	546.4	5.659	.799	1.012E-03	.0351	1.218E-03	.0422
68	550.5	7.010	.893	1.138E-03	.0395	1.371E-03	.0475

PROTUBERANCES

X/L	Z,FULL SCALE(IN)
.3508	374.0500
.3566	374.0500
.3604	374.0500
.3392	366.5500
.3566	366.5500
.3392	360.7000
.3566	360.7000
.3604	360.7000
.3392	353.2000
.3450	353.2000
.3508	353.2000
.3566	353.2000

SUBLIMATOR VENT NO. 1

X/L	Z,FULL SCALE(IN)
.3031	371.1300
.3074	369.1300
.3089	363.6300
.3074	358.1300
.3031	356.1300
.2988	358.1300
.2973	363.6300
.2988	369.1300
.3031	376.1300
.3089	378.6300
.3101	372.6300
.3157	370.3800
.3128	363.6300

DATE 5/12/75

AEDC(ARO,INC.) ARNOLD AFS, TENNESSEE
VON KARMAN GAS DYNAMICS FACILITY
50 INCH HYPERSONIC TUNNEL B
V41R-B7A

GROUP	TEST CONDITION	MODEL	MACH NO	PO,PSIA	TO,DEG R	ALPHA-MODEL	ALPHA-SECTOR	ALPHA-PREBEND	ROLL MODEL	YAW
99	32	140 B	7.99	676.7	1336	35.11	-5.11	30.00	179.88	.0

T-INF (DEG R)	P-INF (PSIA)	Q-INF (PSIA)	V-INF (FT/SEC)	RHO-INF (SLUGS/FT3)	MU-INF (LB-SEC/FT2)	RE/FT (FT-1)	HREF-FR (R= .0400FT)	STFR (R= .0400FT)	SWITCH POSITION
97.0	.670	3.123	3856	6.043E-05	7.810E-08	2.984E 06	2.884E-02	1.555E-02	1

IC NO	TW	DTWDT	QDOT	H(TO)	H(TO)/HREF	H(.9TO)	H(.9TO)/HREF	X/L	Z,FULL SCALE(IN)
								FUSELAGE VENT PANEL NO. 7	
69	533.9	2.772	.347	4.859E-04	.0168	5.838E-04	.0202	.2487	356.4000
70	535.2	2.642	.324	4.070E-04	.0141	4.891E-04	.0170	.2591	356.4000
71	540.7	3.043	.414	5.213E-04	.0181	6.266E-04	.0217	.2419	351.4000
72	540.1	2.672	.379	4.769E-04	.0165	5.732E-04	.0199	.2487	351.4000
73	541.1	2.884	.375	4.724E-04	.0164	5.679E-04	.0197	.2552	351.4000
74	542.4	3.246	.395	4.974E-04	.0172	5.980E-04	.0207	.2610	351.4000
75	543.7	2.983	.407	5.133E-04	.0178	6.174E-04	.0214	.2419	342.8000
77	545.4	3.484	.496	6.278E-04	.0218	7.555E-04	.0262	.2552	342.8000
78	546.6	4.505	.622	7.878E-04	.0273	9.463E-04	.0329	.2610	342.8000
79	545.5	3.778	.486	6.175E-04	.0214	7.437E-04	.0258	.2419	334.2000
80	549.0	4.079	.560	7.116E-04	.0247	8.572E-04	.0297	.2487	334.2000
81	549.5	4.600	.646	8.218E-04	.0285	9.900E-04	.0343	.2552	334.2000
								ACCESS HATCH WINDOW	
83	533.7	4.882	.652	8.127E-04	.0282	9.751E-04	.0338	.2131	398.0000
84	535.4	5.077	.669	8.363E-04	.0290	1.004E-03	.0348	.2131	388.0000
85	535.2	4.239	.578	7.217E-04	.0250	8.662E-04	.0300	.2131	383.0000
87	536.7	3.476	.496	6.171E-04	.0214	7.400E-04	.0257	.2222	395.8000
88	535.0	4.542	.635	7.933E-04	.0275	9.521E-04	.0330	.2193	386.5000
89	536.2	3.516	.517	6.470E-04	.0224	7.768E-04	.0269	.2177	381.8000
90	534.4	4.261	.581	7.245E-04	.0251	8.694E-04	.0301	.2297	389.5000
91	535.5	4.422	.607	7.585E-04	.0263	9.105E-04	.0316	.2243	382.5000
92	534.5	3.747	.529	6.626E-04	.0230	7.956E-04	.0276	.2214	378.7000
93	535.5	3.786	.484	6.055E-04	.0210	7.269E-04	.0252	.2343	374.0000
94	536.0	3.888	.506	6.326E-04	.0219	7.594E-04	.0263	.2274	375.5000
96	537.3	3.665	.521	6.530E-04	.0226	7.842E-04	.0272	.2239	373.3000
98	537.2	3.742	.487	6.099E-04	.0211	7.325E-04	.0254	.2363	368.0000
97	538.3	3.919	.502	6.292E-04	.0218	7.559E-04	.0262	.2286	368.0000
99	537.8	3.651	.517	6.482E-04	.0225	7.786E-04	.0270	.2247	368.0000
100	540.1	3.434	.488	6.131E-04	.0213	7.367E-04	.0255	.2274	360.5000
102	539.9	3.167	.451	5.668E-04	.0197	6.811E-04	.0236	.2081	354.3000
103	537.5	3.737	.492	6.162E-04	.0214	7.401E-04	.0257	.2023	362.7000
105	535.5	4.825	.602	7.529E-04	.0261	9.040E-04	.0313	.2050	378.7000
106	535.2	5.223	.670	8.309E-04	.0290	1.004E-03	.0348	.2050	386.2000

GROUP 90 CENTERLINE TIME 3.05

CH	TC	FIT LENGTH	DTDWT	UNCERTAINTY	CH	TC	FIT LENGTH	DTDWT	UNCERTAINTY
1	1	.80	2.045	.0137	50	53	.80	3.478	.0172
2	2	.80	2.054	.0120	51	54	.80	3.836	.0136
3	3	1.20	1.761	.0124	52	55	.80	2.741	.0225
4	4	1.20	1.718	.0130	53	56	.60	4.081	.0131
5	5	1.20	1.584	.0249	54	57	.60	4.878	.0148
6	6	1.20	1.456	.0135	55	58	.60	6.347	.0081
7	7	1.20	1.061	.1342	56	59	.60	6.339	.0215
8	8	1.20	1.474	.0220	57	60	.60	6.045	.0075
9	9	1.20	1.133	.0245	58	61	.60	5.809	.0049
10	10	2.00	.998	.0090	59	62	.60	4.763	.0205
11	11	1.20	1.059	.0210	60	63	.80	3.923	.0063
12	12	2.00	.884	.0148	61	64	2.00	-.004	-3.2449
13	13	2.00	.542	.0138	62	65	.80	3.698	.0094
14	14	2.00	.677	.0126	63	66	.60	4.744	.0134
15	15	2.00	.751	.0200	64	67	.60	5.659	.0142
16	16	2.00	.385	.0257	65	68	.60	7.010	.0087
17	17	2.00	.465	.0408	66	69	.80	2.772	.0196
18	18	2.00	.242	.0405	67	70	.80	2.642	.0127
19	19	2.00	.066	.1785	68	71	.80	3.043	.1524
20	22	.60	6.962	.0077	69	72	.80	2.672	.0256
21	23	.60	7.962	.0055	70	73	.80	2.888	.0091
22	24	.60	7.400	.0067	71	74	.80	3.246	.0252
23	25	.60	6.180	.0147	72	75	.80	2.980	.0114
24	26	.60	6.766	.0171	73	77	.80	3.484	.0100
25	27	.60	7.434	.0103	74	78	.60	4.505	.0172
26	28	.60	7.136	.0076	75	79	.80	3.778	.0162
27	29	.60	6.514	.0057	76	80	.80	4.079	.0099
28	30	.60	6.393	.0102	77	81	.60	4.600	.0115
29	31	.60	7.255	.0063	78	83	.60	4.882	.0078
30	32	.40	8.660	.0120	79	84	.60	5.077	.0624
31	33	.60	7.037	.0099	80	85	.60	4.239	.0089
32	34	.40	9.221	.0104	81	87	.80	3.476	.0086
33	35	.60	6.796	.0097	82	88	.60	4.542	.0077
34	36	.60	5.239	.0075	83	89	.80	3.516	.0272
35	37	.60	7.707	.0053	84	90	.60	4.261	.0123
36	38	.60	4.945	.0099	85	91	.60	4.422	.0122
37	39	.80	4.013	.0072	86	92	.80	3.747	.0088
38	41	.60	6.991	.0069	87	93	.80	3.788	.0238
39	42	.60	6.894	.0108	88	94	.60	3.888	.0646
40	43	.60	6.947	.0154	89	95	.80	3.665	.0151
41	44	.60	5.957	.0063	90	96	.80	3.742	.0608
42	45	.60	5.174	.0132	91	97	.80	3.919	.0119
43	46	.60	6.981	.0241	92	98	.80	3.681	.0221
44	47	.60	5.899	.0124	93	100	.80	3.434	.0078
45	48	.60	6.220	.0094	94	102	.80	3.187	.0228
46	49	.60	4.734	.0087	95	103	.80	3.737	.0183
47	50	.60	5.231	.0239	96	105	.60	4.805	.0219
48	51	.60	5.064	.0162	97	106	.60	5.223	.0061
49	52	.80	2.983	.0112	98	0	-0	0	0
	91	.050							

BIT ON LOOP 62

DATE 5/12/75

AEDC(ARO,INC.) ARNOLD AFS, TENNESSEE
VON KARMAN GAS DYNAMICS FACILITY
50 INCH HYPERSONIC TUNNEL R
V41R-R7A

GROUP	TEST CONDITION	MODEL	MACH NO	PO,PSIA	TO,DEG R	ALPHA-MODEL	ALPHA-SECTOR	ALPHA-PREBEND	ROLL MODEL	YAW
91	32	140 B	7.99	675.6	1336	35.09	-5.09	30.00	179.92	.0

T-INF (DEG R)	P-INF (PSIA)	Q-INF (PSIA)	V-INF (FT/SEC)	RHO-INF (SLUGS/FT3)	MU-INF (LB-SEC/FT2)	RE/FT (FT-1)	HREF-FR (R= .0400FT)	STFR (R= .0400FT)	SWITCH POSITION
97.1	.070	3.117	3857	6.030E-05	7.814E-08	2.976E 06	2.882E-02	1.557E-02	2

TC NO	TW	DTWDT	GDOT	H(TO)	H(TO)/HREF	H(.9TO)	H(.9TO)/HREF	X/L	Z,FULL SCALE(IN)
								ACCESS HATCH WINDOW	
107	532.5	4.816	.690	8.582E-04	.0298	1.029E-03	.0357	.2050	396.2000
								FUSELAGE VENT PANEL NO. 3 AND 1	
								X/L	Z,FULL SCALE(IN)
108	533.4	7.103	.752	9.361E-04	.0325	1.123E-03	.0390	.1244	377.5000
109	531.8	6.226	.769	9.563E-04	.0332	1.147E-03	.0398	.1302	377.5000
110	531.9	6.083	.771	9.579E-04	.0332	1.149E-03	.0399	.1360	377.5000
111	532.6	6.209	.748	9.309E-04	.0323	1.116E-03	.0387	.1418	377.5000
112	533.7	6.227	.740	9.213E-04	.0320	1.105E-03	.0384	.1476	377.5000
113	533.2	7.303	.838	1.043E-03	.0362	1.251E-03	.0434	.1215	273.5000
114	532.8	6.309	.757	9.427E-04	.0327	1.131E-03	.0392	.1273	273.5000
115	532.7	5.795	.719	8.947E-04	.0310	1.073E-03	.0372	.1331	273.5000
116	533.0	5.891	.723	9.002E-04	.0312	1.080E-03	.0375	.1389	273.5000
117	535.0	6.200	.715	8.919E-04	.0309	1.070E-03	.0371	.1447	273.5000
118	534.3	4.880	.676	8.425E-04	.0292	1.011E-03	.0351	.1409	366.0000
119	535.8	5.576	.723	9.028E-04	.0313	1.084E-03	.0376	.1442	366.0000
120	535.8	5.868	.734	9.174E-04	.0318	1.101E-03	.0382	.1215	359.5000
121	535.8	5.092	.626	7.818E-04	.0271	9.385E-04	.0326	.1303	359.5000
122	536.5	5.115	.638	7.977E-04	.0277	9.577E-04	.0332	.1337	359.5000
								LOWER RCS NOZZLES	
								X/L	Z,FULL SCALE(IN)
124	525.9	2.202	.196	2.417E-04	.0084	2.894E-04	.0100	.0950	400.0000
125	525.9	2.554	.277	3.420E-04	.0119	4.095E-04	.0142	.0988	400.0000
126	526.0	2.444	.334	4.118E-04	.0143	4.932E-04	.0171	.1027	400.0000
127	525.9	2.278	.306	3.775E-04	.0131	4.521E-04	.0157	.0911	395.0000
128	526.6	2.917	.353	4.360E-04	.0151	5.221E-04	.0181	.0950	395.0000
129	527.6	3.425	.401	4.958E-04	.0172	5.940E-04	.0206	.0988	395.0000
130	527.7	2.973	.355	4.386E-04	.0152	5.254E-04	.0182	.0810	390.0000
131	526.8	2.888	.425	5.253E-04	.0182	6.292E-04	.0218	.0857	390.0000
132	528.6	4.802	.558	6.910E-04	.0240	8.280E-04	.0287	.0963	390.0000
133	527.9	3.272	.396	4.900E-04	.0170	5.871E-04	.0204	.0857	383.8000
134	528.1	4.422	.591	7.307E-04	.0254	8.754E-04	.0304	.0872	377.3000
135	530.2	5.950	.713	8.851E-04	.0307	1.061E-03	.0368	.0903	374.5500
136	531.2	6.448	.716	8.893E-04	.0309	1.066E-03	.0370	.0960	374.5500
137	530.4	6.103	.797	9.891E-04	.0343	1.186E-03	.0411	.0872	370.5500
138	531.7	6.830	.786	9.769E-04	.0339	1.171E-03	.0406	.0928	370.5500
139	532.1	6.384	.815	1.013E-03	.0351	1.215E-03	.0422	.0816	366.0500
140	533.4	6.895	.877	1.093E-03	.0379	1.311E-03	.0455	.0934	362.4000
141	533.1	6.529	.863	1.074E-03	.0373	1.288E-03	.0447	.0973	362.4000
142	535.7	5.030	.549	6.852E-04	.0238	8.225E-04	.0285	.0833	355.2000
143	535.4	7.754	.780	9.736E-04	.0338	1.169E-03	.0405	.0919	355.2000
144	537.0	8.715	1.150	1.439E-03	.0499	1.727E-03	.0599	.0949	349.0000

DATE 5/12/75

AEDC(ARO,INC.) ARNOLD AFS, TENNESSEE
VON KARMAN GAS DYNAMICS FACILITY
50 INCH HYPERSONIC TUNNEL B
V41A-B/A

GROUP	TEST CONDITION	MODEL	MACH NO	PO,PSIA	TO,DEG R	ALPHA-MODEL	ALPHA-SECTOR	ALPHA-PREBEND	ROLL MODEL	YAW
91	32	140 B	7.99	675.6	1336	35.09	-5.09	30.00	179.92	.0

T-INF (DEG R)	P-INF (PSIA)	Q-INF (PSIA)	V-INF (FT/SEC)	RHO-INF (SLUGS/FT3)	MU-INF (LB-SEC/FT2)	RE/FT (FT-1)	HREF-FR (R= .0400FT)	STFR (R= .0400FT)	SWITCH POSITION
97.1	.070	3.117	3857	6.030E-05	7.814E-08	2.976E 06	2.882E-02	1.557E-02	2

TC NO	TW	DTWDT	QDOT	H(TO)	H(TO)/HREF	H(.9TO)	H(.9TO)/HREF
161	529.2	2.293	.271	3.354E-04	.0116	4.020E-04	.0139
162	528.7	2.218	.219	2.594E-04	.0090	3.108E-04	.0108
163	527.9	1.748	.214	2.648E-04	.0092	3.172E-04	.0110
164	527.6	2.127	.276	3.419E-04	.0119	4.096E-04	.0142
165	528.1	2.059	.259	3.199E-04	.0111	3.833E-04	.0133
166	528.7	2.056	.263	3.254E-04	.0113	3.899E-04	.0135
167	528.1	1.427	.192	2.382E-04	.0083	2.853E-04	.0099
168	528.2	1.712	.179	2.217E-04	.0077	2.656E-04	.0092
169	526.8	1.457	.176	2.178E-04	.0076	2.608E-04	.0091
170	527.1	1.754	.219	2.701E-04	.0094	3.235E-04	.0112
171	526.9	2.258	.271	3.352E-04	.0116	4.015E-04	.0139
172	526.2	2.096	.272	3.361E-04	.0117	4.025E-04	.0140
173	525.1	.672	.089	1.101E-04	.0038	1.318E-04	.0046
174	524.7	.615	.070	8.581E-05	.0030	1.027E-04	.0036
175	525.0	.814	.116	1.431E-04	.0050	1.713E-04	.0059
176	525.1	.907	.123	1.515E-04	.0053	1.814E-04	.0063
177	538.4	13.494	1.860	2.331E-03	.0809	2.800E-03	.0972
178	541.1	17.956	3.541	4.453E-03	.1545	5.352E-03	.1857
179	542.1	16.953	3.566	4.490E-03	.1558	5.398E-03	.1873
180	538.0	11.068	1.446	1.812E-03	.0629	2.176E-03	.0755
181	536.2	8.415	1.144	1.430E-03	.0496	1.716E-03	.0596
182	531.9	3.472	.494	6.152E-04	.0213	7.352E-04	.0255
183	527.6	.892	.112	1.380E-04	.0048	1.653E-04	.0057
184	527.8	1.003	.137	1.690E-04	.0059	2.025E-04	.0070
185	534.6	7.450	.845	1.117E-03	.0388	1.340E-03	.0465
186	532.7	5.339	.670	8.332E-04	.0289	9.994E-04	.0347
187	532.1	4.918	.654	8.131E-04	.0282	9.751E-04	.0338
188	533.3	6.362	1.440	1.843E-03	.0639	2.211E-03	.0767
189	531.5	4.976	.708	8.797E-04	.0305	1.055E-03	.0366
190	529.7	3.573	.513	6.355E-04	.0220	7.616E-04	.0264
191	531.0	4.016	.612	7.605E-04	.0264	9.118E-04	.0316

UPPER RCS NOZZLES

X/L	2Y/B
.0619	-.0160
.0709	-.0160
.0807	-.0160
.0943	-.0160
.0978	-.0160
.1013	-.0160
.0619	-.0320
.0709	-.0320
.0807	-.0320
.0943	-.0320
.0978	-.0320
.1013	-.0320
.0807	-.0480
.0943	-.0480
.0978	-.0480
.1013	-.0480

CANOPY

DATE 5/12/75

AEDC(ARO,INC.) ARNOLD AFS, TENNESSEE
VON KARMAN GAS DYNAMICS FACILITY
50 INCH HYPERSONIC TUNNEL B
V41P-B7A

GROUP	TEST CONDITION	MODEL	MACH NO	PO,PSIA	TO,DEG R	ALPHA-MODEL	ALPHA-SECTOR	ALPHA-PREBEND	ROLL MODEL	YAW
91	32	140 B	7.99	675.6	1336	35.09	-5.09	30.00	179.92	.0

T-INF (DEG R)	P-INF (PSIA)	Q-INF (PSIA)	V-INF (FT/SEC)	RHO-INF (SLUGS/FT3)	MU-INF (LB-SEC/FT2)	RE/FT (FT-1)	HREF-FR (R= .0400FT)	STFR (R= .0400FT)	SWITCH POSITION
97.1	.070	3.117	3857	6.030E-05	7.814E-08	2.976E 06	2.882E-02	1.557E-02	2

TC NO	TW	DTWDT	QDOT	H(TO)	H(TO)/HREF	H(.9TO)	H(.9TO)/HREF
						CANOPY	
192	526.3	.322	.045	5.594E-05	.0019	6.699E-05	.0023
193	52[illegible].6	2.946	.566	7.014E-04	.0243	8.407E-04	.0292
194	527.[illegible]	1.740	.224	2.765E-04	.0096	3.312E-04	.0115
195	527.1	1.677	.236	2.545E-04	.0088	3.049E-04	.0106
196	527.4	1.324	.173	2.142E-04	.0074	2.566E-04	.0089
197	525.4	.807	.080	9.829E-05	.0034	1.177E-04	.0041
198	525.8	.969	.111	1.369E-04	.0048	1.639E-04	.0057
199	526.8	1.643	.220	2.718E-04	.0094	3.255E-04	.0113
200	528.1	3.328	.473	5.848E-04	.0203	7.007E-04	.0243
201	528.6	3.108	.437	5.415E-04	.0188	6.488E-04	.0225
202	529.2	2.418	.385	3.777E-04	.0131	4.527E-04	.0157
203	525.3	1.233	.152	1.879E-04	.0065	2.250E-04	.0078
204	526.2	1.981	.317	3.785E-04	.0131	4.533E-04	.0157
205	528.7	4.779	.743	9.197E-04	.0319	1.102E-03	.0382
206	526.1	.820	.108	1.337E-04	.0046	1.602E-04	.0056
207	530.6	5.661	.757	9.397E-04	.0326	1.127E-03	.0391
208	525.3	.971	.130	1.602E-04	.0056	1.919E-04	.0067
209	525.6	1.501	.236	2.536E-04	.0088	3.037E-04	.0105
210	525.4	1.138	.151	1.865E-04	.0065	2.233E-04	.0077
211	525.8	.223	.027	3.333E-05	.0012	3.992E-05	.0014
212	525.9	.780	.105	1.293E-04	.0045	1.549E-04	.0054
213	525.4	1.143	.158	1.942E-04	.0067	2.325E-04	.0081
214	526.2	2.672	.373	4.606E-04	.0160	5.515E-04	.0191
215	525.3	1.503	.213	2.621E-04	.0091	3.138E-04	.0109
216	530.0	5.997	.850	1.054E-03	.0366	1.264E-03	.0438
217	528.7	3.914	.556	6.885E-04	.0239	8.250E-04	.0286
218	524.5	1.032	.142	1.745E-04	.0061	2.089E-04	.0072
219	525.6	2.492	.349	4.302E-04	.0149	5.152E-04	.0179
220	525.5	2.194	.300	3.705E-04	.0129	4.436E-04	.0154

GROUP 91 CENTERLINE TIME 3.05

CH	TC	FIT LENGTH	DTDWT	UNCERTAINTY	CH	TC	FIT LENGTH	DTDWT	UNCERTAINTY
1	107	.60	4.816	.0082	50	173	2.00	.672	.0175
2	108	.60	7.103	.0057	51	174	2.00	.615	.0201
3	109	.60	6.226	.0073	52	175	2.00	.814	.0142
4	110	.60	6.083	.0082	53	176	2.00	.907	.0142
5	111	.60	6.209	.0127	54	177	.40	13.494	.0086
6	112	.60	6.227	.0067	55	178	.30	17.956	.0068
7	113	.60	7.303	.0593	56	179	.30	16.953	.0382
8	114	.60	6.309	.0060	57	180	.40	11.068	.0061
9	115	.60	5.795	.0135	58	181	.40	8.415	.0095
10	116	.60	5.841	.0079	59	182	.60	3.472	.0319
11	117	.60	6.200	.0123	60	183	2.00	.892	.0121
12	118	.60	4.880	.0141	61	184	2.00	1.003	.0193
13	119	.60	5.576	.0076	62	185	.60	7.450	.0074
14	120	.60	5.868	.0105	63	186	.60	5.339	.0126
15	121	.60	5.092	.0128	64	187	.60	4.918	.0091
16	122	.60	5.115	.0140	65	188	.60	6.362	.0090
17	124	.80	2.202	.0302	66	189	.60	4.976	.0113
18	125	.80	2.554	.0162	67	190	.80	3.573	.0099
19	126	.80	2.444	.0193	68	191	.60	4.016	.1317
20	127	.80	2.278	.0183	69	192	2.00	.322	.0778
21	128	.80	2.917	.0102	70	193	.80	2.946	.0164
22	129	.80	3.425	.0096	71	194	1.20	1.740	.0196
23	130	.80	2.973	.0220	72	195	1.20	1.677	.0099
24	131	.80	2.888	.0216	73	196	1.20	1.324	.0135
25	132	.60	4.832	.0153	74	197	2.00	.807	.0171
26	133	.80	3.272	.0109	75	198	2.00	.960	.0105
27	134	.60	4.422	.0128	76	199	1.20	1.643	.0165
28	135	.60	5.950	.0077	77	200	.80	3.328	.0092
29	136	.60	6.448	.0059	78	201	.80	3.108	.0113
30	137	.60	6.103	.0091	79	202	.80	2.418	.0823
31	138	.80	6.830	.0086	80	203	1.20	1.233	.0165
32	139	.60	6.384	.0072	81	204	1.20	1.981	.0135
33	140	.60	6.895	.0076	82	205	.60	4.779	.0092
34	141	.60	6.529	.0060	83	206	2.00	.820	.0160
35	142	.60	5.030	.0113	84	207	.60	5.661	.0125
36	143	.60	7.754	.0073	85	208	2.00	.971	.0115
37	144	.40	8.715	.0062	86	209	1.20	1.501	.0126
38	161	.80	2.293	.0220	87	210	2.00	1.138	.0231
39	162	.80	2.716	.0155	88	211	2.00	.223	.0612
40	163	1.20	1.748	.0135	89	212	2.00	.780	.0174
41	164	.80	2.127	.0138	90	213	1.20	1.193	.0867
42	165	.80	2.059	.0097	91	214	.80	2.672	.0235
43	166	1.20	2.056	.0135	92	215	1.20	1.503	.0327
44	167	1.20	1.427	.0172	93	216	.60	5.997	.0095
45	168	1.20	1.712	.0097	94	217	.80	3.914	.0134
46	169	1.20	1.457	.0150	95	218	1.20	1.032	.0374
47	170	1.20	1.754	.0258	96	219	.80	2.490	.0170
48	171	.80	2.258	.0151	97	220	.80	2.194	.0150
49	172	.80	2.096	.0212	98	0	-0	0	0
92		.050							

BIT ON LOOP 64

DATE 5/12/75

AEDC(ARO,INC.) ARNOLD AFS, TENNESSEE
VON KARMAN GAS DYNAMICS FACILITY
50 INCH HYPERSONIC TUNNEL B
V41B-B7A

GROUP	TEST CONDITION	MODEL	MACH NO	PO,PSIA	TO,DEG R	ALPHA-MODEL	ALPHA-SECTOR	ALPHA-PREBEND	ROLL MODEL	YAW
92	32	140 B	7.99	676.0	1337	35.11	-5.11	30.00	179.92	.0

T-INF (DEG R)	P-INF (PSIA)	Q-INF (PSIA)	V-INF (FT/SEC)	RHO-INF (SLUGS/FT3)	MU-INF (LB-SEC/FT2)	RE/FT (FT-1)	HREF-FR (R= .0400FT)	STFR (R= .0400FT)	SWITCH POSITION
97.1	.070	3.119	3859	6.029E-05	7.821E-06	2.975E 06	2.883E-02	1.557E-02	3

TC NO	TW	DTW/DT	QDOT	H(TO)	H(TO)/HREF	H(.9TO)	H(.9TO)/HREF	X/L	2Y/B
						CANOPY			
221	525.4	.694	.044	1.029E-04	.0036	1.232E-04	.0043		
222	525.	1.253	.154	1.893E-04	.0066	2.266E-04	.0079		
223	525.7	5.534	.748	9.217E-04	.0320	1.104E-03	.0383		
						ESCAPE HATCH AND WINDOW			
224	530.4	5.519	.549	6.738E-04	.0236	8.149E-04	.0283	.1933	.0162
225	524.3	3.535	.422	5.222E-04	.0181	6.258E-04	.0217	.1972	.0162
226	530.5	6.451	.679	8.434E-04	.0291	1.007E-03	.0349	.1933	.0384
227	528.1	3.818	.558	6.888E-04	.0239	8.252E-04	.0286	.1972	.0384
228	524.9	1.853	.237	2.921E-04	.0101	3.496E-04	.0121	.1933	.0653
229	525.3	1.417	.181	2.232E-04	.0077	2.672E-04	.0093	.1972	.0653
232	526.5	.351	.047	5.832E-05	.0020	6.984E-05	.0024	.2567	.0235
233	526.5	.385	.058	7.212E-05	.0025	8.637E-05	.0030	.2606	.0235
234	526.3	.544	.079	9.777E-05	.0034	1.171E-04	.0041	.2567	.0491
237	526.5	.639	.090	1.104E-04	.0038	1.322E-04	.0046	.2606	.0491
						CARGO BAY HINGE NO. 1		X/L	Z,FULL SCALE(IN)
238	532.2	2.897	.388	4.815E-04	.0167	5.774E-04	.0200	.2879	420.0000
239	534.4	4.678	.627	7.806E-04	.0271	9.366E-04	.0325	.2917	420.0000
240	532.2	2.535	.352	4.494E-04	.0156	5.389E-04	.0187	.2840	415.0000
241	535.5	4.006	.564	7.032E-04	.0244	8.439E-04	.0293	.2879	415.0000
242	534.6	4.622	.661	8.230E-04	.0285	9.875E-04	.0342	.2917	415.0000
243	533.2	2.294	.281	3.490E-04	.0121	4.188E-04	.0145	.2801	405.0000
244	533.3	1.756	.215	2.555E-04	.0089	3.064E-04	.0106	.2840	405.0000
						CARGO BAY HINGE NO. 2		X/L	Z,FULL SCALE(IN)
245	533.7	2.804	.401	4.986E-04	.0173	5.981E-04	.0207	.3192	420.0000
246	535.2	4.941	.737	8.822E-04	.0306	1.059E-03	.0367	.3439	420.0000
247	534.2	2.555	.377	4.689E-04	.0163	5.625E-04	.0195	.3362	415.0000
248	536.1	4.392	.648	8.057E-04	.0280	9.707E-04	.0337	.3401	415.0000
249	538.0	5.731	.846	1.059E-03	.0367	1.271E-03	.0441	.3439	415.0000
250	537.2	3.788	.476	5.949E-04	.0206	7.143E-04	.0248	.3323	405.0000
251	537.4	3.995	.491	6.144E-04	.0213	7.377E-04	.0256	.3362	405.0000
						CARGO BAY HINGE NO. 3		X/L	Z,FULL SCALE(IN)
252	536.1	5.088	.739	9.224E-04	.0320	1.107E-03	.0384	.3923	420.0000
253	539.3	8.477	1.234	1.546E-03	.0536	1.857E-03	.0644	.3961	420.0000
254	537.4	5.419	.824	1.030E-03	.0357	1.237E-03	.0429	.3884	415.0000
257	540.5	7.001	.947	1.189E-03	.0412	1.428E-03	.0495	.3845	405.0000
258	542.2	8.125	1.111	1.397E-03	.0485	1.680E-03	.0583	.3884	405.0000

DATE 5/12/75

AEDC(ARO,INC.) ARNOLD AFS, TENNESSEE
VON KARMAN GAS DYNAMICS FACILITY
50 INCH HYPERSONIC TUNNEL B
V418-87A

GROUP	TEST CONDITION	MODEL	MACH NO	PO,PSIA	TO,DEG R	ALPHA-MODEL	ALPHA-SECTOR	ALPHA-PREBEND	ROLL MODEL	YAW
52	32	140 B	7.99	676.0	1337	35.11	-5.11	30.00	179.92	.0

T-INF (DEG R)	P-INF (PSIA)	Q-INF (PSIA)	V-INF (FT/SEC)	RHO-INF (SLUGS/FT3)	MU-INF (LB-SEC/FT2)	RE/FT (FT-1)	HREF-FR (R= .0400FT)	STFR (R= .0400FT)	SWITCH POSITION
97.1	.070	3.119	3859	6.029E-05	7.821E-08	2.975E 06	2.883E-02	1.557E-02	3

TC NO	TW	DTWDT	QDOT	H(TO)	H(TO)/HREF	H(.9TO)	H(.9TO)/HREF	TOP CENTERLINE X/L
367	593.5	91.682	11.094	1.492E-02	.5173	1.819E-02	.6307	0
368	563.9	65.561	8.442	1.091E-02	.3785	1.320E-02	.4577	.0008
369	551.5	48.126	5.681	7.229E-03	.2507	8.712E-03	.3021	.0019
370	546.2	28.981	3.555	4.493E-03	.1558	5.407E-03	.1876	.0037
371	540.7	21.437	2.104	2.641E-03	.0916	3.173E-03	.1101	.0058
372	536.1	14.646	1.886	2.353E-03	.0816	2.824E-03	.0980	.0087
373	532.9	8.738	1.143	1.421E-03	.0493	1.704E-03	.0591	.0118
374	533.0	7.392	.967	1.202E-03	.0417	1.442E-03	.0500	.0151
375	532.1	5.772	.788	9.785E-04	.0339	1.173E-03	.0407	.0182
376	532.9	4.818	.634	7.864E-04	.0273	9.456E-04	.0328	.0215
377	532.8	4.349	.559	6.948E-04	.0241	8.333E-04	.0289	.0246
378	533.0	3.657	.426	5.296E-04	.0184	6.352E-04	.0220	.0278
379	531.6	2.366	.290	3.601E-04	.0125	4.318E-04	.0150	.0609
380	530.6	2.023	.247	2.571E-04	.0089	3.082E-04	.0107	.0646
381	530.3	1.894	.245	3.034E-04	.0105	3.636E-04	.0126	.0684
382	529.5	1.765	.230	2.852E-04	.0099	3.418E-04	.0119	.0721
383	528.8	1.715	.229	2.835E-04	.0098	3.396E-04	.0118	.0760
384	528.3	1.527	.212	2.622E-04	.0091	3.141E-04	.0109	.0796
385	528.6	2.200	.282	3.486E-04	.0121	4.180E-04	.0145	.0789
386	528.5	2.254	.265	3.295E-04	.0114	3.948E-04	.0137	.0982
387	529.6	2.566	.314	3.889E-04	.0135	4.659E-04	.0162	.1019
388	530.8	3.923	.373	4.618E-04	.0160	5.536E-04	.0192	.1160
389	530.0	3.344	.484	5.999E-04	.0208	7.190E-04	.0249	.1195
390	529.8	3.058	.481	5.956E-04	.0207	7.138E-04	.0248	.1231
391	529.7	3.181	.506	6.264E-04	.0217	7.507E-04	.0260	.1268
392	530.0	3.449	.590	7.311E-04	.0254	8.763E-04	.0304	.1305
393	530.0	3.667	.619	7.672E-04	.0266	9.196E-04	.0319	.1338
394	530.2	3.929	.658	8.157E-04	.0283	9.777E-04	.0339	.1376
395	529.8	3.942	.589	7.287E-04	.0253	8.733E-04	.0303	.1411
396	530.1	4.192	.620	7.684E-04	.0267	9.210E-04	.0319	.1448
397	530.8	3.808	.564	6.988E-04	.0242	8.377E-04	.0291	.1483
398	529.6	3.881	.545	6.743E-04	.0234	8.080E-04	.0280	.1519
399	538.3	11.699	1.566	1.959E-03	.0679	2.353E-03	.0816	.1556

DATE 5/12/75

AEDC(ARO,INC.) ARNOLD AFS, TENNESSEE
VON KARMAN GAS DYNAMICS FACILITY
50 INCH HYPERSONIC TUNNEL B
V41H-87A

GROUP	TEST CONDITION	MODEL	MACH NO	PO,PSIA	TO,DEG R	ALPHA-MODEL	ALPHA-SECTOR	ALPHA-PREBEND	ROLL MODEL	YAW
52	32	140 B	7.99	676.0	1337	35.11	-5.11	30.00	179.92	.0

T-INF (DEG R)	P-INF (PSIA)	Q-INF (PSIA)	V-INF (FT/SEC)	RHO-INF (SLUGS/FT3)	MU-INF (LB-SEC/FT2)	RE/FT (FT-1)	HREF-FR (R= .0400FT)	STFR (R= .0400FT)	SWITCH POSITION
97.1	.076	3.119	3859	6.029E-05	7.821E-08	2.975E 06	2.883E-02	1.557E-02	3

TC NO	TW	D(WDT)	QDOT	H(TO)	H(TO)/HREF	H(.9TO)	H(.9TO)/HREF	X/L
								TOP CENTERLINE
400	539.2	13.065	1.757	2.213E-03	.0768	2.659E-03	.0922	.1582
401	537.[illegible]	12.344	1.6[illegible]2	2.003E-03	.0695	2.405E-03	.0834	.1608
402	537.2	12.027	1.521	1.876E-03	.0650	2.252E-03	.0781	.1635
403	536.3	11.9[illegible]	1.449	1.814E-03	.0629	2.178E-03	.0756	.1664
404	537.5	11.933	1.447	1.8[illegible]9E-03	.0627	2.172E-03	.0753	.1691
405	538.4	12.743	1.545	1.934E-03	.0671	2.323E-03	.0806	.1720
406	536.9	11.142	1.350	1.687E-03	.0585	2.025E-03	.0702	.1748
407	535.8	9.910	1.279	1.595E-03	.0553	1.915E-03	.0664	.1769
408	534.6	9.043	1.325	1.650E-03	.0572	1.980E-03	.0687	.1800
409	533.[illegible]	6.744	.969	1.205E-03	.0418	1.445E-03	.0501	.1831
410	531.9	5.850	.833	1.034E-03	.0359	1.240E-03	.0430	.1863
411	530.7	3.995	.598	7.418E-04	.0257	8.892E-04	.0308	.1894
412	530.5	2.969	.4[illegible]2	4.966E-04	.0173	5.977E-04	.0207	.1931
413	529.4	2.575	.344	4.280E-04	.0148	5.105E-04	.0177	.1972
414	528.7	1.128	.151	1.863E-04	.0065	2.232E-04	.0077	.2049
415	527.5	.548	.054	6.655E-05	.0023	7.972E-05	.0028	.2250
416	527.4	.275	.032	3.958E-05	.0014	4.741E-05	.0016	.2500
								NOSE TC (Z = 338)
								X/L 2Y/B
145	574.9	63.102	8.630	1.132E-02	.3925	1.372E-02	.4760	.0008 .5039
146	5[illegible]9.9	68.664	9.418	1.245E-02	.4318	1.512E-02	.5245	.0023 .5082
147	579.6	59.519	8.123	1.059E-02	.3674	1.283E-02	.4450	.0043 .5135
148	565.1	46.562	6.548	8.479E-03	.2941	1.025E-02	.3557	.0068 .5205
149	565.6	32.273	4.692	6.001E-03	.2081	7.239E-03	.2511	.0095 .5279
150	555.7	27.646	4.011	5.131E-03	.1779	6.190E-03	.2147	.0122 .5354
151	553.0	18.496	2.610	3.328E-03	.1154	4.012E-03	.1391	.0218 .5621
152	553.2	18.976	2.583	3.294E-03	.1143	3.972E-03	.1378	.0251 .5712
153	555.[illegible]	21.943	2.695	3.448E-03	.1196	4.160E-03	.1443	.0286 .5808
154	555.9	21.320	2.667	3.412E-03	.1183	4.116E-03	.1428	.0319 .5898
155	553.4	18.824	2.377	3.032E-03	.1052	3.656E-03	.1268	.0354 .5995
156	552.2	17.073	2.131	2.714E-03	.0941	3.271E-03	.1135	.0387 .6085
157	552.2	17.447	2.155	2.744E-03	.0952	3.307E-03	.1147	.0420 .6176
158	551.9	16.368	2.021	2.573E-03	.0892	3.101E-03	.1075	.0462 .6294
159	551.1	16.774	1.889	2.402E-03	.0833	2.895E-03	.1004	.0503 .6406

GROUP 92 CENTERLINE TIME 3.15

CH	TC	FIT LENGTH	DTDWT	UNCERTAINTY	CH	TC	FIT LENGTH	DTDWT	UNCERTAINTY
1	221	2.00	.694	.0124	50	384	1.20	1.527	.0077
2	222	1.20	1.253	.0174	51	385	.80	2.200	.0296
3	223	.60	5.534	.0070	52	386	.80	2.258	.0222
4	224	.60	5.519	.0113	53	387	.80	2.566	.0128
5	225	.60	3.536	.0191	54	388	.80	3.923	.0139
6	226	.60	6.451	.0092	55	389	.80	3.344	.0143
7	227	.60	3.418	.0403	56	390	.80	3.058	.0255
8	228	1.20	1.853	.0114	57	391	.80	3.181	.0091
9	229	1.20	1.417	.0252	58	392	.80	3.449	.0083
10	232	2.00	.351	.0273	59	393	.80	3.667	.0135
11	233	2.00	.396	.0710	60	394	.80	3.929	.0069
12	236	2.00	.544	.0207	61	395	.60	3.942	.0215
13	237	2.00	.639	.0150	62	396	.60	4.192	.0116
14	238	.60	2.897	.0091	63	397	.80	3.808	.0133
15	239	.60	4.678	.0178	64	398	.60	3.881	.0201
16	240	.60	2.535	.0157	65	399	.40	11.699	.0066
17	241	.60	4.096	.0248	66	400	.40	13.065	.0104
18	242	.60	4.622	.0127	67	401	.40	12.344	.0134
19	243	.60	2.294	.0174	68	402	.40	12.027	.0449
20	244	1.20	1.756	.0157	69	403	.40	11.906	.0160
21	245	.60	2.834	.0072	70	404	.40	11.930	.0040
22	246	.60	4.941	.0085	71	405	.40	12.740	.0122
23	247	.60	2.565	.0201	72	406	.40	11.142	.0123
24	248	.60	4.342	.0156	73	407	.40	9.900	.0085
25	249	.60	5.731	.0100	74	408	.40	9.043	.0116
26	250	.60	3.748	.0068	75	409	.60	6.744	.0124
27	251	.60	3.945	.0116	76	410	.60	5.800	.0114
28	252	.60	5.088	.0089	77	411	.60	3.995	.0100
29	253	.40	8.477	.0139	78	412	.80	2.969	.0130
30	254	.60	5.415	.0078	79	413	.80	2.575	.0954
31	257	.60	7.091	.0095	80	414	1.20	1.128	.0173
32	258	.60	8.125	.0102	81	415	2.00	.548	.0167
33	367	.20	91.642	.0016	82	416	2.00	.275	.0288
34	368	.20	65.561	.0015	83	145	.20	63.102	.0033
35	369	.20	48.126	.0053	84	146	.20	68.664	.0073
36	370	.30	28.941	.0088	85	147	.20	59.519	.0060
37	371	.30	21.437	.0043	86	148	.20	46.562	.0072
38	372	.40	14.646	.0072	87	149	.30	32.273	.0043
39	373	.40	8.738	.0160	88	150	.30	27.846	.0036
40	374	.60	7.342	.0117	89	151	.30	18.496	.0097
41	375	.60	5.772	.0066	90	152	.30	18.970	.0393
42	376	.60	4.818	.0096	91	153	.30	21.943	.0104
43	377	.60	4.349	.0247	92	154	.30	21.320	.0152
44	378	.80	3.057	.0091	93	155	.30	18.824	.0062
45	379	.80	2.366	.0123	94	156	.30	17.073	.0115
46	380	.80	2.023	.0115	95	157	.30	17.447	.0082
47	381	1.20	1.694	.0154	96	158	.30	16.368	.0080
48	382	1.20	1.765	.0115	97	159	.30	16.774	.0061
49	383	1.20	1.715	.0128	98	0	-0	0	0
93		.050							

BIT ON LOOP 61

DATE 5/12/75

AEDC(ARO,INC.) ARNOLD AFS, TENNESSEE
VON KARMAN GAS DYNAMICS FACILITY
50 INCH HYPERSONIC TUNNEL B
V41B-B7A

GROUP	TEST CONDITION	MODEL	MACH NO	PO,PSIA	TO,DEG R	ALPHA-MODEL	ALPHA-SECTOR	ALPHA-PREBEND	ROLL MODEL	YAW
53	33	140 B	7.99	673.7	1340	40.10	-10.10	30.00	179.92	.0

T-INF (DEG R)	P-INF (PSIA)	Q-INF (PSIA)	V-INF (FT/SEC)	RHO-INF (SLUGS/FT3)	MU-INF (LB-SEC/FT2)	RE/FT (FT-1)	HREF-FR (R= .0400FT)	STFR (R= .0400FT)	SWITCH POSITION
97.3	.070	3.109	3862	5.998E-05	7.835E-08	2.957E 06	2.679E-02	1.562E-02	1

TC NO	TW	DTWDT	QDOT	H(TO)	H(TO)/HREF	H(.9TO)	H(.9TO)/HREF	X/L	Z,FULL SCALE(IN)
								FUSELAGE VENT NO. 1	
1	537.3	2.009	.295	3.303E-04	.0115	3.965E-04	.0138	.4434	376.6300
2	536.1	2.019	.272	3.381E-04	.0117	4.057E-04	.0141	.4264	371.6300
3	536.1	1.665	.229	2.845E-04	.0099	3.415E-04	.0119	.4303	371.6300
4	536.2	1.585	.215	2.600E-04	.0093	3.216E-04	.0112	.4342	371.6300
5	536.5	1.503	.211	2.504E-04	.0087	3.005E-04	.0104	.4380	371.6300
6	538.2	1.348	.179	2.228E-04	.0077	2.676E-04	.0093	.4434	369.1300
7	536.5	1.247	.192	2.265E-04	.0079	2.718E-04	.0094	.4226	366.6300
8	536.3	1.370	.216	2.569E-04	.0089	3.083E-04	.0107	.4264	366.6300
9	537.2	1.074	.156	1.944E-04	.0068	2.334E-04	.0081	.4303	366.6300
10	537.4	.947	.135	1.655E-04	.0059	2.023E-04	.0070	.4342	366.6300
11	538.7	1.014	.137	1.711E-04	.0059	2.055E-04	.0071	.4380	366.6300
12	541.2	.904	.125	1.563E-04	.0054	1.878E-04	.0065	.4496	366.6300
13	543.8	.555	.072	1.026E-04	.0036	1.234E-04	.0043	.4187	357.1300
14	540.7	.701	.096	1.199E-04	.0042	1.441E-04	.0050	.4396	361.6300
15	542.7	.710	.095	1.191E-04	.0041	1.432E-04	.0050	.4434	361.6300
16	544.3	.423	.057	7.200E-05	.0025	8.658E-05	.0030	.4396	355.6300
17	546.9	.455	.062	7.797E-05	.0027	9.383E-05	.0033	.4434	355.6300
18	548.9	.243	.034	4.322E-05	.0015	5.203E-05	.0018	.4396	351.6300
19	551.9	.125	.018	2.254E-05	.0008	2.715E-05	.0009	.4291	332.6300
								CARGO BAY VENT NO. 1	
22	539.7	6.856	.952	1.190E-03	.0413	1.429E-03	.0496	.3974	397.6300
23	537.6	5.710	.797	9.926E-04	.0345	1.191E-03	.0414	.4013	397.6300
24	537.7	6.151	.841	1.036E-03	.0360	1.244E-03	.0432	.4052	397.6300
25	538.1	6.406	.843	1.051E-03	.0365	1.262E-03	.0438	.4090	397.6300
26	539.4	7.263	.953	1.191E-03	.0414	1.430E-03	.0497	.4129	397.6300
27	539.1	6.442	.847	1.120E-03	.0389	1.345E-03	.0467	.3936	392.6300
28	537.3	5.332	.766	9.541E-04	.0331	1.145E-03	.0398	.3974	392.6300
29	537.5	5.996	.864	1.077E-03	.0374	1.293E-03	.0449	.4013	392.6300
30	537.3	6.617	.950	1.184E-03	.0411	1.421E-03	.0494	.4052	392.6300
31	537.4	6.941	.969	1.207E-03	.0419	1.449E-03	.0503	.4090	392.6300
32	537.8	7.405	.981	1.223E-03	.0425	1.468E-03	.0510	.4129	392.6300
33	537.1	6.271	.895	1.115E-03	.0387	1.338E-03	.0465	.4090	386.1300
34	539.9	6.048	1.086	1.359E-03	.0472	1.631E-03	.0567	.4129	387.6300
35	541.0	5.669	.803	1.005E-03	.0349	1.208E-03	.0419	.3897	383.1300
36	538.2	5.487	.796	9.926E-04	.0345	1.192E-03	.0414	.4090	378.6300
37	539.4	7.687	1.081	1.350E-03	.0469	1.622E-03	.0563	.4129	382.1300
38	538.4	5.298	.738	9.203E-04	.0320	1.105E-03	.0384	.4129	377.1300
39	539.4	4.232	.618	7.718E-04	.0268	9.270E-04	.0322	.4001	373.6300
								PROTUBERANCES	
41	539.7	4.801	.643	8.036E-04	.0279	9.652E-04	.0335	.3546	379.0500
42	542.2	6.028	.825	1.034E-03	.0359	1.243E-03	.0432	.3604	379.0500
43	540.7	4.253	.553	6.917E-04	.0240	8.310E-04	.0289	.3450	374.0500

DATE 5/12/75

AEDC(ARO,INC.) ARNOLD AFS, TENNESSEE
VON KARMAN GAS DYNAMICS FACILITY
50 INCH HYPERSONIC TUNNEL B
V41B-87A

GROUP	TEST CONDITION	MODEL	MACH NO	PO,PSIA	TO,DEG R	ALPHA-MODEL	ALPHA-SECTOR	ALPHA-PREBEND	ROLL MODEL	YAW
53	33	140 B	7.99	673.7	1340	40.10	-10.10	30.00	179.92	.0

T-INF (DEG R)	P-INF (PSIA)	Q-INF (PSIA)	V-INF (FT/SEC)	RHO-INF (SLUGS/FT3)	MU-INF (LB-SEC/FT2)	RE/FT (FT-1)	HREF-FR (H= .0400FT)	STFR (H= .0400FT)	SWITCH POSITION
97.3	.070	3.109	3662	5.998E-05	7.835E-08	2.957E 06	2.879E-02	1.562E-02	1

TC NO	TW	DTWDT	QDOT	H(TO)	H(TO)/HREF	H(.9TO)	H(.9TO)/HREF
44	540.4	4.544	.621	7.750E-04	.0269	9.311E-04	.0323
45	543.0	6.214	.845	1.188E-03	.0412	1.426E-03	.0495
46	545.5	8.641	1.211	1.524E-03	.0529	1.834E-03	.0637
47	542.1	4.226	.563	7.055E-04	.0245	8.479E-04	.0295
48	546.2	8.587	1.181	1.488E-03	.0517	1.790E-03	.0622
49	543.5	4.537	.625	7.850E-04	.0273	9.438E-04	.0328
50	546.8	5.774	.835	1.014E-03	.0352	1.221E-03	.0424
51	546.3	4.817	.656	8.265E-04	.0287	9.945E-04	.0345
52	545.7	2.900	.400	5.037E-04	.0175	6.060E-04	.0210
53	546.5	3.677	.539	6.791E-04	.0236	8.171E-04	.0284
54	537.6	5.204	.743	9.239E-04	.0322	1.112E-03	.0386
55	547.3	2.535	.354	4.572E-04	.0160	5.527E-04	.0192

PROTUBERANCES

X/L	Z,FULL SCALE(IN)
.3508	374.0500
.3566	374.0500
.3604	374.0500
.3392	366.5500
.3566	366.5500
.3392	360.7000
.3566	360.7000
.3604	360.7000
.3392	353.2000
.3450	353.2000
.3508	353.2000
.3566	353.2000

TC NO	TW	DTWDT	QDOT	H(TO)	H(TO)/HREF	H(.9TO)	H(.9TO)/HREF
56	538.1	5.162	.658	8.202E-04	.0285	9.848E-04	.0342
57	540.5	5.675	.694	8.664E-04	.0302	1.043E-03	.0362
58	543.1	5.950	.737	9.883E-04	.0343	1.188E-03	.0413
59	545.3	5.231	.637	8.643E-04	.0300	1.040E-03	.0361
60	544.2	4.968	.694	8.726E-04	.0303	1.049E-03	.0364
61	543.9	5.505	.717	8.861E-04	.0308	1.068E-03	.0371
62	540.9	5.533	.678	8.490E-04	.0295	1.020E-03	.0354
63	538.6	5.161	.675	8.421E-04	.0292	1.011E-03	.0351
64	[illegible]	[illegible]	[illegible]	[illegible]	[illegible]	5.887E-06	.0002
65	537.6	4.854	.630	8.231E-04	.0286	9.881E-04	.0343
66	540.3	5.701	.720	9.009E-04	.0313	1.082E-03	.0376
67	543.5	6.102	.850	1.080E-03	.0375	1.298E-03	.0451
68	545.1	5.966	.758	9.541E-04	.0331	1.148E-03	.0399

SUBLIMATOR VENT NO. 1

X/L	Z,FULL SCALE(IN)
.3031	371.1300
.3074	369.1300
.3089	363.6300
.3074	358.1300
.3031	356.1300
.2988	358.1300
.2973	363.6300
.2988	369.1300
.3031	376.1300
.3089	378.6300
.3101	372.6300
.3157	370.3800
.3128	363.6300

DATE 5/12/75

AEDC(ARO,INC.) ARNOLD AFS, TENNESSEE
VON KARMAN GAS DYNAMICS FACILITY
50 INCH HYPERSONIC TUNNEL B
V41R-87A

GROUP	TEST CONDITION	MODEL	MACH NO	PO,PSIA	TO,DEG R	ALPHA-MODEL	ALPHA-SECTOR	ALPHA-PREBEND	ROLL MODEL	YAW
93	33	140 B	7.99	673.7	1340	40.10	-10.10	30.00	179.92	.0

T-INF (DEG R)	P-INF (PSIA)	Q-INF (PSIA)	V-INF (FT/SEC)	RHO-INF (SLUGS/FT3)	MU-INF (LB-SEC/FT2)	RE/FT (FT-1)	HREF-FR (R= .0400FT)	STFR (R= .0400FT)	SWITCH POSITION
97.3	.070	3.109	3862	5.998E-05	7.835E-06	2.957E 06	2.879E-02	1.562E-02	1

IC	NC	TW	DTWDT	QDOT	H(TO)	H(TO)/HREF	H(.9TO)	H(.9TO)/HREF
69		532.7	2.864	.399	4.947E-04	.0172	5.931E-04	.0206
70		533.2	3.111	.371	4.724E-04	.0164	5.665E-04	.0197
71		534.2	3.034	.412	5.112E-04	.0178	6.132E-04	.0213
72		533.0	2.880	.407	5.050E-04	.0175	6.056E-04	.0210
73		535.1	3.459	.448	5.570E-04	.0193	6.682E-04	.0232
74		536.5	3.727	.432	5.622E-04	.0195	6.748E-04	.0234
75		536.0	2.987	.476	5.051E-04	.0175	6.061E-04	.0211
77		537.8	3.826	.543	6.767E-04	.0235	8.124E-04	.0282
78		539.6	4.484	.615	7.703E-04	.0268	9.253E-04	.0321
79		540.4	4.193	.537	6.721E-04	.0233	8.074E-04	.0280
80		539.9	3.936	.537	6.699E-04	.0233	8.045E-04	.0279
81		540.9	4.414	.617	7.726E-04	.0268	9.283E-04	.0322
83		530.1	4.121	.547	6.751E-04	.0234	8.089E-04	.0281
84		530.5	4.047	.532	6.577E-04	.0228	7.882E-04	.0274
85		530.2	3.421	.495	5.744E-04	.0199	6.883E-04	.0239
87		528.2	3.028	.431	5.317E-04	.0185	6.368E-04	.0221
88		530.3	3.873	.540	6.675E-04	.0232	7.999E-04	.0278
89		529.9	3.967	.582	7.183E-04	.0249	8.607E-04	.0299
90		530.3	3.682	.498	6.150E-04	.0214	7.370E-04	.0256
91		530.4	3.817	.522	6.455E-04	.0224	7.735E-04	.0269
92		531.5	3.359	.473	5.847E-04	.0203	7.006E-04	.0243
93		530.3	3.476	.443	5.474E-04	.0190	6.560E-04	.0228
94		531.1	4.098	.532	6.575E-04	.0228	7.881E-04	.0274
95		531.1	3.622	.514	6.351E-04	.0221	7.612E-04	.0264
96		531.7	3.113	.404	5.000E-04	.0174	5.993E-04	.0208
97		532.1	3.715	.474	5.869E-04	.0204	7.036E-04	.0244
98		531.5	3.616	.506	6.266E-04	.0218	7.511E-04	.0261
100		533.5	3.461	.493	6.110E-04	.0212	7.328E-04	.0255
102		534.1	3.137	.443	5.495E-04	.0191	6.591E-04	.0229
103		533.2	3.531	.463	5.745E-04	.0200	6.890E-04	.0239
105		531.1	3.808	.475	5.879E-04	.0204	7.047E-04	.0245
106		530.9	4.213	.539	6.665E-04	.0231	7.988E-04	.0277

FUSELAGE VENT PANEL NO. 7

X/L	Z,FULL SCALE(IN)
.2487	356.4000
.2591	356.4000
.2419	351.4000
.2487	351.4000
.2552	351.4000
.2610	351.4000
.2419	342.8000
.2552	342.8000
.2610	342.8000
.2419	334.2000
.2487	334.2000
.2552	334.2000

ACCESS HATCH WINDOW

X/L	Z,FULL SCALE(IN)
.2131	398.0000
.2131	388.0000
.2131	383.0000
.2222	395.8000
.2193	386.5000
.2177	381.8000
.2297	389.5000
.2243	382.5000
.2214	378.7000
.2343	374.0000
.2274	375.5000
.2239	373.3000
.2363	368.0000
.2286	368.0000
.2247	368.0000
.2274	360.5000
.2081	354.3000
.2023	362.7000
.2050	378.7000
.2050	386.2000

GROUP 93 CENTERLINE TIME 3.00

CH	TC	FIT LENGTH	DTDWT	UNCERTAINTY	CH	TC	FIT LENGTH	DTDWT	UNCERTAINTY
1	1	1.20	2.035	.0105	50	53	.80	3.677	.0243
2	2	.80	2.019	.0224	51	54	.60	5.204	.0093
3	3	1.20	1.666	.0112	52	55	.80	2.538	.0153
4	4	1.20	1.585	.0131	53	56	.60	5.102	.0080
5	5	1.20	1.509	.0213	54	57	.60	5.675	.0145
6	6	1.20	1.348	.0108	55	58	.60	5.950	.0106
7	7	1.20	1.247	.0709	56	59	.60	5.200	.0399
8	8	1.20	1.370	.0142	57	60	.60	4.968	.0083
9	9	2.00	1.074	.0177	58	61	.60	5.565	.0069
10	10	2.00	.947	.0126	59	62	.60	5.523	.0193
11	11	2.00	1.014	.0146	60	63	.60	5.161	.0083
12	12	2.00	.904	.0162	61	64	2.00	.032	.5148
13	13	2.00	.555	.0157	62	65	.60	4.854	.0078
14	14	2.00	.701	.0123	63	66	.60	5.701	.0072
15	15	2.00	.710	.0196	64	67	.60	6.102	.0107
16	16	2.00	.423	.0197	65	68	.60	5.966	.0099
17	17	2.00	.455	.0527	66	69	.80	2.868	.0166
18	18	2.00	.243	.0356	67	70	.80	3.111	.0068
19	19	2.00	.126	.0764	68	71	.80	3.034	.1608
20	22	.60	6.856	.0075	69	72	.80	2.880	.0410
21	23	.60	5.710	.0131	70	73	.80	3.459	.0097
22	24	.60	6.151	.0067	71	74	.80	3.727	.0200
23	25	.60	6.496	.0138	72	75	.80	2.987	.0137
24	26	.60	7.263	.0093	73	77	.80	3.826	.0076
25	27	.60	6.442	.0105	74	78	.60	4.484	.0095
26	28	.60	5.332	.0097	75	79	.60	4.193	.0166
27	29	.60	5.996	.0044	76	80	.80	3.930	.0148
28	30	.60	6.617	.0088	77	81	.60	4.414	.0149
29	31	.60	6.941	.0086	78	83	.60	4.101	.0274
30	32	.60	7.406	.0087	79	84	.60	4.047	.0695
31	33	.60	6.271	.0089	80	85	.80	3.421	.0082
32	34	.40	8.048	.0124	81	87	.80	3.028	.0091
33	35	.60	5.669	.0066	82	88	.80	3.873	.0083
34	36	.60	5.497	.0106	83	89	.80	3.967	.0177
35	37	.60	7.687	.0065	84	90	.80	3.662	.0133
36	38	.60	5.298	.0074	85	91	.80	3.817	.0126
37	39	.60	4.232	.0109	86	92	.80	3.359	.0109
38	41	.60	4.801	.0284	87	93	.80	3.476	.0248
39	42	.60	6.028	.0126	88	94	.60	4.098	.0104
40	43	.60	4.253	.0107	89	95	.80	3.622	.0137
41	44	.60	4.549	.0099	90	96	.80	3.113	.0506
42	45	.60	6.819	.0081	91	97	.80	3.715	.0138
43	46	.40	8.641	.0163	92	98	.80	3.616	.0298
44	47	.60	4.226	.0105	93	100	.80	3.481	.0107
45	48	.40	8.587	.0079	94	102	.80	3.137	.0141
46	49	.60	4.537	.0152	95	103	.80	3.531	.0150
47	50	.60	5.774	.0170	96	105	.80	3.808	.0105
48	51	.60	4.817	.0141	97	106	.60	4.213	.0132
49	52	.80	2.900	.0181	98	0	-0	0	0
	94	.050							

BIT ON LOOP 61

DATE 5/12/75

AEDC(ARO,INC.) ARNOLD AFS, TENNESSEE
VON KARMAN GAS DYNAMICS FACILITY
50 INCH HYPERSONIC TUNNEL B
V41B-B7A

GROUP	TEST CONDITION	MODEL	MACH NO	PO,PSIA	TO,DEG R	ALPHA-MODEL	ALPHA-SECTOR	ALPHA-PREBEND	ROLL MODEL	YAW
9	33	140 B	7.99	672.7	1340	40.10	-10.10	30.00	179.92	.0

T-INF (DEG R)	P-INF (PSIA)	Q-INF (PSIA)	V-INF (FT/SEC)	RHO-INF (SLUGS/FT3)	MU-INF (LB-SEC/FT2)	RE/FT (FT-1)	HREF-FR (R= .0400FT)	STFR (R= .0400FT)	SWITCH POSITION
97.3	.059	3.105	3863	5.988E-05	7.837E-08	2.951E 06	2.877E-02	1.563E-02	2

TC NO	TW	DTWDT	QDOT	H(TO)	H(TO)/HREF	H(.9TO)	H(.9TO)/HREF	X/L	Z,FULL SCALE(IN)
								ACCESS HATCH WINDOW	
107	529.4	3.962	.557	6.991E-04	.0243	8.376E-04	.0291	.2050	396.2000
								FUSELAGE VENT PANEL NO. 3 AND 1	
108	530.7	6.914	.731	9.024E-04	.0314	1.081E-03	.0376	.1244	377.5000
109	528.8	5.929	.731	9.014E-04	.0313	1.080E-03	.0375	.1302	377.5000
110	528.6	5.668	.717	8.833E-04	.0307	1.058E-03	.0368	.1360	377.5000
111	529.5	5.526	.665	8.202E-04	.0285	9.826E-04	.0342	.1418	377.5000
112	530.5	5.753	.682	8.427E-04	.0293	1.010E-03	.0351	.1476	377.5000
113	530.4	6.893	.749	9.747E-04	.0339	1.168E-03	.0406	.1215	273.5000
114	529.3	5.843	.726	8.710E-04	.0303	1.043E-03	.0363	.1273	273.5000
115	529.2	5.499	.680	8.352E-04	.0291	1.004E-03	.0349	.1331	273.5000
116	529.3	5.436	.666	8.213E-04	.0285	9.840E-04	.0342	.1389	273.5000
117	531.3	5.659	.651	8.049E-04	.0280	9.647E-04	.0335	.1447	273.5000
118	529.8	4.503	.622	7.677E-04	.0267	9.198E-04	.0320	.1409	366.0000
119	531.4	5.078	.657	8.120E-04	.0282	9.733E-04	.0338	.1442	366.0000
120	531.7	5.634	.704	8.703E-04	.0302	1.043E-03	.0363	.1215	359.5000
121	531.0	4.574	.561	6.931E-04	.0241	8.307E-04	.0289	.1303	359.5000
122	531.8	4.665	.583	7.212E-04	.0251	8.646E-04	.0300	.1337	359.5000
								LOWER RCS NOZZLES	
124	525.4	1.603	.143	1.749E-04	.0061	2.094E-04	.0073	.0950	400.0000
125	525.0	2.038	.221	2.711E-04	.0094	3.245E-04	.0113	.0988	400.0000
126	525.2	1.792	.245	3.000E-04	.0104	3.591E-04	.0125	.1027	400.0000
127	525.0	1.683	.226	2.771E-04	.0096	3.316E-04	.0115	.0911	395.0000
128	525.1	2.427	.293	3.600E-04	.0125	4.308E-04	.0150	.0950	395.0000
129	525.9	2.889	.338	4.150E-04	.0144	4.968E-04	.0173	.0988	395.0000
130	526.3	2.274	.271	3.330E-04	.0116	3.986E-04	.0139	.0810	390.0000
131	525.4	2.246	.331	4.057E-04	.0141	4.855E-04	.0169	.0857	390.0000
132	526.7	3.988	.463	5.693E-04	.0198	6.815E-04	.0237	.0963	390.0000
133	525.5	2.705	.327	4.015E-04	.0140	4.806E-04	.0167	.0857	383.8000
134	525.6	4.004	.534	6.556E-04	.0228	7.847E-04	.0273	.0872	377.3000
135	527.1	5.638	.675	8.304E-04	.0289	9.943E-04	.0346	.0903	374.5500
136	528.5	6.067	.673	8.288E-04	.0288	9.927E-04	.0345	.0960	374.5500
137	527.3	5.704	.744	9.149E-04	.0318	1.096E-03	.0381	.0872	370.5500
138	528.6	6.524	.750	9.237E-04	.0321	1.106E-03	.0385	.0928	370.5500
139	528.7	5.808	.740	9.117E-04	.0317	1.092E-03	.0380	.0816	366.0500
140	530.6	6.754	.858	1.059E-03	.0368	1.269E-03	.0441	.0934	362.4000
141	529.8	6.178	.815	1.006E-03	.0349	1.205E-03	.0419	.0973	362.4000
142	531.3	4.814	.524	6.476E-04	.0225	7.762E-04	.0270	.0833	355.2000
143	531.4	7.556	.758	9.374E-04	.0326	1.124E-03	.0390	.0919	355.2000
144	532.5	8.472	1.115	1.381E-03	.0480	1.656E-03	.0575	.0949	349.0000

DATE 5/12/75

AEDC(ARO,INC.) ARNOLD AFS, TENNESSEE
VON KARMAN GAS DYNAMICS FACILITY
50 INCH HYPERSONIC TUNNEL B
V418-B7A

GROUP	TEST CONDITION	MODEL	MACH NO	PO,PSIA	TO,DEG R	ALPHA-MODEL	ALPHA-SECTOR	ALPHA-PREBEND	ROLL MODEL	YAW
54	33	140 B	7.99	672.7	1340	40.10	-10.10	30.00	179.92	.0

T-INF (DEG R)	P-INF (PSIA)	Q-INF (PSIA)	V-INF (FT/SEC)	RHO-INF (SLUGS/FT3)	MU-INF (LB-SEC/FT2)	RE/FT (FT-1)	HREF-FR (R= .0400FT)	STFR (R= .0400FT)	SWITCH POSITION
97.3	.069	3.105	3863	5.988E-05	7.837E-08	2.951E 06	2.877E-02	1.563E-02	2

IC NO	TW	DTWDT	COOT	H(TO)	H(TO)/HREF	H(.9TO)	H(.9TO)/HREF	X/L	2Y/B
								UPPER RCS NOZZLES	
161	529.7	2.107	.249	3.070E-04	.0107	3.678E-04	.0128	.0619	-.0160
162	530.1	2.422	.224	2.825E-04	.0098	3.385E-04	.0118	.0709	-.0160
163	528.8	2.451	.300	3.700E-04	.0129	4.432E-04	.0154	.0807	-.0160
164	529.0	3.463	.450	5.553E-04	.0193	6.652E-04	.0231	.0943	-.0160
165	529.5	3.189	.401	4.943E-04	.0172	5.922E-04	.0206	.0978	-.0160
166	529.4	3.015	.346	4.759E-04	.0165	5.702E-04	.0198	.1013	-.0160
167	528.6	1.027	.148	1.706E-04	.0059	2.036E-04	.0071	.0619	-.0320
168	528.8	1.559	.163	2.011E-04	.0070	2.409E-04	.0084	.0709	-.0320
169	527.4	1.466	.178	2.164E-04	.0076	2.615E-04	.0091	.0807	-.0320
170	527.2	2.030	.253	3.111E-04	.0108	3.725E-04	.0129	.0943	-.0320
171	527.4	2.345	.282	3.466E-04	.0120	4.151E-04	.0144	.0978	-.0320
172	526.9	2.134	.277	3.409E-04	.0118	4.081E-04	.0142	.1013	-.0320
173	526.0	.449	.060	7.341E-05	.0026	8.788E-05	.0031	.0807	-.0480
174	525.3	.530	.060	7.376E-05	.0026	8.828E-05	.0031	.0943	-.0480
175	525.3	.691	.099	1.210E-04	.0042	1.448E-04	.0050	.0978	-.0480
176	525.5	.709	.096	1.178E-04	.0041	1.410E-04	.0049	.1013	-.0480
								CANOPY	
177	535.1	12.230	1.683	2.090E-03	.0727	2.508E-03	.0872		
178	534.2	11.322	2.225	2.760E-03	.0959	3.311E-03	.1151		
179	530.7	5.658	1.183	1.461E-03	.0508	1.751E-03	.0609		
180	534.9	12.902	1.683	2.090E-03	.0726	2.508E-03	.0871		
181	534.5	13.094	1.778	2.207E-03	.0767	2.647E-03	.0920		
182	528.5	5.486	.779	9.600E-04	.0334	1.150E-03	.0400		
183	524.5	1.095	.137	1.676E-04	.0058	2.005E-04	.0070		
184	524.2	1.107	.150	1.844E-04	.0064	2.207E-04	.0077		
185	529.8	8.284	.993	1.225E-03	.0426	1.468E-03	.0510		
186	529.4	8.768	1.098	1.355E-03	.0471	1.623E-03	.0564		
187	527.4	4.513	.549	7.364E-04	.0256	8.817E-04	.0306		
188	526.0	2.349	.544	6.684E-04	.0232	8.001E-04	.0278		
189	527.7	6.081	.864	1.063E-03	.0369	1.273E-03	.0442		
190	527.8	7.219	1.035	1.274E-03	.0443	1.525E-03	.0530		
191	525.2	4.338	.660	8.093E-04	.0281	9.686E-04	.0337		

DATE 5/12/75

AEDC(ARO,INC.) ARNOLD AFS, TENNESSEE
VON KARMAN GAS DYNAMICS FACILITY
50 INCH HYPERSONIC TUNNEL B
V41B-87A

GROUP	TEST CONDITION	MODEL	MACH NO	PO,PSIA	TO,DEG R	ALPHA-MODEL	ALPHA-SECTOR	ALPHA-PREBEND	ROLL MODEL	YAW
94	33	140 B	7.99	672.7	1340	40.10	-10.10	30.00	179.92	.0

T-INF (DEG R)	P-INF (PSIA)	Q-INF (PSIA)	V-INF (FT/SEC)	RHO-INF (SLUGS/FT3)	MU-INF (LB-SEC/FT2)	RE/FT (FT-1)	HREF-FR (R= .0400FT)	STFR (R= .0400FT)	SWITCH POSITION
97.3	.069	3.105	3863	5.988E-05	7.837E-08	2.951E 06	2.877E-02	1.563E-02	2

IC NO	TW	DTWDT	QDCT	H(TO)	H(TO)/HREF	H(.9TO)	H(.9TO)/HREF
							CANOPY
192	522.3	1.120	.157	1.920E-04	.0067	2.297E-04	.0080
193	524.4	1.735	.332	4.073E-04	.0142	4.874E-04	.0169
194	522.8	1.598	.205	2.508E-04	.0087	3.000E-04	.0104
195	523.8	3.047	.374	4.576E-04	.0159	5.475E-04	.0190
196	522.6	1.584	.207	2.529E-04	.0088	3.025E-04	.0105
197	523.3	.761	.075	9.182E-05	.0032	1.098E-04	.0038
198	523.[illegible]	.778	.090	1.099E-04	.0038	1.315E-04	.0046
199	521.2	1.076	.144	1.754E-04	.0061	2.098E-04	.0073
200	523.6	3.122	.442	5.418E-04	.0188	6.481E-04	.0225
201	524.1	3.062	.430	5.266E-04	.0183	6.303E-04	.0219
202	523.6	1.925	.242	2.964E-04	.0103	3.546E-04	.0123
203	522.4	.979	.121	1.477E-04	.0051	1.767E-04	.0061
204	522.5	2.005	.310	3.788E-04	.0132	4.531E-04	.0157
205	524.4	4.599	.713	8.744E-04	.0304	1.046E-03	.0364
206	523.[illegible]	.887	.117	1.431E-04	.0050	1.712E-04	.0059
207	525.6	4.824	.644	7.900E-04	.0275	9.455E-04	.0329
208	522.4	.809	.108	1.321E-04	.0046	1.580E-04	.0055
209	521.9	1.580	.216	2.639E-04	.0092	3.156E-04	.0110
210	520.8	1.108	.147	1.794E-04	.0062	2.144E-04	.0075
211	523.8	.810	.098	1.199E-04	.0042	1.434E-04	.0050
212	523.3	.654	.088	1.074E-04	.0037	1.285E-04	.0045
213	522.3	1.015	.134	1.636E-04	.0057	1.957E-04	.0068
214	522.1	2.269	.316	3.865E-04	.0134	4.622E-04	.0161
215	521.6	1.796	.253	3.097E-04	.0108	3.703E-04	.0129
216	524.5	4.537	.641	7.860E-04	.0273	9.406E-04	.0327
217	525.0	4.322	.613	7.518E-04	.0261	8.997E-04	.0313
218	521.5	1.018	.140	1.704E-04	.0059	2.038E-04	.0071
219	521.6	1.659	.232	2.832E-04	.0098	3.387E-04	.0118
220	522.0	2.600	.355	4.344E-04	.0151	5.195E-04	.0181

GROUP 94 CENTERLINE TIME 3.00

CH	TC	FIT LENGTH	DTDWT	UNCERTAINTY	CH	TC	FIT LENGTH	DTDWT	UNCERTAINTY
1	107	.80	3.960	.0116	50	173	2.00	.449	.0460
2	108	.60	6.914	.0086	51	174	2.00	.530	.0267
3	109	.60	5.429	.0067	52	175	2.00	.691	.0181
4	110	.60	5.668	.0061	53	176	2.00	.708	.0115
5	111	.60	5.526	.0167	54	177	.40	12.230	.0094
6	112	.60	5.753	.0065	55	178	.40	11.322	.0070
7	113	.60	6.890	.0279	56	179	.60	5.658	.0211
8	114	.60	5.693	.0087	57	180	.40	12.902	.0088
9	115	.60	5.489	.0166	58	181	.40	13.094	.0078
10	116	.60	5.436	.0075	59	182	.60	5.486	.0188
11	117	.60	5.659	.0111	60	183	1.20	1.045	.0150
12	118	.60	4.503	.0178	61	184	1.20	1.107	.0353
13	119	.60	5.078	.0104	62	185	.40	8.284	.0107
14	120	.60	5.634	.0110	63	186	.40	8.768	.0107
15	121	.60	4.574	.0181	64	187	.60	4.513	.0108
16	122	.60	4.685	.0153	65	188	.80	2.349	.0161
17	124	1.20	1.603	.0178	66	189	.60	6.081	.0093
18	125	.80	2.038	.0174	67	190	.60	7.219	.0046
19	126	1.20	1.792	.0114	68	191	.60	4.338	.0993
20	127	1.20	1.683	.0139	69	192	1.20	1.120	.0334
21	128	.80	2.427	.0081	70	193	1.20	1.735	.0145
22	129	.80	2.889	.0085	71	194	1.20	1.598	.0243
23	130	.80	2.274	.0197	72	195	.80	3.047	.0151
24	131	.80	2.246	.0207	73	196	1.20	1.584	.0180
25	132	.80	3.988	.0155	74	197	2.00	.761	.0145
26	133	.80	2.795	.0150	75	198	2.00	.778	.0154
27	134	.80	4.604	.0076	76	199	1.20	1.076	.0265
28	135	.60	5.638	.0096	77	200	.80	3.122	.0154
29	136	.60	6.067	.0057	78	201	.80	3.062	.0124
30	137	.60	5.704	.0088	79	202	1.20	1.925	.0569
31	138	.60	6.524	.0044	80	203	2.00	.979	.0083
32	139	.60	5.808	.0098	81	204	1.20	2.005	.0107
33	140	.60	6.754	.0072	82	205	.60	4.599	.0104
34	141	.60	6.178	.0061	83	206	2.00	.887	.0191
35	142	.60	4.814	.0072	84	207	.60	4.824	.0095
36	143	.60	7.556	.0064	85	208	2.00	.809	.0117
37	144	.40	8.472	.0072	86	209	1.20	1.580	.0100
38	161	.80	2.107	.0227	87	210	1.20	1.108	.0403
39	162	.80	2.422	.0170	88	211	2.00	.810	.0122
40	163	.80	2.451	.0206	89	212	2.00	.654	.0182
41	164	.80	3.463	.0094	90	213	1.20	1.015	.0881
42	165	.80	3.189	.0107	91	214	.80	2.269	.0278
43	166	.80	3.015	.0176	92	215	1.20	1.796	.0271
44	167	1.20	1.022	.0204	93	216	.60	4.537	.0099
45	168	1.20	1.559	.0124	94	217	.60	4.322	.0181
46	169	1.20	1.466	.0099	95	218	1.20	1.018	.0288
47	170	.80	2.030	.0288	96	219	1.20	1.659	.0137
48	171	.80	2.345	.0138	97	220	.60	2.600	.0132
49	172	.80	2.134	.0191	98	0	-0	0	0

95 .050

HIT ON LOOP 62

DATE 5/12/75

AEDC(ARO,INC.) ARNOLD AFS, TENNESSEE
VON KARMAN GAS DYNAMICS FACILITY
50 INCH HYPERSONIC TUNNEL B
V418-B7A

GROUP	TEST CONDITION	MODEL	MACH NO	PO,PSIA	TO,DEG R	ALPHA-MODEL	ALPHA-SECTOR	ALPHA-PREBEND	ROLL MODEL	YAW
55	33	140 B	7.99	674.1	1340	40.14	-10.14	30.00	179.92	.0

T-INF (DEG R)	P-INF (PSIA)	Q-INF (PSIA)	V-INF (FT/SEC)	RHO-INF (SLUGS/FT3)	MU-INF (LB-SEC/FT2)	RE/FT (FT-1)	HREF-FR (R= .0400FT)	STFR (R= .0400FT)	SWITCH POSITION
97.3	.279	3.111	3863	6.000E-05	7.836E-08	2.957E 06	2.880E-02	1.561E-02	3

IC NO	TW	DTWDT	QDOT	H(TO)	H(TO)/HREF	H(.9TO)	H(.9TO)/HREF
							CANOPY
221	523.4	.434	.052	6.402E-05	.0022	7.659E-05	.0027
222	523.7	.969	.119	1.456E-04	.0051	1.742E-04	.0060
223	522.4	2.958	.399	4.883E-04	.0170	5.840E-04	.0203
							ESCAPE HATCH AND WINDOW
							X/L 2Y/B
224	523.3	4.999	.496	6.116E-04	.0212	7.325E-04	.0254
225	527.0	3.243	.337	4.157E-04	.0165	5.696E-04	.0198
226	525.1	2.403	.252	3.074E-04	.0107	3.703E-04	.0129
227	523.5	1.745	.254	3.115E-04	.0108	3.727E-04	.0129
228	522.1	1.121	.143	1.753E-04	.0061	2.096E-04	.0073
229	522.7	1.084	.139	1.704E-04	.0059	2.039E-04	.0071
232	525.3	.260	.035	4.239E-05	.0015	5.145E-05	.0018
233	525.7	.345	.052	6.432E-05	.0022	7.663E-05	.0027
236	524.5	.658	.097	1.194E-04	.0041	1.429E-04	.0050
237	525.1	1.046	.147	1.798E-04	.0062	2.152E-04	.0075
							CARGO BAY HINGE NO. 1
							X/L Z,FULL SCALE(IN)
238	530.3	2.856	.382	4.721E-04	.0164	5.659E-04	.0196
239	534.2	4.907	.657	8.158E-04	.0283	9.785E-04	.0340
240	530.6	2.161	.318	3.809E-04	.0132	4.564E-04	.0158
241	534.3	3.936	.554	6.872E-04	.0239	8.243E-04	.0286
242	532.9	3.661	.523	6.476E-04	.0225	7.765E-04	.0270
243	531.1	2.197	.268	3.318E-04	.0115	3.977E-04	.0138
244	530.4	2.109	.246	3.043E-04	.0106	3.646E-04	.0127
							CARGO BAY HINGE NO. 2
							X/L Z,FULL SCALE(IN)
245	533.9	5.113	.731	9.063E-04	.0315	1.087E-03	.0377
246	536.5	8.149	1.167	1.456E-03	.0506	1.749E-03	.0607
247	534.3	4.402	.649	8.053E-04	.0280	9.659E-04	.0335
248	537.4	6.986	1.032	1.286E-03	.0447	1.544E-03	.0536
249	538.5	7.501	1.108	1.382E-03	.0480	1.660E-03	.0576
250	536.2	4.905	.616	7.666E-04	.0266	9.200E-04	.0319
251	536.3	4.995	.614	7.642E-04	.0265	9.170E-04	.0318
							CARGO BAY HINGE NO. 3
							X/L Z,FULL SCALE(IN)
252	536.9	8.080	1.175	1.462E-03	.0508	1.755E-03	.0609
253	538.4	9.378	1.354	1.702E-03	.0591	2.043E-03	.0709
254	538.3	7.882	1.199	1.496E-03	.0519	1.796E-03	.0624
257	539.0	6.983	.944	1.174E-03	.0409	1.415E-03	.0491
258	537.6	5.788	.790	9.842E-04	.0342	1.182E-03	.0410

DATE 5/12/75

AEDC(ARO,INC.) ARNOLD AFS, TENNESSEE
VON KARMAN GAS DYNAMICS FACILITY
50 INCH HYPERSONIC TUNNEL B
V41R-87A

GROUP	TEST CONDITION	MODEL	MACH NO	PO,PSIA	TO,DEG R	ALPHA-MODEL	ALPHA-SECTOR	ALPHA-PREBEND	ROLL MODEL	YAW
95	33	140 B	7.99	674.1	1340	40.14	-10.14	30.00	179.92	.0

T-INF (DEG R)	P-INF (PSIA)	Q-INF (PSIA)	V-INF (FT/SEC)	RHO-INF (SLUGS/FT3)	MU-INF (LB-SEC/FT2)	RE/FT (FT-1)	HREF-FR (R= .0400FT)	STFR (R= .0400FT)	SWITCH POSITION
97.3	.076	3.111	3863	6.000E-05	7.836E-08	2.957E 06	2.880E-02	1.561E-02	3

TOP CENTERLINE

IC NO	TW	DTWDT	QDOT	H(TO)	H(TO)/HREF	H(.9TO)	H(.9TO)/HREF	X/L
367	582.0	82.482	9.924	1.309E-02	.4545	1.590E-02	.5521	0
368	554.1	55.812	7.151	9.099E-03	.3159	1.097E-02	.3808	.0008
369	542.9	36.692	4.313	5.410E-03	.1879	6.504E-03	.2258	.0019
370	538.3	24.974	3.051	3.806E-03	.1321	4.569E-03	.1587	.0037
371	534.1	17.681	1.729	2.146E-03	.0745	2.574E-03	.0894	.0058
372	530.6	11.675	1.499	1.852E-03	.0643	2.219E-03	.0771	.0087
373	528.5	7.247	.946	1.165E-03	.0405	1.396E-03	.0485	.0118
374	528.9	6.261	.817	1.007E-03	.0350	1.207E-03	.0419	.0151
375	528.1	4.882	.665	8.193E-04	.0284	9.812E-04	.0341	.0182
376	528.9	4.010	.527	6.496E-04	.0226	7.782E-04	.0270	.0215
377	529.6	3.596	.461	5.674E-04	.0198	6.822E-04	.0237	.0246
378	529.6	3.227	.375	4.631E-04	.0161	5.549E-04	.0193	.0278
379	529.9	2.244	.275	3.394E-04	.0118	4.067E-04	.0141	.0609
380	529.3	2.216	.276	2.793E-04	.0097	3.346E-04	.0116	.0646
381	529.0	2.152	.278	3.428E-04	.0119	4.107E-04	.0143	.0684
382	528.2	2.055	.268	3.302E-04	.0115	3.955E-04	.0137	.0721
383	528.1	2.164	.289	3.560E-04	.0124	4.264E-04	.0148	.0760
384	527.8	2.003	.278	3.426E-04	.0119	4.101E-04	.0142	.0796
385	529.4	3.492	.448	5.526E-04	.0192	6.621E-04	.0230	.0789
386	529.4	3.767	.445	5.487E-04	.0191	6.573E-04	.0228	.0982
387	529.9	3.890	.477	5.865E-04	.0204	7.052E-04	.0245	.1019
388	531.5	5.781	.549	6.793E-04	.0236	8.143E-04	.0283	.1160
389	530.4	4.664	.676	8.346E-04	.0290	1.000E-03	.0347	.1195
390	530.0	4.565	.718	8.865E-04	.0308	1.062E-03	.0369	.1231
391	529.8	4.024	.640	7.905E-04	.0274	9.465E-04	.0329	.1268
392	530.2	3.843	.656	8.122E-04	.0282	9.733E-04	.0338	.1305
393	529.9	3.914	.661	8.160E-04	.0283	9.777E-04	.0339	.1338
394	529.9	3.892	.652	8.050E-04	.0280	9.645E-04	.0335	.1376
395	529.4	3.879	.579	7.143E-04	.0248	8.557E-04	.0297	.1411
396	529.7	3.727	.551	6.803E-04	.0236	8.151E-04	.0283	.1448
397	529.7	3.398	.503	6.203E-04	.0215	7.432E-04	.0258	.1483
398	528.8	3.632	.510	6.281E-04	.0218	7.524E-04	.0261	.1519
399	536.2	10.409	1.392	1.731E-03	.0601	2.077E-03	.0721	.1556

DATE 5/12/75

AEDC(ARO,INC.) ARNOLD AFS, TENNESSEE
VON KARMAN GAS DYNAMICS FACILITY
50 INCH HYPERSONIC TUNNEL B
V41B-87A

GROUP	TEST CONDITION	MODEL	MACH NO	PO,PSIA	TO,DEG R	ALPHA-MODEL	ALPHA-SECTOR	ALPHA-PREBEND	ROLL MODEL	YAW
55	33	140 B	7.99	674.1	1340	40.14	-10.14	30.00	179.92	.0

T-INF (DEG R)	P-INF (PSIA)	Q-INF (PSIA)	V-INF (FT/SEC)	RHO-INF (SLUGS/FT3)	MU-INF (LB-SEC/FT2)	RE/FT (FT-1)	HREF-FR (R= .0400FT)	STFR (R= .0400FT)	SWITCH POSITION
97.3	.070	3.111	3863	6.000E-05	7.836E-08	2.957E 06	2.880E-02	1.561E-02	3

TC NO	TW	DTWDT	QDOT	H(TO)	H(TO)/HREF	H(.9TO)	H(.9TO)/HREF	TOP CENTERLINE X/L
400	533.3	14.460	1.955	2.438E-03	.0847	2.928E-03	.1017	.1582
401	537.2	14.264	1.851	2.305E-03	.0800	2.767E-03	.0961	.1608
402	536.4	13.201	1.647	2.051E-03	.0712	2.461E-03	.0855	.1635
403	536.2	12.395	1.467	1.825E-03	.0634	2.191E-03	.0761	.1664
404	534.6	11.045	1.337	1.660E-03	.0576	1.992E-03	.0691	.1691
405	537.1	13.798	1.673	2.083E-03	.0723	2.500E-03	.0868	.1720
406	536.8	14.313	1.735	2.160E-03	.0750	2.592E-03	.0900	.1748
407	537.1	14.584	1.855	2.348E-03	.0815	2.818E-03	.0979	.1769
408	535.5	13.110	1.923	2.390E-03	.0830	2.867E-03	.0996	.1800
409	532.1	10.010	1.438	1.780E-03	.0618	2.134E-03	.0741	.1831
410	532.6	8.257	1.137	1.469E-03	.0510	1.762E-03	.0612	.1863
411	530.3	5.891	.882	1.090E-03	.0378	1.306E-03	.0453	.1894
412	529.1	4.134	.560	6.903E-04	.0240	8.269E-04	.0287	.1931
413	528.2	2.915	.389	4.797E-04	.0167	5.745E-04	.0199	.1972
414	527.1	1.305	.175	2.147E-04	.0075	2.571E-04	.0089	.2049
415	526.7	.498	.049	6.019E-05	.0021	7.206E-05	.0025	.2250
416	526.1	.502	.059	7.191E-05	.0025	8.608E-05	.0030	.2500

TC NO	TW	DTWDT	QDOT	H(TO)	H(TO)/HREF	H(.9TO)	H(.9TO)/HREF	NOSE TC (Z = 338) X/L	2Y/B
145	565.6	57.373	7.810	1.008E-02	.3501	1.219E-02	.4234	.0008	.5039
146	571.2	63.666	8.691	1.130E-02	.3925	1.369E-02	.4753	.0023	.5082
147	563.2	52.861	7.187	9.252E-03	.3212	1.118E-02	.3882	.0043	.5135
148	557.0	43.831	6.139	7.840E-03	.2722	9.458E-03	.3284	.0068	.5205
149	547.4	30.728	4.449	5.613E-03	.1949	6.755E-03	.2345	.0095	.5279
150	546.2	25.944	3.719	4.684E-03	.1626	5.636E-03	.1957	.0122	.5354
151	543.1	17.508	2.489	3.085E-03	.1071	3.709E-03	.1288	.0218	.5621
152	544.1	20.405	2.820	3.544E-03	.1230	4.261E-03	.1479	.0251	.5712
153	546.1	20.993	2.505	3.230E-03	.1122	3.886E-03	.1349	.0286	.5808
154	544.8	19.058	2.371	2.981E-03	.1035	3.585E-03	.1245	.0319	.5898
155	544.3	17.827	2.241	2.816E-03	.0978	3.386E-03	.1176	.0354	.5995
156	543.0	16.167	2.009	2.521E-03	.0875	3.030E-03	.1052	.0387	.6085
157	543.9	15.776	1.940	2.437E-03	.0846	2.930E-03	.1017	.0420	.6176
158	543.8	15.464	1.902	2.388E-03	.0829	2.872E-03	.0997	.0462	.6294
159	543.6	15.838	1.776	2.230E-03	.0774	2.681E-03	.0931	.0503	.6406

GROUP 95 CENTERLINE TIME 3.05

CH	TC	FIT LENGTH	DTDWT	UNCERTAINTY	CH	TC	FIT LENGTH	DTDWT	UNCERTAINTY
1	221	2.00	.434	.0254	50	384	.80	2.003	.0156
2	222	2.00	.969	.0088	51	385	.80	3.492	.0113
3	223	.80	2.958	.0139	52	386	.80	3.767	.0117
4	224	.80	4.999	.0138	53	387	.80	3.890	.0101
5	225	.80	3.243	.0195	54	388	.60	5.781	.0134
6	226	.80	2.403	.0131	55	389	.60	4.664	.0120
7	227	1.20	1.746	.0771	56	390	.60	4.565	.0411
8	228	1.20	1.121	.0155	57	391	.60	4.024	.0111
9	229	2.00	1.045	.0142	58	392	.80	3.843	.0088
10	232	2.00	.260	.0340	59	393	.80	3.914	.0174
11	233	2.00	.345	.0353	60	394	.80	3.892	.0134
12	236	2.00	.668	.0171	61	395	.80	3.879	.0181
13	237	1.20	1.046	.0197	62	396	.80	3.727	.0079
14	238	.80	2.856	.0172	63	397	.80	3.398	.0125
15	239	.60	4.907	.0173	64	398	.80	3.632	.0110
16	240	.80	2.161	.0183	65	399	.40	10.409	.0111
17	241	.80	3.936	.0155	66	400	.40	14.460	.0051
18	242	.80	3.660	.0105	67	401	.40	14.269	.0044
19	243	.80	2.197	.0181	68	402	.40	13.201	.0522
20	244	.80	2.109	.0669	69	403	.40	12.065	.0187
21	245	.60	5.113	.0122	70	404	.40	11.045	.0122
22	246	.60	8.149	.0073	71	405	.40	13.798	.0098
23	247	.60	4.402	.0216	72	406	.40	14.313	.0067
24	248	.60	6.986	.0137	73	407	.40	14.584	.0117
25	249	.60	7.501	.0074	74	408	.40	13.116	.0091
26	250	.60	4.905	.0067	75	409	.40	10.010	.0095
27	251	.60	4.995	.0076	76	410	.40	8.257	.0206
28	252	.40	8.080	.0057	77	411	.60	5.891	.0046
29	253	.40	9.378	.0098	78	412	.60	4.134	.0111
30	254	.60	7.882	.0080	79	413	.80	2.915	.0715
31	257	.60	6.983	.0084	80	414	1.20	1.308	.0096
32	258	.60	5.788	.0079	81	415	2.00	.498	.0245
33	367	.20	82.482	.0044	82	416	2.00	.502	.0148
34	368	.20	55.612	.0029	83	145	.20	57.373	.0052
35	369	.20	36.692	.0052	84	146	.20	63.666	.0033
36	370	.30	24.974	.0042	85	147	.20	52.861	.0033
37	371	.30	17.681	.0062	86	148	.20	43.831	.0040
38	372	.40	11.675	.0115	87	149	.30	30.728	.0076
39	373	.60	7.247	.0078	88	150	.30	25.944	.0050
40	374	.60	6.281	.0089	89	151	.30	17.509	.0091
41	375	.60	4.882	.0091	90	152	.30	20.805	.0289
42	376	.60	4.010	.0106	91	153	.30	20.983	.0047
43	377	.80	3.596	.0122	92	154	.30	19.058	.0181
44	378	.80	3.227	.0126	93	155	.30	17.827	.0083
45	379	.80	2.244	.0115	94	156	.30	16.167	.0112
46	380	.80	2.210	.0160	95	157	.40	15.776	.0088
47	381	.80	2.152	.0473	96	158	.40	15.464	.0086
48	382	.80	2.055	.0173	97	159	.40	15.830	.0057
49	383	.80	2.164	.0200	98	0	-0	0	0
96		.050							

HIT ON LOOP 60

DATE 5/12/75

AEDC(ARO,INC.) ARNOLD AFS, TENNESSEE
VON KARMAN GAS DYNAMICS FACILITY
50 INCH HYPERSONIC TUNNEL B
V41B-87A

GROUP	TEST CONDITION	MODEL	MACH NO	PO,PSIA	TO,DEG R	ALPHA-MODEL	ALPHA-SECTOR	ALPHA-PREBEND	ROLL MODEL	YAW
56	34	140 B	7.99	673.7	1339	40.09	-10.30	30.00	168.50	2.0

T-INF (DEG R)	P-INF (PSIA)	Q-INF (PSIA)	V-INF (FT/SEC)	RHO-INF (SLUGS/FT3)	MU-INF (LB-SEC/FT2)	RE/FT (FT-1)	HREF-FR (R= .0400FT)	STFR (R= .0400FT)	SWITCH POSITION
97.3	.070	3.109	3861	6.001E-05	7.830E-08	2.959E 06	2.879E-02	1.561E-02	1

TC NO	TW	DTWDT	QDOT	H(TO)	H(TO)/HREF	H(.9TO)	H(.9TO)/HREF
1	545.7	4.078	.545	6.813E-04	.0237	8.197E-04	.0285
2	546.2	3.899	.527	6.653E-04	.0231	8.005E-04	.0278
3	545.7	3.146	.434	5.469E-04	.0190	6.579E-04	.0229
4	545.6	2.955	.464	5.066E-04	.0177	6.119E-04	.0213
5	545.6	2.724	.365	4.596E-04	.0160	5.529E-04	.0192
6	546.2	2.192	.242	3.678E-04	.0128	4.425E-04	.0154
7	546.4	2.138	.313	3.953E-04	.0137	4.756E-04	.0165
8	545.5	2.279	.345	4.349E-04	.0151	5.232E-04	.0182
9	546.3	1.835	.239	3.015E-04	.0105	3.628E-04	.0126
10	546.3	1.406	.252	2.543E-04	.0088	3.060E-04	.0106
11	547.1	1.500	.264	2.571E-04	.0089	3.094E-04	.0107
12	548.2	1.133	.157	1.965E-04	.0069	2.369E-04	.0083
13	551.4	.682	.101	1.281E-04	.0045	1.544E-04	.0054
14	549.3	.919	.125	1.561E-04	.0055	1.904E-04	.0066
15	550.6	.913	.123	1.554E-04	.0054	1.872E-04	.0065
16	552.1	.539	.073	9.321E-05	.0032	1.123E-04	.0039
17	553.9	.615	.084	1.067E-04	.0037	1.287E-04	.0045
18	555.9	.383	.054	6.842E-05	.0024	8.314E-05	.0029
19	558.5	.173	.024	3.133E-05	.0011	3.782E-05	.0013
22	545.3	9.046	1.260	1.587E-03	.0551	1.909E-03	.0663
23	543.9	8.488	1.159	1.435E-03	.0519	1.798E-03	.0624
24	543.5	7.222	.979	1.231E-03	.0427	1.480E-03	.0514
25	543.1	7.057	.931	1.170E-03	.0406	1.406E-03	.0488
26	544.4	8.491	1.117	1.407E-03	.0489	1.692E-03	.0588
27	545.6	8.681	1.213	1.529E-03	.0531	1.839E-03	.0639
28	544.5	7.012	1.011	1.273E-03	.0442	1.531E-03	.0532
29	543.5	6.651	.961	1.208E-03	.0420	1.453E-03	.0505
30	543.3	7.282	1.049	1.318E-03	.0458	1.585E-03	.0551
31	544.2	9.063	1.269	1.597E-03	.0555	1.921E-03	.0667
32	545.2	10.072	1.339	1.687E-03	.0586	2.029E-03	.0705
33	545.2	8.635	1.237	1.559E-03	.0541	1.875E-03	.0651
34	547.4	10.792	1.466	1.853E-03	.0644	2.231E-03	.0775
35	548.0	7.958	1.131	1.430E-03	.0497	1.721E-03	.0598
36	547.9	8.870	1.293	1.634E-03	.0568	1.967E-03	.0683
37	548.5	11.196	1.582	2.001E-03	.0695	2.409E-03	.0837
38	549.0	9.057	1.268	1.605E-03	.0557	1.932E-03	.0671
39	549.5	7.132	1.047	1.326E-03	.0461	1.597E-03	.0555
41	546.5	7.224	.971	1.225E-03	.0426	1.474E-03	.0512
42	548.4	8.059	1.106	1.399E-03	.0486	1.684E-03	.0585
43	548.3	6.586	.859	1.087E-03	.0377	1.308E-03	.0454

FUSELAGE VENT NO. 1

X/L	Z,FULL SCALE(IN)
.4434	376.6300
.4264	371.6300
.4303	371.6300
.4342	371.6300
.4380	371.6300
.4434	369.1300
.4226	366.6300
.4264	366.6300
.4303	366.6300
.4342	366.6300
.4380	366.6300
.4496	366.6300
.4187	357.1300
.4396	361.6300
.4434	361.6300
.4396	355.6300
.4434	355.6300
.4396	351.6300
.4291	332.6300

CARGO BAY VENT NO. 1

X/L	Z,FULL SCALE(IN)
.3974	397.6300
.4013	397.6300
.4052	397.6300
.4090	397.6300
.4129	397.6300
.3936	392.6300
.3974	392.6300
.4013	392.6300
.4052	392.6300
.4090	392.6300
.4129	392.6300
.4090	386.1300
.4129	387.6300
.3897	383.1300
.4090	378.6300
.4129	382.1300
.4129	377.1300
.4001	373.6300

PROTUBERANCES

X/L	Z,FULL SCALE(IN)
.3546	379.0500
.3604	379.0500
.3450	374.0500

DATE 5/12/75

AEDC(ARO,INC.) ARNOLD AFS, TENNESSEE
VON KARMAN GAS DYNAMICS FACILITY
50 INCH HYPERSONIC TUNNEL B
V41B-87A

GROUP	TEST CONDITION	MODEL	MACH NO	PO,PSIA	TO,DEG R	ALPHA-MODEL	ALPHA-SECTOR	ALPHA-PREBEND	ROLL MODEL	YAW
56	34	140 B	7.99	673.7	1339	40.09	-10.30	30.00	168.50	2.0

T-INF (DEG R)	P-INF (PSIA)	Q-INF (PSIA)	V-INF (FT/SEC)	RHO-INF (SLUGS/FT3)	MU-INF (LB-SEC/FT2)	RE/FT (FT-1)	HREF-FR (R= .0400FT)	STFR (R= .0400FT)	SWITCH POSITION
97.3	.070	3.109	3861	6.001E-05	7.830E-08	2.959E 06	2.879E-02	1.561E-02	1

TC NO	TW	DTWDT	QDOT	H(TO)	H(TO)/HREF	H(.9TO)	H(.9TO)/HREF
44	547.7	6.792	.929	1.174E-03	.0408	1.413E-03	.0491
45	548.7	8.211	1.142	1.445E-03	.0502	1.739E-03	.0604
46	550.3	9.204	1.293	1.640E-03	.0570	1.975E-03	.0686
47	548.9	5.693	.787	9.967E-04	.0346	1.200E-03	.0417
48	552.7	10.090	1.392	1.770E-03	.0615	2.134E-03	.0741
49	550.1	5.945	.822	1.042E-03	.0362	1.254E-03	.0436
50	554.9	8.694	1.215	1.552E-03	.0539	1.871E-03	.0650
51	554.3	7.653	1.046	1.333E-03	.0463	1.608E-03	.0558
52	552.0	3.909	.541	6.873E-04	.0239	8.282E-04	.0288
53	552.7	4.939	.726	9.233E-04	.0321	1.113E-03	.0387
54	542.1	5.476	.783	9.830E-04	.0341	1.182E-03	.0410
55	553.4	3.539	.549	6.481E-04	.0225	7.813E-04	.0271
56	543.0	5.669	.732	9.202E-04	.0320	1.106E-03	.0384
57	546.0	6.396	.795	9.894E-04	.0344	1.190E-03	.0413
58	549.6	7.389	.981	1.243E-03	.0432	1.497E-03	.0520
59	552.4	7.059	.946	1.189E-03	.0413	1.433E-03	.0498
60	551.8	6.523	.914	1.161E-03	.0403	1.399E-03	.0486
61	550.4	6.668	.850	1.078E-03	.0374	1.298E-03	.0451
62	546.4	6.329	.779	9.834E-04	.0342	1.183E-03	.0411
63	543.6	5.634	.738	9.282E-04	.0322	1.116E-03	.0388
64	~~543.5~~	~~[illegible]~~	~~[illegible]~~	~~2.215E-06~~	~~.0001~~	~~2.662E-06~~	~~.0001~~
65	541.8	5.366	.732	9.177E-04	.0319	1.103E-03	.0383
66	545.3	6.390	.809	1.020E-03	.0354	1.227E-03	.0426
67	548.7	6.732	.951	1.204E-03	.0418	1.449E-03	.0503
68	552.4	7.952	1.014	1.290E-03	.0448	1.554E-03	.0540

PROTUBERANCES

X/L	Z,FULL SCALE(IN)
.3508	374.0500
.3566	374.0500
.3604	374.0500
.3392	366.5500
.3566	366.5500
.3392	360.7000
.3566	360.7000
.3604	360.7000
.3392	353.2000
.3450	353.2000
.3508	353.2000
.3566	353.2000

SUBLIMATOR VENT NO. 1

X/L	Z,FULL SCALE(IN)
.3031	371.1300
.3074	369.1300
.3089	363.6300
.3074	358.1300
.3031	356.1300
.2988	358.1300
.2973	363.6300
.2988	369.1300
~~.3031~~	~~376.1300~~
.3089	378.6300
.3101	372.6300
.3157	370.3800
.3128	363.6300

DATE 5/12/75

AEDC(ARO,INC.) ARNOLD AFS, TENNESSEE
VON KARMAN GAS DYNAMICS FACILITY
50 INCH HYPERSONIC TUNNEL H
V418-87A

GROUP	TEST CONDITION	MODEL	MACH NO	PO,PSIA	TO,DEG R	ALPHA-MODEL	ALPHA-SECTOR	ALPHA-PREBEND	ROLL MODEL	YAW
96	34	140 H	7.99	673.7	1339	40.09	-10.30	30.00	168.50	2.0

T-INF (DEG R)	P-INF (PSIA)	Q-INF (PSIA)	V-INF (FT/SEC)	RHO-INF (SLUGS/FT3)	MU-INF (LB-SEC/FT2)	RE/FT (FT-1)	HREF-FR (R= .0400FT)	STFR (R= .0400FT)	SWITCH POSITION
97.3	.070	3.109	3861	6.001E-05	7.830E-08	2.959E 06	2.879E-02	1.561E-02	1

TC NO	T*	DT*DT	QDOT	H(TO)	H(TO)/HREF	H(.9TO)	H(.9TO)/HREF
69	539.7	3.461	.483	6.035E-04	.0210	7.252E-04	.0252
70	539.4	3.503	.430	5.375E-04	.0187	6.456E-04	.0224
71	540.1	3.991	.544	6.804E-04	.0236	8.173E-04	.0284
72	540.0	3.167	.450	5.630E-04	.0196	6.763E-04	.0235
73	541.2	3.777	.491	6.155E-04	.0214	7.397E-04	.0257
74	542.2	4.552	.553	6.942E-04	.0241	8.345E-04	.0290
75	542.5	3.517	.480	6.021E-04	.0209	7.238E-04	.0251
77	544.7	4.620	.658	8.279E-04	.0288	9.957E-04	.0346
78	546.5	5.782	.798	1.007E-03	.0350	1.211E-03	.0421
79	546.9	5.104	.656	8.284E-04	.0288	9.970E-04	.0346
80	546.1	5.117	.701	8.845E-04	.0307	1.064E-03	.0370
81	548.6	5.659	.794	1.005E-03	.0349	1.210E-03	.0420
83	533.2	4.621	.617	7.655E-04	.0266	9.181E-04	.0319
84	534.5	4.958	.653	8.121E-04	.0282	9.743E-04	.0338
85	535.9	5.390	.735	9.151E-04	.0318	1.098E-03	.0381
87	531.1	3.781	.540	6.600E-04	.0232	8.007E-04	.0278
88	535.0	5.053	.707	8.791E-04	.0305	1.055E-03	.0366
89	537.9	5.654	.832	1.039E-03	.0361	1.248E-03	.0433
90	534.5	4.863	.663	8.237E-04	.0286	9.882E-04	.0343
91	536.4	5.365	.737	9.177E-04	.0319	1.101E-03	.0383
92	539.1	6.147	.870	1.087E-03	.0378	1.306E-03	.0454
93	535.0	3.847	.492	6.116E-04	.0212	7.338E-04	.0255
94	537.4	4.703	.612	7.638E-04	.0265	9.170E-04	.0319
95	538.2	5.140	.732	9.135E-04	.0317	1.097E-03	.0381
96	536.9	3.653	.475	5.928E-04	.0206	7.116E-04	.0247
97	537.3	4.332	.554	6.917E-04	.0240	8.304E-04	.0288
98	537.3	4.255	.598	7.456E-04	.0259	8.951E-04	.0311
100	538.9	4.156	.590	7.372E-04	.0256	8.854E-04	.0308
102	539.2	3.742	.529	6.620E-04	.0230	7.951E-04	.0276
103	537.1	4.298	.565	7.049E-04	.0245	8.462E-04	.0294
105	535.2	4.792	.600	7.480E-04	.0259	8.952E-04	.0311
106	534.8	4.850	.622	7.730E-04	.0269	9.274E-04	.0322

FUSELAGE VENT PANEL NO. 7

X/L	Z,FULL SCALE(IN)
.2487	356.4000
.2591	356.4000
.2419	351.4000
.2487	351.4000
.2552	351.4000
.2610	351.4000
.2419	342.8000
.2552	342.8000
.2610	342.8000
.2419	334.2000
.2487	334.2000
.2552	334.2000

ACCESS HATCH WINDOW

X/L	Z,FULL SCALE(IN)
.2131	398.0000
.2131	388.0000
.2131	383.0000
.2222	395.8000
.2193	386.5000
.2177	381.8000
.2297	389.5000
.2243	382.5000
.2214	378.7000
.2343	374.0000
.2274	375.5000
.2239	373.3000
.2363	368.0000
.2286	368.0000
.2247	368.0000
.2274	360.5000
.2081	354.3000
.2023	362.7000
.2050	378.7000
.2050	386.2000

GROUP 96 CENTERLINE TIME 2.95

CH	TC	FIT LENGTH	DTDWT	UNCERTAINTY	CH	TC	FIT LENGTH	DTDWT	UNCERTAINTY
1	1	.60	4.078	.0162	50	53	.60	4.939	.0229
2	2	.60	3.849	.0107	51	54	.60	5.476	.0214
3	3	.80	3.146	.0081	52	55	.80	3.539	.0167
4	4	.80	2.955	.0081	53	56	.60	5.669	.0099
5	5	.80	2.724	.0290	54	57	.60	6.396	.0118
6	6	.80	2.192	.0164	55	58	.60	7.389	.0065
7	7	.80	2.138	.0709	56	59	.60	7.059	.0242
8	8	.80	2.279	.0137	57	60	.60	6.523	.0072
9	9	1.20	1.696	.0154	58	61	.60	6.668	.0056
10	10	1.20	1.406	.0154	59	62	.60	6.329	.0111
11	11	1.20	1.500	.0167	60	63	.60	5.634	.0087
12	12	1.20	1.133	.0305	61	64	2.00	-.014	-1.0667
13	13	2.00	.682	.0140	62	65	.60	5.368	.0096
14	14	2.00	.910	.0113	63	66	.60	6.390	.0083
15	15	2.00	.913	.0176	64	67	.60	6.732	.0074
16	16	2.00	.539	.0232	65	68	.60	7.952	.0047
17	17	2.00	.615	.0304	66	69	.80	3.460	.0150
18	18	2.00	.383	.0206	67	70	.80	3.503	.0068
19	19	2.00	.173	.0606	68	71	.80	3.991	.0473
20	22	.40	9.046	.0077	69	72	.80	3.167	.0221
21	23	.40	8.448	.0060	70	73	.80	3.777	.0108
22	24	.60	7.222	.0075	71	74	.60	4.552	.0200
23	25	.60	7.057	.0152	72	75	.80	3.517	.0147
24	26	.40	8.491	.0095	73	77	.60	4.620	.0154
25	27	.40	8.681	.0161	74	78	.60	5.782	.0084
26	28	.60	7.012	.0097	75	79	.60	5.104	.0160
27	29	.60	6.651	.0074	76	80	.60	5.117	.0183
28	30	.60	7.282	.0056	77	81	.60	5.659	.0081
29	31	.40	9.063	.0138	78	83	.60	4.621	.0107
30	32	.40	10.072	.0080	79	84	.60	4.958	.0499
31	33	.40	8.635	.0081	80	85	.60	5.390	.0110
32	34	.40	10.792	.0061	81	87	.80	3.781	.0103
33	35	.60	7.918	.0315	82	88	.60	5.053	.0096
34	36	.40	8.870	.0064	83	89	.60	5.654	.0121
35	37	.40	11.186	.0056	84	90	.60	4.863	.0123
36	38	.40	9.057	.0098	85	91	.60	5.365	.0092
37	39	.60	7.132	.0060	86	92	.60	6.147	.0115
38	41	.60	7.224	.0062	87	93	.80	3.847	.0259
39	42	.60	8.059	.0052	88	94	.60	4.703	.0069
40	43	.60	6.596	.0114	89	95	.60	5.140	.0123
41	44	.60	6.792	.0062	90	96	.80	3.653	.0405
42	45	.40	8.211	.0098	91	97	.60	4.332	.0227
43	46	.40	9.204	.0087	92	98	.60	4.255	.0285
44	47	.60	5.893	.0079	93	100	.60	4.156	.0138
45	48	.40	10.030	.0087	94	102	.80	3.742	.0148
46	49	.60	5.945	.0050	95	103	.60	4.298	.0248
47	50	.40	8.694	.0321	96	105	.60	4.792	.0095
48	51	.60	7.653	.0078	97	106	.60	4.850	.0064
49	52	.80	3.909	.0091	98	0	-0	0	0
97		.050							

BIT ON LOOP 63

DATE 5/12/75 AEDC(ARO,INC.) ARNOLD AFS, TENNESSEE

VON KARMAN GAS DYNAMICS FACILITY

50 INCH HYPERSONIC TUNNEL B

V41B-87A

GROUP	TEST CONDITION	MODEL	MACH NO	PO,PSIA	TO,DEG R	ALPHA-MODEL	ALPHA-SECTOR	ALPHA-PREBEND	ROLL MODEL	YAW
97	34	140 B	7.99	674.1	1338	40.08	-10.29	30.00	168.50	2.0

T-INF (DEG R)	P-INF (PSIA)	Q-INF (PSIA)	V-INF (FT/SEC)	RHO-INF (SLUGS/FT3)	MU-INF (LB-SEC/FT2)	RE/FT (FT-1)	HREF-FR (R= .0400FT)	STFR (R= .0400FT)	SWITCH POSITION
97.2	.078	3.111	3860	6.008E-05	7.826E-08	2.963E 06	2.879E-02	1.560E-02	2

TC NO	TW	DTWDT	QDOT	H(TO)	H(TO)/HREF	H(.9TO)	H(.9TO)/HREF	X/L	Z,FULL SCALE(IN)
								ACCESS HATCH WINDOW	
107	533.2	4.565	.654	8.126E-04	.0282	9.746E-04	.0338	.2050	396.2000
								FUSELAGE VENT PANEL NO. 3 AND 1	
								X/L	Z,FULL SCALE(IN)
108	536.9	7.716	.816	1.020E-03	.0354	1.225E-03	.0425	.1244	377.5000
109	534.9	6.474	.831	9.971E-04	.0346	1.196E-03	.0415	.1302	377.5000
110	534.7	6.283	.797	9.918E-04	.0344	1.190E-03	.0413	.1360	377.5000
111	535.3	6.374	.769	9.576E-04	.0333	1.149E-03	.0399	.1418	377.5000
112	535.9	6.477	.770	9.599E-04	.0333	1.152E-03	.0400	.1476	377.5000
113	536.6	7.131	.819	1.022E-03	.0355	1.227E-03	.0426	.1215	273.5000
114	536.0	6.480	.779	9.713E-04	.0337	1.166E-03	.0405	.1273	273.5000
115	536.0	5.958	.740	9.228E-04	.0320	1.107E-03	.0385	.1331	273.5000
116	535.7	5.956	.732	9.120E-04	.0317	1.095E-03	.0380	.1389	273.5000
117	537.3	6.347	.733	9.145E-04	.0318	1.098E-03	.0381	.1447	273.5000
118	536.3	4.949	.685	8.537E-04	.0296	1.025E-03	.0356	.1409	366.0000
119	537.9	5.760	.747	9.338E-04	.0324	1.121E-03	.0389	.1442	366.0000
120	538.6	6.078	.762	9.525E-04	.0331	1.144E-03	.0397	.1215	359.5000
121	538.1	5.270	.649	8.104E-04	.0281	9.732E-04	.0338	.1303	359.5000
122	538.8	5.205	.650	8.131E-04	.0282	9.766E-04	.0339	.1337	359.5000
								LOWER RCS NOZZLES	
								X/L	Z,FULL SCALE(IN)
124	529.2	1.811	.151	1.934E-04	.0069	2.389E-04	.0083	.0950	400.0000
125	529.0	2.481	.270	3.332E-04	.0116	3.992E-04	.0139	.0988	400.0000
126	528.7	2.103	.288	3.551E-04	.0123	4.254E-04	.0148	.1027	400.0000
127	529.5	1.930	.250	3.211E-04	.0112	3.847E-04	.0134	.0911	395.0000
128	529.2	2.782	.337	4.171E-04	.0145	4.998E-04	.0174	.0950	395.0000
129	530.6	3.170	.372	4.602E-04	.0160	5.515E-04	.0192	.0988	395.0000
130	530.5	2.344	.290	3.457E-04	.0120	4.156E-04	.0144	.0810	390.0000
131	530.2	2.447	.301	4.466E-04	.0155	5.353E-04	.0186	.0857	390.0000
132	531.5	4.510	.525	6.507E-04	.0226	7.801E-04	.0271	.0963	390.0000
133	531.0	2.976	.361	4.471E-04	.0155	5.359E-04	.0186	.0857	383.8000
134	531.2	4.393	.588	7.283E-04	.0253	8.730E-04	.0303	.0872	377.3000
135	533.4	6.251	.751	9.334E-04	.0324	1.120E-03	.0389	.0903	374.5500
136	534.5	6.796	.756	9.408E-04	.0327	1.129E-03	.0392	.0960	374.5500
137	534.1	6.292	.823	1.024E-03	.0356	1.228E-03	.0427	.0872	370.5500
138	535.4	7.250	.836	1.041E-03	.0362	1.249E-03	.0434	.0928	370.5500
139	535.7	6.485	.829	1.033E-03	.0359	1.240E-03	.0430	.0816	366.0500
140	537.2	7.321	.933	1.165E-03	.0405	1.399E-03	.0486	.0934	362.4000
141	536.6	6.916	.915	1.142E-03	.0396	1.370E-03	.0476	.0973	362.4000
142	538.5	5.277	.576	7.207E-04	.0250	8.655E-04	.0301	.0833	355.2000
143	538.4	8.356	.842	1.052E-03	.0365	1.263E-03	.0439	.0919	355.2000
144	540.4	9.305	1.230	1.541E-03	.0535	1.852E-03	.0643	.0949	349.0000

DATE 5/12/75

AEDC(ARO,INC.) ARNOLD AFS, TENNESSEE
VON KARMAN GAS DYNAMICS FACILITY
50 INCH HYPERSONIC TUNNEL B
V41B-B7A

GROUP	TEST CONDITION	MODEL	MACH NO	PO,PSIA	TO,DEG R	ALPHA-MODEL	ALPHA-SECTOR	ALPHA-PREBEND	ROLL MODEL	YAW
97	34	140 B	7.99	674.1	1338	40.08	-10.29	30.00	168.50	2.0

T-INF (DEG R)	P-INF (PSIA)	Q-INF (PSIA)	V-INF (FT/SEC)	RHO-INF (SLUGS/FT3)	MU-INF (LB-SEC/FT2)	RE/FT (FT-1)	HREF-FR (R= .0400FT)	STFR (R= .0400FT)	SWITCH POSITION
97.2	.070	3.111	3860	6.008E-05	7.826E-08	2.963E 06	2.879E-02	1.560E-02	2

IC	NC	TW	DTWDT	QDOT	H(TO)	H(TO)/HREF	H(.9TO)	H(.9TO)/HREF	UPPER RCS NOZZLES X/L	Z/B
161		532.5	2.064	.244	3.029E-04	.0105	3.632E-04	.0126	.0619	-.0160
162		532.6	2.251	.213	2.643E-04	.0092	3.170E-04	.0110	.0709	-.0160
163		531.3	2.214	.272	3.365E-04	.0117	4.034E-04	.0140	.0807	-.0160
164		530.9	2.746	.358	4.428E-04	.0154	5.308E-04	.0184	.0943	-.0160
165		531.3	2.731	.343	4.255E-04	.0148	5.101E-04	.0177	.0978	-.0160
166		531.5	2.592	.332	4.113E-04	.0143	4.930E-04	.0171	.1013	-.0160
167		531.4	-.609	-.082	-1.020E-04	-.0035	-1.223E-04	-.0042	.0619	-.0320
168		530.4	1.099	.115	1.426E-04	.0050	1.710E-04	.0059	.0709	-.0320
169		529.7	-.608	-.074	-9.117E-05	-.0032	-1.093E-04	-.0038	.0807	-.0320
170		528.9	1.273	.159	1.961E-04	.0068	2.349E-04	.0082	.0943	-.0320
171		528.8	1.309	.157	1.944E-04	.0068	2.329E-04	.0081	.0978	-.0320
172		528.5	-.607	-.079	-9.753E-05	-.0034	-1.168E-04	-.0041	.1013	-.0320
173		528.2	-.607	-.081	-9.975E-05	-.0035	-1.195E-04	-.0041	.0807	-.0480
174		527.1	-.606	-.069	-8.480E-05	-.0029	-1.016E-04	-.0035	.0943	-.0480
175		527.1	-.606	-.087	-1.068E-04	-.0037	-1.279E-04	-.0044	.0978	-.0480
176		527.2	-.606	-.082	-1.015E-04	-.0035	-1.215E-04	-.0042	.1013	-.0480
									CANOPY	
177		537.4	11.401	1.571	1.962E-03	.0682	2.356E-03	.0818		
178		533.9	4.218	.829	1.030E-03	.0358	1.236E-03	.0429		
179		532.6	2.845	.596	7.391E-04	.0257	8.864E-04	.0308		
180		538.0	9.972	1.303	1.628E-03	.0565	1.955E-03	.0679		
181		533.9	5.122	.695	8.644E-04	.0300	1.037E-03	.0360		
182		531.4	3.181	.453	5.609E-04	.0195	6.724E-04	.0234		
183		529.4	-.607	-.076	-9.303E-05	-.0033	-1.124E-04	-.0039		
184		529.5	-.607	-.083	-1.022E-04	-.0035	-1.224E-04	-.0043		
185		534.5	8.659	1.041	1.295E-03	.0450	1.553E-03	.0539		
186		534.3	7.062	.886	1.102E-03	.0383	1.322E-03	.0459		
187		532.1	3.819	.518	6.298E-04	.0219	7.551E-04	.0262		
188		530.7	2.818	.655	8.105E-04	.0281	9.715E-04	.0337		
189		531.2	4.599	.654	8.105E-04	.0281	9.716E-04	.0337		
190		531.2	5.307	.762	9.441E-04	.0328	1.132E-03	.0393		
191		529.7	3.759	.573	7.084E-04	.0246	8.489E-04	.0295		

DATE 5/12/75

AEDC(ARO,INC.) ARNOLD AFS, TENNESSEE
VON KARMAN GAS DYNAMICS FACILITY
50 INCH HYPERSONIC TUNNEL B
V41H-B7A

GROUP	TEST CONDITION	MODEL	MACH NO	PO,PSIA	TO,DEG R	ALPHA-MODEL	ALPHA-SECTOR	ALPHA-PREBEND	ROLL MODEL	YAW
57	34	140 B	7.99	674.1	1338	40.08	-10.29	30.00	168.50	2.0

T-INF (DEG R)	P-INF (PSIA)	Q-INF (PSIA)	V-INF (FT/SEC)	RHO-INF (SLUGS/FT3)	MU-INF (LB-SEC/FT2)	RE/FT (FT-1)	HREF-FR (R= .0400FT)	STFR (R= .0400FT)	SWITCH POSITION
97.2	.679	3.111	3860	6.008E-05	7.826E-08	2.963E 06	2.879E-02	1.560E-02	2

CANOPY

TC NO	TW	DTWDT	QUCT	H(TO)	H(TO)/HREF	H(.9TO)	H(.9TO)/HREF
192	526.1	-.606	-.045	-1.048E-04	-.0036	-1.255E-04	-.0044
193	529.8	2.822	.542	6.702E-04	.0233	8.032E-04	.0279
194	527.6	1.762	.227	2.746E-04	.0097	3.349E-04	.0116
195	528.1	2.458	.312	3.728E-04	.0129	4.466E-04	.0155
196	527.5	2.187	.286	3.533E-04	.0123	4.231E-04	.0147
197	525.9	-.605	-.050	-7.358E-05	-.0026	-8.810E-05	-.0031
198	526.2	-.604	-.070	-8.625E-05	-.0030	-1.033E-04	-.0036
199	525.2	1.257	.158	2.069E-04	.0072	2.476E-04	.0086
200	528.7	3.515	.499	6.168E-04	.0214	7.389E-04	.0257
201	530.3	4.743	.668	8.267E-04	.0287	9.908E-04	.0344
202	530.0	4.199	.530	6.551E-04	.0229	7.851E-04	.0273
203	526.1	1.010	.125	1.537E-04	.0053	1.840E-04	.0064
204	526.6	1.588	.246	3.028E-04	.0105	3.626E-04	.0126
205	528.5	3.540	.556	6.870E-04	.0239	8.230E-04	.0286
206	525.0	1.310	.173	2.130E-04	.0074	2.550E-04	.0089
207	529.4	3.724	.498	6.154E-04	.0214	7.373E-04	.0256
208	525.5	-.605	-.081	-9.964E-05	-.0035	-1.193E-04	-.0041
209	525.9	1.387	.190	2.338E-04	.0081	2.799E-04	.0097
210	526.2	1.692	.225	2.770E-04	.0096	3.317E-04	.0115
211	526.0	1.217	.147	1.813E-04	.0063	2.171E-04	.0075
212	526.1	1.137	.153	1.880E-04	.0065	2.251E-04	.0078
213	525.6	-.606	-.080	-9.839E-05	-.0034	-1.178E-04	-.0041
214	526.5	1.631	.228	2.807E-04	.0097	3.361E-04	.0117
215	526.8	2.519	.356	4.392E-04	.0153	5.259E-04	.0183
216	527.4	2.468	.349	4.308E-04	.0150	5.160E-04	.0179
217	528.7	3.737	.531	6.557E-04	.0228	7.855E-04	.0273
218	525.1	-.605	-.083	-1.022E-04	-.0035	-1.223E-04	-.0042
219	525.6	1.565	.219	2.697E-04	.0094	3.229E-04	.0112
220	526.0	2.128	.292	3.588E-04	.0125	4.296E-04	.0149

GROUP 97 CENTERLINE TIME 3.10

CH	TC	FIT LENGTH	DTD#T	UNCERTAINTY	CH	TC	FIT LENGTH	DTD#T	UNCERTAINTY
1	107	.60	4.565	.0119	50	173	2.00	-.607	-.0013
2	108	.60	7.716	.0080	51	174	2.00	-.606	-.0014
3	109	.60	6.474	.0064	52	175	2.00	-.606	-.0015
4	110	.60	6.283	.0050	53	176	2.00	-.606	-.0015
5	111	.60	6.374	.0135	54	177	.40	11.401	.0058
6	112	.60	6.477	.0088	55	178	.60	4.218	.0131
7	113	.60	7.131	.0487	56	179	.80	2.845	.0319
8	114	.60	6.480	.0086	57	180	.40	9.972	.0121
9	115	.60	5.958	.0173	58	181	.60	5.122	.0124
10	116	.60	5.956	.0051	59	182	.80	3.181	.0171
11	117	.60	6.347	.0093	60	183	2.00	-.607	-.0018
12	118	.60	4.940	.0141	61	184	2.00	-.607	-.0019
13	119	.60	5.760	.0104	62	185	.40	8.659	.0101
14	120	.60	6.078	.0087	63	186	.60	7.062	.0088
15	121	.60	5.270	.0134	64	187	.80	3.819	.0172
16	122	.60	5.205	.0124	65	188	.80	2.818	.0099
17	124	1.20	1.811	.0230	66	189	.60	4.599	.0182
18	125	.80	2.441	.0153	67	190	.60	5.307	.0104
19	126	.80	2.103	.0200	68	191	.60	3.759	.1240
20	127	1.20	1.930	.0123	69	192	2.00	-.606	-.0018
21	128	.80	2.782	.0096	70	193	.80	2.822	.0157
22	129	.80	3.170	.0129	71	194	1.20	1.762	.0243
23	130	.80	2.344	.0328	72	195	.80	2.458	.0162
24	131	.80	2.447	.0234	73	196	.80	2.187	.0167
25	132	.60	4.510	.0126	74	197	2.00	-.605	-.0019
26	133	.80	2.976	.0150	75	198	2.00	-.606	-.0020
27	134	.60	4.393	.0096	76	199	1.20	1.257	.0257
28	135	.60	6.251	.0079	77	200	.80	3.515	.0086
29	136	.60	6.796	.0066	78	201	.60	4.743	.0085
30	137	.60	6.292	.0068	79	202	.60	4.199	.0733
31	138	.60	7.250	.0050	80	203	1.20	1.010	.0168
32	139	.60	6.485	.0064	81	204	1.20	1.588	.0126
33	140	.60	7.321	.0063	82	205	.80	3.580	.0071
34	141	.60	6.916	.0052	83	206	1.20	1.310	.0278
35	142	.60	5.277	.0116	84	207	.80	3.724	.0088
36	143	.40	8.356	.0103	85	208	2.00	-.605	-.0017
37	144	.40	9.305	.0056	86	209	1.20	1.387	.0133
38	161	.80	2.064	.0235	87	210	1.20	1.692	.0360
39	162	.80	2.251	.0178	88	211	1.20	1.217	.0139
40	163	.80	2.214	.0203	89	212	1.20	1.137	.0179
41	164	.80	2.746	.0100	90	213	2.00	-.606	-.0020
42	165	.80	2.731	.0113	91	214	1.20	1.631	.0191
43	166	.80	2.592	.0257	92	215	.80	2.519	.0354
44	167	2.00	-.609	-.0021	93	216	.80	2.468	.0136
45	168	1.20	1.099	.0144	94	217	.80	3.737	.0130
46	169	2.00	-.608	-.0022	95	218	2.00	-.605	-.0019
47	170	1.20	1.273	.0362	96	219	1.20	1.565	.0130
48	171	1.20	1.309	.0171	97	220	.80	2.128	.0132
49	172	2.00	-.607	-.0024	98	0	-0	0	0
98		.050							

BIT ON LOOP 62

DATE 5/12/75

AEDC(ARO,INC.) ARNOLD AFS, TENNESSEE
VON KARMAN GAS DYNAMICS FACILITY
50 INCH HYPERSONIC TUNNEL B
V41B-B7A

GROUP	TEST CONDITION	MODEL	MACH NO	PO,PSIA	TO,DEG R	ALPHA-MODEL	ALPHA-SECTOR	ALPHA-PREBEND	ROLL MODEL	YAW
98	34	140 B	7.99	676.0	1338	40.14	-10.34	30.00	168.48	2.1

T-INF (DEG R)	P-INF (PSIA)	Q-INF (PSIA)	V-INF (FT/SEC)	RHO-INF (SLUGS/FT3)	MU-INF (LB-SEC/FT2)	RE/FT (FT-1)	HREF-FR (R= .0400FT)	STFR (R= .0400FT)	SWITCH POSITION
97.2	.270	3.119	3859	6.028E-05	7.822E-08	2.974E 06	2.883E-02	1.557E-02	3

IC NO	TW	DT*CT	QDOT	H(TO)	H(TO)/HREF	H(.9TO)	H(.9TO)/HREF	X/L	2Y/B
								CANOPY	
221	525.1	.576	.069	8.540E-05	.0030	1.022E-04	.0035		
222	524.3	.542	.066	8.170E-05	.0028	9.778E-05	.0034		
223	522.7	2.224	.300	3.664E-04	.0128	4.408E-04	.0153		
								ESCAPE HATCH AND WINDOW	
224	528.7	3.465	.344	4.254E-04	.0148	5.097E-04	.0177	.1933	.0162
225	527.2	2.414	.288	3.553E-04	.0123	4.256E-04	.0148	.1972	.0162
226	525.1	1.540	.196	2.040E-04	.0071	2.442E-04	.0085	.1933	.0384
227	524.5	.992	.145	1.769E-04	.0062	2.141E-04	.0074	.1972	.0384
228	523.5	2.303	.295	3.620E-04	.0126	4.331E-04	.0150	.1933	.0653
229	524.1	2.080	.266	3.271E-04	.0113	3.915E-04	.0136	.1972	.0653
232	526.2	.417	.056	6.928E-05	.0024	8.296E-05	.0029	.2567	.0235
233	526.7	.434	.066	8.199E-05	.0028	9.818E-05	.0034	.2606	.0235
236	525.7	.566	.082	1.016E-04	.0035	1.216E-04	.0042	.2567	.0491
237	526.4	.748	.105	1.291E-04	.0045	1.546E-04	.0054	.2606	.0491
								CARGO BAY HINGE NO. 1	
								X/L	Z,FULL SCALE(IN)
238	534.1	3.634	.487	6.059E-04	.0210	7.270E-04	.0252	.2879	420.0000
239	539.0	6.314	.848	1.062E-03	.0368	1.276E-03	.0442	.2917	420.0000
240	533.5	2.945	.421	5.236E-04	.0182	6.282E-04	.0218	.2840	415.0000
241	539.5	5.292	.746	9.339E-04	.0324	1.122E-03	.0389	.2879	415.0000
242	537.0	5.192	.743	9.262E-04	.0322	1.114E-03	.0386	.2917	415.0000
243	535.4	2.746	.346	4.191E-04	.0145	5.030E-04	.0174	.2801	405.0000
244	535.3	2.550	.299	3.721E-04	.0129	4.466E-04	.0155	.2840	405.0000
								CARGO BAY HINGE NO. 2	
								X/L	Z,FULL SCALE(IN)
245	538.2	6.007	.860	1.076E-03	.0373	1.293E-03	.0448	.3192	420.0000
246	541.9	9.235	1.325	1.665E-03	.0578	2.002E-03	.0694	.3439	420.0000
247	539.2	5.701	.842	1.055E-03	.0366	1.267E-03	.0440	.3362	415.0000
248	542.6	8.682	1.285	1.616E-03	.0561	1.943E-03	.0674	.3401	415.0000
249	543.2	9.098	1.347	1.696E-03	.0588	2.039E-03	.0707	.3439	415.0000
250	542.3	5.625	.709	8.913E-04	.0309	1.072E-03	.0372	.3323	405.0000
251	541.7	5.925	.731	9.179E-04	.0318	1.103E-03	.0383	.3362	405.0000
								CARGO BAY HINGE NO. 3	
								X/L	Z,FULL SCALE(IN)
252	541.3	8.760	1.276	1.602E-03	.0556	1.926E-03	.0668	.3923	420.0000
253	544.4	11.320	1.652	2.082E-03	.0722	2.505E-03	.0869	.3961	420.0000
254	542.9	9.463	1.443	1.815E-03	.0630	2.184E-03	.0757	.3884	415.0000
257	546.2	9.800	1.330	1.660E-03	.0583	2.022E-03	.0701	.3845	405.0000
258	545.7	8.689	1.191	1.503E-03	.0521	1.809E-03	.0627	.3884	405.0000

DATE 5/12/75

AEDC(ARO,INC.) ARNOLD AFS, TENNESSEE
VON KARMAN GAS DYNAMICS FACILITY
50 INCH HYPERSONIC TUNNEL B
V41B-87A

GROUP	TEST CONDITION	MODEL	MACH NO	PO,PSIA	TO,DEG R	ALPHA-MODEL	ALPHA-SECTOR	ALPHA-PREBEND	ROLL MODEL	YAW
98	34	140 B	7.99	676.0	1338	40.14	-10.34	30.00	168.48	2.1

T-INF (DEG R)	P-INF (PSIA)	Q-INF (PSIA)	V-INF (FT/SEC)	RHO-INF (SLUGS/FT3)	MU-INF (LB-SEC/FT2)	RE/FT (FT-1)	HREF-FR (R= .0400FT)	STFR (R= .0400FT)	SWITCH POSITION
97.2	.070	3.119	3859	6.028E-05	7.822E-08	2.974E 06	2.683E-02	1.557E-02	3

TC NO	TW	DTWDT	QDOT	H(TO)	H(TO)/HREF	H(.9TO)	H(.9TO)/HREF	TOP CENTERLINE X/L
367	591.2	80.734	9.758	1.307E-02	.4535	1.593E-02	.5525	0
368	562.7	55.643	7.160	9.240E-03	.3205	1.117E-02	.3973	.0008
369	550.5	36.741	4.335	5.508E-03	.1910	6.636E-03	.2301	.0019
370	544.1	23.751	2.910	3.668E-03	.1272	4.411E-03	.1530	.0037
371	540.0	17.159	1.683	2.110E-03	.0732	2.536E-03	.0879	.0058
372	536.2	11.771	1.516	1.891E-03	.0656	2.270E-03	.0787	.0087
373	534.2	7.475	.978	1.218E-03	.0422	1.461E-03	.0507	.0118
374	534.1	6.304	.825	1.027E-03	.0356	1.232E-03	.0427	.0151
375	533.0	4.861	.664	8.252E-04	.0286	9.897E-04	.0343	.0182
376	533.7	3.917	.516	6.417E-04	.0223	7.698E-04	.0267	.0215
377	534.1	3.640	.468	5.826E-04	.0202	6.989E-04	.0242	.0246
378	533.8	3.201	.373	4.641E-04	.0161	5.567E-04	.0193	.0278
379	532.5	2.500	.307	3.810E-04	.0132	4.569E-04	.0158	.0609
380	531.3	2.450	.291	3.116E-04	.0108	3.736E-04	.0130	.0646
381	530.8	2.298	.297	3.682E-04	.0128	4.414E-04	.0153	.0684
382	529.9	2.086	.272	3.372E-04	.0117	4.041E-04	.0140	.0721
383	529.6	2.271	.304	3.757E-04	.0130	4.503E-04	.0156	.0760
384	529.4	2.223	.309	3.824E-04	.0133	4.583E-04	.0159	.0796
385	530.6	3.577	.459	5.692E-04	.0197	6.822E-04	.0237	.0789
386	530.5	3.576	.422	5.235E-04	.0182	6.275E-04	.0218	.0982
387	531.2	3.915	.480	5.953E-04	.0206	7.137E-04	.0248	.1019
388	532.8	5.839	.555	6.897E-04	.0239	8.271E-04	.0287	.1160
389	531.4	4.818	.698	8.664E-04	.0300	1.039E-03	.0360	.1195
390	531.2	4.298	.677	8.389E-04	.0291	1.006E-03	.0349	.1231
391	530.6	3.863	.615	7.618E-04	.0264	9.132E-04	.0317	.1268
392	530.8	3.817	.653	8.100E-04	.0281	9.709E-04	.0337	.1305
393	530.5	3.792	.641	7.937E-04	.0275	9.513E-04	.0330	.1338
394	530.2	3.768	.631	7.821E-04	.0271	9.375E-04	.0325	.1376
395	530.0	3.550	.530	6.563E-04	.0228	7.866E-04	.0273	.1411
396	530.2	3.510	.519	6.434E-04	.0223	7.711E-04	.0267	.1448
397	530.0	3.102	.459	5.683E-04	.0197	6.811E-04	.0236	.1483
398	530.5	3.172	.445	5.518E-04	.0191	6.615E-04	.0229	.1519
399	535.9	9.124	1.219	1.521E-03	.0528	1.826E-03	.0633	.1556

DATE 5/12/75

AEDC(ARO,INC.) ARNOLD AFS, TENNESSEE
VON KARMAN GAS DYNAMICS FACILITY
50 INCH HYPERSONIC TUNNEL B
V41H-B7A

GROUP	TEST CONDITION	MODEL	MACH NO	PO,PSIA	TO,DEG R	ALPHA-MODEL	ALPHA-SECTOR	ALPHA-PREBEND	ROLL MODEL	YAW
58	34	140 B	7.99	676.0	1338	40.14	-10.34	30.00	168.48	2.1

T-INF (DEG R)	P-INF (PSIA)	Q-INF (PSIA)	V-INF (FT/SEC)	RHO-INF (SLUGS/FT3)	MU-INF (LB-SEC/FT2)	RE/FT (FT-1)	HREF-FR (R= .0400FT)	STFR (R= .0400FT)	SWITCH POSITION
97.2	.070	3.119	3859	6.028E-05	7.822E-08	2.974E 06	2.883E-02	1.557E-02	3

TC NO	TW	DTWDT	QDOT	H(TO)	H(TO)/HREF	H(.9TO)	H(.9TO)/HREF	X/L
								TOP CENTERLINE
400	538.4	12.979	1.754	2.195E-03	.0761	2.636E-03	.0914	.1582
401	539.8	14.488	1.841	2.355E-03	.0817	2.828E-03	.0981	.1608
402	541.5	20.905	2.615	3.264E-03	.1139	3.948E-03	.1369	.1635
403	545.3	23.100	2.824	3.568E-03	.1237	4.294E-03	.1489	.1664
404	544.2	21.094	2.582	3.230E-03	.1120	3.884E-03	.1347	.1691
405	542.9	19.259	2.341	2.946E-03	.1022	3.542E-03	.1229	.1720
406	539.4	15.119	1.835	2.299E-03	.0797	2.761E-03	.0958	.1748
407	537.6	12.367	1.599	1.999E-03	.0693	2.400E-03	.0832	.1769
408	536.6	11.708	1.717	2.144E-03	.0744	2.574E-03	.0893	.1800
409	533.7	9.447	1.358	1.689E-03	.0586	2.027E-03	.0703	.1831
410	534.9	7.055	1.101	1.372E-03	.0476	1.646E-03	.0571	.1863
411	532.0	5.957	.893	1.108E-03	.0384	1.329E-03	.0461	.1894
412	531.9	4.322	.586	7.261E-04	.0252	8.704E-04	.0302	.1931
413	529.6	2.798	.374	4.630E-04	.0161	5.548E-04	.0192	.1972
414	528.5	1.311	.175	2.165E-04	.0075	2.594E-04	.0090	.2049
415	527.5	.466	.046	5.660E-05	.0020	6.779E-05	.0024	.2250
416	527.2	.329	.038	4.728E-05	.0016	5.663E-05	.0020	.2500
								NOSE TC (Z = 338) X/L 2Y/B
145	574.6	57.063	7.803	1.023E-02	.3547	1.240E-02	.4301	.0008 .5039
146	583.0	64.081	8.749	1.166E-02	.4044	1.417E-02	.4915	.0023 .5082
147	574.8	52.872	7.230	9.478E-03	.3287	1.149E-02	.3986	.0043 .5135
148	568.1	45.666	6.432	8.358E-03	.2899	1.012E-02	.3509	.0068 .5205
149	558.4	31.747	4.622	5.931E-03	.2057	7.160E-03	.2483	.0095 .5279
150	556.1	26.882	3.873	4.955E-03	.1719	5.979E-03	.2074	.0122 .5354
151	554.7	18.307	2.586	3.303E-03	.1146	3.984E-03	.1382	.0218 .5621
152	555.9	21.138	2.853	3.687E-03	.1279	4.449E-03	.1543	.0251 .5712
153	558.2	21.965	2.761	3.466E-03	.1202	4.184E-03	.1451	.0286 .5808
154	556.8	19.995	2.502	3.205E-03	.1112	3.867E-03	.1341	.0319 .5898
155	555.5	18.377	2.323	2.970E-03	.1030	3.583E-03	.1243	.0354 .5995
156	554.1	17.275	2.159	2.755E-03	.0956	3.323E-03	.1152	.0387 .6085
157	554.0	16.715	2.066	2.637E-03	.0914	3.179E-03	.1103	.0420 .6176
158	554.6	16.665	2.061	2.632E-03	.0913	3.174E-03	.1101	.0462 .6294
159	553.6	16.991	1.916	2.444E-03	.0848	2.946E-03	.1022	.0503 .6406

GROUP 98 CENTERLINE TIME 3.05

CH	TC	FIT LENGTH	DTDWT	UNCERTAINTY	CH	TC	FIT LENGTH	DTDWT	UNCERTAINTY
1	221	2.00	.576	.0150	50	384	.80	2.223	.0304
2	222	2.00	.542	.0203	51	385	.80	3.577	.0173
3	223	.80	2.224	.0166	52	386	.80	3.576	.0115
4	224	.80	3.465	.0088	53	387	.80	3.915	.0094
5	225	.80	2.414	.0341	54	388	.60	5.839	.0171
6	226	1.20	1.580	.0191	55	389	.60	4.818	.0153
7	227	2.00	.998	.0545	56	390	.60	4.298	.0463
8	228	.80	2.363	.0232	57	391	.60	3.863	.0226
9	229	.80	2.030	.0235	58	392	.80	3.817	.0065
10	232	2.00	.417	.0278	59	393	.80	3.792	.0116
11	233	2.00	.435	.0371	60	394	.80	3.768	.0093
12	236	2.00	.566	.0259	61	395	.80	3.550	.0158
13	237	2.00	.748	.0121	62	396	.80	3.510	.0074
14	238	.80	3.634	.0135	63	397	.80	3.102	.0139
15	239	.60	6.314	.0180	64	398	.80	3.172	.0136
16	240	.80	2.945	.0133	65	399	.40	9.124	.0136
17	241	.60	5.242	.0229	66	400	.40	12.979	.0101
18	242	.60	5.192	.0083	67	401	.40	14.488	.0071
19	243	.80	2.746	.0145	68	402	.30	20.905	.0535
20	244	.80	2.550	.0173	69	403	.30	23.100	.0159
21	245	.60	6.007	.0032	70	404	.30	21.064	.0071
22	246	.40	9.235	.0066	71	405	.30	19.259	.0113
23	247	.60	5.791	.0161	72	406	.40	15.119	.0041
24	248	.40	8.682	.0136	73	407	.40	12.367	.0067
25	249	.40	9.098	.0116	74	408	.40	11.708	.0075
26	250	.60	5.625	.0091	75	409	.40	9.447	.0142
27	251	.60	5.925	.0077	76	410	.60	7.656	.0089
28	252	.40	8.760	.0098	77	411	.60	5.957	.0077
29	253	.40	11.320	.0041	78	412	.60	4.322	.0101
30	254	.40	9.463	.0093	79	413	.80	2.798	.0622
31	257	.40	9.800	.0078	80	414	1.20	1.311	.0138
32	258	.40	8.689	.0117	81	415	2.00	.466	.0171
33	367	.20	80.734	.0016	82	416	2.00	.329	.0192
34	368	.20	55.643	.0010	83	145	.20	57.063	.0040
35	369	.20	36.741	.0064	84	146	.20	64.081	.0019
36	370	.30	23.751	.0085	85	147	.20	52.872	.0052
37	371	.30	17.159	.0059	86	148	.20	45.666	.0128
38	372	.40	11.771	.0049	87	149	.30	31.747	.0110
39	373	.60	7.475	.0086	88	150	.30	26.882	.0062
40	374	.60	6.364	.0130	89	151	.30	18.307	.0145
41	375	.60	4.861	.0107	90	152	.30	21.138	.0472
42	376	.80	3.917	.0072	91	153	.30	21.965	.0092
43	377	.80	3.640	.0122	92	154	.30	19.998	.0199
44	378	.80	3.201	.0095	93	155	.30	18.377	.0058
45	379	.80	2.500	.0154	94	156	.30	17.275	.0045
46	380	.80	2.450	.0381	95	157	.30	16.715	.0073
47	381	.80	2.298	.0242	96	158	.30	16.665	.0089
48	382	.80	2.048	.0187	97	159	.30	16.991	.0070
49	383	.80	2.271	.0207	98	0	-0	0	0
98		.050							

BIT ON LOOP 59

DATE 5/12/75

AEDC(ARO,INC.) ARNOLD AFS, TENNESSEE
VON KARMAN GAS DYNAMICS FACILITY
50 INCH HYPERSONIC TUNNEL B
V418-B/A

GROUP	TEST CONDITION	MODEL	MACH NO	PO,PSIA	TO,DEG R	ALPHA-MODEL	ALPHA-SECTOR	ALPHA-PREBEND	ROLL MODEL	YAW
69	35	140 B	7.99	673.0	1337	45.17	-15.17	30.00	179.86	.0

T-INF (DEG R)	P-INF (PSIA)	Q-INF (PSIA)	V-INF (FT/SEC)	RHO-INF (SLUGS/FT3)	MU-INF (LB-SEC/FT2)	RE/FT (FT-1)	HREF-FR (R= .0400FT)	STFR (R= .0400FT)	SWITCH POSITION
97.1	.070	3.106	3857	6.007E-05	7.815E-08	2.965E 06	2.877E-02	1.560E-02	1

IC	NC	TW	DTWDT	QDOT	H(TO)	H(TO)/HREF	H(.9TO)	H(.9TO)/HREF	X/L	Z,FULL SCALE(IN)
									FUSELAGE VENT NO. 1	
1	540.5	1.204	.159	2.000E-04	.0070	2.404E-04	.0084		.4434	376.6300
2	539.5	1.043	.141	1.764E-04	.0061	2.120E-04	.0074		.4264	371.6300
3	539.4	1.017	.140	1.754E-04	.0061	2.107E-04	.0073		.4303	371.6300
4	539.7	1.013	.138	1.726E-04	.0060	2.074E-04	.0072		.4342	371.6300
5	541.1	1.029	.137	1.727E-04	.0060	2.076E-04	.0072		.4380	371.6300
6	542.7	.924	.123	1.546E-04	.0054	1.859E-04	.0065		.4434	369.1300
7	541.6	.796	.115	1.464E-04	.0051	1.759E-04	.0061		.4226	366.6300
8	540.3	.951	.144	1.803E-04	.0063	2.167E-04	.0075		.4264	366.6300
9	542.0	.775	.113	1.421E-04	.0049	1.708E-04	.0059		.4303	366.6300
10	541.5	.693	.099	1.248E-04	.0043	1.500E-04	.0052		.4342	366.6300
11	542.4	.745	.101	1.275E-04	.0044	1.533E-04	.0053		.4380	366.6300
12	546.1	.645	.089	1.129E-04	.0039	1.359E-04	.0047		.4496	366.6300
13	549.0	.416	.061	7.791E-05	.0027	9.383E-05	.0033		.4187	357.1300
14	545.3	.762	.134	1.319E-04	.0046	1.587E-04	.0055		.4396	361.6300
15	548.2	.571	.077	9.708E-05	.0034	1.169E-04	.0041		.4434	361.6300
16	549.7	.437	.059	7.555E-05	.0026	9.101E-05	.0032		.4396	355.6300
17	552.6	.468	.064	8.130E-05	.0028	9.801E-05	.0034		.4434	355.6300
18	555.3	.261	.037	4.699E-05	.0016	5.669E-05	.0020		.4396	351.6300
19	558.5	.066	.009	1.198E-05	.0004	1.447E-05	.0005		.4291	332.6300
									CARGO BAY VENT NO. 1	
22	542.7	7.670	1.066	1.343E-03	.0467	1.615E-03	.0562		.3974	397.6300
23	540.5	8.061	1.127	1.416E-03	.0492	1.702E-03	.0592		.4013	397.6300
24	541.2	9.214	1.247	1.568E-03	.0545	1.885E-03	.0655		.4052	397.6300
25	541.7	10.437	1.376	1.731E-03	.0602	2.081E-03	.0723		.4090	397.6300
26	544.2	11.225	1.477	1.864E-03	.0648	2.242E-03	.0779		.4129	397.6300
27	543.2	7.841	1.094	1.379E-03	.0479	1.658E-03	.0577		.3936	392.6300
28	542.0	7.525	1.083	1.363E-03	.0474	1.639E-03	.0570		.3974	392.6300
29	540.9	8.344	1.204	1.513E-03	.0526	1.819E-03	.0632		.4013	392.6300
30	540.5	9.749	1.402	1.762E-03	.0612	2.117E-03	.0736		.4052	392.6300
31	541.8	10.857	1.519	1.911E-03	.0664	2.298E-03	.0799		.4090	392.6300
32	542.5	11.546	1.533	1.931E-03	.0671	2.322E-03	.0807		.4129	392.6300
33	541.2	7.274	1.040	1.308E-03	.0455	1.572E-03	.0546		.4090	386.1300
34	543.1	9.151	1.240	1.563E-03	.0543	1.879E-03	.0653		.4129	387.6300
35	545.0	6.520	.925	1.169E-03	.0406	1.406E-03	.0489		.3897	383.1300
36	540.3	3.393	.493	6.186E-04	.0215	7.433E-04	.0258		.4090	378.6300
37	541.0	5.407	.761	9.564E-04	.0332	1.150E-03	.0400		.4129	382.1300
38	540.5	3.043	.424	5.327E-04	.0185	6.402E-04	.0223		.4129	377.1300
39	542.3	2.804	.410	5.161E-04	.0179	6.205E-04	.0216		.4001	373.6300
									PROTUBERANCES	
41	544.8	6.924	.930	1.174E-03	.0408	1.413E-03	.0491		.3546	379.0500
42	547.4	8.621	1.182	1.498E-03	.0521	1.804E-03	.0627		.3604	379.0500
43	544.2	4.389	.571	7.211E-04	.0251	8.675E-04	.0302		.3450	374.0500

DATE 5/12/75

AEDC(ARO,INC.) ARNOLD AFS, TENNESSEE
VON KARMAN GAS DYNAMICS FACILITY
50 INCH HYPERSONIC TUNNEL B
V41B-87A

GROUP	TEST CONDITION	MODEL	MACH NO	PO,PSIA	TO,DEG R	ALPHA-MODEL	ALPHA-SECTOR	ALPHA-PREBEND	ROLL MODEL	YAW
59	35	140 B	7.99	673.0	1337	45.17	-15.17	30.00	179.86	.0

T-INF (DEG R)	P-INF (PSIA)	Q-INF (PSIA)	V-INF (FT/SEC)	RHO-INF (SLUGS/FT3)	MU-INF (LB-SEC/FT2)	RE/FT (FT-1)	AREF-FR (R= .0400FT)	STFR (R= .0400FT)	SWITCH POSITION
97.1	.070	5.106	3857	6.007E-05	7.815E-08	2.965E 06	2.877E-02	1.560E-02	1

TC NO	TW	DTWDT	QDOT	H(TO)	H(TO)/HREF	H(.9TO)	H(.9TO)/HREF
44	545.6	6.005	.820	1.037E-03	.0360	1.248E-03	.0434
45	548.8	9.626	1.338	1.699E-03	.0591	2.046E-03	.0711
46	548.6	9.091	1.276	1.620E-03	.0563	1.951E-03	.0678
47	546.3	4.462	.595	7.537E-04	.0262	9.071E-04	.0315
48	551.4	9.051	1.248	1.589E-03	.0552	1.915E-03	.0666
49	548.5	5.017	.693	8.792E-04	.0306	1.059E-03	.0368
50	550.6	4.879	.681	8.668E-04	.0301	1.044E-03	.0363
51	550.4	3.863	.527	6.705E-04	.0233	8.078E-04	.0281
52	550.6	3.095	.428	5.446E-04	.0189	6.562E-04	.0228
53	551.2	3.488	.512	6.522E-04	.0227	7.860E-04	.0273
54	541.0	5.591	.799	1.005E-03	.0349	1.208E-03	.0420
55	552.3	1.914	.275	3.507E-04	.0122	4.227E-04	.0147
56	541.7	5.243	.677	8.515E-04	.0296	1.024E-03	.0356
57	544.1	5.370	.658	8.365E-04	.0289	9.990E-04	.0347
58	545.9	4.737	.628	7.942E-04	.0276	9.558E-04	.0332
59	5.8.8	4.260	.564	7.154E-04	.0249	8.616E-04	.0300
60	548.2	4.143	.580	7.352E-04	.0256	8.853E-04	.0308
61	547.1	4.736	.623	7.633E-04	.0265	9.189E-04	.0319
62	544.2	4.941	.608	7.670E-04	.0267	9.226E-04	.0321
63	542.4	5.335	.699	8.799E-04	.0306	1.058E-03	.0368
64	[illegible]	[illegible]	[illegible]	[illegible]	[illegible]	[illegible]	[illegible]
65	541.3	5.406	.737	9.259E-04	.0322	1.113E-03	.0387
66	543.9	5.881	.744	9.391E-04	.0326	1.130E-03	.0393
67	545.9	4.773	.673	8.517E-04	.0296	1.025E-03	.0356
68	548.0	4.839	.616	7.810E-04	.0272	9.405E-04	.0327

PROTUBERANCES

X/L	Z,FULL SCALE(IN)
.3508	374.0500
.3566	374.0500
.3604	374.0500
.3392	366.5500
.3566	366.5500
.3392	360.7000
.3566	360.7000
.3604	360.7000
.3392	353.2000
.3450	353.2000
.3508	353.2000
.3566	353.2000

SUBLIMATOR VENT NO. 1

X/L	Z,FULL SCALE(IN)
.3031	371.1300
.3074	369.1300
.3089	363.6300
.3074	358.1300
.3031	356.1300
.2988	358.1300
.2973	363.6300
.2988	369.1300
.3031	376.1300
.3089	378.6300
.3101	372.6300
.3157	370.3800
.3128	363.6300

DATE 5/12/75

AEDC(ARO,INC.) ARNOLD AFS, TENNESSEE
VON KARMAN GAS DYNAMICS FACILITY
50 INCH HYPERSONIC TUNNEL B
V41B-B7A

GROUP	TEST CONDITION	MODEL	MACH NO	PO,PSIA	TO,DEG R	ALPHA-MODEL	ALPHA-SECTOR	ALPHA-PREBEND	ROLL MODEL	YAW
99	35	140 B	7.99	673.0	1337	45.17	-15.17	30.00	179.86	.0

T-INF (DEG R)	P-INF (PSIA)	Q-INF (PSIA)	V-INF (FT/SEC)	RHO-INF (SLUGS/FT3)	MU-INF (LB-SEC/FT2)	RE/FT (FT-1)	HREF-FR (R= .0400FT)	STFR (R= .0400FT)	SWITCH POSITION
97.1	.672	3.106	3857	6.007E-05	7.815E-08	2.965E 06	2.877E-02	1.560E-02	1

IC NO	TW	DIWDT	RDOT	H(TO)	H(TO)/HREF	H(.9TO)	H(.9TO)/HREF
69	535.8	3.078	.429	5.301E-04	.0186	6.435E-04	.0224
70	537.7	3.946	.483	6.046E-04	.0210	7.291E-04	.0252
71	538.1	3.743	.519	6.372E-04	.0222	7.653E-04	.0266
72	538.5	2.921	.414	5.177E-04	.0180	6.215E-04	.0216
73	538.4	4.123	.535	6.711E-04	.0233	8.062E-04	.0280
74	540.5	4.501	.568	7.140E-04	.0248	8.580E-04	.0298
75	540.5	3.522	.481	6.027E-04	.0210	7.243E-04	.0252
77	542.3	4.215	.549	7.544E-04	.0262	9.071E-04	.0315
78	543.5	4.885	.673	8.488E-04	.0295	1.021E-03	.0355
79	545.2	4.530	.582	7.354E-04	.0256	8.849E-04	.0308
80	544.5	3.348	.458	5.749E-04	.0201	6.964E-04	.0242
81	545.4	4.282	.600	7.565E-04	.0264	9.126E-04	.0317
83	531.3	4.022	.536	6.669E-04	.0232	7.985E-04	.0278
84	532.2	4.097	.549	6.705E-04	.0233	8.041E-04	.0280
85	533.3	4.627	.630	7.844E-04	.0273	9.409E-04	.0327
87	529.4	3.285	.459	5.805E-04	.0202	6.961E-04	.0242
88	532.4	4.275	.547	7.426E-04	.0258	8.907E-04	.0310
89	533.2	4.566	.671	8.347E-04	.0290	1.001E-03	.0348
90	532.3	4.325	.544	7.318E-04	.0254	8.777E-04	.0305
91	533.2	4.507	.618	7.669E-04	.0267	9.223E-04	.0321
92	535.0	4.854	.695	8.552E-04	.0297	1.026E-03	.0357
93	532.4	3.217	.411	5.108E-04	.0178	6.124E-04	.0213
94	533.3	3.706	.491	5.993E-04	.0208	7.190E-04	.0250
95	534.2	3.644	.517	6.450E-04	.0224	7.739E-04	.0269
96	534.5	3.339	.434	5.413E-04	.0188	6.495E-04	.0226
97	534.5	3.637	.472	5.842E-04	.0205	7.011E-04	.0246
98	534.2	3.358	.471	5.870E-04	.0204	7.043E-04	.0245
100	536.6	3.395	.481	6.018E-04	.0209	7.226E-04	.0251
102	537.0	2.893	.409	5.113E-04	.0178	6.139E-04	.0213
103	535.4	3.345	.440	5.487E-04	.0191	6.586E-04	.0229
105	534.1	3.152	.394	4.912E-04	.0171	5.894E-04	.0205
106	532.7	4.173	.535	6.650E-04	.0231	7.977E-04	.0277

FUSELAGE VENT PANEL NO. 7

X/L	Z,FULL SCALE(IN)
.2487	356.4000
.2591	356.4000
.2419	351.4000
.2487	351.4000
.2552	351.4000
.2610	351.4000
.2419	342.8000
.2552	342.8000
.2610	342.8000
.2419	334.2000
.2487	334.2000
.2552	334.2000

ACCESS HATCH WINDOW

X/L	Z,FULL SCALE(IN)
.2131	398.0000
.2131	388.0000
.2131	383.0000
.2222	395.8000
.2193	386.5000
.2177	381.8000
.2297	389.5000
.2243	382.5000
.2214	378.7000
.2343	374.0000
.2274	375.5000
.2239	373.3000
.2363	368.0000
.2286	368.0000
.2247	368.0000
.2274	360.5000
.2081	354.3000
.2023	362.7000
.2050	378.7000
.2050	386.2000

GROUP 99 CENTERLINE TIME 2.90

CH	TC	FIT LENGTH	DTDWT	UNCERTAINTY	CH	TC	FIT LENGTH	DTDWT	UNCERTAINTY
1	1	1.20	1.284	.0166	50	53	.80	3.488	.0240
2	2	1.20	1.043	.0442	51	54	.60	5.591	.0153
3	3	1.20	1.017	.0303	52	55	1.20	1.914	.0114
4	4	1.20	1.010	.0150	53	56	.60	5.242	.0096
5	5	2.00	1.029	.0198	54	57	.60	5.370	.0109
6	6	2.00	.924	.0099	55	58	.60	4.737	.0129
7	7	2.00	.796	.0473	56	59	.60	4.260	.0239
8	8	2.00	.951	.0116	57	60	.60	4.143	.0085
9	9	2.00	.775	.0562	58	61	.60	4.736	.0100
10	10	2.00	.693	.0159	59	62	.60	4.941	.0184
11	11	2.00	.748	.0301	60	63	.60	5.335	.0103
12	12	2.00	.645	.0246	61	64	2.00	.000	1312.0448
13	13	2.00	.416	.0233	62	65	.60	5.406	.0049
14	14	1.20	.762	.2325	63	66	.60	5.881	.0098
15	15	2.00	.571	.0250	64	67	.60	4.773	.0098
16	16	2.00	.437	.0282	65	68	.60	4.839	.0164
17	17	2.00	.468	.0348	66	69	.80	3.078	.0190
18	18	2.00	.261	.0301	67	70	.80	3.940	.0067
19	19	2.00	.066	.1399	68	71	.80	3.740	.0743
20	22	.60	7.670	.0114	69	72	.80	2.921	.0225
21	23	.40	8.061	.0103	70	73	.60	4.123	.0103
22	24	.40	9.214	.0050	71	74	.60	4.681	.0197
23	25	.40	10.437	.0287	72	75	.80	3.522	.0099
24	26	.40	11.226	.0113	73	77	.60	4.215	.0081
25	27	.60	7.841	.0062	74	78	.60	4.885	.0128
26	28	.60	7.525	.0070	75	79	.60	4.530	.0121
27	29	.40	8.344	.0168	76	80	.80	3.348	.0186
28	30	.40	9.749	.0115	77	81	.60	4.282	.0143
29	31	.40	10.857	.0052	78	83	.60	4.022	.0074
30	32	.40	11.546	.0054	79	84	.60	4.097	.0737
31	33	.60	7.274	.0074	80	85	.60	4.627	.0099
32	34	.40	9.151	.0101	81	87	.80	3.285	.0145
33	35	.60	6.520	.0090	82	88	.60	4.275	.0081
34	36	.60	3.393	.0097	83	89	.60	4.566	.0165
35	37	.60	5.407	.0100	84	90	.60	4.325	.0157
36	38	.60	3.043	.0118	85	91	.60	4.507	.0114
37	39	.80	2.804	.0084	86	92	.60	4.854	.0098
38	41	.60	6.924	.0123	87	93	.80	3.217	.0197
39	42	.40	8.621	.0169	88	94	.80	3.706	.0084
40	43	.60	4.389	.0111	89	95	.80	3.644	.0143
41	44	.60	6.005	.0048	90	96	.80	3.339	.0379
42	45	.40	9.626	.0094	91	97	.80	3.697	.0187
43	46	.40	9.091	.0203	92	98	.80	3.358	.0399
44	47	.60	4.462	.0121	93	100	.80	3.396	.0130
45	48	.40	9.041	.0036	94	102	.80	2.893	.0171
46	49	.60	5.017	.0098	95	103	.80	3.345	.0183
47	5	.60	4.879	.0354	96	105	.80	3.152	.0173
48	51	.80	3.863	.0091	97	106	.60	4.173	.0163
49	52	.80	3.095	.0138	98	0	-0	0	0
100		.050							

BIT ON LOOP 60

DATE 5/12/79

AEDC(ARO,INC.) ARNOLD AFS, TENNESSEE
VON KARMAN GAS DYNAMICS FACILITY
50 INCH HYPERSONIC TUNNEL H
V41H-87A

GROUP	TEST CONDITION	MODEL	MACH NO	PO,PSIA	TO,DEG R	ALPHA-MODEL	ALPHA-SECTOR	ALPHA-PREBEND	ROLL MODEL	YAW
101	35	140 B	7.99	674.3	1337	45.03	-15.03	30.00	179.86	.0

T-INF (DEG R)	P-INF (PSIA)	Q-INF (PSIA)	V-INF (FT/SEC)	RHO-INF (SLUGS/FT3)	MU-INF (LB-SEC/FT2)	RE/FT (FT-1)	HREF-FR (R= .0400FT)	STFR (R= .0400FT)	SWITCH POSITION
97.1	.070	3.111	3858	6.017E-05	7.816E-08	2.970E 06	2.879E-02	1.559E-02	3

IC NO	TW	DTWDT	QDOT	H(TO)	H(TO)/HREF	H(.9TO)	H(.9TO)/HREF
							CANOPY
221	532.8	3.930	.475	5.914E-04	.0205	7.094E-04	.0246
222	534.8	6.343	.742	9.755E-04	.0339	1.171E-03	.0407
223	533.1	5.388	.731	9.101E-04	.0316	1.092E-03	.0379
							ESCAPE HATCH AND WINDOW
							X/L 2Y/B
224	533.0	5.324	.530	6.594E-04	.0229	7.910E-04	.0275
225	533.5	5.399	.645	8.031E-04	.0279	9.635E-04	.0335
226	534.4	5.299	.558	6.958E-04	.0242	8.349E-04	.0290
227	534.5	6.153	.902	1.124E-03	.0390	1.349E-03	.0468
228	533.9	5.359	.689	8.566E-04	.0298	1.030E-03	.0358
229	533.6	4.801	.617	7.688E-04	.0267	9.223E-04	.0320
232	533.7	4.885	.661	8.232E-04	.0286	9.876E-04	.0343
233	535.4	5.316	.808	1.008E-03	.0350	1.210E-03	.0420
236	534.4	4.381	.642	8.001E-04	.0278	9.601E-04	.0333
237	535.9	4.977	.731	8.752E-04	.0304	1.051E-03	.0365
							CARGO BAY HINGE NO. 1
							X/L Z,FULL SCALE(IN)
238	535.4	4.833	.648	8.087E-04	.0281	9.706E-04	.0337
239	535.3	4.238	.568	7.091E-04	.0246	8.510E-04	.0296
240	535.3	4.037	.578	7.217E-04	.0251	8.664E-04	.0301
241	526.7	1.489	.209	2.577E-04	.0090	3.087E-04	.0107
242	527.2	1.706	.243	3.002E-04	.0104	3.595E-04	.0125
243	527.0	1.358	.166	2.045E-04	.0071	2.449E-04	.0085
244	526.9	1.255	.146	1.806E-04	.0063	2.164E-04	.0075
							CARGO BAY HINGE NO. 2
							X/L Z,FULL SCALE(IN)
245	527.7	2.052	.294	3.632E-04	.0126	4.351E-04	.0151
246	528.0	2.277	.324	4.013E-04	.0139	4.807E-04	.0167
247	528.5	1.674	.246	3.044E-04	.0106	3.647E-04	.0127
248	527.7	1.609	.236	2.923E-04	.0102	3.501E-04	.0122
249	529.4	3.168	.466	5.770E-04	.0200	6.916E-04	.0240
250	528.5	2.480	.310	3.842E-04	.0133	4.603E-04	.0160
251	529.7	3.594	.440	5.458E-04	.0190	6.542E-04	.0227
							CARGO BAY HINGE NO. 3
							X/L Z,FULL SCALE(IN)
252	531.6	5.060	.733	9.111E-04	.0316	1.092E-03	.0379
253	532.1	5.670	.822	1.022E-03	.0355	1.226E-03	.0426
254	531.8	5.287	.802	9.964E-04	.0346	1.195E-03	.0415
257	532.8	6.037	.814	1.013E-03	.0352	1.214E-03	.0422
258	533.0	5.408	.736	9.163E-04	.0318	1.099E-03	.0382

X/L	2Y/B
.1933	.0162
.1972	.0162
.1933	.0384
.1972	.0384
.1933	.0653
.1972	.0653
.2567	.0235
.2606	.0235
.2567	.0491
.2606	.0491

X/L	Z,FULL SCALE(IN)
.2879	420.0000
.2917	420.0000
.2840	415.0000
.2879	415.0000
.2917	415.0000
.2801	405.0000
.2840	405.0000

X/L	Z,FULL SCALE(IN)
.3192	420.0000
.3439	420.0000
.3362	415.0000
.3401	415.0000
.3439	415.0000
.3323	405.0000
.3362	405.0000

X/L	Z,FULL SCALE(IN)
.3923	420.0000
.3961	420.0000
.3884	415.0000
.3845	405.0000
.3884	405.0000

DATE 5/12/75

AEDC(ARO,INC.) ARNOLD AFS, TENNESSEE
VON KARMAN GAS DYNAMICS FACILITY
50 INCH HYPERSONIC TUNNEL R
V41R-B7A

GROUP	TEST CONDITION	MODEL	MACH NO	PO,PSIA	TO,DEG R	ALPHA-MODEL	ALPHA-SECTOR	ALPHA-PREBEND	ROLL MODEL	YAW
101	35	140 B	7.99	674.3	1337	45.03	-15.03	30.00	179.86	.0

T-INF (DEG R)	P-INF (PSIA)	Q-INF (PSIA)	V-INF (FT/SEC)	RHO-INF (SLUGS/FT3)	MU-INF (LB-SEC/FT2)	RE/FT (FT-1)	HREF-FR (R= .0400FT)	STFR (R= .0400FT)	SWITCH POSITION
97.1	.070	3.111	3858	6.017E-05	7.816E-08	2.970E 06	2.879E-02	1.559E-02	3

TOP CENTERLINE

TC NO	TW	DTWDT	QDOT	H(TO)	H(TO)/HREF	H(.9TO)	H(.9TO)/HREF	X/L
367	534.4	6.147	.722	9.002E-04	.0313	1.080E-03	.0375	0
368	533.5	5.787	.734	9.137E-04	.0317	1.096E-03	.0381	.0008
369	535.6	4.461	.522	6.522E-04	.0227	7.828E-04	.0272	.0019
370	536.0	6.795	.829	1.036E-03	.0360	1.243E-03	.0432	.0037
371	537.3	7.511	.736	9.206E-04	.0320	1.105E-03	.0384	.0058
372	530.1	2.654	.341	4.223E-04	.0147	5.062E-04	.0176	.0087
373	530.8	3.170	.414	5.139E-04	.0178	6.161E-04	.0214	.0118
374	530.7	3.014	.394	4.886E-04	.0170	5.857E-04	.0203	.0151
375	530.5	4.346	.593	7.355E-04	.0255	8.817E-04	.0306	.0182
376	531.1	3.548	.467	5.794E-04	.0201	6.947E-04	.0241	.0215
377	530.6	3.297	.423	5.252E-04	.0182	6.297E-04	.0219	.0246
378	527.9	-.604	-.070	-8.682E-05	-.0030	-1.040E-04	-.0036	.0278
379	528.4	1.361	.167	2.063E-04	.0072	2.471E-04	.0086	.0609
380	528.0	1.275	.131	1.614E-04	.0056	1.934E-04	.0067	.0646
381	527.8	1.984	.256	3.166E-04	.0110	3.793E-04	.0132	.0684
382	527.7	2.131	.278	3.437E-04	.0119	4.118E-04	.0143	.0721
383	527.8	1.861	.249	3.073E-04	.0107	3.681E-04	.0128	.0760
384	525.9	-.603	-.084	-1.033E-04	-.0036	-1.237E-04	-.0043	.0796
385	525.8	-.604	-.077	-9.536E-05	-.0033	-1.142E-04	-.0040	.0789
386	525.8	-.604	-.071	-8.775E-05	-.0030	-1.051E-04	-.0036	.0982
387	525.8	-.604	-.074	-9.104E-05	-.0032	-1.090E-04	-.0038	.1019
388	539.0	12.874	1.228	1.539E-03	.0535	1.849E-03	.0642	.1160
389	538.0	12.748	1.854	2.322E-03	.0806	2.788E-03	.0968	.1195
390	533.5	6.066	.956	1.191E-03	.0414	1.428E-03	.0496	.1231
391	538.3	11.259	1.799	2.254E-03	.0783	2.707E-03	.0940	.1268
392	540.7	14.093	2.425	3.047E-03	.1058	3.662E-03	.1272	.1305
393	532.3	5.167	.874	1.087E-03	.0377	1.303E-03	.0453	.1338
394	527.0	1.080	.181	2.232E-04	.0078	2.674E-04	.0093	.1376
395	527.0	1.220	.182	2.247E-04	.0078	2.692E-04	.0093	.1411
396	534.1	7.069	1.048	1.306E-03	.0454	1.567E-03	.0544	.1448
397	538.0	11.390	1.692	2.119E-03	.0736	2.545E-03	.0884	.1483
398	531.7	5.339	.750	9.322E-04	.0324	1.118E-03	.0388	.1519
399	529.5	2.156	.287	3.559E-04	.0124	4.265E-04	.0148	.1556

DATE 5/12/75

AEDC(ARO,INC.) ARNOLD AFS, TENNESSEE
VON KARMAN GAS DYNAMICS FACILITY
50 INCH HYPERSONIC TUNNEL B
V41B-87A

GROUP	TEST CONDITION	MODEL	MACH NO	PO,PSIA	TO,DEG R	ALPHA-MODEL	ALPHA-SECTOR	ALPHA-PREBEND	ROLL MODEL	YAW
101	35	140 B	7.99	674.3	1337	45.03	-15.03	30.00	179.86	.0

T-INF (DEG R)	P-INF (PSIA)	Q-INF (PSIA)	V-INF (FT/SEC)	RHO-INF (SLUGS/FT3)	MU-INF (LB-SEC/FT2)	RE/FT (FT-1)	HREF-FR (R= .0400FT)	STFR (R= .0400FT)	SWITCH POSITION
97.1	.670	3.111	3858	6.017E-05	7.816E-08	2.970E 06	2.879E-02	1.559E-02	3

TC NO	TW	DTWDT	QDOT	H(TO)	H(TO)/HREF	H(.9TO)	H(.9TO)/HREF	TOP CENTERLINE X/L
400	530.1	3.195	.430	5.333E-04	.0185	6.392E-04	.0222	.1582
401	534.5	9.135	1.153	1.475E-03	.0512	1.770E-03	.0615	.1608
402	530.5	6.601	.821	1.018E-03	.0354	1.221E-03	.0424	.1635
403	529.1	2.304	.279	3.458E-04	.0120	4.144E-04	.0144	.1664
404	527.8	1.642	.198	2.450E-04	.0085	2.934E-04	.0102	.1691
405	527.3	1.529	.184	2.279E-04	.0079	2.730E-04	.0095	.1720
406	527.9	2.308	.278	3.443E-04	.0120	4.125E-04	.0143	.1748
407	528.2	2.736	.352	4.356E-04	.0151	5.219E-04	.0181	.1769
408	525.5	-.604	-.083	-1.085E-04	-.0038	-1.299E-04	-.0045	.1800
409	526.1	-.603	-.086	-1.066E-04	-.0037	-1.277E-04	-.0044	.1831
410	527.3	1.372	.197	2.430E-04	.0084	2.911E-04	.0101	.1863
411	527.9	1.958	.293	3.622E-04	.0126	4.339E-04	.0151	.1894
412	529.1	3.244	.439	5.440E-04	.0189	6.519E-04	.0226	.1931
413	528.3	1.742	.233	2.879E-04	.0100	3.450E-04	.0120	.1972
414	526.5	1.009	.135	1.663E-04	.0058	1.992E-04	.0069	.2049
415	526.5	1.190	.117	1.445E-04	.0050	1.731E-04	.0060	.2250
416	527.9	2.512	.293	3.623E-04	.0126	4.341E-04	.0151	.2500

TC NO	TW	DTWDT	QDOT	H(TO)	H(TO)/HREF	H(.9TO)	H(.9TO)/HREF	NOSE TC (Z = 338) X/L	2Y/B
145	525.9	-.603	-.080	-9.926E-05	-.0034	-1.189E-04	-.0041	.0008	.5039
146	529.0	4.460	.596	7.379E-04	.0256	8.843E-04	.0307	.0023	.5082
147	526.4	-.608	-.080	-9.934E-05	-.0035	-1.190E-04	-.0041	.0043	.5135
148	526.1	1.029	.142	1.751E-04	.0061	2.097E-04	.0073	.0068	.5205
149	526.3	-.604	-.087	-1.067E-04	-.0037	-1.278E-04	-.0044	.0095	.5279
150	526.9	-.605	-.086	-1.061E-04	-.0037	-1.271E-04	-.0044	.0122	.5354
151	526.5	-.607	-.084	-1.043E-04	-.0036	-1.249E-04	-.0043	.0218	.5621
152	526.6	-.605	-.081	-1.006E-04	-.0035	-1.205E-04	-.0042	.0251	.5712
153	526.4	1.337	.182	1.997E-04	.0069	2.391E-04	.0083	.0286	.5808
154	526.8	1.786	.220	2.718E-04	.0094	3.255E-04	.0113	.0319	.5898
155	527.8	2.941	.367	4.533E-04	.0157	5.430E-04	.0189	.0354	.5995
156	528.9	3.616	.446	5.523E-04	.0192	6.618E-04	.0230	.0387	.6085
157	525.5	-.606	-.074	-9.108E-05	-.0032	-1.091E-04	-.0038	.0420	.6176
158	526.4	-.606	-.074	-9.120E-05	-.0032	-1.092E-04	-.0038	.0462	.6294
159	526.5	2.256	.251	3.097E-04	.0108	3.709E-04	.0129	.0503	.6406

GROUP 101 CENTERLINE TIME 2.95

CH	TC	FIT LENGTH	DTDWT	UNCERTAINTY	CH	TC	FIT LENGTH	DTDWT	UNCERTAINTY
1	221	.80	3.930	.0103	50	384	2.00	-.603	-.0027
2	222	.60	6.343	.0092	51	385	2.00	-.604	-.0018
3	223	.60	5.388	.0099	52	386	2.00	-.604	-.0018
4	224	.60	5.324	.0135	53	387	2.00	-.604	-.0020
5	225	.60	5.390	.0235	54	388	.40	12.874	.0051
6	226	.60	5.295	.0068	55	389	.40	12.748	.0078
7	227	.60	6.153	.0342	56	390	.60	6.066	.0248
8	228	.60	5.359	.0079	57	391	.40	11.259	.0101
9	229	.60	4.831	.0143	58	392	.40	14.093	.0064
10	232	.60	4.885	.0110	59	393	.60	5.167	.0205
11	233	.60	5.316	.0116	60	394	1.20	1.080	.0151
12	236	.60	4.341	.0112	61	395	1.20	1.220	.0395
13	237	.60	4.977	.0078	62	396	.60	7.069	.0057
14	238	.60	4.833	.0144	63	397	.40	11.390	.0090
15	239	.60	4.236	.0154	64	398	.60	5.339	.0117
16	240	.80	4.037	.0125	65	399	.80	2.156	.0137
17	241	1.20	1.489	.0239	66	400	.80	3.195	.0106
18	242	1.20	1.706	.0115	67	401	.40	9.135	.0071
19	243	1.20	1.358	.0165	68	402	.60	6.601	.0569
20	244	1.20	1.255	.0199	69	403	.80	2.304	.0347
21	245	.80	2.062	.0091	70	404	1.20	1.642	.0139
22	246	.80	2.277	.0108	71	405	1.20	1.529	.0242
23	247	1.20	1.674	.0186	72	406	.80	2.308	.0195
24	248	1.20	1.009	.0213	73	407	.80	2.736	.0146
25	249	.80	3.168	.0145	74	408	2.00	-.604	-.0019
26	250	.80	2.480	.0127	75	409	2.00	-.603	-.0025
27	251	.80	3.594	.0135	76	410	1.20	1.372	.0217
28	252	.60	5.060	.0110	77	411	1.20	1.958	.0106
29	253	.60	5.670	.0071	78	412	.80	3.244	.0102
30	254	.60	5.287	.0102	79	413	1.20	1.742	.0597
31	257	.60	6.037	.0077	80	414	1.20	1.009	.0144
32	258	.60	5.408	.0041	81	415	1.20	1.190	.0159
33	367	.60	6.147	.0038	82	416	.80	2.512	.0075
34	368	.60	5.727	.0055	83	145	2.00	-.603	-.0029
35	369	.60	4.461	.0099	84	146	.60	4.460	.0197
36	370	.60	6.795	.0070	85	147	2.00	-.603	-.0037
37	371	.60	7.511	.0161	86	148	1.20	1.029	.0151
38	372	.80	2.654	.0131	87	149	2.00	-.604	-.0018
39	373	.80	3.170	.0079	88	150	2.00	-.605	-.0010
40	374	.80	3.014	.0122	89	151	2.00	-.607	-.0036
41	375	.60	4.346	.0082	90	152	2.00	-.606	-.0044
42	376	.80	3.548	.0089	91	153	1.20	1.337	.0281
43	377	.80	3.297	.0130	92	154	1.20	1.786	.0307
44	378	2.00	-.604	-.0037	93	155	.80	2.941	.0118
45	379	1.20	1.361	.0132	94	156	.80	3.616	.0141
46	381	1.20	1.275	.0142	95	157	2.00	-.606	-.0049
47	381	1.20	1.984	.0236	96	158	2.00	-.606	-.0035
48	382	.80	2.131	.0137	97	159	.80	2.256	.0141
49	383	1.20	1.861	.0115	98	0	-0	0	0

DATE 5/12/75

AEDC(ARO,INC.) ARNOLD AFS, TENNESSEE
VON KARMAN GAS DYNAMICS FACILITY
50 INCH HYPERSONIC TUNNEL B
V41B-B/A

GROUP	TEST CONDITION	MODEL	MACH NO	PO,PSIA	TO,DEG R	ALPHA-MODEL	ALPHA-SECTOR	ALPHA-PREBEND	ROLL MODEL	YAW
102	36	140 B	8.00	860.3	1341	19.99	10.01	30.00	179.94	-.0

T-INF (DEG R)	P-INF (PSIA)	Q-INF (PSIA)	V-INF (FT/SEC)	RHO-INF (SLUGS/FT3)	MU-INF (LB-SEC/FT2)	RE/FT (FT-1)	HREF-FR (R= .0400FT)	STFR (R= .0400FT)	SWITCH POSITION
97.1	.088	3.948	3864	7.610E-05	7.821E-08	3.759E 06	3.245E-02	1.386E-02	1

IC NO	TW	DTWDT	QDOT	H(TO)	H(TO)/HREF	H(.9TO)	H(.9TO)/HREF	X/L	Z,FULL SCALE(IN)
								FUSELAGE VENT NO. 1	
1	543.6	7.791	1.031	1.293E-03	.0398	1.554E-03	.0479	.4434	376.6300
2	543.7	7.715	1.042	1.308E-03	.0403	1.572E-03	.0484	.4264	371.6300
3	543.1	7.809	1.076	1.349E-03	.0416	1.621E-03	.0500	.4303	371.6300
4	542.4	7.946	1.083	1.357E-03	.0418	1.631E-03	.0503	.4342	371.6300
5	543.1	8.362	1.118	1.402E-03	.0432	1.685E-03	.0519	.4380	371.6300
6	543.7	8.221	1.092	1.370E-03	.0422	1.648E-03	.0508	.4434	369.1300
7	544.3	8.208	1.201	1.509E-03	.0465	1.814E-03	.0559	.4226	366.6300
8	545.7	7.243	1.095	1.372E-03	.0423	1.649E-03	.0508	.4264	366.6300
9	545.2	7.886	1.151	1.447E-03	.0446	1.740E-03	.0536	.4303	366.6300
10	544.8	8.088	1.159	1.456E-03	.0449	1.751E-03	.0540	.4342	366.6300
11	545.7	8.647	1.173	1.476E-03	.0455	1.775E-03	.0547	.4380	366.6300
12	546.7	8.885	1.230	1.549E-03	.0477	1.864E-03	.0574	.4496	366.6300
13	548.2	7.355	1.095	1.369E-03	.0422	1.648E-03	.0508	.4187	357.1300
14	547.7	8.137	1.116	1.407E-03	.0434	1.694E-03	.0522	.4396	361.6300
15	548.1	7.916	1.091	1.339E-03	.0413	1.611E-03	.0497	.4434	361.6300
16	545.5	4.693	.637	8.010E-04	.0247	9.636E-04	.0297	.4396	355.6300
17	545.9	4.155	.564	7.093E-04	.0219	8.533E-04	.0263	.4434	355.6300
18	546.2	2.661	.373	4.696E-04	.0145	5.649E-04	.0174	.4396	351.6300
19	547.8	1.779	.250	3.148E-04	.0097	3.788E-04	.0117	.4291	332.6300
								CARGO BAY VENT NO. 1	
22	539.3	6.724	.933	1.164E-03	.0359	1.398E-03	.0431	.3974	397.6300
23	538.7	7.258	1.014	1.264E-03	.0390	1.518E-03	.0468	.4013	397.6300
24	539.0	7.634	1.032	1.289E-03	.0397	1.546E-03	.0477	.4052	397.6300
25	538.8	7.049	.927	1.157E-03	.0356	1.389E-03	.0428	.4090	397.6300
26	540.5	7.832	1.028	1.285E-03	.0396	1.544E-03	.0476	.4129	397.6300
27	540.1	7.640	1.064	1.330E-03	.0410	1.597E-03	.0492	.3936	392.6300
28	539.7	7.206	1.036	1.293E-03	.0399	1.553E-03	.0479	.3974	392.6300
29	539.8	7.393	1.066	1.331E-03	.0410	1.599E-03	.0493	.4013	392.6300
30	539.1	7.556	1.036	1.355E-03	.0418	1.627E-03	.0501	.4052	392.6300
31	538.7	7.305	1.020	1.272E-03	.0392	1.528E-03	.0471	.4090	392.6300
32	538.1	6.843	.946	1.129E-03	.0348	1.356E-03	.0418	.4129	392.6300
33	538.6	5.634	.805	1.003E-03	.0309	1.204E-03	.0371	.4090	386.1300
34	540.2	6.818	.922	1.152E-03	.0355	1.384E-03	.0427	.4129	387.6300
35	542.2	7.392	1.047	1.312E-03	.0404	1.576E-03	.0486	.3897	383.1300
36	540.3	5.818	.844	1.055E-03	.0325	1.267E-03	.0391	.4090	378.6300
37	540.4	6.746	.949	1.186E-03	.0365	1.425E-03	.0439	.4129	382.1300
38	541.6	6.784	.946	1.184E-03	.0365	1.422E-03	.0438	.4129	377.1300
39	541.9	6.233	.911	1.141E-03	.0352	1.371E-03	.0422	.4001	373.6300
								PROTUBERANCES	
41	539.2	6.811	.912	1.138E-03	.0351	1.366E-03	.0421	.3546	379.0500
42	542.2	9.466	1.295	1.622E-03	.0500	1.949E-03	.0601	.3604	379.0500
43	538.1	4.207	.546	6.803E-04	.0210	8.167E-04	.0252	.3450	374.0500

DATE 5/12/75

AEDC(ARO,INC.) ARNOLD AFS, TENNESSEE
VON KARMAN GAS DYNAMICS FACILITY
50 INCH HYPERSONIC TUNNEL B
V41B-B7A

GROUP	TEST CONDITION	MODEL	MACH NO	PO,PSIA	TO,DEG R	ALPHA-MODEL	ALPHA-SECTOR	ALPHA-PREBEND	ROLL MODEL	YAW
102	36	140 B	8.00	660.3	1341	19.99	10.01	30.00	179.94	-.0

T-INF (DEG R)	P-INF (PSIA)	Q-INF (PSIA)	V-INF (FT/SEC)	RHO-INF (SLUGS/FT3)	MU-INF (LB-SEC/FT2)	RE/FT (FT-1)	HREF-FR (R= .0400FT)	STFR (R= .0400FT)	SWITCH POSITION
97.1	.086	3.948	3864	7.610E-05	7.821E-08	3.759E 06	3.245E-02	1.386E-02	1

TC NO	TW	DTWDT	QDOT	H(TO)	H(TO)/HREF	H(.9TO)	H(.9TO)/HREF
44	540.6	8.301	1.131	1.413E-03	.0436	1.698E-03	.0523
45	546.8	12.253	1.772	2.144E-03	.0661	2.579E-03	.0795
46	545.5	11.611	1.627	2.046E-03	.0631	2.461E-03	.0759
47	539.4	4.665	.621	7.745E-04	.0239	9.301E-04	.0287
48	545.2	9.726	1.337	1.681E-03	.0518	2.021E-03	.0623
49	541.6	6.814	.938	1.174E-03	.0362	1.410E-03	.0435
50	549.3	11.614	1.621	2.048E-03	.0631	2.465E-03	.0760
51	546.6	9.774	1.331	1.676E-03	.0517	2.017E-03	.0622
52	545.5	8.307	1.146	1.441E-03	.0444	1.733E-03	.0534
53	545.4	9.021	1.321	1.661E-03	.0512	1.998E-03	.0616
54	536.4	5.261	.750	9.332E-04	.0288	1.120E-03	.0345
55	545.6	7.984	1.144	1.439E-03	.0443	1.731E-03	.0533
56	536.6	4.660	.600	7.464E-04	.0230	8.958E-04	.0276
57	537.9	4.836	.591	7.361E-04	.0227	8.837E-04	.0272
58	539.2	4.770	.630	7.862E-04	.0242	9.442E-04	.0291
59	540.2	3.767	.496	6.199E-04	.0191	7.446E-04	.0229
60	539.6	3.405	.474	5.920E-04	.0182	7.110E-04	.0219
61	540.0	4.369	.554	6.917E-04	.0213	8.308E-04	.0256
62	538.1	4.797	.588	7.330E-04	.0226	8.800E-04	.0271
63	537.2	4.885	.638	7.942E-04	.0245	9.533E-04	.0294
64	528.9	.008	.001	1.149E-06	.0000	1.376E-06	.0000
65	536.5	4.975	.676	8.411E-04	.0259	1.009E-03	.0311
66	538.0	5.138	.648	8.078E-04	.0249	9.698E-04	.0299
67	539.9	5.004	.704	8.769E-04	.0271	1.056E-03	.0325
68	540.2	4.617	.585	7.313E-04	.0225	8.784E-04	.0271

PROTUBERANCES

X/L	Z,FULL SCALE(IN)
.3508	374.0500
.3566	374.0500
.3604	374.0500
.3392	366.5500
.3566	366.5500
.3392	360.7000
.3566	360.7000
.3604	360.7000
.3392	353.2000
.3450	353.2000
.3508	353.2000
.3566	353.2000

SUBLIMATOR VENT NO. 1

X/L	Z,FULL SCALE(IN)
.3031	371.1300
.3074	369.1300
.3089	363.6300
.3074	358.1300
.3031	356.1300
.2988	358.1300
.2973	363.6300
.2988	369.1300
.3031	376.1300
.3089	378.6300
.3101	372.6300
.3157	370.3800
.3128	363.6300

DATE 5/12/75

AEDC(ARO,INC.) ARNOLD AFS, TENNESSEE
VON KARMAN GAS DYNAMICS FACILITY
50 INCH HYPERSONIC TUNNEL H
V41H-B7A

GROUP	TEST CONDITION	MODEL	MACH NO	PO,PSIA	TO,DEG R	ALPHA-MODEL	ALPHA-SECTOR	ALPHA-PREBEND	ROLL MODEL	YAW
102	36	140 B	8.00	860.3	1341	19.99	10.01	30.00	179.94	-.0

T-INF (DEG R)	P-INF (PSIA)	Q-INF (PSIA)	V-INF (FT/SEC)	RHO-INF (SLUGS/FT3)	MU-INF (LB-SEC/FT2)	RE/FT (FT-1)	HREF-FR (R= .0400FT)	STFR (R= .0400FT)	SWITCH POSITION
97.1	.088	3.948	3864	7.610E-05	7.821E-08	3.759E 06	3.245E-02	1.386E-02	1

IC NO	TW	DIWDT	QDOT	H(TO)	H(TO)/HREF	H(.9TO)	H(.9TO)/HREF
							FUSELAGE VENT PANEL NO. 7
							X/L Z,FULL SCALE(IN)
69	536.2	5.545	.773	9.615E-04	.0296	1.154E-03	.0356	.2487 356.4000
70	536.5	5.605	.687	8.540E-04	.0263	1.025E-03	.0316	.2591 356.4000
71	537.1	6.762	.919	1.144E-03	.0353	1.373E-03	.0423	.2419 351.4000
72	536.9	5.627	.826	1.028E-03	.0317	1.234E-03	.0380	.2487 351.4000
73	537.5	5.846	.759	9.448E-04	.0291	1.134E-03	.0350	.2552 351.4000
74	538.2	5.853	.710	8.847E-04	.0273	1.062E-03	.0327	.2610 351.4000
75	539.3	6.914	.941	1.174E-03	.0362	1.410E-03	.0435	.2419 342.8000
77	538.7	5.261	.747	9.310E-04	.0287	1.118E-03	.0345	.2552 342.8000
78	539.3	5.489	.755	9.416E-04	.0290	1.131E-03	.0349	.2610 342.8000
79	540.3	6.445	.826	1.032E-03	.0318	1.239E-03	.0382	.2419 334.2000
80	537.4	4.683	.639	7.955E-04	.0245	9.549E-04	.0294	.2487 334.2000
81	538.4	4.533	.633	7.885E-04	.0243	9.467E-04	.0292	.2552 334.2000
							ACCESS HATCH WINDOW
							X/L Z,FULL SCALE(IN)
83	530.1	4.026	.537	6.619E-04	.0204	7.931E-04	.0244	.2131 398.0000
84	530.8	4.520	.595	7.341E-04	.0226	8.797E-04	.0271	.2131 388.0000
85	531.5	4.197	.571	7.057E-04	.0217	8.458E-04	.0261	.2131 383.0000
87	528.7	2.786	.397	4.890E-04	.0151	5.857E-04	.0180	.2222 395.8000
88	531.5	3.889	.543	6.709E-04	.0207	8.042E-04	.0248	.2193 386.5000
89	531.9	4.678	.687	8.430E-04	.0262	1.018E-03	.0314	.2177 381.8000
90	531.1	3.531	.480	5.932E-04	.0183	7.109E-04	.0219	.2297 389.5000
91	532.4	3.998	.535	6.622E-04	.0204	7.939E-04	.0245	.2243 382.5000
92	533.7	4.484	.633	7.850E-04	.0242	9.413E-04	.0290	.2214 378.7000
93	532.5	3.520	.449	5.560E-04	.0171	6.666E-04	.0205	.2343 374.0000
94	533.6	4.473	.541	7.202E-04	.0222	8.637E-04	.0266	.2274 375.5000
95	534.5	4.860	.690	8.564E-04	.0264	1.027E-03	.0317	.2239 373.3000
96	534.1	3.871	.503	6.237E-04	.0192	7.481E-04	.0231	.2363 368.0000
97	533.8	4.307	.550	6.817E-04	.0210	8.176E-04	.0252	.2286 368.0000
98	534.1	4.624	.649	8.041E-04	.0248	9.644E-04	.0297	.2247 368.0000
100	534.5	4.674	.662	8.214E-04	.0253	9.853E-04	.0304	.2274 360.5000
102	534.3	3.788	.535	6.631E-04	.0204	7.953E-04	.0245	.2081 354.3000
103	533.1	3.996	.524	6.495E-04	.0200	7.788E-04	.0240	.2023 362.7000
105	531.3	4.459	.557	6.880E-04	.0212	8.246E-04	.0254	.2050 378.7000
106	531.0	4.525	.579	7.153E-04	.0220	8.573E-04	.0264	.2050 386.2000

GROUP 102 CENTERLINE TIME 2.65

CH	TC	FIT LENGTH	DTDWT	UNCERTAINTY	CH	TC	FIT LENGTH	DTDWT	UNCERTAINTY
1	1	.60	7.791	.0085	50	53	.40	9.021	.0203
2	2	.60	7.715	.0082	51	54	.60	5.261	.0121
3	3	.60	7.809	.0044	52	55	.40	7.984	.0167
4	4	.40	7.946	.0067	53	56	.60	4.660	.0097
5	5	.40	8.362	.0127	54	57	.60	4.836	.0093
6	6	.40	8.221	.0096	55	58	.60	4.770	.0133
7	7	.60	8.208	.0573	56	59	.80	3.767	.0284
8	8	.60	7.243	.0066	57	60	.80	3.405	.0091
9	9	.60	7.886	.0081	58	61	.60	4.369	.0118
10	10	.60	8.088	.0067	59	62	.60	4.797	.0173
11	11	.40	8.647	.0085	60	63	.60	4.885	.0078
12	12	.40	8.885	.0103	61	64	2.00	.008	2.4196
13	13	.60	7.356	.0092	62	65	.60	4.975	.0081
14	14	.60	8.137	.0075	63	66	.60	5.138	.0104
15	15	.60	7.916	.0115	64	67	.60	5.004	.0160
16	16	.60	4.893	.0134	65	68	.60	4.617	.0083
17	17	.60	4.155	.0255	66	69	.60	5.545	.0145
18	18	.80	2.661	.0102	67	70	.60	5.605	.0066
19	19	1.20	1.779	.0181	68	71	.60	6.762	.0842
20	22	.60	6.724	.0072	69	72	.60	5.827	.0332
21	23	.60	7.258	.0065	70	73	.60	5.846	.0067
22	24	.60	7.634	.0069	71	74	.60	5.853	.0144
23	25	.60	7.046	.0088	72	75	.60	6.914	.0086
24	26	.60	7.832	.0086	73	77	.60	5.261	.0086
25	27	.60	7.640	.0077	74	78	.60	5.489	.0121
26	28	.60	7.266	.0059	75	79	.60	6.445	.0094
27	29	.60	7.393	.0071	76	80	.60	4.683	.0180
28	30	.60	7.556	.0071	77	81	.60	4.530	.0102
29	31	.60	7.336	.0071	78	83	.60	4.026	.0128
30	32	.60	6.843	.0057	79	84	.60	4.520	.0615
31	33	.60	5.634	.0096	80	85	.60	4.197	.0094
32	34	.60	6.818	.0077	81	87	.80	2.766	.0121
33	35	.60	7.392	.0086	82	88	.80	3.889	.0072
34	36	.60	5.818	.0068	83	89	.60	4.678	.0168
35	37	.60	6.746	.0057	84	90	.80	3.531	.0137
36	38	.60	6.784	.0059	85	91	.80	3.908	.0092
37	39	.60	6.233	.0060	86	92	.60	4.489	.0116
38	41	.60	6.811	.0053	87	93	.60	3.520	.0239
39	42	.40	9.466	.0131	88	94	.60	4.473	.0074
40	43	.60	4.267	.0170	89	95	.60	4.860	.0119
41	44	.40	8.301	.0088	90	96	.80	3.871	.0580
42	45	.40	12.253	.0072	91	97	.60	4.307	.0244
43	46	.40	11.611	.0152	92	98	.60	4.624	.0308
44	47	.60	4.666	.0111	93	100	.60	4.674	.0114
45	48	.40	9.726	.0082	94	102	.80	3.788	.0146
46	49	.60	6.814	.0087	95	103	.80	3.996	.0169
47	50	.40	11.614	.0130	96	105	.60	4.459	.0189
48	51	.40	9.774	.0092	97	106	.60	4.525	.0104
49	52	.40	8.307	.0081	98	0	-0	0	0
103		.050							

SIT ON LOOP 56

DATE 5/12/75

AEDC(ARO,INC.) ARNOLD AFS, TENNESSEE
VON KARMAN GAS DYNAMICS FACILITY
50 INCH HYPERSONIC TUNNEL B
V41B-B7A

GROUP	TEST CONDITION	MODEL	MACH NO	PO,PSIA	TO,DEG R	ALPHA-MODEL	ALPHA-SECTOR	ALPHA-PREBEND	ROLL MODEL	YAW
103	36	140 B	8.00	859.0	1344	20.06	9.94	30.00	179.94	-.0

T-INF (DEG R)	P-INF (PSIA)	Q-INF (PSIA)	V-INF (FT/SEC)	RHO-INF (SLUGS/FT3)	MU-INF (LB-SEC/FT2)	RE/FT (FT-1)	HREF-FR (H= .0400FT)	STFR (H= .0400FT)	SWITCH POSITION
97.4	.088	3.942	3869	7.578E-05	7.843E-08	3.738E 06	3.244E-02	1.390E-02	2

IC	NC	TW	DTWDT	QDOT	H(TO)	H(TO)/HREF	H(.9TO)	H(.9TO)/HREF	X/L	Z,FULL SCALE(IN)
									ACCESS HATCH WINDOW	
107	527.[illegible]	4.147	.593	7.258E-04	.0224	8.689E-04	.0268		.2050	396.2000
									FUSELAGE VENT PANEL NO. 3 AND 1	
									X/L	Z,FULL SCALE(IN)
108	528.8	8.277	.874	1.073E-03	.0331	1.285E-03	.0396		.1244	377.5000
109	528.2	6.871	.848	1.039E-03	.0320	1.243E-03	.0383		.1302	377.5000
110	527.7	6.255	.742	9.702E-04	.0299	1.161E-03	.0358		.1360	377.5000
111	528.5	6.209	.747	9.153E-04	.0282	1.096E-03	.0338		.1418	377.5000
112	529.3	6.097	.723	8.867E-04	.0273	1.062E-03	.0327		.1476	377.5000
113	530.0	7.164	.821	1.008E-03	.0311	1.208E-03	.0372		.1215	273.5000
114	528.6	6.703	.803	9.844E-04	.0303	1.179E-03	.0363		.1273	273.5000
115	528.4	5.915	.733	8.981E-04	.0277	1.075E-03	.0331		.1331	273.5000
116	528.0	5.872	.719	8.809E-04	.0272	1.055E-03	.0325		.1389	273.5000
117	530.1	6.127	.735	8.653E-04	.0267	1.036E-03	.0319		.1447	273.5000
118	529.[illegible]	5.227	.722	8.853E-04	.0273	1.060E-03	.0327		.1409	366.0000
119	530.7	6.160	.749	9.695E-04	.0299	1.161E-03	.0358		.1442	366.0000
120	530.7	6.215	.776	9.535E-04	.0294	1.142E-03	.0352		.1215	359.5000
121	530.4	5.523	.678	8.326E-04	.0257	9.973E-04	.0307		.1303	359.5000
122	531.0	5.842	.728	8.945E-04	.0276	1.072E-03	.0330		.1337	359.5000
									LOWER RCS NOZZLES	
									X/L	Z,FULL SCALE(IN)
124	529.2	6.356	.566	6.948E-04	.0214	8.320E-04	.0256		.0950	400.0000
125	527.9	6.255	.600	8.323E-04	.0257	9.964E-04	.0307		.0988	400.0000
126	527.8	5.458	.746	9.136E-04	.0282	1.094E-03	.0337		.1027	400.0000
127	527.7	5.860	.788	9.649E-04	.0297	1.155E-03	.0356		.0911	395.0000
128	527.4	6.071	.735	8.998E-04	.0277	1.077E-03	.0332		.0950	395.0000
129	528.2	6.519	.763	9.354E-04	.0288	1.120E-03	.0345		.0988	395.0000
130	529.5	6.879	.822	1.008E-03	.0311	1.208E-03	.0372		.0810	390.0000
131	527.9	6.062	.893	1.094E-03	.0337	1.310E-03	.0404		.0857	390.0000
132	528.8	6.393	.976	1.196E-03	.0369	1.433E-03	.0442		.0963	390.0000
133	528.1	6.127	.742	9.091E-04	.0280	1.088E-03	.0336		.0857	383.8000
134	526.7	6.881	.918	1.123E-03	.0346	1.344E-03	.0414		.0872	377.3000
135	528.5	9.039	1.082	1.326E-03	.0409	1.588E-03	.0489		.0903	374.5500
136	530.0	9.893	1.098	1.348E-03	.0415	1.614E-03	.0498		.0960	374.5500
137	528.0	8.934	1.165	1.428E-03	.0440	1.709E-03	.0527		.0872	370.5500
138	529.7	9.961	1.145	1.406E-03	.0433	1.684E-03	.0519		.0928	370.5500
139	529.4	8.716	1.111	1.363E-03	.0420	1.632E-03	.0503		.0816	366.0500
140	530.5	9.183	1.167	1.434E-03	.0442	1.717E-03	.0529		.0934	362.4000
141	529.7	8.169	1.078	1.323E-03	.0408	1.584E-03	.0488		.0973	362.4000
142	530.5	6.946	.756	9.285E-04	.0286	1.112E-03	.0343		.0833	355.2000
143	530.8	9.784	.982	1.207E-03	.0372	1.446E-03	.0446		.0919	355.2000
144	532.8	10.992	1.447	1.784E-03	.0550	2.138E-03	.0659		.0949	349.0000

DATE 5/12/75

AEDC(ARO,INC.) ARNOLD AFS, TENNESSEE
VON KARMAN GAS DYNAMICS FACILITY
50 INCH HYPERSONIC TUNNEL B
V41B-87A

GROUP	TEST CONDITION	MODEL	MACH NO	PO,PSIA	TO,DEG R	ALPHA-MODEL	ALPHA-SECTOR	ALPHA-PREBEND	ROLL MODEL	YAW
103	36	140 B	8.00	859.0	1344	20.06	9.94	30.00	179.94	-.0

T-INF (DEG R)	P-INF (PSIA)	Q-INF (PSIA)	V-INF (FT/SEC)	RHO-INF (SLUGS/FT3)	MU-INF (LB-SEC/FT2)	RE/FT (FT-1)	HREF-FR (R= .0400FT)	STFR (R= .0400FT)	SWITCH POSITION
97.4	.088	3.942	3869	7.578E-05	7.843E-08	3.738E 06	3.244E-02	1.390E-02	2

TC NO	TW	DTWDT	QDOT	H(TO)	H(TO)/HREF	H(.9TO)	H(.9TO)/HREF	X/L	2Y/B
								UPPER RCS NOZZLES	
161	531.1	5.120	.605	7.441E-04	.0229	8.914E-04	.0275	.0619	-.0160
162	531.1	5.032	.476	5.850E-04	.0180	7.009E-04	.0216	.0709	-.0160
163	528.7	3.521	.431	5.288E-04	.0163	6.331E-04	.0195	.0807	-.0160
164	527.1	2.628	.342	4.179E-04	.0129	5.002E-04	.0154	.0943	-.0160
165	527.3	1.951	.245	2.998E-04	.0092	3.588E-04	.0111	.0978	-.0160
166	527.1	1.234	.158	1.934E-04	.0060	2.315E-04	.0071	.1013	-.0160
167	530.7	4.858	.656	8.086E-04	.0249	9.682E-04	.0298	.0619	-.0320
168	530.6	5.250	.550	6.759E-04	.0208	8.097E-04	.0250	.0709	-.0320
169	528.0	3.754	.455	5.568E-04	.0172	6.666E-04	.0205	.0807	-.0320
170	527.5	3.053	.381	4.658E-04	.0144	5.576E-04	.0172	.0943	-.0320
171	527.3	3.058	.367	4.498E-04	.0139	5.384E-04	.0166	.0978	-.0320
172	526.4	2.244	.291	3.564E-04	.0110	4.265E-04	.0131	.1013	-.0320
173	528.7	3.802	.506	6.208E-04	.0191	7.433E-04	.0229	.0807	-.0480
174	527.2	3.238	.367	4.497E-04	.0139	5.383E-04	.0166	.0943	-.0480
175	526.7	2.896	.414	5.059E-04	.0156	6.054E-04	.0187	.0978	-.0480
176	526.3	2.231	.303	3.701E-04	.0114	4.429E-04	.0137	.1013	-.0480
								CANOPY	
177	542.3	19.316	2.668	3.327E-03	.1026	3.997E-03	.1232		
178	550.7	35.382	7.012	8.835E-03	.2724	1.064E-02	.3279		
179	557.4	41.987	8.899	1.131E-02	.3486	1.364E-02	.4204		
180	534.4	7.077	.923	1.140E-03	.0351	1.367E-03	.0421		
181	541.1	17.569	2.394	2.981E-03	.0919	3.580E-03	.1104		
182	549.0	38.005	5.456	6.860E-03	.2115	8.256E-03	.2545		
183	527.3	4.956	.620	7.588E-04	.0234	9.082E-04	.0280		
184	528.2	5.979	.815	9.983E-04	.0308	1.195E-03	.0368		
185	535.4	10.988	1.321	1.633E-03	.0503	1.959E-03	.0604		
186	547.1	26.771	3.382	4.242E-03	.1308	5.103E-03	.1573		
187	559.8	46.721	6.299	8.030E-03	.2475	9.690E-03	.2987		
188	545.8	28.854	6.754	8.458E-03	.2607	1.017E-02	.3135		
189	537.3	13.451	1.920	2.379E-03	.0733	2.854E-03	.0880		
190	548.3	30.443	4.410	5.540E-03	.1708	6.666E-03	.2055		
191	556.3	53.057	8.288	1.052E-02	.3242	1.268E-02	.3909		

DATE 5/12/75

AEDC(ARO,INC.) ARNOLD AFS, TENNESSEE
VON KARMAN GAS DYNAMICS FACILITY
50 INCH HYPERSONIC TUNNEL R
V41B-B7A

GROUP	TEST CONDITION	MODEL	MACH NO	PO,PSIA	TO,DEG R	ALPHA-MODEL	ALPHA-SECTOR	ALPHA-PREBEND	ROLL MODEL	YAW
103	36	140 B	8.00	859.0	1344	20.06	9.94	30.00	179.94	-.0

T-INF (DEG R)	P-INF (PSIA)	Q-INF (PSIA)	V-INF (FT/SEC)	RHO-INF (SLUGS/FT3)	MU-INF (LB-SEC/FT2)	RE/FT (FT-1)	HREF-FR (R= .0400FT)	STFR (R= .0400FT)	SWITCH POSITION
97.4	[illegible]	3.542	3869	7.578E-05	7.843E-08	3.738E 06	3.244E-02	1.390E-02	2

IC NO	TW	DT*DT	QDOT	H(TO)	H(TO)/HREF	H(.9TO)	H(.9TO)/HREF
						CANOPY	
192	[illegible]	[illegible]	.698	8.426E-04	.0260	1.009E-03	.0311
193	540.2	22.53[illegible]	4.370	5.435E-03	.1675	6.525E-03	.2012
194	539.4	5.235	.803	9.871E-04	.0304	1.162E-03	.0364
195	543.3	22.071	2.733	3.412E-03	.1052	4.100E-03	.1264
196	551.4	35.8[illegible]	4.730	5.969E-03	.1840	7.169E-03	.2216
197	524.2	1.252	.124	1.506E-04	.0046	1.802E-04	.0056
198	524.5	1.747	.196	2.342E-04	.0074	2.862E-04	.0088
199	526.0	2.3[illegible]	.309	3.776E-04	.0116	4.518E-04	.0139
200	531.4	7.594	1.080	1.329E-03	.0410	1.592E-03	.0491
201	535.3	32.13[illegible]	4.561	5.709E-03	.1760	6.864E-03	.2116
202	[illegible]	21.4[illegible]	2.719	3.365E-03	.1043	4.065E-03	.1253
203	525.7	3.341	.413	5.055E-04	.0156	6.050E-04	.0186
204	535.3	5.924	1.078	1.325E-03	.0409	1.588E-03	.0489
205	542.4	27.914	4.370	5.453E-03	.1681	6.552E-03	.2020
206	524.6	2.046	.270	3.295E-04	.0102	3.941E-04	.0121
207	545.2	14.716	1.973	2.439E-03	.0752	2.924E-03	.0902
208	525.3	4.015	.537	6.560E-04	.0202	7.849E-04	.0242
209	525.1	5.204	.713	8.714E-04	.0269	1.043E-03	.0321
210	529.2	9.743	1.298	1.594E-03	.0491	1.909E-03	.0588
211	525.9	3.075	.372	4.549E-04	.0140	5.444E-04	.0168
212	525.9	3.529	.474	5.792E-04	.0179	6.931E-04	.0214
213	527.7	4.958	.656	8.027E-04	.0247	9.609E-04	.0296
214	528.7	8.593	1.232	1.473E-03	.0454	1.764E-03	.0544
215	531.7	12.654	1.795	2.209E-03	.0681	2.647E-03	.0816
216	530.7	9.696	1.375	1.690E-03	.0521	2.024E-03	.0624
217	532.3	10.526	1.498	1.844E-03	.0568	2.210E-03	.0681
218	527.5	7.067	.972	1.191E-03	.0367	1.425E-03	.0439
219	531.9	12.207	1.715	2.111E-03	.0651	2.530E-03	.0790
220	532.0	14.440	1.994	2.443E-03	.0753	2.927E-03	.0902

GROUP 103 CENTERLINE TIME - 8.75

CH	TC	FIT LENGTH	DTDWT	UNCERTAINTY	CH	TC	FIT LENGTH	DTDWT	UNCERTAINTY
1	107	.60	4.147	.0087	50	173	.80	3.802	.0195
2	108	.40	8.277	.0119	51	174	.80	3.238	.0192
3	109	.60	6.871	.0073	52	175	.80	2.896	.0166
4	110	.60	6.266	.0059	53	176	.80	2.231	.0141
5	111	.60	6.209	.0185	54	177	.30	19.316	.0102
6	112	.60	6.097	.0038	55	178	.20	35.382	.0088
7	113	.60	7.168	.0438	56	179	.20	41.987	.0132
8	114	.60	6.703	.0070	57	180	.60	7.077	.0071
9	115	.60	5.919	.0066	58	181	.30	17.569	.0052
10	116	.60	5.872	.0059	59	182	.20	38.005	.0039
11	117	.60	6.127	.0079	60	183	.60	4.956	.0047
12	118	.60	5.227	.0131	61	184	.60	5.979	.0114
13	119	.60	6.100	.0111	62	185	.40	10.988	.0061
14	120	.60	6.215	.0096	63	186	.30	26.771	.0040
15	121	.60	5.528	.0097	64	187	.20	46.721	.0048
16	122	.60	5.848	.0132	65	188	.30	28.854	.0074
17	124	.60	6.356	.0209	66	189	.40	13.451	.0111
18	125	.60	6.255	.0093	67	190	.30	30.443	.0044
19	126	.60	5.458	.0116	68	191	.20	53.657	.0291
20	127	.60	5.860	.0135	69	192	.60	4.868	.0263
21	128	.60	6.071	.0043	70	193	.30	22.630	.0046
22	129	.60	6.519	.0077	71	194	.60	6.236	.0129
23	130	.60	6.879	.0085	72	195	.30	22.071	.0032
24	131	.60	6.062	.0106	73	196	.20	35.698	.0052
25	132	.40	8.393	.0131	74	197	1.20	1.252	.0183
26	133	.60	6.127	.0067	75	198	1.20	1.697	.0123
27	134	.60	6.880	.0055	76	199	.80	2.308	.0319
28	135	.40	9.030	.0073	77	200	.60	7.594	.0111
29	136	.40	9.890	.0074	78	201	.20	32.138	.0057
30	137	.40	8.934	.0129	79	202	.30	21.441	.0389
31	138	.40	9.961	.0068	80	203	.80	3.341	.0099
32	139	.40	8.716	.0095	81	204	.60	6.948	.0066
33	140	.40	9.183	.0039	82	205	.30	27.914	.0042
34	141	.40	8.169	.0089	83	206	.80	2.046	.0160
35	142	.60	6.946	.0055	84	207	.40	14.716	.0063
36	143	.40	9.784	.0095	85	208	.60	4.015	.0122
37	144	.40	10.992	.0106	86	209	.60	5.204	.0091
38	161	.60	5.120	.0155	87	210	.40	9.743	.0157
39	162	.60	5.032	.0094	88	211	.80	3.078	.0085
40	163	.80	3.521	.0134	89	212	.80	3.529	.0177
41	164	.80	2.628	.0123	90	213	.60	4.958	.0654
42	165	1.20	1.951	.0129	91	214	.40	8.593	.0120
43	166	1.20	1.238	.0428	92	215	.40	12.654	.0282
44	167	.60	4.858	.0141	93	216	.40	9.696	.0116
45	168	.60	5.250	.0105	94	217	.40	10.526	.0174
46	169	.80	3.734	.0073	95	218	.60	7.067	.0133
47	170	.80	3.053	.0207	96	219	.40	12.207	.0160
48	171	.80	3.058	.0069	97	220	.40	14.440	.0089
49	172	.80	2.244	.0185	98	0	-0	0	0
	104	.050							

BIT ON LOOP 56

DATE 5/12/75

AEDC(ARO,INC.) ARNOLD AFS, TENNESSEE
VON KARMAN GAS DYNAMICS FACILITY
50 INCH HYPERSONIC TUNNEL B
V41B-87A

GROUP	TEST CONDITION	MODEL	MACH NO	PO,PSIA	TO,DEG R	ALPHA-MODEL	ALPHA-SECTOR	ALPHA-PREBEND	ROLL MODEL	YAW
104	36	140 B	8.00	858.9	1348	20.06	9.94	30.00	179.94	-.0

T-INF (DEG R)	P-INF (PSIA)	Q-INF (PSIA)	V-INF (FT/SEC)	RHO-INF (SLUGS/FT3)	MU-INF (LB-SEC/FT2)	RE/FT (FT-1)	HREF-FR (R= .0400FT)	STFR (R= .0400FT)	SWITCH POSITION
97.7	.066	3.941	3875	7.554E-05	7.867E-08	3.721E 06	3.245E-02	1.392E-02	3

IC	NC	TW	DTWDT	QDOT	H(TO)	H(TO)/HREF	H(.9TO)	H(.9TO)/HREF		
									CANOPY	
221		528.0	2.904	.350	4.271E-04	.0132	5.111E-04	.0157		
222		530.7	5.834	.718	8.779E-04	.0270	1.051E-03	.0324		
223		530.8	6.098	.826	1.011E-03	.0311	1.211E-03	.0373		
									ESCAPE HATCH AND WINDOW	
									X/L	ZY/B
224		542.4	15.752	1.575	1.954E-03	.0602	2.347E-03	.0723	.1933	.0162
225		538.1	10.251	1.229	1.517E-03	.0467	1.820E-03	.0561	.1972	.0162
226		541.7	17.910	1.895	2.349E-03	.0724	2.820E-03	.0869	.1933	.0384
227		536.8	10.408	1.527	1.881E-03	.0580	2.256E-03	.0695	.1972	.0384
228		538.6	15.453	1.992	2.461E-03	.0758	2.953E-03	.0910	.1933	.0653
229		537.9	11.639	1.500	1.851E-03	.0570	2.220E-03	.0684	.1972	.0653
232		528.4	.648	.087	1.066E-04	.0033	1.276E-04	.0039	.2567	.0235
233		528.6	.825	.125	1.524E-04	.0047	1.824E-04	.0056	.2606	.0235
236		527.9	.770	.113	1.371E-04	.0042	1.641E-04	.0051	.2567	.0491
237		528.2	.861	.124	1.507E-04	.0046	1.803E-04	.0056	.2606	.0491
									CARGO BAY HINGE NO. 1	
									X/L	Z,FULL SCALE(IN)
238		530.0	1.900	.254	3.104E-04	.0096	3.716E-04	.0115	.2879	420.0000
239		529.9	2.151	.288	3.513E-04	.0108	4.206E-04	.0130	.2917	420.0000
240		530.1	1.731	.247	3.016E-04	.0093	3.611E-04	.0111	.2840	415.0000
241		530.7	2.582	.363	4.434E-04	.0137	5.309E-04	.0164	.2879	415.0000
242		532.3	3.780	.528	6.473E-04	.0199	7.755E-04	.0239	.2917	415.0000
243		530.8	2.268	.270	3.298E-04	.0102	3.950E-04	.0122	.2801	405.0000
244		531.0	1.837	.215	2.626E-04	.0081	3.144E-04	.0097	.2840	405.0000
									CARGO BAY HINGE NO. 2	
									X/L	Z,FULL SCALE(IN)
245		532.4	3.432	.499	6.110E-04	.0188	7.320E-04	.0226	.3192	420.0000
246		533.0	3.993	.570	6.994E-04	.0215	8.379E-04	.0258	.3439	420.0000
247		532.9	3.678	.542	6.643E-04	.0205	7.959E-04	.0245	.3362	415.0000
248		533.5	4.418	.651	7.988E-04	.0246	9.572E-04	.0295	.3401	415.0000
249		535.1	5.952	.878	1.079E-03	.0333	1.294E-03	.0399	.3439	415.0000
250		536.1	5.678	.713	8.781E-04	.0271	1.053E-03	.0324	.3323	405.0000
251		535.6	5.625	.691	8.506E-04	.0262	1.020E-03	.0314	.3362	405.0000
									CARGO BAY HINGE NO. 3	
									X/L	Z,FULL SCALE(IN)
252		534.1	5.148	.747	9.175E-04	.0283	1.100E-03	.0339	.3923	420.0000
253		534.0	5.236	.760	9.331E-04	.0288	1.118E-03	.0345	.3961	420.0000
254		534.1	4.920	.747	9.174E-04	.0283	1.099E-03	.0339	.3884	415.0000
257		536.4	5.709	.771	9.494E-04	.0293	1.138E-03	.0351	.3845	405.0000
258		536.1	5.233	.714	8.784E-04	.0271	1.053E-03	.0325	.3884	405.0000

DATE 5/12/75

AEDC(ARO,INC.) ARNOLD AFS, TENNESSEE
VON KARMAN GAS DYNAMICS FACILITY
50 INCH HYPERSONIC TUNNEL H
V418-H/A

GROUP	TEST CONDITION	MODEL	MACH NO	PO,PSIA	TO,DEG R	ALPHA-MODEL	ALPHA-SECTOR	ALPHA-PREBEND	ROLL MODEL	YAW
104	36	140 H	8.00	858.9	1348	20.06	9.94	30.00	179.94	-.0

T-INF (DEG R)	P-INF (PSIA)	Q-INF (PSIA)	V-INF (FT/SEC)	RHO-INF (SLUGS/FT3)	MU-INF (LB-SEC/FT2)	RE/FT (FT-1)	HREF-FR (R= .0400FT)	STFR (R= .0400FT)	SWITCH POSITION
97.7	.088	3.941	3875	7.554E-05	7.867E-08	3.721E 06	3.245E-02	1.392E-02	3

TOP CENTERLINE

IC NO	TW	DTWDT	QDOT	H(TO)	H(TO)/HREF	H(.9TO)	H(.9TO)/HREF	X/L
367	522.3	125.238	15.369	2.117E-02	.6522	2.599E-02	.8009	0
368	548.8	99.804	13.011	1.713E-02	.5278	2.042E-02	.6417	.0008
369	566.9	68.939	8.201	1.049E-02	.3233	1.268E-02	.3907	.0019
370	554.3	49.433	6.089	7.668E-03	.2363	9.236E-03	.2846	.0037
371	551.9	41.478	4.094	5.140E-03	.1584	6.187E-03	.1906	.0058
372	545.6	30.107	3.895	4.852E-03	.1495	5.831E-03	.1797	.0087
373	541.8	20.073	2.637	3.269E-03	.1007	3.925E-03	.1209	.0118
374	540.2	16.333	2.144	2.653E-03	.0817	3.184E-03	.0981	.0151
375	538.1	13.092	1.723	2.213E-03	.0682	2.654E-03	.0818	.0182
376	539.2	11.617	1.534	1.896E-03	.0584	2.275E-03	.0701	.0215
377	539.4	10.887	1.404	1.736E-03	.0535	2.083E-03	.0642	.0246
378	538.6	9.754	1.140	1.407E-03	.0434	1.688E-03	.0520	.0278
379	536.6	5.741	.706	8.696E-04	.0268	1.043E-03	.0321	.0609
380	534.7	4.674	.440	5.901E-04	.0182	7.073E-04	.0218	.0646
381	533.9	4.254	.551	6.703E-04	.0208	8.105E-04	.0250	.0684
382	532.9	3.491	.456	5.593E-04	.0172	6.707E-04	.0207	.0721
383	532.3	3.348	.448	5.492E-04	.0169	6.579E-04	.0203	.0760
384	531.7	2.975	.414	5.070E-04	.0156	6.072E-04	.0187	.0796
385	531.3	2.775	.356	4.362E-04	.0134	5.224E-04	.0161	.0789
386	530.9	2.530	.299	3.657E-04	.0113	4.379E-04	.0135	.0982
387	530.6	2.099	.257	3.146E-04	.0097	3.768E-04	.0116	.1019
388	530.8	.961	.091	1.117E-04	.0034	1.337E-04	.0041	.1160
389	530.5	.853	.124	1.511E-04	.0047	1.809E-04	.0056	.1195
390	530.8	.948	.149	1.824E-04	.0056	2.185E-04	.0067	.1231
391	530.3	.998	.159	1.940E-04	.0060	2.323E-04	.0072	.1268
392	530.7	1.023	.175	2.141E-04	.0066	2.564E-04	.0079	.1305
393	531.0	1.007	.170	2.081E-04	.0064	2.492E-04	.0077	.1338
394	530.8	1.034	.173	2.120E-04	.0065	2.538E-04	.0078	.1376
395	531.1	1.063	.159	1.942E-04	.0060	2.326E-04	.0072	.1411
396	531.7	1.324	.196	2.401E-04	.0074	2.876E-04	.0089	.1448
397	532.5	1.766	.262	3.206E-04	.0099	3.841E-04	.0118	.1483
398	534.1	2.518	.354	4.350E-04	.0134	5.213E-04	.0161	.1519
399	538.0	3.723	.498	6.147E-04	.0189	7.374E-04	.0227	.1556

DATE 5/12/75

AEDC(ARO,INC.) ARNOLD AFS, TENNESSEE
VON KARMAN GAS DYNAMICS FACILITY
50 INCH HYPERSONIC TUNNEL H
V418-87A

GROUP	TEST CONDITION	MODEL	MACH NO	PO,PSIA	TO,DEG R	ALPHA-MODEL	ALPHA-SECTOR	ALPHA-PREBEND	ROLL MODEL	YAW
104	36	140 B	8.00	858.9	1348	20.06	9.94	30.00	179.94	-.0

T-INF (DEG R)	P-INF (PSIA)	Q-INF (PSIA)	V-INF (FT/SEC)	RHO-INF (SLUGS/FT3)	MU-INF (LB-SEC/FT2)	RE/FT (FT-1)	HREF-FR (R= .0400FT)	STFR (R= .0400FT)	SWITCH POSITION
97.7	.098	3.941	3875	7.554E-05	7.867E-08	3.721E 06	3.245E-02	1.392E-02	3

TC NO	TW	DTWDT	QDOT	H(TO)	H(TO)/HREF	H(.9TO)	H(.9TO)/HREF	X/L
								TOP CENTERLINE
400	541.0	6.967	.935	1.158E-03	.0357	1.390E-03	.0428	.1582
401	541.5	9.231	1.200	1.487E-03	.0458	1.786E-03	.0550	.1608
402	545.6	15.214	1.907	2.375E-03	.0732	2.855E-03	.0880	.1635
403	550.3	21.084	2.582	3.235E-03	.0997	3.893E-03	.1199	.1664
404	553.5	24.627	3.010	3.787E-03	.1167	4.560E-03	.1405	.1691
405	556.5	28.357	3.472	4.356E-03	.1351	5.287E-03	.1629	.1720
406	555.9	29.314	3.587	4.526E-03	.1395	5.454E-03	.1681	.1748
407	555.5	28.255	3.640	4.654E-03	.1434	5.608E-03	.1728	.1769
408	553.4	26.835	3.970	4.993E-03	.1539	6.013E-03	.1853	.1800
409	547.6	21.461	3.158	3.850E-03	.1196	4.666E-03	.1438	.1831
410	547.0	17.561	2.542	3.172E-03	.0977	3.813E-03	.1175	.1863
411	543.8	14.412	2.173	2.701E-03	.0832	3.245E-03	.1000	.1894
412	542.1	11.717	1.597	1.981E-03	.0610	2.379E-03	.0733	.1931
413	538.9	7.629	1.025	1.266E-03	.0390	1.519E-03	.0468	.1972
414	535.3	4.158	.557	6.855E-04	.0211	8.218E-04	.0253	.2049
415	532.3	1.855	.183	2.241E-04	.0069	2.685E-04	.0083	.2250
416	529.6	.994	.115	1.402E-04	.0043	1.679E-04	.0052	.2500
								NOSE TC (Z = 338)
								X/L 2Y/B
145	594.5	85.931	11.867	1.574E-02	.4850	1.917E-02	.5907	.0008 .5039
146	596.3	88.678	12.257	1.630E-02	.5022	1.986E-02	.6119	.0023 .5082
147	580.1	72.435	9.932	1.293E-02	.3983	1.568E-02	.4830	.0043 .5135
148	570.6	57.236	8.071	1.038E-02	.3198	1.255E-02	.3868	.0068 .5205
149	559.8	41.389	6.030	7.646E-03	.2356	9.223E-03	.2842	.0095 .5279
150	559.2	36.939	5.330	6.754E-03	.2081	8.145E-03	.2510	.0122 .5354
151	556.8	26.346	3.725	4.706E-03	.1450	5.672E-03	.1748	.0218 .5621
152	556.0	26.609	3.629	4.580E-03	.1411	5.519E-03	.1700	.0251 .5712
153	555.6	25.563	3.139	3.959E-03	.1220	4.771E-03	.1470	.0286 .5808
154	555.4	25.026	3.129	3.946E-03	.1216	4.754E-03	.1465	.0319 .5898
155	553.3	22.216	2.805	3.528E-03	.1087	4.249E-03	.1309	.0354 .5995
156	551.9	20.658	2.579	3.237E-03	.0998	3.897E-03	.1201	.0387 .6085
157	552.1	20.905	2.582	3.242E-03	.0999	3.902E-03	.1202	.0420 .6176
158	552.2	20.821	2.571	3.229E-03	.0995	3.888E-03	.1198	.0462 .6294
159	552.2	21.840	2.461	3.091E-03	.0952	3.721E-03	.1147	.0503 .6406

GROUP 1A4 CENTERLINE TIME 2.75

CH	TC	FIT LENGTH	DTDWT	UNCERTAINTY	CH	TC	FIT LENGTH	DTDWT	UNCERTAINTY
1	221	.80	2.994	.0089	50	384	.80	2.975	.0195
2	222	.60	5.834	.0094	51	385	.80	2.775	.0097
3	223	.60	6.098	.0078	52	386	.80	2.530	.0238
4	224	.40	15.752	.0066	53	387	.80	2.099	.0178
5	225	.40	10.251	.0318	54	388	2.00	.961	.0124
6	226	.30	17.910	.0102	55	389	2.00	.853	.0114
7	227	.40	10.408	.0661	56	390	2.00	.948	.0425
8	228	.40	15.453	.0082	57	391	1.20	.998	.0171
9	229	.40	11.639	.0066	58	392	1.20	1.023	.0177
10	232	2.00	.648	.0158	59	393	2.00	1.007	.0119
11	233	2.00	.825	.0162	60	394	1.20	1.034	.0187
12	236	2.00	.770	.0187	61	395	1.20	1.063	.0358
13	237	2.00	.881	.0098	62	396	1.20	1.324	.0119
14	238	1.20	1.900	.0120	63	397	1.20	1.766	.0105
15	239	.80	2.151	.0149	64	398	.80	2.518	.0140
16	240	1.20	1.731	.0092	65	399	.80	3.723	.0094
17	241	.80	2.582	.0193	66	400	.60	6.907	.0111
18	242	.80	3.700	.0151	67	401	.40	9.231	.0095
19	243	.80	2.208	.0186	68	402	.40	15.214	.0306
20	244	1.20	1.837	.0120	69	403	.30	21.084	.0135
21	245	.80	3.492	.0085	70	404	.30	24.627	.0057
22	246	.80	3.993	.0105	71	405	.30	28.357	.0067
23	247	.80	3.678	.0118	72	406	.30	29.314	.0081
24	248	.60	4.418	.0146	73	407	.30	28.285	.0024
25	249	.60	5.952	.0174	74	408	.30	26.835	.0044
26	250	.60	5.678	.0106	75	409	.30	21.461	.0074
27	251	.60	5.625	.0100	76	410	.30	17.561	.0063
28	252	.60	5.148	.0105	77	411	.40	14.412	.0091
29	253	.60	5.236	.0090	78	412	.40	11.717	.0054
30	254	.60	4.920	.0166	79	413	.40	7.629	.0607
31	257	.60	5.769	.0084	80	414	.60	4.158	.0108
32	258	.60	5.233	.0193	81	415	1.20	1.855	.0094
33	367	.20	125.238	.0020	82	416	1.20	.984	.0183
34	368	.20	99.808	.0021	83	145	.20	85.931	.0033
35	369	.20	68.939	.0032	84	146	.20	88.678	.0024
36	370	.20	49.433	.0050	85	147	.20	72.435	.0018
37	371	.20	41.478	.0061	86	148	.20	57.236	.0016
38	372	.30	30.107	.0075	87	149	.20	41.389	.0099
39	373	.30	20.073	.0082	88	150	.20	36.939	.0059
40	374	.30	16.333	.0055	89	151	.30	26.346	.0087
41	375	.40	13.092	.0101	90	152	.30	26.609	.0222
42	376	.40	11.617	.0062	91	153	.30	25.560	.0076
43	377	.40	10.887	.0088	92	154	.30	25.026	.0142
44	378	.40	9.754	.0101	93	155	.30	22.216	.0061
45	379	.60	5.741	.0058	94	156	.30	20.658	.0087
46	380	.60	4.674	.0139	95	157	.30	20.905	.0107
47	381	.60	4.254	.0196	96	158	.30	20.821	.0128
48	382	.80	3.491	.0134	97	159	.30	21.840	.0046
49	383	.80	3.348	.0104	98	0	-0	0	0
105		.050							

BIT ON LOOP 58

DATE 5/12/75

AEDC(ARO,INC.) ARNOLD AFS, TENNESSEE
VON KARMAN GAS DYNAMICS FACILITY
50 INCH HYPERSONIC TUNNEL B
V41B-B7A

GROUP	TEST CONDITION	MODEL	MACH NO	PO,PSIA	TO,DEG R	ALPHA-MODEL	ALPHA-SECTOR	ALPHA-PREBEND	ROLL MODEL	YAW
105	38	140 B	8.00	861.0	1349	25.08	4.92	30.00	179.94	-.0

T-INF (DEG R)	P-INF (PSIA)	Q-INF (PSIA)	V-INF (FT/SEC)	RHO-INF (SLUGS/FT3)	MU-INF (LB-SEC/FT2)	RE/FT (FT-1)	HREF-FR (R= .0400FT)	STFR (R= .0400FT)	SWITCH POSITION
97.2	.088	3.951	3876	7.567E-05	7.872E-08	3.726E 06	3.250E-02	1.391E-02	1

TC NO	TW	DTWDT	QDOT	H(TO)	H(TO)/HREF	H(.9TO)	H(.9TO)/HREF	X/L	Z,FULL SCALE(IN)
								FUSELAGE VENT NO. 1	
1	548.1	16.321	2.166	2.703E-03	.0832	3.250E-03	.1000	.4434	376.6300
2	548.5	14.888	2.016	2.519E-03	.0775	3.029E-03	.0932	.4264	371.6300
3	545.7	13.746	1.840	2.352E-03	.0724	2.826E-03	.0870	.4303	371.6300
4	545.3	13.572	1.853	2.305E-03	.0709	2.770E-03	.0852	.4342	371.6300
5	543.7	11.778	1.575	1.955E-03	.0602	2.349E-03	.0723	.4380	371.6300
6	542.6	9.464	1.277	1.558E-03	.0479	1.871E-03	.0576	.4434	369.1300
7	541.5	9.062	1.325	1.640E-03	.0505	1.969E-03	.0606	.4226	366.6300
8	541.0	7.673	1.159	1.434E-03	.0441	1.721E-03	.0530	.4264	366.6300
9	541.6	6.742	.942	1.216E-03	.0374	1.460E-03	.0449	.4303	366.6300
10	540.2	5.271	.753	9.306E-04	.0286	1.117E-03	.0344	.4342	366.6300
11	541.3	5.495	.744	9.206E-04	.0283	1.105E-03	.0340	.4380	366.6300
12	543.9	3.454	.477	5.897E-04	.0181	7.078E-04	.0218	.4496	366.6300
13	542.4	2.448	.360	4.463E-04	.0137	5.359E-04	.0165	.4187	357.1300
14	543.5	2.945	.410	5.068E-04	.0156	6.084E-04	.0187	.4396	361.6300
15	541.1	2.615	.349	4.322E-04	.0133	5.188E-04	.0160	.4434	361.6300
16	541.7	1.614	.219	2.713E-04	.0083	3.258E-04	.0100	.4396	355.6300
17	542.9	1.334	.181	2.240E-04	.0069	2.691E-04	.0083	.4434	355.6300
18	544.3	1.200	.158	2.088E-04	.0064	2.508E-04	.0077	.4396	351.6300
19	546.5	1.030	.144	1.799E-04	.0055	2.162E-04	.0067	.4291	332.6300
								CARGO BAY VENT NO. 1	
								X/L	Z,FULL SCALE(IN)
22	540.8	9.031	1.254	1.552E-03	.0477	1.862E-03	.0573	.3974	397.6300
23	539.7	8.948	1.249	1.543E-03	.0475	1.852E-03	.0570	.4013	397.6300
24	540.0	8.475	1.147	1.417E-03	.0436	1.700E-03	.0523	.4052	397.6300
25	539.1	6.973	.918	1.133E-03	.0348	1.359E-03	.0418	.4090	397.6300
26	537.8	6.030	.791	9.742E-04	.0300	1.168E-03	.0360	.4129	397.6300
27	541.1	9.087	1.287	1.587E-03	.0482	1.881E-03	.0579	.3936	392.6300
28	541.7	7.863	1.132	1.401E-03	.0431	1.682E-03	.0518	.3974	392.6300
29	539.2	6.541	.943	1.164E-03	.0358	1.397E-03	.0430	.4013	392.6300
30	537.3	5.857	.842	1.037E-03	.0319	1.244E-03	.0383	.4052	392.6300
31	536.5	5.072	.708	8.706E-04	.0268	1.044E-03	.0321	.4090	392.6300
32	536.9	5.405	.716	8.807E-04	.0271	1.056E-03	.0325	.4129	392.6300
33	537.2	4.498	.642	7.903E-04	.0243	9.478E-04	.0292	.4090	386.1300
34	538.2	5.399	.730	8.996E-04	.0277	1.079E-03	.0332	.4129	387.6300
35	540.4	5.739	.813	1.004E-03	.0309	1.206E-03	.0371	.3897	383.1300
36	539.8	6.042	.877	1.083E-03	.0333	1.300E-03	.0400	.4090	378.6300
37	538.9	6.109	.859	1.060E-03	.0326	1.271E-03	.0391	.4129	382.1300
38	541.3	8.605	1.210	1.484E-03	.0457	1.782E-03	.0548	.4129	377.1300
39	542.4	7.474	1.043	1.354E-03	.0417	1.626E-03	.0500	.4001	373.6300
								PROTUBERANCES	
								X/L	Z,FULL SCALE(IN)
41	541.4	9.771	1.310	1.621E-03	.0499	1.946E-03	.0599	.3546	379.0500
42	545.2	11.716	1.665	1.996E-03	.0614	2.398E-03	.0738	.3604	379.0500
43	538.6	5.692	.739	9.114E-04	.0280	1.093E-03	.0336	.3450	374.0500

DATE 5/12/75

AEDC(ARO,INC.) ARNOLD AFS, TENNESSEE
VON KARMAN GAS DYNAMICS FACILITY
50 INCH HYPERSONIC TUNNEL B
V418-B7A

GROUP	TEST CONDITION	MODEL	MACH NO	PO,PSIA	TO,DEG R	ALPHA-MODEL	ALPHA-SECTOR	ALPHA-PREBEND	ROLL MODEL	YAW
105	38	140 B	8.00	861.0	1349	25.08	4.92	30.00	179.94	-.0

T-INF (DEG R)	P-INF (PSIA)	Q-INF (PSIA)	V-INF (FT/SEC)	RHO-INF. (SLUGS/FT3)	MU-INF (LB-SEC/FT2)	RE/FT (FT-1)	HREF-FR (R= .0400FT)	STFR (R= .0400FT)	SWITCH POSITION
97.8	.048	3.951	3876	7.567E-05	7.872E-08	3.726E 06	3.250E-02	1.391E-02	1

IC NO	TW	DT*DT	QDOT	H(TO)	H(TO)/HREF	H(.9TO)	H(.9TO)/HREF
44	542.4	10.214	1.393	1.726E-03	.0531	2.072E-03	.0638
45	545.9	11.631	1.615	2.010E-03	.0618	2.415E-03	.0743
46	544.9	11.073	1.551	1.928E-03	.0593	2.317E-03	.0713
47	546.5	6.641	.894	1.093E-03	.0336	1.312E-03	.0404
48	547.2	11.247	1.547	1.929E-03	.0594	2.319E-03	.0714
49	543.[illegible]	9.789	1.337	1.658E-03	.0510	1.992E-03	.0613
50	551.1	15.192	2.121	2.657E-03	.0818	3.198E-03	.0984
51	552.6	16.045	2.192	2.752E-03	.0847	3.313E-03	.1019
52	552.3	13.612	1.884	2.363E-03	.0727	2.845E-03	.0875
53	548.6	11.693	1.715	2.142E-03	.0659	2.576E-03	.0793
54	537.1	5.861	.836	1.030E-03	.0317	1.235E-03	.0380
55	547.9	10.813	1.551	1.935E-03	.0596	2.327E-03	.0716
						PROTUBERANCES	
						X/L	Z,FULL SCALE(IN)
56	536.1	4.467	.575	7.071E-04	.0218	8.478E-04	.0261
57	536.3	3.036	.378	4.648E-04	.0143	5.573E-04	.0171
58	538.9	4.382	.579	7.140E-04	.0220	8.567E-04	.0264
59	542.7	5.959	.785	9.728E-04	.0299	1.168E-03	.0359
60	541.7	5.228	.729	9.026E-04	.0278	1.084E-03	.0333
61	539.9	3.871	.491	6.002E-04	.0187	7.275E-04	.0224
62	536.5	2.725	.334	4.107E-04	.0126	4.925E-04	.0152
63	537.1	4.839	.632	7.782E-04	.0239	9.332E-04	.0287
64	[illegible]	[illegible]	[illegible]	[illegible]	[illegible]	[illegible]	[illegible]
65	537.3	5.066	.770	9.488E-04	.0292	1.138E-03	.0350
66	536.7	4.153	.524	6.445E-04	.0198	7.728E-04	.0238
67	539.2	3.651	.513	6.336E-04	.0195	7.602E-04	.0234
68	541.2	5.237	.664	8.220E-04	.0253	9.867E-04	.0304
						SUBLIMATOR VENT NO. 1	
						X/L	Z,FULL SCALE(IN)
						.3031	371.1300
						.3074	369.1300
						.3089	363.6300
						.3074	358.1300
						.3031	356.1300
						.2988	358.1300
						.2973	363.6300
						.2988	369.1300
						.3031	376.1300
						.3089	378.6300
						.3101	372.6300
						.3157	370.3800
						.3128	363.6300

DATE 5/12/75

AEDC(ARO,INC.) ARNOLD AFS, TENNESSEE
VON KARMAN GAS DYNAMICS FACILITY
50 INCH HYPERSONIC TUNNEL B
V418-B7A

GROUP	TEST CONDITION	MODEL	MACH NO	PO,PSIA	TO,DEG R	ALPHA-MODEL	ALPHA-SECTOR	ALPHA-PREBEND	ROLL MODEL	YAW
105	38	140 B	8.00	861.0	1349	25.08	4.92	30.00	179.94	-.0

T-INF (DEG R)	P-INF (PSIA)	Q-INF (PSIA)	V-INF (FT/SEC)	RHO-INF (SLUGS/FT3)	MU-INF (LB-SEC/FT2)	RE/FT (FT-1)	HREF-FR (R= .0400FT)	STFR (R= .0400FT)	SWITCH POSITION
97.8	.088	3.551	3876	7.567E-05	7.872E-08	3.726E 06	3.250E-02	1.391E-02	1

TC NO	TW	DTWDT	QDOT	H(TO)	H(TO)/HREF	H(.9TO)	H(.9TO)/HREF
FUSELAGE VENT PANEL NO. 7							
69	536.5	6.721	.938	1.154E-03	.0355	1.363E-03	.0426
70	535.0	5.922	.735	8.918E-04	.0274	1.069E-03	.0329
71	535.7	6.962	.939	1.159E-03	.0357	1.390E-03	.0428
72	536.4	5.920	.839	1.032E-03	.0318	1.238E-03	.0381
73	536.6	5.383	.698	8.590E-04	.0264	1.030E-03	.0317
74	537.2	5.352	.649	7.987E-04	.0246	9.579E-04	.0295
75	538.2	5.111	.695	8.571E-04	.0264	1.028E-03	.0316
77	537.3	3.312	.470	5.784E-04	.0178	6.936E-04	.0213
78	537.7	3.415	.469	5.780E-04	.0178	6.933E-04	.0213
79	540.4	3.939	.545	6.239E-04	.0192	7.488E-04	.0230
80	539.1	3.342	.456	5.633E-04	.0173	6.758E-04	.0208
81	540.2	4.775	.667	8.249E-04	.0254	9.900E-04	.0305
ACCESS HATCH WINDOW							
83	533.5	8.295	1.107	1.357E-03	.0418	1.626E-03	.0500
84	537.2	11.477	1.515	1.865E-03	.0574	2.236E-03	.0688
85	536.4	12.539	1.719	2.104E-03	.0647	2.522E-03	.0776
87	531.9	7.594	1.084	1.326E-03	.0408	1.588E-03	.0489
88	535.7	11.738	1.642	2.018E-03	.0621	2.419E-03	.0745
89	538.4	13.462	1.982	2.445E-03	.0752	2.932E-03	.0902
90	536.0	11.400	1.554	1.911E-03	.0588	2.291E-03	.0705
91	538.2	14.298	1.953	2.421E-03	.0745	2.904E-03	.0893
92	542.2	17.880	2.534	3.139E-03	.0966	3.769E-03	.1160
93	537.8	12.023	1.539	1.896E-03	.0583	2.274E-03	.0700
94	540.7	15.292	1.994	2.466E-03	.0759	2.960E-03	.0911
95	542.7	17.432	2.487	3.082E-03	.0948	3.702E-03	.1139
96	537.4	9.951	1.295	1.596E-03	.0491	1.914E-03	.0589
97	539.7	12.937	1.657	2.047E-03	.0630	2.456E-03	.0756
99	541.5	14.899	2.097	2.596E-03	.0799	3.116E-03	.0959
100	540.2	10.958	1.562	1.930E-03	.0594	2.316E-03	.0713
102	543.2	12.420	1.761	2.184E-03	.0672	2.624E-03	.0807
103	542.1	13.441	1.772	2.195E-03	.0675	2.636E-03	.0811
105	540.3	12.774	1.672	1.981E-03	.0609	2.377E-03	.0731
106	537.2	11.438	1.468	1.808E-03	.0556	2.168E-03	.0667

	X/L	Z,FULL SCALE(IN)
FUSELAGE VENT PANEL NO. 7		
69	.2487	356.4000
70	.2591	356.4000
71	.2419	351.4000
72	.2487	351.4000
73	.2552	351.4000
74	.2610	351.4000
75	.2419	342.8000
77	.2552	342.8000
78	.2610	342.8000
79	.2419	334.2000
80	.2487	334.2000
81	.2552	334.2000
ACCESS HATCH WINDOW		
83	.2131	398.0000
84	.2131	388.0000
85	.2131	383.0000
87	.2222	395.8000
88	.2193	386.5000
89	.2177	381.8000
90	.2297	389.5000
91	.2243	382.5000
92	.2214	378.7000
93	.2343	374.0000
94	.2274	375.5000
95	.2239	373.3000
96	.2363	368.0000
97	.2286	368.0000
99	.2247	368.0000
100	.2274	360.5000
102	.2081	354.3000
103	.2023	362.7000
105	.2050	378.7000
106	.2050	386.2000

GROUP 105 CENTERLINE TIME 2.45

CH	TC	FIT LENGTH	DTD*T	UNCERTAINTY	CH	TC	FIT LENGTH	DTD*T	UNCERTAINTY
1	1	.40	16.321	.0052	50	53	.40	11.693	.0176
2	2	.40	14.888	.0055	51	54	.60	5.861	.0144
3	3	.40	13.774	.0108	52	55	.40	10.813	.0140
4	4	.40	13.572	.0098	53	56	.60	4.467	.0126
5	5	.40	11.778	.0195	54	57	.80	3.096	.0129
6	6	.40	9.468	.0057	55	58	.60	4.382	.0136
7	7	.40	9.062	.0718	56	59	.60	5.950	.0321
8	8	.60	7.673	.0044	57	60	.60	5.228	.0069
9	9	.60	6.742	.0101	58	61	.80	3.871	.0082
10	10	.60	5.371	.0104	59	62	.80	2.725	.0169
11	11	.60	5.435	.0152	60	63	.60	4.839	.0102
12	12	.80	3.454	.0148	61	64	2.00	.005	3.8850
13	13	.60	2.448	.0109	62	65	.60	5.666	.0064
14	14	.80	2.998	.0156	63	66	.60	4.153	.0159
15	15	.80	2.615	.0259	64	67	.80	3.651	.0132
16	16	1.20	1.818	.0113	65	68	.60	5.237	.0106
17	17	1.20	1.334	.0257	66	69	.60	6.721	.0089
18	18	1.20	1.200	.0150	67	70	.60	5.922	.0056
19	19	1.20	1.030	.0203	68	71	.60	6.902	.0599
20	22	.40	9.030	.0134	69	72	.60	5.920	.0290
21	23	.40	8.940	.0058	70	73	.60	5.383	.0110
22	24	.40	8.476	.0112	71	74	.60	5.352	.0130
23	25	.60	6.973	.0178	72	75	.60	5.111	.0100
24	26	.60	6.030	.0216	73	77	.80	3.312	.0082
25	27	.40	9.087	.0177	74	78	.80	3.415	.0115
26	28	.60	7.863	.0075	75	79	.80	3.939	.0104
27	29	.60	6.541	.0111	76	80	.80	3.342	.0167
28	30	.60	5.867	.0063	77	81	.60	4.775	.0122
29	31	.60	5.072	.0077	78	83	.40	8.295	.0099
30	32	.60	5.405	.0092	79	84	.40	11.477	.0368
31	33	.60	4.468	.0094	80	85	.40	12.539	.0073
32	34	.60	5.399	.0074	81	87	.60	7.594	.0079
33	35	.60	5.739	.0069	82	88	.40	11.738	.0051
34	36	.60	6.042	.0072	83	89	.40	13.462	.0167
35	37	.60	6.108	.0045	84	90	.40	11.400	.0081
36	38	.40	8.605	.0070	85	91	.40	14.290	.0036
37	39	.60	7.474	.0069	86	92	.30	17.880	.0058
38	41	.40	9.771	.0116	87	93	.40	12.023	.0153
39	42	.40	11.716	.0079	88	94	.40	15.292	.0052
40	43	.60	5.692	.0134	89	95	.30	17.432	.0087
41	44	.40	10.214	.0078	90	96	.40	9.951	.0343
42	45	.40	11.631	.0115	91	97	.40	12.937	.0148
43	46	.40	11.073	.0148	92	98	.40	14.899	.0122
44	47	.60	6.941	.0089	93	100	.40	10.998	.0080
45	48	.40	11.247	.0079	94	102	.40	12.420	.0095
46	49	.40	9.705	.0121	95	103	.40	13.441	.0127
47	50	.40	15.192	.0093	96	105	.40	12.774	.0092
48	51	.40	16.045	.0046	97	106	.40	11.438	.0053
49	52	.40	13.612	.0059	98	0	-0	0	0
105		.050							

BIT ON LOOP 58

DATE 5/12/75

AEDC(ARO,INC.) ARNOLD AFS, TENNESSEE
VON KARMAN GAS DYNAMICS FACILITY
50 INCH HYPERSONIC TUNNEL B
V41B-87A

GROUP	TEST CONDITION	MODEL	MACH NO	PO,PSIA	TO,DEG R	ALPHA-MODEL	ALPHA-SECTOR	ALPHA-PREBEND	ROLL MODEL	YAW
106	3F	140 B	8.00	862.0	1349	25.00	5.00	30.00	179.94	-.0

T-INF (DEG R)	P-INF (PSIA)	Q-INF (PSIA)	V-INF (FT/SEC)	RHO-INF (SLUGS/FT3)	MU-INF (LB-SEC/FT2)	RE/FT (FT-1)	HREF-FR (R= .0400FT)	STFR (R= .0400FT)	SWITCH POSITION
97.7	.038	3.556	3875	7.580E-05	7.863E-08	3.733E 06	3.251E-02	1.390E-02	2

PC NO	TS	DTWDT	QDCT	H(TO)	H(TO)/HREF	H(.9TO)	H(.9TO)/HREF	X/L	Z,FULL SCALE(IN)
								ACCESS HATCH WINDOW	
107	533.5	7.020	1.007	1.235E-03	.0380	1.480E-03	.0455	.2050	396.2000
								FUSELAGE VENT PANEL NO. 3 AND 1	
								X/L	Z,FULL SCALE(IN)
108	535.4	7.758	.822	1.010E-03	.0311	1.211E-03	.0373	.1244	377.5000
109	533.1	6.841	.852	1.045E-03	.0321	1.252E-03	.0385	.1302	377.5000
110	533.4	6.745	.855	1.048E-03	.0322	1.256E-03	.0386	.1360	377.5000
111	533.5	6.712	.859	9.930E-04	.0305	1.190E-03	.0366	.1418	377.5000
112	534.5	7.134	.848	1.042E-03	.0321	1.249E-03	.0384	.1476	377.5000
113	534.9	7.554	.869	1.067E-03	.0328	1.279E-03	.0394	.1215	273.5000
114	534.1	6.855	.825	1.013E-03	.0312	1.214E-03	.0373	.1273	273.5000
115	534.0	6.557	.814	9.993E-04	.0307	1.198E-03	.0368	.1331	273.5000
116	534.0	6.502	.799	9.802E-04	.0301	1.175E-03	.0361	.1389	273.5000
117	536.2	7.107	.820	1.009E-03	.0310	1.210E-03	.0372	.1447	273.5000
118	535.3	5.832	.808	9.933E-04	.0305	1.191E-03	.0366	.1409	366.0000
119	536.9	6.811	.843	1.088E-03	.0335	1.305E-03	.0401	.1442	366.0000
120	537.6	6.855	.859	1.059E-03	.0326	1.271E-03	.0391	.1215	359.5000
121	537.2	6.086	.749	9.225E-04	.0284	1.106E-03	.0340	.1303	359.5000
122	537.9	6.241	.779	9.610E-04	.0296	1.153E-03	.0355	.1337	359.5000
								LOWER RCS NOZZLES	
								X/L	Z,FULL SCALE(IN)
124	532.7	4.897	.437	5.357E-04	.0165	6.418E-04	.0197	.0950	400.0000
125	531.4	5.118	.557	6.814E-04	.0210	8.161E-04	.0251	.0988	400.0000
126	531.5	4.883	.669	8.181E-04	.0252	9.798E-04	.0301	.1027	400.0000
127	532.0	4.896	.659	8.068E-04	.0248	9.664E-04	.0297	.0911	395.0000
128	531.6	5.215	.633	7.743E-04	.0238	9.273E-04	.0285	.0950	395.0000
129	532.5	6.025	.787	8.664E-04	.0266	1.038E-03	.0319	.0988	395.0000
130	534.9	5.554	.695	8.173E-04	.0251	9.796E-04	.0301	.0810	390.0000
131	532.8	5.205	.769	9.427E-04	.0290	1.129E-03	.0347	.0857	390.0000
132	534.4	7.872	.918	1.127E-03	.0347	1.351E-03	.0415	.0963	390.0000
133	533.7	5.827	.708	8.684E-04	.0267	1.041E-03	.0320	.0857	383.8000
134	532.7	6.737	.902	1.105E-03	.0340	1.324E-03	.0407	.0872	377.3000
135	534.1	8.582	1.031	1.266E-03	.0389	1.517E-03	.0467	.0903	374.5500
136	534.9	8.941	.995	1.222E-03	.0376	1.465E-03	.0451	.0960	374.5500
137	534.3	8.324	1.069	1.338E-03	.0411	1.603E-03	.0493	.0872	370.5500
138	535.2	9.166	1.057	1.299E-03	.0400	1.557E-03	.0479	.0928	370.5500
139	536.4	8.535	1.072	1.344E-03	.0413	1.611E-03	.0496	.0816	366.0500
140	536.4	8.635	1.100	1.355E-03	.0417	1.624E-03	.0500	.0934	362.4000
141	536.4	7.772	1.029	1.266E-03	.0389	1.518E-03	.0467	.0973	362.4000
142	538.2	6.415	.763	8.642E-04	.0266	1.037E-03	.0319	.0833	355.2000
143	538.1	9.576	.964	1.190E-03	.0366	1.427E-03	.0439	.0919	355.2000
144	540.4	10.726	1.418	1.754E-03	.0539	2.105E-03	.0648	.0949	349.0000

DATE 5/12/75

AEDC(ARO,INC.) ARNOLD AFS, TENNESSEE
VON KARMAN GAS DYNAMICS FACILITY
50 INCH HYPERSONIC TUNNEL B
V41B-87A

GROUP	TEST CONDITION	MODEL	MACH NO	PO,PSIA	TO,DEG R	ALPHA-MODEL	ALPHA-SECTOR	ALPHA-PREBEND	ROLL MODEL	YAW
106	38	140 B	8.00	862.0	1349	25.00	5.00	30.00	179.94	-.0

T-INF (DEG R)	P-INF (PSIA)	Q-INF (PSIA)	V-INF (FT/SEC)	RHO-INF (SLUGS/FT3)	MU-INF (LB-SEC/FT2)	RE/FT (FT-1)	HREF-FR (R= .0400FT)	STFR (R= .0400FT)	SWITCH POSITION
97.7	.086	3.955	3875	7.580E-05	7.868E-08	3.733E 06	3.251E-02	1.390E-02	2

IC	RC	TW	DTWDT	RDOT	H(TO)	H(TO)/HREF	H(.9TO)	H(.9TO)/HREF	X/L	2Y/B
									UPPER RCS NOZZLES	
161		537.6	3.813	.452	5.574E-04	.0171	6.685E-04	.0206	.0619	-.0160
162		536.8	3.925	.372	4.584E-04	.0141	5.498E-04	.0169	.0709	-.0160
163		533.7	2.481	.305	3.739E-04	.0115	4.480E-04	.0138	.0807	-.0160
164		532.2	1.976	.257	3.153E-04	.0097	3.777E-04	.0116	.0943	-.0160
165		532.1	1.557	.196	2.359E-04	.0074	2.873E-04	.0088	.0978	-.0160
166		532.1	1.353	.173	2.121E-04	.0065	2.541E-04	.0078	.1013	-.0160
167		537.3	3.347	.454	5.590E-04	.0172	6.765E-04	.0206	.0619	-.0320
168		536.6	3.518	.370	4.552E-04	.0140	5.459E-04	.0168	.0709	-.0320
169		533.1	2.500	.304	3.722E-04	.0114	4.459E-04	.0137	.0807	-.0320
170		531.6	2.161	.270	3.304E-04	.0102	3.957E-04	.0122	.0943	-.0320
171		531.3	2.268	.273	3.341E-04	.0103	4.002E-04	.0123	.0978	-.0320
172		530.7	1.702	.222	2.710E-04	.0083	3.245E-04	.0100	.1013	-.0320
173		533.8	2.699	.360	4.422E-04	.0136	5.299E-04	.0163	.0807	-.0480
174		531.1	2.040	.232	2.837E-04	.0087	3.398E-04	.0105	.0943	-.0480
175		530.5	1.743	.250	3.059E-04	.0094	3.663E-04	.0113	.0978	-.0480
176		530.4	1.505	.205	2.500E-04	.0077	2.993E-04	.0092	.1013	-.0480
									CANOPY	
177		542.8	11.882	1.642	2.037E-03	.0626	2.446E-03	.0752		
178		549.3	22.728	4.500	5.629E-03	.1731	6.771E-03	.2083		
179		556.9	30.508	6.464	8.164E-03	.2511	9.841E-03	.3027		
180		533.2	6.457	1.116	1.366E-03	.0420	1.639E-03	.0504		
181		544.1	14.950	2.040	2.536E-03	.0780	3.046E-03	.0937		
182		552.5	29.878	4.292	5.378E-03	.1654	6.471E-03	.1990		
183		530.5	2.388	.299	3.655E-04	.0112	4.377E-04	.0135		
184		531.0	2.865	.353	4.681E-04	.0144	5.606E-04	.0172		
185		536.2	5.230	.629	7.742E-04	.0238	9.283E-04	.0286		
186		542.1	12.692	1.599	1.983E-03	.0610	2.381E-03	.0732		
187		554.7	29.799	4.007	5.047E-03	.1552	6.080E-03	.1870		
188		545.0	20.711	4.846	6.029E-03	.1854	7.245E-03	.2228		
189		535.7	5.716	.815	1.003E-03	.0308	1.202E-03	.0370		
190		542.1	14.073	2.032	2.519E-03	.0775	3.025E-03	.0930		
191		550.2	28.155	4.336	5.429E-03	.1670	6.533E-03	.2009		

DATE 5/12/75

AEDC(ARO,INC.) ARNOLD AFS, TENNESSEE
VON KARMAN GAS DYNAMICS FACILITY
50 INCH HYPERSONIC TUNNEL B
V41B-B/A

GROUP	TEST CONDITION	MODEL	MACH NO	Po,PSIA	To,DEG R	ALPHA-MODEL	ALPHA-SECTOR	ALPHA-PREBEND	ROLL MODEL	YAW
136	38	140 H	8.00	862.0	1349	25.00	5.00	30.00	179.94	-.0

T-INF (DEG R)	P-INF (PSIA)	Q-INF (PSIA)	V-INF (FT/SEC)	RHO-INF (SLUGS/FT3)	MU-INF (LB-SEC/FT2)	RE/FT (FT-1)	HREF-FR (R= .0400FT)	STFR (R= .0400FT)	SWITCH POSITION
97.7	.088	3.955	3875	7.580E-05	7.868E-08	3.733E 06	3.251E-02	1.390E-02	2

IC NO	TW	DIMPT	QDOT	H(TO)	H(TO)/HREF	H(.9TO)	H(.9TO)/HREF
						CANOPY	
192	540.5	2.705	.381	4.657E-04	.0143	5.576E-04	.0171
193	541.3	17.935	3.475	4.292E-03	.1320	5.152E-03	.1585
194	533.5	6.623	.855	1.049E-03	.0323	1.257E-03	.0387
195	542.0	15.783	1.953	2.421E-03	.0745	2.907E-03	.0894
196	548.2	24.553	3.248	4.060E-03	.1249	4.884E-03	.1502
197	527.7	1.561	.154	1.879E-04	.0058	2.248E-04	.0069
198	527.7	1.345	.231	2.812E-04	.0086	3.365E-04	.0104
199	530.2	2.943	.395	4.823E-04	.0148	5.775E-04	.0178
200	534.1	7.117	1.014	1.244E-03	.0383	1.491E-03	.0459
201	545.3	23.639	3.355	4.176E-03	.1284	5.018E-03	.1543
202	542.7	18.418	2.338	2.901E-03	.0892	3.484E-03	.1071
203	528.0	2.183	.271	3.292E-04	.0101	3.939E-04	.0121
204	530.7	3.902	.605	7.401E-04	.0228	8.862E-04	.0273
205	539.0	16.264	2.541	3.139E-03	.0965	3.766E-03	.1158
206	536.7	.770	.102	1.237E-04	.0038	1.480E-04	.0046
207	536.8	12.441	1.659	2.056E-03	.0632	2.466E-03	.0758
208	527.1	1.598	.214	2.605E-04	.0080	3.117E-04	.0096
209	527.4	2.757	.378	4.602E-04	.0142	5.506E-04	.0169
210	529.0	3.925	.523	6.377E-04	.0196	7.633E-04	.0235
211	525.9	1.115	.135	1.640E-04	.0050	1.962E-04	.0060
212	526.7	1.029	.138	1.681E-04	.0052	2.011E-04	.0062
213	527.6	2.659	.352	4.281E-04	.0132	5.123E-04	.0158
214	529.5	5.129	.718	8.759E-04	.0269	1.049E-03	.0322
215	530.4	5.553	.787	9.620E-04	.0296	1.152E-03	.0354
216	532.7	8.364	1.187	1.455E-03	.0447	1.743E-03	.0536
217	533.6	7.604	1.083	1.329E-03	.0409	1.592E-03	.0490
218	527.2	2.946	.405	4.931E-04	.0152	5.900E-04	.0181
219	530.4	5.262	.739	9.030E-04	.0278	1.081E-03	.0333
220	531.3	8.107	1.114	1.362E-03	.0419	1.632E-03	.0502

GROUP 106 CENTERLINE TIME 2.85

CH	TC	FIT LENGTH	DTDWT	UNCERTAINTY	CH	TC	FIT LENGTH	DTDWT	UNCERTAINTY
1	107	.60	7.026	.0078	50	173	.80	2.699	.0219
2	108	.60	7.758	.0065	51	174	.60	2.040	.0205
3	109	.60	6.891	.0060	52	175	1.20	1.748	.0186
4	110	.60	6.745	.0057	53	176	1.20	1.505	.0110
5	111	.60	6.712	.0103	54	177	.40	11.882	.0122
6	112	.60	7.138	.0053	55	178	.30	22.728	.0055
7	113	.60	7.564	.0055	56	179	.30	30.508	.0225
8	114	.60	6.869	.0069	57	180	.40	8.457	.0152
9	115	.60	6.557	.0170	58	181	.40	14.950	.0055
10	116	.60	6.582	.0057	59	182	.30	29.878	.0053
11	117	.60	7.107	.0155	60	183	.80	2.388	.0105
12	118	.60	5.832	.0120	61	184	.80	2.805	.0212
13	119	.60	6.811	.0101	62	185	.60	5.230	.0095
14	120	.60	6.859	.0063	63	186	.40	12.692	.0069
15	121	.60	6.086	.0086	64	187	.30	29.799	.0033
16	122	.60	6.241	.0078	65	188	.30	20.711	.0060
17	124	.60	4.897	.0156	66	189	.60	5.716	.0113
18	125	.60	5.118	.0083	67	190	.40	14.073	.0086
19	126	.60	4.883	.0113	68	191	.30	28.155	.0233
20	127	.60	4.880	.0129	69	192	.80	2.705	.0332
21	128	.60	5.215	.0090	70	193	.30	17.935	.0087
22	129	.60	6.025	.0052	71	194	.60	6.623	.0102
23	130	.60	5.554	.0129	72	195	.40	15.780	.0061
24	131	.60	5.216	.0104	73	196	.30	24.553	.0064
25	132	.60	7.872	.0071	74	197	1.20	1.561	.0134
26	133	.60	5.827	.0068	75	198	.80	1.995	.0201
27	134	.60	6.737	.0072	76	199	.80	2.943	.0184
28	135	.40	8.582	.0109	77	200	.60	7.117	.0065
29	136	.40	8.441	.0064	78	201	.30	23.639	.0038
30	137	.40	8.324	.0075	79	202	.30	18.418	.0318
31	138	.40	9.166	.0057	80	203	.80	2.183	.0122
32	139	.40	8.536	.0090	81	204	.80	3.902	.0084
33	140	.40	8.635	.0114	82	205	.30	16.264	.0058
34	141	.60	7.772	.0064	83	206	2.00	.770	.0227
35	142	.60	6.415	.0072	84	207	.40	12.441	.0078
36	143	.40	9.576	.0093	85	208	1.20	1.598	.0107
37	144	.40	10.726	.0049	86	209	.80	2.757	.0154
38	161	.60	3.813	.0133	87	210	.80	3.925	.0209
39	162	.80	3.926	.0091	88	211	1.20	1.115	.0157
40	163	.80	2.481	.0222	89	212	1.20	1.029	.0241
41	164	1.20	1.976	.0091	90	213	.80	2.659	.0570
42	165	1.20	1.557	.0107	91	214	.60	5.129	.0174
43	166	1.20	1.353	.0246	92	215	.60	5.553	.0262
44	167	.80	3.347	.0100	93	216	.40	8.364	.0121
45	168	.80	3.518	.0315	94	217	.60	7.604	.0082
46	169	.80	2.510	.0175	95	218	.80	2.946	.0189
47	170	.80	2.161	.0371	96	219	.60	5.262	.0120
48	171	.80	2.268	.0135	97	220	.40	8.107	.0097
49	172	1.20	1.712	.0125	98	0	-0	0	0
	107	.050							

BIT ON LOOP 59

DATE 5/12/75

AEDC(ARO,INC.) ARNOLD AFS, TENNESSEE
VON KARMAN GAS DYNAMICS FACILITY
50 INCH HYPERSONIC TUNNEL B
V41B-87A

GROUP	TEST CONDITION	MODEL	MACH NO	PO,PSIA	TO,DEG R	ALPHA-MODEL	ALPHA-SECTOR	ALPHA-PREBEND	ROLL MODEL	YAW
187	35	140 B	8.00	859.9	1347	25.07	4.93	30.00	179.94	-.0

T-INF (DEG R)	P-INF (PSIA)	Q-INF (PSIA)	V-INF (FT/SEC)	RHO-INF (SLUGS/FT3)	MU-INF (LB-SEC/FT2)	RE/FT (FT-1)	HREF-FR (R= .0400FT)	STFR (R= .0400FT)	SWITCH POSITION
97.6	.188	3.946	3874	7.568E-05	7.861E-08	3.729E 06	3.247E-02	1.391E-02	3

TC NO	TW	DIWDT	QDOT	H(TO)	H(TO)/HREF	H(.9TO)	H(.9TO)/HREF	X/L	2Y/B
								CANOPY	
221	525.8	1.028	.124	1.508E-04	.0046	1.804E-04	.0056		
222	525.9	1.817	.223	2.714E-04	.0084	3.247E-04	.0100		
223	527.5	6.206	.840	1.024E-03	.0315	1.226E-03	.0377		
								ESCAPE HATCH AND WINDOW	
								X/L	2Y/B
224	536.1	9.221	.919	1.133E-03	.0349	1.359E-03	.0418	.1933	.0162
225	534.0	5.665	.678	8.336E-04	.0257	9.991E-04	.0308	.1972	.0162
226	535.9	11.793	1.244	1.533E-03	.0472	1.838E-03	.0566	.1933	.0384
227	532.0	7.230	1.058	1.297E-03	.0400	1.554E-03	.0479	.1972	.0384
228	533.2	12.555	1.615	1.984E-03	.0611	2.378E-03	.0732	.1933	.0653
229	533.3	9.707	1.248	1.533E-03	.0472	1.837E-03	.0566	.1972	.0653
232	527.5	.516	.070	8.493E-05	.0026	1.016E-04	.0031	.2567	.0235
233	528.1	.634	.096	1.172E-04	.0036	1.402E-04	.0043	.2606	.0235
234	526.4	.325	.047	5.772E-05	.0018	6.905E-05	.0021	.2567	.0491
237	526.7	.404	.057	6.875E-05	.0021	8.249E-05	.0025	.2606	.0491
								CARGO BAY HINGE NO. 1	
								X/L	Z,FULL SCALE(IN)
238	533.2	5.568	.746	9.158E-04	.0282	1.097E-03	.0338	.2879	420.0000
239	533.5	5.866	.786	9.654E-04	.0297	1.157E-03	.0356	.2917	420.0000
240	533.0	5.162	.737	9.053E-04	.0279	1.085E-03	.0334	.2840	415.0000
241	534.9	6.373	.897	1.104E-03	.0340	1.323E-03	.0408	.2879	415.0000
242	536.1	7.308	1.046	1.289E-03	.0397	1.545E-03	.0476	.2917	415.0000
243	534.6	5.582	.623	8.404E-04	.0259	1.007E-03	.0310	.2801	405.0000
244	533.6	4.483	.524	6.444E-04	.0198	7.722E-04	.0238	.2840	405.0000
								CARGO BAY HINGE NO. 2	
								X/L	Z,FULL SCALE(IN)
245	534.6	5.357	.766	9.421E-04	.0290	1.129E-03	.0348	.3192	420.0000
246	535.0	5.616	.813	9.882E-04	.0304	1.185E-03	.0365	.3439	420.0000
247	535.0	5.492	.810	9.967E-04	.0307	1.195E-03	.0368	.3362	415.0000
248	535.9	6.063	.894	1.102E-03	.0339	1.321E-03	.0407	.3401	415.0000
249	537.7	7.014	1.036	1.279E-03	.0394	1.534E-03	.0472	.3439	415.0000
250	537.5	5.734	.721	8.699E-04	.0274	1.067E-03	.0329	.3323	405.0000
251	536.3	5.782	.711	8.713E-04	.0270	1.052E-03	.0324	.3362	405.0000
								CARGO BAY HINGE NO. 3	
								X/L	Z,FULL SCALE(IN)
252	534.7	4.895	.711	8.744E-04	.0269	1.048E-03	.0323	.3923	420.0000
253	535.3	5.643	.820	1.009E-03	.0311	1.210E-03	.0373	.3961	420.0000
254	534.9	4.683	.711	8.755E-04	.0270	1.050E-03	.0323	.3884	415.0000
257	537.2	5.352	.723	8.923E-04	.0275	1.070E-03	.0330	.3845	405.0000
258	537.4	5.695	.777	9.592E-04	.0295	1.151E-03	.0354	.3884	405.0000

DATE 5/12/75

AEDC(ARO,INC.) ARNOLD AFS, TENNESSEE
VON KARMAN GAS DYNAMICS FACILITY
50 INCH HYPERSONIC TUNNEL B
V41R-B7A

GROUP	TEST CONDITION	MODEL	MACH NO	PO,PSIA	TO,DEG R	ALPHA-MODEL	ALPHA-SECTOR	ALPHA-PREBEND	ROLL MODEL	YAW
107	38	140 B	8.00	859.9	1347	25.07	4.93	30.00	179.94	-.0

T-INF (DEG R)	P-INF (PSIA)	Q-INF (PSIA)	V-INF (FT/SEC)	RHO-INF (SLUGS/FT3)	MU-INF (LB-SEC/FT2)	RE/FT (FT-1)	HREF-FR (R= .0400FT)	STFR (R= .0400FT)	SWITCH POSITION
97.6	.088	3.946	3874	7.568E-05	7.861E-08	3.729E 06	3.247E-02	1.391E-02	3

TOP CENTERLINE

TC NO	TW	DTWDT	QDOT	H(TO)	H(TO)/HREF	H(.9TO)	H(.9TO)/HREF	X/L
367	620.5	117.936	14.461	1.939E-02	.6127	2.442E-02	.7521	0
368	565.7	90.120	11.730	1.540E-02	.4742	1.871E-02	.5761	.0008
369	563.8	59.696	7.090	9.047E-03	.2786	1.093E-02	.3365	.0019
370	552.5	42.163	5.189	6.527E-03	.2010	7.859E-03	.2421	.0037
371	549.9	34.537	3.485	4.269E-03	.1315	5.137E-03	.1582	.0058
372	544.2	24.703	3.194	3.976E-03	.1224	4.777E-03	.1471	.0087
373	540.0	15.741	2.066	2.558E-03	.0788	3.071E-03	.0946	.0118
374	539.7	12.808	1.681	2.081E-03	.0641	2.497E-03	.0769	.0151
375	538.0	10.190	1.395	1.724E-03	.0531	2.068E-03	.0637	.0182
376	539.3	8.794	1.162	1.437E-03	.0443	1.725E-03	.0531	.0215
377	539.4	7.871	1.015	1.256E-03	.0387	1.507E-03	.0464	.0246
378	540.3	7.115	.832	1.031E-03	.0317	1.237E-03	.0381	.0278
379	537.7	4.085	.503	6.207E-04	.0191	7.446E-04	.0229	.0609
380	536.0	3.410	.351	4.321E-04	.0133	5.181E-04	.0160	.0646
381	535.0	3.229	.418	5.149E-04	.0159	6.173E-04	.0190	.0684
382	533.5	2.632	.344	4.229E-04	.0130	5.068E-04	.0156	.0721
383	532.6	2.477	.332	4.069E-04	.0125	4.876E-04	.0150	.0760
384	532.0	2.308	.321	3.939E-04	.0121	4.719E-04	.0145	.0796
385	531.6	2.051	.264	3.230E-04	.0099	3.869E-04	.0119	.0789
386	531.9	1.834	.217	2.659E-04	.0082	3.185E-04	.0098	.0982
387	532.0	1.858	.228	2.795E-04	.0086	3.349E-04	.0103	.1019
388	532.3	1.925	.183	2.244E-04	.0069	2.688E-04	.0083	.1160
389	531.2	1.572	.228	2.791E-04	.0086	3.343E-04	.0103	.1195
390	530.8	1.389	.219	2.677E-04	.0082	3.205E-04	.0099	.1231
391	530.3	1.170	.186	2.278E-04	.0070	2.728E-04	.0084	.1268
392	530.3	1.050	.180	2.200E-04	.0068	2.634E-04	.0081	.1305
393	530.2	1.040	.176	2.151E-04	.0066	2.575E-04	.0079	.1338
394	530.5	.996	.167	2.044E-04	.0063	2.448E-04	.0075	.1376
395	530.3	.928	.139	1.695E-04	.0052	2.030E-04	.0063	.1411
396	530.7	.952	.141	1.725E-04	.0053	2.065E-04	.0064	.1448
397	530.8	1.265	.187	2.294E-04	.0071	2.747E-04	.0085	.1483
398	532.6	3.253	.457	5.611E-04	.0173	6.722E-04	.0207	.1519
399	538.0	5.968	.799	9.805E-04	.0304	1.183E-03	.0364	.1556

DATE 5/12/75

AEDC(ARO,INC.) ARNOLD AFS, TENNESSEE
VON KARMAN GAS DYNAMICS FACILITY
50 INCH HYPERSONIC TUNNEL B
V41P-B7A

GROUP	TEST CONDITION	MODEL	MACH NO	PO,PSIA	TO,DEG R	ALPHA-MODEL	ALPHA-SECTOR	ALPHA-PREBEND	ROLL MODEL	YAW
107	38	140 b	8.00	859.9	1347	25.07	4.93	30.00	179.94	-.0

T-INF (DEG R)	P-INF (PSIA)	Q-INF (PSIA)	V-INF (FT/SEC)	RHO-INF (SLUGS/FT3)	MU-INF (LB-SEC/FT2)	RE/FT (FT-1)	HREF-FR (R= .0400FT)	STFR (R= .0400FT)	SWITCH POSITION
97.6	.088	3.942	3874	7.568E-05	7.861E-08	3.729E 06	3.247E-02	1.391E-02	3

TC NO	Tw	DTWDT	QDOT	H(TO)	H(TO)/HREF	H(.9TO)	H(.9TO)/HREF	TOP CENTERLINE X/L
400	540.1	8.897	1.204	1.491E-03	.0459	1.789E-03	.0551	.1582
401	540.2	9.887	1.285	1.591E-03	.0490	1.910E-03	.0588	.1608
402	541.8	11.689	1.462	1.815E-03	.0559	2.179E-03	.0671	.1635
403	543.2	12.517	1.528	1.899E-03	.0585	2.281E-03	.0703	.1664
404	543.7	12.629	1.536	1.911E-03	.0589	2.296E-03	.0707	.1691
405	545.1	13.738	1.678	2.091E-03	.0644	2.514E-03	.0774	.1720
406	542.6	11.895	1.446	1.797E-03	.0553	2.158E-03	.0665	.1748
407	542.1	10.657	1.381	1.715E-03	.0528	2.059E-03	.0634	.1769
408	541.4	10.191	1.498	1.859E-03	.0573	2.232E-03	.0687	.1800
409	538.8	7.972	1.149	1.421E-03	.0438	1.705E-03	.0525	.1831
410	539.5	6.654	.959	1.187E-03	.0366	1.425E-03	.0439	.1863
411	536.6	4.962	.746	9.195E-04	.0283	1.103E-03	.0340	.1894
412	536.1	4.113	.559	6.890E-04	.0212	8.262E-04	.0254	.1931
413	535.6	3.286	.441	5.427E-04	.0167	6.508E-04	.0200	.1972
414	533.4	1.908	.256	3.141E-04	.0097	3.765E-04	.0116	.2049
415	531.4	1.059	.104	1.279E-04	.0039	1.531E-04	.0047	.2250
416	529.5	.638	.074	9.107E-05	.0028	1.090E-04	.0034	.2500

TC NO	Tw	DTWDT	QDOT	H(TO)	H(TO)/HREF	H(.9TO)	H(.9TO)/HREF	NOSE TC (Z = 338) X/L	2Y/B
145	595.6	80.683	11.148	1.483E-02	.4567	1.806E-02	.5564	.0008	.5039
146	596.3	82.598	11.417	1.520E-02	.4681	1.852E-02	.5704	.0023	.5082
147	581.5	68.541	9.474	1.228E-02	.3781	1.490E-02	.4588	.0043	.5135
148	574.3	56.675	8.067	1.038E-02	.3189	1.254E-02	.3862	.0068	.5205
149	562.5	49.106	5.715	7.268E-03	.2238	8.774E-03	.2702	.0095	.5279
150	562.4	35.118	5.075	6.464E-03	.1991	7.803E-03	.2403	.0122	.5354
151	562.6	24.336	3.451	4.397E-03	.1354	5.309E-03	.1635	.0218	.5621
152	561.9	23.422	3.204	4.078E-03	.1256	4.922E-03	.1516	.0251	.5712
153	562.1	24.348	3.000	3.819E-03	.1176	4.610E-03	.1420	.0286	.5808
154	562.2	23.209	2.912	3.708E-03	.1142	4.476E-03	.1379	.0319	.5898
155	561.0	22.498	2.851	3.624E-03	.1116	4.374E-03	.1347	.0354	.5995
156	560.0	21.719	2.722	3.457E-03	.1065	4.170E-03	.1284	.0387	.6085
157	560.4	22.187	2.751	3.496E-03	.1077	4.218E-03	.1299	.0420	.6176
158	560.7	22.305	2.766	3.516E-03	.1083	4.243E-03	.1307	.0462	.6294
159	559.6	21.829	2.469	3.134E-03	.0965	3.780E-03	.1164	.0503	.6406

GROUP 107 CENTERLINE TIME 2.90

CH	TC	FIT LENGTH	DTDWT	UNCERTAINTY	CH	TC	FIT LENGTH	DTDWT	UNCERTAINTY
1	221	1.20	1.028	.0139	50	384	.80	2.308	.0202
2	222	1.20	1.817	.0089	51	385	.80	2.051	.0305
3	223	.60	6.206	.0091	52	386	1.20	1.834	.0137
4	224	.40	9.221	.0104	53	387	1.20	1.858	.0088
5	225	.60	5.665	.0162	54	388	1.20	1.925	.0140
6	226	.40	11.743	.0085	55	389	1.20	1.572	.0130
7	227	.60	7.230	.0381	56	390	1.20	1.389	.0556
8	228	.40	12.555	.0062	57	391	1.20	1.170	.0163
9	229	.40	9.707	.0104	58	392	1.20	1.050	.0130
10	232	2.00	.516	.0502	59	393	1.20	1.040	.0233
11	233	2.00	.634	.0207	60	394	2.00	.996	.0088
12	236	2.00	.325	.0436	61	395	2.00	.928	.0185
13	237	2.00	.404	.0205	62	396	2.00	.952	.0091
14	238	.60	5.558	.0105	63	397	1.20	1.265	.0167
15	239	.60	5.866	.0172	64	398	.80	3.253	.0163
16	240	.60	5.162	.0088	65	399	.60	5.968	.0102
17	241	.60	6.373	.0216	66	400	.40	8.897	.0108
18	242	.60	7.308	.0127	67	401	.40	9.887	.0057
19	243	.60	5.582	.0138	68	402	.40	11.689	.0336
20	244	.60	4.483	.0187	69	403	.40	12.517	.0155
21	245	.60	5.357	.0066	70	404	.40	12.629	.0071
22	246	.60	5.616	.0104	71	405	.40	13.768	.0052
23	247	.60	5.492	.0118	72	406	.40	11.895	.0063
24	248	.60	6.063	.0118	73	407	.40	10.657	.0069
25	249	.60	7.014	.0139	74	408	.40	10.191	.0102
26	250	.60	5.734	.0114	75	409	.40	7.972	.0208
27	251	.60	5.782	.0083	76	410	.60	6.654	.0086
28	252	.60	4.895	.0093	77	411	.60	4.962	.0125
29	253	.60	5.643	.0072	78	412	.60	4.113	.0086
30	254	.60	4.683	.0129	79	413	.80	3.286	.0605
31	257	.60	5.352	.0066	80	414	1.20	1.908	.0092
32	258	.60	5.695	.0109	81	415	1.20	1.059	.0192
33	367	.20	117.936	.0014	82	416	2.00	.638	.0144
34	368	.20	90.120	.0007	83	145	.20	80.683	.0027
35	369	.20	59.696	.0010	84	146	.20	82.598	.0065
36	370	.20	42.163	.0054	85	147	.20	68.541	.0015
37	371	.20	34.537	.0051	86	148	.20	56.675	.0030
38	372	.30	24.763	.0053	87	149	.20	39.106	.0071
39	373	.30	15.741	.0066	88	150	.20	35.118	.0060
40	374	.40	12.808	.0134	89	151	.30	24.336	.0053
41	375	.40	10.190	.0082	90	152	.30	23.422	.0261
42	376	.40	8.794	.0097	91	153	.30	24.348	.0055
43	377	.40	7.871	.0144	92	154	.30	23.209	.0108
44	378	.60	7.115	.0041	93	155	.30	22.488	.0076
45	379	.60	4.085	.0092	94	156	.30	21.719	.0112
46	380	.80	3.410	.0098	95	157	.30	22.187	.0143
47	381	.80	3.229	.0167	96	158	.30	22.305	.0040
48	382	.80	2.632	.0131	97	159	.30	21.829	.0060
49	383	.80	2.477	.0164	98	0	-0	0	0
108		.050							

HIT ON LOOP 59

DATE 5/12/75

AEDC(ARO,INC.) ARNOLD AFS, TENNESSEE
VON KARMAN GAS DYNAMICS FACILITY
50 INCH HYPERSONIC TUNNEL B
V41B-87A

GROUP	TEST CONDITION	MODEL	MACH NO	PO,PSIA	TO,DEG R	ALPHA-MODEL	ALPHA-SECTOR	ALPHA-PREBEND	ROLL MODEL	YAW
105	39	140 B	8.00	860.9	1347	30.06	-.06	30.00	179.94	.0

T-INF (DEG R)	P-INF (PSIA)	Q-INF (PSIA)	V-INF (FT/SEC)	RHO-INF (SLUGS/FT3)	MU-INF (LB-SEC/FT2)	RE/FT (FT-1)	HREF-FR (R= .0400FT)	STFR (R= .0400FT)	SWITCH POSITION
97.5	.088	3.550	3873	7.579E-05	7.859E-08	3.735E 06	3.249E-02	1.390E-02	1

TC	NC	TW	DTWDT	QDOT	H(TO)	H(TO)/HREF	H(.9TO)	H(.9TO)/HREF	X/L	Z,FULL SCALE(IN)
									FUSELAGE VENT NO. 1	
1	539.8	6.145	.812	1.006E-03	.0310	1.207E-03	.0372		.4434	376.6300
2	540.1	5.717	.771	9.552E-04	.0294	1.147E-03	.0353		.4264	371.6300
3	538.5	4.369	.690	7.426E-04	.0229	8.910E-04	.0274		.4303	371.6300
4	538.4	4.331	.589	7.287E-04	.0224	8.743E-04	.0269		.4342	371.6300
5	538.9	3.927	.524	6.483E-04	.0200	7.779E-04	.0239		.4380	371.6300
6	539.4	3.593	.476	5.897E-04	.0182	7.077E-04	.0218		.4434	369.1300
7	538.9	2.855	.417	5.156E-04	.0159	6.187E-04	.0190		.4226	366.6300
8	538.5	3.294	.497	6.145E-04	.0189	7.373E-04	.0227		.4264	366.6300
9	538.8	2.424	.353	4.364E-04	.0134	5.236E-04	.0161		.4303	366.6300
10	538.7	2.163	.339	3.821E-04	.0118	4.585E-04	.0141		.4342	366.6300
11	539.2	2.333	.315	3.904E-04	.0120	4.685E-04	.0144		.4380	366.6300
12	540.5	1.905	.263	3.260E-04	.0100	3.913E-04	.0120		.4496	366.6300
13	543.4	1.011	.149	1.851E-04	.0057	2.224E-04	.0068		.4187	357.1300
14	540.8	1.519	.208	2.575E-04	.0079	3.091E-04	.0095		.4396	361.6300
15	541.6	1.469	.196	2.436E-04	.0075	2.925E-04	.0090		.4434	361.6300
16	543.3	.937	.127	1.579E-04	.0049	1.897E-04	.0058		.4396	355.6300
17	544.8	.880	.119	1.487E-04	.0046	1.787E-04	.0055		.4434	355.6300
18	546.9	.720	.101	1.262E-04	.0039	1.517E-04	.0047		.4396	351.6300
19	549.5	.412	.058	7.247E-05	.0022	8.720E-05	.0027		.4291	332.6300
									CARGO BAY VENT NO. 1	
									X/L	Z,FULL SCALE(IN)
22	541.1	6.734	.935	1.181E-03	.0357	1.394E-03	.0429		.3974	397.6300
23	538.5	5.364	.747	9.265E-04	.0285	1.112E-03	.0342		.4013	397.6300
24	538.6	5.393	.729	9.018E-04	.0278	1.082E-03	.0333		.4052	397.6300
25	539.2	5.989	.788	9.781E-04	.0300	1.171E-03	.0361		.4090	397.6300
26	540.9	7.709	1.012	1.256E-03	.0386	1.507E-03	.0464		.4129	397.6300
27	540.4	5.955	.830	1.029E-03	.0317	1.235E-03	.0380		.3936	392.6300
28	539.2	4.681	.673	8.329E-04	.0256	9.995E-04	.0308		.3974	392.6300
29	540.1	5.827	.840	1.041E-03	.0321	1.250E-03	.0385		.4013	392.6300
30	539.9	6.828	.982	1.216E-03	.0374	1.460E-03	.0449		.4052	392.6300
31	540.4	8.152	1.140	1.413E-03	.0435	1.696E-03	.0522		.4090	392.6300
32	539.8	8.656	1.148	1.422E-03	.0438	1.706E-03	.0525		.4129	392.6300
33	540.9	8.462	1.210	1.501E-03	.0462	1.802E-03	.0555		.4090	386.1300
34	541.5	9.514	1.288	1.600E-03	.0493	1.921E-03	.0591		.4129	387.6300
35	543.9	7.034	.998	1.242E-03	.0382	1.493E-03	.0459		.3897	383.1300
36	543.5	9.717	1.413	1.758E-03	.0541	2.112E-03	.0650		.4090	378.6300
37	543.4	11.568	1.630	2.028E-03	.0624	2.437E-03	.0750		.4129	382.1300
38	543.5	10.324	1.441	1.793E-03	.0552	2.154E-03	.0663		.4129	377.1300
39	545.3	8.283	1.213	1.513E-03	.0466	1.818E-03	.0560		.4001	373.6300
									PROTUBERANCES	
									X/L	Z,FULL SCALE(IN)
41	543.0	9.456	1.268	1.578E-03	.0486	1.895E-03	.0583		.3546	379.0500
42	543.7	9.569	1.310	1.630E-03	.0502	1.959E-03	.0603		.3604	379.0500
43	540.5	6.349	.825	1.023E-03	.0315	1.228E-03	.0378		.3450	374.0500

DATE 5/12/75

AEDC(ARO,INC.) ARNOLD AFS, TENNESSEE
VON KARMAN GAS DYNAMICS FACILITY
50 INCH HYPERSONIC TUNNEL B
V41B-B7A

GROUP	TEST CONDITION	MODEL	MACH NO	PO,PSIA	TO,DEG R	ALPHA-MODEL	ALPHA-SECTOR	ALPHA-PREBEND	ROLL MODEL	YAW
108	39	140 B	8.00	860.9	1347	30.06	-.06	30.00	179.94	.0

T-INF (DEG R)	P-INF (PSIA)	Q-INF (PSIA)	V-INF (FT/SEC)	RHO-INF (SLUGS/FT3)	MU-INF (LB-SEC/FT2)	RE/FT (FT-1)	HREF-FR (R= .0400FT)	STFR (R= .0400FT)	SWITCH POSITION
97.6	.088	3.950	3873	7.579E-05	7.859E-08	3.735E 06	3.249E-02	1.390E-02	1

TC NO	TW	DTWDT	QDOT	H(TO)	H(TO)/HREF	H(.9TO)	H(.9TO)/HREF
44	542.9	9.271	1.264	1.572E-03	.0484	1.889E-03	.0581
45	544.5	9.347	1.297	1.616E-03	.0497	1.942E-03	.0598
46	545.6	10.619	1.488	1.857E-03	.0572	2.232E-03	.0687
47	544.5	9.699	1.293	1.612E-03	.0496	1.937E-03	.0596
48	546.6	9.771	1.344	1.679E-03	.0517	2.018E-03	.0621
49	547.5	11.685	1.613	2.018E-03	.0621	2.426E-03	.0747
50	547.9	9.164	1.278	1.599E-03	.0492	1.923E-03	.0592
51	548.3	9.172	1.250	1.565E-03	.0482	1.883E-03	.0579
52	546.7	5.625	.776	9.698E-04	.0299	1.166E-03	.0359
53	547.1	6.691	.981	1.226E-03	.0377	1.474E-03	.0454
54	536.2	3.155	.450	5.552E-04	.0171	6.658E-04	.0205
55	546.9	4.874	.699	8.735E-04	.0269	1.050E-03	.0323
56	537.2	3.694	.476	5.875E-04	.0181	7.048E-04	.0217
57	539.0	4.627	.566	6.998E-04	.0215	8.398E-04	.0259
58	542.1	6.124	.810	1.006E-03	.0310	1.209E-03	.0372
59	546.9	7.548	.998	1.247E-03	.0384	1.499E-03	.0461
60	545.9	6.975	.975	1.217E-03	.0374	1.462E-03	.0450
61	543.9	5.906	.750	9.339E-04	.0287	1.122E-03	.0345
62	539.9	4.659	.572	7.084E-04	.0218	8.503E-04	.0262
63	537.9	3.602	.471	5.816E-04	.0179	6.977E-04	.0215
64	537.3	-.011	-.031	-1.654E-06	-.0001	-1.984E-06	-.0001
65	536.7	3.245	.441	5.444E-04	.0168	6.529E-04	.0201
66	538.6	4.369	.552	6.822E-04	.0210	8.186E-04	.0252
67	542.0	5.617	.791	9.824E-04	.0302	1.180E-03	.0363
68	544.9	6.858	.872	1.086E-03	.0334	1.306E-03	.0402

PROTUBERANCES

X/L	Z,FULL SCALE(IN)
.3508	374.0500
.3566	374.0500
.3604	374.0500
.3392	366.5500
.3566	366.5500
.3392	360.7000
.3566	360.7000
.3604	360.7000
.3392	353.2000
.3450	353.2000
.3508	353.2000
.3566	353.2000

SUBLIMATOR VENT NO. 1

X/L	Z,FULL SCALE(IN)
.3031	371.1300
.3074	369.1300
.3089	363.6300
.3074	358.1300
.3031	356.1300
.2988	358.1300
.2973	363.6300
.2988	369.1300
.3031	376.1300
.3089	378.6300
.3101	372.6300
.3157	370.3800
.3128	363.6300

DATE 5/12/75

AEDC(ARO,INC.) ARNOLD AFS, TENNESSEE
VON KARMAN GAS DYNAMICS FACILITY
50 INCH HYPERSONIC TUNNEL B
V41H-67A

GROUP	TEST CONDITION	MODEL	MACH NO	PO,PSIA	TO,DEG R	ALPHA-MODEL	ALPHA-SECTOR	ALPHA-PREBEND	ROLL MODEL	YAW
108	39	140 B	8.00	860.9	1347	30.06	-.06	30.00	179.94	.0

T-INF (DEG R)	P-INF (PSIA)	Q-INF (PSIA)	V-INF (FT/SEC)	RHO-INF (SLUGS/FT3)	MU-INF (LB-SEC/FT2)	RE/FT (FT-1)	HREF-FR (R= .0400FT)	STFR (R= .0400FT)	SWITCH POSITION
97.6	.088	3.950	3873	7.579E-05	7.859E-08	3.735E 06	3.249E-02	1.390E-02	1

TC NO	TW	DIWOT	QDOT	H(TO)	H(TO)/HREF	H(.9TO)	H(.9TO)/HREF	X/L	Z,FULL SCALE(IN)
								FUSELAGE VENT PANEL NO. 7	
69	536.0	4.080	.569	7.016E-04	.0216	8.413E-04	.0259	.2487	356.4000
70	536.2	3.617	.443	5.464E-04	.0168	6.553E-04	.0202	.2591	356.4000
71	538.4	4.619	.629	7.772E-04	.0239	9.325E-04	.0287	.2419	351.4000
72	536.9	3.706	.525	6.485E-04	.0200	7.779E-04	.0239	.2487	351.4000
73	537.3	3.565	.462	5.711E-04	.0176	6.850E-04	.0211	.2552	351.4000
74	537.7	3.308	.411	5.076E-04	.0156	6.090E-04	.0187	.2610	351.4000
75	541.1	3.972	.541	6.714E-04	.0207	8.062E-04	.0248	.2419	342.8000
77	540.3	3.730	.530	6.567E-04	.0202	7.884E-04	.0243	.2552	342.8000
78	541.6	4.824	.664	8.243E-04	.0254	9.898E-04	.0305	.2610	342.8000
79	545.1	4.394	.565	7.043E-04	.0217	8.464E-04	.0261	.2419	334.2000
80	544.8	5.147	.765	8.785E-04	.0270	1.056E-03	.0325	.2487	334.2000
81	546.1	6.004	.842	1.051E-03	.0323	1.263E-03	.0389	.2552	334.2000
								ACCESS HATCH WINDOW	
								X/L	Z,FULL SCALE(IN)
83	538.0	12.691	1.698	2.099E-03	.0646	2.518E-03	.0775	.2131	398.0000
84	539.8	14.586	1.927	2.386E-03	.0735	2.866E-03	.0882	.2131	388.0000
85	540.1	14.284	1.950	2.410E-03	.0742	2.891E-03	.0890	.2131	383.0000
87	532.9	8.370	1.145	1.468E-03	.0452	1.759E-03	.0542	.2222	395.8000
88	537.0	13.057	1.828	2.256E-03	.0695	2.706E-03	.0833	.2193	386.5000
89	540.8	15.096	2.226	2.760E-03	.0850	3.314E-03	.1020	.2177	381.8000
90	537.4	12.098	1.651	2.039E-03	.0628	2.446E-03	.0753	.2297	389.5000
91	539.2	15.126	2.079	2.574E-03	.0792	3.089E-03	.0951	.2243	382.5000
92	543.3	18.045	2.644	3.289E-03	.1012	3.952E-03	.1216	.2214	378.7000
93	539.0	12.139	1.554	1.924E-03	.0592	2.309E-03	.0711	.2343	374.0000
94	541.3	15.227	1.986	2.465E-03	.0759	2.960E-03	.0911	.2274	375.5000
95	543.0	17.223	2.457	3.056E-03	.0941	3.671E-03	.1130	.2239	373.3000
96	538.1	8.640	1.125	1.391E-03	.0428	1.669E-03	.0514	.2363	368.0000
97	540.3	11.687	1.497	1.856E-03	.0571	2.228E-03	.0686	.2286	368.0000
98	541.6	13.870	1.952	2.424E-03	.0746	2.911E-03	.0896	.2247	368.0000
100	541.0	8.608	1.223	1.517E-03	.0467	1.822E-03	.0561	.2274	360.5000
102	544.3	9.593	1.361	1.695E-03	.0522	2.037E-03	.0627	.2081	354.3000
103	544.1	12.286	1.621	2.019E-03	.0622	2.426E-03	.0747	.2023	362.7000
105	542.9	15.099	1.897	2.359E-03	.0726	2.833E-03	.0872	.2050	378.7000
106	541.9	15.305	1.969	2.444E-03	.0752	2.934E-03	.0903	.2050	386.2000

GROUP 10A CENTERLINE TIME 2.90

CH	TC	FIT LENGTH	DTDWT	UNCERTAINTY	CH	TC	FIT LENGTH	DTDWT	UNCERTAINTY
1	1	.60	6.145	.0086	50	53	.60	6.691	.0126
2	2	.60	5.717	.0073	51	54	.80	3.156	.0140
3	3	.60	4.369	.0092	52	55	.60	4.874	.0134
4	4	.60	4.331	.0132	53	56	.80	3.694	.0105
5	5	.80	3.927	.0149	54	57	.60	4.627	.0129
6	6	.80	3.593	.0115	55	58	.60	6.124	.0077
7	7	.80	2.855	.0702	56	59	.60	7.548	.0312
8	8	.80	3.294	.0174	57	60	.60	6.975	.0071
9	9	.80	2.424	.0294	58	61	.60	5.906	.0073
10	10	.80	2.163	.0199	59	62	.60	4.659	.0123
11	11	.80	2.333	.0246	60	63	.80	3.602	.0098
12	12	1.20	1.905	.0135	61	64	2.00	-.011	-1.5974
13	13	2.00	1.011	.0068	62	65	.80	3.245	.0097
14	14	1.20	1.519	.0171	63	66	.60	4.369	.0099
15	15	1.20	1.469	.0176	64	67	.60	5.617	.0101
16	16	2.00	.937	.0159	65	68	.60	6.858	.0102
17	17	2.00	.880	.0217	66	69	.60	4.060	.0167
18	18	2.00	.720	.0116	67	70	.80	3.617	.0087
19	19	2.00	.412	.0318	68	71	.60	4.619	.0868
20	22	.60	6.734	.0107	69	72	.80	3.706	.0313
21	23	.60	5.364	.0045	70	73	.80	3.565	.0116
22	24	.60	5.393	.0062	71	74	.80	3.388	.0151
23	25	.60	5.989	.0128	72	75	.80	3.972	.0090
24	26	.60	7.708	.0108	73	77	.80	3.730	.0087
25	27	.60	5.955	.0094	74	78	.60	4.824	.0115
26	28	.60	4.681	.0148	75	79	.60	4.398	.0140
27	29	.60	5.827	.0060	76	80	.60	5.147	.0110
28	30	.60	6.828	.0074	77	81	.60	6.004	.0054
29	31	.60	8.152	.0064	78	83	.40	12.691	.0070
30	32	.40	8.656	.0099	79	84	.40	14.586	.0346
31	33	.40	8.462	.0084	80	85	.40	14.284	.0065
32	34	.40	9.514	.0118	81	87	.40	8.370	.0087
33	35	.60	7.034	.0058	82	88	.40	13.057	.0062
34	36	.40	9.717	.0099	83	89	.40	15.096	.0061
35	37	.40	11.568	.0065	84	90	.40	12.098	.0080
36	38	.40	10.324	.0081	85	91	.40	15.126	.0057
37	39	.60	8.283	.0104	86	92	.30	18.645	.0079
38	41	.40	9.456	.0088	87	93	.40	12.139	.0162
39	42	.40	9.569	.0091	88	94	.40	15.227	.0042
40	43	.60	6.349	.0144	89	95	.30	17.223	.0063
41	44	.40	9.271	.0079	90	96	.40	8.640	.0420
42	45	.40	9.347	.0084	91	97	.40	11.687	.0157
43	46	.40	10.619	.0079	92	98	.40	13.870	.0224
44	47	.40	9.699	.0082	93	100	.40	8.608	.0104
45	48	.40	9.771	.0085	94	102	.40	9.593	.0187
46	49	.40	11.685	.0080	95	103	.40	12.286	.0075
47	50	.40	9.164	.0208	96	105	.40	15.099	.0059
48	51	.40	9.172	.0116	97	106	.40	15.305	.0043
49	52	.60	5.625	.0193	98	0	-0	0	0
109		.050							

BIT ON LOOP 61

DATE 5/12/75

AEDC(ARO,INC.) ARNOLD AFS, TENNESSEE
VON KARMAN GAS DYNAMICS FACILITY
50 INCH HYPERSONIC TUNNEL B
V41B-B7A

GROUP	TEST CONDITION	MODEL	MACH NO	PO,PSIA	TO,DEG R	ALPHA-MODEL	ALPHA-SECTOR	ALPHA-PREBEND	ROLL MODEL	YAW
109	35	140 B	8.00	861.0	1347	30.10	-.10	30.00	179.94	.0

T-INF (DEG R)	P-INF (PSIA)	Q-INF (PSIA)	V-INF (FT/SEC)	RHO-INF (SLUGS/FT3)	MU-INF (LB-SEC/FT2)	RE/FT (FT-1)	HREF-FR (R= .0400FT)	STFR (R= .0400FT)	SWITCH POSITION
97.6	.088	3.951	3873	7.581E-05	7.858E-08	3.736E 06	3.249E-02	1.390E-02	2

IC	NO	TW	DTWDT	QDOT	H(TO)	H(TO)/HREF	H(.9TO)	H(.9TO)/HREF	X/L	Z,FULL SCALE(IN)
									ACCESS HATCH WINDOW	
107		539.0	12.004	1.725	2.135E-03	.0657	2.563E-03	.0789	.2050	396.2000
									FUSELAGE VENT PANEL NO. 3 AND 1	
108		537.5	8.162	.865	1.069E-03	.0329	1.283E-03	.0395	.1244	377.5000
109		536.1	7.027	.870	1.073E-03	.0330	1.287E-03	.0396	.1302	377.5000
110		536.0	7.021	.891	1.099E-03	.0338	1.318E-03	.0406	.1360	377.5000
111		537.2	7.485	.904	1.116E-03	.0344	1.339E-03	.0412	.1418	377.5000
112		538.2	8.423	1.003	1.240E-03	.0382	1.488E-03	.0458	.1476	377.5000
113		538.7	8.116	.934	1.155E-03	.0356	1.386E-03	.0427	.1215	273.5000
114		537.5	7.164	.865	1.068E-03	.0329	1.281E-03	.0394	.1273	273.5000
115		537.5	6.717	.835	1.032E-03	.0318	1.238E-03	.0381	.1331	273.5000
116		537.2	7.344	.934	1.117E-03	.0344	1.340E-03	.0412	.1389	273.5000
117		539.9	8.234	.952	1.179E-03	.0363	1.415E-03	.0436	.1447	273.5000
118		539.9	6.753	.938	1.162E-03	.0358	1.395E-03	.0429	.1409	366.0000
119		542.5	8.066	1.049	1.304E-03	.0401	1.567E-03	.0482	.1442	366.0000
120		542.7	7.102	.892	1.109E-03	.0341	1.332E-03	.0410	.1215	359.5000
121		542.5	6.408	.790	9.827E-04	.0302	1.180E-03	.0363	.1303	359.5000
122		543.7	6.854	.858	1.068E-03	.0329	1.284E-03	.0395	.1337	359.5000
									LOWER RCS NOZZLES	
124		533.5	3.564	.318	3.913E-04	.0120	4.690E-04	.0144	.0950	400.0000
125		532.4	3.731	.403	4.948E-04	.0152	5.929E-04	.0182	.0988	400.0000
126		532.8	3.741	.513	6.296E-04	.0194	7.544E-04	.0232	.1027	400.0000
127		533.2	3.519	.474	5.831E-04	.0179	6.927E-04	.0215	.0911	395.0000
128		532.8	3.885	.472	5.795E-04	.0178	6.944E-04	.0214	.0950	395.0000
129		533.5	4.842	.569	6.990E-04	.0215	8.377E-04	.0258	.0988	395.0000
130		536.0	4.381	.525	6.472E-04	.0199	7.761E-04	.0239	.0810	390.0000
131		534.0	4.059	.600	7.361E-04	.0227	8.847E-04	.0272	.0857	390.0000
132		535.3	6.570	.766	9.442E-04	.0291	1.132E-03	.0348	.0963	390.0000
133		534.4	4.487	.545	6.710E-04	.0207	8.044E-04	.0248	.0857	383.8000
134		534.2	5.799	.777	9.561E-04	.0294	1.146E-03	.0353	.0872	377.3000
135		536.7	7.650	.920	1.136E-03	.0350	1.362E-03	.0419	.0903	374.5500
136		538.2	8.031	.895	1.106E-03	.0341	1.327E-03	.0409	.0960	374.5500
137		537.1	7.735	1.014	1.252E-03	.0385	1.502E-03	.0462	.0872	370.5500
138		537.6	8.456	.976	1.206E-03	.0371	1.447E-03	.0445	.0928	370.5500
139		539.6	8.014	1.026	1.271E-03	.0391	1.526E-03	.0470	.0816	366.0500
140		539.6	8.364	1.068	1.322E-03	.0407	1.587E-03	.0489	.0934	362.4000
141		540.2	7.657	1.015	1.259E-03	.0387	1.511E-03	.0465	.0973	362.4000
142		543.0	6.261	.685	8.525E-04	.0262	1.024E-03	.0315	.0833	355.2000
143		541.9	9.289	.937	1.164E-03	.0358	1.398E-03	.0430	.0919	355.2000
144		545.4	10.387	1.376	1.717E-03	.0529	2.064E-03	.0635	.0949	349.0000

DATE 5/12/75

AEDC(APO,INC.) ARNOLD AFS, TENNESSEE
VON KARMAN GAS DYNAMICS FACILITY
50 INCH HYPERSONIC TUNNEL B
V41B-87A

GROUP	TEST CONDITION	MODEL	MACH NO	PO,PSIA	TO,DEG R	ALPHA-MODEL	ALPHA-SECTOR	ALPHA-PREBEND	ROLL MODEL	YAW
109	39	140 B	8.00	861.0	1347	30.10	-.10	30.00	179.94	.0

T-INF (DEG R)	P-INF (PSIA)	Q-INF (PSIA)	V-INF (FT/SEC)	RHO-INF (SLUGS/FT3)	MU-INF (LB-SEC/FT2)	RE/FT (FT-1)	HREF-FR (R= .0400FT)	STFR (R= .0400FT)	SWITCH POSITION
97.6	.088	3.951	3873	7.581E-05	7.858E-08	3.736E 06	3.249E-02	1.390E-02	2

IC NO	TW	DTWDT	QDOT	H(TO)	H(TO)/HREF	H(.9TO)	H(.9TO)/HREF	X/L	2Y/B
								UPPER RCS NOZZLES	
161	539.3	2.715	.322	3.990E-04	.0123	4.788E-04	.0147	.0619	-.0160
162	538.3	2.764	.292	3.243E-04	.0100	3.892E-04	.0120	.0709	-.0160
163	535.5	2.034	.250	3.081E-04	.0095	3.694E-04	.0114	.0807	-.0160
164	533.9	1.815	.237	2.912E-04	.0090	3.490E-04	.0107	.0943	-.0160
165	534.3	1.737	.219	2.693E-04	.0083	3.228E-04	.0099	.0978	-.0160
166	534.4	1.561	.200	2.463E-04	.0076	2.953E-04	.0091	.1013	-.0160
167	538.8	2.261	.307	3.796E-04	.0117	4.555E-04	.0140	.0619	-.0320
168	537.7	2.561	.269	3.328E-04	.0102	3.993E-04	.0123	.0709	-.0320
169	534.9	1.948	.237	2.916E-04	.0090	3.495E-04	.0108	.0807	-.0320
170	533.1	1.725	.216	2.649E-04	.0082	3.174E-04	.0098	.0943	-.0320
171	533.1	1.931	.233	2.859E-04	.0088	3.426E-04	.0105	.0978	-.0320
172	532.2	1.641	.214	2.624E-04	.0081	3.144E-04	.0097	.1013	-.0320
173	534.8	1.454	.194	2.392E-04	.0074	2.867E-04	.0088	.0807	-.0480
174	532.0	1.060	.121	1.480E-04	.0046	1.773E-04	.0055	.0943	-.0480
175	531.6	1.180	.169	2.072E-04	.0064	2.482E-04	.0076	.0978	-.0480
176	531.2	1.024	.139	1.707E-04	.0053	2.045E-04	.0063	.1013	-.0480
								CANOPY	
177	542.4	12.030	1.682	2.066E-03	.0636	2.481E-03	.0764		
178	545.1	16.525	3.266	4.073E-03	.1254	4.895E-03	.1507		
179	554.2	27.986	5.922	7.470E-03	.2299	8.999E-03	.2770		
180	539.5	6.473	.846	1.048E-03	.0323	1.258E-03	.0387		
181	540.2	9.627	1.311	1.625E-03	.0500	1.951E-03	.0600		
182	546.1	24.907	3.570	4.458E-03	.1372	5.360E-03	.1650		
183	530.2	1.084	.136	1.662E-04	.0051	1.991E-04	.0061		
184	530.3	1.304	.178	2.178E-04	.0067	2.608E-04	.0080		
185	536.5	5.636	.674	8.321E-04	.0256	9.979E-04	.0307		
186	538.3	7.095	.892	1.104E-03	.0340	1.324E-03	.0408		
187	543.6	15.791	2.112	2.629E-03	.0809	3.158E-03	.0972		
188	549.2	26.201	6.143	7.701E-03	.2371	9.266E-03	.2852		
189	533.2	3.101	.442	5.427E-04	.0167	6.503E-04	.0200		
190	534.7	5.068	.729	8.976E-04	.0276	1.076E-03	.0331		
191	538.1	10.102	1.546	1.912E-03	.0588	2.294E-03	.0706		

DATE 5/12/75

AEDC(ARO,INC.) ARNOLD AFS, TENNESSEE
VON KARMAN GAS DYNAMICS FACILITY
50 INCH HYPERSONIC TUNNEL B
V418-87A

GROUP	TEST CONDITION	MODEL	MACH NO	PO,PSIA	TO,DEG R	ALPHA-MODEL	ALPHA-SECTOR	ALPHA-PREBEND	ROLL MODEL	YAW
109	39	140 B	8.00	861.0	1347	30.10	-.10	30.00	179.94	.0

T-INF (DEG R)	P-INF (PSIA)	Q-INF (PSIA)	V-INF (FT/SEC)	RHO-INF (SLUGS/FT3)	MU-INF (LB-SEC/FT2)	RE/FT (FT-1)	HREF-FR (R= .0400FT)	STFR (R= .0400FT)	SWITCH POSITION
97.8	.288	3.951	3673	7.581E-05	7.858E-08	3.736E 06	3.249E-02	1.390E-02	2

TC NO	TW	DT*DT	QDOT	H(TO)	H(TO)/HREF	H(.9TO)	H(.9TO)/HREF
						CANOPY	
193	528.1	.649	.118	1.444E-04	.0044	1.729E-04	.0053
193	536.7	9.821	1.893	2.336E-03	.0719	2.802E-03	.0963
194	529.2	1.686	.217	2.655E-04	.0082	3.178E-04	.0098
195	531.9	3.815	.470	5.763E-04	.0177	6.905E-04	.0213
196	534.1	6.215	.816	1.004E-03	.0309	1.204E-03	.0370
197	528.0	.941	.093	1.135E-04	.0035	1.359E-04	.0042
198	527.4	1.176	.138	1.663E-04	.0051	1.990E-04	.0061
199	527.1	1.510	.202	2.468E-04	.0076	2.953E-04	.0091
200	530.4	4.401	.626	7.665E-04	.0236	9.179E-04	.0283
201	536.3	10.169	1.437	1.772E-03	.0546	2.126E-03	.0654
202	535.3	8.977	1.135	1.398E-03	.0430	1.676E-03	.0516
203	527.3	1.394	.172	2.104E-04	.0065	2.518E-04	.0078
204	528.2	2.666	.413	5.046E-04	.0155	6.040E-04	.0186
205	532.7	6.757	1.052	1.293E-03	.0398	1.549E-03	.0477
206	527.4	1.155	.153	1.869E-04	.0058	2.236E-04	.0069
207	533.6	8.602	1.152	1.417E-03	.0436	1.698E-03	.0523
208	527.1	1.394	.187	2.278E-04	.0070	2.726E-04	.0084
209	526.5	1.807	.248	3.018E-04	.0093	3.611E-04	.0111
210	526.5	1.603	.213	2.600E-04	.0080	3.110E-04	.0096
211	527.6	1.031	.125	1.523E-04	.0047	1.823E-04	.0056
212	527.4	1.427	.192	2.343E-04	.0072	2.804E-04	.0086
213	527.5	2.341	.389	3.777E-04	.0116	4.520E-04	.0139
214	527.8	3.229	.451	5.510E-04	.0170	6.594E-04	.0203
215	527.1	2.275	.322	3.926E-04	.0121	4.698E-04	.0145
216	531.3	6.249	.886	1.087E-03	.0335	1.302E-03	.0401
217	532.7	6.753	.961	1.181E-03	.0363	1.415E-03	.0436
218	526.3	2.133	.293	3.573E-04	.0110	4.274E-04	.0132
219	527.4	3.183	.446	5.446E-04	.0168	6.517E-04	.0201
220	527.8	3.287	.451	5.502E-04	.0169	6.585E-04	.0203

GROUP 199 CENTERLINE TIME 3.00

CH	TC	FIT LENGTH	DTDWT	UNCERTAINTY	CH	TC	FIT LENGTH	DTDWT	UNCERTAINTY
1	107	.40	12.084	.0043	50	173	1.20	1.454	.0313
2	108	.40	8.162	.0071	51	174	1.20	1.060	.0226
3	109	.60	7.027	.0040	52	175	1.20	1.180	.0314
4	110	.60	7.021	.0076	53	176	1.20	1.024	.0187
5	111	.60	7.485	.0083	54	177	.40	12.030	.0087
6	112	.40	8.423	.0079	55	178	.30	16.525	.0105
7	113	.60	8.116	.0430	56	179	.30	27.986	.0324
8	114	.60	7.184	.0072	57	180	.60	6.473	.0109
9	115	.60	6.717	.0091	58	181	.40	9.627	.0106
10	116	.60	7.344	.0074	59	182	.30	24.907	.0063
11	117	.40	8.234	.0080	60	183	1.20	1.084	.0175
12	118	.60	6.753	.0103	61	184	1.20	1.304	.0298
13	119	.60	8.066	.0096	62	185	.60	5.606	.0086
14	120	.60	7.132	.0066	63	186	.60	7.095	.0093
15	121	.60	6.498	.0095	64	187	.30	15.791	.0054
16	122	.60	6.854	.0072	65	188	.30	26.201	.0060
17	124	.80	3.564	.0214	66	189	.80	3.101	.0181
18	125	.80	3.721	.0095	67	190	.60	5.068	.0083
19	126	.80	3.741	.0182	68	191	.40	10.102	.0794
20	127	.80	3.519	.0180	69	192	2.00	.840	.0282
21	128	.80	3.886	.0064	70	193	.40	9.821	.0147
22	129	.60	4.842	.0097	71	194	1.20	1.686	.0189
23	13	.60	4.381	.0214	72	195	.80	3.815	.0104
24	131	.60	4.059	.0143	73	196	.60	6.215	.0077
25	132	.60	6.570	.0055	74	197	2.00	.941	.0103
26	133	.60	4.487	.0123	75	198	1.20	1.176	.0183
27	134	.60	5.799	.0048	76	199	1.20	1.510	.0145
28	135	.60	7.650	.0047	77	200	.60	4.401	.0136
29	136	.60	9.031	.0050	78	201	.40	10.169	.0092
30	137	.60	7.735	.0066	79	202	.40	8.977	.0515
31	138	.40	8.456	.0071	80	203	1.20	1.394	.0113
32	139	.60	8.014	.0052	81	204	.80	2.666	.0186
33	140	.40	8.364	.0068	82	205	.60	6.757	.0063
34	141	.60	7.657	.0053	83	206	1.20	1.158	.0162
35	142	.60	6.261	.0090	84	207	.40	8.602	.0126
36	143	.40	9.289	.0126	85	208	1.20	1.394	.0096
37	144	.40	10.387	.0089	86	209	1.20	1.807	.0087
38	161	.80	2.715	.0197	87	210	1.20	1.603	.0315
39	162	.80	2.764	.0100	88	211	1.20	1.031	.0142
40	163	.80	2.034	.0287	89	212	1.20	1.427	.0163
41	164	1.20	1.815	.0088	90	213	.80	2.341	.0470
42	165	1.20	1.737	.0088	91	214	.80	3.229	.0232
43	166	1.20	1.561	.0265	92	215	.80	2.275	.0435
44	167	.80	2.261	.0172	93	216	.60	6.249	.0069
45	168	.80	2.561	.0113	94	217	.60	6.753	.0092
46	169	1.20	1.948	.0094	95	218	.80	2.133	.0349
47	170	1.20	1.725	.0262	96	219	.80	3.183	.0171
48	171	1.20	1.931	.0115	97	220	.80	3.287	.0118
49	172	1.20	1.641	.0150	98	0	-0	0	0
110		.050							

HIT ON LOOP 62

DATE 5/12/75

AEDC(ARO,INC.) ARNOLD AFS, TENNESSEE
VON KARMAN GAS DYNAMICS FACILITY
50 INCH HYPERSONIC TUNNEL B
V41P-87A

GROUP	TEST CONDITION	MODEL	MACH NO	PO,PSIA	TO,DEG R	ALPHA-MODEL	ALPHA-SECTOR	ALPHA-PREBEND	ROLL MODEL	YAW
110	39	140 B	8.00	860.9	1347	30.10	-.10	30.00	179.94	.0

T-INF (DEG R)	P-INF (PSIA)	Q-INF (PSIA)	V-INF (FT/SEC)	RHO-INF (SLUGS/FT3)	MU-INF (LB-SEC/FT2)	RE/FT (FT-1)	HREF-FR (R= .0400FT)	STFR (R= .0400FT)	SWITCH POSITION
97.5	.086	3.553	3873	7.579E-05	7.459E-08	3.735E 06	3.249E-02	1.390E-02	3

TC NO	TW	DTWDT	QDOT	H(TO)	H(TO)/HREF	H(.9TO)	H(.9TO)/HREF		
								CANOPY	
221	525.4	1.254	.151	1.840E-04	.0057	2.201E-04	.0068		
222	525.3	2.005	.246	2.993E-04	.0092	3.579E-04	.0110		
223	524.5	4.209	.509	6.914E-04	.0213	8.258E-04	.0254		
								ESCAPE HATCH AND WINDOW	
								X/L	2Y/B
224	532.4	5.644	.582	6.854E-04	.0212	8.259E-04	.0254	.1933	.0162
225	532.5	3.534	.422	5.166E-04	.0159	6.187E-04	.0190	.1972	.0162
226	533.3	11.143	1.174	1.443E-03	.0444	1.729E-03	.0532	.1933	.0384
227	528.5	6.046	.890	1.089E-03	.0335	1.304E-03	.0401	.1972	.0384
228	529.1	8.764	1.124	1.375E-03	.0423	1.645E-03	.0507	.1933	.0653
229	530.2	8.695	1.116	1.367E-03	.0421	1.636E-03	.0504	.1972	.0653
232	526.5	.434	.054	6.635E-05	.0020	7.939E-05	.0024	.2567	.0235
233	527.4	.454	.059	8.374E-05	.0026	1.002E-04	.0031	.2606	.0235
236	526.4	.818	.119	1.484E-04	.0045	1.739E-04	.0054	.2567	.0491
237	527.1	.903	.127	1.544E-04	.0048	1.848E-04	.0057	.2606	.0491
								CARGO BAY HINGE NO. 1	
								X/L	Z,FULL SCALE(IN)
238	534.2	6.144	.823	1.013E-03	.0312	1.214E-03	.0374	.2879	420.0000
239	535.8	7.575	1.016	1.253E-03	.0386	1.502E-03	.0462	.2917	420.0000
240	534.2	5.970	.853	1.050E-03	.0323	1.258E-03	.0387	.2840	415.0000
241	537.3	7.622	1.074	1.326E-03	.0408	1.591E-03	.0490	.2879	415.0000
242	537.5	8.373	1.199	1.481E-03	.0456	1.777E-03	.0547	.2917	415.0000
243	536.2	5.903	.723	8.918E-04	.0275	1.070E-03	.0329	.2801	405.0000
244	535.3	4.938	.578	7.122E-04	.0219	8.539E-04	.0263	.2840	405.0000
								CARGO BAY HINGE NO. 2	
								X/L	Z,FULL SCALE(IN)
245	535.5	5.219	.746	9.197E-04	.0283	1.103E-03	.0339	.3192	420.0000
246	535.8	5.221	.747	9.204E-04	.0283	1.104E-03	.0340	.3439	420.0000
247	535.4	4.385	.647	7.969E-04	.0245	9.555E-04	.0294	.3362	415.0000
248	535.5	4.647	.686	8.451E-04	.0260	1.013E-03	.0312	.3401	415.0000
249	535.9	4.882	.720	8.893E-04	.0274	1.067E-03	.0328	.3439	415.0000
250	536.7	3.434	.432	5.325E-04	.0164	6.386E-04	.0197	.3323	405.0000
251	536.9	3.871	.476	5.876E-04	.0181	7.048E-04	.0217	.3362	405.0000
								CARGO BAY HINGE NO. 3	
								X/L	Z,FULL SCALE(IN)
252	536.0	5.314	.772	9.518E-04	.0293	1.141E-03	.0351	.3923	420.0000
253	538.2	7.524	1.095	1.354E-03	.0417	1.624E-03	.0500	.3961	420.0000
254	536.5	5.507	.837	1.033E-03	.0318	1.239E-03	.0381	.3884	415.0000
257	538.1	5.909	.799	9.872E-04	.0304	1.184E-03	.0365	.3845	405.0000
258	539.1	6.867	.938	1.161E-03	.0357	1.393E-03	.0429	.3884	405.0000

DATE 5/12/75

AEDC(ARO,INC.) ARNOLD AFS, TENNESSEE
VON KARMAN GAS DYNAMICS FACILITY
50 INCH HYPERSONIC TUNNEL B
V41B-87A

GROUP	TEST CONDITION	MODEL	MACH NO	PO,PSIA	TO,DEG R	ALPHA-MODEL	ALPHA-SECTOR	ALPHA-PREBEND	ROLL MODEL	YAW
110	39	140 B	8.00	860.9	1347	30.10	-.10	30.00	179.94	.0

T-INF (DEG R)	P-INF (PSIA)	Q-INF (PSIA)	V-INF (FT/SEC)	RHO-INF (SLUGS/FT3)	MU-INF (LB-SEC/FT2)	RE/FT (FT-1)	HREF-FR (R= .0400FT)	STFR (R= .0400FT)	SWITCH POSITION
97.6	.086	3.952	3873	7.579E-05	7.859E-08	3.735E 06	3.249E-02	1.390E-02	3

IC NO	TW	DTWDT	QDOT	H(TO)	H(TO)/HREF	H(.9TO)	H(.9TO)/HREF	TOP CENTERLINE X/L
367	612.6	111.064	13.566	1.847E-02	.5686	2.262E-02	.6963	0
368	577.9	82.838	10.740	1.396E-02	.4298	1.693E-02	.5211	.0008
369	559.5	58.956	6.988	8.873E-03	.2731	1.070E-02	.3295	.0019
370	549.9	40.364	4.961	6.223E-03	.1916	7.489E-03	.2305	.0037
371	547.1	30.187	2.972	3.715E-03	.1144	4.467E-03	.1375	.0058
372	540.1	20.429	2.636	3.266E-03	.1005	3.921E-03	.1207	.0087
373	537.3	12.867	1.685	2.038E-03	.0641	2.498E-03	.0769	.0118
374	536.6	9.655	1.265	1.561E-03	.0480	1.872E-03	.0576	.0151
375	535.2	7.931	1.034	1.336E-03	.0411	1.602E-03	.0493	.0182
376	537.1	6.737	.889	1.098E-03	.0338	1.317E-03	.0405	.0215
377	537.4	6.098	.738	9.702E-04	.0299	1.164E-03	.0358	.0246
378	537.8	5.367	.627	7.745E-04	.0238	9.292E-04	.0286	.0278
379	536.7	3.089	.368	4.688E-04	.0144	5.622E-04	.0173	.0609
380	534.7	2.798	.286	3.539E-04	.0109	4.243E-04	.0131	.0646
381	533.7	2.421	.313	3.854E-04	.0119	4.619E-04	.0142	.0684
382	532.4	2.118	.277	3.349E-04	.0105	4.073E-04	.0125	.0721
383	532.3	1.980	.265	3.252E-04	.0100	3.897E-04	.0120	.0760
384	531.7	1.625	.226	2.774E-04	.0085	3.322E-04	.0102	.0796
385	531.5	1.865	.240	2.939E-04	.0090	3.521E-04	.0108	.0789
386	531.4	1.877	.222	2.721E-04	.0084	3.260E-04	.0100	.0982
387	531.7	2.036	.250	3.063E-04	.0094	3.669E-04	.0113	.1019
388	532.7	2.714	.298	3.168E-04	.0098	3.795E-04	.0117	.1160
389	531.4	2.423	.351	4.308E-04	.0133	5.158E-04	.0159	.1195
390	530.6	1.952	.307	3.753E-04	.0116	4.507E-04	.0139	.1231
391	530.5	2.220	.353	4.327E-04	.0133	5.182E-04	.0160	.1268
392	530.7	2.319	.397	4.862E-04	.0150	5.823E-04	.0179	.1305
393	530.5	2.498	.421	5.153E-04	.0159	6.171E-04	.0190	.1338
394	530.6	2.676	.449	5.493E-04	.0169	6.578E-04	.0202	.1376
395	530.8	2.759	.412	5.048E-04	.0155	6.045E-04	.0186	.1411
396	531.1	3.235	.479	5.870E-04	.0181	7.031E-04	.0216	.1448
397	531.7	3.291	.497	5.977E-04	.0184	7.160E-04	.0220	.1483
398	532.4	4.369	.614	7.529E-04	.0232	9.033E-04	.0278	.1519
399	542.5	13.469	1.806	2.245E-03	.0691	2.696E-03	.0830	.1556

DATE 5/12/75

AEDC(ARO,INC.) ARNOLD AFS, TENNESSEE
VON KARMAN GAS DYNAMICS FACILITY
50 INCH HYPERSONIC TUNNEL B
V41B-B7A

ORIF	TEST CONDITION	MODEL	MACH NO	Po,PSIA	To,DEG R	ALPHA-MODEL	ALPHA-SECTOR	ALPHA-PREBEND	ROLL MODEL	YAW
110	38	140 B	8.00	860.9	1347	30.10	-.10	30.00	179.94	.0

T-INF (DEG R)	P-INF (PSIA)	Q-INF (PSIA)	V-INF (FT/SEC)	RHO-INF (SLUGS/FT3)	MU-INF (LB-SEC/FT2)	RE/FT (FT-1)	HREF-FR (R= .0400FT)	STFR (R= .0400FT)	SWITCH POSITION
92.8	.088	3.550	3873	7.579E-05	7.859E-06	3.735E 06	3.249E-02	1.390E-02	3

IC	JC	TW	DTWALL	QDOT	H(TO)	H(TO)/HREF	H(.9TO)	H(.9TO)/HREF	X/L	2Y/B
									TOP CENTERLINE	
401	542.5	15.445	2.043	2.605E-03	.0802	3.129E-03	.0963	.1582		
402	542.3	15.342	2.071	2.466E-03	.0765	2.966E-03	.0919	.1603		
403	542.7	16.925	2.118	2.633E-03	.0811	3.163E-03	.0974	.1635		
404	543.3	15.515	1.844	2.356E-03	.0725	2.830E-03	.0871	.1664		
405	542.4	14.394	1.735	2.160E-03	.0665	2.595E-03	.0799	.1691		
406	542.4	13.556	1.648	2.048E-03	.0630	2.460E-03	.0757	.1720		
407	540.5	12.391	1.5[illegible]	1.866E-03	.0574	2.240E-03	.0689	.1748		
408	539.3	10.567	1.370	1.696E-03	.0522	2.035E-03	.0627	.1769		
409	538.[illegible]	9.151	1.344	1.666E-03	.0513	1.998E-03	.0615	.1800		
410	536.1	6.734	.899	1.195E-03	.0368	1.434E-03	.0441	.1831		
411	535.[illegible]	5.723	.823	1.014E-03	.0312	1.216E-03	.0374	.1863		
412	533.7	4.071	.611	7.508E-04	.0231	8.999E-04	.0277	.1894		
413	533.7	3.247	.447	5.501E-04	.0169	6.593E-04	.0203	.1931		
414	532.[illegible]	2.667	.350	4.414E-04	.0136	5.288E-04	.0163	.1972		
415	531.7	1.415	.190	2.328E-04	.0072	2.789E-04	.0086	.2049		
416	530.[illegible]	.852	.085	1.039E-04	.0032	1.244E-04	.0038	.2250		
417	528.7	.472	.055	6.727E-05	.0021	8.053E-05	.0025	.2500		
									NOSE IC (Z = 338)	
									X/L	2Y/B
145	569.4	75.037	10.338	1.365E-02	.4202	1.661E-02	.5111	.0008	.5039	
146	572.7	80.507	11.108	1.473E-02	.4533	1.793E-02	.5518	.0023	.5082	
147	570.7	69.076	9.474	1.236E-02	.3806	1.500E-02	.4617	.0043	.5135	
148	573.9	55.649	7.867	1.017E-02	.3132	1.232E-02	.3793	.0068	.5205	
149	561.0	38.093	5.553	7.084E-03	.2174	8.525E-03	.2624	.0095	.5279	
150	562.3	33.482	4.839	6.165E-03	.1898	7.443E-03	.2291	.0122	.5354	
151	561.8	22.841	3.238	4.123E-03	.1269	4.977E-03	.1532	.0218	.5621	
152	561.[illegible]	22.024	3.012	3.832E-03	.1179	4.624E-03	.1423	.0251	.5712	
153	561.7	23.136	2.850	3.629E-03	.1117	4.380E-03	.1348	.0286	.5804	
154	562.[illegible]	24.537	3.083	3.928E-03	.1209	4.743E-03	.1460	.0319	.5898	
155	562.3	23.023	2.928	3.730E-03	.1148	4.503E-03	.1386	.0354	.5995	
156	560.3	21.420	2.685	3.419E-03	.1051	4.118E-03	.1268	.0387	.6085	
157	560.3	20.511	2.543	3.238E-03	.0995	3.899E-03	.1200	.0420	.6176	
158	559.4	20.174	2.500	3.174E-03	.0977	3.828E-03	.1178	.0462	.6294	
159	559.[illegible]	19.827	2.242	2.845E-03	.0876	3.431E-03	.1056	.0503	.6406	

GROUP 110 CENTERLINE TIME 3.05

CH	TC	FIT LENGTH	OTDWT	UNCERTAINTY	CH	TC	FIT LENGTH	OTDWT	UNCERTAINTY
1	221	1.20	1.254	.0190	50	384	1.20	1.625	.0225
2	222	.80	2.005	.0155	51	385	1.20	1.865	.0171
3	223	.60	4.209	.0109	52	386	1.20	1.877	.0158
4	224	.60	5.644	.0060	53	387	.80	2.036	.0106
5	225	.40	3.529	.0207	54	388	.80	2.714	.0153
6	226	.40	11.143	.0064	55	389	.80	2.423	.0177
7	227	.60	6.090	.0518	56	390	.80	1.952	.0806
8	228	.40	8.744	.0109	57	391	.80	2.220	.0150
9	229	.40	8.696	.0193	58	392	.80	2.319	.0129
10	232	2.00	.404	.0300	59	393	.80	2.490	.0103
11	233	2.00	.454	.0519	60	394	.80	2.676	.0093
12	235	2.00	.818	.0124	61	395	.80	2.759	.0212
13	237	2.00	.913	.0106	62	396	.80	3.235	.0077
14	238	.60	6.144	.0092	63	397	.80	3.291	.0110
15	239	.60	7.578	.0105	64	398	.60	4.369	.0144
16	240	.60	5.970	.0092	65	399	.40	13.469	.0092
17	241	.60	7.622	.0156	66	400	.40	15.446	.0079
18	242	.60	8.373	.0116	67	401	.40	15.382	.0029
19	243	.60	5.963	.0077	68	402	.40	16.926	.0313
20	244	.60	4.938	.0157	69	403	.40	15.516	.0098
21	245	.60	5.219	.0120	70	404	.40	14.304	.0074
22	246	.60	5.221	.0118	71	405	.40	13.558	.0103
23	247	.60	4.386	.0141	72	406	.40	12.391	.0081
24	248	.60	4.057	.0137	73	407	.40	10.587	.0044
25	249	.60	4.882	.0115	74	408	.40	9.181	.0082
26	250	.80	3.434	.0083	75	409	.60	6.734	.0066
27	251	.60	3.870	.0078	76	410	.60	5.723	.0095
28	252	.60	5.314	.0093	77	411	.60	4.071	.0051
29	253	.60	7.528	.0098	78	412	.80	3.297	.0089
30	254	.60	5.507	.0102	79	413	.80	2.687	.0708
31	257	.60	5.959	.0108	80	414	1.20	1.419	.0144
32	258	.60	6.867	.0097	81	415	2.00	.862	.0116
33	367	.20	111.084	.0021	82	416	2.00	.472	.0164
34	368	.20	82.036	.0029	83	145	.20	75.037	.0019
35	369	.20	58.966	.0069	84	146	.20	80.507	.0031
36	370	.20	40.364	.0051	85	147	.20	69.076	.0022
37	371	.30	30.137	.0034	86	148	.20	55.699	.0014
38	372	.30	20.429	.0081	87	149	.20	38.093	.0104
39	373	.40	12.867	.0048	88	150	.20	33.482	.0057
40	374	.40	9.655	.0142	89	151	.30	22.841	.0101
41	375	.40	7.931	.0045	90	152	.30	22.029	.0186
42	376	.60	6.737	.0069	91	153	.30	23.134	.0093
43	377	.60	6.098	.0108	92	154	.30	24.537	.0141
44	378	.60	5.367	.0095	93	155	.30	23.083	.0041
45	379	.80	3.045	.0084	94	156	.30	21.420	.0082
46	380	.80	2.748	.0109	95	157	.30	20.510	.0108
47	381	.80	2.421	.0312	96	158	.30	20.174	.0099
48	382	.80	2.118	.0121	97	159	.30	19.827	.0059
49	383	1.20	1.980	.0108	98	0	-0	0	0
111		.050							

BIT ON LOOP 61

DATE 5/12/75

AEDC(ARO,INC.) ARNOLD AFS, TENNESSEE
VON KARMAN GAS DYNAMICS FACILITY
50 INCH HYPERSONIC TUNNEL B
V41B-B7A

GROUP	TEST CONDITION	MODEL	MACH NO	PO,PSIA	TO,DEG R	ALPHA-MODEL	ALPHA-SECTOR	ALPHA-PREBEND	ROLL MODEL	YAW
111	41	140 B	8.00	860.8	1347	35.12	-5.12	30.00	179.94	.0

T-INF (DEG R)	P-INF (PSIA)	Q-INF (PSIA)	V-INF (FT/SEC)	RHO-INF (SLUGS/FT3)	MU-INF (LB-SEC/FT2)	RE/FT (FT-1)	HREF-FR (R= .0400FT)	STFR (R= .0400FT)	SWITCH POSITION
97.6	.088	3.950	3873	7.576E-05	7.861E-08	3.733E 06	3.249E-02	1.390E-02	1

TC NO	TW	DTWDT	QDOT	H(TO)	H(TO)/HREF	H(.9TO)	H(.9TO)/HREF	X/L	Z,FULL SCALE(IN)
								FUSELAGE VENT NO. 1	
1	541.2	2.915	.395	4.742E-04	.0147	5.741E-04	.0177	.4434	376.6300
2	540.7	2.996	.404	5.009E-04	.0154	6.014E-04	.0185	.4264	371.6300
3	539.5	2.449	.337	4.171E-04	.0128	5.007E-04	.0154	.4303	371.6300
4	540.0	2.339	.319	3.940E-04	.0121	4.736E-04	.0146	.4342	371.6300
5	540.4	2.316	.319	3.831E-04	.0118	4.598E-04	.0142	.4380	371.6300
6	541.7	1.933	.267	3.164E-04	.0098	3.824E-04	.0118	.4434	369.1300
7	540.8	1.791	.240	3.225E-04	.0099	3.872E-04	.0119	.4226	366.6300
8	539.4	2.047	.315	3.901E-04	.0120	4.682E-04	.0144	.4264	366.6300
9	540.3	1.608	.233	2.866E-04	.0089	3.464E-04	.0107	.4303	366.6300
10	540.5	1.241	.197	2.447E-04	.0075	2.938E-04	.0090	.4342	366.6300
11	541.5	1.484	.201	2.494E-04	.0077	2.994E-04	.0092	.4380	366.6300
12	543.5	1.288	.178	2.215E-04	.0068	2.661E-04	.0082	.4496	366.6300
13	546.6	.798	.116	1.468E-04	.0045	1.765E-04	.0054	.4187	357.1300
14	543.8	.976	.134	1.663E-04	.0051	1.998E-04	.0061	.4396	361.6300
15	545.5	1.034	.138	1.726E-04	.0053	2.075E-04	.0064	.4434	361.6300
16	546.5	.559	.075	9.315E-05	.0029	1.120E-04	.0034	.4396	355.6300
17	549.1	.634	.086	1.079E-04	.0033	1.298E-04	.0040	.4434	355.6300
18	551.3	.392	.055	6.926E-05	.0021	8.337E-05	.0026	.4396	351.6300
19	554.3	.145	.020	2.569E-05	.0008	3.095E-05	.0010	.4291	332.6300
								CARGO BAY VENT NO. 1	
22	542.4	7.680	1.068	1.326E-03	.0408	1.593E-03	.0490	.3974	397.6300
23	541.6	8.952	1.252	1.554E-03	.0478	1.866E-03	.0574	.4013	397.6300
24	542.1	9.389	1.272	1.579E-03	.0486	1.896E-03	.0584	.4052	397.6300
25	541.8	7.693	1.014	1.259E-03	.0388	1.512E-03	.0465	.4090	397.6300
26	541.6	8.619	1.132	1.405E-03	.0432	1.687E-03	.0519	.4129	397.6300
27	543.3	8.093	1.129	1.405E-03	.0432	1.687E-03	.0519	.3936	392.6300
28	542.7	8.474	1.220	1.516E-03	.0467	1.821E-03	.0561	.3974	392.6300
29	542.8	8.007	1.157	1.437E-03	.0442	1.726E-03	.0531	.4013	392.6300
30	541.2	7.729	1.112	1.379E-03	.0425	1.656E-03	.0510	.4052	392.6300
31	540.2	9.051	1.285	1.567E-03	.0482	1.881E-03	.0579	.4090	392.6300
32	541.4	10.836	1.438	1.785E-03	.0549	2.142E-03	.0659	.4129	392.6300
33	542.1	10.242	1.465	1.819E-03	.0560	2.185E-03	.0673	.4090	386.1300
34	544.4	12.576	1.736	2.155E-03	.0664	2.554E-03	.0786	.4129	387.6300
35	546.3	8.996	1.277	1.585E-03	.0491	1.917E-03	.0590	.3897	383.1300
36	543.3	9.380	1.394	1.696E-03	.0522	2.037E-03	.0627	.4090	378.6300
37	544.3	12.425	1.751	2.181E-03	.0671	2.620E-03	.0807	.4129	382.1300
38	545.1	7.763	1.084	1.351E-03	.0416	1.624E-03	.0500	.4129	377.1300
39	544.9	7.513	1.100	1.370E-03	.0422	1.647E-03	.0507	.4001	373.6300
								PROTUBERANCES	
41	545.1	8.692	1.167	1.455E-03	.0448	1.748E-03	.0538	.3546	379.0500
42	546.0	8.842	1.212	1.512E-03	.0465	1.818E-03	.0559	.3604	379.0500
43	546.0	8.470	1.124	1.377E-03	.0424	1.656E-03	.0510	.3450	374.0500

DATE 5/12/75

AEDC(ARO,INC.) ARNOLD AFS, TENNESSEE
VON KARMAN GAS DYNAMICS FACILITY
50 INCH HYPERSONIC TUNNEL H
V41A-87A

GROUP	TEST CONDITION	MODEL	MACH NO	PO,PSIA	TO,DEG R	ALPHA-MODEL	ALPHA-SECTOR	ALPHA-PREBEND	ROLL MODEL	YAW
111	41	140 B	8.00	660.9	1347	35.12	-5.12	30.00	179.94	.0

T-INF (DEG R)	P-INF (PSIA)	Q-INF (PSIA)	V-INF (FT/SEC)	RHO-INF (SLUGS/FT3)	MU-INF (LB-SEC/FT2)	RE/FT (FT-1)	HREF-FR (R= .0400FT)	STFR (R= .0400FT)	SWITCH POSITION
97.6	.088	3.950	3873	7.576E-05	7.861E-08	3.733E 06	3.249E-02	1.390E-02	1

TC NO	TW	DTWDT	QDOT	H(TO)	H(TO)/HREF	H(.9TO)	H(.9TO)/HREF
44	546.6	7.837	1.071	1.336E-03	.0411	1.606E-03	.0494
45	546.2	7.183	.997	1.245E-03	.0383	1.496E-03	.0461
46	547.3	8.686	1.218	1.523E-03	.0469	1.831E-03	.0564
47	548.0	7.741	1.034	1.294E-03	.0398	1.556E-03	.0479
48	548.9	8.568	1.180	1.477E-03	.0455	1.777E-03	.0547
49	548.0	6.455	.891	1.115E-03	.0343	1.341E-03	.0413
50	552.2	7.837	1.035	1.377E-03	.0424	1.658E-03	.0510
51	551.6	7.552	1.031	1.296E-03	.0399	1.560E-03	.0480
52	549.8	3.972	.549	6.863E-04	.0212	8.282E-04	.0255
53	550.4	4.863	.714	8.950E-04	.0276	1.078E-03	.0332
54	540.1	4.924	.714	8.715E-04	.0268	1.046E-03	.0322
55	551.2	3.749	.539	6.766E-04	.0208	8.144E-04	.0251
56	540.8	5.105	.659	8.169E-04	.0251	9.807E-04	.0302
57	543.5	5.988	.734	9.126E-04	.0281	1.096E-03	.0337
58	547.1	7.387	.980	1.224E-03	.0377	1.472E-03	.0453
59	551.5	8.024	1.063	1.335E-03	.0411	1.608E-03	.0495
60	550.5	7.260	1.017	1.276E-03	.0393	1.536E-03	.0473
61	548.7	6.994	.891	1.115E-03	.0343	1.341E-03	.0413
62	544.2	5.707	.702	8.739E-04	.0269	1.050E-03	.0323
63	541.7	5.030	.659	8.173E-04	.0252	9.814E-04	.0302
64	[illegible]	[illegible]	[illegible]	[illegible]	[illegible]	[illegible]	[illegible]
65	539.9	4.756	.648	8.020E-04	.0247	9.627E-04	.0296
66	542.8	5.911	.748	9.293E-04	.0286	1.116E-03	.0344
67	546.1	6.729	.949	1.185E-03	.0365	1.424E-03	.0438
68	550.0	8.075	1.029	1.290E-03	.0397	1.553E-03	.0478

PROTUBERANCES

X/L	Z,FULL SCALE(IN)
.3508	374.0500
.3566	374.0500
.3604	374.0500
.3392	366.5500
.3566	366.5500
.3392	360.7000
.3566	360.7000
.3604	360.7000
.3392	353.2000
.3450	353.2000
.3508	353.2000
.3566	353.2000

SUBLIMATOR VENT NO. 1

X/L	Z,FULL SCALE(IN)
.3031	371.1300
.3074	369.1300
.3089	363.6300
.3074	358.1300
.3031	356.1300
.2988	358.1300
.2973	363.6300
.2988	369.1300
.3031	376.1300
.3089	378.6300
.3101	372.6300
.3157	370.3800
.3128	363.6300

DATE 5/12/75

AEDC(ARO,INC.) ARNOLD AFS, TENNESSEE
VON KARMAN GAS DYNAMICS FACILITY
50 INCH HYPERSONIC TUNNEL B
V41B-87A

GROUP	TEST CONDITION	MODEL	MACH NO	PC,PSIA	TO,DEG R	ALPHA-MODEL	ALPHA-SECTOR	ALPHA-PREBEND	ROLL MODEL	YAW
111	41	140 B	8.00	860.8	1347	35.12	-5.12	30.00	179.94	.0

T-INF (DEG R)	P-INF (PSIA)	Q-INF (PSIA)	V-INF (FT/SEC)	RHO-INF (SLUGS/FT3)	MU-INF (LB-SEC/FT2)	RE/FT (FT-1)	HREF-FR (R= .0400FT)	STFR (R= .0400FT)	SWITCH POSITION
97.6	.088	3.950	3873	7.576E-05	7.861E-08	3.733E 06	3.249E-02	1.390E-02	1

IC NO	TW	DTWDT	QDOT	H(TO)	H(TO)/HREF	H(.9TO)	H(.9TO)/HREF
69	538.3	3.653	.510	6.304E-04	.0194	7.563E-04	.0233
70	538.3	3.412	.416	5.172E-04	.0159	6.206E-04	.0191
71	540.7	4.535	.618	7.664E-04	.0236	9.201E-04	.0283
72	539.2	3.377	.479	5.930E-04	.0183	7.117E-04	.0219
73	540.6	3.639	.473	5.855E-04	.0180	7.027E-04	.0216
74	541.3	4.072	.495	6.136E-04	.0189	7.368E-04	.0227
75	543.3	3.783	.516	6.418E-04	.0198	7.709E-04	.0237
77	544.3	4.519	.643	8.001E-04	.0246	9.613E-04	.0296
78	545.7	5.581	.770	9.601E-04	.0296	1.154E-03	.0355
79	548.1	4.911	.632	7.904E-04	.0243	9.506E-04	.0293
80	548.1	5.303	.728	9.101E-04	.0280	1.095E-03	.0337
81	549.1	5.803	.815	1.021E-03	.0314	1.228E-03	.0378
83	536.1	5.252	.702	8.652E-04	.0266	1.038E-03	.0319
84	537.5	5.100	.684	8.442E-04	.0260	1.013E-03	.0312
85	537.5	5.829	.795	9.821E-04	.0302	1.178E-03	.0363
87	533.3	3.974	.568	6.969E-04	.0215	8.350E-04	.0257
88	536.6	5.409	.767	9.336E-04	.0287	1.120E-03	.0345
89	538.9	5.643	.837	1.035E-03	.0319	1.242E-03	.0382
90	536.3	5.223	.713	8.767E-04	.0270	1.054E-03	.0324
91	537.6	5.829	.801	9.887E-04	.0304	1.186E-03	.0365
92	540.2	6.477	.917	1.136E-03	.0350	1.364E-03	.0420
93	536.0	4.287	.548	6.756E-04	.0208	8.101E-04	.0249
94	537.7	5.362	.698	8.622E-04	.0265	1.034E-03	.0318
95	539.6	5.457	.777	9.620E-04	.0296	1.155E-03	.0355
96	537.4	4.607	.600	7.405E-04	.0228	8.883E-04	.0273
97	538.5	4.593	.588	7.264E-04	.0224	8.722E-04	.0268
98	538.4	4.444	.625	7.721E-04	.0238	9.264E-04	.0285
100	540.5	4.436	.633	7.810E-04	.0240	9.376E-04	.0289
102	542.1	3.752	.532	6.603E-04	.0203	7.924E-04	.0244
103	540.0	4.008	.528	6.538E-04	.0201	7.847E-04	.0242
105	539.2	5.421	.687	8.502E-04	.0262	1.020E-03	.0314
106	538.0	5.415	.695	8.592E-04	.0264	1.031E-03	.0317

FUSELAGE VENT PANEL NO. 7

X/L	Z,FULL SCALE(IN)
.2487	356.4000
.2591	356.4000
.2419	351.4000
.2487	351.4000
.2552	351.4000
.2610	351.4000
.2419	342.8000
.2552	342.8000
.2610	342.8000
.2419	334.2000
.2487	334.2000
.2552	334.2000

ACCESS HATCH WINDOW

X/L	Z,FULL SCALE(IN)
.2131	398.0000
.2131	388.0000
.2131	383.0000
.2222	395.8000
.2193	386.5000
.2177	381.8000
.2297	389.5000
.2243	382.5000
.2214	378.7000
.2343	374.0000
.2274	375.5000
.2239	373.3000
.2363	368.0000
.2286	368.0000
.2247	368.0000
.2274	360.5000
.2081	354.3000
.2023	362.7000
.2050	378.7000
.2050	386.2000

GROUP 111 CENTERLINE TIME 3.00

CH	TC	FIT LENGTH	DTDWT	UNCERTAINTY	CH	TC	FIT LENGTH	DTDWT	UNCERTAINTY
1	1	.80	2.915	.0081	50	53	.60	4.863	.0164
2	2	.80	2.996	.0128	51	54	.60	4.924	.0131
3	3	.80	2.449	.0150	52	55	.80	3.749	.0122
4	4	.80	2.339	.0181	53	56	.60	5.105	.0114
5	5	.80	2.316	.0277	54	57	.60	5.988	.0096
6	6	1.20	1.933	.0102	55	58	.60	7.387	.0060
7	7	1.20	1.781	.0575	56	59	.60	8.024	.0232
8	8	.80	2.087	.0120	57	60	.60	7.260	.0085
9	9	1.20	1.600	.0201	58	61	.60	6.994	.0058
10	10	1.20	1.341	.0151	59	62	.60	5.707	.0118
11	11	1.20	1.484	.0135	60	63	.60	5.030	.0087
12	12	1.20	1.288	.0257	61	64	2.00	-.041	-.5103
13	13	2.00	.798	.0108	62	65	.60	4.756	.0084
14	14	2.00	.976	.0106	63	66	.60	5.911	.0073
15	15	2.00	1.034	.0174	64	67	.60	6.729	.0126
16	16	2.00	.550	.0178	65	68	.60	8.075	.0090
17	17	2.00	.634	.0355	66	69	.80	3.653	.0104
18	18	2.00	.392	.0215	67	70	.80	3.412	.0120
19	19	2.00	.145	.0869	68	71	.60	4.538	.1160
20	22	.60	7.680	.0059	69	72	.80	3.377	.0301
21	23	.40	8.952	.0078	70	73	.80	3.639	.0120
22	24	.40	9.389	.0097	71	74	.80	4.072	.0117
23	25	.60	7.693	.0096	72	75	.80	3.783	.0094
24	26	.40	8.619	.0138	73	77	.60	4.518	.0129
25	27	.60	8.092	.0112	74	78	.60	5.581	.0102
26	28	.40	8.474	.0087	75	79	.60	4.911	.0147
27	29	.60	8.007	.0065	76	80	.60	5.303	.0211
28	30	.60	7.729	.0090	77	81	.60	5.803	.0086
29	31	.40	9.051	.0133	78	83	.60	5.252	.0093
30	32	.40	10.836	.0064	79	84	.60	5.180	.0605
31	33	.40	10.242	.0075	80	85	.60	5.829	.0091
32	34	.40	12.576	.0077	81	87	.80	3.974	.0083
33	35	.40	8.996	.0104	82	88	.60	5.409	.0067
34	36	.40	9.320	.0094	83	89	.60	5.683	.0176
35	37	.40	12.425	.0098	84	90	.60	5.229	.0142
36	38	.60	7.762	.0086	85	91	.60	5.829	.0103
37	39	.60	7.513	.0090	86	92	.60	6.477	.0060
38	41	.40	8.692	.0131	87	93	.60	4.287	.0244
39	42	.40	8.842	.0192	88	94	.60	5.362	.0093
40	43	.40	8.470	.0183	89	95	.60	5.457	.0132
41	44	.60	7.837	.0059	90	96	.60	4.607	.0490
42	45	.60	7.183	.0068	91	97	.60	4.593	.0194
43	46	.40	8.686	.0161	92	98	.60	4.444	.0231
44	47	.60	7.741	.0081	93	100	.60	4.436	.0158
45	48	.40	8.568	.0073	94	102	.80	3.752	.0145
46	49	.60	6.455	.0062	95	103	.60	4.008	.0300
47	50	.60	7.837	.0176	96	105	.60	5.481	.0181
48	51	.60	7.552	.0040	97	106	.60	5.415	.0103
49	52	.40	3.972	.0071	98	0	-0	0	0
112		.050							

BIT ON LOOP 63

DATE 5/12/75

AEDC(ARO,INC.) ARNOLD AFS, TENNESSEE
VON KARMAN GAS DYNAMICS FACILITY
50 INCH HYPERSONIC TUNNEL B
V41B-87A

GROUP	TEST CONDITION	MODEL	MACH NO	PO,PSIA	TO,DEG R	ALPHA-MODEL	ALPHA-SECTOR	ALPHA-PREBEND	ROLL MODEL	YAW
112	41	140 B	8.00	860.5	1348	35.13	-5.13	30.00	179.94	.0

T-INF (DEG R)	P-INF (PSIA)	Q-INF (PSIA)	V-INF (FT/SEC)	RHO-INF (SLUGS/FT3)	MU-INF (LB-SEC/FT2)	RE/FT (FT-1)	HREF-FR (R= .0400FT)	STFR (R= .0400FT)	SWITCH POSITION
97.7	.088	3.948	3874	7.570E-05	7.865E-06	3.729E 06	3.248E-02	1.391E-02	2

TC NO	TW	DT*DT	CDOT	H(TO)	H(TO)/HREF	H(.9TO)	H(.9TO)/HREF	X/L	Z,FULL SCALE(IN)
								ACCESS HATCH WINDOW	
107	535.9	7.057	1.013	1.247E-03	.0384	1.495E-03	.0460	.2050	396.2000
								FUSELAGE VENT PANEL NO. 3 AND 1	
								X/L	Z,FULL SCALE(IN)
108	535.3	8.234	.872	1.073E-03	.0330	1.286E-03	.0396	.1244	377.5000
109	533.9	7.476	.925	1.136E-03	.0350	1.361E-03	.0419	.1302	377.5000
110	533.8	7.186	.911	1.119E-03	.0345	1.341E-03	.0413	.1360	377.5000
111	535.3	7.392	.892	1.097E-03	.0338	1.315E-03	.0405	.1418	377.5000
112	536.9	7.866	.930	1.154E-03	.0355	1.383E-03	.0426	.1476	377.5000
113	536.7	7.857	.923	1.113E-03	.0343	1.335E-03	.0411	.1215	273.5000
114	535.0	7.442	.894	1.100E-03	.0339	1.319E-03	.0406	.1273	273.5000
115	534.3	6.861	.852	1.048E-03	.0323	1.256E-03	.0387	.1331	273.5000
116	535.1	7.169	.881	1.084E-03	.0334	1.299E-03	.0400	.1389	273.5000
117	538.1	7.654	.884	1.091E-03	.0336	1.309E-03	.0403	.1447	273.5000
118	536.7	6.247	.866	1.067E-03	.0329	1.280E-03	.0394	.1409	366.0000
119	539.2	7.315	.930	1.174E-03	.0362	1.409E-03	.0434	.1442	366.0000
120	539.4	6.975	.875	1.081E-03	.0333	1.298E-03	.0400	.1215	359.5000
121	538.8	6.045	.744	9.197E-04	.0283	1.103E-03	.0340	.1303	359.5000
122	539.9	6.255	.775	9.594E-04	.0295	1.151E-03	.0354	.1337	359.5000
								LOWER RCS NOZZLES	
								X/L	Z,FULL SCALE(IN)
124	529.8	2.418	.216	2.634E-04	.0081	3.154E-04	.0097	.0950	400.0000
125	529.5	2.791	.303	3.706E-04	.0114	4.437E-04	.0137	.0988	400.0000
126	529.5	2.656	.363	4.439E-04	.0137	5.315E-04	.0164	.1027	400.0000
127	529.3	2.645	.356	4.352E-04	.0134	5.210E-04	.0160	.0911	395.0000
128	529.5	3.115	.378	4.612E-04	.0142	5.521E-04	.0170	.0950	395.0000
129	530.7	3.854	.452	5.529E-04	.0170	6.621E-04	.0204	.0988	395.0000
130	531.7	3.344	.400	4.896E-04	.0151	5.864E-04	.0181	.0810	390.0000
131	530.1	3.143	.404	5.668E-04	.0175	6.787E-04	.0209	.0857	390.0000
132	531.3	5.346	.622	7.619E-04	.0235	9.125E-04	.0281	.0963	390.0000
133	530.3	3.506	.425	5.198E-04	.0160	6.224E-04	.0192	.0857	383.8000
134	530.8	5.032	.673	8.224E-04	.0253	9.846E-04	.0303	.0872	377.3000
135	532.5	6.819	.819	1.004E-03	.0309	1.202E-03	.0370	.0903	374.5500
136	534.2	7.378	.821	1.008E-03	.0310	1.208E-03	.0372	.0960	374.5500
137	532.7	6.926	.906	1.111E-03	.0342	1.331E-03	.0410	.0872	370.5500
138	534.5	7.859	.906	1.113E-03	.0343	1.334E-03	.0411	.0928	370.5500
139	534.8	7.203	.920	1.132E-03	.0348	1.357E-03	.0418	.0816	366.0500
140	536.3	7.804	.995	1.225E-03	.0377	1.469E-03	.0452	.0934	362.4000
141	536.5	7.497	.992	1.223E-03	.0376	1.467E-03	.0451	.0973	362.4000
142	538.9	5.683	.621	7.679E-04	.0236	9.214E-04	.0284	.0833	355.2000
143	537.7	9.112	.917	1.132E-03	.0348	1.358E-03	.0418	.0919	355.2000
144	540.9	10.056	1.329	1.646E-03	.0507	1.976E-03	.0608	.0949	349.0000

DATE 5/12/75

AEDC(ARO,INC.) ARNOLD AFS, TENNESSEE
VON KARMAN GAS DYNAMICS FACILITY
50 INCH HYPERSONIC TUNNEL H
V41A-B/A

GROUP	TEST CONDITION	MODEL	MACH NO	PO,PSIA	TO,DEG R	ALPHA-MODEL	ALPHA-SECTOR	ALPHA-PREBEND	ROLL MODEL	YAW
112	41	140 B	8.00	860.5	1348	35.13	-5.13	30.00	179.94	.0

T-INF (DEG R)	P-INF (PSIA)	Q-INF (PSIA)	V-INF (FT/SEC)	RHO-INF (SLUGS/FT3)	MU-INF (LB-SEC/FT2)	RE/FT (FT-1)	HREF-FR (R= .0400FT)	STFR (R= .0400FT)	SWITCH POSITION
97.7	.088	3.948	3874	7.570E-05	7.865E-08	3.729E 06	3.248E-02	1.391E-02	2

IC NO	TW	DTWDT	GDOT	H(TO)	H(TO)/HREF	H(.9TO)	H(.9TO)/HREF
161	535.4	2.590	.307	3.774E-04	.0116	4.525E-04	.0139
162	534.8	2.495	.235	2.874E-04	.0089	3.469E-04	.0107
163	533.3	1.935	.238	2.915E-04	.0090	3.493E-04	.0108
164	532.3	2.585	.337	4.128E-04	.0127	4.946E-04	.0152
165	533.3	2.449	.308	3.784E-04	.0116	4.534E-04	.0140
166	533.8	2.319	.297	3.649E-04	.0112	4.373E-04	.0135
167	534.8	1.617	.219	2.691E-04	.0083	3.226E-04	.0099
168	534.5	1.925	.232	2.484E-04	.0076	2.977E-04	.0092
169	532.1	1.623	.197	2.414E-04	.0074	2.892E-04	.0089
170	531.5	2.283	.285	3.491E-04	.0107	4.182E-04	.0129
171	531.5	2.702	.325	3.988E-04	.0123	4.776E-04	.0147
172	531.5	2.543	.331	4.056E-04	.0125	4.857E-04	.0150
173	531.6	.724	.097	1.182E-04	.0036	1.416E-04	.0044
174	530.1	.716	.091	9.945E-05	.0031	1.191E-04	.0037
175	530.2	.896	.128	1.568E-04	.0048	1.877E-04	.0058
176	530.2	.997	.136	1.657E-04	.0051	1.984E-04	.0061
177	539.8	16.436	2.288	2.806E-03	.0864	3.367E-03	.1037
178	541.9	19.770	3.930	4.838E-03	.1489	5.809E-03	.1788
179	541.9	17.898	3.764	4.609E-03	.1437	5.607E-03	.1726
180	540.3	15.081	1.973	2.442E-03	.0752	2.932E-03	.0902
181	538.3	12.667	1.723	2.128E-03	.0655	2.553E-03	.0786
182	532.1	6.809	.969	1.188E-03	.0366	1.423E-03	.0438
183	527.4	1.080	.133	1.615E-04	.0050	1.933E-04	.0060
184	527.2	1.187	.162	1.969E-04	.0061	2.356E-04	.0073
185	534.3	8.822	1.050	1.303E-03	.0401	1.561E-03	.0481
186	531.6	5.961	.747	9.151E-04	.0282	1.096E-03	.0337
187	534.9	8.996	1.198	1.473E-03	.0453	1.765E-03	.0543
188	531.4	6.897	1.673	1.963E-03	.0604	2.351E-03	.0724
189	530.5	5.790	.823	1.007E-03	.0310	1.206E-03	.0371
190	528.5	4.685	.672	8.198E-04	.0252	9.812E-04	.0302
191	529.8	7.153	1.090	1.332E-03	.0410	1.595E-03	.0491

UPPER RCS NOZZLES

X/L	2Y/B
.0619	-.0160
.0709	-.0160
.0807	-.0160
.0943	-.0160
.0978	-.0160
.1013	-.0160
.0619	-.0320
.0709	-.0320
.0807	-.0320
.0943	-.0320
.0978	-.0320
.1013	-.0320
.0807	-.0480
.0943	-.0480
.0978	-.0480
.1013	-.0480

CANOPY

DATE 5/12/75

AEDC(ARO,INC.) ARNOLD AFS, TENNESSEE
VON KARMAN GAS DYNAMICS FACILITY
50 INCH HYPERSONIC TUNNEL B
V41B-87A

GROUP	TEST CONDITION	MODEL	MACH NO	PO,PSIA	TO,DEG R	ALPHA-MODEL	ALPHA-SECTOR	ALPHA-PREBEND	ROLL MODEL	YAW
112	41	140 B	8.00	860.5	1348	35.13	-5.13	30.00	179.94	.0

T-INF (DEG R)	P-INF (PSIA)	Q-INF (PSIA)	V-INF (FT/SEC)	RHO-INF (SLUGS/FT3)	MU-INF (LB-SEC/FT2)	RE/FT (FT-1)	HREF-FR (R= .0400FT)	STFR (R= .0400FT)	SWITCH POSITION
97.7	.088	3.949	3874	7.570E-05	7.865E-08	3.729E 06	3.248E-02	1.391E-02	2

IC NO	T*	DIADT	CODT	H(TO)	H(TO)/HREF	H(.9TO)	H(.9TO)/HREF
						CANOPY	
192	525.2	.978	.137	1.666E-04	.0051	1.993E-04	.0061
193	527.4	3.195	.613	7.468E-04	.0230	8.936E-04	.0275
194	524.4	2.120	.272	3.308E-04	.0102	3.956E-04	.0122
195	525.3	2.013	.247	3.002E-04	.0092	3.590E-04	.0111
196	524.4	2.080	.272	3.303E-04	.0102	3.950E-04	.0122
197	526.2	.964	.095	1.158E-04	.0036	1.385E-04	.0043
198	525.5	1.153	.133	1.622E-04	.0050	1.939E-04	.0060
199	523.4	2.638	.353	4.280E-04	.0132	5.117E-04	.0158
200	526.2	3.870	.549	6.642E-04	.0206	7.993E-04	.0246
201	527.4	4.687	.659	8.031E-04	.0247	9.610E-04	.0296
202	527.5	4.473	.553	6.867E-04	.0211	8.217E-04	.0253
203	524.7	1.459	.180	2.190E-04	.0067	2.618E-04	.0081
204	524.5	2.612	.494	4.905E-04	.0151	5.865E-04	.0181
205	527.3	5.929	.921	1.122E-03	.0345	1.343E-03	.0413
206	527.1	1.035	.137	1.667E-04	.0051	1.994E-04	.0061
207	529.5	7.834	1.047	1.280E-03	.0394	1.532E-03	.0472
208	524.4	1.119	.150	1.818E-04	.0056	2.173E-04	.0067
209	523.4	2.052	.231	3.405E-04	.0105	4.070E-04	.0125
210	522.4	1.453	.193	2.337E-04	.0072	2.793E-04	.0086
211	526.5	1.264	.154	1.870E-04	.0058	2.237E-04	.0069
212	526.1	1.220	.164	1.994E-04	.0061	2.386E-04	.0073
213	524.4	1.444	.191	2.313E-04	.0071	2.766E-04	.0085
214	524.5	3.014	.421	5.108E-04	.0157	6.108E-04	.0188
215	523.0	2.276	.321	3.895E-04	.0120	4.656E-04	.0143
216	524.3	6.814	.965	1.177E-03	.0362	1.409E-03	.0434
217	528.3	6.098	.866	1.057E-03	.0325	1.265E-03	.0389
218	523.2	1.229	.159	2.044E-04	.0063	2.443E-04	.0075
219	523.5	2.875	.402	4.879E-04	.0150	5.832E-04	.0180
220	523.5	3.033	.415	5.031E-04	.0155	6.015E-04	.0185

GROUP 112 CENTERLINE TIME 3.10

CH	TC	FIT LENGTH	DTDWT	UNCERTAINTY	CH	TC	FIT LENGTH	DTDWT	UNCERTAINTY
1	107	.60	7.057	.0126	50	173	2.00	.724	.0327
2	108	.60	8.234	.0165	51	174	2.00	.716	.0179
3	109	.60	7.476	.0075	52	175	2.00	.896	.0092
4	110	.60	7.146	.0059	53	176	2.00	.997	.0091
5	111	.60	7.392	.0151	54	177	.30	16.436	.0126
6	112	.60	7.666	.0054	55	178	.30	19.770	.0075
7	113	.60	7.857	.0266	56	179	.30	17.898	.0155
8	114	.60	7.442	.0062	57	180	.40	15.081	.0080
9	115	.60	6.861	.0109	58	181	.40	12.667	.0053
10	116	.60	7.169	.0094	59	182	.60	6.809	.0115
11	117	.60	7.654	.0127	60	183	2.00	1.060	.0135
12	118	.60	6.247	.0142	61	184	2.00	1.187	.0183
13	119	.60	7.316	.0074	62	185	.40	8.822	.0026
14	120	.60	6.975	.0070	63	186	.60	5.961	.0134
15	121	.60	6.045	.0201	64	187	.40	8.996	.0093
16	122	.60	6.235	.0075	65	188	.60	6.897	.0092
17	124	.80	2.418	.0350	66	189	.60	5.790	.0182
18	125	.80	2.791	.0109	67	190	.60	4.685	.0140
19	126	.80	2.656	.0120	68	191	.60	7.153	.0364
20	127	.80	2.648	.0218	69	192	2.00	.976	.0249
21	128	.80	3.115	.0082	70	193	.80	3.195	.0134
22	129	.80	3.854	.0104	71	194	.80	2.120	.0166
23	130	.80	3.344	.0188	72	195	1.20	2.013	.0103
24	131	.80	3.143	.0121	73	196	.80	2.080	.0205
25	132	.80	5.346	.0095	74	197	2.00	.964	.0151
26	133	.80	3.556	.0108	75	198	1.20	1.153	.0184
27	134	.80	5.032	.0129	76	199	.80	2.638	.0412
28	135	.80	6.819	.0077	77	200	.80	3.870	.0067
29	136	.80	7.378	.0084	78	201	.60	4.687	.0102
30	137	.80	6.926	.0067	79	202	.60	4.473	.0703
31	138	.80	7.659	.0059	80	203	1.20	1.459	.0133
32	139	.80	7.203	.0052	81	204	.80	2.612	.0151
33	140	.80	7.834	.0071	82	205	.60	5.929	.0095
34	141	.80	7.497	.0057	83	206	1.20	1.035	.0285
35	142	.80	5.688	.0124	84	207	.60	7.834	.0089
36	143	.80	9.112	.0218	85	208	1.20	1.119	.0136
37	144	.80	10.050	.0114	86	209	.80	2.052	.0166
38	161	.80	2.590	.0178	87	210	1.20	1.453	.0396
39	162	.80	2.485	.0140	88	211	1.20	1.269	.0161
40	163	1.20	1.935	.0159	89	212	1.20	1.220	.0169
41	164	.80	2.585	.0112	90	213	1.20	1.444	.0601
42	165	.80	2.449	.0163	91	214	.80	3.014	.0245
43	166	.80	2.319	.0220	92	215	.80	2.276	.0460
44	167	1.20	1.617	.0142	93	216	.60	6.814	.0091
45	168	1.20	1.925	.0099	94	217	.60	6.098	.0091
46	169	1.20	1.623	.0086	95	218	1.20	1.229	.0312
47	170	.80	2.243	.0541	96	219	.80	2.875	.0213
48	171	.80	2.712	.0115	97	220	.80	3.030	.0119
49	172	.80	2.543	.0182	98	0	-0	0	0
113		.050							

HIT ON LOOP 60

DATE 5/12/75

AEDC(ARO,INC.) ARNOLD AFS, TENNESSEE
VON KARMAN GAS DYNAMICS FACILITY
50 INCH HYPERSONIC TUNNEL B
V418-B7A

GROUP	TEST CONDITION	MODEL	MACH NO	PO,PSIA	TO,DEG R	ALPHA-MODEL	ALPHA-SECTOR	ALPHA-PREBEND	ROLL MODEL	YAW
113	41	140 B	8.00	862.0	1349	35.09	-5.09	30.00	179.94	.0

T-INF (DEG R)	P-INF (PSIA)	Q-INF (PSIA)	V-INF (FT/SEC)	RHO-INF (SLUGS/FT3)	MU-INF (LB-SEC/FT2)	RE/FT (FT-1)	HREF-FR (R= .0400FT)	STFR (R= .0400FT)	SWITCH POSITION
97.8	.088	3.955	3876	7.578E-05	7.870E-08	3.732E 06	3.252E-02	1.390E-02	3

PC NO	TW	DTWDT	QDOT	H(TO)	H(TO)/HREF	H(.9TO)	H(.9TO)/HREF	X/L	Z/B	Z,FULL SCALE(IN)
								CANOPY		
221	527.1	.317	.099	1.199E-04	.0037	1.434E-04	.0044			
222	526.5	1.568	.185	2.253E-04	.0069	2.695E-04	.0083			
223	526.5	4.928	.667	8.107E-04	.0249	9.698E-04	.0298			
								ESCAPE HATCH AND WINDOW		
224	533.1	6.361	.633	7.721E-04	.0239	9.298E-04	.0286	.1933	.0162	
225	531.6	3.955	.473	5.764E-04	.0178	6.927E-04	.0213	.1972	.0162	
226	532.7	7.444	.784	9.604E-04	.0295	1.151E-03	.0354	.1933	.0384	
227	529.5	4.845	.716	8.736E-04	.0269	1.046E-03	.0322	.1972	.0384	
228	525.5	2.195	.251	3.421E-04	.0105	4.093E-04	.0126	.1933	.0653	
229	527.2	1.844	.242	2.946E-04	.0091	3.525E-04	.0108	.1972	.0653	
232	527.7	.451	.061	7.389E-05	.0023	8.841E-05	.0027	.2567	.0235	
233	528.4	.524	.080	9.742E-05	.0030	1.166E-04	.0036	.2606	.0235	
236	527.4	.727	.106	1.292E-04	.0040	1.546E-04	.0048	.2567	.0491	
237	528.1	.836	.118	1.432E-04	.0044	1.713E-04	.0053	.2606	.0491	
								CARGO BAY HINGE NO. 1		
238	533.9	3.891	.521	6.345E-04	.0197	7.664E-04	.0236	.2879	420.0000	
239	536.6	6.576	.881	1.085E-03	.0334	1.301E-03	.0400	.2917	420.0000	
240	534.0	3.473	.496	6.089E-04	.0187	7.297E-04	.0224	.2840	415.0000	
241	537.5	6.035	.851	1.048E-03	.0322	1.257E-03	.0387	.2879	415.0000	
242	537.0	6.863	.982	1.209E-03	.0372	1.450E-03	.0446	.2917	415.0000	
243	534.5	3.097	.378	4.639E-04	.0143	5.560E-04	.0171	.2801	405.0000	
244	534.1	2.869	.336	4.119E-04	.0127	4.936E-04	.0152	.2840	405.0000	
								CARGO BAY HINGE NO. 2		
245	536.1	4.994	.714	8.789E-04	.0270	1.054E-03	.0324	.3192	420.0000	
246	538.7	7.485	1.072	1.323E-03	.0407	1.588E-03	.0488	.3439	420.0000	
247	536.9	5.095	.752	9.258E-04	.0285	1.110E-03	.0341	.3362	415.0000	
248	539.6	6.939	1.026	1.267E-03	.0390	1.520E-03	.0468	.3401	415.0000	
249	541.3	8.305	1.229	1.521E-03	.0468	1.826E-03	.0562	.3439	415.0000	
250	539.0	5.083	.639	7.894E-04	.0243	9.472E-04	.0291	.3323	405.0000	
251	538.8	5.373	.662	8.172E-04	.0251	9.805E-04	.0302	.3362	405.0000	
								CARGO BAY HINGE NO. 3		
252	538.5	7.094	1.032	1.273E-03	.0392	1.528E-03	.0470	.3923	420.0000	
253	541.1	10.298	1.500	1.856E-03	.0571	2.228E-03	.0685	.3961	420.0000	
254	539.9	7.620	1.100	1.434E-03	.0441	1.721E-03	.0529	.3884	415.0000	
257	541.5	8.439	1.143	1.415E-03	.0435	1.699E-03	.0522	.3845	405.0000	
258	543.0	9.457	1.298	1.610E-03	.0495	1.934E-03	.0595	.3884	405.0000	

DATE 5/12/75

AEDC(ARO,INC.) ARNOLD AFS, TENNESSEE
VON KARMAN GAS DYNAMICS FACILITY
50 INCH HYPERSONIC TUNNEL B
V41R-87A

GROUP	TEST CONDITION	MODEL	MACH NO	PO,PSIA	TO,DEG R	ALPHA-MODEL	ALPHA-SECTOR	ALPHA-PREBEND	ROLL MODEL	YAW
113	41	140 B	8.00	862.0	1349	35.09	-5.09	30.00	179.94	.0

T-INF (DEG R)	P-INF (PSIA)	Q-INF (PSIA)	V-INF (FT/SEC)	RHO-INF (SLUGS/FT3)	MU-INF (LB-SEC/FT2)	RE/FT (FT-1)	HREF-FR (R= .0400FT)	STFR (R= .0400FT)	SWITCH POSITION
97.8	.088	3.955	3876	7.576E-05	7.870E-06	3.732E 06	3.252E-02	1.390E-02	3

TOP CENTERLINE

IC NO	TW	DTWDT	QDOT	H(TO)	H(TO)/HREF	H(.9TO)	H(.9TO)/HREF	X/L
367	612.5	103.933	12.632	1.692E-02	.5204	2.065E-02	.6351	0
368	569.7	75.438	9.741	1.250E-02	.3844	1.512E-02	.4649	.0008
369	555.4	50.303	5.950	7.498E-03	.2306	9.033E-03	.2778	.0019
370	546.4	33.149	4.067	5.067E-03	.1558	6.091E-03	.1873	.0037
371	542.9	24.937	2.450	3.039E-03	.0935	3.650E-03	.1123	.0058
372	537.3	16.786	2.163	2.664E-03	.0819	3.195E-03	.0983	.0087
373	534.7	10.311	1.350	1.657E-03	.0510	1.987E-03	.0611	.0118
374	534.7	8.487	1.111	1.364E-03	.0420	1.635E-03	.0503	.0151
375	534.2	6.570	.848	1.102E-03	.0339	1.321E-03	.0406	.0182
376	534.9	5.490	.724	8.889E-04	.0273	1.065E-03	.0328	.0215
377	535.2	4.852	.624	7.673E-04	.0236	9.197E-04	.0283	.0246
378	535.2	4.364	.509	6.255E-04	.0192	7.498E-04	.0231	.0278
379	536.3	2.720	.334	4.115E-04	.0127	4.934E-04	.0152	.0609
380	535.3	2.496	.257	3.153E-04	.0097	3.780E-04	.0116	.0646
381	534.9	2.310	.299	3.677E-04	.0113	4.407E-04	.0136	.0684
382	534.4	2.015	.264	3.236E-04	.0100	3.879E-04	.0119	.0721
383	533.9	1.905	.255	3.131E-04	.0096	3.752E-04	.0115	.0760
384	533.4	1.704	.237	2.911E-04	.0090	3.488E-04	.0107	.0796
385	533.7	2.630	.338	4.149E-04	.0128	4.971E-04	.0153	.0789
386	533.9	2.634	.312	3.824E-04	.0118	4.583E-04	.0141	.0982
387	534.1	2.911	.358	4.387E-04	.0135	5.257E-04	.0162	.1019
388	535.6	4.463	.425	5.224E-04	.0161	6.263E-04	.0193	.1160
389	534.9	3.943	.573	7.033E-04	.0216	8.430E-04	.0259	.1195
390	534.4	3.678	.580	7.114E-04	.0219	8.532E-04	.0262	.1231
391	534.6	3.813	.608	7.457E-04	.0230	8.950E-04	.0275	.1268
392	534.5	4.188	.718	8.820E-04	.0271	1.057E-03	.0325	.1305
393	534.3	4.504	.762	9.359E-04	.0288	1.122E-03	.0345	.1338
394	534.3	4.719	.793	9.727E-04	.0299	1.166E-03	.0359	.1376
395	534.1	4.713	.705	8.653E-04	.0266	1.037E-03	.0319	.1411
396	534.3	4.670	.693	8.500E-04	.0261	1.019E-03	.0313	.1448
397	534.6	4.412	.654	8.034E-04	.0247	9.629E-04	.0296	.1483
398	534.6	4.617	.650	7.977E-04	.0245	9.561E-04	.0294	.1519
399	543.8	13.738	1.844	2.289E-03	.0704	2.750E-03	.0846	.1556

DATE 5/12/75

AEDC(ARO,INC.) ARNOLD AFS, TENNESSEE
VON KARMAN GAS DYNAMICS FACILITY
50 INCH HYPERSONIC TUNNEL H
V418-B7A

GROUP	TEST CONDITION	MODEL	MACH NO	PO,PSIA	TO,DEG R	ALPHA-MODEL	ALPHA-SECTOR	ALPHA-PREBEND	ROLL MODEL	YAW
113	91	140 B	8.00	862.0	1349	35.09	-5.09	30.00	179.94	.0

T-INF (DEG R)	P-INF (PSIA)	Q-INF (PSIA)	V-INF (FT/SEC)	RHO-INF (SLUGS/FT3)	MU-INF (LB-SEC/FT2)	RE/FT (FT-1)	HREF-FR (R= .0400FT)	STFR (R= .0400FT)	SWITCH POSITION
97.8	.088	3.955	3876	7.578E-05	7.870E-08	3.732E 06	3.252E-02	1.390E-02	3

TC TC	TW	DTWDT	QDOT	H(TO)	H(TO)/HREF	H(.9TO)	H(.9TO)/HREF	X/L	2Y/B
								TOP CENTERLINE	
400	544.3	14.926	2.024	2.515E-03	.0773	3.021E-03	.0929	.1582	
401	542.3	13.931	1.812	2.246E-03	.0691	2.697E-03	.0830	.1608	
402	542.0	13.220	1.654	2.049E-03	.0630	2.461E-03	.0757	.1635	
403	543.5	14.475	1.767	2.194E-03	.0675	2.635E-03	.0810	.1664	
404	543.6	14.955	1.819	2.258E-03	.0694	2.712E-03	.0834	.1691	
405	543.2	15.503	1.922	2.385E-03	.0733	2.864E-03	.0881	.1720	
406	542.5	14.595	1.774	2.200E-03	.0677	2.642E-03	.0812	.1748	
407	540.9	12.603	1.532	2.020E-03	.0621	2.425E-03	.0746	.1769	
408	539.2	10.734	1.576	1.947E-03	.0599	2.336E-03	.0718	.1800	
409	536.1	8.221	1.103	1.456E-03	.0448	1.745E-03	.0537	.1831	
410	535.5	6.923	.906	1.225E-03	.0377	1.468E-03	.0452	.1863	
411	533.5	4.773	.715	8.764E-04	.0270	1.053E-03	.0324	.1894	
412	533.4	3.564	.484	5.931E-04	.0182	7.107E-04	.0219	.1931	
413	532.2	2.500	.335	4.096E-04	.0126	4.906E-04	.0151	.1972	
414	531.3	1.287	.172	2.106E-04	.0065	2.522E-04	.0078	.2049	
415	530.4	.625	.082	7.517E-05	.0023	9.000E-05	.0028	.2250	
416	529.3	.370	.043	5.272E-05	.0016	6.311E-05	.0019	.2500	
								NOSE TC (Z = 338)	
145	582.2	71.725	9.845	1.284E-02	.3948	1.558E-02	.4791	.0008	.5039
146	588.1	77.228	10.631	1.397E-02	.4297	1.698E-02	.5223	.0023	.5082
147	577.9	68.087	9.325	1.209E-02	.3719	1.466E-02	.4508	.0043	.5135
148	570.7	53.714	7.575	9.732E-03	.2993	1.177E-02	.3621	.0068	.5205
149	557.3	37.040	5.340	6.808E-03	.2094	8.206E-03	.2524	.0095	.5279
150	559.0	32.114	4.633	5.864E-03	.1803	7.072E-03	.2175	.0122	.5354
151	556.1	21.142	2.988	3.769E-03	.1159	4.541E-03	.1397	.0218	.5621
152	556.5	22.815	3.112	3.927E-03	.1208	4.732E-03	.1455	.0251	.5712
153	559.9	24.761	3.047	3.862E-03	.1188	4.658E-03	.1433	.0286	.5808
154	550.1	23.700	2.971	3.766E-03	.1158	4.542E-03	.1397	.0319	.5898
155	557.9	20.965	2.654	3.354E-03	.1031	4.043E-03	.1243	.0354	.5995
156	556.6	19.120	2.392	3.019E-03	.0929	3.639E-03	.1119	.0387	.6085
157	556.9	19.053	2.359	2.977E-03	.0916	3.588E-03	.1104	.0420	.6176
158	556.1	18.774	2.323	2.930E-03	.0901	3.530E-03	.1086	.0462	.6294
159	556.2	18.958	2.141	2.700E-03	.0830	3.254E-03	.1001	.0503	.6406

GROUP 113 CENTERLINE TIME 2.95

CH	TC	FIT LENGTH	DTDWT	UNCERTAINTY	CH	TC	FIT LENGTH	DTDWT	UNCERTAINTY
1	221	2.00	.817	.0140	50	384	1.20	1.704	.0296
2	222	1.20	1.568	.0144	51	385	.80	2.630	.0213
3	223	.60	4.928	.0124	52	386	.80	2.634	.0157
4	224	.60	6.361	.0068	53	387	.80	2.911	.0165
5	225	.80	3.965	.0145	54	388	.60	4.463	.0127
6	226	.60	7.444	.0080	55	389	.80	3.943	.0084
7	227	.60	4.836	.0566	56	390	.80	3.678	.0353
8	228	.80	2.196	.0158	57	391	.80	3.813	.0078
9	229	1.20	1.889	.0183	58	392	.60	4.188	.0094
10	232	2.00	.450	.0239	59	393	.60	4.504	.0187
11	233	2.00	.528	.0420	60	394	.60	4.719	.0125
12	236	2.00	.727	.0224	61	395	.60	4.713	.0277
13	237	2.00	.638	.0114	62	396	.60	4.670	.0080
14	238	.80	3.891	.0128	63	397	.60	4.412	.0120
15	239	.60	6.570	.0157	64	398	.60	4.617	.0111
16	240	.80	3.473	.0070	65	399	.40	13.738	.0102
17	241	.60	6.036	.0121	66	400	.40	14.926	.0098
18	242	.60	6.860	.0121	67	401	.40	13.931	.0066
19	243	.80	3.087	.0132	68	402	.40	13.220	.0456
20	244	.80	2.669	.0254	69	403	.40	14.475	.0156
21	245	.60	4.994	.0117	70	404	.40	14.955	.0065
22	246	.60	7.445	.0062	71	405	.30	15.803	.0197
23	247	.60	5.045	.0275	72	406	.40	14.595	.0076
24	248	.60	6.939	.0107	73	407	.40	12.603	.0026
25	249	.60	8.306	.0063	74	408	.40	10.734	.0261
26	250	.60	5.083	.0139	75	409	.40	8.221	.0107
27	251	.60	5.378	.0083	76	410	.60	6.923	.0108
28	252	.60	7.094	.0053	77	411	.60	4.773	.0087
29	253	.40	10.246	.0082	78	412	.80	3.564	.0090
30	254	.60	7.620	.0078	79	413	.80	2.500	.0793
31	257	.40	8.499	.0065	80	414	1.20	1.267	.0125
32	258	.40	9.487	.0094	81	415	2.00	.625	.0133
33	367	.20	103.933	.0022	82	416	2.00	.370	.0231
34	368	.20	75.438	.0017	83	145	.20	71.725	.0053
35	369	.20	50.303	.0066	84	146	.20	77.228	.0055
36	370	.20	33.149	.0101	85	147	.20	68.087	.0061
37	371	.30	24.937	.0040	86	148	.20	53.714	.0021
38	372	.30	16.786	.0084	87	149	.20	37.040	.0077
39	373	.40	10.311	.0053	88	150	.30	32.114	.0040
40	374	.40	8.487	.0127	89	151	.30	21.142	.0121
41	375	.60	6.570	.0052	90	152	.30	22.815	.0271
42	376	.60	5.490	.0069	91	153	.30	24.761	.0060
43	377	.60	4.852	.0188	92	154	.30	23.700	.0158
44	378	.60	4.364	.0091	93	155	.30	20.968	.0056
45	379	.80	2.720	.0116	94	156	.30	19.120	.0113
46	380	.80	2.496	.0113	95	157	.30	19.053	.0069
47	381	.80	2.310	.0568	96	158	.30	18.774	.0049
48	382	1.20	2.015	.0138	97	159	.30	18.958	.0082
49	383	1.20	1.905	.0126	98	0	-0	0	0

DATE 5/12/75

AEDC(ARO,INC.) ARNOLD AFS, TENNESSEE
VON KARMAN GAS DYNAMICS FACILITY
50 INCH HYPERSONIC TUNNEL B
V41B-87A

GROUP	TEST CONDITION	MODEL	MACH NO	PO,PSIA	TO,DEG R	ALPHA-MODEL	ALPHA-SECTOR	ALPHA-PREBEND	ROLL MODEL	YAW
114	1F	140 B	7.98	428.1	1305	20.02	9.98	30.00	179.94	-.0

T-INF (DEG R)	P-INF (PSIA)	Q-INF (PSIA)	V-INF (FT/SEC)	RHO-INF (SLUGS/FT3)	MU-INF (LB-SEC/FT2)	RE/FT (FT-1)	HREF-FR (R= .0400FT)	STFR (R= .0400FT)	SWITCH POSITION
95.0	.045	1.987	3812	3.935E-05	7.652E-08	1.960E 06	2.291E-02	1.923E-02	1

TC NO	TW	DT*DT	QDOT	H(TO)	H(TO)/HREF	H(.9TO)	H(.9TO)/HREF	X/L	Z,FULL SCALE(IN)
								FUSELAGE VENT NO. 1	
1	538.4	5.365	.738	9.236E-04	.0403	1.113E-03	.0486	.4434	376.6300
2	539.0	5.657	.762	9.948E-04	.0434	1.199E-03	.0523	.4264	371.6300
3	538.9	6.008	.826	1.077E-03	.0470	1.298E-03	.0567	.4303	371.6300
4	539.1	6.169	.840	1.096E-03	.0478	1.321E-03	.0576	.4342	371.6300
5	539.8	6.544	.873	1.141E-03	.0498	1.375E-03	.0600	.4380	371.6300
6	540.6	7.048	.935	1.222E-03	.0533	1.474E-03	.0643	.4434	369.1300
7	540.6	7.232	1.057	1.381E-03	.0603	1.666E-03	.0727	.4226	366.6300
8	533.1	6.062	.918	1.197E-03	.0523	1.443E-03	.0630	.4264	366.6300
9	541.5	7.127	1.038	1.359E-03	.0593	1.639E-03	.0715	.4303	366.6300
10	541.2	7.572	1.083	1.416E-03	.0618	1.708E-03	.0746	.4342	366.6300
11	542.5	8.216	1.113	1.459E-03	.0637	1.760E-03	.0768	.4380	366.6300
12	542.5	7.845	1.084	1.420E-03	.0620	1.714E-03	.0748	.4496	366.6300
13	540.4	5.105	.750	9.805E-04	.0428	1.182E-03	.0516	.4187	357.1300
14	541.1	6.220	.850	1.112E-03	.0486	1.342E-03	.0586	.4396	361.6300
15	540.6	5.628	.752	9.825E-04	.0429	1.185E-03	.0517	.4434	361.6300
16	539.1	2.558	.346	4.513E-04	.0197	5.440E-04	.0237	.4396	355.6300
17	539.0	2.295	.310	4.049E-04	.0177	4.880E-04	.0213	.4434	355.6300
18	539.4	1.580	.221	2.881E-04	.0126	3.473E-04	.0152	.4396	351.6300
19	540.2	1.208	.169	2.206E-04	.0096	2.660E-04	.0116	.4291	332.6300
								CARGO BAY VENT NO. 1	
								X/L	Z,FULL SCALE(IN)
22	535.5	4.609	.638	8.292E-04	.0362	9.985E-04	.0436	.3974	397.6300
23	535.5	4.611	.643	8.350E-04	.0364	1.006E-03	.0439	.4013	397.6300
24	535.0	4.483	.605	7.852E-04	.0343	9.454E-04	.0413	.4052	397.6300
25	535.5	3.813	.501	6.507E-04	.0284	7.836E-04	.0342	.4090	397.6300
26	535.6	4.218	.552	7.175E-04	.0313	8.640E-04	.0377	.4129	397.6300
27	535.9	4.701	.654	8.492E-04	.0371	1.023E-03	.0446	.3936	392.6300
28	534.5	4.170	.598	7.756E-04	.0338	9.337E-04	.0408	.3974	392.6300
29	535.2	4.235	.609	7.913E-04	.0345	9.527E-04	.0416	.4013	392.6300
30	534.9	4.201	.603	7.819E-04	.0341	9.414E-04	.0411	.4052	392.6300
31	534.6	3.809	.531	6.887E-04	.0301	8.291E-04	.0362	.4090	392.6300
32	533.9	3.112	.411	5.331E-04	.0233	6.417E-04	.0280	.4129	392.6300
33	533.8	2.054	.293	3.792E-04	.0165	4.564E-04	.0199	.4090	386.1300
34	534.5	2.525	.341	4.419E-04	.0193	5.320E-04	.0232	.4129	387.6300
35	537.0	3.973	.562	7.319E-04	.0319	8.817E-04	.0385	.3897	383.1300
36	536.2	3.361	.487	6.328E-04	.0276	7.621E-04	.0333	.4090	378.6300
37	536.0	3.592	.504	6.552E-04	.0286	7.890E-04	.0344	.4129	382.1300
38	537.0	4.356	.606	7.885E-04	.0344	9.499E-04	.0415	.4129	377.1300
39	537.3	3.876	.565	7.358E-04	.0321	8.864E-04	.0387	.4001	373.6300
								PROTUBERANCES	
								X/L	Z,FULL SCALE(IN)
41	534.1	2.638	.352	4.567E-04	.0199	5.497E-04	.0240	.3546	379.0500
42	535.9	4.539	.619	8.041E-04	.0351	9.683E-04	.0423	.3604	379.0500
43	534.2	1.833	.237	3.078E-04	.0134	3.705E-04	.0162	.3450	374.0500

DATE 5/12/75

AEDC(ARO,INC.) ARNOLD AFS, TENNESSEE
VON KARMAN GAS DYNAMICS FACILITY
50 INCH HYPERSONIC TUNNEL B
V41B-B/A

GROUP	TEST CONDITION	MODEL	MACH NO	PO,PSIA	TO,DEG R	ALPHA-MODEL	ALPHA-SECTOR	ALPHA-PREBEND	ROLL MODEL	YAW
114	1P	140 B	7.98	428.1	1305	20.02	9.98	30.00	179.94	-.0

T-INF (DEG R)	P-INF (PSIA)	Q-INF (PSIA)	V-INF (FT/SEC)	RHO-INF (SLUGS/FT3)	MU-INF (LB-SEC/FT2)	RE/FT (FT-1)	HREF-FR (R= .0400FT)	STFR (R= .0400FT)	SWITCH POSITION
95.0	.045	1.987	3812	3.935E-05	7.652E-08	1.940E 06	2.291E-02	1.923E-02	1

IC NO	TW	DIWDT	CDOT	H(TO)	H(TO)/HREF	H(.9TO)	H(.9TO)/HREF	X/L	Z,FULL SCALE(IN)
								PROTUBERANCES	
44	535.7	3.695	.502	6.523E-04	.0285	7.855E-04	.0343	.3508	374.0500
45	539.9	6.214	.860	1.123E-03	.0490	1.354E-03	.0591	.3566	374.0500
46	538.8	6.274	.876	1.143E-03	.0499	1.378E-03	.0601	.3604	374.0500
47	535.5	2.770	.368	4.775E-04	.0208	5.750E-04	.0251	.3392	366.5500
48	539.0	5.444	.746	9.731E-04	.0425	1.173E-03	.0512	.3566	366.5500
49	536.5	3.949	.542	7.050E-04	.0308	8.492E-04	.0371	.3392	360.7000
50	539.4	4.720	.655	8.558E-04	.0373	1.031E-03	.0450	.3566	360.7000
51	537.9	4.350	.590	7.664E-04	.0335	9.258E-04	.0404	.3604	360.7000
52	540.0	6.080	.836	1.092E-03	.0477	1.317E-03	.0575	.3392	353.2000
53	540.0	6.728	.982	1.284E-03	.0560	1.547E-03	.0675	.3450	353.2000
54	532.8	1.688	.240	3.110E-04	.0136	3.742E-04	.0163	.3508	353.2000
55	540.8	6.866	.982	1.284E-03	.0560	1.548E-03	.0675	.3566	353.2000
								SUBLIMATOR VENT NO. 1	
56	533.3	1.593	.205	2.652E-04	.0116	3.192E-04	.0139	.3031	371.1300
57	534.1	1.713	.229	2.707E-04	.0118	3.259E-04	.0142	.3074	369.1300
58	534.2	1.358	.179	2.320E-04	.0101	2.792E-04	.0122	.3089	363.6300
59	535.3	1.656	.218	2.825E-04	.0123	3.402E-04	.0148	.3074	358.1300
60	535.0	1.405	.195	2.534E-04	.0111	3.050E-04	.0133	.3031	356.1300
61	534.5	1.422	.180	2.331E-04	.0102	2.806E-04	.0122	.2988	358.1300
62	534.2	1.745	.214	2.768E-04	.0121	3.332E-04	.0145	.2973	363.6300
63	533.5	1.685	.220	2.846E-04	.0124	3.425E-04	.0149	.2988	369.1300
64	515.9	.020	.002	3.080E-06	.0001	3.690E-06	.0002	.3031	376.1300
65	533.1	1.501	.204	2.637E-04	.0115	3.174E-04	.0139	.3089	378.6300
66	534.0	1.760	.222	2.873E-04	.0125	3.458E-04	.0151	.3101	372.6300
67	534.2	1.694	.238	3.079E-04	.0134	3.707E-04	.0162	.3157	370.3800
68	534.9	1.435	.181	2.354E-04	.0103	2.835E-04	.0124	.3128	363.6300

DATE 5/12/75

AEDC(ARO,INC.) ARNOLD AFS, TENNESSEE
VON KARMAN GAS DYNAMICS FACILITY
50 INCH HYPERSONIC TUNNEL B
V418-87A

	TEST	MODEL	MACH NO	PO,PSIA	TO,DEG R	ALPHA-MODEL	ALPHA-SECTOR	ALPHA-PREBEND	ROLL MODEL	YAW
214	19	140 B	7.98	428.1	1305	20.02	9.98	30.00	179.94	-.0

T-INF (DEG R)	P-INF (PSIA)	Q-INF (PSIA)	V-INF (FT/SEC)	RHO-INF (SLUGS/FT3)	MU-INF (LB-SEC/FT2)	RE/FT (FT-1)	HREF-FR (R= .0400FT)	STFR (R= .0400FT)	SWITCH POSITION
95.0	.045	1.987	3812	3.935E-05	7.652E-08	1.960E 06	2.291E-02	1.923E-02	1

PC NO	TW	DIMOT	QDOT	H(TO)	H(TO)/HREF	H(.9TO)	H(.9TO)/HREF	X/L	Z,FULL SCALE(IN)
								FUSELAGE VENT PANEL NO. 7	
69	532.4	2.132	.297	3.839E-04	.0168	4.619E-04	.0202	.2487	356.4000
70	532.5	2.072	.253	3.278E-04	.0143	3.944E-04	.0172	.2591	356.4000
71	532.6	1.803	.245	3.165E-04	.0138	3.809E-04	.0166	.2419	351.4000
72	533.1	2.112	.299	3.869E-04	.0169	4.656E-04	.0203	.2487	351.4000
73	533.1	2.128	.275	3.566E-04	.0156	4.291E-04	.0187	.2552	351.4000
74	533.3	2.133	.258	3.342E-04	.0146	4.022E-04	.0176	.2610	351.4000
75	533.4	2.241	.310	4.010E-04	.0175	4.826E-04	.0211	.2419	342.8000
77	533.7	2.140	.303	3.925E-04	.0171	4.724E-04	.0206	.2552	342.8000
78	534.4	2.186	.300	3.888E-04	.0170	4.681E-04	.0204	.2610	342.8000
79	534.5	2.450	.313	4.060E-04	.0177	4.888E-04	.0213	.2419	334.2000
80	533.7	2.298	.313	4.055E-04	.0177	4.880E-04	.0213	.2487	334.2000
81	533.9	1.871	.261	3.379E-04	.0147	4.067E-04	.0177	.2552	334.2000
								ACCESS HATCH WINDOW	
								X/L	Z,FULL SCALE(IN)
83	532.1	2.589	.345	4.449E-04	.0194	5.350E-04	.0233	.2131	398.0000
84	531.4	3.017	.397	5.129E-04	.0224	6.169E-04	.0269	.2131	388.0000
85	530.2	2.717	.369	4.769E-04	.0208	5.736E-04	.0250	.2131	393.0000
87	529.4	1.806	.257	3.317E-04	.0145	3.988E-04	.0174	.2222	395.8000
88	530.7	2.605	.354	4.692E-04	.0205	5.642E-04	.0246	.2193	386.5000
89	530.9	2.791	.409	5.285E-04	.0231	6.357E-04	.0277	.2177	381.8000
90	530.5	2.324	.316	4.081E-04	.0178	4.908E-04	.0214	.2297	389.5000
91	531.1	2.755	.377	4.871E-04	.0213	5.859E-04	.0256	.2243	382.5000
92	532.3	3.117	.440	5.685E-04	.0248	6.840E-04	.0299	.2214	378.7000
93	531.3	2.400	.306	3.954E-04	.0173	4.756E-04	.0208	.2343	374.0000
94	532.8	3.066	.398	5.155E-04	.0225	6.203E-04	.0271	.2274	375.5000
95	532.8	3.125	.443	5.740E-04	.0250	6.907E-04	.0301	.2239	373.3000
96	532.0	2.484	.332	4.169E-04	.0182	5.016E-04	.0219	.2363	368.0000
97	532.0	2.803	.358	4.624E-04	.0202	5.563E-04	.0243	.2286	368.0000
98	532.4	2.979	.417	5.399E-04	.0236	6.496E-04	.0283	.2247	368.0000
100	532.3	2.559	.362	4.682E-04	.0204	5.633E-04	.0246	.2274	360.5000
102	531.9	2.650	.374	4.830E-04	.0211	5.810E-04	.0254	.2081	354.3000
103	531.2	2.832	.371	4.796E-04	.0209	5.769E-04	.0252	.2023	362.7000
105	531.2	2.633	.329	4.246E-04	.0185	5.107E-04	.0223	.2050	378.7000
106	530.5	3.010	.385	4.969E-04	.0217	5.976E-04	.0261	.2050	386.2000

GROUP 114 CENTERLINE TIME 2.65

CH	TC	FIT LENGTH	DTDWT	UNCERTAINTY	CH	TC	FIT LENGTH	DTDWT	UNCERTAINTY
1	1	.60	5.365	.0130	50	53	.60	6.728	.0088
2	2	.60	5.657	.0093	51	54	1.20	1.688	.0227
3	3	.60	6.008	.0057	52	55	.60	6.866	.0110
4	4	.60	6.169	.0071	53	56	1.20	1.593	.0109
5	5	.60	6.544	.0142	54	57	1.20	1.713	.0150
6	6	.60	7.048	.0061	55	58	1.20	1.358	.0134
7	7	.60	7.232	.0483	56	59	1.20	1.656	.0411
8	8	.60	6.082	.0061	57	60	1.20	1.405	.0119
9	9	.60	7.127	.0119	58	61	1.20	1.422	.0095
10	10	.60	7.572	.0074	59	62	1.20	1.745	.0134
11	11	.60	8.216	.0101	60	63	1.20	1.685	.0288
12	12	.60	7.845	.0068	61	64	2.00	.020	.8377
13	13	.60	5.105	.0081	62	65	1.20	1.501	.0139
14	14	.60	6.220	.0106	63	66	1.20	1.760	.0119
15	15	.60	5.628	.0095	64	67	1.20	1.694	.0179
16	16	.80	2.558	.0125	65	68	1.20	1.435	.0184
17	17	.80	2.295	.0253	66	69	.80	2.132	.0274
18	18	1.20	1.580	.0093	67	70	.80	2.072	.0147
19	19	1.20	1.208	.0169	68	71	.80	1.803	.1412
20	22	.60	4.608	.0125	69	72	.80	2.112	.0261
21	23	.60	4.611	.0548	70	73	.80	2.128	.0196
22	24	.60	4.483	.0192	71	74	.80	2.133	.0304
23	25	.80	3.813	.0182	72	75	.80	2.281	.0139
24	26	.60	4.218	.0219	73	77	.80	2.140	.0146
25	27	.60	4.701	.0149	74	78	.80	2.186	.0164
26	28	.60	4.170	.0105	75	79	.80	2.450	.0145
27	29	.60	4.236	.0147	76	80	.80	2.298	.0304
28	30	.60	4.201	.0098	77	81	1.20	1.871	.0105
29	31	.80	3.809	.0099	78	83	.80	2.589	.0140
30	32	.80	3.112	.0120	79	84	.80	3.017	.0666
31	33	.80	2.054	.0181	80	85	.80	2.717	.0122
32	34	.80	2.525	.0149	81	87	1.20	1.806	.0140
33	35	.80	3.979	.0086	82	88	.80	2.605	.0088
34	36	.80	3.361	.0103	83	89	.80	2.791	.0156
35	37	.80	3.592	.0099	84	90	.80	2.326	.0156
36	38	.60	4.356	.0097	85	91	.80	2.755	.0104
37	39	.80	3.876	.0057	86	92	.80	3.117	.0124
38	41	.80	2.638	.0156	87	93	.80	2.400	.0363
39	42	.60	4.539	.0119	88	94	.80	3.066	.0095
40	43	1.20	1.833	.0183	89	95	.80	3.125	.0150
41	44	.80	3.695	.0083	90	96	.80	2.484	.0761
42	45	.60	6.214	.0070	91	97	.80	2.803	.0190
43	46	.60	6.274	.0176	92	98	.80	2.979	.0313
44	47	.80	2.770	.0147	93	100	.80	2.559	.0183
45	48	.60	5.444	.0100	94	102	.80	2.650	.0252
46	49	.60	3.949	.0111	95	103	.80	2.832	.0169
47	50	.60	4.720	.0300	96	105	.80	2.633	.0241
48	51	.60	4.350	.0124	97	106	.80	3.010	.0102
49	52	.60	6.080	.0042	98	0	-0	0	0
120		.050							

HIT ON LOOP 57

DATE 5/12/75

AEDC(ARO,INC.) ARNOLD AFS, TENNESSEE
VON KARMAN GAS DYNAMICS FACILITY
50 INCH HYPERSONIC TUNNEL B
V41B-87A

GROUP	TEST CONDITION	MODEL	MACH NO	Pw,PSIA	TO,DEG R	ALPHA-MODEL	ALPHA-SECTOR	ALPHA-PREBEND	ROLL MODEL	YAW
115	43	140 B	7.98	430.5	1304	20.05	9.95	30.00	179.92	-0.

T-INF (DEG R)	P-INF (PSIA)	Q-INF (PSIA)	V-INF (FT/SEC)	RHO-INF (SLUGS/FT3)	MU-INF (LB-SEC/FT2)	RE/FT (FT-1)	HREF-FR (R= .0400FT)	STFR (R= .0400FT)	SWITCH POSITION
94.9	.045	1.599	3809	3.963E-05	7.640E-08	1.976E 06	2.297E-02	1.916E-02	2

PC NO	TW	DTWDT	RDOT	H(TO)	H(TO)/HREF	H(.9TO)	H(.9TO)/HREF	X/L	Z,FULL SCALE(IN)
								ACCESS HATCH WINDOW	
107	529.6	2.769	.396	5.113E-04	.0223	6.148E-04	.0268	.2050	396.2000
								FUSELAGE VENT PANEL NO. 3 AND 1	
								X/L	Z,FULL SCALE(IN)
108	534.0	5.598	.592	7.697E-04	.0335	9.267E-04	.0403	.1244	377.5000
109	532.6	4.560	.564	7.313E-04	.0318	8.801E-04	.0383	.1302	377.5000
110	532.3	4.170	.528	6.853E-04	.0298	8.247E-04	.0359	.1360	377.5000
111	532.0	4.026	.485	6.293E-04	.0274	7.574E-04	.0330	.1418	377.5000
112	532.4	4.044	.485	6.292E-04	.0274	7.573E-04	.0330	.1476	377.5000
113	533.3	5.404	.620	8.055E-04	.0351	9.696E-04	.0422	.1215	273.5000
114	532.5	4.478	.538	6.976E-04	.0304	8.397E-04	.0366	.1273	273.5000
115	533.2	3.881	.482	6.252E-04	.0272	7.526E-04	.0328	.1331	273.5000
116	532.5	3.885	.477	6.189E-04	.0269	7.449E-04	.0324	.1389	273.5000
117	533.4	4.167	.480	6.232E-04	.0271	7.502E-04	.0327	.1447	273.5000
118	533.1	3.341	.462	6.001E-04	.0261	7.223E-04	.0314	.1409	366.0000
119	533.5	3.996	.518	6.724E-04	.0293	8.096E-04	.0352	.1442	366.0000
120	533.7	4.078	.510	6.623E-04	.0288	7.973E-04	.0347	.1215	359.5000
121	533.9	3.611	.444	5.763E-04	.0251	6.938E-04	.0302	.1303	359.5000
122	534.1	3.943	.491	6.362E-04	.0278	7.683E-04	.0334	.1337	359.5000
								LOWER RCS NOZZLES	
								X/L	Z,FULL SCALE(IN)
124	530.3	4.276	.381	4.930E-04	.0215	5.929E-04	.0258	.0950	400.0000
125	528.7	4.277	.465	6.000E-04	.0261	7.214E-04	.0314	.0988	400.0000
126	531.0	3.629	.497	6.436E-04	.0280	7.736E-04	.0337	.1027	400.0000
127	526.9	4.068	.547	7.039E-04	.0306	8.459E-04	.0368	.0911	395.0000
128	526.7	4.272	.517	6.655E-04	.0290	7.996E-04	.0348	.0950	395.0000
129	526.6	4.530	.531	6.846E-04	.0298	8.231E-04	.0358	.0988	395.0000
130	530.5	4.669	.558	7.218E-04	.0314	8.683E-04	.0378	.0810	390.0000
131	526.4	4.171	.614	7.904E-04	.0344	9.496E-04	.0413	.0857	390.0000
132	525.1	4.693	.545	6.997E-04	.0305	8.404E-04	.0366	.0963	390.0000
133	524.2	4.153	.532	6.440E-04	.0280	7.734E-04	.0337	.0857	383.8000
134	524.5	4.614	.615	7.847E-04	.0344	9.484E-04	.0413	.0872	377.3000
135	527.2	6.138	.735	9.465E-04	.0412	1.138E-03	.0495	.0903	374.5500
136	529.4	6.444	.715	9.243E-04	.0402	1.112E-03	.0484	.0960	374.5500
137	529.0	5.844	.763	9.849E-04	.0429	1.184E-03	.0516	.0872	370.5500
138	530.2	6.348	.730	9.439E-04	.0411	1.135E-03	.0494	.0928	370.5500
139	531.6	5.649	.721	9.336E-04	.0406	1.123E-03	.0489	.0816	366.0500
140	532.7	6.196	.788	1.022E-03	.0445	1.230E-03	.0536	.0934	362.4000
141	532.6	5.550	.733	9.510E-04	.0414	1.145E-03	.0498	.0973	362.4000
142	532.7	4.547	.485	6.423E-04	.0280	7.730E-04	.0337	.0833	355.2000
143	534.0	6.578	.661	8.590E-04	.0374	1.034E-03	.0450	.0919	355.2000
144	535.4	7.279	.960	1.249E-03	.0544	1.505E-03	.0655	.0949	349.0000

DATE 5/12/75

AEDC(ARO,INC.) ARNOLD AFS, TENNESSEE
VON KARMAN GAS DYNAMICS FACILITY
50 INCH HYPERSONIC TUNNEL B
V41B-87A

GROUP	TEST CONDITION	MODEL	MACH NO	PO,PSIA	TO,DEG R	ALPHA-MODEL	ALPHA-SECTOR	ALPHA-PREBEND	ROLL MODEL	YAW
115	43	140 B	7.98	430.5	1304	20.05	9.95	30.00	179.92	-.0

T-INF (DEG R)	P-INF (PSIA)	Q-INF (PSIA)	V-INF (FT/SEC)	RHO-INF (SLUGS/FT3)	MU-INF (LB-SEC/FT2)	RE/FT (FT-1)	HREF-FR (R= .0400FT)	STFR (R= .0400FT)	SWITCH POSITION
94.9	.045	1.598	3809	3.963E-05	7.640E-08	1.976E 06	2.297E-02	1.916E-02	2

IC NO	TW	DTWDT	QDOT	H(TO)	H(TO)/HREF	H(.9TO)	H(.9TO)/HREF	X/L	2Y/B
								UPPER RCS NOZZLES	
161	535.2	7.394	.876	1.140E-03	.0496	1.373E-03	.0597	.0619	-.0160
162	533.8	6.426	.798	1.036E-03	.0451	1.247E-03	.0543	.0709	-.0160
163	525.6	6.535	.799	1.027E-03	.0447	1.234E-03	.0537	.0807	-.0160
164	521.0	5.554	.720	9.202E-04	.0401	1.104E-03	.0481	.0943	-.0160
165	528.8	4.153	.522	6.734E-04	.0293	8.096E-04	.0352	.0978	-.0160
166	531.8	3.725	.477	6.141E-04	.0269	7.437E-04	.0324	.1013	-.0160
167	536.5	9.431	1.278	1.666E-03	.0725	2.007E-03	.0874	.0619	-.0320
168	535.0	9.871	1.037	1.350E-03	.0588	1.626E-03	.0708	.0709	-.0320
169	525.6	7.034	.851	1.094E-03	.0476	1.314E-03	.0572	.0807	-.0320
170	523.7	6.681	.831	1.066E-03	.0464	1.280E-03	.0557	.0943	-.0320
171	530.4	6.546	.788	1.019E-03	.0444	1.226E-03	.0534	.0978	-.0320
172	532.4	5.548	.723	9.374E-04	.0408	1.128E-03	.0491	.1013	-.0320
173	531.0	6.053	.807	1.045E-03	.0455	1.257E-03	.0547	.0807	-.0480
174	527.2	4.663	.529	6.825E-04	.0297	8.203E-04	.0357	.0943	-.0480
175	530.7	4.629	.663	8.573E-04	.0373	1.031E-03	.0449	.0978	-.0480
176	532.3	4.587	.624	8.095E-04	.0352	9.742E-04	.0424	.1013	-.0480
								CANOPY	
177	542.2	18.476	2.551	3.351E-03	.1459	4.043E-03	.1760		
178	544.2	21.332	4.214	5.549E-03	.2416	6.700E-03	.2916		
179	547.9	23.820	5.024	6.650E-03	.2895	8.036E-03	.3498		
180	544.4	18.646	2.444	3.220E-03	.1402	3.888E-03	.1693		
181	545.5	21.122	2.884	3.805E-03	.1656	4.595E-03	.2000		
182	542.8	21.336	3.053	4.014E-03	.1747	4.844E-03	.2108		
183	531.3	2.325	.291	3.773E-04	.0164	4.540E-04	.0198		
184	531.6	2.759	.377	4.879E-04	.0212	5.870E-04	.0256		
185	540.4	14.024	1.690	2.215E-03	.0964	2.671E-03	.1163		
186	543.2	17.489	2.205	2.900E-03	.1263	3.500E-03	.1524		
187	547.5	23.012	3.033	4.079E-03	.1775	4.928E-03	.2145		
188	540.7	15.676	3.660	4.797E-03	.2088	5.786E-03	.2519		
189	537.9	9.253	1.321	1.725E-03	.0751	2.079E-03	.0905		
190	542.7	16.083	3.323	3.054E-03	.1329	3.685E-03	.1604		
191	544.0	20.434	3.137	4.130E-03	.1798	4.986E-03	.2170		

DATE 5/12/75

AEDC(ARO,INC.) ARNOLD AFS, TENNESSEE
VON KARMAN GAS DYNAMICS FACILITY
50 INCH HYPERSONIC TUNNEL B
V41B-87A

GROUP	TEST CONDITION	MODEL	MACH NO	PO,PSIA	TO,DEG R	ALPHA-MODEL	ALPHA-SECTOR	ALPHA-PREBEND	ROLL MODEL	YAW
115	43	140 B	7.98	430.5	1304	20.05	9.95	30.00	179.92	-.0

T-INF (DEG R)	P-INF (PSIA)	Q-INF (PSIA)	V-INF (FT/SEC)	RHO-INF (SLUGS/FT3)	MU-INF (LB-SEC/FT2)	RE/FT (FT-1)	HREF-FR (R= .0400FT)	STFR (R= .0400FT)	SWITCH POSITION
94.2	.045	1.594	3809	3.963E-05	7.640E-08	1.976E 06	2.297E-02	1.916E-02	2

TC NO	TW	DTW/DT	QDOT	H(TO)	H(TO)/HREF	H(.9TO)	H(.9TO)/HREF
						CANOPY	
192	532.5	3.591	.494	6.403E-04	.0279	7.706E-04	.0335
193	537.4	12.455	2.211	2.884E-03	.1257	3.481E-03	.1515
194	534.4	5.975	.772	1.004E-03	.0437	1.209E-03	.0526
195	542.4	14.514	1.834	2.409E-03	.1049	2.907E-03	.1265
196	544.0	17.772	2.345	3.088E-03	.1344	3.727E-03	.1623
197	530.4	.734	.073	9.309E-05	.0041	1.129E-04	.0049
198	530.9	1.009	.117	1.514E-04	.0066	1.821E-04	.0079
199	532.2	1.923	.258	3.348E-04	.0146	4.029E-04	.0175
200	535.5	6.752	.953	1.253E-03	.0546	1.510E-03	.0657
201	544.1	20.202	3.866	3.774E-03	.1643	4.556E-03	.1983
202	539.1	11.633	1.474	1.928E-03	.0839	2.324E-03	.1012
203	531.4	2.211	.274	3.551E-04	.0155	4.273E-04	.0186
204	533.6	4.455	.692	8.992E-04	.0391	1.083E-03	.0471
205	540.4	16.625	2.600	3.407E-03	.1483	4.108E-03	.1788
206	530.1	1.032	.137	1.766E-04	.0077	2.124E-04	.0092
207	536.7	9.734	1.300	1.703E-03	.0741	2.052E-03	.0893
208	530.7	1.543	.214	2.765E-04	.0120	3.326E-04	.0145
209	530.8	2.154	.296	3.829E-04	.0167	4.606E-04	.0200
210	533.0	4.554	.652	8.461E-04	.0368	1.018E-03	.0443
211	530.4	2.215	.269	3.477E-04	.0151	4.182E-04	.0182
212	530.4	1.994	.269	3.475E-04	.0151	4.181E-04	.0182
213	532.2	3.164	.419	5.436E-04	.0237	6.541E-04	.0285
214	532.5	3.859	.540	7.002E-04	.0305	8.427E-04	.0367
215	533.9	6.308	.895	1.162E-03	.0506	1.399E-03	.0609
216	534.4	6.734	.957	1.244E-03	.0541	1.498E-03	.0652
217	534.5	6.777	.966	1.256E-03	.0547	1.512E-03	.0658
218	531.4	3.765	.519	6.728E-04	.0293	8.095E-04	.0352
219	533.5	4.537	.638	8.268E-04	.0361	9.975E-04	.0434
220	533.6	6.528	.898	1.166E-03	.0508	1.404E-03	.0611

GROUP 115 CENTERLINE TIME 2.65

CH	TC	FIT LENGTH	DTDWT	UNCERTAINTY	CH	TC	FIT LENGTH	DTDWT	UNCERTAINTY
1	107	.80	2.765	.0119	50	173	.60	6.053	.0208
2	108	.60	5.546	.0106	51	174	.60	4.663	.0172
3	109	.60	4.560	.0112	52	175	.60	4.629	.0109
4	110	.60	4.170	.0071	53	176	.60	4.587	.0146
5	111	.60	4.026	.0221	54	177	.30	18.470	.0101
6	112	.60	4.084	.0105	55	178	.30	21.332	.0077
7	113	.60	5.408	.0415	56	179	.30	23.820	.0192
8	114	.60	4.478	.0092	57	180	.30	18.646	.0052
9	115	.60	3.891	.0104	58	181	.30	21.122	.0055
10	116	.80	3.886	.0123	59	182	.30	21.336	.0059
11	117	.60	4.167	.0103	60	183	.80	2.325	.0156
12	118	.60	3.341	.0161	61	184	.80	2.759	.0190
13	119	.60	3.996	.0075	62	185	.40	14.024	.0053
14	120	.60	4.078	.0159	63	186	.30	17.489	.0018
15	121	.60	3.611	.0163	64	187	.30	23.012	.0068
16	122	.60	3.940	.0085	65	188	.30	15.676	.0145
17	124	.60	4.276	.0330	66	189	.40	9.253	.0157
18	125	.60	4.277	.0279	67	190	.40	16.083	.0072
19	126	.60	3.629	.0095	68	191	.30	20.434	.0279
20	127	.60	4.068	.0086	69	192	.80	3.501	.0165
21	128	.60	4.272	.0155	70	193	.40	11.465	.0075
22	129	.60	4.530	.0096	71	194	.60	5.975	.0074
23	130	.60	4.669	.0297	72	195	.40	14.814	.0066
24	131	.60	4.171	.0222	73	196	.30	17.772	.0069
25	132	.60	4.693	.0180	74	197	2.00	.733	.0163
26	133	.60	4.153	.0208	75	198	2.00	1.009	.0090
27	134	.60	4.014	.0160	76	199	1.20	1.923	.0160
28	135	.60	6.138	.0108	77	200	.60	6.752	.0057
29	136	.60	6.444	.0092	78	201	.30	20.202	.0058
30	137	.60	5.844	.0067	79	202	.40	11.630	.0419
31	138	.60	6.348	.0065	80	203	.80	2.211	.0162
32	139	.60	5.649	.0084	81	204	.60	4.456	.0106
33	140	.60	6.194	.0068	82	205	.30	16.625	.0068
34	141	.60	5.550	.0070	83	206	1.20	1.032	.0217
35	142	.60	4.547	.0154	84	207	.40	9.734	.0116
36	143	.60	6.578	.0078	85	208	1.20	1.593	.0120
37	144	.60	7.279	.0049	86	209	.80	2.154	.0149
38	151	.60	7.394	.0095	87	210	.60	4.884	.0215
39	152	.40	8.426	.0139	88	211	.80	2.215	.0145
40	153	.60	6.536	.0123	89	212	.80	1.994	.0234
41	154	.60	5.556	.0067	90	213	.80	3.164	.0756
42	155	.60	4.153	.0122	91	214	.80	3.852	.0219
43	166	.80	3.725	.0154	92	215	.60	6.300	.0245
44	167	.40	9.431	.0067	93	216	.60	6.735	.0102
45	168	.40	9.871	.0074	94	217	.60	6.777	.0097
46	169	.60	7.034	.0063	95	218	.80	3.766	.0100
47	170	.60	6.641	.0100	96	219	.60	4.537	.0139
48	171	.60	6.546	.0097	97	220	.60	6.528	.0073
49	172	.60	5.548	.0089	98	0	-0	0	0
115		.050							

BIT ON LOOP 56

DATE 5/12/75

AEDC(APO,INC.) ARNOLD AFS, TENNESSEE
VON KARMAN GAS DYNAMICS FACILITY
50 INCH HYPERSONIC TUNNEL B
V41H-87A

GRID #	TEST CONDITION	MODEL	MACH NO	PO,PSIA	TO,DEG R	ALPHA-MODEL	ALPHA-SECTOR	ALPHA-PREBEND	ROLL MODEL	YAW
110	44	146 B	7.98	432.1	1302	30.05	-.05	30.00	179.92	.0

T-INF (DEG R)	P-INF (PSIA)	Q-INF (PSIA)	V-INF (FT/SEC)	RHO-INF (SLUGS/FT3)	MU-INF (LB-SEC/FT2)	RE/FT (FT-1)	HREF-FR (R= .0400FT)	STFR (R= .0400FT)	SWITCH POSITION
54.6	.245	2.005	3807	3.982E-05	7.631E-08	1.987E 06	2.301E-02	1.911E-02	2

IC	TW	QTWOT	QOOT	H(TO)	H(TO)/HREF	H(.9TO)	H(.9TO)/HREF	X/L	Z,FULL SCALE(IN)
								ACCESS HATCH WINDOW	
107	529.5	3.003	.430	5.565E-04	.0242	6.694E-04	.0291	.2050	396.2000
								FUSELAGE VENT PANEL NO. 3 AND 1	
108	531.7	5.431	.574	7.455E-04	.0324	8.972E-04	.0390	.1244	377.5000
109	530.4	4.523	.559	7.239E-04	.0315	8.709E-04	.0378	.1302	377.5000
110	531.2	4.396	.557	7.212E-04	.0313	8.676E-04	.0377	.1360	377.5000
111	531.1	4.673	.563	7.301E-04	.0317	8.784E-04	.0382	.1418	377.5000
112	532.3	5.006	.584	7.716E-04	.0335	9.286E-04	.0404	.1476	377.5000
113	531.5	5.034	.577	7.490E-04	.0326	9.014E-04	.0392	.1215	273.5000
114	532.7	4.665	.560	7.256E-04	.0315	8.730E-04	.0379	.1273	273.5000
115	530.8	4.509	.559	7.247E-04	.0315	8.719E-04	.0379	.1331	273.5000
116	530.2	4.505	.552	7.164E-04	.0311	8.619E-04	.0375	.1389	273.5000
117	532.4	4.925	.567	7.370E-04	.0320	8.870E-04	.0385	.1447	273.5000
118	531.1	3.943	.545	7.072E-04	.0307	8.509E-04	.0370	.1409	366.0000
119	532.3	4.558	.590	7.665E-04	.0333	9.225E-04	.0401	.1442	366.0000
120	532.9	4.608	.576	7.489E-04	.0325	9.015E-04	.0392	.1215	359.5000
121	532.4	4.265	.623	6.801E-04	.0296	8.186E-04	.0356	.1303	359.5000
122	532.3	4.273	.532	6.919E-04	.0301	8.329E-04	.0362	.1337	359.5000
								LOWER RCS NOZZLES	
123	529.8	2.523	.225	2.913E-04	.0127	3.504E-04	.0152	.0950	400.0000
124	528.5	2.452	.257	3.452E-04	.0150	4.152E-04	.0180	.0988	400.0000
125	529.8	2.296	.392	3.908E-04	.0170	4.701E-04	.0204	.1027	400.0000
126	528.7	2.604	.351	4.538E-04	.0197	5.457E-04	.0237	.0911	395.0000
127	528.5	2.819	.341	4.415E-04	.0192	5.309E-04	.0231	.0950	395.0000
128	528.4	2.964	.347	4.496E-04	.0195	5.407E-04	.0235	.0988	395.0000
129	530.5	2.927	.357	4.627E-04	.0201	5.566E-04	.0242	.0810	390.0000
130	528.8	2.837	.418	5.410E-04	.0235	6.506E-04	.0283	.0857	390.0000
131	528.5	3.378	.393	5.078E-04	.0221	6.106E-04	.0265	.0963	390.0000
132	527.8	2.787	.337	4.359E-04	.0189	5.240E-04	.0228	.0857	383.8000
133	527.5	3.772	.514	6.505E-04	.0283	7.820E-04	.0340	.0872	377.3000
134	529.2	5.142	.616	7.973E-04	.0346	9.588E-04	.0417	.0903	374.5500
135	530.6	5.283	.586	7.602E-04	.0330	9.146E-04	.0397	.0960	374.5500
136	528.3	5.157	.673	8.714E-04	.0379	1.048E-03	.0455	.0872	370.5500
137	531.4	5.509	.634	8.212E-04	.0357	9.878E-04	.0429	.0928	370.5500
138	530.6	5.247	.669	8.674E-04	.0377	1.044E-03	.0454	.0816	366.0500
139	531.5	5.497	.699	9.070E-04	.0394	1.091E-03	.0474	.0934	362.4000
140	531.8	5.033	.665	8.629E-04	.0375	1.038E-03	.0451	.0973	362.4000
141	531.4	4.180	.455	5.904E-04	.0257	7.105E-04	.0309	.0833	355.2000
142	532.5	6.206	.723	8.098E-04	.0352	9.747E-04	.0424	.0919	355.2000
143	534.1	6.919	.912	1.187E-03	.0516	1.430E-03	.0621	.0949	349.0000
144									

DATE 5/12/75

AEDC(ARO,INC.) ARNOLD AFS, TENNESSEE
VON KARMAN GAS DYNAMICS FACILITY
50 INCH HYPERSONIC TUNNEL B
V41B-87A

GROUP	TEST CONDITION	MODEL	MACH NO	PO,PSIA	TO,DEG R	ALPHA-MODEL	ALPHA-SECTOR	ALPHA-PREBEND	ROLL MODEL	YAW
110	44	140 B	7.98	432.1	1302	30.05	-.05	30.00	179.92	.0

T-INF (DEG R)	P-INF (PSIA)	Q-INF (PSIA)	V-INF (FT/SEC)	RHO-INF (SLUGS/FT3)	MU-INF (LB-SEC/FT2)	RE/FT (FT-1)	HREF-FR (R= .0400FT)	STFR (R= .0400FT)	SWITCH POSITION
94.8	.045	2.005	3807	3.982E-05	7.631E-08	1.987E 06	2.301E-02	1.911E-02	2

TC NO	TW	DTW/DT	QDOT	H(TO)	H(TO)/HREF	H(.9TO)	H(.9TO)/HREF	X/L	2Y/B
								UPPER RCS NOZZLES	
161	533.2	2.178	.258	3.352E-04	.0146	4.035E-04	.0175	.0619	-.0160
162	532.2	2.164	.205	2.659E-04	.0116	3.200E-04	.0139	.0709	-.0160
163	528.5	1.566	.192	2.480E-04	.0108	2.982E-04	.0130	.0807	-.0160
164	527.2	1.291	.168	2.166E-04	.0094	2.604E-04	.0113	.0943	-.0160
165	530.0	1.142	.144	1.859E-04	.0081	2.237E-04	.0097	.0978	-.0160
166	531.5	1.019	.130	1.693E-04	.0074	2.037E-04	.0089	.1013	-.0160
167	533.8	1.854	.251	3.265E-04	.0142	3.932E-04	.0171	.0619	-.0320
168	532.6	2.179	.229	2.970E-04	.0129	3.576E-04	.0155	.0709	-.0320
169	528.4	1.631	.198	2.554E-04	.0111	3.071E-04	.0133	.0807	-.0320
170	527.7	1.414	.176	2.276E-04	.0099	2.736E-04	.0119	.0943	-.0320
171	529.7	1.468	.177	2.287E-04	.0099	2.750E-04	.0120	.0978	-.0320
172	530.3	1.176	.153	1.983E-04	.0086	2.366E-04	.0104	.1013	-.0320
173	530.3	.909	.121	1.570E-04	.0068	1.889E-04	.0082	.0807	-.0480
174	528.5	.648	.073	9.492E-05	.0041	1.141E-04	.0050	.0943	-.0480
175	529.7	.641	.092	1.188E-04	.0052	1.429E-04	.0062	.0978	-.0480
176	530.2	.565	.077	9.957E-05	.0043	1.198E-04	.0052	.1013	-.0480
								CANOPY	
177	541.2	11.226	1.550	2.037E-03	.0885	2.458E-03	.1068		
178	541.6	11.527	2.274	2.991E-03	.1300	3.608E-03	.1568		
179	545.7	16.503	3.477	4.598E-03	.1998	5.555E-03	.2414		
180	538.3	7.158	.935	1.225E-03	.0532	1.477E-03	.0642		
181	535.9	3.709	.504	6.579E-04	.0286	7.927E-04	.0344		
182	536.4	5.520	.787	1.029E-03	.0447	1.239E-03	.0539		
183	529.9	.665	.083	1.079E-04	.0047	1.298E-04	.0056		
184	530.2	.805	.110	1.423E-04	.0062	1.712E-04	.0074		
185	535.2	5.103	.613	8.000E-04	.0348	9.637E-04	.0419		
186	534.8	3.302	.414	5.403E-04	.0235	6.508E-04	.0283		
187	537.4	5.776	.770	1.008E-03	.0438	1.214E-03	.0528		
188	539.0	9.675	2.257	2.958E-03	.1286	3.567E-03	.1550		
189	532.6	2.565	.365	4.747E-04	.0206	5.714E-04	.0248		
190	532.5	1.821	.262	3.401E-04	.0148	4.093E-04	.0178		
191	534.7	3.856	.589	7.678E-04	.0334	9.247E-04	.0402		

DATE 5/12/75

AEDC(ARO,INC.) ARNOLD AFS, TENNESSEE
VON KARMAN GAS DYNAMICS FACILITY
50 INCH HYPERSONIC TUNNEL B
V418-87A

GROUP	TEST CONDITION	MODEL	MACH NO	PO,PSIA	TO,DEG R	ALPHA-MODEL	ALPHA-SECTOR	ALPHA-PREBEND	ROLL MODEL	YAW
116	44	140 B	7.95	432.1	1362	30.05	-.05	30.00	179.92	.0

T-INF (DEG R)	P-INF (PSIA)	Q-INF (PSIA)	V-INF (FT/SEC)	RHO-INF (SLUGS/FT3)	MU-INF (LB-SEC/FT2)	RE/FT (FT-1)	HREF-FR (R= .0400FT)	STFR (R= .0400FT)	SWITCH POSITION
94.8	.245	2.005	3807	3.982E-05	7.631E-08	1.987E 06	2.301E-02	1.911E-02	2

CANOPY

IC NO	TW	DTW/DT	QDOT	H(TO)	H(TO)/HREF	H(.9TO)	H(.9TO)/HREF
193	528.6	.716	.131	1.306E-04	.0057	1.571E-04	.0068
194	524.2	3.738	.719	9.307E-04	.0407	1.128E-03	.0490
194	528.5	.378	.048	6.163E-05	.0027	7.410E-05	.0032
195	530.0	.853	.105	1.360E-04	.0059	1.636E-04	.0071
195	530.9	1.472	.193	2.503E-04	.0109	3.012E-04	.0131
197	528.5	.627	.062	8.017E-05	.0035	9.640E-05	.0042
198	528.4	.638	.073	9.436E-05	.0041	1.135E-04	.0049
199	527.0	.757	.111	1.309E-04	.0057	1.573E-04	.0068
200	529.7	1.643	.249	3.097E-04	.0135	3.725E-04	.0162
201	532.8	3.774	.532	6.923E-04	.0301	8.334E-04	.0362
202	531.5	2.537	.320	4.157E-04	.0181	5.002E-04	.0217
203	527.4	.895	.111	1.431E-04	.0062	1.721E-04	.0075
204	529.8	1.164	.150	2.331E-04	.0101	2.803E-04	.0122
205	531.7	4.038	.624	8.101E-04	.0352	9.749E-04	.0424
206	528.4	1.188	.157	2.031E-04	.0088	2.442E-04	.0106
207	532.6	3.746	.543	6.606E-04	.0287	7.951E-04	.0346
208	527.3	.734	.095	1.269E-04	.0055	1.525E-04	.0066
209	527.3	.895	.123	1.584E-04	.0069	1.904E-04	.0083
210	527.3	.696	.093	1.195E-04	.0052	1.436E-04	.0062
211	528.3	.929	.113	1.455E-04	.0063	1.749E-04	.0076
212	528.2	.967	.133	1.640E-04	.0073	2.020E-04	.0088
213	527.3	.953	.126	1.626E-04	.0071	1.954E-04	.0085
214	527.3	1.453	.203	2.622E-04	.0114	3.152E-04	.0137
215	527.6	.928	.131	1.697E-04	.0074	2.040E-04	.0089
216	530.8	3.063	.435	5.641E-04	.0245	6.787E-04	.0295
217	530.5	2.440	.347	4.499E-04	.0196	5.412E-04	.0235
218	527.0	.989	.136	1.754E-04	.0076	2.108E-04	.0092
219	527.0	1.724	.242	3.118E-04	.0136	3.748E-04	.0163
220	527.5	1.387	.190	2.455E-04	.0107	2.952E-04	.0128

GROUP 116 CENTERLINE TIME 2.75

CH	TC	FIT LENGTH	DTDWT	UNCERTAINTY	CH	TC	FIT LENGTH	DTDWT	UNCERTAINTY
1	107	.80	3.003	.0161	50	173	2.00	.909	.0253
2	108	.60	5.431	.0094	51	174	2.00	.646	.0279
3	109	.60	4.523	.0084	52	175	2.00	.641	.0197
4	110	.60	4.396	.0123	53	176	2.00	.565	.0140
5	111	.60	4.673	.0214	54	177	.40	11.226	.0084
6	112	.60	5.006	.0090	55	178	.40	11.527	.0110
7	113	.60	5.034	.0268	56	179	.40	16.503	.0151
8	114	.60	4.665	.0077	57	180	.60	7.158	.0114
9	115	.60	4.569	.0172	58	181	.80	3.709	.0097
10	116	.60	4.505	.0099	59	182	.60	5.520	.0136
11	117	.60	4.926	.0117	60	183	2.00	.665	.0132
12	118	.60	3.943	.0196	61	184	2.00	.805	.0203
13	119	.60	4.558	.0088	62	185	.60	5.103	.0090
14	120	.60	4.618	.0128	63	186	.80	3.302	.0102
15	121	.60	4.265	.0229	64	187	.60	5.778	.0098
16	122	.60	4.273	.0147	65	188	.40	9.675	.0102
17	124	.80	2.523	.0323	66	189	.80	2.565	.0124
18	125	.80	2.452	.0117	67	190	1.20	1.821	.0094
19	126	.80	2.296	.0156	68	191	.80	3.856	.0629
20	127	.80	2.606	.0171	69	192	2.00	.718	.0488
21	128	.80	2.819	.0066	70	193	.80	3.736	.0119
22	129	.80	2.964	.0106	71	194	2.00	.370	.0595
23	130	.80	2.987	.0334	72	195	2.00	.853	.0119
24	131	.80	2.837	.0144	73	196	1.20	1.472	.0139
25	132	.80	3.378	.0140	74	197	2.00	.627	.0208
26	133	.80	2.787	.0116	75	198	2.00	.630	.0166
27	134	.80	3.772	.0079	76	199	2.00	.757	.0159
28	135	.60	5.142	.0111	77	200	1.20	1.683	.0124
29	136	.60	5.293	.0068	78	201	.80	3.774	.0087
30	137	.60	5.157	.0069	79	202	.80	2.537	.0744
31	138	.60	5.509	.0086	80	203	2.00	.895	.0083
32	139	.60	5.247	.0090	81	204	1.20	1.164	.0172
33	140	.60	5.497	.0074	82	205	.80	4.008	.0113
34	141	.60	5.033	.0093	83	206	1.20	1.188	.0257
35	142	.60	4.180	.0109	84	207	.80	3.796	.0097
36	143	.60	6.206	.0097	85	208	2.00	.734	.0134
37	144	.60	6.919	.0087	86	209	2.00	.895	.0092
38	161	.80	2.178	.0156	87	210	2.00	.696	.0346
39	162	.80	2.184	.0192	88	211	2.00	.929	.0111
40	163	1.20	1.566	.0194	89	212	2.00	.967	.0105
41	164	1.20	1.291	.0101	90	213	2.00	.953	.0441
42	165	1.20	1.142	.0146	91	214	1.20	1.453	.0221
43	166	2.00	1.019	.0145	92	215	2.00	.928	.0225
44	167	1.20	1.854	.0108	93	216	.80	3.068	.0138
45	168	.80	2.179	.0168	94	217	.80	2.440	.0279
46	169	1.20	1.631	.0107	95	218	2.00	.989	.0150
47	170	1.20	1.414	.0322	96	219	1.20	1.724	.0160
48	171	1.20	1.468	.0178	97	220	1.20	1.387	.0128
49	172	1.20	1.176	.0187	98	0	-0	0	0
117		.050							

BIT ON LOOP 55

DATE 5/12/75

AEDC(ARO,INC.) ARNOLD AFS, TENNESSEE
VON KARMAN GAS DYNAMICS FACILITY
50 INCH HYPERSONIC TUNNEL B
V41B-87A

GROUP	TEST CONDITION	MODEL	MACH NO	PO,PSIA	TO,DEG R	ALPHA-MODEL	ALPHA-SECTOR	ALPHA-PREBEND	ROLL MODEL	YAW
117	45	140 B	7.98	429.8	1299	40.07	-10.07	30.00	179.92	.0

T-INF (DEG R)	P-INF (PSIA)	Q-INF (PSIA)	V-INF (FT/SEC)	RHO-INF (SLUGS/FT3)	MU-INF (LB-SEC/FT2)	RE/FT (FT-1)	HREF-FR (R= .0400FT)	STFR (R= .0400FT)	SWITCH POSITION
94.6	.045	1.595	3803	3.969E-05	7.615E-08	1.982E 06	2.294E-02	1.914E-02	2

IC NO	TW	DTWDT	QDOT	H(TO)	H(TO)/HREF	H(.9TO)	H(.9TO)/HREF	X/L	Z,FULL SCALE(IN)
								ACCESS HATCH WINDOW	
107	531.1	2.953	.423	5.503E-04	.0240	6.624E-04	.0289	.2050	396.2000
								FUSELAGE VENT PANEL NO. 3 AND 1	
								X/L	Z,FULL SCALE(IN)
108	533.2	5.258	.556	7.262E-04	.0317	8.745E-04	.0381	.1244	377.5000
109	532.0	4.511	.557	7.265E-04	.0317	8.747E-04	.0381	.1302	377.5000
110	531.5	4.313	.546	7.120E-04	.0310	8.571E-04	.0374	.1360	377.5000
111	532.4	4.509	.543	7.085E-04	.0309	8.530E-04	.0372	.1418	377.5000
112	532.5	4.303	.511	6.664E-04	.0291	8.024E-04	.0350	.1476	377.5000
113	533.0	4.846	.556	7.254E-04	.0316	8.736E-04	.0381	.1215	273.5000
114	532.3	4.519	.541	7.057E-04	.0308	8.497E-04	.0370	.1273	273.5000
115	532.5	4.043	.502	6.545E-04	.0285	7.881E-04	.0344	.1331	273.5000
116	532.2	4.142	.518	6.625E-04	.0289	7.976E-04	.0348	.1389	273.5000
117	533.2	4.174	.491	6.276E-04	.0274	7.558E-04	.0329	.1447	273.5000
118	532.3	3.404	.471	6.139E-04	.0268	7.391E-04	.0322	.1409	366.0000
119	533.2	3.759	.487	6.351E-04	.0277	7.649E-04	.0333	.1442	366.0000
120	533.1	4.113	.514	6.709E-04	.0292	8.079E-04	.0352	.1215	359.5000
121	533.1	3.407	.418	5.459E-04	.0238	6.574E-04	.0287	.1303	359.5000
122	533.2	3.448	.429	5.606E-04	.0244	6.750E-04	.0294	.1337	359.5000
								LOWER RCS NOZZLES	
								X/L	Z,FULL SCALE(IN)
124	529.9	1.357	.121	1.572E-04	.0069	1.892E-04	.0082	.0950	400.0000
125	529.4	1.462	.159	2.065E-04	.0090	2.484E-04	.0108	.0988	400.0000
126	529.3	1.303	.179	2.324E-04	.0101	2.796E-04	.0122	.1027	400.0000
127	529.6	1.491	.201	2.607E-04	.0114	3.136E-04	.0137	.0911	395.0000
128	529.4	1.709	.227	2.691E-04	.0117	3.237E-04	.0141	.0950	395.0000
129	529.7	1.839	.216	2.801E-04	.0122	3.369E-04	.0147	.0988	395.0000
130	530.0	1.791	.203	2.644E-04	.0115	3.181E-04	.0139	.0810	390.0000
131	529.3	1.626	.240	3.118E-04	.0136	3.752E-04	.0164	.0857	390.0000
132	529.1	2.289	.266	3.456E-04	.0151	4.157E-04	.0181	.0963	390.0000
133	529.2	1.739	.211	2.736E-04	.0119	3.292E-04	.0143	.0857	383.8000
134	529.1	2.894	.387	5.022E-04	.0219	6.042E-04	.0263	.0872	377.3000
135	530.3	4.097	.491	6.367E-04	.0278	7.666E-04	.0335	.0903	374.5500
136	531.0	4.655	.517	6.727E-04	.0293	8.096E-04	.0353	.0960	374.5500
137	530.8	4.258	.556	7.238E-04	.0316	8.711E-04	.0380	.0872	370.5500
138	531.4	4.898	.564	7.340E-04	.0320	8.834E-04	.0385	.0928	370.5500
139	532.5	4.385	.560	7.299E-04	.0318	8.788E-04	.0383	.0816	366.0500
140	532.7	5.104	.649	8.469E-04	.0369	1.020E-03	.0445	.0934	362.4000
141	532.2	4.703	.621	8.096E-04	.0353	9.747E-04	.0425	.0973	362.4000
142	533.2	3.612	.343	5.136E-04	.0224	6.184E-04	.0270	.0833	355.2000
143	533.9	5.662	.569	7.433E-04	.0324	8.952E-04	.0390	.0919	355.2000
144	534.7	6.351	.837	1.095E-03	.0477	1.319E-03	.0575	.0949	349.0000

DATE 5/12/75

AEDC(ARO,INC.) ARNOLD AFS, TENNESSEE
VON KARMAN GAS DYNAMICS FACILITY
50 INCH HYPERSONIC TUNNEL B
V418-B/A

GROUP	TEST CONDITION	MODEL	MACH NO	PO,PSIA	TO,DEG R	ALPHA-MODEL	ALPHA-SECTOR	ALPHA-PREBEND	ROLL MODEL	YAW
117	45	140 B	7.98	429.8	1299	40.07	-10.07	30.00	179.92	.0

T-INF (DEG R)	P-INF (PSIA)	Q-INF (PSIA)	V-INF (FT/SEC)	RHO-INF (SLUGS/FT3)	MU-INF (LB-SEC/FT2)	RE/FT (FT-1)	HREF-FR (R= .0400FT)	STFR (R= .0400FT)	SWITCH POSITION
94.6	.045	1.995	3803	3.969E-05	7.615E-08	1.982E 06	2.294E-02	1.914E-02	2

IC NO	TW	DTWDT	QDOT	H(TO)	H(TO)/HREF	H(.9TO)	H(.9TO)/HREF	X/L	2Y/B
								UPPER RCS NOZZLES	
161	532.8	1.607	.190	2.479E-04	.0108	2.985E-04	.0130	.0619	-.0160
162	532.6	1.869	.177	2.307E-04	.0101	2.777E-04	.0121	.0709	-.0160
163	530.0	1.507	.185	2.402E-04	.0105	2.890E-04	.0126	.0807	-.0160
164	529.1	2.029	.264	3.427E-04	.0149	4.122E-04	.0180	.0943	-.0160
165	531.7	1.940	.244	3.179E-04	.0139	3.826E-04	.0167	.0978	-.0160
166	532.4	1.793	.230	2.994E-04	.0131	3.605E-04	.0157	.1013	-.0160
167	532.3	.909	.123	1.601E-04	.0070	1.928E-04	.0084	.0619	-.0320
168	531.8	1.377	.144	1.862E-04	.0082	2.265E-04	.0099	.0709	-.0320
169	529.1	1.253	.152	1.972E-04	.0086	2.372E-04	.0103	.0807	-.0320
170	528.5	1.555	.194	2.515E-04	.0110	3.025E-04	.0132	.0943	-.0320
171	530.2	1.654	.199	2.589E-04	.0113	3.115E-04	.0136	.0978	-.0320
172	530.5	1.455	.189	2.464E-04	.0107	2.965E-04	.0129	.1013	-.0320
173	529.1	.261	.035	4.505E-05	.0020	5.420E-05	.0024	.0807	-.0480
174	528.1	.429	.048	6.162E-05	.0027	7.434E-05	.0032	.0943	-.0480
175	529.2	.530	.076	9.846E-05	.0043	1.184E-04	.0052	.0978	-.0480
176	529.6	.571	.078	1.009E-04	.0044	1.214E-04	.0053	.1013	-.0480
								CANOPY	
177	539.1	11.719	1.616	2.126E-03	.0927	2.564E-03	.1118		
178	537.0	9.091	1.789	2.347E-03	.1023	2.830E-03	.1234		
179	534.7	4.900	1.027	1.343E-03	.0585	1.618E-03	.0705		
180	537.4	7.857	1.026	1.347E-03	.0587	1.624E-03	.0708		
181	535.1	6.037	.820	1.073E-03	.0468	1.293E-03	.0564		
182	530.6	2.000	.284	3.701E-04	.0161	4.453E-04	.0194		
183	530.0	.690	.086	1.124E-04	.0049	1.353E-04	.0059		
184	530.1	.711	.097	1.261E-04	.0055	1.517E-04	.0066		
185	534.3	6.609	.794	1.038E-03	.0453	1.251E-03	.0545		
186	533.9	5.909	.741	9.689E-04	.0422	1.167E-03	.0509		
187	531.9	2.472	.329	4.282E-04	.0187	5.155E-04	.0225		
188	530.6	2.109	.490	6.374E-04	.0278	7.670E-04	.0334		
189	531.5	4.373	.622	8.103E-04	.0353	9.754E-04	.0425		
190	531.8	5.037	.723	9.426E-04	.0411	1.135E-03	.0495		
191	529.8	2.414	.368	4.780E-04	.0208	5.751E-04	.0251		

DATE 5/12/75

AEDC(ARO,INC.) ARNOLD AFS, TENNESSEE
VON KARMAN GAS DYNAMICS FACILITY
50 INCH HYPERSONIC TUNNEL R
V41R-87A

GROUP	TEST CONDITION	MODEL	MACH NO	PO,PSIA	TO,DEG R	ALPHA-MODEL	ALPHA-SECTOR	ALPHA-PREBEND	ROLL MODEL	YAW
117	45	140 B	7.98	429.8	1299	40.07	-10.07	30.00	179.92	.0

T-INF (DEG R)	P-INF (PSIA)	Q-INF (PSIA)	V-INF (FT/SEC)	RHO-INF (SLUGS/FT3)	MU-INF (LB-SEC/FT2)	RE/FT (FT-1)	HREF-FR (R= .0400FT)	STFR (R= .0400FT)	SWITCH POSITION
94.6	.045	1.995	3803	3.969E-05	7.615E-08	1.982E 06	2.294E-02	1.914E-02	2

IC	NC	TW	DIWDT	DDCT	H(TO)	H(TO)/HREF	H(.9TO)	H(.9TO)/HREF
								CANOPY
192		528.5	.543	.094	1.054E-04	.0047	1.303E-04	.0057
193		528.5	1.141	.219	2.844E-04	.0124	3.420E-04	.0149
194		527.4	.993	.125	1.655E-04	.0072	1.991E-04	.0087
195		529.5	1.715	.211	2.735E-04	.0119	3.289E-04	.0143
196		527.7	1.113	.146	1.889E-04	.0082	2.271E-04	.0099
197		528.4	.466	.046	5.977E-05	.0026	7.189E-05	.0031
198		526.2	.489	.057	7.345E-05	.0032	8.833E-05	.0039
199		526.7	1.003	.134	1.738E-04	.0076	2.089E-04	.0091
200		528.2	2.064	.293	3.802E-04	.0166	4.572E-04	.0199
201		528.7	2.341	.330	4.277E-04	.0186	5.144E-04	.0224
202		528.2	1.143	.149	1.932E-04	.0084	2.323E-04	.0101
203		527.7	.586	.072	9.309E-05	.0041	1.119E-04	.0049
204		527.5	1.006	.155	2.008E-04	.0088	2.414E-04	.0105
205		529.0	3.061	.476	6.177E-04	.0269	7.430E-04	.0324
206		529.1	.322	.043	5.528E-05	.0024	6.650E-05	.0029
207		530.0	3.495	.467	6.074E-04	.0265	7.308E-04	.0319
208		527.8	.642	.086	1.116E-04	.0049	1.342E-04	.0058
209		527.3	1.045	.143	1.856E-04	.0081	2.231E-04	.0097
210		526.4	.639	.085	1.100E-04	.0048	1.322E-04	.0058
211		529.1	.737	.099	1.159E-04	.0051	1.394E-04	.0061
212		528.5	.588	.079	1.026E-04	.0045	1.234E-04	.0054
213		527.7	.743	.098	1.274E-04	.0056	1.532E-04	.0067
214		527.7	1.607	.225	2.912E-04	.0127	3.502E-04	.0153
215		526.4	1.036	.146	1.886E-04	.0082	2.267E-04	.0099
216		529.2	3.182	.448	5.817E-04	.0254	6.998E-04	.0305
217		529.3	3.019	.424	5.573E-04	.0243	6.704E-04	.0292
218		527.9	.671	.092	1.194E-04	.0052	1.436E-04	.0063
219		527.1	1.685	.237	3.067E-04	.0134	3.687E-04	.0161
220		525.9	1.463	.200	2.591E-04	.0113	3.115E-04	.0136

GROUP 117 CENTERLINE TIME 2.70

CH	TC	FIT LENGTH	DTDWT	UNCERTAINTY	CH	TC	FIT LENGTH	DTDWT	UNCERTAINTY
1	107	.80	2.953	.0138	50	173	2.00	.261	.0857
2	108	.80	5.258	.0148	51	174	2.00	.420	.0327
3	109	.80	4.511	.0109	52	175	2.00	.530	.0247
4	110	.80	4.313	.0111	53	176	2.00	.571	.0158
5	111	.80	4.529	.0183	54	177	.40	11.719	.0080
6	112	.80	4.303	.0094	55	178	.40	9.091	.0090
7	113	.80	4.846	.0301	56	179	.60	4.900	.0443
8	114	.80	4.510	.0165	57	180	.60	7.857	.0091
9	115	.80	4.043	.0075	58	181	.60	6.037	.0073
10	116	.80	4.142	.0105	59	182	.80	2.000	.0268
11	117	.80	4.174	.0089	60	183	2.00	.690	.0164
12	118	.80	3.404	.0192	61	184	2.00	.711	.0250
13	119	.80	3.759	.0143	62	185	.60	6.609	.0064
14	120	.80	4.113	.0117	63	186	.60	5.909	.0042
15	121	.80	3.407	.0179	64	187	.80	2.472	.0265
16	122	.80	3.448	.0121	65	188	.80	2.109	.0170
17	124	1.20	1.357	.0377	66	189	.60	4.373	.0150
18	125	1.20	1.462	.0136	67	190	.60	5.037	.0094
19	126	1.20	1.359	.0153	68	191	.80	2.414	.0692
20	127	1.20	1.491	.0193	69	192	2.00	.593	.0379
21	128	1.20	1.709	.0094	70	193	1.20	1.141	.0233
22	129	1.20	1.839	.0130	71	194	2.00	.993	.0165
23	13	1.20	1.700	.0228	72	195	1.20	1.715	.0131
24	131	1.20	1.626	.0179	73	196	1.20	1.113	.0177
25	132	.80	2.289	.0296	74	197	2.00	.466	.0230
26	133	1.20	1.739	.0130	75	198	2.00	.489	.0289
27	134	.80	2.854	.0099	76	199	1.20	1.003	.0293
28	135	.80	4.097	.0090	77	200	.80	2.064	.0157
29	136	.80	4.655	.0097	78	201	.80	2.341	.0125
30	137	.80	4.258	.0092	79	202	1.20	1.182	.0901
31	138	.80	4.898	.0046	80	203	2.00	.580	.0145
32	139	.80	4.335	.0139	81	204	2.00	1.000	.0117
33	140	.80	5.104	.0101	82	205	.80	3.061	.0092
34	141	.80	4.702	.0114	83	206	2.00	.322	.0896
35	142	.80	3.612	.0091	84	207	.80	3.495	.0138
36	143	.80	5.662	.0100	85	208	2.00	.642	.0136
37	144	.80	6.351	.0079	86	209	1.20	1.045	.0166
38	161	1.20	1.687	.0149	87	210	2.00	.639	.0403
39	162	1.20	1.869	.0112	88	211	2.00	.737	.0298
40	163	1.20	1.507	.0134	89	212	2.00	.588	.0217
41	164	.80	2.029	.0193	90	213	2.00	.743	.0655
42	165	1.20	1.940	.0096	91	214	1.20	1.607	.0207
43	166	1.20	1.793	.0163	92	215	1.20	1.030	.0413
44	167	2.00	.969	.0106	93	216	.80	3.162	.0087
45	168	1.20	1.377	.0138	94	217	.80	3.019	.0161
46	169	1.20	1.253	.0156	95	218	2.00	.671	.0184
47	170	1.20	1.555	.0289	96	219	1.20	1.689	.0139
48	171	1.20	1.654	.0135	97	220	1.20	1.460	.0144
49	172	1.20	1.455	.0146	98	0	-0	0	0

DATE 5/12/75

AEDC(ARO,INC.) ARNOLD AFS, TENNESSEE
VON KARMAN GAS DYNAMICS FACILITY
50 INCH HYPERSONIC TUNNEL B
V41B-87A

GROUP	TEST CONDITIONS	MODEL	MACH NO	PO,PSIA	TO,DEG R	ALPHA-MODEL	ALPHA-SECTOR	ALPHA-PREBEND	ROLL MODEL	YAW
114	46	140 B	7.90	109.2	1269	20.06	9.94	30.00	179.92	-.0

T-INF (DEG R)	P-INF (PSIA)	Q-INF (PSIA)	V-INF (FT/SEC)	RHO-INF (SLUGS/FT3)	MU-INF (LB-SEC/FT2)	RE/FT (FT-1)	HREF-FR (R= .0400FT)	STFR (R= .0400FT)	SWITCH POSITION
94.1	.612	.534	3755	1.082E-05	7.576E-08	5.364E 05	1.178E-02	3.656E-02	2

TC NO	T0	DTWST	QDOT	H(TO)	H(TO)/HREF	H(.9TO)	H(.9TO)/HREF		
								ACCESS HATCH WINDOW	
								X/L	Z,FULL SCALE(IN)
107	531.5	1.340	.192	2.604E-04	.0221	3.146E-04	.0267	.2050	396.2000
								FUSELAGE VENT PANEL NO. 3 AND 1	
								X/L	Z,FULL SCALE(IN)
108	533.9	2.741	.240	3.948E-04	.0335	4.772E-04	.0405	.1244	377.5000
109	533.2	2.266	.240	3.810E-04	.0324	4.605E-04	.0391	.1302	377.5000
110	532.9	1.968	.249	3.390E-04	.0298	4.096E-04	.0348	.1360	377.5000
111	532.9	2.135	.258	3.501E-04	.0297	4.231E-04	.0359	.1418	377.5000
112	533.7	2.031	.241	3.279E-04	.0278	3.962E-04	.0336	.1476	377.5000
113	534.1	2.409	.277	3.765E-04	.0320	4.551E-04	.0386	.1215	273.5000
114	533.7	2.274	.273	3.717E-04	.0316	4.492E-04	.0381	.1273	273.5000
115	533.5	1.949	.242	3.292E-04	.0280	3.979E-04	.0338	.1331	273.5000
116	533.7	1.943	.239	3.247E-04	.0276	3.925E-04	.0333	.1389	273.5000
117	533.7	2.116	.244	3.317E-04	.0282	4.009E-04	.0340	.1447	273.5000
118	534.1	1.751	.242	3.300E-04	.0280	3.989E-04	.0339	.1409	366.0000
119	534.1	2.025	.252	3.571E-04	.0303	4.316E-04	.0366	.1442	366.0000
120	534.5	2.076	.250	3.539E-04	.0300	4.279E-04	.0363	.1215	359.5000
121	534.9	1.826	.224	3.058E-04	.0260	3.697E-04	.0314	.1303	359.5000
122	535.1	1.745	.217	2.965E-04	.0252	3.585E-04	.0304	.1337	359.5000
								LOWER RCS NOZZLES	
								X/L	Z,FULL SCALE(IN)
124	533.0	2.243	.200	2.723E-04	.0231	3.290E-04	.0279	.0950	400.0000
125	530.5	1.667	.191	2.457E-04	.0209	2.967E-04	.0252	.0988	400.0000
126	532.7	1.912	.252	3.559E-04	.0302	4.301E-04	.0365	.1027	400.0000
127	532.7	1.938	.251	3.551E-04	.0301	4.291E-04	.0364	.0911	395.0000
128	532.5	2.209	.258	3.643E-04	.0309	4.402E-04	.0374	.0950	395.0000
129	532.8	2.231	.252	3.558E-04	.0302	4.300E-04	.0365	.0988	395.0000
130	533.0	2.313	.277	3.766E-04	.0320	4.552E-04	.0386	.0810	390.0000
131	532.4	2.111	.312	4.235E-04	.0360	5.117E-04	.0434	.0857	390.0000
132	532.7	2.347	.273	3.715E-04	.0315	4.489E-04	.0381	.0963	390.0000
133	532.2	2.145	.250	3.537E-04	.0300	4.273E-04	.0363	.0857	383.8000
134	532.3	2.320	.311	4.219E-04	.0358	5.096E-04	.0433	.0872	377.3000
135	533.4	2.890	.347	4.721E-04	.0401	5.706E-04	.0484	.0903	374.5500
136	533.7	3.045	.339	4.606E-04	.0391	5.567E-04	.0473	.0960	374.5500
137	533.5	2.803	.357	4.968E-04	.0423	6.029E-04	.0512	.0872	370.5500
138	533.9	3.066	.353	4.808E-04	.0408	5.812E-04	.0493	.0928	370.5500
139	534.3	2.881	.368	5.012E-04	.0426	6.059E-04	.0514	.0816	366.0500
140	534.6	2.910	.371	5.049E-04	.0429	6.104E-04	.0518	.0934	362.4000
141	534.3	2.627	.347	4.730E-04	.0402	5.717E-04	.0485	.0973	362.4000
142	535.0	2.118	.231	3.147E-04	.0267	3.805E-04	.0323	.0833	355.2000
143	535.4	3.129	.315	4.291E-04	.0364	5.189E-04	.0441	.0919	355.2000
144	536.3	3.563	.470	6.415E-04	.0545	7.758E-04	.0659	.0949	349.0000

DATE 5/12/75

AEDC(ARO,INC.) ARNOLD AFS, TENNESSEE
VON KARMAN GAS DYNAMICS FACILITY
50 INCH HYPERSONIC TUNNEL B
V41H-87A

GROUP	TEST CONDITION	MODEL	MACH NO	PO,PSIA	TO,DEG R	ALPHA-MODEL	ALPHA-SECTOR	ALPHA-PREBEND	ROLL MODEL	YAW
11B	46	140 B	7.90	109.2	1269	20.06	9.94	30.00	179.92	-.0

T-INF (DEG R)	P-INF (PSIA)	Q-INF (PSIA)	V-INF (FT/SEC)	RHO-INF (SLUGS/FT3)	MU-INF (LB-SEC/FT2)	RE/FT (FT-1)	HREF-FR (R= .0400FT)	STFR (R= .0400FT)	SWITCH POSITION
9-.1	.012	.530	3755	1.082E-05	7.576E-06	5.364E 05	1.178E-02	3.656E-02	2

IC	NC	TW	DTWDT	QDOT	H(TO)	H(TO)/HREF	H(.9TO)	H(.9TO)/HREF	X/L	2Y/B
									UPPER RCS NOZZLES	
161		533.3	1.737	.216	2.795E-04	.0237	3.378E-04	.0287	.0619	-.0160
162		532.8	1.632	.154	2.098E-04	.0178	2.535E-04	.0215	.0709	-.0160
163		531.4	1.172	.144	1.950E-04	.0166	2.355E-04	.0200	.0807	-.0160
164		531.1	.935	.122	1.651E-04	.0140	1.994E-04	.0169	.0943	-.0160
165		532.2	.760	.096	1.299E-04	.0110	1.570E-04	.0133	.0978	-.0160
166		532.5	.598	.077	1.041E-04	.0088	1.258E-04	.0107	.1013	-.0160
167		533.5	2.312	.313	4.255E-04	.0361	5.143E-04	.0437	.0619	-.0320
168		533.2	2.262	.237	3.227E-04	.0274	3.899E-04	.0331	.0709	-.0320
169		531.3	1.481	.180	2.437E-04	.0207	2.943E-04	.0250	.0807	-.0320
170		530.8	1.135	.142	1.921E-04	.0163	2.320E-04	.0197	.0943	-.0320
171		531.3	1.211	.146	1.979E-04	.0168	2.390E-04	.0203	.0978	-.0320
172		531.7	.868	.116	1.569E-04	.0133	1.895E-04	.0161	.1013	-.0320
173		531.2	1.227	.164	2.218E-04	.0188	2.679E-04	.0227	.0807	-.0480
174		530.9	.926	.105	1.428E-04	.0121	1.724E-04	.0146	.0943	-.0480
175		531.2	.938	.134	1.821E-04	.0155	2.199E-04	.0187	.0978	-.0480
176		531.4	.718	.098	1.324E-04	.0112	1.599E-04	.0136	.1013	-.0480
									CANOPY	
177		534.9	2.235	.318	4.173E-04	.0356	5.069E-04	.0430		
178		536.2	4.149	.816	1.115E-03	.0946	1.348E-03	.1144		
179		539.5	7.647	1.606	2.203E-03	.1871	2.668E-03	.2265		
180		533.7	.844	.110	1.497E-04	.0127	1.809E-04	.0154		
181		534.5	1.728	.235	3.196E-04	.0271	3.864E-04	.0328		
182		535.2	3.145	.448	6.113E-04	.0519	7.392E-04	.0628		
183		532.5	.461	.058	7.861E-05	.0067	9.498E-05	.0081		
184		532.6	.462	.063	8.577E-05	.0073	1.036E-04	.0088		
185		533.1	1.024	.123	1.672E-04	.0142	2.020E-04	.0171		
186		534.7	1.647	.232	3.159E-04	.0268	3.820E-04	.0324		
187		535.1	3.206	.427	5.821E-04	.0494	7.038E-04	.0598		
188		537.0	5.185	1.238	1.651E-03	.1402	1.998E-03	.1696		
189		533.2	.871	.124	1.686E-04	.0143	2.038E-04	.0173		
190		533.9	1.514	.218	2.964E-04	.0252	3.583E-04	.0304		
191		534.7	2.698	.412	5.617E-04	.0477	6.791E-04	.0577		

DATE 5/12/75

AEDC(ARO,INC.) ARNOLD AFS, TENNESSEE
VON KARMAN GAS DYNAMICS FACILITY
50 INCH HYPERSONIC TUNNEL B
V41B-B7A

GROUP	TEST CONDITION	MODEL	MACH NO	PO,PSIA	TO,DEG R	ALPHA-MODEL	ALPHA-SECTOR	ALPHA-PREBEND	ROLL MODEL	YAW
118	46	140 B	7.90	109.2	1269	20.06	9.94	30.00	179.92	-.0

T-INF (DEG R)	P-INF (PSIA)	Q-INF (PSIA)	V-INF (FT/SEC)	RHO-INF (SLUGS/FT3)	MU-INF (LB-SEC/FT2)	RE/FT (FT-1)	HREF-FR (R= .0400FT)	STFR (R= .0400FT)	SWITCH POSITION
94.1	.012	.530	3755	1.082E-05	7.576E-08	5.364E 05	1.178E-02	3.656E-02	2

TC NO	TW	DTWDT	QDOT	H(TO)	H(TO)/HREF	H(.9TO)	H(.9TO)/HREF
						CANOPY	
192	532.3	.586	.082	1.111E-04	.0094	1.343E-04	.0114
193	535.3	3.339	.643	8.771E-04	.0745	1.061E-03	.0900
194	532.3	.879	.113	1.540E-04	.0131	1.861E-04	.0158
195	533.4	1.746	.215	2.927E-04	.0249	3.538E-04	.0300
196	533.4	2.115	.278	3.776E-04	.0321	4.563E-04	.0387
197	530.8	.335	.033	4.501E-05	.0038	5.435E-05	.0046
198	531.2	.310	.030	4.882E-05	.0041	5.897E-05	.0050
199	531.2	.997	.134	1.815E-04	.0154	2.192E-04	.0186
200	532.9	1.526	.217	2.953E-04	.0251	3.568E-04	.0303
201	534.1	2.571	.353	4.943E-04	.0419	5.971E-04	.0507
202	534.8	3.022	.342	5.206E-04	.0442	6.295E-04	.0534
203	531.4	.453	.056	7.620E-05	.0065	9.203E-05	.0078
204	532.1	.844	.131	1.779E-04	.0151	2.149E-04	.0182
205	533.7	2.018	.314	4.278E-04	.0363	5.171E-04	.0439
206	530.2	.438	.058	7.849E-05	.0067	9.478E-05	.0080
207	533.7	2.257	.332	4.114E-04	.0349	4.972E-04	.0422
208	530.8	.313	.042	5.686E-05	.0048	6.867E-05	.0058
209	531.7	.524	.072	9.704E-05	.0083	1.179E-04	.0100
210	532.3	.965	.129	1.748E-04	.0148	2.112E-04	.0179
211	530.9	.509	.062	8.374E-05	.0071	1.011E-04	.0086
212	530.8	.420	.057	7.668E-05	.0065	9.260E-05	.0079
213	530.9	.410	.054	7.301E-05	.0062	8.890E-05	.0075
214	531.4	.554	.078	1.053E-04	.0089	1.272E-04	.0108
215	531.9	1.140	.162	2.195E-04	.0186	2.652E-04	.0225
216	533.2	1.767	.251	3.412E-04	.0290	4.123E-04	.0350
217	532.9	1.476	.210	2.857E-04	.0243	3.452E-04	.0293
218	530.5	.356	.049	6.640E-05	.0056	8.018E-05	.0068
219	531.8	.269	.038	5.120E-05	.0043	6.185E-05	.0053
220	531.9	.973	.134	1.815E-04	.0154	2.192E-04	.0186

GROUP 118 CENTERLINE TIME 2.60

CH	TC	FIT LENGTH	DTDWT	UNCERTAINTY	CH	TC	FIT LENGTH	DTDWT	UNCERTAINTY
1	107	1.20	1.340	.0139	50	173	1.20	1.227	.0143
2	108	.80	2.741	.0156	51	174	2.00	.926	.0157
3	109	.80	2.266	.0154	52	175	2.00	.938	.0156
4	110	.80	1.968	.0158	53	176	2.00	.718	.0121
5	111	.80	2.138	.0383	54	177	.80	2.235	.0234
6	112	.80	2.031	.0109	55	178	.60	4.149	.0117
7	113	.80	2.419	.0778	56	179	.60	7.647	.0205
8	114	.80	2.274	.0129	57	180	2.00	.844	.0113
9	115	1.20	1.949	.0128	58	181	1.20	1.728	.0102
10	116	1.20	1.943	.0071	59	182	.80	3.145	.0146
11	117	.80	2.116	.0266	60	183	2.00	.461	.0234
12	118	1.20	1.751	.0165	61	184	2.00	.462	.0365
13	119	.80	2.025	.0127	62	185	1.20	1.024	.0721
14	120	.80	2.076	.0151	63	186	1.20	1.847	.0107
15	121	1.20	1.826	.0161	64	187	.80	3.206	.0123
16	122	1.20	1.745	.0119	65	188	.60	5.185	.0106
17	124	.80	2.243	.0394	66	189	2.00	.871	.0176
18	125	2.00	1.667	.0846	67	190	1.20	1.514	.0102
19	126	1.20	1.912	.0085	68	191	.80	2.698	.0965
20	127	1.20	1.938	.0117	69	192	2.00	.580	.0367
21	128	.80	2.209	.0112	70	193	.80	3.339	.0123
22	129	.80	2.231	.0869	71	194	2.00	.879	.0165
23	130	.80	2.313	.0203	72	195	1.20	1.746	.0103
24	131	.80	2.111	.0235	73	196	.80	2.115	.0143
25	132	.80	2.347	.0210	74	197	2.00	.335	.0291
26	133	.80	2.146	.0146	75	198	2.00	.310	.0447
27	134	.80	2.320	.0133	76	199	1.20	.997	.0319
28	135	.80	2.890	.0140	77	200	1.20	1.526	.0088
29	136	.80	3.045	.0105	78	201	.80	2.571	.0159
30	137	.80	2.803	.0151	79	202	.80	3.022	.0653
31	138	.80	3.066	.0087	80	203	2.00	.453	.0188
32	139	.80	2.881	.0141	81	204	2.00	.844	.0124
33	140	.80	2.910	.0109	82	205	1.20	2.018	.0070
34	141	.80	2.627	.0107	83	206	2.00	.438	.0215
35	142	.80	2.118	.0193	84	207	.80	2.257	.0177
36	143	.80	3.129	.0114	85	208	2.00	.313	.0242
37	144	.80	3.563	.0081	86	209	2.00	.524	.0206
38	161	1.20	1.737	.0121	87	210	2.00	.965	.0219
39	162	1.20	1.632	.0126	88	211	2.00	.509	.0159
40	163	1.20	1.172	.0231	89	212	2.00	.420	.0225
41	164	2.00	.935	.0078	90	213	2.00	.410	.1031
42	165	2.00	.760	.0098	91	214	2.00	.554	.0308
43	166	2.00	.598	.0223	92	215	1.20	1.140	.0446
44	167	.80	2.312	.0154	93	216	1.20	1.767	.0116
45	168	.80	2.262	.0136	94	217	1.20	1.476	.0213
46	169	1.20	1.481	.0096	95	218	2.00	.356	.0491
47	170	1.20	1.135	.0413	96	219	2.00	.269	.0580
48	171	1.20	1.211	.0166	97	220	2.00	.973	.0096
49	172	2.00	.888	.0113	98	0	-0	0	0
119		.050							

BIT ON LOOP 55

DATE 5/12/75

AEDC(ARO,INC.) ARNOLD AFS, TENNESSEE
VON KARMAN GAS DYNAMICS FACILITY
50 INCH HYPERSONIC TUNNEL H
V41B-87A

GROUP	TEST CONDITION	MODEL	MACH NO	PO,PSIA	TO,DEG R	ALPHA-MODEL	ALPHA-SECTOR	ALPHA-PREBEND	ROLL MODEL	YAW
119	47	140 B	7.90	111.4	1270	30.05	-.05	30.00	179.94	.0

T-INF (DEG R)	P-INF (PSIA)	Q-INF (PSIA)	V-INF (FT/SEC)	RHO-INF (SLUGS/FT3)	MU-INF (LB-SEC/FT2)	RE/FT (FT-1)	HREF-FR (R= .0400FT)	STFR (R= .0400FT)	SWITCH POSITION
94.2	.212	.541	3756	1.103E-05	7.582E-06	5.466E 05	1.190E-02	3.621E-02	2

TC NO	TW	DTWDT	QDOT	H(TO)	H(TO)/HREF	H(.9TO)	H(.9TO)/HREF	X/L	Z,FULL SCALE(IN)
								ACCESS HATCH WINDOW	
107	529.3	1.544	.221	2.963E-04	.0251	3.601E-04	.0303	.2050	396.2000
								FUSELAGE VENT PANEL NO. 3 AND 1	
108	529.[illegible]	2.775	.293	3.956E-04	.0332	4.774E-04	.0401	.1244	377.5000
109	528.1	2.414	.298	4.016E-04	.0337	4.845E-04	.0407	.1302	377.5000
110	527.8	2.354	.298	4.012E-04	.0337	4.840E-04	.0407	.1360	377.5000
111	529.2	2.373	.285	3.949E-04	.0323	4.644E-04	.0390	.1418	377.5000
112	529.3	2.521	.299	4.035E-04	.0339	4.871E-04	.0409	.1476	377.5000
113	529.5	2.582	.296	3.945E-04	.0336	4.822E-04	.0405	.1215	273.5000
114	528.9	2.491	.298	4.030E-04	.0339	4.864E-04	.0409	.1273	273.5000
115	529.5	2.180	.270	3.643E-04	.0306	4.397E-04	.0370	.1331	273.5000
116	528.8	2.415	.296	3.991E-04	.0335	4.816E-04	.0405	.1389	273.5000
117	529.5	2.478	.285	3.850E-04	.0324	4.647E-04	.0391	.1447	273.5000
118	530.2	1.962	.271	3.666E-04	.0308	4.426E-04	.0372	.1409	366.0000
119	530.4	2.321	.300	4.059E-04	.0341	4.901E-04	.0412	.1442	366.0000
120	531.5	2.412	.301	4.085E-04	.0343	4.934E-04	.0415	.1215	359.5000
121	531.6	2.106	.258	3.531E-04	.0294	4.228E-04	.0355	.1303	359.5000
122	532.8	2.277	.283	3.843E-04	.0323	4.642E-04	.0390	.1337	359.5000
								LOWER RCS NOZZLES	
124	529.7	1.379	.123	1.661E-04	.0140	2.005E-04	.0168	.0950	400.0000
125	529.2	1.394	.151	2.046E-04	.0172	2.470E-04	.0208	.0988	400.0000
126	529.7	1.178	.151	2.179E-04	.0183	2.630E-04	.0221	.1027	400.0000
127	529.3	1.186	.159	2.155E-04	.0181	2.601E-04	.0219	.0911	395.0000
128	529.0	1.478	.179	2.419E-04	.0203	2.919E-04	.0245	.0950	395.0000
129	529.6	1.537	.181	2.434E-04	.0205	2.938E-04	.0247	.0988	395.0000
130	530.6	1.559	.186	2.521E-04	.0212	3.044E-04	.0256	.0810	390.0000
131	529.2	1.323	.195	2.635E-04	.0221	3.180E-04	.0267	.0857	390.0000
132	529.1	1.381	.195	2.639E-04	.0222	3.186E-04	.0268	.0963	390.0000
133	528.3	1.361	.155	2.224E-04	.0187	2.683E-04	.0225	.0857	383.8000
134	528.1	1.859	.248	3.349E-04	.0281	4.041E-04	.0340	.0872	377.3000
135	528.8	2.484	.298	4.014E-04	.0338	4.849E-04	.0408	.0903	374.5500
136	530.2	2.643	.293	3.957E-04	.0333	4.789E-04	.0402	.0960	374.5500
137	528.7	2.608	.340	4.594E-04	.0386	5.544E-04	.0466	.0872	370.5500
138	529.8	2.788	.321	4.332E-04	.0364	5.230E-04	.0440	.0928	370.5500
139	529.6	2.519	.321	4.338E-04	.0365	5.236E-04	.0440	.0816	366.0500
140	530.5	2.703	.343	4.647E-04	.0391	5.611E-04	.0472	.0934	362.4000
141	531.2	2.558	.338	4.573E-04	.0384	5.522E-04	.0464	.0973	362.4000
142	531.0	2.100	.228	3.094E-04	.0260	3.736E-04	.0314	.0833	355.2000
143	530.8	3.085	.310	4.189E-04	.0352	5.059E-04	.0425	.0919	355.2000
144	532.4	3.616	.476	6.456E-04	.0543	7.800E-04	.0655	.0949	349.0000

DATE 5/12/75

AEDC(ARO,INC.) ARNOLD AFS, TENNESSEE
VON KARMAN GAS DYNAMICS FACILITY
50 INCH HYPERSONIC TUNNEL B
V41B-87A

GROUP	TEST CONDITION	MODEL	MACH NO	PO,PSIA	TO,DEG R	ALPHA-MODEL	ALPHA-SECTOR	ALPHA-PREBEND	ROLL MODEL	YAW
119	47	140 B	7.90	111.4	1270	30.05	-.05	30.00	179.94	.0

T-INF (DEG R)	P-INF (PSIA)	Q-INF (PSIA)	V-INF (FT/SEC)	RHO-INF (SLUGS/FT3)	MU-INF (LB-SEC/FT2)	RE/FT (FT-1)	HREF-FR (R= .0400FT)	STFR (R= .0400FT)	SWITCH POSITION
94.2	.012	.541	3756	1.103E-05	7.582E-08	5.466E 05	1.190E-02	3.621E-02	2

TC NO	TW	DTWDT	QDOT	H(TO)	H(TO)/HREF	H(.9TO)	H(.9TO)/HREF	UPPER RCS NOZZLES X/L	2Y/B
161	531.1	1.137	.134	1.819E-04	.0153	2.196E-04	.0185	.0619	-.0160
162	531.2	.910	.086	1.165E-04	.0098	1.407E-04	.0118	.0709	-.0160
163	529.9	.731	.090	1.211E-04	.0102	1.462E-04	.0123	.0807	-.0160
164	529.5	.620	.081	1.090E-04	.0092	1.316E-04	.0111	.0943	-.0160
165	530.6	.550	.069	9.301E-05	.0079	1.130E-04	.0095	.0978	-.0160
166	530.9	.462	.059	8.007E-05	.0067	9.669E-05	.0081	.1013	-.0160
167	531.7	.975	.132	1.786E-04	.0150	2.157E-04	.0181	.0619	-.0320
168	530.9	1.000	.105	1.419E-04	.0119	1.714E-04	.0144	.0709	-.0320
169	529.8	.629	.076	1.030E-04	.0087	1.243E-04	.0104	.0807	-.0320
170	529.3	.551	.069	9.279E-05	.0078	1.120E-04	.0094	.0943	-.0320
171	529.6	.619	.074	1.006E-04	.0085	1.214E-04	.0102	.0978	-.0320
172	529.7	.471	.061	8.275E-05	.0070	9.989E-05	.0084	.1013	-.0320
173	530.2	.486	.065	8.760E-05	.0074	1.058E-04	.0089	.0807	-.0480
174	529.6	.421	.048	6.470E-05	.0054	7.809E-05	.0066	.0943	-.0480
175	529.9	.317	.045	6.122E-05	.0051	7.391E-05	.0062	.0978	-.0480
176	530.0	.322	.044	5.927E-05	.0050	7.155E-05	.0060	.1013	-.0480
								CANOPY	
177	532.7	3.795	.522	7.079E-04	.0595	8.553E-04	.0719		
178	533.8	3.960	.778	1.057E-03	.0889	1.278E-03	.1074		
179	533.3	3.284	.688	9.338E-04	.0785	1.128E-03	.0948		
180	529.7	1.330	.173	2.338E-04	.0197	2.823E-04	.0237		
181	530.4	1.618	.219	2.965E-04	.0249	3.580E-04	.0301		
182	530.1	1.310	.186	2.519E-04	.0212	3.041E-04	.0256		
183	527.3	.254	.032	4.282E-05	.0036	5.166E-05	.0043		
184	527.5	.268	.036	4.913E-05	.0041	5.927E-05	.0050		
185	529.4	1.270	.152	2.057E-04	.0173	2.483E-04	.0209		
186	530.2	1.499	.188	2.540E-04	.0213	3.066E-04	.0258		
187	530.4	1.167	.155	2.097E-04	.0176	2.532E-04	.0213		
188	531.8	2.059	.479	6.487E-04	.0545	7.836E-04	.0659		
189	528.7	.782	.111	1.501E-04	.0126	1.811E-04	.0152		
190	529.0	1.009	.145	1.955E-04	.0164	2.359E-04	.0198		
191	529.0	1.136	.173	2.340E-04	.0197	2.825E-04	.0237		

DATE 5/12/75

AEDC(ARO,INC.) ARNOLD AFS, TENNESSEE
VON KARMAN GAS DYNAMICS FACILITY
50 INCH HYPERSONIC TUNNEL B
V41B-B/A

GROUP	TEST CONDITION	MODEL	MACH NO	PO,PSIA	TO,DEG R	ALPHA-MODEL	ALPHA-SECTOR	ALPHA-PREBEND	ROLL MODEL	YAW
119	47	140 B	7.99	111.4	1270	30.05	-.05	30.00	179.94	.0

T-INF (DEG R)	P-INF (PSIA)	Q-INF (PSIA)	V-INF (FT/SEC)	RHO-INF (SLUGS/FT3)	MU-INF (LB-SEC/FT2)	RE/FT (FT-1)	HREF-FR (R= .0400FT)	STFR (R= .0400FT)	SWITCH POSITION
94.2	.012	.541	3756	1.103E-05	7.582E-08	5.466E 05	1.190E-02	3.621E-02	2

IC NO	TW	DIWDT	CDOT	H(TO)	H(TO)/HREF	H(.9TO)	H(.9TO)/HREF
							CANOPY
192	527.1	.229	.032	4.340E-05	.0036	5.235E-05	.0044
193	530.2	1.264	.243	3.285E-04	.0276	3.966E-04	.0333
194	526.9	.291	.037	5.044E-05	.0042	6.085E-05	.0051
195	527.5	.445	.055	7.373E-05	.0062	8.895E-05	.0075
196	528.1	.455	.060	8.036E-05	.0068	9.696E-05	.0081
197	527.3	.264	.026	3.514E-05	.0030	4.239E-05	.0036
198	526.3	.277	.032	4.320E-05	.0036	5.211E-05	.0044
199	525.0	.368	.049	6.616E-05	.0056	7.979E-05	.0067
200	527.1	.604	.036	1.165E-04	.0098	1.405E-04	.0118
201	528.5	.829	.117	1.574E-04	.0132	1.900E-04	.0160
202	529.3	1.301	.164	2.217E-04	.0186	2.675E-04	.0225
203	525.8	.334	.041	5.552E-05	.0047	6.695E-05	.0056
204	526.0	.340	.053	7.059E-05	.0059	8.524E-05	.0072
205	528.1	.833	.125	1.664E-04	.0142	2.032E-04	.0171
206	527.8	.025	.003	4.458E-06	.0004	5.379E-06	.0005
207	529.0	.891	.119	1.608E-04	.0135	1.941E-04	.0163
208	525.6	.308	.041	5.550E-05	.0047	6.691E-05	.0056
209	525.4	.337	.046	6.210E-05	.0052	7.488E-05	.0063
210	526.2	.280	.037	5.007E-05	.0042	6.038E-05	.0051
211	528.4	.326	.039	5.321E-05	.0045	6.421E-05	.0054
212	527.1	.430	.058	7.789E-05	.0065	9.395E-05	.0079
213	525.4	.425	.056	7.539E-05	.0063	9.089E-05	.0076
214	525.5	.442	.062	8.321E-05	.0070	1.003E-04	.0084
215	525.5	.251	.035	4.751E-05	.0040	5.741E-05	.0048
216	528.0	.740	.105	1.414E-04	.0119	1.706E-04	.0143
217	528.2	.757	.107	1.450E-04	.0122	1.749E-04	.0147
218	524.8	.327	.045	6.034E-05	.0051	7.274E-05	.0061
219	525.7	.840	.118	1.582E-04	.0133	1.907E-04	.0160
220	525.3	.245	.034	4.507E-05	.0038	5.434E-05	.0046

GROUP 119 CENTERLINE TIME 2.70

CH	TC	FIT LENGTH	DTDWT	UNCERTAINTY	CH	TC	FIT LENGTH	DTDWT	UNCERTAINTY
1	107	1.20	1.544	.0174	50	173	2.00	.486	.0209
2	108	.80	2.775	.0181	51	174	2.00	.421	.0259
3	109	.80	2.414	.0136	52	175	2.00	.317	.0411
4	110	.80	2.354	.0120	53	176	2.00	.322	.0262
5	111	.80	2.373	.0377	54	177	.80	3.795	.0111
6	112	.80	2.521	.0145	55	178	.80	3.960	.0092
7	113	.80	2.582	.0647	56	179	.80	3.264	.0434
8	114	.80	2.491	.0162	57	180	1.20	1.330	.0157
9	115	.80	2.180	.0233	58	181	1.20	1.618	.0075
10	116	.80	2.415	.0148	59	182	1.20	1.310	.0208
11	117	.80	2.478	.0188	60	183	2.00	.254	.0364
12	118	1.20	1.982	.0092	61	184	2.00	.268	.0578
13	119	.80	2.321	.0106	62	185	1.20	1.270	.0169
14	120	.80	2.412	.0121	63	186	1.20	1.499	.0084
15	121	.80	2.116	.0313	64	187	2.00	1.167	.0187
16	122	.80	2.277	.0179	65	188	.80	2.059	.0172
17	124	1.20	1.379	.0358	66	189	2.00	.782	.0168
18	125	1.20	1.384	.0125	67	190	1.20	1.009	.0138
19	126	1.20	1.178	.0159	68	191	2.00	1.136	.0589
20	127	1.20	1.186	.0237	69	192	2.00	.229	.0802
21	128	1.20	1.478	.0118	70	193	1.20	1.264	.0169
22	129	1.20	1.537	.0123	71	194	2.00	.291	.0559
23	130	1.20	1.559	.0232	72	195	2.00	.445	.0216
24	131	1.20	1.323	.0199	73	196	2.00	.455	.0186
25	132	1.20	1.681	.0184	74	197	2.00	.264	.0441
26	133	1.20	1.361	.0152	75	198	2.00	.277	.0478
27	134	1.20	1.859	.0120	76	199	2.00	.368	.0521
28	135	.80	2.494	.0240	77	200	2.00	.609	.0151
29	136	.80	2.643	.0120	78	201	2.00	.829	.0121
30	137	.80	2.648	.0098	79	202	1.20	1.301	.0871
31	138	.80	2.788	.0135	80	203	2.00	.334	.0227
32	139	.80	2.519	.0192	81	204	2.00	.340	.0239
33	140	.80	2.793	.0134	82	205	2.00	.803	.0089
34	141	.80	2.558	.0136	83	206	2.00	.025	.8707
35	142	.80	2.120	.0135	84	207	2.00	.891	.0143
36	143	.80	3.045	.0093	85	208	2.00	.308	.0294
37	144	.80	3.616	.0054	86	209	2.00	.337	.0262
38	161	1.20	1.137	.0197	87	210	2.00	.280	.0882
39	162	2.00	.410	.0118	88	211	2.00	.326	.0246
40	163	2.00	.731	.0165	89	212	2.00	.430	.0342
41	164	2.00	.820	.0102	90	213	2.00	.425	.2111
42	165	2.00	.520	.0129	91	214	2.00	.443	.0369
43	166	2.00	.462	.0342	92	215	2.00	.251	.0924
44	167	2.00	.475	.0117	93	216	2.00	.740	.0077
45	168	1.20	1.000	.0128	94	217	2.00	.757	.0206
46	169	2.00	.629	.0127	95	218	2.00	.327	.0847
47	170	2.00	.551	.0434	96	219	2.00	.840	.0181
48	171	2.00	.615	.0154	97	220	2.00	.245	.0334
49	172	2.00	.471	.0229	98	0	-0	0	0
120		.050							

BIT ON LOOP 57

DATE 5/19/75

AEDC(ARO,INC.) ARNOLD AFS, TENNESSEE
VON KARMAN GAS DYNAMICS FACILITY
50 INCH HYPERSONIC TUNNEL B
V41B-B7A

GROUP	TEST CONDITION	MODEL	MACH NO	PO,PSIA	TO,DEG R	ALPHA-MODEL	ALPHA-SECTOR	ALPHA-PREBEND	ROLL MODEL	YAW
123	48	140 B	7.90	109.6	1272	40.02	-10.02	30.00	179.94	.0

T-INF (DEG R)	P-INF (PSIA)	Q-INF (PSIA)	V-INF (FT/SEC)	RHO-INF (SLUGS/FT3)	MU-INF (LB-SEC/FT2)	RE/FT (FT-1)	HREF-FR (R= .0400FT)	STFR (R= .0400FT)	SWITCH POSITION
94.3	.012	.532	3760	1.083E-05	7.595E-08	5.363E 05	1.181E-02	3.655E-02	2

IC NO	TW	DTWDT	QDOT	H(TO)	H(TO)/HREF	H(.9TO)	H(.9TO)/HREF	X/L	Z,FULL SCALE(IN)
								ACCESS HATCH WINDOW	
107	531.4	1.478	.212	2.857E-04	.0242	3.449E-04	.0292	.2050	396.2000
								FUSELAGE VENT PANEL NO. 3 AND 1	
								X/L	Z,FULL SCALE(IN)
108	532.5	2.545	.269	3.642E-04	.0308	4.398E-04	.0373	.1244	377.5000
109	532.1	2.292	.233	3.629E-04	.0324	4.624E-04	.0392	.1302	377.5000
110	531.9	2.232	.243	3.820E-04	.0324	4.613E-04	.0391	.1360	377.5000
111	532.1	2.347	.243	3.822E-04	.0324	4.616E-04	.0391	.1418	377.5000
112	532.3	2.256	.267	3.610E-04	.0306	4.360E-04	.0369	.1476	377.5000
113	532.4	2.376	.273	3.687E-04	.0312	4.453E-04	.0377	.1215	273.5000
114	532.5	2.249	.270	3.652E-04	.0309	4.410E-04	.0374	.1273	273.5000
115	532.5	1.984	.246	3.331E-04	.0282	4.023E-04	.0341	.1331	273.5000
116	532.3	2.129	.261	3.532E-04	.0299	4.266E-04	.0361	.1389	273.5000
117	532.5	2.224	.256	3.465E-04	.0294	4.185E-04	.0355	.1447	273.5000
118	532.8	1.675	.232	3.135E-04	.0266	3.787E-04	.0321	.1409	366.0000
119	533.4	1.985	.257	3.480E-04	.0295	4.204E-04	.0356	.1442	366.0000
120	533.5	2.021	.253	3.422E-04	.0290	4.133E-04	.0350	.1215	359.5000
121	533.7	1.770	.217	2.945E-04	.0249	3.558E-04	.0301	.1303	359.5000
122	533.7	1.700	.212	2.869E-04	.0243	3.467E-04	.0294	.1337	359.5000
								LOWER RCS NOZZLES	
								X/L	Z,FULL SCALE(IN)
124	531.1	.643	.057	7.743E-05	.0066	9.348E-05	.0079	.0950	400.0000
125	530.7	.764	.085	1.150E-04	.0097	1.388E-04	.0118	.0988	400.0000
126	530.9	.885	.094	1.266E-04	.0107	1.528E-04	.0129	.1027	400.0000
127	530.8	.726	.098	1.319E-04	.0112	1.592E-04	.0135	.0911	395.0000
128	531.1	.933	.113	1.528E-04	.0129	1.845E-04	.0156	.0950	395.0000
129	531.4	1.012	.119	1.603E-04	.0136	1.936E-04	.0164	.0988	395.0000
130	531.5	1.011	.121	1.633E-04	.0138	1.972E-04	.0167	.0810	390.0000
131	531.0	.898	.133	1.790E-04	.0152	2.161E-04	.0183	.0857	390.0000
132	530.9	1.154	.134	1.812E-04	.0153	2.187E-04	.0185	.0963	390.0000
133	530.5	1.104	.134	1.806E-04	.0153	2.180E-04	.0185	.0857	383.8000
134	531.0	1.593	.213	2.877E-04	.0244	3.473E-04	.0294	.0872	377.3000
135	531.5	2.176	.261	3.526E-04	.0299	4.257E-04	.0361	.0903	374.5500
136	532.0	2.412	.268	3.620E-04	.0307	4.372E-04	.0370	.0960	374.5500
137	532.0	2.169	.283	3.831E-04	.0325	4.627E-04	.0392	.0872	370.5500
138	532.2	2.505	.288	3.899E-04	.0330	4.709E-04	.0399	.0928	370.5500
139	532.9	2.160	.276	3.731E-04	.0316	4.506E-04	.0382	.0816	366.0500
140	533.1	2.488	.316	4.284E-04	.0363	5.175E-04	.0438	.0934	362.4000
141	532.9	2.376	.314	4.248E-04	.0360	5.131E-04	.0435	.0973	362.4000
142	534.0	1.740	.190	2.569E-04	.0218	3.104E-04	.0263	.0833	355.2000
143	533.8	2.825	.284	3.845E-04	.0326	4.646E-04	.0394	.0919	355.2000
144	534.6	3.307	.436	5.911E-04	.0501	7.143E-04	.0605	.0949	349.0000

DATE 5/12/75

AEDC(ARO,INC.) ARNOLD AFS, TENNESSEE
VON KARMAN GAS DYNAMICS FACILITY
50 INCH HYPERSONIC TUNNEL B
V41B-87A

GROUP	TEST CONDITION	MODEL	MACH NO	PO,PSIA	TO,DEG R	ALPHA-MODEL	ALPHA-SECTOR	ALPHA-PREBEND	ROLL MODEL	YAW
120	42	140 B	7.90	109.6	1272	40.02	-10.02	30.00	179.94	.0

T-INF (DEG R)	P-INF (PSIA)	Q-INF (PSIA)	V-INF (FT/SEC)	RHO-INF (SLUGS/FT3)	MU-INF (LB-SEC/FT2)	RE/FT (FT-1)	HREF-FR (R= .0400FT)	STFR (R= .0400FT)	SWITCH POSITION
94.3	.012	.532	3760	1.083E-05	7.595E-08	5.363E 05	1.181E-02	3.655E-02	2

IC NO	TW	DTWDT	QDOT	H(TO)	H(TO)/HREF	H(.9TO)	H(.9TO)/HREF	UPPER RCS NOZZLES X/L	2Y/B
161	532.5	.773	.091	1.236E-04	.0105	1.493E-04	.0126	.0619	-.0160
162	532.2	.764	.072	9.763E-05	.0083	1.179E-04	.0100	.0709	-.0160
163	531.2	.643	.079	1.064E-04	.0090	1.285E-04	.0109	.0807	-.0160
164	531.1	.729	.095	1.281E-04	.0109	1.546E-04	.0131	.0943	-.0160
165	532.3	.672	.085	1.143E-04	.0097	1.380E-04	.0117	.0978	-.0160
166	532.6	.654	.084	1.133E-04	.0096	1.368E-04	.0116	.1013	-.0160
167	531.9	.441	.060	8.064E-05	.0068	9.737E-05	.0082	.0619	-.0320
168	531.9	.551	.058	7.801E-05	.0066	9.420E-05	.0080	.0709	-.0320
169	530.5	.417	.051	6.828E-05	.0058	8.242E-05	.0070	.0807	-.0320
170	530.3	.482	.060	8.108E-05	.0069	9.787E-05	.0083	.0943	-.0320
171	530.9	.555	.067	9.016E-05	.0076	1.088E-04	.0092	.0978	-.0320
172	530.9	.534	.066	8.855E-05	.0075	1.069E-04	.0091	.1013	-.0320
173	530.2	.168	.022	3.024E-05	.0026	3.650E-05	.0031	.0807	-.0480
174	529.7	.158	.018	2.413E-05	.0020	2.912E-05	.0025	.0943	-.0480
175	530.0	.202	.029	3.894E-05	.0033	4.700E-05	.0040	.0978	-.0480
176	530.4	.217	.029	3.977E-05	.0034	4.801E-05	.0041	.1013	-.0480
								CANOPY	
177	534.8	4.399	.605	8.211E-04	.0696	9.924E-04	.0841		
178	534.4	3.625	.712	9.662E-04	.0818	1.168E-03	.0989		
179	533.0	2.160	.452	6.119E-04	.0518	7.391E-04	.0626		
180	533.6	2.565	.334	4.529E-04	.0384	5.472E-04	.0464		
181	533.1	1.862	.253	3.421E-04	.0290	4.132E-04	.0350		
182	531.6	.878	.125	1.687E-04	.0143	2.037E-04	.0173		
183	531.3	.485	.061	8.200E-05	.0069	9.900E-05	.0084		
184	531.2	.578	.079	1.065E-04	.0090	1.286E-04	.0109		
185	532.5	2.076	.249	3.371E-04	.0286	4.071E-04	.0345		
186	533.0	1.999	.251	3.393E-04	.0287	4.099E-04	.0347		
187	531.3	1.216	.162	2.182E-04	.0185	2.635E-04	.0223		
188	531.7	.998	.232	3.132E-04	.0265	3.782E-04	.0320		
189	531.3	1.251	.178	2.404E-04	.0204	2.902E-04	.0246		
190	531.5	1.499	.215	2.908E-04	.0246	3.511E-04	.0297		
191	531.2	.961	.147	1.979E-04	.0168	2.389E-04	.0202		

DATE 5/12/75

AEDC(ARO,INC.) ARNOLD AFS, TENNESSEE
VON KARMAN GAS DYNAMICS FACILITY
50 INCH HYPERSONIC TUNNEL B
V418-87A

GROUP	TEST CONDITION	MODEL	MACH NO	PO,PSIA	TO,DEG R	ALPHA-MODEL	ALPHA-SECTOR	ALPHA-PREBEND	ROLL MODEL	YAW
120	42	140 B	7.90	109.6	1272	40.02	-10.02	30.00	179.94	.0

T-INF (DEG R)	P-INF (PSIA)	Q-INF (PSIA)	V-INF (FT/SEC)	RHO-INF (SLUGS/FT3)	MU-INF (LB-SEC/FT2)	RE/FT (FT-1)	HREF-FR (R= .0400FT)	STFR (R= .0400FT)	SWITCH POSITION
94.3	.012	.532	3760	1.083E-05	7.595E-08	5.363E 05	1.181E-02	3.655E-02	2

IC NO	TW	DTWDT	GDOT	H(TO)	H(TO)/HREF	H(.9TO)	H(.9TO)/HREF
						CANOPY	
192	530.1	.229	.032	4.343E-05	.0037	5.242E-05	.0044
193	530.2	.493	.095	1.278E-04	.0108	1.543E-04	.0131
194	529.3	.338	.044	5.862E-05	.0050	7.074E-05	.0060
195	529.5	.320	.039	5.293E-05	.0045	6.388E-05	.0054
196	529.5	.432	.057	7.627E-05	.0065	9.204E-05	.0078
197	529.4	.167	.016	2.222E-05	.0019	2.681E-05	.0023
198	529.7	.193	.022	3.019E-05	.0026	3.643E-05	.0031
199	529.6	.788	.105	1.409E-04	.0119	1.701E-04	.0144
200	529.7	.809	.087	1.168E-04	.0099	1.409E-04	.0119
201	529.5	.498	.057	7.742E-05	.0066	9.344E-05	.0079
202	530.0	.463	.058	7.867E-05	.0067	9.494E-05	.0080
203	529.4	.229	.028	3.815E-05	.0032	4.603E-05	.0039
204	529.6	.483	.075	1.009E-04	.0085	1.217E-04	.0103
205	529.4	.550	.086	1.154E-04	.0098	1.393E-04	.0118
206	529.5	.424	.056	7.564E-05	.0064	9.128E-05	.0077
207	530.2	.719	.096	1.296E-04	.0110	1.564E-04	.0133
208	529.2	.178	.024	3.219E-05	.0027	3.885E-05	.0033
209	529.5	.384	.053	7.094E-05	.0060	8.560E-05	.0073
210	529.0	.346	.046	6.211E-05	.0053	7.494E-05	.0063
211	530.1	.461	.056	7.527E-05	.0064	9.084E-05	.0077
212	529.6	.366	.049	6.639E-05	.0056	8.013E-05	.0068
213	529.0	.288	.038	5.126E-05	.0043	6.184E-05	.0052
214	529.4	.529	.074	9.972E-05	.0084	1.203E-04	.0102
215	528.7	.322	.046	6.132E-05	.0052	7.399E-05	.0063
216	529.5	.681	.096	1.300E-04	.0110	1.569E-04	.0133
217	529.7	.569	.081	1.089E-04	.0092	1.314E-04	.0111
218	528.4	.181	.025	3.341E-05	.0028	4.031E-05	.0034
219	529.6	.240	.034	4.541E-05	.0038	5.480E-05	.0046
220	528.6	.406	.056	7.494E-05	.0063	9.041E-05	.0077

GROUP 120 CENTERLINE TIME 2.80

CH	TC	FIT LENGTH	DTDWT	UNCERTAINTY	CH	TC	FIT LENGTH	DTDWT	UNCERTAINTY
1	107	1.20	1.478	.0102	50	173	2.00	.168	.0478
2	108	.80	2.545	.0143	51	174	2.00	.158	.0787
3	109	.80	2.292	.0151	52	175	2.00	.202	.0581
4	110	.80	2.232	.0149	53	176	2.00	.217	.0316
5	111	.80	2.347	.0279	54	177	.60	4.399	.0175
6	112	.80	2.250	.0153	55	178	.80	3.625	.0112
7	113	.80	2.378	.0988	56	179	.80	2.160	.0631
8	114	.80	2.249	.0139	57	180	.80	2.565	.0096
9	115	1.20	1.984	.0136	58	181	1.20	1.862	.0082
10	116	.80	2.129	.0141	59	182	2.00	.878	.0201
11	117	.80	2.224	.0184	60	183	2.00	.485	.2031
12	118	1.20	1.675	.0158	61	184	2.00	.578	.0413
13	119	1.20	1.985	.0092	62	185	.80	2.076	.0124
14	120	.80	2.021	.0187	63	186	1.20	1.999	.0112
15	121	1.20	1.770	.0180	64	187	1.20	1.216	.0160
16	122	1.20	1.700	.0124	65	188	1.20	.998	.0272
17	124	2.00	.643	.0308	66	189	1.20	1.251	.0351
18	125	2.00	.784	.0106	67	190	1.20	1.499	.0093
19	126	2.00	.685	.0168	68	191	1.20	.961	.1117
20	127	2.00	.726	.0129	69	192	2.00	.229	.0715
21	128	2.00	.933	.0077	70	193	2.00	.493	.0240
22	129	2.00	1.012	.0098	71	194	2.00	.338	.0591
23	130	1.20	1.011	.0448	72	195	2.00	.320	.0378
24	131	2.00	.898	.0159	73	196	2.00	.432	.0233
25	132	1.20	1.154	.0166	74	197	2.00	.167	.0561
26	133	1.20	1.104	.0186	75	198	2.00	.193	.0550
27	134	1.20	1.593	.0116	76	199	2.00	.780	.0244
28	135	.80	2.176	.0128	77	200	2.00	.609	.0161
29	136	.80	2.412	.0112	78	201	2.00	.408	.0229
30	137	.80	2.169	.0224	79	202	2.00	.463	.1078
31	138	.80	2.505	.0131	80	203	2.00	.229	.0390
32	139	.80	2.160	.0162	81	204	2.00	.483	.0205
33	140	.80	2.488	.0105	82	205	2.00	.550	.0137
34	141	.80	2.376	.0111	83	206	2.00	.424	.0220
35	142	1.20	1.740	.0101	84	207	2.00	.719	.0148
36	143	.80	2.825	.0129	85	208	2.00	.178	.0420
37	144	.80	3.307	.0083	86	209	2.00	.384	.0207
38	161	2.00	.773	.0145	87	210	2.00	.346	.0890
39	162	2.00	.764	.0130	88	211	2.00	.461	.0179
40	163	2.00	.643	.0246	89	212	2.00	.366	.0338
41	164	2.00	.729	.0108	90	213	2.00	.288	.1603
42	165	2.00	.672	.0119	91	214	2.00	.529	.0331
43	166	2.00	.654	.0199	92	215	2.00	.322	.0841
44	167	2.00	.441	.0212	93	216	2.00	.681	.0128
45	168	2.00	.551	.0174	94	217	2.00	.569	.0205
46	169	2.00	.417	.0196	95	218	2.00	.181	.0819
47	170	2.00	.482	.0475	96	219	2.00	.240	.0803
48	171	2.00	.555	.0208	97	220	2.00	.406	.0182
49	172	2.00	.504	.0181	98	0	-0	0	0

DATE 5/12/75

AEDC(ARO,INC.) ARNOLD AFS, TENNESSEE
VON KARMAN GAS DYNAMICS FACILITY
50 INCH HYPERSONIC TUNNEL B
V418-87A

GROUP	TEST CONDITION	MODEL	MACH NO	PC,PSIA	TO,DEG R	ALPHA-MODEL	ALPHA-SECTOR	ALPHA-PREBEND	ROLL MODEL	YAW
121	49	140 B	7.90	111.2	1278	40.03	-10.03	30.00	179.94	.0

T-INF (DEG R)	P-INF (PSIA)	Q-INF (PSIA)	V-INF (FT/SEC)	RHO-INF (SLUGS/FT3)	MU-INF (LB-SEC/FT2)	RE/FT (FT-1)	HREF-FR (R= .0400FT)	STFR (R= .0400FT)	SWITCH POSITION
94.6	.012	.546	3769	1.094E-05	7.632E-08	5.402E 05	1.190E-02	3.639E-02	2

TC NO	TW	DTWDT	QDOT	H(TO)	H(TO)/HREF	H(.9TO)	H(.9TO)/HREF	X/L	Z,FULL SCALE(IN)
								ACCESS HATCH WINDOW	
107	531.2	1.538	.220	2.948E-04	.0248	3.557E-04	.0299	.2050	396.2000
								FUSELAGE VENT PANEL NO. 3 AND 1	
108	535.1	2.681	.284	3.821E-04	.0321	4.615E-04	.0388	.1244	377.5000
109	534.3	2.304	.245	3.633E-04	.0322	4.628E-04	.0389	.1302	377.5000
110	534.2	2.245	.245	3.627E-04	.0322	4.621E-04	.0388	.1360	377.5000
111	534.3	2.314	.279	3.752E-04	.0315	4.531E-04	.0381	.1418	377.5000
112	534.6	2.337	.277	3.723E-04	.0313	4.496E-04	.0378	.1476	377.5000
113	535.2	2.296	.264	3.550E-04	.0298	4.288E-04	.0360	.1215	273.5000
114	534.9	2.487	.299	4.022E-04	.0338	4.857E-04	.0408	.1273	273.5000
115	534.6	2.205	.274	3.683E-04	.0309	4.448E-04	.0374	.1331	273.5000
116	534.5	2.199	.270	3.633E-04	.0305	4.387E-04	.0369	.1389	273.5000
117	535.0	2.422	.279	3.757E-04	.0316	4.537E-04	.0381	.1447	273.5000
118	535.3	1.719	.238	3.206E-04	.0269	3.872E-04	.0325	.1409	366.0000
119	535.2	2.033	.263	3.546E-04	.0298	4.283E-04	.0360	.1442	366.0000
120	536.1	2.073	.250	3.492E-04	.0294	4.225E-04	.0355	.1215	359.5000
121	536.2	1.775	.218	2.942E-04	.0247	3.554E-04	.0299	.1303	359.5000
122	536.3	1.864	.233	3.135E-04	.0263	3.788E-04	.0318	.1337	359.5000
								LOWER RCS NOZZLES	
124	533.1	.776	.059	9.302E-05	.0078	1.123E-04	.0094	.0950	400.0000
125	532.9	.801	.087	1.171E-04	.0098	1.413E-04	.0119	.0988	400.0000
126	533.1	.877	.093	1.245E-04	.0105	1.503E-04	.0126	.1027	400.0000
127	533.0	.849	.114	1.536E-04	.0129	1.854E-04	.0156	.0911	395.0000
128	533.2	.915	.111	1.491E-04	.0125	1.800E-04	.0151	.0950	395.0000
129	533.5	.984	.116	1.560E-04	.0131	1.884E-04	.0158	.0988	395.0000
130	533.4	.947	.113	1.522E-04	.0128	1.838E-04	.0154	.0810	390.0000
131	533.4	.974	.144	1.932E-04	.0162	2.332E-04	.0196	.0857	390.0000
132	533.1	1.143	.133	1.787E-04	.0150	2.157E-04	.0181	.0963	390.0000
133	532.9	1.022	.124	1.665E-04	.0140	2.010E-04	.0169	.0857	383.8000
134	533.0	1.481	.198	2.662E-04	.0224	3.214E-04	.0270	.0872	377.3000
135	533.6	2.127	.255	3.431E-04	.0288	4.142E-04	.0348	.0903	374.5500
136	534.2	2.444	.272	3.653E-04	.0307	4.411E-04	.0371	.0960	374.5500
137	534.0	2.174	.264	3.823E-04	.0321	4.616E-04	.0388	.0872	370.5500
138	534.4	2.534	.292	3.928E-04	.0330	4.743E-04	.0398	.0928	370.5500
139	534.9	2.215	.283	3.810E-04	.0320	4.601E-04	.0387	.0816	366.0500
140	535.5	2.589	.330	4.440E-04	.0373	5.364E-04	.0451	.0934	362.4000
141	535.5	2.346	.316	4.250E-04	.0357	5.134E-04	.0431	.0973	362.4000
142	536.2	1.731	.194	2.619E-04	.0220	3.164E-04	.0266	.0833	355.2000
143	536.3	2.859	.288	3.878E-04	.0326	4.685E-04	.0394	.0919	355.2000
144	537.3	3.318	.438	5.912E-04	.0497	7.144E-04	.0600	.0949	349.0000

DATE 5/12/75

AEDC(ARO,INC.) ARNOLD AFS, TENNESSEE
VON KARMAN GAS DYNAMICS FACILITY
50 INCH HYPERSONIC TUNNEL B
V41B-87A

GROUP	TEST CONDITION	MODEL	MACH NO	PO,PSIA	TO,DEG R	ALPHA-MODEL	ALPHA-SECTOR	ALPHA-PREBEND	ROLL MODEL	YAW
121	49	140 B	7.40	111.2	1278	40.03	-10.03	30.00	179.94	.0

T-INF (DEG R)	P-INF (PSIA)	Q-INF (PSIA)	V-INF (FT/SEC)	RHO-INF (SLUGS/FT3)	MU-INF (LB-SEC/FT2)	RE/FT (FT-1)	HREF-FR (R= .0400FT)	STFR (R= .0400FT)	SWITCH POSITION
94.8	.012	.540	3769	1.094E-05	7.632E-06	5.402E 05	1.190E-02	3.639E-02	2

IC NO	TW	DTWDT	QDOT	H(TO)	H(TO)/HREF	H(.9TO)	H(.9TO)/HREF
161	521.3	.462	.054	7.153E-05	.0060	8.607E-05	.0072
162	528.0	.768	.074	9.915E-05	.0083	1.195E-04	.0100
163	531.3	.687	.084	1.128E-04	.0095	1.361E-04	.0114
164	533.2	.719	.094	1.258E-04	.0106	1.518E-04	.0128
165	533.4	.555	.079	9.387E-05	.0079	1.133E-04	.0095
166	533.9	.678	.087	1.167E-04	.0098	1.409E-04	.0118
167	535.0	.340	.046	6.034E-05	.0051	7.329E-05	.0062
168	529.6	-1.277	-.134	-1.787E-04	-.0150	-2.154E-04	-.0181
169	531.7	.324	.039	5.259E-05	.0044	6.345E-05	.0053
170	532.6	.475	.059	7.965E-05	.0067	9.613E-05	.0081
171	532.6	.481	.058	7.757E-05	.0065	9.363E-05	.0079
172	532.6	.428	.056	7.473E-05	.0063	9.019E-05	.0076
173	532.1	.188	.025	3.361E-05	.0028	4.056E-05	.0034
174	532.2	.146	.017	2.227E-05	.0019	2.688E-05	.0023
175	532.3	.115	.016	2.207E-05	.0019	2.664E-05	.0022
176	532.5	.186	.025	3.378E-05	.0029	4.100E-05	.0034
177	535.5	4.250	.545	7.880E-04	.0662	9.519E-04	.0800
178	535.3	3.740	.745	9.900E-04	.0832	1.196E-03	.1005
179	533.8	2.202	.401	6.146E-04	.0521	7.480E-04	.0629
180	534.3	2.513	.328	4.407E-04	.0370	5.321E-04	.0447
181	533.9	1.765	.240	3.221E-04	.0271	3.889E-04	.0327
182	532.5	.854	.122	1.630E-04	.0137	1.967E-04	.0165
183	532.1	.574	.072	9.638E-05	.0081	1.163E-04	.0098
184	532.1	.596	.081	1.091E-04	.0092	1.316E-04	.0111
185	533.8	1.985	.238	3.204E-04	.0269	3.868E-04	.0325
186	533.4	2.055	.258	3.461E-04	.0291	4.178E-04	.0351
187	533.2	1.140	.152	2.036E-04	.0171	2.457E-04	.0206
188	532.5	1.085	.252	3.384E-04	.0284	4.084E-04	.0343
189	532.4	1.179	.168	2.250E-04	.0189	2.715E-04	.0228
190	532.6	1.401	.221	2.701E-04	.0227	3.260E-04	.0274
191	532.1	1.045	.159	2.137E-04	.0180	2.579E-04	.0217

UPPER RCS NOZZLES

X/L	2Y/B
.0619	-.0160
.0709	-.0160
.0807	-.0160
.0943	-.0160
.0978	-.0160
.1013	-.0160
.0619	-.0320
.0709	-.0320
.0807	-.0320
.0943	-.0320
.0978	-.0320
.1013	-.0320
.0807	-.0480
.0943	-.0480
.0978	-.0480
.1013	-.0480

CANOPY

DATE 5/12/75

AEDC(ARO,INC.) ARNOLD AFS, TENNESSEE
VON KARMAN GAS DYNAMICS FACILITY
50 INCH HYPERSONIC TUNNEL B
V41B-B/A

GROUP	TEST CONDITION	MODEL	MACH NO	PO,PSIA	TO,DEG R	ALPHA-MODEL	ALPHA-SECTOR	ALPHA-PREBEND	ROLL MODEL	YAW
121	49	140 B	7.90	111.2	1278	40.03	-10.03	30.00	179.94	.0

T-INF (DEG F)	P-INF (PSIA)	Q-INF (PSIA)	V-INF (FT/SEC)	RHO-INF (SLUGS/FT3)	MU-INF (LB-SEC/FT2)	RE/FT (FT-1)	HREF-FR (R= .0400FT)	STFR (R= .0400FT)	SWITCH POSITION
94.2	.012	.540	3769	1.094E-05	7.632E-08	5.402E 05	1.190E-02	3.639E-02	2

TC NO	TW	DTWDT	QDOT	H(TO)	H(TO)/HREF	H(.9TO)	H(.9TO)/HREF
						CANOPY	
192	530.5	.201	.028	3.763E-05	.0032	4.563E-05	.0038
193	531.3	.524	.101	1.349E-04	.0113	1.627E-04	.0137
194	530.2	.314	.040	5.408E-05	.0045	6.524E-05	.0055
195	530.7	.397	.049	6.542E-05	.0055	7.892E-05	.0066
196	531.0	.333	.044	5.840E-05	.0049	7.045E-05	.0059
197	531.3	.186	.018	2.463E-05	.0021	2.972E-05	.0025
198	531.3	.222	.026	3.445E-05	.0029	4.156E-05	.0035
199	531.2	.055	.007	9.893E-06	.0008	1.193E-05	.0010
200	531.1	.603	.086	1.149E-04	.0097	1.386E-04	.0116
201	531.1	.476	.066	8.865E-05	.0074	1.069E-04	.0090
202	530.8	.277	.035	4.675E-05	.0039	5.640E-05	.0047
203	531.0	.253	.031	4.190E-05	.0035	5.055E-05	.0042
204	531.1	.484	.075	1.005E-04	.0084	1.212E-04	.0102
205	531.4	.581	.090	1.212E-04	.0102	1.462E-04	.0123
206	531.0	-.294	-.040	-5.307E-05	-.0045	-6.402E-05	-.0054
207	531.5	.780	.104	1.398E-04	.0117	1.686E-04	.0142
208	531.0	.188	.025	3.378E-05	.0028	4.076E-05	.0034
209	530.8	.413	.057	7.592E-05	.0064	9.159E-05	.0077
210	530.4	.288	.038	5.135E-05	.0043	6.194E-05	.0052
211	530.7	.580	.070	9.405E-05	.0079	1.135E-04	.0095
212	531.3	.358	.048	6.448E-05	.0054	7.780E-05	.0065
213	530.7	.254	.034	4.498E-05	.0038	5.426E-05	.0046
214	530.8	.554	.078	1.048E-04	.0088	1.264E-04	.0106
215	530.2	.277	.039	5.255E-05	.0044	6.338E-05	.0053
216	530.8	.702	.100	1.331E-04	.0112	1.606E-04	.0135
217	530.6	.649	.092	1.236E-04	.0104	1.490E-04	.0125
218	530.0	.274	.038	5.039E-05	.0042	6.077E-05	.0051
219	531.3	.443	.062	8.339E-05	.0070	1.006E-04	.0085
220	530.0	.386	.053	7.085E-05	.0060	8.544E-05	.0072

GROUP 121 CENTERLINE TIME 2.75

CH	TC	FIT LENGTH	DIDMT	UNCERTAINTY	CH	TC	FIT LENGTH	DIDMT	UNCERTAINTY
1	107	1.20	1.538	.0107	50	173	2.00	.188	.1012
2	108	.80	2.651	.0137	51	174	2.00	.146	.1129
3	109	.80	2.304	.0130	52	175	2.00	.115	.1140
4	110	.80	2.245	.0217	53	176	2.00	.186	.0419
5	111	.80	2.314	.0313	54	177	.60	4.250	.0149
6	112	.80	2.330	.0096	55	178	.80	3.740	.0078
7	113	.80	2.296	.0743	56	179	.80	2.202	.0463
8	114	.80	2.487	.0329	57	180	.80	2.513	.0130
9	115	.80	2.275	.0170	58	181	1.20	1.765	.0085
10	116	.80	2.199	.0189	59	182	2.00	.854	.0172
11	117	.80	2.422	.0266	60	183	2.00	.574	.0143
12	118	1.20	1.719	.0151	61	184	2.00	.596	.0298
13	119	.80	2.033	.0159	62	185	1.20	1.985	.0055
14	120	.80	2.073	.0195	63	186	.80	2.055	.0174
15	121	1.20	1.775	.0189	64	187	1.20	1.140	.0208
16	122	1.20	1.864	.0111	65	188	1.20	1.085	.0208
17	123	2.00	.776	.0238	66	189	1.20	1.179	.0229
18	125	2.00	.801	.0120	67	190	1.20	1.401	.0079
19	126	2.00	.677	.0157	68	191	2.00	1.045	.0596
20	127	2.00	.849	.0110	69	192	2.00	.201	.1104
21	128	2.00	.915	.0096	70	193	2.00	.524	.0245
22	129	2.00	.989	.0075	71	194	2.00	.314	.0544
23	130	2.00	.947	.0254	72	195	2.00	.397	.0263
24	131	2.00	.974	.0159	73	196	2.00	.333	.0270
25	132	1.20	1.143	.0292	74	197	2.00	.186	.0533
26	133	1.20	1.022	.0167	75	198	2.00	.222	.0403
27	134	1.20	1.481	.0131	76	199	2.00	.055	.5014
28	135	.80	2.127	.0108	77	200	2.00	.603	.0120
29	136	.80	2.444	.0127	78	201	2.00	.470	.0222
30	137	.80	2.174	.0136	79	202	2.00	.277	.1822
31	138	.80	2.534	.0137	80	203	2.00	.253	.0289
32	139	.80	2.216	.0141	81	204	2.00	.484	.0229
33	140	.80	2.589	.0144	82	205	2.00	.581	.0115
34	141	.80	2.396	.0193	83	206	2.00	-.299	-.0924
35	142	1.20	1.781	.0113	84	207	2.00	.780	.0125
36	143	.80	2.859	.0103	85	208	2.00	.188	.0449
37	144	.80	3.318	.0083	86	209	2.00	.413	.0226
38	161	2.00	.460	.0246	87	210	2.00	.288	.0649
39	162	2.00	.788	.0125	88	211	2.00	.580	.0209
40	163	2.00	.687	.0216	89	212	2.00	.358	.0290
41	164	2.00	.719	.0092	90	213	2.00	.254	.1001
42	165	2.00	.555	.0184	91	214	2.00	.559	.0234
43	166	2.00	.678	.0242	92	215	2.00	.277	.0994
44	167	2.00	.340	.0251	93	216	2.00	.702	.0122
45	168	2.00	-1.277	-1.8483	94	217	2.00	.649	.0192
46	169	2.00	.324	.1092	95	218	2.00	.274	.0544
47	170	2.00	.475	.0366	96	219	2.00	.443	.0674
48	171	2.00	.480	.0270	97	220	2.00	.386	.0235
49	172	2.00	.428	.0246	98	0	-0	0	0
122		.050							

ALL ON LOOP 58

DATE 5/12/75

AEDC(ARO,INC.) ARNOLD AFS, TENNESSEE
VON KARMAN GAS DYNAMICS FACILITY
50 INCH HYPERSONIC TUNNEL B
V41B-B/A

GROUP	TEST CONDITION	MODEL	MACH NO	PO,PSIA	TO,DEG R	ALPHA-MODEL	ALPHA-SECTOR	ALPHA-PREBEND	ROLL MODEL	YAW
122	50	140 B	7.90	111.3	1279	30.06	-.06	30.00	179.94	.0

T-INF (DEG R)	P-INF (PSIA)	Q-INF (PSIA)	V-INF (FT/SEC)	RHO-INF (SLUGS/FT3)	MU-INF (LB-SEC/FT2)	RE/FT (FT-1)	HREF-FR (R= .0400FT)	STFR (R= .0400FT)	SWITCH POSITION
94.5	.012	.543	3771	1.094E-05	7.640E-08	5.399E 05	1.191E-02	3.640E-02	2

IC	NC	TW	DTWDT	QDOT	HTTOT	HTTOT/HREF	H(.9TO)	H(.9TO)/HREF	X/L	Z,FULL SCALE(IN)
									ACCESS HATCH WINDOW	
107		531.4	1.545	.221	2.960E-04	.0249	3.571E-04	.0300	.2050	396.2000
									FUSELAGE VENT PANEL NO. 3 AND 1	
108		532.5	2.703	.286	3.828E-04	.0321	4.619E-04	.0388	.1244	377.5000
109		531.9	2.425	.300	4.010E-04	.0337	4.838E-04	.0406	.1302	377.5000
110		531.4	2.311	.293	3.916E-04	.0329	4.725E-04	.0397	.1360	377.5000
111		532.1	2.401	.289	3.870E-04	.0325	4.669E-04	.0392	.1418	377.5000
112		532.5	2.256	.268	3.586E-04	.0301	4.327E-04	.0363	.1476	377.5000
113		532.2	2.678	.307	4.110E-04	.0345	4.960E-04	.0416	.1215	273.5000
114		532.2	2.453	.294	3.940E-04	.0331	4.754E-04	.0399	.1273	273.5000
115		532.2	2.256	.280	3.746E-04	.0315	4.520E-04	.0380	.1331	273.5000
116		532.2	2.326	.285	3.820E-04	.0321	4.609E-04	.0387	.1389	273.5000
117		532.3	2.380	.274	3.672E-04	.0308	4.431E-04	.0372	.1447	273.5000
118		532.5	2.026	.280	3.753E-04	.0315	4.529E-04	.0380	.1409	366.0000
119		533.1	2.276	.295	3.949E-04	.0332	4.766E-04	.0400	.1442	366.0000
120		533.5	2.404	.300	4.029E-04	.0338	4.863E-04	.0408	.1215	359.5000
121		533.2	2.098	.258	3.451E-04	.0290	4.166E-04	.0350	.1303	359.5000
122		533.6	2.183	.272	3.646E-04	.0306	4.401E-04	.0370	.1337	359.5000
									LOWER RCS NOZZLES	
123		531.5	1.347	.120	1.607E-04	.0135	1.939E-04	.0163	.0950	400.0000
124		530.7	1.333	.145	1.937E-04	.0163	2.337E-04	.0196	.0988	400.0000
125		531.0	1.234	.159	2.258E-04	.0190	2.723E-04	.0229	.1027	400.0000
126		530.5	1.113	.150	2.002E-04	.0168	2.415E-04	.0203	.0911	395.0000
127		530.5	1.458	.177	2.362E-04	.0198	2.848E-04	.0239	.0950	395.0000
128		531.1	1.523	.179	2.387E-04	.0200	2.880E-04	.0242	.0988	395.0000
129		531.5	1.613	.193	2.578E-04	.0216	3.111E-04	.0261	.0810	390.0000
130		530.7	1.301	.192	2.564E-04	.0215	3.092E-04	.0260	.0857	390.0000
131		530.9	1.853	.216	2.881E-04	.0242	3.475E-04	.0292	.0963	390.0000
132		530.2	1.422	.172	2.301E-04	.0193	2.775E-04	.0233	.0857	383.8000
133		530.4	1.812	.242	3.236E-04	.0272	3.902E-04	.0328	.0872	377.3000
134		531.0	2.608	.313	4.180E-04	.0351	5.042E-04	.0423	.0903	374.5500
135		531.5	2.822	.313	4.191E-04	.0352	5.056E-04	.0425	.0960	374.5500
136		531.3	2.638	.345	4.607E-04	.0387	5.557E-04	.0467	.0872	370.5500
137		531.7	2.887	.332	4.444E-04	.0373	5.361E-04	.0450	.0928	370.5500
138		532.0	2.610	.333	4.456E-04	.0374	5.377E-04	.0451	.0816	366.0500
139		532.5	2.837	.357	4.779E-04	.0401	5.767E-04	.0484	.0934	362.4000
140		532.5	2.514	.332	4.447E-04	.0373	5.366E-04	.0451	.0973	362.4000
141		532.5	1.966	.214	2.864E-04	.0241	3.458E-04	.0290	.0833	355.2000
142		533.7	3.085	.310	4.153E-04	.0349	5.013E-04	.0421	.0919	355.2000
143		533.2	3.583	.472	6.335E-04	.0532	7.649E-04	.0642	.0949	349.0000
144		534.2								

DATE 5/12/75

AEDC(ARO,INC.) ARNOLD AFS, TENNESSEE
VON KARMAN GAS DYNAMICS FACILITY
50 INCH HYPERSONIC TUNNEL B
V41B-67A

GROUP	TEST CONDITION	MODEL	MACH NO	PO,PSIA	TO,DEG R	ALPHA-MODEL	ALPHA-SECTOR	ALPHA-PREBEND	ROLL MODEL	YAW
122	50	140 B	7.90	111.3	1279	30.06	-.06	30.00	179.94	.0

T-INF (DEG R)	P-INF (PSIA)	Q-INF (PSIA)	V-INF (FT/SEC)	RHO-INF (SLUGS/FT3)	MU-INF (LB-SEC/FT2)	RE/FT (FT-1)	HREF-FR (R= .0400FT)	STFR (R= .0400FT)	SWITCH POSITION
94.9	.012	.540	3771	1.094E-05	7.640E-08	5.399E 05	1.191E-02	3.640E-02	2

TC NO	TW	DTWDT	QDOT	H(TO)	H(TO)/HREF	H(.9TO)	H(.9TO)/HREF	X/L	2Y/B
								UPPER RCS NOZZLES	
161	522.4	.736	.087	1.144E-04	.0096	1.377E-04	.0116	.0619	-.0160
162	527.3	.466	.044	5.845E-05	.0049	7.044E-05	.0059	.0709	-.0160
163	529.9	.542	.066	8.869E-05	.0074	1.069E-04	.0090	.0807	-.0160
164	531.4	.553	.072	9.630E-05	.0081	1.162E-04	.0098	.0943	-.0160
165	532.1	.459	.056	7.727E-05	.0065	9.323E-05	.0078	.0978	-.0160
166	532.3	.374	.048	6.410E-05	.0054	7.734E-05	.0065	.1013	-.0160
167	525.1	.777	.105	1.357E-04	.0117	1.671E-04	.0140	.0619	-.0320
168	526.4	.844	.088	1.177E-04	.0099	1.418E-04	.0119	.0709	-.0320
169	530.2	.594	.072	9.615E-05	.0081	1.159E-04	.0097	.0807	-.0320
170	531.0	.561	.070	9.354E-05	.0079	1.128E-04	.0095	.0943	-.0320
171	531.3	.615	.074	9.983E-05	.0083	1.195E-04	.0100	.0978	-.0320
172	531.0	.456	.059	7.926E-05	.0067	9.561E-05	.0080	.1013	-.0320
173	530.1	.533	.071	9.473E-05	.0080	1.142E-04	.0096	.0807	-.0480
174	530.5	.434	.049	6.593E-05	.0055	7.952E-05	.0067	.0943	-.0480
175	530.8	.375	.054	7.170E-05	.0060	8.648E-05	.0073	.0978	-.0480
176	531.0	.335	.046	6.091E-05	.0051	7.348E-05	.0062	.1013	-.0480
								CANOPY	
177	533.1	3.162	.435	5.826E-04	.0489	7.032E-04	.0590		
178	533.1	3.685	.724	9.699E-04	.0814	1.171E-03	.0983		
179	532.7	3.113	.651	8.725E-04	.0733	1.053E-03	.0884		
180	531.3	1.233	.151	2.147E-04	.0180	2.590E-04	.0217		
181	531.5	1.634	.222	2.962E-04	.0249	3.574E-04	.0300		
182	530.5	1.296	.184	2.480E-04	.0207	2.967E-04	.0249		
183	530.0	.240	.030	4.018E-05	.0034	4.846E-05	.0041		
184	529.8	.244	.033	4.435E-05	.0037	5.348E-05	.0045		
185	530.8	1.236	.148	1.981E-04	.0166	2.389E-04	.0201		
186	531.0	1.446	.181	2.421E-04	.0203	2.920E-04	.0245		
187	530.1	1.213	.161	2.150E-04	.0181	2.592E-04	.0218		
188	531.3	1.991	.462	6.181E-04	.0519	7.456E-04	.0626		
189	529.8	.676	.096	1.282E-04	.0108	1.546E-04	.0130		
190	529.9	.913	.131	1.749E-04	.0147	2.109E-04	.0177		
191	530.0	.894	.136	1.819E-04	.0153	2.193E-04	.0184		

DATE 5/12/75

AEDC(ARO,INC.) ARNOLD AFS, TENNESSEE
VON KARMAN GAS DYNAMICS FACILITY
50 INCH HYPERSONIC TUNNEL B
V41H-B7A

GROUP	TEST CONDITION	MODEL	MACH NO	PO,PSIA	TO,DEG R	ALPHA-MODEL	ALPHA-SECTOR	ALPHA-PREBEND	ROLL MODEL	YAW
122	5	140 B	7.90	111.3	1279	30.06	-.06	30.00	179.94	.0

T-INF (DEG R)	P-INF (PSIA)	Q-INF (PSIA)	V-INF (FT/SEC)	RHO-INF (SLUGS/FT3)	MU-INF (LB-SEC/FT2)	RE/FT (FT-1)	HREF-FR (R= .0400FT)	STFR (R= .0400FT)	SWITCH POSITION
94.5	.012	.540	3771	1.094E-05	7.640E-08	5.399E 05	1.191E-02	3.640E-02	2

TC NO	TW	DIWDT	GOOT	H(TO)	H(TO)/HREF	H(.9TO)	H(.9TO)/HREF
						CANOPY	
192	529.1	.279	.039	5.230E-05	.0044	6.305E-05	.0053
193	529.5	1.279	.246	3.275E-04	.0275	3.949E-04	.0332
194	528.0	.265	.034	4.552E-05	.0038	5.486E-05	.0046
195	528.1	.454	.056	7.431E-05	.0062	8.956E-05	.0075
196	528.1	.477	.062	8.308E-05	.0070	1.001E-04	.0084
197	529.5	.218	.022	2.871E-05	.0024	3.462E-05	.0029
198	529.3	.234	.027	3.608E-05	.0030	4.349E-05	.0037
199	527.2	.619	.083	1.101E-04	.0092	1.326E-04	.0111
200	528.2	.620	.088	1.172E-04	.0098	1.412E-04	.0119
201	528.9	.840	.119	1.587E-04	.0133	1.913E-04	.0161
202	529.5	1.419	.179	2.383E-04	.0200	2.873E-04	.0241
203	528.7	.271	.034	4.477E-05	.0038	5.397E-05	.0045
204	527.8	.304	.047	6.258E-05	.0053	7.542E-05	.0063
205	528.7	.845	.131	1.750E-04	.0147	2.110E-04	.0177
206	529.5	.179	.024	3.102E-05	.0027	3.813E-05	.0032
207	528.4	.885	.118	1.576E-04	.0132	1.900E-04	.0160
208	528.9	.256	.034	4.576E-05	.0038	5.518E-05	.0046
209	528.1	.288	.039	5.249E-05	.0044	6.327E-05	.0053
210	527.4	.215	.029	3.805E-05	.0032	4.585E-05	.0038
211	530.5	.344	.042	5.571E-05	.0047	6.719E-05	.0056
212	529.9	.351	.051	6.848E-05	.0057	8.257E-05	.0069
213	528.4	.313	.041	5.521E-05	.0046	6.655E-05	.0056
214	527.9	.409	.057	7.614E-05	.0064	9.176E-05	.0077
215	527.2	.201	.028	3.777E-05	.0032	4.552E-05	.0038
216	528.1	.760	.108	1.432E-04	.0120	1.725E-04	.0145
217	528.4	.734	.104	1.389E-04	.0117	1.674E-04	.0141
218	527.3	.257	.035	4.703E-05	.0039	5.665E-05	.0048
219	528.5	.802	.084	1.125E-04	.0094	1.355E-04	.0114
220	526.9	.242	.033	4.400E-05	.0037	5.301E-05	.0045

GROUP 122 CENTERLINE TIME 2.05

CH	TC	FIT LENGTH	DTDWT	UNCERTAINTY	CH	TC	FIT LENGTH	DTDWT	UNCERTAINTY
1	107	1.20	1.546	.0148	50	173	2.00	.533	.0155
2	108	.80	2.703	.0156	51	174	2.00	.414	.0299
3	109	.80	2.436	.0133	52	175	2.00	.375	.0428
4	110	.80	2.311	.0147	53	176	2.00	.335	.0257
5	111	.80	2.401	.0252	54	177	.80	3.162	.0142
6	112	.80	2.256	.0707	55	178	.80	3.685	.0078
7	113	.80	2.678	.0684	56	179	.80	3.113	.0411
8	114	.80	2.453	.0110	57	180	1.20	1.233	.0154
9	115	.80	2.256	.0185	58	181	1.20	1.634	.0098
10	116	.80	2.326	.0131	59	182	1.20	1.296	.0208
11	117	.80	2.380	.0179	60	183	2.00	.240	.0344
12	118	.80	2.026	.0192	61	184	2.00	.244	.0667
13	119	.80	2.276	.0178	62	185	1.20	1.236	.0133
14	12	.80	2.494	.0122	63	186	1.20	1.446	.0129
15	121	.80	2.098	.0237	64	187	1.20	1.213	.0202
16	122	.80	2.193	.0127	65	188	1.20	1.990	.0147
17	124	1.20	1.347	.0408	66	189	2.00	.676	.0199
18	125	1.20	1.333	.0145	67	190	2.00	.913	.0064
19	126	1.20	1.234	.0159	68	191	2.00	.894	.0846
20	127	1.20	1.113	.0266	69	192	2.00	.279	.0597
21	128	1.20	1.458	.0106	70	193	1.20	1.279	.0158
22	129	1.20	1.523	.0109	71	194	2.00	.266	.0555
23	13	1.20	1.613	.0221	72	195	2.00	.454	.0254
24	131	1.20	1.301	.0222	73	196	2.00	.477	.0227
25	132	1.20	1.853	.0382	74	197	2.00	.218	.0455
26	133	1.20	1.422	.0105	75	198	2.00	.234	.0513
27	134	1.20	1.812	.0101	76	199	2.00	.618	.0365
28	135	.80	2.658	.0114	77	200	2.00	.620	.0115
29	136	.80	2.822	.0101	78	201	2.00	.846	.0137
30	137	.80	2.638	.0099	79	202	1.20	1.419	.0844
31	138	.80	2.887	.0106	80	203	2.00	.271	.0338
32	139	.80	2.810	.0121	81	204	2.00	.304	.0323
33	140	.80	2.807	.0139	82	205	2.00	.845	.0099
34	141	.80	2.514	.0120	83	206	2.00	.179	.0894
35	142	1.20	1.960	.0092	84	207	2.00	.885	.0127
36	143	.80	3.085	.0090	85	208	2.00	.256	.0418
37	144	.80	3.583	.0078	86	209	2.00	.288	.0315
38	161	2.00	.736	.0160	87	210	2.00	.215	.1076
39	162	2.00	.466	.0216	88	211	2.00	.344	.0263
40	163	2.00	.542	.0235	89	212	2.00	.381	.0329
41	164	2.00	.553	.0133	90	213	2.00	.313	.0871
42	165	2.00	.455	.0170	91	214	2.00	.409	.0473
43	166	2.00	.374	.0304	92	215	2.00	.201	.1215
44	167	2.00	.777	.0106	93	216	2.00	.760	.0174
45	168	2.00	.844	.0110	94	217	2.00	.734	.0207
46	169	2.00	.594	.0152	95	218	2.00	.257	.0553
47	170	2.00	.501	.0363	96	219	2.00	.602	.0300
48	171	2.00	.615	.0159	97	220	2.00	.242	.0353
49	172	2.00	.456	.0221	98	0	-0	0	0

123 .050

BIT ON LOOP 61

DATE 5/12/75

AEDC(ARO,INC.) ARNOLD AFS, TENNESSEE
VON KARMAN GAS DYNAMICS FACILITY
50 INCH HYPERSONIC TUNNEL B
V41B-H7A

GROUP	TEST CONDITION	MODEL	MACH NO	PO,PSIA	TO,DEG R	ALPHA-MODEL	ALPHA-SECTOR	ALPHA-PREBEND	ROLL MODEL	YAW
123	51	140 B	7.90	109.1	1279	20.04	9.96	30.00	179.94	-.0

T-INF (DEG R)	P-INF (PSIA)	Q-INF (PSIA)	V-INF (FT/SEC)	RHO-INF (SLUGS/FT3)	MU-INF (LB-SEC/FT2)	RE/FT (FT-1)	HREF-FR (R= .0400FT)	STFR (R= .0400FT)	SWITCH POSITION
94.9	.012	.536	3770	1.072E-05	7.636E-08	5.294E 05	1.179E-02	3.676E-02	2

IC NO	TW	DIMDT	QDOT	H(TO)	H(TO)/HREF	H(.9TO)	H(.9TO)/HREF		
								ACCESS HATCH WINDOW X/L	Z,FULL SCALE(IN)
107	530.1	1.322	.199	2.526E-04	.0214	3.046E-04	.0258	.2050	396.2000
								FUSELAGE VENT PANEL NO. 3 AND 1 X/L	Z,FULL SCALE(IN)
108	530.5	2.818	.248	3.977E-04	.0337	4.797E-04	.0407	.1244	377.5000
109	529.7	2.373	.243	3.908E-04	.0331	4.712E-04	.0400	.1302	377.5000
110	529.5	2.184	.276	3.688E-04	.0313	4.447E-04	.0377	.1360	377.5000
111	530.0	2.120	.255	3.405E-04	.0289	4.106E-04	.0348	.1418	377.5000
112	531.5	2.142	.260	3.473E-04	.0295	4.189E-04	.0355	.1476	377.5000
113	530.7	2.031	.301	4.028E-04	.0342	4.859E-04	.0412	.1215	273.5000
114	531.1	2.227	.274	3.651E-04	.0310	4.414E-04	.0374	.1273	273.5000
115	529.7	2.138	.255	3.534E-04	.0300	4.262E-04	.0361	.1331	273.5000
116	531.3	2.069	.246	3.259E-04	.0279	3.967E-04	.0336	.1389	273.5000
117	530.5	2.145	.247	3.297E-04	.0280	3.977E-04	.0337	.1447	273.5000
118	531.1	1.812	.251	3.349E-04	.0284	4.040E-04	.0343	.1409	366.0000
119	531.4	2.096	.271	3.625E-04	.0307	4.373E-04	.0371	.1442	366.0000
120	532.1	2.232	.279	3.732E-04	.0317	4.503E-04	.0382	.1215	359.5000
121	532.2	1.893	.232	3.109E-04	.0264	3.752E-04	.0318	.1303	359.5000
122	532.0	2.077	.259	3.460E-04	.0293	4.175E-04	.0354	.1337	359.5000
								LOWER RCS NOZZLES X/L	Z,FULL SCALE(IN)
124	530.5	2.293	.235	2.737E-04	.0232	3.301E-04	.0280	.0950	400.0000
125	530.5	2.257	.245	3.276E-04	.0278	3.951E-04	.0335	.0988	400.0000
126	530.6	1.963	.259	3.589E-04	.0304	4.329E-04	.0367	.1027	400.0000
127	529.5	2.203	.296	3.954E-04	.0335	4.768E-04	.0404	.0911	395.0000
128	529.6	2.236	.270	3.606E-04	.0306	4.348E-04	.0369	.0950	395.0000
129	531.2	2.265	.258	3.577E-04	.0303	4.314E-04	.0366	.0988	395.0000
130	530.7	2.426	.290	3.874E-04	.0329	4.672E-04	.0396	.0810	390.0000
131	529.3	2.316	.342	4.556E-04	.0386	5.493E-04	.0466	.0857	390.0000
132	529.6	2.429	.283	3.770E-04	.0320	4.546E-04	.0386	.0963	390.0000
133	529.2	2.295	.257	3.566E-04	.0302	4.299E-04	.0365	.0857	383.8000
134	528.6	2.180	.291	3.883E-04	.0329	4.681E-04	.0397	.0872	377.3000
135	529.3	2.965	.356	4.749E-04	.0403	5.726E-04	.0486	.0903	374.5500
136	530.7	3.168	.352	4.700E-04	.0399	5.669E-04	.0481	.0960	374.5500
137	529.7	2.954	.387	5.164E-04	.0438	6.227E-04	.0528	.0872	370.5500
138	530.5	3.106	.357	4.771E-04	.0405	5.755E-04	.0488	.0928	370.5500
139	530.5	2.868	.325	4.871E-04	.0413	5.875E-04	.0498	.0816	366.0500
140	531.3	2.962	.376	5.034E-04	.0427	6.072E-04	.0515	.0934	362.4000
141	531.5	2.781	.357	4.912E-04	.0417	5.926E-04	.0503	.0973	362.4000
142	532.0	2.182	.238	3.180E-04	.0270	3.837E-04	.0325	.0833	355.2000
143	531.9	3.308	.332	4.443E-04	.0377	5.361E-04	.0455	.0919	355.2000
144	533.2	3.643	.480	6.433E-04	.0546	7.764E-04	.0659	.0949	349.0000

DATE 5/12/75

AEDC(ARO,INC.) ARNOLD AFS, TENNESSEE
VON KARMAN GAS DYNAMICS FACILITY
50 INCH HYPERSONIC TUNNEL B
V41R-87A

GROUP	TEST CONDITION	MODEL	MACH NO	PO,PSIA	TO,DEG R	ALPHA-MODEL	ALPHA-SECTOR	ALPHA-PREBEND	ROLL MODEL	YAW
123	51	140 B	7.90	109.1	1279	20.04	9.96	30.00	179.94	-.0

T-INF (DEG R)	P-INF (PSIA)	Q-INF (PSIA)	V-INF (FT/SEC)	RHO-INF (SLUGS/FT3)	MU-INF (LB-SEC/FT2)	RE/FT (FT-1)	HREF-FR (R= .0400FT)	STFR (R= .0400FT)	SWITCH POSITION
94.9	.012	.530	3770	1.072E-05	7.636E-08	5.294E 05	1.179E-02	3.676E-02	2

TC NO	TW	DTWDT	QDOT	H(TO)	H(TO)/HREF	H(.9TO)	H(.9TO)/HREF
161	520.3	1.661	.195	2.573E-04	.0218	3.095E-04	.0263
162	525.7	1.634	.154	2.045E-04	.0173	2.463E-04	.0209
163	528.1	1.164	.143	1.898E-04	.0161	2.287E-04	.0194
164	530.2	.950	.124	1.650E-04	.0140	1.990E-04	.0169
165	531.0	.686	.086	1.153E-04	.0098	1.390E-04	.0118
166	531.2	.582	.074	9.956E-05	.0084	1.201E-04	.0102
167	524.3	1.693	.228	3.020E-04	.0256	3.636E-04	.0308
168	527.5	1.802	.189	2.508E-04	.0213	3.022E-04	.0256
169	528.9	1.288	.156	2.080E-04	.0176	2.507E-04	.0213
170	530.1	1.143	.143	1.905E-04	.0162	2.297E-04	.0195
171	530.2	1.173	.141	1.884E-04	.0160	2.272E-04	.0193
172	530.5	.874	.114	1.520E-04	.0129	1.834E-04	.0156
173	529.5	1.411	.188	2.508E-04	.0213	3.025E-04	.0257
174	530.1	1.114	.127	1.691E-04	.0143	2.039E-04	.0173
175	530.8	.951	.136	1.819E-04	.0154	2.195E-04	.0186
176	530.7	.778	.106	1.413E-04	.0120	1.705E-04	.0145
177	531.4	2.429	.334	4.462E-04	.0378	5.383E-04	.0457
178	532.8	4.255	.836	1.120E-03	.0950	1.351E-03	.1146
179	533.7	5.921	1.240	1.664E-03	.1411	2.008E-03	.1703
180	528.6	.724	.095	1.261E-04	.0107	1.520E-04	.0129
181	529.5	1.387	.188	2.506E-04	.0213	3.022E-04	.0256
182	530.1	2.648	.377	5.027E-04	.0426	6.063E-04	.0514
183	527.5	.518	.065	8.614E-05	.0073	1.038E-04	.0088
184	527.8	.594	.081	1.077E-04	.0091	1.298E-04	.0110
185	528.6	.972	.116	1.551E-04	.0132	1.870E-04	.0159
186	529.3	1.666	.209	2.781E-04	.0236	3.353E-04	.0284
187	530.0	3.120	.414	5.531E-04	.0469	6.670E-04	.0566
188	531.9	4.509	1.048	1.403E-03	.1190	1.693E-03	.1436
189	528.0	.884	.126	1.671E-04	.0142	2.014E-04	.0171
190	528.5	1.674	.240	3.198E-04	.0271	3.855E-04	.0327
191	529.0	2.640	.402	5.363E-04	.0455	6.465E-04	.0548

UPPER RCS NOZZLES

X/L	2Y/B
.0619	-.0160
.0709	-.0160
.0807	-.0160
.0943	-.0160
.0978	-.0160
.1013	-.0160
.0619	-.0320
.0709	-.0320
.0807	-.0320
.0943	-.0320
.0978	-.0320
.1013	-.0320
.0807	-.0480
.0943	-.0480
.0978	-.0480
.1013	-.0480

CANOPY

DATE 5/12/75

AEDC(ARO,INC.) ARNOLD AFS, TENNESSEE
VON KARMAN GAS DYNAMICS FACILITY
50 INCH HYPERSONIC TUNNEL H
V41B-B/A

GROUP	TEST CONDITION	MODEL	MACH NO	PO,PSIA	TO,DEG R	ALPHA-MODEL	ALPHA-SECTOR	ALPHA-PREBEND	ROLL MODEL	YAW
123	51	140 B	7.90	109.1	1279	20.04	9.96	30.00	179.94	-.0

T-INF (DEG R)	P-INF (PSIA)	Q-INF (PSIA)	V-INF (FT/SEC)	RHO-INF (SLUGS/FT3)	MU-INF (LB-SEC/FT2)	RE/FT (FT-1)	HREF-FR (R= .0400FT)	STFR (R= .0400FT)	SWITCH POSITION
94.5	.012	.538	3770	1.072E-05	7.638E-08	5.294E 05	1.179E-02	3.676E-02	2

IC	NC	TW	DTWDT	QDOT	H(TO)	H(TO)/HREF	H(.9TO)	H(.9TO)/HREF
							CANOPY	
192		526.3	.385	.054	7.188E-05	.0061	8.654E-05	.0073
193		530.4	3.510	.674	9.096E-04	.0764	1.086E-03	.0921
194		526.5	.851	.110	1.458E-04	.0124	1.756E-04	.0149
195		527.3	1.717	.211	2.806E-04	.0238	3.381E-04	.0287
196		527.8	2.057	.287	3.503E-04	.0304	4.319E-04	.0366
197		527.4	.341	.034	4.480E-05	.0038	5.399E-05	.0046
198		527.2	.293	.034	4.516E-05	.0038	5.442E-05	.0046
199		526.0	.500	.057	8.889E-05	.0075	1.071E-04	.0091
200		526.5	1.304	.185	2.460E-04	.0209	2.963E-04	.0251
201		527.8	2.532	.356	4.742E-04	.0402	5.715E-04	.0485
202		528.9	3.059	.386	5.140E-04	.0436	6.196E-04	.0526
203		526.1	.508	.063	8.347E-05	.0071	1.005E-04	.0085
204		525.4	.858	.133	1.763E-04	.0150	2.124E-04	.0180
205		527.3	1.963	.305	4.055E-04	.0344	4.886E-04	.0414
206		529.5	.165	.022	2.905E-05	.0025	3.503E-05	.0030
207		528.0	2.430	.325	4.321E-04	.0367	5.208E-04	.0442
208		526.1	.367	.049	6.529E-05	.0055	7.865E-05	.0067
209		525.3	.442	.061	8.029E-05	.0068	9.670E-05	.0082
210		525.4	1.019	.136	1.800E-04	.0153	2.168E-04	.0184
211		527.8	.077	.009	1.244E-05	.0011	1.499E-05	.0013
212		527.7	.411	.055	7.355E-05	.0062	8.863E-05	.0075
213		525.5	.412	.054	7.229E-05	.0061	8.707E-05	.0074
214		525.2	.701	.098	1.297E-04	.0110	1.562E-04	.0133
215		525.7	1.000	.141	1.877E-04	.0159	2.261E-04	.0192
216		527.2	1.833	.252	3.468E-04	.0296	4.203E-04	.0356
217		527.1	1.595	.226	3.010E-04	.0255	3.627E-04	.0308
218		525.0	.424	.059	7.807E-05	.0066	9.401E-05	.0080
219		524.3	1.155	.162	2.145E-04	.0182	2.583E-04	.0219
220		525.2	1.017	.139	1.847E-04	.0157	2.224E-04	.0189

GROUP 123 CENTERLINE TIME 3.00

CH	TC	FIT LENGTH	DTDWT	UNCERTAINTY	CH	TC	FIT LENGTH	DTDWT	UNCERTAINTY
1	107	1.20	1.322	.0114	50	173	1.20	1.411	.0175
2	108	.80	2.818	.0106	51	174	1.20	1.114	.0196
3	109	.80	2.373	.0094	52	175	2.00	.951	.0127
4	110	.80	2.184	.0170	53	176	2.00	.778	.0106
5	111	.80	2.120	.0455	54	177	.80	2.429	.0199
6	112	.80	2.132	.0145	55	178	.60	4.255	.0216
7	113	.80	2.631	.0615	56	179	.60	5.921	.0256
8	114	.80	2.287	.0130	57	180	2.00	.728	.0139
9	115	.80	2.138	.0213	58	181	1.20	1.387	.0136
10	116	1.20	2.009	.0093	59	182	.80	2.648	.0150
11	117	.80	2.145	.0214	60	183	2.00	.518	.0188
12	118	1.20	1.612	.0174	61	184	2.00	.594	.0279
13	119	.80	2.096	.0111	62	185	2.00	.972	.0082
14	120	.80	2.232	.0214	63	186	1.20	1.666	.0144
15	121	1.20	1.893	.0178	64	187	.80	3.120	.0122
16	122	.80	2.077	.0133	65	188	.60	4.509	.0135
17	124	.80	2.298	.0344	66	189	2.00	.884	.0124
18	125	.80	2.257	.0136	67	190	1.20	1.674	.0105
19	126	1.20	1.963	.0145	68	191	.80	2.640	.1059
20	127	.80	2.203	.0225	69	192	2.00	.385	.0556
21	128	.80	2.230	.0112	70	193	.80	3.510	.0091
22	129	.80	2.286	.0114	71	194	2.00	.853	.0171
23	130	.80	2.426	.0234	72	195	1.20	1.717	.0127
24	131	.80	2.316	.0202	73	196	.80	2.057	.0134
25	132	.80	2.429	.0255	74	197	2.00	.341	.0285
26	133	.80	2.206	.0152	75	198	2.00	.293	.0475
27	134	.80	2.180	.0209	76	199	2.00	.500	.0290
28	135	.80	2.968	.0094	77	200	1.20	1.304	.0193
29	136	.80	3.168	.0106	78	201	.80	2.532	.0132
30	137	.80	2.964	.0087	79	202	.80	3.059	.0597
31	138	.80	3.106	.0106	80	203	2.00	.508	.0169
32	139	.80	2.860	.0123	81	204	2.00	.858	.0125
33	140	.80	2.962	.0146	82	205	1.20	1.963	.0108
34	141	.80	2.781	.0141	83	206	2.00	.165	.1649
35	142	.80	2.182	.0180	84	207	.80	2.430	.0155
36	143	.80	3.328	.0107	85	208	2.00	.367	.0346
37	144	.80	3.643	.0080	86	209	2.00	.442	.0177
38	161	1.20	1.661	.0149	87	210	2.00	1.019	.0243
39	162	1.20	1.634	.0085	88	211	2.00	.077	.3521
40	163	1.20	1.164	.0215	89	212	2.00	.411	.0329
41	164	2.00	.950	.0095	90	213	2.00	.412	.0733
42	165	2.00	.686	.0142	91	214	2.00	.701	.0230
43	166	2.00	.582	.0276	92	215	2.00	1.000	.0265
44	167	1.20	1.693	.0139	93	216	1.20	1.853	.0086
45	168	1.20	1.802	.0113	94	217	1.20	1.595	.0249
46	169	1.20	1.248	.0143	95	218	2.00	.429	.0393
47	170	1.20	1.143	.0376	96	219	2.00	1.155	.0225
48	171	1.20	1.173	.0188	97	220	2.00	1.017	.0085
49	172	2.00	.874	.0127	98	0	-0	0	0

DATE 5/12/75

AEDC(ARO,INC.) ARNOLD AFS, TENNESSEE
VON KARMAN GAS DYNAMICS FACILITY
50 INCH HYPERSONIC TUNNEL B
V41H-B7A

GROUP	TEST CONDITION	MODEL	MACH NO	PO,PSIA	TO,DEG R	ALPHA-MODEL	ALPHA-SECTOR	ALPHA-PREBEND	ROLL MODEL	YAW
124	52	140 B	7.98	431.1	1297	20.04	9.96	30.00	179.94	-.0

T-INF (DEG R)	P-INF (PSIA)	Q-INF (PSIA)	V-INF (FT/SEC)	RHO-INF (SLUGS/FT3)	MU-INF (LB-SEC/FT2)	RE/FT (FT-1)	HREF-FR (R= .0400FT)	STFR (R= .0400FT)	SWITCH POSITION
94.4	.045	2.001	3799	3.989E-05	7.600E-08	1.994E 06	2.297E-02	1.909E-02	2

TC NO	TW	DTDOT	QDOT	H(TO)	H(TO)/HREF	H(.9TO)	H(.9TO)/HREF	X/L	Z,FULL SCALE(IN)
								ACCESS HATCH WINDOW	
107	528.8	2.675	.382	4.961E-04	.0217	5.992E-04	.0261	.2050	396.2000
								FUSELAGE VENT PANEL NO. 3 AND 1	
								X/L	Z,FULL SCALE(IN)
108	531.0	5.439	.575	7.566E-04	.0327	9.036E-04	.0393	.1244	377.5000
109	529.8	4.377	.540	7.045E-04	.0307	8.478E-04	.0369	.1302	377.5000
110	529.5	4.064	.514	6.704E-04	.0292	8.067E-04	.0351	.1360	377.5000
111	529.8	3.910	.470	6.134E-04	.0267	7.382E-04	.0321	.1418	377.5000
112	529.6	3.957	.469	6.113E-04	.0266	7.357E-04	.0320	.1476	377.5000
113	530.1	4.680	.536	6.992E-04	.0304	8.415E-04	.0366	.1215	273.5000
114	529.8	4.383	.525	6.852E-04	.0298	8.246E-04	.0359	.1273	273.5000
115	530.2	3.823	.474	6.181E-04	.0269	7.439E-04	.0324	.1331	273.5000
116	529.6	3.757	.460	6.001E-04	.0261	7.222E-04	.0314	.1389	273.5000
117	530.1	3.952	.456	5.942E-04	.0259	7.151E-04	.0311	.1447	273.5000
118	529.4	3.459	.478	6.226E-04	.0271	7.491E-04	.0326	.1409	366.0000
119	530.1	3.876	.501	6.535E-04	.0285	7.865E-04	.0342	.1442	366.0000
120	529.5	4.172	.521	6.784E-04	.0295	8.164E-04	.0355	.1215	359.5000
121	529.6	3.584	.439	5.724E-04	.0249	6.889E-04	.0300	.1303	359.5000
122	529.9	3.677	.457	5.963E-04	.0260	7.176E-04	.0312	.1337	359.5000
								LOWER RCS NOZZLES	
								X/L	Z,FULL SCALE(IN)
124	530.1	4.317	.385	5.019E-04	.0219	6.041E-04	.0263	.0950	400.0000
125	528.9	4.282	.485	6.081E-04	.0264	7.293E-04	.0318	.0988	400.0000
126	529.5	3.760	.514	6.703E-04	.0292	8.066E-04	.0351	.1027	400.0000
127	529.7	3.925	.528	6.867E-04	.0300	8.288E-04	.0361	.0911	395.0000
128	529.1	4.298	.521	6.784E-04	.0295	8.163E-04	.0355	.0950	395.0000
129	529.5	4.458	.522	6.801E-04	.0296	8.185E-04	.0356	.0988	395.0000
130	529.5	4.267	.510	6.641E-04	.0289	7.992E-04	.0348	.0810	390.0000
131	529.5	4.020	.593	7.750E-04	.0337	9.302E-04	.0405	.0857	390.0000
132	529.4	4.662	.542	7.066E-04	.0308	8.503E-04	.0370	.0963	390.0000
133	529.5	3.833	.485	6.054E-04	.0264	7.286E-04	.0317	.0857	383.8000
134	528.8	4.376	.585	7.607E-04	.0331	9.151E-04	.0398	.0872	377.3000
135	529.8	5.767	.691	9.015E-04	.0393	1.085E-03	.0472	.0903	374.5500
136	530.2	6.291	.698	9.109E-04	.0397	1.096E-03	.0477	.0960	374.5500
137	529.5	5.664	.740	9.639E-04	.0420	1.160E-03	.0505	.0872	370.5500
138	530.3	6.379	.734	9.571E-04	.0417	1.152E-03	.0502	.0928	370.5500
139	530.1	5.616	.716	9.338E-04	.0407	1.124E-03	.0489	.0816	366.0500
140	530.7	5.992	.761	9.938E-04	.0433	1.196E-03	.0521	.0934	362.4000
141	529.7	5.354	.736	9.206E-04	.0401	1.108E-03	.0482	.0973	362.4000
142	528.9	4.449	.484	6.297E-04	.0274	7.577E-04	.0330	.0833	355.2000
143	531.0	6.352	.637	8.322E-04	.0362	1.002E-03	.0436	.0919	355.2000
144	531.2	7.042	.926	1.210E-03	.0527	1.457E-03	.0634	.0949	349.0000

DATE 5/12/75

AEDC(ARO,INC.) ARNOLD AFS, TENNESSEE
VON KARMAN GAS DYNAMICS FACILITY
50 INCH HYPERSONIC TUNNEL B
V41B-B7A

GROUP	TEST CONDITION	MODEL	MACH NO	PO,PSIA	TO,DEG R	ALPHA-MODEL	ALPHA-SECTOR	ALPHA-PREBEND	ROLL MODEL	YAW
124	52	140 B	7.98	431.1	1297	20.04	9.96	30.00	179.94	-.0

T-INF (DEG R)	P-INF (PSIA)	Q-INF (PSIA)	V-INF (FT/SEC)	RHO-INF (SLUGS/FT3)	MU-INF (LB-SEC/FT2)	RE/FT (FT-1)	HREF-FR (R= .0400FT)	STFR (R= .0400FT)	SWITCH POSITION
94.4	.045	2.001	3799	3.989E-05	7.600E-08	1.994E 06	2.297E-02	1.909E-02	2

TC NO	TW	DTWDT	QDOT	H(TO)	H(TO)/HREF	H(.9TO)	H(.9TO)/HREF
161	523.6	3.162	.372	4.815E-04	.0210	5.785E-04	.0252
162	527.5	3.032	.286	3.720E-04	.0162	4.475E-04	.0195
163	528.6	2.075	.254	3.308E-04	.0144	3.980E-04	.0173
164	529.5	1.683	.219	2.855E-04	.0124	3.435E-04	.0150
165	529.5	1.290	.162	2.113E-04	.0092	2.543E-04	.0111
166	530.1	.969	.124	1.617E-04	.0070	1.946E-04	.0085
167	525.1	3.435	.463	5.996E-04	.0261	7.207E-04	.0314
168	527.8	3.627	.379	4.934E-04	.0215	5.935E-04	.0258
169	528.0	2.409	.292	3.794E-04	.0165	4.564E-04	.0199
170	529.6	2.463	.307	4.006E-04	.0174	4.822E-04	.0210
171	529.2	2.183	.283	3.422E-04	.0149	4.117E-04	.0179
172	529.1	1.632	.212	2.766E-04	.0120	3.328E-04	.0145
173	527.6	2.437	.324	4.217E-04	.0184	5.073E-04	.0221
174	528.1	2.165	.246	3.198E-04	.0139	3.846E-04	.0167
175	528.6	1.883	.269	3.505E-04	.0153	4.217E-04	.0184
176	528.6	1.518	.236	2.684E-04	.0117	3.229E-04	.0141
177	540.7	13.789	1.913	2.517E-03	.1096	3.038E-03	.1323
178	543.4	18.656	3.653	4.889E-03	.2129	5.906E-03	.2571
179	548.2	22.533	4.754	6.350E-03	.2765	7.681E-03	.3344
180	544.8	3.871	.535	6.628E-04	.0289	7.987E-04	.0348
181	537.9	8.293	1.128	1.487E-03	.0647	1.793E-03	.0781
182	541.9	17.439	2.494	3.305E-03	.1439	3.990E-03	.1737
183	531.2	2.001	.251	3.276E-04	.0143	3.944E-04	.0172
184	531.3	2.473	.338	4.409E-04	.0192	5.309E-04	.0231
185	534.2	4.481	.538	7.061E-04	.0307	8.508E-04	.0370
186	539.3	10.804	1.360	1.796E-03	.0782	2.167E-03	.0943
187	546.9	20.884	2.798	3.731E-03	.1624	4.511E-03	.1964
188	541.6	16.497	3.853	5.103E-03	.2222	6.161E-03	.2683
189	536.0	6.115	.872	1.146E-03	.0499	1.382E-03	.0602
190	540.6	12.819	1.850	2.446E-03	.1065	2.952E-03	.1286
191	545.1	24.245	3.724	4.955E-03	.2157	5.988E-03	.2607

UPPER RCS NOZZLES

X/L	2Y/B
.0619	-.0160
.0709	-.0160
.0807	-.0160
.0943	-.0160
.0978	-.0160
.1013	-.0160
.0619	-.0320
.0709	-.0320
.0807	-.0320
.0943	-.0320
.0978	-.0320
.1013	-.0320
.0807	-.0480
.0943	-.0480
.0978	-.0480
.1013	-.0480

CANOPY

DATE 5/12/75

AEDC(ARO,INC.) ARNOLD AFS, TENNESSEE
VON KARMAN GAS DYNAMICS FACILITY
50 INCH HYPERSONIC TUNNEL B
V41B-87A

GROUP	TEST CONDITION	MODEL	MACH NO	PO,PSIA	TO,DEG R	ALPHA-MODEL	ALPHA-SECTOR	ALPHA-PREBEND	ROLL MODEL	YAW
124	52	140 B	7.98	431.1	1297	20.04	9.96	30.00	179.94	-.0

T-INF (DEG R)	P-INF (PSIA)	Q-INF (PSIA)	V-INF (FT/SEC)	RHO-INF (SLUGS/FT3)	MU-INF (LB-SEC/FT2)	RE/FT (FT-1)	HREF-FR (R= .0400FT)	STFR (R= .0400FT)	SWITCH POSITION
94.4	.245	2.001	3799	3.989E-05	7.600E-08	1.994E 06	2.297E-02	1.909E-02	2

IC NO	TW	DTWDT	QDOT	H(TO)	H(TO)/HREF	H(.9TO)	H(.9TO)/HREF
						CANOPY	
192	531.5	3.157	.445	5.815E-04	.0253	7.002E-04	.0305
193	539.9	14.122	2.726	3.602E-03	.1568	4.347E-03	.1893
194	533.6	4.767	.615	8.000E-04	.0351	9.710E-04	.0423
195	532.6	11.533	1.426	1.883E-03	.0820	2.272E-03	.0989
196	543.3	15.777	2.041	2.762E-03	.1203	3.337E-03	.1453
197	528.3	.789	.078	1.016E-04	.0044	1.222E-04	.0053
198	528.9	1.028	.119	1.550E-04	.0068	1.866E-04	.0081
199	529.5	2.210	.246	3.864E-04	.0168	4.650E-04	.0202
200	533.8	5.212	.742	9.731E-04	.0424	1.172E-03	.0510
201	542.2	17.246	2.444	3.239E-03	.1410	3.911E-03	.1703
202	539.5	12.835	1.627	2.149E-03	.0936	2.593E-03	.1129
203	530.5	1.835	.227	2.967E-04	.0129	3.571E-04	.0156
204	532.8	3.515	.546	7.148E-04	.0311	8.609E-04	.0375
205	539.3	13.619	2.128	2.810E-03	.1223	3.390E-03	.1476
206	527.9	1.408	.136	2.421E-04	.0105	2.912E-04	.0127
207	536.2	9.103	1.221	1.605E-03	.0699	1.935E-03	.0843
208	529.7	1.728	.232	3.021E-04	.0132	3.636E-04	.0158
209	530.3	1.701	.234	3.048E-04	.0133	3.668E-04	.0160
210	532.3	3.770	.533	6.580E-04	.0286	7.924E-04	.0345
211	528.0	1.323	.160	2.085E-04	.0091	2.508E-04	.0109
212	528.9	1.630	.219	2.855E-04	.0124	3.435E-04	.0150
213	530.2	2.151	.285	3.719E-04	.0162	4.476E-04	.0195
214	531.3	3.148	.441	5.759E-04	.0251	6.934E-04	.0302
215	533.0	5.121	.727	9.517E-04	.0414	1.146E-03	.0499
216	533.9	6.067	.862	1.129E-03	.0492	1.361E-03	.0592
217	534.4	6.451	.919	1.206E-03	.0525	1.453E-03	.0633
218	530.3	3.295	.454	5.926E-04	.0258	7.134E-04	.0311
219	531.3	4.368	.614	8.017E-04	.0349	9.652E-04	.0420
220	532.8	5.825	.801	1.048E-03	.0456	1.262E-03	.0550

GROUP 124 CENTERLINE TIME 2.75

CH	TC	FIT LENGTH	DTDWT	UNCERTAINTY	CH	TC	FIT LENGTH	DTDWT	UNCERTAINTY
1	107	.80	2.675	.0161	50	173	.80	2.437	.0348
2	108	.60	5.435	.0121	51	174	.80	2.165	.0189
3	109	.60	4.377	.0115	52	175	1.20	1.883	.0149
4	110	.60	4.064	.0120	53	176	1.20	1.518	.0107
5	111	.60	3.910	.0249	54	177	.40	13.789	.0052
6	112	.60	3.957	.0163	55	178	.30	18.656	.0071
7	113	.60	4.640	.0478	56	179	.30	22.533	.0120
8	114	.60	4.333	.0141	57	180	.80	3.871	.0084
9	115	.80	3.823	.0088	58	181	.40	8.293	.0084
10	116	.60	3.757	.0119	59	182	.30	17.439	.0085
11	117	.60	3.962	.0201	60	183	1.20	2.001	.0103
12	118	.80	3.455	.0158	61	184	.80	2.473	.0335
13	119	.80	3.876	.0089	62	185	.60	4.481	.0055
14	120	.60	4.172	.0164	63	186	.40	10.808	.0134
15	121	.80	3.584	.0172	64	187	.30	20.884	.0079
16	122	.80	3.677	.0088	65	188	.30	16.497	.0113
17	124	.60	4.317	.0240	66	189	.60	6.115	.0095
18	125	.60	4.232	.0133	67	190	.40	12.819	.0042
19	126	.60	3.760	.0109	68	191	.30	24.245	.0318
20	127	.60	3.925	.0168	69	192	.80	3.157	.0227
21	128	.60	4.298	.0088	70	193	.40	14.122	.0060
22	129	.60	4.453	.0105	71	194	.60	4.767	.0121
23	130	.60	4.267	.0256	72	195	.40	11.533	.0044
24	131	.60	4.020	.0117	73	196	.40	15.777	.0066
25	132	.60	4.662	.0101	74	197	2.00	.789	.0138
26	133	.80	3.833	.0132	75	198	1.20	1.028	.0285
27	134	.60	4.376	.0102	76	199	.80	2.210	.0167
28	135	.60	5.767	.0063	77	200	.60	5.212	.0063
29	136	.60	6.291	.0061	78	201	.30	17.246	.0051
30	137	.60	5.664	.0059	79	202	.40	12.838	.0340
31	138	.60	6.379	.0077	80	203	1.20	1.835	.0089
32	139	.60	5.616	.0072	81	204	.80	3.516	.0095
33	140	.60	5.942	.0046	82	205	.40	13.619	.0053
34	141	.60	5.354	.0072	83	206	1.20	1.408	.0227
35	142	.60	4.449	.0207	84	207	.40	9.103	.0075
36	143	.60	6.352	.0089	85	208	1.20	1.728	.0098
37	144	.60	7.042	.0057	86	209	1.20	1.701	.0132
38	161	.80	3.162	.0153	87	210	.80	3.770	.0220
39	162	.80	3.032	.0086	88	211	1.20	1.323	.0139
40	163	.80	2.075	.0198	89	212	1.20	1.630	.0111
41	164	1.20	1.683	.0102	90	213	.80	2.151	.0821
42	165	1.20	1.290	.0157	91	214	.80	3.148	.0218
43	166	2.00	.969	.0121	92	215	.60	5.121	.0299
44	167	.80	3.435	.0104	93	216	.60	6.067	.0064
45	168	.80	3.627	.0094	94	217	.60	6.451	.0085
46	169	.80	2.409	.0131	95	218	.80	3.295	.0197
47	170	.80	2.463	.0410	96	219	.60	4.368	.0138
48	171	.80	2.183	.0179	97	220	.60	5.825	.0058
49	172	1.20	1.632	.0146	98	0	-0	0	0
125		.050							

HIT ON LOOP 60

DATE 5/12/75 AEDC(ARO,INC.) ARNOLD AFS, TENNESSEE

VON KARMAN GAS DYNAMICS FACILITY

50 INCH HYPERSONIC TUNNEL R

V418-87A

GROUP	TEST CONDITION	MODEL	MACH NO	PO,PSIA	TO,DEG R	ALPHA-MODEL	ALPHA-SECTOR	ALPHA-PREBEND	ROLL MODEL	YAW
125	53	140 B	7.98	430.0	1298	30.06	-.06	30.00	179.94	.0

T-INF (DEG R)	P-INF (PSIA)	Q-INF (PSIA)	V-INF (FT/SEC)	RHO-INF (SLUGS/FT3)	MU-INF (LB-SEC/FT2)	RE/FT (FT-1)	HREF-FR (R= .0400FT)	STFR (R= .0400FT)	SWITCH POSITION
9.5	.245	1.996	3802	3.974E-05	7.610E-06	1.985E 06	2.294E-02	1.912E-02	2

IC NO	TW	DTWDT	QDOT	H(TO)	H(TO)/HREF	H(.9TO)	H(.9TO)/HREF	X/L	Z,FULL SCALE(IN)
								ACCESS HATCH WINDOW	
107	527.5	3.013	.431	5.587E-04	.0244	6.719E-04	.0293	.2050	396.2000
								FUSELAGE VENT PANEL NO. 3 AND 1	
108	528.1	5.350	.505	7.328E-04	.0319	8.814E-04	.0384	.1244	377.5000
109	526.9	4.628	.571	7.394E-04	.0322	8.890E-04	.0387	.1302	377.5000
110	526.5	4.512	.570	7.396E-04	.0322	8.880E-04	.0387	.1360	377.5000
111	527.4	4.653	.559	7.252E-04	.0316	8.720E-04	.0380	.1418	377.5000
112	528.3	4.750	.553	7.307E-04	.0318	8.788E-04	.0383	.1476	377.5000
113	527.5	4.861	.556	7.216E-04	.0315	8.679E-04	.0378	.1215	273.5000
114	527.1	4.667	.559	7.243E-04	.0316	8.709E-04	.0380	.1273	273.5000
115	527.1	4.300	.532	6.858E-04	.0301	8.294E-04	.0361	.1331	273.5000
116	527.1	4.477	.548	7.103E-04	.0310	8.541E-04	.0372	.1389	273.5000
117	528.6	4.883	.561	7.249E-04	.0318	8.767E-04	.0382	.1447	273.5000
118	527.5	3.842	.530	6.879E-04	.0300	8.272E-04	.0361	.1409	366.0000
119	528.3	4.567	.590	7.659E-04	.0334	9.212E-04	.0402	.1442	366.0000
120	528.4	4.584	.572	7.422E-04	.0324	8.928E-04	.0389	.1215	359.5000
121	528.0	4.189	.513	6.659E-04	.0290	8.008E-04	.0349	.1303	359.5000
122	528.3	4.348	.540	7.015E-04	.0306	8.438E-04	.0368	.1337	359.5000
								LOWER RCS NOZZLES	
124	526.8	2.665	.237	3.074E-04	.0134	3.696E-04	.0161	.0950	400.0000
125	526.3	2.561	.278	3.600E-04	.0157	4.328E-04	.0189	.0988	400.0000
126	526.5	2.263	.309	4.004E-04	.0175	4.814E-04	.0210	.1027	400.0000
127	525.7	2.693	.362	4.640E-04	.0204	5.625E-04	.0245	.0911	395.0000
128	525.9	2.816	.341	4.410E-04	.0192	5.301E-04	.0231	.0950	395.0000
129	526.5	3.019	.353	4.577E-04	.0199	5.503E-04	.0240	.0988	395.0000
130	527.0	2.996	.356	4.616E-04	.0201	5.550E-04	.0242	.0810	390.0000
131	525.9	2.911	.429	5.548E-04	.0242	6.669E-04	.0291	.0857	390.0000
132	526.3	3.297	.383	4.958E-04	.0216	5.960E-04	.0260	.0963	390.0000
133	525.5	2.954	.351	4.669E-04	.0204	5.612E-04	.0245	.0857	383.8000
134	525.1	3.785	.505	6.527E-04	.0284	7.844E-04	.0342	.0872	377.3000
135	526.4	5.089	.619	7.888E-04	.0344	9.483E-04	.0413	.0903	374.5500
136	527.5	5.395	.548	7.736E-04	.0338	9.327E-04	.0407	.0960	374.5500
137	526.2	5.204	.678	8.783E-04	.0383	1.056E-03	.0460	.0872	370.5500
138	527.3	5.621	.645	8.371E-04	.0365	1.007E-03	.0439	.0928	370.5500
139	527.1	5.210	.663	8.597E-04	.0375	1.034E-03	.0451	.0816	366.0500
140	527.9	5.429	.689	8.940E-04	.0390	1.075E-03	.0469	.0934	362.4000
141	528.0	5.004	.659	8.559E-04	.0373	1.029E-03	.0449	.0973	362.4000
142	527.1	4.065	.441	5.723E-04	.0249	6.881E-04	.0300	.0833	355.2000
143	528.4	6.136	.615	7.984E-04	.0348	9.603E-04	.0419	.0919	355.2000
144	529.6	6.802	.894	1.163E-03	.0507	1.399E-03	.0610	.0949	349.0000

DATE 5/12/75

AEDC(APO,INC.) ARNOLD AFS, TENNESSEE
VON KARMAN GAS DYNAMICS FACILITY
50 INCH HYPERSONIC TUNNEL B
V41B-R7A

GROUP	TEST CONDITION	MODEL	MACH NO	PO,PSIA	TO,DEG R	ALPHA-MODEL	ALPHA-SECTOR	ALPHA-PREBEND	ROLL MODEL	YAW
125	53	140 B	7.98	430.0	1298	30.06	-.06	30.00	179.94	.0

T-INF (DEG R)	P-INF (PSIA)	Q-INF (PSIA)	V-INF (FT/SEC)	RHO-INF (SLUGS/FT3)	MU-INF (LB-SEC/FT2)	RE/FT (FT-1)	HREF-FR (R= .0400FT)	STFR (R= .0400FT)	SWITCH POSITION
94.5	.045	1.596	3802	3.974E-05	7.610E-08	1.985E 06	2.294E-02	1.912E-02	2

IC NO	TW	DTWDT	QDOT	H(TO)	H(TO)/HREF	H(.9TO)	H(.9TO)/HREF	X/L	2Y/B
								UPPER RCS NOZZLES	
161	524.7	1.629	.142	2.479E-04	.0108	2.979E-04	.0130	.0619	-.0160
162	526.8	1.961	.185	2.398E-04	.0104	2.883E-04	.0126	.0709	-.0160
163	526.8	1.341	.164	2.126E-04	.0093	2.557E-04	.0111	.0807	-.0160
164	527.3	1.153	.150	1.939E-04	.0085	2.331E-04	.0102	.0943	-.0160
165	528.2	.896	.113	1.461E-04	.0064	1.757E-04	.0077	.0978	-.0160
166	528.7	.828	.106	1.375E-04	.0060	1.654E-04	.0072	.1013	-.0160
167	525.7	1.602	.216	2.793E-04	.0122	3.358E-04	.0146	.0619	-.0320
168	526.9	1.706	.178	2.313E-04	.0101	2.781E-04	.0121	.0709	-.0320
169	526.6	1.200	.145	1.881E-04	.0082	2.262E-04	.0099	.0807	-.0320
170	527.3	1.266	.158	2.046E-04	.0089	2.460E-04	.0107	.0943	-.0320
171	527.3	1.160	.139	1.809E-04	.0079	2.175E-04	.0095	.0978	-.0320
172	527.5	.951	.124	1.604E-04	.0070	1.929E-04	.0084	.1013	-.0320
173	527.0	.913	.121	1.574E-04	.0069	1.893E-04	.0083	.0807	-.0480
174	526.7	.698	.079	1.025E-04	.0045	1.233E-04	.0054	.0943	-.0480
175	527.0	.626	.089	1.160E-04	.0051	1.394E-04	.0061	.0978	-.0480
176	527.1	.583	.079	1.026E-04	.0045	1.234E-04	.0054	.1013	-.0480
								CANOPY	
177	536.0	9.587	1.320	1.731E-03	.0755	2.087E-03	.0910		
178	537.5	10.933	2.152	2.828E-03	.1233	3.410E-03	.1486		
179	541.1	17.579	3.645	4.880E-03	.2127	5.889E-03	.2567		
180	533.0	6.389	.833	1.085E-03	.0474	1.310E-03	.0571		
181	530.9	2.879	.390	5.084E-04	.0222	6.119E-04	.0267		
182	532.9	6.448	.918	1.199E-03	.0523	1.444E-03	.0630		
183	526.0	.625	.078	1.011E-04	.0044	1.216E-04	.0053		
184	526.3	.712	.097	1.255E-04	.0055	1.508E-04	.0066		
185	530.4	4.217	.526	6.564E-04	.0287	7.923E-04	.0345		
186	530.1	2.565	.321	4.181E-04	.0182	5.031E-04	.0219		
187	533.5	5.970	.794	1.038E-03	.0453	1.251E-03	.0545		
188	535.8	10.584	2.465	3.232E-03	.1409	3.895E-03	.1698		
189	528.2	2.143	.384	3.952E-04	.0172	4.754E-04	.0207		
190	528.3	1.554	.223	2.893E-04	.0126	3.480E-04	.0152		
191	530.3	4.244	.647	8.424E-04	.0367	1.014E-03	.0442		

DATE 5/12/75

AEDC(ARO,INC.) ARNOLD AFS, TENNESSEE
VON KARMAN GAS DYNAMICS FACILITY
50 INCH HYPERSONIC TUNNEL B
V41B-87A

GROUP	TEST CONDITION	MODEL	MACH NO	PO,PSIA	TO,DEG R	ALPHA-MODEL	ALPHA-SECTOR	ALPHA-PREBEND	ROLL MODEL	YAW
165	53	140 B	7.98	430.0	1298	30.06	-.06	30.00	179.94	.0

T-INF (DEG R)	P-INF (PSIA)	Q-INF (PSIA)	V-INF (FT/SEC)	RHO-INF (SLUGS/FT3)	MU-INF (LB-SEC/FT2)	RE/FT (FT-1)	HREF-FR (R= .0400FT)	STFR (R= .0400FT)	SWITCH POSITION
94.5	.045	1.596	3802	3.974E-05	7.610E-08	1.985E 06	2.294E-02	1.912E-02	2

PC NO	TW	DTWDT	GDOT	H(TO)	H(TO)/HREF	H(.9TO)	H(.9TO)/HREF
						CANOPY	
152	524.8	.436	.061	7.919E-05	.0035	9.516E-05	.0041
153	523.4	3.943	.758	9.864E-04	.0430	1.187E-03	.0517
154	524.8	.357	.046	5.921E-05	.0026	7.115E-05	.0031
155	526.2	.787	.097	1.230E-04	.0054	1.503E-04	.0066
156	527.1	1.237	.162	2.098E-04	.0091	2.523E-04	.0110
157	525.1	.557	.055	7.112E-05	.0031	8.547E-05	.0037
158	524.3	.512	.059	7.645E-05	.0033	9.188E-05	.0040
159	524.5	.023	.003	3.928E-06	.0002	4.720E-06	.0002
200	525.7	1.598	.227	2.934E-04	.0128	3.527E-04	.0154
201	528.7	3.581	.504	6.547E-04	.0285	7.875E-04	.0343
202	528.6	1.825	.238	3.086E-04	.0134	3.712E-04	.0162
203	524.2	.731	.090	1.167E-04	.0051	1.402E-04	.0061
204	524.4	1.073	.146	2.146E-04	.0094	2.579E-04	.0112
205	527.7	4.161	.646	8.388E-04	.0366	1.009E-03	.0440
206	524.7	.074	.010	1.329E-05	.0006	1.597E-05	.0007
207	529.4	3.986	.533	6.929E-04	.0302	8.336E-04	.0363
208	523.9	.684	.092	1.181E-04	.0051	1.419E-04	.0062
209	523.7	.800	.110	1.414E-04	.0062	1.698E-04	.0074
210	524.4	.655	.087	1.125E-04	.0049	1.352E-04	.0059
211	524.5	.723	.087	1.129E-04	.0049	1.357E-04	.0059
212	524.9	.695	.093	1.207E-04	.0053	1.450E-04	.0063
213	524.2	.888	.117	1.514E-04	.0066	1.820E-04	.0079
214	524.1	1.380	.193	2.486E-04	.0108	2.987E-04	.0130
215	524.3	.931	.132	1.700E-04	.0074	2.043E-04	.0089
216	527.5	3.327	.471	6.110E-04	.0266	7.348E-04	.0320
217	527.2	2.384	.338	4.389E-04	.0191	5.277E-04	.0230
218	522.9	1.010	.139	1.786E-04	.0078	2.146E-04	.0094
219	524.8	1.416	.198	2.563E-04	.0112	3.080E-04	.0134
220	524.2	1.421	.195	2.512E-04	.0109	3.018E-04	.0132

GROUP 125 CENTERLINE TIME 2.95

CH	TC	FIT LENGTH	DIAMT	UNCERTAINTY	CH	TC	FIT LENGTH	DIAMT	UNCERTAINTY
1	107	.80	3.013	.0090	50	173	2.00	.913	.0196
2	108	.60	5.350	.0051	51	174	2.00	.698	.0240
3	109	.60	4.628	.0123	52	175	2.00	.626	.0215
4	110	.60	4.512	.0150	53	176	2.00	.583	.0149
5	111	.60	4.653	.0155	54	177	.40	9.587	.0152
6	112	.60	4.750	.0328	55	178	.40	10.933	.0132
7	113	.60	4.661	.0661	56	179	.30	17.579	.0243
8	114	.60	4.667	.0101	57	180	.60	6.389	.0100
9	115	.60	4.330	.0154	58	181	.80	2.879	.0128
10	116	.60	4.477	.0133	59	182	.60	6.448	.0096
11	117	.60	4.883	.0103	60	183	2.00	.625	.0110
12	118	.80	3.642	.0118	61	184	2.00	.712	.0236
13	119	.60	4.567	.0104	62	185	.60	4.217	.0073
14	120	.60	4.583	.0167	63	186	.80	2.565	.0109
15	121	.60	4.149	.0169	64	187	.60	5.970	.0117
16	122	.60	4.348	.0103	65	188	.40	10.584	.0108
17	124	.80	2.665	.0326	66	189	.80	2.143	.0237
18	125	.80	2.561	.0123	67	190	1.20	1.554	.0123
19	126	.80	2.263	.0161	68	191	.80	4.244	.0571
20	127	.80	2.633	.0138	69	192	2.00	.436	.0393
21	128	.80	2.816	.0111	70	193	.60	3.943	.0172
22	129	.80	3.019	.0132	71	194	2.00	.357	.0398
23	130	.80	2.986	.0162	72	195	2.00	.787	.0155
24	131	.80	2.911	.0190	73	196	1.20	1.237	.0191
25	132	.80	3.297	.0160	74	197	2.00	.557	.0188
26	133	.80	2.984	.0118	75	198	2.00	.512	.0175
27	134	.80	3.785	.0108	76	199	2.00	.023	.9551
28	135	.60	5.089	.0096	77	200	1.20	1.598	.0136
29	136	.60	5.395	.0082	78	201	.80	3.581	.0091
30	137	.60	5.204	.0065	79	202	1.20	1.885	.0482
31	138	.60	5.621	.0049	80	203	2.00	.731	.0095
32	139	.60	5.210	.0116	81	204	2.00	1.073	.0120
33	140	.60	5.429	.0086	82	205	.60	4.161	.0069
34	141	.50	5.004	.0081	83	206	2.00	.078	.2614
35	142	.50	4.065	.0054	84	207	.80	3.966	.0127
36	143	.60	6.136	.0084	85	208	2.00	.684	.0166
37	144	.50	6.602	.0063	86	209	2.00	.800	.0133
38	161	1.20	1.629	.0112	87	210	2.00	.655	.0331
39	162	1.20	1.961	.0143	88	211	2.00	.723	.0124
40	163	1.20	1.341	.0203	89	212	2.00	.695	.0160
41	164	1.20	1.150	.0139	90	213	2.00	.888	.0499
42	165	2.00	.846	.0134	91	214	1.20	1.380	.0269
43	166	2.00	.828	.0272	92	215	2.00	.931	.0294
44	167	1.20	1.602	.0118	93	216	.80	3.327	.0095
45	168	1.20	1.706	.0102	94	217	.80	2.384	.0174
46	169	1.20	1.200	.0293	95	218	1.20	1.010	.0349
47	170	1.20	1.266	.0383	96	219	1.20	1.416	.0270
48	171	1.20	1.160	.0145	97	220	1.20	1.421	.0129
49	172	2.00	.951	.0104	98	0	-0	0	0
126		.050							

BIT ON LOOP 61

DATE 5/12/75

AEDC(ARO,INC.) ARNOLD AFS, TENNESSEE
VON KARMAN GAS DYNAMICS FACILITY
50 INCH HYPERSONIC TUNNEL R
V41R-B7A

GROUP	TEST CONDITION	MODEL	MACH NO	PO,PSIA	TO,DEG R	ALPHA-MODEL	ALPHA-SECTOR	ALPHA-PREBEND	ROLL MODEL	YAW
126	54	140 B	7.98	430.1	1300	40.04	-10.04	30.00	179.94	.0

T-INF (DEG R)	P-INF (PSIA)	Q-INF (PSIA)	V-INF (FT/SEC)	RHO-INF (SLUGS/FT3)	MU-INF (LB-SEC/FT2)	RE/FT (FT-1)	HREF-FR (R= .0400FT)	STFR (R= .0400FT)	SWITCH POSITION
94.7	.045	1.996	3804	3.969E-05	7.621E-08	1.981E 06	2.295E-02	1.914E-02	2

PC NO	TW	DT*DT	RDOT	H(TO)	H(TO)/HREF	H(.9TO)	H(.9TO)/HREF	X/L	Z,FULL SCALE(IN)
								ACCESS HATCH WINDOW	
107	530.0	2.852	.479	5.315E-04	.0232	6.395E-04	.0279	.2050	396.2000
								FUSELAGE VENT PANEL NO. 3 AND 1	
108	532.2	5.174	.548	7.128E-04	.0311	8.581E-04	.0374	.1244	377.5000
109	531.0	4.449	.550	7.143E-04	.0311	8.596E-04	.0375	.1302	377.5000
110	530.5	4.303	.545	7.081E-04	.0309	8.521E-04	.0371	.1360	377.5000
111	531.2	4.504	.542	7.046E-04	.0307	8.480E-04	.0369	.1418	377.5000
112	531.3	4.456	.529	6.877E-04	.0300	8.277E-04	.0361	.1476	377.5000
113	531.5	4.967	.569	7.411E-04	.0323	8.921E-04	.0389	.1215	273.5000
114	531.4	4.611	.553	7.194E-04	.0313	8.658E-04	.0377	.1273	273.5000
115	531.6	3.916	.486	6.317E-04	.0275	7.604E-04	.0331	.1331	273.5000
116	531.0	4.117	.515	6.562E-04	.0286	7.896E-04	.0344	.1389	273.5000
117	531.5	4.273	.491	6.396E-04	.0279	7.699E-04	.0335	.1447	273.5000
118	531.1	3.513	.455	6.309E-04	.0275	7.592E-04	.0331	.1409	366.0000
119	531.3	3.843	.497	6.470E-04	.0282	7.788E-04	.0339	.1442	366.0000
120	531.5	4.306	.536	6.998E-04	.0305	8.422E-04	.0367	.1215	359.5000
121	531.5	3.477	.426	5.547E-04	.0242	6.677E-04	.0291	.1303	359.5000
122	531.6	3.509	.437	5.691E-04	.0248	6.837E-04	.0298	.1337	359.5000
								LOWER RCS NOZZLES	
124	528.6	1.327	.118	1.532E-04	.0067	1.842E-04	.0080	.0950	400.0000
125	528.4	1.489	.162	2.096E-04	.0091	2.520E-04	.0110	.0988	400.0000
126	528.2	1.324	.141	2.344E-04	.0102	2.819E-04	.0123	.1027	400.0000
127	528.5	1.497	.201	2.608E-04	.0114	3.137E-04	.0137	.0911	395.0000
128	528.9	1.722	.209	2.705E-04	.0118	3.254E-04	.0142	.0950	395.0000
129	529.1	1.855	.217	2.818E-04	.0123	3.390E-04	.0148	.0988	395.0000
130	529.9	1.658	.198	2.570E-04	.0112	3.091E-04	.0135	.0810	390.0000
131	529.2	1.759	.259	3.363E-04	.0147	4.046E-04	.0176	.0857	390.0000
132	529.2	2.307	.268	3.477E-04	.0151	4.182E-04	.0182	.0963	390.0000
133	529.1	2.144	.259	3.369E-04	.0147	4.052E-04	.0177	.0857	383.8000
134	529.6	2.931	.342	5.084E-04	.0222	6.116E-04	.0266	.0872	377.3000
135	530.5	4.103	.443	6.400E-04	.0279	7.701E-04	.0336	.0903	374.5500
136	530.5	4.571	.537	6.594E-04	.0287	7.935E-04	.0346	.0960	374.5500
137	530.8	4.303	.562	7.306E-04	.0318	8.791E-04	.0383	.0872	370.5500
138	531.3	4.976	.573	7.446E-04	.0324	8.961E-04	.0390	.0928	370.5500
139	532.1	4.380	.559	7.275E-04	.0317	8.758E-04	.0382	.0816	366.0500
140	532.3	5.190	.660	8.595E-04	.0374	1.035E-03	.0451	.0934	362.4000
141	531.4	4.809	.635	8.258E-04	.0360	9.939E-04	.0433	.0973	362.4000
142	532.0	3.656	.398	5.180E-04	.0226	6.235E-04	.0272	.0833	355.2000
143	533.4	5.749	.577	7.530E-04	.0328	9.067E-04	.0395	.0919	355.2000
144	533.8	6.414	.845	1.102E-03	.0480	1.327E-03	.0578	.0949	349.0000

DATE 5/12/75

AEDC(ARO,INC.) ARNOLD AFS, TENNESSEE
VON KARMAN GAS DYNAMICS FACILITY
50 INCH HYPERSONIC TUNNEL B
V41H-B7A

GROUP	TEST CONDITION	MODEL	MACH NO	PO,PSIA	TO,DEG R	ALPHA-MODEL	ALPHA-SECTOR	ALPHA-PREBEND	ROLL MODEL	YAW
126	54	140 B	7.98	430.1	1300	40.04	-10.04	30.00	179.94	.0

T-INF (DEG R)	P-INF (PSIA)	Q-INF (PSIA)	V-INF (FT/SEC)	RHO-INF (SLUGS/FT3)	MU-INF (LB-SEC/FT2)	RE/FT (FT-1)	HREF-FR (R= .0400FT)	STFR (R= .0400FT)	SWITCH POSITION
94.7	.045	1.596	3804	3.969E-05	7.621E-08	1.981E 06	2.295E-02	1.914E-02	2

IC NO	TW	DTWDT	QDOT	H(TO)	H(TO)/HREF	H(.9TO)	H(.9TO)/HREF	UPPER RCS NOZZLES X/L	2Y/B
161	526.6	1.345	.159	2.052E-04	.0089	2.466E-04	.0107	.0619	-.0160
162	529.4	1.668	.158	2.044E-04	.0089	2.459E-04	.0107	.0709	-.0160
163	530.3	1.528	.187	2.432E-04	.0106	2.926E-04	.0128	.0807	-.0160
164	530.8	2.194	.286	3.713E-04	.0162	4.468E-04	.0195	.0943	-.0160
165	531.3	2.064	.260	3.376E-04	.0147	4.063E-04	.0177	.0978	-.0160
166	531.3	2.061	.264	3.431E-04	.0149	4.129E-04	.0180	.1013	-.0160
167	527.4	.734	.099	1.281E-04	.0056	1.540E-04	.0067	.0619	-.0320
168	528.9	1.092	.114	1.481E-04	.0065	1.782E-04	.0078	.0709	-.0320
169	529.5	.939	.114	1.477E-04	.0064	1.776E-04	.0077	.0807	-.0320
170	530.3	1.737	.217	2.816E-04	.0123	3.388E-04	.0148	.0943	-.0320
171	529.7	1.434	.173	2.234E-04	.0098	2.694E-04	.0117	.0978	-.0320
172	529.4	1.334	.174	2.251E-04	.0098	2.708E-04	.0118	.1013	-.0320
173	527.7	.296	.039	5.093E-05	.0022	6.123E-05	.0027	.0807	-.0480
174	527.7	.390	.044	5.735E-05	.0025	6.896E-05	.0030	.0943	-.0480
175	527.8	.500	.071	9.252E-05	.0040	1.113E-04	.0048	.0978	-.0480
176	528.1	.540	.073	9.497E-05	.0041	1.142E-04	.0050	.1013	-.0480
								CANOPY	
177	539.2	11.229	1.549	2.035E-03	.0887	2.454E-03	.1069		
178	537.3	8.612	1.695	2.221E-03	.0968	2.678E-03	.1167		
179	535.3	4.934	1.028	1.344E-03	.0585	1.619E-03	.0705		
180	537.9	8.091	1.057	1.387E-03	.0604	1.672E-03	.0728		
181	535.7	5.913	.813	1.051E-03	.0458	1.266E-03	.0552		
182	531.4	2.150	.316	3.978E-04	.0173	4.787E-04	.0209		
183	530.0	.659	.063	1.072E-04	.0047	1.289E-04	.0056		
184	530.0	.704	.096	1.247E-04	.0054	1.500E-04	.0065		
185	534.6	6.475	.778	1.016E-03	.0443	1.224E-03	.0533		
186	534.3	5.621	.705	9.210E-04	.0401	1.109E-03	.0483		
187	532.0	2.409	.320	4.169E-04	.0182	5.018E-04	.0219		
188	531.6	2.036	.487	6.336E-04	.0276	7.626E-04	.0332		
189	532.2	4.187	.596	7.760E-04	.0338	9.341E-04	.0407		
190	532.2	4.435	.637	8.296E-04	.0361	9.987E-04	.0435		
191	530.6	2.791	.426	5.529E-04	.0241	6.653E-04	.0290		

DATE 5/12/75

AEDC(ARO,INC.) ARNOLD AFS, TENNESSEE
VON KARMAN GAS DYNAMICS FACILITY
50 INCH HYPERSONIC TUNNEL B
V41R-B7A

GROUP	TEST CONDITION	MODEL	MACH NO	PO,PSIA	TO,DEG R	ALPHA-MODEL	ALPHA-SECTOR	ALPHA-PREBEND	ROLL MODEL	YAW
126	54	140 B	7.98	430.1	1300	40.04	-10.04	30.00	179.94	.0

T-INF (DEG R)	P-INF (PSIA)	Q-INF (PSIA)	V-INF (FT/SEC)	RHO-INF (SLUGS/FT3)	MU-INF (LB-SEC/FT2)	RE/FT (FT-1)	HREF-FR (R= .0400FT)	STFR (R= .0400FT)	SWITCH POSITION
94.7	.045	1.996	3864	3.969E-05	7.621E-08	1.981E 06	2.295E-02	1.914E-02	2

IC	NO	TW	DTADT	QDOT	H(TO)	H(TO)/HREF	H(.9TO)	H(.9TO)/HREF
								CANOPY
192	528.4	.164	.023	2.988E-05	.0013	3.594E-05	.0016	
193	529.9	1.135	.218	2.831E-04	.0123	3.406E-04	.0148	
194	529.9	1.002	.130	1.672E-04	.0073	2.023E-04	.0088	
195	529.4	1.658	.214	2.645E-04	.0115	3.182E-04	.0139	
196	527.0	1.134	.148	1.925E-04	.0084	2.315E-04	.0101	
197	527.3	.425	.042	5.428E-05	.0024	6.529E-05	.0028	
198	527.4	.447	.051	6.569E-05	.0029	7.922E-05	.0035	
199	528.4	.618	.083	1.070E-04	.0047	1.287E-04	.0056	
200	529.5	1.962	.279	3.618E-04	.0158	4.353E-04	.0190	
201	529.5	2.050	.289	3.746E-04	.0163	4.506E-04	.0196	
202	529.3	1.180	.149	1.931E-04	.0084	2.323E-04	.0101	
203	527.4	.628	.078	1.005E-04	.0044	1.209E-04	.0053	
204	528.4	1.056	.164	2.121E-04	.0092	2.550E-04	.0111	
205	530.0	2.845	.443	5.746E-04	.0250	6.913E-04	.0301	
206	527.4	.773	.122	1.322E-04	.0058	1.589E-04	.0069	
207	531.0	3.477	.465	6.046E-04	.0263	7.276E-04	.0317	
208	527.4	.598	.080	1.031E-04	.0045	1.239E-04	.0054	
209	527.4	.992	.136	1.761E-04	.0077	2.118E-04	.0092	
210	527.4	.688	.092	1.185E-04	.0052	1.425E-04	.0062	
211	527.3	-.115	-.014	-1.803E-05	-.0008	-2.168E-05	-.0009	
212	527.4	.329	.044	5.728E-05	.0025	6.886E-05	.0030	
213	527.3	.754	.100	1.289E-04	.0056	1.550E-04	.0068	
214	528.3	1.607	.225	2.911E-04	.0127	3.500E-04	.0152	
215	527.8	.966	.137	1.770E-04	.0077	2.128E-04	.0093	
216	530.0	2.896	.410	5.318E-04	.0232	6.398E-04	.0279	
217	530.0	2.816	.400	5.199E-04	.0227	6.255E-04	.0273	
218	526.9	.724	.100	1.288E-04	.0056	1.548E-04	.0067	
219	527.3	1.231	.173	2.232E-04	.0097	2.684E-04	.0117	
220	527.7	1.429	.196	2.536E-04	.0111	3.050E-04	.0133	

GROUP 126 CENTERLINE TIME 3.00

CH	TC	FIT LENGTH	DTDWT	UNCERTAINTY	CH	TC	FIT LENGTH	DTDWT	UNCERTAINTY
1	107	.80	2.862	.0086	50	173	2.00	.296	.0361
2	108	.60	5.178	.0102	51	174	2.00	.390	.0323
3	109	.60	4.449	.0076	52	175	2.00	.500	.0253
4	110	.60	4.393	.0109	53	176	2.00	.540	.0141
5	111	.60	4.500	.0186	54	177	.40	11.229	.0103
6	112	.60	4.458	.0092	55	178	.40	8.610	.0090
7	113	.60	4.967	.0359	56	179	.60	4.904	.0363
8	114	.60	4.611	.0069	57	180	.60	8.090	.0100
9	115	.60	3.916	.0127	58	181	.60	5.913	.0066
10	116	.60	4.117	.0115	59	182	.80	2.150	.0210
11	117	.60	4.270	.0138	60	183	2.00	.659	.0208
12	118	.80	3.510	.0165	61	184	2.00	.704	.0204
13	119	.80	3.843	.0090	62	185	.60	6.475	.0082
14	120	.60	4.356	.0116	63	186	.60	5.621	.0076
15	121	.80	3.477	.0169	64	187	.80	2.409	.0192
16	122	.80	3.509	.0150	65	188	.80	2.096	.0163
17	124	1.20	1.327	.0303	66	189	.60	4.187	.0161
18	125	1.20	1.489	.0111	67	190	.60	4.435	.0079
19	126	1.20	1.324	.0172	68	191	.80	2.791	.0629
20	127	1.20	1.437	.0155	69	192	2.00	.164	.1269
21	128	1.20	1.722	.0097	70	193	1.20	1.135	.0211
22	129	1.20	1.855	.0096	71	194	2.00	1.008	.0215
23	130	1.20	1.658	.0229	72	195	1.20	1.658	.0155
24	131	1.20	1.759	.0168	73	196	1.20	1.134	.0152
25	132	.80	2.307	.0245	74	197	2.00	.425	.0221
26	133	.80	2.144	.0225	75	198	2.00	.440	.0245
27	134	.80	2.931	.0145	76	199	2.00	.616	.0231
28	135	.60	4.168	.0131	77	200	1.20	1.962	.0090
29	136	.60	4.571	.0104	78	201	.80	2.050	.0184
30	137	.60	4.303	.0082	79	202	1.20	1.160	.0862
31	138	.60	4.976	.0069	80	203	2.00	.628	.0115
32	139	.60	4.380	.0137	81	204	2.00	1.056	.0090
33	140	.60	5.190	.0114	82	205	.80	2.845	.0120
34	141	.60	4.809	.0100	83	206	2.00	.773	.0155
35	142	.80	3.656	.0107	84	207	.80	3.477	.0105
36	143	.60	5.749	.0074	85	208	2.00	.595	.0147
37	144	.60	6.414	.0070	86	209	1.20	.992	.0149
38	161	1.20	1.346	.0156	87	210	2.00	.688	.0410
39	162	1.20	1.668	.0112	88	211	2.00	-.115	-.1642
40	163	1.20	1.528	.0167	89	212	2.00	.329	.0527
41	164	.80	2.194	.0118	90	213	2.00	.754	.0506
42	165	.80	2.064	.0166	91	214	1.20	1.607	.0224
43	166	.80	2.061	.0190	92	215	2.00	.966	.0327
44	167	2.00	.734	.0135	93	216	.80	2.890	.0099
45	168	1.20	1.092	.0135	94	217	.80	2.816	.0149
46	169	2.00	.939	.0100	95	218	2.00	.724	.0187
47	170	1.20	1.737	.0227	96	219	1.20	1.231	.0236
48	171	1.20	1.434	.0139	97	220	1.20	1.429	.0144
49	172	1.20	1.334	.0167	98	0	-0	0	0

DATE 5/12/75

AEDC(ARO,INC.) ARNOLD AFS, TENNESSEE
VON KARMAN GAS DYNAMICS FACILITY
50 INCH HYPERSONIC TUNNEL B
V41B-87A

GROUP	TEST CONDITION	MODEL	MACH NO	PO,PSIA	TO,DEG R	ALPHA-MODEL	ALPHA-SECTOR	ALPHA-PREBEND	ROLL MODEL	YAW
127	55	140 B	7.99	674.5	1338	20.03	9.97	30.00	179.94	-.0

T-INF (DEG R)	P-INF (PSIA)	Q-INF (PSIA)	V-INF (FT/SEC)	RHO-INF (SLUGS/FT3)	MU-INF (LB-SEC/FT2)	RE/FT (FT-1)	HREF-FR (R= .0400FT)	STFR (R= .0400FT)	SWITCH POSITION
97.2	.070	3.112	3860	6.012E-05	7.825E-08	2.966E 06	2.880E-02	1.560E-02	2

TC NO	TW	DT*DT	GDOT	H(TO)	H(TO)/HREF	H(.9TO)	H(.9TO)/HREF	X/L	Z*FULL SCALE(IN)
								ACCESS HATCH WINDOW	
107	531.7	3.602	.516	6.396E-04	.0222	7.668E-04	.0266	.2050	396.2000
								FUSELAGE VENT PANEL NO. 3 AND 1	
								X/L	Z,FULL SCALE(IN)
108	535.4	7.218	.764	9.524E-04	.0331	1.143E-03	.0397	.1244	377.5000
109	533.6	5.855	.724	9.002E-04	.0313	1.080E-03	.0375	.1302	377.5000
110	533.1	5.483	.695	8.635E-04	.0300	1.036E-03	.0360	.1360	377.5000
111	533.1	5.080	.612	7.606E-04	.0264	9.122E-04	.0317	.1418	377.5000
112	533.4	5.310	.631	7.836E-04	.0272	9.399E-04	.0326	.1476	377.5000
113	534.8	6.162	.707	8.807E-04	.0306	1.057E-03	.0367	.1215	273.5000
114	533.9	5.844	.702	8.730E-04	.0303	1.047E-03	.0364	.1273	273.5000
115	533.8	5.116	.635	7.896E-04	.0274	9.472E-04	.0329	.1331	273.5000
116	533.2	4.992	.613	7.613E-04	.0264	9.131E-04	.0317	.1389	273.5000
117	534.4	5.438	.627	7.798E-04	.0271	9.356E-04	.0325	.1447	273.5000
118	533.3	4.467	.618	7.682E-04	.0267	9.214E-04	.0320	.1409	366.0000
119	534.2	5.342	.692	8.607E-04	.0299	1.033E-03	.0359	.1442	366.0000
120	534.5	5.406	.676	8.413E-04	.0292	1.009E-03	.0350	.1215	359.5000
121	534.1	4.851	.596	7.411E-04	.0257	8.890E-04	.0309	.1303	359.5000
122	534.6	5.103	.636	7.915E-04	.0275	9.496E-04	.0330	.1337	359.5000
								LOWER RCS NOZZLES	
								X/L	Z,FULL SCALE(IN)
124	534.0	5.733	.512	6.368E-04	.0221	7.639E-04	.0265	.0950	400.0000
125	532.7	5.469	.596	7.394E-04	.0257	8.867E-04	.0308	.0988	400.0000
126	532.4	4.916	.674	8.359E-04	.0290	1.002E-03	.0348	.1027	400.0000
127	533.2	5.125	.691	8.584E-04	.0298	1.030E-03	.0357	.0911	395.0000
128	533.0	5.783	.702	8.721E-04	.0303	1.046E-03	.0363	.0950	395.0000
129	533.3	5.958	.700	8.691E-04	.0302	1.042E-03	.0362	.0988	395.0000
130	534.3	5.878	.704	8.753E-04	.0304	1.050E-03	.0365	.0810	390.0000
131	533.2	5.317	.786	9.761E-04	.0339	1.171E-03	.0406	.0857	390.0000
132	533.7	6.219	.725	9.010E-04	.0313	1.081E-03	.0375	.0963	390.0000
133	533.3	5.170	.628	7.801E-04	.0271	9.357E-04	.0325	.0857	383.8000
134	532.5	5.770	.772	9.588E-04	.0333	1.150E-03	.0399	.0872	377.3000
135	534.9	7.705	.926	1.153E-03	.0400	1.383E-03	.0480	.0903	374.5500
136	534.6	8.520	.948	1.180E-03	.0410	1.415E-03	.0491	.0960	374.5500
137	534.6	7.557	.989	1.231E-03	.0427	1.477E-03	.0513	.0872	370.5500
138	534.9	8.666	.999	1.244E-03	.0432	1.492E-03	.0518	.0928	370.5500
139	535.7	7.340	.938	1.169E-03	.0406	1.403E-03	.0487	.0816	366.0500
140	535.5	8.159	1.039	1.295E-03	.0450	1.554E-03	.0540	.0934	362.4000
141	534.8	7.205	.953	1.186E-03	.0412	1.423E-03	.0494	.0973	362.4000
142	534.3	5.901	.643	8.000E-04	.0278	9.598E-04	.0333	.0833	355.2000
143	535.9	8.521	.857	1.068E-03	.0371	1.282E-03	.0445	.0919	355.2000
144	536.7	9.402	1.240	1.548E-03	.0537	1.858E-03	.0645	.0949	349.0000

DATE 5/12/75

AEDC(ARO,INC.) ARNOLD AFS, TENNESSEE
VON KARMAN GAS DYNAMICS FACILITY
50 INCH HYPERSONIC TUNNEL B
V418-87A

GROUP	TEST CONDITION	MODEL	MACH NO	PO,PSIA	TO,DEG R	ALPHA-MODEL	ALPHA-SECTOR	ALPHA-PREBEND	ROLL MODEL	YAW
127	55	140 B	7.99	674.5	1338	20.03	9.97	30.00	179.94	-.0

T-INF (DEG R)	P-INF (PSIA)	Q-INF (PSIA)	V-INF (FT/SEC)	RHO-INF (SLUGS/FT3)	MU-INF (LB-SEC/FT2)	RE/FT (FT-1)	HREF-FR (R= .0400FT)	STFR (R= .0400FT)	SWITCH POSITION
97.2	.070	3.112	3860	6.012E-05	7.825E-08	2.966E 06	2.880E-02	1.560E-02	2

TC NO	TW	DTWDT	QDOT	H(TO)	H(TO)/HREF	H(.9TO)	H(.9TO)/HREF
161	538.2	12.881	1.528	1.910E-03	.0663	2.293E-03	.0796
162	541.0	14.413	1.370	1.720E-03	.0597	2.067E-03	.0718
163	538.3	10.932	1.346	1.662E-03	.0584	2.020E-03	.0701
164	536.7	10.623	1.387	1.731E-03	.0601	2.078E-03	.0721
165	536.4	7.758	.978	1.220E-03	.0424	1.464E-03	.0508
166	535.9	6.695	.859	1.071E-03	.0372	1.285E-03	.0446
167	539.2	14.682	1.993	2.494E-03	.0866	2.996E-03	.1040
168	540.9	15.236	1.605	2.013E-03	.0699	2.419E-03	.0840
169	535.7	10.266	1.248	1.556E-03	.0540	1.867E-03	.0648
170	539.6	13.169	1.651	2.068E-03	.0718	2.485E-03	.0863
171	537.8	11.223	1.356	1.694E-03	.0588	2.034E-03	.0706
172	535.6	8.700	1.135	1.415E-03	.0491	1.698E-03	.0590
173	536.2	10.026	1.340	1.671E-03	.0580	2.006E-03	.0697
174	534.3	8.483	.966	1.202E-03	.0417	1.442E-03	.0501
175	534.9	7.783	1.116	1.390E-03	.0482	1.667E-03	.0579
176	534.6	7.409	1.009	1.256E-03	.0436	1.507E-03	.0523
177	548.1	25.970	3.593	4.554E-03	.1581	5.462E-03	.1903
178	551.6	29.833	5.915	7.521E-03	.2611	9.063E-03	.3146
179	556.2	31.569	6.667	8.552E-03	.2969	1.032E-02	.3582
180	552.3	26.712	3.516	4.474E-03	.1554	5.393E-03	.1872
181	552.3	28.464	3.900	4.963E-03	.1723	5.902E-03	.2077
182	550.4	31.051	4.460	5.662E-03	.1966	6.821E-03	.2368
183	533.6	4.911	.553	6.878E-04	.0239	8.250E-04	.0286
184	533.7	[illegible]	.687	8.536E-04	.0296	1.024E-03	.0355
185	547.4	[illegible]	2.947	3.730E-03	.1295	4.490E-03	.1559
186	553.1	28.881	3.660	4.602E-03	.1619	5.620E-03	.1951
187	555.5	35.016	4.711	6.019E-03	.2090	7.261E-03	.2521
188	546.6	21.774	5.099	6.441E-03	.2236	7.752E-03	.2691
189	543.6	16.456	2.356	2.965E-03	.1030	3.566E-03	.1238
190	549.8	25.579	3.708	4.703E-03	.1633	5.665E-03	.1967
191	551.9	31.080	4.790	6.092E-03	.2115	7.342E-03	.2549

UPPER RCS NOZZLES

X/L	2Y/B
.0619	-.0160
.0709	-.0160
.0807	-.0160
.0943	-.0160
.0978	-.0160
.1013	-.0160
.0619	-.0320
.0709	-.0320
.0807	-.0320
.0943	-.0320
.0978	-.0320
.1013	-.0320
.0807	-.0480
.0943	-.0480
.0978	-.0480
.1013	-.0480

CANOPY

DATE 5/12/75

AEDC(ARO,INC.) ARNOLD AFS, TENNESSEE
VON KARMAN GAS DYNAMICS FACILITY
50 INCH HYPERSONIC TUNNEL B
V41B-87A

GROUP	TEST CONDITION	MODEL	MACH NO	PO,PSIA	TO,DEG R	ALPHA-MODEL	ALPHA-SECTOR	ALPHA-PREBEND	ROLL MODEL	YAW
127	55	140 B	7.99	674.5	1338	20.03	9.97	30.00	179.94	-.0

T-INF (DEG R)	P-INF (PSIA)	Q-INF (PSIA)	V-INF (FT/SEC)	RHO-INF (SLUGS/FT3)	MU-INF (LB-SEC/FT2)	RE/FT (FT-1)	HREF-FR (R= .0400FT)	STFR (R= .0400FT)	SWITCH POSITION
97.2	.070	3.112	3860	6.012E-05	7.825E-08	2.966E 06	2.880E-02	1.560E-02	2

TC NO	TW	DTWDT	QDOT	H(TO)	H(TO)/HREF	H(.9TO)	H(.9TO)/HREF
						CANOPY	
192	535.3	5.184	.732	9.118E-04	.0317	1.094E-03	.0380
193	541.6	15.071	2.912	3.656E-03	.1269	4.394E-03	.1526
194	538.5	9.879	1.278	1.598E-03	.0555	1.919E-03	.0666
195	551.3	24.296	3.021	3.840E-03	.1333	4.627E-03	.1606
196	552.9	28.231	3.751	4.783E-03	.1660	5.767E-03	.2002
197	529.4	.864	.045	1.057E-04	.0037	1.267E-04	.0044
198	530.1	1.124	.130	1.613E-04	.0056	1.933E-04	.0067
199	531.9	3.081	.414	5.132E-04	.0178	6.153E-04	.0214
200	538.8	10.231	1.461	1.828E-03	.0635	2.195E-03	.0762
201	552.5	30.104	4.288	5.458E-03	.1895	6.579E-03	.2284
202	543.0	16.925	2.149	2.703E-03	.0938	3.249E-03	.1128
203	532.7	3.172	.394	4.886E-04	.0170	5.859E-04	.0203
204	537.7	7.379	1.149	1.435E-03	.0498	1.724E-03	.0598
205	550.3	29.282	4.602	5.841E-03	.2028	7.036E-03	.2443
206	530.3	2.014	.267	3.300E-04	.0115	3.955E-04	.0137
207	541.0	13.724	1.845	2.315E-03	.0804	2.782E-03	.0966
208	531.3	2.898	.389	4.821E-04	.0167	5.780E-04	.0201
209	533.0	3.707	.510	6.330E-04	.0220	7.591E-04	.0264
210	535.7	7.922	1.059	1.319E-03	.0458	1.584E-03	.0550
211	532.6	3.752	.455	5.653E-04	.0196	6.779E-04	.0235
212	531.9	4.433	.597	7.408E-04	.0257	8.882E-04	.0308
213	533.7	5.087	.675	8.366E-04	.0291	1.006E-03	.0349
214	534.9	6.577	.923	1.149E-03	.0399	1.379E-03	.0479
215	537.7	10.514	1.496	1.869E-03	.0649	2.244E-03	.0779
216	536.9	9.252	1.316	1.642E-03	.0570	1.972E-03	.0685
217	537.2	9.280	1.324	1.653E-03	.0574	1.985E-03	.0689
218	534.5	6.762	.933	1.161E-03	.0403	1.393E-03	.0484
219	537.0	9.980	1.406	1.755E-03	.0609	2.107E-03	.0732
220	537.6	12.346	1.701	2.125E-03	.0738	2.552E-03	.0886

GROUP 127 CENTERLINE TIME 2.75

CH	TC	FIT LENGTH	DTDWT	UNCERTAINTY	CH	TC	FIT LENGTH	DTDWT	UNCERTAINTY
1	107	.60	3.602	.0085	50	173	.40	10.026	.0080
2	108	.60	7.218	.0059	51	174	.40	8.483	.0115
3	109	.60	5.855	.0056	52	175	.60	7.783	.0125
4	110	.60	5.483	.0077	53	176	.60	7.408	.0081
5	111	.60	5.060	.0267	54	177	.30	25.970	.0051
6	112	.60	5.310	.0093	55	178	.30	29.833	.0044
7	113	.60	6.162	.0337	56	179	.30	31.569	.0085
8	114	.60	5.844	.0040	57	180	.30	26.712	.0036
9	115	.60	5.116	.0125	58	181	.30	28.464	.0032
10	116	.60	4.992	.0060	59	182	.30	31.051	.0086
11	117	.60	5.438	.0142	60	183	.60	4.411	.0068
12	118	.60	4.467	.0123	61	184	.60	5.025	.0202
13	119	.60	5.342	.0086	62	185	.30	24.363	.0049
14	120	.60	5.436	.0115	63	186	.30	28.881	.0043
15	121	.60	4.851	.0205	64	187	.20	35.016	.0077
16	122	.60	5.103	.0095	65	188	.30	21.774	.0072
17	124	.60	5.733	.0221	66	189	.30	16.456	.0131
18	125	.60	5.469	.0106	67	190	.30	25.579	.0042
19	126	.60	4.916	.0133	68	191	.30	31.080	.0226
20	127	.60	5.125	.0060	69	192	.60	5.184	.0278
21	128	.60	5.783	.0077	70	193	.40	15.071	.0062
22	129	.60	5.958	.0058	71	194	.40	9.879	.0152
23	130	.60	5.878	.0144	72	195	.30	24.296	.0077
24	131	.60	5.317	.0127	73	196	.30	28.281	.0041
25	132	.60	6.219	.0108	74	197	2.00	.864	.0125
26	133	.60	5.170	.0127	75	198	1.20	1.124	.0249
27	134	.60	5.770	.0092	76	199	.80	3.081	.0106
28	135	.60	7.705	.0053	77	200	.40	10.231	.0074
29	136	.40	8.520	.0081	78	201	.30	30.104	.0047
30	137	.60	7.557	.0057	79	202	.30	16.925	.0488
31	138	.40	8.666	.0047	80	203	.80	3.172	.0122
32	139	.60	7.340	.0106	81	204	.60	7.379	.0093
33	140	.40	8.159	.0125	82	205	.30	29.282	.0016
34	141	.60	7.205	.0055	83	206	.80	2.014	.0312
35	142	.60	5.901	.0049	84	207	.40	13.724	.0095
36	143	.40	8.521	.0094	85	208	.80	2.898	.0113
37	144	.40	9.402	.0068	86	209	.80	3.707	.0091
38	161	.40	12.881	.0049	87	210	.40	7.922	.0359
39	162	.40	14.413	.0056	88	211	.80	3.752	.0122
40	163	.40	10.932	.0147	89	212	.60	4.433	.0224
41	164	.40	10.623	.0081	90	213	.60	5.087	.0645
42	165	.60	7.758	.0046	91	214	.60	6.577	.0102
43	166	.60	6.695	.0092	92	215	.40	10.514	.0192
44	167	.40	14.688	.0063	93	216	.40	9.252	.0116
45	168	.40	15.236	.0062	94	217	.40	9.280	.0136
46	169	.40	10.266	.0066	95	218	.60	6.762	.0127
47	170	.40	13.169	.0209	96	219	.40	9.980	.0093
48	171	.40	11.223	.0085	97	220	.40	12.346	.0064
49	172	.40	8.700	.0132	98	0216.0*		0	0
	125	.050							

ALL ON LOOP 58

DATE 5/12/75

AEDC(APO,INC.) ARNOLD AFS, TENNESSEE
VON KARMAN GAS DYNAMICS FACILITY
50 INCH HYPERSONIC TUNNEL B
V41B-87A

GROUP	TEST CONDITION	FOUL	MACH NO	PO,PSIA	TO,DEG R	ALPHA-MODEL	ALPHA-SECTOR	ALPHA-PREBEND	ROLL MODEL	YAW
128	56	140 B	7.99	674.5	1338	25.00	5.00	30.00	179.94	-.0

T-INF (DEG R)	P-INF (PSIA)	Q-INF (PSIA)	V-INF (FT/SEC)	RHO-INF (SLUGS/FT3)	MU-INF (LB-SEC/FT2)	RE/FT (FT-1)	HREF-FR (R= .0400FT)	STFR (R= .0400FT)	SWITCH POSITION
97.2	.070	3.112	3850	6.012E-05	7.825E-08	2.966E 06	2.880E-02	1.560E-02	2

IC NO	TW	DT*DT	QDOT	H(TO)	H(TO)/HREF	H(.9TO)	H(.9TO)/HREF	X/L	Z,FULL SCALE(IN)
								ACCESS HATCH WINDOW	
107	531.7	3.632	.516	6.396E-04	.0222	7.668E-04	.0266	.2050	396.2000
								FUSELAGE VENT PANEL NO. 3 AND 1	
108	535.4	7.218	.744	9.524E-04	.0331	1.143E-03	.0397	.1244	377.5000
109	533.6	5.655	.724	9.002E-04	.0313	1.080E-03	.0375	.1302	377.5000
110	533.1	5.483	.695	8.635E-04	.0300	1.036E-03	.0360	.1360	377.5000
111	533.1	5.381	.612	7.606E-04	.0264	9.122E-04	.0317	.1418	377.5000
112	533.4	5.318	.631	7.836E-04	.0272	9.399E-04	.0326	.1476	377.5000
113	534.8	6.162	.707	8.807E-04	.0306	1.057E-03	.0367	.1215	273.5000
114	533.9	5.844	.712	8.730E-04	.0303	1.047E-03	.0364	.1273	273.5000
115	533.8	5.115	.635	7.856E-04	.0274	9.472E-04	.0329	.1331	273.5000
116	533.2	4.992	.613	7.613E-04	.0264	9.131E-04	.0317	.1389	273.5000
117	534.4	5.438	.627	7.788E-04	.0271	9.356E-04	.0325	.1447	273.5000
118	533.3	4.967	.618	7.682E-04	.0267	9.214E-04	.0320	.1409	366.0000
119	534.2	5.342	.692	8.607E-04	.0299	1.033E-03	.0359	.1442	366.0000
120	534.5	5.405	.675	8.413E-04	.0292	1.009E-03	.0350	.1215	359.5000
121	534.1	4.851	.596	7.411E-04	.0257	8.890E-04	.0309	.1303	359.5000
122	534.0	5.103	.636	7.915E-04	.0275	9.496E-04	.0330	.1337	359.5000
								LOWER RCS NOZZLES	
124	534.0	5.733	.512	6.368E-04	.0221	7.639E-04	.0265	.0950	400.0000
125	532.7	5.469	.596	7.394E-04	.0257	8.867E-04	.0308	.0988	400.0000
126	532.4	4.915	.674	8.359E-04	.0290	1.002E-03	.0348	.1027	400.0000
127	533.2	5.125	.671	8.584E-04	.0298	1.030E-03	.0357	.0911	395.0000
128	533.0	5.783	.702	8.721E-04	.0303	1.046E-03	.0363	.0950	395.0000
129	533.2	5.956	.700	8.691E-04	.0302	1.042E-03	.0362	.0988	395.0000
130	534.3	5.879	.704	8.753E-04	.0304	1.050E-03	.0365	.0810	390.0000
131	533.2	5.317	.746	9.701E-04	.0339	1.171E-03	.0406	.0857	390.0000
132	533.7	6.218	.725	9.010E-04	.0313	1.081E-03	.0375	.0963	390.0000
133	533.3	5.178	.628	7.801E-04	.0271	9.357E-04	.0325	.0857	383.8000
134	532.5	5.770	.772	9.563E-04	.0333	1.150E-03	.0399	.0872	377.3000
135	534.9	7.705	.926	1.153E-03	.0400	1.383E-03	.0480	.0903	374.5500
136	534.6	8.523	.948	1.180E-03	.0410	1.415E-03	.0491	.0960	374.5500
137	534.6	7.557	.989	1.231E-03	.0427	1.477E-03	.0513	.0872	370.5500
138	534.9	8.666	.999	1.244E-03	.0432	1.492E-03	.0518	.0928	370.5500
139	535.7	7.340	.938	1.169E-03	.0406	1.403E-03	.0487	.0816	366.0500
140	535.5	8.159	1.039	1.295E-03	.0450	1.554E-03	.0540	.0934	362.4000
141	534.5	7.205	.953	1.186E-03	.0412	1.423E-03	.0494	.0973	362.4000
142	534.3	5.901	.643	8.000E-04	.0278	9.598E-04	.0333	.0833	355.2000
143	535.9	8.521	.857	1.068E-03	.0371	1.282E-03	.0445	.0919	355.2000
144	536.7	9.402	1.240	1.548E-03	.0537	1.858E-03	.0645	.0949	349.0000

DATE 5/12/75

AEDC(ARO,INC.) ARNOLD AFS, TENNESSEE
VON KARMAN GAS DYNAMICS FACILITY
50 INCH HYPERSONIC TUNNEL H
V41H-87A

GROUP	TEST CONDITION	MODEL	MACH NO	Po,PSIA	To,DEG R	ALPHA-MODEL	ALPHA-SECTOR	ALPHA-PREBEND	ROLL MODEL	YAW
128	56	140 B	7.99	674.5	1338	25.00	5.00	30.00	179.94	-.0

T-INF (DEG R)	P-INF (PSIA)	Q-INF (PSIA)	V-INF (FT/SEC)	RHO-INF (SLUGS/FT3)	MU-INF (LB-SEC/FT2)	RE/FT (FT-1)	HREF-FR (R= .0400FT)	STFR (R= .0400FT)	SWITCH POSITION
97.2	.079	3.112	3860	6.012E-05	7.825E-08	2.966E 06	2.880E-02	1.560E-02	2

IC NO	TW	DTWDT	QDOT	H(TO)	H(TO)/HREF	H(.9TO)	H(.9TO)/HREF
161	538.2	12.881	1.528	1.910E-03	.0663	2.293E-03	.0796
162	541.6	14.413	1.370	1.720E-03	.0597	2.067E-03	.0718
163	538.3	10.932	1.346	1.682E-03	.0584	2.020E-03	.0701
164	536.7	10.623	1.387	1.731E-03	.0601	2.078E-03	.0721
165	536.4	7.758	.978	1.220E-03	.0424	1.464E-03	.0508
166	535.9	6.695	.859	1.071E-03	.0372	1.285E-03	.0446
167	539.2	14.688	1.993	2.494E-03	.0866	2.996E-03	.1040
168	540.9	15.236	1.605	2.013E-03	.0699	2.419E-03	.0840
169	535.7	10.266	1.248	1.556E-03	.0540	1.867E-03	.0648
170	539.6	13.169	1.651	2.068E-03	.0718	2.485E-03	.0863
171	537.8	11.223	1.356	1.694E-03	.0588	2.034E-03	.0706
172	535.5	8.700	1.135	1.415E-03	.0491	1.698E-03	.0590
173	536.2	10.026	1.340	1.671E-03	.0580	2.006E-03	.0697
174	534.3	8.483	.966	1.202E-03	.0417	1.442E-03	.0501
175	534.9	7.783	1.116	1.390E-03	.0482	1.667E-03	.0579
176	534.6	7.408	1.009	1.256E-03	.0436	1.507E-03	.0523
177	548.1	25.970	3.598	4.554E-03	.1581	5.482E-03	.1903
178	551.6	29.833	5.915	7.521E-03	.2611	9.063E-03	.3146
179	556.2	31.569	6.687	8.552E-03	.2969	1.032E-02	.3582
180	552.3	26.712	3.516	4.474E-03	.1554	5.393E-03	.1872
181	552.3	28.464	3.930	4.963E-03	.1723	5.982E-03	.2077
182	550.4	31.051	4.460	5.662E-03	.1966	6.821E-03	.2368
183	533.6	4.411	.553	6.878E-04	.0239	8.250E-04	.0286
184	533.7	5.025	.687	8.536E-04	.0296	1.024E-03	.0355
185	547.9	24.363	2.947	3.730E-03	.1295	4.490E-03	.1559
186	553.1	28.881	3.660	4.662E-03	.1619	5.620E-03	.1951
187	555.5	35.016	4.711	6.019E-03	.2090	7.261E-03	.2521
188	546.6	21.774	5.099	6.441E-03	.2236	7.752E-03	.2691
189	543.6	16.456	2.356	2.965E-03	.1030	3.566E-03	.1238
190	549.8	25.579	3.708	4.703E-03	.1633	5.665E-03	.1967
191	551.9	31.080	4.790	6.092E-03	.2115	7.342E-03	.2549

UPPER RCS NOZZLES

	X/L	2Y/B
161	.0619	-.0160
162	.0709	-.0160
163	.0807	-.0160
164	.0943	-.0160
165	.0978	-.0160
166	.1013	-.0160
167	.0619	-.0320
168	.0709	-.0320
169	.0807	-.0320
170	.0943	-.0320
171	.0978	-.0320
172	.1013	-.0320
173	.0807	-.0480
174	.0943	-.0480
175	.0978	-.0480
176	.1013	-.0480

CANOPY

DATE 5/12/75

AEDC(ARO,INC.) ARNOLD AFS, TENNESSEE
VON KARMAN GAS DYNAMICS FACILITY
50 INCH HYPERSONIC TUNNEL B
V41P-87A

GROUP	TEST CONDITION	MODEL	MACH NO	PO,PSIA	TO,DEG R	ALPHA-MODEL	ALPHA-SECTOR	ALPHA-PREBEND	ROLL MODEL	YAW
128	56	140 B	7.99	674.5	1338	25.00	5.00	30.00	179.94	-.0

T-INF (DEG R)	P-INF (PSIA)	Q-INF (PSIA)	V-INF (FT/SEC)	RHO-INF (SLUGS/FT3)	MU-INF (LB-SEC/FT2)	RE/FT (FT-1)	HREF-FR (R= .0400FT)	STFR (R= .0400FT)	SWITCH POSITION
97.3	.070	3.112	3860	6.012E-05	7.825E-08	2.966E 06	2.880E-02	1.560E-02	2

IC NO	TW	DTWOT	QDOT	H(TO)	H(TO)/HREF	H(.9TO)	H(.9TO)/HREF
						CANOPY	
192	535.3	5.184	.732	9.118E-04	.0317	1.094E-03	.0380
193	541.6	15.071	2.912	3.656E-03	.1269	4.394E-03	.1526
194	538.5	9.879	1.278	1.598E-03	.0555	1.919E-03	.0666
195	551.3	24.236	3.021	3.840E-03	.1333	4.627E-03	.1606
196	553.5	28.281	3.751	4.783E-03	.1660	5.767E-03	.2002
197	529.4	.864	.085	1.057E-04	.0037	1.267E-04	.0044
198	530.1	1.124	.130	1.613E-04	.0056	1.933E-04	.0067
199	531.4	3.081	.414	5.132E-04	.0178	6.153E-04	.0214
200	538.8	10.231	1.461	1.828E-03	.0635	2.195E-03	.0762
201	552.5	30.104	4.288	5.458E-03	.1895	6.579E-03	.2284
202	543.0	16.925	2.149	2.703E-03	.0938	3.249E-03	.1128
203	532.7	3.172	.394	4.886E-04	.0170	5.859E-04	.0203
204	537.7	7.379	1.149	1.435E-03	.0498	1.724E-03	.0598
205	556.3	29.282	4.672	5.841E-03	.2028	7.036E-03	.2443
206	530.3	2.014	.267	3.300E-04	.0115	3.955E-04	.0137
207	541.3	13.724	1.845	2.315E-03	.0804	2.782E-03	.0966
208	531.3	2.898	.389	4.821E-04	.0167	5.780E-04	.0201
209	533.3	3.707	.510	6.330E-04	.0220	7.591E-04	.0264
210	535.7	7.922	1.059	1.319E-03	.0458	1.584E-03	.0550
211	532.6	3.752	.455	5.653E-04	.0196	6.779E-04	.0235
212	531.3	4.433	.597	7.408E-04	.0257	8.862E-04	.0308
213	533.7	5.087	.675	8.386E-04	.0291	1.006E-03	.0349
214	534.9	6.577	.923	1.149E-03	.0399	1.379E-03	.0479
215	537.7	10.514	1.495	1.869E-03	.0649	2.244E-03	.0779
216	536.9	9.252	1.316	1.642E-03	.0570	1.972E-03	.0685
217	537.2	9.280	1.324	1.653E-03	.0574	1.985E-03	.0689
218	534.5	6.762	.933	1.161E-03	.0403	1.393E-03	.0484
219	537.0	9.980	1.406	1.755E-03	.0609	2.107E-03	.0732
220	537.6	12.346	1.721	2.125E-03	.0738	2.552E-03	.0886

GROUP 128 CENTERLINE TIME 2.75

CH	TC	FIT LENGTH	DTDWT	UNCERTAINTY	CH	TC	FIT LENGTH	DTDWT	UNCERTAINTY
1	107	.60	3.602	.0085	50	173	.40	10.026	.0080
2	108	.60	7.218	.0058	51	174	.40	8.483	.0115
3	109	.60	5.855	.0056	52	175	.60	7.783	.0125
4	110	.60	5.443	.0077	53	176	.60	7.408	.0081
5	111	.60	5.080	.0267	54	177	.30	25.970	.0051
6	112	.60	5.310	.0093	55	178	.30	29.833	.0044
7	113	.60	6.162	.0337	56	179	.30	31.569	.0085
8	114	.60	5.844	.0040	57	180	.30	26.712	.0036
9	115	.60	5.116	.0125	58	181	.30	28.464	.0032
10	116	.60	4.992	.0080	59	182	.30	31.051	.0086
11	117	.60	5.438	.0142	60	183	.60	4.411	.0068
12	118	.60	4.467	.0123	61	184	.60	5.025	.0202
13	119	.60	5.342	.0086	62	185	.30	24.363	.0049
14	120	.60	5.406	.0115	63	186	.30	28.881	.0043
15	121	.60	4.851	.0205	64	187	.20	35.016	.0077
16	122	.60	5.103	.0095	65	188	.30	21.774	.0072
17	124	.60	5.733	.0221	66	189	.30	16.456	.0131
18	125	.60	5.469	.0106	67	190	.30	25.579	.0042
19	126	.60	4.916	.0133	68	191	.30	31.080	.0226
20	127	.60	5.125	.0060	69	192	.60	5.184	.0278
21	128	.60	5.783	.0077	70	193	.40	15.071	.0062
22	129	.60	5.958	.0058	71	194	.40	9.879	.0152
23	130	.60	5.878	.0144	72	195	.30	24.296	.0077
24	131	.60	5.317	.0127	73	196	.30	28.281	.0041
25	132	.60	6.219	.0104	74	197	2.00	.864	.0125
26	133	.60	5.170	.0127	75	198	1.20	1.124	.0249
27	134	.60	5.770	.0092	76	199	.80	3.081	.0106
28	135	.60	7.705	.0053	77	200	.40	10.231	.0074
29	136	.40	8.520	.0081	78	201	.30	30.104	.0047
30	137	.60	7.557	.0057	79	202	.30	16.925	.0488
31	138	.40	8.666	.0047	80	203	.80	3.172	.0122
32	139	.60	7.340	.0106	81	204	.60	7.379	.0093
33	140	.40	8.159	.0125	82	205	.30	29.282	.0016
34	141	.60	7.205	.0055	83	206	.80	2.014	.0312
35	142	.60	5.901	.0049	84	207	.40	13.724	.0095
36	143	.40	8.521	.0094	85	208	.80	2.898	.0113
37	144	.40	9.402	.0066	86	209	.80	3.707	.0091
38	161	.40	12.881	.0049	87	210	.40	7.922	.0359
39	162	.40	14.413	.0056	88	211	.80	3.752	.0122
40	163	.40	10.932	.0147	89	212	.60	4.433	.0224
41	164	.40	10.622	.0081	90	213	.60	5.087	.0645
42	165	.60	7.758	.0046	91	214	.60	6.577	.0102
43	166	.60	6.695	.0092	92	215	.40	10.514	.0192
44	167	.40	14.698	.0063	93	216	.40	9.252	.0116
45	168	.40	15.236	.0062	94	217	.40	9.280	.0136
46	169	.40	10.266	.0066	95	218	.60	6.762	.0127
47	170	.40	13.169	.0209	96	219	.40	9.980	.0093
48	171	.40	11.223	.0085	97	220	.40	12.346	.0064
49	172	.40	8.700	.0132	98	0	-0	0	0
128		.650							

BIT ON LOOP 60

DATE 5/12/75

AEDC(ARO,INC.) ARNOLD AFS, TENNESSEE
VON KARMAN GAS DYNAMICS FACILITY
50 INCH HYPERSONIC TUNNEL B
V41B-87A

GROUP	TEST CONDITION	MODEL	MACH NO	PO,PSIA	TO,DEG R	ALPHA-MODEL	ALPHA-SECTOR	ALPHA-PREBEND	ROLL MODEL	YAW
129	57	140 B	7.99	674.0	1339	30.07	-.07	30.00	179.94	.0

T-INF (DEG R)	P-INF (PSIA)	Q-INF (PSIA)	V-INF (FT/SEC)	RHO-INF (SLUGS/FT3)	MU-INF (LB-SEC/FT2)	RE/FT (FT-1)	HREF-FR (R= .0400FT)	STFR (R= .0400FT)	SWITCH POSITION
97.3	.070	3.110	3861	6.004E-05	7.830E-08	2.960E 06	2.880E-02	1.561E-02	2

ICONC	TW	DTNOT	QDOT	H(TO)	H(TO)/HREF	H(.9TO)	H(.9TO)/HREF	X/L	Z,FULL SCALE(IN)
								ACCESS HATCH WINDOW	
107	533.3	5.737	.822	1.020E-03	.0354	1.224E-03	.0425	.2050	396.2000
								FUSELAGE VENT PANEL NO. 3 AND 1	
108	534.7	7.047	.746	9.276E-04	.0322	1.113E-03	.0386	.1244	377.5000
109	532.9	6.149	.760	9.430E-04	.0327	1.131E-03	.0393	.1302	377.5000
110	532.7	5.932	.752	9.323E-04	.0324	1.118E-03	.0388	.1360	377.5000
111	535.5	6.079	.733	9.095E-04	.0316	1.091E-03	.0379	.1418	377.5000
112	534.5	6.566	.780	9.698E-04	.0337	1.164E-03	.0404	.1476	377.5000
113	534.3	6.770	.777	9.657E-04	.0335	1.158E-03	.0402	.1215	273.5000
114	533.5	6.143	.738	9.158E-04	.0318	1.098E-03	.0381	.1273	273.5000
115	533.3	5.656	.703	8.725E-04	.0303	1.046E-03	.0363	.1331	273.5000
116	533.5	6.071	.745	9.253E-04	.0321	1.110E-03	.0385	.1389	273.5000
117	535.5	6.467	.746	9.268E-04	.0322	1.114E-03	.0387	.1447	273.5000
118	534.0	5.295	.733	9.104E-04	.0316	1.092E-03	.0379	.1409	366.0000
119	535.4	5.957	.772	9.608E-04	.0334	1.153E-03	.0400	.1442	366.0000
120	535.6	5.963	.746	9.288E-04	.0323	1.115E-03	.0387	.1215	359.5000
121	535.3	5.386	.662	8.235E-04	.0286	9.881E-04	.0343	.1303	359.5000
122	535.7	5.595	.698	8.685E-04	.0302	1.042E-03	.0362	.1337	359.5000
								LOWER RCS NOZZLES	
124	532.0	3.321	.296	3.672E-04	.0128	4.403E-04	.0153	.0950	400.0000
125	531.1	3.340	.363	4.498E-04	.0156	5.391E-04	.0187	.0988	400.0000
126	530.9	3.025	.414	5.123E-04	.0178	6.141E-04	.0213	.1027	400.0000
127	531.3	3.377	.455	5.631E-04	.0196	6.750E-04	.0234	.0911	395.0000
128	531.2	3.677	.446	5.521E-04	.0192	6.618E-04	.0230	.0950	395.0000
129	531.6	3.972	.466	5.771E-04	.0200	6.919E-04	.0240	.0988	395.0000
130	533.7	4.009	.480	5.957E-04	.0207	7.145E-04	.0248	.0810	390.0000
131	531.6	3.846	.568	7.039E-04	.0244	8.439E-04	.0293	.0857	390.0000
132	531.5	4.431	.516	6.388E-04	.0222	7.658E-04	.0266	.0963	390.0000
133	531.6	3.868	.469	5.815E-04	.0202	6.971E-04	.0242	.0857	383.8000
134	531.5	5.005	.670	8.293E-04	.0288	9.942E-04	.0345	.0872	377.3000
135	533.2	6.694	.804	9.976E-04	.0346	1.196E-03	.0415	.0903	374.5500
136	533.9	7.044	.784	9.734E-04	.0338	1.168E-03	.0405	.0960	374.5500
137	533.5	6.777	.847	1.100E-03	.0382	1.320E-03	.0458	.0872	370.5500
138	534.2	7.398	.852	1.059E-03	.0368	1.271E-03	.0441	.0928	370.5500
139	535.2	6.907	.883	1.098E-03	.0381	1.318E-03	.0458	.0816	366.0500
140	535.3	7.175	.914	1.137E-03	.0395	1.364E-03	.0474	.0934	362.4000
141	534.6	6.667	.882	1.096E-03	.0381	1.315E-03	.0457	.0973	362.4000
142	535.4	5.411	.590	7.342E-04	.0255	8.810E-04	.0306	.0833	355.2000
143	536.7	8.022	.807	1.006E-03	.0349	1.207E-03	.0419	.0919	355.2000
144	537.5	9.020	1.190	1.485E-03	.0516	1.783E-03	.0619	.0949	349.0000

DATE 5/12/75

AEDC(ARO,INC.) ARNOLD AFS, TENNESSEE
VON KARMAN GAS DYNAMICS FACILITY
50 INCH HYPERSONIC TUNNEL B
V41B-87A

GROUP	TEST CONDITION	MODEL	MACH NO	PO,PSIA	TO,DEG R	ALPHA-MODEL	ALPHA-SECTOR	ALPHA-PREBEND	ROLL MODEL	YAW
129	57	140 B	7.99	674.0	1339	30.07	-.07	30.00	179.94	.0

T-INF (DEG R)	P-INF (PSIA)	Q-INF (PSIA)	V-INF (FT/SEC)	RHO-INF (SLUGS/FT3)	MU-INF (LB-SEC/FT2)	RE/FT (FT-1)	HREF-FR (R= .0400FT)	STFR (R= .0400FT)	SWITCH POSITION
97.3	.070	3.110	3861	6.004E-05	7.830E-08	2.960E 06	2.880E-02	1.561E-02	2

TC NO	TW	DTWDT	QDOT	H(TO)	H(TO)/HREF	H(.9TO)	H(.9TO)/HREF
161	537.1	3.610	.428	5.336E-04	.0185	6.405E-04	.0222
162	536.7	3.566	.338	4.214E-04	.0146	5.058E-04	.0176
163	534.4	2.378	.292	3.630E-04	.0126	4.355E-04	.0151
164	533.6	2.584	.337	4.183E-04	.0145	5.017E-04	.0174
165	533.8	2.166	.273	3.387E-04	.0118	4.062E-04	.0141
166	534.0	2.019	.259	3.215E-04	.0112	3.857E-04	.0134
167	537.1	3.426	.464	5.790E-04	.0201	6.951E-04	.0241
168	537.5	4.020	.423	5.272E-04	.0183	6.330E-04	.0220
169	534.5	3.174	.386	4.793E-04	.0166	5.751E-04	.0200
170	535.1	3.839	.480	5.974E-04	.0207	7.168E-04	.0249
171	534.0	3.372	.407	5.051E-04	.0175	6.059E-04	.0210
172	532.8	2.581	.336	4.173E-04	.0145	5.003E-04	.0174
173	532.7	1.189	.159	1.968E-04	.0068	2.360E-04	.0082
174	531.7	.999	.114	1.407E-04	.0049	1.687E-04	.0059
175	531.2	1.043	.149	1.847E-04	.0064	2.215E-04	.0077
176	531.1	1.041	.142	1.752E-04	.0061	2.100E-04	.0073
177	545.0	16.594	2.295	2.891E-03	.1004	3.477E-03	.1208
178	544.7	16.305	3.221	4.056E-03	.1408	4.878E-03	.1694
179	552.3	20.662	5.636	7.164E-03	.2488	8.634E-03	.2998
180	541.8	10.477	1.372	1.721E-03	.0598	2.068E-03	.0718
181	539.3	6.592	.897	1.122E-03	.0390	1.348E-03	.0468
182	543.0	15.677	2.244	2.819E-03	.0979	3.389E-03	.1177
183	530.9	1.138	.143	1.764E-04	.0061	2.115E-04	.0073
184	531.1	1.374	.188	2.321E-04	.0081	2.782E-04	.0097
185	538.3	7.421	.893	1.116E-03	.0387	1.340E-03	.0465
186	537.7	5.599	.704	8.764E-04	.0305	1.055E-03	.0366
187	541.0	11.456	1.530	1.917E-03	.0666	2.304E-03	.0800
188	545.6	19.665	4.603	5.801E-03	.2014	6.978E-03	.2423
189	534.6	3.941	.562	6.981E-04	.0242	8.375E-04	.0291
190	534.1	3.304	.475	5.903E-04	.0205	7.081E-04	.0246
191	537.7	6.866	1.051	1.311E-03	.0455	1.574E-03	.0547

UPPER RCS NOZZLES

X/L	2Y/B
.0619	-.0160
.0709	-.0160
.0807	-.0160
.0943	-.0160
.0978	-.0160
.1013	-.0160
.0619	-.0320
.0709	-.0320
.0807	-.0320
.0943	-.0320
.0978	-.0320
.1013	-.0320
.0807	-.0480
.0943	-.0480
.0978	-.0480
.1013	-.0480

CANOPY

DATE 5/12/79

AEDC(ARO,INC.) ARNOLD AFS, TENNESSEE
VON KARMAN GAS DYNAMICS FACILITY
50 INCH HYPERSONIC TUNNEL B
V418-87A

GROUP	TEST CONDITION	MODEL	MACH NO	PO,PSIA	TO,DEG R	ALPHA-MODEL	ALPHA-SECTOR	ALPHA-PREBEND	ROLL MODEL	YAW
129	57	140 B	7.99	674.0	1339	30.07	-.07	30.00	179.94	.0

T-INF (DEG R)	P-INF (PSIA)	Q-INF (PSIA)	V-INF (FT/SEC)	RHO-INF (SLUGS/FT3)	MU-INF (LB-SEC/FT2)	RE/FT (FT-1)	HREF-FR (R= .0400FT)	STFR (R= .0400FT)	SWITCH POSITION
97.3	.070	3.110	3861	6.004E-05	7.830E-08	2.960E 06	2.880E-02	1.561E-02	2

IC NO	TW	DTWDT	QDOT	H(TO)	H(TO)/HREF	H(.9TO)	H(.9TO)/HREF
						CANOPY	
192	528.9	.238	.034	4.141E-05	.0014	4.961E-05	.0017
193	536.1	6.899	1.329	1.656E-03	.0575	1.987E-03	.0690
194	529.5	1.213	.156	1.930E-04	.0067	2.312E-04	.0080
195	531.2	2.508	.309	3.821E-04	.0133	4.580E-04	.0159
196	533.0	3.564	.458	5.803E-04	.0202	6.959E-04	.0242
197	528.1	.866	.036	1.035E-04	.0037	1.264E-04	.0044
198	528.2	1.161	.134	1.658E-04	.0058	1.986E-04	.0069
199	529.2	1.483	.199	2.456E-04	.0085	2.942E-04	.0102
200	530.9	3.406	.484	5.995E-04	.0208	7.185E-04	.0250
201	535.1	6.670	.942	1.172E-03	.0407	1.406E-03	.0488
202	534.5	5.464	.691	8.587E-04	.0298	1.030E-03	.0358
203	527.9	1.317	.163	2.009E-04	.0070	2.406E-04	.0084
204	529.6	2.112	.327	4.040E-04	.0140	4.839E-04	.0168
205	532.4	5.262	.819	1.016E-03	.0353	1.218E-03	.0423
206	528.4	1.242	.164	2.026E-04	.0070	2.427E-04	.0084
207	533.6	5.957	.798	9.906E-04	.0344	1.188E-03	.0413
208	527.3	1.131	.151	1.866E-04	.0065	2.235E-04	.0078
209	527.4	1.183	.192	1.997E-04	.0069	2.392E-04	.0083
210	527.4	1.184	.158	1.941E-04	.0067	2.324E-04	.0081
211	527.7	.167	.020	2.490E-05	.0009	2.982E-05	.0010
212	528.1	1.186	.159	1.967E-04	.0068	2.356E-04	.0082
213	527.9	1.813	.240	2.956E-04	.0103	3.540E-04	.0123
214	528.0	2.392	.334	4.123E-04	.0143	4.938E-04	.0171
215	527.9	1.696	.240	2.959E-04	.0103	3.544E-04	.0123
216	531.2	4.625	.656	8.119E-04	.0282	9.732E-04	.0338
217	531.8	4.786	.681	8.436E-04	.0293	1.011E-03	.0351
218	527.0	1.521	.209	2.576E-04	.0089	3.084E-04	.0107
219	527.7	2.595	.364	4.485E-04	.0156	5.372E-04	.0187
220	527.8	2.398	.329	4.053E-04	.0141	4.855E-04	.0169

GROUP 129 CENTERLINE TIME 2.95

CH	TC	FIT LENGTH	DTDWT	UNCERTAINTY	CH	TC	FIT LENGTH	DTDWT	UNCERTAINTY
1	107	.60	5.737	.0031	50	173	1.20	1.189	.0212
2	108	.60	7.047	.0083	51	174	2.00	.999	.0156
3	109	.60	6.149	.0077	52	175	1.20	1.043	.0200
4	110	.60	5.932	.0073	53	176	1.20	1.041	.0140
5	111	.60	6.078	.0173	54	177	.30	16.594	.0091
6	112	.60	6.566	.0061	55	178	.30	16.305	.0062
7	113	.60	6.770	.0413	56	179	.30	26.662	.0106
8	114	.60	6.143	.0070	57	180	.40	10.477	.0069
9	115	.60	5.666	.0090	58	181	.60	6.592	.0066
10	116	.60	6.071	.0089	59	182	.40	15.677	.0083
11	117	.60	6.467	.0125	60	183	1.20	1.138	.0093
12	118	.60	5.235	.0145	61	184	1.20	1.374	.0286
13	119	.60	5.957	.0045	62	185	.60	7.421	.0070
14	120	.60	5.963	.0099	63	186	.60	5.599	.0106
15	121	.60	5.386	.0117	64	187	.40	11.456	.0133
16	122	.60	5.595	.0137	65	188	.30	19.665	.0095
17	124	.80	3.321	.0166	66	189	.80	3.941	.0123
18	125	.80	3.340	.0077	67	190	.80	3.304	.0121
19	126	.80	3.025	.0112	68	191	.60	6.866	.0489
20	127	.80	3.377	.0144	69	192	2.00	.238	.0886
21	128	.80	3.677	.0074	70	193	.60	6.899	.0087
22	129	.80	3.972	.0088	71	194	1.20	1.213	.0213
23	130	.80	4.009	.0148	72	195	.80	2.508	.0185
24	131	.80	3.848	.0146	73	196	.80	3.564	.0107
25	132	.60	4.431	.0182	74	197	2.00	.866	.0133
26	133	.80	3.868	.0109	75	198	1.20	1.161	.0171
27	134	.60	5.005	.0115	76	199	1.20	1.483	.0172
28	135	.60	6.694	.0107	77	200	.80	3.406	.0100
29	136	.60	7.048	.0069	78	201	.60	6.670	.0085
30	137	.60	6.777	.0091	79	202	.60	5.464	.0543
31	138	.60	7.398	.0057	80	203	1.20	1.317	.0104
32	139	.60	6.937	.0068	81	204	.80	2.112	.0173
33	140	.60	7.176	.0049	82	205	.60	5.262	.0091
34	141	.60	6.667	.0065	83	206	1.20	1.242	.0172
35	142	.60	5.411	.0106	84	207	.60	5.957	.0090
36	143	.60	8.022	.0074	85	208	1.20	1.131	.0187
37	144	.40	9.020	.0074	86	209	1.20	1.183	.0168
38	161	.80	3.610	.0122	87	210	1.20	1.184	.0386
39	162	.80	3.566	.0082	88	211	2.00	.167	.0776
40	163	.80	2.378	.0203	89	212	1.20	1.186	.0259
41	164	.80	2.584	.0169	90	213	1.20	1.813	.0700
42	165	.80	2.166	.0127	91	214	.80	2.392	.0291
43	166	1.20	2.019	.0138	92	215	1.20	1.696	.0196
44	167	.80	3.426	.0097	93	216	.60	4.625	.0178
45	168	.80	4.020	.0100	94	217	.60	4.786	.0141
46	169	.80	3.174	.0126	95	218	1.20	1.521	.0304
47	170	.80	3.839	.0310	96	219	.80	2.595	.0219
48	171	.80	3.372	.0112	97	220	.80	2.398	.0185
49	172	.80	2.581	.0145	98	0216.0*		0	0
	130	.050							

OIL ON LOOP 62

DATE 5/12/75

AEDC(ARO,INC.) ARNOLD AFS, TENNESSEE
VON KARMAN GAS DYNAMICS FACILITY
50 INCH HYPERSONIC TUNNEL H
V41B-B7A

GROUP	TEST CONDITION	MODEL	MACH NO	PO,PSIA	TO,DEG R	ALPHA-MODEL	ALPHA-SECTOR	ALPHA-PREBEND	ROLL MODEL	YAW
130	58	140 H	7.99	674.0	1339	34.99	-4.99	30.00	179.94	.0

T-INF (DEG R)	P-INF (PSIA)	Q-INF (PSIA)	V-INF (FT/SEC)	RHO-INF (SLUGS/FT3)	MU-INF (LB-SEC/FT2)	RE/FT (FT-1)	HREF-FR (R= .0400FT)	STFR (R= .0400FT)	SWITCH POSITION
97.3	.070	3.115	3861	6.004E-05	7.830E-08	2.960E 06	2.880E-02	1.561E-02	2

TC NO	TW	DTWDT	QDCT	H(TO)	H(TO)/HREF	H(.9TO)	H(.9TO)/HREF	X/L	Z,FULL SCALE(IN)
								ACCESS HATCH WINDOW	
107	533.3	5.737	.822	1.020E-03	.0354	1.224E-03	.0425	.2050	396.2000
								FUSELAGE VENT PANEL NO. 3 AND 1	
108	534.7	7.047	.746	9.276E-04	.0322	1.113E-03	.0386	.1244	377.5000
109	532.9	6.149	.759	9.430E-04	.0327	1.131E-03	.0393	.1302	377.5000
110	532.7	5.932	.752	9.323E-04	.0324	1.118E-03	.0388	.1360	377.5000
111	533.5	6.078	.733	9.095E-04	.0316	1.091E-03	.0379	.1418	377.5000
112	534.5	6.566	.749	9.698E-04	.0337	1.164E-03	.0404	.1476	377.5000
113	534.3	6.770	.777	9.657E-04	.0335	1.158E-03	.0402	.1215	273.5000
114	533.5	6.143	.738	9.158E-04	.0318	1.098E-03	.0381	.1273	273.5000
115	533.2	5.666	.723	8.725E-04	.0303	1.046E-03	.0363	.1331	273.5000
116	533.5	6.071	.745	9.253E-04	.0321	1.110E-03	.0385	.1389	273.5000
117	535.5	6.467	.746	9.280E-04	.0322	1.114E-03	.0387	.1447	273.5000
118	534.9	5.295	.733	9.104E-04	.0316	1.092E-03	.0379	.1409	366.0000
119	535.4	5.957	.772	9.6[illegible]8E-04	.0334	1.153E-03	.0400	.1442	366.0000
120	535.6	5.963	.746	9.288E-04	.0323	1.115E-03	.0387	.1215	359.5000
121	535.3	5.388	.662	8.235E-04	.0286	9.881E-04	.0343	.1303	359.5000
122	535.7	5.595	.698	8.685E-04	.0302	1.042E-03	.0362	.1337	359.5000
								LOWER RCS NOZZLES	
124	532.[illegible]	3.321	.290	3.672E-04	.0128	4.403E-04	.0153	.0950	400.0000
125	531.1	3.340	.353	4.498E-04	.0156	5.391E-04	.0187	.0988	400.0000
126	530.9	3.325	.414	5.123E-04	.0178	6.141E-04	.0213	.1027	400.0000
127	531.3	3.377	.455	5.631E-04	.0196	6.750E-04	.0234	.0911	395.0000
128	531.2	3.677	.446	5.521E-04	.0192	6.618E-04	.0230	.0950	395.0000
129	531.6	3.972	.466	5.771E-04	.0200	6.919E-04	.0240	.0988	395.0000
130	533.7	4.209	.480	5.957E-04	.0207	7.145E-04	.0248	.0810	390.0000
131	531.8	3.848	.558	7.039E-04	.0244	8.439E-04	.0293	.0857	390.0000
132	531.5	4.431	.516	6.369E-04	.0222	7.658E-04	.0266	.0963	390.0000
133	531.8	3.865	.469	5.815E-04	.0202	6.971E-04	.0242	.0857	383.8000
134	531.5	5.005	.670	8.293E-04	.0288	9.942E-04	.0345	.0872	377.3000
135	533.2	6.694	.804	9.976E-04	.0346	1.196E-03	.0415	.0903	374.5500
136	533.9	7.048	.784	9.734E-04	.0338	1.168E-03	.0405	.0960	374.5500
137	533.5	6.777	.887	1.100E-03	.0382	1.320E-03	.0458	.0872	370.5500
138	534.2	7.398	.852	1.059E-03	.0368	1.271E-03	.0441	.0928	370.5500
139	535.2	6.907	.883	1.096E-03	.0381	1.318E-03	.0458	.0816	366.0500
140	535.3	7.176	.914	1.137E-03	.0395	1.364E-03	.0474	.0934	362.4000
141	534.6	6.667	.892	1.096E-03	.0381	1.315E-03	.0457	.0973	362.4000
142	535.4	5.411	.590	7.342E-04	.0255	8.810E-04	.0306	.0833	355.2000
143	536.7	8.022	.807	1.036E-03	.0349	1.207E-03	.0419	.0919	355.2000
144	537.5	9.020	1.190	1.485E-03	.0516	1.783E-03	.0619	.0949	349.0000

DATE 5/12/75

AEDC(ARO,INC.) ARNOLD AFS, TENNESSEE
VON KARMAN GAS DYNAMICS FACILITY
50 INCH HYPERSONIC TUNNEL H
V41R-67A

GROUP	TEST CONDITION	MODEL	MACH NO	PO,PSIA	TO,DEG R	ALPHA-MODEL	ALPHA-SECTOR	ALPHA-PREBEND	ROLL MODEL	YAW
130	58	140 B	7.99	674.0	1339	34.99	-4.99	30.00	179.94	.0

T-INF (DEG R)	P-INF (PSIA)	Q-INF (PSIA)	V-INF (FT/SEC)	RHO-INF (SLUGS/FT3)	MU-INF (LB-SEC/FT2)	RE/FT (FT-1)	HREF-FR (R= .0400FT)	STFR (R= .0400FT)	SWITCH POSITION
97.3	.070	3.116	3861	6.004E-05	7.830E-08	2.960E 06	2.880E-02	1.561E-02	2

TC NO	TW	DTWDT	QDOT	H(TO)	H(TO)/HREF	H(.9TO)	H(.9TO)/HREF	X/L	2Y/B
								UPPER RCS NOZZLES	
161	537.1	3.610	.428	5.336E-04	.0185	6.405E-04	.0222	.0619	-.0160
162	536.7	3.566	.338	4.214E-04	.0146	5.058E-04	.0176	.0709	-.0160
163	534.4	2.378	.292	3.630E-04	.0126	4.355E-04	.0151	.0807	-.0160
164	533.6	2.554	.337	4.183E-04	.0145	5.017E-04	.0174	.0943	-.0160
165	533.8	2.166	.273	3.357E-04	.0118	4.062E-04	.0141	.0978	-.0160
166	534.0	2.019	.259	3.215E-04	.0112	3.857E-04	.0134	.1013	-.0160
167	537.1	3.426	.464	5.790E-04	.0201	6.951E-04	.0241	.0619	-.0320
168	537.5	4.020	.423	5.272E-04	.0183	6.330E-04	.0220	.0709	-.0320
169	534.5	3.174	.386	4.793E-04	.0166	5.751E-04	.0200	.0807	-.0320
170	535.1	3.839	.480	5.974E-04	.0207	7.168E-04	.0249	.0943	-.0320
171	534.0	3.372	.407	5.051E-04	.0175	6.059E-04	.0210	.0978	-.0320
172	532.5	2.581	.336	4.173E-04	.0145	5.003E-04	.0174	.1013	-.0320
173	532.7	1.189	.159	1.968E-04	.0068	2.360E-04	.0082	.0807	-.0480
174	531.7	.999	.114	1.407E-04	.0049	1.687E-04	.0059	.0943	-.0480
175	531.2	1.043	.149	1.847E-04	.0064	2.215E-04	.0077	.0978	-.0480
176	531.1	1.041	.142	1.752E-04	.0061	2.100E-04	.0073	.1013	-.0480
								CANOPY	
177	545.0	16.594	2.295	2.891E-03	.1004	3.477E-03	.1208		
178	544.7	16.305	3.221	4.056E-03	.1408	4.878E-03	.1694		
179	552.3	26.662	5.636	7.104E-03	.2488	8.634E-03	.2998		
180	541.8	10.477	1.372	1.721E-03	.0598	2.068E-03	.0718		
181	539.3	6.592	.897	1.122E-03	.0390	1.348E-03	.0468		
182	543.0	15.677	2.244	2.819E-03	.0979	3.389E-03	.1177		
183	530.9	1.138	.143	1.764E-04	.0061	2.115E-04	.0073		
184	531.1	1.374	.188	2.321E-04	.0081	2.782E-04	.0097		
185	538.3	7.421	.893	1.116E-03	.0387	1.340E-03	.0465		
186	537.7	5.599	.704	8.784E-04	.0305	1.055E-03	.0366		
187	541.0	11.456	1.530	1.917E-03	.0666	2.304E-03	.0800		
188	545.6	19.665	4.603	5.801E-03	.2014	6.978E-03	.2423		
189	534.6	3.941	.562	6.961E-04	.0242	8.375E-04	.0291		
190	534.1	3.304	.475	5.903E-04	.0205	7.081E-04	.0246		
191	537.7	6.866	1.051	1.311E-03	.0455	1.574E-03	.0547		

DATE 5/12/75

AEDC(ARO,INC.) ARNOLD AFS, TENNESSEE
VON KARMAN GAS DYNAMICS FACILITY
50 INCH HYPERSONIC TUNNEL B
V41B-87A

GROUP	TEST CONDITION	MODEL	MACH NO	PO,PSIA	TO,DEG R	ALPHA-MODEL	ALPHA-SECTOR	ALPHA-PREBEND	ROLL MODEL	YAW
130	5F	140 M	7.99	674.0	1339	34.99	-4.99	30.00	179.94	.0

T-INF (DEG R)	P-INF (PSIA)	Q-INF (PSIA)	V-INF (FT/SEC)	RHO-INF (SLUGS/FT3)	MU-INF (LB-SEC/FT2)	RE/FT (FT-1)	HREF-FR (R= .0400FT)	STFR (R= .0400FT)	SWITCH POSITION
97.3	.070	3.110	3861	6.004E-05	7.830E-08	2.960E 06	2.880E-02	1.561E-02	2

IC NO	TW	DTWDT	QDOT	H(TO)	H(TO)/HREF	H(.9TO)	H(.9TO)/HREF
						CANOPY	
192	528.9	.238	.034	4.141E-05	.0014	4.961E-05	.0017
193	536.1	6.899	1.329	1.656E-03	.0575	1.987E-03	.0690
194	529.5	1.213	.155	1.930E-04	.0067	2.312E-04	.0080
195	531.2	2.508	.309	3.821E-04	.0133	4.580E-04	.0159
196	533.0	3.564	.468	5.803E-04	.0202	6.959E-04	.0242
197	528.1	.856	.086	1.055E-04	.0037	1.264E-04	.0044
198	528.3	1.161	.134	1.658E-04	.0058	1.986E-04	.0069
199	529.2	1.483	.199	2.456E-04	.0085	2.942E-04	.0102
200	530.9	3.406	.404	5.995E-04	.0208	7.185E-04	.0250
201	535.1	6.670	.942	1.172E-03	.0407	1.406E-03	.0488
202	534.5	5.464	.691	8.587E-04	.0298	1.030E-03	.0358
203	527.9	1.317	.163	2.009E-04	.0070	2.406E-04	.0084
204	528.6	2.112	.327	4.040E-04	.0140	4.839E-04	.0168
205	532.4	5.262	.819	1.016E-03	.0353	1.218E-03	.0423
206	528.4	1.242	.164	2.026E-04	.0070	2.427E-04	.0084
207	533.6	5.957	.798	9.906E-04	.0344	1.188E-03	.0413
208	527.3	1.131	.151	1.866E-04	.0065	2.235E-04	.0078
209	527.4	1.183	.162	1.997E-04	.0069	2.392E-04	.0083
210	527.4	1.164	.158	1.941E-04	.0067	2.324E-04	.0081
211	527.7	.157	.020	2.490E-05	.0009	2.982E-05	.0010
212	528.1	1.186	.159	1.967E-04	.0068	2.356E-04	.0082
213	527.9	1.813	.240	2.956E-04	.0103	3.540E-04	.0123
214	528.0	2.392	.334	4.123E-04	.0143	4.938E-04	.0171
215	527.9	1.696	.240	2.959E-04	.0103	3.544E-04	.0123
216	531.2	4.625	.656	8.119E-04	.0282	9.732E-04	.0338
217	531.8	4.786	.681	8.436E-04	.0293	1.011E-03	.0351
218	527.0	1.521	.209	2.576E-04	.0089	3.084E-04	.0107
219	527.7	2.595	.364	4.485E-04	.0156	5.372E-04	.0187
220	527.8	2.398	.329	4.053E-04	.0141	4.855E-04	.0169

GROUP 130 CENTERLINE TIME 2.95

CH	TC	FIT LENGTH	DTDWT	UNCERTAINTY	CH	TC	FIT LENGTH	DTDWT	UNCERTAINTY
1	107	.60	5.737	.0031	50	173	1.20	1.189	.0212
2	108	.60	7.047	.0083	51	174	2.00	.999	.0156
3	109	.60	6.149	.0077	52	175	1.20	1.043	.0200
4	110	.60	5.932	.0073	53	176	1.20	1.041	.0140
5	111	.60	6.078	.0173	54	177	.30	16.594	.0091
6	112	.60	6.566	.0061	55	178	.30	16.305	.0062
7	113	.60	6.770	.0413	56	179	.30	26.662	.0106
8	114	.60	6.143	.0070	57	180	.40	10.477	.0069
9	115	.60	5.666	.0090	58	181	.60	6.592	.0066
10	116	.60	6.071	.0089	59	182	.40	15.677	.0083
11	117	.60	6.467	.0125	60	183	1.20	1.138	.0093
12	118	.60	5.295	.0145	61	184	1.20	1.374	.0286
13	119	.60	5.957	.0045	62	185	.60	7.421	.0070
14	120	.60	5.963	.0099	63	186	.60	5.599	.0106
15	121	.60	5.386	.0117	64	187	.40	11.456	.0133
16	122	.60	5.595	.0137	65	188	.30	19.665	.0095
17	124	.80	3.321	.0166	66	189	.80	3.941	.0123
18	125	.80	3.340	.0077	67	190	.80	3.304	.0121
19	126	.80	3.025	.0112	68	191	.60	6.866	.0489
20	127	.80	3.377	.0144	69	192	2.00	.238	.0886
21	128	.80	3.677	.0074	70	193	.60	6.899	.0087
22	129	.80	3.972	.0088	71	194	1.20	1.213	.0213
23	130	.80	4.009	.0148	72	195	.80	2.508	.0185
24	131	.80	3.848	.0146	73	196	.80	3.564	.0107
25	132	.60	4.431	.0182	74	197	2.00	.866	.0133
26	133	.80	3.868	.0109	75	198	1.20	1.161	.0171
27	134	.60	5.005	.0115	76	199	1.20	1.483	.0172
28	135	.60	6.694	.0107	77	200	.80	3.406	.0100
29	136	.60	7.048	.0069	78	201	.60	6.670	.0085
30	137	.60	6.777	.0091	79	202	.60	5.464	.0543
31	138	.60	7.398	.0057	80	203	1.20	1.317	.0104
32	139	.60	6.907	.0068	81	204	.80	2.112	.0173
33	140	.60	7.176	.0049	82	205	.60	5.262	.0091
34	141	.60	6.667	.0065	83	206	1.20	1.242	.0172
35	142	.60	5.411	.0106	84	207	.60	5.957	.0090
36	143	.60	8.022	.0074	85	208	1.20	1.131	.0187
37	144	.40	9.020	.0074	86	209	1.20	1.183	.0168
38	161	.80	3.610	.0122	87	210	1.20	1.184	.0386
39	162	.80	3.566	.0082	88	211	2.00	.167	.0776
40	163	.80	2.378	.0203	89	212	1.20	1.186	.0259
41	164	.80	2.544	.0169	90	213	1.20	1.813	.0700
42	165	.80	2.166	.0127	91	214	.80	2.392	.0291
43	166	1.20	2.019	.0138	92	215	1.20	1.696	.0196
44	167	.80	3.426	.0097	93	216	.60	4.625	.0178
45	168	.80	4.020	.0100	94	217	.60	4.786	.0141
46	169	.80	3.174	.0126	95	218	1.20	1.521	.0304
47	170	.80	3.839	.0310	96	219	.80	2.595	.0219
48	171	.80	3.372	.0112	97	220	.80	2.398	.0185
49	172	.80	2.581	.0145	98	0	-0	0	0
130		.100							

BIT ON LOOP 61

DATE 5/12/75

AEDC(ARO,INC.) ARNOLD AFS, TENNESSEE
VON KARMAN GAS DYNAMICS FACILITY
50 INCH HYPERSONIC TUNNEL B
V41R-B/A

GROUP	TEST CONDITION	MODEL	MACH NO	PO,PSIA	TO,DEG R	ALPHA-MODEL	ALPHA-SECTOR	ALPHA-PREBEND	ROLL MODEL	YAW
131	37	140 B	8.00	661.8	1343	29.03	10.17	30.00	191.36	2.0

T-INF (DEG R)	P-INF (PSIA)	Q-INF (PSIA)	V-INF (FT/SEC)	RHO-INF (SLUGS/FT3)	MU-INF (LB-SEC/FT2)	RE/FT (FT-1)	HREF-FR (R= .0400FT)	STFR (R= .0400FT)	SWITCH POSITION
97.3	.288	3.954	3867	7.608E-05	7.837E-08	3.755E 06	3.249E-02	1.387E-02	1

IC	TW	DTWDT	QDOT	H(TO)	H(TO)/HREF	H(.9TO)	H(.9TO)/HREF	X/L	Z,FULL SCALE(IN)
								FUSELAGE VENT NO. 1	
1	544.2	7.474	.990	1.239E-03	.0381	1.489E-03	.0458	.4434	376.6300
2	545.5	7.558	1.022	1.281E-03	.0394	1.541E-03	.0474	.4264	371.6300
3	545.3	8.001	1.173	1.383E-03	.0426	1.663E-03	.0512	.4303	371.6300
4	544.7	8.022	1.095	1.371E-03	.0422	1.648E-03	.0507	.4342	371.6300
5	544.9	8.529	1.141	1.430E-03	.0440	1.719E-03	.0529	.4380	371.6300
6	545.5	9.239	1.228	1.540E-03	.0474	1.852E-03	.0570	.4434	369.1300
7	546.1	8.473	1.241	1.557E-03	.0479	1.872E-03	.0576	.4226	366.6300
8	545.2	7.600	1.153	1.441E-03	.0444	1.732E-03	.0533	.4264	366.6300
9	546.7	8.605	1.257	1.578E-03	.0486	1.898E-03	.0584	.4303	366.6300
10	546.1	9.009	1.291	1.620E-03	.0499	1.948E-03	.0600	.4342	366.6300
11	547.5	9.633	1.318	1.644E-03	.0506	1.978E-03	.0609	.4380	366.6300
12	547.6	9.837	1.362	1.712E-03	.0527	2.060E-03	.0634	.4496	366.6300
13	550.5	10.285	1.608	2.028E-03	.0624	2.442E-03	.0752	.4187	357.1300
14	549.1	10.225	1.473	1.767E-03	.0544	2.127E-03	.0655	.4396	361.6300
15	549.6	11.108	1.490	1.877E-03	.0578	2.260E-03	.0696	.4434	361.6300
16	549.2	9.747	1.325	1.668E-03	.0513	2.008E-03	.0618	.4396	355.6300
17	549.1	8.951	1.217	1.533E-03	.0472	1.845E-03	.0568	.4434	355.6300
18	548.0	7.286	1.022	1.285E-03	.0396	1.547E-03	.0476	.4396	351.6300
19	546.2	4.992	.771	8.812E-04	.0271	1.060E-03	.0326	.4291	332.6300
								CARGO BAY VENT NO. 1	
22	540.5	7.961	1.176	1.378E-03	.0424	1.654E-03	.0509	.3974	397.6300
23	540.3	8.247	1.153	1.436E-03	.0442	1.724E-03	.0531	.4013	397.6300
24	541.1	8.879	1.222	1.498E-03	.0461	1.800E-03	.0554	.4052	397.6300
25	541.2	8.819	1.162	1.449E-03	.0446	1.741E-03	.0536	.4090	397.6300
26	542.7	9.701	1.275	1.593E-03	.0490	1.914E-03	.0589	.4129	397.6300
27	541.5	8.512	1.147	1.481E-03	.0456	1.779E-03	.0547	.3936	392.6300
28	542.3	8.743	1.259	1.572E-03	.0484	1.888E-03	.0581	.3974	392.6300
29	542.3	9.066	1.309	1.635E-03	.0503	1.964E-03	.0605	.4013	392.6300
30	541.2	9.712	1.397	1.742E-03	.0536	2.093E-03	.0644	.4052	392.6300
31	541.5	9.836	1.376	1.716E-03	.0528	2.062E-03	.0635	.4090	392.6300
32	542.3	10.066	1.336	1.668E-03	.0514	2.005E-03	.0617	.4129	392.6300
33	541.4	7.076	1.012	1.263E-03	.0389	1.517E-03	.0467	.4090	386.1300
34	542.9	8.613	1.167	1.458E-03	.0449	1.752E-03	.0539	.4129	387.6300
35	544.7	10.602	1.514	1.885E-03	.0580	2.266E-03	.0697	.3897	383.1300
36	542.5	5.651	.821	1.026E-03	.0316	1.232E-03	.0379	.4090	378.6300
37	543.3	7.398	1.042	1.303E-03	.0401	1.566E-03	.0482	.4129	382.1300
38	543.6	6.547	.914	1.143E-03	.0352	1.373E-03	.0423	.4129	377.1300
39	543.3	5.587	.817	1.022E-03	.0314	1.228E-03	.0378	.4001	373.6300
								PROTUBERANCES	
								X/L	Z,FULL SCALE(IN)
41	541.4	8.534	1.144	1.426E-03	.0439	1.714E-03	.0527	.3546	379.0500
42	544.4	11.556	1.582	1.981E-03	.0610	2.381E-03	.0733	.3604	379.0500
43	539.8	4.713	.612	7.618E-04	.0234	9.147E-04	.0282	.3450	374.0500

DATE 5/12/75

AEDC(ARO,INC.) ARNOLD AFS, TENNESSEE
VON KARMAN GAS DYNAMICS FACILITY
50 INCH HYPERSONIC TUNNEL B
V41H-B7A

GROUP	TEST CONDITION	MODEL	MACH NO	PO,PSIA	TO,DEG R	ALPHA-MODEL	ALPHA-SECTOR	ALPHA-PREBEND	ROLL MODEL	YAW
131	37	140 B	8.00	861.8	1343	20.03	10.17	30.00	191.36	2.0

T-INF (DEG R)	P-INF (PSIA)	Q-INF (PSIA)	V-INF (FT/SEC)	RHO-INF (SLUGS/FT3)	MU-INF (LB-SEC/FT2)	RE/FT (FT-1)	HREF-FR (R= .0400FT)	STFR (R= .0400FT)	SWITCH POSITION
97.3	.088	3.954	3867	7.606E-05	7.837E-08	3.755E 06	3.249E-02	1.387E-02	1

TC NO	T∞	DTWDT	QDOT	H(TO)	H(TO)/HREF	H(.9TO)	H(.9TO)/HREF
44	544.0	11.148	1.521	1.903E-03	.0586	2.288E-03	.0704
45	551.4	17.538	2.442	3.083E-03	.0949	3.713E-03	.1143
46	550.5	17.007	2.390	3.015E-03	.0928	3.630E-03	.1117
47	540.7	4.533	.603	7.520E-04	.0231	9.032E-04	.0278
48	547.3	11.323	1.558	1.957E-03	.0602	2.354E-03	.0725
49	542.6	6.746	.928	1.159E-03	.0357	1.393E-03	.0429
50	553.0	14.623	2.044	2.546E-03	.0796	3.116E-03	.0959
51	548.4	11.177	1.523	1.917E-03	.0590	2.306E-03	.0710
52	545.9	7.479	1.032	1.294E-03	.0398	1.556E-03	.0479
53	545.1	8.568	1.254	1.571E-03	.0484	1.889E-03	.0582
54	537.5	2.881	.411	5.102E-04	.0157	6.122E-04	.0188
55	545.9	7.459	1.069	1.341E-03	.0413	1.612E-03	.0496
56	538.0	2.777	.358	4.444E-04	.0137	5.333E-04	.0164
57	539.2	2.957	.362	4.496E-04	.0138	5.398E-04	.0166
58	540.8	3.663	.484	6.035E-04	.0186	7.249E-04	.0223
59	541.7	3.349	.441	5.508E-04	.0170	6.617E-04	.0204
60	541.5	3.201	.446	5.567E-04	.0171	6.687E-04	.0206
61	541.4	3.336	.423	5.277E-04	.0162	6.339E-04	.0195
62	539.5	3.002	.368	4.582E-04	.0141	5.502E-04	.0169
63	538.5	2.819	.368	4.578E-04	.0141	5.495E-04	.0169
64	[illegible]	[illegible]	[illegible]	[illegible]	[illegible]	[illegible]	[illegible]
65	537.5	2.747	.374	4.637E-04	.0143	5.565E-04	.0171
66	538.9	3.016	.381	4.734E-04	.0146	5.683E-04	.0175
67	540.6	3.237	.455	5.674E-04	.0175	6.814E-04	.0210
68	542.4	4.069	.516	6.449E-04	.0199	7.749E-04	.0239

PROTUBERANCES

X/L	Z,FULL SCALE(IN)
.3508	374.0500
.3566	374.0500
.3604	374.0500
.3392	366.5500
.3566	366.5500
.3392	360.7000
.3566	360.7000
.3604	360.7000
.3392	353.2000
.3450	353.2000
.3508	353.2000
.3566	353.2000

SUBLIMATOR VENT NO. 1

X/L	Z,FULL SCALE(IN)
.3031	371.1300
.3074	369.1300
.3089	363.6300
.3074	358.1300
.3031	356.1300
.2988	358.1300
.2973	363.6300
.2988	369.1300
.3031	376.1300
.3089	378.6300
.3101	372.6300
.3157	370.3800
.3128	363.6300

DATE 5/12/75

AEDC(ARO,INC.) ARNOLD AFS, TENNESSEE
VON KARMAN GAS DYNAMICS FACILITY
50 INCH HYPERSONIC TUNNEL H
V41B-B7A

GROUP	TEST CONDITION	MODEL	MACH NO	PO,PSIA	TO,DEG R	ALPHA-MODEL	ALPHA-SECTOR	ALPHA-PREBEND	ROLL MODEL	YAW
131	37	140 B	8.00	861.8	1343	20.03	10.17	30.00	191.36	2.0

T-INF (DEG R)	P-INF (PSIA)	Q-INF (PSIA)	V-INF (FT/SEC)	RHO-INF (SLUGS/FT3)	MU-INF (LB-SEC/FT2)	RE/FT (FT-1)	HREF-FR (R= .0400FT)	STFR (R= .0400FT)	SWITCH POSITION
97.3	.088	3.554	3867	7.608E-05	7.837E-08	3.755E 06	3.249E-02	1.387E-02	1

TC NO	TW	DT*DT	QDOT	H(TO)	H(TO)/HREF	H(.9TO)	H(.9TO)/HREF	X/L	Z,FULL SCALE(IN)
FUSELAGE VENT PANEL NO. 7									
69	538.8	3.480	.496	6.042E-04	.0186	7.253E-04	.0223	.2487	356.4000
70	538.6	3.446	.423	5.253E-04	.0162	6.305E-04	.0194	.2591	356.4000
71	539.7	3.973	.541	6.733E-04	.0207	8.084E-04	.0249	.2419	351.4000
72	539.1	3.510	.498	6.195E-04	.0191	7.437E-04	.0229	.2487	351.4000
73	539.8	3.723	.444	6.018E-04	.0185	7.227E-04	.0222	.2552	351.4000
74	539.5	3.653	.443	5.520E-04	.0170	6.628E-04	.0204	.2610	351.4000
75	540.9	4.181	.570	7.099E-04	.0218	8.526E-04	.0262	.2419	342.8000
77	541.1	3.341	.475	5.917E-04	.0182	7.107E-04	.0219	.2552	342.8000
78	541.3	3.706	.510	6.360E-04	.0196	7.640E-04	.0235	.2610	342.8000
79	542.6	4.217	.541	6.756E-04	.0208	8.118E-04	.0250	.2419	334.2000
80	541.6	3.239	.443	5.524E-04	.0170	6.635E-04	.0204	.2487	334.2000
81	541.3	3.356	.469	5.853E-04	.0180	7.030E-04	.0216	.2552	334.2000
ACCESS HATCH WINDOW									
83	536.0	4.802	.642	7.951E-04	.0245	9.538E-04	.0294	.2131	398.0000
84	537.7	5.139	.678	8.419E-04	.0259	1.010E-03	.0311	.2131	388.0000
85	537.0	4.538	.619	7.678E-04	.0236	9.213E-04	.0284	.2131	383.0000
87	534.0	3.334	.477	5.888E-04	.0181	7.060E-04	.0217	.2222	395.8000
88	536.7	4.672	.654	8.109E-04	.0250	9.729E-04	.0299	.2193	386.5000
89	537.5	3.657	.538	6.681E-04	.0206	8.017E-04	.0247	.2177	381.8000
90	536.2	4.298	.586	7.282E-04	.0224	8.712E-04	.0268	.2297	389.5000
91	537.1	4.693	.645	7.995E-04	.0246	9.594E-04	.0295	.2243	382.5000
92	537.7	4.351	.615	7.636E-04	.0235	9.164E-04	.0282	.2214	378.7000
93	537.4	3.985	.510	6.326E-04	.0195	7.591E-04	.0234	.2343	374.0000
94	537.6	4.818	.627	7.766E-04	.0240	9.344E-04	.0288	.2274	375.5000
95	538.2	4.280	.629	7.568E-04	.0233	9.084E-04	.0280	.2239	373.3000
96	538.0	4.032	.525	6.520E-04	.0201	7.826E-04	.0241	.2363	368.0000
97	539.0	4.748	.628	7.559E-04	.0233	9.075E-04	.0279	.2286	368.0000
98	539.0	4.310	.606	7.534E-04	.0232	9.044E-04	.0278	.2247	368.0000
100	539.4	4.513	.641	7.970E-04	.0245	9.569E-04	.0295	.2274	360.5000
102	540.0	4.362	.617	7.686E-04	.0237	9.229E-04	.0284	.2081	354.3000
103	538.9	4.888	.643	7.998E-04	.0246	9.601E-04	.0296	.2023	362.7000
105	538.8	5.322	.667	8.293E-04	.0255	9.955E-04	.0306	.2050	378.7000
106	537.4	5.487	.705	8.742E-04	.0269	1.049E-03	.0323	.2050	386.2000

GROUP 131 CENTERLINE TIME 2.75

CH	TC	FIT LENGTH	DTDWT	UNCERTAINTY	CH	TC	FIT LENGTH	DTDWT	UNCERTAINTY
1	1	.60	7.476	.0073	50	53	.40	8.568	.0256
2	2	.60	7.558	.0084	51	54	.80	2.881	.0200
3	3	.60	8.001	.0072	52	55	.60	7.459	.0120
4	4	.40	8.022	.0100	53	56	.80	2.777	.0149
5	5	.40	8.529	.0233	54	57	.80	2.957	.0114
6	6	.40	9.239	.0083	55	58	.80	3.663	.0108
7	7	.40	8.473	.0830	56	59	.80	3.349	.0256
8	8	.60	7.600	.0047	57	60	.80	3.201	.0124
9	9	.40	8.605	.0130	58	61	.80	3.336	.0106
10	10	.40	9.009	.0087	59	62	.80	3.002	.0173
11	11	.40	9.633	.0134	60	63	.80	2.819	.0137
12	12	.40	9.837	.0098	61	64	2.00	-.002	-7.0753
13	13	.40	10.885	.0047	62	65	.80	2.747	.0118
14	14	.40	10.225	.0141	63	66	.80	3.016	.0112
15	15	.40	11.158	.0124	64	67	.80	3.237	.0116
16	16	.40	9.747	.0098	65	68	.80	4.069	.0095
17	17	.40	8.958	.0282	66	69	.80	3.480	.0155
18	18	.60	7.286	.0066	67	70	.80	3.446	.0094
19	19	.60	4.992	.0142	68	71	.80	3.973	.0590
20	22	.40	7.961	.0128	69	72	.80	3.510	.0157
21	23	.40	8.247	.0059	70	73	.80	3.723	.0087
22	24	.40	8.879	.0134	71	74	.80	3.653	.0161
23	25	.40	8.819	.0051	72	75	.60	4.181	.0177
24	26	.40	9.701	.0184	73	77	.80	3.341	.0128
25	27	.40	8.512	.0163	74	78	.80	3.706	.0108
26	28	.40	8.743	.0134	75	79	.60	4.217	.0134
27	29	.40	9.066	.0123	76	80	.80	3.239	.0093
28	30	.40	9.712	.0078	77	81	.80	3.356	.0109
29	31	.40	9.836	.0049	78	83	.60	4.802	.0151
30	32	.40	10.066	.0099	79	84	.60	5.139	.0506
31	33	.60	7.076	.0067	80	85	.60	4.538	.0103
32	34	.40	8.612	.0116	81	87	.80	3.334	.0100
33	35	.40	10.602	.0069	82	88	.60	4.672	.0080
34	36	.60	5.651	.0105	83	89	.80	3.657	.0192
35	37	.60	7.398	.0079	84	90	.60	4.298	.0130
36	38	.60	6.547	.0086	85	91	.60	4.693	.0141
37	39	.60	5.587	.0059	86	92	.60	4.351	.0112
38	41	.40	8.534	.0081	87	93	.80	3.985	.0270
39	42	.40	11.556	.0056	88	94	.60	4.818	.0094
40	43	.60	4.713	.0281	89	95	.60	4.280	.0156
41	44	.40	11.148	.0048	90	96	.60	4.032	.0533
42	45	.30	17.538	.0091	91	97	.60	4.748	.0183
43	46	.30	17.007	.0115	92	98	.60	4.310	.0340
44	47	.60	4.533	.0137	93	100	.60	4.513	.0140
45	48	.40	11.323	.0070	94	102	.60	4.362	.0138
46	49	.60	6.740	.0145	95	103	.60	4.888	.0164
47	50	.40	14.623	.0102	96	105	.60	5.322	.0142
48	51	.40	11.177	.0083	97	106	.60	5.487	.0082
49	52	.60	7.479	.0087	98	0	-0	0	0
132		.050							

BIT ON LOOP 60

DATE 5/12/75

AEDC(ARO,INC.) ARNOLD AFS, TENNESSEE
VON KARMAN GAS DYNAMICS FACILITY
50 INCH HYPERSONIC TUNNEL B
V41B-87A

GROUP	TEST CONDITION	MODEL	MACH NO	PO,PSIA	TO,DEG R	ALPHA-MODEL	ALPHA-SECTOR	ALPHA-PREBEND	ROLL MODEL	YAW
132	37	140 B	8.00	859.5	1346	20.05	10.15	30.00	191.42	2.0

T-INF (DEG R)	P-INF (PSIA)	Q-INF (PSIA)	V-INF (FT/SEC)	RHO-INF (SLUGS/FT3)	MU-INF (LB-SEC/FT2)	RE/FT (FT-1)	HREF-FR (R= .0400FT)	STFR (R= .0400FT)	SWITCH POSITION
97.5	.098	3.944	3871	7.574E-05	7.851E-08	3.734E 06	3.245E-02	1.390E-02	2

TC NO	TW	DTWDT	QDOT	H(TO)	H(TO)/HREF	H(.9TO)	H(.9TO)/HREF		
								ACCESS HATCH WINDOW	
								X/L	Z,FULL SCALE(IN)
107	533.6	4.906	.723	8.658E-04	.0267	1.038E-03	.0320	.2050	396.2000
								FUSELAGE VENT PANEL NO. 3 AND 1	
								X/L	Z,FULL SCALE(IN)
108	536.5	9.894	1.049	1.296E-03	.0399	1.555E-03	.0479	.1244	377.5000
109	533.8	8.163	1.011	1.244E-03	.0383	1.491E-03	.0459	.1302	377.5000
110	534.0	7.536	.956	1.178E-03	.0363	1.412E-03	.0435	.1360	377.5000
111	534.8	7.343	.886	1.092E-03	.0337	1.310E-03	.0403	.1418	377.5000
112	535.9	7.329	.872	1.076E-03	.0332	1.291E-03	.0398	.1476	377.5000
113	535.8	9.196	1.056	1.304E-03	.0402	1.564E-03	.0482	.1215	273.5000
114	535.2	7.948	.955	1.179E-03	.0363	1.413E-03	.0435	.1273	273.5000
115	534.5	6.964	.865	1.066E-03	.0328	1.278E-03	.0394	.1331	273.5000
116	534.2	6.823	.838	1.033E-03	.0318	1.238E-03	.0381	.1389	273.5000
117	536.9	7.345	.848	1.048E-03	.0323	1.257E-03	.0387	.1447	273.5000
118	535.4	6.176	.856	1.056E-03	.0325	1.266E-03	.0390	.1409	366.0000
119	537.4	7.165	.930	1.150E-03	.0354	1.380E-03	.0425	.1442	366.0000
120	538.1	7.296	.914	1.132E-03	.0349	1.359E-03	.0419	.1215	359.5000
121	537.2	6.351	.781	9.663E-04	.0298	1.159E-03	.0357	.1303	359.5000
122	538.1	6.680	.834	1.033E-03	.0318	1.239E-03	.0382	.1337	359.5000
								LOWER RCS NOZZLES	
								X/L	Z,FULL SCALE(IN)
124	535.0	7.152	.639	7.885E-04	.0243	9.454E-04	.0291	.0950	400.0000
125	534.4	7.628	.831	1.025E-03	.0316	1.228E-03	.0379	.0988	400.0000
126	535.1	7.402	1.015	1.253E-03	.0386	1.502E-03	.0463	.1027	400.0000
127	533.4	6.426	.866	1.067E-03	.0329	1.279E-03	.0394	.0911	395.0000
128	533.5	8.462	1.028	1.265E-03	.0390	1.516E-03	.0467	.0950	395.0000
129	534.8	8.975	1.055	1.300E-03	.0401	1.559E-03	.0480	.0988	395.0000
130	535.0	7.699	.922	1.137E-03	.0350	1.364E-03	.0420	.0810	390.0000
131	532.7	6.411	.947	1.165E-03	.0359	1.396E-03	.0430	.0857	390.0000
132	533.6	8.540	.995	1.225E-03	.0378	1.469E-03	.0453	.0963	390.0000
133	534.9	9.152	1.112	1.372E-03	.0423	1.645E-03	.0507	.0857	383.8000
134	531.5	8.199	1.097	1.347E-03	.0415	1.614E-03	.0497	.0872	377.3000
135	535.1	10.452	1.256	1.550E-03	.0478	1.858E-03	.0573	.0903	374.5500
136	537.1	11.567	1.288	1.593E-03	.0491	1.911E-03	.0589	.0960	374.5500
137	534.6	10.436	1.366	1.684E-03	.0519	2.019E-03	.0622	.0872	370.5500
138	536.5	11.336	1.338	1.616E-03	.0498	1.939E-03	.0597	.0928	370.5500
139	536.1	10.157	1.299	1.604E-03	.0494	1.924E-03	.0593	.0816	366.0500
140	537.8	10.636	1.356	1.679E-03	.0517	2.014E-03	.0621	.0934	362.4000
141	537.1	9.480	1.255	1.552E-03	.0478	1.862E-03	.0574	.0973	362.4000
142	537.8	7.853	.857	1.061E-03	.0327	1.273E-03	.0392	.0833	355.2000
143	538.6	11.473	1.156	1.432E-03	.0441	1.718E-03	.0529	.0919	355.2000
144	541.5	12.584	1.664	2.069E-03	.0638	2.485E-03	.0766	.0949	349.0000

DATE 5/12/75

AEDC(ARO,INC.) ARNOLD AFS, TENNESSEE
VON KARMAN GAS DYNAMICS FACILITY
50 INCH HYPERSONIC TUNNEL B
V418-B7A

GROUP	TEST CONDITION	MODEL	MACH NO	PO,PSIA	TO,DEG R	ALPHA-MODEL	ALPHA-SECTOR	ALPHA-PREBEND	ROLL MODEL	YAW
132	37	140 B	8.00	859.5	1346	20.05	10.15	30.00	191.42	2.0

T-INF (DEG R)	P-INF (PSIA)	Q-INF (PSIA)	V-INF (FT/SEC)	RHO-INF (SLUGS/FT3)	MU-INF (LB-SEC/FT2)	RE/FT (FT-1)	HREF-FR (R= .0400FT)	STFR (R= .0400FT)	SWITCH POSITION
97.5	.088	3.944	3871	7.574E-05	7.851E-08	3.734E 06	3.245E-02	1.390E-02	2

IC NO	TW	DTWDT	QDOT	H(TO)	H(TO)/HREF	H(.9TO)	H(.9TO)/HREF
161	529.1	7.743	.914	1.119E-03	.0345	1.340E-03	.0413
162	533.4	6.807	.644	7.932E-04	.0244	9.507E-04	.0293
163	531.2	4.658	.571	7.014E-04	.0216	8.402E-04	.0259
164	530.9	3.486	.454	5.570E-04	.0172	6.672E-04	.0206
165	532.0	2.687	.338	4.155E-04	.0128	4.978E-04	.0153
166	532.4	2.200	.292	3.464E-04	.0107	4.150E-04	.0128
167	529.8	5.806	.784	9.608E-04	.0296	1.151E-03	.0355
168	532.4	6.243	.655	8.050E-04	.0248	9.646E-04	.0297
169	530.1	3.969	.481	5.898E-04	.0182	7.064E-04	.0218
170	530.8	3.518	.439	5.369E-04	.0166	6.455E-04	.0199
171	532.0	3.658	.441	5.415E-04	.0167	6.488E-04	.0200
172	531.8	3.066	.399	4.906E-04	.0151	5.878E-04	.0181
173	531.8	4.692	.626	7.688E-04	.0237	9.211E-04	.0284
174	531.4	3.795	.432	5.301E-04	.0163	6.350E-04	.0196
175	531.5	3.184	.456	5.599E-04	.0173	6.708E-04	.0207
176	531.4	2.673	.364	4.465E-04	.0138	5.349E-04	.0165
177	558.2	39.244	5.464	6.939E-03	.2138	8.369E-03	.2579
178	560.5	41.372	8.239	1.049E-02	.3233	1.266E-02	.3902
179	564.6	44.935	9.558	1.224E-02	.3770	1.478E-02	.4555
180	541.0	8.616	1.128	1.401E-03	.0432	1.682E-03	.0518
181	552.4	24.596	3.370	4.249E-03	.1309	5.117E-03	.1577
182	555.1	54.901	7.945	1.018E-02	.3136	1.230E-02	.3789
183	533.1	5.377	.674	8.299E-04	.0256	9.947E-04	.0306
184	534.1	6.559	.896	1.105E-03	.0340	1.324E-03	.0408
185	541.9	11.462	1.382	1.720E-03	.0530	2.066E-03	.0636
186	557.0	30.794	3.910	4.957E-03	.1527	5.977E-03	.1842
187	578.4	65.056	9.853	1.154E-02	.3555	1.399E-02	.4311
188	553.2	31.345	7.364	9.292E-03	.2863	1.119E-02	.3449
189	541.8	12.296	1.759	2.188E-03	.0674	2.627E-03	.0810
190	555.9	32.213	4.684	5.930E-03	.1827	7.148E-03	.2202
191	569.0	61.226	9.517	1.225E-02	.3775	1.482E-02	.4567

UPPER RCS NOZZLES

X/L	2Y/B
.0619	-.0160
.0709	-.0160
.0807	-.0160
.0943	-.0160
.0978	-.0160
.1013	-.0160
.0619	-.0320
.0709	-.0320
.0807	-.0320
.0943	-.0320
.0978	-.0320
.1013	-.0320
.0807	-.0480
.0943	-.0480
.0978	-.0480
.1013	-.0480

CANOPY

DATE 5/12/75

AEDC(ARO,INC.) ARNOLD AFS, TENNESSEE
VON KARMAN GAS DYNAMICS FACILITY
50 INCH HYPERSONIC TUNNEL B
V41B-87A

GROUP	TEST CONDITION	MODEL	MACH NO	PO,PSIA	TO,DEG R	ALPHA-MODEL	ALPHA-SECTOR	ALPHA-PREBEND	ROLL MODEL	YAW
132	37	140 B	8.00	859.5	1346	20.05	10.15	30.00	191.42	2.0

T-INF (DEG R)	P-INF (PSIA)	Q-INF (PSIA)	V-INF (FT/SEC)	RHO-INF (SLUGS/FT3)	MU-INF (LB-SEC/FT2)	RE/FT (FT-1)	HREF-FR (R= .0400FT)	STFR (R= .0400FT)	SWITCH POSITION
97.5	.088	3.944	3871	7.574E-05	7.851E-08	3.734E 06	3.245E-02	1.390E-02	2

CANOPY

TC NO	TW	LINDT	QDOT	H(TO)	H(TO)/HREF	H(.9TO)	H(.9TO)/HREF
192	532.3	2.395	.333	4.150E-04	.0128	4.972E-04	.0153
193	546.5	24.374	4.722	5.909E-03	.1821	7.108E-03	.2189
194	533.9	5.024	.649	7.994E-04	.0246	9.583E-04	.0295
195	543.2	14.015	1.736	2.163E-03	.0666	2.599E-03	.0801
196	557.6	30.420	4.041	5.123E-03	.1578	6.177E-03	.1903
197	529.9	2.076	.255	2.518E-04	.0078	3.015E-04	.0093
198	529.5	2.558	.296	3.633E-04	.0112	4.350E-04	.0134
199	530.5	3.298	.442	5.428E-04	.0167	6.501E-04	.0200
200	536.7	9.030	1.286	1.592E-03	.0491	1.910E-03	.0589
201	551.5	30.117	4.288	5.399E-03	.1664	6.501E-03	.2003
202	547.6	24.918	3.171	3.973E-03	.1224	4.779E-03	.1473
203	532.1	5.303	.658	8.084E-04	.0249	9.686E-04	.0298
204	537.0	10.642	1.656	2.048E-03	.0631	2.457E-03	.0757
205	552.3	36.636	5.762	7.263E-03	.2238	8.747E-03	.2695
206	531.5	1.555	.259	3.166E-04	.0098	3.816E-04	.0118
207	540.6	16.324	2.194	2.723E-03	.0839	3.269E-03	.1007
208	530.5	3.659	.491	6.021E-04	.0186	7.210E-04	.0222
209	530.3	4.884	.670	8.223E-04	.0253	9.848E-04	.0303
210	534.8	11.154	1.490	1.837E-03	.0566	2.203E-03	.0679
211	530.9	1.379	.167	2.053E-04	.0063	2.459E-04	.0076
212	530.1	2.044	.275	3.373E-04	.0104	4.040E-04	.0124
213	532.7	6.718	.890	1.095E-03	.0337	1.312E-03	.0404
214	533.9	10.324	1.448	1.783E-03	.0549	2.138E-03	.0659
215	538.2	16.328	2.324	2.878E-03	.0887	3.453E-03	.1064
216	535.7	11.510	1.636	2.020E-03	.0622	2.422E-03	.0746
217	535.1	10.107	1.441	1.777E-03	.0548	2.131E-03	.0657
218	532.4	8.193	1.130	1.389E-03	.0428	1.664E-03	.0513
219	537.3	16.108	2.270	2.808E-03	.0865	3.369E-03	.1038
220	540.5	21.658	2.989	3.713E-03	.1144	4.458E-03	.1373

GROUP 132 CENTERLINE TIME 2.95

CH	TC	FIT LENGTH	DTDWT	UNCERTAINTY	CH	TC	FIT LENGTH	DTDWT	UNCERTAINTY
1	107	.60	4.906	.0082	50	173	.60	4.692	.0113
2	108	.40	9.898	.0061	51	174	.80	3.795	.0120
3	109	.40	8.163	.0098	52	175	.80	3.184	.0192
4	110	.60	7.536	.0069	53	176	.80	2.673	.0141
5	111	.60	7.343	.0178	54	177	.20	39.244	.0056
6	112	.60	7.329	.0079	55	178	.20	41.372	.0047
7	113	.40	9.196	.0661	56	179	.20	44.935	.0086
8	114	.60	7.948	.0073	57	180	.40	8.616	.0103
9	115	.60	6.964	.0086	58	181	.30	24.596	.0025
10	116	.60	6.823	.0081	59	182	.20	54.901	.0039
11	117	.60	7.345	.0152	60	183	.60	5.377	.0089
12	118	.60	6.176	.0064	61	184	.60	6.559	.0136
13	119	.60	7.165	.0037	62	185	.40	11.462	.0080
14	120	.60	7.296	.0059	63	186	.30	30.794	.0055
15	121	.60	6.351	.0123	64	187	.20	65.056	.0019
16	122	.60	6.680	.0094	65	188	.30	31.345	.0049
17	124	.60	7.152	.0064	66	189	.40	12.296	.0105
18	125	.60	7.628	.0075	67	190	.30	32.213	.0031
19	126	.60	7.402	.0084	68	191	.20	61.226	.0175
20	127	.60	6.426	.0109	69	192	.80	2.395	.0207
21	128	.40	8.452	.0116	70	193	.30	24.379	.0050
22	129	.40	8.975	.0092	71	194	.60	5.029	.0120
23	130	.60	7.699	.0123	72	195	.40	14.015	.0100
24	131	.60	6.411	.0107	73	196	.30	30.420	.0070
25	132	.40	8.540	.0109	74	197	.80	2.076	.0192
26	133	.40	9.152	.0102	75	198	.80	2.558	.0228
27	134	.40	8.199	.0132	76	199	.80	3.298	.0096
28	135	.40	10.452	.0105	77	200	.40	9.030	.0115
29	136	.40	11.567	.0035	78	201	.30	30.117	.0069
30	137	.40	10.436	.0056	79	202	.30	24.918	.0341
31	138	.40	11.336	.0066	80	203	.60	5.303	.0103
32	139	.40	10.157	.0103	81	204	.40	10.642	.0043
33	140	.40	10.636	.0056	82	205	.20	36.630	.0071
34	141	.40	9.480	.0069	83	206	1.20	1.958	.0133
35	142	.60	7.852	.0072	84	207	.30	16.324	.0116
36	143	.40	11.473	.0043	85	208	.80	3.659	.0092
37	144	.40	12.584	.0064	86	209	.60	4.884	.0129
38	161	.60	7.743	.0085	87	210	.40	11.154	.0210
39	162	.60	6.807	.0067	88	211	1.20	1.379	.0121
40	163	.60	4.658	.0181	89	212	.80	2.044	.0320
41	164	.80	3.486	.0070	90	213	.60	6.718	.0358
42	165	.80	2.687	.0123	91	214	.40	10.324	.0144
43	166	.80	2.200	.0225	92	215	.30	16.328	.0165
44	167	.60	5.806	.0086	93	216	.40	11.510	.0083
45	168	.60	6.243	.0046	94	217	.40	10.107	.0101
46	169	.80	3.969	.0093	95	218	.40	8.193	.0193
47	170	.80	3.518	.0259	96	219	.30	16.108	.0083
48	171	.80	3.658	.0125	97	220	.30	21.658	.0063
49	172	.80	3.066	.0100	98	0	-0	0	0
	133	.050							

BIT ON LOOP 60

DATE 5/12/75

AEDC(ARO,INC.) ARNOLD AFS, TENNESSEE
VON KARMAN GAS DYNAMICS FACILITY
50 INCH HYPERSONIC TUNNEL B
V41B-67A

GROUP	TEST CONDITION	MODEL	MACH NO	PO,PSIA	TO,DEG R	ALPHA-MODEL	ALPHA-SECTOR	ALPHA-PREBEND	ROLL MODEL	YAW
133	37	140 B	8.00	861.2	1346	20.05	10.14	30.00	191.42	2.0

T-INF (DEG R)	P-INF (PSIA)	Q-INF (PSIA)	V-INF (FT/SEC)	RHO-INF (SLUGS/FT3)	MU-INF (LB-SEC/FT2)	RE/FT (FT-1)	HREF-FR (R= .0400FT)	STFR (R= .0400FT)	SWITCH POSITION
97.6	.588	3.952	3872	7.586E-05	7.854E-08	3.740E 06	3.249E-02	1.389E-02	3

TC NO	TW	DTWDT	QDOT	H(TO)	H(TO)/HREF	H(.9TO)	H(.9TO)/HREF	X/L	Z/B	Z,FULL SCALE(IN)
						CANOPY				
221	539.2	1.199	.145	1.772E-04	.0055	2.122E-04	.0065			
222	530.8	4.026	.495	6.077E-04	.0187	7.278E-04	.0224			
223	530.5	8.137	1.103	1.353E-03	.0416	1.620E-03	.0499			
						ESCAPE HATCH AND WINDOW				
224	544.3	15.895	1.531	1.984E-03	.0611	2.385E-03	.0734	.1933	.0162	
225	540.5	9.700	1.164	1.443E-03	.0444	1.732E-03	.0533	.1972	.0162	
226	543.5	19.493	2.065	2.573E-03	.0792	3.092E-03	.0952	.1933	.0384	
227	537.9	10.382	1.524	1.865E-03	.0580	2.262E-03	.0696	.1972	.0384	
228	540.1	17.449	2.251	2.793E-03	.0860	3.353E-03	.1032	.1933	.0653	
229	540.5	13.221	1.7 6	2.115E-03	.0651	2.539E-03	.0782	.1972	.0653	
232	529.8	.674	.091	1.114E-04	.0034	1.334E-04	.0041	.2567	.0235	
233	530.4	.835	.127	1.551E-04	.0048	1.858E-04	.0057	.2606	.0235	
236	528.4	.619	.090	1.106E-04	.0034	1.324E-04	.0041	.2567	.0491	
237	529.1	.714	.100	1.226E-04	.0038	1.468E-04	.0045	.2606	.0491	
						CARGO BAY HINGE NO. 1		X/L	Z,FULL SCALE(IN)	
238	532.0	2.345	.314	3.855E-04	.0119	4.618E-04	.0142	.2879	420.0000	
239	532.1	2.723	.364	4.476E-04	.0138	5.363E-04	.0165	.2917	420.0000	
240	531.9	2.225	.318	3.900E-04	.0120	4.672E-04	.0144	.2840	415.0000	
241	532.4	3.113	.438	5.382E-04	.0166	6.449E-04	.0198	.2879	415.0000	
242	534.6	5.107	.730	8.994E-04	.0277	1.078E-03	.0332	.2917	415.0000	
243	532.5	2.440	.298	3.666E-04	.0113	4.393E-04	.0135	.2801	405.0000	
244	532.4	2.126	.249	3.054E-04	.0094	3.660E-04	.0113	.2840	405.0000	
						CARGO BAY HINGE NO. 2		X/L	Z,FULL SCALE(IN)	
245	533.3	1.919	.274	3.372E-04	.0104	4.042E-04	.0124	.3192	420.0000	
246	533.2	2.153	.308	3.782E-04	.0116	4.533E-04	.0140	.3439	420.0000	
247	533.3	1.917	.282	3.475E-04	.0107	4.165E-04	.0128	.3362	415.0000	
248	533.7	2.453	.362	4.450E-04	.0137	5.333E-04	.0164	.3401	415.0000	
249	535.6	3.867	.570	7.036E-04	.0217	8.437E-04	.0260	.3439	415.0000	
250	534.7	2.618	.329	4.050E-04	.0125	4.856E-04	.0149	.3323	405.0000	
251	534.6	2.594	.319	3.926E-04	.0121	4.707E-04	.0145	.3362	405.0000	
						CARGO BAY HINGE NO. 3		X/L	Z,FULL SCALE(IN)	
252	534.4	3.244	.471	5.801E-04	.0179	6.954E-04	.0214	.3923	420.0000	
253	535.0	3.865	.561	6.918E-04	.0213	8.294E-04	.0255	.3961	420.0000	
254	534.9	3.488	.530	6.530E-04	.0201	7.830E-04	.0241	.3884	415.0000	
257	536.5	4.722	.638	7.876E-04	.0242	9.447E-04	.0291	.3845	405.0000	
258	537.5	5.341	.729	9.012E-04	.0277	1.081E-03	.0333	.3884	405.0000	

DATE 5/12/75

AEDC(ARO,INC.) ARNOLD AFS, TENNESSEE
VON KARMAN GAS DYNAMICS FACILITY
50 INCH HYPERSONIC TUNNEL B
V41H-B/A

GROUP	TEST CONDITION	MODEL	MACH NO	PO,PSIA	TO,DEG R	ALPHA-MODEL	ALPHA-SECTOR	ALPHA-PREBEND	ROLL MODEL	YAW
133	37	140 B	8.00	861.2	1346	20.05	10.14	30.00	191.42	2.0

T-INF (DEG R)	P-INF (PSIA)	Q-INF (PSIA)	V-INF (FT/SEC)	RHO-INF (SLUGS/FT3)	MU-INF (LB-SEC/FT2)	RE/FT (FT-1)	HREF-FR (R= .0400FT)	STFR (R= .0400FT)	SWITCH POSITION
97.6	.088	3.952	3872	7.586E-05	7.854E-08	3.740E 06	3.249E-02	1.389E-02	3

TOP CENTERLINE

IC NO	TW	DTWDT	QDOT	H(TO)	H(TO)/HREF	H(.9TO)	H(.9TO)/HREF	X/L
367	630.4	122.431	15.084	2.107E-02	.6487	2.596E-02	.7989	0
368	546.3	98.653	12.936	1.720E-02	.5295	2.096E-02	.6453	.0008
369	572.3	67.782	8.084	1.044E-02	.3214	1.264E-02	.3890	.0019
370	558.3	48.388	5.972	7.580E-03	.2333	9.141E-03	.2814	.0037
371	554.8	41.480	4.100	5.160E-03	.1595	6.242E-03	.1921	.0058
372	547.4	30.165	3.976	4.890E-03	.1505	5.881E-03	.1810	.0087
373	542.1	19.982	2.625	3.265E-03	.1005	3.922E-03	.1207	.0118
374	539.3	16.156	2.120	2.627E-03	.0809	3.153E-03	.0971	.0151
375	536.3	13.320	1.822	2.250E-03	.0693	2.699E-03	.0831	.0182
376	535.9	11.897	1.569	1.936E-03	.0596	2.321E-03	.0714	.0215
377	533.9	11.334	1.458	1.795E-03	.0552	2.151E-03	.0662	.0246
378	529.3	9.940	1.156	1.415E-03	.0436	1.694E-03	.0521	.0278
379	535.2	11.223	1.379	1.700E-03	.0523	2.039E-03	.0628	.0609
380	533.9	9.261	.951	1.171E-03	.0360	1.404E-03	.0432	.0646
381	535.9	7.848	1.017	1.256E-03	.0386	1.506E-03	.0463	.0684
382	534.3	6.188	.810	9.973E-04	.0307	1.196E-03	.0368	.0721
383	533.5	5.658	.758	9.325E-04	.0287	1.118E-03	.0344	.0760
384	532.7	4.708	.655	8.057E-04	.0248	9.655E-04	.0297	.0796
385	533.2	4.458	.573	7.050E-04	.0217	8.449E-04	.0260	.0789
386	534.3	4.731	.560	6.890E-04	.0212	8.267E-04	.0254	.0982
387	534.8	4.621	.558	6.998E-04	.0215	8.390E-04	.0258	.1019
388	536.9	4.214	.401	4.961E-04	.0153	5.951E-04	.0183	.1160
389	535.5	2.728	.396	4.888E-04	.0150	5.861E-04	.0180	.1195
390	535.2	1.920	.303	3.734E-04	.0115	4.477E-04	.0138	.1231
391	534.5	2.339	.373	4.595E-04	.0141	5.508E-04	.0170	.1268
392	535.2	2.762	.474	5.844E-04	.0180	7.007E-04	.0216	.1305
393	535.3	2.916	.494	6.089E-04	.0187	7.301E-04	.0225	.1338
394	535.2	2.856	.480	5.918E-04	.0182	7.096E-04	.0218	.1376
395	535.4	2.778	.416	5.129E-04	.0158	6.150E-04	.0189	.1411
396	535.9	2.888	.429	5.290E-04	.0163	6.344E-04	.0195	.1448
397	536.9	3.520	.523	6.458E-04	.0199	7.746E-04	.0238	.1483
398	539.0	4.910	.692	8.578E-04	.0264	1.030E-03	.0317	.1519
399	545.7	9.485	1.274	1.592E-03	.0490	1.913E-03	.0589	.1556

DATE 5/12/75

AEDC(ARO,INC.) ARNOLD AFS, TENNESSEE
VON KARMAN GAS DYNAMICS FACILITY
50 INCH HYPERSONIC TUNNEL B
V41A-87A

GROUP	TEST CONDITION	MODEL	MACH NO	PO,PSIA	TO,DEG R	ALPHA-MODEL	ALPHA-SECTOR	ALPHA-PREBEND	ROLL MODEL	YAW
133	37	140 B	8.00	861.2	1346	20.05	10.14	30.00	191.42	2.0

T-INF (DEG R)	P-INF (PSIA)	Q-INF (PSIA)	V-INF (FT/SEC)	RHO-INF (SLUGS/FT3)	MU-INF (LB-SEC/FT2)	RE/FT (FT-1)	HREF-FR (R= .0400FT)	STFR (R= .0400FT)	SWITCH POSITION
97.6	.086	3.952	3872	7.586E-05	7.854E-08	3.740E 06	3.249E-02	1.389E-02	3

TC NO	TW	DT*DT	QDOT	H(TO)	H(TO)/HREF	H(.9TO)	H(.9TO)/HREF	X/L
								TOP CENTERLINE
400	559.8	17.130	2.330	2.929E-03	.0902	3.526E-03	.1085	.1582
401	552.2	21.320	2.787	3.509E-03	.1080	4.226E-03	.1301	.1608
402	556.1	26.105	3.541	4.461E-03	.1379	5.402E-03	.1663	.1635
403	560.4	32.136	3.953	5.043E-03	.1552	6.086E-03	.1873	.1664
404	561.1	33.451	4.104	5.227E-03	.1609	6.309E-03	.1942	.1691
405	563.5	36.452	4.478	5.721E-03	.1761	6.909E-03	.2127	.1720
406	561.8	33.744	4.140	5.272E-03	.1623	6.363E-03	.1959	.1748
407	560.6	30.529	3.993	5.083E-03	.1564	6.134E-03	.1888	.1769
408	558.0	27.693	4.105	5.208E-03	.1603	6.281E-03	.1933	.1800
409	551.4	22.033	3.204	4.030E-03	.1241	4.852E-03	.1494	.1831
410	550.4	18.575	2.693	3.384E-03	.1042	4.073E-03	.1254	.1863
411	546.3	13.710	2.070	2.588E-03	.0797	3.112E-03	.0958	.1894
412	543.8	10.440	1.424	1.775E-03	.0546	2.133E-03	.0656	.1931
413	541.4	7.732	1.040	1.292E-03	.0398	1.552E-03	.0478	.1972
414	537.8	3.747	.503	6.222E-04	.0192	7.465E-04	.0230	.2049
415	533.9	1.063	.164	2.020E-04	.0062	2.421E-04	.0075	.2250
416	531.3	.995	.116	1.427E-04	.0044	1.709E-04	.0053	.2500
								NOSE TC (Z = 338)
								X/L 2Y/B
145	614.2	88.566	13.249	1.656E-02	.5098	2.023E-02	.6228	.0008 .5039
146	615.2	91.341	13.681	1.711E-02	.5267	2.091E-02	.6437	.0023 .5082
147	568.7	73.506	13.122	1.336E-02	.4113	1.625E-02	.5002	.0043 .5135
148	578.1	60.875	8.617	1.122E-02	.3453	1.360E-02	.4187	.0068 .5205
149	566.3	43.925	6.420	8.232E-03	.2534	9.949E-03	.3062	.0095 .5279
150	567.2	40.665	5.891	7.562E-03	.2328	9.142E-03	.2814	.0122 .5354
151	564.4	28.353	4.024	5.147E-03	.1584	6.218E-03	.1914	.0218 .5621
152	563.5	28.806	3.943	5.039E-03	.1551	6.084E-03	.1873	.0251 .5712
153	563.6	27.918	3.442	4.398E-03	.1354	5.311E-03	.1635	.0286 .5808
154	563.4	26.950	3.384	4.323E-03	.1330	5.220E-03	.1607	.0319 .5898
155	561.5	24.490	3.105	3.957E-03	.1218	4.776E-03	.1470	.0354 .5995
156	559.8	22.398	2.806	3.588E-03	.1098	4.305E-03	.1325	.0387 .6085
157	560.1	22.860	2.834	3.606E-03	.1110	4.351E-03	.1339	.0420 .6176
158	559.9	23.445	2.907	3.696E-03	.1138	4.460E-03	.1373	.0462 .6294
159	560.4	24.056	2.722	3.463E-03	.1066	4.179E-03	.1286	.0503 .6406

GROUP 133 CENTERLINE TIME 2.95

CH	TC	FIT LENGTH	DTDWT	UNCERTAINTY	CH	TC	FIT LENGTH	DTDWT	UNCERTAINTY
1	221	1.20	1.199	.0196	50	384	.60	4.708	.0333
2	222	.80	4.026	.0089	51	385	.60	4.458	.0189
3	223	.40	8.137	.0076	52	386	.60	4.731	.0132
4	224	.40	15.895	.0055	53	387	.60	4.621	.0105
5	225	.40	9.700	.0181	54	388	.60	4.214	.0158
6	226	.30	19.493	.0025	55	389	.80	2.728	.0143
7	227	.40	10.332	.0406	56	390	1.20	1.920	.0387
8	228	.30	17.445	.0044	57	391	.80	2.339	.0125
9	229	.40	13.221	.0098	58	392	.80	2.762	.0117
10	232	2.00	.674	.0213	59	393	.80	2.916	.0116
11	233	2.00	.835	.0127	60	394	.80	2.856	.0139
12	236	2.00	.619	.0219	61	395	.80	2.778	.0164
13	237	2.00	.714	.0122	62	396	.80	2.888	.0085
14	238	.80	2.345	.0174	63	397	.80	3.520	.0106
15	239	.80	2.723	.0263	64	398	.60	4.910	.0158
16	240	.80	2.225	.0202	65	399	.40	9.485	.0087
17	241	.80	3.113	.0396	66	400	.30	17.130	.0152
18	242	.60	5.107	.0092	67	401	.30	21.320	.0033
19	243	.80	2.440	.0179	68	402	.30	28.105	.0395
20	244	.80	2.126	.0301	69	403	.20	32.196	.0074
21	245	1.20	1.919	.0095	70	404	.20	33.451	.0078
22	246	.80	2.153	.0139	71	405	.20	36.452	.0036
23	247	1.20	1.917	.0190	72	406	.20	33.744	.0050
24	248	.80	2.453	.0182	73	407	.30	30.529	.0038
25	249	.80	3.867	.0143	74	408	.30	27.690	.0040
26	250	.80	2.618	.0105	75	409	.30	22.083	.0086
27	251	.80	2.594	.0125	76	410	.30	18.575	.0133
28	252	.80	3.244	.0093	77	411	.40	13.710	.0079
29	253	.80	3.865	.0092	78	412	.40	10.440	.0061
30	254	.80	3.488	.0072	79	413	.60	7.732	.0392
31	257	.60	4.722	.0168	80	414	.80	3.747	.0112
32	258	.60	5.341	.0110	81	415	1.20	1.663	.0120
33	367	.20	122.431	.0022	82	416	1.20	.995	.0145
34	368	.20	98.653	.0047	83	145	.20	88.566	.0015
35	369	.20	67.782	.0039	84	146	.20	91.341	.0046
36	370	.20	48.328	.0017	85	147	.20	73.506	.0057
37	371	.20	41.480	.0041	86	148	.20	60.875	.0031
38	372	.30	30.165	.0036	87	149	.20	43.925	.0037
39	373	.30	19.982	.0046	88	150	.20	40.665	.0025
40	374	.30	16.156	.0140	89	151	.30	28.353	.0047
41	375	.40	13.320	.0058	90	152	.30	28.806	.0325
42	376	.40	11.697	.0078	91	153	.30	27.916	.0070
43	377	.40	11.334	.0205	92	154	.30	26.950	.0084
44	378	.40	9.940	.0053	93	155	.30	24.490	.0054
45	379	.40	11.223	.0065	94	156	.30	22.390	.0065
46	380	.40	9.261	.0079	95	157	.30	22.860	.0064
47	381	.60	7.848	.0135	96	158	.30	23.445	.0050
48	382	.60	6.188	.0062	97	159	.30	24.056	.0073
49	383	.60	5.658	.0091	98	0	-0	0	0
134		.050							

HIT ON LOOP 64

DATE 5/12/75

AEDC(ARO,INC.) ARNOLD AFS, TENNESSEE
VON KARMAN GAS DYNAMICS FACILITY
50 INCH HYPERSONIC TUNNEL H
V41B-8/A

GROUP	TEST CONDITION	MODEL	MACH NO	PO,PSIA	TO,DEG R	ALPHA-MODEL	ALPHA-SECTOR	ALPHA-PREBEND	ROLL MODEL	YAW
134	40	140 B	8.00	861.2	1345	30.00	-2.01	30.00	90.00	2.0

T-INF (DEG R)	P-INF (PSIA)	Q-INF (PSIA)	V-INF (FT/SEC)	RHO-INF (SLUGS/FT3)	MU-INF (LB-SEC/FT2)	RE/FT (FT-1)	HREF-FR (R= .0400FT)	STFR (R= .0400FT)	SWITCH POSITION
97.5	.058	3.953	3870	7.592E-05	7.848E-08	3.744E 06	3.248E-02	1.389E-02	1

IC NO	TW	DTWDT	QDOT	H(TO)	H(TO)/HREF	H(.9TO)	H(.9TO)/HREF	X/L	Z,FULL SCALE(IN)
								FUSELAGE VENT NO. 1	
1	540.5	8.504	1.124	1.397E-03	.0430	1.677E-03	.0516	.4434	376.6300
2	540.6	6.996	.944	1.173E-03	.0361	1.408E-03	.0433	.4264	371.6300
3	538.7	5.623	.773	9.582E-04	.0295	1.150E-03	.0354	.4303	371.6300
4	538.7	5.584	.760	9.423E-04	.0290	1.131E-03	.0348	.4342	371.6300
5	538.7	5.370	.716	8.863E-04	.0273	1.066E-03	.0328	.4380	371.6300
6	538.6	4.515	.612	7.589E-04	.0234	9.108E-04	.0280	.4434	369.1300
7	535.2	3.505	.511	6.338E-04	.0195	7.605E-04	.0234	.4226	366.6300
8	537.5	4.020	.606	7.504E-04	.0231	9.003E-04	.0277	.4264	366.6300
9	537.9	3.123	.454	5.625E-04	.0173	6.750E-04	.0208	.4303	366.6300
10	537.3	2.633	.374	4.757E-04	.0146	5.707E-04	.0176	.4342	366.6300
11	538.2	2.653	.386	4.778E-04	.0147	5.734E-04	.0177	.4380	366.6300
12	535.5	2.059	.294	3.518E-04	.0109	4.222E-04	.0130	.4496	366.6300
13	540.7	1.195	.176	2.163E-04	.0067	2.621E-04	.0081	.4187	357.1300
14	538.5	1.454	.199	2.463E-04	.0076	2.956E-04	.0091	.4396	361.6300
15	539.4	1.441	.192	2.386E-04	.0073	2.865E-04	.0088	.4434	361.6300
16	540.3	.844	.114	1.418E-04	.0044	1.703E-04	.0052	.4396	355.6300
17	541.7	.822	.111	1.386E-04	.0043	1.665E-04	.0051	.4434	355.6300
18	542.8	.682	.095	1.169E-04	.0037	1.429E-04	.0044	.4396	351.6300
19	544.8	.418	.059	7.311E-05	.0023	8.787E-05	.0027	.4291	332.6300
								CARGO BAY VENT NO. 1	
								X/L	Z,FULL SCALE(IN)
22	541.8	6.359	.884	1.100E-03	.0339	1.321E-03	.0407	.3974	397.6300
23	539.7	5.687	.795	9.866E-04	.0304	1.184E-03	.0365	.4013	397.6300
24	541.1	6.411	.868	1.079E-03	.0332	1.296E-03	.0399	.4052	397.6300
25	541.6	6.848	.903	1.123E-03	.0346	1.349E-03	.0415	.4090	397.6300
26	542.0	8.063	1.059	1.319E-03	.0406	1.584E-03	.0488	.4129	397.6300
27	541.3	5.763	.803	9.994E-04	.0308	1.200E-03	.0369	.3936	392.6300
28	540.2	5.571	.801	9.953E-04	.0306	1.195E-03	.0368	.3974	392.6300
29	541.5	6.572	.949	1.181E-03	.0364	1.419E-03	.0437	.4013	392.6300
30	541.7	7.404	1.065	1.326E-03	.0408	1.593E-03	.0490	.4052	392.6300
31	541.3	8.557	1.197	1.489E-03	.0458	1.788E-03	.0550	.4090	392.6300
32	541.6	9.026	1.198	1.491E-03	.0459	1.790E-03	.0551	.4129	392.6300
33	542.1	7.795	1.115	1.388E-03	.0427	1.668E-03	.0513	.4090	386.1300
34	543.1	9.319	1.263	1.574E-03	.0485	1.891E-03	.0582	.4129	387.6300
35	545.2	7.250	1.029	1.280E-03	.0396	1.546E-03	.0476	.3897	383.1300
36	545.0	10.165	1.479	1.848E-03	.0569	2.222E-03	.0684	.4090	378.6300
37	545.4	11.794	1.663	2.080E-03	.0640	2.500E-03	.0770	.4129	382.1300
38	546.0	12.169	1.703	2.131E-03	.0656	2.562E-03	.0789	.4129	377.1300
39	546.1	9.471	1.387	1.736E-03	.0534	2.088E-03	.0643	.4001	373.6300
								PROTUBERANCES	
								X/L	Z,FULL SCALE(IN)
41	545.8	9.112	1.224	1.531E-03	.0471	1.841E-03	.0567	.3546	379.0500
42	546.2	9.881	1.354	1.695E-03	.0522	2.038E-03	.0627	.3604	379.0500
43	542.4	6.898	.897	1.118E-03	.0344	1.343E-03	.0413	.3450	374.0500

DATE 5/12/75

AEDC(ARO,INC.) ARNOLD AFS, TENNESSEE
VON KARMAN GAS DYNAMICS FACILITY
50 INCH HYPERSONIC TUNNEL B
V41B-8/A

GROUP	TEST CONDITION	MODEL	MACH NO	PO,PSIA	TO,DEG R	ALPHA-MODEL	ALPHA-SECTOR	ALPHA-PREBEND	ROLL MODEL	YAW
134	40	140 B	8.00	861.2	1345	30.00	-2.01	30.00	90.00	2.0

T-INF (DEG R)	P-INF (PSIA)	Q-INF (PSIA)	V-INF (FT/SEC)	RHO-INF (SLUGS/FT3)	MU-INF (LB-SEC/FT2)	RE/FT (FT-1)	HREF-FR (R= .0400FT)	STFR (R= .0400FT)	SWITCH POSITION
97.5	.088	3.952	3870	7.592E-05	7.84PE-08	3.744E 06	3.248E-02	1.389E-02	1

IC NO	TW	DTWDT	QDOT	H(TO)	H(TO)/HREF	H(.9TO)	H(.9TO)/HREF
44	546.0	9.482	1.295	1.621E-03	.0499	1.949E-03	.0600
45	547.0	9.992	1.388	1.739E-03	.0535	2.091E-03	.0644
46	548.5	11.472	1.610	2.021E-03	.0622	2.432E-03	.0749
47	546.2	10.116	1.350	1.690E-03	.0520	2.032E-03	.0625
48	549.4	10.636	1.465	1.840E-03	.0567	2.215E-03	.0682
49	548.9	11.098	1.533	1.925E-03	.0593	2.316E-03	.0713
50	550.6	10.352	1.445	1.619E-03	.0560	2.190E-03	.0674
51	550.5	10.149	1.385	1.743E-03	.0536	2.098E-03	.0646
52	546.2	6.169	.851	1.065E-03	.0328	1.281E-03	.0394
53	547.2	7.412	1.086	1.361E-03	.0419	1.637E-03	.0504
54	537.4	3.719	.531	6.569E-04	.0202	7.882E-04	.0243
55	546.3	5.647	.809	1.013E-03	.0312	1.218E-03	.0375
56	537.6	4.143	.534	6.610E-04	.0203	7.931E-04	.0244
57	539.9	4.889	.598	7.425E-04	.0229	8.914E-04	.0274
58	543.2	6.300	.834	1.040E-03	.0320	1.249E-03	.0385
59	547.5	7.423	.981	1.230E-03	.0379	1.480E-03	.0455
60	546.4	6.969	.974	1.219E-03	.0375	1.466E-03	.0451
61	544.3	6.085	.773	9.652E-04	.0297	1.160E-03	.0357
62	540.2	4.762	.585	7.281E-04	.0224	8.718E-04	.0268
63	538.4	3.967	.518	6.426E-04	.0198	7.712E-04	.0237
64	~~548.4~~	~~[illegible]~~	~~[illegible]~~	~~[illegible]~~	~~.0001~~	~~5.3026-06~~	~~.0002~~
65	537.9	3.035	.494	6.124E-04	.0189	7.349E-04	.0226
66	540.0	4.853	.613	7.614E-04	.0234	9.141E-04	.0281
67	542.2	5.478	.771	9.606E-04	.0296	1.154E-03	.0355
68	546.1	6.906	.878	1.099E-03	.0338	1.322E-03	.0407

PROTUBERANCES

X/L	Z,FULL SCALE(IN)
.3508	374.0500
.3566	374.0500
.3604	374.0500
.3392	366.5500
.3566	366.5500
.3392	360.7000
.3566	360.7000
.3604	360.7000
.3392	353.2000
.3450	353.2000
.3508	353.2000
.3566	353.2000

SUBLIMATOR VENT NO. 1

X/L	Z,FULL SCALE(IN)
.3031	371.1300
.3074	369.1300
.3089	363.6300
.3074	358.1300
.3031	356.1300
.2988	358.1300
.2973	363.6300
.2988	369.1300
.3031	376.1300
.3089	378.6300
.3101	372.6300
.3157	370.3800
.3128	363.6300

DATE 5/12/75

AEDC(ARO,INC.) ARNOLD AFS, TENNESSEE
VON KARMAN GAS DYNAMICS FACILITY
50 INCH HYPERSONIC TUNNEL B
V41B-B7A

GROUP	TEST CONDITION	MODEL	MACH NO	PO,PSIA	TO,DEG R	ALPHA-MODEL	ALPHA-SECTOR	ALPHA-PREBEND	ROLL MODEL	YAW
134	40	140 B	8.00	861.2	1345	30.00	-2.01	30.00	90.00	2.0

T-INF (DEG R)	P-INF (PSIA)	Q-INF (PSIA)	V-INF (FT/SEC)	RHO-INF (SLUGS/FT3)	MU-INF (LB-SEC/FT2)	RE/FT (FT-1)	HREF-FR (R= .0400FT)	STFR (R= .0400FT)	SWITCH POSITION
97.5	.688	3.552	3870	7.592E-05	7.846E-08	3.744E 06	3.248E-02	1.389E-02	1

IC	NC	TW	DTWDT	QDOT	H(TO)	H(TO)/HREF	H(.9TO)	H(.9TO)/HREF
69		535.8	3.974	.554	6.847E-04	.0211	8.212E-04	.0253
70		535.8	3.555	.435	5.360E-04	.0166	6.453E-04	.0199
71		536.7	4.059	.552	6.825E-04	.0210	8.187E-04	.0252
72		536.3	3.634	.515	6.367E-04	.0196	7.637E-04	.0235
73		536.3	3.568	.463	5.720E-04	.0176	6.861E-04	.0211
74		536.5	3.607	.437	5.409E-04	.0167	6.489E-04	.0200
75		538.8	3.865	.526	6.522E-04	.0201	7.828E-04	.0241
77		538.2	4.190	.594	7.365E-04	.0227	8.838E-04	.0272
78		540.8	5.216	.718	8.921E-04	.0275	1.071E-03	.0330
79		542.2	4.471	.573	7.134E-04	.0220	8.575E-04	.0264
80		542.2	5.391	.736	9.165E-04	.0282	1.101E-03	.0339
81		544.4	6.213	.870	1.087E-03	.0335	1.306E-03	.0402
83		544.0	12.933	1.735	2.166E-03	.0667	2.603E-03	.0801
84		545.5	14.078	1.866	2.333E-03	.0718	2.805E-03	.0864
85		541.8	12.750	1.744	2.170E-03	.0668	2.607E-03	.0802
87		536.2	8.849	1.266	1.565E-03	.0482	1.877E-03	.0578
88		541.7	13.252	1.860	2.314E-03	.0712	2.780E-03	.0856
89		541.7	12.359	1.823	2.269E-03	.0698	2.725E-03	.0839
90		541.3	11.882	1.624	2.021E-03	.0622	2.427E-03	.0747
91		541.6	13.115	1.805	2.246E-03	.0691	2.698E-03	.0831
92		542.6	12.095	1.714	2.136E-03	.0658	2.566E-03	.0790
93		541.1	10.766	1.380	1.716E-03	.0528	2.061E-03	.0634
94		544.0	12.766	1.668	2.081E-03	.0641	2.501E-03	.0770
95		543.5	12.037	1.718	2.143E-03	.0660	2.575E-03	.0793
96		540.0	8.135	1.060	1.317E-03	.0405	1.581E-03	.0487
97		542.4	10.970	1.437	1.753E-03	.0540	2.106E-03	.0648
98		542.6	11.057	1.559	1.942E-03	.0598	2.333E-03	.0718
100		541.9	7.994	1.136	1.414E-03	.0435	1.699E-03	.0523
102		545.3	8.381	1.190	1.487E-03	.0458	1.788E-03	.0550
103		546.7	11.625	1.536	1.924E-03	.0592	2.313E-03	.0712
105		547.8	14.150	1.742	2.235E-03	.0688	2.688E-03	.0828
106		547.4	15.415	1.989	2.493E-03	.0768	2.999E-03	.0923

FUSELAGE VENT PANEL NO. 7

X/L	Z,FULL SCALE(IN)
.2487	356.4000
.2591	356.4000
.2419	351.4000
.2487	351.4000
.2552	351.4000
.2610	351.4000
.2419	342.8000
.2552	342.8000
.2610	342.8000
.2419	334.2000
.2487	334.2000
.2552	334.2000

ACCESS HATCH WINDOW

X/L	Z,FULL SCALE(IN)
.2131	398.0000
.2131	388.0000
.2131	383.0000
.2222	395.8000
.2193	386.5000
.2177	381.8000
.2297	389.5000
.2243	382.5000
.2214	378.7000
.2343	374.0000
.2274	375.5000
.2239	373.3000
.2363	368.0000
.2286	368.0000
.2247	368.0000
.2274	360.5000
.2081	354.3000
.2023	362.7000
.2050	378.7000
.2050	386.2000

GROUP 134 CENTERLINE TIME 3.15

CH	TC	FIT LENGTH	DTDWT	UNCERTAINTY	CH	TC	FIT LENGTH	DTDWT	UNCERTAINTY
1	1	.40	8.574	.0118	50	53	.60	7.412	.0066
2	2	.60	6.996	.0050	51	54	.80	3.719	.0099
3	3	.60	5.623	.0069	52	55	.60	5.647	.0173
4	4	.60	5.594	.0065	53	56	.60	4.143	.0137
5	5	.60	5.370	.0232	54	57	.60	4.889	.0136
6	6	.60	4.619	.0102	55	58	.60	6.300	.0072
7	7	.60	3.505	.0530	56	59	.60	7.423	.0231
8	8	.60	4.020	.0099	57	60	.60	6.969	.0073
9	9	.60	3.123	.0147	58	61	.60	6.085	.0068
10	10	.80	2.692	.0123	59	62	.60	4.762	.0122
11	11	.80	2.653	.0120	60	63	.60	3.967	.0098
12	12	.60	2.059	.0212	61	64	2.00	-.029	-.6202
13	13	1.20	1.195	.0164	62	65	.80	3.635	.0093
14	14	1.20	1.454	.0177	63	66	.60	4.853	.0123
15	15	1.20	1.441	.0174	64	67	.60	5.478	.0072
16	16	2.00	.844	.0132	65	68	.60	6.906	.0117
17	17	2.00	.822	.0275	66	69	.80	3.974	.0133
18	18	2.00	.682	.0111	67	70	.80	3.555	.0085
19	19	2.00	.418	.0188	68	71	.60	4.059	.0843
20	22	.60	6.359	.0111	69	72	.80	3.634	.0136
21	23	.60	5.687	.0192	70	73	.80	3.568	.0115
22	24	.60	6.411	.0035	71	74	.80	3.607	.0137
23	25	.60	6.848	.0081	72	75	.80	3.865	.0102
24	26	.40	8.063	.0094	73	77	.60	4.190	.0138
25	27	.60	5.763	.0114	74	78	.60	5.216	.0082
26	28	.60	5.571	.0074	75	79	.60	4.470	.0191
27	29	.60	6.572	.0069	76	80	.60	5.381	.0116
28	30	.60	7.404	.0087	77	81	.60	6.213	.0068
29	31	.40	8.557	.0115	78	83	.40	12.933	.0106
30	32	.40	9.026	.0104	79	84	.40	14.078	.0323
31	33	.60	7.795	.0067	80	85	.40	12.750	.0036
32	34	.40	9.319	.0126	81	87	.40	8.849	.0088
33	35	.60	7.250	.0069	82	88	.40	13.252	.0069
34	36	.40	10.165	.0061	83	89	.40	12.359	.0080
35	37	.40	11.794	.0041	84	90	.40	11.882	.0090
36	38	.40	12.169	.0076	85	91	.40	13.115	.0080
37	39	.40	9.471	.0106	86	92	.40	12.095	.0053
38	41	.40	9.112	.0117	87	93	.40	10.706	.0135
39	42	.40	9.881	.0111	88	94	.40	12.766	.0077
40	43	.60	6.858	.0082	89	95	.40	12.037	.0113
41	44	.40	9.482	.0072	90	96	.40	8.135	.0631
42	45	.40	9.992	.0060	91	97	.40	10.970	.0093
43	46	.40	11.472	.0185	92	98	.40	11.067	.0155
44	47	.40	10.116	.0078	93	100	.60	7.994	.0079
45	48	.40	10.636	.0081	94	102	.60	8.381	.0086
46	49	.40	11.098	.0054	95	103	.40	11.625	.0125
47	50	.40	10.352	.0164	96	105	.40	14.150	.0118
48	51	.40	10.149	.0079	97	106	.40	15.415	.0027
49	52	.60	6.169	.0105	98	0	-0	0	0
135		.050							

BIT ON LOOP 63

DATE 5/12/75

AEDC(ARO,INC.) ARNOLD AFS, TENNESSEE
VON KARMAN GAS DYNAMICS FACILITY
50 INCH HYPERSONIC TUNNEL B
V41B-87A

GROUP	TEST CONDITION	MODEL	MACH NO	PO,PSIA	TO,DEG R	ALPHA-MODEL	ALPHA-SECTOR	ALPHA-PREBEND	ROLL MODEL	YAW
135	40	140 B	8.00	860.4	1344	30.00	-1.99	30.00	89.94	2.0

T-INF (DEG R)	P-INF (PSIA)	Q-INF (PSIA)	V-INF (FT/SEC)	RHO-INF (SLUGS/FT3)	MU-INF (LB-SEC/FT2)	RE/FT (FT-1)	HREF-FR (R= .0400FT)	STFR (R= .0400FT)	SWITCH POSITION
97.4	.056	3.548	3809	7.592E-05	7.841E-08	3.745E 06	3.246E-02	1.389E-02	2

IC NO	TW	DTWDT	QDOT	H(TO)	H(TO)/HREF	H(.9TO)	H(.9TO)/HREF	X/L	Z,FULL SCALE(IN)
								ACCESS HATCH WINDOW	
107	545.6	13.154	1.847	2.376E-03	.0732	2.856E-03	.0880	.2050	396.2000
								FUSELAGE VENT PANEL NO. 3 AND 1	
108	539.3	8.025	.852	1.059E-03	.0326	1.271E-03	.0391	.1244	377.5000
109	537.2	7.244	.924	1.121E-03	.0345	1.345E-03	.0414	.1302	377.5000
110	537.8	7.757	.986	1.223E-03	.0377	1.467E-03	.0452	.1360	377.5000
111	539.3	8.093	.979	1.216E-03	.0375	1.460E-03	.0450	.1418	377.5000
112	542.1	9.830	1.173	1.462E-03	.0450	1.756E-03	.0541	.1476	377.5000
113	538.9	7.482	.861	1.069E-03	.0329	1.283E-03	.0395	.1215	273.5000
114	537.9	7.400	.891	1.105E-03	.0340	1.326E-03	.0408	.1273	273.5000
115	539.6	7.493	.931	1.156E-03	.0356	1.388E-03	.0427	.1331	273.5000
116	538.5	8.421	1.037	1.288E-03	.0397	1.546E-03	.0476	.1389	273.5000
117	538.3	9.800	1.185	1.417E-03	.0436	1.703E-03	.0524	.1447	273.5000
118	541.4	7.946	1.119	1.382E-03	.0426	1.659E-03	.0511	.1409	366.0000
119	544.2	9.842	1.281	1.602E-03	.0493	1.926E-03	.0593	.1442	366.0000
120	542.1	7.640	.959	1.196E-03	.0368	1.437E-03	.0443	.1215	359.5000
121	542.0	6.900	.851	1.061E-03	.0327	1.275E-03	.0393	.1303	359.5000
122	543.7	7.681	.952	1.202E-03	.0370	1.444E-03	.0445	.1337	359.5000
								LOWER RCS NOZZLES	
124	532.1	3.740	.384	4.110E-04	.0127	4.925E-04	.0152	.0950	400.0000
125	530.7	3.527	.384	4.718E-04	.0145	5.652E-04	.0174	.0988	400.0000
126	530.5	3.260	.438	5.385E-04	.0166	6.451E-04	.0199	.1027	400.0000
127	530.4	4.138	.557	6.841E-04	.0211	8.195E-04	.0252	.0911	395.0000
128	529.9	3.996	.494	5.950E-04	.0183	7.126E-04	.0220	.0950	395.0000
129	530.8	4.261	.520	6.143E-04	.0189	7.359E-04	.0227	.0988	395.0000
130	532.3	3.745	.443	5.517E-04	.0170	6.611E-04	.0204	.0810	390.0000
131	533.5	4.111	.607	7.457E-04	.0230	8.933E-04	.0275	.0857	390.0000
132	530.6	4.728	.550	6.703E-04	.0202	8.101E-04	.0250	.0963	390.0000
133	532.1	5.401	.665	8.142E-04	.0252	9.816E-04	.0302	.0857	383.8000
134	529.9	6.010	.803	9.870E-04	.0304	1.182E-03	.0364	.0872	377.3000
135	533.0	7.485	.899	1.108E-03	.0341	1.328E-03	.0409	.0903	374.5500
136	535.4	8.033	.894	1.105E-03	.0341	1.326E-03	.0408	.0960	374.5500
137	532.8	7.855	1.027	1.266E-03	.0390	1.518E-03	.0467	.0872	370.5500
138	534.3	8.315	.958	1.183E-03	.0364	1.419E-03	.0437	.0928	370.5500
139	534.9	7.838	1.022	1.238E-03	.0381	1.484E-03	.0457	.0816	366.0500
140	535.8	8.245	1.050	1.300E-03	.0400	1.559E-03	.0480	.0934	362.4000
141	536.9	7.440	.945	1.220E-03	.0376	1.464E-03	.0451	.0973	362.4000
142	538.0	6.048	.680	8.192E-04	.0252	9.832E-04	.0303	.0833	355.2000
143	537.7	9.039	.910	1.129E-03	.0348	1.354E-03	.0417	.0919	355.2000
144	542.3	10.318	1.365	1.703E-03	.0524	2.046E-03	.0630	.0949	349.0000

DATE 5/12/75

AEDC(ARO,INC.) ARNOLD AFS, TENNESSEE
VON KARMAN GAS DYNAMICS FACILITY
50 INCH HYPERSONIC TUNNEL B
V41B-B7A

GROUP	TEST CONDITION	MODEL	MACH NO	PO,PSIA	TO,DEG R	ALPHA-MODEL	ALPHA-SECTOR	ALPHA-PREBEND	ROLL MODEL	YAW
135	40	140 B	8.00	860.4	1344	30.00	-1.99	30.00	89.94	2.0

T-INF (DEG R)	P-INF (PSIA)	Q-INF (PSIA)	V-INF (FT/SEC)	RHO-INF (SLUGS/FT3)	MU-INF (LB-SEC/FT2)	RE/FT (FT-1)	HREF-FR (R= .0400FT)	STFR (R= .0400FT)	SWITCH POSITION
97.4	.088	3.548	3869	7.592E-05	7.841E-08	3.745E 06	3.246E-02	1.389E-02	2

IC NO	TW	DTWDT	QDOT	H(TO)	H(TO)/HREF	H(.9TO)	H(.9TO)/HREF	X/L	2Y/B
								UPPER RCS NOZZLES	
161	532.6	3.573	.423	5.207E-04	.0160	6.241E-04	.0192	.0619	-.0160
162	533.1	2.944	.279	3.435E-04	.0106	4.118E-04	.0127	.0709	-.0160
163	530.7	2.112	.259	3.183E-04	.0098	3.813E-04	.0117	.0807	-.0160
164	530.5	1.987	.259	3.179E-04	.0098	3.808E-04	.0117	.0943	-.0160
165	531.4	2.039	.256	3.156E-04	.0097	3.781E-04	.0116	.0978	-.0160
166	532.7	1.724	.221	2.721E-04	.0084	3.261E-04	.0100	.1013	-.0160
167	533.0	1.978	.268	3.299E-04	.0102	3.954E-04	.0122	.0619	-.0320
168	533.2	2.262	.237	2.927E-04	.0090	3.509E-04	.0108	.0709	-.0320
169	530.8	1.659	.201	2.473E-04	.0076	2.963E-04	.0091	.0807	-.0320
170	530.7	1.600	.200	2.456E-04	.0076	2.942E-04	.0091	.0943	-.0320
171	531.5	1.817	.219	2.693E-04	.0083	3.227E-04	.0099	.0978	-.0320
172	531.2	1.471	.192	2.357E-04	.0073	2.824E-04	.0087	.1013	-.0320
173	531.8	1.101	.147	1.808E-04	.0056	2.167E-04	.0067	.0807	-.0480
174	530.6	.727	.093	1.016E-04	.0031	1.217E-04	.0037	.0943	-.0480
175	530.9	.790	.112	1.372E-04	.0042	1.644E-04	.0051	.0978	-.0480
176	530.6	.685	.093	1.145E-04	.0035	1.372E-04	.0042	.1013	-.0480
								CANOPY	
177	554.9	25.263	3.512	4.450E-03	.1371	5.363E-03	.1652		
178	553.3	25.148	4.990	6.311E-03	.1944	7.604E-03	.2342		
179	565.9	33.013	7.027	9.030E-03	.2782	1.092E-02	.3362		
180	542.0	6.625	.868	1.082E-03	.0333	1.299E-03	.0400		
181	540.4	5.389	.734	9.133E-04	.0281	1.097E-03	.0338		
182	540.4	6.441	.921	1.145E-03	.0353	1.375E-03	.0424		
183	529.1	1.169	.146	1.796E-04	.0055	2.151E-04	.0066		
184	528.8	1.333	.182	2.228E-04	.0069	2.668E-04	.0082		
185	539.0	6.201	.747	9.278E-04	.0286	1.114E-03	.0343		
186	541.2	6.200	.781	9.727E-04	.0300	1.168E-03	.0360		
187	544.7	7.994	1.070	1.338E-03	.0412	1.609E-03	.0496		
188	543.1	14.093	3.294	4.113E-03	.1267	4.942E-03	.1522		
189	534.2	3.616	.515	6.361E-04	.0196	7.627E-04	.0235		
190	535.6	4.309	.620	7.670E-04	.0236	9.200E-04	.0283		
191	540.6	7.357	1.127	1.403E-03	.0432	1.685E-03	.0519		

DATE 5/12/75

AEDC(ARO,INC.) ARNOLD AFS, TENNESSEE
VON KARMAN GAS DYNAMICS FACILITY
50 INCH HYPERSONIC TUNNEL B
V41B-87A

GROUP	TEST CONDITION	MODEL	MACH NO	PO,PSIA	TO,DEG R	ALPHA-MODEL	ALPHA-SECTOR	ALPHA-PREBEND	ROLL MODEL	YAW
135	40	149 B	8.00	860.4	1344	30.00	-1.99	30.00	89.94	2.0

T-INF (DEG R)	P-INF (PSIA)	Q-INF (PSIA)	V-INF (FT/SEC)	RHO-INF (SLUGS/FT3)	MU-INF (LB-SEC/FT2)	RE/FT (FT-1)	HREF-FR (R= .0400FT)	STFR (R= .0400FT)	SWITCH POSITION
97.4	.088	3.948	3869	7.592E-05	7.841E-08	3.745E 06	3.246E-02	1.389E-02	2

TC NO	TW	DT*DT	QDOT	H(TO)	H(TO)/HREF	H(.9TO)	H(.9TO)/HREF
							CANOPY
192	527.6	.809	.114	1.394E-04	.0043	1.668E-04	.0051
193	533.4	5.209	1.021	1.235E-03	.0381	1.481E-03	.0456
194	528.2	1.423	.143	2.244E-04	.0069	2.686E-04	.0083
195	530.4	2.643	.331	4.076E-04	.0126	4.863E-04	.0150
196	532.8	4.312	.566	6.975E-04	.0215	8.360E-04	.0258
197	528.4	.839	.083	1.017E-04	.0031	1.218E-04	.0038
198	527.5	.968	.114	1.398E-04	.0043	1.674E-04	.0052
199	527.5	1.345	.180	2.207E-04	.0068	2.642E-04	.0081
200	530.8	2.917	.415	5.103E-04	.0157	6.113E-04	.0188
201	535.5	5.946	.847	1.048E-03	.0323	1.257E-03	.0387
202	536.0	6.215	1.049	1.285E-03	.0396	1.543E-03	.0475
203	527.8	1.094	.134	1.644E-04	.0051	1.968E-04	.0061
204	529.3	1.837	.255	3.446E-04	.0108	4.186E-04	.0129
205	533.4	4.525	.705	8.697E-04	.0268	1.042E-03	.0321
206	528.2	1.251	.165	2.027E-04	.0062	2.427E-04	.0075
207	533.9	6.224	.834	1.029E-03	.0317	1.234E-03	.0380
208	527.4	1.182	.158	1.940E-04	.0060	2.322E-04	.0072
209	526.7	1.450	.199	2.431E-04	.0075	2.910E-04	.0090
210	526.7	1.705	.227	2.775E-04	.0085	3.321E-04	.0102
211	528.8	1.272	.154	1.890E-04	.0058	2.263E-04	.0070
212	528.5	1.304	.175	2.150E-04	.0066	2.574E-04	.0079
213	529.1	1.547	.205	2.507E-04	.0077	3.001E-04	.0092
214	528.0	2.283	.319	3.911E-04	.0120	4.682E-04	.0144
215	527.6	2.505	.355	4.343E-04	.0134	5.199E-04	.0160
216	530.7	4.774	.678	8.333E-04	.0257	9.983E-04	.0307
217	532.5	6.107	.869	1.071E-03	.0330	1.284E-03	.0395
218	527.3	1.550	.213	2.611E-04	.0080	3.125E-04	.0096
219	527.7	2.194	.328	3.769E-04	.0116	4.512E-04	.0139
220	528.8	3.192	.438	5.370E-04	.0165	6.430E-04	.0198

GROUP 135 CENTERLINE TIME 3.10

CH	TC	FIT LENGTH	DTDWT	UNCERTAINTY	CH	TC	FIT LENGTH	DTDWT	UNCERTAINTY
1	107	.40	13.154	.0033	50	173	1.20	1.101	.0346
2	108	.60	8.026	.0056	51	174	2.00	.727	.0164
3	109	.60	7.298	.0055	52	175	2.00	.780	.0165
4	110	.60	7.757	.0063	53	176	2.00	.685	.0130
5	111	.40	8.093	.0333	54	177	.30	25.263	.0092
6	112	.40	9.830	.0055	55	178	.30	25.148	.0075
7	113	.60	7.482	.0299	56	179	.30	33.013	.0133
8	114	.60	7.400	.0055	57	180	.60	6.625	.0072
9	115	.60	7.483	.0119	58	181	.60	5.389	.0098
10	116	.40	8.421	.0094	59	182	.60	6.441	.0129
11	117	.40	9.800	.0214	60	183	1.20	1.169	.0213
12	118	.60	7.980	.0122	61	184	1.20	1.333	.0292
13	119	.40	9.842	.0061	62	185	.60	6.201	.0046
14	120	.60	7.640	.0082	63	186	.60	6.200	.0084
15	121	.60	6.900	.0137	64	187	.60	7.994	.0060
16	122	.60	7.681	.0113	65	188	.40	14.093	.0061
17	124	.80	3.740	.0156	66	189	.80	3.616	.0116
18	125	.80	3.527	.0086	67	190	.60	4.309	.0082
19	126	.80	3.200	.0160	68	191	.60	7.357	.0292
20	127	.60	4.135	.0262	69	192	2.00	.809	.0283
21	128	.60	3.996	.0130	70	193	.60	5.200	.0180
22	129	.60	4.251	.0106	71	194	1.20	1.423	.0291
23	130	.80	3.745	.0145	72	195	.80	2.693	.0180
24	131	.60	4.111	.0123	73	196	.60	4.312	.0106
25	132	.60	4.728	.0093	74	197	2.00	.839	.0110
26	133	.60	5.481	.0109	75	198	1.20	.986	.0288
27	134	.60	6.010	.0100	76	199	1.20	1.345	.0183
28	135	.60	7.485	.0055	77	200	.80	2.917	.0100
29	136	.60	8.033	.0053	78	201	.60	5.998	.0089
30	137	.60	7.855	.0073	79	202	.40	8.215	.0649
31	138	.40	8.315	.0138	80	203	1.20	1.084	.0160
32	139	.60	7.838	.0077	81	204	1.20	1.837	.0115
33	140	.40	8.245	.0080	82	205	.60	4.525	.0099
34	141	.60	7.440	.0082	83	206	1.20	1.251	.0226
35	142	.60	6.048	.0077	84	207	.60	6.224	.0099
36	143	.40	9.039	.0091	85	208	1.20	1.182	.0174
37	144	.40	10.318	.0052	86	209	1.20	1.450	.0151
38	161	.80	3.573	.0129	87	210	1.20	1.705	.0248
39	162	.80	2.944	.0136	88	211	1.20	1.272	.0120
40	163	.80	2.112	.0265	89	212	1.20	1.304	.0219
41	164	1.20	1.987	.0081	90	213	1.20	1.547	.0757
42	165	.80	2.039	.0184	91	214	.80	2.283	.0212
43	166	1.20	1.724	.0276	92	215	.80	2.505	.0343
44	167	1.20	1.978	.0113	93	216	.60	4.779	.0124
45	168	.80	2.262	.0146	94	217	.60	6.107	.0175
46	169	1.20	1.659	.0118	95	218	1.20	1.550	.0253
47	170	1.20	1.690	.0193	96	219	.80	2.194	.0247
48	171	1.20	1.817	.0135	97	220	.80	3.192	.0134
49	172	1.20	1.471	.0116	98	0	-0	0	0
136		.050							

BIT ON LOOP 64

DATE 5/12/79

AEDC(ARO,INC.) ARNOLD AFS, TENNESSEE
VON KARMAN GAS DYNAMICS FACILITY
50 INCH HYPERSONIC TUNNEL B
V41B-B7A

GROUP	TEST CONDITION	MODEL	MACH NO	PO,PSIA	TO,DEG R	ALPHA-MODEL	ALPHA-SECTOR	ALPHA-PREBEND	ROLL MODEL	YAW
136	49	140 B	8.00	859.7	1342	30.00	-1.99	30.00	89.88	2.0

T-INF (DEG R)	P-INF (PSIA)	Q-INF (PSIA)	V-INF (FT/SEC)	RHO-INF (SLUGS/FT3)	MU-INF (LB-SEC/FT2)	RE/FT (FT-1)	HREF-FR (R= .0400FT)	STFR (R= .0400FT)	SWITCH POSITION
97.3	.088	3.945	3866	7.596E-05	7.830E-08	3.750E 06	3.244E-02	1.388E-02	3

IC NO	Ta	DTWDT	QDOT	H(TO)	H(TO)/HREF	H(.9TO)	H(.9TO)/HREF
						CANOPY	
221	529.5	.725	.088	1.078E-04	.0033	1.291E-04	.0040
222	529.7	1.270	.156	1.922E-04	.0059	2.302E-04	.0071
223	525.9	3.434	.465	5.717E-04	.0176	6.848E-04	.0211
						ESCAPE HATCH AND WINDOW	
						X/L	2Y/B
224	535.2	7.282	.726	8.992E-04	.0277	1.079E-03	.0332	.1933	.0162
225	531.8	4.447	.532	6.561E-04	.0202	7.863E-04	.0242	.1972	.0162
226	531.5	15.841	1.676	2.094E-03	.0645	2.516E-03	.0776	.1933	.0384
227	535.0	9.925	1.454	1.802E-03	.0555	2.161E-03	.0666	.1972	.0384
228	530.7	4.934	.634	7.807E-04	.0241	9.354E-04	.0288	.1933	.0653
229	530.8	4.891	.628	7.741E-04	.0239	9.276E-04	.0286	.1972	.0653
232	528.2	.527	.071	8.727E-05	.0027	1.045E-04	.0032	.2567	.0235
233	529.0	.625	.085	1.164E-04	.0036	1.394E-04	.0043	.2606	.0235
236	528.2	.783	.114	1.405E-04	.0043	1.683E-04	.0052	.2567	.0491
237	528.8	.852	.119	1.469E-04	.0045	1.759E-04	.0054	.2606	.0491
						CARGO BAY HINGE NO. 1	
						X/L	Z,FULL SCALE(IN)
238	538.4	5.619	.755	9.387E-04	.0289	1.127E-03	.0347	.2879	420.0000
239	541.3	7.549	1.015	1.268E-03	.0391	1.523E-03	.0469	.2917	420.0000
240	538.4	5.326	.763	9.494E-04	.0293	1.140E-03	.0351	.2840	415.0000
241	542.8	7.152	1.011	1.264E-03	.0390	1.519E-03	.0468	.2879	415.0000
242	543.1	7.816	1.122	1.404E-03	.0433	1.688E-03	.0520	.2917	415.0000
243	540.2	4.945	.677	7.568E-04	.0233	9.089E-04	.0280	.2801	405.0000
244	538.7	4.124	.484	6.020E-04	.0186	7.227E-04	.0223	.2840	405.0000
						CARGO BAY HINGE NO. 2	
						X/L	Z,FULL SCALE(IN)
245	538.4	4.329	.620	7.715E-04	.0238	9.261E-04	.0285	.3192	420.0000
246	539.2	4.799	.685	8.546E-04	.0263	1.026E-03	.0316	.3439	420.0000
247	538.8	3.569	.527	6.564E-04	.0202	7.880E-04	.0243	.3362	415.0000
248	539.5	4.384	.648	8.072E-04	.0249	9.693E-04	.0299	.3401	415.0000
249	542.2	5.146	.762	9.521E-04	.0293	1.144E-03	.0353	.3439	415.0000
250	541.5	4.289	.640	6.748E-04	.0208	8.107E-04	.0250	.3323	405.0000
251	541.7	4.461	.550	6.869E-04	.0212	8.253E-04	.0254	.3362	405.0000
						CARGO BAY HINGE NO. 3	
						X/L	Z,FULL SCALE(IN)
252	541.1	6.089	.887	1.107E-03	.0341	1.330E-03	.0410	.3923	420.0000
253	543.5	8.313	1.212	1.517E-03	.0467	1.823E-03	.0562	.3961	420.0000
254	542.1	6.009	.916	1.145E-03	.0353	1.376E-03	.0424	.3884	415.0000
257	544.7	6.532	.886	1.111E-03	.0342	1.335E-03	.0412	.3845	405.0000
258	546.3	7.912	1.084	1.362E-03	.0420	1.639E-03	.0505	.3884	405.0000

DATE 5/12/75

AEDC(ARO,INC.) ARNOLD AFS, TENNESSEE
VON KARMAN GAS DYNAMICS FACILITY
50 INCH HYPERSONIC TUNNEL B
V41B-87A

GROUP	TEST CONDITION	MODEL	MACH NO	PO,PSIA	TO,DEG R	ALPHA-MODEL	ALPHA-SECTOR	ALPHA-PREBEND	ROLL MODEL	YAW
136	40	140 B	8.00	859.7	1342	30.00	-1.99	30.00	89.88	2.0

T-INF (DEG R)	P-INF (PSIA)	Q-INF (PSIA)	V-INF (FT/SEC)	RHO-INF (SLUGS/FT3)	MU-INF (LB-SEC/FT2)	RE/FT (FT-1)	HREF-FR (R= .0400FT)	STFR (R= .0400FT)	SWITCH POSITION
97.3	.088	3.945	3866	7.596E-05	7.830E-08	3.750E 06	3.244E-02	1.388E-02	3

TC NO	TW	DTWDT	QDOT	H(TO)	H(TO)/HREF	H(.9TO)	H(.9TO)/HREF	TOP CENTERLINE X/L
367	641.0	99.953	12.378	1.765E-02	.5441	2.183E-02	.6729	0
368	599.3	75.314	9.869	1.326E-02	.4095	1.621E-02	.4997	.0008
369	572.6	51.328	6.124	7.957E-03	.2453	9.638E-03	.2971	.0019
370	558.8	36.002	4.445	5.674E-03	.1749	6.848E-03	.2111	.0037
371	554.4	27.359	2.733	3.432E-03	.1058	4.136E-03	.1275	.0058
372	545.3	19.245	2.439	3.124E-03	.0963	3.757E-03	.1158	.0087
373	539.6	12.226	1.664	1.999E-03	.0616	2.400E-03	.0740	.0118
374	537.8	9.716	1.274	1.564E-03	.0488	1.901E-03	.0586	.0151
375	535.9	7.687	1.051	1.304E-03	.0402	1.565E-03	.0482	.0182
376	535.3	6.530	.861	1.067E-03	.0329	1.280E-03	.0395	.0215
377	534.2	5.847	.752	9.308E-04	.0287	1.116E-03	.0344	.0246
378	541.4	4.700	.547	6.748E-04	.0208	8.066E-04	.0249	.0278
379	532.5	3.875	.476	5.874E-04	.0181	7.041E-04	.0217	.0609
380	531.9	3.484	.357	4.411E-04	.0136	5.287E-04	.0163	.0646
381	532.1	3.393	.439	5.419E-04	.0167	6.495E-04	.0200	.0684
382	530.7	2.796	.365	4.501E-04	.0139	5.393E-04	.0166	.0721
383	530.0	2.404	.321	3.958E-04	.0122	4.742E-04	.0146	.0760
384	529.2	2.189	.304	3.742E-04	.0115	4.482E-04	.0138	.0796
385	529.9	2.193	.282	3.466E-04	.0107	4.152E-04	.0128	.0789
386	531.1	2.795	.330	4.072E-04	.0126	4.879E-04	.0150	.0982
387	531.8	2.977	.365	4.506E-04	.0139	5.400E-04	.0166	.1019
388	534.1	4.241	.403	4.992E-04	.0154	5.986E-04	.0185	.1160
389	533.1	3.625	.526	6.501E-04	.0200	7.793E-04	.0240	.1195
390	533.0	3.487	.549	6.790E-04	.0209	8.141E-04	.0251	.1231
391	532.4	3.257	.519	6.407E-04	.0197	7.680E-04	.0237	.1268
392	532.7	3.393	.591	7.183E-04	.0221	8.611E-04	.0265	.1305
393	532.5	3.610	.610	7.540E-04	.0232	9.038E-04	.0279	.1338
394	532.9	3.903	.655	8.094E-04	.0249	9.704E-04	.0299	.1376
395	532.6	4.220	.631	7.793E-04	.0240	9.341E-04	.0288	.1411
396	533.2	4.361	.646	7.989E-04	.0246	9.578E-04	.0295	.1448
397	533.7	4.483	.665	8.220E-04	.0253	9.856E-04	.0304	.1483
398	534.3	6.113	.860	1.065E-03	.0328	1.277E-03	.0394	.1519
399	548.8	15.155	2.039	2.570E-03	.0792	3.093E-03	.0953	.1556

DATE 5/12/75

AEDC(ARO,INC.) ARNOLD AFS, TENNESSEE
VON KARMAN GAS DYNAMICS FACILITY
50 INCH HYPERSONIC TUNNEL H
V41H-87A

GROUP	TEST CONDITION	MODEL	MACH NO	PO,PSIA	TO,DEG R	ALPHA-MODEL	ALPHA-SECTOR	ALPHA-PREBEND	ROLL MODEL	YAW
136	40	140 B	8.00	859.7	1342	30.00	-1.99	30.00	89.88	2.0

T-INF (DEG R)	P-INF (PSIA)	Q-INF (PSIA)	V-INF (FT/SEC)	RHO-INF (SLUGS/FT3)	MU-INF (LB-SEC/FT2)	RE/FT (FT-1)	HREF-FR (R= .0400FT)	STFR (R= .0400FT)	SWITCH POSITION
97.2	.038	3.945	3866	7.596E-05	7.830E-08	3.750E 06	3.244E-02	1.388E-02	3

IC	NC	TW	DTWDT	QDOT	H(TO)	H(TO)/HREF	H(.9TO)	H(.9TO)/HREF	X/L
									TOP CENTERLINE
400		549.7	15.865	2.157	2.722E-03	.0839	3.277E-03	.1010	.1582
401		547.8	15.285	1.993	2.509E-03	.0773	3.020E-03	.0931	.1608
402		548.4	16.445	2.054	2.600E-03	.0802	3.130E-03	.0965	.1635
403		547.7	14.766	1.865	2.272E-03	.0700	2.734E-03	.0843	.1664
404		547.5	14.391	1.754	2.207E-03	.0680	2.655E-03	.0818	.1691
405		548.5	14.642	1.785	2.249E-03	.0693	2.707E-03	.0834	.1720
406		544.5	13.282	1.615	2.026E-03	.0624	2.436E-03	.0751	.1748
407		542.8	11.351	1.472	1.841E-03	.0567	2.212E-03	.0682	.1769
408		543.9	9.847	1.447	1.806E-03	.0557	2.170E-03	.0669	.1800
409		537.9	7.615	1.047	1.364E-03	.0421	1.638E-03	.0505	.1831
410		537.6	6.246	.900	1.118E-03	.0345	1.342E-03	.0414	.1863
411		534.5	5.029	.755	9.346E-04	.0288	1.121E-03	.0345	.1894
412		533.5	3.993	.542	6.700E-04	.0207	8.034E-04	.0248	.1931
413		532.4	3.125	.418	5.166E-04	.0159	6.192E-04	.0191	.1972
414		530.6	1.669	.223	2.750E-04	.0085	3.294E-04	.0102	.2049
415		529.8	.929	.092	1.126E-04	.0035	1.349E-04	.0042	.2250
416		529.1	.430	.050	6.167E-05	.0019	7.386E-05	.0023	.2500
									NOSE TC (Z = 338)
									X/L 2Y/B
145		610.5	72.088	10.034	1.371E-02	.4227	1.679E-02	.5177	.0008 .5039
146		615.9	73.791	10.297	1.418E-02	.4370	1.739E-02	.5361	.0023 .5082
147		613.0	66.072	9.162	1.239E-02	.3820	1.514E-02	.4668	.0043 .5135
148		591.9	53.203	7.582	1.011E-02	.3115	1.231E-02	.3793	.0068 .5205
149		572.3	37.736	5.541	7.197E-03	.2218	8.717E-03	.2687	.0095 .5279
150		571.2	32.257	4.682	6.073E-03	.1872	7.353E-03	.2267	.0122 .5354
151		565.7	21.568	3.063	3.945E-03	.1216	4.769E-03	.1470	.0218 .5621
152		565.4	23.695	3.247	4.180E-03	.1288	5.053E-03	.1558	.0251 .5712
153		567.4	24.872	3.073	3.966E-03	.1222	4.797E-03	.1479	.0286 .5808
154		569.5	25.179	3.171	4.104E-03	.1265	4.966E-03	.1531	.0319 .5898
155		566.9	23.174	2.946	3.800E-03	.1171	4.595E-03	.1416	.0354 .5995
156		564.5	21.134	2.655	3.414E-03	.1052	4.126E-03	.1272	.0387 .6085
157		564.3	20.436	2.539	3.264E-03	.1006	3.945E-03	.1216	.0420 .6176
158		563.6	19.642	2.440	3.134E-03	.0966	3.787E-03	.1167	.0462 .6294
159		563.6	19.891	2.254	2.895E-03	.0892	3.498E-03	.1078	.0503 .6406

GROUP 136 CENTERLINE TIME 3.15

CH	TC	FIT LENGTH	DTDWT	UNCERTAINTY	CH	TC	FIT LENGTH	DTDWT	UNCERTAINTY
1	221	2.00	.725	.0118	50	384	.80	2.189	.0171
2	222	1.20	1.270	.0146	51	385	.80	2.193	.0333
3	223	.60	3.434	.0085	52	386	.80	2.795	.0139
4	224	.60	7.282	.0060	53	387	.80	2.977	.0118
5	225	.60	4.447	.0254	54	388	.60	4.241	.0122
6	226	.40	15.841	.0053	55	389	.80	3.625	.0102
7	227	.40	9.925	.0373	56	390	.80	3.487	.0238
8	228	.60	4.934	.0113	57	391	.80	3.257	.0107
9	229	.60	4.891	.0141	58	392	.80	3.393	.0080
10	232	2.00	.527	.0185	59	393	.80	3.610	.0097
11	233	2.00	.625	.0194	60	394	.80	3.903	.0064
12	236	2.00	.783	.0168	61	395	.60	4.220	.0205
13	237	2.00	.852	.0120	62	396	.60	4.361	.0109
14	238	.60	5.619	.0092	63	397	.60	4.483	.0129
15	239	.60	7.549	.0126	64	398	.60	6.113	.0114
16	240	.60	5.328	.0119	65	399	.40	15.155	.0085
17	241	.60	7.152	.0177	66	400	.40	15.865	.0067
18	242	.60	7.816	.0066	67	401	.40	15.285	.0042
19	243	.60	4.945	.0143	68	402	.40	16.445	.0292
20	244	.60	4.124	.0159	69	403	.40	14.760	.0150
21	245	.60	4.329	.0093	70	404	.40	14.391	.0077
22	246	.60	4.790	.0101	71	405	.40	14.642	.0085
23	247	.80	3.569	.0216	72	406	.40	13.282	.0045
24	248	.60	4.384	.0259	73	407	.40	11.351	.0079
25	249	.60	5.146	.0104	74	408	.40	9.847	.0095
26	250	.60	4.289	.0182	75	409	.60	7.616	.0061
27	251	.60	4.460	.0100	76	410	.60	6.246	.0095
28	252	.60	6.089	.0098	77	411	.60	5.029	.0073
29	253	.40	8.313	.0089	78	412	.60	3.992	.0113
30	254	.60	6.009	.0112	79	413	.80	3.125	.0601
31	257	.60	6.532	.0071	80	414	1.20	1.669	.0101
32	258	.60	7.912	.0051	81	415	2.00	.929	.0107
33	367	.20	99.953	.0031	82	416	2.00	.430	.0200
34	368	.20	75.314	.0120	83	145	.20	72.088	.0037
35	369	.20	51.398	.0022	84	146	.20	73.791	.0013
36	370	.20	36.002	.0069	85	147	.20	66.072	.0016
37	371	.30	27.359	.0042	86	148	.20	53.203	.0075
38	372	.30	19.245	.0091	87	149	.20	37.796	.0103
39	373	.40	12.226	.0074	88	150	.20	32.257	.0062
40	374	.40	9.716	.0153	89	151	.30	21.568	.0073
41	375	.60	7.687	.0052	90	152	.30	23.696	.0284
42	376	.60	6.530	.0069	91	153	.30	24.872	.0093
43	377	.60	5.847	.0070	92	154	.30	25.178	.0080
44	378	.60	4.700	.0159	93	155	.30	23.174	.0021
45	379	.80	3.875	.0067	94	156	.30	21.134	.0058
46	380	.80	3.494	.0087	95	157	.30	20.436	.0105
47	381	.80	3.393	.0226	96	158	.30	19.642	.0060
48	382	.80	2.796	.0191	97	159	.30	19.891	.0058
49	383	.80	2.404	.0136	98	0	-0	0	0
137		.050							

BIT ON LOOP 62

DATE 5/1-/75

AEDC(ARO,INC.) ARNOLD AFS, TENNESSEE
VON KARMAN GAS DYNAMICS FACILITY
50 INCH HYPERSONIC TUNNEL H
V41B-87A

GROUP	TEST CONDITION	MODEL	MACH NO	PO,PSIA	TO,DEG R	ALPHA-MODEL	ALPHA-SECTOR	ALPHA-PREBEND	ROLL MODEL	YAW
135	42	140 H	8.00	861.9	1341	40.03	-10.03	30.00	179.86	.0

T-INF (DEG R)	P-INF (PSIA)	Q-INF (PSIA)	V-INF (FT/SEC)	RHO-INF (SLUGS/FT3)	MU-INF (LB-SEC/FT2)	RE/FT (FT-1)	HREF-FR (R= .0400FT)	STFR (R= .0400FT)	SWITCH POSITION
97.2	.088	3.955	3864	7.623E-05	7.822E-08	3.766E 06	3.248E-02	1.385E-02	2

IC NO	TW	DTWDT	CDCT	H(TO)	H(TO)/HREF	H(.9TO)	H(.9TO)/HREF	X/L	Z,FULL SCALE(IN)
								ACCESS HATCH WINDOW	
107	538.7	2.705	.249	4.846E-04	.0149	5.819E-04	.0179	.2050	396.2000
								FUSELAGE VENT PANEL NO. 3 AND 1	
								X/L	Z,FULL SCALE(IN)
108	538.5	2.962	.314	3.916E-04	.0121	4.701E-04	.0145	.1244	377.5000
109	537.6	2.336	.290	3.625E-04	.0111	4.327E-04	.0133	.1302	377.5000
110	537.6	2.113	.268	3.342E-04	.0103	4.012E-04	.0124	.1360	377.5000
111	538.4	1.994	.240	2.988E-04	.0092	3.587E-04	.0110	.1418	377.5000
112	539.3	1.653	.197	2.452E-04	.0076	2.945E-04	.0091	.1476	377.5000
113	538.7	1.445	.166	2.074E-04	.0064	2.490E-04	.0077	.1215	273.5000
114	538.0	1.963	.236	2.944E-04	.0091	3.534E-04	.0109	.1273	273.5000
115	538.0	1.239	.154	1.920E-04	.0059	2.305E-04	.0071	.1331	273.5000
116	538.1	1.090	.134	1.671E-04	.0051	2.006E-04	.0062	.1389	273.5000
117	539.1	1.202	.149	1.741E-04	.0053	2.079E-04	.0064	.1447	273.5000
118	541.1	1.011	.140	1.756E-04	.0054	2.110E-04	.0065	.1409	366.0000
119	544.2	2.191	.285	3.560E-04	.0110	4.304E-04	.0133	.1442	366.0000
120	541.2	1.967	.247	3.087E-04	.0095	3.709E-04	.0114	.1215	359.5000
121	542.9	2.140	.264	3.309E-04	.0102	3.977E-04	.0122	.1303	359.5000
122	543.7	1.955	.245	3.070E-04	.0095	3.691E-04	.0114	.1337	359.5000
								LOWER RCS NOZZLES	
								X/L	Z,FULL SCALE(IN)
124	545.8	3.328	.299	3.701E-04	.0116	4.524E-04	.0139	.0950	400.0000
125	547.6	3.424	.376	4.736E-04	.0146	5.699E-04	.0175	.0988	400.0000
126	550.7	3.713	.513	6.497E-04	.0200	7.825E-04	.0241	.1027	400.0000
127	544.4	8.371	1.135	1.425E-03	.0439	1.713E-03	.0528	.0911	395.0000
128	542.2	7.264	.886	1.110E-03	.0342	1.333E-03	.0411	.0950	395.0000
129	542.4	7.644	.942	1.179E-03	.0362	1.357E-03	.0418	.0988	395.0000
130	543.3	7.876	.947	1.187E-03	.0365	1.427E-03	.0439	.0810	390.0000
131	543.5	9.258	1.375	1.725E-03	.0531	2.073E-03	.0638	.0857	390.0000
132	544.9	8.183	.959	1.205E-03	.0371	1.449E-03	.0446	.0963	390.0000
133	541.9	6.745	.822	1.029E-03	.0317	1.237E-03	.0381	.0857	383.8000
134	542.6	7.546	1.015	1.272E-03	.0392	1.529E-03	.0471	.0872	377.3000
135	541.7	8.399	1.013	1.268E-03	.0390	1.523E-03	.0469	.0903	374.5500
136	542.2	9.074	1.013	1.268E-03	.0390	1.524E-03	.0469	.0960	374.5500
137	542.3	10.179	1.337	1.675E-03	.0516	2.013E-03	.0620	.0872	370.5500
138	541.4	8.744	1.011	1.265E-03	.0390	1.520E-03	.0468	.0928	370.5500
139	544.3	10.807	1.386	1.742E-03	.0536	2.095E-03	.0645	.0816	366.0500
140	546.4	7.847	1.005	1.265E-03	.0390	1.522E-03	.0469	.0934	362.4000
141	543.9	8.280	1.100	1.380E-03	.0425	1.660E-03	.0511	.0973	362.4000
142	544.0	10.849	1.188	1.491E-03	.0459	1.793E-03	.0552	.0833	355.2000
143	542.9	8.342	.842	1.055E-03	.0325	1.268E-03	.0391	.0919	355.2000
144	544.8	7.020	.930	1.168E-03	.0360	1.405E-03	.0432	.0949	349.0000

DATE 5/12/75

AEDC(ARO,INC.) ARNOLD AFS, TENNESSEE
VON KARMAN GAS DYNAMICS FACILITY
50 INCH HYPERSONIC TUNNEL B
V418-87A

GROUP	TEST CONDITION	MODEL	MACH NO	PO,PSIA	TO,DEG R	ALPHA-MODEL	ALPHA-SECTOR	ALPHA-PREBEND	ROLL MODEL	YAW
138	42	140 B	8.00	861.9	1341	40.03	-10.03	30.00	179.86	.0

T-INF (DEG R)	P-INF (PSIA)	Q-INF (PSIA)	V-INF (FT/SEC)	RHO-INF (SLUGS/FT3)	MU-INF (LB-SEC/FT2)	RE/FT (FT-1)	HREF-FR (R= .0400FT)	STFR (R= .0400FT)	SWITCH POSITION
97.2	.088	3.955	3864	7.623E-05	7.822E-08	3.766E 06	3.248E-02	1.385E-02	2

IC NO	TW	DTWDT	CDOT	H(TO)	H(TO)/HREF	H(.9TO)	H(.9TO)/HREF	X/L	2Y/B
								UPPER RCS NOZZLES	
161	545.5	7.251	.863	1.045E-03	.0334	1.305E-03	.0402	.0619	-.0160
162	548.5	9.357	.872	1.126E-03	.0347	1.356E-03	.0417	.0709	-.0160
163	545.2	5.744	.729	8.917E-04	.0275	1.072E-03	.0330	.0807	-.0160
164	546.6	7.360	.946	1.216E-03	.0374	1.463E-03	.0451	.0943	-.0160
165	548.8	9.734	1.235	1.560E-03	.0480	1.877E-03	.0578	.0978	-.0160
166	549.0	9.587	1.248	1.564E-03	.0481	1.882E-03	.0580	.1013	-.0160
167	547.0	5.539	.755	9.505E-04	.0293	1.144E-03	.0352	.0619	-.0320
168	551.1	11.011	1.166	1.476E-03	.0454	1.778E-03	.0547	.0709	-.0320
169	548.7	6.120	.749	9.455E-04	.0291	1.138E-03	.0350	.0807	-.0320
170	552.6	9.239	1.166	1.479E-03	.0455	1.783E-03	.0549	.0943	-.0320
171	551.4	7.467	.938	1.151E-03	.0354	1.386E-03	.0427	.0978	-.0320
172	550.5	4.099	.539	6.820E-04	.0210	8.214E-04	.0253	.1013	-.0320
173	550.8	5.170	.696	8.812E-04	.0271	1.061E-03	.0327	.0807	-.0480
174	543.3	6.411	.734	9.199E-04	.0283	1.106E-03	.0340	.0943	-.0480
175	550.4	3.142	.454	5.747E-04	.0177	6.921E-04	.0213	.0978	-.0480
176	543.9	6.202	.849	1.065E-03	.0328	1.281E-03	.0394	.1013	-.0480
								CANOPY	
177	546.5	6.875	.952	1.198E-03	.0369	1.441E-03	.0444		
178	549.4	7.080	1.402	1.772E-03	.0545	2.133E-03	.0657		
179	552.0	6.414	1.356	1.719E-03	.0529	2.071E-03	.0638		
180	551.7	5.923	.779	9.875E-04	.0304	1.190E-03	.0366		
181	551.8	6.456	.884	1.119E-03	.0345	1.348E-03	.0415		
182	547.5	6.714	.953	1.214E-03	.0374	1.461E-03	.0450		
183	544.8	6.343	.800	1.005E-03	.0310	1.209E-03	.0372		
184	542.9	2.251	.309	3.872E-04	.0119	4.654E-04	.0143		
185	543.1	6.015	.726	9.101E-04	.0280	1.094E-03	.0337		
186	546.2	7.009	.885	1.114E-03	.0343	1.340E-03	.0413		
187	549.4	7.299	.978	1.235E-03	.0380	1.486E-03	.0458		
188	551.6	7.055	1.656	2.099E-03	.0646	2.528E-03	.0778		
189	539.1	3.522	.503	6.274E-04	.0193	7.534E-04	.0232		
190	540.2	3.938	.568	7.095E-04	.0218	8.523E-04	.0262		
191	541.6	3.889	.596	7.462E-04	.0230	8.967E-04	.0276		

DATE 5/12/75

AEDC(ARO,INC.) ARNOLD AFS, TENNESSEE
VON KARMAN GAS DYNAMICS FACILITY
50 INCH HYPERSONIC TUNNEL B
V41B-87A

GROUP	TEST CONDITION	MODEL	MACH NO	PO,PSIA	TO,DEG R	ALPHA-MODEL	ALPHA-SECTOR	ALPHA-PREBEND	ROLL MODEL	YAW
138	42	140 B	8.00	861.9	1341	40.03	-10.03	30.00	179.86	.0

T-INF (DEG R)	P-INF (PSIA)	Q-INF (PSIA)	V-INF (FT/SEC)	RHO-INF (SLUGS/FT3)	MU-INF (LB-SEC/FT2)	RE/FT (FT-1)	HREF-FR (R= .0400FT)	STFR (R= .0400FT)	SWITCH POSITION
97.2	.038	3.955	3864	7.623E-05	7.822E-08	3.766E 06	3.248E-02	1.385E-02	2

IC NO	TW	DTWDT	QDOT	H(TO)	H(TO)/HREF	H(.9TO)	H(.9TO)/HREF
						CANOPY	
192	540.2	3.453	.449	6.106E-04	.0188	7.334E-04	.0226
193	541.2	4.311	.833	1.042E-03	.0321	1.251E-03	.0385
194	543.1	4.886	.633	7.941E-04	.0244	9.545E-04	.0294
195	544.3	3.680	.456	5.724E-04	.0176	6.882E-04	.0212
196	545.2	4.880	.644	8.100E-04	.0249	9.742E-04	.0300
197	547.9	5.922	.541	7.456E-04	.0230	8.973E-04	.0276
198	551.5	5.222	.611	7.737E-04	.0238	9.317E-04	.0287
199	548.4	5.486	.743	9.363E-04	.0289	1.130E-03	.0348
200	550.8	5.523	.793	1.004E-03	.0309	1.210E-03	.0372
201	535.8	5.675	.882	9.958E-04	.0307	1.195E-03	.0368
202	536.1	5.881	.744	9.246E-04	.0285	1.110E-03	.0342
203	534.7	4.952	.615	7.629E-04	.0235	9.151E-04	.0282
204	533.2	3.904	.607	7.517E-04	.0231	9.014E-04	.0278
205	534.7	5.306	.827	1.026E-03	.0316	1.231E-03	.0379
206	534.4	4.875	.647	8.020E-04	.0247	9.620E-04	.0296
207	535.0	4.944	.663	8.224E-04	.0253	9.866E-04	.0304
208	535.1	5.304	.713	8.855E-04	.0273	1.062E-03	.0327
209	535.7	4.772	.657	8.160E-04	.0251	9.790E-04	.0301
210	535.5	4.367	.584	7.246E-04	.0223	8.693E-04	.0268
211	537.0	5.186	.631	7.849E-04	.0242	9.421E-04	.0290
212	536.8	5.018	.678	8.430E-04	.0260	1.012E-03	.0311
213	537.3	4.721	.627	7.805E-04	.0240	9.369E-04	.0288
214	537.7	4.543	.645	8.034E-04	.0247	9.644E-04	.0297
215	537.0	4.741	.674	8.390E-04	.0258	1.007E-03	.0310
216	540.3	4.473	.637	7.960E-04	.0245	9.562E-04	.0294
217	541.9	3.872	.554	6.933E-04	.0213	8.331E-04	.0256
218	539.5	4.644	.643	8.020E-04	.0247	9.632E-04	.0297
219	537.8	5.361	.756	9.409E-04	.0290	1.130E-03	.0348
220	536.7	5.898	.812	1.010E-03	.0311	1.212E-03	.0373

GROUP 138 CENTERLINE TIME 3.05

CH	TC	FIT LENGTH	DTDWT	UNCERTAINTY	CH	TC	FIT LENGTH	DTDWT	UNCERTAINTY
1	107	.80	2.775	.0115	50	173	.60	5.170	.0123
2	108	.80	2.962	.0077	51	174	.60	6.411	.0088
3	109	.80	2.336	.0096	52	175	.80	3.142	.0118
4	110	.80	2.113	.0168	53	176	.60	6.202	.0093
5	111	1.20	1.944	.0286	54	177	.60	6.875	.0096
6	112	1.20	1.650	.0122	55	178	.60	7.080	.0085
7	113	1.20	1.446	.0566	56	179	.60	6.414	.0378
8	114	1.20	1.963	.0084	57	180	.60	5.923	.0060
9	115	1.20	1.239	.0280	58	181	.60	6.456	.0077
10	116	1.20	1.040	.0165	59	182	.60	6.714	.0104
11	117	1.20	1.242	.0260	60	183	.60	6.342	.0082
12	118	1.20	1.011	.0232	61	184	2.00	2.251	.1397
13	119	2.00	2.191	.0991	62	185	.60	6.015	.0063
14	120	2.00	1.967	.0848	63	186	.60	7.009	.0089
15	121	2.00	2.140	.0416	64	187	.60	7.299	.0127
16	122	2.00	1.955	.1098	65	188	.60	7.055	.0072
17	124	2.00	3.328	.1152	66	189	.80	3.522	.0111
18	125	2.00	3.424	.1252	67	190	.80	3.938	.0065
19	126	2.00	3.713	.1347	68	191	.80	3.889	.0444
20	127	.40	8.371	.0118	69	192	.80	3.453	.0107
21	128	.60	7.264	.0071	70	193	.60	4.311	.0107
22	129	.60	7.644	.0071	71	194	.60	4.886	.0190
23	130	.60	7.876	.0084	72	195	.80	3.680	.0130
24	131	.40	9.258	.0248	73	196	.60	4.880	.0091
25	132	.60	8.183	.0070	74	197	.60	5.922	.0091
26	133	.60	6.742	.0094	75	198	.60	5.222	.0186
27	134	.60	7.546	.0064	76	199	.60	5.486	.0135
28	135	.40	8.395	.0108	77	200	.60	5.523	.0070
29	136	.40	9.074	.0103	78	201	.60	5.675	.0091
30	137	.40	10.175	.0098	79	202	.60	5.881	.0517
31	138	.40	8.744	.0103	80	203	.60	4.952	.0094
32	139	.40	10.867	.0090	81	204	.80	3.908	.0073
33	140	.60	7.847	.0066	82	205	.60	5.306	.0084
34	141	.60	8.280	.0053	83	206	.60	4.875	.0130
35	142	.40	10.849	.0106	84	207	.60	4.944	.0096
36	143	.40	8.342	.0104	85	208	.60	5.304	.0098
37	144	.60	7.020	.0060	86	209	.60	4.772	.0117
38	161	.60	7.251	.0120	87	210	.60	4.367	.0244
39	162	.40	9.357	.0111	88	211	.60	5.186	.0078
40	163	.60	5.744	.0118	89	212	.60	5.018	.0190
41	164	.60	7.360	.0069	90	213	.60	4.721	.0480
42	165	.40	9.734	.0093	91	214	.60	4.593	.0314
43	166	.40	9.547	.0115	92	215	.60	4.741	.0195
44	167	.60	5.539	.0097	93	216	.60	4.473	.0153
45	168	.40	11.011	.0112	94	217	.80	3.872	.0205
46	169	.60	6.120	.0083	95	218	.60	4.644	.0223
47	170	.40	9.239	.0116	96	219	.60	5.361	.0114
48	171	.60	7.467	.0073	97	220	.60	5.898	.0074
49	172	.60	4.099	.0107	98	0	-0	0	0
139		.650							

BII CN LOOP 65

DATE 5/12/75

AEDC(ARO,INC.) ARNOLD AFS, TENNESSEE
VON KARMAN GAS DYNAMICS FACILITY
50 INCH HYPERSONIC TUNNEL B
V418-87A

GROUP	TEST CONDITION	MODEL	MACH NO	PO,PSIA	TO,DEG R	ALPHA-MODEL	ALPHA-SECTOR	ALPHA-PREBEND	ROLL MODEL	YAW
139	42	140 B	8.00	861.7	1342	40.10	-10.10	30.00	179.86	.0

T-INF (DEG R)	P-INF (PSIA)	Q-INF (PSIA)	V-INF (FT/SEC)	RHO-INF (SLUGS/FT3)	MU-INF (LB-SEC/FT2)	RE/FT (FT-1)	HREF-FR (R= .0400FT)	STFR (R= .0400FT)	SWITCH POSITION
97.3	.088	3.954	3866	7.613E-05	7.831E-08	3.758E 06	3.248E-02	1.386E-02	3

TC NO	TW	DTWDT	QDOT	H(TO)	H(TO)/HREF	H(.9TO)	H(.9TO)/HREF	X/L	2Y/B
								CANOPY	
221	527.6	.560	.068	8.298E-05	.0026	9.934E-05	.0031		
222	527.4	1.248	.153	1.881E-04	.0058	2.252E-04	.0069		
223	524.7	2.294	.310	3.791E-04	.0117	4.536E-04	.0140		
								ESCAPE HATCH AND WINDOW	
224	531.2	5.951	.592	7.297E-04	.0225	8.744E-04	.0269	.1933	.0162
225	529.6	3.811	.455	5.600E-04	.0172	6.708E-04	.0207	.1972	.0162
226	528.4	3.094	.325	3.995E-04	.0123	4.784E-04	.0147	.1933	.0384
227	526.4	2.060	.301	3.683E-04	.0113	4.409E-04	.0136	.1972	.0384
228	525.3	1.717	.220	2.692E-04	.0083	3.221E-04	.0099	.1933	.0653
229	525.9	1.899	.243	2.978E-04	.0092	3.564E-04	.0110	.1972	.0653
232	527.1	.377	.051	6.239E-05	.0019	7.468E-05	.0023	.2567	.0235
233	527.8	.466	.071	8.656E-05	.0027	1.036E-04	.0032	.2606	.0235
236	527.0	.586	.085	1.048E-04	.0032	1.255E-04	.0039	.2567	.0491
237	527.6	.754	.106	1.297E-04	.0040	1.553E-04	.0048	.2606	.0491
								CARGO BAY HINGE NO. 1	
								X/L	Z,FULL SCALE(IN)
238	536.1	3.389	.455	5.638E-04	.0174	6.765E-04	.0208	.2879	420.0000
239	540.7	6.590	.886	1.105E-03	.0340	1.327E-03	.0409	.2917	420.0000
240	535.9	3.331	.477	5.999E-04	.0182	7.088E-04	.0218	.2840	415.0000
241	540.5	5.721	.808	1.007E-03	.0310	1.210E-03	.0372	.2879	415.0000
242	537.4	5.896	.844	1.048E-03	.0323	1.258E-03	.0387	.2917	415.0000
243	537.3	2.910	.357	4.430E-04	.0136	5.316E-04	.0164	.2801	405.0000
244	536.8	2.561	.300	3.725E-04	.0115	4.470E-04	.0138	.2840	405.0000
								CARGO BAY HINGE NO. 2	
								X/L	Z,FULL SCALE(IN)
245	540.8	7.508	1.077	1.343E-03	.0414	1.614E-03	.0497	.3192	420.0000
246	544.2	10.463	1.536	1.887E-03	.0581	2.268E-03	.0698	.3439	420.0000
247	541.9	6.744	.998	1.247E-03	.0384	1.498E-03	.0461	.3362	415.0000
248	545.1	9.900	1.467	1.840E-03	.0567	2.213E-03	.0681	.3401	415.0000
249	545.0	9.949	1.474	1.849E-03	.0569	2.224E-03	.0685	.3439	415.0000
250	544.2	6.654	.839	1.052E-03	.0324	1.264E-03	.0389	.3323	405.0000
251	543.6	7.000	.864	1.082E-03	.0333	1.300E-03	.0400	.3362	405.0000
								CARGO BAY HINGE NO. 3	
								X/L	Z,FULL SCALE(IN)
252	543.3	9.718	1.417	1.774E-03	.0546	2.132E-03	.0656	.3923	420.0000
253	544.8	10.655	1.555	1.950E-03	.0600	2.344E-03	.0722	.3961	420.0000
254	544.1	9.310	1.421	1.780E-03	.0548	2.140E-03	.0659	.3884	415.0000
257	545.5	8.332	1.130	1.419E-03	.0437	1.706E-03	.0525	.3845	405.0000
258	545.1	6.910	.946	1.187E-03	.0365	1.427E-03	.0439	.3884	405.0000

DATE 5/12/75

AEDC(ARO,INC.) ARNOLD AFS, TENNESSEE
VON KARMAN GAS DYNAMICS FACILITY
50 INCH HYPERSONIC TUNNEL B
V418-87A

GROUP	TEST CONDITION	MODEL	MACH NO	PO,PSIA	TO,DEG R	ALPHA-MODEL	ALPHA-SECTOR	ALPHA-PREBEND	ROLL MODEL	YAW
139	42	140 B	8.00	861.7	1342	40.10	-10.10	30.00	179.86	.0

T-INF (DEG R)	P-INF (PSIA)	Q-INF (PSIA)	V-INF (FT/SEC)	RHO-INF (SLUGS/FT3)	MU-INF (LB-SEC/FT2)	RE/FT (FT-1)	HREF-FR (R= .0400FT)	STFR (R= .0400FT)	SWITCH POSITION
97.3	.088	3.954	3866	7.613E-05	7.831E-08	3.758E 06	3.248E-02	1.386E-02	3

TOP CENTERLINE

TC NO	TW	DTWDT	QDOT	H(TO)	H(TO)/HREF	H(.9TO)	H(.9TO)/HREF	X/L
367	601.8	90.373	10.980	1.463E-02	.4565	1.811E-02	.5576	0
368	570.1	63.819	8.243	1.067E-02	.3286	1.292E-02	.3977	.0008
369	556.1	42.096	4.941	6.335E-03	.1950	7.639E-03	.2352	.0019
370	548.1	27.529	3.380	4.256E-03	.1310	5.122E-03	.1577	.0037
371	543.3	20.419	2.006	2.511E-03	.0773	3.018E-03	.0929	.0058
372	538.4	13.945	1.798	2.236E-03	.0688	2.684E-03	.0826	.0087
373	533.5	8.652	1.132	1.399E-03	.0431	1.678E-03	.0517	.0118
374	531.5	8.449	1.104	1.362E-03	.0419	1.632E-03	.0502	.0151
375	531.3	5.832	.797	9.824E-04	.0302	1.177E-03	.0362	.0182
376	531.8	4.220	.555	6.651E-04	.0211	8.211E-04	.0253	.0215
377	531.4	3.978	.511	6.301E-04	.0194	7.551E-04	.0232	.0246
378	530.8	3.962	.461	5.682E-04	.0175	6.808E-04	.0210	.0278
379	529.5	2.749	.337	4.145E-04	.0128	4.964E-04	.0153	.0609
380	529.2	2.605	.267	3.283E-04	.0101	3.932E-04	.0121	.0646
381	529.2	2.629	.340	4.177E-04	.0129	5.003E-04	.0154	.0684
382	528.6	2.395	.313	3.840E-04	.0118	4.599E-04	.0142	.0721
383	528.2	2.334	.312	3.829E-04	.0118	4.585E-04	.0141	.0760
384	527.9	2.461	.342	4.197E-04	.0129	5.025E-04	.0155	.0796
385	529.3	3.462	.444	5.463E-04	.0168	6.544E-04	.0201	.0789
386	529.9	4.110	.485	5.974E-04	.0184	7.157E-04	.0220	.0982
387	530.8	4.732	.580	7.150E-04	.0220	8.567E-04	.0264	.1019
388	533.9	7.279	.692	8.565E-04	.0264	1.027E-03	.0316	.1160
389	532.4	6.089	.883	1.090E-03	.0336	1.307E-03	.0402	.1195
390	531.8	5.474	.862	1.063E-03	.0327	1.275E-03	.0392	.1231
391	531.6	5.095	.811	1.001E-03	.0308	1.199E-03	.0369	.1268
392	531.7	4.900	.839	1.035E-03	.0319	1.241E-03	.0382	.1305
393	531.3	4.875	.824	1.016E-03	.0313	1.217E-03	.0375	.1338
394	531.3	4.983	.836	1.030E-03	.0317	1.235E-03	.0380	.1376
395	530.6	4.586	.685	8.438E-04	.0260	1.011E-03	.0311	.1411
396	531.1	4.444	.658	8.109E-04	.0250	9.717E-04	.0299	.1448
397	530.9	4.252	.630	7.758E-04	.0239	9.296E-04	.0286	.1483
398	531.0	5.106	.717	8.839E-04	.0272	1.059E-03	.0326	.1519
399	541.9	13.552	1.817	2.270E-03	.0699	2.727E-03	.0840	.1556

DATE 5/12/75

AEDC(ARO,INC.) ARNOLD AFS, TENNESSEE
VON KARMAN GAS DYNAMICS FACILITY
50 INCH HYPERSONIC TUNNEL B
V41B-B7A

GROUP	TEST CONDITION	MODEL	MACH NO	PO,PSIA	TO,DEG R	ALPHA-MODEL	ALPHA-SECTOR	ALPHA-PREBEND	ROLL MODEL	YAW
139	42	140 B	8.00	861.7	1342	40.10	-10.10	30.00	179.86	.0

T-INF (DEG R)	P-INF (PSIA)	Q-INF (PSIA)	V-INF (FT/SEC)	RHO-INF (SLUGS/FT3)	MU-INF (LB-SEC/FT2)	RE/FT (FT-1)	HREF-FR (R= .0400FT)	STFR (R= .0400FT)	SWITCH POSITION
57.2	.038	3.954	3866	7.613E-05	7.831E-08	3.758E 06	3.248E-02	1.386E-02	3

TC NO	TW	DTWDT	QDOT	H(TO)	H(TO)/HREF	H(.9TO)	H(.9TO)/HREF	X/L	2Y/B
								TOP CENTERLINE	
400	543.4	17.123	2.320	2.904E-03	.0894	3.491E-03	.1075	.1582	
401	541.5	17.002	2.210	2.760E-03	.0850	3.316E-03	.1021	.1608	
402	540.7	15.157	1.895	2.364E-03	.0728	2.839E-03	.0874	.1635	
403	538.7	11.829	1.440	1.792E-03	.0552	2.151E-03	.0662	.1664	
404	539.0	13.242	1.607	2.000E-03	.0616	2.401E-03	.0739	.1691	
405	541.8	16.915	2.055	2.567E-03	.0790	3.084E-03	.0950	.1720	
406	541.7	18.092	2.198	2.746E-03	.0845	3.299E-03	.1016	.1748	
407	541.2	16.902	2.189	2.733E-03	.0841	3.283E-03	.1011	.1769	
408	539.4	14.435	2.120	2.641E-03	.0813	3.171E-03	.0976	.1800	
409	535.1	10.750	1.547	1.916E-03	.0590	2.298E-03	.0708	.1831	
410	535.0	8.887	1.279	1.584E-03	.0488	1.900E-03	.0585	.1863	
411	532.6	6.405	.960	1.186E-03	.0365	1.422E-03	.0438	.1894	
412	531.2	4.590	.622	7.671E-04	.0236	9.192E-04	.0283	.1931	
413	530.3	3.240	.433	5.334E-04	.0164	6.391E-04	.0197	.1972	
414	528.8	1.446	.193	2.375E-04	.0073	2.844E-04	.0088	.2049	
415	527.7	.563	.055	6.802E-05	.0021	8.143E-05	.0025	.2250	
416	528.1	.489	.057	7.012E-05	.0022	8.396E-05	.0026	.2500	
								NOSE TC (Z = 338)	
145	541.7	62.659	8.598	1.130E-02	.3480	1.373E-02	.4226	.0008	.5039
146	536.4	70.311	9.690	1.289E-02	.3968	1.569E-02	.4830	.0023	.5082
147	582.6	59.425	8.158	1.074E-02	.3306	1.304E-02	.4016	.0043	.5135
148	573.1	50.013	7.062	9.180E-03	.2826	1.112E-02	.3424	.0068	.5205
149	560.4	35.167	5.125	6.555E-03	.2018	7.913E-03	.2436	.0095	.5279
150	558.2	28.922	4.171	5.319E-03	.1638	6.418E-03	.1976	.0122	.5354
151	554.9	19.624	2.772	3.521E-03	.1084	4.244E-03	.1307	.0218	.5621
152	556.4	22.260	3.036	3.863E-03	.1189	4.659E-03	.1434	.0251	.5712
153	558.3	22.949	2.822	3.599E-03	.1108	4.343E-03	.1337	.0286	.5808
154	556.5	20.846	2.608	3.319E-03	.1022	4.003E-03	.1232	.0319	.5898
155	555.7	20.028	2.532	3.218E-03	.0991	3.881E-03	.1195	.0354	.5995
156	553.8	18.187	2.272	2.882E-03	.0887	3.473E-03	.1069	.0387	.6085
157	553.9	17.957	2.219	2.815E-03	.0867	3.392E-03	.1044	.0420	.6176
158	554.0	18.099	2.237	2.838E-03	.0874	3.420E-03	.1053	.0462	.6294
159	553.4	17.733	1.999	2.534E-03	.0780	3.054E-03	.0940	.0503	.6406

GROUP 139 CENTERLINE TIME 3.20

CH	TC	FIT LENGTH	DTDWT	UNCERTAINTY	CH	TC	FIT LENGTH	DTDWT	UNCERTAINTY
1	221	1.70	.560	.0192	50	384	.80	2.461	.0777
2	222	1.20	1.248	.0114	51	385	.80	3.462	.0152
3	223	.80	2.274	.0152	52	386	.60	4.110	.0158
4	224	.60	5.951	.0120	53	387	.60	4.732	.0147
5	225	.80	3.811	.0152	54	388	.60	7.279	.0100
6	226	.80	3.094	.0097	55	389	.60	6.089	.0111
7	227	.80	2.060	.0682	56	390	.60	5.474	.0257
8	228	1.20	1.717	.0310	57	391	.60	5.095	.0091
9	229	1.20	1.899	.0325	58	392	.60	4.960	.0089
10	232	1.70	.377	.0483	59	393	.60	4.875	.0193
11	233	1.70	.466	.0385	60	394	.60	4.983	.0074
12	236	1.70	.586	.0360	61	395	.60	4.586	.0140
13	237	1.70	.754	.0160	62	396	.60	4.444	.0091
14	238	.80	3.389	.1046	63	397	.60	4.252	.0152
15	239	.60	6.590	.0212	64	398	.60	5.106	.0130
16	240	.80	3.331	.0281	65	399	.40	13.552	.0060
17	241	.60	5.721	.0299	66	400	.30	17.123	.0109
18	242	.60	5.896	.0266	67	401	.30	17.002	.0048
19	243	.60	2.910	.0165	68	402	.40	15.157	.0314
20	244	.80	2.561	.0226	69	403	.40	11.829	.0162
21	245	.60	7.508	.0076	70	404	.40	13.242	.0121
22	246	.40	10.483	.0078	71	405	.30	16.915	.0135
23	247	.60	6.744	.0149	72	406	.30	18.092	.0097
24	248	.40	9.900	.0127	73	407	.30	16.902	.0046
25	249	.40	9.949	.0097	74	408	.40	14.435	.0059
26	250	.60	6.654	.0103	75	409	.40	10.750	.0107
27	251	.60	7.000	.0095	76	410	.40	8.887	.0099
28	252	.40	9.718	.0075	77	411	.60	6.405	.0066
29	253	.40	10.655	.0106	78	412	.60	4.590	.0092
30	254	.40	9.310	.0151	79	413	.80	3.240	.0514
31	257	.40	8.332	.0100	80	414	1.20	1.446	.0139
32	258	.60	6.910	.0080	81	415	1.70	.563	.0234
33	367	.20	90.373	.0017	82	416	1.70	.489	.0217
34	368	.20	63.819	.0014	83	145	.20	62.659	.0020
35	369	.20	42.096	.0036	84	146	.20	70.311	.0063
36	370	.30	27.529	.0055	85	147	.20	59.425	.0036
37	371	.30	20.419	.0018	86	148	.20	50.013	.0051
38	372	.40	13.945	.0042	87	149	.20	35.167	.0177
39	373	.40	8.652	.0138	88	150	.30	28.922	.0020
40	374	.40	8.449	.0177	89	151	.30	19.624	.0069
41	375	.60	5.838	.0103	90	152	.30	22.260	.0211
42	376	.60	4.220	.0123	91	153	.30	22.949	.0112
43	377	.60	3.978	.0212	92	154	.30	20.846	.0087
44	378	.80	3.962	.0065	93	155	.30	20.028	.0032
45	379	.80	2.749	.0133	94	156	.30	18.187	.0163
46	380	.80	2.605	.0136	95	157	.30	17.957	.0154
47	381	.80	2.629	.0273	96	158	.30	18.099	.0110
48	382	.80	2.395	.0161	97	159	.30	17.733	.0062
49	383	.60	2.334	.0137	98	0216.0*		0	0
140		.050							

BIT ON LOOP 59

DATE 5/12/75

AEDC(ARO,INC.) ARNOLD AFS, TENNESSEE
VON KARMAN GAS DYNAMICS FACILITY
50 INCH HYPERSONIC TUNNEL B
V41B-87A

GROUP	TEST CONDITION	MODEL	MACH NO	PO,PSIA	TO,DEG R	ALPHA-MODEL	ALPHA-SECTOR	ALPHA-PREBEND	ROLL MODEL	YAW
140	1	140 B	8.00	111.3	1264	20.04	9.96	30.00	179.86	-.0

T-INF (DEG R)	P-INF (PSIA)	Q-INF (PSIA)	V-INF (FT/SEC)	RHO-INF (SLUGS/FT3)	MU-INF (LB-SEC/FT2)	RE/FT (FT-1)	HREF-FR (R= .0400FT)	STFR (R= .0400FT)	SWITCH POSITION
91.6	.011	.511	3752	1.044E-05	7.377E-08	5.311E 05	1.155E-02	3.721E-02	1

IC	NC	TW	DT/DT	QDOT	H(TO)	H(TO)/HREF	H(.9TO)	H(.9TO)/HREF	X/L	Z,FULL SCALE(IN)
									FUSELAGE VENT NO. 1	
1		542.5	3.445	.456	6.313E-04	.0546	7.654E-04	.0662	.4434	376.6300
2		543.5	3.345	.452	6.268E-04	.0542	7.601E-04	.0658	.4264	371.6300
3		543.2	3.293	.454	6.289E-04	.0544	7.626E-04	.0660	.4303	371.6300
4		543.1	3.341	.456	6.317E-04	.0547	7.660E-04	.0663	.4342	371.6300
5		543.1	3.223	.431	5.974E-04	.0517	7.244E-04	.0627	.4380	371.6300
6		543.1	3.119	.414	5.743E-04	.0497	6.963E-04	.0603	.4434	369.1300
7		543.8	2.654	.388	5.389E-04	.0466	6.536E-04	.0566	.4226	366.6300
8		542.9	2.385	.361	4.998E-04	.0433	6.060E-04	.0524	.4264	366.6300
9		543.8	2.362	.344	4.780E-04	.0414	5.797E-04	.0502	.4303	366.6300
10		543.3	2.101	.311	4.169E-04	.0361	5.056E-04	.0438	.4342	366.6300
11		543.7	2.157	.292	4.057E-04	.0351	4.920E-04	.0426	.4380	366.6300
12		543.4	1.757	.243	3.369E-04	.0292	4.085E-04	.0354	.4496	366.6300
13		545.3	1.077	.159	2.207E-04	.0191	2.678E-04	.0232	.4187	357.1300
14		544.2	1.217	.167	2.313E-04	.0200	2.805E-04	.0243	.4396	361.6300
15		544.2	1.155	.155	2.146E-04	.0186	2.602E-04	.0225	.4434	361.6300
16		545.2	.759	.103	1.432E-04	.0124	1.738E-04	.0150	.4396	355.6300
17		545.5	.763	.104	1.440E-04	.0125	1.748E-04	.0151	.4434	355.6300
18		546.1	.571	.080	1.115E-04	.0096	1.353E-04	.0117	.4396	351.6300
19		547.4	.420	.059	8.214E-05	.0071	9.973E-05	.0086	.4291	332.6300
									CARGO BAY VENT NO. 1	
22		536.8	.879	.122	1.674E-04	.0145	2.027E-04	.0175	.3974	397.6300
23		536.7	1.001	.140	1.918E-04	.0166	2.322E-04	.0201	.4013	397.6300
24		536.5	1.099	.148	2.038E-04	.0176	2.467E-04	.0214	.4052	397.6300
25		536.5	1.033	.136	1.865E-04	.0161	2.258E-04	.0195	.4090	397.6300
26		537.0	1.061	.139	1.911E-04	.0165	2.313E-04	.0200	.4129	397.6300
27		537.0	1.094	.152	2.095E-04	.0181	2.536E-04	.0219	.3936	392.6300
28		537.0	.862	.124	1.702E-04	.0147	2.060E-04	.0178	.3974	392.6300
29		537.0	.954	.137	1.888E-04	.0163	2.286E-04	.0198	.4013	392.6300
30		536.6	1.078	.155	2.126E-04	.0184	2.573E-04	.0223	.4052	392.6300
31		536.9	1.216	.170	2.332E-04	.0202	2.822E-04	.0244	.4090	392.6300
32		537.2	1.321	.175	2.405E-04	.0208	2.911E-04	.0252	.4129	392.6300
33		538.5	1.282	.183	2.522E-04	.0218	3.054E-04	.0264	.4090	386.1300
34		538.8	1.532	.207	2.855E-04	.0247	3.457E-04	.0299	.4129	387.6300
35		539.2	1.119	.158	2.183E-04	.0189	2.644E-04	.0229	.3897	383.1300
36		541.1	1.908	.277	3.830E-04	.0331	4.641E-04	.0402	.4090	378.6300
37		539.4	2.059	.290	3.997E-04	.0346	4.842E-04	.0419	.4129	382.1300
38		541.7	2.456	.343	4.739E-04	.0410	5.744E-04	.0497	.4129	377.1300
39		542.0	2.267	.331	4.587E-04	.0397	5.561E-04	.0481	.4001	373.6300
									PROTUBERANCES	
41		538.1	.872	.117	1.607E-04	.0139	1.946E-04	.0168	.3546	379.0500
42		538.4	1.074	.147	2.020E-04	.0175	2.446E-04	.0212	.3604	379.0500
43		538.9	.790	.103	1.414E-04	.0122	1.712E-04	.0148	.3450	374.0500

DATE 5/12/75

AEDC(ARO,INC.) ARNOLD AFS, TENNESSEE
VON KARMAN GAS DYNAMICS FACILITY
50 INCH HYPERSONIC TUNNEL B
V41B-87A

GROUP	TEST CONDITION	MODEL	MACH NO	PO,PSIA	TO,DEG R	ALPHA-MODEL	ALPHA-SECTOR	ALPHA-PREBEND	ROLL MODEL	YAW
140	1	140 B	8.00	111.3	1264	20.04	9.96	30.00	179.86	-.0

T-INF (DEG R)	P-INF (PSIA)	Q-INF (PSIA)	V-INF (FT/SEC)	RHO-INF (SLUGS/FT3)	MU-INF (LB-SEC/FT2)	RE/FT (FT-1)	HREF-FR (R= .0400FT)	STFR (R= .0400FT)	SWITCH POSITION
91.6	.011	.511	3752	1.044E-05	7.377E-08	5.311E 05	1.155E-02	3.721E-02	1

TC NO	TW	DTWDT	GOOT	H(TO)	H(TO)/HREF	H(.9TO)	H(.9TO)/HREF
44	539.2	.959	.131	1.800E-04	.0156	2.181E-04	.0189
45	539.7	1.366	.189	2.608E-04	.0226	3.159E-04	.0273
46	539.9	1.423	.199	2.745E-04	.0238	3.325E-04	.0288
47	540.7	1.340	.178	2.464E-04	.0213	2.985E-04	.0258
48	541.4	1.488	.204	2.823E-04	.0244	3.422E-04	.0296
49	542.3	1.879	.259	3.582E-04	.0310	4.343E-04	.0376
50	543.2	2.206	.307	4.254E-04	.0368	5.158E-04	.0446
51	543.8	2.691	.366	5.079E-04	.0440	6.159E-04	.0533
52	544.8	2.805	.387	5.375E-04	.0465	6.521E-04	.0564
53	544.9	2.617	.383	5.325E-04	.0461	6.460E-04	.0559
54	536.7	.762	.109	1.494E-04	.0129	1.808E-04	.0156
55	545.1	2.471	.354	4.922E-04	.0426	5.972E-04	.0517

PROTUBERANCES

	X/L	Z,FULL SCALE(IN)
44	.3508	374.0500
45	.3566	374.0500
46	.3604	374.0500
47	.3392	366.5500
48	.3566	366.5500
49	.3392	360.7000
50	.3566	360.7000
51	.3604	360.7000
52	.3392	353.2000
53	.3450	353.2000
54	.3508	353.2000
55	.3566	353.2000

SUBLIMATOR VENT NO. 1

	TW	DTWDT	GOOT	H(TO)	H(TO)/HREF	H(.9TO)	H(.9TO)/HREF	X/L	Z,FULL SCALE(IN)
56	537.9	.733	.095	1.301E-04	.0113	1.575E-04	.0136	.3031	371.1300
57	538.7	.699	.085	1.177E-04	.0102	1.425E-04	.0123	.3074	369.1300
58	540.1	.708	.094	1.292E-04	.0112	1.565E-04	.0135	.3089	363.6300
59	541.9	.924	.122	1.685E-04	.0146	2.042E-04	.0177	.3074	358.1300
60	541.8	.779	.109	1.503E-04	.0130	1.822E-04	.0158	.3031	356.1300
61	540.8	.695	.088	1.219E-04	.0105	1.476E-04	.0128	.2988	358.1300
62	539.3	.705	.086	1.193E-04	.0103	1.444E-04	.0125	.2973	363.6300
63	538.2	.732	.096	1.318E-04	.0114	1.596E-04	.0138	.2988	369.1300
64	513.2	-.050	-.006	-8.019E-06	-.0007	-9.642E-06	-.0008	.3031	376.1300
65	536.7	.688	.094	1.286E-04	.0111	1.556E-04	.0135	.3089	378.6300
66	538.1	.798	.101	1.387E-04	.0120	1.679E-04	.0145	.3101	372.6300
67	538.7	.231	.032	4.477E-05	.0039	5.422E-05	.0047	.3157	370.3800
68	541.1	.779	.099	1.366E-04	.0118	1.655E-04	.0143	.3128	363.6300

DATE 5/12/75

AEDC(ARO,INC.) ARNOLD AFS, TENNESSEE
VON KARMAN GAS DYNAMICS FACILITY
50 INCH HYPERSONIC TUNNEL B
V418-87A

GROUP	TEST CONDITION	MODEL	MACH NO	PO,PSIA	TO,DEG R	ALPHA-MODEL	ALPHA-SECTOR	ALPHA-PREBEND	ROLL MODEL	YAW
140	1	140 B	8.00	111.3	1264	20.04	9.96	30.00	179.86	-.0

T-INF (DEG R)	P-INF (PSIA)	Q-INF (PSIA)	V-INF (FT/SEC)	RHO-INF (SLUGS/FT3)	MU-INF (LB-SEC/FT2)	RE/FT (FT-1)	HREF-FR (R= .0400FT)	STFR (R= .0400FT)	SWITCH POSITION
91.6	.011	.511	3752	1.044E-05	7.377E-06	5.311E 05	1.155E-02	3.721E-02	1

TC NO	TW	DTWDT	QDOT	H(TO)	H(TO)/HREF	H(.9TO)	H(.9TO)/HREF	X/L	Z*FULL SCALE(IN)
								FUSELAGE VENT PANEL NO. 7	
69	537.2	1.017	.142	1.952E-04	.0169	2.363E-04	.0205	.2487	356.4000
70	537.3	1.017	.125	1.714E-04	.0148	2.075E-04	.0180	.2591	356.4000
71	538.1	1.063	.145	1.992E-04	.0172	2.412E-04	.0209	.2419	351.4000
72	538.9	.892	.127	1.745E-04	.0151	2.113E-04	.0183	.2487	351.4000
73	538.8	.954	.124	1.707E-04	.0148	2.067E-04	.0179	.2552	351.4000
74	538.8	.988	.120	1.651E-04	.0143	1.999E-04	.0173	.2610	351.4000
75	539.6	1.069	.146	2.008E-04	.0174	2.432E-04	.0210	.2419	342.8000
77	540.2	.847	.120	1.661E-04	.0144	2.012E-04	.0174	.2552	342.8000
78	540.4	1.019	.140	1.935E-04	.0168	2.345E-04	.0203	.2610	342.8000
79	541.6	1.091	.140	1.935E-04	.0167	2.346E-04	.0203	.2419	334.2000
80	540.0	.813	.111	1.534E-04	.0133	1.859E-04	.0161	.2487	334.2000
81	541.0	.983	.137	1.900E-04	.0164	2.302E-04	.0199	.2552	334.2000
								ACCESS HATCH WINDOW	
								X/L	Z*FULL SCALE(IN)
83	532.3	1.273	.170	2.319E-04	.0201	2.803E-04	.0243	.2131	398.0000
84	532.8	1.390	.183	2.501E-04	.0216	3.023E-04	.0262	.2131	388.0000
85	534.0	1.276	.174	2.380E-04	.0206	2.879E-04	.0249	.2131	383.0000
87	532.1	.909	.130	1.772E-04	.0153	2.142E-04	.0185	.2222	395.8000
88	533.7	1.339	.187	2.561E-04	.0222	3.097E-04	.0268	.2193	386.5000
89	534.9	.715	.105	1.441E-04	.0125	1.743E-04	.0151	.2177	381.8000
90	533.2	1.207	.164	2.247E-04	.0194	2.717E-04	.0235	.2297	389.5000
91	534.2	1.335	.183	2.507E-04	.0217	3.032E-04	.0262	.2243	382.5000
92	535.1	1.269	.179	2.457E-04	.0213	2.972E-04	.0257	.2214	378.7000
93	534.2	1.178	.150	2.060E-04	.0178	2.492E-04	.0216	.2343	374.0000
94	536.0	1.291	.168	2.305E-04	.0199	2.789E-04	.0241	.2274	375.5000
95	535.6	1.296	.184	2.527E-04	.0219	3.057E-04	.0265	.2239	373.3000
96	535.6	1.353	.176	2.415E-04	.0209	2.921E-04	.0253	.2363	368.0000
97	535.9	1.282	.164	2.250E-04	.0195	2.723E-04	.0236	.2286	368.0000
98	535.8	1.206	.169	2.323E-04	.0201	2.811E-04	.0243	.2247	368.0000
100	537.3	1.271	.180	2.478E-04	.0214	3.000E-04	.0260	.2274	360.5000
102	536.9	1.219	.172	2.368E-04	.0205	2.866E-04	.0248	.2081	354.3000
103	535.7	1.354	.178	2.441E-04	.0211	2.954E-04	.0256	.2023	362.7000
105	534.1	1.813	.227	3.145E-04	.0269	3.755E-04	.0325	.2050	378.7000
106	533.2	1.493	.191	2.616E-04	.0226	3.163E-04	.0274	.2050	386.2000

GROUP 140 CENTERLINE TIME 2.90

CH	TC	FIT LENGTH	DTDWT	UNCERTAINTY	CH	TC	FIT LENGTH	DTDWT	UNCERTAINTY
1	1	.80	3.445	.0113	50	53	.80	2.617	.0302
2	2	.80	3.345	.0144	51	54	2.00	.762	.0143
3	3	.80	3.293	.0081	52	55	.80	2.471	.0272
4	4	.80	3.341	.0074	53	56	2.00	.733	.0111
5	5	.80	3.223	.0203	54	57	2.00	.699	.0143
6	6	.80	3.119	.0105	55	58	2.00	.708	.0149
7	7	.80	2.654	.0474	56	59	2.00	.924	.0346
8	8	.80	2.385	.0116	57	60	2.00	.779	.0101
9	9	.80	2.362	.0164	58	61	2.00	.695	.0090
10	10	.80	2.101	.0235	59	62	2.00	.705	.0174
11	11	.80	2.157	.0184	60	63	2.00	.732	.0132
12	12	1.20	1.757	.0150	61	64	2.00	-.050	-.3475
13	13	1.20	1.077	.0149	62	65	2.00	.688	.0102
14	14	1.20	1.217	.0136	63	66	2.00	.798	.0131
15	15	1.20	1.155	.0374	64	67	2.00	.231	.0573
16	16	2.00	.759	.0414	65	68	2.00	.779	.0161
17	17	2.00	.763	.0262	66	69	1.20	1.017	.0277
18	18	2.00	.571	.0146	67	70	1.20	1.017	.0121
19	19	2.00	.420	.0253	68	71	1.20	1.063	.1254
20	22	2.00	.879	.0172	69	72	2.00	.892	.0222
21	23	2.00	1.001	.0063	70	73	2.00	.954	.0139
22	24	1.20	1.099	.0191	71	74	2.00	.988	.0161
23	25	1.20	1.033	.0393	72	75	1.20	1.069	.0165
24	26	1.20	1.061	.0351	73	77	2.00	.847	.0138
25	27	1.20	1.094	.0267	74	78	1.20	1.019	.0221
26	28	2.00	.862	.0127	75	79	1.20	1.091	.0255
27	29	2.00	.954	.0087	76	80	2.00	.813	.0131
28	30	1.20	1.078	.0117	77	81	1.20	.963	.0187
29	31	1.20	1.216	.0177	78	83	1.20	1.273	.0174
30	32	1.20	1.321	.0358	79	84	1.20	1.390	.0807
31	33	1.20	1.282	.0123	80	85	1.20	1.276	.0164
32	34	1.20	1.532	.0135	81	87	2.00	.909	.0106
33	35	1.20	1.119	.0156	82	88	1.20	1.339	.0138
34	36	1.20	1.908	.0074	83	89	2.00	.715	.0221
35	37	.80	2.059	.0138	84	90	1.20	1.207	.0126
36	38	.80	2.456	.0098	85	91	1.20	1.335	.0120
37	39	.80	2.267	.0092	86	92	1.20	1.269	.0122
38	41	2.00	.872	.0105	87	93	1.20	1.178	.0374
39	42	1.20	1.074	.0177	88	94	1.20	1.291	.0150
40	43	2.00	.790	.0205	89	95	1.20	1.296	.0202
41	44	2.00	.959	.0081	90	96	1.20	1.353	.1042
42	45	1.20	1.366	.0095	91	97	1.20	1.282	.0306
43	46	1.20	1.423	.0266	92	98	1.20	1.206	.0366
44	47	1.20	1.340	.0140	93	100	1.20	1.271	.0188
45	48	1.20	1.488	.0115	94	102	1.20	1.219	.0328
46	49	1.20	1.879	.0094	95	103	1.20	1.354	.0244
47	50	.80	2.206	.0347	96	105	1.20	1.813	.0137
48	51	.80	2.691	.0135	97	106	1.20	1.493	.0128
49	52	.80	2.805	.0121	98	0216.0*		0	0
141		.050							

811 ON LOOP 62

DATE 5/12/75

AEDC(ARO,INC.) ARNOLD AFS, TENNESSEE
VON KARMAN GAS DYNAMICS FACILITY
50 INCH HYPERSONIC TUNNEL H
V41B-87A

GROUP	TEST CONDITION	MODEL	MACH NO	PO,PSIA	TO,DEG R	ALPHA-MODEL	ALPHA-SECTOR	ALPHA-PREBEND	ROLL MODEL	YAW
141	1	140 B	8.00	109.3	1269	20.06	9.94	30.00	179.86	-.0

T-INF (DEG R)	P-INF (PSIA)	Q-INF (PSIA)	V-INF (FT/SEC)	RHO-INF (SLUGS/FT3)	MU-INF (LB-SEC/FT2)	RE/FT (FT-1)	HREF-FR (R= .0400FT)	STFR (R= .0400FT)	SWITCH POSITION
91.9	.011	.502	3759	1.022E-05	7.401E-08	5.189E 05	1.146E-02	3.762E-02	2

TC NO	TW	DTWDT	QDOT	H(TO)	H(TO)/HREF	H(.9TO)	H(.9TO)/HREF	X/L	Z,FULL SCALE(IN)
								ACCESS HATCH WINDOW	
107	530.1	1.297	.185	2.511E-04	.0219	3.032E-04	.0265	.2050	396.2000
								FUSELAGE VENT PANEL NO. 3 AND 1	
108	529.9	2.742	.290	3.920E-04	.0342	4.733E-04	.0413	.1244	377.5000
109	529.1	2.369	.292	3.953E-04	.0345	4.771E-04	.0416	.1302	377.5000
110	529.0	2.225	.281	3.806E-04	.0332	4.593E-04	.0401	.1360	377.5000
111	529.5	2.162	.260	3.518E-04	.0307	4.247E-04	.0371	.1418	377.5000
112	530.3	2.143	.254	3.440E-04	.0300	4.154E-04	.0363	.1476	377.5000
113	530.3	2.695	.309	4.182E-04	.0365	5.050E-04	.0441	.1215	273.5000
114	529.6	2.238	.268	3.630E-04	.0317	4.383E-04	.0383	.1273	273.5000
115	529.5	1.887	.234	3.164E-04	.0276	3.820E-04	.0333	.1331	273.5000
116	529.6	2.077	.254	3.443E-04	.0301	4.157E-04	.0363	.1389	273.5000
117	530.5	2.101	.242	3.274E-04	.0286	3.954E-04	.0345	.1447	273.5000
118	530.7	1.768	.244	3.311E-04	.0289	3.999E-04	.0349	.1409	366.0000
119	531.3	2.068	.267	3.627E-04	.0317	4.381E-04	.0382	.1442	366.0000
120	531.8	2.497	.312	4.233E-04	.0369	5.114E-04	.0446	.1215	359.5000
121	531.9	1.904	.234	3.170E-04	.0277	3.830E-04	.0334	.1303	359.5000
122	532.4	1.800	.224	3.044E-04	.0266	3.677E-04	.0321	.1337	359.5000
								LOWER RCS NOZZLES	
124	529.6	2.091	.186	2.522E-04	.0220	3.044E-04	.0266	.0950	400.0000
125	529.3	2.226	.242	3.272E-04	.0286	3.950E-04	.0345	.0988	400.0000
126	529.9	1.942	.266	3.596E-04	.0314	4.341E-04	.0379	.1027	400.0000
127	529.0	1.733	.233	3.152E-04	.0275	3.804E-04	.0332	.0911	395.0000
128	528.9	2.234	.271	3.659E-04	.0319	4.416E-04	.0385	.0950	395.0000
129	529.4	2.296	.269	3.639E-04	.0318	4.393E-04	.0383	.0988	395.0000
130	529.3	2.319	.277	3.745E-04	.0327	4.521E-04	.0395	.0810	390.0000
131	528.6	1.989	.293	3.961E-04	.0346	4.781E-04	.0417	.0857	390.0000
132	529.3	2.307	.268	3.629E-04	.0317	4.380E-04	.0382	.0963	390.0000
133	528.4	2.434	.295	3.983E-04	.0348	4.807E-04	.0420	.0857	383.8000
134	527.7	2.372	.317	4.275E-04	.0373	5.158E-04	.0450	.0872	377.3000
135	529.1	2.956	.354	4.790E-04	.0418	5.782E-04	.0505	.0903	374.5500
136	530.3	3.039	.337	4.568E-04	.0399	5.516E-04	.0481	.0960	374.5500
137	528.7	3.001	.392	5.292E-04	.0462	6.388E-04	.0558	.0872	370.5500
138	529.8	3.129	.360	4.869E-04	.0425	5.879E-04	.0513	.0928	370.5500
139	529.3	2.829	.360	4.875E-04	.0426	5.885E-04	.0514	.0816	366.0500
140	530.5	2.828	.359	4.866E-04	.0425	5.876E-04	.0513	.0934	362.4000
141	531.0	2.692	.355	4.818E-04	.0421	5.818E-04	.0508	.0973	362.4000
142	530.8	2.069	.225	3.050E-04	.0266	3.684E-04	.0322	.0833	355.2000
143	530.8	3.204	.321	4.356E-04	.0380	5.260E-04	.0459	.0919	355.2000
144	532.2	3.648	.480	6.519E-04	.0569	7.876E-04	.0687	.0949	349.0000

DATE 5/12/75

AEDC(ARO,INC.) ARNOLD AFS, TENNESSEE
VON KARMAN GAS DYNAMICS FACILITY
50 INCH HYPERSONIC TUNNEL B
V41B-87A

GROUP	TEST CONDITION	MODEL	MACH NO	PO,PSIA	TO,DEG R	ALPHA-MODEL	ALPHA-SECTOR	ALPHA-PREBEND	ROLL MODEL	YAW
141	1	140 B	8.00	109.3	1269	20.06	9.94	30.00	179.86	-.0

T-INF (DEG R)	P-INF (PSIA)	Q-INF (PSIA)	V-INF (FT/SEC)	RHO-INF (SLUGS/FT3)	MU-INF (LB-SEC/FT2)	RE/FT (FT-1)	HREF-FR (R= .0400FT)	STFR (R= .0400FT)	SWITCH POSITION
91.9	.011	.502	3759	1.022E-05	7.401E-08	5.189E 05	1.146E-02	3.762E-02	2

TC	TW	DTWDT	QDOT	H(TO)	H(TO)/HREF	H(.9TO)	H(.9TO)/HREF
161	529.0	1.900	.224	3.032E-04	.0265	3.660E-04	.0319
162	529.6	1.533	.145	1.959E-04	.0171	2.365E-04	.0206
163	528.9	1.300	.159	2.153E-04	.0188	2.599E-04	.0227
164	528.9	1.000	.130	1.758E-04	.0153	2.122E-04	.0185
165	529.6	.747	.094	1.269E-04	.0111	1.532E-04	.0134
166	529.7	.601	.077	1.040E-04	.0091	1.256E-04	.0110
167	529.8	1.734	.234	3.163E-04	.0276	3.818E-04	.0333
168	529.4	1.799	.188	2.549E-04	.0222	3.077E-04	.0269
169	528.6	1.259	.153	2.061E-04	.0180	2.487E-04	.0217
170	528.7	1.060	.132	1.787E-04	.0156	2.156E-04	.0188
171	529.0	1.140	.137	1.854E-04	.0162	2.238E-04	.0195
172	529.1	.847	.110	1.491E-04	.0130	1.799E-04	.0157
173	528.6	1.325	.176	2.384E-04	.0208	2.877E-04	.0251
174	528.7	1.090	.124	1.672E-04	.0146	2.018E-04	.0176
175	529.0	.898	.128	1.736E-04	.0151	2.095E-04	.0183
176	529.1	.724	.098	1.329E-04	.0116	1.605E-04	.0140
177	531.8	2.354	.323	4.388E-04	.0383	5.301E-04	.0463
178	534.3	5.230	1.028	1.400E-03	.1222	1.692E-03	.1477
179	534.4	5.285	1.107	1.508E-03	.1316	1.823E-03	.1591
180	529.1	.731	.095	1.286E-04	.0112	1.552E-04	.0135
181	530.1	1.375	.186	2.523E-04	.0220	3.046E-04	.0266
182	531.1	2.697	.384	5.201E-04	.0454	6.282E-04	.0548
183	527.6	.405	.051	6.843E-05	.0060	8.256E-05	.0072
184	527.7	.474	.065	8.719E-05	.0076	1.052E-04	.0092
185	529.3	.926	.111	1.502E-04	.0131	1.813E-04	.0158
186	530.5	1.650	.207	2.801E-04	.0244	3.382E-04	.0295
187	531.1	2.937	.390	5.291E-04	.0462	6.391E-04	.0558
188	532.9	4.175	.971	1.320E-03	.1152	1.594E-03	.1392
189	528.9	.904	.128	1.737E-04	.0152	2.096E-04	.0183
190	529.8	1.544	.222	2.999E-04	.0262	3.621E-04	.0316
191	530.8	2.571	.392	5.313E-04	.0464	6.416E-04	.0560

UPPER RCS NOZZLES

X/L	2Y/B
.0619	-.0160
.0709	-.0160
.0807	-.0160
.0943	-.0160
.0978	-.0160
.1013	-.0160
.0619	-.0320
.0709	-.0320
.0807	-.0320
.0943	-.0320
.0978	-.0320
.1013	-.0320
.0807	-.0480
.0943	-.0480
.0978	-.0480
.1013	-.0480

CANOPY

DATE 5/12/75

AEDC(ARO,INC.) ARNOLD AFS, TENNESSEE
VON KARMAN GAS DYNAMICS FACILITY
50 INCH HYPERSONIC TUNNEL B
V41B-8/A

GROUP	TEST CONDITION	MODEL	MACH NO	PO,PSIA	TO,DEG R	ALPHA-MODEL	ALPHA-SECTOR	ALPHA-PREBEND	ROLL MODEL	YAW
141	1	140 B	8.00	109.3	1269	20.06	9.94	30.00	179.86	-.0

T-INF (DEG R)	P-INF (PSIA)	Q-INF (PSIA)	V-INF (FT/SEC)	RHO-INF (SLUGS/FT3)	MU-INF (LB-SEC/FT2)	RE/FT (FT-1)	HREF-FR (R= .0400FT)	STFR (R= .0400FT)	SWITCH POSITION
91.9	.011	.502	3759	1.022E-05	7.401E-08	5.189E 05	1.146E+02	3.762E-02	2

TC NO	TW	DTWDT	QDOT	H(TO)	H(TO)/HREF	H(.9TO)	H(.9TO)/HREF
						CANOPY	
192	527.6	.505	.071	9.594E-05	.0084	1.158E-04	.0101
193	531.8	3.688	.709	9.622E-04	.0840	1.162E-03	.1015
194	527.8	.941	.121	1.634E-04	.0143	1.972E-04	.0172
195	529.0	1.809	.222	3.007E-04	.0262	3.630E-04	.0317
196	529.1	2.091	.274	3.703E-04	.0323	4.469E-04	.0390
197	527.8	.318	.031	4.240E-05	.0037	5.116E-05	.0045
198	527.4	.283	.033	4.413E-05	.0039	5.324E-05	.0046
199	526.1	.911	.122	1.643E-04	.0143	1.982E-04	.0173
200	528.0	1.510	.214	2.895E-04	.0253	3.494E-04	.0305
201	529.8	2.483	.350	4.732E-04	.0413	5.712E-04	.0499
202	530.5	3.238	.408	5.533E-04	.0483	6.682E-04	.0583
203	526.9	.500	.062	8.334E-05	.0073	1.005E-04	.0088
204	527.2	.808	.125	1.688E-04	.0147	2.036E-04	.0178
205	528.7	2.084	.324	4.378E-04	.0382	5.284E-04	.0461
206	528.1	.326	.043	5.818E-05	.0051	7.020E-05	.0061
207	529.6	2.300	.307	4.159E-04	.0363	5.021E-04	.0438
208	526.6	.347	.047	6.269E-05	.0055	7.562E-05	.0066
209	526.7	.528	.072	9.753E-05	.0085	1.176E-04	.0103
210	527.2	.991	.132	1.779E-04	.0155	2.146E-04	.0187
211	528.7	.382	.046	6.256E-05	.0055	7.551E-05	.0066
212	527.9	.455	.061	8.261E-05	.0072	9.968E-05	.0087
213	526.7	.508	.067	9.048E-05	.0079	1.091E-04	.0095
214	526.5	.611	.085	1.149E-04	.0100	1.386E-04	.0121
215	527.1	1.042	.147	1.988E-04	.0174	2.398E-04	.0209
216	528.9	1.882	.257	3.604E-04	.0315	4.350E-04	.0380
217	528.9	1.589	.226	3.051E-04	.0266	3.683E-04	.0321
218	526.0	.413	.057	7.647E-05	.0067	9.223E-05	.0081
219	526.8	.689	.097	1.302E-04	.0114	1.571E-04	.0137
220	526.4	.986	.135	1.821E-04	.0159	2.196E-04	.0192

GROUP 141 CENTERLINE TIME 3.05

CH	TC	FIT LENGTH	DTDWT	UNCERTAINTY	CH	TC	FIT LENGTH	DTDWT	UNCERTAINTY
1	107	1.20	1.297	.0171	50	173	1.20	1.325	.0107
2	108	.80	2.742	.0106	51	174	1.20	1.090	.0240
3	109	.80	2.369	.0130	52	175	2.00	.898	.0153
4	110	.80	2.225	.0138	53	176	2.00	.724	.0196
5	111	.80	2.162	.0276	54	177	.80	2.354	.0193
6	112	.80	2.143	.0180	55	178	.60	5.230	.0130
7	113	.80	2.695	.0631	56	179	.60	5.285	.0338
8	114	.80	2.238	.0108	57	180	2.00	.731	.0131
9	115	1.20	1.887	.0121	58	181	1.20	1.375	.0110
10	116	.80	2.077	.0187	59	182	.80	2.697	.0166
11	117	.80	2.101	.0284	60	183	2.00	.405	.0235
12	118	1.20	1.768	.0167	61	184	2.00	.474	.0334
13	119	.80	2.068	.0219	62	185	2.00	.926	.0095
14	120	.80	2.497	.0571	63	186	1.20	1.650	.0129
15	121	1.20	1.904	.0179	64	187	.80	2.937	.0126
16	122	1.20	1.870	.0194	65	188	.60	4.175	.0139
17	124	.80	2.091	.0458	66	189	2.00	.904	.0162
18	125	.80	2.226	.0219	67	190	1.20	1.544	.0104
19	126	1.20	1.942	.0130	68	191	.80	2.571	.1053
20	127	1.20	1.733	.0295	69	192	2.00	.505	.0214
21	128	.80	2.234	.0100	70	193	.80	3.688	.0095
22	129	.80	2.296	.0105	71	194	2.00	.941	.0166
23	130	.80	2.319	.0256	72	195	1.20	1.809	.0158
24	131	1.20	1.989	.0181	73	196	.80	2.091	.0143
25	132	.80	2.307	.0457	74	197	2.00	.318	.0324
26	133	.80	2.434	.0419	75	198	2.00	.283	.0343
27	134	.80	2.372	.0117	76	199	2.00	.911	.0197
28	135	.80	2.956	.0149	77	200	1.20	1.510	.0128
29	136	.80	3.039	.0094	78	201	.80	2.483	.0171
30	137	.80	3.001	.0096	79	202	.80	3.238	.0652
31	138	.80	3.129	.0100	80	203	2.00	.500	.0169
32	139	.80	2.829	.0158	81	204	2.00	.808	.0121
33	140	.80	2.828	.0134	82	205	.80	2.084	.0173
34	141	.80	2.692	.0154	83	206	2.00	.326	.0339
35	142	.80	2.069	.0147	84	207	.80	2.300	.0215
36	143	.80	3.204	.0102	85	208	2.00	.347	.0261
37	144	.80	3.648	.0055	86	209	2.00	.528	.0155
38	161	1.20	1.900	.0158	87	210	2.00	.991	.0262
39	162	1.20	1.533	.0184	88	211	2.00	.382	.0302
40	163	1.20	1.300	.0285	89	212	2.00	.455	.0383
41	164	1.20	1.000	.0169	90	213	2.00	.508	.1161
42	165	2.00	.747	.0112	91	214	2.00	.611	.0233
43	166	2.00	.601	.0255	92	215	2.00	1.042	.0254
44	167	1.20	1.734	.0145	93	216	1.20	1.882	.0116
45	168	1.20	1.799	.0135	94	217	1.20	1.589	.0134
46	169	1.20	1.259	.0174	95	218	2.00	.413	.0198
47	170	1.20	1.060	.0301	96	219	2.00	.689	.0134
48	171	1.20	1.140	.0213	97	220	1.20	.986	.0202
49	172	2.00	.847	.0148	98	0216.0*		0	0
142		.050							

OIT ON LOOP 66

DATE 5/12/75

AEDC(ARO,INC.) ARNOLD AFS, TENNESSEE
VON KARMAN GAS DYNAMICS FACILITY
50 INCH HYPERSONIC TUNNEL B
V41B-B7A

GROUP	TEST CONDITION	MODEL	MACH NO	PO,PSIA	TO,DEG R	ALPHA-MODEL	ALPHA-SECTOR	ALPHA-PREBEND	ROLL MODEL	YAW
142	1	140 B	8.00	110.0	1273	20.03	9.97	30.00	179.86	-.0

T-INF (DEG R)	P-INF (PSIA)	Q-INF (PSIA)	V-INF (FT/SEC)	RHO-INF (SLUGS/FT3)	MU-INF (LB-SEC/FT2)	RE/FT (FT-1)	HREF-FR (R= .0400FT)	STFR (R= .0400FT)	SWITCH POSITION
92.2	.011	.505	3764	1.025E-05	7.424E-08	5.198E 05	1.150E-02	3.757E-02	3

IC NO	TW	DTWDT	QDOT	H(TO)	H(TO)/HREF	H(.9TO)	H(.9TO)/HREF
						CANOPY	
221	526.0	.338	.041	5.451E-05	.0047	6.571E-05	.0057
222	524.4	.488	.060	7.997E-05	.0070	9.636E-05	.0084
223	523.9	1.437	.194	2.594E-04	.0226	3.125E-04	.0272
						ESCAPE HATCH AND WINDOW	
224	529.6	2.951	.293	3.947E-04	.0343	4.763E-04	.0414
225	528.6	2.327	.278	3.733E-04	.0325	4.503E-04	.0392
226	529.0	3.412	.359	4.823E-04	.0419	5.819E-04	.0506
227	527.6	2.209	.322	4.327E-04	.0376	5.218E-04	.0454
228	526.8	2.825	.362	4.854E-04	.0422	5.853E-04	.0509
229	526.6	2.296	.294	3.943E-04	.0343	4.754E-04	.0413
232	527.0	.183	.025	3.316E-05	.0029	3.999E-05	.0035
233	527.2	.209	.032	4.238E-05	.0037	5.110E-05	.0044
236	526.2	.157	.023	3.078E-05	.0027	3.710E-05	.0032
237	526.7	.217	.030	4.085E-05	.0036	4.926E-05	.0043
						CARGO BAY HINGE NO. 1	
238	529.2	.689	.092	1.238E-04	.0108	1.494E-04	.0130
239	529.6	.625	.084	1.125E-04	.0098	1.358E-04	.0118
240	529.0	.619	.088	1.186E-04	.0103	1.431E-04	.0124
241	529.2	.624	.088	1.179E-04	.0103	1.422E-04	.0124
242	529.5	.556	.079	1.066E-04	.0093	1.287E-04	.0112
243	530.3	.734	.090	1.208E-04	.0105	1.458E-04	.0127
244	530.4	.711	.083	1.119E-04	.0097	1.350E-04	.0117
245	530.3	.602	.086	1.157E-04	.0101	1.397E-04	.0121
246	530.5	.597	.085	1.147E-04	.0100	1.384E-04	.0120
247	530.3	.531	.078	1.052E-04	.0091	1.270E-04	.0110
248	530.9	.646	.095	1.281E-04	.0111	1.546E-04	.0134
249	530.7	.509	.075	1.009E-04	.0088	1.218E-04	.0106
250	532.0	.764	.096	1.294E-04	.0112	1.562E-04	.0136
251	531.6	.776	.095	1.284E-04	.0112	1.550E-04	.0135
						CARGO BAY HINGE NO. 2	
252	530.2	.682	.099	1.331E-04	.0116	1.607E-04	.0140
253	530.4	.638	.092	1.246E-04	.0108	1.504E-04	.0131
254	530.3	.572	.087	1.168E-04	.0102	1.409E-04	.0123
257	530.7	.592	.080	1.075E-04	.0093	1.298E-04	.0113
258	530.7	.581	.079	1.064E-04	.0093	1.285E-04	.0112

	X/L	Z,FULL SCALE(IN)
ESCAPE HATCH AND WINDOW	X/L	2Y/B
	.1933	.0162
	.1972	.0162
	.1933	.0384
	.1972	.0384
	.1933	.0653
	.1972	.0653
	.2567	.0235
	.2606	.0235
	.2567	.0491
	.2606	.0491
CARGO BAY HINGE NO. 1	X/L	Z,FULL SCALE(IN)
	.2879	420.0000
	.2917	420.0000
	.2840	415.0000
	.2879	415.0000
	.2917	415.0000
	.2801	405.0000
	.2840	405.0000
CARGO BAY HINGE NO. 2	X/L	Z,FULL SCALE(IN)
	.3192	420.0000
	.3439	420.0000
	.3362	415.0000
	.3401	415.0000
	.3439	415.0000
	.3323	405.0000
	.3362	405.0000
CARGO BAY HINGE NO. 3	X/L	Z,FULL SCALE(IN)
	.3923	420.0000
	.3961	420.0000
	.3884	415.0000
	.3845	405.0000
	.3884	405.0000

DATE 5/12/75

AEDC(ARO,INC.) ARNOLD AFS, TENNESSEE
VON KARMAN GAS DYNAMICS FACILITY
50 INCH HYPERSONIC TUNNEL B
V418-87A

GROUP	TEST CONDITION	MODEL	MACH NO	PO,PSIA	TO,DEG R	ALPHA-MODEL	ALPHA-SECTOR	ALPHA-PREBEND	ROLL MODEL	YAW
142	1	140 B	8.00	110.0	1273	20.03	9.97	30.00	179.86	-.0

T-INF (DEG R)	P-INF (PSIA)	Q-INF (PSIA)	V-INF (FT/SEC)	RHO-INF (SLUGS/FT3)	MU-INF (LB-SEC/FT2)	RE/FT (FT-1)	HREF-FR (R= .0400FT)	STFR (R= .0400FT)	SWITCH POSITION
92.2	.011	.505	3764	1.025E-05	7.424E-08	5.198E 05	1.150E-02	3.757E-02	3

TC NO	TW	DTWDT	QDOT	H(TO)	H(TO)/HREF	H(.9TO)	H(.9TO)/HREF	TOP CENTERLINE X/L
367	561.7	46.081	5.489	7.721E-03	.6714	9.405E-03	.8179	0
368	549.2	35.263	4.507	6.231E-03	.5418	7.561E-03	.6575	.0008
369	541.9	22.991	2.701	3.697E-03	.3215	4.476E-03	.3892	.0019
370	536.9	16.399	2.002	2.722E-03	.2367	3.291E-03	.2862	.0037
371	536.2	13.758	1.347	1.830E-03	.1591	2.212E-03	.1923	.0058
372	532.9	9.647	1.240	1.677E-03	.1458	2.025E-03	.1761	.0087
373	531.9	6.677	.873	1.178E-03	.1025	1.423E-03	.1237	.0118
374	530.9	5.339	.698	9.405E-04	.0818	1.135E-03	.0987	.0151
375	529.9	4.319	.589	7.931E-04	.0690	9.571E-04	.0832	.0182
376	530.7	3.839	.505	6.806E-04	.0592	8.215E-04	.0714	.0215
377	530.6	3.676	.472	6.362E-04	.0553	7.679E-04	.0668	.0246
378	529.8	2.987	.347	4.677E-04	.0407	5.644E-04	.0491	.0278
379	528.7	1.936	.237	3.187E-04	.0277	3.845E-04	.0334	.0609
380	528.1	1.718	.176	2.363E-04	.0206	2.850E-04	.0248	.0646
381	527.7	1.536	.198	2.662E-04	.0231	3.210E-04	.0279	.0684
382	527.5	1.251	.163	2.190E-04	.0190	2.641E-04	.0230	.0721
383	527.4	1.204	.161	2.157E-04	.0188	2.601E-04	.0226	.0760
384	527.4	1.068	.148	1.991E-04	.0173	2.401E-04	.0209	.0796
385	527.6	.887	.114	1.527E-04	.0133	1.841E-04	.0160	.0789
386	527.8	.918	.108	1.455E-04	.0126	1.754E-04	.0153	.0982
387	527.9	.945	.116	1.553E-04	.0135	1.873E-04	.0163	.1019
388	527.9	.979	.093	1.246E-04	.0108	1.503E-04	.0131	.1160
389	527.4	.737	.107	1.431E-04	.0124	1.726E-04	.0150	.1195
390	526.9	.545	.086	1.148E-04	.0100	1.384E-04	.0120	.1231
391	526.4	.469	.075	9.985E-05	.0087	1.204E-04	.0105	.1268
392	526.3	.393	.067	9.006E-05	.0078	1.086E-04	.0094	.1305
393	526.0	.349	.059	7.890E-05	.0069	9.512E-05	.0083	.1338
394	525.9	.335	.056	7.499E-05	.0065	9.040E-05	.0079	.1376
395	525.9	.289	.043	5.770E-05	.0050	6.955E-05	.0060	.1411
396	526.1	.323	.048	6.382E-05	.0055	7.694E-05	.0067	.1448
397	526.1	.353	.052	6.979E-05	.0061	8.413E-05	.0073	.1483
398	527.1	.583	.082	1.096E-04	.0095	1.322E-04	.0115	.1519
399	527.5	.810	.108	1.446E-04	.0126	1.744E-04	.0152	.1556

DATE 5/12/75

AEDC(ARO,INC.) ARNOLD AFS, TENNESSEE
VON KARMAN GAS DYNAMICS FACILITY
50 INCH HYPERSONIC TUNNEL B
V418-B7A

GROUP	TEST CONDITION	MODEL	MACH NO	PO,PSIA	TO,DEG R	ALPHA-MODEL	ALPHA-SECTOR	ALPHA-PREBEND	ROLL MODEL	YAW
142	1	140 B	8.00	110.0	1273	20.03	9.97	30.00	179.86	-.0

T-INF (DEG R)	P-INF (PSIA)	Q-INF (PSIA)	V-INF (FT/SEC)	RHO-INF (SLUGS/FT3)	MU-INF (LB-SEC/FT2)	RE/FT (FT-1)	HREF-FR (R= .0400FT)	STFR (R= .0400FT)	SWITCH POSITION
92.2	.011	.505	3764	1.025E-05	7.424E-08	5.198E 05	1.150E-02	3.757E-02	3

TC NO	TW	DTWDT	QDOT	H(TO)	H(TO)/HREF	H(.9TO)	H(.9TO)/HREF	X/L	2Y/B
								TOP CENTERLINE	
400	527.9	1.218	.164	2.200E-04	.0191	2.654E-04	.0231	.1582	
401	528.1	1.500	.194	2.602E-04	.0226	3.138E-04	.0273	.1608	
402	529.1	1.786	.222	2.987E-04	.0260	3.603E-04	.0313	.1635	
403	529.2	2.554	.310	4.164E-04	.0362	5.023E-04	.0437	.1664	
404	529.9	2.677	.323	4.353E-04	.0379	5.254E-04	.0457	.1691	
405	531.3	3.284	.397	5.355E-04	.0466	6.464E-04	.0562	.1720	
406	531.0	3.735	.451	6.086E-04	.0529	7.347E-04	.0639	.1748	
407	531.7	3.788	.488	6.591E-04	.0573	7.958E-04	.0692	.1769	
408	531.9	3.879	.568	7.663E-04	.0666	9.252E-04	.0805	.1800	
409	531.2	3.497	.502	6.773E-04	.0589	8.177E-04	.0711	.1831	
410	531.8	3.251	.467	6.304E-04	.0548	7.611E-04	.0662	.1863	
411	530.2	2.427	.363	4.897E-04	.0426	5.910E-04	.0514	.1894	
412	530.1	2.045	.277	3.731E-04	.0324	4.503E-04	.0392	.1931	
413	529.9	1.478	.198	2.661E-04	.0231	3.212E-04	.0279	.1972	
414	529.3	.898	.120	1.615E-04	.0140	1.949E-04	.0169	.2049	
415	527.7	.472	.046	6.240E-05	.0054	7.526E-05	.0065	.2250	
416	527.7	.289	.034	4.519E-05	.0039	5.450E-05	.0047	.2500	
								NOSE TC (Z = 338)	
145	553.7	30.202	4.087	5.686E-03	.4944	6.909E-03	.6008	.0008	.5039
146	552.9	30.886	4.178	5.805E-03	.5048	7.051E-03	.6132	.0023	.5082
147	545.3	24.226	3.254	4.489E-03	.3904	5.441E-03	.4732	.0043	.5135
148	543.1	18.101	2.517	3.451E-03	.3001	4.180E-03	.3635	.0068	.5205
149	540.6	13.964	2.015	2.752E-03	.2394	3.332E-03	.2897	.0095	.5279
150	539.9	12.912	1.845	2.518E-03	.2190	3.047E-03	.2650	.0122	.5354
151	539.3	9.067	1.271	1.733E-03	.1507	2.097E-03	.1823	.0218	.5621
152	538.5	8.886	1.201	1.636E-03	.1423	1.980E-03	.1721	.0251	.5712
153	537.8	9.009	1.096	1.492E-03	.1298	1.805E-03	.1569	.0286	.5808
154	537.0	8.326	1.032	1.406E-03	.1220	1.696E-03	.1475	.0319	.5898
155	536.4	7.802	.977	1.327E-03	.1154	1.604E-03	.1395	.0354	.5995
156	535.4	7.376	.913	1.239E-03	.1077	1.497E-03	.1302	.0387	.6085
157	535.1	7.173	.878	1.191E-03	.1036	1.439E-03	.1252	.0420	.6176
158	535.6	7.725	.946	1.284E-03	.1116	1.552E-03	.1349	.0462	.6294
159	534.8	7.273	.812	1.101E-03	.0957	1.330E-03	.1157	.0503	.6406

GROUP 142 CENTERLINE TIME 3.25

CH	TC	FIT LENGTH	DTDWT	UNCERTAINTY	CH	TC	FIT LENGTH	DTDWT	UNCERTAINTY
1	221	1.70	.338	.0288	50	384	1.20	1.068	.0280
2	222	1.70	.488	.0216	51	385	1.70	.867	.0162
3	223	1.20	1.437	.0136	52	386	1.70	.918	.0190
4	224	.80	2.951	.0100	53	387	1.70	.945	.0142
5	225	.80	2.327	.0203	54	388	1.20	.979	.0220
6	226	.80	3.412	.0096	55	389	1.70	.737	.0191
7	227	.80	2.208	.0712	56	390	1.70	.545	.0662
8	228	.80	2.625	.0101	57	391	1.70	.469	.0274
9	229	.80	2.296	.0200	58	392	1.70	.393	.0173
10	232	1.70	.183	.0787	59	393	1.70	.349	.0493
11	233	1.70	.209	.0818	60	394	1.70	.335	.0314
12	236	1.70	.157	.1145	61	395	1.70	.289	.0856
13	237	1.70	.217	.0605	62	396	1.70	.323	.0318
14	238	1.70	.639	.0180	63	397	1.70	.353	.0370
15	239	1.70	.625	.0273	64	398	1.70	.583	.0274
16	240	1.70	.619	.0275	65	399	1.70	.810	.0158
17	241	1.70	.624	.0400	66	400	1.20	1.218	.0185
18	242	1.70	.556	.0223	67	401	1.20	1.500	.0162
19	243	1.70	.734	.0203	68	402	1.20	1.786	.0776
20	244	1.70	.711	.0177	69	403	.80	2.554	.0376
21	245	1.70	.602	.0176	70	404	.80	2.677	.0210
22	246	1.70	.597	.0194	71	405	.80	3.264	.0215
23	247	1.70	.531	.0381	72	406	.80	3.735	.0096
24	248	1.70	.646	.0312	73	407	.80	3.788	.0084
25	249	1.70	.509	.0353	74	408	.80	3.879	.0096
26	250	1.70	.764	.0194	75	409	.80	3.497	.0137
27	251	1.70	.776	.0171	76	410	.80	3.251	.0158
28	252	1.70	.682	.0185	77	411	.80	2.427	.0122
29	253	1.70	.638	.0151	78	412	.80	2.045	.0167
30	254	1.70	.572	.0218	79	413	1.20	1.478	.0696
31	257	1.70	.592	.0191	80	414	1.70	.898	.0136
32	258	1.70	.581	.0233	81	415	1.70	.472	.0246
33	367	.20	46.081	.0016	82	416	1.70	.289	.0349
34	368	.20	35.263	.0028	83	145	.30	30.202	.0090
35	369	.30	22.991	.0037	84	146	.30	30.866	.0058
36	370	.30	16.349	.0090	85	147	.30	24.226	.0051
37	371	.40	13.758	.0028	86	148	.30	18.101	.0080
38	372	.40	9.647	.0146	87	149	.40	13.964	.0168
39	373	.60	6.677	.0102	88	150	.40	12.912	.0056
40	374	.60	5.339	.0147	89	151	.40	9.067	.0193
41	375	.60	4.319	.0109	90	152	.40	8.886	.0584
42	376	.80	3.839	.0068	91	153	.40	9.009	.0227
43	377	.80	3.676	.0149	92	154	.40	8.326	.0316
44	378	.80	2.987	.0114	93	155	.60	7.802	.0070
45	379	1.20	1.936	.0111	94	156	.60	7.376	.0114
46	380	1.20	1.718	.0095	95	157	.60	7.173	.0139
47	381	1.20	1.536	.0230	96	158	.60	7.725	.0069
48	382	1.20	1.251	.0287	97	159	.60	7.273	.0103
49	383	1.20	1.204	.0228	98	0	0	0	0