X66-36167 MS-IL
X66-36167

NASA TECHNICAL MEMORANDUM

NASA TM X-53384

February 1, 1966

Cy 1

NASA TM X-53384

(NASA-TM-X-53384) THE ASTRIONICS SYSTEM OF SATURN LAUNCH VEHICLES (NASA) 175 p

N77-79016

Unclas
00/19 32194

THE ASTRIONICS SYSTEM OF SATURN LAUNCH VEHICLES

by Rudolf Decher
Astrionics Laboratory

PROPERTY OF
MARSHALL LIBRARY
MS-IL

NASA

George C. Marshall Space Flight Center, Huntsville, Alabama

FOR REFERENCE ONLY

JUN 1977
RECEIVED
NASA STI FACILITY
INPUT BRANCH

TECHNICAL MEMORANDUM X-53384

THE ASTRIONICS SYSTEM OF SATURN LAUNCH VEHICLES

By

Rudolf Decher

George C. Marshall Space Flight Center
Huntsville, Alabama

ABSTRACT

The onboard astrionics system for Saturn IB and Saturn V launch vehicles is described. Flight functions such as navigation, guidance, control, onboard measurements, data transmission, radio tracking, and power generation are discussed. A brief description of the corresponding subsystems includes the launch vehicle data adapter and digital computer, the stabilized platform, control sensors, the analog flight control computer, the engine actuator system, the auxiliary propulsion system, the measuring and telemetry system, the radio command system, and tracking transponders. The operation of the astrionics system is described for a typical flight mission in the Apollo program.

NASA-GEORGE C. MARSHALL SPAÇE FLIGHT CENTER

NASA-GEORGE C. MARSHALL SPACE FLIGHT CENTER

TECHNICAL MEMORANDUM X-53384

THE ASTRIONICS SYSTEM OF SATURN LAUNCH VEHICLES

By

Rudolf Decher

ASTRIONICS LABORATORY
RESEARCH AND DEVELOPMENT OPERATIONS

TABLE OF CONTENTS

	Page
SUMMARY	1
INTRODUCTION	1
Saturn Launch Vehicles and Missions	1
The Astrionics System and Its Functions	4
Instrument Unit	11
System Reliability	11
NAVIGATION, GUIDANCE, AND CONTROL	14
General Description	14
Navigation	16
Guidance	23
Attitude Control During Powered Flight	27
Flight Control Computer	32
Attitude Control During Coasting Flight	43
Signal Flow and Processing	50
Mode and Sequence Control	52
MEASURING AND TELEMETRY SYSTEMS	56
Introduction	56
Measuring System	58
Telemetry Systems	64
FM/FM Telemetry System	66
SS/FM Telemetry System	71
PCM/FM Telemetry	71
Telemetry Calibration	76
Digital Data Acquisition System (DDAS)	76
Emergency Detection System (EDS)	78
Optical Instrumentation	80
Television	80

TABLE OF CONTENTS (Concluded)

	Page
RADIO COMMAND AND TRACKING	81
Introduction	81
Saturn Command and Communications System	83
IU Command System	86
C-Band Radar Transponder	95
Azusa Transponder	97
ODOP Transponder	97
POWER SUPPLY AND DISTRIBUTION SYSTEM	100
STABILIZED PLATFORM	103
Introduction	103
Gas Bearing Gyros	109
Gimbal Systems and Servoloops	109
Accelerometers and Servoloops	118
Platform Alignment	125
LAUNCH VEHICLE DATA ADAPTER AND DIGITAL COMPUTER	129
General Description	129
Launch Vehicle Data Adapter	131
Launch Vehicle Digital Computer	138
REFERENCES	145

LIST OF ILLUSTRATIONS

Figure	Title	Page
1.	Saturn IB Launch Vehicle Characteristic Data	2
2.	Saturn V Launch Vehicle Characteristic Data	3
3.	Saturn V/Apollo Mission Profile	5
4.	Saturn IB Astrionics System (Operational Vehicle)	8
5.	Saturn V Astrionics System (Operational Vehicle)	9
6.	Saturn IB and V Instrument Unit	12
7.	Thermal Conditioning Panel	13
8.	Saturn V Navigation, Guidance, and Control System, Block Diagram	15
9.	Navigation Coordinate Systems	18
10.	Navigation Flow Diagram	22
11.	Coordinate System Used for Iterative Guidance Mode (IGM)	24
12.	Altitude, Acceleration F/M, Velocity V_S, and Aerodynamic Pressure Q for a Typical Saturn Trajectory	26
13.	Variations of CP and CG during Flight	28
14.	Typical Saturn V Frequency Spectrum	29
15.	Relationship of Attitude Control Parameters	31
16.	Saturn Attitude Control System (Powered Flight)	31
17.	Saturn IB Flight Control Computer	33
18.	Saturn V Flight Control Computer	34

LIST OF ILLUSTRATIONS (Cont'd)

Figure	Title	Page
19.	Typical Gain Program for a_0, a_1, g_2 Coefficients	36
20.	Saturn V Engine, Actuator, and Nozzle Arrangement	39
21.	Hydraulic Actuator System	40
22.	Flow-Through Valve and Actuator with Mechanical Feedback	41
23.	Attitude Control System for Coasting Flight	44
24.	Limit Cycle Phase Diagram	44
25.	Pitch Channel of the APS, Block Diagram	46
26.	Deadbands of the Attitude Control System	47
27.	Operation Diagram of the S-IVB Auxiliary Propulsion System	49
28.	Navigation, Guidance, and Control Signal Processing	51
29.	Attitude Signal Flow Diagram	53
30.	Switch Selector	54
31.	Switch Selector Register Word Format	55
32.	Measuring and Telemetry System	57
33.	Typical Saturn Measuring System	59
34.	RACS in the Measuring Unit, Block Diagram	65
35.	Typical S-IVB/IU Telemetry System (Operational Version)	67
36.	Typical Saturn V FM/FM Telemetry System	68

LIST OF ILLUSTRATIONS (Cont'd)

Figure	Title	Page
37.	Model 270 Multiplexer, Block Diagram	70
38.	Airborne SS Telemetry Assembly, Block Diagram	72
39.	PCM/DDAS Assembly, Block Diagram	74
40.	Digital Multiplexing and Formating Logic	75
41.	Computer Interface Unit, System Interconnection	77
42.	Crew Safety System (Saturn V)	79
43.	Launch-Phase Tracking Stations	82
44.	Saturn Command and Communication System (CCS)	85
45.	Saturn CCS, Block Diagram	85
46.	Saturn V IU Command System, Block Diagram	87
47.	Saturn IB IU Command System, Block Diagram	89
48.	Phase-Shift Keyed Signals	89
49.	Digital Command Word	90
50.	IU Command Decoder, Simplified Logic Diagram	93
51.	SST-135C Transponder System, Block Diagram	96
52.	Azusa Transponder, Block Diagram	98
53.	ODOP Transponder, Block Diagram	99
54.	Saturn V Power Supply and Distribution Systems, Block Diagram	101
55.	Typical Battery Load Profiles for SA-IU-205 and Subsequent Vehicles	102

LIST OF ILLUSTRATIONS (Cont'd)

Figure	Title	Page
56.	ST124M3 Gimbal Configuration	105
57.	Platform Signal Flow	107
58.	ST124M Stable Platform	108
59.	Single-Axis Integrating Gyro, Cutaway View	111
60.	Signal Generator and Torque Generator, Exploded View	112
61.	Gyro Electrical Schematic	113
62.	Three-Gimbal Configuration	114
63.	Platform Gimbal Pivot Scheme	115
64.	Gyro Servoloops	116
65.	Dual Speed Resolver	117
66.	AB3-K8 Accelerometer, Cutaway View	121
67.	Accelerometer, Schematic Diagram	121
68.	Accelerometer Servoloop, Block Diagram	123
69.	Accelerometer, Electrical Schematic	124
70.	Gas-Bearing Pendulum, Cutaway View	126
71.	Platform Erection System, Block Diagram	126
72.	Platform Azimuth Alignment System	127
73.	Platform Azimuth Alignment System, Block Diagram	128
74.	Launch Vehicle Digital Computer, Exploded View	130

LIST OF ILLUSTRATIONS (Concluded)

Figure	Title	Page
75.	Connections Between the Digital Computer, Data Adapter, and Astrionics System	130
76.	Launch Vehicle Data Adapter, Block Diagram	133
77.	Computer Functional Diagram	139
78.	Word Organization	143
79.	Triple Modular Redundancy	145

LIST OF TABLES

Table	Title	Page
I.	Navigation Equations	20
II.	Input Signals to Flight Control Computer	35
III.	Servoactuator Characteristics (Design Goals)	42
IV.	Number of Measurements, Transducers, and Measuring Racks	60
V.	Typical Saturn V Measurements	61
VI.	Typical Saturn V Operational Measurements	62
VII.	Telemetry Systems in the Various Saturn Vehicle Stages	65
VIII.	Tracking Stations Used after Orbit Insertion	84
IX.	Examples of Mode Commands	90
X.	IU Battery Characteristics	104
XI.	Gyro Characteristics	110

LIST OF TABLES (Concluded)

Table	Title	Page
XII.	Accelerometer Characteristics	119
XIII.	Data Adapter Characteristics	135
XIV.	Launch Vehicle TMR Computer Characteristics	142

TECHNICAL MEMORANDUM X-53384

THE ASTRIONICS SYSTEM OF SATURN LAUNCH VEHICLES

SUMMARY

The concepts and the hardware implementation of the Saturn IB and Saturn V astrionics onboard system are described. Briefly discussed are the functions and operation of the astrionics system and its subsystems during flight for typical flight missions in the Apollo program. The main functions of the astrionics system are as follows.

1. Navigation, guidance, and control of the vehicle
2. Measurement of vehicle performance
3. Two-way data transmission between vehicle and ground stations
4. Radio tracking of the vehicle
5. Checkout and monitoring of vehicle functions in orbit
6. Emergency detection
7. Generation of electrical power for system operation.

The equipment necessary to perform these functions includes the launch vehicle data adapter and digital computer, the stabilized platform, the flight control computer, control sensors, engine actuators, the auxiliary propulsion system, the measuring and telemetry system, the IU radio command system, several tracking transponders, and the power supply. The corresponding ground support and checkout systems are not included in this description.

INTRODUCTION

Saturn Launch Vehicles and Missions

The Saturn astrionics system includes the electrical and electronic equipment in the vehicle and the ground equipment necessary to prepare it for

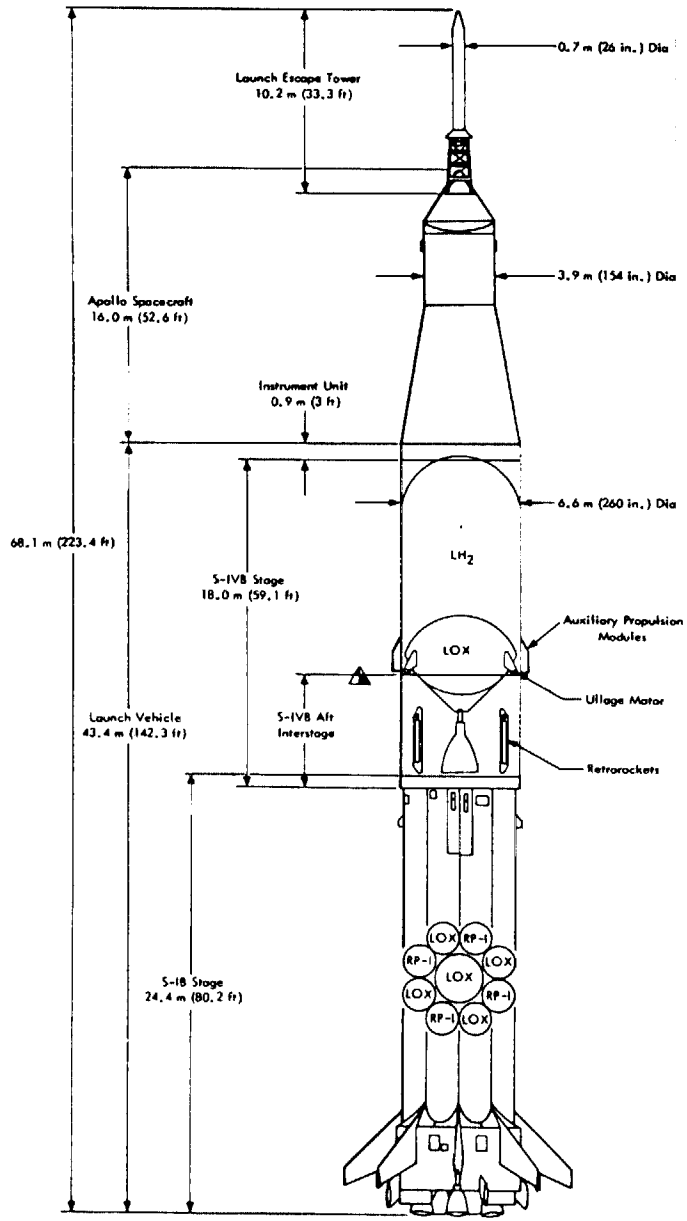

SATURN IB

- Overall Length . . . . . : 68.1m (223.4 ft)

S-IB

- Dry Weight . . . . . : 39,861 kg (87,800 lbs)
- Main Propulsion Engine. : Rocketdyne H-1 (8)
  - Total Nominal Thrust . . : 7,116,000 N (1,600,000 lbs) (sea level)
  - Propellants . . . . . : LOX and RP-1
  - Engine Cant Angle . . . : Inboard (4) 3°
Outboard (4) 6°
  - Gimbal Pattern . . . . . : ± 8° Square Pattern (outboard engines only) (4)
- Retromotors . . . . . : Thiokol TE-29-1B (4) (1)
  - Propellant . . . . . : Solid
  - Arrangement . . . . . : Equally spaced circumferentially on aft interstage.

S-IVB

- Dry Weight . . . . . : 10,805 kg (23,800 lbs)
- Main Propulsion Engine. : Rocketdyne J-2 (1)
  - Total Nominal Thrust . . : 912,250 N (205,000 lbs) (vacuum)
  - Propellants . . . . . : LOX and LH_2
  - Engine Cant Angle . . . : None
  - Gimbal Pattern . . . . . : ± 7° Square Pattern
- Attitude Control Engines : TAPCO (6)
  - Nominal Thrust (Each) . : 666 N (150 lbs) (vacuum)
  - Propellants . . . . . : Hypergolic (MMH & N_2O_4)
  - Arrangement . . . . . : Two auxiliary propulsion modules containing 3 engines each, located at positions I and III on aft skirt.
- Ullage Motors/Engines . : Thiokol TX-280 (3)
  - Propellant . . . . . : Solid
  - Arrangement . . . . . : Equally spaced circumferentially on aft skirt.

INSTRUMENT UNIT

- Dry Weight . . . . . : 1,884 kg (4,150 lbs)

Note:

(1) Retromotors are used for S-IB retrograde acceleration.

▲ Flight Separation

FIGURE 1. SATURN IB LAUNCH VEHICLE CHARACTERISTIC DATA

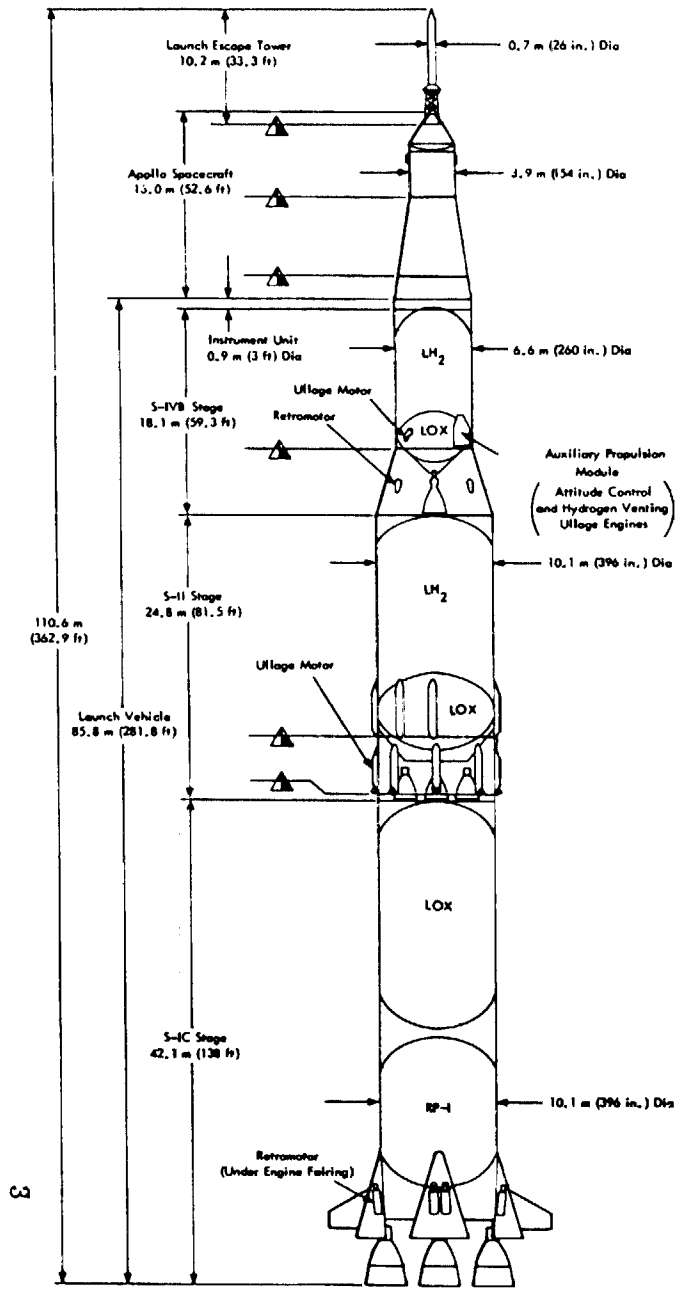

SATURN V

- Overall Length . . . . . : 110.6m (362.9 ft)

S-IC

- Dry Weight . . . . . : 136,200 Kg (300,000 lbs)
- Main Propulsion Engines : Rocketdyne F-1 (5)
  - Total Nominal Thrust . . : 33,864,500 N (7,610,000 lbs)
  - Propellants . . . . . : LOX and RP-1
  - Engine Cant Angle . . . : None
  - Gimbal Pattern . . . . . : ± 5° 9° Square Pattern (Outboard Engines) (4)
- Retromotors . . . . . : 8
  - Propellants . . . . . : Solid
  - Arrangement . . . . . : Two in each F-1 engine fairing

S-II

- Dry Weight . . . . . : 37,183 kg (81,900 lbs)
- Mainstage Propellant Capacity . . . . . : 440,380 kg (970,000 lbs)
- Main Propulsion Engines : Rocketdyne J-2 (5)
  - Total Nominal Thrust . . : 4,561,250 N (1,025,000 lbs)
  - Propellants . . . . . : LOX and LH_2
  - Engine Cant Angle . . . : None
  - Gimbal Pattern . . . . . : ± 7° Square Pattern (Outboard Engines) (4)
- Ullage Motors/Engines . . : RS-U-501 (8)
  - Nominal Thrust (Each) . : 101,900 N (22,900 lbs) (vacuum)
  - Propellants . . . . . : Solid
  - Arrangement . . . . . : Equally spaced around S-IC/S-II Interstage, in line with S-IC fins and positions I, II, III, & IV.

S-IVB

- Dry Weight . . . . . : 12,440 kg (27,400 lbs)
- Mainstage Propellant Capacity . . . . . : 104,420 kg (230,000 lbs)
- Main Propulsion Engine : Rocketdyne J-2 (1)
  - Total Nominal Thrust . : 912,250 N (205,000 lbs)
  - Propellants . . . . . : LOX and LH_2
  - Engine Cant Angle . . . : None
  - Gimbal Pattern . . . . . : ± 7° Square Pattern
- Attitude Control Engines : TAPCO (6)
  - Nominal Thrust (Each) . : 670 N (150 lbs) (vacuum)
  - Propellants . . . . . : Hypergolic (MMH & N_2O_4)
  - Arrangement . . . . . : Two auxiliary propulsion modules containing 3 engines each, located at positions I and III on aft skirt.
- Ullage Motors/Engines . . : Thiokol TX-280 (2)
  - Nominal Thrust (Each) . : 15,560 N (3,500 lbs) (vacuum)
  - Propellant . . . . . : Solid
  - Arrangement . . . . . : Equally spaced circumferentially on aft skirt.
- Hydrogen Venting Ullage Engines . . . . . : Gemini OAMS (2)
  - Nominal Thrust (Each) . : 320 N (72 lbs) (vacuum)
  - Propellants . . . . . : Hypergolic (MMH & N_2O_4)
  - Arrangement . . . . . : One in each of two auxiliary propulsion modules located at positions I and III on aft skirt.
- Retromotors . . . . . : TE-29-18 (4) (1)
  - Propellants . . . . . : Solid
  - Arrangement . . . . . : Positions I, II, III, and IV S-II/S-IVB Interstage.

INSTRUMENT UNIT

- Dry Weight . . . . . : 1,884 kg (4,150 lbs)

Note:

(1) Retromotors are used for S-II retrograde acceleration

▲ Flight Separation

FIGURE 2. SATURN V LAUNCH VEHICLE CHARACTERISTIC DATA

launch. This description, however, is concerned only with the onboard astrionics system.

Sketches of the Saturn IB and Saturn V launch vehicles and some characteristic data are given in Figures 1 and 2. Both vehicles have the same upper stage (S-IVB) with the Instrument Unit (IU) mounted on top of this stage. The IU contains the major portion of the onboard astrionics system, which is very similar for both launch vehicles.

The Saturn launch vehicle astrionics system has been designed primarily to meet requirements for the Apollo mission with the goal of landing astronauts on the moon. However the astrionics system enables the Saturn vehicles to perform other types of missions, e.g., injection of heavy payloads into earth orbit or escape trajectories, either by direct ascent or with a parking orbit phase, and transfer between earth orbit and extended missions beyond escape trajectory injection. Some of those missions would require the addition of sensors, such as a rendezvous radar, to the present system.

The Saturn IB launch vehicle is used for earth orbital flight tests of the Apollo spacecraft and the S-IVB/IU stage which also is a part of the Saturn V vehicle. The Saturn V is the launch vehicle for the actual Apollo lunar landing missions. A typical profile of the launch vehicle (Saturn V) mission in the Apollo program is illustrated in Figure 3. The first and second stages of the launch vehicle are separated from the space vehicle after their fuel is consumed. The third stage (S-IVB) provides the necessary thrust to achieve the final velocity for a circular orbit of approximately 200 km (108 nautical miles). The space vehicle, consisting of the S-IVB/IU and the Apollo spacecraft, coasts in orbit a maximum of three revolutions. When the selected launch window occurs, the engine of the S-IVB stage is restarted and the S-IVB stage injects the vehicle into a translunar trajectory. After injection the S-IVB/IU stage provides attitude control and stabilization for the space vehicle until the transposition maneuver is performed. In this maneuver, the service and command modules of the spacecraft move away from the lunar excursion module (LEM) and turn around and dock again with LEM, which stays connected to the S-IVB/IU stage. Then the launch vehicle mission is completed and the S-IVB/IU is separated from the Apollo spacecraft.

The Astrionics System and Its Functions

During flight the astrionics system performs or is involved in the following main functions:

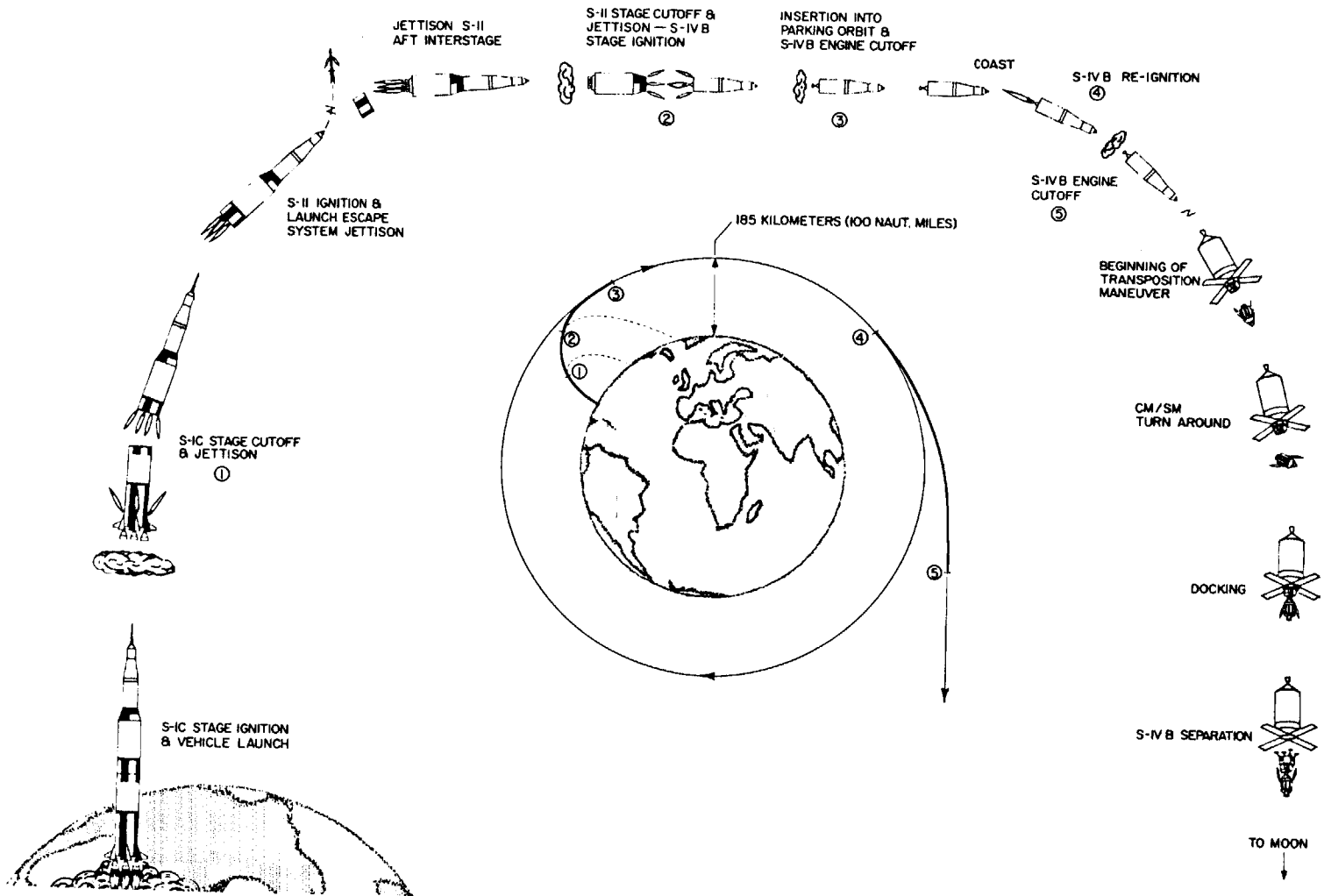

FIGURE 3. SATURN V/APOLLO MISSION PROFILE

1. Navigation, guidance, and control of the space vehicle

2. Measurement of vehicle performance and environment

3. Data transmission between vehicle and ground stations in both directions

4. Radio tracking of the vehicle

5. Checkout and monitoring of vehicle functions in orbit

6. Detection of emergency situations

7. Generation of electrical power for system operation.

The operational lifetime of the S-IVB/IU astrionics system as determined by the power supply capacity and water supply of the environmental control system is 4 1/2 hours for Saturn IB and 7 hours for Saturn V. This operation time is sufficient to complete the launch vehicle missions in the Apollo program. With increased battery capacity and water supply, the operation time can be extended if required for other missions.

Simplified block diagrams of the Saturn IB and Saturn V onboard astrionics system are shown in Figures 4 and 5. The main difference between the Saturn V and Saturn IB systems is the additional functions and equipment required for operation of the S-II stage and the additional use of a UHF radio link for data transmission and command.

The Saturn astrionics system provides navigation, guidance, and control of the vehicle from launch until separation of the S-IVB/IU from the spacecraft. Involved in these functions are the stabilized platform, the launch vehicle digital computer and data adapter, the flight control computer, the rate gyros, the propulsion engine actuators, and the auxiliary propulsion system. The stabilized platform carries three integrating accelerometers which measure the thrust acceleration in a space-fixed reference frame. The platform gimbal angles indicate the attitude of the vehicle in the platform reference frame. The launch vehicle data adapter serves as input/output device for the launch vehicle digital computer including the necessary data processing. The digital computer performs computations for navigation, guidance, control, and other functions.

Flight sequence control is also accomplished by the launch vehicle digital computer. The flight program stored in the digital computer memory generates

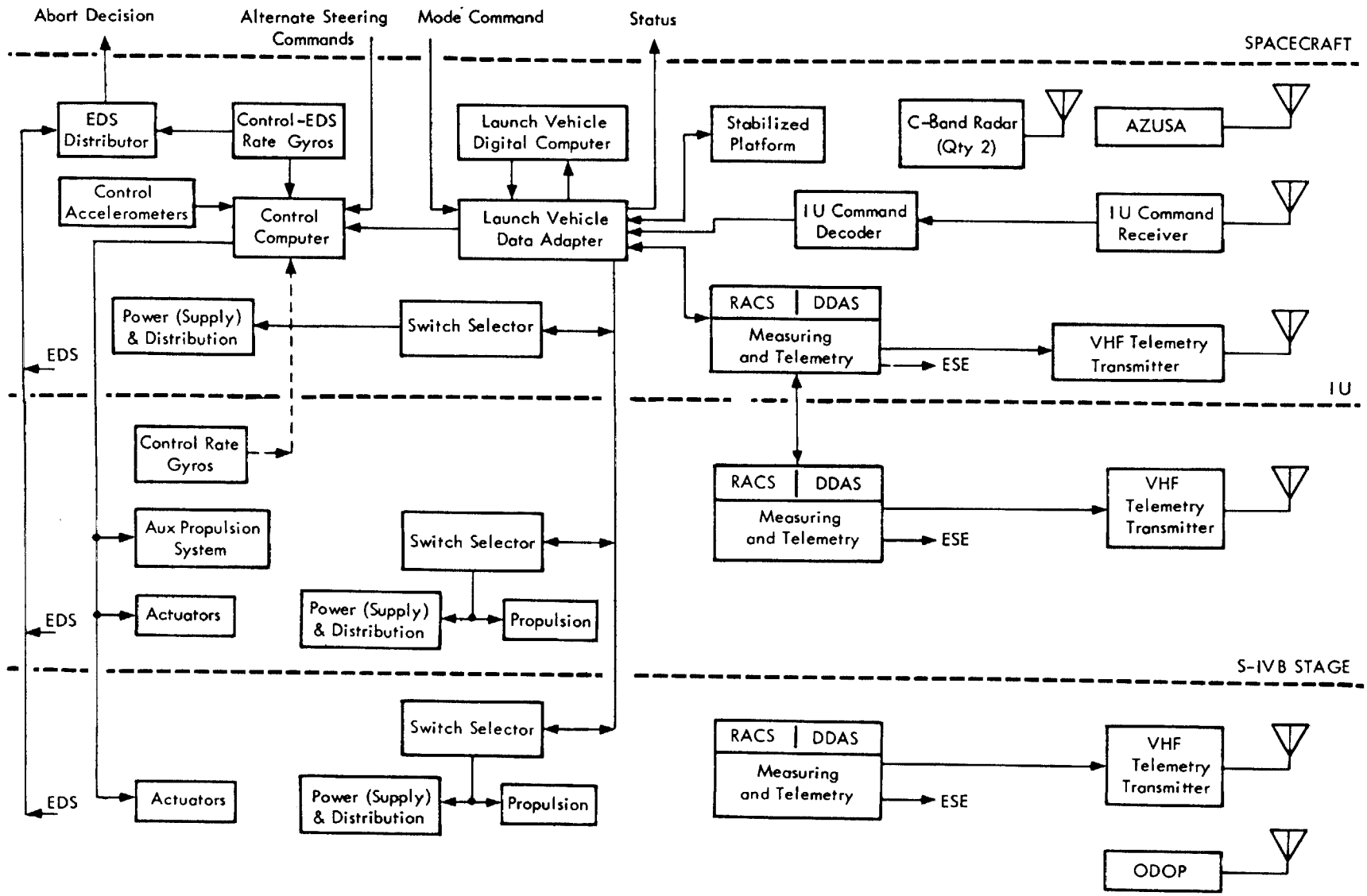

FIGURE 4. SATURN IB ASTRIONICS SYSTEM (OPERATIONAL VEHICLE)

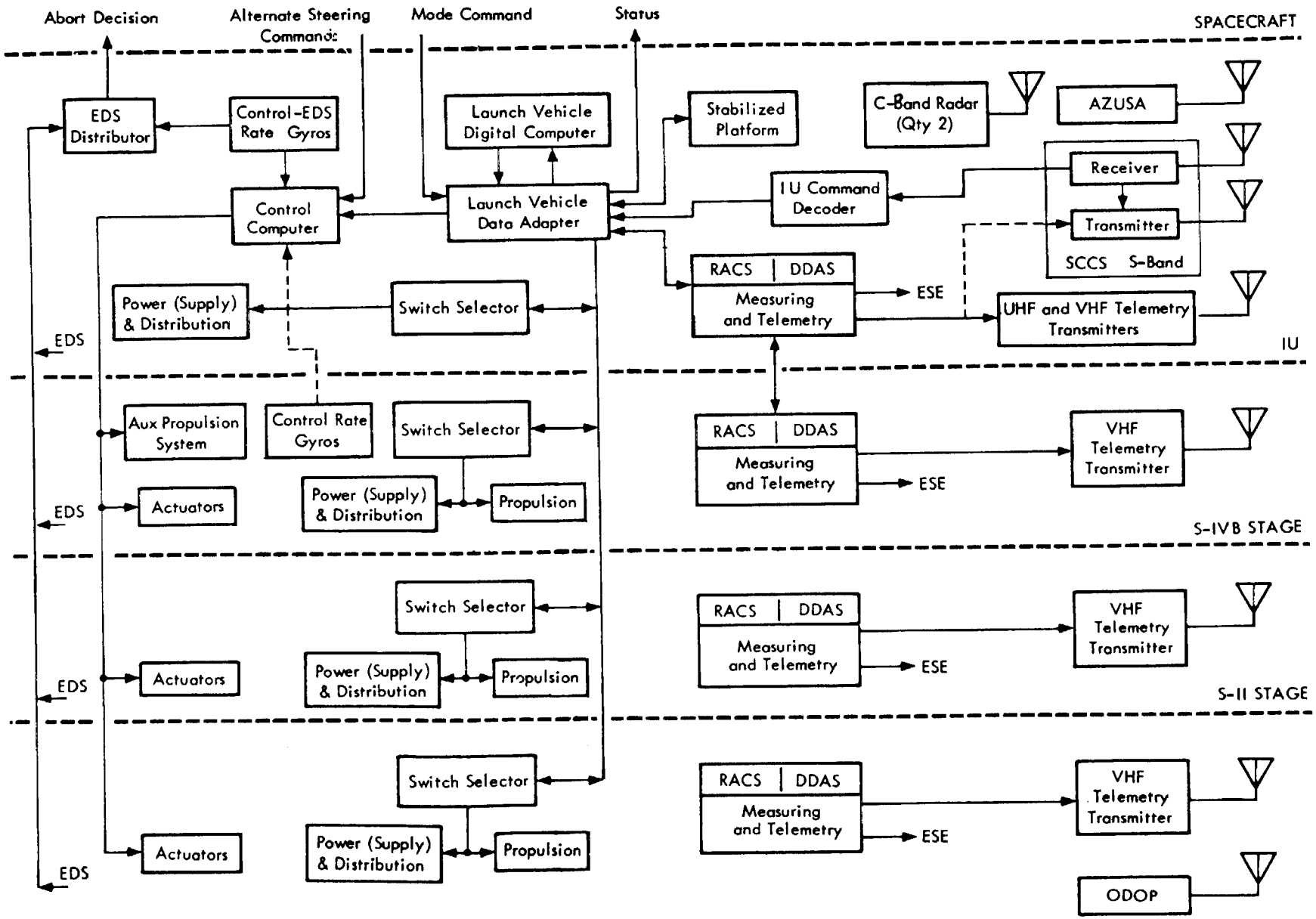

FIGURE 5. SATURN V ASTRIONICS SYSTEM (OPERATIONAL VEHICLE)

the necessary flight sequence commands, which are transmitted through the data adapter and switch selector to the proper circuit in the particular vehicle stage.

Each vehicle stage is equipped with a complete measuring and telemetry system including radio frequency transmitter and antennas. In Saturn IB vehicles, telemetry data are radiated from the vehicle to ground stations in the VHF band (225-260 MHz). The PCM/FM telemetry system of the S-IVB stage and the IU are interconnected to provide a redundant transmission path and to make S-IVB measurements available to the launch vehicle data adapter. All flight control data are transmitted through the PCM/FM system.

In Saturn V vehicles the PCM/FM telemetry data of the S-IVB and IU are transmitted in the VHF band (225-260 MHz) and in the UHF band (2200-2300 MHz). The UHF-band transmission is provided primarily for transmission over the longer ranges after the vehicle has left the parking orbit. In addition the PCM/FM data can be transmitted through the communication and command system (CCS) transponder. This arrangement provides high reliability through redundancy in the transmission path.

Each stage telemetry system has a separate output via coaxial cable to the electronic support equipment (ESE), which is used with the digital data acquisition system (DDAS) for vehicle checkout before launch.

The IU command system permits data transmission from ground stations to the IU for insertion into the launch vehicle digital computer.

The Saturn vehicles carry several tracking transponders. The ODOP transponder is located in the first stage of Saturn IB and V. The IU is equipped with two C-band radar transponders, an Azusa transponder, and the CCS transponder (Saturn V only).

The emergency detection system (EDS) collects special measurements from each stage of the launch vehicle. Based on these measurements, critical states of the vehicle which may require mission abort are detected and the information is sent to the spacecraft for display and/or initiation of automatic abort.

Several lines cross the IU/spacecraft interface for exchange of signals. Alternate steering commands from the spacecraft navigation and guidance system may be used to control the launch vehicle during S-II and S-IVB powered flight phases. This type of operation is considered as backup in case of a failure of the IU navigation and guidance system. During coasting flight the astronaut may

control the attitude of the vehicle through manually generated commands. To indicate the state of the launch vehicle, certain measurements are sent to the spacecraft and displayed to the astronaut.

Before launch, automatic checkout of the vehicle system is controlled by the launch computer complex and the electronic ground support equipment, including the digital data acquisition system.

Instrument Unit

The IU is a cylindrical structure mounted on top of the S-IVB stage (Fig. 6). It contains the major portion of the vehicle's astrionics equipment. The electronic equipment boxes are mounted on cold plates which are attached to the inner wall of the cylindrical structure. A similar arrangement exists in the S-IVB stage.

The cold plates are part of a thermal conditioning system that removes the heat generated inside the equipment boxes and keeps the equipment in the proper temperature range. A coolant fluid (60 percent methanol and 40 percent water) is circulated through the cold plates (16 plates each in the IU and S-IVB stages). Each cold plate (Fig. 7) measures 76 by 76 cm (30 by 30 in.) and is capable of dissipating approximately 420 watts. Most of the equipment requiring cooling is mounted on these cold plates. Some equipment (e.g., the launch vehicle data adapter and digital computer) contains integral cooling passages connected to the thermal conditioning system and is not mounted on cold plates. The cooling fluid is circulated through the thermal conditioning system by an electrically driven pump. During flight, heat is removed from the coolant in a heat exchanger (sublimator) by evaporation of water from a separate supply into the vacuum of space.

System Reliability

The following examples illustrate efforts to achieve reliability by providing system redundancy and alternate modes of operation.

The multiengine stages have an inherent redundancy. With one engine out, the mission can still be accomplished in most cases. Also a failure in the actuator system of one controllable engine can be compensated by the three other control engines. Each gimballed engine has an independent hydraulic actuator system. In the flight control computer all signal channels are triple redundant for the S-IVB coast and powered flight phases, and quad redundant relay circuits are used for switching of input control signals. The

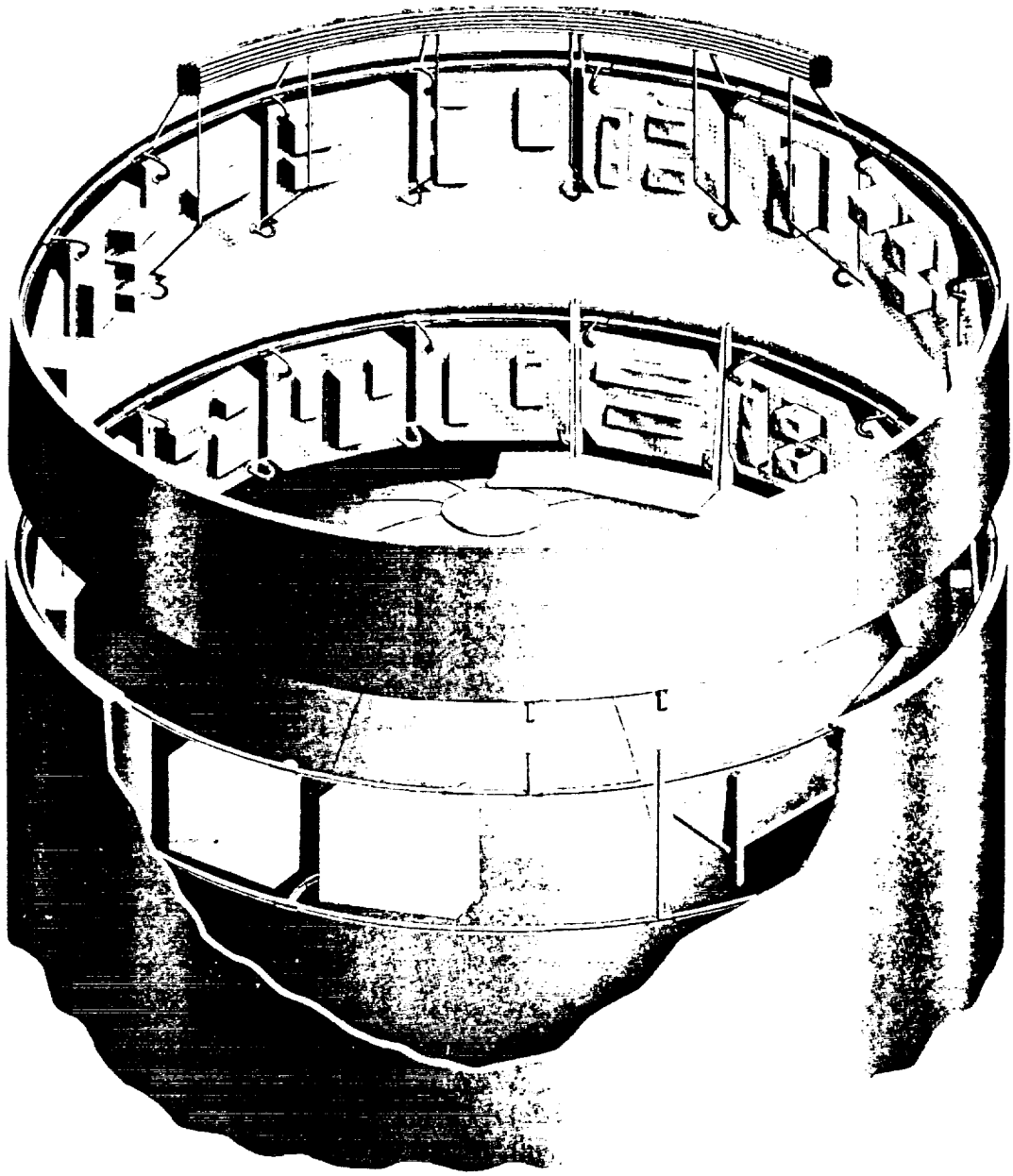

FIGURE 6. SATURN IB AND V INSTRUMENT UNIT

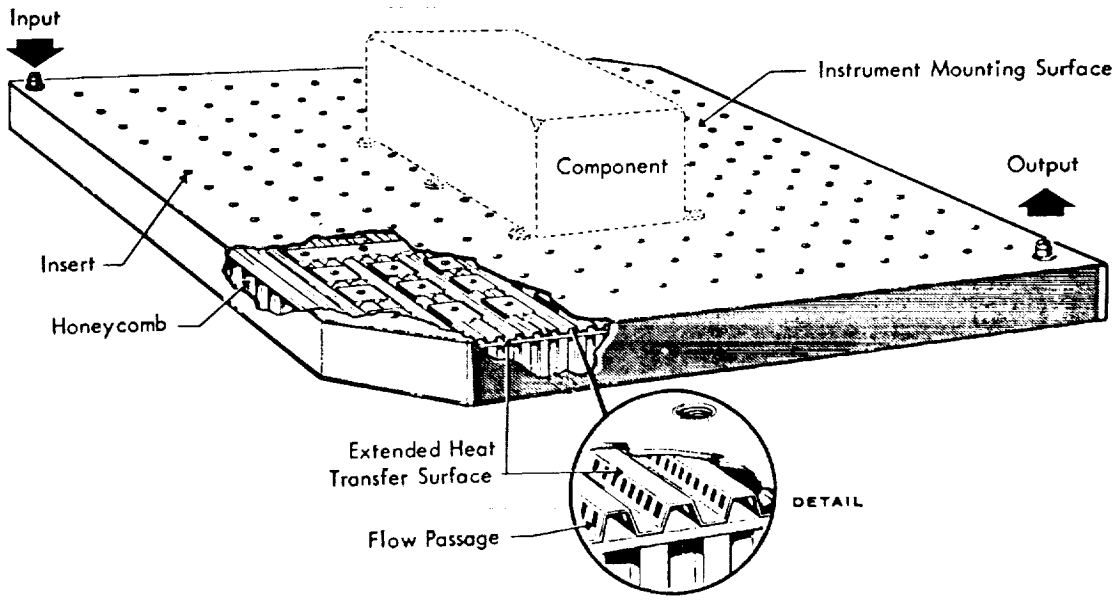

FIGURE 7. THERMAL CONDITIONING PANEL

control/emergency-detection-system rate gyro package and the control signal processor are triple redundant. The propellant valves of the S-IVB auxiliary propulsion system and the connected control relay package are arranged in a quad redundant configuration. The launch vehicle data adapter and digital computer contain duplex and triple redundant circuitry. The EDS uses triple and dual redundant sensors and circuitry. The switch selector can be operated either by the true digital command code or by the complement of this code. This feature eliminates many failure modes. In addition quadruple and triple redundant circuitry is employed in the switch selector. The mission control data are transmitted over redundant radio links from the IU and S-IVB to ground stations. As an alternate mode of system operation, guidance and control of the Saturn launch vehicle can be accomplished by the spacecraft navigation and guidance system (except during first stage powered flight).

NAVIGATION, GUIDANCE, AND CONTROL [1-4]

General Description

The three functions required to direct a space vehicle along a trajectory to achieve a given mission are defined as follows. Navigation is the determination of position and velocity of the vehicle from measurements made onboard the vehicle. Guidance is the computation of maneuvers necessary to achieve the desired end conditions of a trajectory (e.g., insertion into earth orbit), and control is the execution of these maneuvers by controlling the proper hardware. Control functions are divided into attitude control and flight sequence control.

The simplified block diagram shown in Figure 8 indicates the essential equipment that represents the Saturn V inertial navigation, guidance, and control system. (The Saturn IB system is obtained by omitting the blocks connected with the S-II stage.)

The three-gimbal stabilized platform (ST124-M) provides a space-fixed coordinate reference frame for attitude control and for navigation (acceleration) measurements. Three integrating accelerometers mounted on the gyro-stabilized inner gimbal of the platform measure the three components of acceleration (thrust acceleration) in the direction of the reference coordinate axes. The accelerometer measurements are processed in the launch vehicle data adapter (LVDA) and fed into the launch vehicle digital computer (LVDC). In the LVDC, the accelerometer measurements are combined with the computed gravitational acceleration to obtain velocity and position of the vehicle.

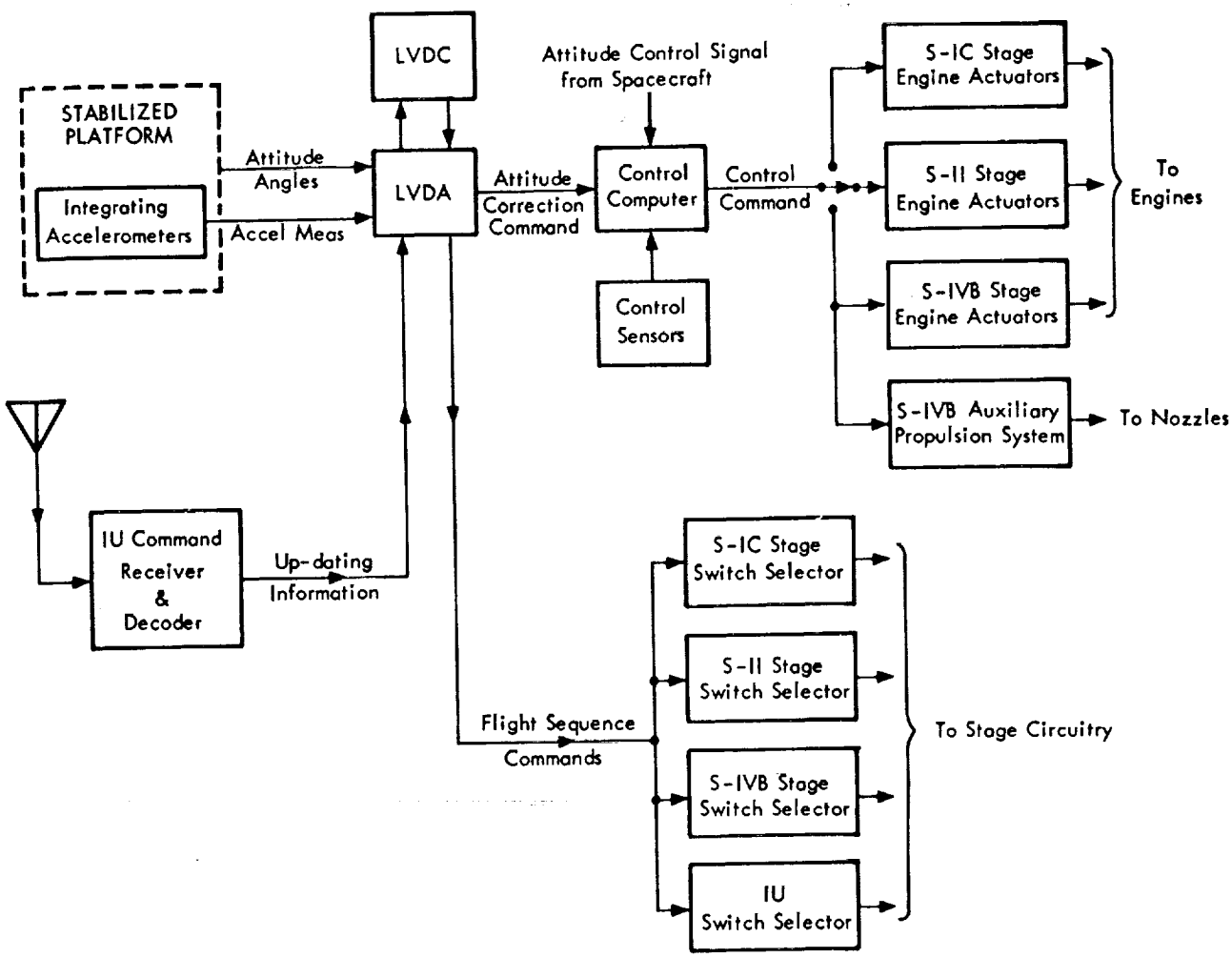

FIGURE 8. SATURN V NAVIGATION, GUIDANCE, AND CONTROL SYSTEM BLOCK DIAGRAM

The LVDA is the input/output device for the LVDC. It processes signals from different sources to make these signals acceptable to the computer. The computed position and velocity of the vehicle are inputs to the guidance computations. According to the guidance scheme (which is programed into the LVDC), the flight maneuvers required to achieve the mission goal are computed in the LVDC. The guidance scheme provides the required thrust direction and the time of propulsion engine cutoff and reignition.

The required thrust direction is compared with the instantaneous attitude of the vehicle obtained from the gimbal angle readings at the stabilized platform. This comparison is performed in the LVDC. The resulting attitude error command is sent to the flight control computer where the attitude error signals are combined with signals from the control sensors (rate gyros) to generate control commands for the engine actuators. The required thrust direction is obtained by swivelling of propulsion engines. Since the S-IVB stage has only a single propulsion engine, the auxiliary propulsion system is used for roll control during S-IVB powered flight. During coasting flight the auxiliary propulsion system provides complete attitude control for the space vehicle.

Flight sequence commands (e.g., stage separation) are generated by the LVDC according to a stored program. These commands are sent through the switch selector to the circuitry of the stage where the command must be executed.

The IU radio command system permits insertion of information into the LVDC during flight by transmission from ground stations. This capability, for example, may be used to update guidance data (e.g., position and velocity).

The following sections give a functional description of the navigation, guidance, and control system. The stabilized platform and the LVDA/LVDC are described later.

Navigation [5]

The acceleration $\ddot{r}$ of the vehicle is the result of thrust acceleration F/M and gravitational acceleration g(r):

$$\ddot{r} = F/M + g(r) \tag{1}$$

The velocity $\dot{r}$ is obtained by integration:

$$\dot{r} = \int \ddot{r}\, dt = \int \frac{F}{M}\, dt + \int g(r)\, dt + \dot{r}_o \tag{2}$$

Further integration yields the position r of the vehicle. The sensitive axes of the three integrating accelerometers mounted on the stabilized gimbal of the platform define a rectangular measuring coordinate system $X_I Y_I Z_I$. The navigation computations are performed in the earth centered coordinate system $X_s Y_s Z_s$. Both coordinate systems are parallel (Fig. 9). Before launch both systems are earth fixed (rotating with the earth). At the instant of platform release (a few seconds before liftoff), they become space-direction fixed. In flight the integrating accelerometers respond to thrust acceleration only. Their outputs are the velocity components $\dot{X}_I \dot{Y}_I \dot{Z}_I$ (resulting from thrust acceleration F/M). To obtain the total velocity of the vehicle, the velocity components caused by gravitational acceleration g(r) must be added.

The gravitational acceleration, which is a function of the vehicle position, is computed from the gravity potential function based on the Fisher ellipsoid:

$$\Omega = \frac{GM_E}{r}\left[1 + J\frac{R_E^2}{3r^2}(1 - 3\sin^2\lambda) + \frac{HR_E^2}{5r^3}(3 - 5\sin^2\lambda)\sin\lambda + \frac{DR_E^4}{35r^4}(3 - 30\sin^2\lambda + 35\sin^4\lambda)\right] \tag{3}$$

where

G = universal gravitational constant

M_E = mass of the earth

R_E = equatorial radius of the earth

$r = |\bar{r}|$ = distance from earth's center to the vehicle

λ = angle between $\bar{r}$ and the equatorial plane

J, D, H = constants

To combine the components of thrust acceleration and gravitational acceleration, the latter must be expressed in the $X_I Y_I Z_I$ (or $X_s Y_s Z_s$) coordinate

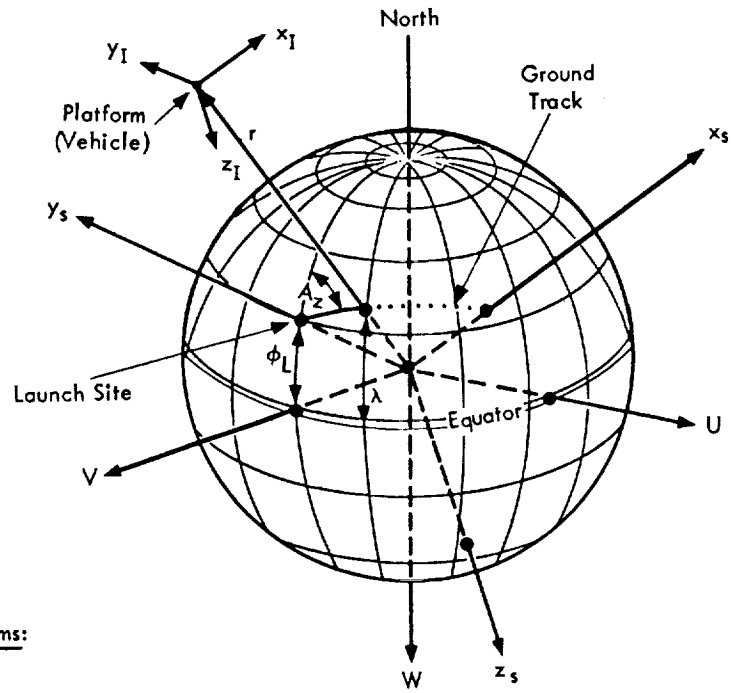

Coordinate Systems:

UVW: Earth-fixed rectangular system used for gravity computations. Origin at the center of the earth; W axis collinear with the earth's spin axis and pointing south; V axis in the equatorial plane intersecting the equator at the longitude of the launch site; U axis completes right-handed orthogonal system.

$x_s y_s z_s$: Space-fixed rectangular coordinate system. for navigation computations. Origin at the earth's center; the Y axis is parallel to the vertical at the launch site at the instant of take-off; the X-Y plane contains the flight plane; the Z axis completes the right-handed system.

Coordinate Systems:

$x_I y_I z_I$: Accelerometer coordinate system, parallel to the $x_s y_s z_s$ system, origin at the vehicle platform.

ϕ_L: Geodetic latitude of the launch site.

A_z: Launch azimuth, measured in clockwise direction from north.

r: Radius vector from the earth's center to the vehicle.

FIGURE 9. NAVIGATION COORDINATE SYSTEMS

system. This is accomplished by transforming the potential function Ω (given in polar coordinates) first into the rectangular coordinate system UVW (Fig. 9) using the relationship:

$$r = \sqrt{u^2 + v^2 + w^2} \tag{4}$$

$$w = -r \sin \lambda .$$

The components of gravitational acceleration in the UVW system are the partial derivatives of Ω (uvw):

$$\ddot{u}_g = \frac{\partial \Omega}{\partial u} = uQ$$

$$\ddot{v}_g = \frac{\partial \Omega}{\partial v} = vQ \tag{5}$$

$$\ddot{w}_g = \frac{\partial \Omega}{\partial w} = wQ + P .$$

The expressions for Q and P are shown in Table I.

The transformation from the UVW to the $X_s Y_s Z_s$ system is performed by two successive rotations, first about the U axis by an angle ϕ_L, and second about the new V axis (now parallel to Y_s) by an angle of $(90° - A_z)$. As may be seen from Figure 9, ϕ_L is the geodetic latitude of the launch site and A_z is the launch azimuth measured clockwise from north. The rotational transformation is expressed in matrix form by:

$$\begin{bmatrix} x_s \\ y_s \\ z_s \end{bmatrix} = [A] \begin{bmatrix} u \\ v \\ w \end{bmatrix} \tag{6}$$

TABLE I. NAVIGATION EQUATIONS

Velocity:

$$\dot{x}_S = \dot{x}_I + \int \ddot{x}_g \, dt + \dot{x}_o$$

$$\dot{y}_S = \dot{y}_I + \int \ddot{y}_g \, dt + \dot{y}_o$$

$$\dot{z}_S = \dot{z}_I + \int \ddot{z}_g \, dt + \dot{z}_o$$

Position (Displacement)

$$x_S = \int \dot{x}_S \, dt + x_o$$

$$y_S = \int \dot{y}_S \, dt + y_o$$

$$z_S = \int \dot{z}_S \, dt + z_o$$

Thrust Acceleration:

$$\frac{F}{M} = \sqrt{\left(\frac{d\ddot{x}_I}{dt}\right)^2 + \left(\frac{d\ddot{y}_I}{dt}\right)^2 + \left(\frac{d\ddot{z}_I}{dt}\right)^2}$$

$x_o y_o z_o$ and $\dot{x}_o \dot{y}_o \dot{z}_o$ are initial conditions at lift-off

$\dot{x}_I \dot{y}_I \dot{z}_I$: Accelerometer output

Gravitational Acceleration:

$$\ddot{x}_g = x_S Q - P \cos \phi_L \cos A_z$$

$$\ddot{y}_g = y_S Q - P \sin \phi_L$$

$$\ddot{z}_g = z_S Q + P \cos \phi_L \sin A_z$$

ϕ_L : Latitude of launch site

A_z : Launch azimuth

$$Q = -\frac{GM_E}{r^3}\left[1 + J\left(\frac{R_E}{r}\right)^2 \left(1 - \frac{5w^2}{r^2}\right) + H\left(\frac{R_E}{r}\right)^3 \left(\frac{w}{r}\right)\left(3 - \frac{7w^2}{r^2}\right) + \frac{D}{7}\left(\frac{R_E}{4}\right)^4\left(3 - 42\frac{w^2}{r^2} + 63\frac{w^4}{r^4}\right)\right]$$

$$P = \frac{GM_E}{r^2}\left(\frac{R_E}{r}\right)^2\left[2J\left(\frac{w}{r}\right) + \frac{H}{5}\left(\frac{R_E}{r}\right)\left(15\frac{w^3}{r^3} - 3\right) + \frac{D}{7}\left(\frac{R_E}{r}\right)^2\left(\frac{w}{r}\right)\left(12 - 28\frac{w^2}{r^2}\right)\right]$$

$$[A] = \begin{bmatrix} \sin A_z & -\sin \phi_L \cos A_z & -\cos \phi_L \cos A_z \\ 0 & \cos \phi_L & -\sin \phi_L \\ \cos A_z & \sin \phi_L \sin A_z & \sin A_z \cos \phi_L \end{bmatrix} \tag{7}$$

The components of the gravitational acceleration in the $X_s Y_s Z_s$ coordinate system are:

$$\ddot{x}_g = x_s Q - P \cos \phi_L \cos A_z$$

$$\ddot{y}_g = y_s Q - P \sin \phi_L \tag{8}$$

$$\ddot{z}_g = z_s Q + P \cos \phi_L \sin A_z$$

A flow diagram of the navigation computations is shown in Figure 10. Accelerometer readings $\dot{x}_I \dot{y}_I \dot{z}_I$, initial velocity $\dot{x}_o \dot{y}_o \dot{z}_o$, and gravitational velocity $\dot{x}_g \dot{y}_g \dot{z}_g$ are added to obtain the total vehicle velocity $\dot{r}$. Integration of $\dot{r}$ and adding of the initial position $x_o y_o z_o$ yields the position r in the $X_s Y_s Z_s$ coordinate system. These position data enter into the computation of gravitational acceleration. The quantities r, $\dot{r}$, F/M, and t (time) are the input data for guidance computations. The thrust acceleration F/M is computed from differentiated accelerometer readings (Table I).

The initial conditions, i.e., the position coordinates $x_o y_o z_o$ of the launch site, the velocity components $\dot{x}_o \dot{y}_o \dot{z}_o$ of the vehicle on the launch pad caused by the earth's rotation, and the geodetic latitude ϕ_L, are constants for a given launch site and are stored in the LVDC. The launch azimuth A_z depends on the mission and may be a function of time in which case the quantity cos A_z stored in the LVDC is updated continuously. The equations required for navigational computations are listed in Table I.

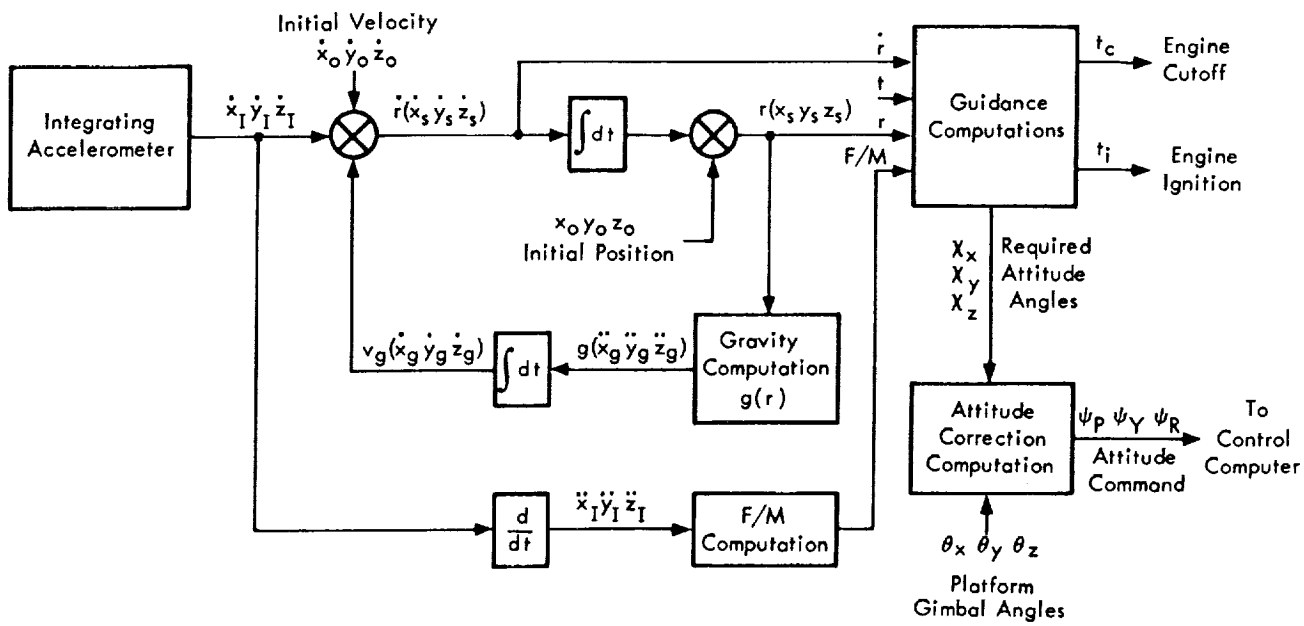

FIGURE 10. NAVIGATION FLOW DIAGRAM

Navigation computations are performed continuously throughout the mission. During coast flight, no accelerometer readings are obtained, and position and velocity are computed using gravitational acceleration only (solving the equations of motion).

Guidance

The flight maneuvers required to achieve the mission-dependent end conditions of the trajectory are computed according to the guidance scheme. The end conditions for the launch vehicle trajectory in the Apollo mission are insertion into earth orbit and injection into translunar trajectory (after leaving the parking orbit). The guidance scheme is represented by a set of equations programed into the LVDC. The result of the guidance computations (guidance commands) is the required direction of the thrust vector, defined by three Euler angles $\chi_x \chi_y \chi_z$ and the time of engine cutoff and reignition t_c.

The Saturn launch vehicles use a path adaptive guidance scheme which is optimized to achieve the mission goal with minimum propellant consumption and high accuracy. The instantaneous state of the vehicle represented by position, velocity, and acceleration (computed from navigation measurements) is used in the guidance scheme to compute an optimum trajectory that meets the specified end condition. These computations are performed about once per second. The resulting guidance commands therefore are functions of the instantaneous vehicle state which is a function of time:

$$\begin{aligned} \chi &= f_1\left(\bar{r}, \dot{\bar{r}}, \frac{F}{m}\right) = f\left(x, y, z, \dot{x}, \dot{y}, \dot{z}, \frac{F}{m}\right) \\ t_c &= f_2\left(\bar{r}, \dot{\bar{r}}, \frac{F}{m}\right). \end{aligned} \tag{9}$$

The path adaptive guidance scheme corrects perturbations occurring during flight by determining a new optimum trajectory which meets the specified end condition. Perturbations may result from aerodynamic forces (including wind) and variations of engine thrust (e.g., engine-out condition). During first stage propulsion (S-IB or S-IC), no path adaptive guidance is applied; this prevents excessive structural loads caused by guidance maneuvers. In this flight phase the vehicle traverses the dense portion of the atmosphere and strong aerodynamic forces occur. An open loop guidance, i.e., a time program for the tilt angle, is used during first stage flight. Path adaptive guidance is initiated at the beginning of the second stage flight.

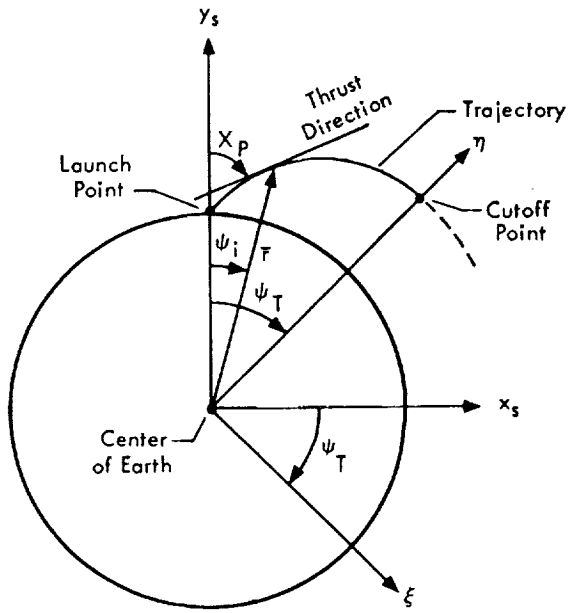

Situation Shown in the Flight Plane

$x_s\ y_s\ z_s$ — Space-fixed Coordinate System for Navigation

$\xi\ \eta\ \zeta$ — Space-fixed Coordinate System for Guidance (IGM)

ψ_T — Range Angle

FIGURE 11. COORDINATE SYSTEM USED FOR ITERATIVE GUIDANCE MODE (IGM)

The path adaptive guidance scheme developed for Saturn vehicles is called the iterative guidance mode [6-8]. It has been tested successfully with Saturn I vehicles. The iterative guidance mode provides accurate vehicle guidance with minimum propellant consumption and offers flexibility with respect to changes in missions and mission parameters. Basically the same equations are used for guidance to earth orbit and from earth orbit to translunar injection.

The rectangular space-fixed coordinate system $\xi\zeta\eta$ introduced for guidance computations is shown in Figure 11. Origin is at the center of the earth; the η axis intersects the specified cutoff position of the vehicle. The guidance scheme computes the thrust direction χ in pitch and yaw and the time of engine cutoff when the vehicle velocity is equal to the desired orbital (cutoff) velocity. These computations are based on optimized trajectories obtained by calculus of variations methods. Simplified equations of motion are applied.

For flight into earth orbit the preflight input parameters to the guidance scheme consist of nine vehicle dependent quantities (estimated burning time and specific impulse for each vehicle stage, coast time between second and third stage, and the ratios of mass and mass flow rate for the two guided stages) and seven mission dependent quantities (velocity, radius η, and path angle at cutoff; inclination and descending node of the cutoff plane; a mission constant; and the launch azimuth).

The plane containing the parking orbit is defined by the instantaneous position of the launch site, the earth center, and the position of the moon at the time of arrival. This plane moves in space because of the earth rotation and the motion of the moon. Therefore the launch azimuth, the inclination, and the modes of the parking orbit are functions of time and must be continuously updated before launch by the launch control computer. Because of range safety requirements and other mission constraints, the launch azimuth is limited from 72 to 108 degrees (measured clockwise from north). This provides a launch window of at least 2-1/2 hours. Generally such a launch window occurs twice a day. However, the existence and duration of a launch window for the Apollo mission is governed by a large number of mission constraints. During ascent into earth orbit the flight will be in one plane since any plane change degrades the payload performance of the launch vehicle. Figure 12 shows characteristic data for a typical Saturn V ascent trajectory.

Before launch the platform is continuously torqued to point the X axis of the platform in the direction of the time varying launch azimuth. Five seconds before liftoff the platform is released and its orientation becomes

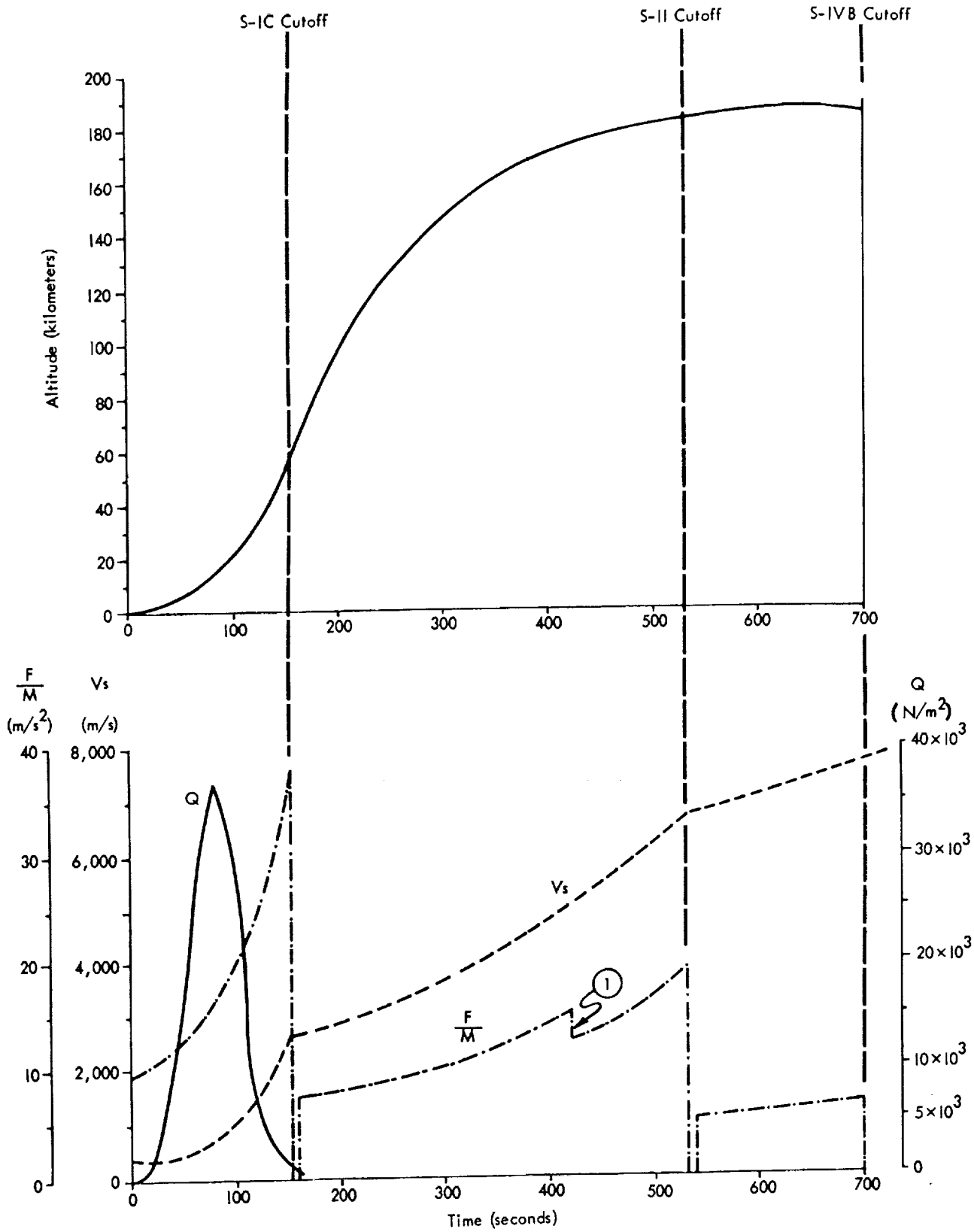

(1) The change of thrust acceleration (F/M) around 415 seconds is caused by a change in the propellant mixture ratio.

FIGURE 12. ALTITUDE, ACCELERATION F/M, VELOCITY V_S, AND AERODYNAMIC PRESSURE Q FOR A TYPICAL SATURN TRAJECTORY

space fixed. After liftoff, when the vehicle is clear of the ground equipment, a roll maneuver is performed to properly align the vehicle's attitude control axis with respect to the flight plane (defined by the platform orientation). Simultaneously the time tilt program (in pitch) is started.

For guidance out of the parking orbit, 10 vehicle-dependent and 33 mission-dependent parameters are required as input to the guidance scheme. Time of S-IVB engine reignition in orbit is computed in the LVDC. The guidance computations again generate the required thrust direction angles (in pitch and yaw) and the time of cutoff. Cutoff is commanded when the vehicle's energy has reached the required value.

Attitude Control During Powered Flight [9, 10]

Attitude control of the Saturn vehicle during powered flight is accomplished by controlling the direction of the thrust vector by swivelling the propulsion engines. During coasting flight (in orbit and after translunar injection) the auxiliary propulsion system of the S-IVB is used for attitude control. The auxiliary propulsion system also provides roll control during the S-IVB powered flight phase since roll control cannot be achieved with the single propulsion engine of the S-IVB stage.

During propelled flight the attitude control system's function is to align the vehicle thrust vector with the thrust vector commanded by the guidance system in such a manner that a stable attitude of the vehicle is guaranteed. The vehicle is aerodynamically unstable (except for a short time around 60 seconds after liftoff) as may be seen from the locations of center of pressure and center of gravity in Figure 13. Structural loads caused by aerodynamic forces including atmospheric turbulence must be kept within safety limits by controlling the vehicle to achieve a minimum angle of attack. Aerodynamic pressure reaches a maximum during first stage flight. Aerodynamic forces and attitude control can excite bending oscillations of the vehicle body which affect the control sensors (e.g., rate gyros) depending on their locations. A typical frequency spectrum for the Saturn V vehicle during three powered flight phases is shown in Figure 14. It includes the frequencies of the control system, the bending and torsional frequencies of the vehicle body, and propellant sloshing frequencies. The "engine-reaction-zero" represents the sinusoidal response where the inertial effects of the engine induce forces at the engine gimbal point equal and opposite to the side force obtained by swivelling the thrust vector. The bending mode response to the engine deflection at this frequency is zero (tail-wags-dog frequency). Propellant consumption during flight causes variations in vehicle parameters thus causing the frequency bands in Figure 14. The problem of propellant sloshing is solved by baffles in the propellant tank.

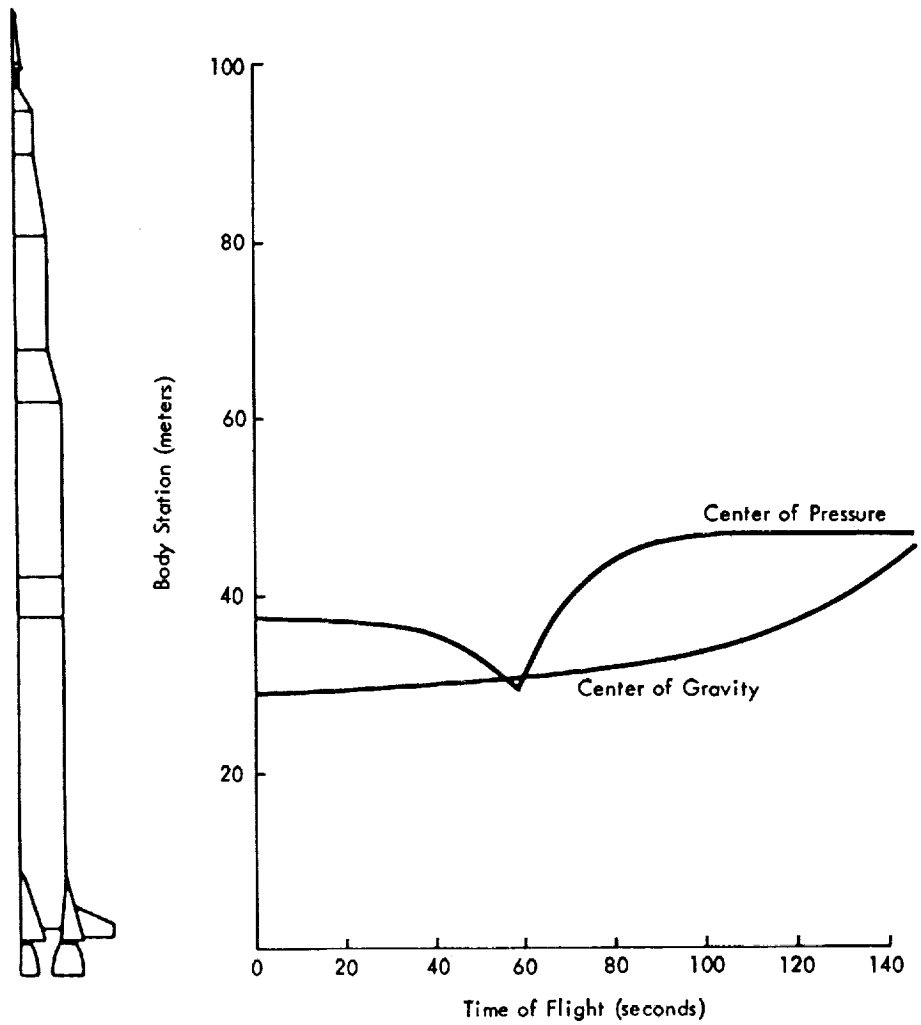

FIGURE 13. VARIATIONS OF CP AND CG DURING FLIGHT

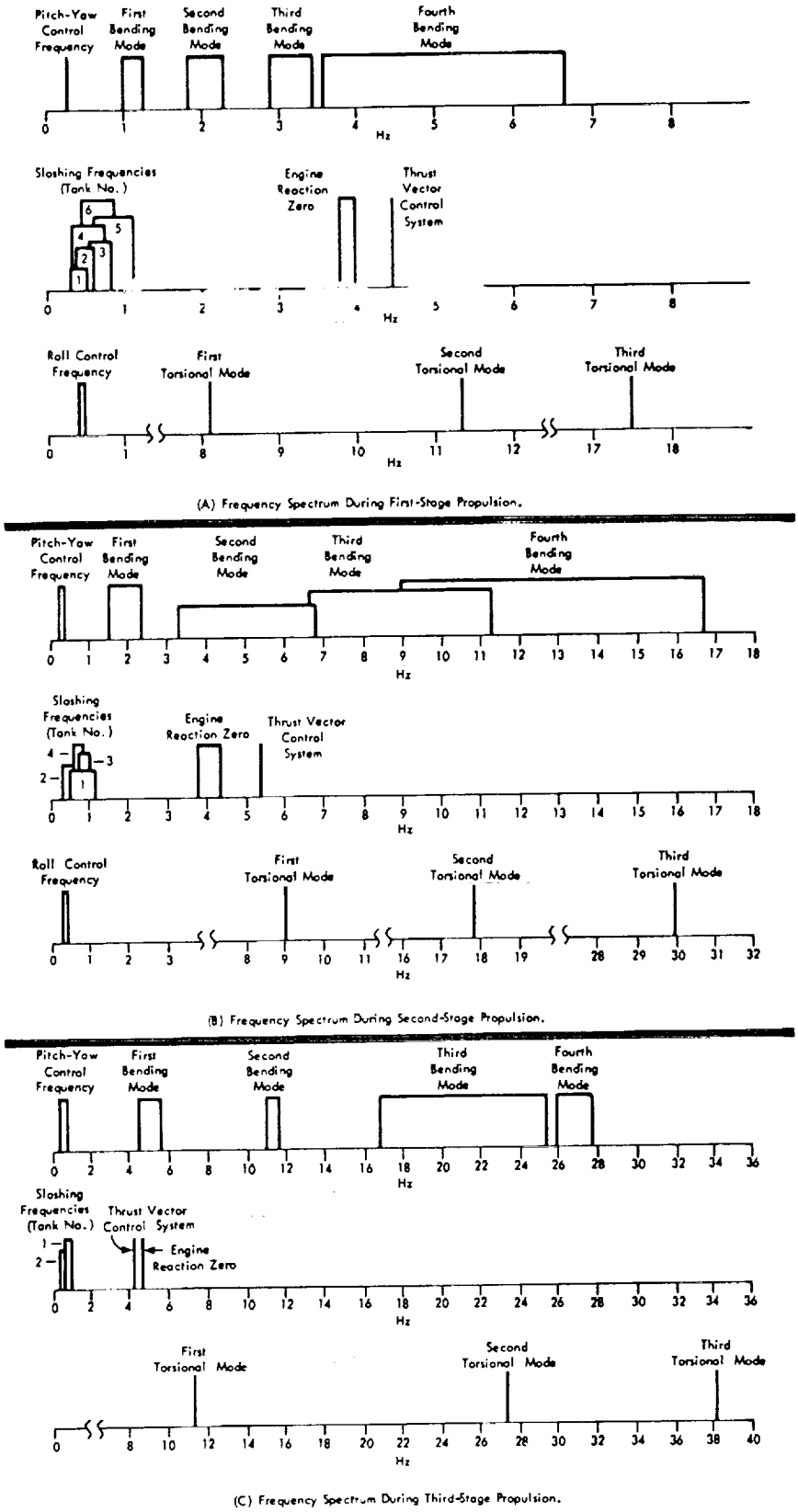

FIGURE 14. TYPICAL SATURN V FREQUENCY SPECTRUM

An attitude/attitude-rate scheme is used for attitude control of Saturn vehicles. The control law for the thrust vector deflection angle β is:

$$\beta = a_0\psi + a_1\dot{\phi} + g_2\ddot{\gamma}$$

where a_0, a_1, and g_2 are gain factors; ψ and $\dot{\phi}$ are the attitude error angle and the angular rate respectively; and $\ddot{\gamma}$ is the lateral acceleration measured by body-fixed accelerometers (Fig. 15). Lateral acceleration control is introduced for load relief and drift minimum and will be used during first stage flight only.

A simplified block diagram of the Saturn attitude control system for powered flight operation is shown in Figure 16. In the LVDC the desired thrust vector angle χ (generated by the guidance scheme) is compared with the platform gimbal angle θ (vehicle attitude) to obtain the attitude error signal ψ. The LVDA performs the necessary signal processing by transforming analog signals into digital signals and vice versa. The analog input signals to the flight control computer are the attitude angle error ψ from the LVDA or from the spacecraft, the angular rate $\dot{\phi}$ from rate gyros, and the lateral acceleration $\ddot{\gamma}$ from control accelerometers. The flight control computer provides the proper gain adjustment and filtering of the ψ, $\dot{\phi}$, and $\ddot{\gamma}$ signals and combines these signals according to the control law to generate a control command for the engine actuators. The actuators deflect the propulsion engines to achieve the thrust vector direction β which drives the vehicle to the desired attitude. More details about signal processing in the LVDA/LVDC are given on page 50.

Control Sensors. Two sets of rate gyros are used in the vehicle. Each set generates angular rate signals in pitch, yaw, and roll. The triple redundant control/EDS rate gyro package located in the IU contains nine rate gyros. The nonredundant control rate gyro package with three rate gyros is located in the aft end of the S-IVB stage. The single-degree-of-freedom rate gyros used in both packages are able to sense angular rates up to 20 degrees per second either clockwise or counterclockwise. The gyros are fluid-damped devices. A microsyn serves as pickoff at the gimbal. The angular rate about the input axis of the gyro is transformed into an ac signal (400 Hz) at the microsyn output. The gyro is equipped with a wheel speed sensor which generates an ac pulse signal whose frequency is proportional to the angular velocity of the gyro wheel. Deviations of more than ±50 Hz from the nominal value (1600 Hz) of any gyro cause a telemetry signal which is used for automatic checkout.

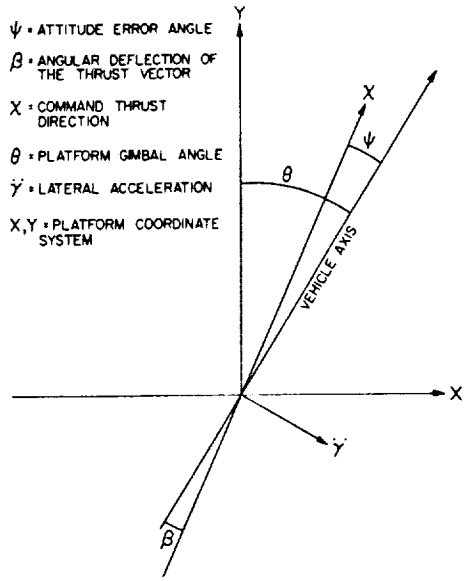

FIGURE 15. RELATIONSHIP OF ATTITUDE CONTROL PARAMETERS

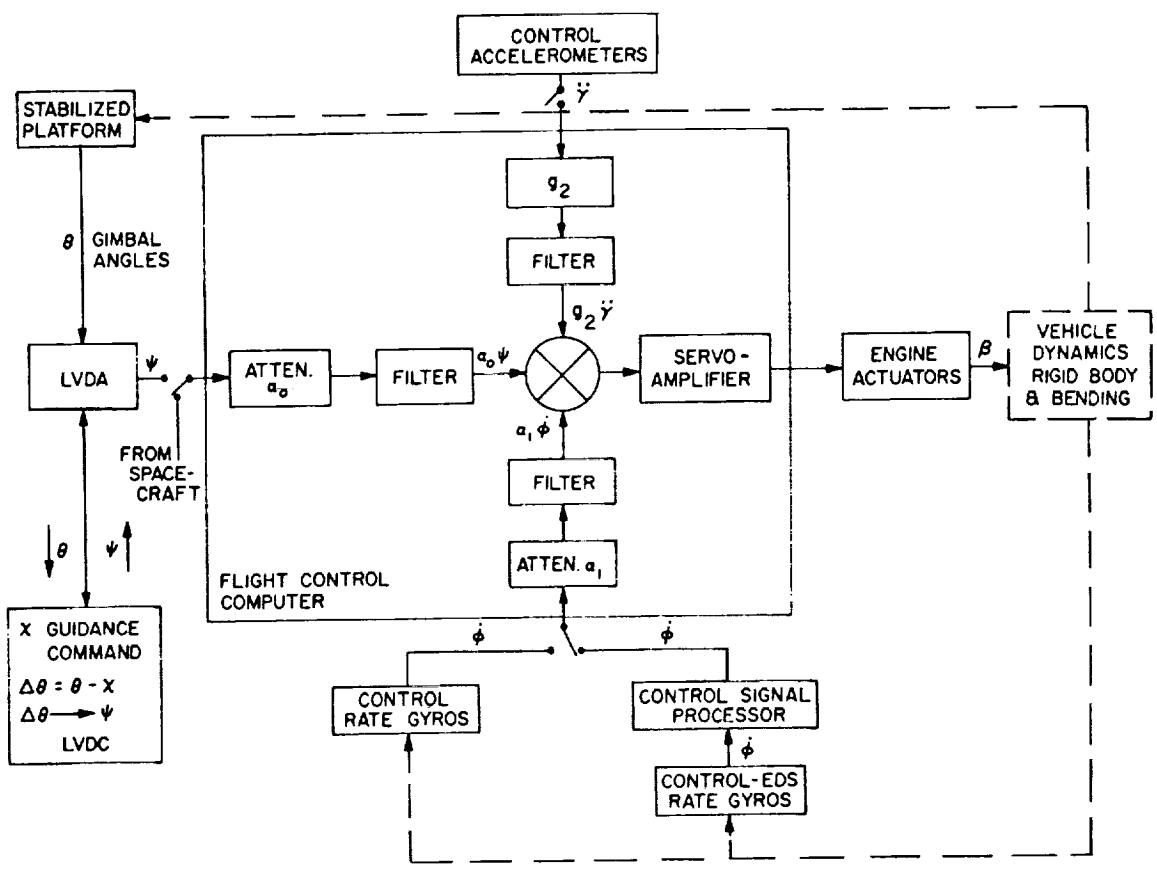

FIGURE 16. SATURN ATTITUDE CONTROL SYSTEM (POWERED FLIGHT)

The control/EDS rate gyro package, used throughout the mission, is triple redundant. The nine rate gyros are arranged in three groups, each group providing angular rate signals about the pitch, yaw, and roll axes of the vehicle; i.e., there are nine independent output signals. The comparison of these signals and selection of three signals (one each for pitch, yaw, and roll) as input to the flight control computer are accomplished in the control signal processor. First the 400 Hz output signal from each rate gyro (microsyn) is demodulated to generate a dc voltage (0 to 45V) which is proportional to the sensed angular rate. Three redundant angular rate signals are available for each axis. Two of these signals are compared; one is used as input to the flight control computer. If the compared signals differ by a predetermined amount, the third signal is switched to the flight control computer. The control signal processor also contains three power supplies generating the necessary dc voltages for the demodulators, comparison circuits, rate switches, and three static inverters. The static inverters provide 400 Hz (26V) for the gyro motors, microsyns, and demodulator reference. The rate switches generate an EDS signal when the angular rate signals exceed predetermined values.

The nonredundant control rate gyro package (in the S-IVB) contains three rate gyros and the necessary power supply, inverter, and demodulation and wheel speed sensing circuits.

Two control accelerometers (one for pitch and one for yaw) measuring the acceleration $\ddot{\gamma}$ of the vehicle perpendicular to the vehicle roll axis may be used during first stage propulsion. The control accelerometers are linear spring-mass systems with fluid damping and inductive pickoff. The accelerometer package contains a static inverter generating the 400 Hz for the pickoff and a demodulator which transforms the ac pickoff signal into a dc voltage (proportional to the applied acceleration) which is sent to the flight control computer.

No control accelerometers will be used in the Saturn V vehicle. The control accelerometers in the Saturn IB vehicle are located in the IU. The exact location of the control accelerometers and the control rate gyro package depends on further investigations of vehicle dynamics and flight results.

Flight Control Computer

The flight control computer processes and combines the analog control signals from different sources to generate the proper command signals for the engine actuators of all vehicle stages and for the auxiliary propulsion system in the S-IVB stages. Operation of the flight control computer in connection with the auxiliary propulsion system (APS) is described later (page 48).

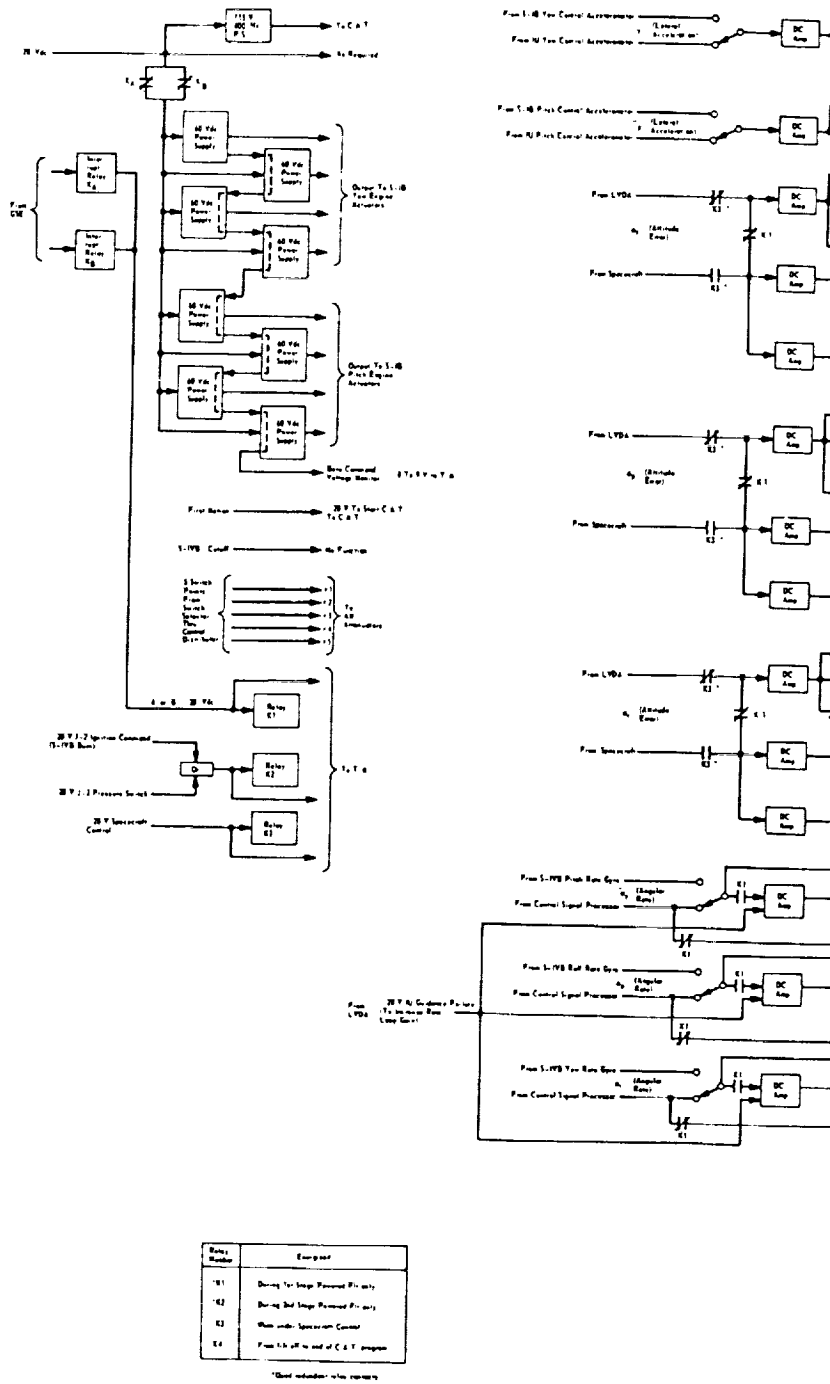

FIGURE 17. SATURN II

FOLDOUT FRAME 1

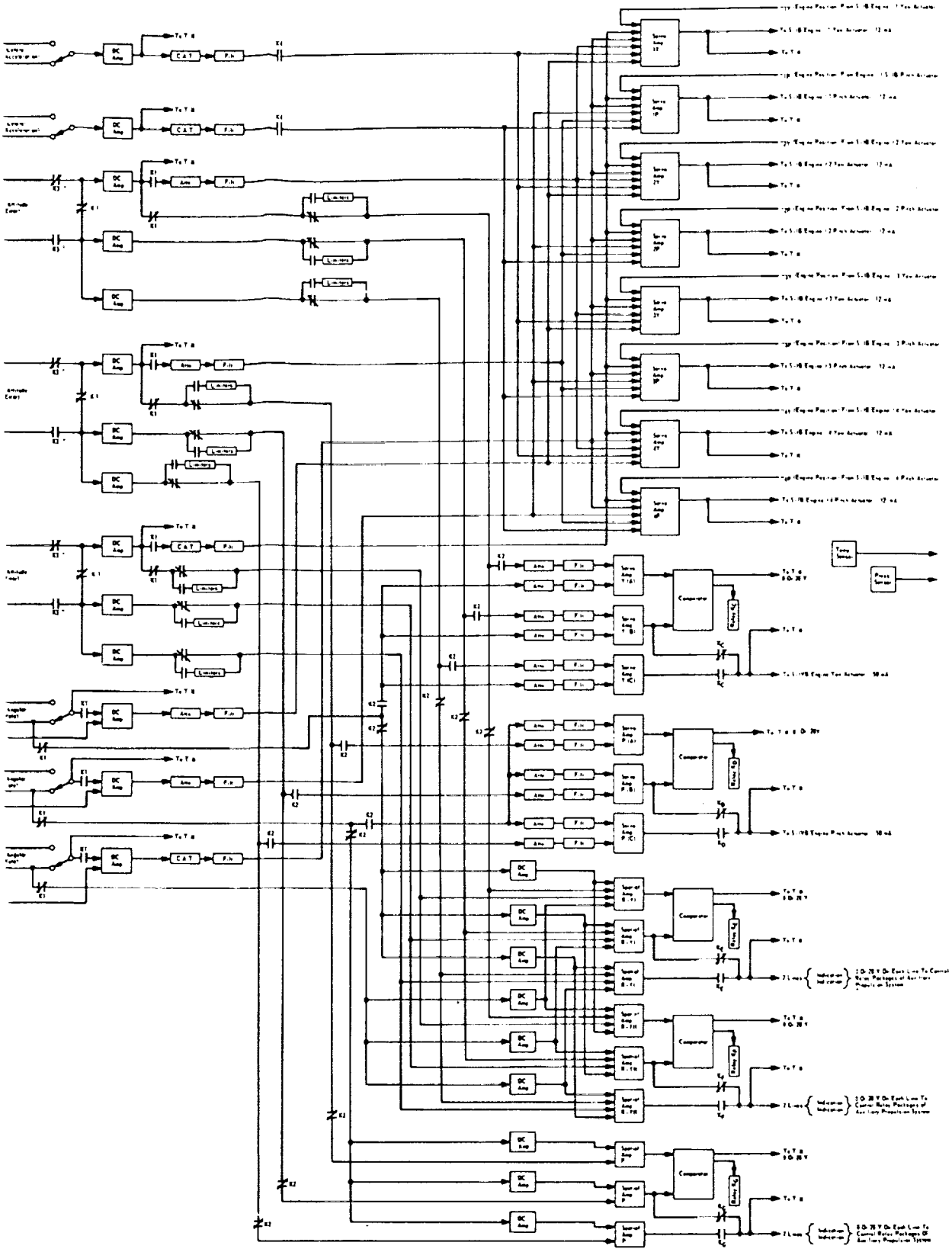

'. SATURN IB FLIGHT CONTROL COMPUTER

FOLDOUT FRAME 2

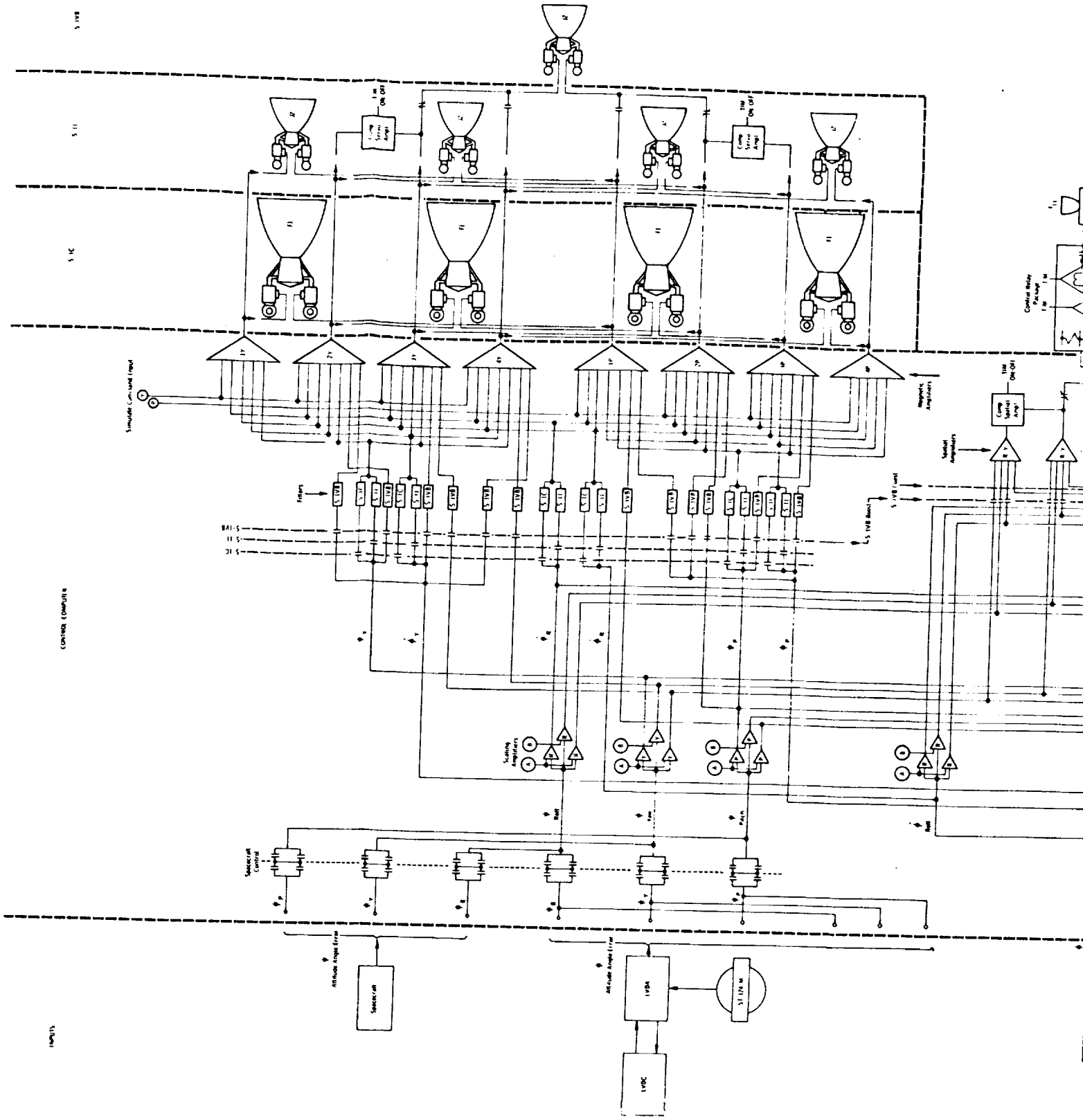

FOLDOUT FRAME 1

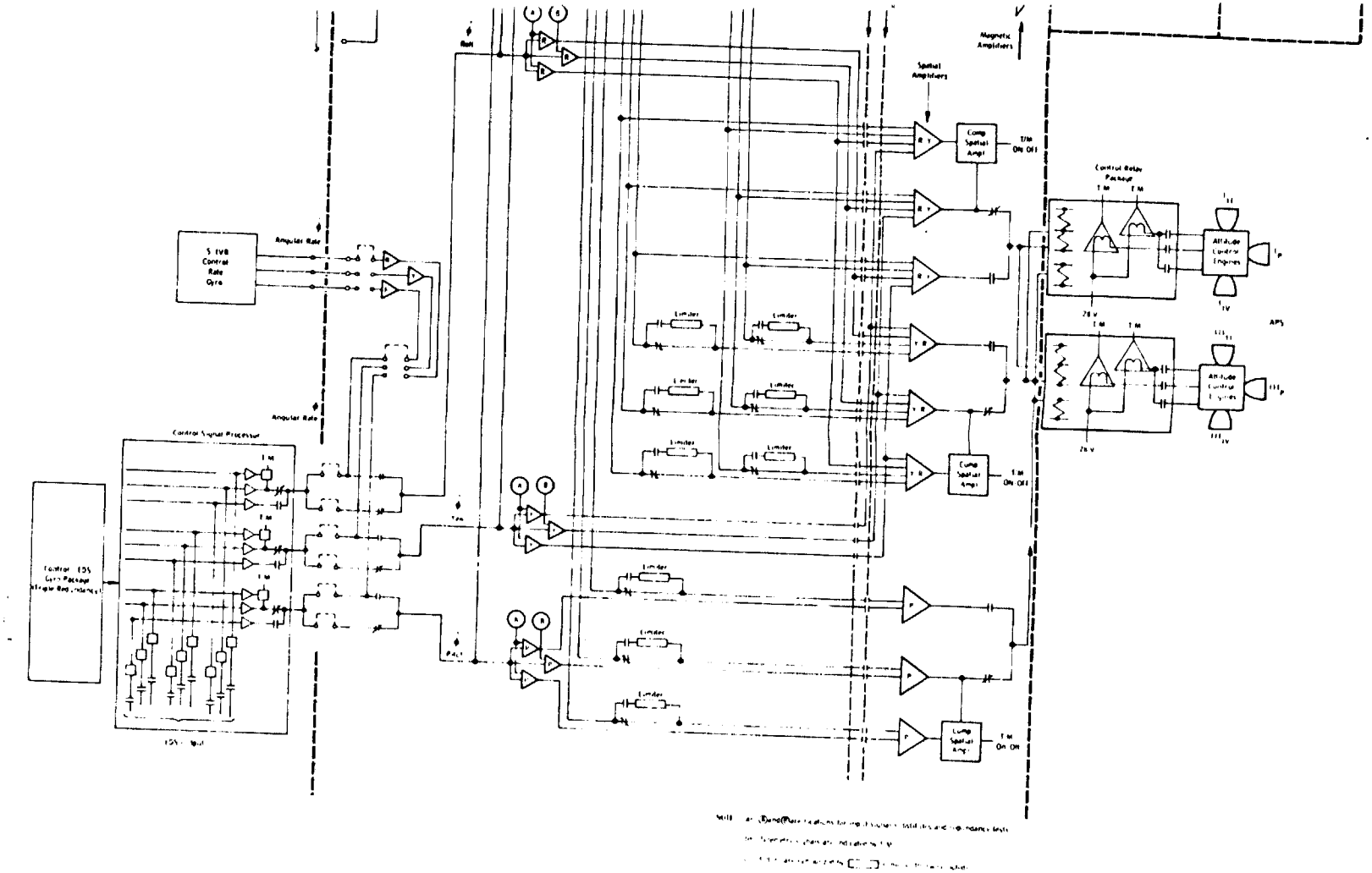

FIGURE 18. SATURN V FLIGHT CONTROL COMPUTER

FOLDOUT FRAME 2

The flight control computer is equipped with eight input channels in Saturn IB and six input channels in Saturn V (Table II). The essential elements of the flight control computer are scaling amplifiers, filters, and servoamplifiers. Block diagrams of the Saturn IB and V flight control computers are shown in Figures 17 and 18.

The scaling amplifiers (including dc amplifiers and attenuators) provide proper adjustment of the gain factors a_0, a_1, g_2 for the input signals. The control attenuation timer (CAT) consists of motor-driven cam-controlled potentiometers used in the Saturn IB vehicle to provide a time dependent gain factor g_2 for the control accelerometer signals. The attenuators consist of relay-switched resistor networks which change gain factors in steps during the flight. A typical time program for a_0, a_1, and g_2 is shown in Figure 19 for Saturn IB first stage flight.

TABLE II. INPUT SIGNALS TO FLIGHT CONTROL COMPUTER

Input Signal		Symbol	Source
Attitude Angle Error	Pitch	ψ_P	LVDA or Spacecraft
	Yaw	ψ_Y	
	Roll	ψ_R	
Angular Rates	Pitch	$\dot{\phi}_P$	Rate Gyros (Launch Vehicle)
	Yaw	$\dot{\phi}_Y$	
	Roll	$\dot{\phi}_R$	
Lateral Acceleration (Saturn IB only)	Pitch	$\ddot{\gamma}_P$	Control Accelerometers (Launch Vehicle)
	Yaw	$\ddot{\gamma}_Y$	

The filters (passive RCL networks) provide gain and phase stabilization in the control loops. Bending mode frequencies, which may be contained in the control sensor signals, are either attenuated or shifted in phase. Since the dynamic characteristic of the vehicle changes during flight (particularly at stage separation) different sets of filters are selected for each stage by relays controlled from the flight program (in the LVDC).

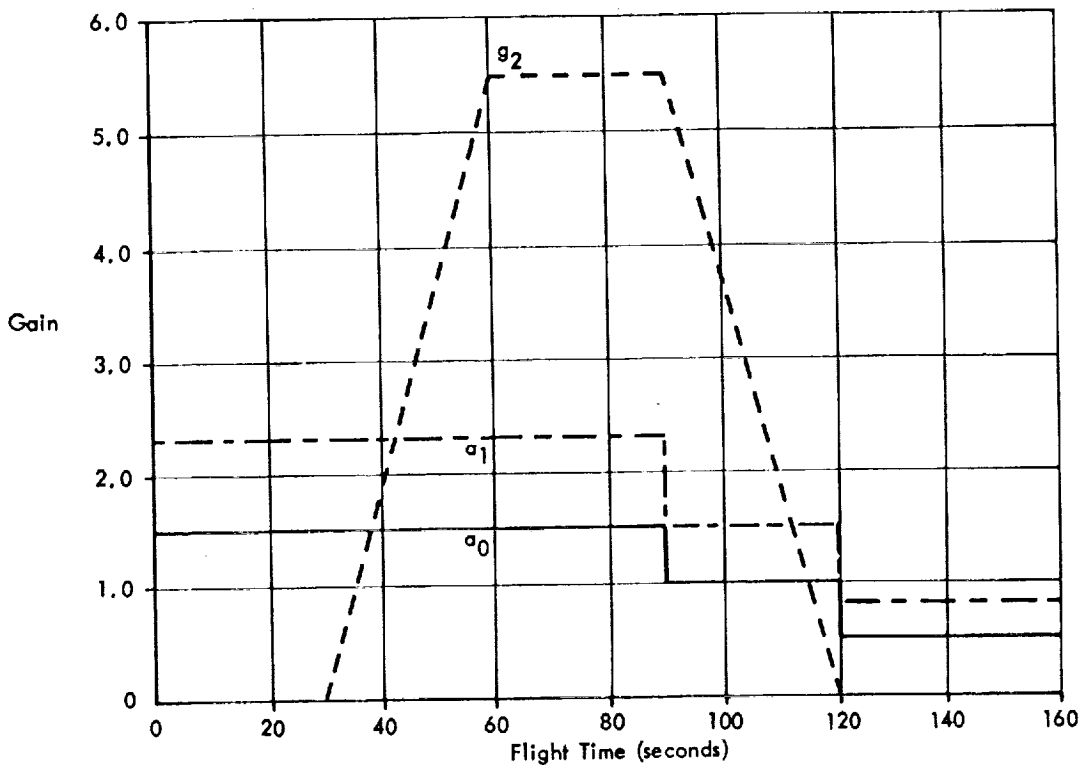

FIGURE 19. TYPICAL GAIN PROGRAM FOR a_o, a_1, g_2 COEFFICIENTS

After filtering, the control signals are combined in the servoamplifiers. The resulting signal is then amplified to a power level sufficient to drive the actuator control valves.

The Saturn IB flight control computer contains two types of servoamplifiers: eight servoamplifiers for the S-IB stage actuators (providing up to 12 mA output current) and six servoamplifiers for the S-IVB stage actuators (providing up to 50 mA output current).

Each actuator in the S-IB stage is driven by one servoamplifier. The three yaw control signals ψ_Y, $\dot{\phi}_Y$, $\ddot{\gamma}_Y$ are fed into each of the four yaw amplifiers; the three pitch control signals ψ_P, $\dot{\phi}_P$, $\ddot{\gamma}_P$ are sent to each of the four pitch amplifiers. All eight servoamplifiers receive the two roll control signals ψ_R, $\dot{\phi}_R$ since a roll maneuver requires simultaneous operation of pitch and yaw actuators. The six servoamplifiers for the S-IVB actuators are used in a triple redundant arrangement to control the two actuators of the single J-2 engine. The outputs of two yaw servoamplifiers are compared; one output signal is used to control the yaw actuator. If the two compared amplifiers' signals disagree, the output of the third yaw amplifier is switched to the yaw actuator. The same principle is used with the three pitch servoamplifiers. For roll control during S-IVB flight, the auxiliary propulsion system is used.

The Saturn V flight control computer contains eight servoamplifiers of the same type used for S-IVB control in Saturn IB. The S-IC and S-II actuators are controlled by one servoamplifier each. During S-IVB flight the computer configuration is the same as in the Saturn IB.

The switching of input signals, attenuators, filters, and servoamplifiers in the flight control computer is controlled by the LVDA/LVDC through the switch selector. Several measures have been taken to assure high reliability of the flight control computer. The ψ and $\dot{\phi}$ signals enter the flight control computer via duplex lines which branch off into three scaling amplifiers. A quad redundant relay configuration is provided for switching the attitude error ψ input of the control computer either to the LVDA or to the spacecraft. During S-IVB powered flight and coasting flight, the computer operates with completely triple redundant channels (including scaling amplifiers, filters, servoamplifiers, spatial amplifiers) for each of the six input control signals.

Hydraulic Engine Actuators [11]. Each gimbal mounted propulsion engine is equipped with two hydraulic engine actuators for engine deflection in pitch and yaw. The S-IB stage has eight engines; the four outer engines are

gimballed. In the S-IC and S-II stage, four of the five engines are gimballed; the S-IVB stage contains only one gimballed engine. Actuator layout and polarity tables for the actuator control commands for Saturn V are given in Figure 20. All control engines of a stage are deflected simultaneously by the same amount to generate a desired thrust vector direction. To achieve a roll maneuver, pitch and yaw actuators of each control engine are operated simultaneously.

Figure 21 shows the hydraulic actuator system. Independent hydraulic systems are provided for each gimballed engine to increase reliability and for simplification of testing and malfunction isolation. The swivel range of control engines in the multiengine stages is sufficient to maintain control of the vehicle despite failure of one control engine (i.e., loss of thrust or loss of actuator operation). In the S-IVB, S-II, and S-IB stages the hydraulic power for the actuators is provided during flight by a pump which is driven mechanically by the propellant turbopump. For checkout purposes hydraulic pressure is supplied by an auxiliary pump driven by an electric motor. In the S-IC stage the engine fuel pump directly generates the hydraulic pressure using the fuel as hydraulic fluid. For testing of actuator operation, hydraulic pressure is supplied by a system external to the vehicle.

The actuator servoassembly, which transforms the β_c command signal from the flight control computer into a linear displacement of the actuator piston, is shown in Figure 22. The signal from the flight control computer is applied to the coil of the torque motor which controls the four-way flapper valve. For instance, if the valve restricts the flow of hydraulic fluid in the left branch, the resulting increase of pressure in this branch moves the power spool to the right. This opens a flow path which builds up pressure on the left side of the actuator piston and displaces the piston to the right, causing a corresponding deflection of the engine. The mechanical feedback link generates a countertorque on the flapper valve. The motion of the actuator piston stops when the torques at the servovalve from the mechanical feedback and from the torque motor coil are equal. A potentiometer generates a telemetry signal indicating the piston position.

The mechanical feedback feature is used with all actuators except those in the S-IB stage, which are equipped with electrical feedback. A potentiometer serving as a transducer sends an electrical β feedback signal to the servoamplifier in the flight control computer. The mechanical feedback is simpler and thus more reliable. Typical data on the hydraulic engine actuators are shown in Table III.

NOTES:

1. All signal arrows indicate positive vehicle movements.
2. Vehicle tilts over position I.
3. Engine actuator layouts shown as viewed from aft end of vehicle.
4. Directions and polarities shown are typical for all stages.
5. $+\beta$ indicates engine deflection required to correct for positive vehicle movement.
6. CG = Center of gravity
   F = Nozzles on
   EXT = Actuator extended
   RET = Actuator retracted
   β = Thrust vector angular deflection

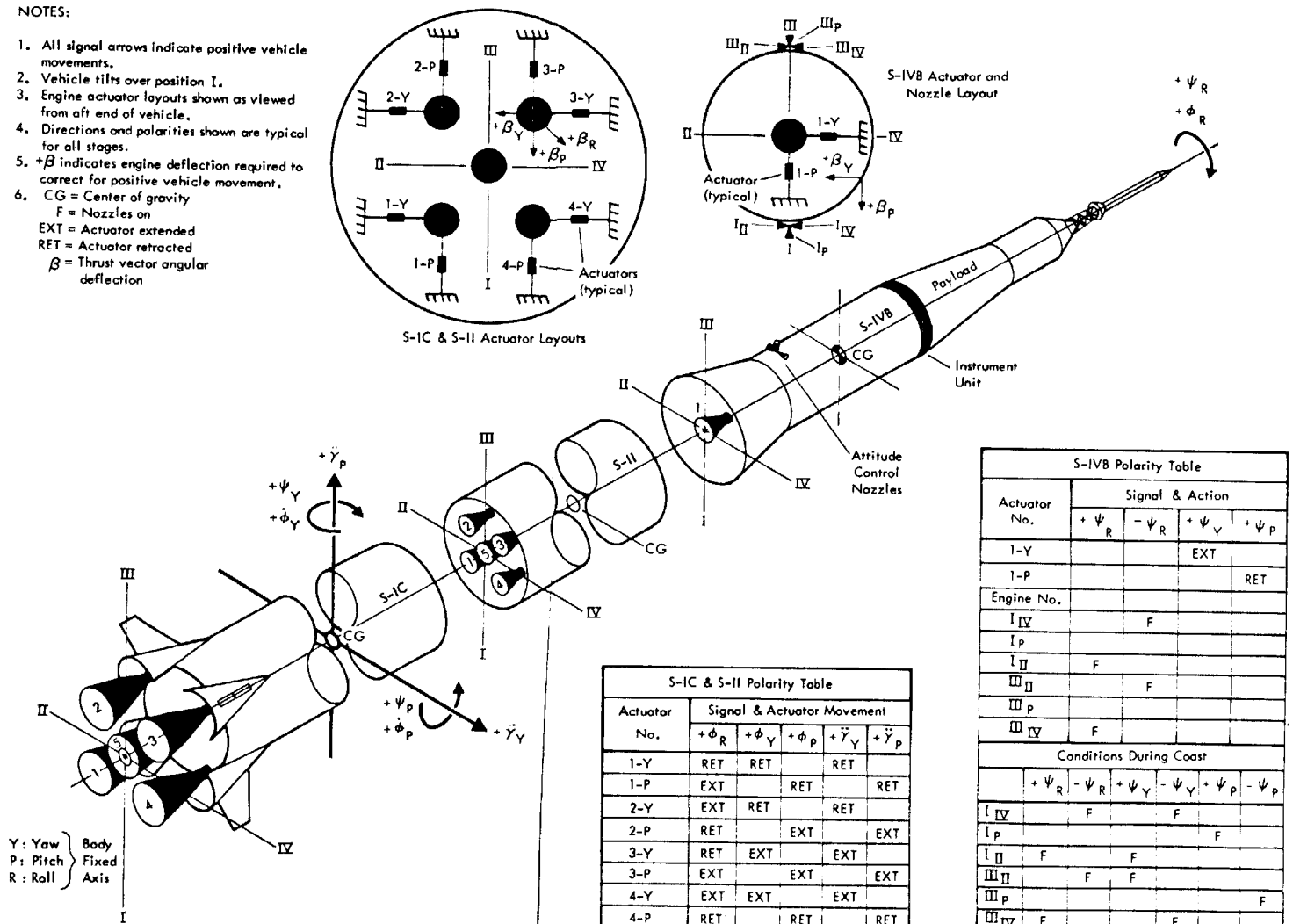

S-IC & S-II Polarity Table					
Actuator No.	Signal & Actuator Movement				
	$+\phi_R$	$+\phi_Y$	$+\phi_P$	$+\ddot{\gamma}_Y$	$+\ddot{\gamma}_P$
1-Y	RET	RET		RET	
1-P	EXT		RET		RET
2-Y	EXT	RET		RET	
2-P	RET		EXT		EXT
3-Y	RET	EXT		EXT	
3-P	EXT		EXT		EXT
4-Y	EXT	EXT		EXT	
4-P	RET		RET		RET

S-IVB Polarity Table				
Actuator No.	Signal & Action			
	$+\psi_R$	$-\psi_R$	$+\psi_Y$	$+\psi_P$
1-Y			EXT	
1-P				RET
Engine No.				
I_{IV}		F		
I_P				
I_{II}	F			
III_{II}		F		
III_P				
III_{IV}	F			
Conditions During Coast				
	$+\psi_R$	$-\psi_R$	$+\psi_Y$	$-\psi_Y$	$+\psi_P$	$-\psi_P$
I_{IV}		F		F		
I_P					F	
I_{II}	F		F			
III_{II}		F	F			
III_P						F
III_{IV}	F			F		

FIGURE 20. SATURN V ENGINE, ACTUATOR, AND NOZZLE ARRANGEMENT

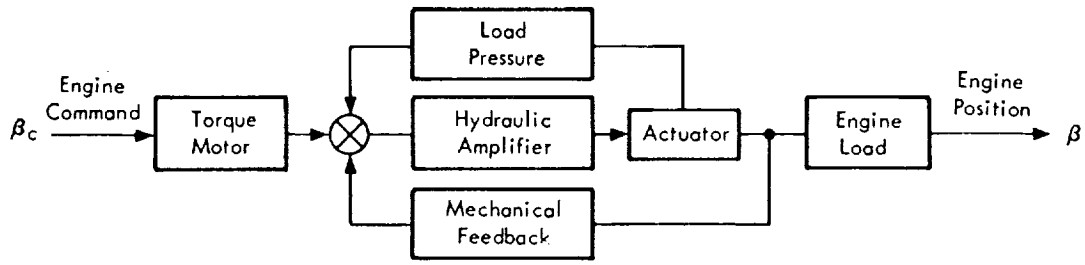

SIMPLIFIED SYSTEM BLOCK DIAGRAM

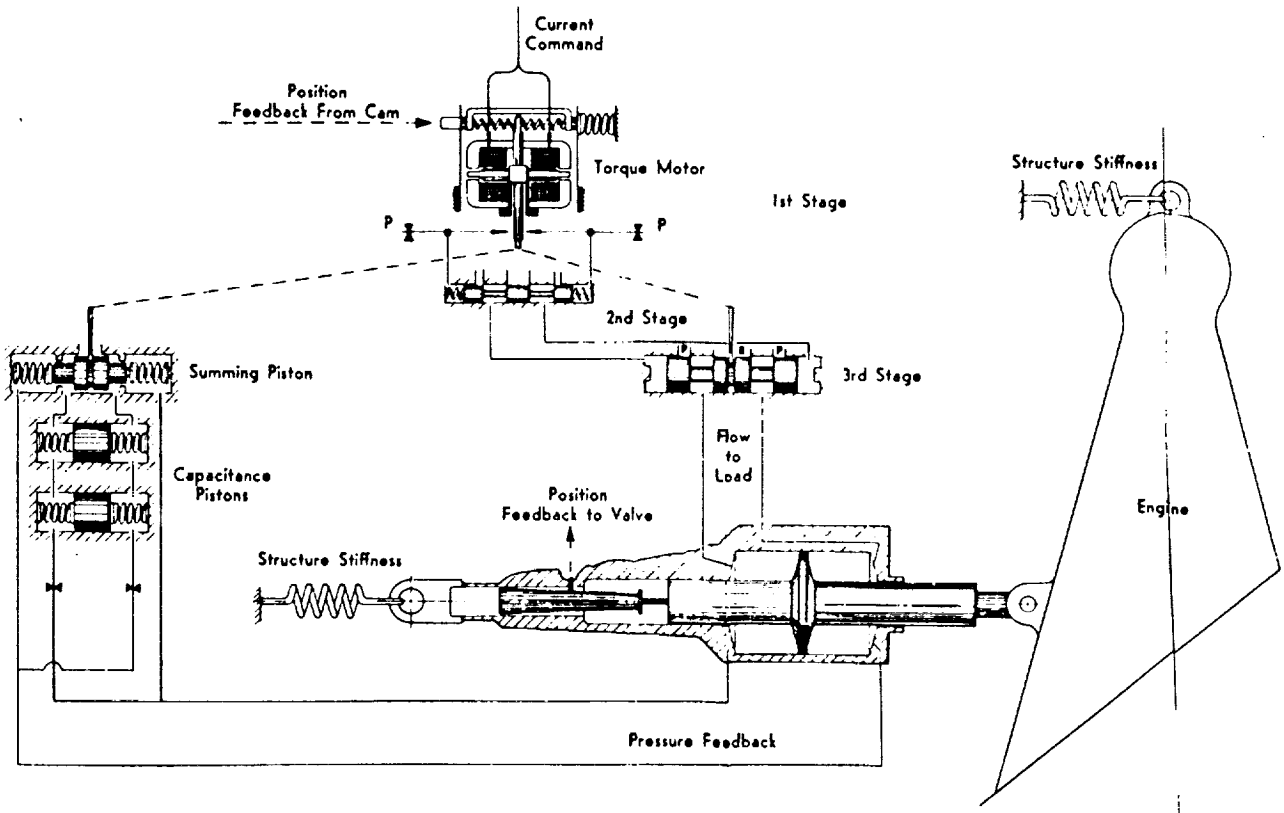

FIGURE 21. HYDRAULIC ACTUATOR SYSTEM

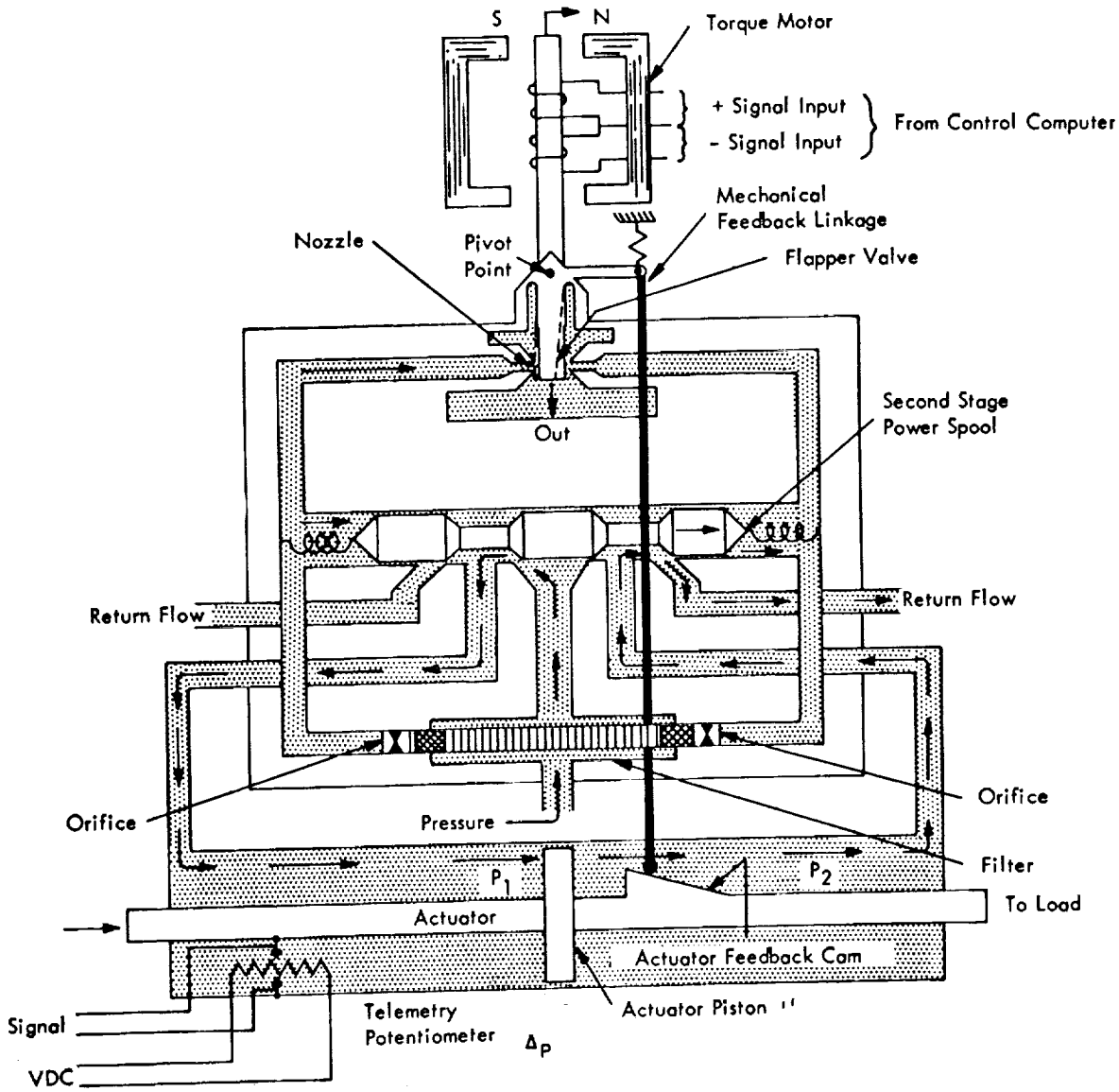

FIGURE 22. FLOW-THROUGH VALVE AND ACTUATOR WITH MECHANICAL FEEDBACK

TABLE III. SERVOACTUATOR CHARACTERISTICS (DESIGN GOALS)

Parameter	S-IC F-1 Engine	S-II J-2 Engine	S-IVB J-2 Engine	S-IB H-1 Engine
Engine				
Moment Arm				
meters	1.620	0.301	0.295	0.699
inches	63.8	11.9	11.6	27.5
Moments of Inertia				
kg m^2	42,000	1,990	1,970	750
slug ft^2	56,760	2,690	2,660	1,015
Servo Actuator				
Piston Area cm^2	368	83.9	76	32.3
in^2	57	13	11.78	5
Stroke cm	29.2	7.7	7.4	9.7
inches	11.5	3.02	2.9	3.82
Supply Pressure				
N/cm^2	12.4×10^6 to 15.2×10^6	24.2×10^6	25.2×10^6	20.7×10^6
psig	1,800-2,200	3,500	3,650	3,000
Torque Motor Current				
mA	50	50	50	12
System				
Angular Deflection				
degrees	±5.15	±7	±7	±7.99
Angular Velocity				
deg/s	5	9.6	8.0	
Load Resonance	8.0	7.9	7.1	

Attitude Control During Coasting Flight [12]

For attitude control during coasting flight the APS of the S-IVB stage is used. The APS contains six thrust nozzles burning hypergolic propellant. The attitude control motors are combined into two modules located at the rear of the S-IVB stage as shown in Figure 20. The nozzles, which are turned on and off by pulse commands from the flight control computer, produce torques about the center of gravity of the vehicle. One engine in each module is operated for pitch maneuvers; the other two engines provide yaw and roll control (see table in Fig. 20).

A simplified block diagram of the APS control scheme is given in Figure 23. The analog input signals to the flight control computer are the attitude error signals ψ, from either the LVDA or the spacecraft, and the angular rate signals $\dot{\phi}$ provided by the body-fixed control/EDS rate gyros. The attitude angle error signals ψ obtained from the LVDA are generated in the LVDC by comparing the platform gimbal angles θ (existing vehicle attitude) with the desired attitude angles χ which are computed in the LVDC according to a special program for orbital flight. The ψ signals from the LVDA are limited in the LVDA to ±2.5 degrees for pitch and yaw and ±3.5 degrees for roll. The attitude error signals from the spacecraft originate in the Apollo navigation and guidance system. They may be generated by the astronaut through manual control if he wishes to change the vehicle attitude. These ψ signals from the spacecraft are limited in the launch vehicle flight control computer (±2.5 degrees pitch and yaw, ±3.5 degrees roll).

Scaling amplifiers in the flight control computer provide the proper gain factors (a_0 and a_1) before the ψ and $\dot{\phi}$ signals are combined in the spatial amplifier, which also contains the pseudo-rate modulator. When the combined signal exceeds certain limits at the input of the pseudo-rate modulator, the spatial amplifiers activate the proper attitude engines which then drive the vehicle to the desired attitude. The control scheme generates continuous thrust or thrust pulses with variable duration and frequency. The deadband and switching hysteresis in the spatial amplifier (pseudo-rate modulator) result in attitude deadband. The vehicle performs a limit cycle about the commanded attitude inside the deadband (±1 degree) as illustrated in the phase diagram in Figure 24 showing the relationship between attitude angle ψ and angular rate $\dot{\phi}$. Beginning at point A in the diagram, the vehicle is rotating in positive direction. When the vehicle state reaches point B, the combination of ψ and $\dot{\phi}$ exceeds the upper deadband limit and the attitude control engine fires. The generated torque brings the vehicle to point C of the diagram where the combined control signal falls below the deadband limit and the attitude control engine is turned off. The vehicle now drifts with the existing

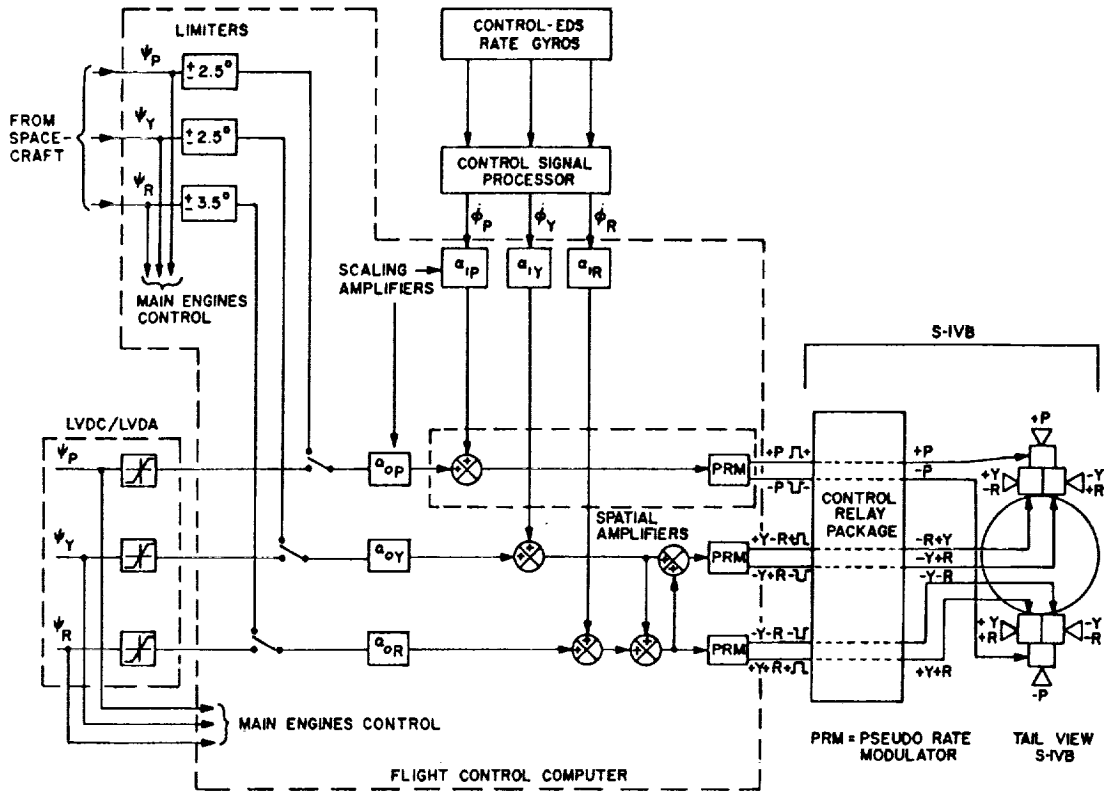

FIGURE 23. ATTITUDE CONTROL SYSTEM FOR COASTING FLIGHT

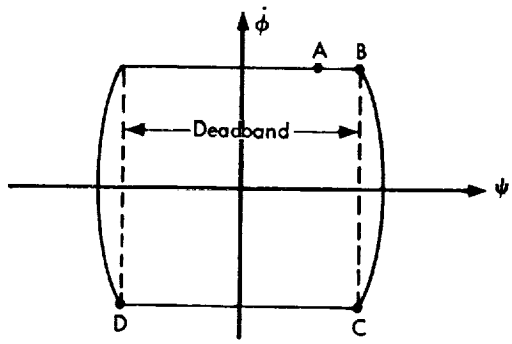

FIGURE 24. LIMIT CYCLE PHASE DIAGRAM

angular velocity until the deadband limit is exceeded at D and the attitude control propulsion system is turned on again.

Attitude control of the vehicle about the pitch axis is independent of yaw and roll control; yaw and roll control are coupled. A simplified block diagram of the pitch control loop is shown in Figure 25. The error signal $\epsilon(t)$ that controls the pseudo-rate modulator is

$$\epsilon(t) = a_0\psi(t) + a_1\dot{\phi}(t) \tag{10}$$

The pseudo-rate modulator, which acts as an on-off contactor, receives the input signal

$$\epsilon_c(t) = \epsilon(t) + h(t) - V(t) \tag{11}$$

where $h(t)$ is the positive switching hysteresis and $V(t)$ is the voltage of the negative feedback lag network. The contactor is off for $|\epsilon| < |E_c|$; it is on if $|\epsilon_c| > |E_c|$. The polarity of the contactor output signal is determined by the polarity of the input signal E_c. The on and off time of the contactor is a function of the input signal ϵ.

The output signal of the pseudo-rate modulation is pulse-width and pulse-rate modulated as a function of the input signal level within a certain magnitude range of the input signal. Above this range the contactor is continuously on; below, it is continuously off. Optimum propellant consumption and desired accuracy are obtained with the following typical system parameters: gain factors $a_0 = 1$, $a_1 = 5$; modulator limit $E_c = 1$ degree; minimum "on-time" $\Delta t_m = 0.065$s; modulation range about 0.6 degree; limits for ψ_P and ψ_Y of ±2.5 degrees and for ψ_R of ±3.5 degrees. The corresponding phase plane plots for the attitude angle deadband are given in Figure 26. As a consequence of limiting the angle error ψ the angular rate $\dot{\phi}$ of attitude maneuvers is limited also, as may be seen by inserting the above given system parameters into equation 10. The contactor opens for $|\epsilon_c| \leq |E_c|$; i.e., the propulsion system is shut off when the angular rate has reached 0.3 degree/s since

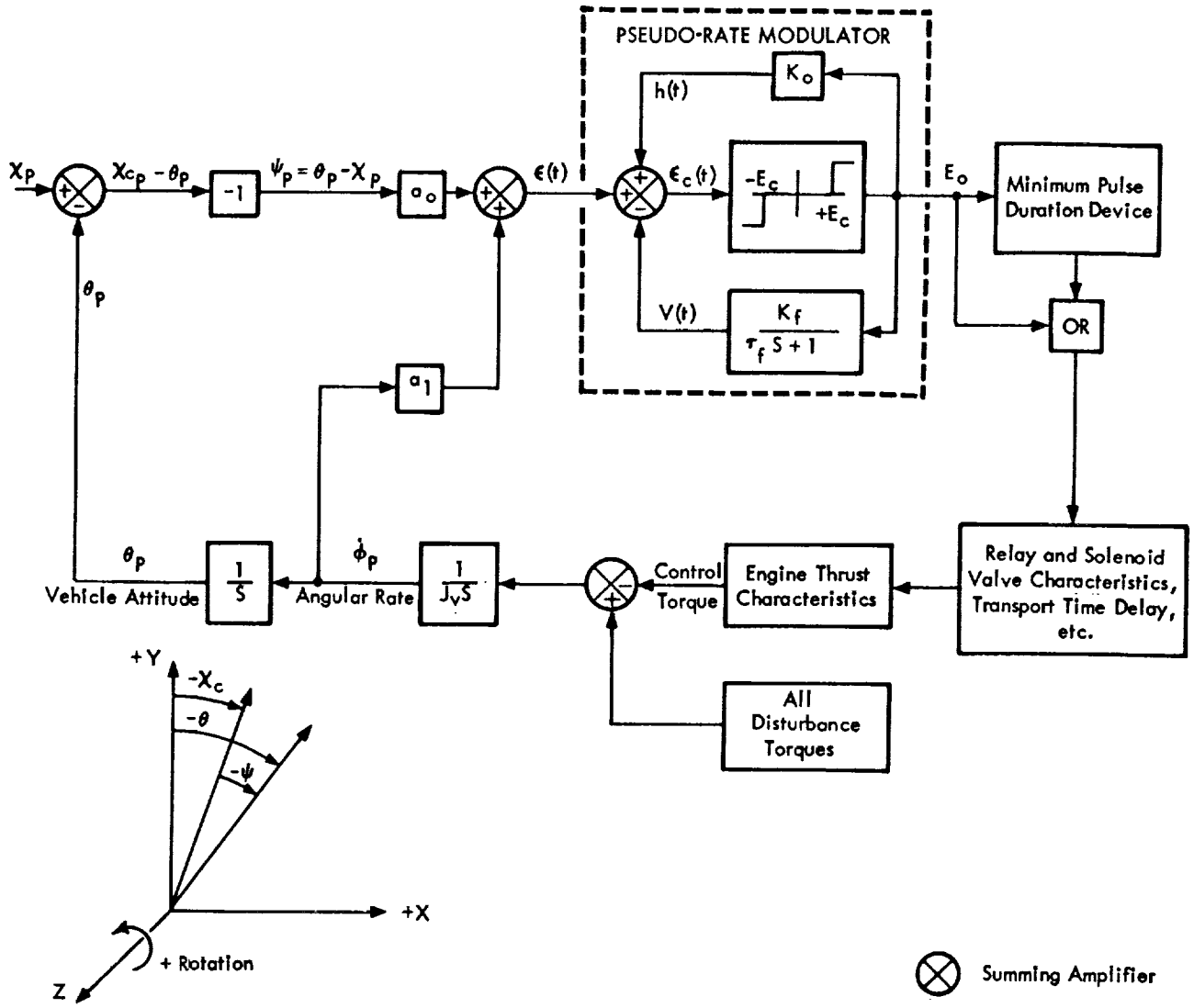

FIGURE 25. PITCH CHANNEL OF THE APS, BLOCK DIAGRAM

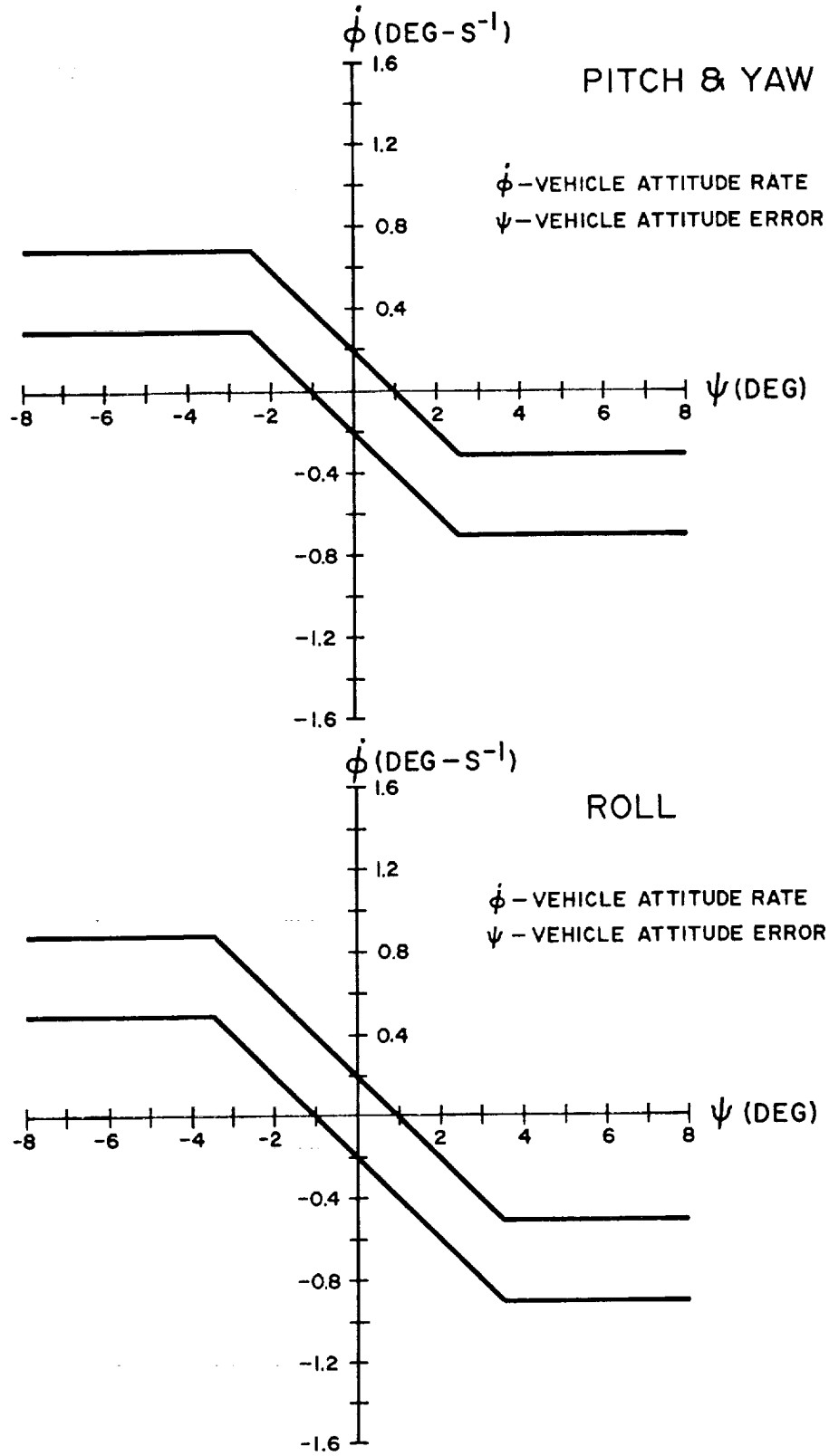

FIGURE 26. DEADBANDS OF THE ATTITUDE CONTROL SYSTEM

$\epsilon_c = \pm 2.5 \pm 5 \times 0.3 = 1$ for the pitch and yaw channel. The corresponding rate limit in roll is 0.5 degree/s. The limitation of angular velocity prevents excessive propellant consumption in attitude control maneuvers. The longer time required to perform a maneuver is not a critical factor.

The minimum pulse duration device (Fig. 25) guarantees an engine burning time of at least 65 milliseconds once the contactor is switched on. This is necessary because the specific impulse of the attitude control engine decreases rapidly for thrust pulses below 60 milliseconds. The minimum pulse duration is also required because of the vehicle response to roll control. The "or" gate passes the longer of the two pulses from the pseudo-rate modulator and from the minimum pulse duration device.

The configuration of the flight control computer for operation of the APS may be seen from Figures 17 or 18 (it is the same for Saturn IB and Saturn V vehicles). No filters are provided for the input signals ψ and $\dot{\phi}$. Nine spatial amplifiers are connected in a manner to obtain a triple redundant arrangement (three spatial amplifiers each for pitch, yaw, and roll control). A comparator circuit selects the output of one amplifier out of the three in each channel.

The output signal from the spatial amplifier ("or" gate) energizes the proper relays in the control relay package located in the S-IVB stage. Two control relay packages each containing 12 double-pole double-throw relays switch the stage electrical power to the coils of the propellant control valves of the APS. The propellant valves are arranged in a quad-redundant configuration to assure high reliability of the APS. The control relay package also provides redundancy by proper connection of relay contacts. The design of the relay circuitry takes into consideration predominant failure modes of relays (coil failures, failure to make contact, and welded contacts).

The yaw and roll control channels of the APS are similar to the pitch channel described so far. The main difference is that yaw and roll signals are mixed as indicated in Figure 23 before they enter the pseudo-rate modulators. This scheme is designed to achieve minimum propellant consumption. It prevents the activation of opposite attitude control engines, and it prevents one engine firing to correct an error in one channel and thereby increasing an already existing error in the other channel.

A typical operation of the APS during coast flight is shown in Figure 27. The initial state of the vehicle (determined by ψ and $\dot{\phi}$) is represented by point A in the diagram. In correcting the existing attitude error, the APS first generates

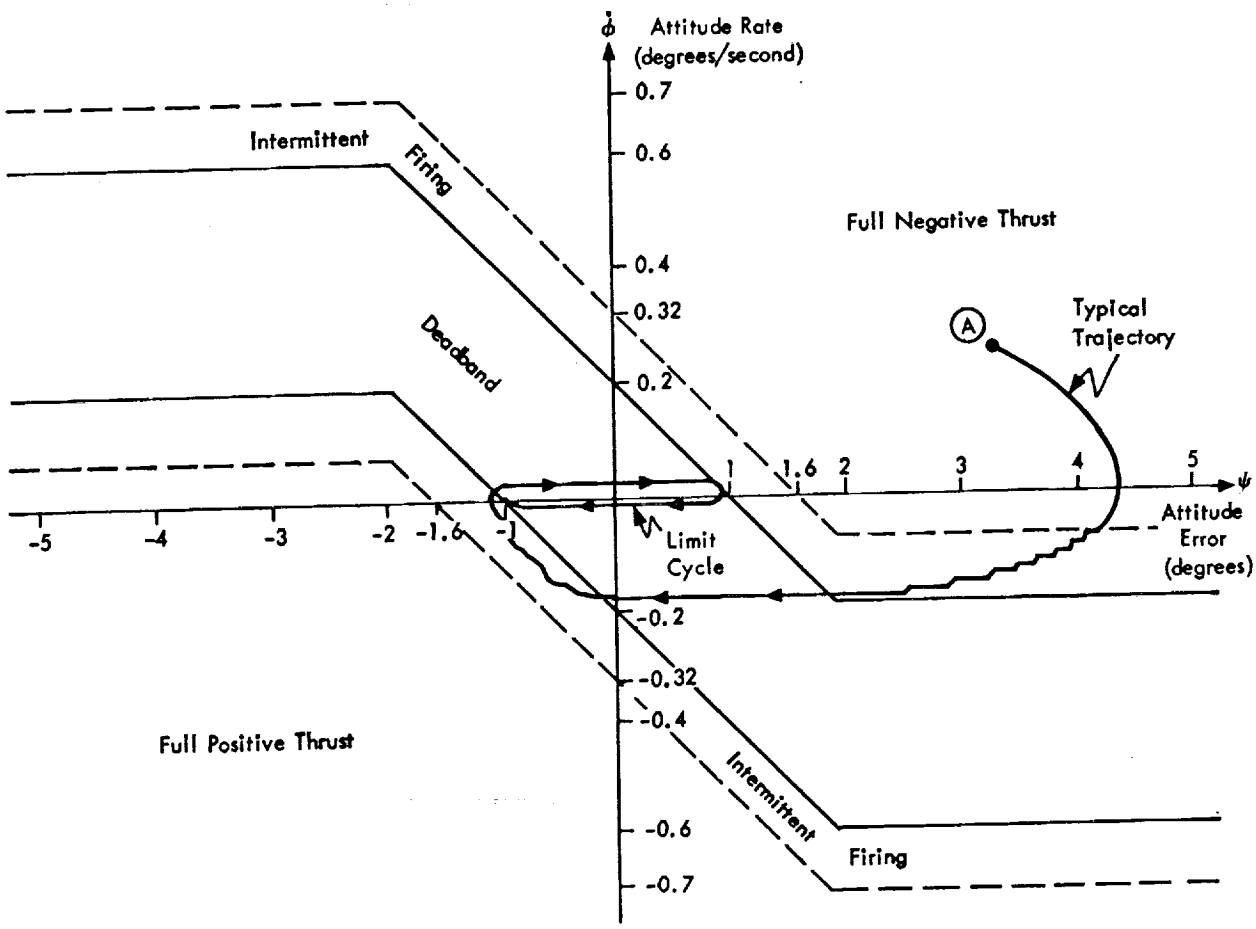

FIGURE 27. OPERATION DIAGRAM OF THE S-IVB AUXILIARY PROPULSION SYSTEM

continuous thrust followed by a series of thrust pulses, a coast phase, and again a sequence of thrust pulses until the limit cycle within the deadband about the commanded attitude angle χ is achieved.

Signal Flow and Processing

The general scheme of navigation, guidance, and control signal processing in the launch vehicle data adapter and digital computer (LVDA/LVDC) is indicated in Figure 28. Navigation and guidance computations are performed in the major computation loop approximately once per second. Inputs to these computations are the velocity measurements obtained from the platform accelerometers and real time provided by the LVDA real time counter. The results of the major loop computation are the thrust direction angles χ and discrete guidance commands (e.g. engine cutoff).

Attitude control commands are computed in the minor computation loop comparing the platform gimbal angles with the computed χ angles. The difference between these angles is transformed into analog control signals sent to the control computer for attitude correction. The attitude correction signals are computed approximately 25 times per second to provide nearly continuous attitude control and to reduce stability problems. The χ guidance command changes are comparatively slow and computations once per second are sufficient.

The total angular rotation of the accelerometer measuring head represents the integrated thrust acceleration. The rotation of the measuring head is read by an optical encoder (optisyn) which generates a gray code signal. The optisyn output is converted into a binary number in the LVDA accelerometer signal processor. One bit represents a velocity increment of 0.05 m/s. Each optisyn generates two redundant readout signals which are processed and stored in the delay line register of the LVDA. These data, which represent incremental velocity, are read into the LVDC together with a real time increment also stored in the delay line. The increments of velocity and real time are accumulated in the LVDC to obtain the total velocity and real time required for navigation and guidance computations. The thrust acceleration F/M is computed by dividing the accelerometer velocity increments by the time increments (differentiation). Clock signals obtained from the LVDC are counted and accumulated in the LVDA delay line to obtain real time.

The platform gimbal angle readings are obtained from the multispeed resolvers which measure the angular displacement of the gimbal shaft. The angle information is contained in the phase shift between two sinusoidal signals (1016 Hz) obtained from the resolver. The phase difference is measured and

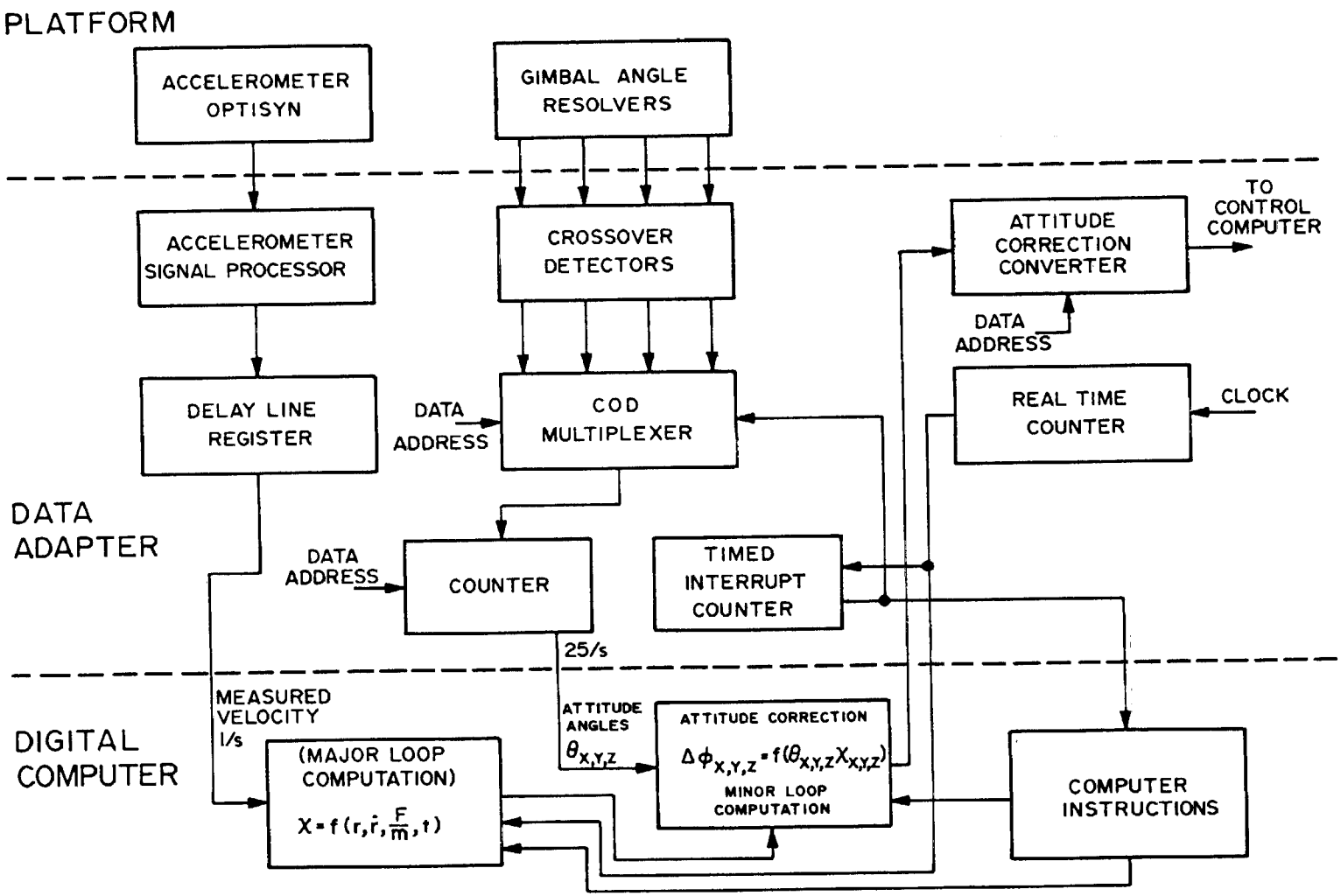

FIGURE 28. NAVIGATION, GUIDANCE, AND CONTROL SIGNAL PROCESSING

transformed into a digital number by electronic counters. Start and stop signals are generated by the crossover detectors (COD) which generate a gating signal at the zero crossing of the resolver signals. Each gimbal angle is measured by a dual speed resolver consisting of a coarse resolver (1:1) and a fine resolver (32:1). The transformation of gimbal angles into digital numbers is performed in a redundant circuitry. The start and stop signals from the COD's of the various resolver inputs are gated through the COD multiplexer as commanded by the LVDC through the COD address register. The 11-bit counter operating with a clock frequency of 2048 MHz counts the time interval between start and stop signals from the COD. The counter readout is fed through the serializer into the LVDC. The subtract and limit check circuits compare the counts from the two parallel (redundant) counters and generate an error signal if they disagree. The computer then performs a test to determine which counter reading is correct (i.e., reasonable). The coarse gimbal angle readings can be used as backup for the fine readings. A computation flow diagram for the attitude angle error ψ computations is shown in Figure 29. The difference $\Delta\theta$ between platform gimbal angles θ and required thrust direction (vehicle attitude) χ is computed for each axis 25 times per second. The χ values are obtained at the same rate by interpolation between the 1-second computation of the major loop. The angle difference $\Delta\theta$ (in the XYZ coordinate system) is then transformed into the vehicle control axes system (roll, pitch, yaw), and the resulting error signals ψ are converted to analog signals for input to the flight control computer. The digital-to-analog conversion of the attitude error signals is performed by ladder networks with redundant channels in the LVDA.

Mode and Sequence Control

The astrionics system of the Saturn launch vehicles has several modes of operation during flight. Each mode is represented by a predetermined set of instructions stored in the LVDC memory which causes the astrionics system to perform certain functions. Examples of operation modes are guidance, attitude control, and sequencing during different flight phases (first stage, second stage, orbit, second burn of S-IVB, etc.). The computer also generates the necessary flight sequence commands, such as stage separation or engine ignition and cutoff, required for operation of a particular mode. Selection and initiation of a new operation mode may be caused by completion of a previous mode, a time program, the occurrence of an event, or command from the spacecraft or IU command system. For example, if the astronaut wants to control the attitude of the vehicle in orbit, he sends the proper mode command through the LVDA to the LVDC which then generates the necessary signals to switch the attitude control signals from the spacecraft to the flight control computer in the IU.

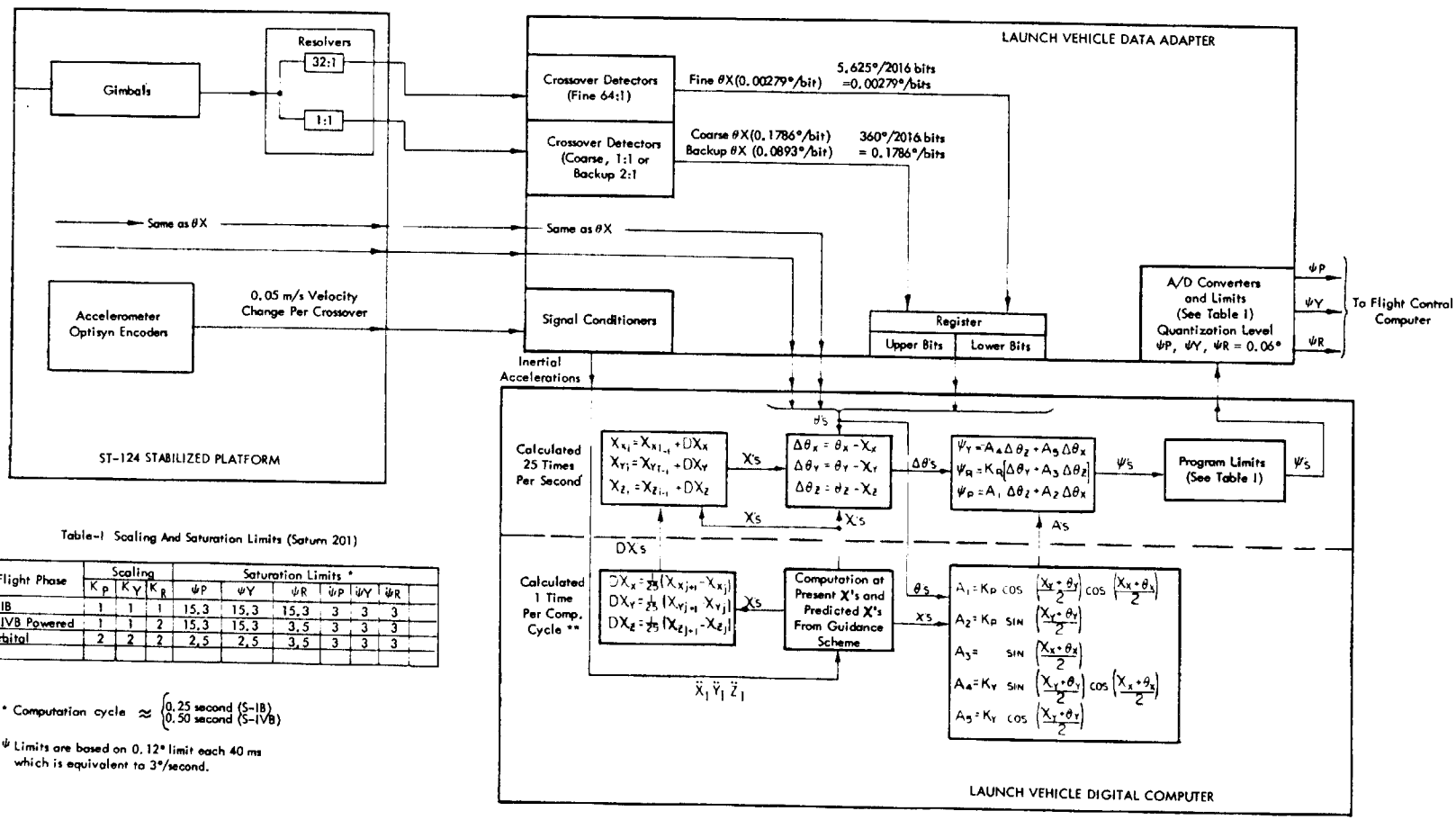

Table-I Scaling And Saturation Limits (Saturn 201)

Flight Phase	Scaling			Saturation Limits *					
	K_P	K_Y	K_R	ψP	ψY	ψR	ψP	ψY	ψR
S-IB	1	1	1	15.3	15.3	15.3	3	3	3
S-IVB Powered	1	1	2	15.3	15.3	3.5	3	3	3
Orbital	2	2	2	2.5	2.5	3.5	3	3	3

** Computation cycle ≈ 0.25 second (S-IB), 0.50 second (S-IVB)

*ψ Limits are based on 0.12° limit each 40 ms which is equivalent to 3°/second.

FIGURE 29. ATTITUDE SIGNAL FLOW DIAGRAM

Notes: •Signal return lines from the Switch Selectors, through the Control Distributor, to the LVDA are not shown in this Figure.
•The letters used to label interstage connections between units are not actual pin or cable connectors. The letter code is denoted below:

a = 8-digit address (8 lines)
b = Force reset (register) (1 line + 1 redundant line)
c = Register verification (8 lines)
d = Read command (1 line + 1 redundant line)
e =, f =, g =, h = } Stage Select Lines (1 line + 1 redundant line)
j = b, c, d, e, f, g, and h to IU telemetry
k = Register test, Zero indicate, Sw Sel output } To stage telemetry (1 line each)
m = +28 Vdc from the Instrument Unit

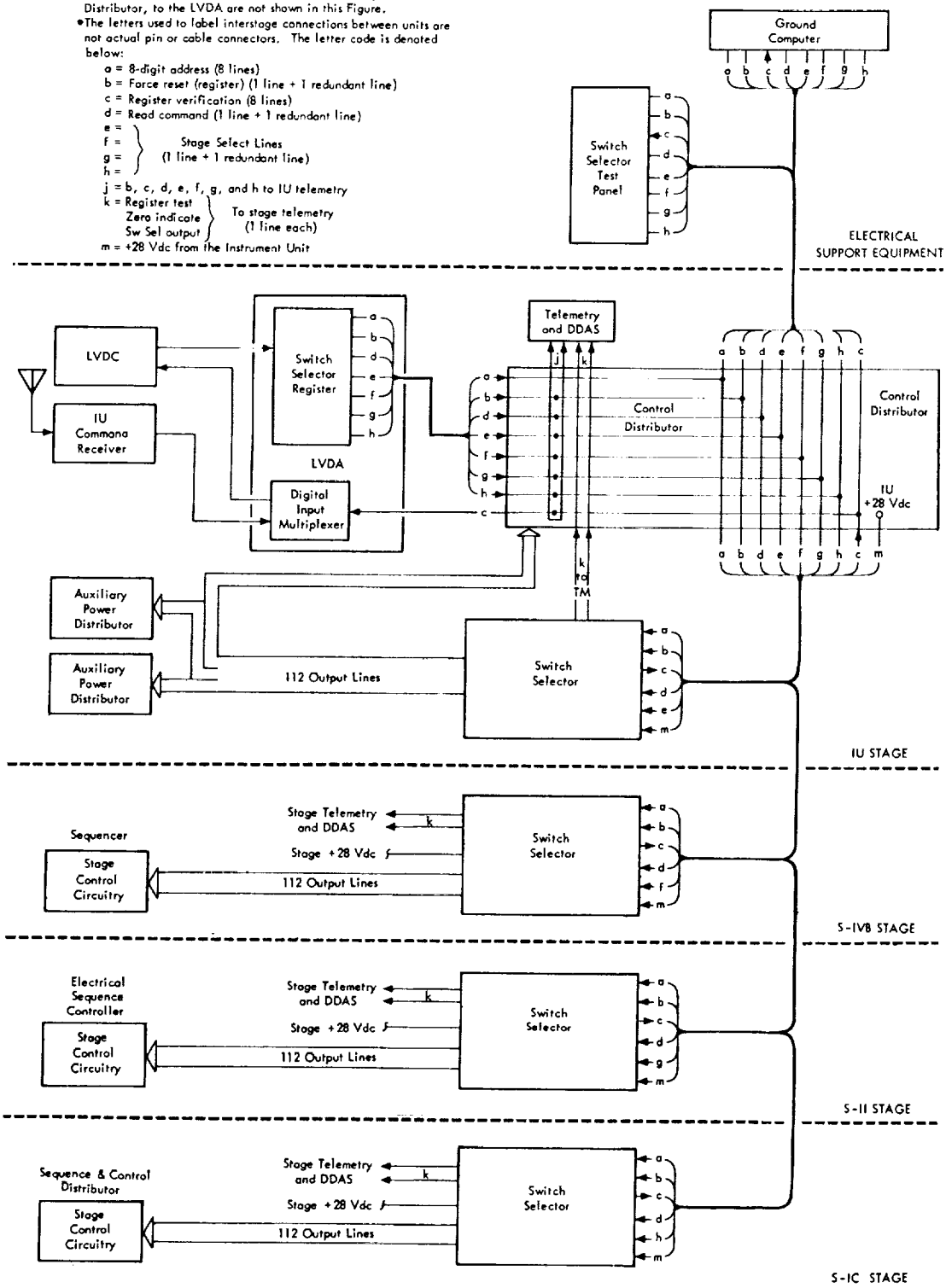

FIGURE 30. SWITCH SELECTOR

Figure 30 shows the scheme for flight sequence control. The LVDC generates the sequence commands which are sent through the LVDA to the switch selector of a particular vehicle stage. The addressed switch selector then activates the proper circuitry for execution of the command. Each vehicle stage and the IU is equipped with one switch selector.

All stage switch selectors are connected in parallel to the LVDA. The command sent to the switch selectors consists of an 8-bit digital code which describes the function to be executed and a 1-bit address to select a particular switch selector (Fig. 31). A "1" bit of the switch selector code is represented by +28 Vdc and a "0" bit by zero volts. The relay circuit in the addressed switch selector decodes the command word and activates the corresponding circuit for execution of the command. Coding of flight sequence command permits the transmission of a number of commands with a minimum of lines between stages. Each stage switch selector can process 112 different commands (one at a time). In the Saturn V launch vehicle, which contains four switch selectors, 448 different functions can be controlled with only 28 lines connecting the LVDA with the switch selectors.

The switch selector circuit consists of an input relay section driven from the IU 28 V power supply and an output relay section powered from the stage power supply. Both sections are coupled through a diode matrix that transfers and decodes the received command. A selected command can be executed by transmitting the code or the complement of the code. This possibility increases the reliability of the switch selector operation. To accomplish high reliability, quadruple and triple modular redundant circuits are used.

The command word (eight bits) is transferred from the LVDA switch selector register in parallel to each switch selector. Simultaneously the stage select signal is sent to the proper switch selector (on a separate line for each switch selector). The stage select signal causes electrical power to be supplied to the input register (eight latching relays) of the addressed switch selector which then stores the eight-bit command. The complement of the input code (obtained from a different set of relays) is transmitted back over eight parallel lines through the digital input multiplexer (LVDA) to the LVDC for verification.

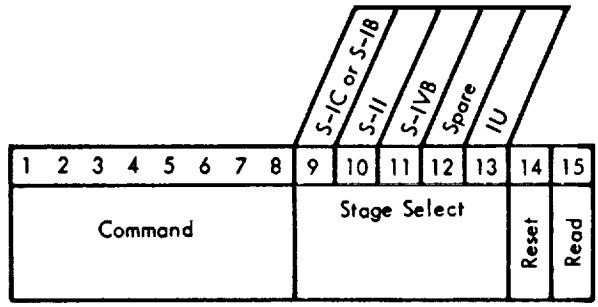

FIGURE 31. SWITCH SELECTOR REGISTER WORD FORMAT

If the original command and its retransmitted complement code agree, the LVDC generates the read command (one bit) which is transferred through the LVDA to all switch selectors in parallel. In the addressed switch selector the read command causes the decoding of the stored input command and execution of the command through the connected output circuitry.

When the original command and the retransmitted (complement) code do not agree, the LVDC generates the reset command (one bit sent in parallel to all switch selectors) which resets the relay input register of the addressed switch selector. Then the complement of the original code (representing the same command function) together with the stage select command is sent to the same switch selector. The switch selector register contains two redundant channels; channel A is the primary channel; the complement code is sent through channel B. This time the command is not verified but the read command is given to activate the proper switch selector output channels for command execution. Each read command initiates a reset of the input register to prepare it for a new command.

MEASURING AND TELEMETRY SYSTEMS [13]

Introduction

Each stage of the Saturn launch vehicles is equipped with an independent measuring and telemetry system including RF transmitters, antennas, and digital data acquisition system (DDAS) output. The general signal flow is shown in Figure 32. The quantity to be measured is converted by a transducer into an electrical signal which is shaped in a signal conditioner and routed through the measuring distributor to one of several telemetry systems. During flight the measuring signals are modulated on radio frequency carriers and transmitted to telemetry ground stations. Before launch, measurement signals (in digital form) are transmitted over coaxial cables (DDAS output) from each vehicle stage to the ground facilities for automatic checkout of the vehicle systems.

The data provided by the measuring and telemetry systems are used for:

1. Automatic preflight checkout of the vehicle
2. Monitoring of vehicle performance during powered flight
3. Monitoring and checkout of the vehicle in orbit
4. Verification of IU command system data transmission
5. Postflight evaluation of vehicle performance.

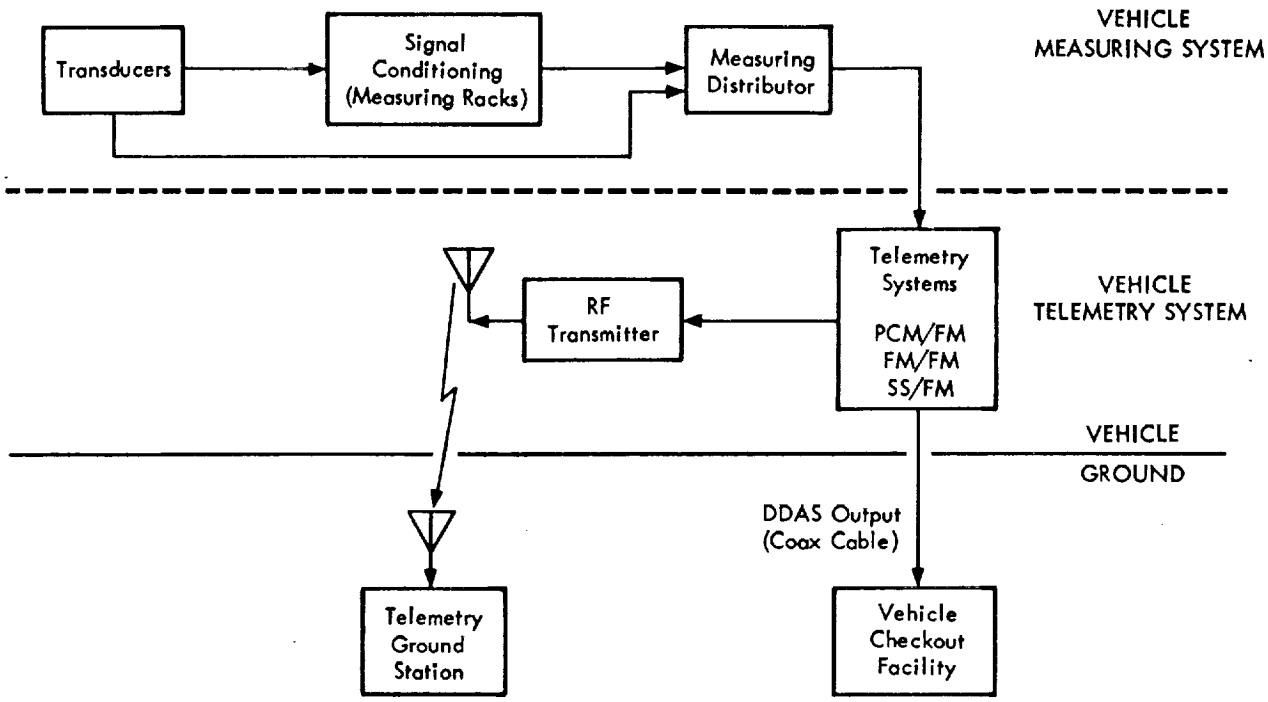

FIGURE 32. MEASURING AND TELEMETRY SYSTEM

The S-IVB and IU telemetry systems are interconnected to provide alternate transmission links. The IU telemetry system has an interface with the LVDA/LVDC for monitoring of S-IVB and IU digital data. The measuring and telemetry systems of each vehicle stage are largely standardized. An optical system taking motion pictures and an onboard television system are available for observation of events in the vehicle during flight.

Measuring System

The measurements made onboard the vehicle are used to monitor the performance of onboard equipment, to control and monitor flight sequence events, and to determine the flight environment. Certain selected measurements are used in the emergency detection system (EDS) provided for crew safety.

The measuring system (Fig. 33) includes transducers, signal conditioners (mounted in measuring racks), measuring voltage supplies, distributors for measuring signals, and equipment for remote automatic calibration. The measuring signals are generated in transducers or originate in the vehicle equipment. The transducers convert nonelectrical quantities (e.g. pressure, temperature, vibration) into electrical analog signals. Monitoring signals originating in the vehicle equipment are in the form of currents, voltages, frequencies, pulse sequences (digital signals), or discrete signals indicating flight sequence events.

The size and complexity of big launch vehicles require an extensive measuring program. Table IV gives typical figures for the number of measurements and transducers in each vehicle stage. On the first flights (R&D flights) of the vehicle, more measurements are required to evaluate the vehicle design and performance while the measuring program for operational vehicles can be reduced after successful R&D flights. Table V is indicative for the type of measurements and transducers used in the Saturn V vehicle. Because of the large number and variety of measurements and transducers and the changes from vehicle to vehicle, no attempt is made to provide a complete listing. Operational measurements indicating trends and the state of vehicle systems are used for mission control. Typical operational measurements are listed in Table VI.

Most measuring signals generated by transducers and also some from other sources require signal conditioning. Signal conditioners shape the measuring signal and convert it to an analog signal with the proper range (0-5 Vdc) for modulation of the telemetry subcarrier oscillators.

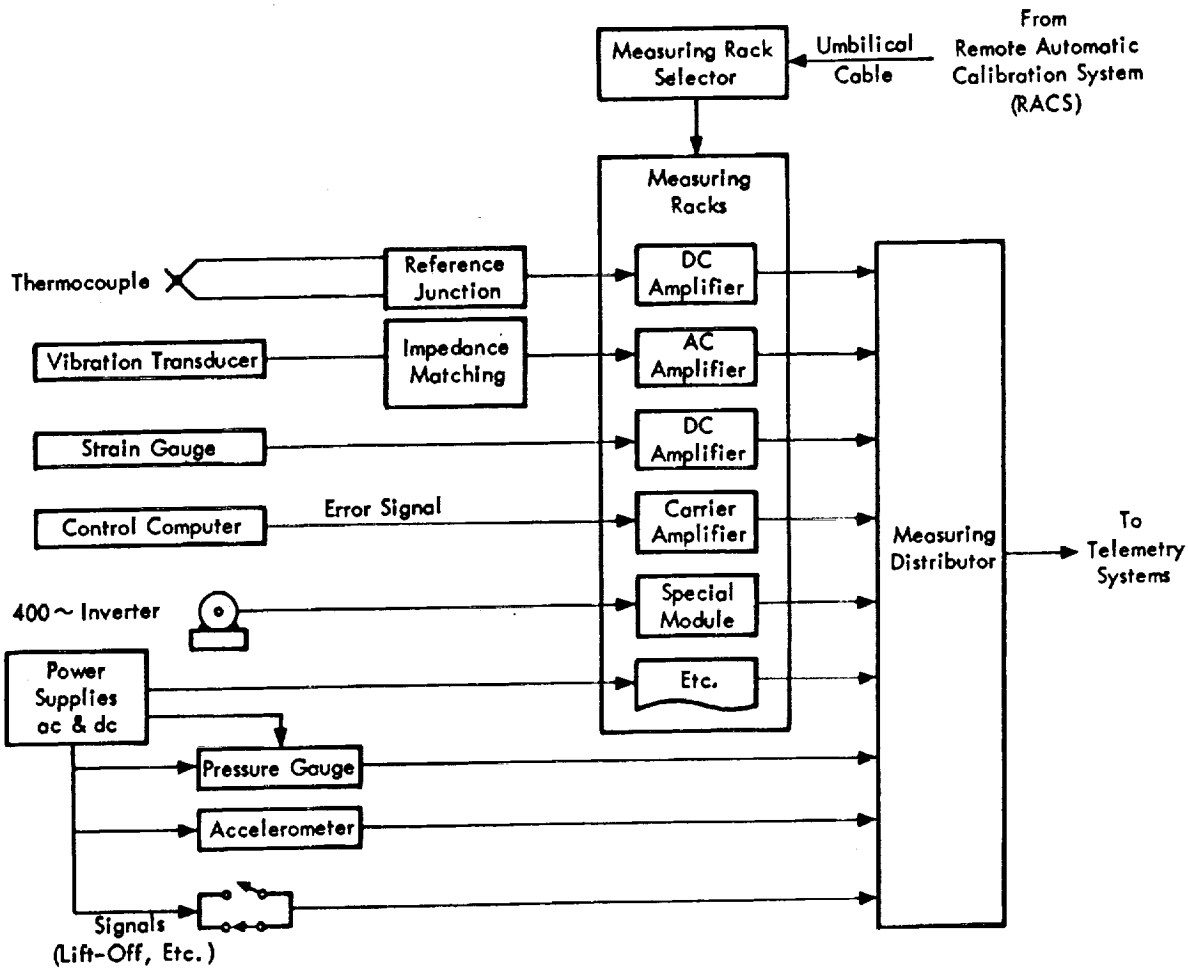

FIGURE 33. TYPICAL SATURN MEASURING SYSTEM

TABLE IV. NUMBER OF MEASUREMENTS, TRANSDUCERS, AND MEASURING RACKS

SATURN IB						
Stage	Measurements		Transducers		Measuring Racks	
	R & D	Oper	R & D	Oper	R & D	Oper
S-IB	542	263	305	106	19	5
S-IV B	432	218	298	115	17*	7*
IU	278	134	92	45	9	5
Total Vehicle	1252	615	695	366	45	17

SATURN V						
Stage	Measurements		Transducers		Measuring Racks	
	R & D	Oper	R & D	Oper	R & D	Oper
S-IC	901	297	723	157	27	5
S-II	913	446	589	180	35	8
S-IV B	432	218	298	115	17*	7*
IU	278	134	92	45	9	5
Total Vehicle	2524	1077	1702	497	88	25

* Signal conditioning panels

TABLE V. TYPICAL SATURN V MEASUREMENTS

Quantity Measured	Typical Transducer	Number of Measurements					
		S-IC		S-IVB		IU	
		R&D	Oper	R&D	Oper	R&D	Oper
Acoustic energy	Microphone	4	0	6	0	1	0
Temperature	Resistance thermometer thermocouple	257	61	163	50	56	30
Pressure	Vibration pressure transducer & other types	235	82	72	46	13	6
Vibration	Piezoelectric accelerometer	80	10	38	6	29	4
Propellant flow rate	Flowmeter	105	0	4	4	11	4
Liquid level	Level probe	17	8	6	6	—	—
Strain	Strain gauge	68	0	12	0	—	—
RPM (turbopump)	Tachometer	5	5	2	2	—	—
Acceleration	Force balance accelerometer	3	1	1	1	6	6
Voltage, current, and frequency	—	11	11	38	30	15	12
Signals	—	97	97	53	53	6	6
Guidance and Control Signals	—	—	—	—	—	58	45
RF & telemetry signals	—	—	—	—	—	28	6
Angular velocity	Rate gyro	—	—	—	—	35	3

TABLE VI. TYPICAL SATURN V OPERATIONAL MEASUREMENTS

S-IVB Auxiliary Propulsion System
Propellant level
Helium supply pressure
Propellant temperature
S-IVB Main Propulsion System
Gas supply pressure
Propellant valve positions
Propellant masses
Engine sequencing signals
Tank pressure
Propellant flow
Thrust chamber pressure
Hydraulic system pressure and fluid temperature
S-IVB/IU Electrical System
Battery voltages and currents
Bus voltages and currents
Inverter voltages
S-IVB Attitude Control and Stabilization System
Attitude control signals (pitch, yaw, roll)
Angular velocity (pitch, yaw, roll)
Engine actuators position
Control computer temperature
Servo amplifier signals
Spacial amplifier signals
Valve positions
Navigation, Guidance, and Digital Signal
Steering commands (pitch, yaw, roll)
Space fixed velocity (3 components)
Space fixed displacement (3 components)
Computer time
Time to S-IVB second ignition and cutoff
Accelerometer output (X, Y, Z)
Gyro servo output (X, Y, Z)
Gimbal angles (pitch, yaw, roll)
Launch Vehicle Digital Computer signals
Temperatures of computer and platform components
Air bearing supply pressure
Switch Selector output
Environmental Control System
Pressure and temperature of coolant at several places
Cold plate temperature
Gas supply pressure
Instrumentation and Communication System
Power output of the PCM transmitter (S-IVB & IU)

Signal conditioning modules are standardized as far as possible and consist of dc amplifiers, ac amplifiers, and special modules. The signal conditioning modules are assembled into measuring racks. Each rack contains modules for 20 measuring channels and two calibration channels. The number of measuring racks in each stage is listed in Table IV indicating the capacity of measuring channels available. In the S-IVB stage, signal conditioning panels are used instead of measuring racks.

In the measuring system of the IU, for example, only one type of dc amplifier and one type of ac amplifier is used. These amplifiers can be adapted to various types of signals by a plug-in signal conditioning card. The amplifier module contains a regulated power supply, a limiter circuit to prevent overdriving of the subcarrier oscillator in the telemetry system, and relays for calibration and checkout of the measuring channel. It also provides power for excitation of transducers.

The dc amplifier module is used for temperature, pressure, voltage, current, and other measurements. It contains a chopper amplifier whose frequency response can be switched to 0 to 20 Hz or 0 to 1000 Hz. The fixed gain (normally 100) is changed by replacing the plug-in card. The ac amplifier is used primarily for vibration and acoustic measurements. It has a gain of 240 and a frequency response of 40 to 3000 Hz. Special signal conditioning modules are required for some types of transducers and for frequency measurement.

All measuring signals are routed through measuring distributors which connect the various measuring channels with the proper input channels of the telemetry systems. Different measuring channels can be connected to the input of a given telemetry system by an arrangement of switches inside the measuring distributor. These switches are controlled by signals from the control distributor.

The measuring channels can be calibrated before launch through the remote automatic calibration system (RACS). Two relays in each signal conditioning module disconnect the transducer (or signal source) from the module and connect it to a circuit simulating the transducer and a signal at the high and low end of the measuring signal range. This calibration procedure is controlled from the ground support equipment either manually through a keyboard or automatically by a computer program. Each vehicle stage has its own RACS. The selection of a particular measuring channel for calibration and the calibration signal (high or low) is accomplished through a digital code transmitted from the GSE through the umbilical cable to the measuring rack selector of the stage

(Fig. 34). This calibration signal (13 bits transmitted in parallel) contains six bits for selection of the desired measuring rack, five bits for selection of a particular channel in the addressed rack, and two bits for a high or low calibration signal. The calibration signal is first decoded in the measuring rack selector of the stage and then in the channel selector of the addressed measuring rack. Two channel selectors (each for 10 channels) are included in a measuring rack. Measuring channels can be calibrated simultaneously or in sequence. The results of calibration are indicated through the telemetry system in the ground checkout equipment.

Telemetry Systems

The primary function of the telemetry system is to modulate the measuring signals on RF carriers for transmission to ground stations. This function includes data multiplexing and processing.

The measuring signals and data to be transmitted can be grouped according to accuracy and frequency response required. From those requirements the scheme of data multiplexing, modulation techniques, and required telemetry channel bandwidth are derived. Typical categories of frequency response ranges are 2 to 3 Hz (low response), 5 to 40 Hz (medium response), 50 to 1000 Hz (high response), and 50 to 3000 Hz (wideband). The accuracy requirement ranges from one percent (or below) to about five percent.

To provide efficient transmission of the large number and variety of data, several different modulation and multiplexing techniques are applied in the Saturn vehicle telemetry systems:

1. FM/FM using several subcarriers modulated on a common carrier. In addition, pulse amplitude modulation (PAM) and triple frequency modulation (FM^3) are applied as auxiliary techniques.

2. Pulse code modulation/frequency modulation (PCM/FM) telemetry.

3. Single sideband/frequency modulation (SS/FM) telemetry.

Digital data transmission is compatible with real time data processing by the ground-based digital computer and is relatively insensitive to noise. Therefore, all operational data and data requiring high accuracy are transmitted through the PCM/FM telemetry system. Analog-to-digital conversion is applied to those data which do not originate in digital form.

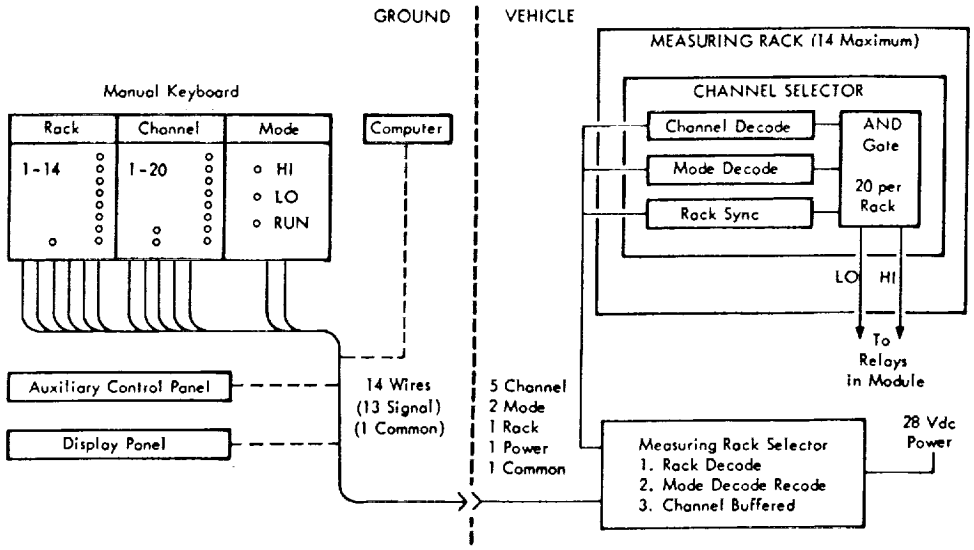

FIGURE 34. RACS IN THE MEASURING UNIT, BLOCK DIAGRAM

TABLE VII. TELEMETRY SYSTEMS IN THE VARIOUS SATURN VEHICLE STAGES

Stage	Telemetry System	Number of Systems		Number of Multiplexers		Transmitter	
		R&D	Oper	R & D	Oper	Frequency	Power
IU	FM/FM SS/FM PCM/FM	2 1 1	1 - 1	1x CIU 2x Mod 270 1x Mod 245 1x RDM Mod 410 1x RDSM	1x CIU 2x Mod 270 2x RDM Mod 410	Saturn IB: 225-260 MHz Saturn V: 225-260 MHz and 2200-2300 MHz	20 W
S-IVB	FM/FM SS/FM PCM/FM	3 1 1	1 - 1	4x Mod 270 1x Mod 245	2x Mod 270	225-260 MHz	20 W
S-II	FM/FM SS/FM PCM/FM	3 2 1	2 - 1	5x Mod 270 1x Mod 245 7x RASM 2x RDSM	2x Mod 270 2x RDSM 2x RASM	225-260 MHz	20 W
S-IC	FM/FM SS/FM PCM/FM	3 2 1	1 - 1	4x Mod 270 2x Mod 245 1x RDSM	1x RDSM 2x Mod 270	225-260 MHz	20 W
S-IB	FM/FM SS/FM PCM/FM	2 1 1	1 - 1	3x Mod 270 1x Mod 245 2x RDSM	2x Mod 270 1x RDSM	225-260 MHz	20 W

Note: CIU = Computer Interface Unit
RDSM = Remote Digital Submultiplexer
RASM = Remote Analog Submultiplexer
RDM = Remote Digital Multiplexer (Mod 410)

The SS/FM system will be carried only on R&D vehicles for transmission of vibration and acoustic measurements requiring a wide bandwidth which cannot be handled by the standard FM/FM channels.

The bandwidth and number of telemetry channels available is standardized according to the IRIG specifications. Time division (PAM/FM) and frequency division (FM/FM or FM^3) multiplexing is applied to increase the number of measuring channels which can be transmitted over a given telemetry channel. Types and number of telemetry systems and multiplexers used in the Saturn vehicle stages are listed in Table VII. These figures are subject to change. The number of telemetry systems in the table corresponds to the number of RF carriers radiated in the stated frequency band. The 270 multiplexer is a time division multiplexer for analog data used in connection with the FM/FM telemetry system. It also provides input data to the PCM/FM system. The remote analog submultiplexer (RASM) feeds time multiplexed data into the 270 multiplexer. The 245 multiplexer is used for time division multiplexing of wideband analog data for SS/FM and FM/FM telemetry systems. The 410 remote digital multiplexer (RDM) and the remote digital submultiplexers (RDSM) supply digital data to the PCM/FM telemetry system.

The telemetry systems in the launch vehicle stages and the IU are composed of the various types of multiplexers, modulation systems, and RF transmitters in a building block manner. A typical arrangement of telemetry systems for the S-IVB/IU (Saturn V operational vehicle) is shown in Figure 35. Digital data (operational data) are exchanged between the IU and S-IV PCM/FM telemetry systems and transmitted in parallel in the VHF band and UHF band. This scheme provides redundancy in the PCM/FM system and in the transmission links.

FM/FM Telemetry System

A general block diagram of the FM/FM telemetry system is shown in Figure 36. The analog measuring signals (in the range 0-5 Vdc) from the measuring distributor modulate the frequency of several voltage controlled subcarrier oscillators (VCO). The output of all subcarrier oscillators is combined in the mixer amplifier. The composite signal modulates the frequency of the RF carrier which is radiated from the vehicle antenna.

In Figure 36, 13 of the standard IRIG subcarrier channels are used as continuous data channels. The assigned maximum bandwidth of these channels increases from 84 Hz (channel 2) to 3300 Hz (channel 14). The measuring signals are applied to these channels according to their frequency response.

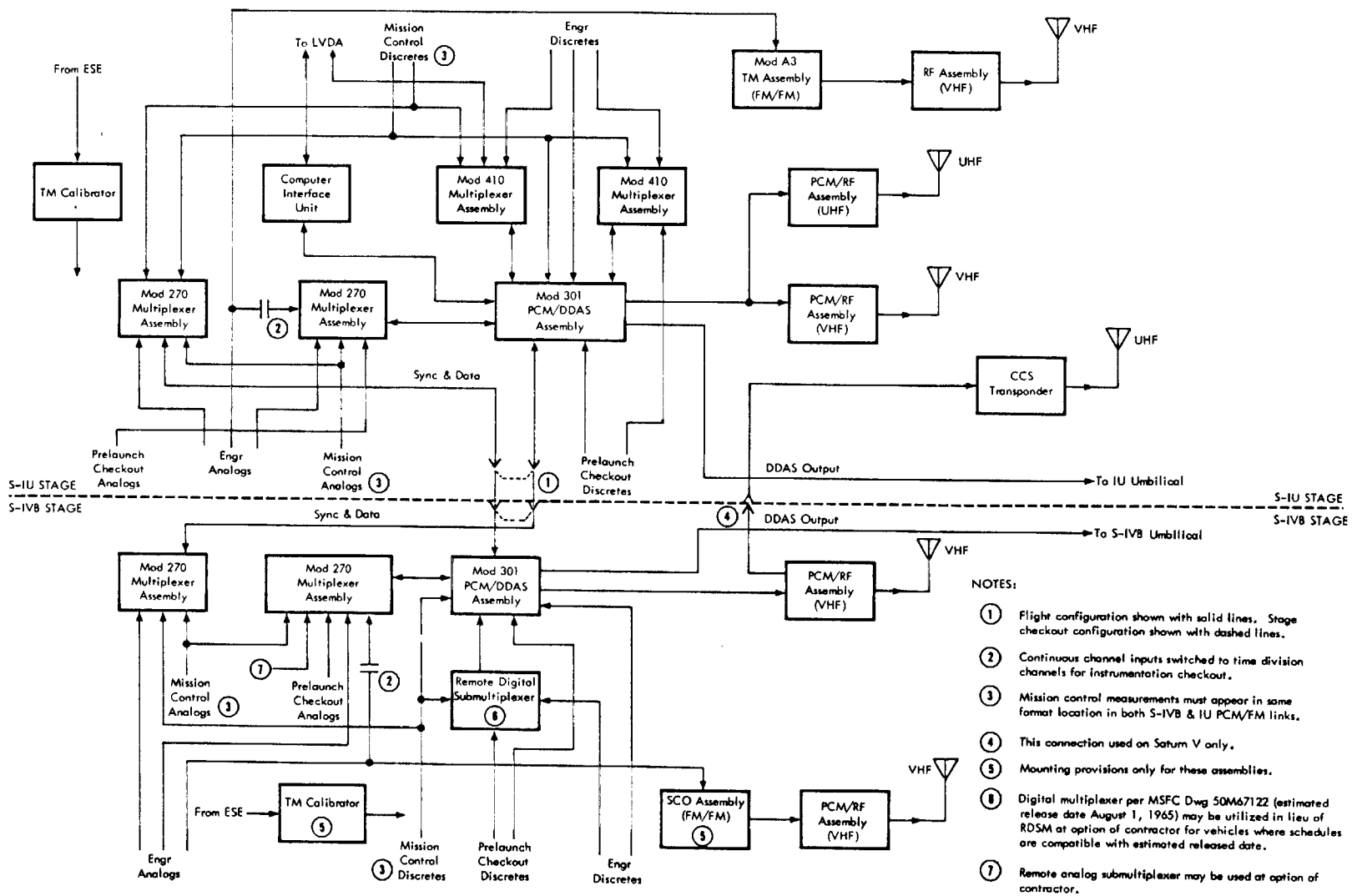

NOTES:

1. Flight configuration shown with solid lines. Stage checkout configuration shown with dashed lines.
2. Continuous channel inputs switched to time division channels for instrumentation checkout.
3. Mission control measurements must appear in same format location in both S-IVB & IU PCM/FM links.
4. This connection used on Saturn V only.
5. Mounting provisions only for these assemblies.
6. Digital multiplexer per MSFC Dwg 50M67122 (estimated release date August 1, 1965) may be utilized in lieu of RDSM at option of contractor for vehicles where schedules are compatible with estimated released date.
7. Remote analog submultiplexer may be used at option of contractor.

FIGURE 35. TYPICAL S-IVB/IU TELEMETRY SYSTEM (OPERATIONAL VERSION)

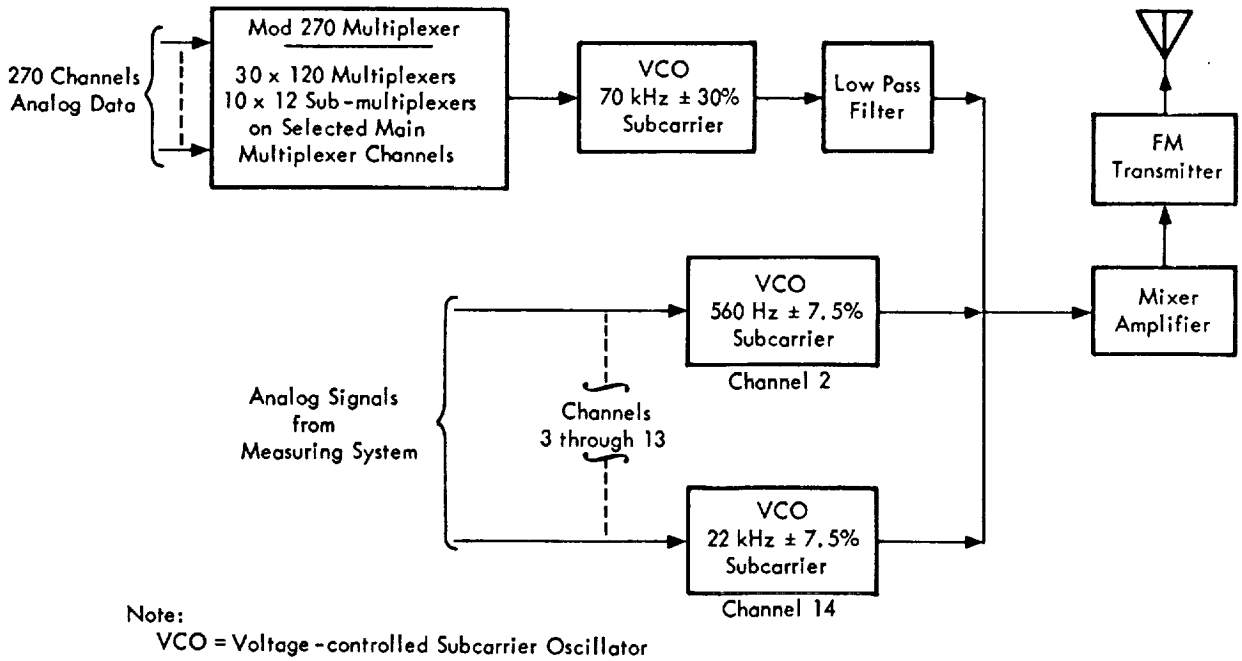

FIGURE 36. TYPICAL SATURN V FM/FM TELEMETRY SYSTEM

The method of frequency-division multiplexing that divides the available bandwidth of an RF carrier into several subcarrier channels for simultaneous transmission can be carried one step further. Some of the subcarrier oscillators may be modulated with the combined signals from several sub-subcarrier oscillators that are modulated by the measuring signals. This technique, known as triple frequency modulation (FM^3), increases the number of simultaneous measuring channels by reducing the bandwidth of those channels since the frequency band of one subcarrier channel must be shared by several sub-subcarrier channels. Also the accuracy of FM^3 channels is reduced because of the additional modulation process. Triple FM is applied only to higher bandwidth channels (above IRIG channel 13).

A subcarrier channel with a center frequency of 70 kHz (bandwidth 10.5 kHz) is used for time multiplexed signals obtained from a 270 multiplexer. Time multiplexing increases the channel capacity by sampling several data channels in sequence. This is accomplished by a solid state commutator. The output signal of the commutator (a sequence of pulses of varying amplitude) frequency modulates the 70 kHz subcarrier oscillator. This technique is called PAM/FM/FM.

The 270 time-division multiplexer contains 30 input channels. Each channel is sampled at a rate of 120 times per second. The output wave train therefore has a pulse rate of 3600 per second. Three of those 30 channels are utilized for frame identification and amplitude reference. The remaining 27 data channels accept the measuring signals from the measuring distributor.

A block diagram of the 270 multiplexer is shown in Figure 37. The input channels are connected sequentially to the multiplexer output by the gates (electronic switches). The gate switching sequence is controlled by the gate logic, which receives a synchronizing signal from the PCM/FM telemetry assembly. The multiplexer supplies two output pulse trains. One output (with a 1.2 V zero reference) modulates the 70 kHz subcarrier oscillator. The other output (without reference) is connected to the PCM/DDAS telemetry assembly. The output pulse rate is 3600 per second with a duty cycle of 50 percent except for pulses from channels 29 and 30 which have no spacing. The output pulse of those two channels provides a 5-volt reference level and serves as frame identification. A zero amplitude reference is provided by channel 28.

Any of the channels 1 through 23 may be submultiplexed by replacing the one channel gate by a 10 channel gate (plug-in module). Each of these 10 subchannels is sampled 12 times per second. This method of submultiplexing increases the channel capacity of the 270 multiplexer to 234 data channels. A dummy module is inserted if a channel is utilized as a single channel with a sampling rate of 120 per second.

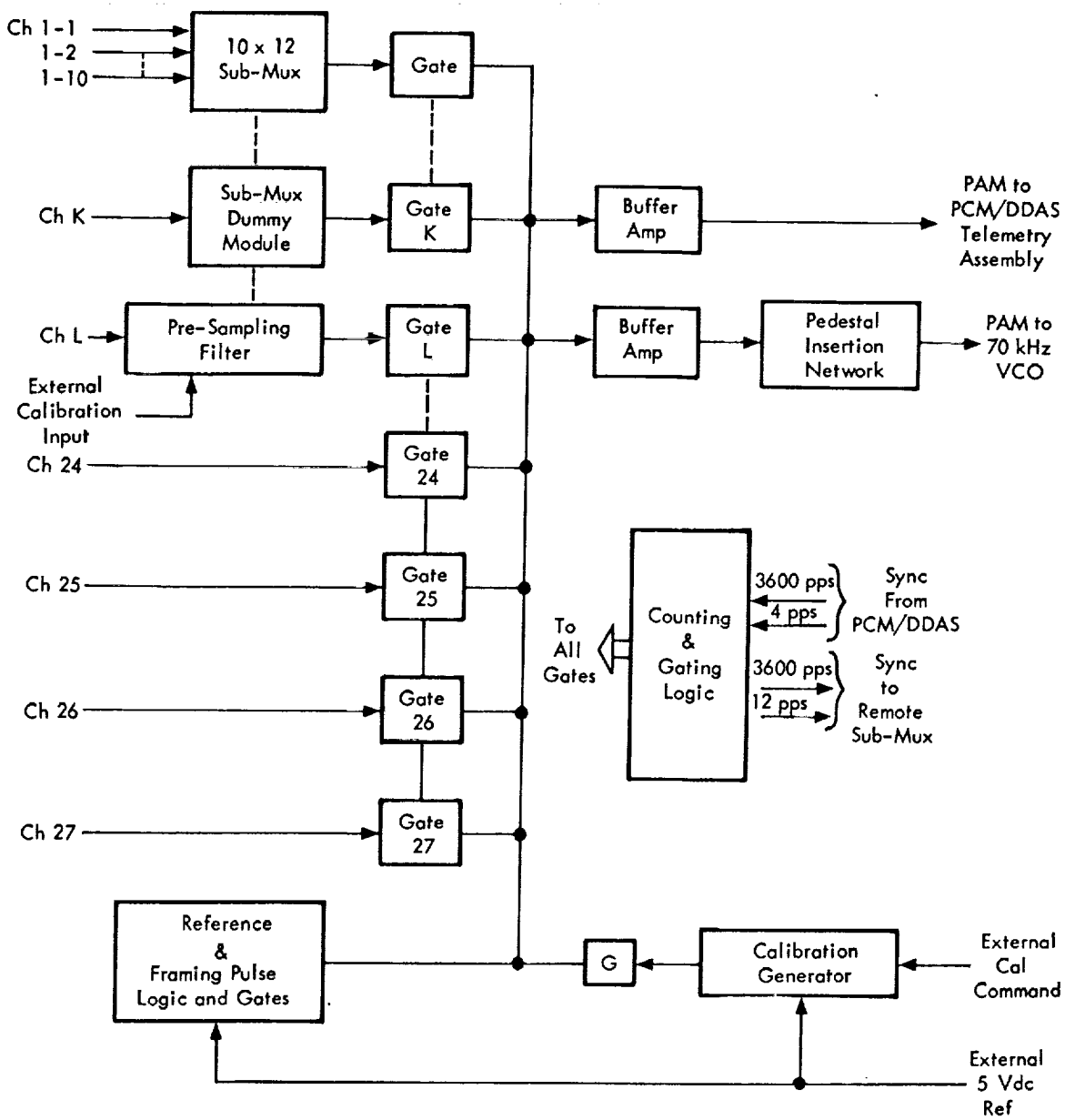

FIGURE 37. MODEL 270 MULTIPLEXER, BLOCK DIAGRAM

Each of the 27 data channels may be connected to a remote submultiplexer which connects 10 subchannels to one channel of the 270 multiplexer. The gates of the submultiplexer are synchronized by signals from the main multiplexer (270) and provide a sampling rate of 12 per second for each subchannel.

A calibration signal consisting of amplitude steps (0, 25, 50, 75, and 100 percent of full scale) may be applied to all data channels (1 through 27) during flight. The calibration is initiated by a command from the telemetry calibrator assembly in synchronization with the beginning of a new frame.

SS/FM Telemetry System

The SS/FM telemetry system utilized for transmission of vibration data is carried in R&D vehicles only. The system can transmit 15 data channels with a bandwidth of 30 to 3000 Hz each, requiring about 45 kHz RF transmission bandwidth.

A general block diagram of the SS/FM telemetry system is given in Figure 38. The input measuring signals are heterodyned with a 455 kHz signal in a balanced modulator. The lower sideband of the resulting signal is removed by a mechanical bandpass filter. The upper sideband is then translated to the proper baseband frequency in a second balanced modulator. The second balanced modulator of each channel receives a different subcarrier signal from a frequency synthesizer, which places the lower sideband outputs in the frequency range from 4.74 kHz to 72 kHz. The 15 channels, each 3 kHz wide, are separated by 4.74 kHz. The upper sidebands of the second balanced modulator outputs are removed in the summing amplifier, which combines the signals from all channels and adds a 75.835 kHz pilot tone required for demodulation at the receiving station. Summing amplifier No. 2 combines the regulated signals from summing amplifier No. 1 and a 960 Hz signal utilized for demultiplexing in connecting with the 245 multiplexer. The composite signal from the second summing amplifier modulates the frequency of the RF transmitter.

The 245 vibration multiplexer used with the SS/FM telemetry system is a time-division multiplexer that samples up to 80 input channels and provides 16 output channels (15 channels to the SS/FM telemetry system and one channel to the FM/FM telemetry system). The frequency response of input channels is 0 to 5000 Hz.

PCM/FM Telemetry

The PCM/FM telemetry system consists of the 301 PCM/DDAS telemeter assembly, several multiplexers, the computer interface unit, and the PCM/RF

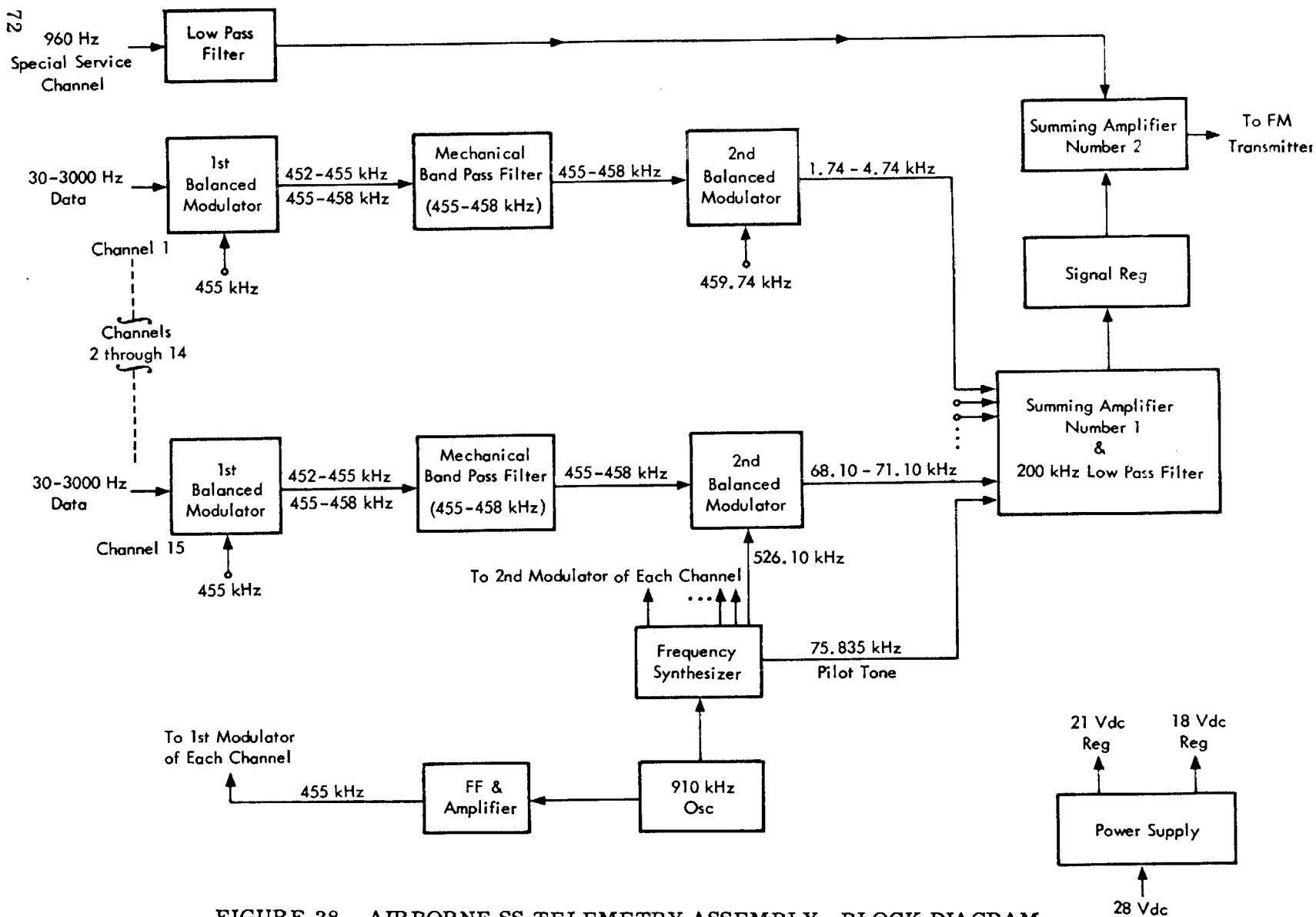

FIGURE 38. AIRBORNE SS TELEMETRY ASSEMBLY, BLOCK DIAGRAM

assembly. The PCM/FM system (with the exception of the PCM/RF assembly) is also a part of the DDAS, which provides digital data for vehicle checkout before launch.

The PCM/DDAS telemeter assembly (301), which is the central part of the system, accepts analog input signals from as many as six 270 multiplexers and digital inputs from several sources including the 410 multiplexer and remote digital submultiplexers (RDSM) (Fig. 39). These input signals are transformed into a digital serial format (72 kilobits/s) for modulation of the RF transmitter and for the DDAS output. In addition, digital data are transmitted in parallel to the computer interface unit.

The PAM wave trains from several 270 multiplexers (described with the FM/FM system) are connected by the PAM scanner in a programed sequence to the input of the analog-to-digital converter (ADC). The scanning sequence is determined by the program patch which may contain three different programs. Changes between programs can be accomplished by an external mode command. The gates in the PAM scanner switch both output lines from each multiplexer.

The ADC encodes the PAM signals from the PAM scanner into digital signals which are transmitted in parallel (10 bits) to the storage register in the digital multiplexing and formating logic. The A/D conversion process is controlled by command signals generated in the programing logic.

The digital multiplexing and formating logic (Fig. 40) combines the digital signals from several sources and generates data words (frames). The digital data input to the PCM/DDAS assembly consists of as many as 10 channels, with 10 bits parallel in each channel (zero volts represents a "0," positive voltage represents a "1"). The 10 bits of a channel are stored temporarily in magnetic core registers (MCR) before they are shifted into the parallel storage register by a read command. The 10-bit ADC output is also transferred into the parallel storage register (PSR). The insertion of the 10-bit data sets into the 10-bit parallel storage register is controlled by commands from the programing and timing logic and is performed in a predetermined sequence. The PCM/DDAS frame consists of 30 words (10 bits each). For frame identification the complement of the 30th word is generated by the frame ID logic and inserted after the 30th word.

The 10 bits in the parallel shift register are transferred in parallel to the serializing logic and to the computer interface unit. The serializing logic shifts the bits of PSR in sequence to the non-return-to-zero (NRZ) flipflop which generates the NRZ serial output for frequency modulation of the PCM/RF

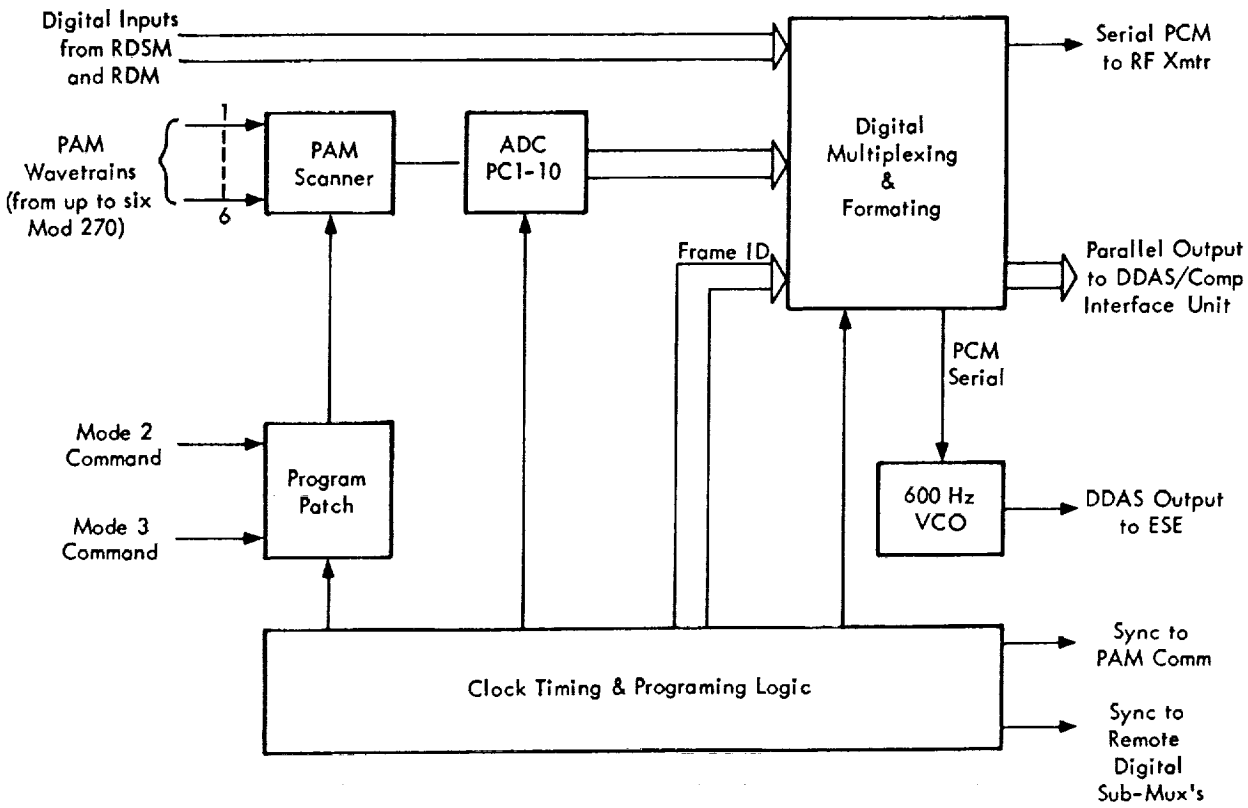

FIGURE 39. PCM/DDAS ASSEMBLY, BLOCK DIAGRAM

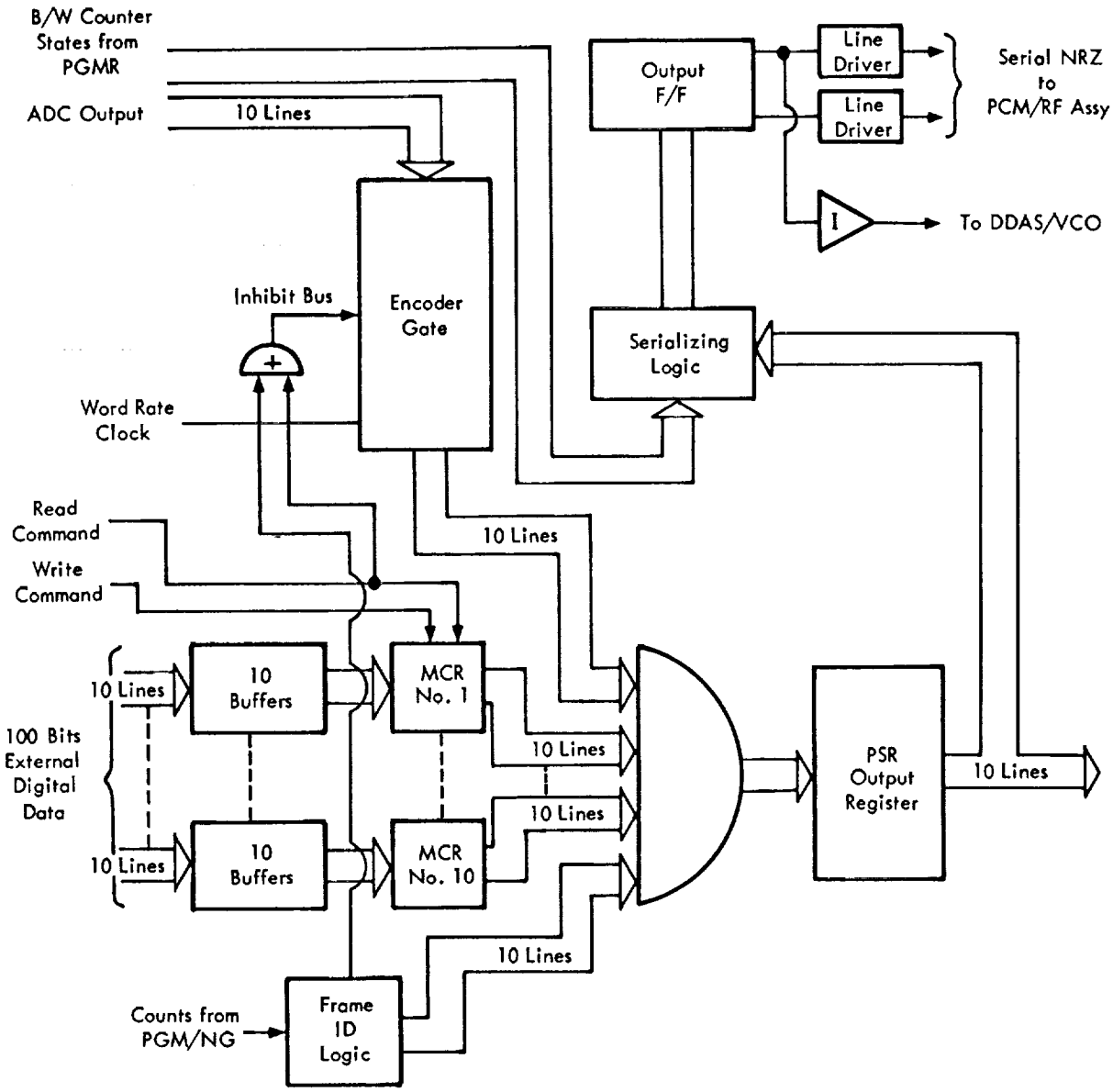

FIGURE 40. DIGITAL MULTIPLEXING AND FORMATING LOGIC

assembly. This serial pulse train (bit rate 72 kHz) is also utilized to frequency modulate a 600 kHz carrier oscillator (DDAS/VCO) which provides the DDAS output over coaxial cable.

The programing and timing logic generates the timing signals required to control the operation of the PCM/DDAS system including synchronizing signals for the multiplexers (270 and remote digital submultiplexer).

Each of the 10 digital input channels to the PCM/DDAS assembly may be connected to a remote digital submultiplexer (RDSM) to increase the data capacity. The RDSM has 10 channels (10 bits each) which are sampled in sequence and their content is transferred to a 10-bit output register which is connected to a particular channel of the PCM/DDAS assembly.

A special remote digital multiplexer (410) is used to multiplex the 40-bit data words from the launch vehicle data adapter and digital computer into 10-bit groups for input to the PCM/DDAS assembly.

Telemetry Calibration

The telemetry calibrator/controller generates the signals for calibration of the telemetry systems. Preflight calibration is controlled from the electronic support equipment (ESE); inflight calibration is controlled by the LVDC. The calibrator furnishes the calibration voltages and 28 Vdc control signals for activation of switches that apply the calibration signal instead of the measuring signal to a selected channel. The 270 multiplexers contain their own calibration voltage generators which are activated by command from the calibrator assembly.

For calibration of the FM subcarrier oscillators, voltage steps of 1.25 Vdc from 0 to 5 Vdc are generated and applied to a selected channel. SS/FM telemetry channels are calibrated with a 1700 Hz, 1 volt (peak-to-peak) signal. Calibration is initiated by the LVDC through the switch selector, which causes the calibrator assembly to start the calibration sequence. Calibration voltages and commands are then applied sequentially to the various telemetry channels.

Digital Data Acquisition System (DDAS)

The DDAS includes the PCM/FM telemetry system (with the exception of the PCM/RF assembly) and portions of the ESE. For preflight checkout, the DDAS output from the PCM/DDAS assembly (modulated on a 600 kHz carrier) is transmitted to the ground equipment over coaxial cables. These data are used in the automatic vehicle checkout process, recorded on tape, and displayed in the ground facilities.

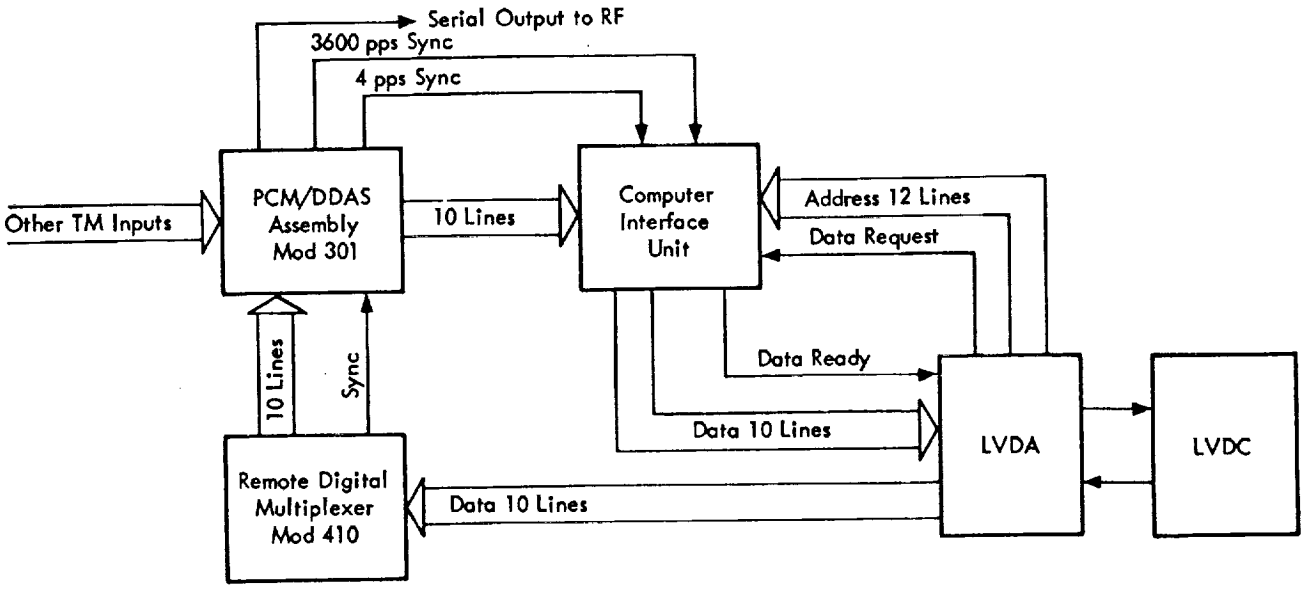

FIGURE 41. COMPUTER INTERFACE UNIT, SYSTEM INTERCONNECTION

During flight in orbit, certain selected measurements from the IU or the S-IVB are inserted into the LVDA/LVDC through the computer interface unit. The LVDA/LVDC continuously monitors those measurements. If a measurement value is not within the specified limits, the corresponding information is transmitted through the 410 multiplexer and the PCM/FM telemetry system to ground stations upon request from the ground station through the IU command system. The data flow between the PCM/DDAS assembly and the LVDA/LVDC is indicated in Figure 41.

The selection of specific measuring channels for monitoring by the LVDA/LVDC is accomplished by a computer program. The data channel to be selected is identified by a digital code (12 bits) sent from the LVDA to the DDAS/computer interface unit. The computer interface unit transfers the 10 bits of the specified data channel, as soon as they appear in the PCM/DDAS data stream, into a 10-bit holding register and generates a "data-ready" bit for the LVDA/LVDC. When the data ready signal is received by the LVDA the 10-bit information is shifted from the computer interface unit into the LVDA digital input multiplexer from which the data are fed in serial form into the LVDC.

Emergency Detection System (EDS)

The EDS, which is a part of the crew safety system, utilizes a number of measurements to detect those malfunctions in the launch vehicle that may cause one of the two prime emergency situations: explosion of propellants and vehicle breakup by aerodynamic forces. Detection of an emergency situation will automatically initiate abort (removal of the spacecraft from the launch vehicle) if the detected failure does not permit sufficient time for the astronauts' reaction and decision. The decision to initiate manual abort is left to the astronaut if the detected failure mode does not immediately develop into an emergency condition. The EDS measurements are displayed to the astronauts.

Measurements used for automatic abort are obtained from triple redundant sensors with majority voting; dual redundant sensors are employed for most manual abort measurements. Particular consideration has been given to the reliability of the EDS.

Figure 42 is a simplified block diagram of the Saturn V crew safety system including EDS. Automatic abort is initiated by excessive angular velocities of the vehicle and by loss of thrust in two or more engines of the S-IC stage. The angular overrates are indicated by the triple-redundant-control EDS rate gyro package in the IU. The automatic abort process includes engine shutdown in the propelling vehicle stage and start of the abort sequence.

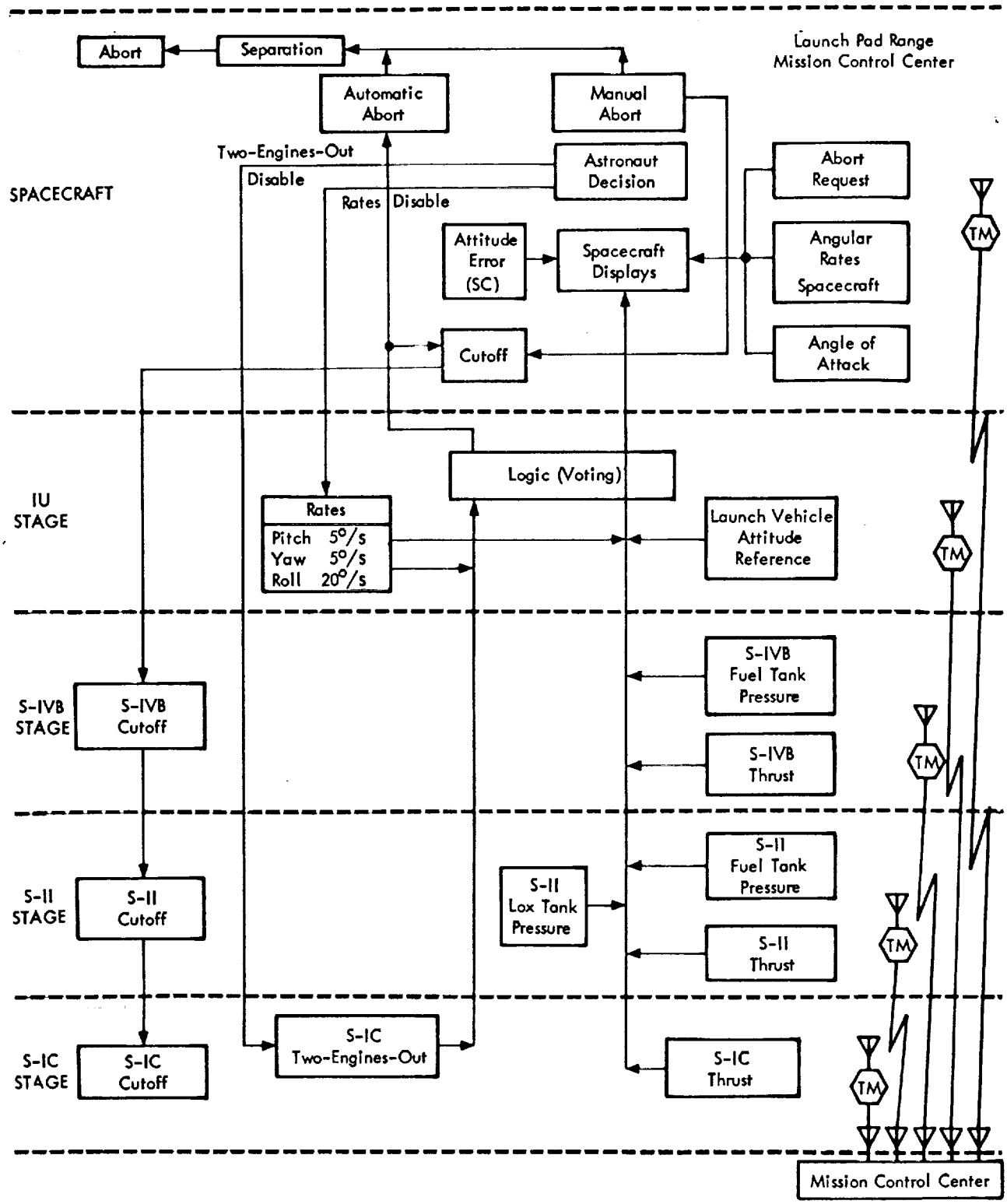

FIGURE 42. CREW SAFETY SYSTEM (SATURN V)

The decision for manual abort is based on a number of measurements displayed to the astronaut and is governed by mission rules. The loss of thrust in any engine of each vehicle stage, separation of stages, and malfunction of the launch vehicle attitude reference system are indicated to the astronaut by lights. Additional measurements displayed in analog form are: the pressure in the propellant tanks of the S-II and S-IVB stages, the angular rates of the vehicle, the attitude error, and the angle of attack. Manual abort requires at least two separate indications of a malfunction. Vehicle staging may be accomplished also by manual command.

The Saturn IB EDS is similar to the Saturn V system.

Optical Instrumentation

Several 16 mm film cameras may be carried on the vehicle to observe certain events occurring in flight; for example, the propellant behavior inside the tanks or the ignition of engines. Each film camera is enclosed in a capsule which is ejected after film exposure during flight. The capsules are recovered from the ocean surface.

The cameras, which have a 30 m film capacity, are operated from the vehicle power supply. The frame rate is 6 to 100 per second for Saturn V and 128 per second for Saturn IB. Each camera is located inside a capsule behind a silica window close to the vehicle wall for ejection. Fiber optics are used to observe events which are not visible from possible camera locations. Incandescent and stroboscopic lamps are used as light sources inside the vehicle.

A timing and synchronization system provides synchronization of the stroboscopic lights with the camera shutter and generates a timing signal to mark the edge of the film.

Television

A television system can be carried in the stages of the Saturn vehicles to observe vehicle functions in flight. Especially small television cameras have been developed for this system. Up to four cameras may be connected to a video multiplexing unit. The video multiplexer output signal is frequency modulated on a 1705 MHz carrier. Fiber optics may be used with the television cameras.

The television signal received at the ground station can be viewed in real time and recorded simultaneously. The recording system includes a video tape

recorder and a kinescope recorder. The received picture has a video resolution (horizontal) of 500 lines (video bandwidth 8 MHz). The frame rate is 30 per second (2:1 interlaced).

RADIO COMMAND AND TRACKING

Introduction

The Saturn launch vehicles are equipped with two types of radio command systems and several tracking transponders.

The range safety command system, consisting of the ground transmitter facility and several radio receivers in the vehicle, permits the range safety officer to destroy the vehicle by radio command during flight in emergency situations. Each powered vehicle stage carries two independent radio command receivers for decoding the destruct command and activating the destruct circuit. The early Saturn IB and V vehicles use a tone command system (AN/DRW-13 receiver/decoder). The command is transmitted by modulating the transmitter frequency (406 to 450 MHz) with several audio frequency tones. A secure range safety command system will be used in later launch vehicles. The new system, which transmits a digital coded command, provides a high degree of protection against intended and unintended interference. The command destruct system is deactivated after the vehicle has achieved orbit.

The IU command system is used for digital data transmission from ground stations to the vehicle. The system, which provides the possibility to insert information into the LVDC (e.g., updating of the guidance system), is not operated during powered flight.

The following tracking transponders are carried in Saturn vehicles:

Transponder Type	Transponder Location	
	Saturn IB	Saturn V
C-Band Radar (two)	IU	IU
Azusa/Glotrac	IU	IU
S-Band (CCS)	-	IU
ODOP	S-IB	S-IC

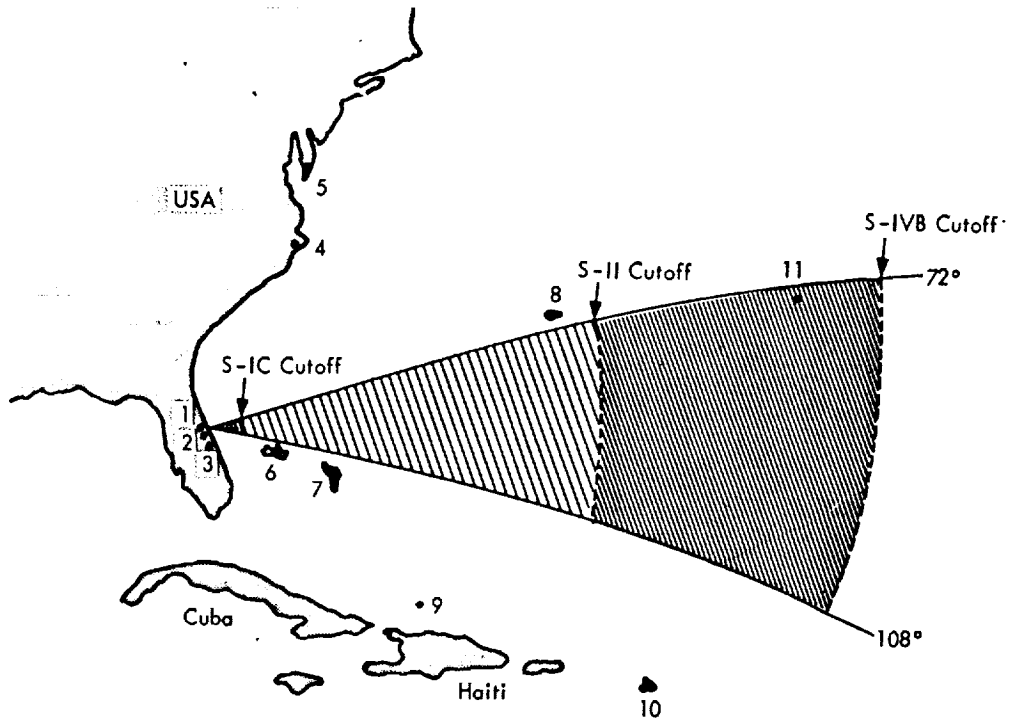

Number	Location	Tracking System
1.	Cape Kennedy, Florida	C-Band Radar ODOP AZUSA/GLOTRAC
2.	Patrick, Florida	C-Band Radar
3.	Valkaria, Florida	(Not used presently for Saturn tracking)
4.	Cherry Point, North Carolina	GLOTRAC Receiver
5.	Wallops Island, Virginia	C-Band Radar
6.	Grand Bahama Island	C-Band Radar AZUSA
7.	Eleuthera Island	GLOTRACK Receiver
8.	Bermuda Island	C-Band Radar GLOTRAC Transmitter & Receiver
9.	Grand Turk Island	C-Band Radar GLOTRAC Receiver
10.	Antigua	C-Band Radar GLOTRAC Transmitter & Receiver
11.	Atlantic Ship (Position depends on launch azimuth)	C-Band Radar

FIGURE 43. LAUNCH-PHASE TRACKING STATIONS

The vehicle is tracked from launch to insertion into earth orbit by ground stations shown in Figure 43. After orbit insertion the vehicle is tracked by C-band radar stations and stations of the manned spaceflight network (MSFN) listed in Table VIII.

A unified carrier system, the Saturn command and communication system (CCS), is carried on the Saturn V vehicles for IU command, UHF telemetry, and S-band tracking.

Saturn Command and Communication System

The CCS operates in connection with ground stations of the manned spaceflight network (MSFN). The CCS carried in the IU of Saturn V vehicles performs three basic functions; (1) it receives and demodulates the IU command signal transmitted by ground stations, (2) it transmits PCM/FM telemetry signals to ground stations, and (3) it acts as a tracking transponder.

Figure 44 shows the overall block diagram of the CCS. An omnidirectional antenna pair is used for the receiver. The transmitter signal is connected to a second omnidirectional antenna pair as long as the vehicle is within a range of approximately 10,000 km from the earth. When the distance becomes greater, the transmitter output is switched to the directional antenna (stepped gain from approximately 6 db to 12 db). This antenna is vehicle fixed and the radiation pattern is directed toward the earth by controlling the attitude of the vehicle. The omnidirectional transmitting antennas are used also for the UHF telemetry transmission. The signal received by the CCS is a 2101.8 MHz carrier phase modulated with a ranging code and with the 70 kHz IU command subcarrier. The receiver of the CCS recovers and demodulates the 70 kHz command subcarrier and supplies the command signal to the digital decoder.

Since the Apollo spacecraft is equipped with an S-band tracking transponder, the tracking function of the Saturn CCS is not a primary requirement; however, it may be used as backup. The tracking function of the Saturn CCS includes demodulation of the pseudo random range code (which is phase modulated on the received carrier signal) and generation of a return carrier signal that is phase coherent with the received carrier frequency. The frequency ratio of the received and transmitted carrier is 221/240. The transmitted carrier is again phase modulated with the range code. The CCS transponder permits unambiguous range measurement and coherent Doppler measurement.

The PCM telemetry data modulate a 1.024 MHz subcarrier that is phase modulated on the retransmitted 2282.5 MHz carrier.

TABLE VIII. TRACKING STATIONS USED AFTER ORBIT INSERTION

Name and Location	S-Band Tracking Single Dual	Ant. Dia		C-Band Radar
Cape Kennedy, Florida	D	9.2 m	MSFN	X
Bermuda	S	"	"	X
Antigua Island	S	"	"	X
Canary Island	S	"	"	X
Ascension Island	D	"	"	X
Canarvon, Australia	D	"	"	X
Hawaii, USA	D	"	"	X
Guaymas, Mexico	S	"	"	
Wallops Island, USA	D	"	"	
Guam	D	"	"	
Texas Station, USA	S	"	"	
Canberra, Australia	D	26 m	DSIF/ JPL	
Goldstone, USA	D	"	"	
Madrid, Spain	D	"	"	
Goldstone, USA	D	"	MSFN	
Madrid, Spain	D	"	"	
Canberra, Australia	D	"	"	
Point Aguello, USA				X
White Sands, USA				X
1 Ship (Atlantic)	D			X
4 Ships	S			X
9.2 m = 30 ft 26 m = 85 ft				

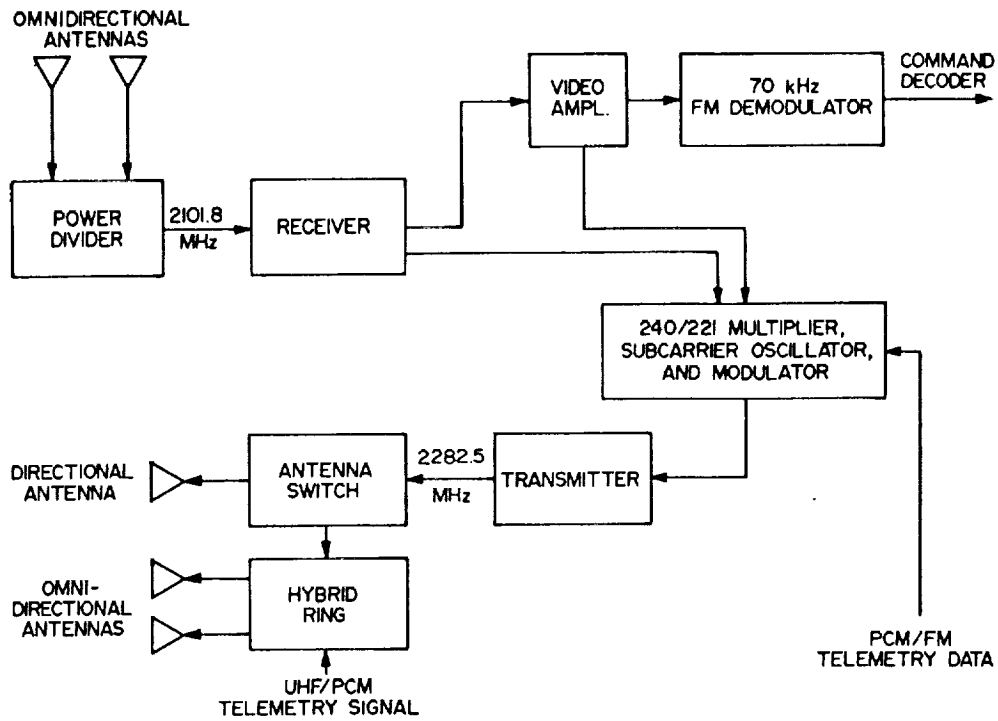

FIGURE 44. SATURN COMMAND AND COMMUNICATION SYSTEM (CCS)

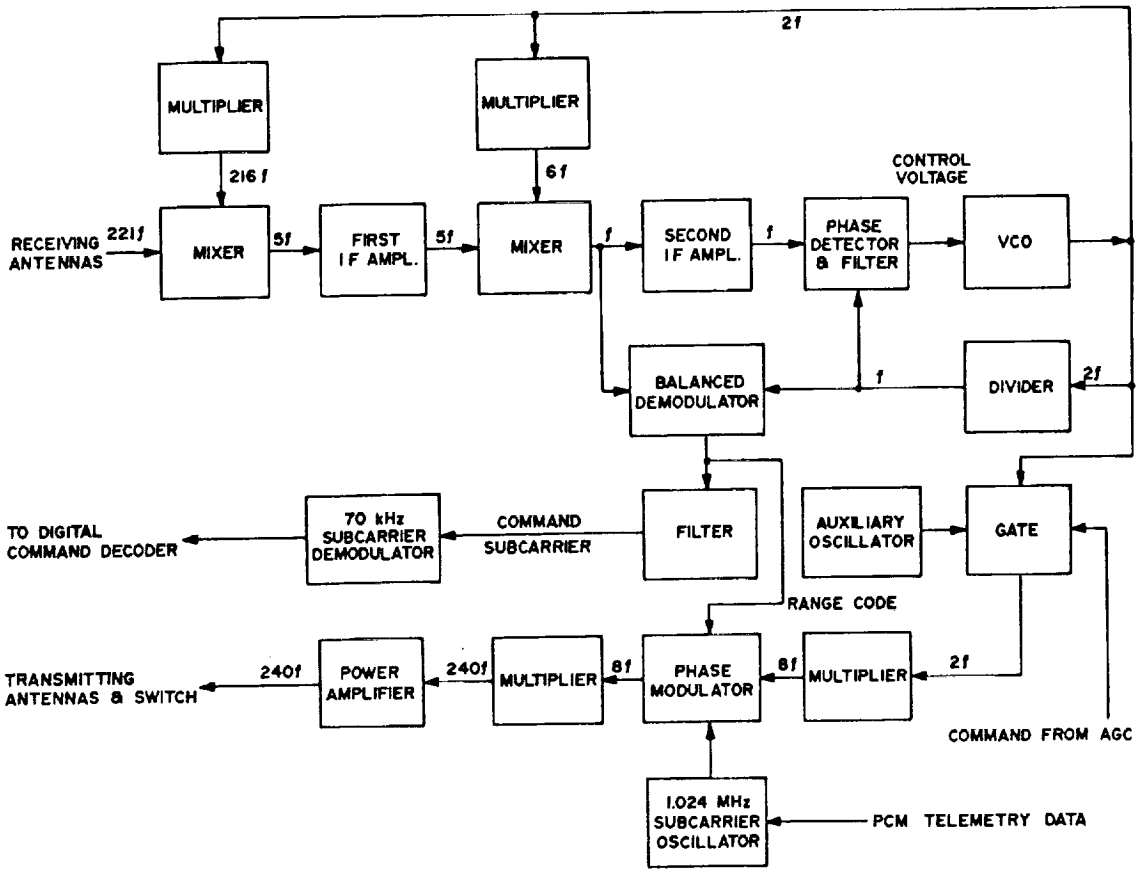

FIGURE 45. SATURN CCS, BLOCK DIAGRAM

A more detailed block diagram of the CCS is shown in Figure 45. The system includes a double-conversion phase-locked receiver that converts the incoming 2101.8 MHz signal to a second IF of 9.5 MHz using signals generated by the voltage controlled oscillator (VCO). The phase difference between the output signal of the second IF amplifier and the VCO signal is transformed in the phase detector into a dc voltage which, after filtering, controls the frequency of the VCO. Therefore, the VCO signal and the retransmitted carrier signal derived from the VCO are phase coherent with the received signal.

The 9.5 MHz signal from the second mixer is sent to the balanced demodulator, which provides the 70 kHz command subcarrier and the pseudo random range code at the output. The 70 kHz subcarrier (isolated from the range code signal by filtering) is fed into the demodulator, which recovers the command baseband signal. The range code signal phase modulates a signal derived from the VCO. The resulting signal is then multiplied to 2282.5 MHz and amplified to about 20 watts for retransmission to the ground station. The phase modulator has a second input for the 1.024 MHz telemetry subcarrier. The PCM telemetry signal bi-phase modulates a 1.024 MHz crystal oscillator.

As long as the receiver is unlocked, an auxiliary oscillator provides a signal to generate the transmitter carrier. When the receiver has locked on the signal transmitted from the ground station, the resulting automatic gain control (AGC) generates a control signal to switch the input of the CCS transmitter from the auxiliary oscillator to the VCO.

The transmitter of the CCS can be switched off by command to avoid interference with signals from the spacecraft LEM transponder operating at the same frequency. The CCS receiver will be on continuously for reception of IU command transmission.

IU Command System [14]

The data to be transmitted to the vehicle are generated in the mission control center in Houston and distributed to the stations of the MSFN via teletype. The received message is stored in the DCS memory before transmission to the vehicle. Essentially the same ground-station equipment and carrier frequency are used for the IU command system and the Apollo spacecraft data link.

A block diagram of the Saturn V IU command system is given in Figure 46. The digital command data modulate the frequency of the 70 kHz subcarrier oscillator. The resulting subcarrier signal is frequency modulated on the 2101.8 MHz carrier frequency for transmission to the vehicle. The S-band transponder

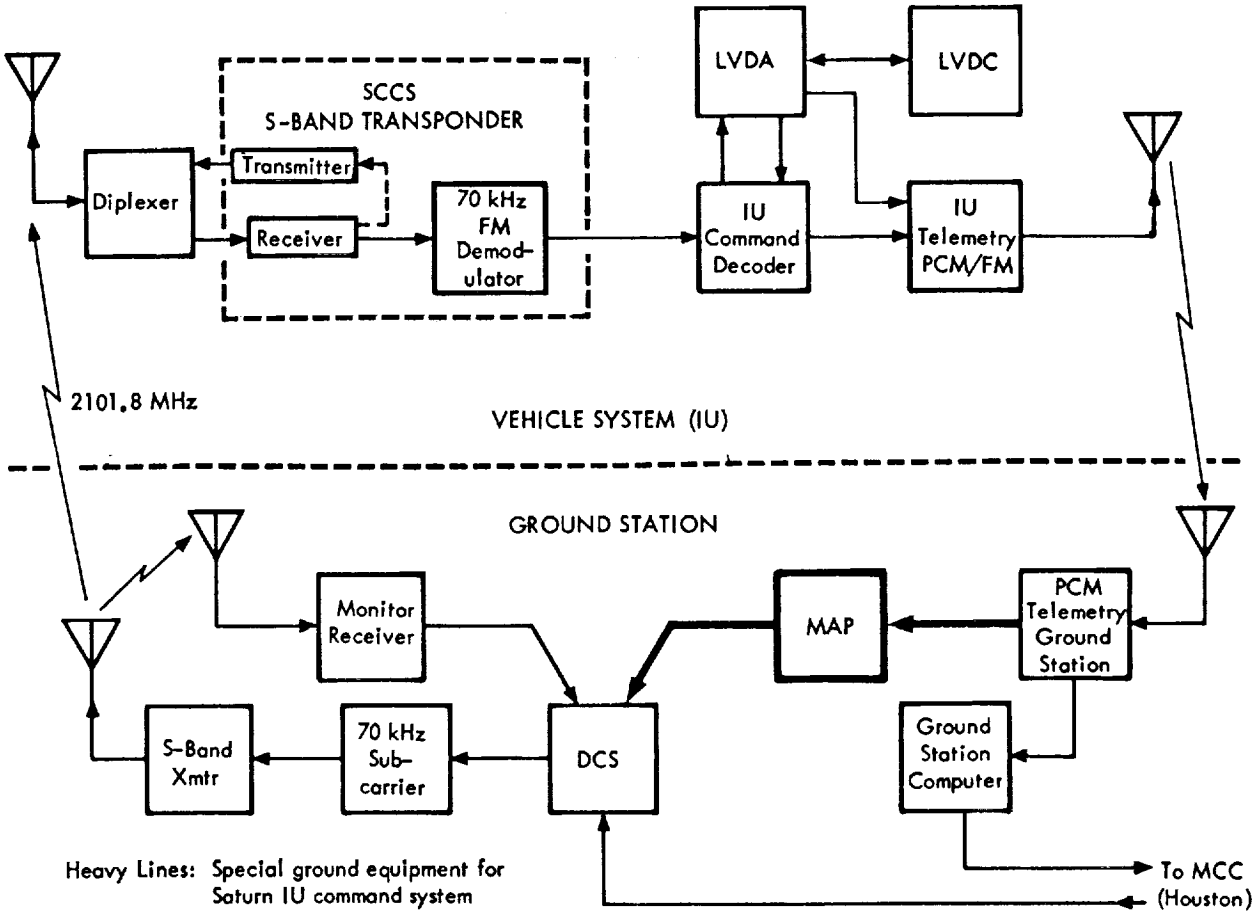

FIGURE 46. SATURN V IU COMMAND SYSTEM, BLOCK DIAGRAM

(CCS) located in the IU separates the 70 kHz subcarrier from the received signal and provides the baseband signal, which is decoded in the command decoder. The message reconstructed in the decoder is then fed through the LVDA into the LVDC. Verification of the received command is transmitted over the PCM/FM telemetry link back to the ground station. The same basic scheme applies to the Saturn IB IU command system (Fig. 47). No subcarrier is used but the command data are directly modulated on a 450 MHz RF carrier. Instead of the S-band transponder, the MC 503 receiver is used in the IU of the Saturn IB vehicles for reception of the command signal.

The data processing equipment (DCS) in the ground station generates a phase-shift keyed modulation of a 2 kHz tone with respect to a coherent reference tone of 1 kHz. A binary "1" is represented when both frequencies (1 and 2 kHz tones) are in phase at positive-going zero crossing of the 1 kHz signal as indicated in Figure 48. The composite signal of the 1 and 2 kHz tones (B in Fig. 48) frequency modulates the 70 kHz subcarrier in the Saturn V system or directly the 450 MHz RF carrier in the Saturn IB system (±60 kHz deviation).

The command word transmitted to the vehicle is composed of 35 bits including address and information (Fig. 49). The first three bits of the word represent the vehicle address, indicating whether the message is to be received by the IU command system or the Apollo spacecraft (the same carrier is used for messages to both systems). The decoder address (14 bits distributed among the 35 word bits) is compared with a preset address in the IU command decoder. The remaining 18 bits are transferred to the LVDC. Two of these bits are interrupt bits, which indicate to the LVDA/LVDC the reception of a command message. The computer then interrupts its normal program to process the received command message. The 14 information bits represent either a mode command (controlling the computer operation) or data. The orbital mode/data (OM/D) bits indicate to the computer whether the 14 information bits are a mode command or data.

Several command words may be necessary to transmit a complete message. The first word is always a mode command word; subsequent words contain data (if required for the message). Examples of different command types are given in Table IX. Messages requiring a variable number of data words include an execute command to indicate that all data have been transmitted.

Sub-bit encoding is employed to reduce the probability of an error in the transmitted message. Each of the 35 bits of a command word is encoded into five sub bits (representing a "1" or a "0"). The complete word, therefore,

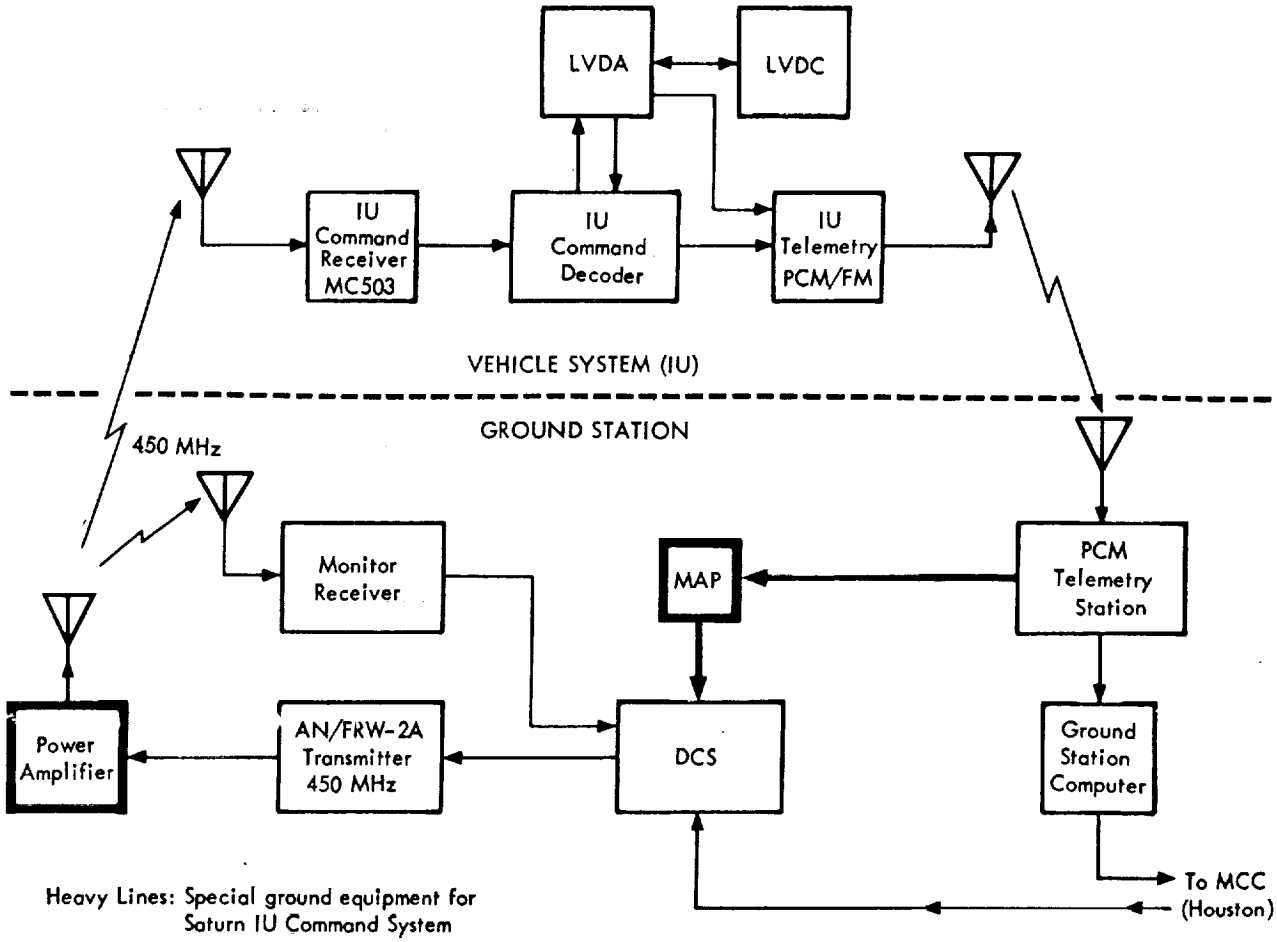

FIGURE 47. SATURN IB IU COMMAND SYSTEM, BLOCK DIAGRAM

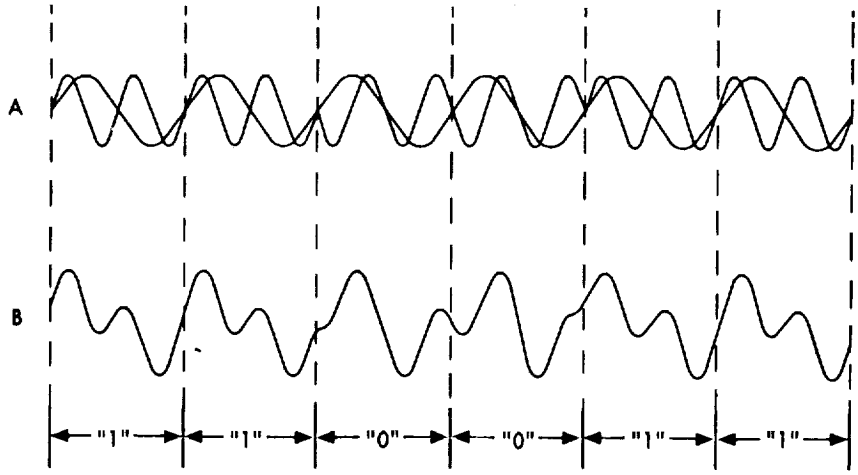

FIGURE 48. PHASE-SHIFT KEYED SIGNALS

TABLE IX. EXAMPLES OF MODE COMMANDS

Command Type	Number of Command Words Required	First Word	Subsequent Words
(1)	5, 9, 13, 17, 21, 25, 29, 33, 37, 41	MCW	DCW
(2)	1	MCW	-
(3)	3	MCW	DCW
(4)	1	MCW	-
(5)	1	MCW	-
(6)	3	MCW	DCW
(7)	5	MCW	DCW

Note: MCW - Mode Command Word
DCW - Data Command Words

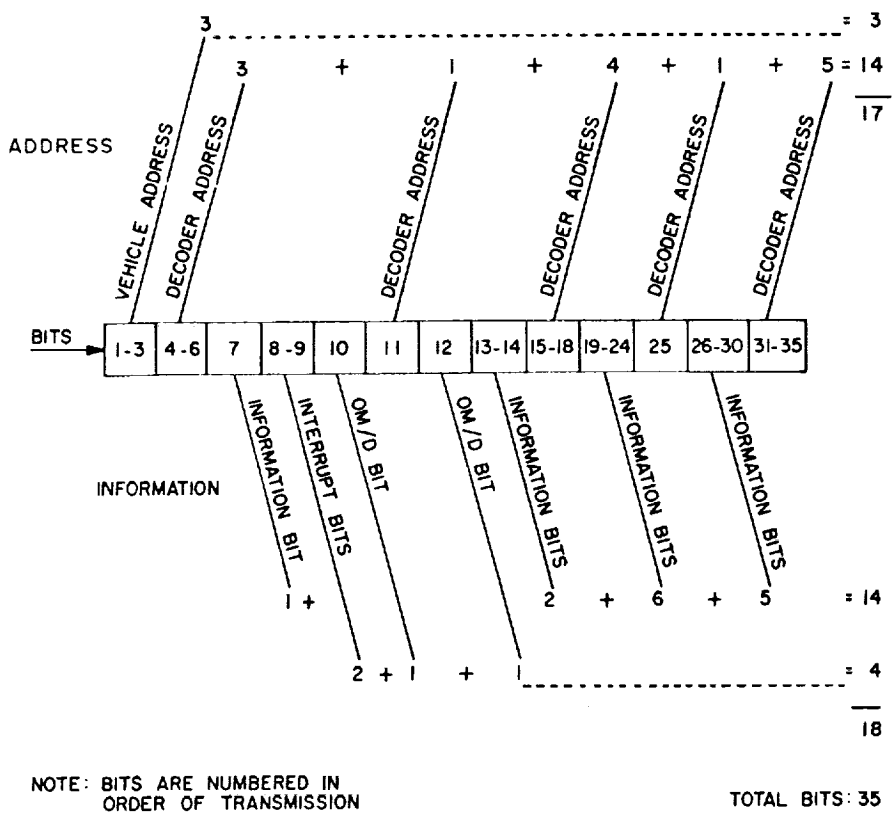

FIGURE 49. DIGITAL COMMAND WORD

consists of 175 sub bits transmitted at a rate of 1 kHz controlled by the 1-kHz tone. Word bits are obtained at a rate of 200 Hz. The first 3 bits (vehicle address) of a word have a sub-bit code which differs from the sub-bit code of the remaining 32 word bits. The sub bits are transmitted as non-return-to-zero modulation (no time interval between subsequent bits).

The MCR-503 receiver used in Saturn IB for reception of the command signals is a double conversion receiver. The RF input section is tunable from 406 to 450 MHz. The discriminator in the receiver demodulates the command signal. The composite baseband signal of Figure 48 is available at the receiver output and is fed into the IU command decoder. In Saturn V the equivalent signal is provided by the Saturn CCS transponder.

The decoder, which is the connecting link between the command receiver and the LVDA/LVDC, recovers the original message format. This is accomplished in two steps; first by demodulation of the baseband PSK signal to regenerate the sub bits, and second by decoding of the sub-bit sequence into the original message format. The sub-bit detector separates the 1 and 2 kHz signals contained in the baseband signal by filtering and compares the phase of the two signals. A positive pulse is generated either at the "0" output or at the "1" output depending on the phase relationship between the 1 and 2 kHz signals. The two outputs of the sub-bit detector are connected to the main decoder. A threshold detector operated by the 1 kHz reference signal prevents the generation of sub bits from noise signals while no RF signal is received at the vehicle (uncaptured receiver). Between messages a continuous sequence of sub-bit "1's" is transmitted to keep the decoder ready for reception of the next message.

A block diagram of the main decoder is given in Figure 50. The output of the sub-bit detector is fed into the 5-bit shift register. The shift register is connected to three comparators which determine whether the five sub bits in the register represent the vehicle address ("X"), an "0" bit, or a "1" bit of the command word. The 5-bit counter generates a signal after five sub bits have been shifted into the register, which initiates the comparison. The first three sub-bit groups of a command word are compared in the "X" comparator and counted in a 3-bit counter. When the correct vehicle address has been recognized by the "X" comparator, the "0" and "1" comparators are activated to generate a "1" or "0" output for each of the following sub-bit groups. The output of the two comparators is transferred into the 32-bit shift register. When this shift register is filled, a signal from the 32-bit counter initiates the address comparison. A correct address generates a signal through the AND gate, which opens the output gates to transfer the contents of the shift register in parallel to the LVDA digital input multiplexer. This event is indicated by a telemetry signal as address verification.

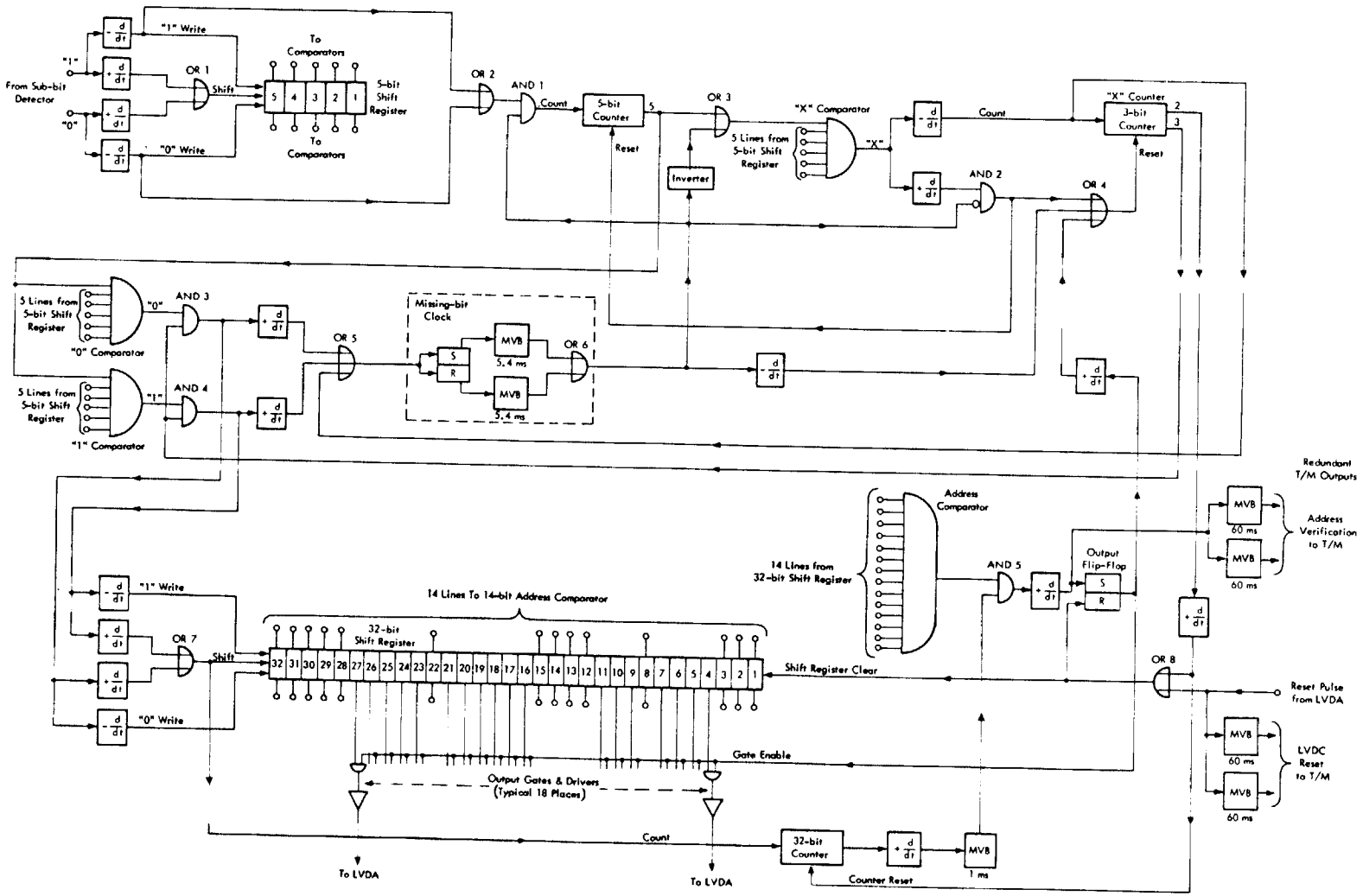

FIGURE 50. IU COMMAND DECODER, SIMPLIFIED LOGIC DIAGRAM

The 14 information bits of the command word contain the true and the complement code of the information for the purpose of error checking. Thus only seven bits per word are available for transmittal of information. The LVDC compares the true and the complement code in each command word. If agreement exists, the LVDC generates a reset pulse that clears the decoder shift register and prepares other circuits in the decoder for reception of the next command word. This reset pulse generates a telemetry signal which is transmitted to the ground station. In the ground station the address verification and reset telemetry signal generate the message acceptance pulse (MAP) indicated in Figures 47 and 48. Only after occurrence of the MAP is the next command word transmitted to the vehicle.

If the true and complement code do not agree, the LVDC does not accept the information and no reset pulse is generated. As a consequence no MAP occurs in the ground station. If the MAP is not given within a certain time after transmission of a command word, the same word is transmitted again. The detection of an error (disagreement) by the LVDC is indicated to the ground station by telemetry. When an error persists, the word is repeated a certain number of times and then a terminate command is sent automatically to the vehicle, causing the LVDC to terminate its subroutine and to return to the normal program or await a new command message. The probability of an undetected error in the IU command transmissions is 10^{-9}.

C-Band Radar Transponder

The C-band radar transponder in the IU receives pulse interrogation from radar ground stations (AN/FPS-16 and AN/FPQ-6) transmitting in the 5.4 to 5.9 GHz frequency band. The transponder retransmits pulse signals in the same frequency band. Two radar transponders, each connected to a separate antenna, provide radar tracking capability independent of the vehicle attitude. This solution is more reliable than use of one transponder with antenna switching. The radar transponder increases the range and accuracy of the radar stations, which measure range and direction. Range is obtained from the travel time of the pulse signal. The angle measurement is accomplished by monopulse technique.

A simplified block diagram of the C-band radar transponder is given in Figure 51. The receiving/transmitting antenna is connected to the duplexer, which directs the received signal into the superheterodyne receiver. The video pulse signal is detected in the IF amplifier (50 MHz IF) and fed into the decoder, which reshapes the signal. Interrogation of the transponder may be accomplished with coded pulses (double pulse). In this case the decoder provides an output

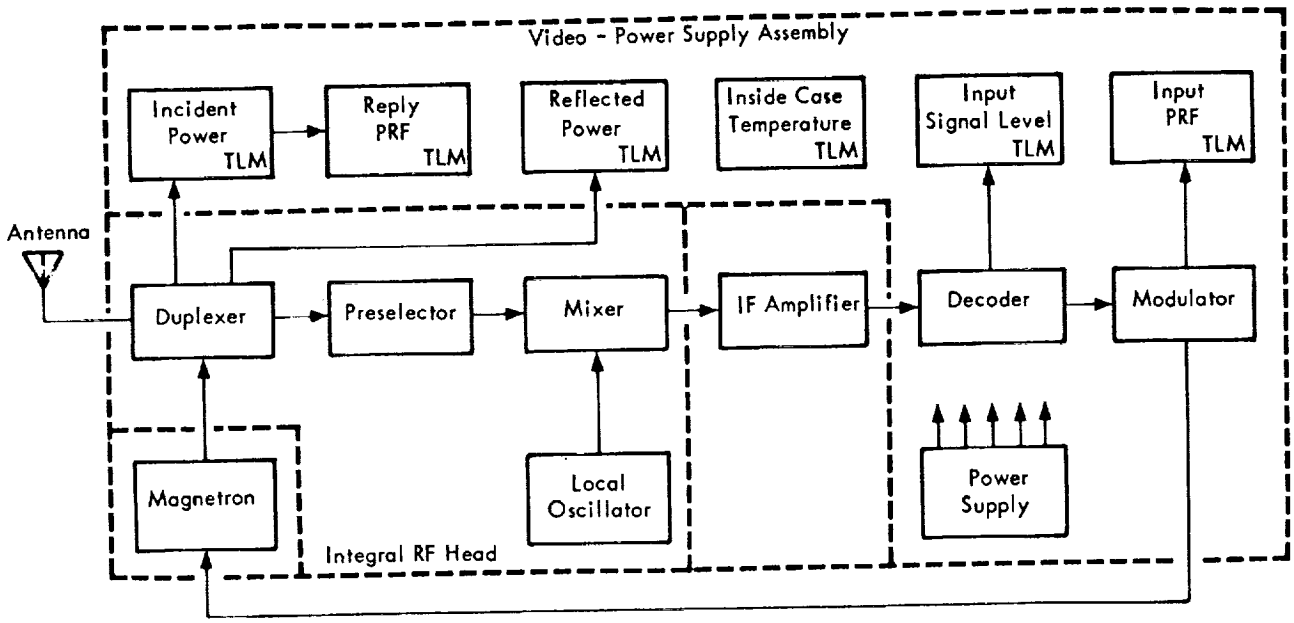

FIGURE 51. SST-135C TRANSPONDER SYSTEM, BLOCK DIAGRAM

only if the interrogating pulses are spaced correctly. In the modulator the decoder output signal is transformed into a high-power pulse signal delayed precisely 3 μs against the received signal. The modulator output is applied to the transmitter magnetron for generation of the transponder return signal, which is fed through the duplexer into the antenna. Except for the transmitter magnetron the transponder circuitry is all solid state.

Azusa Transponder

The Azusa transponder receives a cw signal at 5060.194 MHz from the Azusa ground station and retransmits the received signal spectrum at 5000 MHz. The carrier signal from the ground station is modulated with several low frequencies (157.4 Hz, 3.934 kHz, 98.356 kHz) which provide unambiguous range measurements. The Azusa ground station determines range and two direction cosines from which the vehicle position is computed. The range measurements are performed by measuring the round trip phase delay of the carrier frequency and modulation frequencies. The direction cosine is obtained from an antenna interferometer arrangement using several antennas spaced along two crossed baselines. The phase difference between signals received at two spaced antennas is a measure for the direction cosine of the line of sight to the vehicle.

A simplified block diagram of the Azusa transponder is given in Figure 52. The duplexer provides the isolation between received and transmitted signals in connection with a common receiving/transmitting antenna. The received signal is translated to a frequency of 60.194 MHz in a crystal mixer using the 5000 MHz signal from the local klystron oscillator. The modulation frequencies are detected in the receiver and remodulated on the 5000 MHz local oscillator signal for retransmission to the ground stations. The transmitted signal is phase locked to the received signal through a phase-locked loop based on the 98.356 kHz modulation frequency. The transponder uses semiconductor components with the exception of the 5000 MHz klystron oscillator. The Azusa type C transponder carried in Saturn vehicles can be interrogated also by Glotrac ground stations.

ODOP Transponder

The ODOP transponder in the first stage of Saturn vehicles receives an unmodulated cw signal at 890 MHz and retransmits phase coherent at 960 MHz. The ODOP tracking system consists of a ground transmitter and several ground receiving stations which measure the Doppler shift. Integration of the Doppler frequency yields the range sum (transmitter/transponder and transponder/receiver) for a particular receiving station. At least three receiving stations are required

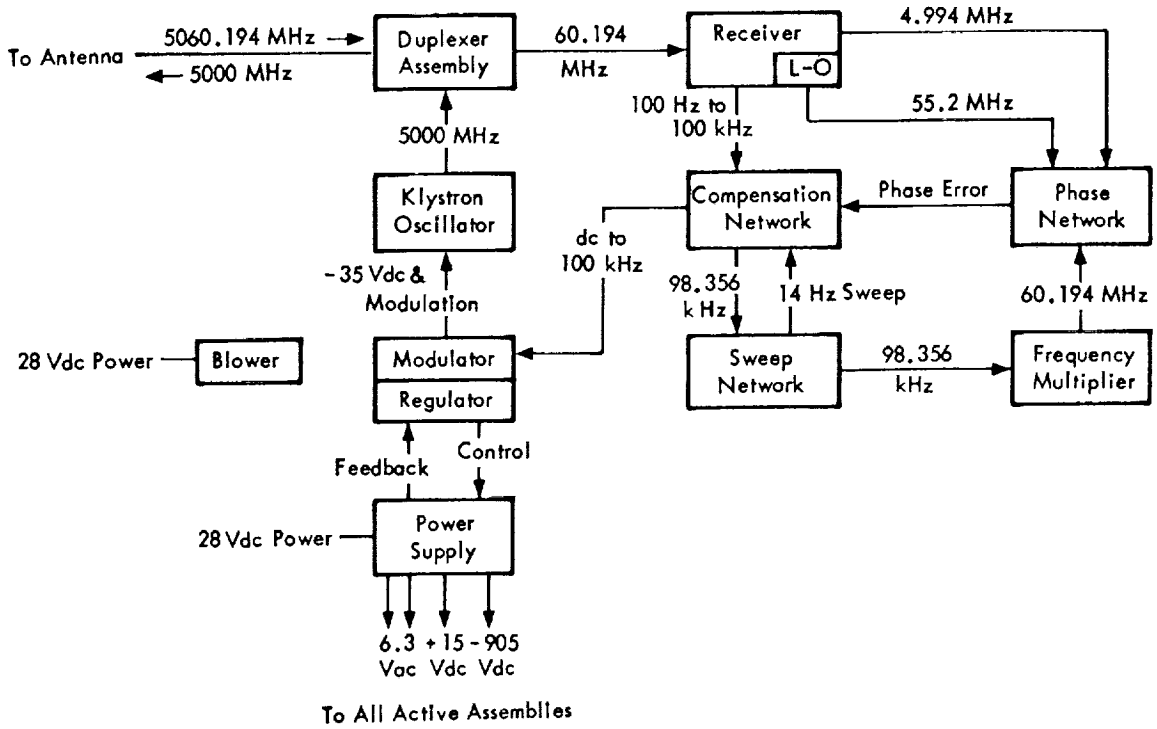

FIGURE 52. AZUSA TRANSPONDER, BLOCK DIAGRAM

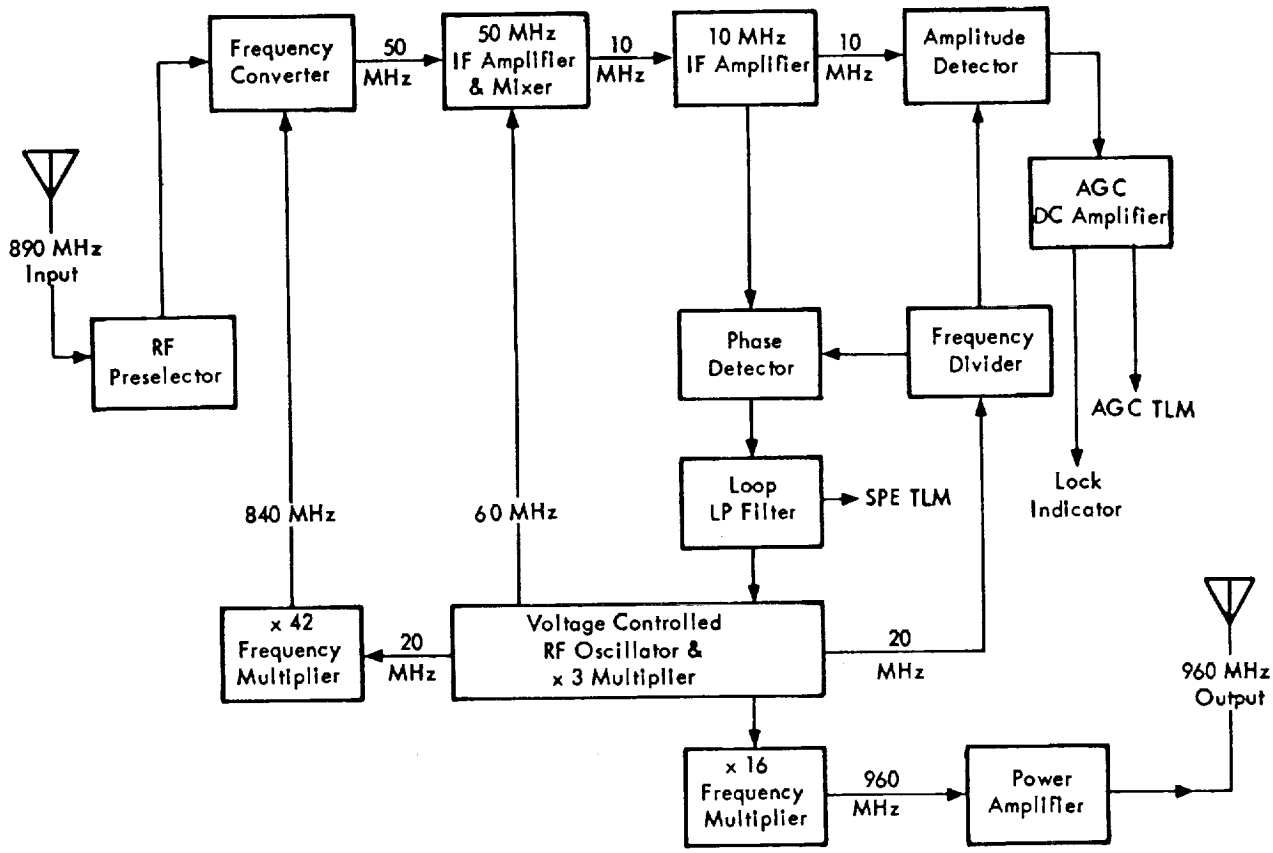

FIGURE 53. ODOP TRANSPONDER, BLOCK DIAGRAM

to determine the position of the vehicle. The ODOP tracking system provides accurate tracking data during the very early launch phase when other tracking systems suffer from multipath propagation.

The ODOP transponder (Fig. 53) is a modification of the transponder used in Ranger vehicles by JPL. Separate antennas are used for receiving and transmitting. A phase-locked loop keeps the transmitted frequency (960 MHz) phase coherent with the received frequency (890 MHz). The transponder is completely transistorized.

POWER SUPPLY AND DISTRIBUTION SYSTEM

Each stage of the Saturn launch vehicles carries its own battery power supply. Figure 54 is a block diagram of the power and distribution system of Saturn V. The primary power (28 Vdc) from the batteries is supplied to the individual electric and electronic equipment through an arrangement of distributors. Before launch, power is provided by the ground support equipment (ESE) through the umbilical cables to each stage. The switchover from the ground power supply to the vehicle power supply is accomplished by motor-driven power transfer switches 30 seconds before liftoff. These power transfer switches, controlled by the ESE, make contact to the internal power supply before they break contact with the external power supply.

The distributors contain relays to switch power on and off for certain vehicle equipment. During preflight checkout these switching operations are controlled from the ESE. Inflight switching is commanded by the LVDC through the switch selector. The control distributor (in the IU) performs signal switching in connection with the guidance and control system operation. The EDS distributor contains the relay logic for processing EDS measuring signals and generating EDS command signals.

Several measuring distributors interconnect the various measuring signals (from transducers or other sources) to the different telemetry systems and channels. The measuring distributors have a switching capability to connect different measuring signals to a given telemetry channel.

In addition to the general 28 Vdc battery power system of the vehicle, there are two types of special power supplies; 5 Vdc measuring voltage supplies and a 56 Vdc power supply. Any other dc voltage or ac power is generated in special power supplies incorporated in the equipment where it is required.

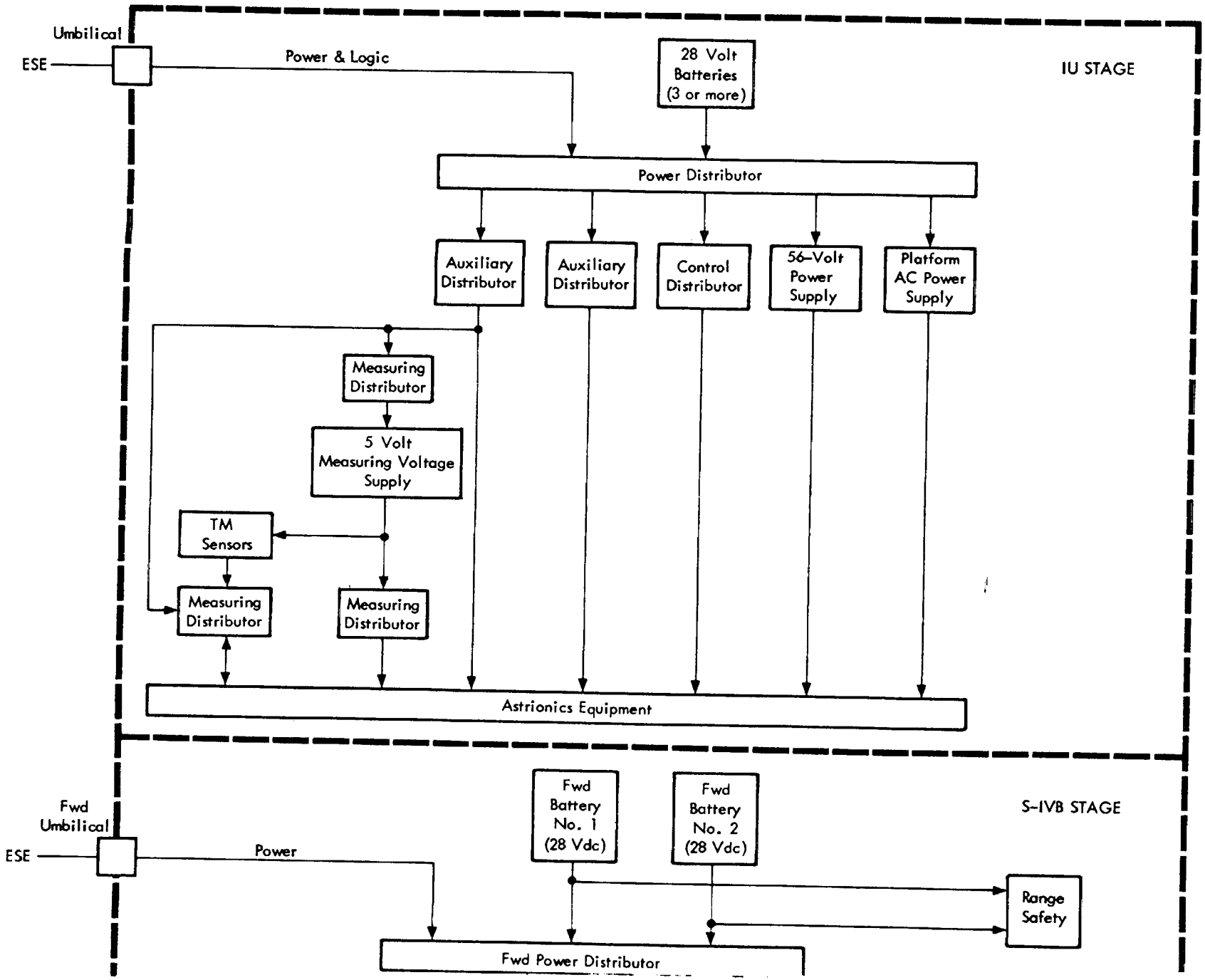

FOLDOUT FRAME 3

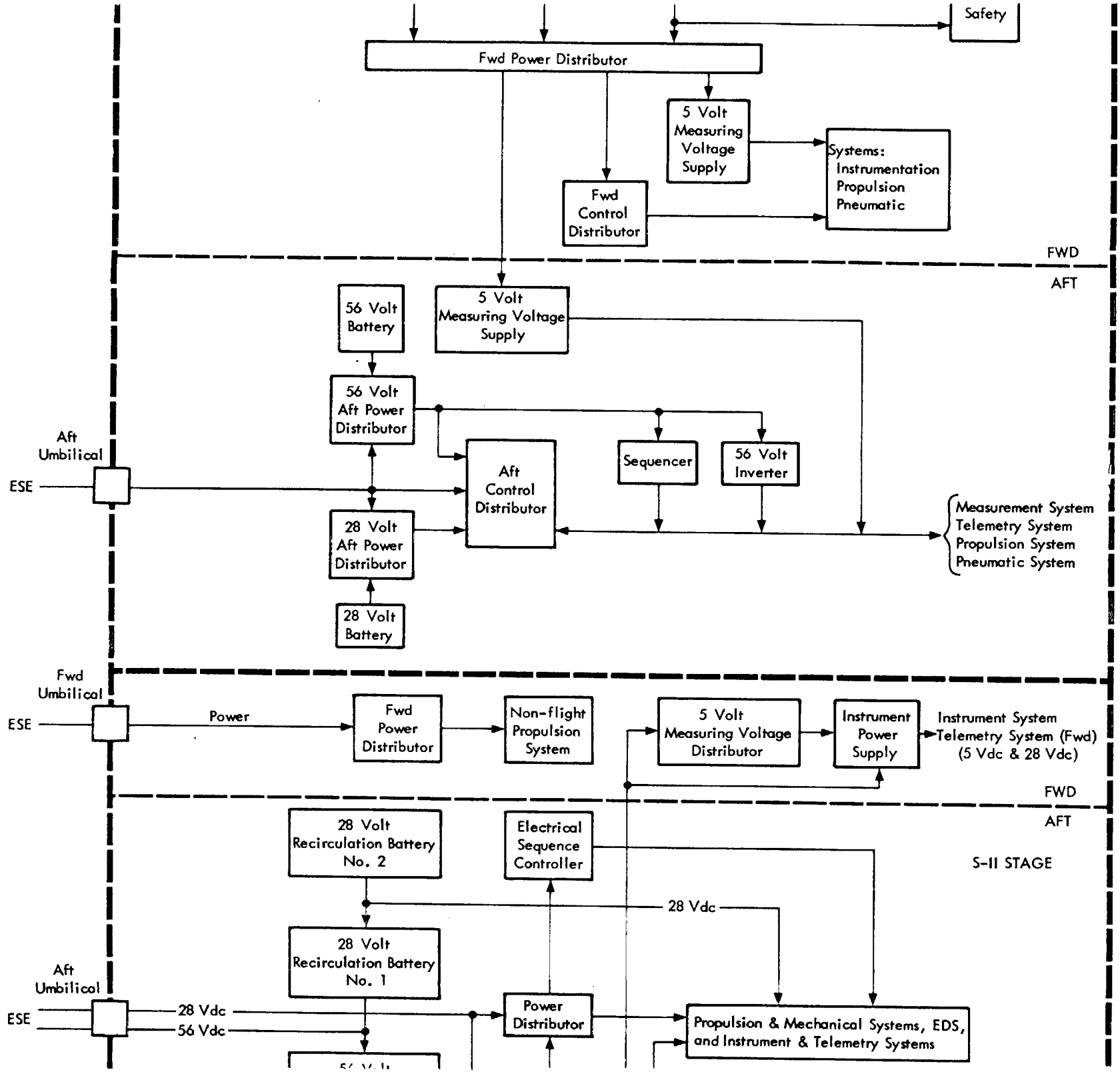

FOLDOUT FRAME 2

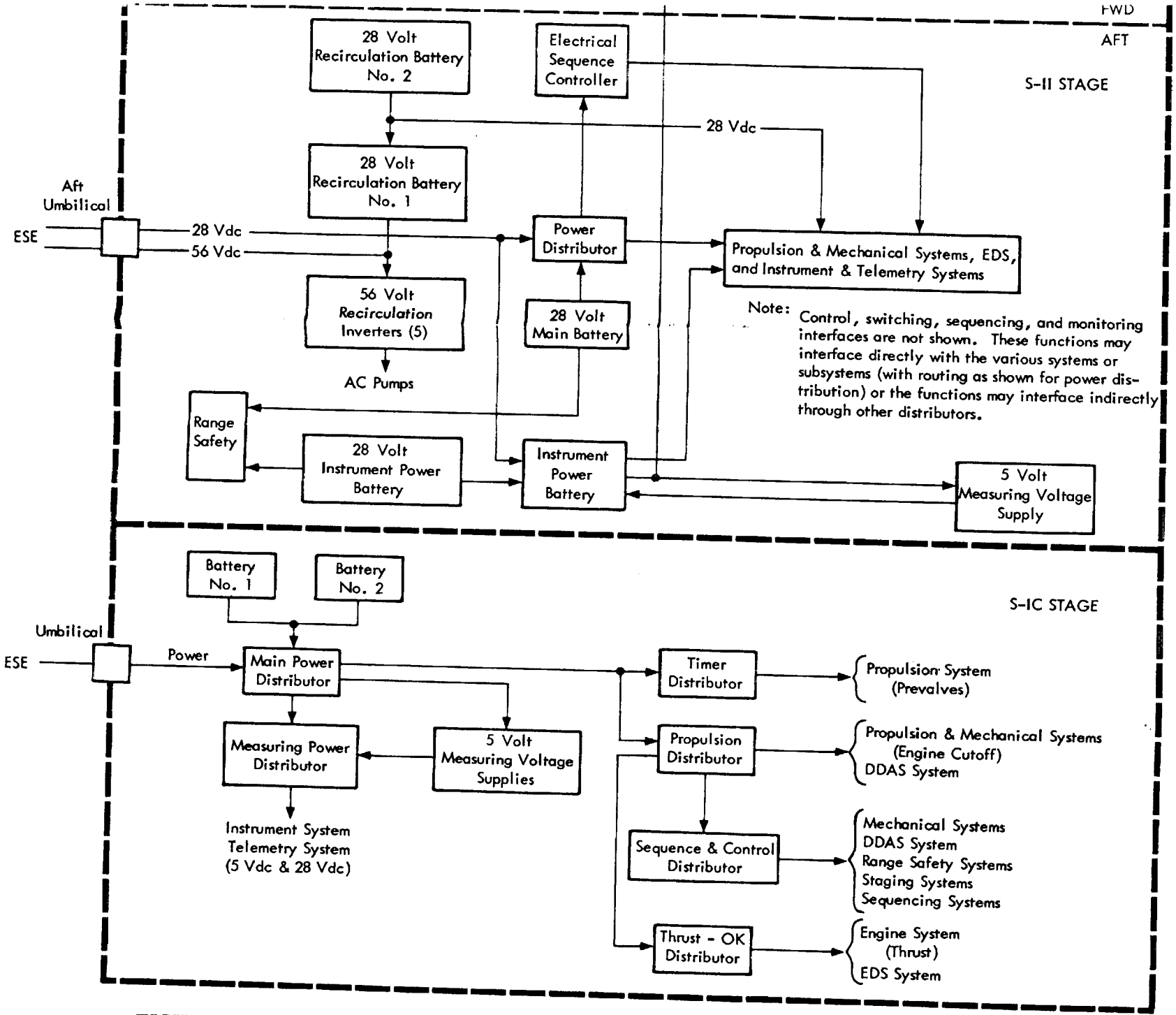

FIGURE 54. SATURN V POWER SUPPLY AND DISTRIBUTION SYSTEMS, BLOCK DIAGRAM

FOLDOUT FRAME 1

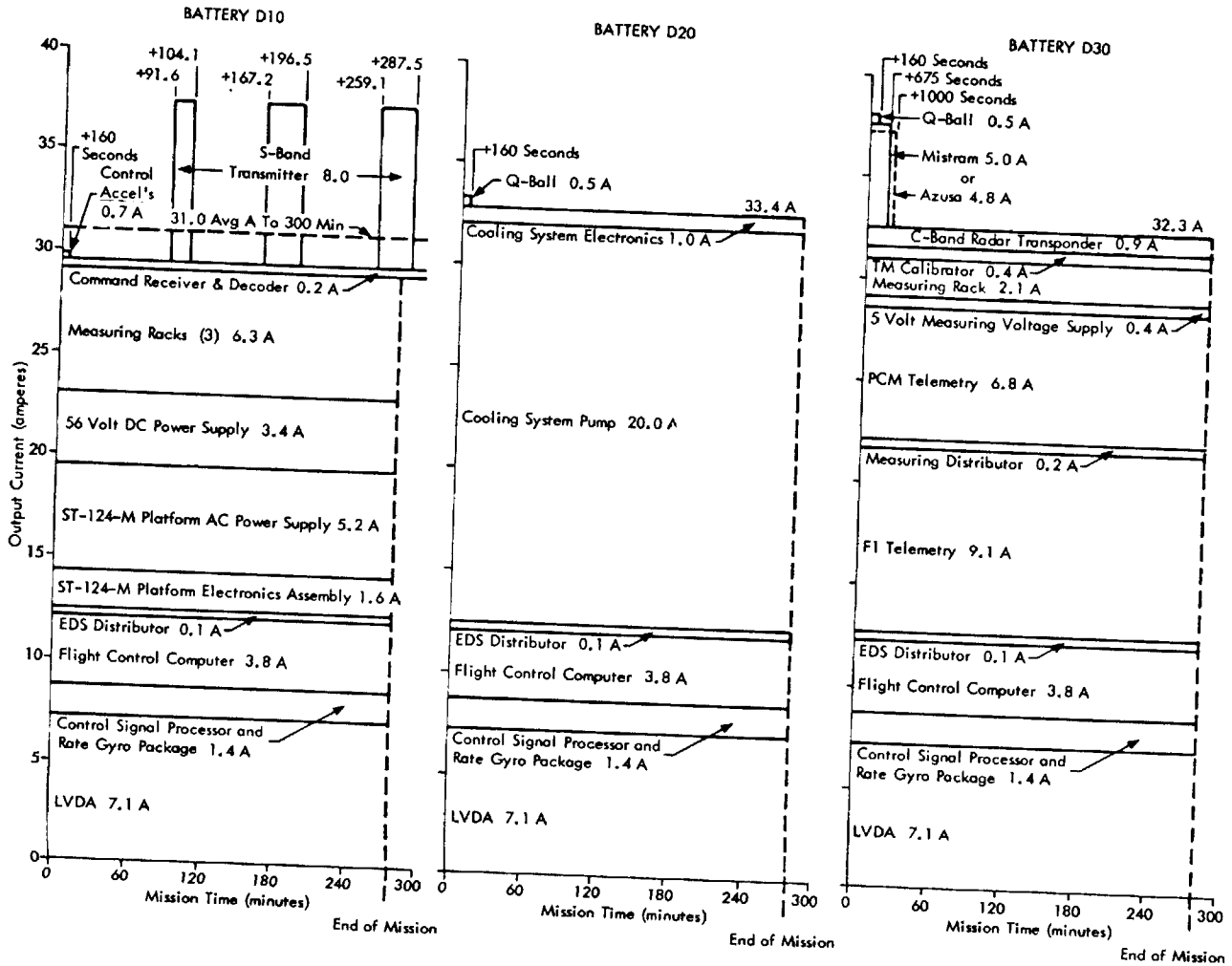

FIGURE 55. TYPICAL BATTERY LOAD PROFILES FOR SA-IU-205 AND SUBSEQUENT VEHICLES

The measuring voltage supply provides 5 Vdc regulated to ±0.005 V which is used as reference voltage for measuring signals and as excitation for certain transducers. This 5 Vdc output voltage is obtained from the 28 Vdc battery power by square wave generation in connection with pulse width modulation, regulator circuits, and rectification.

The 56 Vdc power supply output is used primarily for the stabilized platform. A blocking oscillator operating from the 28 Vdc battery power generates a 2 kHz square wave which is processed and rectified to obtain 56 Vdc.

The primary power is supplied by dry-charged alkaline silver-zinc batteries with a potassium hydroxide electrolyte. A battery is composed of 20 cells connected in series; each cell generates 1.5 V. A relief valve is provided to keep the internal cell pressure below 69,000 N/m^2 (10 psig). The characteristics of the battery are listed in Table X. Three or more batteries are used in the IU, depending on mission time and changing power requirements of the astrionics system. A battery load profile for Saturn IB (SA-205) is shown in Figure 55. To increase reliability, certain equipment is connected to three different batteries to keep it operational in case of a battery failure.

The grounding scheme is not quite the same in all vehicle stages. In the IU the outer skin of the structure is the reference ground.

STABILIZED PLATFORM [15]

Introduction

The inertial platform (ST124-M) provides the reference coordinate system, vehicle acceleration measurements, and vehicle attitude measurements for navigation, guidance, and attitude control of the Saturn launch vehicle. The ST124-M is a three-gimbal platform. The stabilized inner gimbal carries three integrating accelerometers for acceleration measurements, three gas bearing gyros for attitude stabilization of the inner gimbal, two pendulums for vertical alignment, and a prism arrangement for azimuth alignment of the platform. The orientation of these components and the gimbal arrangement are shown in Figure 56.

The three-gimbal configuration permits freedom of rotation about the inner stabilized gimbal while rotation about the middle gimbal axis must be

TABLE X. IU BATTERY CHARACTERISTICS

Battery Type	MAP 4240 - Dry charged
Cells	
Number	20 (with provisions for selecting 18 or 19 cells if required)
Nominal voltage per cell	1.5 Vdc
Material	Alkaline silver-zinc
Electrolyte	Potassium hydroxide (KOH)
Output	
Voltage	+28 ± 2 Vdc
Current	35 amperes for a 10-hour load period (if used within 72 hours after activation)
Measurements available	Current output Internal temperature
Cooling System	Cold plate
Ambient Temperature Range	+10°C to +48.9°C (+50°F to +120°F) for proper operation
Heat Transfer Characteristics	
Dissipation	0.07 W/cm^2 (0.47 W/in.^{2})
Surface area	2074 cm^2 (321.4 in.^{2})
Total dissipation	150 watts
Physical Characteristics	
Activated weight	75 kg (165 pounds)
Dimensions	
Length	65.5 cm (25.4 in.)
Width	26.9 cm (10.6 in.)
Depth	23.1 cm (9.1 in.)
Volume	40,164 cm^3 (2450 in.^{3})

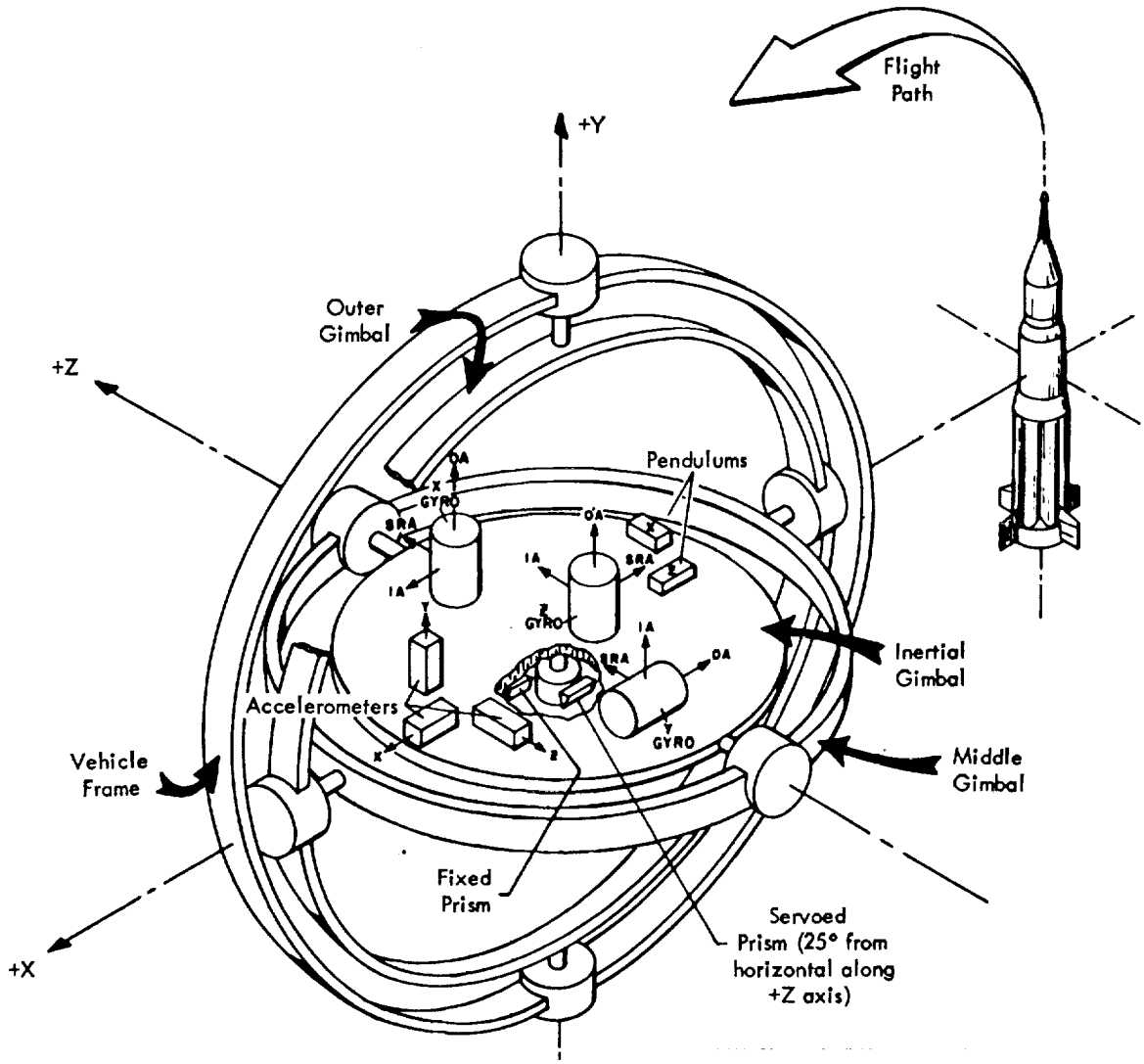

FIGURE 56. ST124-M3 GIMBAL CONFIGURATION

limited to ±45 degrees to prevent gimbal lock. The platform can be equipped with four gimbals to obtain complete rotational freedom; the four-gimbal configuration is not used in the Saturn/Apollo program. The angular displacement of the gimbals with respect to the stabilized gimbal indicates the vehicle attitude. The angular displacement about the gimbal pivots is measured by dual speed resolvers.

The rectangular reference coordinate system XYZ is defined by the orientation of the input axes of three single-degree-of-freedom gyros mounted on the stabilized inner gimbal. Any rotation of the inner gimbal is sensed by the gyros, which generate control signals that are applied to the proper dc torque motors mounted on the gimbal pivots. These control signals cause a rotation of the gimbals about their pivot axes in such a manner that the inner gimbal keeps a space-fixed orientation.

The sensitive axes of the integrating accelerometers are aligned parallel to the XYZ axes (gyro IA axes) to measure the three components of vehicle acceleration along those axes. The accelerometers are pendulous single-degree-of-freedom gyros. Their output signals represent the accumulated velocity (integrated acceleration).

The inertial platform system includes the ST124-M platform assembly, platform electronic assembly (servoamplifiers), accelerometer signal conditioner, ac power supply, 56-V power supply, and gas bearing supply. A simplified signal flow in the platform system is given in Figure 57. The output signals of the accelerometers (AB3-K8) are first shaped by the platform accelerometer signal conditioner and then converted to digital signals by the accelerometer signal processor (ASP) in the LVDA for navigation and guidance computations. The analog output signals from the gimbal resolvers are converted to digital signals by the crossover detector (COD) in the LVDA. The gimbal angle readings are used for attitude control of the vehicle. The output of the resolver chain is used in the ESE for prelaunch checkout only. The platform electronics assembly contains the servoamplifiers which are part of the gyro-gimbal servoloop and the accelerometer servoloop. The ac power supply generates several frequencies required for the platform operation: 400 Hz (3 phase), 4.8 kHz, 1.92 kHz, and 1.6 kHz.

The platform gimbals, pivot housings, and base are made of beryllium. The weight of the ST124-M platform is 48 kg (107 lbs). The hemispherical aluminum covers of the platform contain passages for the water-methanol coolant flow of the environmental control system to stabilize the temperature at about 315°K. Figure 58 shows a cutaway view of the platform assembly. The platform system uses solid state electronics.

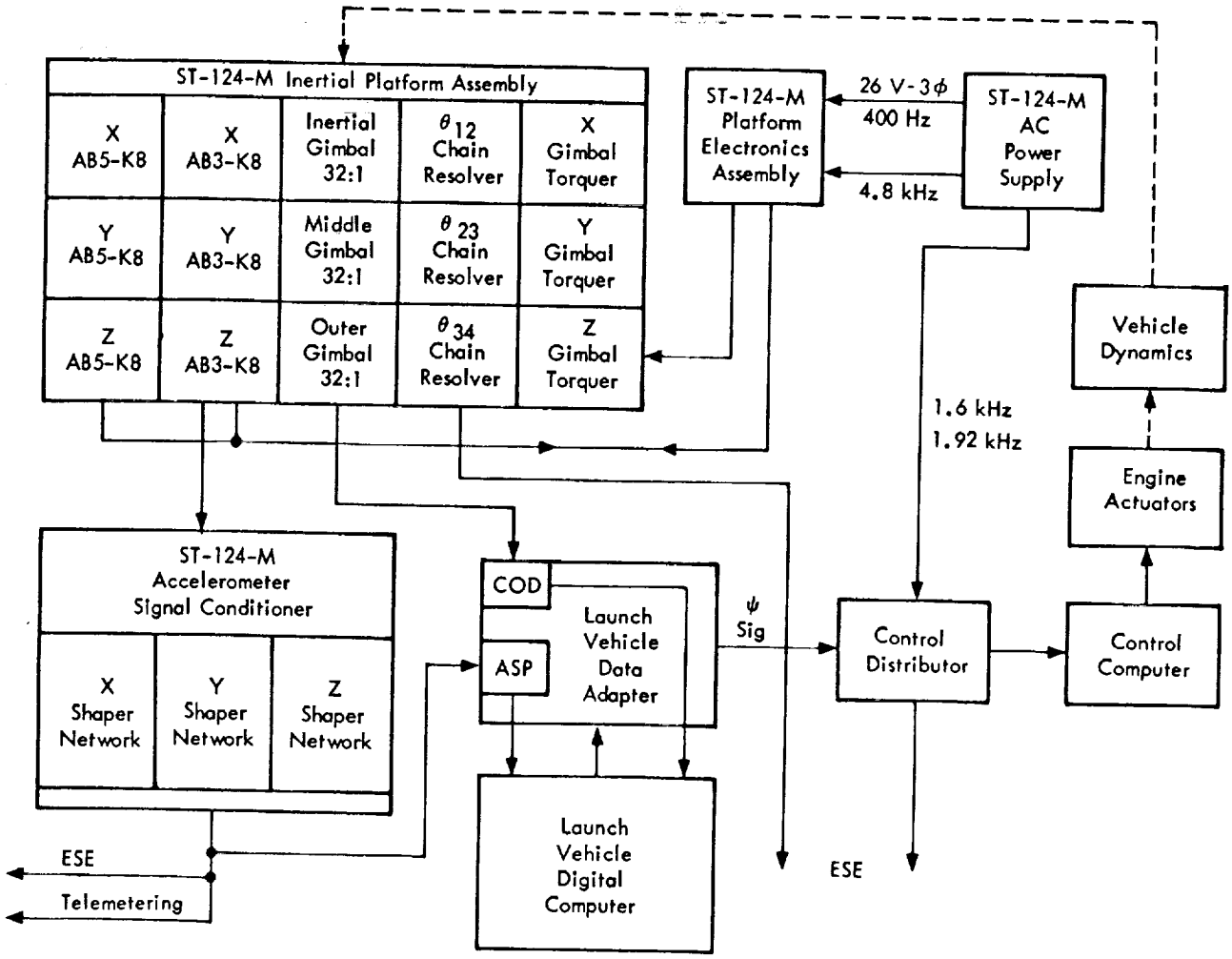

FIGURE 57. PLATFORM SIGNAL FLOW

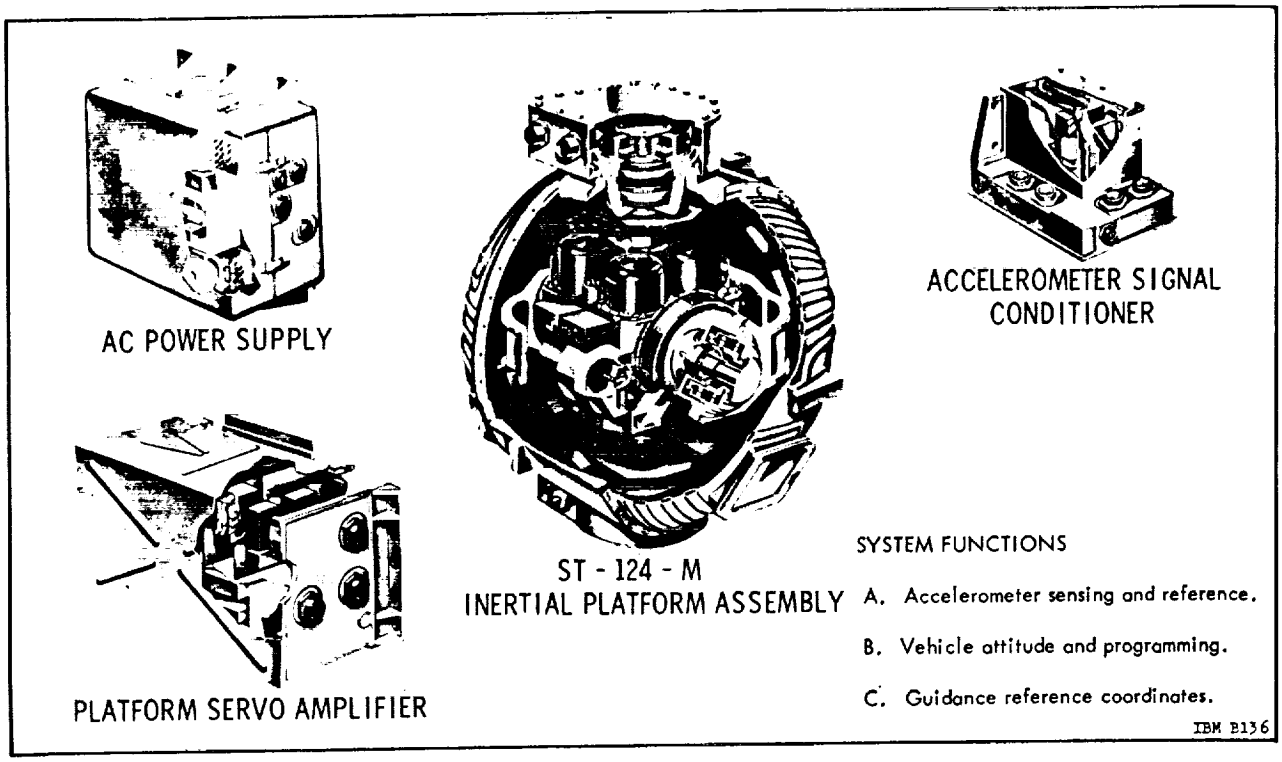

FIGURE 58. ST124-M STABLE PLATFORM

Gas Bearing Gyros [16]

Three AB5-K8 gas bearing single-degree-of-freedom gyros mounted to the inner gimbal sense the rotation of the inner gimbal and generate the proper control signals for stabilization of this gimbal. A cutaway view of the gyro is given in Figure 59 and an exploded view in Figure 60. The gyro is enclosed in a cylindrical case which is suspended inside the sleeve and between the end plates by the gas bearing. Nitrogen gas from an external supply passes through 24 holes in the sleeve. Porous discs in the holes diffuse the gas flow, which is symmetrical to both end plates and provides axial and radial centering of the floating cylinder. The gas escapes around the hub at both ends of the cylinder. The gyro motor (inside the cylinder) is driven with 400 Hz 3 phase power. The cylinder is filled with helium to increase heat transfer and reduce losses in the motor windings.

Rotation of the gyro about the input axis (Fig. 59) results in a rotation of the cylinder about its output axis. The angular displacement of the cylinder is sensed by an inductive pickoff excited with a 4.8 kHz signal. The signal generator output is the input to the gimbal servoloop. A torque generator (principle of eddy current motor) is used for initial alignment of the gyro. The signal generator and the torque generator are coupled to the cylinder by a copper shorted loop attached to the cylinder. The 3 phase 400 Hz excitation power for the gyro motor is fed into the cylinder through ribbon flex leads. The electrical diagram of the AB5-K8 gyro is shown in Figure 61. Table XI lists characteristic data of the gyro.

Gimbal System and Servoloops

The arrangement of the gimbals is shown in Figure 62 and the gimbal pivot scheme is shown in Figure 63. The platform base (frame) is mounted to the vehicle. The Z pivots, which connect the inner stabilized gimbal with the middle gimbal, define the Z axis, which is parallel to the vehicle pitch axis on the launch pad. The middle gimbal is coupled through the X pivots to the outer gimbal. The X axis is parallel to the vehicle yaw axis on the launch pad. The Y pivots connect the outer gimbal and the platform base. The inner gimbal maintains its initial orientation in space, defining the XYZ coordinate system while the vehicle attitude changes during flight. The angular orientation of the gimbals to each other is controlled by dc torque motors on the pivots. Electrical signals are transferred across the Y and Z pivots by slip rings and across the X pivot (which is limited in rotation) by flex cable. The angular displacements between gimbals is measured by dual speed resolvers (32:1) at the gimbal pivots. The resolver output is transmitted to the LVDC to generate attitude control signals.

TABLE XI. GYRO CHARACTERISTICS

Gyro Wheel	
Type	Synchronous hysteresis
Angular momentum	2.6×10^6 g cm^2/s
Wheel speed	24,000 rpm
Wheel excitation	26 V, 3-phase, 400 Hz
Wheel bearing preload	3.4 kg, operating (7.5 pounds)
Wheel power at sync	8 W
Wheel life	3000 hours, minimum
Wheel mount	Symmetrical
Wheel sync time	90 seconds
Gas Bearing	
Gas pressure	10.3 N/cm^{2}d (15 psid)
Gas flow rate	2000 cc/min STP (122 in.^{3}/min)
Gas gap (one side)	0.015 to 0.02 cm (0.006 to 0.008 in.)
Orifice restrictors	Millipore discs
Sleeve material	Anodized beryllium
Endplate material	Anodized beryllium
Cylinder material	Anodized beryllium
Signal Generator	
Type	Short turn reluctance
Excitation	10 V, 4.8 kHz
Sensitivity	550 mV/° with 10 k load
Float freedom	$\pm 3^{\circ}{}^{+0^{\circ}}_{-0.5^{\circ}}$
Torquer (for platform erection and earth rate bias only)	
Type	Shorted turn reluctance
Normal erection rate	6°/min
Fixed coil excitation	26 V, 400 Hz, 45 mA
Maximum variable coil excitation	30 V, 400 Hz, 50 mA
Impedance	
Fixed coil resistance	184 Ω
Fixed coil impedance	555 Ω ∠+31° (400 Hz)
Variable coil resistance	190 Ω
Variable coil impedance	330 Ω ∠+53° (400 Hz)

Physical Characteristics	
Size	
Diameter	7.7 cm (3 inches)
Length	10.3 cm (4 inches)
Weight	900 grams (2 pounds)
Mounting	3-point flange mounting
Temperature Characteristics	
Calibration temperature	40°C (104°F) (gyro housing)
Drift versus temperature gradient	0.009°/h/°C

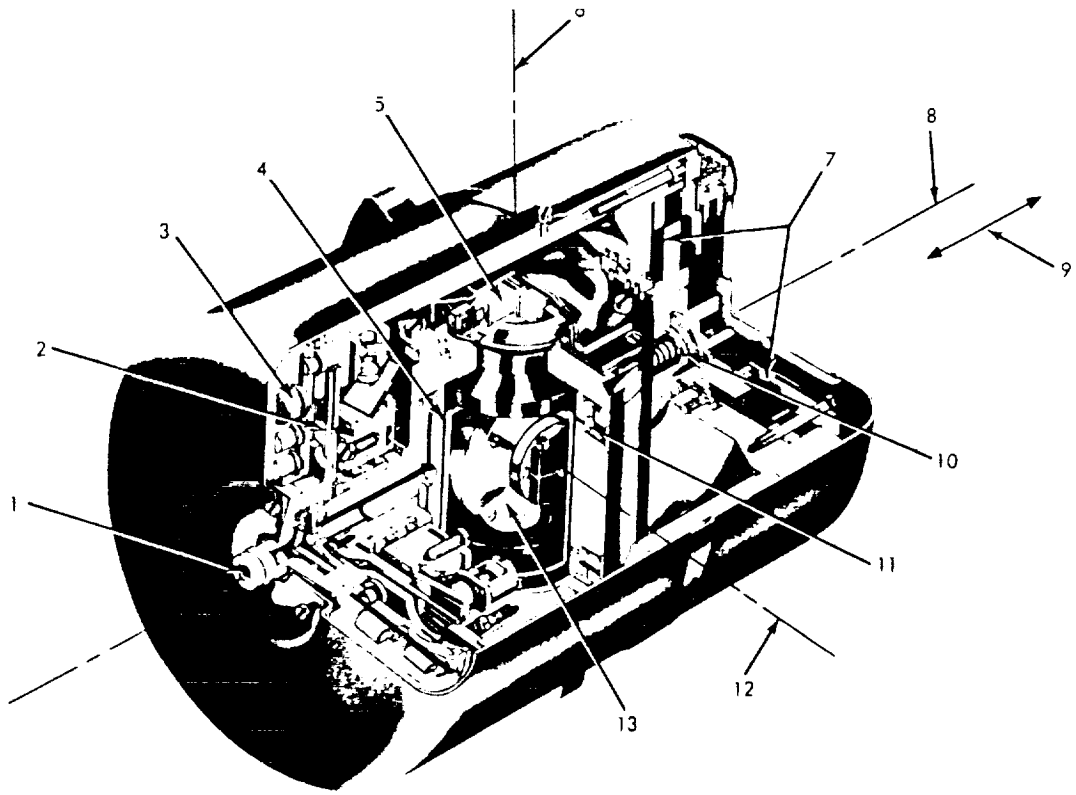

1. Gas Inlet
2. Encoder Discs
3. Encoder Electronics
4. Supporting Gas Film
5. Servo Pickoff
6. Gyro Output Axis
7. Torquer
8. Gyro Input Axis
9. Accelerometer Measuring Direction
10. Slip Ring Capsule
11. Feeder Ports
12. Spin Reference Axis
13. Gyro Rotor

FIGURE 59. SINGLE-AXIS INTEGRATING GYRO, CUTAWAY VIEW

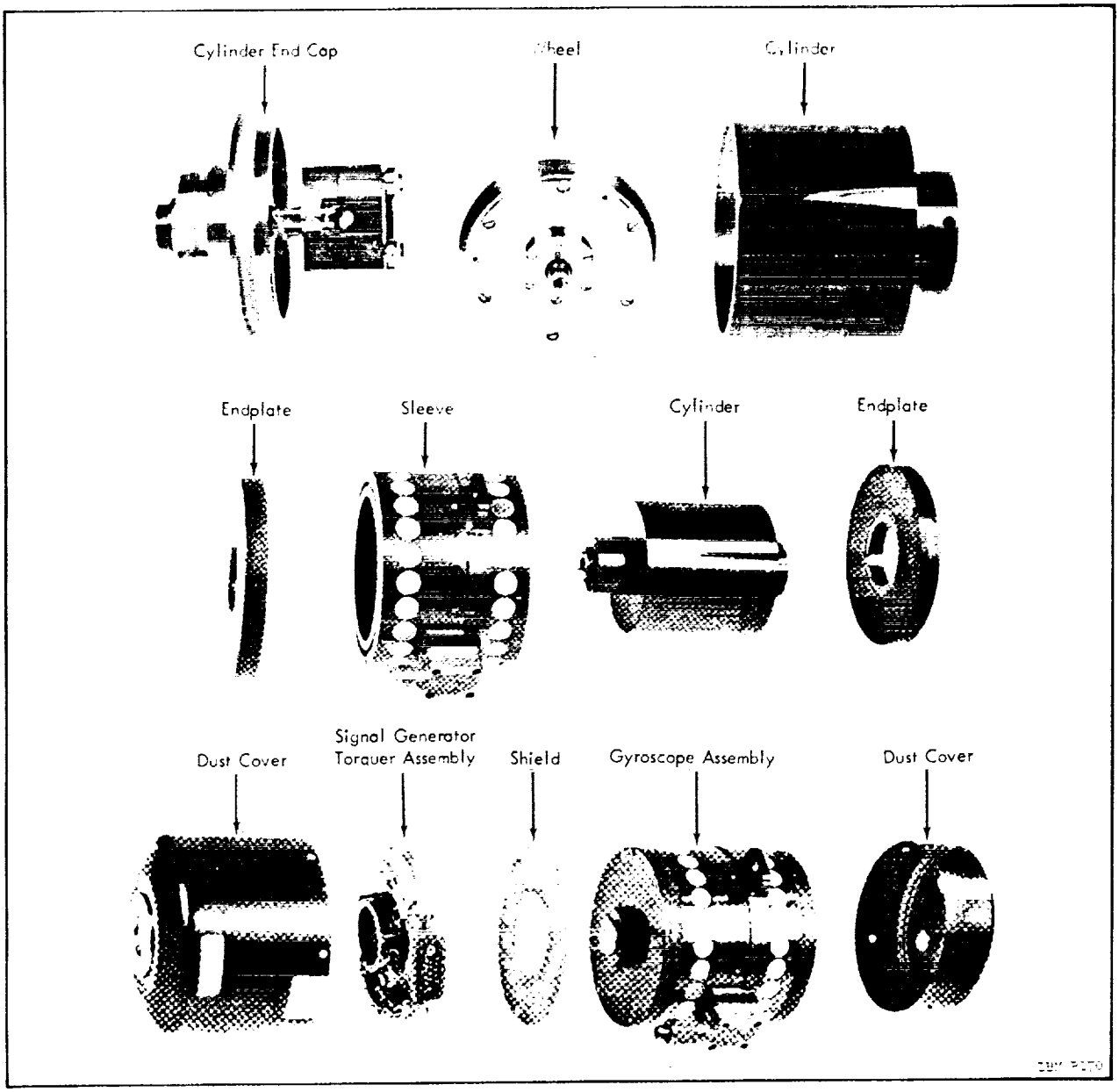

FIGURE 60. SIGNAL GENERATOR AND TORQUE GENERATOR, EXPLODED VIEW

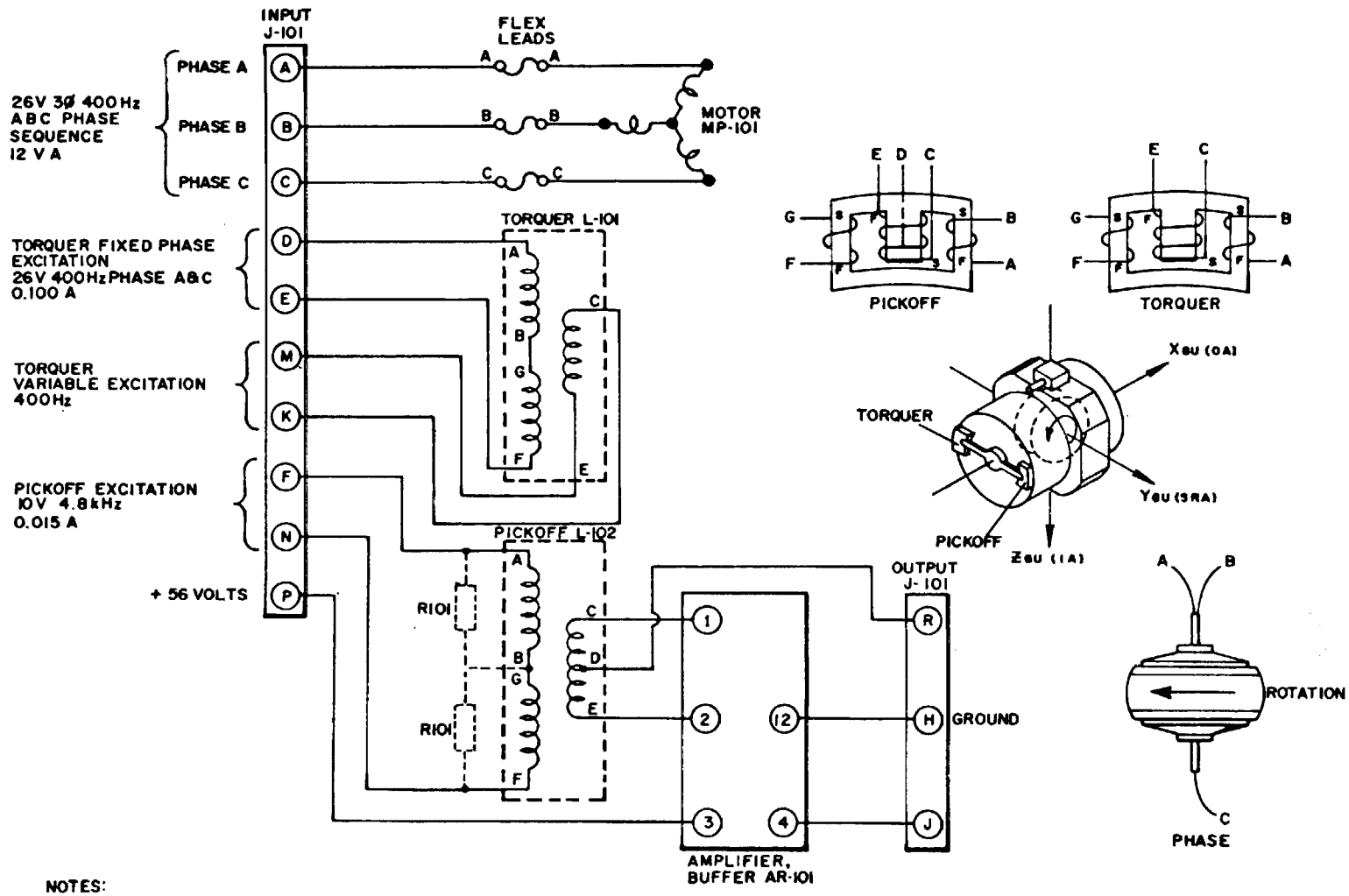

NOTES:

1. A POSITIVE RATE ABOUT I_A WILL CAUSE THE INNER CYLINDER TO ROTATE ABOUT THE POSITIVE OA AND V_{HJ} TO BE IN PHASE WITH V_{FN} ON CONNECTOR J-101.
2. WITH GYRO CONNECTED TO 26V, 400Hz 3 PHASE ROTATION A-B-C AMERICAN STANDARD. GYRO WHEEL SHALL ROTATE IN A NEGATIVE DIRECTION ABOUT THE $\bar{Y}_{GU}$ VECTOR.
3. A VOLTAGE V_{DE} IN TIME PHASE WITH V_{KM} WILL PRODUCE A MOMENT ON THE INNER CYLINDER IN A NEGATIVE DIRECTION ABOUT THE $\bar{X}_{GU}$ VECTOR.

FIGURE 61. GYRO ELECTRICAL SCHEMATIC

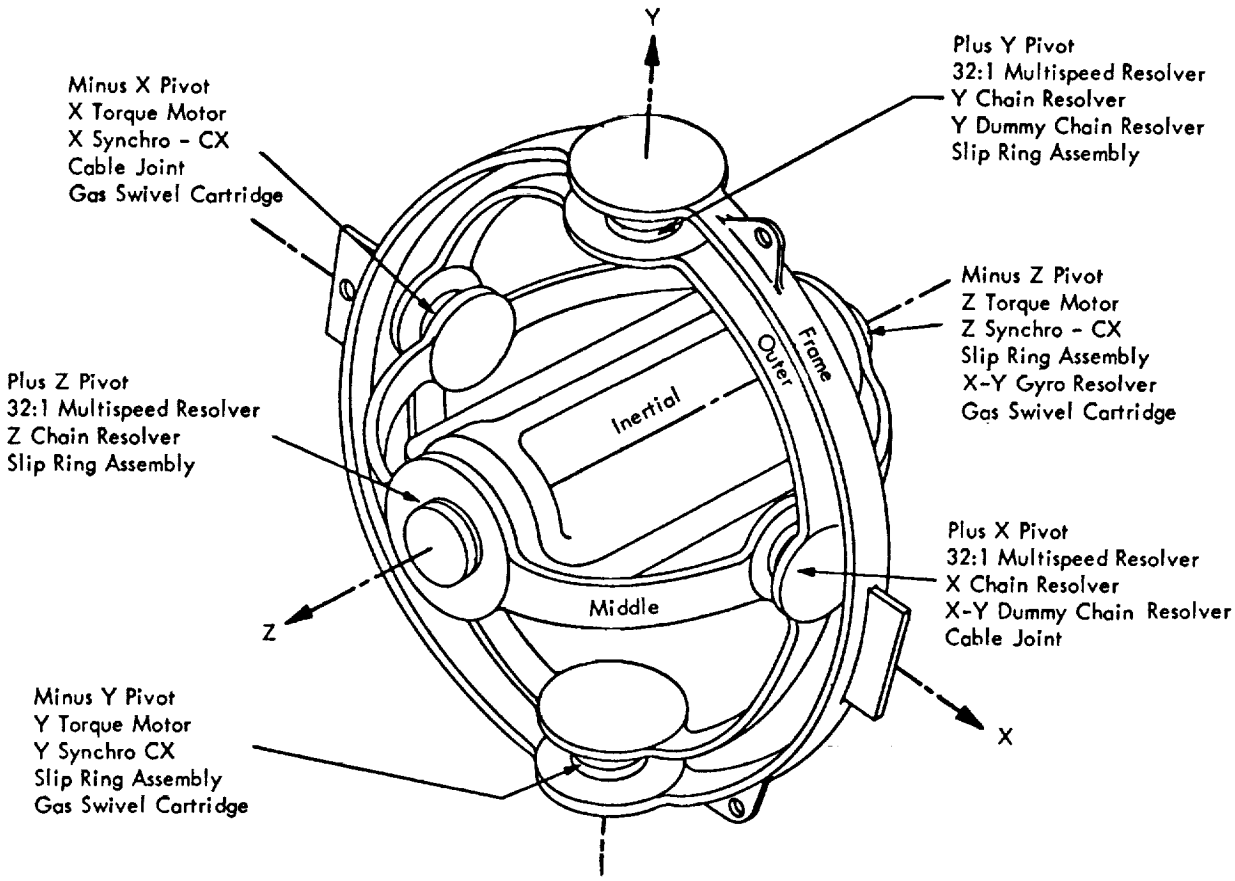

FIGURE 62. THREE-GIMBAL CONFIGURATION

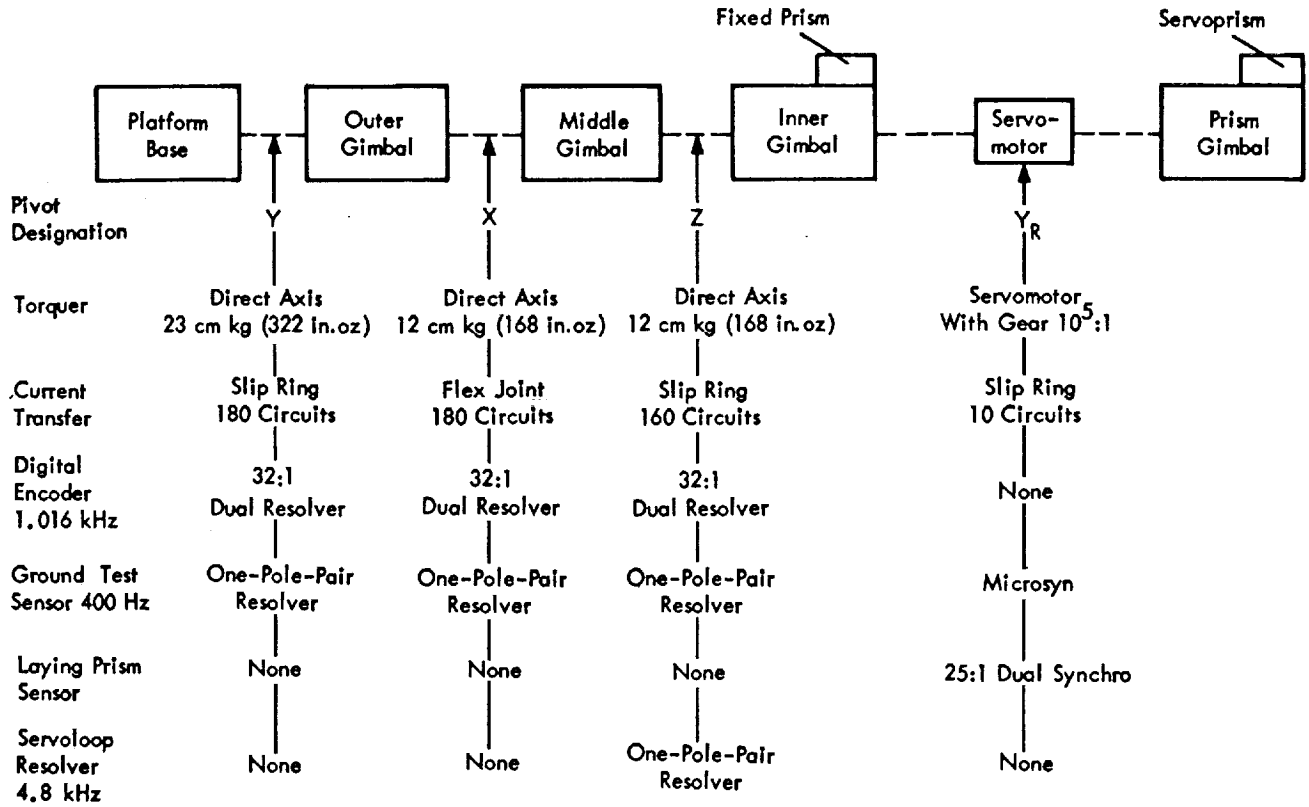

FIGURE 63. PLATFORM GIMBAL PIVOT SCHEME

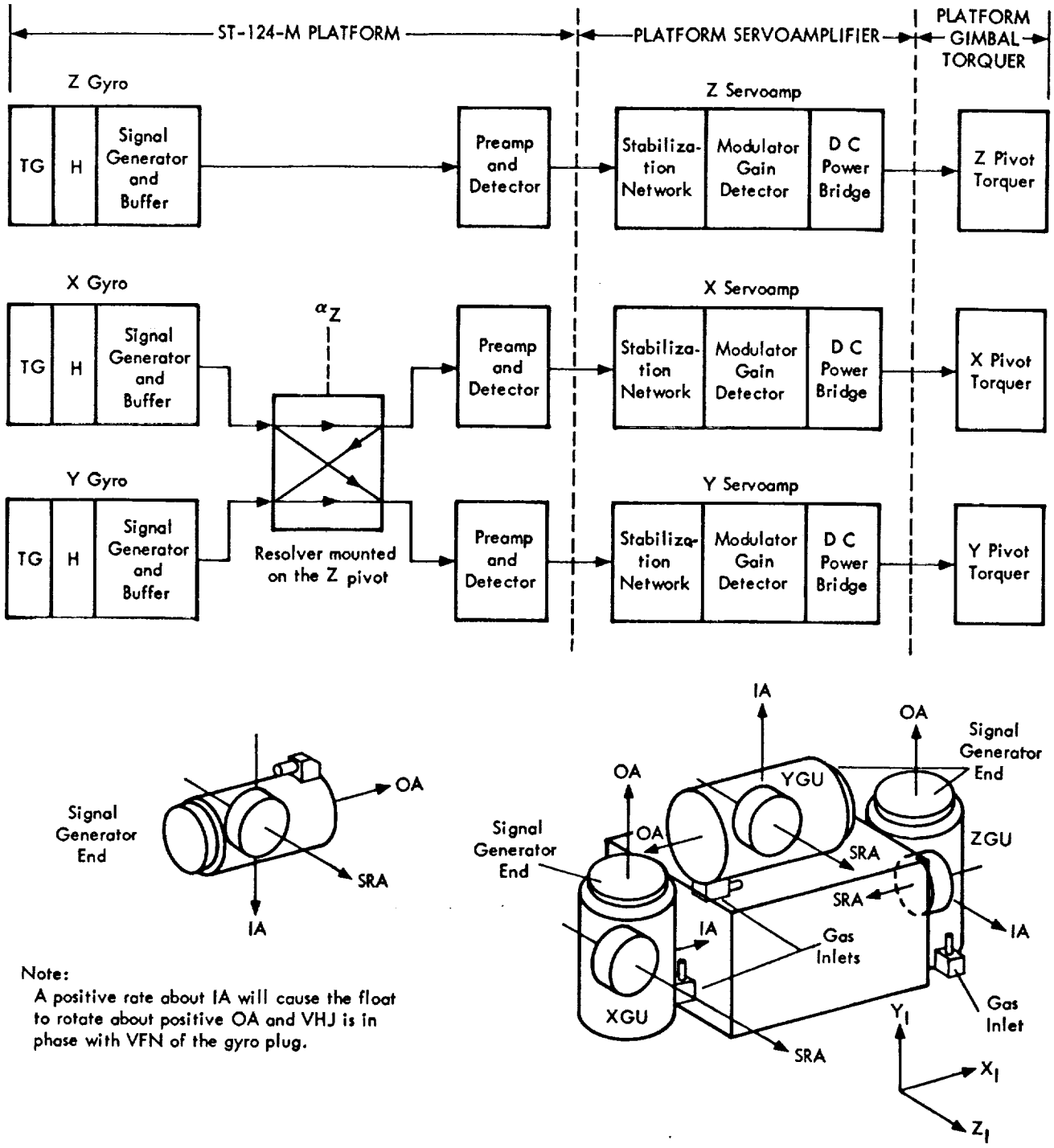

Note:
A positive rate about IA will cause the float to rotate about positive OA and VHJ is in phase with VFN of the gyro plug.

FIGURE 64. GYRO SERVOLOOPS

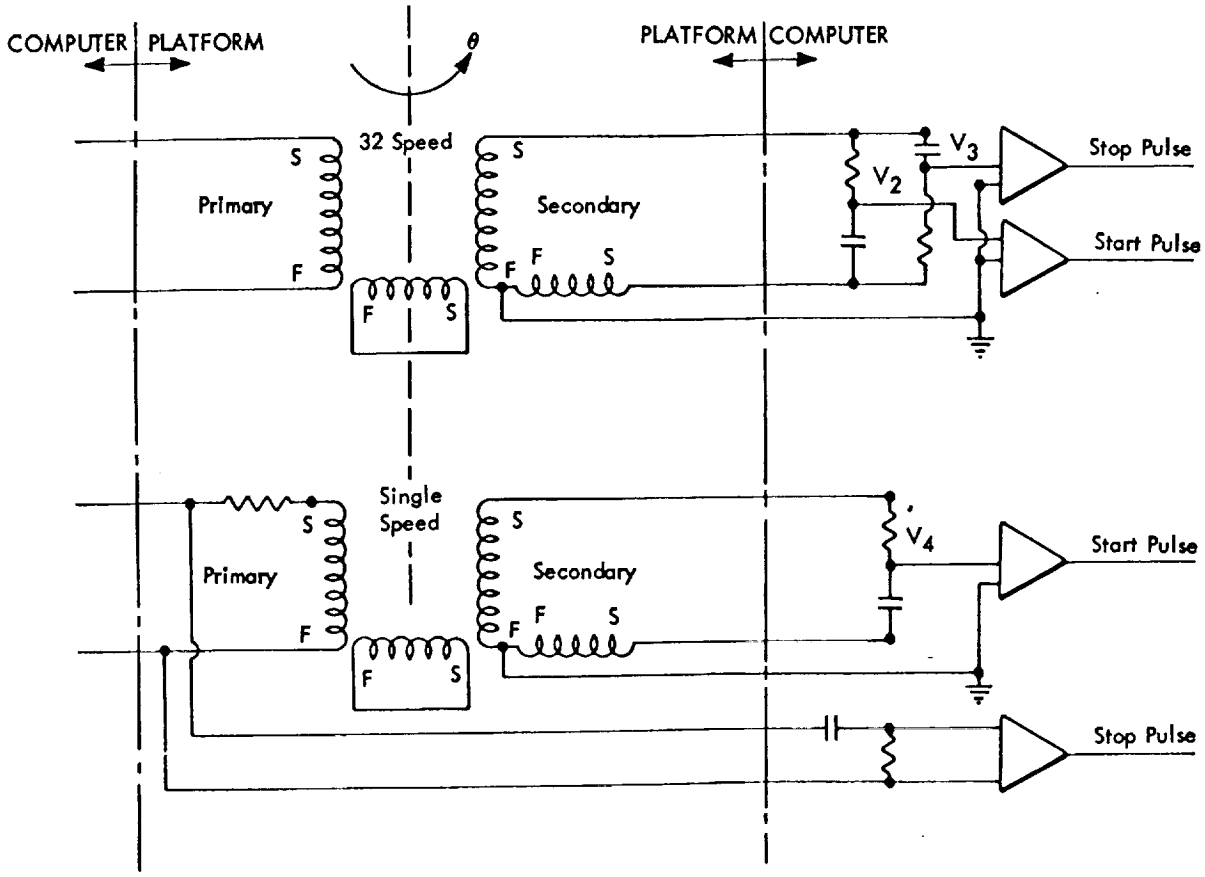

FIGURE 65. DUAL SPEED RESOLVER

Additional single speed resolvers connected to an analog resolver chain are used for ground checkout of the platform system on the launch pad.

A block diagram of the gyro gimbal servoloops is given in Figure 64. The output signals from the gyro signal generators are processed and then applied as control signals to the gimbal pivot torques which rotate the gimbals in such a way that the inner gimbal stays space-direction stabilized. The signal generator output, a modulated 4.8 kHz signal, is amplified and demodulated at the gimbal. The resulting dc signal is then shaped by a stabilizing network, remodulated on a 4.8 kHz carrier, amplified, demodulated, and then applied to the dc power bridge which drives the gimbal torquer. The output signals from the X gyro and the Y gyro are resolved along the X and Y pivot axis by a resolver mounted on the Z pivot before they are sent to the X pivot channel and Y pivot channel.

A diagram of the dual speed resolver, which measures gimbal attitude, is given in Figure 65. The primary windings are excited with a 1016 Hz signal (26 V). The phase difference between the signal on the secondary windings and the excitation voltage depends on the rotation angle θ of the coupling coil (shaft). This phase difference is measured by a digital counter with a 2.048 MHz clock frequency in the LVDA. The counter output representing the angular displacement of the gimbals is used in the computer to determine the vehicle attitude angles.

The dual speed resolver contains a 32-speed and a single-speed winding. The 32-speed winding generates 32 electrical phase rotations (360 deg) for a complete rotation of the shaft. The counter gate is opened by a positive-going zero crossing of the voltage V2 and the stop pulse is generated by the positive-going zero crossing of V3. The phase difference between V2 and V3 is 64 θ (the factor of 2 results from the bridge network). The signal from the single-speed winding serves as a backup (with reduced accuracy) if a failure occurs in the 32-speed system.

Accelerometers and Servoloops

Three integrating accelerometers are mounted on the stabilized platform gimbal to measure the thrust acceleration of the vehicle. A cutaway view of the AB3-K8 accelerometer is shown in Figure 66. The accelerometer contains a single-degree-of-freedom gyro with an unbalance (pendulosity) about the output axis. This is shown schematically in Figure 67. An acceleration along the input axis generates a torque about the gyro sensitive axis because of the pendulous mass. This torque causes the gyro to rotate about the output axis (acceleration input axis). The gyro is contained inside the measuring head, which is free to

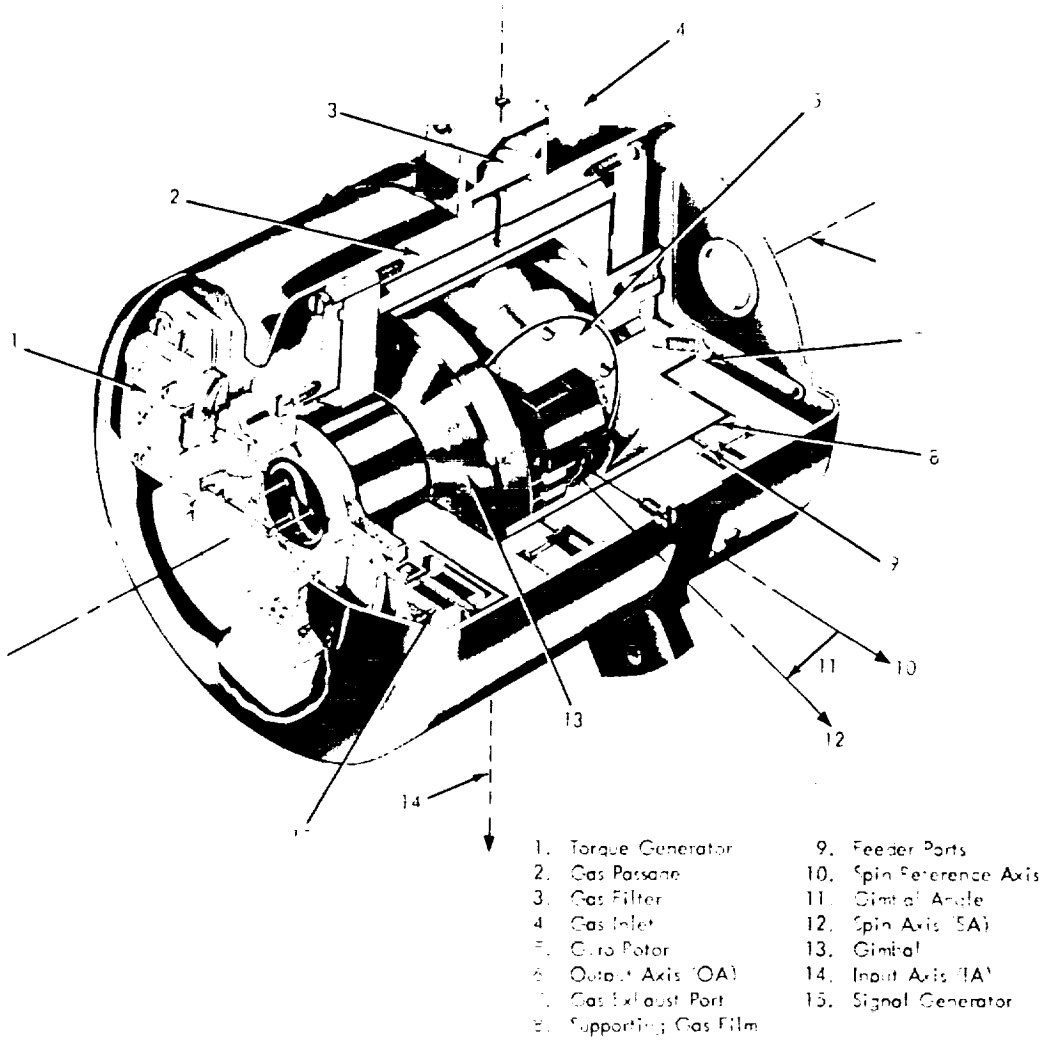

FIGURE 66. AB3-K8 ACCELEROMETER, CUTAWAY VIEW

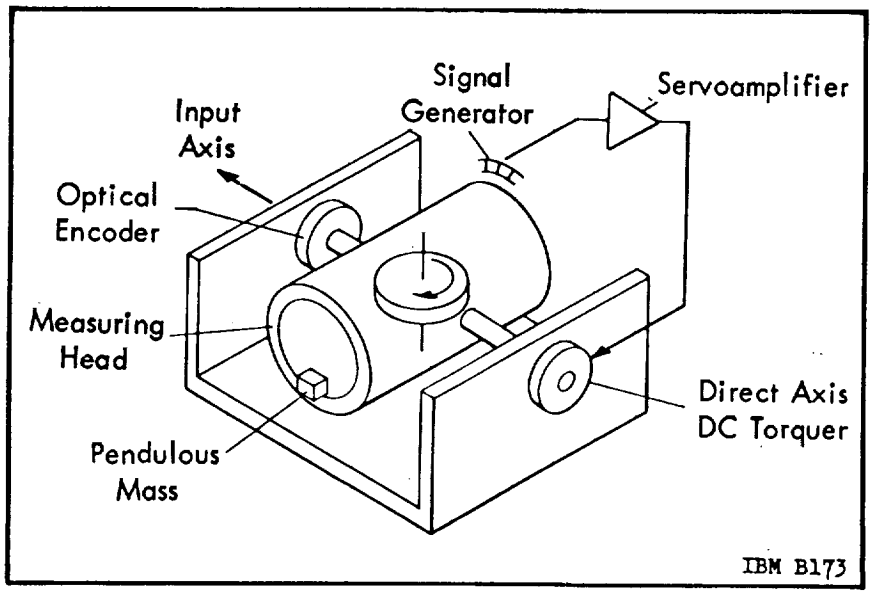

FIGURE 67. ACCELEROMETER, SCHEMATIC DIAGRAM

TABLE XII. ACCELEROMETER CHARACTERISTICS

Gyro Wheel	
Type	Synchronous hysteresis
Angular momentum	94,000 g cm^2/second (207 pounds)
Wheel speed	12,000 rpm
Wheel excitation	26 V, 3-phase, 400 Hz
Wheel sync time	90 seconds
Wheel power at sync	4.5 W
Wheel life	3000 hours, minimum
Wheel mount	Symmetrical
Wheel bearing preload	907.2 grams (1.99 pounds) operating
Gas Bearing	
Gas pressure	10.3 N/cm^2d (15 psid)
Gas flow rate	2400 cc/min STP (146 in^3/min)
Gas gap	0.015 to 0.02 cm (0.006 to 0.008 in.)
Orifice restrictors	Millipore discs
Sleeve material	Anodized beryllium
Endplate material	Monel
Cylinder material	Anodized beryllium
Signal Generator	
Type	4-pole shorted turn reluctance
Excitation	10 V, 4.8 kHz
Sensitivity	285 mV/° with 700 Ω load
Float freedom	$\pm 3^{\circ}{}^{+0^{\circ}}_{-0.5^{\circ}}$
Torque Motor	
Type	Direct-axis dc torquer
Maximum torque	1.44 kg cm at 1.1A and 44V
DC resistance	32.6 ohms
Inductance	12.5 millihenries

Velocity Pickoff	
Type	Digital encoder (optical grid)
Count	6000 count/revolution
Resolution	5 cm/s/bit (1.96 in. /s/bit)
Output	Incremental with redundant channels
Physical Characteristics	
Size	
Diameter	8.3 cm (3.25 inches)
Length	12.8 cm (5 inches)
Weight	1200 g (2.64 pounds)
Mounting	3-point flange mounting
Performance	
Accelerometer scale factor	300 m/s/revolution of output axis (985 feet/s/revolution)
Pendulosity	20 g cm
Temperature Characteristics	
Calibration temperature	40°C ambient (104°F) (on housing gyro)
Ambient temperature range for required accuracies	40°C ± 3°C (104°F ± 5.4°F)

rotate about the output axis. The rate of rotation of the measuring head is a measure of the applied acceleration; the angular position is the integrated acceleration (i.e., velocity). An optical encoder measures the angular position of the measuring head.

Because of friction in the bearings, a torque about the output axis is generated which would cause the gyro float to rotate about the gyro sensitive axis inside the measuring head. This rotation is compensated by the servoloop indicated in Figure 67. Any rotation of the float inside the measuring head is sensed by an inductive pickoff, and a proper control signal is generated and applied to a dc torque motor on the output axis. The torque from the motor cancels the friction in the output axis bearings and thereby keeps the float and the mass unbalance properly aligned with respect to the acceleration input axis. A diagram of the accelerometer servoloops is given in Figure 68.

The gyro, which is the AB5-K8 gyro with minor modifications, is mounted in a cylinder (float) suspended on a gas bearing inside the measuring head (Fig. 66). The float is limited to ±3 degree rotation about the cylinder axis (gyro sensitive axis). The power for the gyro motor is supplied through flex leads. The measuring head assembly is supported by ball bearings and can rotate freely inside the case. Electrical signals (for the inductive pickoff and the gyro motor) are transferred into the measuring head by slip rings. An electric diagram of the accelerometer is shown in Figure 69.

The optical encoder mounted on the output axis consists of two discs. The disc fixed to the case contains a pattern of 1501 radial lines; the disc rotating with the head contains 1500 radial lines. A light beam is transmitted through the discs when the radial lines (at the beam location) coincide. The transmitted light beam is detected by a photocell. Five lamps are mounted at the circumference of the optical encoder. One light beam provides a reference signal; the remaining four beams are spaced 90 degrees apart forming two readout channels (one is for redundancy). The output waveform of the photo detector is indicated in Figure 69. A1, A2 and B1, B2 are pairs of photo detectors each 90 degrees apart. The encoder has a resolution of 6000 bits per complete revolution. The direction of the rotation is indicated by the leading signal (A1, A2 or B1, B2). The decoder output signals are shaped in the accelerometer signal conditioner of the platform system before they are sent to the LVDA. Characteristic data of the AB5-K8 accelerometer are given in Table XII.

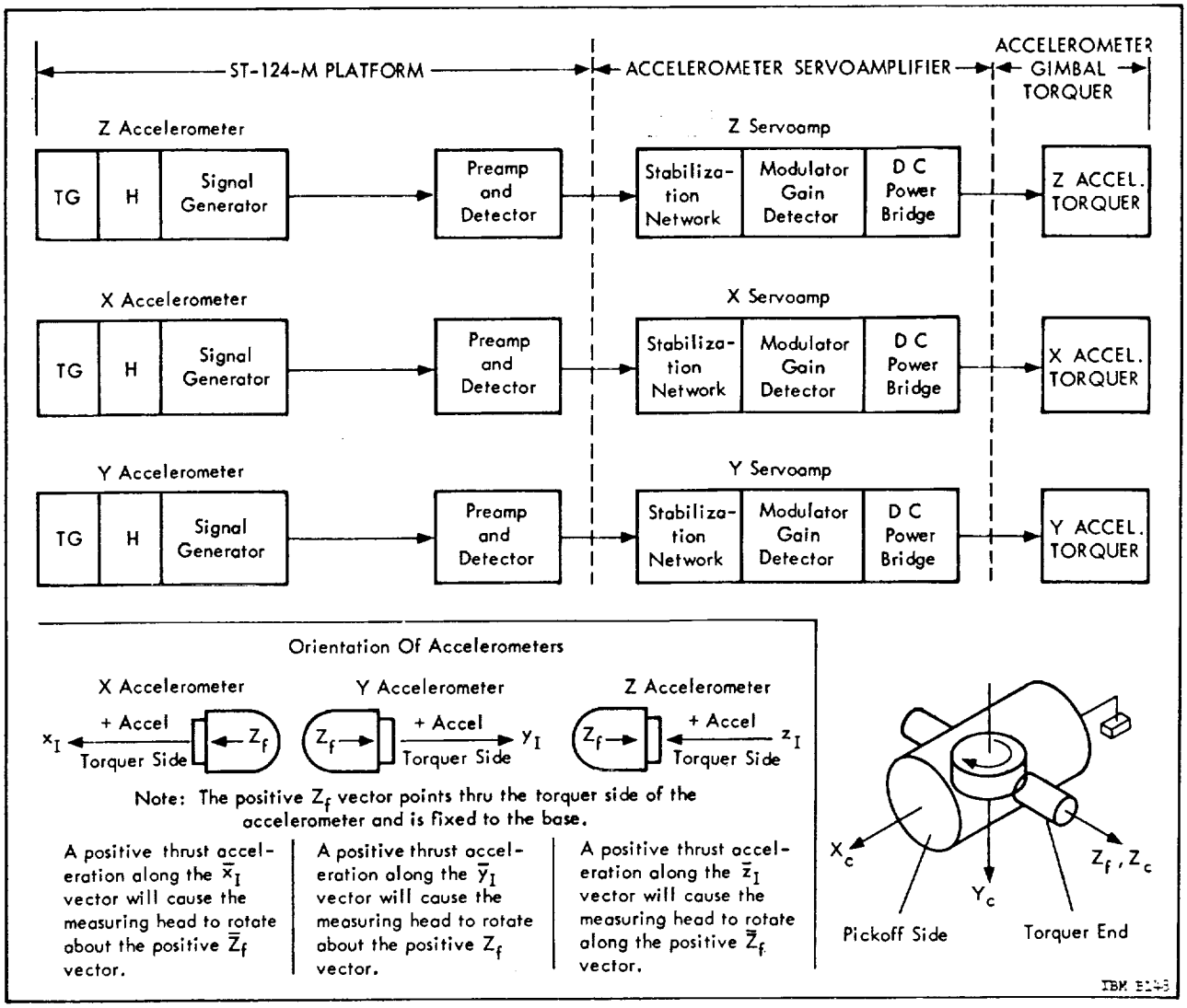

FIGURE 68. ACCELEROMETER SERVOLOOP, BLOCK DIAGRAM

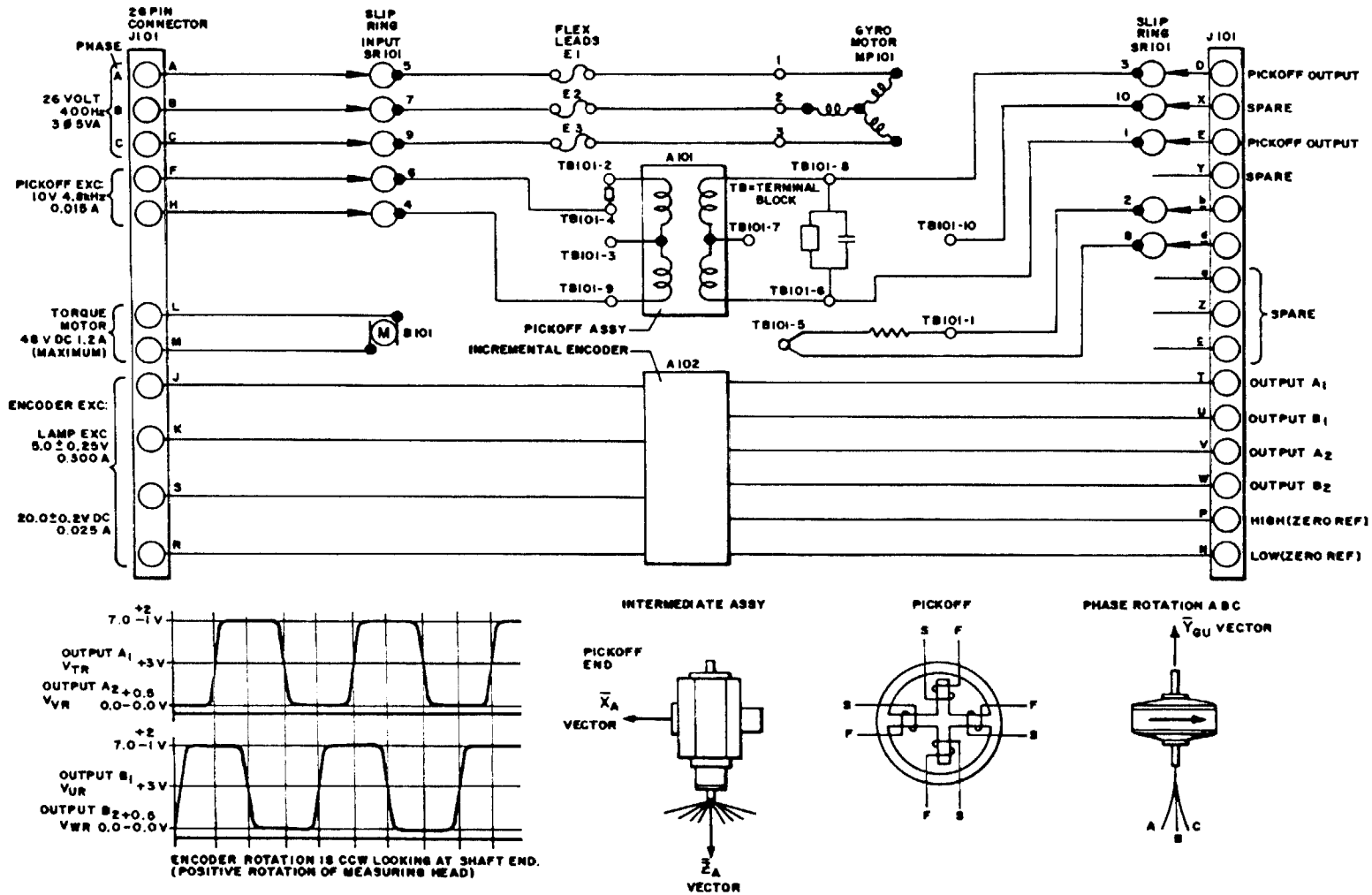

FIGURE 69. ACCELEROMETER, ELECTRICAL SCHEMATIC

Platform Alignment

Before launch, the platform gimbals are aligned as indicated in Figure 56. The Y axis of the platform coordinate system is vertical (parallel to the local gravity vector), and the X axis points into the direction of the flight azimuth (flight plane = XY plane). This platform alignment is carried out through an automatic system that is part of the electronic ground support equipment (ESE).

The vertical erection of the platform Y axis is accomplished by means of two gas bearing pendulums mounted on the inner stabilized gimbal. The pendulums are sensitive to gravity and measure the leveling in the direction of the X and Z axes. Figure 70 is a cutaway view of the pendulum. A slug floating in a gas bearing carries an iron core moving inside the coils of a differential transformer which generates the electrical error signal. The slug motion is damped by an exhaust orifice.

The error signals from the X and Z pendulums are transmitted to the ground support equipment where the proper control signals are generated. These signals are transmitted back to the torque generators of the X and Z gyros, respectively. Torquing of these gyros causes a rotation of their respective gimbals until the inner gimbal is leveled, i.e., the error signals from the pendulums become zero. A block diagram of the platform erection system is shown in Figure 71. The system keeps the inner platform gimbal leveled with an accuracy of ±3 arc seconds by tracking the local gravity vector, which changes direction with respect to inertial space, i.e., stabilized gimbal, while the vehicle on the launch pad rotates with the earth. The rate of change of the gravity vector is a function of the earth's angular velocity and the latitude of the launch site.

The azimuth alignment system rotates the erected platform until the X coordinate axis (sensitive axis of the X accelerometer) points into the direction of the desired launch azimuth. This is achieved by an optical system using a theodolite located about 200 m (700 ft) from the vehicle base and two prisms mounted to the stabilized platform gimbal (Fig. 72). One prism is fixed to the stabilized gimbal with its porro edge parallel to the platform X axis. The second prism can rotate about the Y axis with respect to the stabilized gimbal, whereby the porro edge stays parallel to the XZ plane. It is driven through a gear train of 10^5:1 by a servomotor (mounted to the stabilized gimbal) which is controlled from the theodolite equipment. The angular position of the movable prism with respect to the stabilized gimbal is measured by a 25:1 dual speed synchro transmitter.

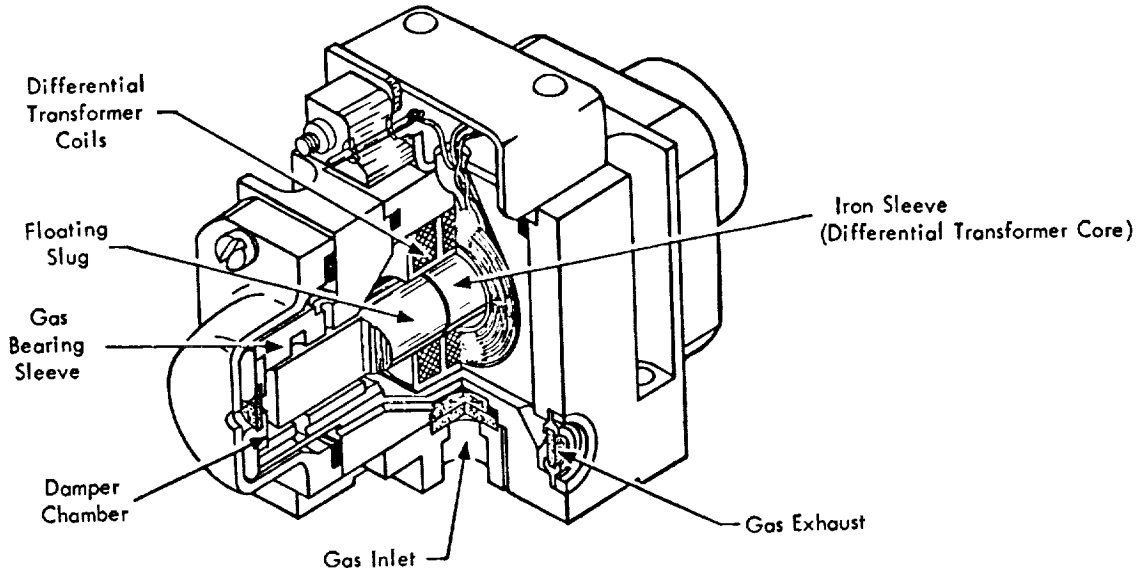

FIGURE 70. GAS-BEARING PENDULUM, CUTAWAY VIEW

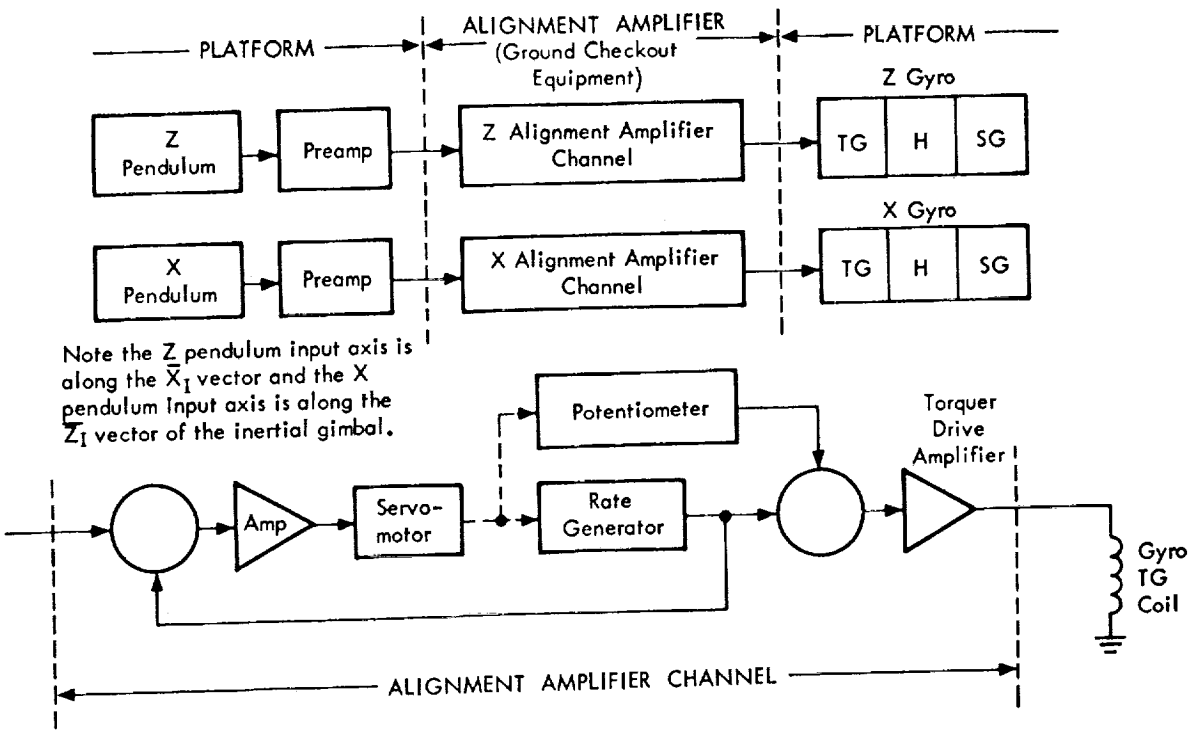

FIGURE 71. PLATFORM ERECTION SYSTEM, BLOCK DIAGRAM

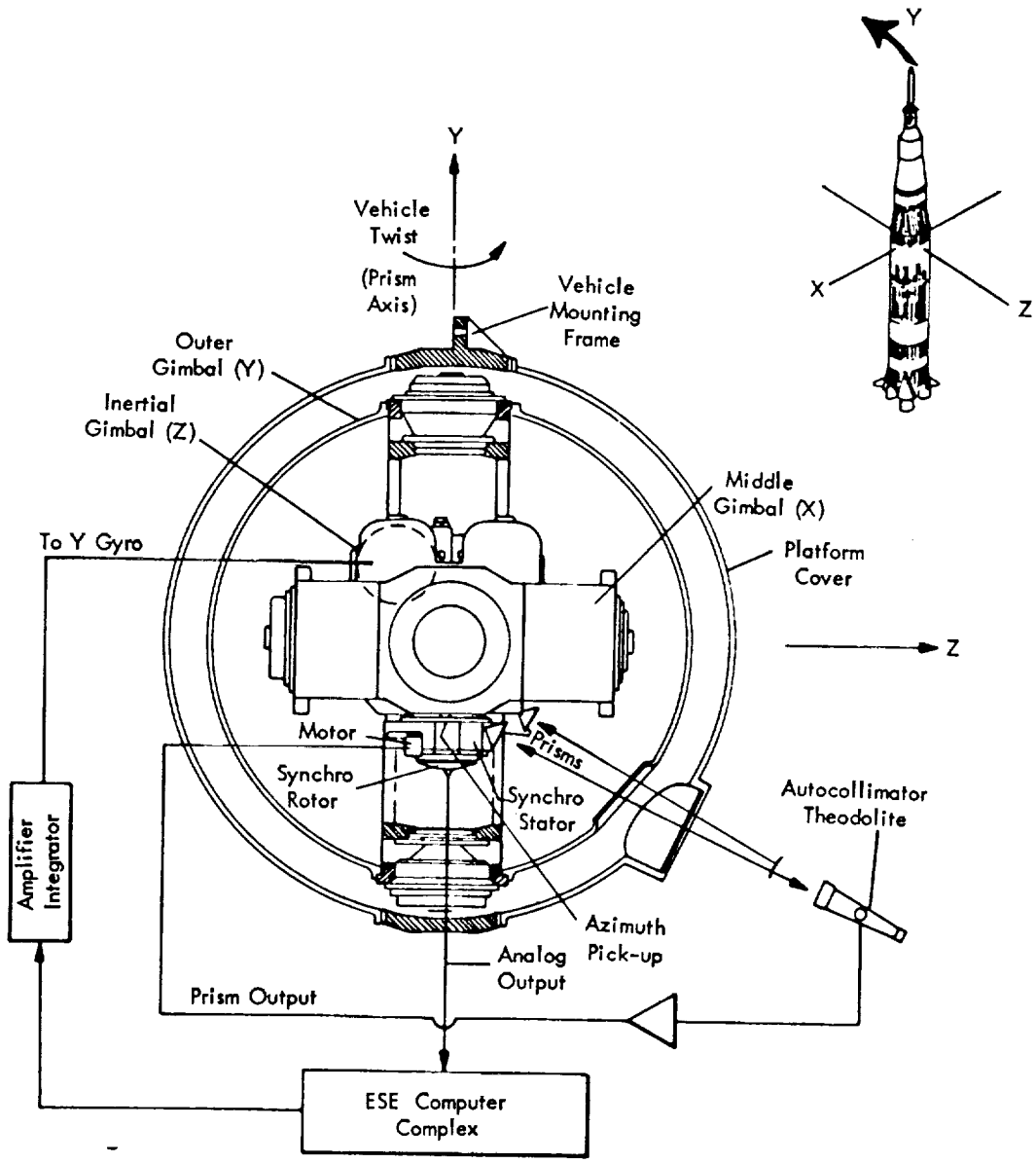

FIGURE 72. PLATFORM AZIMUTH ALIGNMENT SYSTEM

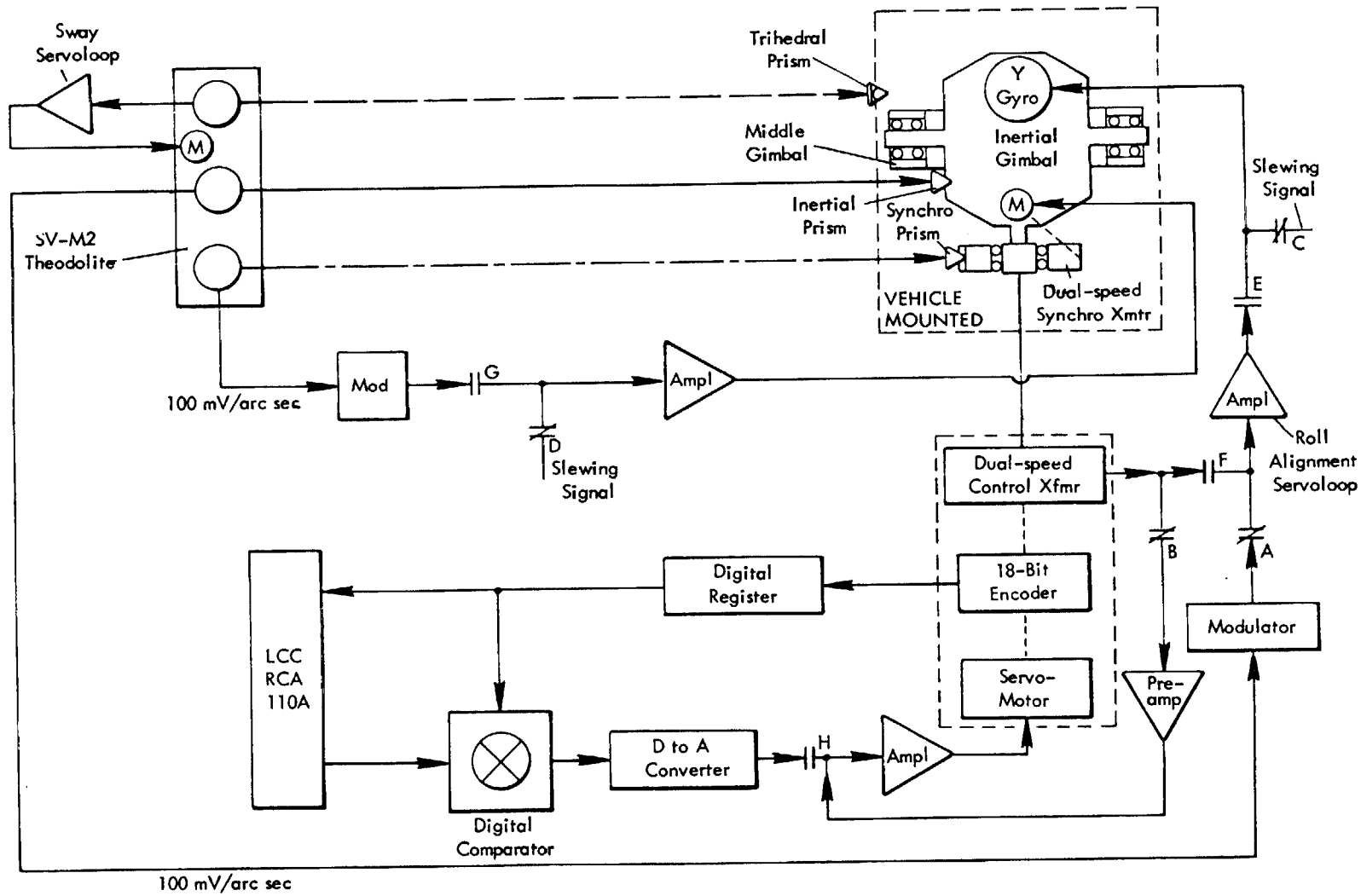

FIGURE 73. PLATFORM AZIMUTH ALIGNMENT SYSTEM, BLOCK DIAGRAM

The azimuth laying scheme is indicated in Figure 73. The theodolite transmits a light beam to each prism on the platform and receives the beam reflected back to the theodolite. Any angular deviation between the transmitted and received light beam is transformed into the control signal which is applied to the Y gyro torquer and synchro prism servo, respectively. In this manner, the fixed prism is rotated with the inner gimbal through the roll servoloop until the light beams coincide in the theodolite. The synchro prism is aligned in a similar way through the servomotor. The light beams to both prisms are parallel and define the baseline azimuth, which serves as a reference for the launch azimuth. This reference azimuth angle is transmitted from the dual speed synchro transmitter to the 18-bit digital encoder, and the corresponding digital value is stored in the LCC.

The X axis of the platform coordinates must now be aligned with the launch azimuth (desired flight plane). This requires a continuous rotation of the inner gimbal about the Y axis because of earth rotation and because the launch azimuth is a function of launch time. The LCC continuously computes the required azimuth angle and compares its value with the stored baseline azimuth angle. The difference value drives, through the servomotor, the 18-bit shaft encoder to the proper position; and the resulting error signal from the dual speed transformer is applied to the roll (Y) servoloop, which rotates the inner gimbal and thereby aligns the X axis with the azimuth commanded by the LCC. The servo prism is held in its original position (reference position). The azimuth laying error is less than ±20 arc seconds.

The light beams generated by the theodolite are in the infrared region using two frequency bands for the fixed prism and servo prism. Translatory motions of the vehicle are taken into account by a trihedral prism fixed to the vehicle and the connected servo system at the theodolite.

LAUNCH VEHICLE DATA ADAPTER AND DIGITAL COMPUTER [17]

General Description

The LVDA and the LVDC together represent a digital computer system. The LVDA/LVDC system performs computations and data processing in the Saturn astrionics system for the following main operations:

1. Prelaunch checkout of the vehicle

2. Navigation, guidance, and attitude control of the vehicle

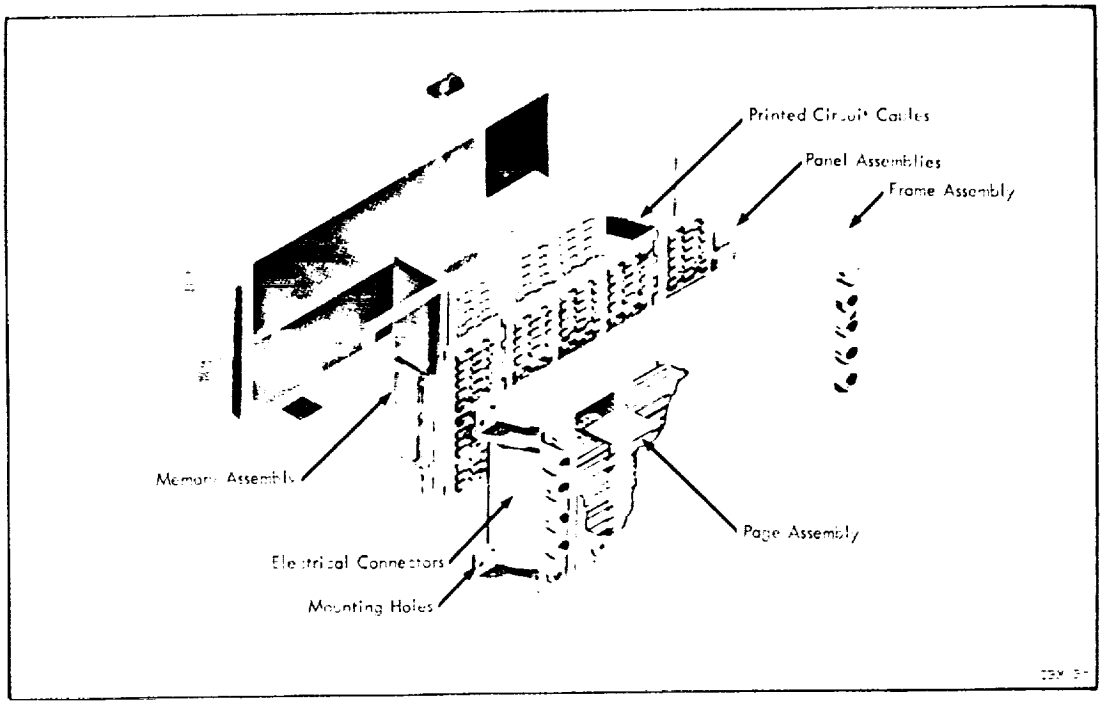

FIGURE 74. LAUNCH VEHICLE DIGITAL COMPUTER, EXPLODED VIEW

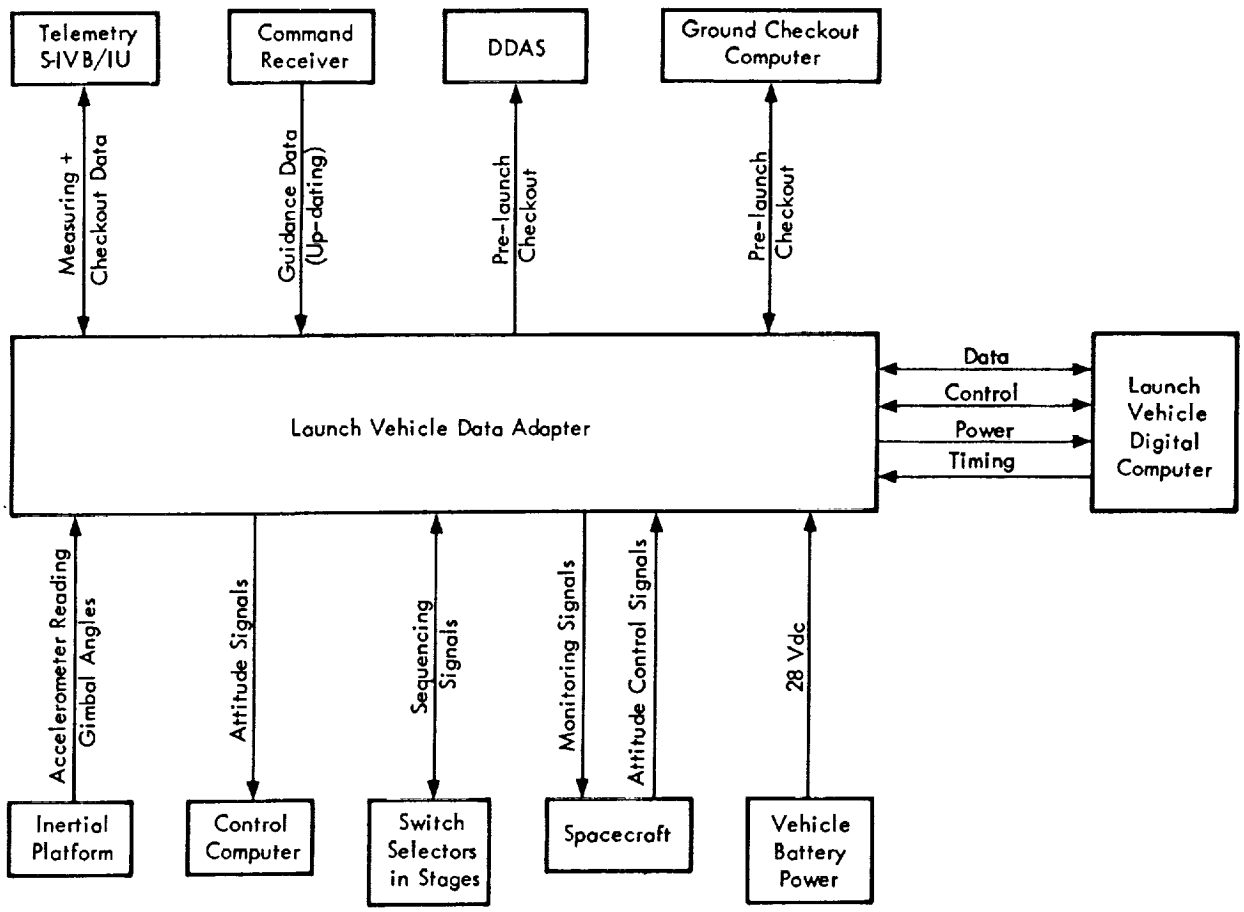

FIGURE 75. CONNECTIONS BETWEEN THE DIGITAL COMPUTER, DATA ADAPTER, AND ASTRIONICS SYSTEM

3. Flight sequence control

4. Orbital checkout of vehicle systems.

The LVDA and the LVDC are enclosed in two boxes mounted on supporting plates in the IU. The magnesium lithium frames of both units contain channels for circulation of the cooling fluid from the IU environmental control system. An exploded view of the LVDA and the LVDC is shown in Figure 74. Microminiature packaging techniques are used to a large extent. Unit logic devices consisting of ceramic wafers (7.5 x 7.5 mm) with deposited wiring, resistors, and attached semiconductor chips are mounted on an interconnecting board (page assembly).

The LVDA serves as an input/output device for the LVDC and as a central point for the signal flow between various equipment and subsystems of the IU. The LVDC contains the logic circuits, memory, and timing system to perform the arithmetic operations required for computations. The interconnections between the LVDA/LVDC and other equipment of the astrionics system are indicated in Figure 75.

Double and triple redundant circuitry is used in the LVDA and LVDC to obtain high reliability.

Launch Vehicle Data Adapter (LVDA)

The LVDA controls the signal flow between the LVDC and other equipment of the astrionics system. The functions of the LVDA include converting signals (e.g., analog to digital and digital to analog), changing the format of digital data (between parallel and serial), and providing temporary storage of information (in registers and delay lines) as a buffer between the LVDC and other equipment. A simplified block diagram of the LVDA is given in Figure 76 and characteristic data are listed in Table XIII.

Data transfer between the LVDA and LVDC is in serial form with a rate of 512 kilobits per second. Data are transferred from the serializer (LVDA) to the accumulator in the arithmetic element of the LVDC and from there to the computer memory. Data are transmitted in opposite direction from the computer accumulator and memory to the computer data selector in the LVDA. Information transfer between LVDA and LVDC (in both directions) is initiated by a process input-output (PIO) instruction generated in the LVDC. This PIO instruction is accompanied by an address (9 bits in parallel) which specifies the register or location in the LVDA to or from which data are to be transferred.

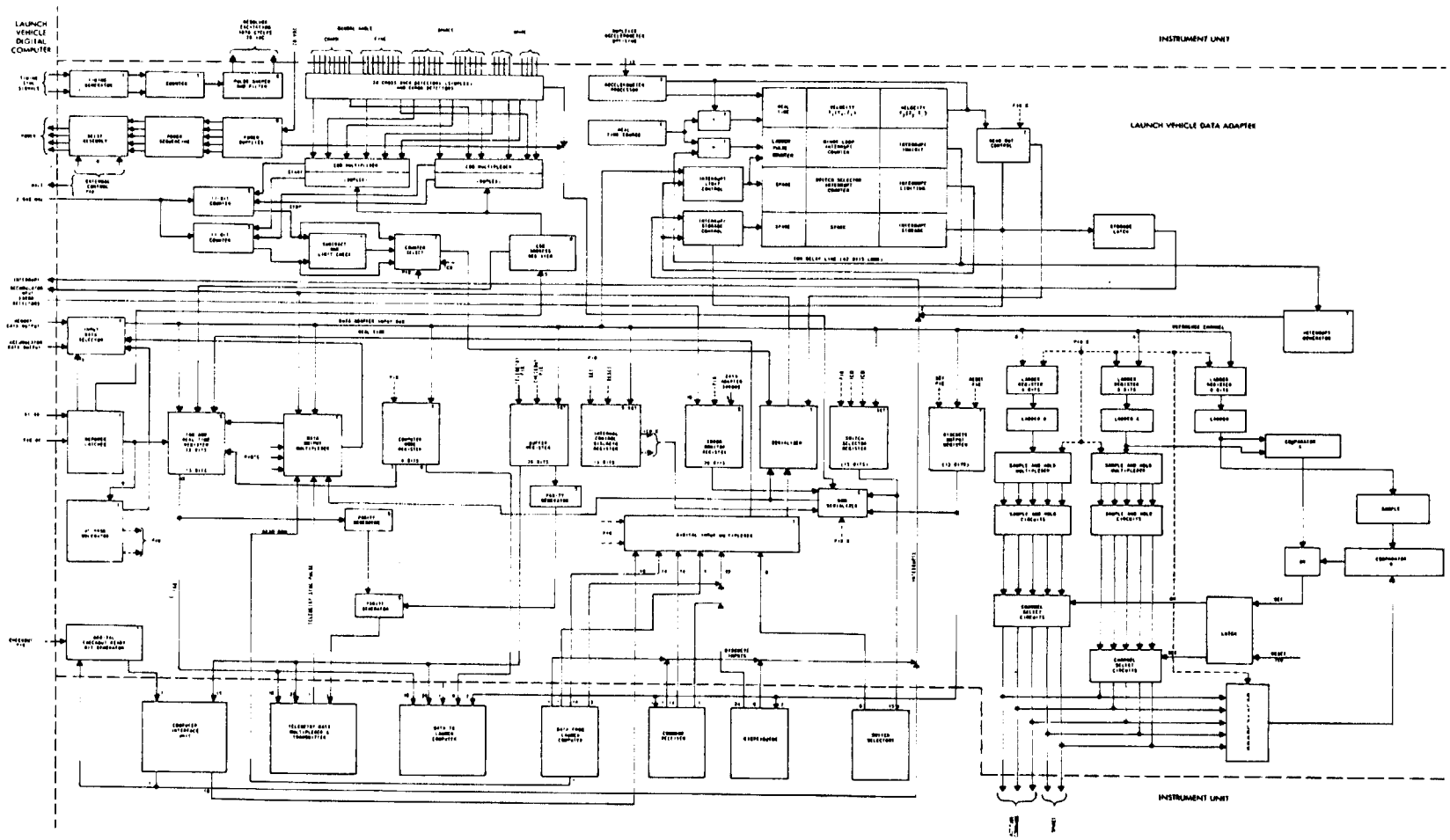

FIGURE 76. LAUNCH VEHICLE DATA ADAPTER, BLOCK DIAGRAM

TABLE XIII. DATA ADAPTER CHARACTERISTICS

Item	Description
Computer input-output rate	512 kHz serial
Power supplies	6 duplexed regulated dc supplies 2 ac resolver power supplies
Switch Selector	8-bit Switch Selector input 15-bit Switch Selector output
Discretes	7 interrupt inputs from the IU 13 discrete outputs 32 discrete inputs
Buffer register Tab register Mode register	26 bits 8 bits 6 bits } Provide communication with the RCA-110 Ground Control Computer, telemetry transmitter, and DDAS
Digital-to-analog converter	8 bits plus sign, 2.5 millisecond operation, three attitude commands, and two spare outputs
Analog-to-digital converter	Equivalent of 17 bits from a 2-speed resolver
Platform	4 two-speed gimbal angle resolver inputs
Spares	10 single-speed resolver inputs
Delay lines	3 four-channel delay lines for normal operations 1 four-channel delay line for telemetry operations (DOM)
Telemetry	
Command Receiver data transmitter	14 bits for input data 38 data and identification bits plus validity bit and parity bit
Computer Interface Unit	15 bits address plus a data request bit for output data 10 bits for input data plus data ready interrupt
Output to launch computer	41 data and identification bits for output data plus discrete outputs
Input from RCA-110 Ground Control Computer	14 bits for input data plus interrupt
Number of components (estimated)	38,000 silicon semiconductors, cermet resistors, and other special components
Reliability	0.99 probability of success for 250 hours of operation; uses TMR logic, duplex special circuits, duplex power supplies
Packaging	125 electronic page assemblies, plus special electronic assemblies
Weight	80 kilograms (214 pounds)
Volume	0.1 cubic meter (3.6 cubic feet)
Power (without computer)	320 watts

The triple redundant address generator in the LVDA decodes the address and initiates the specified operation. The information is transferred in words of 26 bits.

Three glass delay lines (in a redundant arrangement) are used in the LVDA for temporary storage of data to be transferred to the computer for accumulation of real time and accelerometer readings and for storage of interrupt signals. These delay lines provide input data to the LVDC in phase with the computer operation timing. The delay line operation is synchronized by timing signals from the LVDC. Circulation time of the delay line is equal to the basic computation cycle (82 μs). The delay line can store twelve 14-bit words (four channels time shared). Information is transferred from the delay line through the serializer to the LVDC upon receipt of a PIO instruction.

The LVDA can interrupt the computer operation to process higher priority data or when data from external sources are ready to be processed (e.g., data transmitted from a ground station through the IU command system). Interrupt signals from 12 sources can be stored in the interrupt register (delay line) of the LVDA (9 of these interrupt signals are generated external to the LVDA). An interrupt signal (1 bit) received by the LVDA is stored in the proper time slot in the delay line, and the LVDA sends a signal to the LVDC indicating that an interrupt signal has been received. The LVDC then reads the interrupt register to determine the type of interrupt and starts operation of the proper interrupt subroutine. No further interrupt can occur until this subroutine is completed.

The LVDA contains six duplex power supplies (dc-to-dc converters) which provide regulated dc power from the vehicle 28 Vdc supply for the LVDA and LVDC. In addition, the 1016 Hz excitation power for the platform resolvers is generated in the LVDA from the LVDC timing signals. Timing signals from the computer synchronize the operation of the LVDA.

The error monitor register (26 bits) in the LVDA stores signals from the disagreement detectors in the triple modular redundant circuitry of the computer logic. This information is transmitted through the data output multiplexer to the ground for error monitoring.

The LVDA provides discrete output signals to control certain vehicle functions not controlled by the switch selectors (such as reset of the IU command decoder and data request to the computer interface unit). The discrete control signals are stored in the triple redundant 13-bit discrete output register of the LVDA. The activation of these signals is accomplished by a PIO instruction.

The LVDA can receive 32 discrete input signals through the digital input multiplexer (e.g., interrupt signals from the IU command system, computer interface unit, and various discretes from the control distributor indicating flight events). These discrete input signals are not stored in the LVDA but are combined into 24-bit and 8-bit words read periodically by the LVDC (as requested by PIO instructions).

The 15-bit digital code controlling the switch selector operation is stored in the switch selector register of the LVDA. This register is loaded by the LVDA when switch selector operation is required (PIO instruction). The feedback signal from the switch selector (8-bit complement of the transmitted code) is read through the digital input multiplexer into the LVDC for comparison with the original code. The switch selector register contains triple redundant circuits.

Information to be transmitted from the LVDA/LVDC to the telemetry system and DDAS, the computer interface unit, and the launch control computer is stored in the 26-bit buffer register. This information is transferred in parallel from the buffer register to the digital data multiplexer of the telemetry system (26 bits), to the launch control computer (26 bits), and to the computer interface unit (15 bits).

The information transferred to the telemetry data multiplexer consists of 40 bits in parallel including 26 bits from the buffer register, 13 bits from the tag and real time register, and one parity bit. The 13 bits from the tag and real time register (which are sent also to the launch control computer) contain eight identification bits for the information in the buffer register. The remaining five bits are real time (obtained from the real time counter) when the buffer register has been loaded by the LVDA data output multiplexer. When the buffer register has been loaded with information from the LVDC, those five bits are composed of three mode bits (from the mode register), one validity bit, and one address bit. The information in the 6-bit mode register defines the mode of computer operation. All six mode bits are transmitted to the launch control computer during preflight checkout while only three bits are transferred to the tag and real time register and transmitted together with computer data to the telemetry digital multiplexer.

Since operation of the telemetry data multiplexer is not synchronized with the LVDA, timing information may be read into the telemetry data multiplexer from the buffer and tag/real time registers while those registers are being loaded. This would yield invalid output data. To indicate that the information from the registers is valid, a validity bit is added to the telemetry word (in the tag/real time register).

To check errors in telemetry (from the LVDC/LVDA) received on the ground, a parity bit is included in the 40-bit telemetry word. Odd parity is used, i.e., all "one bits" of word plus the parity are an odd number. The parity generators adjust the parity for each sub word (from the buffer register and tag/real time register) and then generate the parity for the complete telemetry word only.

Information from the launch control computer, computer interface unit, control distributor, EDS distributor, IU command decoder, and switch selector (feedback) is made available to the LVDC through the digital input multiplexer. Data to be transmitted to the LVDC are selected by the 9-bit address accompanying the PIO instruction. The data are serialized in the digital input multiplexer. In addition, real time gating signals from delay line and crossover detector counters to the LVDC are temporarily stored in the digital input multiplexer.

During orbital checkout, the LVDC monitors data from the measuring and telemetry system. To obtain these data, a 15-bit address is sent from the LVDC through the buffer register to the computer interface unit. When the buffer register is loaded, a "ready bit" is transmitted from the LVDA to the computer interface unit. The 15-bit address selects through an address comparator the desired information out of the telemetry data flow and stores the selected data in a 10-bit register in the computer interface unit. When the 10-bit register is loaded, an interrupt signal is transmitted to the LVDC. The LVDC then reads the information from the computer interface unit through the digital input multiplexer.

The navigation, guidance, and control signal flow through the LVDA/LVDC has been described earlier. The square wave (gray code) signals from the accelerometer encoders (optisyns) are fed into the accelerometer signal processor for conversion into digital numbers used in guidance computations. Accumulated velocity readings are stored in the LVDA delay line before transfer to the LVDC. The gimbal resolver signals from the stabilized platform (two phase analog signals) are transformed into digital readings by crossover detectors and counters. These values are used in the guidance computations, which result in digital signals for the desired vehicle attitude. These signals are then converted in the ladder networks into analog signals, which are fed as attitude commands into the analog control computer of the IU.

Launch Vehicle Digital Computer

The LVDC is a general purpose computer controlled by a stored program. Data are processed using complement-of-two arithmetic. The computer can be subdivided into the following functional elements as indicated in Figure 77:

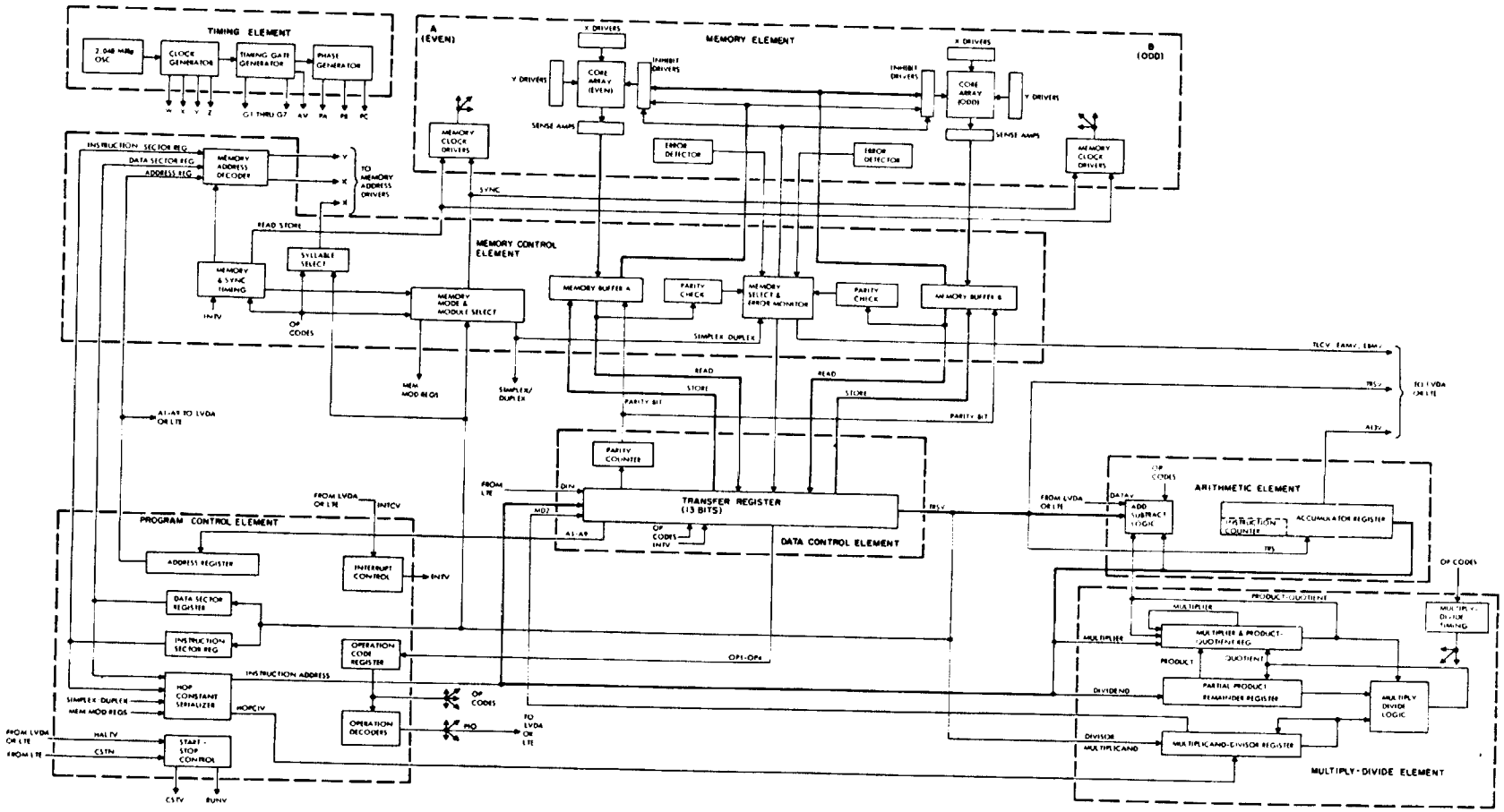

FIGURE 77. COMPUTER FUNCTIONAL DIAGRAM

timing, memory, memory control, data control, program control, arithmetic, multiply/divide, and voting. The characteristics of the LVDC are shown in Table XIV.

For data and instructions, the LVDC uses a 28-bit word consisting of two syllables of 14 bits each (Fig. 78). The parity bit of each syllable is used for error check when information is transferred to or from the memory. The remaining 26 bits of a word are available as information bits (binary numbers or instructions). Binary numbers have a sign bit (S) and 25 magnitude bits. Instruction words (13 bits) are composed of an address (9 bits) and an operation code (4 bits).

The LVDC uses a random access ferrite-core memory for storage of data and program instructions. The memory is composed of modules, each having a storage capacity of 4096 words (28 bits each). A maximum of eight modules may be used providing storage for 32,768 words. To increase reliability, the memory may be operated in duplex mode with pairs of modules containing the same data. Readout errors in one module are then corrected using data from the second module of the pair. While duplex operation increases reliability, the storage capacity is cut in half. Temporary storage exists in shift registers (delay lines and latches) and static latch registers.

Transfer of information to or from the memory is controlled by the memory control element which provides buffer storage for the information flow between memory and computer. The functions of the memory control element include address decoding for selection of memory locations, error monitoring (parity check), and error correction (for duplex operation). The data flow to and from the memory passes through the memory buffer registers. The data transfer between memory and transfer register is in parallel (13 bits). Two memory cycles are required to transfer a complete computer word (26 bits). The data flow between the transfer register and other computer units (e.g., LVDA, arithmetic element, multiply-divide element, program control element) is in serial form.

The computer program is stored in the memory as a sequence of instructions. The program control element controls the computer operation according to these stored instructions. The program control element decodes the instruction words (in the address register and operation code register), selects the corresponding memory locations to obtain the required data, and initiates the processing of the data as specified by the instructions. The program is sequenced through the instruction counter, which stores the memory address of the next instruction to be executed. After completion of an operation,

TABLE XIV. LAUNCH VEHICLE TMR COMPUTER CHARACTERISTICS

Characteristic	Description
Type	Stored program, general purpose, serial, fixed-point, binary
Clock	2.048 MHz clock, 4 clocks per bit, 512 kilobits per second
Speed	Add-subtract and multiply-divide simultaneously
Add time, accuracy	82 us, 26 bits
Multiply time, accuracy	328 us, 24 bits
Mult-hold time, accuracy	410 us, 24 bits
Divide time, accuracy	656 us, 24 bits
Memory	Random access toroidal core
Storage Capacity	Up to a maximum of 32,768 twenty eight-bit words in 4096-word modules
Word Length	Memory word 28 bits: 2 instructions may be stored in one memory word
Data	26 bits plus 2 parity bits
Instruction	13 bits plus 1 parity bit
Input/Output	External: computer-programmed I/O control: external interrupt provided
Component Count*	40,800 silicon semiconductors and film resistors (cermet). Up to 917,504 toroid cores
Reliability*	0.996 probability of success for 250 hours using TMR logic and duplex memory modules
Packaging	Structure constructed of magnesium-lithium material, designed to house 73 electronic pages and 8 memory modules
Weight*	30 kg (75.0 lbs) (4 memory modules)
Volume*	0.07 meters^3 (2.4 feet^3)
Power*	150.0 watts (4 memory modules)

*Figures given here are estimated values

Bit Position	Syllable 0														Syllable 1													
	1	2	3	4	5	6	7	8	9	10	11	12	13	Par	1	2	3	4	5	6	7	8	9	10	11	12	13	Par
Numeric Designation	13	14	15	16	17	18	19	20	21	22	23	24	25		S	1	2	3	4	5	6	7	8	9	10	11	12	
Non-Numeric Designation	14	15	16	17	18	19	20	21	22	23	24	25	26		1	2	3	4	5	6	7	8	9	10	11	12	13	

Data Word Layout

Bit Position	Syllable 0														Syllable 1													
	1	2	3	4	5	6	7	8	9	10	11	12	13	Par	1	2	3	4	5	6	7	8	9	10	11	12	13	Par
Designation	A8	A7	A6	A5	A4	A3	A2	A1	A9	OP4	OP3	OP2	OP1		A8	A7	A6	A5	A4	A3	A2	A1	A9	OP4	OP3	OP2	OP1	
Use	Operand Address									Operation Code					Operand Address									Operation Code				

Instruction Word Layout

FIGURE 78. WORD ORGANIZATION

the content of the instruction counter is incremented by one to obtain the address of the following instruction. A change in this step-by-step sequence can be introduced by a HOP constant (in the program) which specifies a new address.

The normal program sequence can be interrupted to process data of higher priority by an interrupt signal from the LVDA. After execution of the interrupt operation, the computer resumes its normal program at the point where it had been interrupted. The interrupt process is accomplished in such a manner that no interference with the normal program or loss of data occurs.

The computational units of the LVDC are the arithmetic unit (which performs addition, subtraction, shifts, and logic extractions) and the multiply/divide element (which multiplies and divides by iterative processes). Both elements operate independently and may be used simultaneously. Ultrasonic glass delay lines provide short term storage required in the above operations.

The timing section of the LVDC supplies timing signals for control and synchronization of the computer operation, except for the memory element which generates its own timing signals. A computer cycle is approximately 82 μs. This is the time required in the LVDC to read, decode, and execute an instruction.

The LVDC uses triple redundant logic circuitry consisting of three identical channels. Each channel is subdivided into seven modules: computer timing, transfer register, arithmetic, multiply/divide, operate code, memory address register and decoder, memory timing, and parity check. The outputs from corresponding modules are compared in voter circuits as indicated in Figure 79. The voter transfers the output of two modules which have the same output to the next module. If one module fails, the following module will receive a correct input. Approximately 13 output signals from each module are voted. Signals from the disagreement detectors are combined and sent to the telemetry buffer register in the LVDC for failure monitoring before and after launch.

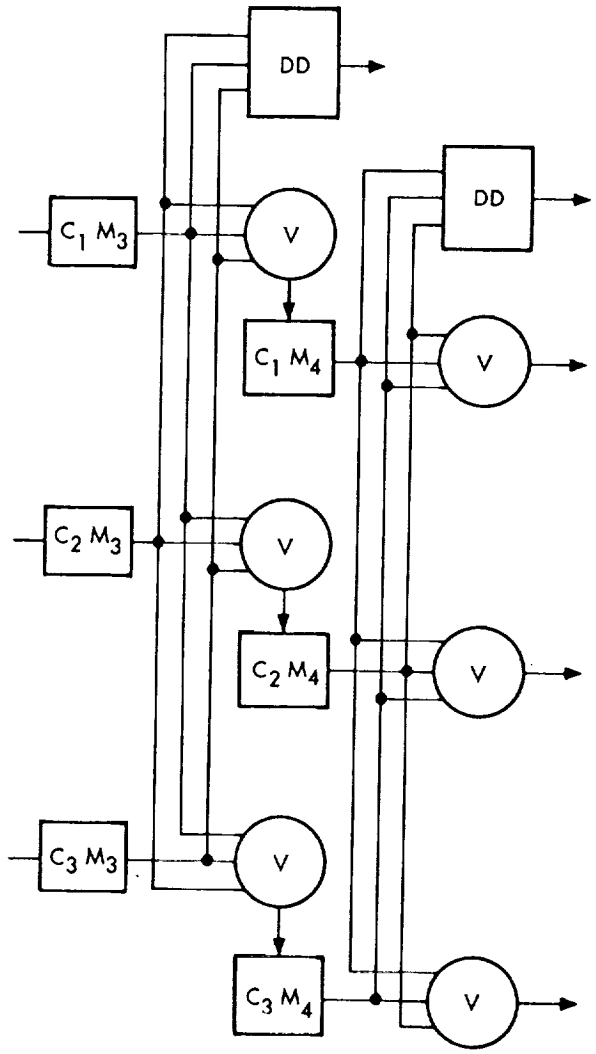

C_i - i^{th} Channel

M_j - j^{th} Module

V - Voter

DD - Disagreement Detector

FIGURE 79. TRIPLE MODULAR REDUNDANCY

REFERENCES

1. Geissler, E. D.; and Haeussermann, W.: Saturn Guidance and Control. Astronautics, Vol. 7, No. 2, February 1962.

2. Haeussermann, W.; Moore, F. B.; and Gassaway, G. C.: Guidance and Control Systems for Space Carrier Vehicles. Astronautical Engineering and Science, pp. 160-177, McGraw-Hill Book Co., Inc., 1963.

3. Haeussermann, W.; and Duncan, R. C.: Status of Guidance and Control Methods, Instrumentation, and Techniques as Applied in the Apollo Project, presented at the Lecture Series on Orbit Optimization and Advanced Guidance Instrumentation. Advisory Group of Aeronautical Research and Development, North Atlantic Treaty Organization, Duesseldorf, Germany, October 21-22, 1964.

4. Haeussermann, W.: Guidance and Control of Saturn Launch Vehicles. AIAA Paper No. 65-304 presented at AIAA Second Annual Meeting, San Francisco, July 1965.

5. Dabbs, J. R.: Inflight Gravitational Computation. NASA TM X-53061, September 6, 1964.

6. Chandler, D. C.; Horn, H. J.; and Martin, D. T.: An Iterative Guidance Scheme and Its Application to Lunar Landing. MTP-AERO-63-11, February 6, 1963.

7. Smith, I. E.; and Deaton, E. T., Jr.: An Iterative Guidance Scheme for Ascent to Orbit (Suborbital Start of the Third Stage). MTP-AERO-63-44, May 29, 1963.

8. Cooper, F. D.: Implementation of Saturn V Guidance Equations for Lunar Missions from Earth Parking Orbit. Presented at the 12th Flight Mechanics, Dynamics, Guidance and Control Panel Meeting, Manned Spacecraft Center, Houston, Texas, April 13-14, 1965.

9. Hoelker, R. F.: Theory of Artificial Stabilization of Missiles and Space Vehicles with Exposition of Four Control Principles. NASA Technical Note D-555.

10. Thompson, Z.; and Alcott, R. J.: Apollo Booster Flight Control System Integration. Presented at the SAE A-18 Committee Meeting, Houston, Texas, December 11-13, 1963.

11. Kalange, M. A.; and Alcott, R. J.: Saturn V S-IC Stage Engine Gimbal Actuation System. Society of Automotive Engineers, Aerospace Fluid Power Systems and Equipment Conference, Los Angeles, California, May 18-20, 1964.

12. Schultz, D. N.: Space Vehicle Attitude Control Using Pseudo Rate Modulation. Astrionics Research and Development Report No. 2, NASA TM X-53044, May 1, 1964.

13. Powell, J. T., Jr.: Saturn Flight Instrumentation. ISA Journal, Vol. II, No. 11, pp. 51-63, November 1964.

14. Lowery, H. R.: Saturn Instrument Unit Command System. NASA TM X-53350, October 10, 1965.

15. Thomason, H. E.: A General Description of the ST-124-M Inertial Platform System. NASA TN D-2983, September 1965.

16. Haeussermann, W.: Inertial Instruments with Gas Bearings. Kreiselprobleme Gyrodynamics, IUTAM Symposium Celerina, Springer-Verlag, Berlin 1962 (Edited by Hans Ziegler).

17. Saturn V Launch Vehicle Digital Computer, Laboratory Maintenance Instructions, Vols. I and II. International Business Machines Corporation, November 1964.

NASA TM X-53384 APPROVAL February 1, 1966

THE ASTRIONICS SYSTEM OF
SATURN LAUNCH VEHICLES

By Rudolf Decher

The information in this report has been reviewed for security classification. Review of any information concerning Department of Defense or Atomic Energy Commission programs has been made by the MSFC Security Classification Officer. This report, in its entirety, has been determined to be unclassified.

This report has also been reviewed and approved for technical accuracy.

J. Mack

J. MACK
Chief, Systems Engineering Office

W. Haeussermann

W. HAEUSSERMANN
Director, Astrionics Laboratory