N7810117

SYSTEMS TECHNOLOGY, INC.

2672 BAYSHORE FRONTAGE ROAD • MOUNTAIN VIEW, CALIFORNIA 94043 • PHONE [415] 961-4674

Technical Report No. 1097-1

THE DETERMINATION OF SOME REQUIREMENTS FOR A HELICOPTER FLIGHT RESEARCH SIMULATION FACILITY

(NASA-CR-152066) THE DETERMINATION OF SOME REQUIREMENTS FOR A HELICOPTER FLIGHT RESEARCH SIMULATION FACILITY (Systems Technology, Inc., Mountain View, Calif.) 59 p HC A04/MF A01 CSCL 14B G3/09

N78-10117

Unclas 52048

J. B. Sinacori

September 1977

Contract NAS2-9421

National Aeronautics and Space Administration
Ames Research Center
Moffett Field, CA 94035

NOV 1977
RECEIVED
NASA STI FACILITY

ACKNOWLEDGEMENT

The author gratefully acknowledges the contributions of Messrs. David L. Key and Richard S. Dunn. Their guidance and review of the motion and visual requirements were valuable and stimulating.

Preceding page blank

TABLE OF CONTENTS

SECTION		Page
1.0	INTRODUCTION	1
	1.1 Scope of Effort	1
	1.2 Outline of Report	1
2.0	MOTION SYSTEM REQUIREMENTS	2
	2.1 Outline of Methodology	2
	2.2 Postulated Washout Rules	3
	2.3 Supporting Experimental Effort	3
	2.4 Simple Uncoupled Estimates	10
	2.5 Coupled, Multi-Axis Estimates	12
	2.6 High-Frequency, Threshold, and Smoothness Criteria	15
3.0	VISUAL SYSTEM REQUIREMENTS	22
	3.1 TV Camera/Model Requirements	22
	3.2 Requirements Substantiating Data	22
4.0	RECOMMENDATIONS FOR FURTHER RESEARCH	37
	4.1 Motion System Definition	37
	4.2 Recommendations for Visual System Requirements Determination Research	37

APPENDIX I -- VISUAL DISPLAY SYSTEM REQUIREMENTS

LIST OF FIGURES

		Page
1	Motion Fidelity Versus Phase Lead and Gain at 1 rad/sec . . .	4
2	Drive Logic	5
3	Recovered Motion Parameters	16
4	Travels Used	17
5	Effective Pilot Time Delay (τ_{eff}) Versus Motion Drive Natural Frequency (ω_M)	20
6	Allowable Level Turn and Sidestepping Bank Angle Versus Speed for a Preview Time of 3 Seconds	25
7	Hypothetical Effects of Visual Acuity	31
8	Approximate Resolution for Various TV Systems Compared with the Eye in Terms of Object Minimum Angular Dimension	32
9	Detection and Recognition Ranges for Various Size Objects . .	33

LIST OF TABLES

1	Coefficient Values	8
2	Summary of FSAA Test Results	11
3	Uncoupled Estimates Motion Requirements	13
4	Coupled Multi-Axis Estimates of Motion Requirements	14
5	"Recovered" Motion	18
6	Motion Thresholds	21

SECTION 1.0

INTRODUCTION

1.1 SCOPE OF EFFORT

In response to the desires of the U. S. Army Air Mobility Research and Development Laboratory (AMRDL), a study was made to define some important requirements for a flight simulation facility to support Army helicopter development.

The requirements associated with the visual and motion subsystems of the planned simulator received the most attention as they tend to set the pace for the entire facility development.

The important motion simulation requirements addressed were those associated with a moving platform. The visual requirements related to the television-type of visual system where a camera and model are used to generate a dynamic scene.

1.2 OUTLINE OF REPORT

The second section of the report details the motion requirements study. The method used is presented together with the underlying assumptions and a description of the supporting data. The results are presented in a form suitable for use in a preliminary design.

The third section relates visual requirements associated with a television camera/model concept. The important parameters are described together with substantiating data and assumptions.

Section four describes research recommendations and is the result of recognizing that many of the requirements for both the motion and visual systems have little or no support other than "intuition." It is our conviction that the outlining of verification research aids in formulating the criteria sought for supporting the requirements.

SECTION 2.0

MOTION SYSTEM REQUIREMENTS

2.1 OUTLINE OF METHODOLOGY

The first method presented is used for determining the maximum acceleration, velocity, and position required of a motion base. The helicopter motions for specified tasks are taken from a fixed-base simulation of the particular helicopter and used as inputs to the driving logic for a generalized motion base. The coefficients of this logic are set according to rules agreed upon by several researchers working closely in this field. These rules attempt to relate engineering fidelity to driving logic performance and are based on both documented and undocumented experimental results.

The motion base drive logic of a flight simulator is an array of computations that take the vehicle's motions and calculate the simulator's motion. The computations are similar to the helicopter's motion computations except that additional functions are included. The purpose of these is to restrict the simulator's motion within practical bounds dictated by the motion generation facility. This usually makes the simulated motion a fraction of that for the helicopter. The restricting process, however, is constrained by the necessity to maximize the "motion fidelity." The choice of the coefficients in the logic, therefore, is critical to effective motion simulation.

The logic basically "washes out" the helicopter motions. This is done by filtering the motions such that the more rapid movements of shorter duration are passed but the slower ones of longer duration are not. As an unintentional consequence of the filtering process, the attenuated, slower motions are phase shifted ahead in time, and it is thought that phase lead and attentuation reduce fidelity. Just how this occurs is not well understood and, as an attempt to define this relationship, discussions

were held with several researchers (R. S. Shirley, R. S. Bray, and R. L. Stapleford) on motion simulation. The results are discussed below.

2.2 POSTULATED WASHOUT RULES

The rules adopted for this study are summarized in Fig. 1. Two plots are shown in this figure, one relating to the angular motions and the other to the translational ones. The angular "motion" means angular velocity while the translational "motion" means the specific (or apparent) forces. These quantities refer to the angular velocity at the pilot station and the apparent force acting on the pilot. The plot gives the expected fidelity as a function of the phase distortion and attenuation of the simulator angular velocity and specific force compared to those of the helicopter at a frequency of 1 radian/second. High fidelity means the motion sensations are close to those of visual flight (as perceived through the use of the visual display). Medium fidelity implies that the differences are perceptible but not objectionable to the pilot. Low fidelity means that the differences are very noticeable and objectionable because of a loss in performance or disorientation. Also shown on the plots are the relations offered by linear first and second order high pass filters with unity gain and break frequencies as shown.

To obtain the motion requirements for the desired level of fidelity, it is simply a matter of introducing the helicopter motions to a drive logic whose filter coefficients cause the phase distortion and attenuation shown in Fig. 1. This was done and the logic selected for use is a modified form of the NASA-Ames Research Center Flight Simulator for Advanced Aircraft (FSAA) logic as suggested by R. S. Bray and is shown in Fig. 2. Table 1 lists the coefficients for the four points shown in the plots.

2.3 SUPPORTING EXPERIMENTAL EFFORT

Since the postulated washout rules were only supported by researcher opinion, it was thought that some experimental verification was warranted. The FSAA became available on a "piggy-back" basis during the study, and three hours of testing were accomplished with a NASA research pilot flying a high performance helicopter simulation. The FSAA logic was set to

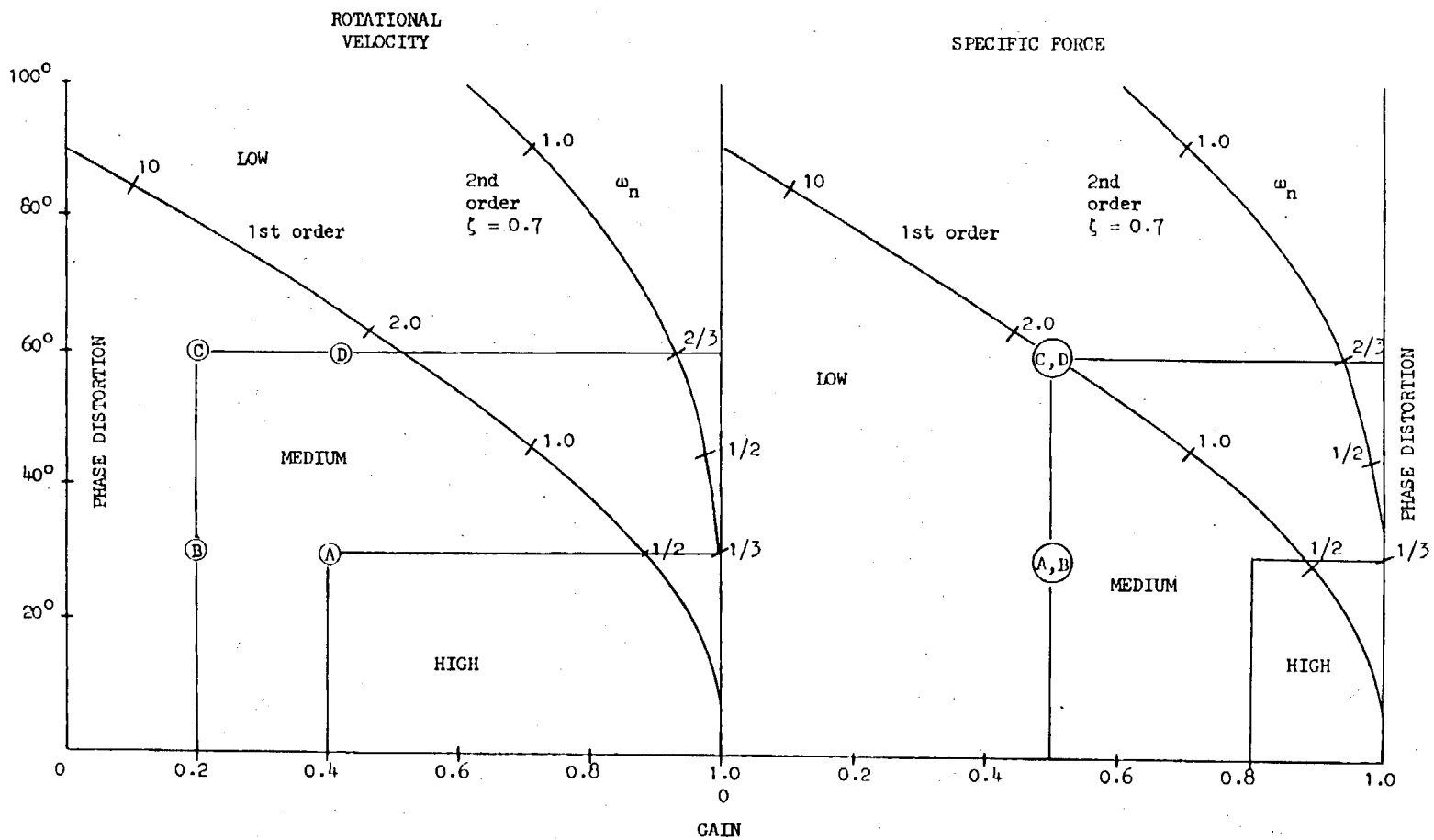

HIGH: Motion sensations are close to those of visual flight
MEDIUM: Motion sensation differences are noticeable but not objectionable
LOW: Differences are noticeable and objectionable, loss of performance, disorientation

Figure 1: Motion Fidelity Versus Phase Distortion and Gain at 1 rad/sec

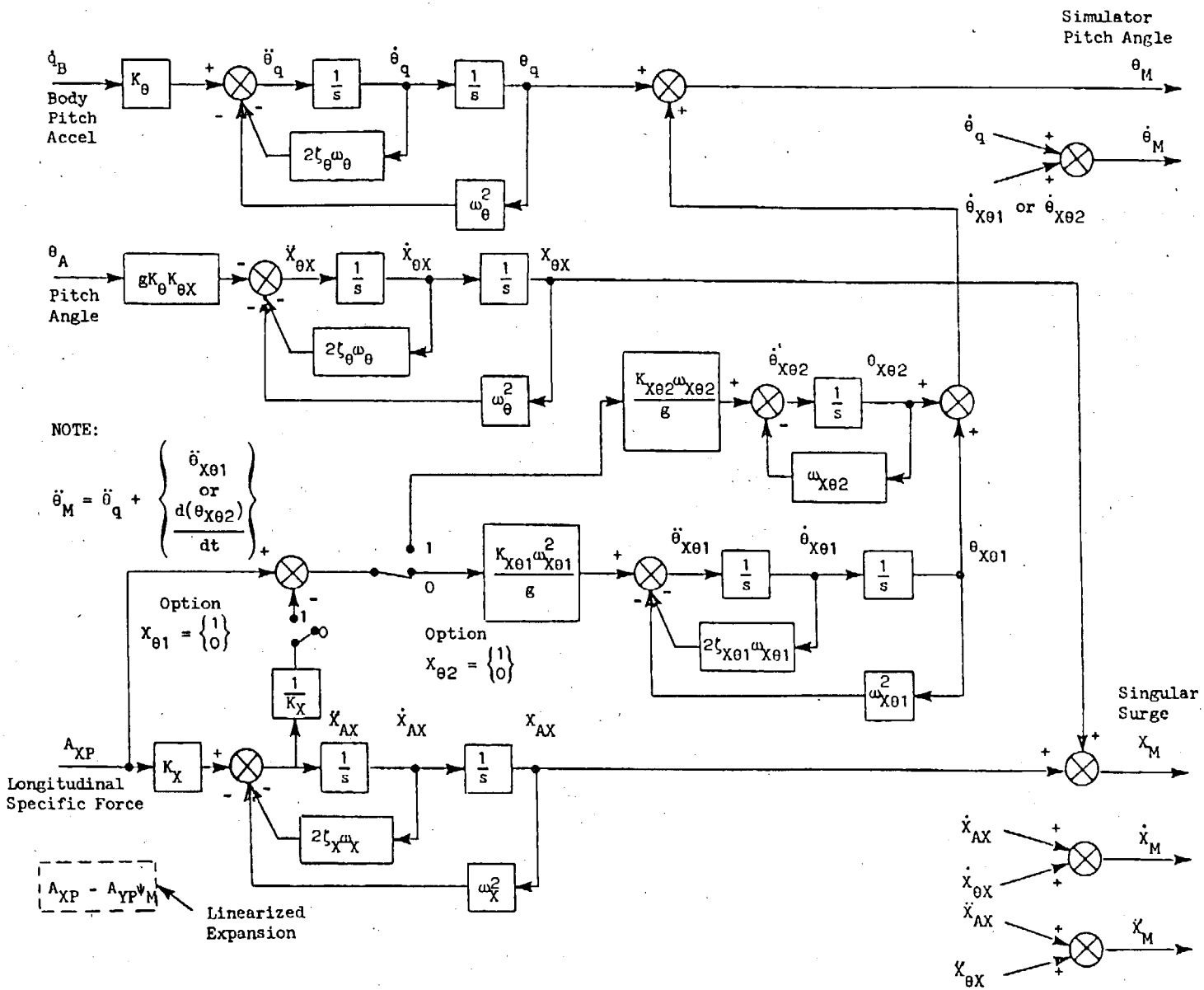

Figure 2: Drive Logic

a. Longitudinal Plane

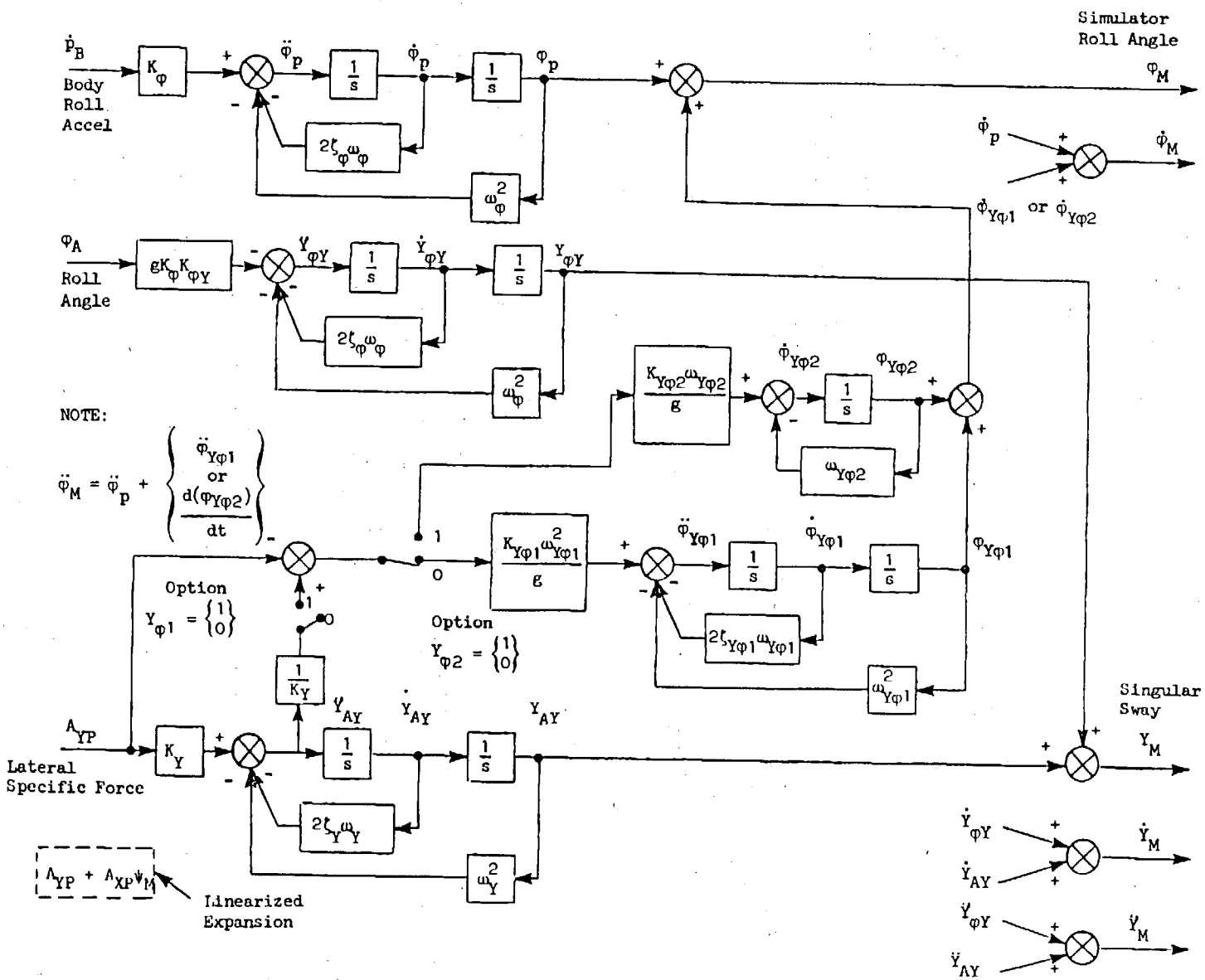

Figure 2 (Continued)

b. Lateral Plane

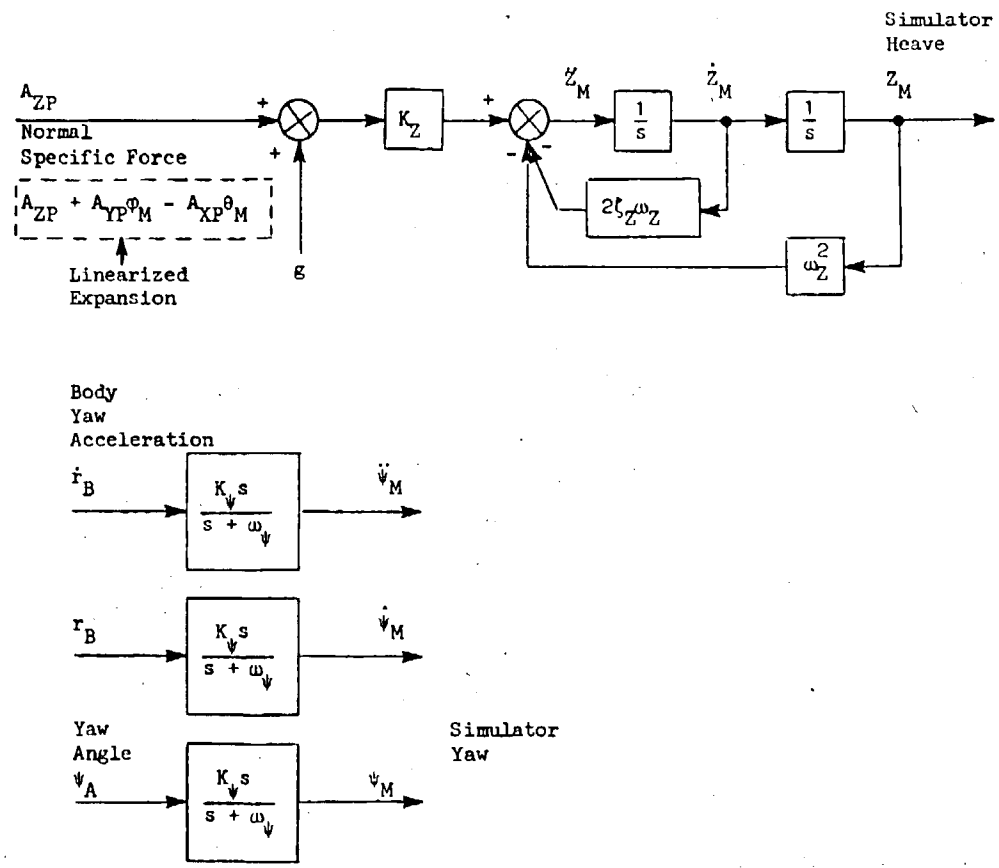

Figure 2 (Concluded)

Normal and Yaw Axes

TABLE 1

COEFFICIENT VALUES

	CASE / COEFFICIENT	A	B	C	D	
LONGITUDINAL PLANE	K_θ	0.4	0.2	0.22	0.4	
	ζ_θ	0.7	0.7	0.7	0.7	
	ω_θ	0.33	0.33	0.67	0.67	D1-0.6
	$K_{\theta X}$	1.0	1.0	1.0	1.0	D2-0.4
	K_X	0.51	0.51	0.53	0.53	D3-0.2
	ζ_X	0.7	0.7	0.7	0.7	D4- 0
	ω_X	0.75	0.75	0.75	0.75	
	$K_{X\theta 1}$	1.0	1.0	1.0	1.0	
	$\zeta_{X\theta 1}$	0.7	0.7	0.7	0.7	
	$\omega_{X\theta 1}$	1.0	1.0	1.0	1.0	
	$K_{X\theta 2}$	-	-	-	-	
	$\omega_{X\theta 2}$	-	-	-	-	
LATERAL PLANE	K_φ	0.4	0.2	0.22	0.4	
	ζ_φ	0.7	0.7	0.7	0.7	
	ω_φ	0.33	0.33	0.67	0.67	D1-0.6
	$K_{\varphi Y}$	1.0	1.0	1.0	1.0	D2-0.4
	K_Y	0.51	0.51	0.53	0.53	D3-0.2
	ζ_Y	0.7	0.7	0.7	0.7	D4- 0
	ω_Y	0.75	0.75	0.75	0.75	
	$K_{Y\varphi 1}$	1.0	1.0	1.0	1.0	
	$\zeta_{Y\varphi 1}$	0.7	0.7	0.7	0.7	
	$\omega_{Y\varphi 1}$	1.0	1.0	1.0	1.0	
	$K_{Y\varphi 2}$	-	-	-	-	
	$\omega_{Y\varphi 2}$	-	-	-	-	

TABLE 1 (CONCLUDED)

CASE COEFFICIENT		A	B	C	D	
HEAVE	K_Z	0.51	0.51	0.53	0.53	
	ζ_Z	0.7	0.7	0.7	0.7	
	ω_Z	0.33	0.33	0.67	0.67	
YAW	K_ψ	0.45	0.28	0.38	0.4	
	ω_ψ	0.6	0.6	1.8	1.8	
OPTIONS	OP: $X\theta 1$ $X\theta 2$	0	0	0	0	
	OP: $Y\varphi 1$ $Y\varphi 2$	↓	↓	↓	↓	

approximate the logic of Fig. 2 only for the lateral plane using option "O". The tasks were to "S" turn down a runway at about 60 knots and a precision hover. Peak bank angles and normal load factors reached during the "S" turns were about $\pm$ 60 degrees and 2.0 g's, respectively. The pilot was asked to rate his impressions of motion cues relative to the visual scene using the adjectives consistent with the fidelity criteria of Fig. 1. Besides subjective comment, the peak simulator lateral displacement was recorded together with the commanded (helicopter) specific side force and the recovered (simulator) force.

The highlight of the test was to define the required lateral travel, a dimension that impacts heavily on the implied cost of a platform device.

In all, eight conditions were examined and the results are shown in Table 2. Following tests of configurations A, B, C, and D, condition D was re-examined with reduced values of the coordinating gain $K_{\varphi Y}$. This gain has the effect of reducing the lateral movement of the simulator at the expense of side force distortion. When $K_{\varphi Y}$ is unity, the side force fidelity (or recovery) is excellent (the commanded side forces resulting from the "S" turn maneuver were on the order of 0.1 to 0.2 g at frequencies of 1 to 2 Hertz). As $K_{\varphi Y}$ is reduced, the recovered side force shows increased deviation from the command, with the recovered force resembling more and more the washed out bank angle. When $K_{\varphi Y} = 0$, the recovered side force still shows the high frequency components but superimposed on a component of simulator bank angle.

The important finding described in Table 2 is that an acceptable simulation was maintained even when the coordinating gain was set at values near 0.6. Values of 0.4 or less elicited pilot objections because of the anomalous side forces he felt. Based on these tests and researcher opinion, the coefficients corresponding to condition D1 were selected for use in the requirements analysis.

2.4 SIMPLE UNCOUPLED ESTIMATES

The maximum excursions of a generalized six-degree-of-freedom motion platform may be computed under the assumption of steady state or initial

TABLE 2

SUMMARY OF FSAA TEST RESULTS

CONDITION	K_φ	ω_φ (rad/sec)	$K_{\varphi Y}$	MAXIMUM LATERAL TRAVEL (FT)	PILOT COMMENT
A	0.4	0.33	1.0	$\pm$ 36*	Acceptable rolling impression with coordinated sensation. Limits felt.
B	0.2	0.33	1.0	$\pm$ 36*	Acceptable rolling impression with coordinated sensation. Limits felt.
C	0.2	0.67	1.0	$\pm$ 20	Illusion of motion appears subdued but is still acceptable. Good turn coordination.
D	0.4	0.67	1.0	$\pm$ 26	Acceptable rolling impression. Turn coordination and side force buildup in slips is felt.
D1	0.4	0.67	0.6	$\pm$ 16	Not much different from Case D.
D2	0.4	0.67	0.4	$\pm$ 12	Feels more subdued and can notice "jerkiness."
D3	0.4	0.67	0.2		Poor turn coordination: feels like lateral turbulence.
D4	0.4	0.67	0		Noticeably poor turn coordination that is difficult to correct

* Lateral axis encountering limits of $\pm$ 36 ft.

conditions. Using the coefficients of Table 1, Case D1 with the logic of Fig. 2, the peak excursions were estimated. These are a function of the simulated helicopter's peak steady state or initial motions. In Table 2, the maximum position, velocity, and acceleration of the hypothetical motion base following the drive logic commands are computed. The assumption used in this calculation is that the helicopter motion is sinusoidal. Examination of the time histories from the fixed-base simulation of low-level helicopter flight revealed that the largest motions recorded were nearly sinusoidal for about one period. The period of this equivalent sinusoid was 5.24 seconds. The pitch, roll, and yaw amplitudes are given in Table 2. The force amplitudes were small (less than 0.15 g) along the longitudinal and lateral axes, but about 1 g (incremental) along the normal axis. This means that the helicopter was flown in a coordinated manner with peak normal specific force reaching 2 g and zero. The data of Table 3 are computed using these sinusoids driving through the filters shown. The coefficients of these filters are those from Case D1 of the FSAA experiment. The phase shift due to filtering is not shown in Table 3 because it does not contribute to the requirements data in the right column.

2.5 COUPLED, MULTI-AXIS ESTIMATES

A better, less subjective method of estimating the motion requirements is simply to introduce actual data to the drive logic. This was done using recorded data from the fixed-base simulation of nap-of-the-earth (NOE) flights mentioned earlier. The data, pre-recorded on digital tape, were played through the computer-implemented drive logic set up for Case D1. The computer was instructed to search for the maximum value of the output acceleration, velocity, and position for all six axes. The results are shown in Table 4.

Inherent in these data are several assumptions.

- The use of fixed-base input data; this should yield slightly conservative results.

TABLE 3

UNCOUPLED ESTIMATES MOTION REQUIREMENTS

EQUATION OF EQUIVALENT SINUSOID REPRESENTING MAXIMUM HELICOPTER MOTION	HIGH-PASS FILTER OF DRIVE LOGIC AND ITS COEFFICIENTS	TRANSLATIONAL ACCELERATIONS	MAXIMUM EXCURSIONS, VELOCITIES, AND ACCELERATIONS
PITCH $\theta_A = 0.92 \sin 1.25\ t$ (rad)	$\theta_M = \dfrac{0.4\ s^2\ \theta_A}{s^2 + 2(0.7)(0.67)s + (0.67)^2}$ $\theta_M = 0.37 \sin 1.25\ t$ (rad)	$\ddot{X}_M = -0.6\ g\ \theta_M$ (ft/sec^2)	$\ddot{\theta}_M = 0.58$ rad/sec^2 $\dot{\theta}_M = 0.46$ rad/sec $\theta_M = 0.37$ rad $\ddot{X}_M = 7.1$ ft/sec^2 $\dot{X}_M = 5.7$ ft/sec $X_M = 4.6$ ft
ROLL $\varphi_A = 1.06 \sin 1.25\ t$ (rad)	$\varphi_M = \dfrac{0.4\ s^2\ \theta_A}{s^2 + 2(0.7)(0.67)s + (0.67)^2}$ $\varphi_M = 0.42 \sin 1.25\ t$ (rad)	$\ddot{Y}_M = 0.6\ g\ \varphi_M$ (ft/sec^2)	$\ddot{\varphi}_M = 0.7$ rad/sec^2 $\dot{\varphi}_M = 0.56$ rad/sec $\varphi_M = 0.42$ rad $\ddot{Y}_M = 8.2$ ft/sec^2 $\dot{Y}_M = 6.6$ ft/sec $Y_M = 5.2$ ft
YAW $\psi_A = 0.8 \sin 0.67\ t$ (rad)	$\psi_M = \dfrac{0.45\ s\ \psi_A}{s + 1.8}$ $\psi_M = 0.28 \sin 0.67\ t$ (rad)	---	$\ddot{\psi}_M = 0.13$ rad/sec^2 $\dot{\psi}_M = 0.19$ rad/sec $\psi_M = 0.28$ rad
NORMAL (Longitudinal and Lateral ≈ 0) $A_{Z_P} = -32.2\ (1 + \sin 1.25\ t)$ (ft/sec^2)	$\ddot{Z}_M = \dfrac{0.53\ s^2\ (A_{Z_P} + 32.2)}{s^2 + 2(0.7)(0.67)s + (0.67)^2}$	$\ddot{Z}_M = -17.1 \sin 1.25\ t$ (ft/sec^2)	$\ddot{Z}_M = 17.1$ ft/sec^2 $\dot{Z}_M = 13.7$ ft/sec $Z_M = 10.9$ ft

ORIGINAL PAGE IS
OF POOR QUALITY

TABLE 4

COUPLED MULTI-AXIS ESTIMATES OF MOTION REQUIREMENTS

UNITS ft, sec, rad		A		C		D		D1	
		Combination Task	Longitudinal Lateral Task	Combination Task	Longitudinal Lateral Task	Combination Task	Longitudinal Lateral Task	Combination Task	Longitudinal Lateral Task
X_M	MOTION SYSTEM	11-10	16-6	3-3	4-4	6-6	8-8	3-3	4-4
$\dot{X}_M$		6-6	6-8	2-2	2-4	4-4	4-8	2-2	2-4
$\ddot{X}_M$		5-5	5-9	3-3	4-4	6-6	8-8	3-3	4-4
Y_M		45-37	54-54	13-9	12-11	26-18	24-22	13-9	12-11
$\dot{Y}_M$		22-17	21-18	7-6	5-4	14-12	10-8	7-6	5-4
$\ddot{Y}_M$		13-12	10-8	4-4	4-4	8-8	8-8	4-4	4-4
Z_M		11-88	39-32	11-22	14-18	22-44	28-36	22-44	28-36
$\dot{Z}_M$		27-22	18-29	13-9	10-17	26-18	20-34	26-18	20-34
$\ddot{Z}_M$		27-16	29-37	17-10	22-18	34-20	44-36	34-20	44-36
φ_M		.35-.35	.25-.24	.1-.14	.1-.13	.2-.28	.2-.26	.2-.28	.2-.26
$\dot{\varphi}_M$		.23-.24	.18-.27	.1-.1	.1-.14	.2-.2	.2-.28	.2-.2	.2-.28
$\ddot{\varphi}_M$		.52-.40	.44-.44	.28-.25	.27-.23	.56-.50	.54-.46	.56-.50	.54-.46
θ_M		.12-.17	.25-.14	.07-.08	.11-.1	.14-.16	.22-.2	.14-.16	.22-.2
$\dot{\theta}_M$		.18-.14	.32-.24	.06-.1	.13-.15	.1-.2	.26-.30	.1-.2	.26-.30
$\ddot{\theta}_M$		.33-.32	.43-.74	.2-.2	.17-.43	.4-.4	.34-.86	.4-.4	.34-.86
ψ_M		.24-.18		.17-.12		.34-.24		.34-.24	
$\dot{\psi}_M$		.17-.14		.13-.11		.26-.22		.26-.22	
$\ddot{\psi}_M$		.24-.33		.19-.28		.38-.56		.38-.56	
$\dot{q}_B$	AIRCRAFT	.73-.78							
θ_A		.32-.37							
A_{X_P}		.12-.19							
$\dot{p}_B$		1.2-1.0							
φ_A		1.0-.89							
A_{Y_P}		3.4-2.5							
$\dot{r}_B$		.54-.66							
r_B		.38-.32							
ψ_A		.82-.54							
A_{Z_P}		0-58							

- Neglect of rotating axis transformations; maximum distortions of the longitudinal and lateral specific forces as compared with the input forces showed differences of 0.12 g except during a hard turn where they were larger. The use of "g" to compute the sway contribution from washed-out bank angle instead of A_{Z_P} accounts for this difference.
- The Euler angles, θ_A, φ_A, and ψ_A are the double integrals of the body accelerations, $\dot{q}_B$, $\dot{p}_B$, and $\dot{r}_B$.
- The drive logic has the proper coefficients. This assumption is not completely supported by experiment.
- The hypothetical motion base has perfect following dynamics.

To aid the effort, analyses were made of the drive logic response. These are shown in Figs. 3 and 4 where the Bode magnitude plots for recovered motion and displacements used are sketched.

The output time histories from the drive logic were also examined in order to check that it was working properly. For this examination, the calculation of the recovered angular velocity and specific force was done without axis transformation assumptions. The full transformations used are given in Table 5.

2.6 HIGH-FREQUENCY, THRESHOLD, AND SMOOTHNESS CRITERIA

2.6.1 High-Frequency Criteria

The speed of response or dynamic response of the motion base should be chosen on the basis of the fastest commands it must follow. These are produced during critical tasks where the human pilot and the aircraft combined are operating at peak performance levels.

According to Adams*, for single-axis control tasks, the servo drive characteristics should be equivalent to those of a linear second-order

---

* Adams, James J., "Dynamic Requirements for Simulator Servo Drive Mechanism," AIAA Paper No. 70-355, 1970.

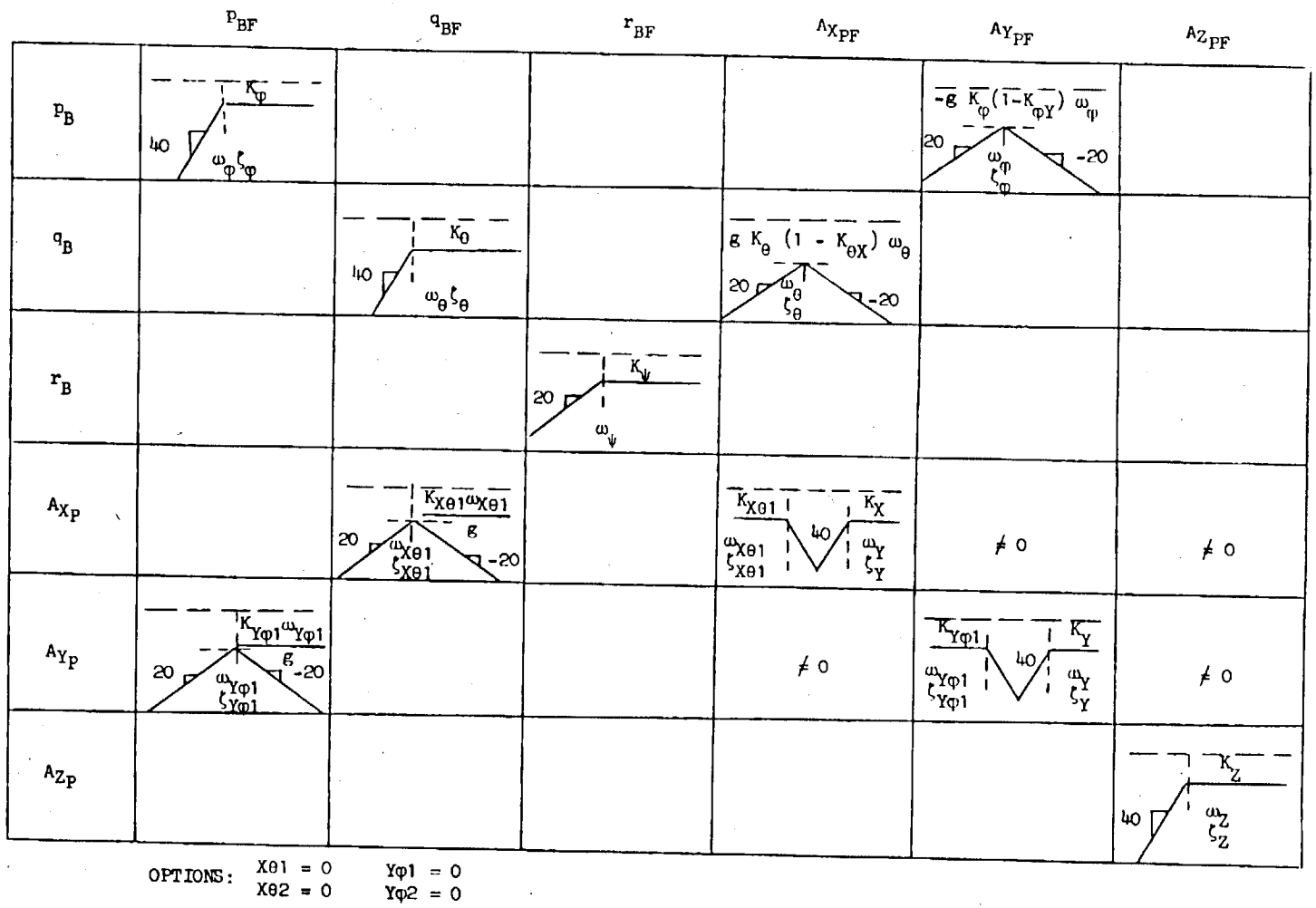

OPTIONS: $X\theta 1 = 0$ $\quad Y\varphi 1 = 0$
$X\theta 2 = 0$ $\quad Y\varphi 2 = 0$

Figure 3: Recovered Motion Parameters

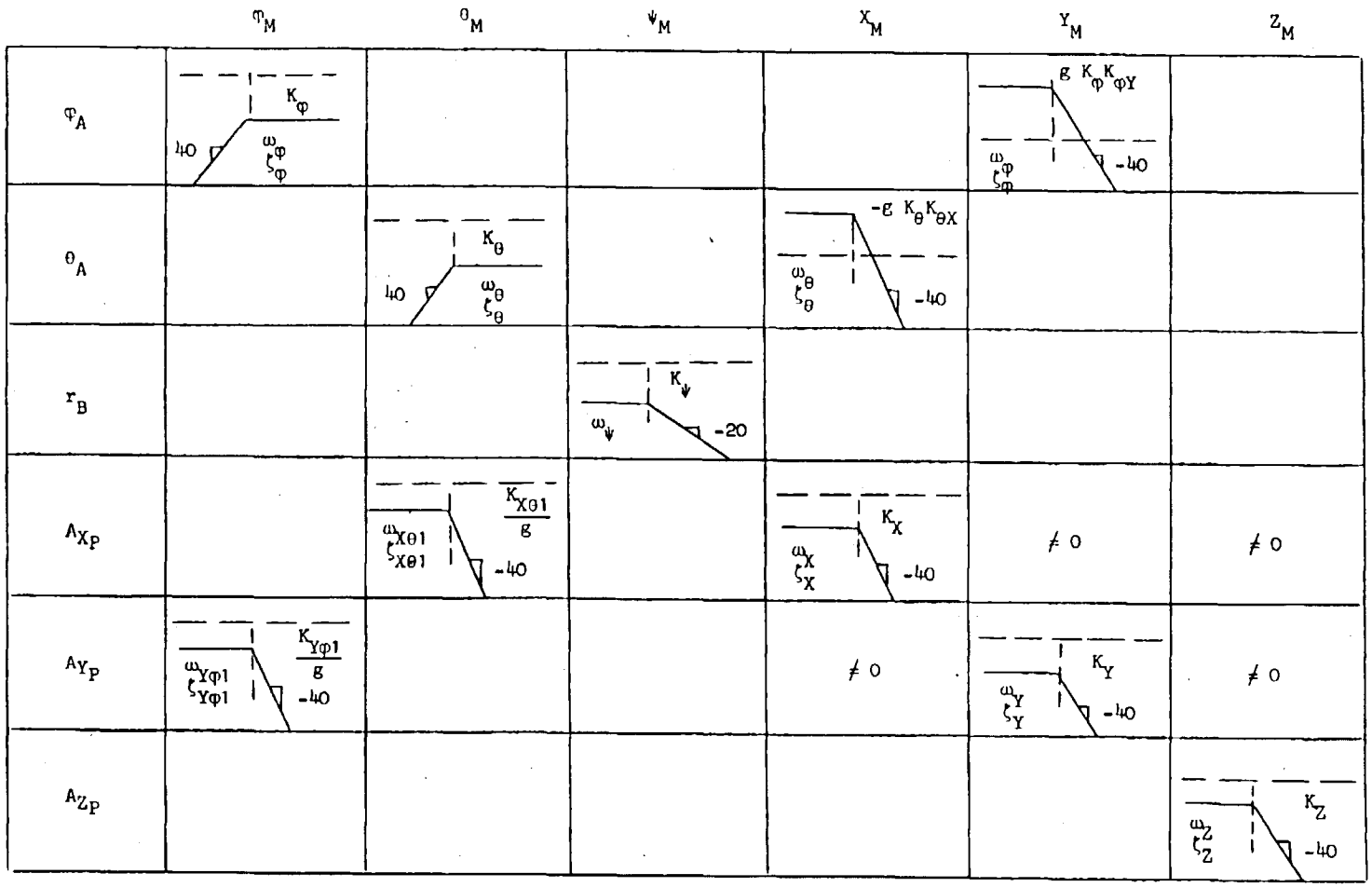

OPTIONS: $X\theta 1 = 0$ $X\theta 2 = 0$ $Y\varphi 1 = 0$ $Y\varphi 2 = 0$

Figure 4: Displacements Used

TABLE 5

"RECOVERED" MOTION

Recovered Angular Velocities

$$
\begin{cases}
p_{BF} = \dot{\varphi}_M - \dot{\psi}_M \sin \theta_M \\
q_{BF} = \dot{\theta}_M \cos \varphi_M + \dot{\psi}_M \sin \varphi_M \cos \theta_M \\
r_{BF} = -\dot{\theta}_M \sin \varphi_M + \dot{\psi}_M \cos \varphi_M \cos \theta_M
\end{cases}
$$

Recovered Specific Forces

$$
\begin{cases}
A_{X_{PF}} = \ddot{X}_M \cos \theta_M \cos \psi_M + \ddot{Y}_M \cos \theta_M \sin \psi_M - (\ddot{Z}_M - g) \sin \theta_M \\
A_{Y_{PF}} = \ddot{X}_M (\sin \varphi_M \sin \theta_M \cos \psi_M - \cos \varphi_M \sin \psi_M) \\
\qquad + \ddot{Y}_M (\sin \varphi_M \sin \theta_M \sin \psi_M + \cos \varphi_M \cos \psi_M) \\
\qquad + (\ddot{Z}_M - g)(\sin \varphi_M \cos \theta_M) \\
A_{Z_{PF}} = \ddot{X}_M (\cos \varphi_M \sin \theta_M \cos \psi_M + \sin \varphi_M \sin \psi_M) \\
\qquad + \ddot{Y}_M (\cos \varphi_M \sin \theta_M \sin \psi_M - \sin \varphi_M \cos \psi_M) \\
\qquad + (\ddot{Z}_M - g)(\cos \varphi_M \cos \theta_M)
\end{cases}
$$

system with a natural frequency of 20 radians/second or higher and a damping ratio near 0.7.

Additional tests conducted by Sinacori on the roll axis suggests the same. In Fig. 5 is a plot of the effective pilot time delay for a critical task as a function of roll dynamics natural frequency ω_M. The actuator dynamics were approximated by a linear second order system of 0.7 damping ratio and variable natural frequency ω_M. It is seen that little effect on pilot time delay exists for natural frequencies of 19 radians/second or higher. The tasks used for these tests were critical in that they required the pilot to control increasingly divergent roll axis dynamics until loss of control was observed. The time delay estimate is based on the pilot-vehicle dynamics at this critical time. The criteria of 19 radians/second or higher therefore represents the required response for a pilot-vehicle system in which the pilot is the limiting factor.

2.6.2 Threshold

The human rotational and translational motion thresholds have been measured by Hosman and van der Vaart* in a hydraulic motion base with hydrostatic bearings. Their results show the angular velocity threshold to be frequency independent and all thresholds to be a function of task loading. The values adopted are approximations to these data and are shown in Table 6. Corresponding sinusoidal angular position and angular acceleration thresholds are also tabulated.

2.6.3 Smoothness

Noise associated with the motion base may obviously be noticeable when its level exceeds the threshold levels and should therefore be below these values. A reasonable level of distortion from a sine wave input is 10% of the command at these levels. This results from an examination of the minimum standard deviation of the human threshold data as reported by Hosman and van der Vaart. These were seldom below 10% of the mean threshold level.

---

* Hosman, R. J. A. W. and J. C. van der Vaart, "Thresholds of Motion Perception Measured in a Flight Simulator," U. of Delft Memo M-248, 1976.

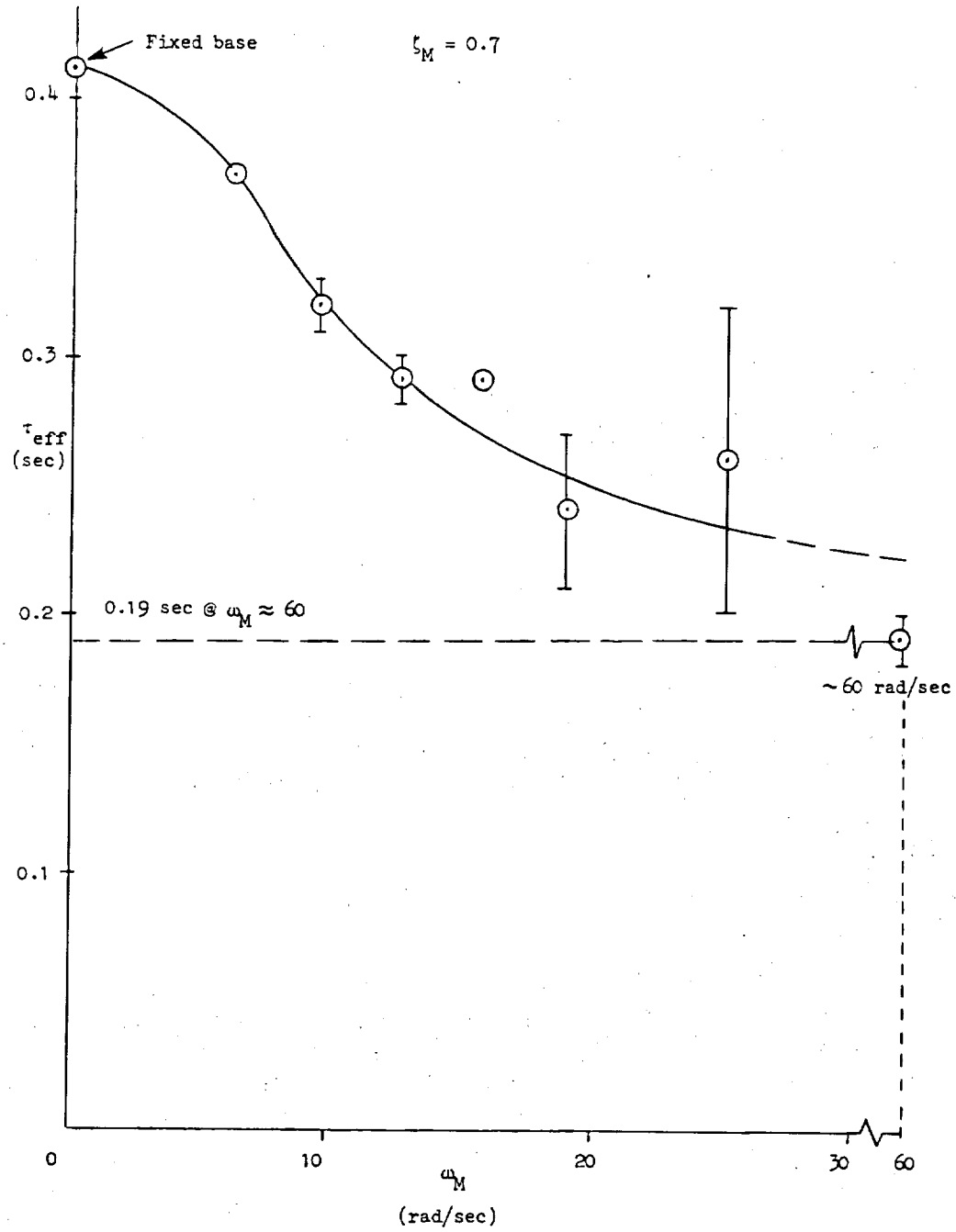

Figure 5. Effective Pilot Time Delay (τ_{eff}) Versus Motion Drive Natural Frequency (ω_M)

TABLE 6

MOTION THRESHOLDS

ANGULAR			LINEAR ACCELERATION
POSITION	VELOCITY	ACCELERATION	
$\frac{0.2}{\omega}$ deg	0.2 deg/sec	0.2 ω deg/sec^2	0.01 g
ω in rad/sec			

SECTION 3.0

VISUAL SYSTEM REQUIREMENTS

3.1 TV CAMERA/MODEL REQUIREMENTS

A draft requirements list was prepared for Army review. The requirements relate mostly to the television camera/model visual system but generality was intended. The document, as revised following the first review, is contained in Appendix I.

3.2 REQUIREMENTS SUBSTANTIATING DATA

3.2.1 Field-of-View (Section 3.1.1 of Appendix I)

The 40 degree requirement for elevation field-of-view is taken from fixed-base nap-of-the-earth (NOE) simulation results. The maximum pitch angles encountered were $\pm$ 20 degrees. The requirement will just allow viewing the horizon during these pitching maneuvers.

The horizontal field-of-view requirement results from considerations of turning performance at low speeds. If it is assumed that the future ground track τ seconds ahead must be visible in a level turn of fixed bank, a one-sided lateral field must cover at least $\tau a_y/2V$ radians, where τ is the preview time in seconds, V, the velocity in feet/second, and a_y, the horizontal acceleration in feet/second^2. A 60 degree bank results in a 2 g level turn and makes $a_y = 1.73$ g $= 55.8$ ft/sec^2. With this and $\tau = 3$ seconds, the relation is:

$$\xi \text{ (radians)} = \frac{49.5}{V} \text{ (knots)} \; ; \; V \neq 0$$

The variables are shown in the following sketch:

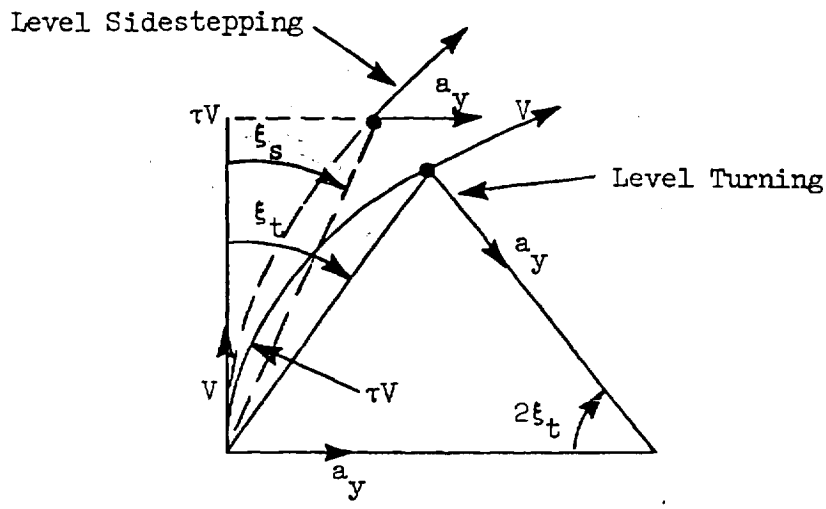

The relation shows the intuitive result that for slow-flying helicopters that can turn rapidly, an increasing field-of-view is required as speed decreases (or turn rate increases). As the velocity approaches zero, i.e., hover, the field-of-view requirement increases without limit, which, of course, is not realistic.

Some light may be shed on this dilemma if one considers how a helicopter is maneuvered at low speed. Coordinated turns are seldom performed at very low (< 20 knots) speed nor are they necessary because the helicopter can slip appreciably without any adverse effects such as reaching a yaw control limit. When maneuvering forward at these low speeds, helicopters generally are banked in order to accelerate sideways (normal to the heading) while heading is held nearly fixed. The pilot's attention is still directed forward and for this reason the required field-of-view is probably not extremely large.

A similar relation for the required half horizontal angle may be derived for the constant heading case. For a level flight sidestepping maneuver in forward flight at constant heading the relation is:

$$\tan \xi_t = \frac{\tau a_y}{2V}$$

This is essentially the same relation as was previously derived for turning flight. It is exactly the same when ξ_t < 30 degrees.

It is suggested that the horizontal field requirement does not increase with decreasing speed but rather;

> The pilot adjusts his turn rate so as to maintain an acceptable preview point within a comfortable field-of-view that does not require head movements.

This, of course, implies that the pilot will limit his bank angle (side acceleration) as a function of speed. This may be illustrated by solving both relations for the required bank angle for a given field-of-view and velocity. First, however, the relation between horizontal side acceleration and bank angle for a coordinated level turn or sidestep must be substituted. This is:

$$a_y = g \tan \varphi$$

where φ is the helicopter bank angle. After these operations, the relations become:

$$\varphi_t = \tan^{-1}\left(\frac{2V\xi_t}{\tau g}\right) \text{— Level Turning}$$

$$\varphi_s = \tan^{-1}\left(\frac{2V \tan \xi_s}{\tau g}\right) \text{— Level Sidestepping}$$

Both relations are plotted in Fig. 6. They are essentially identical for $|\xi| < 30$ degrees. In this figure, the allowable bank angle φ versus speed V is shown for various half-field-of-view angles ξ for a preview time τ of 3 seconds. The upper plot is for level turning (coordinated) and the lower for sidestepping flight (constant heading).

Examination of the plots shows that a 60 degree half field angle (120 degree field-of-view) allows banking for a 2 g level turn at 50 knots and a sidestep at 30 knots.

It is suggested that such bank angles are rarely produced in NOE flight and that furthermore, the pilot may adjust his maximum bank angle as a function of flight speed simply because doing so results in a more

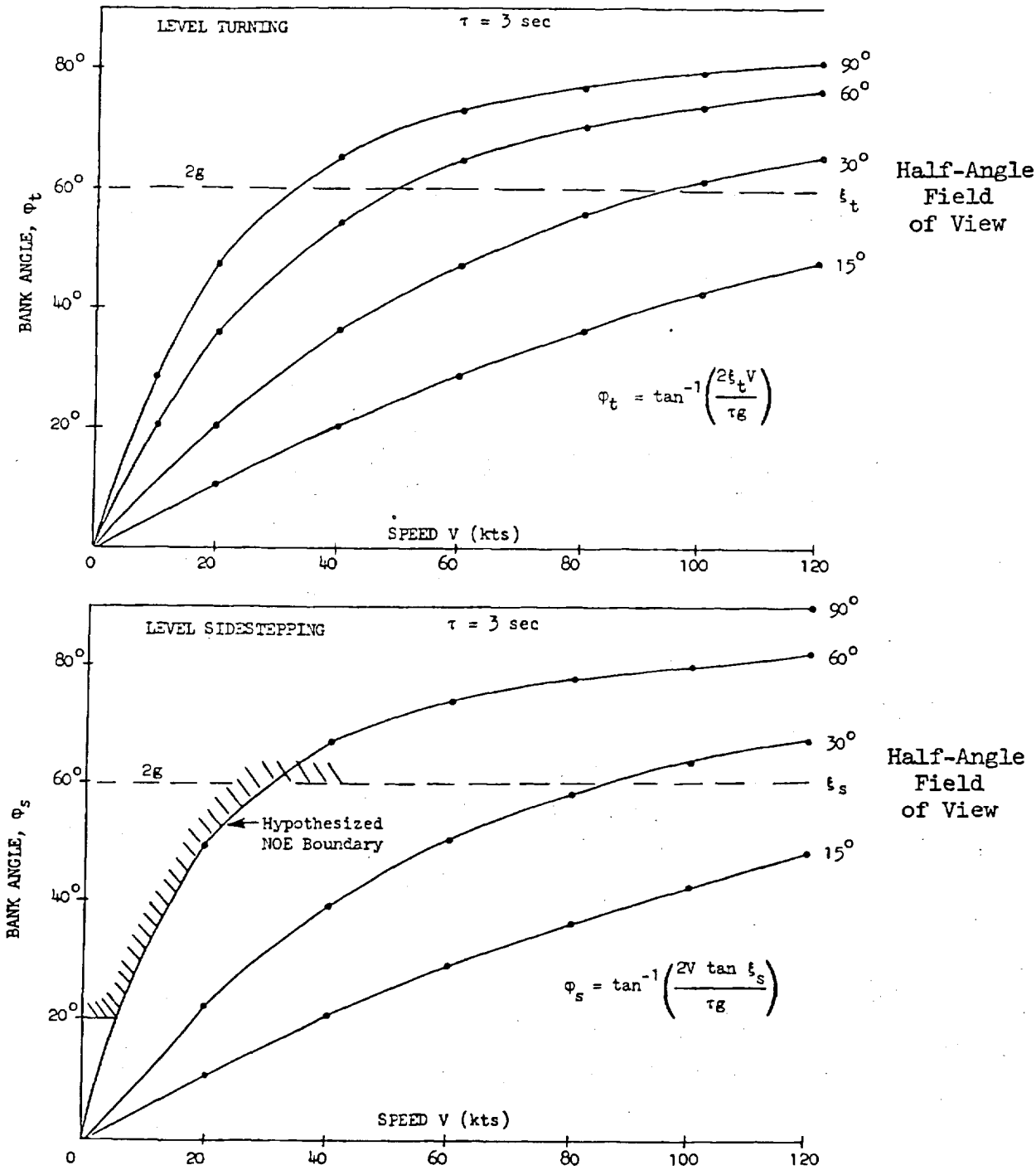

Figure 6. Allowable Level Turn and Sidestepping Bank Angle Versus Speed for a Preview Time of 3 Seconds.

manageable turn requiring no head movements and consistent with his out-the-window visibility. It is hypothesized that pilots flying in NOE conditions follow a relation typically like the hatched one shown in the lower plot of Fig. 6 corresponding to a usable (effective) field-of-view requirement of about 120 degrees. The cut-off at a bank of 20 degrees represents the hovering bank angle requirements; however this analysis is not intended to address the field-of-view requirement in hovering flight. This is nothing more than saying that large bank angles at low speeds are not produced because the resulting horizontal accelerations cannot be effectively managed and for this reason a field-of-view greater than 120 degrees cannot be utilized in NOE maneuvering. If a requirement for a larger field exists, it must be based on other premises.

It follows that the rolling presentation format for the visual field is likely to be necessary because a 40-degree-high field will not allow viewing the preview point when bank angles exceed 40 degrees. If the format is rolled with the horizon, the preview point, 3 seconds or so ahead will remain visible. The choice of 3 seconds represents the minimum practical time (or distance) ahead that the pilot must be able to see. Longer times are probable and could increase slightly the horizontal field required.

The variable field format is believed consistent with future cockpit window arrays and NOE target acquisition tasks.

3.2.2 Focus (Section 3.1.2 in Appendix I)

The requirement attempts to promote natural accommodation reflexes by specifying that an object be focused either at its real distance from the eye point or at least eight feet away. This is the hyperfocal eye distance used by American Airlines in their real-image display devices and found to be acceptable.

3.2.3 Effect of Pilot Head Movements (Section 3.1.3 in Appendix I)

The harness systems of helicopters do not permit head movements that would cause the eye point to move outside a 6 inch radius sphere. The distortion requirement of 5% is taken from Weber's law that a change in a

perceived quantity such as the angular separation between objects cannot be detected until the change reaches 5% of the initial angular separation.

3.2.4 Location of High-Quality Viewing Spheres (Section 3.1.4 in Appendix I)

The spheres are centered at each primary pilot with a maximum possible separation of four feet, the separation of pilots in the CH-47 helicopter.

3.2.5 Edge Matching (Section 3.1.5 in Appendix I)

The matching criteria of 15 arc minutes is purely a guess.

3.2.6 Static Resolution (Section 3.2.1 in Appendix I)

Resolution is that property of imaging systems to show fine detail. When resolution is high, objects appear crisp with sharp edges. When it is low, objects appear fuzzy and indistinct, with blurred edges. The resolution of optical devices is measured by assessing the ability of the system to show close point sources of light as separated. If the refracting and/or reflecting surfaces are properly figured, the resolution is limited only by diffraction effects. In the case of the normal eye as in any optical device, this is mainly affected by entrance aperture size; the greater the aperture, the higher the resolution. In the case of the eye, however, more resolution capability exists probably because of additional visual stimulus processing by the brain. For example a telephone wire may be seen against the sky even when it subtends only seconds of arc. For the range of light from the upper limits of night vision to bright sunlight, the resolution range can be expected to be between 10 and 0.7 arc minutes, respectively*. The finest resolution that could be expected therefore in the low brightness of the simulation environment is about one arc minute. It is stressed that this resolution pertains to the <u>detection</u> of objects with moderate contrast relative to their surroundings. <u>Recognition</u> of an object requires a larger

---

* Bio-Astronautics Data Book, NASA SP-3006, 2nd Edition, 1973.

angle, for example, the 20/20 line of letters on the familiar Snellen chart subtends an angle of five arc minutes at 20 feet.

What acuity level is required for visual flight? It is the author's opinion as a pilot that in-flight spatial orientation and position judgments are made from the perception of angles subtended by familiar (recognized) objects. When objects are unfamiliar, use is made of airspeed instrument indications, wind velocity cues, and the apparent angular rates of external visual objects to judge relative velocity, height, range, etc. In the familiar case, the "scale" of the apparent world is obvious, but in the unfamiliar case it must be inferred by some indirect means. It is argued that rarely will two objects be aligned to where one arc-minute or better acuity is useful.

A similar process exists in a visual flight simulator. The ease with which a pilot can use a visual display depends on its resolving power and the abundance of recognizable objects. Could it be that poor pilot performance and adverse comment regarding some low-level terrain board TV visuals is due to the pilot's having constantly to orient himself in unfamiliar surroundings? In unfamiliar surroundings, orientation is probably aided by scanning instruments (airspeed) and judging range by comparing the inferred speed to the observed angular velocity of objects. This is probably an inherently slower process than the recognition of familiar objects and could be the cause of reduced pilot performance. Perhaps this suggests an experiment in position judgments using familiar and unfamiliar targets. Would the recognition time be longer for unfamiliar objects due to the necessity for eye and head movements, additional instrument scanning, etc.?

The visual process used in flying a helicopter in NOE conditions is believed to be the following:

- Spatial orientation is achieved by recognizing (and interpreting correctly) familiar objects and their subtended angles.

- When observed objects cannot be recognized (in terms of size), additional instrument scanning is required. For example, an airspeed indication together with observation of wind cues (e.g., treetops blowing in the wind) give a groundspeed judgment which can then be used with angular rate observations to estimate range, height, etc.
- At close range (< 50 feet) minor use is made of binocular vision if available. If it is not, head movements will accomplish the same effect.
- There exists a time delay for position, velocity, etc. judgments made under the foregoing conditions that is different for each. For example, the delay using binocular vision with close familiar objects is probably less than that without binocular vision and unfamiliar objects.

Unfortunately, the above hypothesis does not lead directly to a specific resolution requirement. What it does do, however, is suggest that for any visual simulation system to be effective, it must elicit the same orientation judgment time delay as exists for the real world situation. This means that a display with poor resolution or insufficient detail may be augmented by the inclusion of larger, more familiar objects, otherwise performance degradation can be expected for tasks where the time delay is important.

It is advisable, therefore, to include provisions for adding specified familiar objects to the scene as required in order to achieve a perceptual time delay equivalent to that in flight.

It is assumed that the simulator will be used to research the post-detection (of a target) phase of a mission, not the pre-detection phase. The detection event can, of course, be artifically placed in the test time period. The recognition of objects in the simulated visual field, however, must approximate that of the real world for spatial orientation perception delays to be realistic; therefore, it does not appear justified to design

more recognition performance than is present with the eye alone and perhaps not even that much. It is well known that persons with reduced visual acuity can perform many visual tasks with little difficulty. A person with 20/50 vision can drive an automobile or fly an aircraft in the sense of maneuvering only. Naturally complaints arise for not being able to read signs or to navigate by external visual references precisely. Experience suggests that a noticeable workload increase and loss of performance should occur at this level of acuity but not be unduly objectionable. A guess at the relationship between acuity and performance/workload effects is shown in Fig. 7.

This is an attempt to guess at the effect on performance of visual acuity based on personal judgment. The performance could be the speed that an NOE course is flown compared to the speed with 20/20 acuity, or the subjective workload increase over that with 20/20 acuity. The straight-line relation is based on a constant preview time, i.e., speed is reduced to give a constant time for the period between recognition and arrival. The "guess" (curved line) simply shows that the human observer will surpass this relationship because he will reconstruct the required spatial orientation from the objects that can be recognized or scan the instruments more frequently. The judgment is made by the author that 20/50 acuity will cause noticeable but unobjectionable effects on workload and performance and represents a reasonable compromise between system and hardware performance.

In terms of TV systems, this corresponds roughly to a 2000 scan line system with a 40 degree vertical field. A rough comparison of various TV systems with the eye is shown in Fig. 8. Note that a 2000 line system is about the ultimate from the point of view of resolution because camera/probe optics limit the resolution to about three arc minutes. Figure 9 shows the detection and recognition ranges for a 2000 line system having a 3 arc-minute detection angle and a 12.5 arc-minute recognition angle. Vertical lines of constant approach speed are also shown for a preview time of 3 seconds.

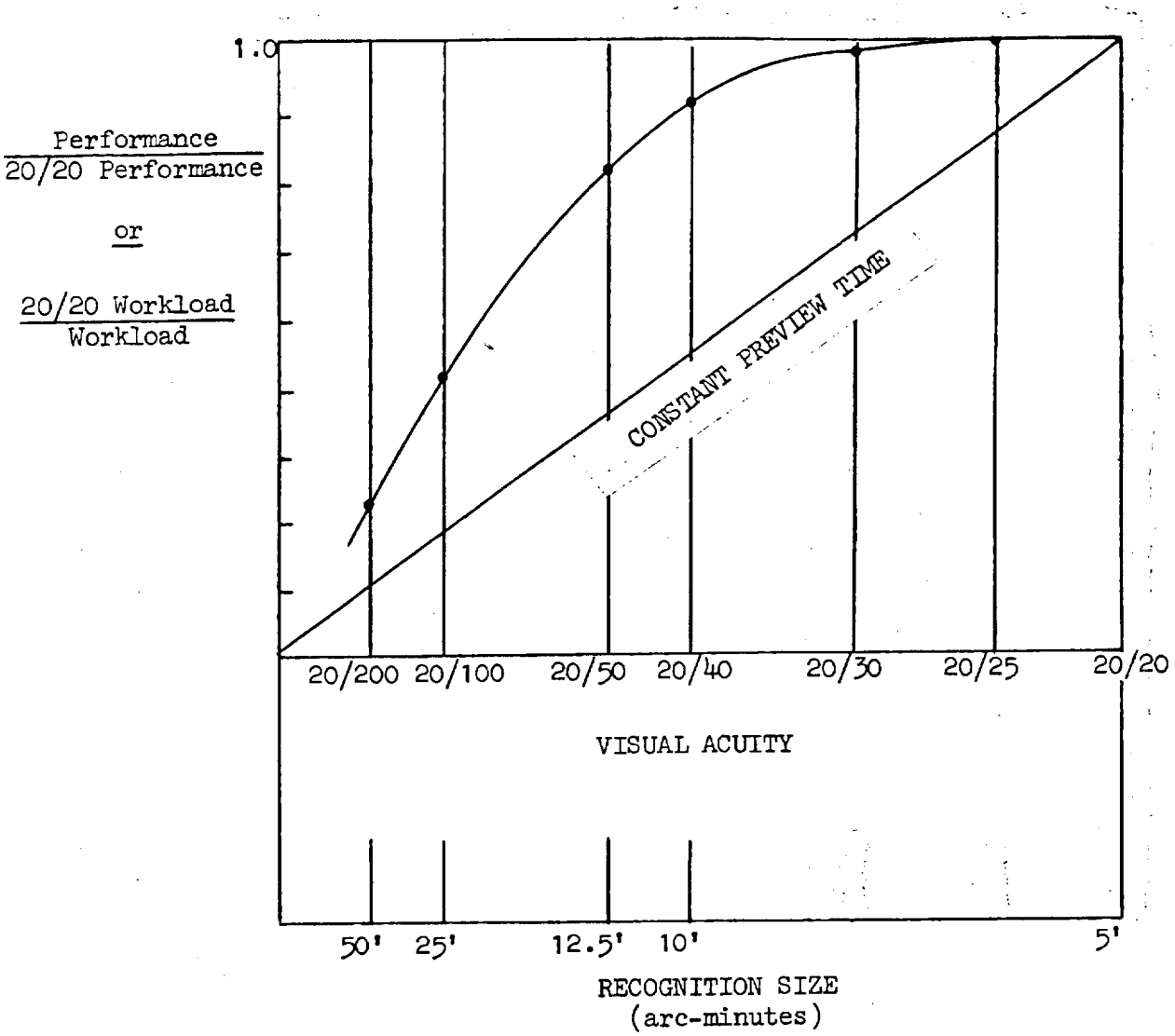

Figure 7. Hypothetical Effects of Visual Acuity

MECHANISM / TASK	EYE APERTURE ~ 3 mm	6000 LINE TV 37° VERTICAL SCAN LINE SEPARATION = .37 arc-minute APERTURE = 0.6 mm	2000 LINE TV 37° VERTICAL SCAN LINE SEPARATION = 1 arc-minute APERTURE = 0.6 mm	1000 LINE TV 37° VERTICAL SCAN LINE SEPARATION = 2.2 arc-minutes APERTURE = 0.6 mm	525 LINE TV 37° VERTICAL SCAN LINE SEPARATION = 4.2 arc-minutes APERTURE = 0.6 mm
APPROXIMATE EQUIVALENT VISUAL ACUITY	20/20	20/20	20/50	20/100	20/200
DETECTION 1 LINE PAIR* COVERS OBJECT 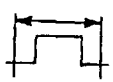 OBJECT **	1 arc-minute	1 arc-minute	3 arc-minutes	6 arc-minutes	11 arc-minutes
RECOGNITION 4 LINE PAIRS* COVERS OBJECT 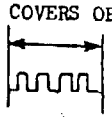 OBJECT **	5 arc-minutes	5 arc-minutes	12 arc-minutes	24 arc-minutes	46 arc-minutes
	NORMAL UNAIDED EYE	IMPOSSIBLE DUE TO PROBE DIFFRACTION & DEPTH-OF-FIELD LIMITATION ~3 arc-minutes	ADVANCED TV		PRESENT TV

* Optical Line Pairs

** Ref: RCA Electro-Optics Handbook

Figure 8. Approximate Resolution for Various TV Systems Compared with the Eye in Terms of Object Minimum Angular Dimension

ORIGINAL PAGE IS OF POOR QUALITY

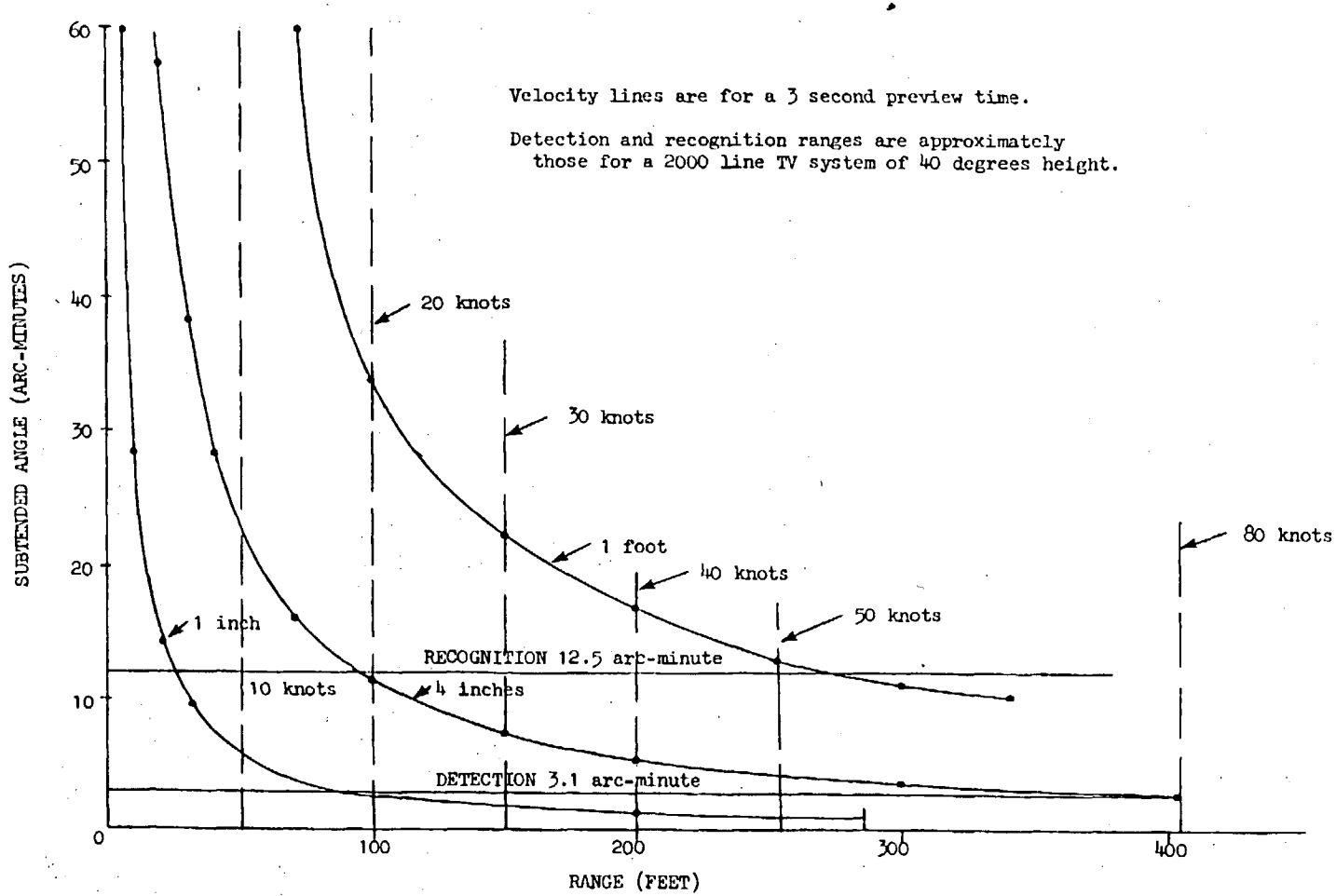

Figure 9. Detection and Recognition Ranges for Various Size Objects.

The important aspects of the resolution criteria are summarized below:

- The equivalent of 20/50 acuity, i.e., detection size ~3 arc-minutes recognition size ~12.5 arc-minutes
- Scan line separation ~ 1 to 2 arc-minutes so that rate detection time at threshold is one second or less.
- Potentially practical
- Minimum size object is 4 inches (smallest dimension) and will be recognized at lateral extremities of display during expected maximum effort turning maneuvers.

3.2.7 Dynamic Resolution (Section 3.2.2 of Appendix I)

When the helicopter is rolled at an angular velocity of 60 degrees/second, the maximum roll velocity of the display, the slew velocity at the edge of a 120 degree wide field is 63 degrees/second. At the required degradation of 0.3 line pairs/degree/degree/second, this results in a degradation of 19 line pairs/degree. The static requirement of 19 leaves theoretically no resolving power at the edge.

3.2.8 Depth-of-Field (Section 3.2.3 of Appendix I)

The critical number here is the minimum object distance at which high-quality images can be produced. This is required to be ten feet. This means that at an eye height of five feet, the slant range for good focus is ten feet and will be seen at a look-down angle of 30 degrees, a value considered reasonable for precision hover and landings. The rest of the requirement is compatible with depth-of-field properties of typical probes.

3.2.9 Detail (Section 3.3 of Appendix I)

The size of the smallest detail is 4 inches. This is based on the inclusion of some man-made features making scale determination comparable to that in the real world. The smallest feature shall be fences which are generally made using 4 inch by 4 inch posts. These will be detectable

at a 400 foot range and easily recognizeable at 100 feet, a range sufficient to give a preview time of 3 seconds at 20 knots. The requirement is based on an examination of the California hill country near Hunter-Liggett Army Air Base.

3.2.10 Brightness (Section 3.4 of Appendix I)

The requirement is compatible with current TV capabilities, not the brightness levels expected for all NOE flying.

3.2.11 Maximum Performance (Section 3.5.1 of Appendix I)

The requirements are compatible with current camera/model gantry properties at a maximum scale of 400/1.

3.2.12 Thresholds (Section 3.5.2 of Appendix I)

The thresholds are compatible with acceptable hover performance where peak position excursions are one foot. The requirement is taken from Sinacori* where a threshold of 0.32 foot was found acceptable.

3.2.13 Dynamics (Section 3.5.3 of Appendix I)

Maximum frequency content of 3 radians/second (rotational) and 1 radian/second (translational) are expected for NOE flying. From the data of Fig. 5, a bandwidth of six to ten times the highest frequency gives between 0.7 and full performance. Therefore, the 0.7 value is chosen corresponding to six times the highest expected frequency. This translates to 6 x 3 = 18 radians/second (rotational) and 6 x 1 = 6 radians/second (translational).

3.2.14 Velocity Error (Section 3.5.4 of Appendix I)

The four inch requirement is compatible with the hover threshold performance.

---

* Sinacori, J. B., V/STOL Ground Based Simulation Techniques, USAAVLABS TR 67-55, 1967.

3.2.15 Jitter (Section 3.5.5 of Appendix I)

The 2 arc-minute angular jitter requirement for any part of the display field is slightly less than the detection angle of three arc-minutes. Therefore the jitter should be undetectable.

3.2.16 Flicker (Section 3.5.6 of Appendix I)

This requirement is obvious.

SECTION 4.0

RECOMMENDATIONS FOR FURTHER RESEARCH

4.1 MOTION SYSTEM DEFINITION

The effort described attempted to formulate some preliminary design criteria for a platform-type motion base to be used in simulation nap-of-the-earth helicopter flight. The technique of configuring a sensible drive logic and computing its commands using fixed-base simulator data is not a complete analysis.

Further research recommendation:

- Extend the present analysis by using additional simulator or real flight data as inputs.
- Modify the analysis to include non-linear and time-varying filters to optimize the recovery.
- Conduct experiments to verify the validity of the logic forms and coefficients used.
- Create and use in the preceding tests a motion fidelity criteria that uses both objective and subjective data.
- Conduct experiments to further explore the effects of time delays and finite actuator bandwidth.
- Create an overall motion platform use plan that utilizes monitors and researcher data banks to establish and maintain the desired level of fidelity.

4.2 RECOMMENDATIONS FOR VISUAL SYSTEM REQUIREMENTS DETERMINATION RESEARCH

The critical requirements for any visual system used for helicopter research and development are field-of-view, detail, and resolution. The following recommendations follow from an attempt to define these parameters.

- Conduct research to establish display utilization equivalence relative to the real world. Research recognition time delays as a function of object array, resolution, and movement.
- Determine the effect on nap-of-the-earth flight performance of reduced visual acuity using specially-designed eye glasses.
- Collect nap-of-the-earth flight data and assess the validity of the proposed field-of-view requirement in terms of turning performance. Examine peak bank angles versus flight speed and pilot head movements to verify the 120 degree requirement.
- Research the effect on recognition time delays of selected geometrical objects placed on a low detail/resolution scene using computer generated imagery techniques.

APPENDIX I

U.S. ARMY RESEARCH AND DEVELOPMENT FLIGHT SIMULATION FACILITY

VISUAL DISPLAY SYSTEM REQUIREMENTS

J. B. Sinacori

SECTION 1.0

INTRODUCTION AND INTENT

This document is a list of requirements for a research and development flight simulator visual display system. The system's function is to provide an acceptable outside scene to the simulator pilots. The scene must reflect the changes in the outside scene as the vehicle changes its attitude and position in space. These parameters and their derivatives will be calculated by a central computer and will be available to control the visual system.

A variety of research and development applications are planned for this device that range from simple part-task investigations to multi-crew near-full mission studies. While the level of sophistication sought is high, flexibility is desired that allows the use of only the capability needed.

The Army's requirement for air mobility calls for flight operations close to the ground with highly maneuverable rotorcraft. The always-present closeness of vehicle and terrain requires a new dimension in visual simulation and it is difficult to anticipate at this time all of the visual system requirements for such simulation. For this reason, the visual system properties sought incorporate some variability for task and some for growth.

The Army's desire is to use the most advanced parts of the current visual system technology to obtain this capability. It is recognized, however, that these requirements may press on the current state-of-the-art. The position taken is that the current technology cannot provide all of the capability ultimately needed and that future growth is essential if this device is to live up to its intended use as a vital tool in Army research and development activities.

SECTION 2.0

SCOPE

These requirements are intended to guide the procurement of an effective visual generation and display system that will allow simulation performance approaching that of real flight. As such, rigid adherence to them is not necessary if the deviations are adequately justified. The burden of justification, however, lies with the respondent. Such procedures are not only welcome, but encouraged by the Army in the hope that superior cooperation between respondent and government results, and thereby producing a superior visual system.

The visual system sought will be integrated to a two-man side-by-side cockpit with a desired capability for adaptation to tandem or staggered tandem arrangement. (Test subjects may be either the pilot or co-pilot or a backward facing load operator.) This cockpit will be mounted atop a motion base with limited movement capability. Elements of the cockpit or the whole cockpit will be driven to simulate vibration effects. Human factors-type experiments will require a quiet electrical environment. Complete freedom of both pilots is necessary and no encumbrances to either pilot are permissible except those normally encountered in flight. The display must not compromise the flexibility to change the cockpit configuration as a wide variety of configurations will be simulated. Cockpit structure will be included that will force pilots to use normal head movements when attempting to see around structural members.

It is anticipated that the visual system will be carried with the cockpit by the motion base so as to avoid the miscoordination of visual and motion information. If, however, this is not possible, details explaining the expected miscoordination and additional consequences are required.

The research and development studies planned will require the simulation of a wide variety of maneuvers that helicopters are capable of. These

maneuvers will include those necessary for low-level flight encompassing contour (vertical maneuvering) flying and nap-of-the-earth flight where sharp turns, climbs, descents, and hover are used to negotiate courses where the skids and rotor contact trees and the fuselage is sometimes flown between trees in order to keep low. The idea of air mobility means air mobile while using natural features for advantage in either offensive or defensive maneuvering.

A typical mission profile to be studied could be surveillance and harassment of enemy armor following a canyon from an adjacent canyon. In such a situation, a main force of attack helicopters could be flying down the canyon as rapidly as possible to a favorable attack point. Scout helicopters, in the meantime, could skirt the ridges and occasionally "pop up" for a look at the enemy movements. Possibly, armed helicopters could also "pop up" to fire weapons and then retreat to the safety of the canyon. In such a situation the element of surprise is maintained due to the cover afforded by the terrain; but the helicopters must be able to take advantage of this factor by possessing maneuver capability compatible with such terrain. One of the functions of this simulator is to allow studies of the required maneuver performance in such cases.

Among the many maneuvers possible are quick starts and stops, pop-ups and heading change, quick drop to a hover amidst tree cover, rapid yaw with sideslip to orient the aircraft for weapon delivery, quick dive and turn to escape fire, maximum effort level turns, slope landings, and maximum performance climbs out of confined areas. Such maneuvering can be performed in full daylight or dark nights. It is obvious that lighting conditions, terrain features, weather, and helicopter/crew performance will all interact heavily. A safe ground environment where these factors may be controlled for study is the goal of this simulator and the capability to effectively simulate all flight environments the Army will encounter is sought for this device.

The requirements stated here are a first step in achieving this capability. All the requirements stated here must be available simultaneously. The system must be capable of color representation and diffuse cockpit

lighting must be included that negates the need for the night lighting system of the helicopter. This diffuse lighting will be used in daylight simulations.

SECTION 3.0

REQUIREMENTS

3.1 FORMAT

3.1.1 Field-of-View

Due to the high maneuvering performance at low speeds of helicopters, a wide field-of-view is required for simulation because the crewman must fixate at many points while acquiring movement information from peripheral vision. It cannot be determined with certainty at this time exactly what parts of the observable sphere are essential to the effective simulation of specific tasks. Therefore field variability is sought with provisions for growth as technology developments permit.

Three modes of field display are required and growth potential to a fourth must be demonstrated.

a) A body-fixed field at least 120 deg wide in azimuth and 40 deg high in elevation positioned with its centroid directly ahead of the pilot.

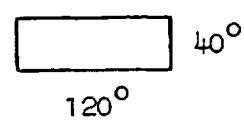

b) A body-fixed field formed by three squares at least 40 deg on a side arranged side-by-side in azimuth as shown below. Each square field must be manually adjustable in elevation through an angle of ± 20 deg.

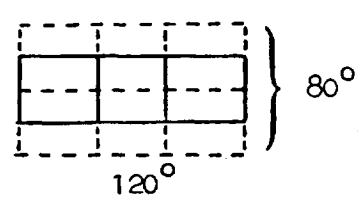

c) A 120 deg wide by 40 deg high rectangular field that can be rotated about its centroid. This rotation shall be rotated with respect to the cockpit and be at least ± 60 deg. This mode will be used to present ground details ahead of the aircraft and on its projected curved flight path during steep level turns at low altitude and airspeed. The long edges of the display will be maintained parallel to the horizon by driving the servo with the bank angle.

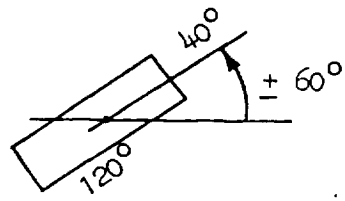

d) A fourth mode must be potentially possible in which any of the three rectangular fields outlined in mode b may be manually repositioned so that their centroids may range ± 90 deg in azimuth and ± 30 deg in elevation.

3.1.2 Focus

The images presented to each eye within the above fields shall be focused together at the correct distance or at least eight feet from the observing pilot's eye point, a point approximately at the bridge of the nose so as to permit accommodation similar to that in the real world.

3.1.3 Effect of Pilot Head Movements

In most visual generation and display systems, there exists a limited observing space within which image quality is high. For the fields described, the high quality space shall be a sphere of at least six inches radius centered at the pilot's eye point, as defined above. Within this space, the image angular distortion shall not exceed 5% of the angle the object's position subtends from the centroid of the relevant field. The centroid of the relevant field is meant to be the point (usually the optical center of a device) where distortions due to that device are obviously zero.

3.1.4 Location of High Quality Viewing Spheres

The high quality viewing sphere described in Section 3.1.3 shall be located such that its center is coincident with the nominal location of the pilot's eye point. Both side-by-side and tandem seating arrangements must be accommodated. The pilot may be either the left or right crewman in the case of the side-by-side seating and either the forward or aft crewman in tandem configurations. The separation of the crewmen can range up to 48 inches.

3.1.5 Edge Matching

Where image fields are generated by several devices, the edge matching of objects at the interface between any two fields shall be such that any point on an object shown by both devices shall not show an angular separation of more than 15 arc minutes, as viewed from the high-quality viewing space. The distortion for the crewman not viewing from within the high-quality sphere shall not exceed 50%. Edge matching for this case shall be within 30 arc minutes.

3.2 Resolution

3.2.1 Static Resolution

At any point within the fields-of-view described, the system must have the ability to show at least 19 line pairs per degree at a constrast ratio of 20 in black and white (see Figure 1). The line pairs object must have a rectangular luminance form and contrast is defined as (maximum luminance + minimum luminance). This response is to be observable by the normal unaided eye with the luminance pattern stationary. The line pairs must be discernible in either the horizontal or vertical orientation relative to the observer when the observer views the line pairs from any point within the high-quality viewing space defined in Sections 3.1.3 and 3.1.4. Outside this space the requirement is half that in the space.

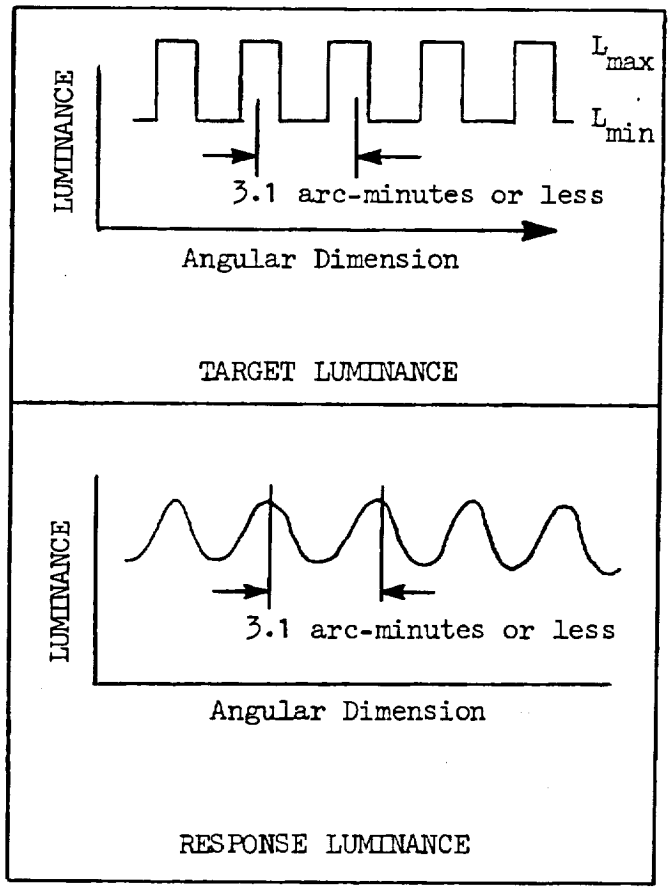

CONTRAST RATIO

$$\frac{L_{max}}{L_{min}} = 20$$

Figure 1: Resolution Requirement

3.2.2 Dynamic Resolution

When the line pair image is slewed across the display, a degradation of resolution is expected. This degradation shall not exceed a decrease of 0.3 line pairs per degree per second at a contrast ratio of 20. This criteria shall hold up to an image angular velocity of 40 deg/sec when viewed from the high-quality space defined previously. The dynamic resolution decrease shall apply to both the horizontal and vertical directions, and shall be demonstrated in only those directions. Outside the high-quality viewing space, the requirement is for half that in the space, i.e., a degradation of 0.6 line pairs per degree per second at a contrast ratio of 20.

3.2.3 Depth of Field

When objects are viewed at various ranges from within the high-quality viewing space the resolution criteria defined previously shall apply at ranges defined by Table 1, Depth of Field.

3.3 Detail

The image presented to the pilot must resemble real-world scenery typified by rolling grassland interspersed with patches of forest containing trees ranging in height from 12 feet to 60 feet and separated by distances ranging from 20 to 60 feet or more. Small shrubs, rock outcroppings, and stream beds shall also be included. All these features shall appear with their natural colors. In addition, man-made features such as roads, buildings, fences, and moving vehicles must be included. All the features described shall be recognizable when they subtend an angle of 12.5 arc minutes (minimum angular dimension). The available fly-over terrain dimensions must be at least 24,000 feet by 12,000 feet. The available height range of the pilot's eye point is from five feet to 2,000 feet. Provisions must be available for adding familiar objects of specified size in areas where the number of recognizable features is small.

TABLE 1

DEPTH OF FIELD

RANGE (ft)	NEAR BOUNDARY (ft)	FAR BOUNDARY (ft)
40	10	70
80	40.0	150
120	60.0	400
160	80.0	∞

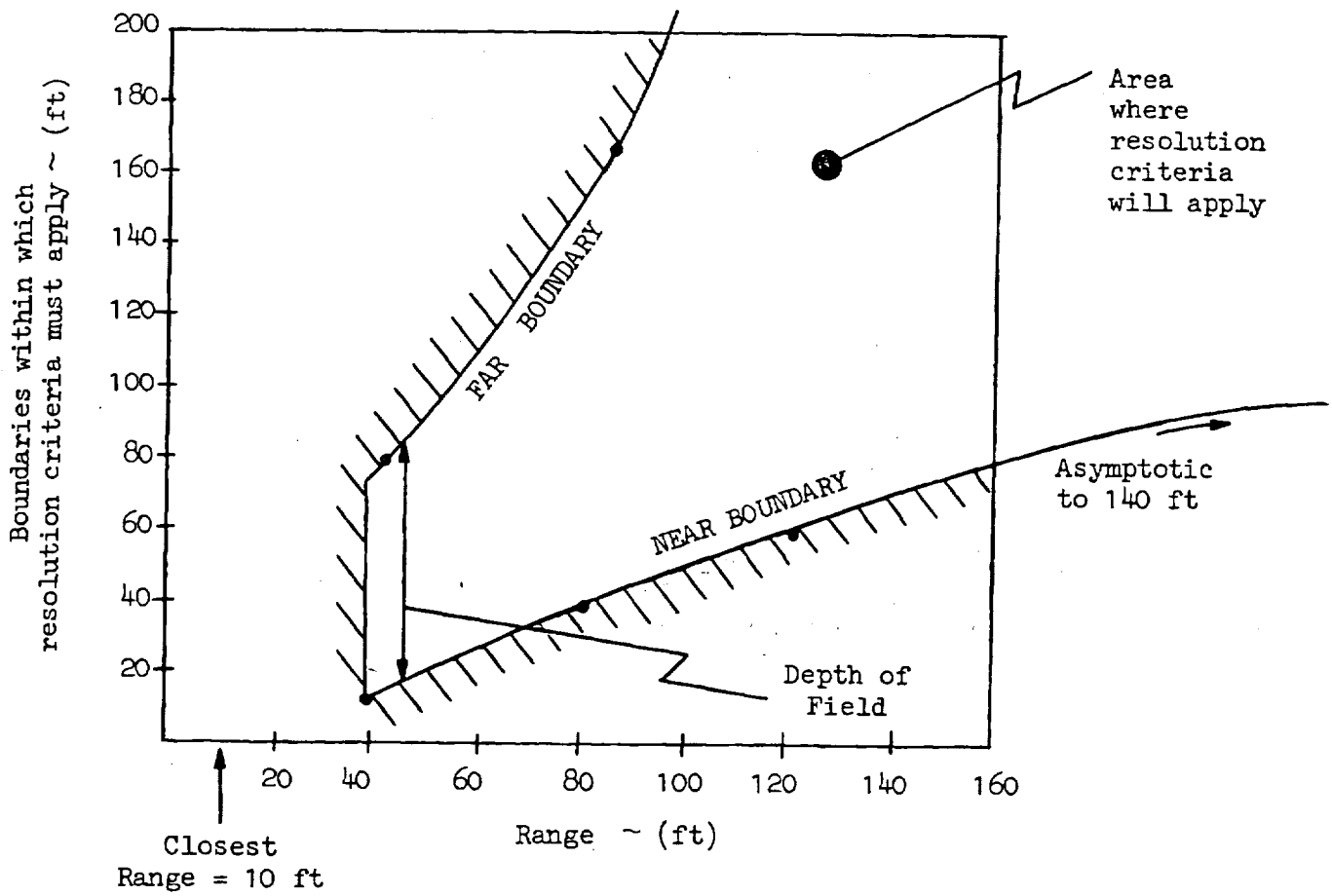

3.4 Brightness

The brightness capability of the system shall be such that the darkest black is presented at a luminance level of 0.6 foot-Lamberts. The brightest white luminance level will be 12 foot-Lamberts. At least 10 shades of gray between these levels must be demonstrated. The luminance levels within the cockpit will be such that the aircraft night lighting system is not required when simulating daytime conditions. Diffuse cockpit lighting similar to that on a cloudy day is required. Full color capability is required including white light.

3.5 Movement Performance

3.5.1 Maximum Performance

Within the "fly-in" space described in Section 3.3, namely a box 24,000 feet long by 12,000 feet wide by 2,000 feet high, the following maximum performance must be provided as shown in Table 2. The X and Y axes refer to the horizontal directions such as North and East, the Z axis refers to the height degree-of-freedom. Pitch, roll, and yaw angles, rates, and accelerations refer to Euler parameters. The performance shall be available to each simultaneously.

3.5.2 Thresholds

The displayed attitude threshold shall be 6 arc-minutes or less. This defines where the attitude response of any axis shows a high correlation with the command. This correlation shall be such that the error when following a sinusoidal command of 15 arc-minutes peak amplitude is less than 6 arc-minutes for a range of frequencies from zero to two Hertz.

The thresholds for the translational degrees of freedom will be such that the error when following a sinusoidal position command of $\pm$ 1 foot or larger is less than four inches for a range of frequencies from zero to one-half Hertz. These criteria will apply at all spatial orientations and positions available.

TABLE 2

MAXIMUM PERFORMANCE

PARAMETER \ AXIS	X (North)	Y (East)	Z (Height)	PITCH	ROLL	YAW
DISPLACEMENT	± 12,000 ft	± 6,000 ft	2,000 ft	± 45 deg	Continuous	Continuous
VELOCITY	± 350 ft/sec	± 350 ft/sec	± 200 ft/sec	± 50 deg/sec	± 60 deg/sec	± 60 deg/sec
ACCELERATION	± 130 ft/sec^2	± 130 ft/sec^2	+ 100 - 160 ft/sec^2	± 90 deg/sec^2	± 150 deg/sec^2	± 120 deg/sec^2

3.5.3 Dynamics

Above the threshold levels, the display movements will follow the commands with the following performance. The rotational axes frequency response shall match that of a lag-type second-order system with an undamped natural frequency of 4 Hertz and 0.7 damping ratio. The match will show the amplitudes within ± 1 db and the phase within ± 20 deg up to a frequency of 2 Hertz at any amplitude between the maximum and the threshold.

The translational axes frequency response shall match that of a lag-type second-order system with an undamped natural frequency of 1 Hertz and 0.7 damping ratio. The match will show the amplitudes within ± 1 db and the phase within ± 20 deg up to a frequency of 0.5 Hertz at any amplitude between the maximum and the threshold.

3.5.4 Velocity Error

The translational position error for each axis will not be more than 4 inches when the system is following constant velocity commands up to the velocity limits of the driving system.

3.5.5 Jitter

Total jitter amplitudes due to any combination of sources shall not exceed ± 2 arc-minutes on the display.

3.5.6 Flicker

Flicker of the display will be undetectable to the normal unaided eye at the highest brightness levels of the display under static conditions.

SECTION 4.0

COCKPIT INTEGRATION AND COMPATIBILITY

The visual system will be carried on a motion base supporting a cockpit and a two-man (side-by-side) crew. Cockpit combings and other structure must be represented and elements of the cockpit will be driven to simulate vibration effects. Various kinds of equipment may be installed in the cockpit to monitor human performance. These devices will require a relatively quiet electrical environment. Excessive sound noise correlated with display parameters may provide unwanted information to the crew and therefore is not acceptable. Simulation periods may be long, approaching hours, therefore requiring an examination of radiation effects. It is re-stressed that the display for one crew member must be high-quality while the display simultaneously presented to the second crew member (four feet away) can be degraded. The crew members must not be encumbered by the display equipment. Cockpit flexibility for rapid changeover will be sought and access for this as well as maintenance must be provided. A dark environment will also require control of outside lighting. Since control consoles must be near the display hardware, an adequate lighting control scheme is required. Any system must be compatible with current black and white and color television systems. Compatibility with computer graphics terminals and computer-generated imagery techniques must be described.

SECTION 5.0

GROWTH POTENTIAL

Since the exact definition of field-of-view requirements for Army flight missions is not possible at this time, a high degree of flexibility and potential growth in this area is sought. Besides extending the field, additional information may be required such as moving targets, missiles, and other aircraft. More attitude information of less detail in the peripheral parts of the field may be required for effective control studies.

The advent of real-time computer-generated imagery extends the potential for random terrain generation, a desirable feature for human factors studies. The impact of such innovations on the system growth must be described.

The enormous luminance range associated with simulation of daylight and dark night conditions will impact heavily on the ability of the present device to research effectively the problems faced by the Army in the next two decades. The basic requirement of air mobility in all environmental conditions of lighting, weather, and terrain obviously will press the simulation technology addressed to those requirements.

Some of the growth capability items that can be foreseen now are:

- Extended field of view
- Resolution compatible with vision
- More realistic range of brightness levels and contrast
- Random terrain image generation with detail approaching one inch.

The possibility of growth in these areas must be described.