FACILITY FORM 602

Z65 15327
(ACCESSION NUMBER)

(THRU)

143
(PAGES)

(CODE)

(NASA CR OR TMX OR AD NUMBER)

(CATEGORY)

Copy No. 24 SID 62-10

STRUCTURAL ANALYSIS OF THE 0.105 SCALE APOLLO WIND TUNNEL MODEL (FS-2)

(NAS9-150)

Reissued November 1963

(NASA-CR-155286) STRUCTURAL ANALYSIS OF THE 0.105 SCALE APOLLO WIND TUNNEL MODEL (FS-2) (North American Aviation, Inc.) 143 p

N78-70365

Unclas
00/18 33741

~~AVAILABLE TO NASA HEADQUARTERS ONLY~~

NOV 1977
RECEIVED
NASA STI FACILITY

This issue replaces and supersedes all previsous issues of this book.

Accession No. 50912

Copy No. 24 SID 62-104

STRUCTURAL ANALYSIS OF THE 0.105 SCALE APOLLO WIND TUNNEL MODEL (FS-2)

(NAS9-150)

Reissued November 1963

~~AVAILABLE TO NASA HEADQUARTERS ONLY~~

NORTH AMERICAN AVIATION, INC.
SPACE and INFORMATION SYSTEMS DIVISION

#8760

FOREWORD

The structural analysis of the FS-2 model was performed under the NASA Apollo Contract NAS9-150, Exhibit I, paragraph 5.1.

This report was prepared by the Aero-Thermo Model Structures Group, Los Angeles Division of North American Aviation, Inc., under the direction of C. B. McClain.

ABSTRACT

This report covers the structural integrity of the Apollo FS-2 Force Model to be run in the Ames Unitary Plan Wind Tunnel and also in the North American Trisonic Wind Tunnel.

Loads for the calculations shown are based on the Ames Tunnel conditions, starting or steady state, whichever gives the most critical load for the component in question. A summary sheet of Trisonic Tunnel margins of safety is included in the report also.

All components show positive margins of safety based on a safety factor of five on material ultimate; except the short (-4) tower. The tower base legs have a safety factor of 3.62 on the ultimate strength of the material with full primary and secondary stresses combined.

The balance will be overloaded in starting at $\alpha = 0°$ unless the normal elements are used to resist side loading (roll 90°). When $\alpha = 90°$ rolling moment will be the only overload consideration, again in starting.

All components not analyzed in this report were considered not critical.

CONTENTS

Section		Page
I	INTRODUCTION	1
II	DISCUSSION	3
	Launch Escape Rocket Motor Assembly	3
	Jettison Motor	3
	Launch Escape Tower Structures	3
	Command Module	4
	Sting	4
	Margins of Safety (Ames)	5
	Estimated TWT Loads	6
III	REFERENCES	9
	LOADS	10
	APPENDIXES	
	A. STRUCTURAL ANALYSIS	A-1
	B. MODIFICATIONS FOR DUAL BALANCE TEST	B-1
	C. MODIFICATION TO UPDATE THE FS-2 MODEL	C-1
	D. AUTOMATED STRAKES	D-1
	E. ADDITION OF CANARD PLATE TO TOWER STRUCTURE	E-1
	F. COMMAND MODULE ANTENNAS, VENT AND UMBILICAL FAIRING	F-1

I. INTRODUCTION

This report presents a structural analysis of the 0.105-scale Apollo wind tunnel model (FS-2). Numerous configurations of the model are to be tested in the Ames Unitary Plan 8- by 7-, 9- by 7-, and 11- by 11-foot wind tunnels. The ability of the most critical of these configurations to withstand the loadings encountered during test is analyzed herein. The loadings used are based on steady-state conditions in the Ames 11- by 11-foot Unitary Plan Wind Tunnel. A summary table of margins of safety is also provided in this report to cover the load conditions these models will be subjected to in the North American Aviation, Inc., Trisonic Wind Tunnel Facility.

Test conditions are covered in this report, and starting and steady-state loading are investigated with the result that steady-state loading is critical for the model components when at a 90-degree angle of attack. The tunnel starting condition will be critical for the sting when at a 0-degree angle of attack. Starting will also be critical for the balance when at 0 and 90 degrees angle of attack.

All components to be tested in the Ames Facilities have positive margins of safety on a safety factor of 5 on material ultimate. The balance elements will be loaded above rated value unless balance installations are studied carefully.

These models are also to be tested in North American Aviation's Trisonic Wind Tunnel. The basic tower (170 inch) will have a negative margin of safety for that test unless starting angles of attack are kept below 20 degrees.

Components not analyzed in this report are concluded to be not critical.

I. INTRODUCTION

This report presents a structural analysis of the .105 Scale Apollo Wind Tunnel Model (FS-2). Numerous configurations of the model are to be tested in the Ames Unitary Plan 8 x 7, 9 x 7 and 11 x 11 foot Wind Tunnels. The ability of the most critical of these configurations to withstand the loadings encountered during test is analyzed herein. The loadings used are based on steady state conditions in the Ames 11 x 11 foot Unitary Plan Wind Tunnel.

A summary table of margins of safety is also provided herein to cover the load conditions these models will be subjected to in the North American Aviation, Inc., Trisonic Wind Tunnel Facility.

II SUMMARY

This report is a structural analysis of the most critical of various configurations of the .105 Scale Apollo Wind Tunnel Force Model (FS-2).

Test conditions covered are for the Ames Unitary Plan 8 x 7, 9 x 7, and 11 x 11 foot Wind Tunnels. Starting and steady state loading are investigated with the result that steady state loading is critical for the model components when at an angle of attack of ninety degrees. The tunnel starting condition will be critical for the sting when at zero degree angle of attack. Starting will also be critical for the balance when at zero, and also ninety degrees, angle of attack.

All components to be tested in the Ames Facilities have positive margins of safety on a safety factor of five on material ultimate. The balance elements will be loaded above rated value unless balance installations are studied carefully.

These models are also to be tested in North American Aviation's Trisonic Wind Tunnel at a later date. The basic tower (170-inch) will have a negative margin of safety for that test unless starting angles of attack are kept below twenty degrees.

Components not analyzed in this report are concluded to be not critical.

II. DISCUSSION

LAUNCH ESCAPE ROCKET MOTOR ASSEMBLY

Two escape rocket motor configurations are to be tested. One is a basic motor of cylindrical shape with a conical nose cone and a flared skirt aft; the other one is a motor with the same conical nose cone as the basic motor and a taper-sided shape (page A-3 of Appendix A). The taper is from the nose cone to the same diameter at the base (aft) as the basic motor flare skirt.

The alternate rocket motor shape is used for calculating loads on the rocket-tower-command module configurations checked in Appendix A. For critical section checks on the rocket motors, the basic motor is critical at the intersection of the cylindrical side and the skirt flare (page A-3).

Bending and compressive stresses due to normal and drag loading on the rocket are in the order of 3225 psi. When compared with a safety factor of 5 on a material ultimate of 77,000 psi, this gives a positive margin of safety of 3.76.

JETTISON ROCKET ASSEMBLY

As is the case with all the Apollo launch escape configurations, the jettison rocket motor is not highly loaded. It is somewhat protected by the tower structure when running at high angles of attack and is completely blocked by the rocket motor when at low angles of attack; therefore, no structural problem exists in the structure or attachment.

LAUNCH ESCAPE TOWER STRUCTURES

Four tower structures are designed for test and two are analyzed in this report. The long (240 inch) and the one equivalent to the 170-inch full-scale tower. The two short towers (120 and 80 inch) are adequate by comparison.

Leg sizes of the 240-inch and the 170-inch towers differ. The longer tower has 3/8-inch-diameter legs, and the 170-inch tower is made with 5/16-inch-diameter legs. The web members on both towers are all 1/4-inch rods.

III DISCUSSION

Launch Escape Rocket Motor Assembly

Two configurations of escape rocket motors are to be tested. One is a basic motor of cylindrical shape with a conical nose cone, and a flared skirt aft. The other one is a motor with the same conical nose cone as the basic motor and a taper sided shape, (A-3). The taper is from the nose cone to the same diameter at the base (aft) as the basic motor flare skirt.

The alternate rocket motor shape is used for calculating loads on the rocket-tower-command module configurations checked in Appendix A. For critical section checks on the rocket motors, the basic motor is critical at the intersection of the cylindrical side and the skirt flare, (A-3).

Bending and compressive stresses, due to normal and drag loading on the rocket are in the order of 3,225 psi. When compared with a safety factor of five on a material ultimate of 77,000 psi, this gives a positive margin of safety of 3.76.

Jettison Rocket Assembly

As is the case with all the Apollo launch escape configurations, the jettison rocket motor is not highly loaded. It is somewhat protected by the tower structure when running at high angle of attack and completely blocked by the rocket motor when at low angles of attack; therefore, no structural problem exists in the structure or attachment.

Launch Escape Tower Structures

Four tower structures are designed for test. Two of the four are analyzed in this report. The long (240-inch) and the one equivalent to the 170-inch full scale tower. The two short towers (120-inch and 80-inch) are adequate by comparison.

Leg sizes of the 240-inch and the 170-inch towers differ. The longer tower has three-eights inch diameter legs, and the 170-inch tower is made with five-sixteenth inch diameter legs. The web members on both towers are all one-quarter inch rods.

Construction and assembly of all members is by welding at the joints of the web members to the legs (A-4,12). All bays above the base bay are tapered panel type with one diagonal in each of four sides.

III DISCUSSION (Cont)

The base bay is a bent frame with a double beam top and two single rod knee braces in each of its four sides. Critical stresses occur at the junction of the kneebrace to the leg, and at the base of the legs where they join to the stiff rod attachment ends.

Combined compression, due to the over turning moment and side sway bending, induce stresses of 31,650 psi in the long tower and 70,000 psi in the 170-inch tower. The shorter tower is therefore most critical.

For steady state loading condition at ninety degrees angle of attack, the margin of safety for the above stress, when compared with a safety factor of 5 on material ultimate, is a negative twenty-eight percent. A true safety factor for the stresses shown is 3.62, (A-15). The long tower has a positive margin of safety of fifty-three percent for the ninety degree steady state loads, (A-9); which are the highest encountered at the Ames Facilities.

Command Module

Tower reactions are transferred to the command module through a pair of tower mounting blocks. These blocks attach directly to the balance block into which the balance cavities are bored. The external structure of the command module is of shell type and resists air loads only on itself. These loads are transmitted directly to the balance block.

Of significance stress wise, are the tower leg socket attachment and tower mounting block attachment to the balance block (A-17,21) and (Reference 9).

All margins of safety are one-hundred percent or more on a safety factor of five on material ultimate.

Sting

The sting is made in the form of a tapered, round bar, and is machined from a 17-4 PH corrosive resistant steel forging.

When the model is at zero angle of attack loads on the sting are a maximum during starting conditions. The critical section occurs at the sting to tunnel adapter socket, (A-25,28). Side and normal loads combine to cause a stress of 37,400 psi in bending. Shear stresses are in the order of 200 psi and can be neglected.

The Margin of Safety for a section at the thick part of the aft socket taper is fifty percent positive.

All members are constructed and assembled by welding at the joints of the web members to the legs (pages A-4 and A-12). All bays above the base bay are tapered panel type with one diagonal in each of four sides.

The base bay is a bent frame with a double beam top and two single rod knee braces in each of its four sides. Critical stresses occur at the junction of the kneebrace to the leg and at the base of the legs where they join to the stiff rod attachment ends.

Combined compression due to the over turning moment and side-sway bending induces stresses of 31, 650 psi in the long tower and 70, 000 psi in the 170-inch tower. The shorter tower is, therefore, most critical. For steady-state loading condition at 90 degrees angle of attack, the margin of safety for these stresses, when compared with a safety factor of 5 on material ultimate, is a negative 28 percent. A true safety factor for the stresses shown is 3.62 (page A-15). The long tower has a positive margin of safety of 53 percent for the 90-degree steady-state loads (page A-9), which are the highest encountered at the Ames Facilities.

COMMAND MODULE

Tower reactions are transferred to the command module through a pair of tower mounting blocks attached directly to the balance block into which the balance cavities are bored. The external structure of the command module is of shell type and resists air loads only on itself. These loads are transmitted directly to the balance block.

The tower leg socket attachment and tower mounting block attachment to the balance block (pages A-17 and A-21) are significant in considering stress (Reference 4).

All margins of safety are 100 percent or more on a safety factor of 5 on material ultimate.

STING

The sting is in the form of a tapered, round bar and is machined from a 17-4 PH corrosive resistant steel forging.

When the model is at 0 degrees angle of attack, loads on the sting are a maximum during starting conditions. The critical section occurs at the sting to tunnel adapter socket (pages A-25 and A-28). Side and normal loads combine to cause a stress of 37, 400 psi in bending. Shear stresses are in order of 200 psi and can be neglected.

IV MARGIN OF SAFETY TABLE
(AMES TEST)

Page	Component	Type of Stress	M.S.
A.3	-1 Rocket	Bending	3.76
A.9	-6 Tower Leg	Comp. and Bending	.53
A.10	-6 Tower Diameter	Tension	1.17
A.11	-6 Tower Welds	Shear	4.4
A.15	-4 Tower Leg	Comp. and Bending	-.28
A.18	-3 Socket Weld	Shear	1.10
A.19	-3 Socket Rod	Bending	1.97
A.19	-3 Socket Screw	Tension	3.14
A.20	-3 Socket Rod	Tension	High
A.20	-3 Socket Rod	Shear	High
A.22	-5 Block Screws	Tension	1.29
A.23	-5 Block Pins	Shear	2.64
A.30	Ames Sting	Bending	.50
A.31	Ames Balance	Side Load	-.34**
A.32	Ames Balance	Roll	-.48**

Component	TWT TEST	M.S. *	True S.F.
-1 Rocket		.79	
-6 Tower Legs		-.48	(1.56)
-6 Tower Welds		.78	
-6 Tower Diagonals		-.28	(2.15)
-4 Tower Legs	α = 50° Start α = 20° Start	-.77	(.714)
-3 Socket		-.47	(1.58

* Based on Safety Factor of 3 on Ult.

IV MARGIN OF SAFETY TABLE
(TWT TEST) Cont.

Balance

α =0°, TWT Start, Task 2-3/4" Bal.
-6 Tower/Alt. Rocket

Element	Rated Load	Test Load
Fwd. Normal	3750	3888
Fwd. Side	1875	4304
Chord	4200	6398

α =0°, TWT Start, Task 2-3/4" Bal.
-4 Tower/Basic Rocket & Jettison Motor at Nose

Fwd. Normal	Not Critical	
Fwd. Side	1877	3454
Chord	4200	6398

α =20°, TWT Start
-4 Tower/Basic Rocket with Jettison Rocket at Nose

** Rolling Moment	8000	5339
** Fwd. Side Force	1875	3406
Fwd. Normal	3750	4737
Chord	420	6387

** These hold for any α (a function of model angle to sting angle only, 20° used here).

The margin of safety for a section at the thick part of the aft socket taper is 50 percent positive.

MARGINS OF SAFETY

The margins of safety for the Ames tests are presented in Table 1.

Table 1. Ames Test Margins of Safety

Component	Type of Stress	Margin of Safety	Appendix Page No.
-1 Rocket	Bending	3.76	A-3
-6 Tower leg	Compression and bending	0.53	A-9
-6 Tower diameter	Tension	1.17	A-10
-6 Tower welds	Shear	4.4	A-11
-4 Tower leg	Compression and bending	-0.28	A-15
-3 Socket weld	Shear	1.10	A-18
-3 Socket rod	Bending	1.97	A-19
-3 Socket screw	Tension	3.14	A-19
-3 Socket rod	Tension	High	A-20
-3 Socket rod	Shear	High	A-20
-5 Block screws	Tension	1.29	A-22
-5 Block pins	Shear	2.64	A-23
Ames sting	Bending	0.50	A-30
Ames balance	Side load	-0.34*	A-31
Ames balance	Roll	-0.48*	A-32

*For any angle of attack and is a function of model angle to sting angle only (20 degrees used here).

V. REFERENCES

1. "Model Design Structures Manual" L.A. Div., NAA No. NA52-332, Rev. 1962.

2. "Structures Manual" Vol. I & II, L.A. Div., NAA No. NA52-400, Rev. 1962.

3. R.J. Roark, Formulas for Stress & Strain, Third Edition, New York, McGraw-Hill Book Co. - 1954.

4. U.S. Department of Defense, Strength of Metal Aircraft Elements, MIL-HDBK-5 Wash. 25, D.C. Armed Forces Supply Support Center, 1961.

5. "Starting and Running Loads for the 0.105 Scale Apollo FS-2 Model", NAA, Inc., Wind Tunnel Letter No. W.T.L. 62-34 Feb. 19, 1962.

6. "Running Loads for the 0.105 Scale Apollo FS-2 Model in Ames UPWT." NAA, Inc., Wind Tunnel Letter No. WTL 62-44, March 8, 1962.

7. No. 7121-01076 "Model Assembly Apollo - FS-2 Force Model" March 1962, SID, NAA, Inc.

8. No. 7121-01077 "Assembly & Details - Command Module FS-2 Apollo Force Model". Feb. 1962, SID NAA, Inc.

9. No. 7121-01078 "Details - Balance Blocks & Misc. .105 Scale FS-2 Apollo" Feb. 1962, SID, NAA, Inc.

10. No. 7121-01079 "Assembly and Details - Launch Escape Towers (FS-2) Apollo Model" Feb. 1962, SID, NAA, Inc.

11. No. 7121-01080 "Assembly and Details - Rocket Motors, Apollo (FS-2) Model" Feb. 1962, SID, NAA, Inc.

12. No. 7121 - 01081 "Sting, Ames W.T. Apollo (FS-2) Force Model" Feb. 1962 SID, NAA, Inc.

13. No. 7121-01082 "Sting, T.W.T. FS-2 Apollo Force Model" March 1962, SID, NAA, Inc.

14. No. 7121-01083 "Installation-Ames UPWT. . . (8' x 7'), (9' x 7'), (11' x 11') Apollo (FS-2) Model", Feb. 1962, SID, NAA, Inc.

STEADY STATE LOADS SHEET

Model APOLLO FS-2
Tunnel UPWT 8X7, 9X7 & 11X11 FT.
Mach no. range .7 TO 3.5
Design q 450 PSF FOR α = 25° ~ 95°
540 PSF FOR α = 0° ~ 25°

Angle of attack range 0 TO 95°*
Angle of yaw range 0
Reference area 1.4253 FT²
Reference length 1.3475 FT
Reference span

A safety factor of 5 based on the ultimate strength or a safety factor of 3 based on the yield strength which ever is critical should be used in all design calculations.

Configuration	Attitude α	Normal lb	Side lb	Chord lb	Center of pressure spanwise	Center of pressure chordwise
COMMAND MODULE (C_2)	180°			827.5	℄	10.92" AFT OF CONE APEX
	90°	462.0		128.0	℄	
TOWER STRUCTURE (SHORT)	90°	205.5			℄	3.759" FWD OF CONE APEX
TOWER STRUCTURE (LONG)	90°	338			℄	12.162" AFT OF ROCKET SKIRT
ESCAPE ROCKET	90°	240.0		25.7	℄	8.77" AFT OF ROCKET NOSE
JETTISON MOTOR	90°	30.8			℄	3.65" AFT OF ROCKET SKIRT
LAUNCH ESCAPE SYSTEM (ET6 C2)	90°	962.0		128.3	℄	1.05" FWD OF CONE APEX

Max. rolling moment:
Others:

Approved by G. McStan Jr.

REF: W.T.L. 62-44, ENCL.(1)

* α = 180° INCLUDED FOR COMMAND MODULE MAX. CHORD FORCE

J.K.K.
JVC
3-7-62

NORTH AMERICAN AVIATION, INC.
FIGURE 1.
AMES STEADY STATE LOADS

-5.2-
SID 62-104
APOLLO FS-2

PREPARED BY: PLL.	NORTH AMERICAN AVIATION, INC.	PAGE NO. -5.3-
CHECKED BY: RBR.	FIGURE 2.1 TWT STARTING	REPORT NO. SID 62-104
DATE: 2-19-62	LOADS	MODEL NO. APOLLO, FS-2

STARTING LOADS SHEET

Model 0.105 SCALE APOLLO, FS-2
Tunnel TWT
Mach no. range 0.3 TO 3.5

Angle of attack range C - 0° TO 90°
LES - 0° TO 50°
Angle of yaw range 0°

Starting pressures-- Δ P (psi)

	Normal load	Side load	Chord load
Flat surfaces	7.5	7.5	28.3
Curved surfaces			

A safety factor of 3 based on the ultimate strength or a safety factor of 2 based on the yield strength whichever is critical should be used in all design calculations.

NOTE: FR. & PR. DENOTE FRONTAL & PLAN AREA RESPECTIVELY

Configuration	Attitude α	Area IN.²	Normal* lb	Side lb	Chord* lb	Center of pressure spanwise	Center of pressure chordwise
COMMAND MODULE (C2)	0°	FR.205	989.2	989.2	5795.9	℄	4.54" fwd
	5°	PL.132.8	1489.0		5690.0		model base
	50°		5527.9		2157.5		
	90°		3718.0		1538.0		
BASIC ESCAPE ROCET (E)	0°	FR.19.13	404.9	404.9	517.0	℄	8.27" fwd.
	5°	PL.53.62	453		550		rocket skirt end
	50°		1131.0		572.5		
ALTERNATE ESCAPE ROCKET (E2)	0°	FR.19.13	498.6	498.6	517.0	℄	8.18" fwd.
	5°	PL.68.06	549.0		579.0		rocket skirt end
	50°		1426.4		572.5		

Max. rolling moment: _____
Others:

* CHORD & NORMAL LOADS ARE PARALLEL AND PERPENDICULAR TO THE MODEL AXIS OF SYMMETRY RESPECTIVELY.

Approved by: [signature]

REF: WTL.62-84, ENCL.(1)

STARTING LOADS SHEET

Model 0.105 SCALE APOLLO, FS-2
Tunnel TWT
Mach no. range 3 TO 3.5

Angle of attack range C 0° TO 90° LES 0° TO 50°
Angle of yaw range 0°

Starting pressures-- Δ P (psi)

	Normal load	Side load	Chord load
Flat surfaces	7.5	7.5	28.3
Curved surfaces			

A safety factor of 3 based on the ultimate strength or a safety factor of 2 based on the yield strength whichever is critical should be used in all design calculations.

NOTE: FR & PL DENOTE FRONTAL & PLAN AREAS RESPECTIVELY

Configuration	Attitude α	Area IN.²	Normal * lb	Side lb	Chord * lb	Center of pressure spanwise	Center of pressure chordwise
BASIC TOWER (T5)	0°	FR 3.31	334.0	334.0	85.3	℄	7.765" aft
	5°	PL 44.53	346.8		127.2		rocket skirt end
	50°		869.8		449.8		
ALTERNATE TOWER (T6)	0°	FR 3.31	557.6	557.6	85.3	℄	12.80" aft
	5°	PL 73.32	579.0		208.3		rocket skirt end
	50°		1550.0		795.0		
JETTISON MOTOR	0°	FR 0	43.38	43.38	0	℄	3.41" aft
	5°	PL 5.78	42.85		-3.075		rocket skirt
	50°		92.13		50.36		end

Max. rolling moment: _____
Others:

* CHORD AND NORMAL LOADS ARE PARALLEL AND PERPENDICULAR TO THE MODEL AXIS OF SYMMETRY RESPECTIVELY.

Approved by: Hamilton Jr.

REF: WTL. 62-34, ENCL. (1)

PQ-62-20

PREPARED BY: P.L.L.
CHECKED BY: R.B.R.
DATE: 2-19-62

NORTH AMERICAN AVIATION, INC.
FIGURE 2.2 TWT STARTING LOADS

PAGE NO. -5.4-
SID 62-104
REVISION
MODEL NO. APOLLO, FS-2

PREPARED BY: P.L.L.	NORTH AMERICAN AVIATION, INC.	PAGE NO. -5.5- OF
CHECKED BY: R.B.R.	FIGURE 3.1 AMES STARTING	REPORT NO. SID 62-104
DATE: 2-19-62	LOADS	MODEL NO. APOLLO-FS-2

STARTING LOADS SHEET

Model 0.105 SCALE APOLLO, FS-2
Tunnel AMES 11'x11' & 9'x7' UPWT
Mach no. range 7 TO 2.6

Angle of attack range 0° TO 90°
Angle of yaw range 0°

Starting pressures-- Δ P (psi)

	Normal load	Side load	Chord load
Flat surfaces	1.215	2.08	2.08
Curved surfaces			

A safety factor of 5 based on the ultimate strength or a safety factor of 3 based on the yield strength whichever is critical should be used in all design calculations.

NOTE: FR & PL DENOTE FRONTAL AND PLAN AREAS RESPECTIVELY @ α = 0°

Configuration	Attitude α	Area inches²	Normal* lb	Side lb	Chord* lb	Center of pressure spanwise	Center of pressure chordwise
COMMAND MODULE (CE)	0°	FR. 205	161.20	276.00	426.00	℄	4.54" fwd.
	90°	PL. 132.8	276.00	"	249.00		model base
BASIC ESCAPE ROCKET (E)	0°	FR. 19.13	65.10	111.20	39.79	℄	8.27" fwd
	90°	PL. 53.62	111.20	"	23.22		rocket skirt end
ALTERNATE ESCAPE ROCKET (E2)	0°	FR. 19.13	82.60	141.60	39.79	℄	8.18" fwd.
	90°	PL. 68.06	141.60	"	23.22		rocket skirt end
BASIC TOWER (T5)	0°	FR. 3.31	54.10	92.50	6.88	℄	7.765" aft
	90°	PL. 44.53	92.50	"	4.02		rocket skirt end
ALTERNATE TOWER (T6)	0°	FR. 3.31	89.00	152.20	6.88	℄	12.80" aft
	90°	PL. 73.32	152.20	"	4.02		rocket skirt end

Max. rolling moment: _____
Others:
CHORD & NORMAL LOADS ARE PARALLEL AND PERPENDICULAR TO THE MODEL AXIS OF SYMMETRY RESPECTIVELY

Approved by: [signature]

PQ-62-20

REF: NTL 62-[illegible]

PREPARED BY: PLL	NORTH AMERICAN AVIATION, INC.	PAGE NO. -5.6-
CHECKED BY: RBR	FIGURE 3.2 AMES	SID 62-104
DATE: 2-19-62	STARTING LOADS	MODEL NO. APOLLO, FS-2

STARTING LOADS SHEET

Model 0.105 SCALE APOLLO-FS-2
Tunnel AMES 11'X11' & 9'X7' UPWT
Mach no. range .7 TO 2.6

Angle of attack range 0° TO 90°
Angle of yaw range 0°

Starting pressures-- Δ P (psi)

	Normal load	Side load	Chord load
Flat surfaces	1.215	2.08	2.08
Curved surfaces			

A safety factor of 5 based on the ultimate strength or a safety factor of 3 based on the yield strength whichever is critical should be used in all design calculations.

NOTE: FR. & PL. ARE FRONTAL & PLAN AREAS RESPECTIVELY

Configuration	Attitude α	Area inches²	Normal* lb	Side lb	Chord* lb	Center of pressure spanwise	Center of pressure chordwise
JETTISON MOTOR	0°	FR. 0	7.02	12.01	0	℄	3.41" aft
	90°	PL. 5.78	12.01	"	0		rocket skirt end

Max. rolling moment: _____
Others:

* CHORD & NORMAL LOADS ARE PARALLEL & PERPENDICULAR TO THE MODEL AXIS OF SYMMETRY RESPECTIVELY

Approved by: [signature]

PQ-62-20

REF: WTL. 62-34 EV. (1)

RBR	NORTH AMERICAN AVIATION, INC.		-5.7-
	HIGHER & TWT		SID 62-104
R-19-62	STARTING LOADS		APOLLO, FS-2

STEADY STATE LOADS SHEET

Model 0.105 SCALE APOLLO FS-2
Tunnel TWT
Mach no. range 3 TO 3.5

Design q 2000 PSF

Angle of attack range 0° TO 50° LES / 0° TO 180° -C
Angle of yaw range 0°
Reference area 1.4261 FT²
Reference length 1.3475 FT.
Reference span 1.3475 FT.

A safety factor of _____ based on the ultimate strength or a safety factor of _____ based on the yield strength which ever is critical should be used in all design calculations.

Configuration	Attitude α	Normal lb	Side lb	Chord lb	Center of pressure spanwise	Center of pressure chordwise
COMMAND MODULE (C2)	-180°			40350	℄	3.89" fwd blunt end
(α = -180° BLUNT END FWD)	-145°	393.0		3340	℄	
	-90°	1371.0			℄	
LAUNCH ESCAPE SYSTEM	0°	53		2771	℄	4.78" fwd blunt end
(ET6C2)	50°	2719		1446	℄	10.07 fwd blunt end

Max. rolling moment: _____
Others:

Approved by [signature]

REF. WTL.62-34, ENCL.(1)

PQ-62-21

STEADY STATE LOADS SHEET

Model 0.105 SCALE APOLLO FS-2
Tunnel AMES 11'x11' & 9'x7' UPWT
Mach no. range 2 to 2.6

Design q 410 PSF

Angle of attack range 0° to -180°
Angle of yaw range ±6°
Reference area 1.4261 FT²
Reference length 1.3475 FT.
Reference span 1.3475 FT.

A safety factor of 5 based on the ultimate strength or a safety factor of 3 based on the yield strength which ever is critical should be used in all design calculations.

Configuration	Attitude α	Normal lb	Side lb	Chord lb	Center of pressure spanwise	Center of pressure chordwise
COMMAND MODULE (C2)	-180°			827.5	℄	3.89" from
(α=180° BLUNT END FWD)	-145°	80.6		685	℄	blunt end
	-90°	281.8			℄	
TOWER STRUCTURE	90°	289.2			℄	8.28" aft } reduce skirt end
ESCAPE ~~ROCKET~~	90°	401.5			℄	8.27" fwd }
LAUNCH ESCAPE SYSTEM	0°	—		565.3	℄	9.96" fwd. blunt end
(E T6 C2)	50°	541.6		301.	℄	19.46 fwd blunt end
	90°	1114.3			℄	

Max. rolling moment: _____
Others:

Approved by [signature]

REF: WTL. 62-34, ENCL. (2)

PQ-62-21

P.L.L.
R.B.R.
2-10-62

NORTH AMERICAN AVIATION, INC.
FIGURE 5. AMES
STEADY STATE LOADS

-5.8-
S1062-104
APOLLO, FS-2

The Transonic Wind Tunnel margins of safety based on a safety factor of 3 on the ultimate are presented in Table 2.

Table 2. TWT Test Margins of Safety

Component	M.S.	True Safety Factor
-1 Rocket	0.79	
-6 Tower legs	-0.48	1.56
-6 Tower welds	0.78	
-6 Tower diagonals	-0.28	2.15
-4 Tower legs	-0.77	0.714
α = 50 deg Start		
α = 20 deg Start		
-3 Socket	-0.47	1.58

ESTIMATED TWT LOADS

The estimated loads on the -6 tower and alternate rocket configuration at 0 degrees angle of attack for TWT start using the Task 2-3/4-inch balance are as follows:

Element	Rated Load	Test Load
Forward normal	3750	3888
Forward side	1875	4304
Chord	4200	6398

The estimated loads on the -4 tower with the basic rocket and jettison motor at the nose at 0 degrees angle of attack for TWT start using the Task 2-3/4-inch balance are as follows:

Element	Rated Load	Test Load
Forward normal	Not critical	
Forward side	1877	3454
Chord	4200	6398

The estimated loads on the -4 tower with the basic rocket with the jettison rocket at the nose at 20 degrees angle of attack for TWT start are as follows:

Element	Rated Load	Test Load
*Rolling moment	8000	5339
*Forward side force	1875	3406
Forward normal	3750	4737
Chord	420	6387

*For any angle of attack and is a function of model angle to sting angle only.

III. REFERENCES

1. Assembly and Details - Command Module FS-2 Apollo Force Model. NAA S&ID, Drawing No. 7121-01077 (February 1962).

2. Assembly and Details - Launch Escape Towers FS-2 Apollo Model. NAA S&ID, Drawing No. 7121-01079 (February 1962).

3. Assembly and Details - Rocket Motors, Apollo FS-2 Model. NAA S&ID, Drawing No. 7121-01080 (February 1962).

4. Details - Balance Block and Miscellaneous, 0.105-Scale FS-2 Apollo. NAA S&ID, Drawing No. 7121-01078 (February 1962).

5. Installation - Ames UPWT (8-by 7-foot, 9-by 7-foot, and 11-by 11-foot) Apollo FS-2 Model. NAA S&ID, Drawing No. 7121-01083 (February 1962).

6. Model Assembly - Apollo FS-2 Force Model. NAA S&ID, Drawing No. 7121-01076 (March 1962).

7. Model Design Structures Manual. NAA LAD, NA52-332 (Revised 1962).

8. Roark, R. J. Formulas for Stress and Strain, 3rd edition. New York: McGraw-Hill Book Company, Inc., 1954.

9. Running Loads for the 0.105-Scale Apollo FS-2 Model in Ames UPWT. NAA Wind Tunnel Letter No. WTL 62-44 (18 March 1962).

10. Starting and Running Loads for the 0.105-Scale Apollo FS-2 Model. NAA Wind Tunnel Letter No. WTL 62-34 (19 February 1962).

11. Sting, Ames Wind Tunnel Apollo FS-2 Force Model. NAA S&ID, Drawing No. 7121-01081 (February 1962).

12. Sting, TWT FS-2 Apollo Force Model. NAA S&ID, Drawing No. 7121-01082 (March 1962).

13. Strength of Metal Aircraft Elements. U.S. Department of Defense, MIL-HDBK-5 Armed Forces Supply Support Center, Washington, D.C. (1961).

14. Structure Manual, Vol. I and II. NAA LAD NA52-400 (Revised 1962).

APPENDIX A

STRUCTURAL ANALYSIS

APPENDIX A

Contents

	Page
ROCKET MOTOR ASSEMBLY	A-3
LONG TOWER (-6)	A-4
SHORT TOWER (-4)	A-12
TOWER SOCKET (-3)	A-17
TOWER MOUNT (-5)	A-21
AMES STING	A-24
AMES BALANCE STUDY	A-31

7121-01080

-1 ROCKET MOTOR ASSY- ; MATL- 7075 T6 ALUM.

(BASIC ROCKET MOTOR)

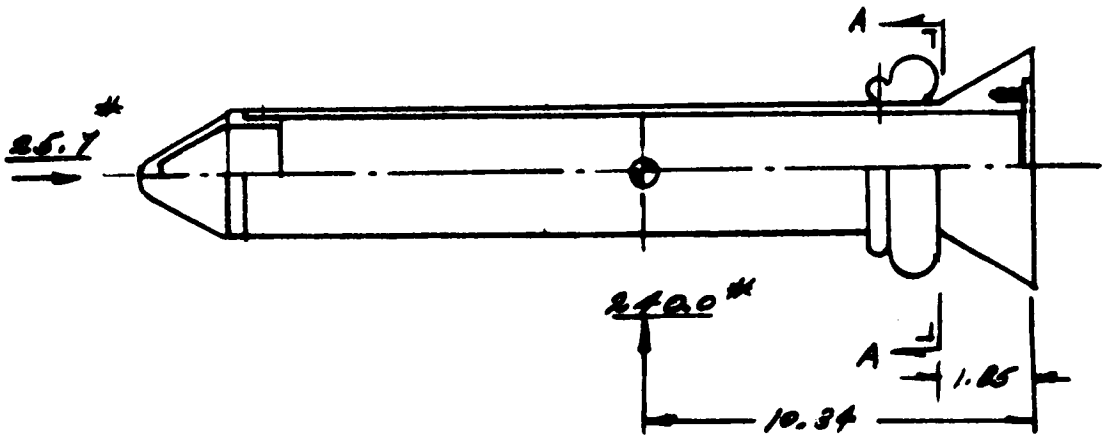

BENDING SECTION A-A:

$$Z = .09817(d^4 - d_1^4)/d$$

$$= .09817(2.73^4 - 2.48^4)/2.73$$

$$= .6372 \text{ in}^3$$

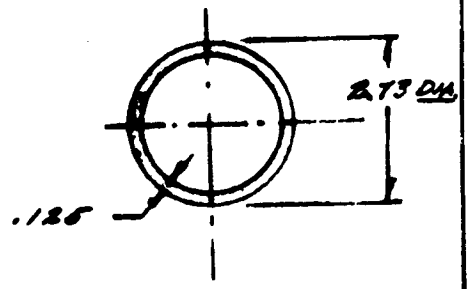

SECT. AA

$A = 1.023 \text{ in}^2$

$$M = 240(10.34 - 1.05)$$

$$= (240.0)(8.49)$$

$$= 2037.6 \text{ in\#}$$

$$f_b = \frac{M}{Z} + P/A = 2038/.637 + 25.7/1.023$$

$$= 3{,}200 + 25. = 3{,}225 \text{ \#/in}^2$$

$$M.S. = \frac{77}{(3)3{,}23} - 1 = 3.76$$

PREPARED BY: CBM	NORTH AMERICAN AVIATION, INC.	PAGE NO. -A.4- OF
CHECKED BY: ORM	.105 Sc FS-2 APOLLO	REPORT NO. SID-62-104
DATE: 2.12.62	FORCE MODEL	MODEL NO.

7121-01079

LONG TOWER (-6) / ALTERNATE ROCKET

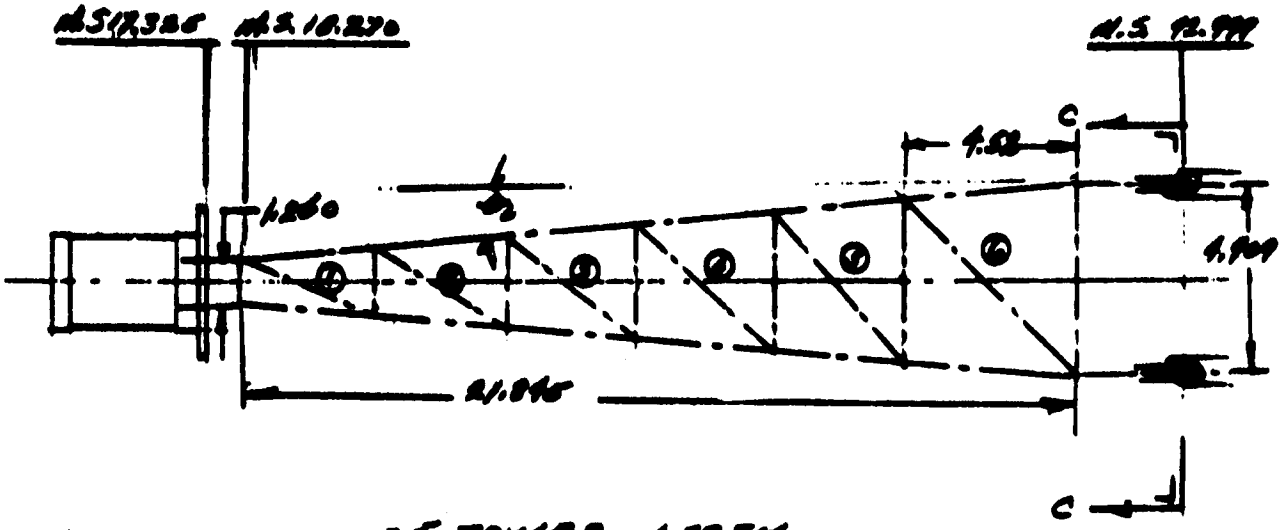

-5 TOWER ASSEM.

MAT'L. - 17-4PH CRES
H.T. - 190-210KSI

SPACE GEOMETRY -

$\theta_L = \tan^{-1}(4.909-1.260)/2(21.845) = \tan^{-1} .08352$

$= 4°46'+$

$\cos\theta_L = .99653$; $\sin\theta_L = .08323$

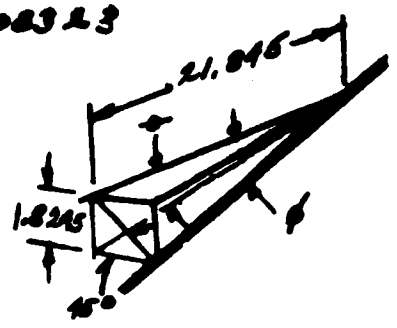

$\phi_L = \tan^{-1}(1.8245)(1.414)/21.845$

$= \tan^{-1} .11809$

$= 6°44'+$

$\cos\phi_L = .99310$; $\sin\phi_L = .11728$

MAIN TAPER COL. LOAD FACTOR

$= 1/.99310 = \underline{1.007}$

7121-01079

-6 TOWER -LONG- (CONT.)

MEMBER LOADS BAY 6

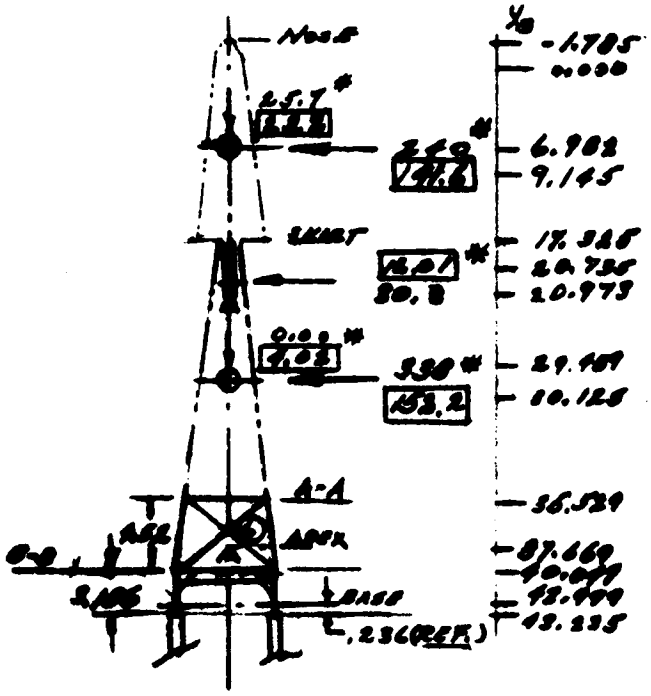

LOADS DIAGRAM. (AMES)

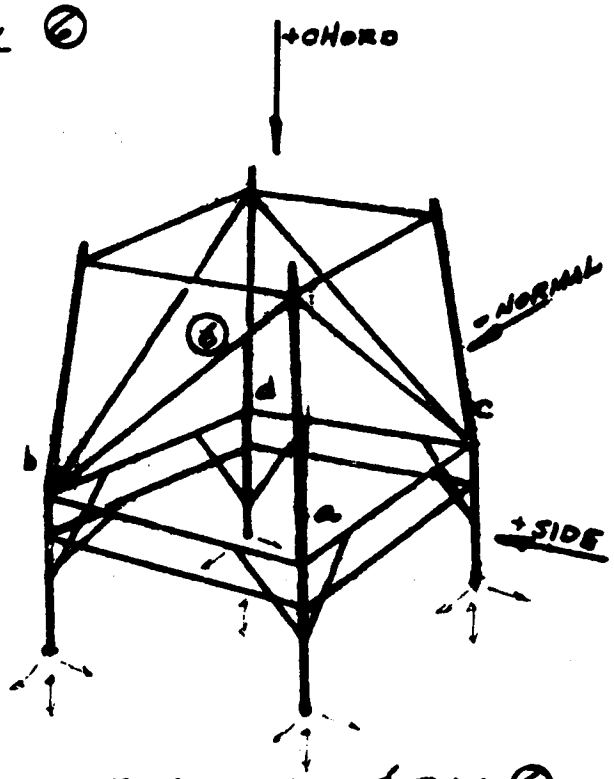

TOWER BASE & BAY 6

CRITICAL LOADING CONDITION STUDY - (AMES)

STEADY STATE, (NON-BOXED VALUES (NORMAL ONLY))

$$\Sigma M_{NOS} = 240(40.099 - 6.982) + 938(40.099 - 29.489) + 30.8(40.099 - 20.973)$$

$$= 7936.1 + 35693 + 587.5 = \underline{12{,}093}^{\#}$$

$$\Sigma M_{NAA} = 12098 - 608.8(4.52) = \underline{9341}^{\#}$$

$$\Sigma M_{SOB} = \Sigma M_{SAA} = 0.0$$

$$\Sigma P_N = 240 + 938 + 30.8 = \underline{608.8}^{\#}$$

$$\Sigma P_C = \underline{25.7}^{\#}$$

7121-01079

-6 TOWER - LONG - (CONT.)

MEMBER LOADS BAY 6 (CONT.)

STARTING - (BOXED VALUES - (SAME NORMAL & SIDE)

$$\Sigma M_{S_{B-B}} = \Sigma M_{N_{BB}} = 141.6(40.099 - 9.145)$$
$$+ 12.01(40.099 - 20.935) + 158.2(40.099 - 30.120)$$
$$= 4376.0 + 232.0 + 1510.4 = \boxed{6118.4}\ \#$$

$$\Sigma M_{S_{A-A}} = \Sigma M_{N-AA} = 6118.4 - 305.0(4.52) = \boxed{4736.2}\ \#$$

$$\Sigma P_N = \Sigma P_S = \boxed{305.0}\ \#$$

$$\Sigma P_C = \boxed{27.24}\ \#$$

CRITICAL MEMBER LOADS -

$$P_{d_N} = -P_{a_N} = 1.007\left\{\begin{matrix}12,093.\\ \boxed{6118.4}\end{matrix}\right\} / 2(4.907) = \begin{matrix}1240.3\ \#\\ \boxed{632.5}\end{matrix}$$

$$P_{c_N} = -P_{b_N} = 1.007\left\{\begin{matrix}9,341\\ \boxed{4736.2}\end{matrix}\right\} / 2(4.312) = \begin{matrix}1090.7\\ \boxed{553.0}\end{matrix}$$

$$P_{a_S} = -P_{d_S} = 1.007\left\{\begin{matrix}-\\ \boxed{6118.4}\end{matrix}\right\} / 9.818 = \begin{matrix}-\\ \boxed{627.5}\end{matrix}$$

$$P_{b_S} = -P_{c_S} = 1.007\left\{\begin{matrix}-\\ \boxed{4736.2}\end{matrix}\right\} / 8.624 = \begin{matrix}-\\ \boxed{553.0}\end{matrix}$$

$$P_d = -P_a = P_{a_N} \pm P_{a_S} = \begin{cases}1240.3 \pm 0 = \pm 1240.3\\ 627.5 \pm 627.5 = \boxed{\pm 1255.0/0.0}\end{cases}$$

$$P_b = -P_c = P_{c_N} \pm P_{b_S} = \begin{cases}\pm 1090.7 \pm 0 = \pm 1090.7\\ 553.0 \pm 553.0 = \boxed{\pm 1106.0/0.0}\end{cases}$$

* REF. PG. A.4

7121-01079

-6 TOWER -LONG- (CONT.)

MEMBER LOADS BAY (6) (CONT)

(+ TENSION, - COMP.)

$$P_a = \begin{cases} +1240.3 - 6.43 = +1233.9\ \# \\ +\boxed{1255.0} - \boxed{6.86} = \boxed{+1248.1} \end{cases}$$ 1.1% ∆

$$P_b = \begin{cases} +1090.7 - 6.43 = +1084.3\ \# \\ - - \boxed{6.86} = \boxed{-6.86} \end{cases}$$

$$P_c = \begin{cases} -1090.7 - 6.43 = -1097.1\ \# \\ - - \boxed{6.86} = \boxed{-6.86} \end{cases}$$

$$P_d = \begin{cases} -1240.2 - 6.43 = -1246.7\ \# \\ -\boxed{1255.0} - \boxed{6.86} = \boxed{-1261.9} \end{cases}$$ 1.3% ∆

$$P_{a_c} - P_{b_c} = P_{c_c} = P_{d_c} = 1007 \begin{Bmatrix} 25.7 \\ 27.4 \end{Bmatrix} / 4 = \boxed{-6.86}$$

PRIMARY LOAD STRESS ARE THE SAME FOR START AND STEADY STATE, BUT THE SECONDARY BENDING STRESSES FOR THE STEADY STATE COND. ARE HIGHER THAN THOSE FOR STARTING. THEREFORE THE STEADY STATE LOADS WILL BE USED FOR ANALYSIS

7121 - 01079

-6 TOWER - LONG - (CONT)

SECONDARY BENDING MOMENTS.

ASSUMING INFLECTION POINT AT 60% OF ℓ AND BOTH ENDS FIXED.

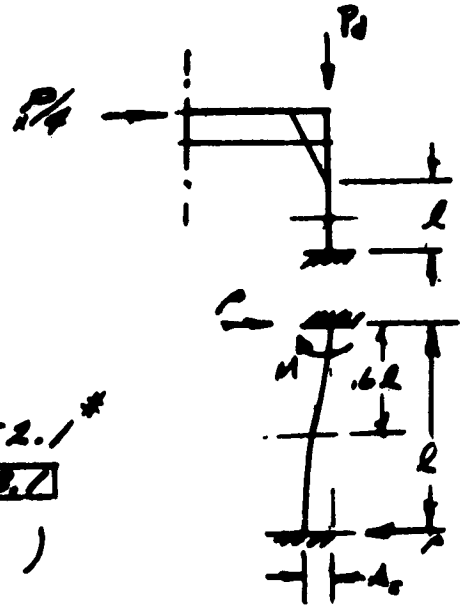

$M_{CR} = P(.6\ell)$

$P = \begin{cases} 608.8/4 = 152.1^{\#} \\ \boxed{205.5}(1.414)/4 = \boxed{70.8} \end{cases}$

(REF. PG. A5&6)

$\ell = (43.325 - 40.099 - 2.120) = \underline{1.156}''$

(REF: 9. & PG. A.5)

$M_{CR} = 152.1(.6)(1.156) = \underline{105.5}''^{\#}$

7181-01079

-6 TOWER - LONG -(CONT.)

PRIMARY COMP. STRESS (MAX)

$f_c = \frac{P}{A} = 1246.7/.1106$

$= \underline{11,282.3}$ #/in²

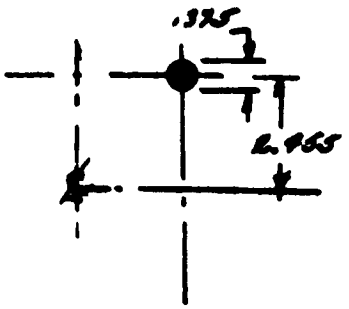

$F_c = 190,000$ PSI

$A_o = \underline{.1106}$ in²

$I_o = \underline{.000971}$ in⁴

$R_c = \frac{5(11282.2)}{190000} = \underline{.297}$

SECONDARY BENDING STRESS

$f_b = \frac{Mc}{I} = 105.5(.1875)/.000971$

$= \underline{20,371}$ #/in²

$F_b = 280,000$ PSI

$R_b = \frac{5(20,371)}{280,000} = \underline{.364}$

$M.S. = \frac{1}{R_c + R_b} - 1 = \frac{1}{.297 + .364} - 1 = \underline{.59}$

7121-01079

-6 TOWER - LONG: (CONT.)

BAY ⑥ DIAGONAL MEMBERS (SHEAR)

MAX. LOAD ASSUMED ON ONE MEMBER IN TENSION -

$P_N = \underline{608.8}$ # (REF. PG A.6) (CONSERVATIVE)

$\theta = 45°$, $\cos\theta = .70711$

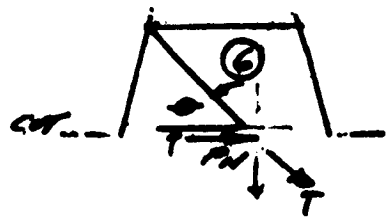

$T = 608.8 / .70711$

$= \underline{861}$ #

$f_t = T/A = \dfrac{861}{.0491}$

$= \underline{17,536}$ #/in²

MEM. SECT.
A = .0491 in²

$F_t = \underline{190,000 \text{ PSI}}$

$M.S. = \dfrac{190}{5(17.5)} - 1 = \underline{1.17}$

7121-01079

-5 TOWER ASSEM. (CONT.)

WELDED JOINTS -

$P_{⑥} = 1240.3$ # (REF. PG. A.6)

$P_{⑤} = 1090.7$ #

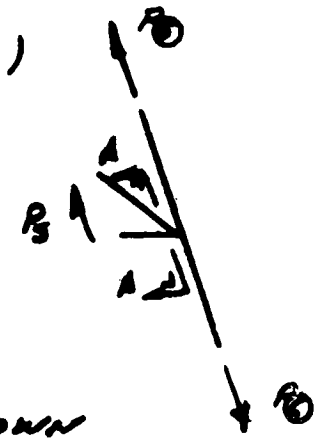

$P_S = P_6 - P_5 = 1240.3 - 1090.7$

$= \underline{149.6}$ #

ASSUME $A_{S_{TOT}}$ = SHADED AREA SHOWN IN SECTION A-A

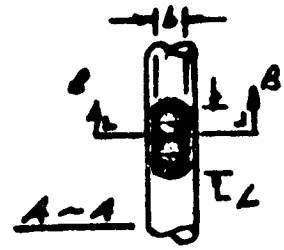

$b = d = .25"$

$L = 2(.25 + .062) = .624"$

$A_S = b(d) - .7854(d)^2$

$+ .062(B/8)\pi(d)$

$= (.25)^2 - .7854(.25)^2 + .0413(3.14)(.25)$

$= .0134 + .0824 = \underline{.0458}$ "²

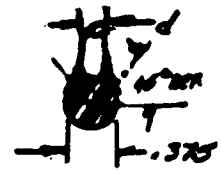

$f_S = P/A = 149.6 / .0458(.707) = \underline{4615}$ #/IN²

$F_S = 125{,}000$ PSI (REF. 1.).

$M.S. = \frac{125}{(5)4.6} - 1 = \underline{4.4}$

.375(.707)
= .361

$\frac{A_1}{\frac{A_1 + A_2}{2}} = \frac{2A_1}{A_1 + A_2}$

$= \frac{2(\frac{b}{8})}{\frac{3}{8} + \frac{3}{16}} = \frac{4}{5}$

$\therefore \theta = 30°$

PREPARED BY: [illegible]	NORTH AMERICAN AVIATION, INC.	PAGE NO. -A-12- OF
CHECKED BY: AB	.105 FS-2 APOLLO	REPORT NO. S10-62-104
DATE: 2.12.62	FORCE MODEL	MODEL NO.

7121-01079

-4 TOWER ASSY. ; MAT'L - 17-4PH, H.T. 190KSI.

(SHORT TOWER / ALTERNATE ROCKET)

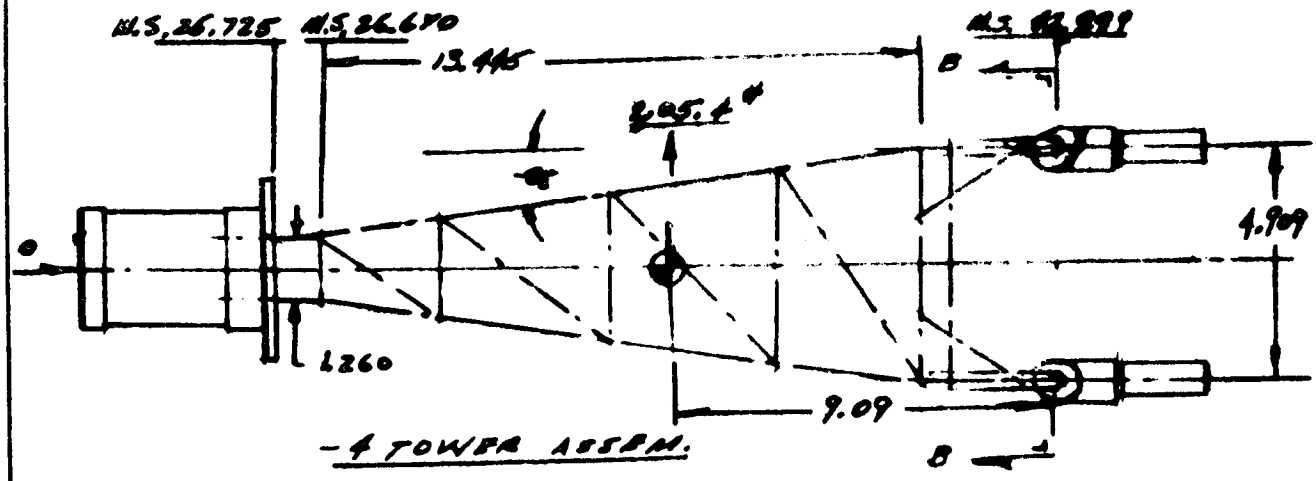

-4 TOWER ASSEM.

SPACE GEOMETRY:

$\theta_s = \tan^{-1}(4.909 - 1.260)/(2 \times 13.445) = \tan^{-1} .13570$

$= 7^\circ 44'+$

$\cos\theta = .99091$; $\sin\theta = .13446$

$\phi = \tan^{-1}(1.8245)(1.414)/13.445$

$= \tan^{-1} .19188$

$= 10^\circ 51'+$

$\cos\phi = .98209$; $\sin\phi = .18843$

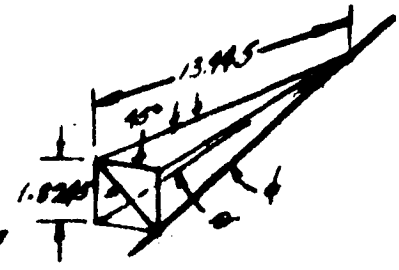

MAIN TAPER COL. LOAD FACTOR

$= 1/.98209 = \underline{1.018}$

7121-01079

-1. TOWER - SHORT - (CONT.)

THE STEADY STATE LOADING CONDITION WAS CRITICAL FOR THE LONG TOWER, AND THEREFORE WILL BE USED FOR THE SHORT ONE.

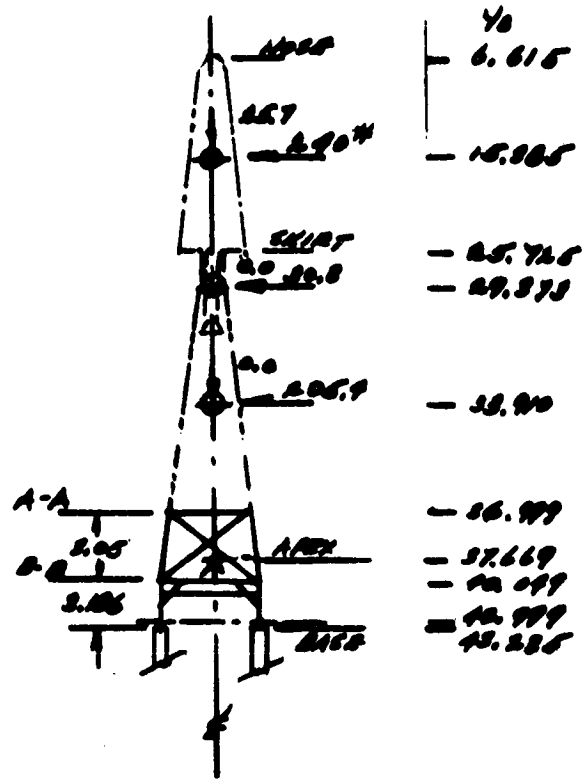

LOAD GEOMETRY. (AMES)

PREPARED BY: CBM	NORTH AMERICAN AVIATION, INC.	PAGE NO. -A14- OF
CHECKED BY: ORLA	.105 SC. FS-2 APOLLO	REPORT NO. SID-62-104
DATE:	FORCE MODEL	MODEL NO.

7121-01079

-4 TOWER - SHORT - (CONT.)

$$\Sigma M_{N_{AA}} = 240(40.049-15.285) + 30.8(40.049-29.373) + 205.4(40.049-33.910)$$

$$= 5919.3 + 328.8 + 1260.9 = \underline{7509.0}^{\#}$$

$$\Sigma M_{N_{A-A}} = 7509 - 476.2(3.05) = \underline{6055.7}^{\#}$$

$$\Sigma M_{S_{AA}} = \Sigma M_{S_{AA}} = 0.0$$

$$\Sigma P_N = 240 + 30.8 + 205.4 = \underline{476.2}^{\#}$$

$$\Sigma P_C = \underline{25.7}^{\#}$$

$$P_{dN} = -P_{aN} = 1.018(7509.0)/2(4.909) = \pm \underline{778.6}^{\#}$$

$$P_{cN} = -P_{bN} = 1.018(6055.7)/2(4.312) = \pm \underline{714.8}^{\#}$$

$$P_S = 0.0$$

PRIMARY COMP. STRESS

$$P_d = P_{dN} + P_c/4 = 778.6 + 25.7/4$$

$$= 778.6 + 6.4 = \underline{785.0}^{\#}$$

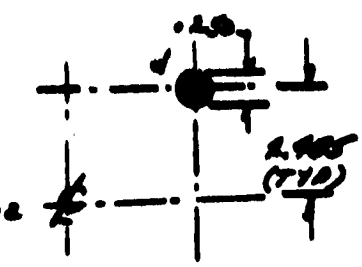

$$f_c = P/A = 785/.0491 = \underline{15,988}^{\#/\square''}$$

$$F_c = \underline{190,000 \text{ PSI}}$$

$$A_c = \underline{.0491}^{\square''}$$

$$R_c = \frac{5(15.99)}{190.0} = \underline{.421}$$

PREPARED BY: CAW	NORTH AMERICAN AVIATION, INC.	PAGE NO. A.15 OF
CHECKED BY: QRM	.105 Sc. FS-2 APOLLO	REPORT NO. S10-62-109
DATE:	FORCE MODEL	MODEL NO.

7121-01079

-4 TOWER - SHORT - (CONT.)

SECONDARY BENDING STRESS -

$M_{CR} = P(.6\ell)$ (REF. PG. A.8)

$P = 476.2/4 = \underline{119}^{\#}$

$\ell = 1.156''$ (REF. PG. A.8)

$M_{CR} = 119(.6)(1.156) = \underline{82.5}^{''\#}$

$I = (.25)^4(.0491) = \underline{.000192}^{''4}$

$f_b = \frac{Mc}{I} = \frac{82.5(.125)}{.000192} = \underline{53,711}^{\#/\square''}$

$F_b = 280$ KSI.

$R_b = \frac{5(53.7)}{280.0} = \underline{.959}$

$M.S. = \frac{1}{R_c + R_b} - 1 = \frac{1}{.421 + .959} - 1 = \underline{-.28}$ [redacted]

$S.F_{(TRUE)}$ ON ULT. = $\underline{3.62}$

7121 - 01079

-4- TOWER - SHORT - (CONT.)

THE DIAGONAL MEMBERS AND WELDS ARE NOT CRITICAL BY COMPARISON WITH THE LONG TOWER.

COLUMN CHECK OF MAIN TAPER MEMBER (d).

$L = 1.018(3.05) = \underline{3.105''}$

$P = 778.6 + 6.4(1.018) = \underline{785.1^{\#}}$

$P_{CR} = \dfrac{n\pi^2 EI}{L^2}$

$n = 2$ (PARTIAL FIXITY ASSUMED)

$E = 28.5 \times 10^6$ PSI

$I = .000192$ (REF. PG. A.15)

$P_{CR} = \dfrac{2(3.14)^2(28.5)(.000192)\times 10^6}{(3.105)^2} = \underline{11{,}203^{\#}}$

NOT CRITICAL

7121-01079

- S SOCKET -

MAX. LOAD & MOM. OCCUR WITH LONG TOWER

$P_c = \underline{1846.7}$ #

$P_t = \underline{1858.9}$ # } (REF. PG. A.7)

$S = \underline{152.1}$ #

$M = \underline{105.5}$ " # } (REF. PG. A.8)

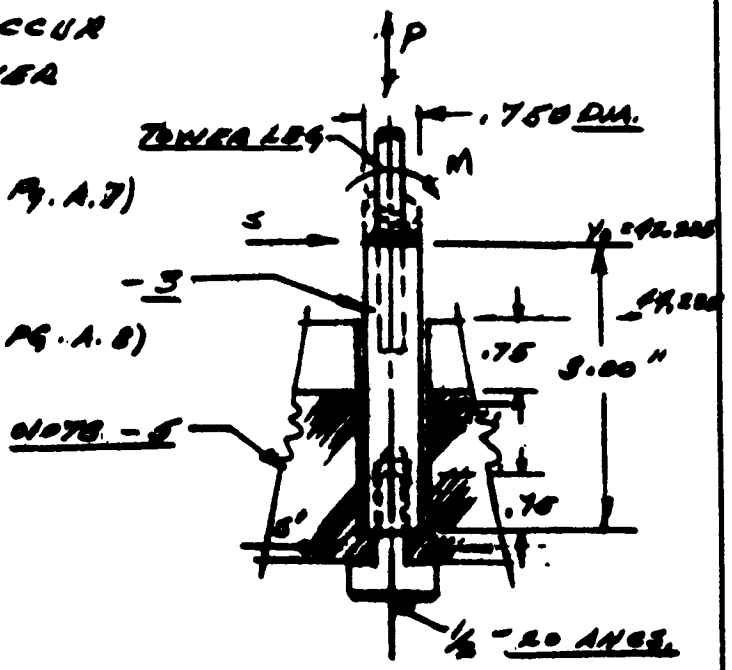

WELD CHECK -

ASSUME WELD IS FILLET.

$t_s = [(.750 - .375)/2](.707)$

$= .1326$ "

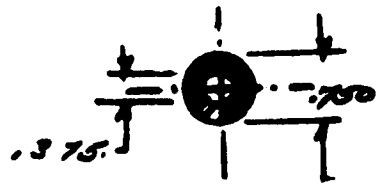

WELD SPOT.

$r_{(PP)} = (.375 - .1875)(.25) + .1875$

$= .2344$ "

$A_s = 2\pi r t = 2(3.14)(.2344)(.1326)$

$= \underline{.1953}$ "²

$I_0 \cong \pi r^3 t = 3.14(.2344)^3(.1326)$

$= \underline{.00536}$ "⁴

$c = .1875(1.5) = \underline{.2812}$ "

PREPARED BY: CBM	NORTH AMERICAN AVIATION, INC.	PAGE NO. -A.18- OF
CHECKED BY: DRM	.105 SC FS-2 APOLLO	REPORT NO. 510-62-104
DATE:	FORCE MODEL	MODEL NO.

7121-01079

-3 SOCKET (CONT.)

$$f_s = P/A + \frac{Mc}{I} = \frac{1233.9}{1953} + \frac{105.5(.2818)}{.00536}$$

$$= 6320 + 5535^{*} = \underline{11,855}\ \#/\text{IN}^2$$

*(CONSERVATIVE AS SOCKET HOLE WILL TAKE MOM.)

$F_s = 125,000$ PSI

$$M.S. = \frac{125}{5(11.86)} - 1 = \underline{1.10}$$

-3 SOCKET ROD BENDING-

ASSUME BASE OF LEG HOLE & EDGE OF -5 BLOCK COINCIDE-

$P = \underline{1296.7}\ \#$

$M = 152.1(44.235 - 43.375 + .75) + 105.5$

$= 266.2 + 105.5 = \underline{371.7}\ \text{"}\#$

$A_t = (.75^2 - .375^2)(.7854) = \underline{.3600}\ \text{"}^2$ (.4650, .10402)

$I_o = (.75^4 - .375^4)(.0491) = \underline{.0150}\ \text{"}^4$

$c = \underline{.375}\ \text{"}$

7121-01079

-3 SOCKET (CONT)

ROD BENDING (CONT.)

$$f_b = \frac{P}{A} + \frac{Mc}{I} = \frac{1246.7}{.3600} + \frac{371.7(.375)}{.0150}$$

$$= 3,463 + 9293 = \underline{12,755}\ \#/in^2$$

$F_b = \underline{190,000}$ (CONSER)

$$M.S. = \frac{190.}{12.76(5)} - 1 = \underline{\underline{1.97}}$$

-$\frac{1}{2}$-20 AHCS.

$P_t = \underline{25,550}$

$P_t = \underline{1233.9\#}$

$$M.S. = \frac{25,550}{1,233.9(5)} - 1 = \underline{\underline{3.14}}$$

7121-01079

TOWER ATTACHMENTS (-3 SOCKET)

1/2-20 AHCS - (CONT.)

LEG NET AREA IN TENSION & BEARING -

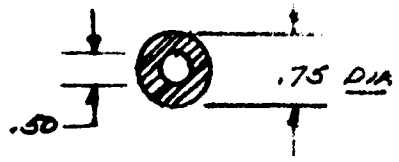

$P = 1233.9^{\#}$ (-5 TOWER)

$A_s = (.75^2 - .50^2).7854 = .2454 \text{ in}^2$

$f_s = P/A = 1233.9/.2454 = \underline{5028} \ \#/\text{in}^2$

$F_s = \underline{190{,}000}$ PSI

$M.S. = \frac{190}{5(5.03)} - 1 = \underline{\text{HIGH}}$

1/2-20 AHCS THD. SHEAR - (REF. 1.)

$A_s = .7324(l)$

$l = .75$ (75% OF TAPPED LENGTH)

$A_s = .7324(.75) = \underline{.5493} \text{ in}^2$

$F_s = P/A = 1233.9/.5493 = 2245 \ \#/\text{in}^2$

$F_s = 95$ KSI

M.S. = HIGH

PREPARED BY: CBM	NORTH AMERICAN AVIATION, INC.	PAGE NO. -A.21- OF
CHECKED BY: ORM	.105 SC PS-2 APOLLO	REPORT NO. 510-62-104
DATE: 3-6-62	FORCE MODEL	MODEL NO.

7181-01078

-5 TOWER MOUNT BLOCK -

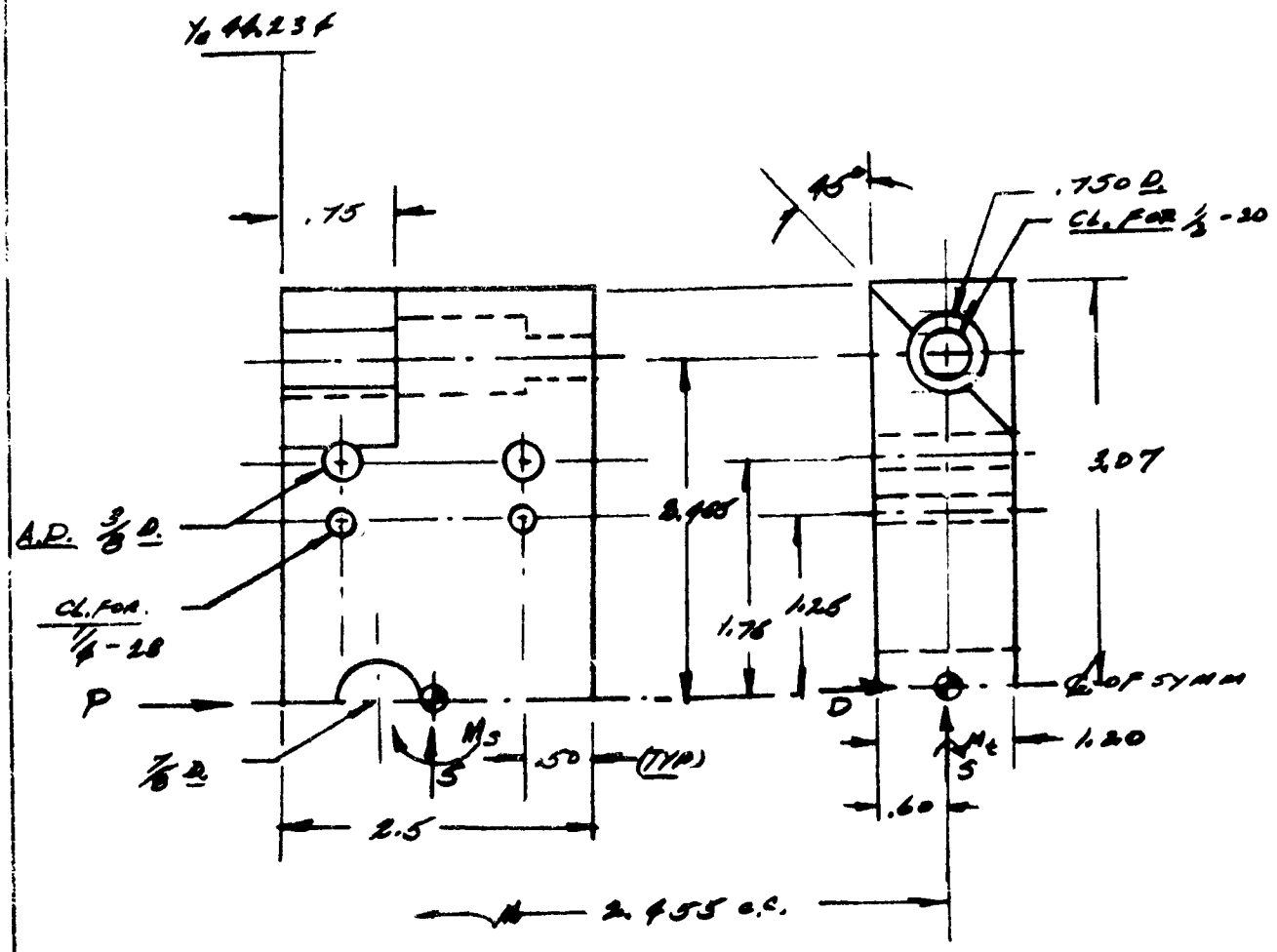

PREPARED BY: CBM	NORTH AMERICAN AVIATION, INC.	PAGE NO. -A.22- OF
CHECKED BY: ORM	1106 SC FS-2 APOLLO	510-62-104 REPORT NO.
DATE: 3-6-62	FORCE MODEL	MODEL NO.

7121-01078

-STOWER MOUNT BLOCK-

LONG TOWER LOADS ARE CRITICAL-

SCREW TENSION 1/4-28 ANCS.

$P_{MAX} = {}^{*}1246.7(2) = \underline{2493.4^{\#}}$

$D_{MAX} = {}^{*}608.8/2 = \underline{304.4^{\#}}$

*(REF. PG'S. A.7 & A.8)

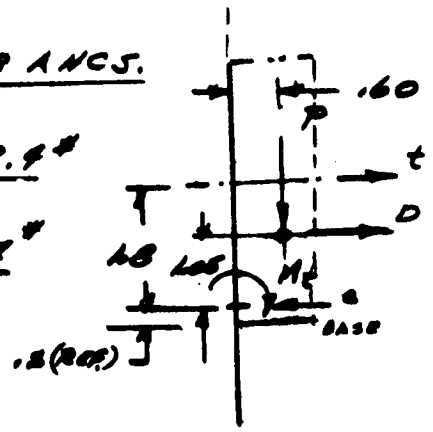

LOAD SKETCH

$t = M_t / R(1.8)$

$M_t = P(.60) + D(1.05)$

$= 2493.4(.60) + 304.4(1.05) = \underline{1816}$ "#

$t = 1816 / 3.6 = \underline{504^{\#}}$

$T = 5792^{\#}$ (REF. 1)

$M.S. = \dfrac{5792}{5(504)} - 1 = \underline{\underline{1.29}}$

7121-01078

-5 TOWER BLOCK (CONT.)

3/8" A.D. PINS -

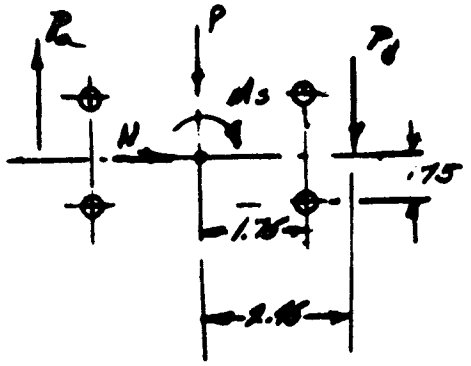

$P_d = 1246.7$ #

$P_a = 1233.9$ # } (REF. PG. A.7)

$N = 608.8/2 = 304.4$ #

$P = P_d - P_a = 1246.7 - 1233.9$

$= 12.8$ #

$M_s = (P_d + P_a)(2.45) = (1246.7 + 1233.9)(2.45)$

$= 6077.5$ "#

$I_p = 4[(.75)^2 + (0.75)^2] = 1.45$ "^{4}/in^2

$a = [(0.75)^2 + (.75)^2]^{\frac{1}{2}} = 1.20$"

$P_1 = N/4 + M(a)/I_p$

$= 304.4/4 + 6077.5(1.20)/1.45 = 873$ #
(CONSER).

$P = 15{,}895$ # (REF. 1)

$M.S. = \frac{15.895}{5(.873)} - 1 = 2.64$

PREPARED BY: CAM	NORTH AMERICAN AVIATION, INC.	PAGE NO. -A.24- OF
CHECKED BY: ORM	.105 Sc. FS-2 APOLLO	SID-62-104 REPORT NO.
DATE: 2.13.62	FORCE MODEL	MODEL NO.

7121-01081

AMES STING LOADING:

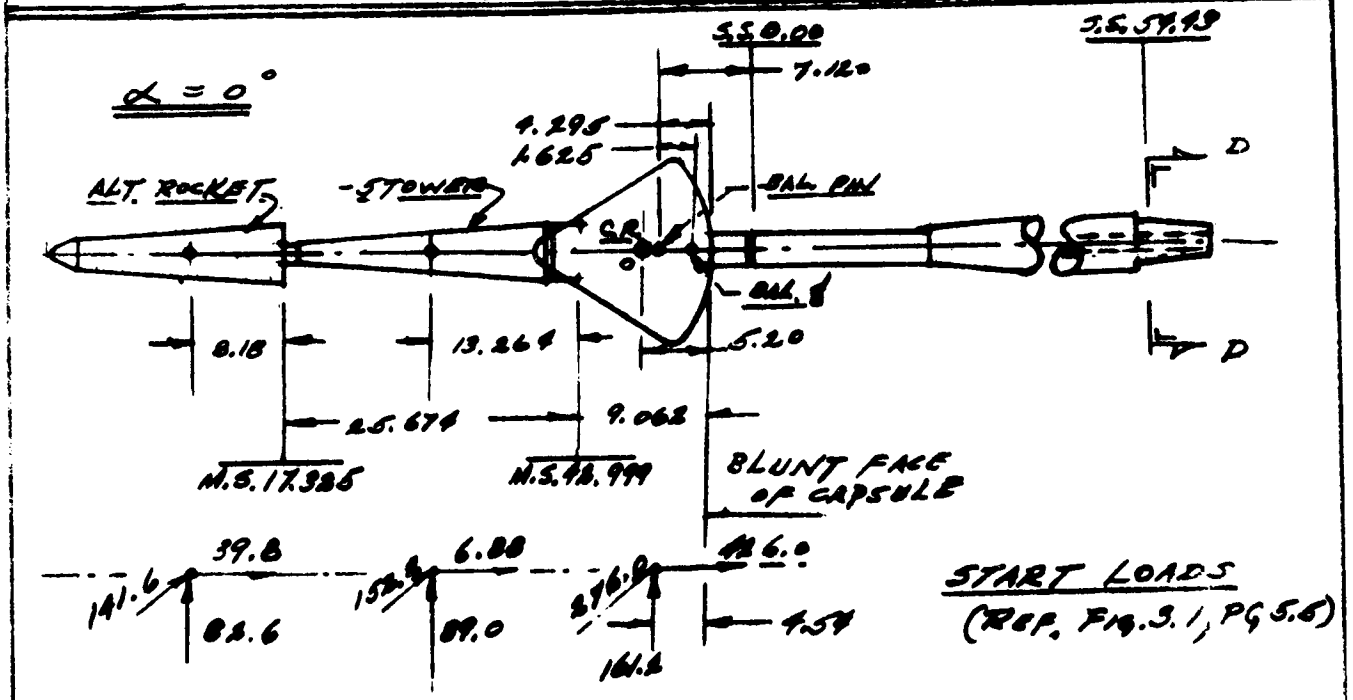

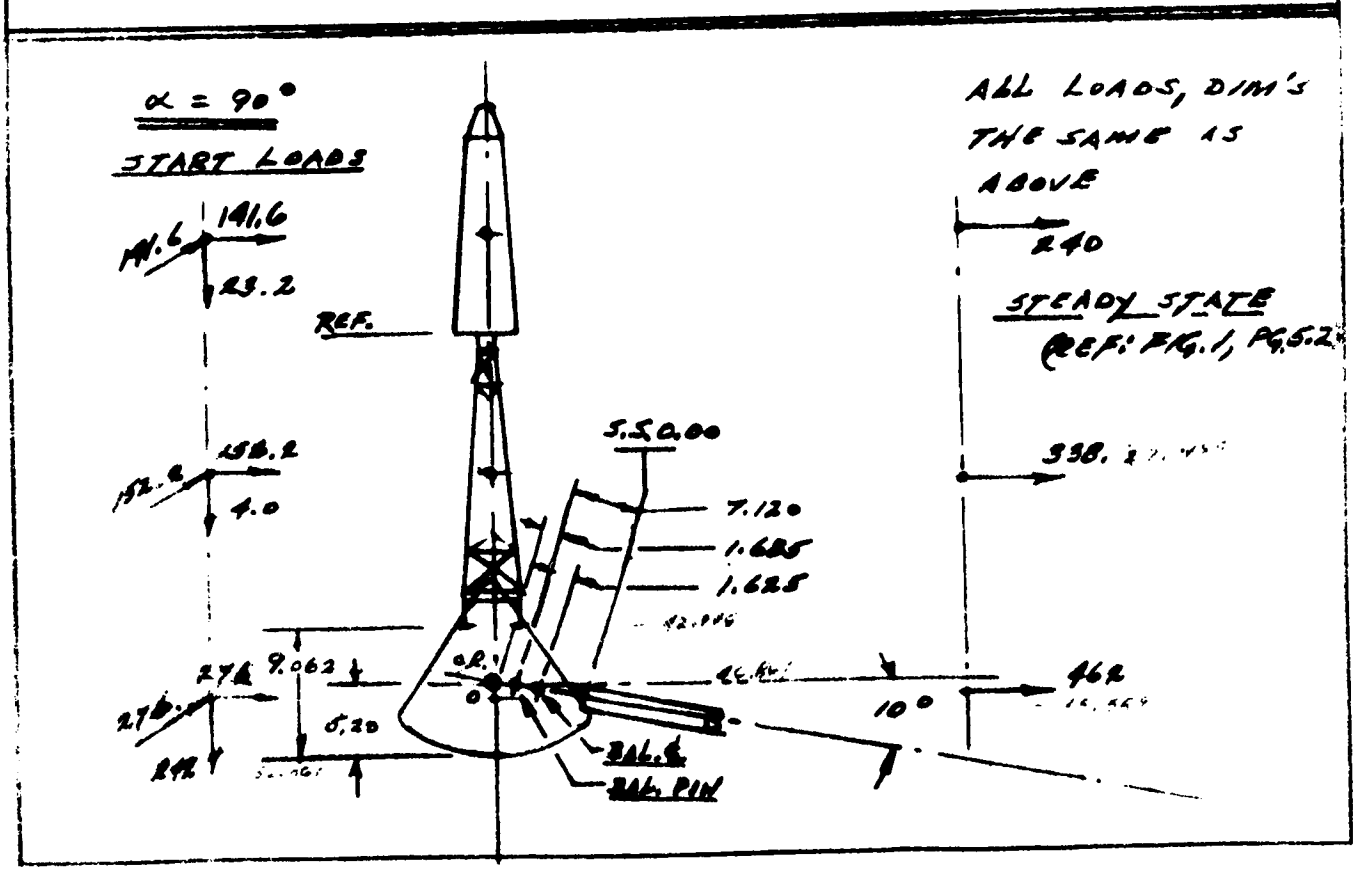

PREPARED BY: CAM	NORTH AMERICAN AVIATION, INC.	PAGE NO. -A.25- OF
CHECKED BY: ORM	1105 Sc FS-2 APOLLO	SID-62-104 REPORT NO.
DATE: 2.13.62	FORCE MODEL	MODEL NO.

7121 - 01081

AMES STING

MAX. MOMENT STUDY:

$\alpha = 0°$, START

$$M_{X_{DD}} = 88.6(8.18 + 25.674 + 9.062 + 7.120 - 4.295 + 54.43)$$
$$+ 89.0(13.264 + 66.317)$$
$$+ 161.2(4.54 + 7.120 - 4.295 + 54.43)$$
$$= 8274.1 + 7088.7 + 7961.4$$
$$= \underline{25,318.2}_{(W)}\ ''\#$$

$$M_{Y_{DD}} = 141.6(100.17) + 152.3(79.581) + 276.0(61.795)$$
$$= 14,184.1 + 12,118.2 + 17,055.4$$
$$= \underline{43,351.7}_{(S)}\ ''\#$$

$$M_{DD} = \left[(M_X)^2 + (M_Y)^2\right]^{\frac{1}{2}} = \left[(25,318.2)^2 + (43,351.7)^2\right]^{\frac{1}{2}}$$
$$= (2,520 \times 10^6)^{\frac{1}{2}} = \underline{\underline{50,203}}\ ''\#$$

$\alpha = 0°$, STEADY STATE

DRAG LOAD ONLY, = 565.3 L 800 # FOR BALANCE ∴ NOT CRITICAL.

7121-01081

AMES STING -

MAX. MOM. STUDY (CONT.)

$\alpha = 90°$, START

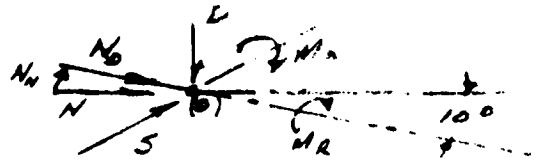

$$M_{x_0} = 141.6(8.18 + 25.674 + 9.062 - 5.20)$$
$$+ 152.2(13.264 + 9.062 - 5.20)$$
$$+ 276.0(4.54 - 5.20)$$
$$= 5{,}340.6 + 2{,}606.6 - 182.2$$
$$= \underline{7{,}765.0}\ \text{"\#} = \underline{M_{x_0}\ (\text{MAX})}$$

$$M_{y_0} = M_{x_0} = \underline{7765.0}\ \text{"\#} = \underline{M_R\ (\text{MAX.})}$$

$$N = 141.6 + 152.2 + 276.0 = \underline{569.8}\ \#$$

$$S = N = \underline{569.8}\ \#$$

$$D = 23.2 + 4.0 + 249.0 = \underline{276.2}\ \# \ (\text{ASSUME} \uparrow)$$

$$M_{DD} = \left\{\left[M_{x_0} + N(\sin 10°)(63.24) - D(\cos 10°)(63.24)\right]^2 + \left[S(63.24)\right]^2\right\}^{\frac{1}{2}}$$
$$= \left\{\left[7765.0 + 569.8(63.24)(.1736) + 276.2(63.24)(.9848)\right]^2\right.$$
$$\left. + \left[569.8(63.24)\right]^2\right\}^{\frac{1}{2}} = (2{,}273 \times 10^6)^{\frac{1}{2}} < M_{DD}\ \alpha = 0°$$

PREPARED BY: CBM	NORTH AMERICAN AVIATION, INC.	PAGE NO. -A-27- OF
CHECKED BY: ORM	.105 Sc FS-2 APOLLO	REPORT NO. SID-62-104
DATE: 2-13-62	FORCE MODEL	MODEL NO.

7121-01081

AMES STING.

MAX. MOM. STUDY (CONT.)

$\alpha = 90°$, STEADY STATE

$M_{X_0} = 240\,(37.879) + 338\,(17.392) + 462\,(-1.728)$

$= \underline{14{,}644}$ "#

$M_{Y_0} = \underline{0.0}$

$N = 1040.0$ #

$S = D = \underline{0.0}$

$M_{DD} = 14{,}644 + 1040\,(.1736)(63.24)$

$= \underline{26061.6}$ "# $< M_{DD}\,(\alpha = 0°;\ \text{START.})$

7121-01081

STARTING LOAD ON STING:-

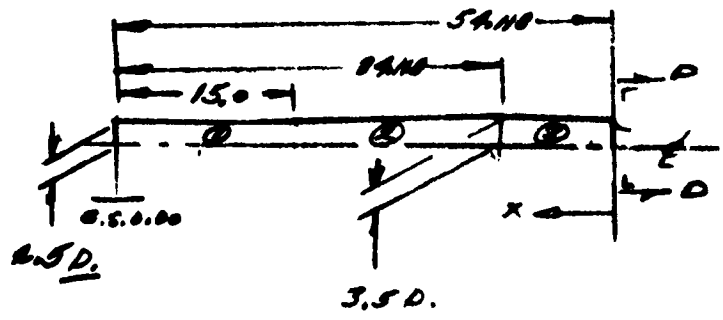

AREA & C.P.

ITEM	A	X	AX
1	37.50	46.62	1748.25
2	57.35	29.56	1695.27
3	70.00	10.00	700.00
	164.85		4143.52

$$\bar{X} = \frac{\Sigma AX}{\Sigma A} = \frac{4143.52}{164.85} = \underline{25.13''}$$

$$P_N = 164.85(1.216) = \underline{200.3\#}$$

$$P_S = 164.85(2.08) = \underline{342.9\#}$$

$$M_{DDN} = 200.3(25.13) = \underline{5033.5''\#}$$

$$M_{DDS} = 342.9(25.13) = \underline{8617.1''\#}$$

PREPARED BY: CBM	NORTH AMERICAN AVIATION, INC.	PAGE NO. -A29- OF
CHECKED BY: ORM	.105 Sq. FS-2 APOLLO	REPORT NO. S10-62-104
DATE: 2·13·62	FORCE MODEL	MODEL NO.

7121-.01081

AMES STING -

MATL - ARMCO 17-4PH
H.T. 190-210 KSI

SECTION AT ADAPTER GAGE FACE (SS [illegible] 43)

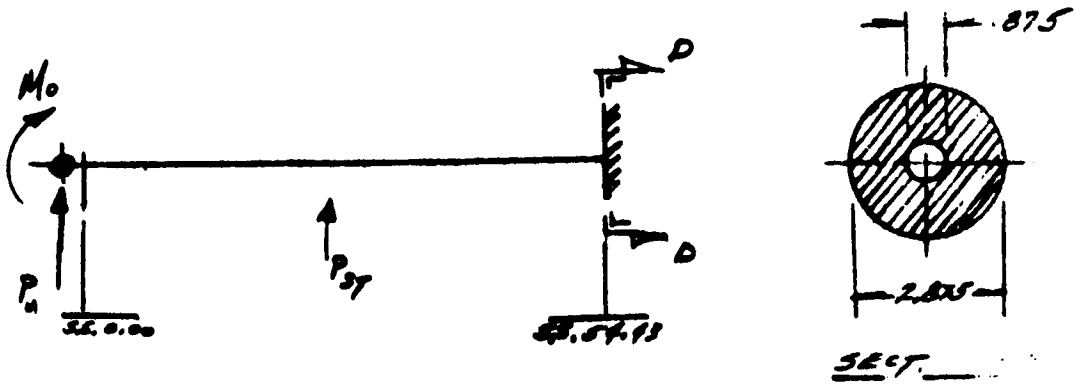

$$Z = .09817\,(d^4 - d_i^4)/d$$

$$= .09817\,(2.875^4 - .875^4)/2.875$$

$$= \underline{2.3129}\ ^{IN^3}$$

$$A = .7854\,(d^2 - d_i^2)$$

$$= \underline{5.8905}\ ^{IN^2}$$

$$M_{OD} = \left[(25{,}818.2 + 5033.5)^2 + (43{,}851.7 + 8617.1)^2\right]^{\frac{1}{2}}$$

$$= \underline{60{,}183}\ ^{IN\#}$$

$$f_b = \frac{Mc}{I} = \frac{60183\,(1.437)}{2.3129} = \underline{37{,}390}\ ^{\#/IN^2}$$

$$F_b = \underline{280\ KSI} \qquad R_b = \frac{5(37390)}{280} = \underline{668}$$

PREPARED BY: CBM	NORTH AMERICAN AVIATION, INC.	PAGE NO. -A.30- OF
CHECKED BY: DRM	.105 SC FS-2 APOLLO	REPORT NO. SID-62-104
DATE: 2.13.62	FORCE MODEL	MODEL NO.

7121-01081

AMES STING -

$P_{D_N} = 82.6 + 89.0 + 161.2 + 200.3 = \underline{533.1}$ #

$P_{D_S} = 141.6 + 152.2 + 276.0 + 342.9 = \underline{912.7}$

$P_D = [(533.1)^2 + (912.7)^2]^{\frac{1}{2}} = \underline{1057.}$ #

$f_s = P/A = \frac{1057.0}{5.89} = \underline{\underline{179.5}}$ #/in²

N.C.

$M.S. = \frac{1}{.668} - 1 = \underline{\underline{.50}}$

(AEDC) 3201580
(NAA) 7121-01083

AMES BALANCE STUDY -

$\alpha = 0^\circ$, START

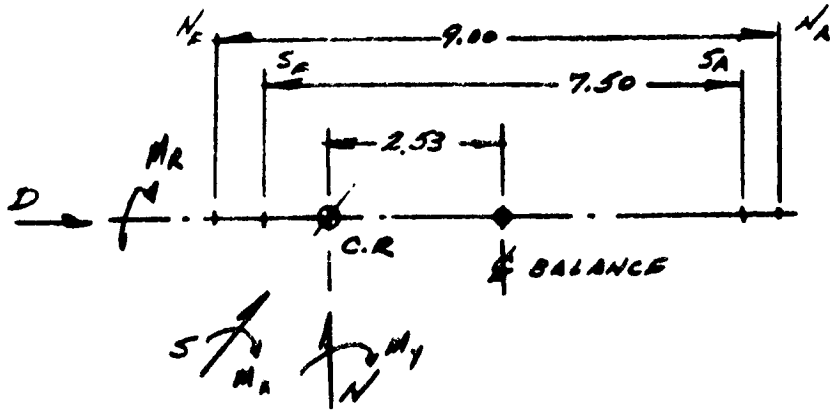

N = 332.8 #
** D = 565.3 #
S = 569.8 #

M_y = 7765 "#

M_R = —

M_x = 7765.0(.584)*
= 4535 "#

$M_{x_{\mathcal{E}}}$ = 332.8(2.530) + 4535
= 5377. "#

$M_{y_{\mathcal{E}}}$ = 569.8(2.530) + 7765
= 9207 "#

$P_{NF(MAX)}$ = (332.8)/2 + 5377/9.00 = 763.8 #

$P_{SF(MAX)}$ = 569.8/2 + 9207/7.50 = 1512.5 #

S.F. ON RATED LOADS $\begin{cases} 2500/763.8 = 3.27 \\ 1000/1512.5 = .661 \end{cases}$

CRITICAL M.S. = .661 − 1 = −.34

NOTE: IF THE BAL. IS ROLLED 90° NO OVERLOAD CONDITION WILL OCCUR.

* RATIO, NORMAL TO SIDE, START LOADS
** (MAX.) STEADY STATE (REF. PG. A.25)

PREPARED BY: OBM	NORTH AMERICAN AVIATION, INC.	PAGE NO. -A.32- OF
CHECKED BY: ORM	.105 SCALE FS-2	SID-62-104 REPORT NO.
DATE: 3-7-62	APOLLO FORCE MODEL	MODEL NO.

(AEDC) 3201580
(NAA) 7121-01083

AMES BALANCE STUDY -

$\alpha = 90°$; START

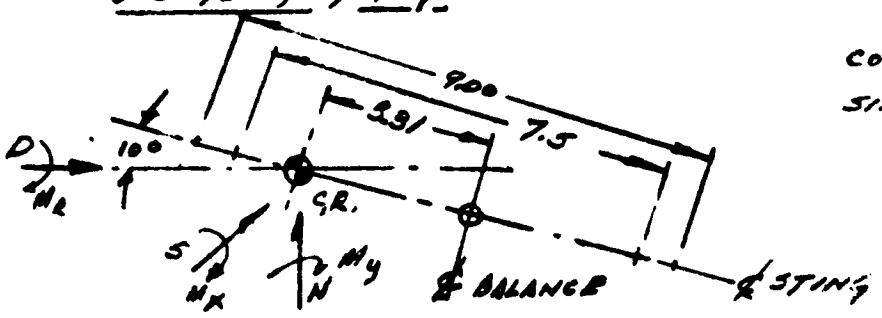

COS 10° = .9848
SIN 10° = .1736

$\overset{*}{N} = 1.426(1.215)(144)$
$= \underline{249.5}$ #
$D = \underline{569.8}$ #
$S = \underline{569.8}$ #

$M_{X_b} = 7765.0 + 569.8(.1736)(3.31) + 249.5(.9848)(3.31) = \underline{8905.7}$ "#

$M_{Y_b} = 569.8(3.31) + 7765.0(.1736) + \text{—} = \underline{3234}$ "#

$M_R = 7765.0(.9848) = \underline{7647.0}$ "#

$M_y = \text{—}$
$M_R = \underline{7765.0}$ "#
$M_X = \underline{7765.0}$ "#

* NORMAL LOAD ON BLUNT FACE OF MODEL = (START)

$P_{N_{F(MAX)}} = [249.5(.9848) + 569.8(.1736)]/2 + 8905.7/9.0 = \underline{1161.8}$ #

$P_{S_{F(MAX)}} = 569.8/2 + 3234/7.50 = \underline{716.1}$ #

$D = 569.8(.9848) + 249.5(.1736) = \underline{604.5}$ #

S.F. ON RATED LOADS
- 2600/1161.8 = 2.15
- 1000/716.1 = 1.40
- 800/604.5 = 1.32
- 400/7647.0 = .523

CRITICAL M.S. = .523 - 1 = .477

APPENDIX B

MODIFICATIONS FOR DUAL BALANCE TEST

REMARKS

This appendix presents a structural analysis of the components of the FS-2 Apollo force model that have been modified or added for a dual balance test. Testing will be conducted in the Ames Unitary Plan Wind Tunnel facilities.

Two load conditions are studied: starting loads at 40 degrees angle of attack and running loads at 50 degrees angle of attack. All components are analyzed for the load condition that is most critical in each case. All components have positive margins of safety for a safety factor of 5 on material ultimate.

All drawings are NAA/S&ID drawn in July 1962 and are given in the following listing.

7121-01077	Assembly and Details—Command Module
7121-01078	Details—Balance Blocks and Miscellaneous
7121-01079	Assembly and Details—Launch Escape Tower
7121-01081	Sting—Ames Wind Tunnel
7121-01086	Model Installation—Ames Unitary Tunnel
7121-01087	Assembly and Details Indexed Sting Joint
7121-01089	Assembly and Details Rocket Motors

Margins of safety for the components are as follows:

Page	Component	Type of Stress	Margin of Safety
B-9	-4 Balance adaptor	Bending	High
B-12	-4 Tower leg support	Shear	2.59
B-12	Leg Support pins	Shear	2.50
B-13	Leg Support bolts	Tension	High
B-13	-7 Splice plate	Bending	1.20
B-20	-9 Spacer pins	Shear	1.75
B-21	-9 Spacer bolts	Tension	4.84
B-26	-2 Support arm	Bending	2.07
B-28	-2 Pivot pins	Shear	3.76
B-29	-2 Support bolts	Tension	1.16
B-32	-6 Sting adapter (C-C)	Bending	3.41
B-34	-6 Sting adaptor (D-D)	Bending	1.45
B-35	Ames sting	Bending	0.46

LOADS, APOLLO — WIND TUNNEL MODEL

MODEL APOLLO FS-2
SCALE .105
TUNNEL UPWT-AMES
TEMP.
MACH NO. .7 TO 3.5
q = 540 PSF
α = 0°
STEADY STATE LOADS — ☒
TRANSIENT LOADS — ☐

REQUIRED SAFETY FACTORS:—
5 ON ULTIMATE
3 ON YIELD

NOTES:—
(1)—LOADS GIVEN IN POUNDS. DIMS. IN INCHES, (MODEL SCALE).
(2)—

TOTAL CONFIGURATION LOADS:

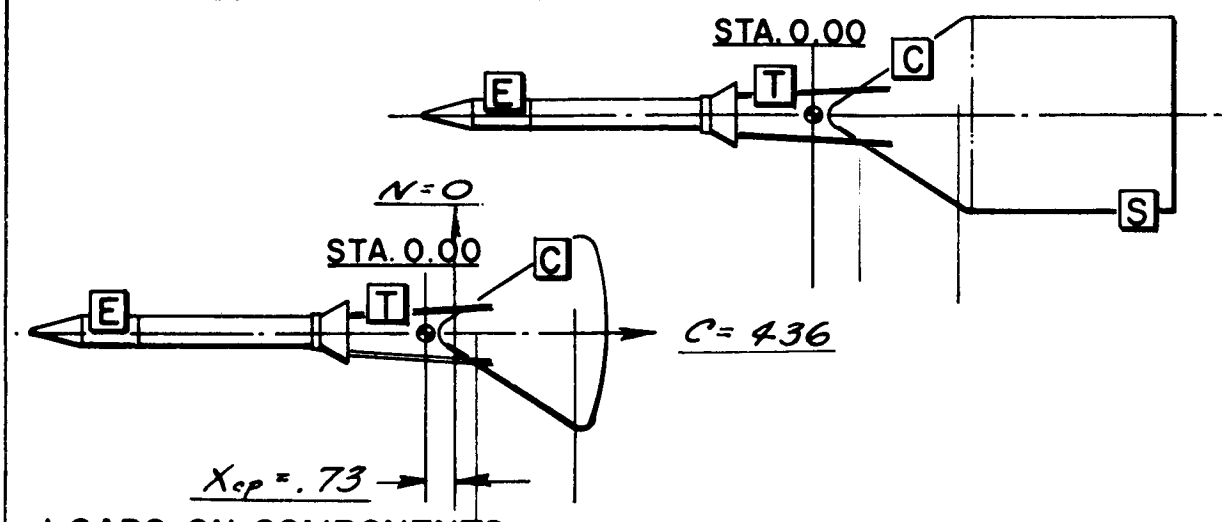

LOADS ON COMPONENTS:

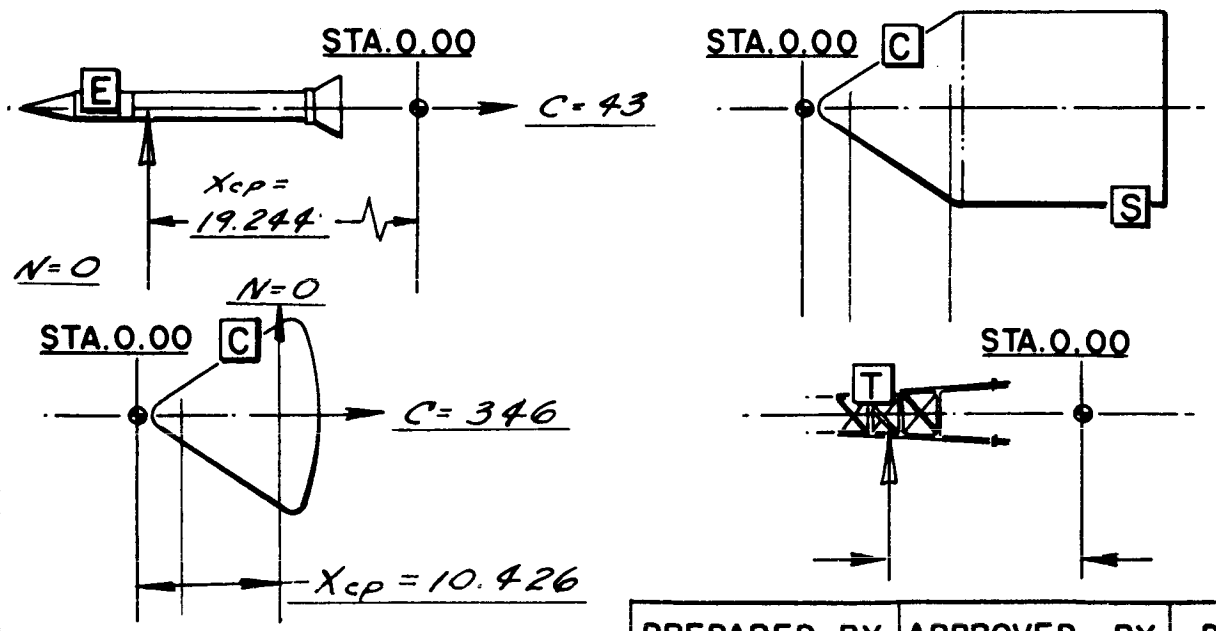

PREPARED BY	APPROVED BY	DATE

SHEET 6 OF

LOADS, APOLLO — WIND TUNNEL MODEL

MODEL APOLLO FS-2
SCALE .105
TUNNEL UPWT-AMES
TEMP.
MACH NO. .7 TO 3.5
q = 540 PSF
α = 50°
STEADY STATE LOADS — [X]
TRANSIENT LOADS — [ ]

REQUIRED SAFETY FACTORS:—
5 ON ULTIMATE
3 ON YIELD

NOTES:—
(1)—LOADS GIVEN IN POUNDS. DIMS. IN INCHES, (MODEL SCALE).
(2)—

TOTAL CONFIGURATION LOADS:

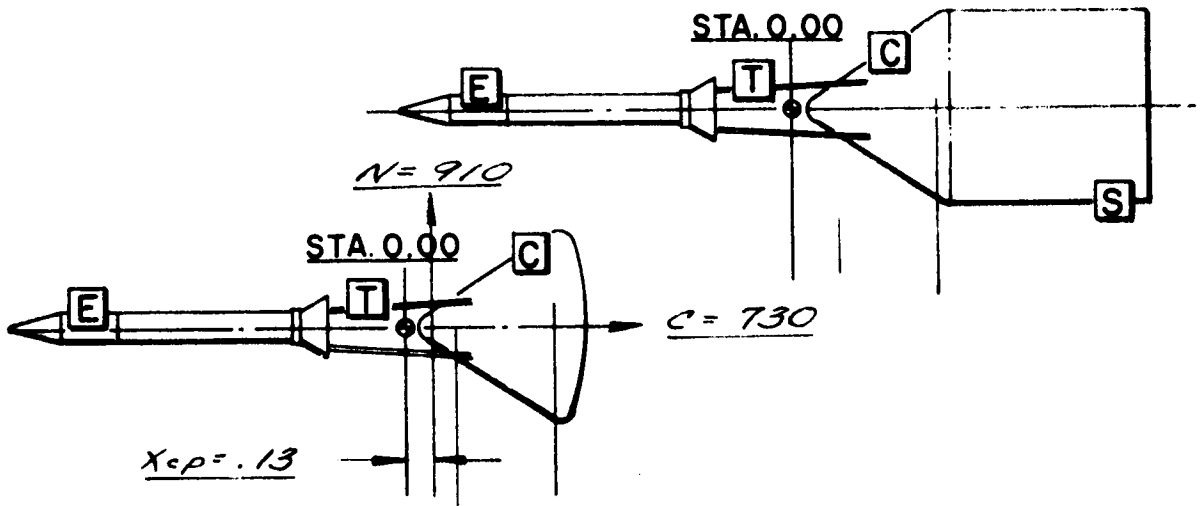

LOADS ON COMPONENTS:

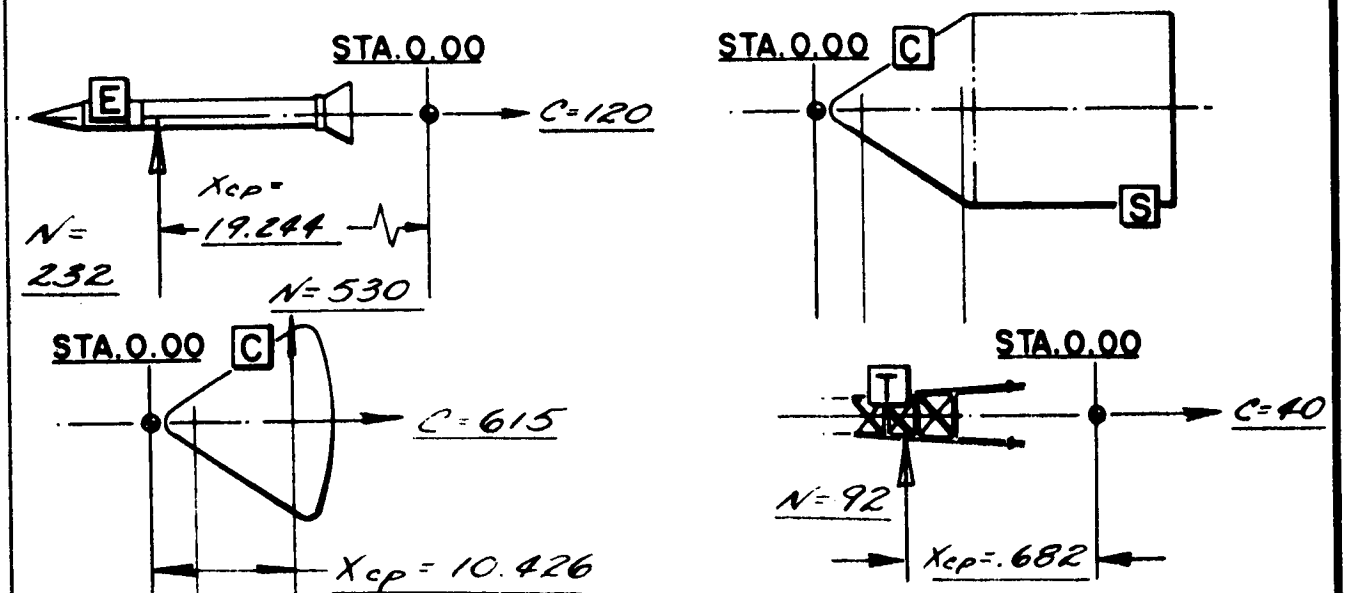

PREPARED BY	APPROVED BY	DATE
SHEET 7 OF		

LOADS, APOLLO — WIND TUNNEL MODEL

MODEL APOLLO FS-2
SCALE .105
TUNNEL UPWT - AMES
TEMP.
MACH NO. .7 TO 3.5
q = 1.215 & 2.08 psi
α = 0°
STEADY STATE LOADS — ☐
TRANSIENT LOADS — ☒

REQUIRED SAFETY FACTORS:—
5 ON ULTIMATE
3 ON YIELD

NOTES:—
(1)—LOADS GIVEN IN POUNDS. DIMS. IN INCHES, (MODEL SCALE).
(2)—

TOTAL CONFIGURATION LOADS:

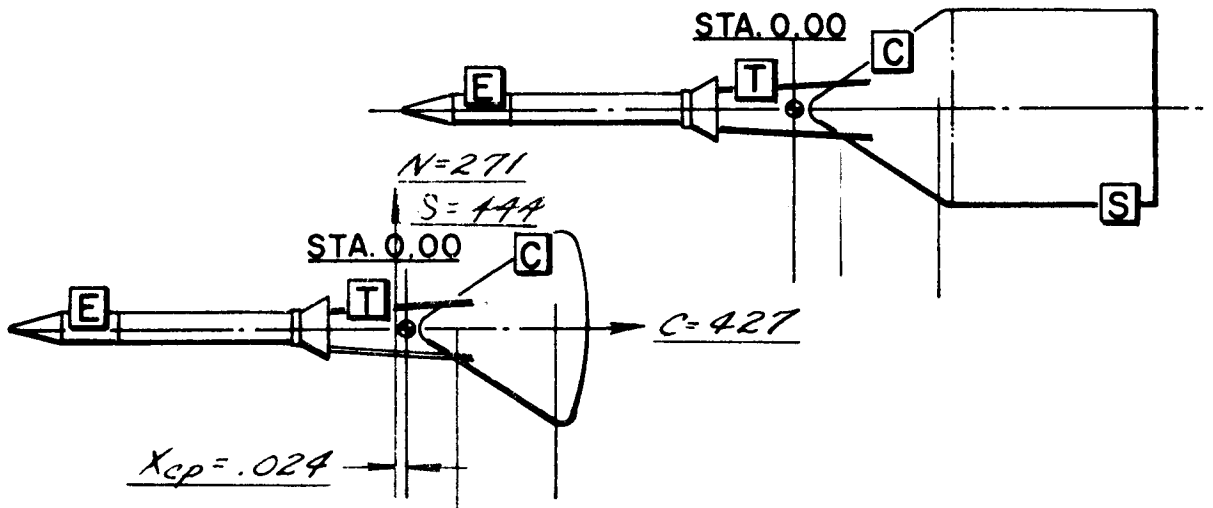

LOADS ON COMPONENTS:

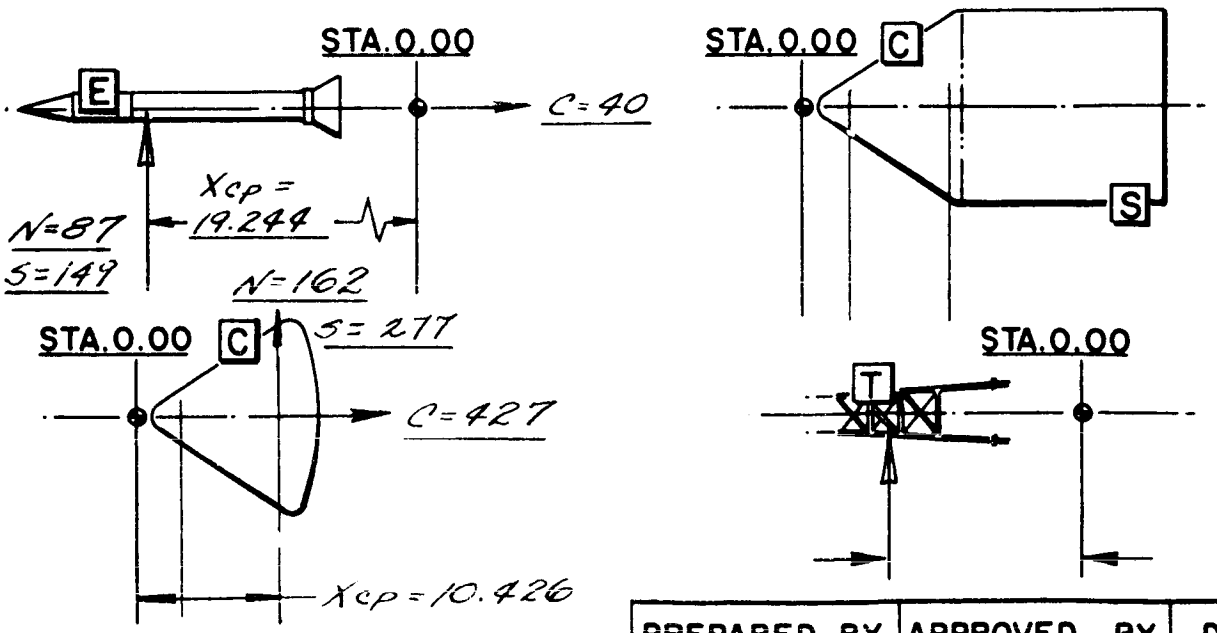

PREPARED BY	APPROVED BY	DATE

SHEET 8 OF

LOADS, APOLLO — WIND TUNNEL MODEL

MODEL APOLLO FS-2
SCALE .105
TUNNEL UPWT - AMES
TEMP.
MACH NO. .7 TO 3.5
q = 1.215 & 2.08 PSI
α = 20°
STEADY STATE LOADS — ☐
TRANSIENT LOADS — ☒

REQUIRED SAFETY FACTORS:—
5 ON ULTIMATE
3 ON YIELD

NOTES:—
(1)-LOADS GIVEN IN POUNDS. DIMS. IN INCHES, (MODEL SCALE).
(2)-

TOTAL CONFIGURATION LOADS:

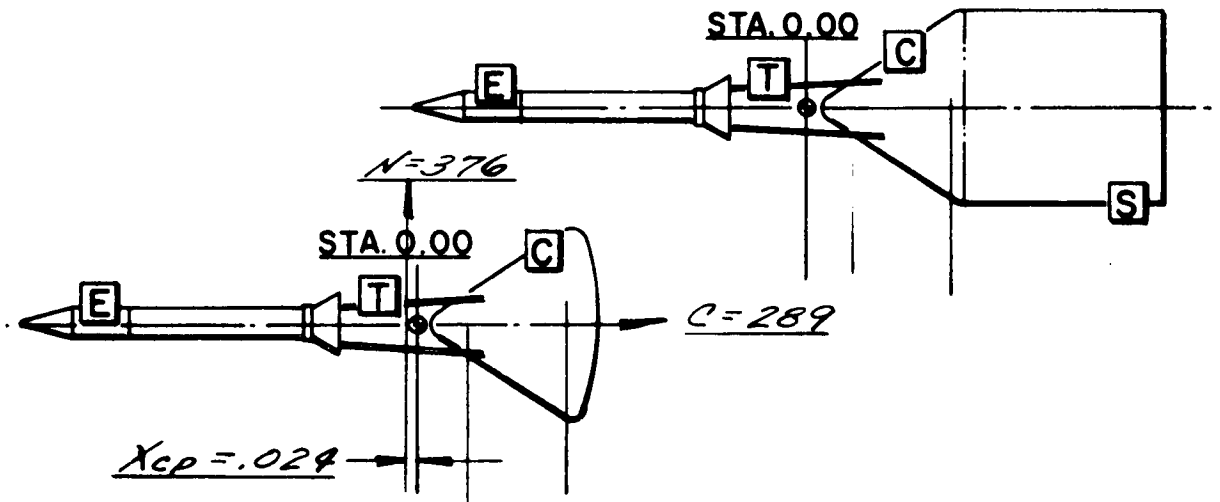

LOADS ON COMPONENTS:

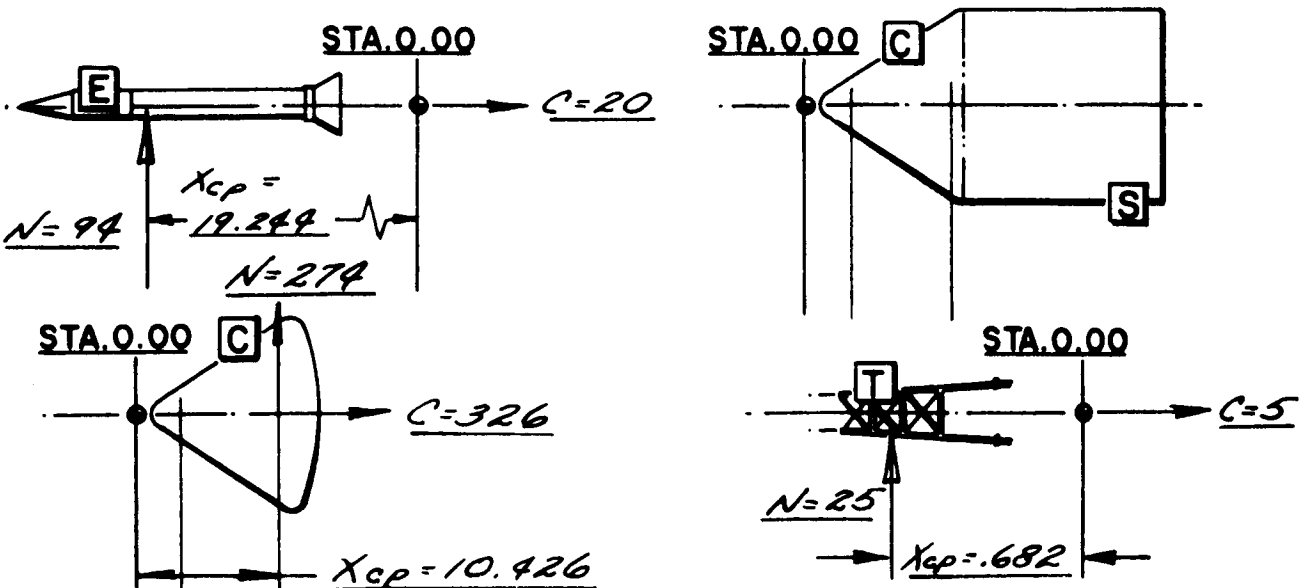

PREPARED BY	APPROVED BY	DATE
	SHEET 9 OF	

LOADS, APOLLO — WIND TUNNEL MODEL

MODEL APOLLO FS-2
SCALE .105
TUNNEL UPWT-AMES
TEMP.
MACH NO. .7 TO 3.5
q = 1.215 & 2.08 PSI
α = 40°
STEADY STATE LOADS — ☐
TRANSIENT LOADS — ☒

REQUIRED SAFETY FACTORS:—
5 ON ULTIMATE
3 ON YIELD

NOTES:—
(1)—LOADS GIVEN IN POUNDS. DIMS. IN INCHES, (MODEL SCALE).
(2)—

TOTAL CONFIGURATION LOADS:

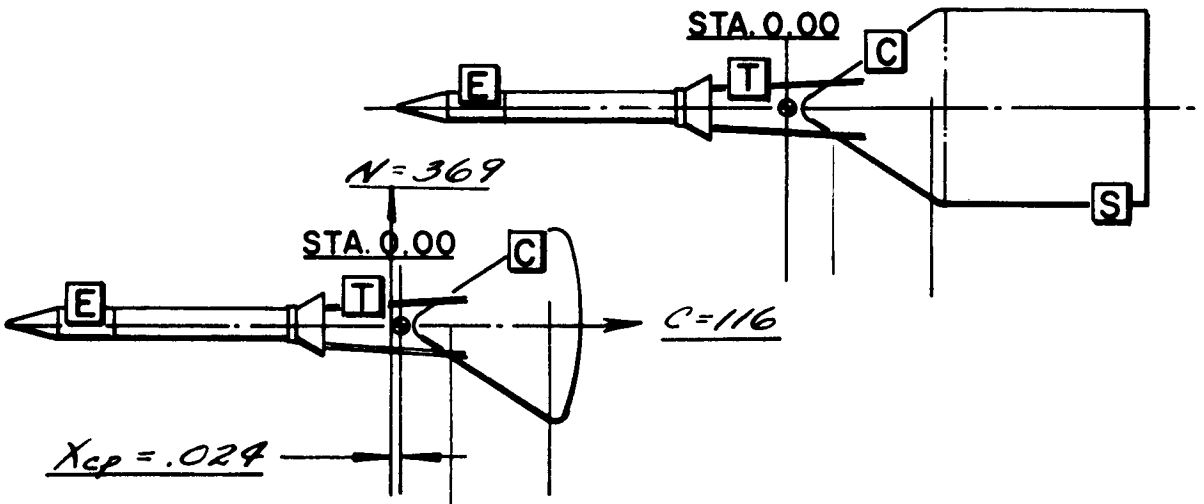

LOADS ON COMPONENTS:

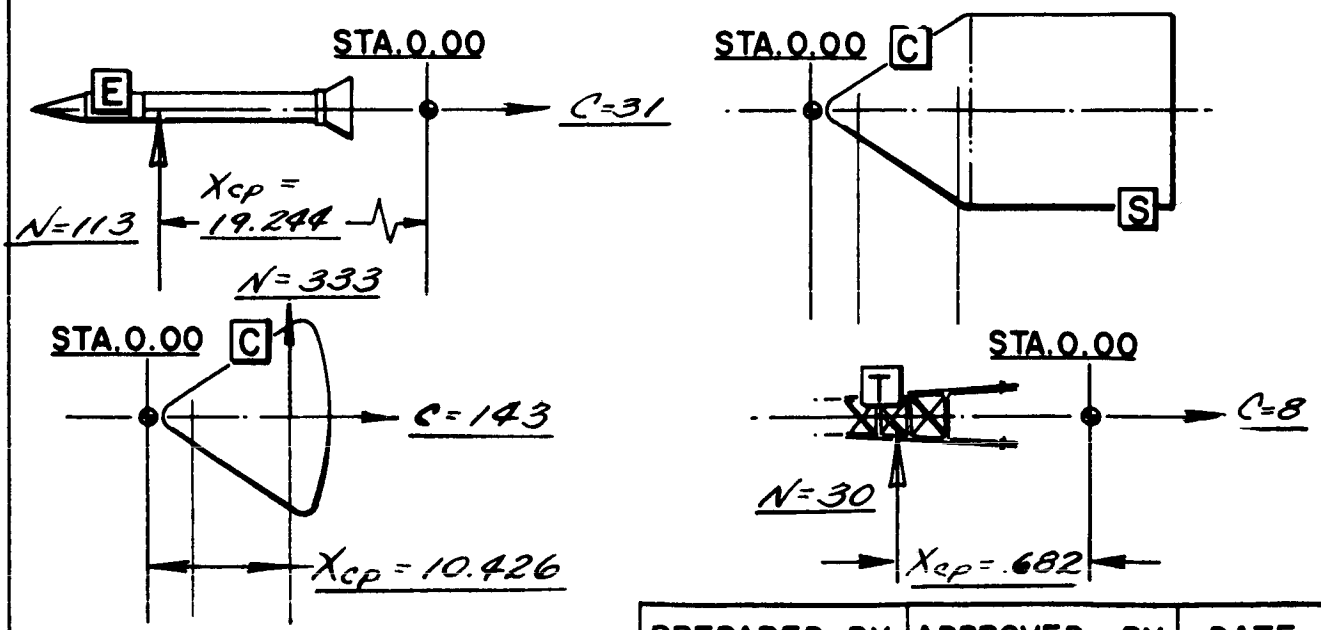

PREPARED BY	APPROVED BY	DATE
	SHEET 10 OF	

PREPARED BY: CAM	NORTH AMERICAN AVIATION, INC.	PAGE NO. OF
CHECKED BY: ARM		REPORT NO.
DATE: 8·2·62		MODEL NO. PS-2

7121-01089

-4 BALANCE ADAPTOR-

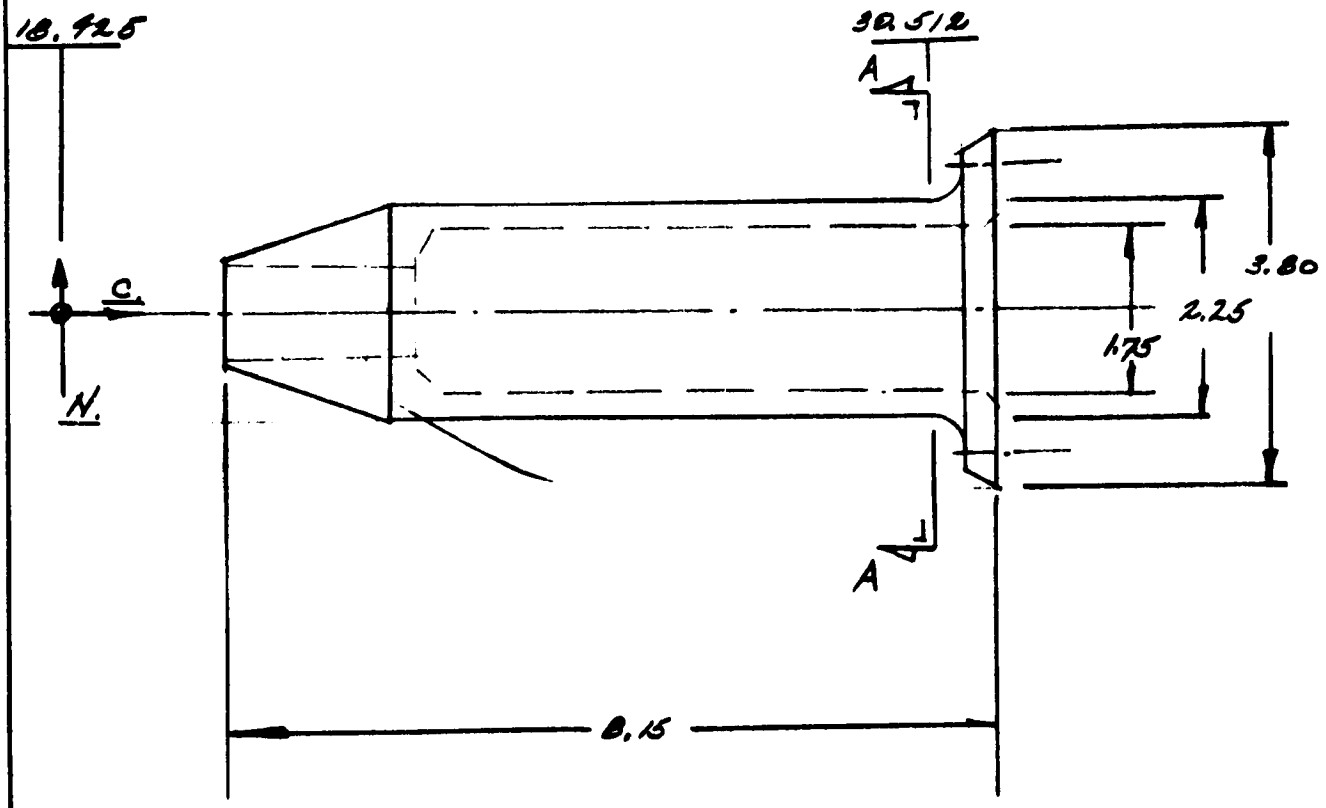

LOADS-

RUNNING- ($\alpha = 50°$)

N= 232 , C = 120 LB.

MAT'L - 17-4PH CRES
(H.T. 190-210 KSI.)

STARTING ($\alpha = 40°$)

N= 149 + 113 = 187 LB
C = 31 LB.

7121-01089

-4 BALANCE ADAPTOR (CONT.)

SECTION A-A; BENDING-

$M = 232\,(30.512 - 18.425) = \underline{2809 \text{ IN-LB.}}$

$I_{xx} = .0491\,(2.25^4 - 1.75^4) = \underline{.7979 \text{ IN}^4}$

$A = .7854\,(2.25^2 - 1.75^2) = \underline{1.571 \text{ IN}^2}$

$$f_b = \frac{Mc}{I} + \frac{P}{A} = \frac{2809(1.125)}{.7979} + \frac{120}{1.571}$$

$$= \underline{\underline{4030 \text{ PSI.}}}$$

$$M.S. = \frac{190}{5(4.03)} - 1 = \underline{\underline{\text{HIGH.}}}$$

PREPARED BY: CBM	NORTH AMERICAN AVIATION, INC.	PAGE NO. OF
CHECKED BY: HYN		REPORT NO.
DATE: 7.23.62		MODEL NO. FS-2

7121-01087

TOWER LEG SUPPORT & SPLICE PLATES

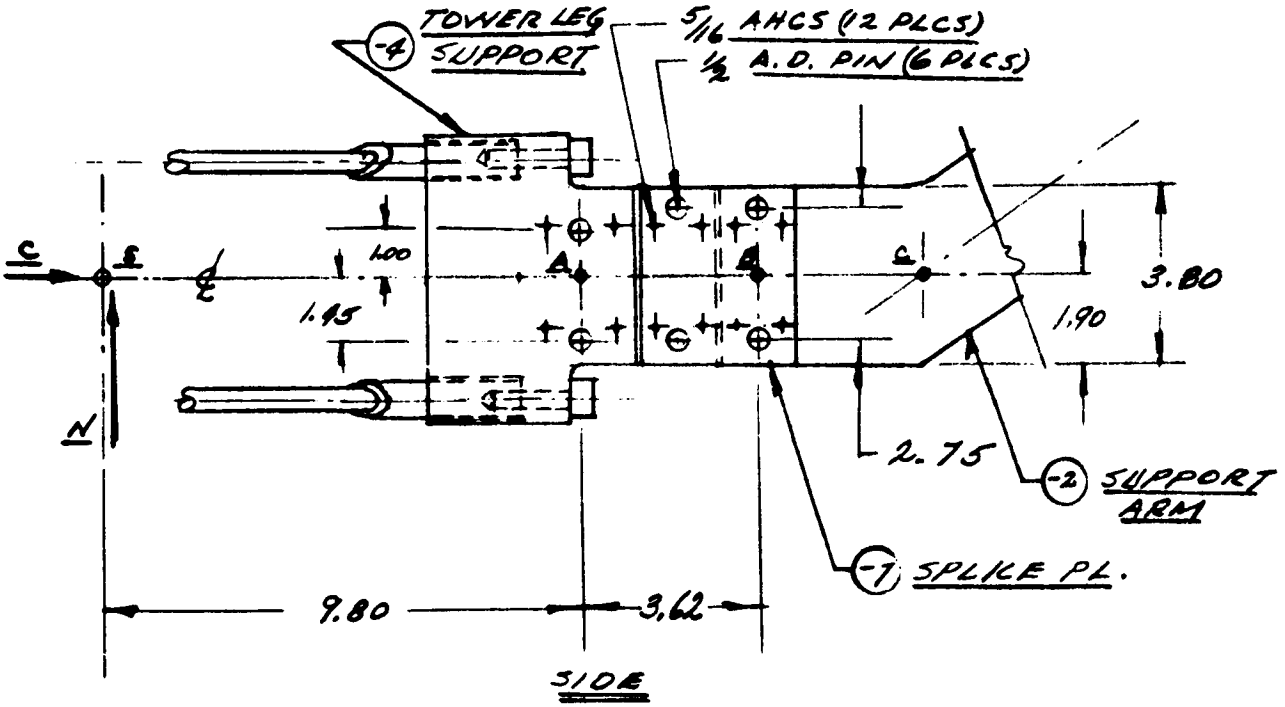

SIDE

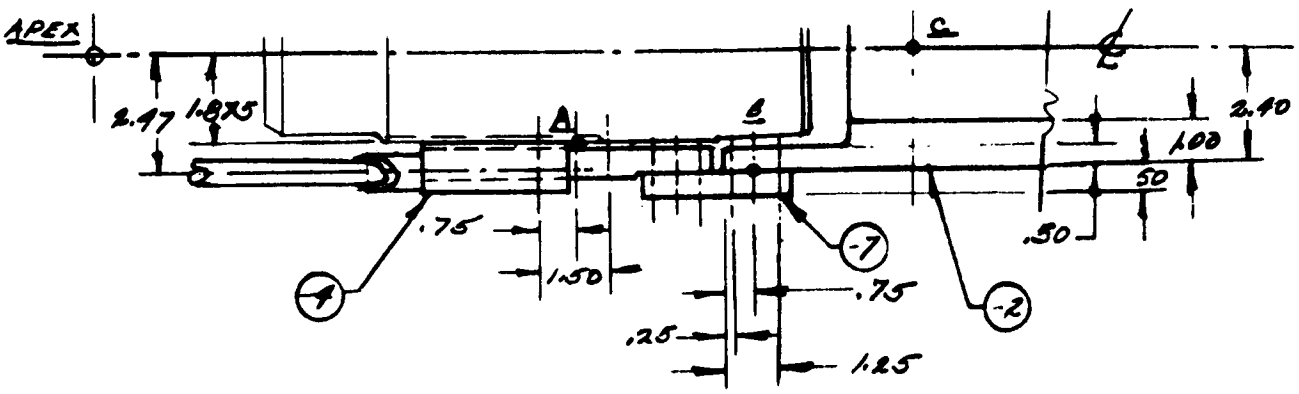

1/2 PLAN

PREPARED BY: [illegible] CHECKED BY: [illegible] DATE: 7.23.62

NORTH AMERICAN AVIATION, INC.

PAGE NO. OF

REPORT NO.

MODEL NO. FJ-2

ROCKET & TOWER SUPPORT STRUCTURE -

NORMAL, SIDE & CHORD STARTING LOAD GEOMETRY.

NORMAL & CHORD RUNNING LOAD GEOMETRY.

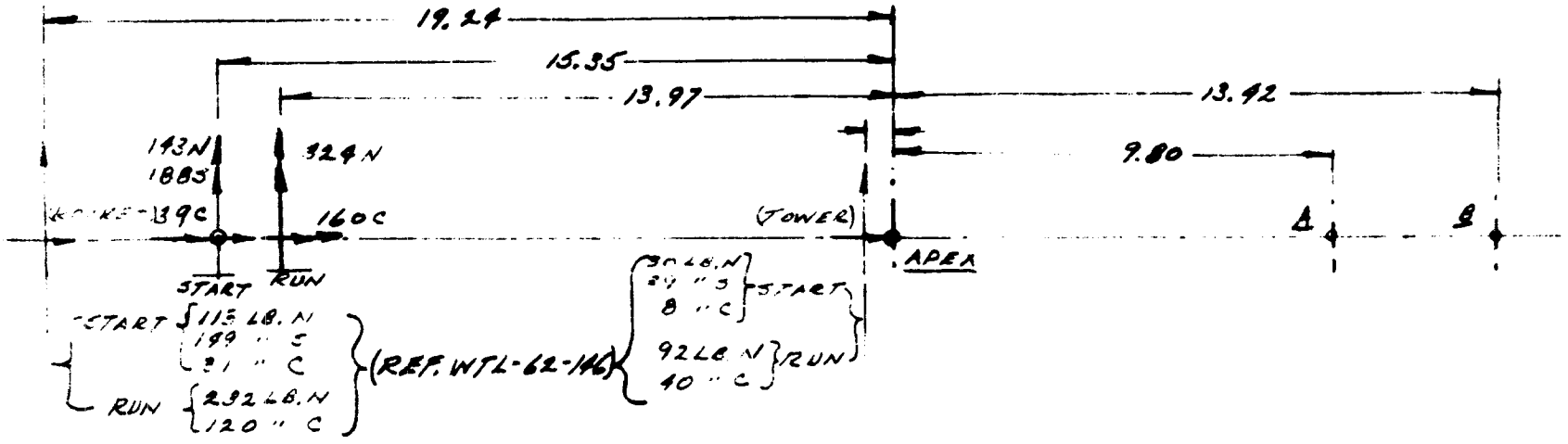

MOMENTS & LOADS AT A & B.

	STARTING (α = 40° CRITICAL)		RUNNING (α = 50° CRIT.)	
	POINT A	POINT B	POINT A	POINT B
M_N =	9596 IN-LB.	4114	7703	8875
M_S =	4728	5409	—	—
N =	143 LB.	143	324	324
S =	188	188	—	—
C =	39	39	160	160

PREPARED BY: CBM	NORTH AMERICAN AVIATION, INC.	PAGE NO. OF
CHECKED BY: DRTW		REPORT NO.
DATE: 7·26·62		MODEL NO. FS-2

7121- 01087

-4 TOWER LEG SUPPORT -

PINS, SUPPORT TO BALANCE BLOCK.

SHEAR - 1/2 IN. A.D. PIN.

$P = M_N/2(d)$, M_N (MAX) = 7703 IN-LB. (REF. PG. 14)

d = 1.00 + 1.45 = 2.45 (REF. PG. 13)

$= 7703/2(2.45)$

= 1,572 LB./PIN.

P(1/2 IN. A.D) = 28,260 LB. (REF. 1.)

$$M.S. = \frac{28,260}{5(1572)} - 1 = 2.59$$

PINS, SUPPORT TO -2 SUPPORT ARM.

SHEAR - 1/2 IN. A.D. PIN.

$P = M_N/2(d)$, (M_N MAX) = 8875 IN-LB. (PG. 14)

d = 2.75 (REF. PG. 13)

$= 8875/2(2.75)$

= 1614 LB./PIN.

$$M.S. = \frac{28,260}{5(1614)} - 1 = 2.50$$

PREPARED BY: CBM	NORTH AMERICAN AVIATION, INC.	PAGE NO. OF
CHECKED BY: ARTM		REPORT NO.
DATE: 7·26·62		MODEL NO. FS-2

7121-01087

-4 TOWER LEG SUPPORT-

BOLTS, SUPPORT TO -2 SUPPORT ARM

TENSION- 5/16-24 A.H.C. SCREWS

$$t = (d/2)M_{S_e} / 2(2.40 - \frac{d}{2})(2)(c)$$

$$= .25(5409) / 4(1.0)(2.40 - .25)$$

$$= 1{,}352 / 4(2.15) = \underline{157 \text{ LB./SC.}}$$

$$M.S. = \frac{9264}{5(157)} - 1 = \underline{\text{HIGH}}$$

BENDING- -7 SPLICE PLATE

MAT'L, 17-4PH (H.T. 190-210 KSI)

$$M_{xx} = M_{S_e}(.50)/2.15 = 5409(.50)/2.15$$

$$= 2516(.50) = \underline{1258 \text{ IN.LB.}}$$

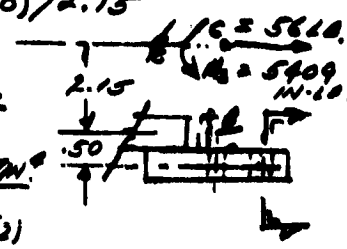

$$I_{xx} = (.50)^3(3.80 - 1.00)/12 = \underline{.02917 \text{ IN}^4}$$

$$I_{yy} = [.50(3.80)^3 - 2(.5)^4]/12 - .25(1.375)^2(2)$$

$$= \underline{1.3301 \text{ IN}^4}$$

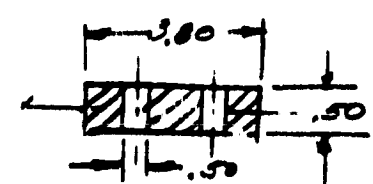

$$f_b = \frac{M_x c}{I_x} + \frac{P}{A} + \frac{M_y c}{I_y}$$

$$= \frac{1258(.25)}{.02917} + \frac{(2516 + 39/2)}{2.80(.50)} + \frac{4119(2.90)}{2(1.3301)} \quad \underline{\text{SECT.}}$$

$$= \underline{17{,}080 \text{ PSI}}$$

$$M.S. = \frac{190}{5(17.1)} - 1 = \underline{1.20}$$

PREPARED BY: CBM	NORTH AMERICAN AVIATION, INC.	PAGE NO. OF
CHECKED BY: HRN		REPORT NO.
DATE: 7.26.62		MODEL NO. F5-2

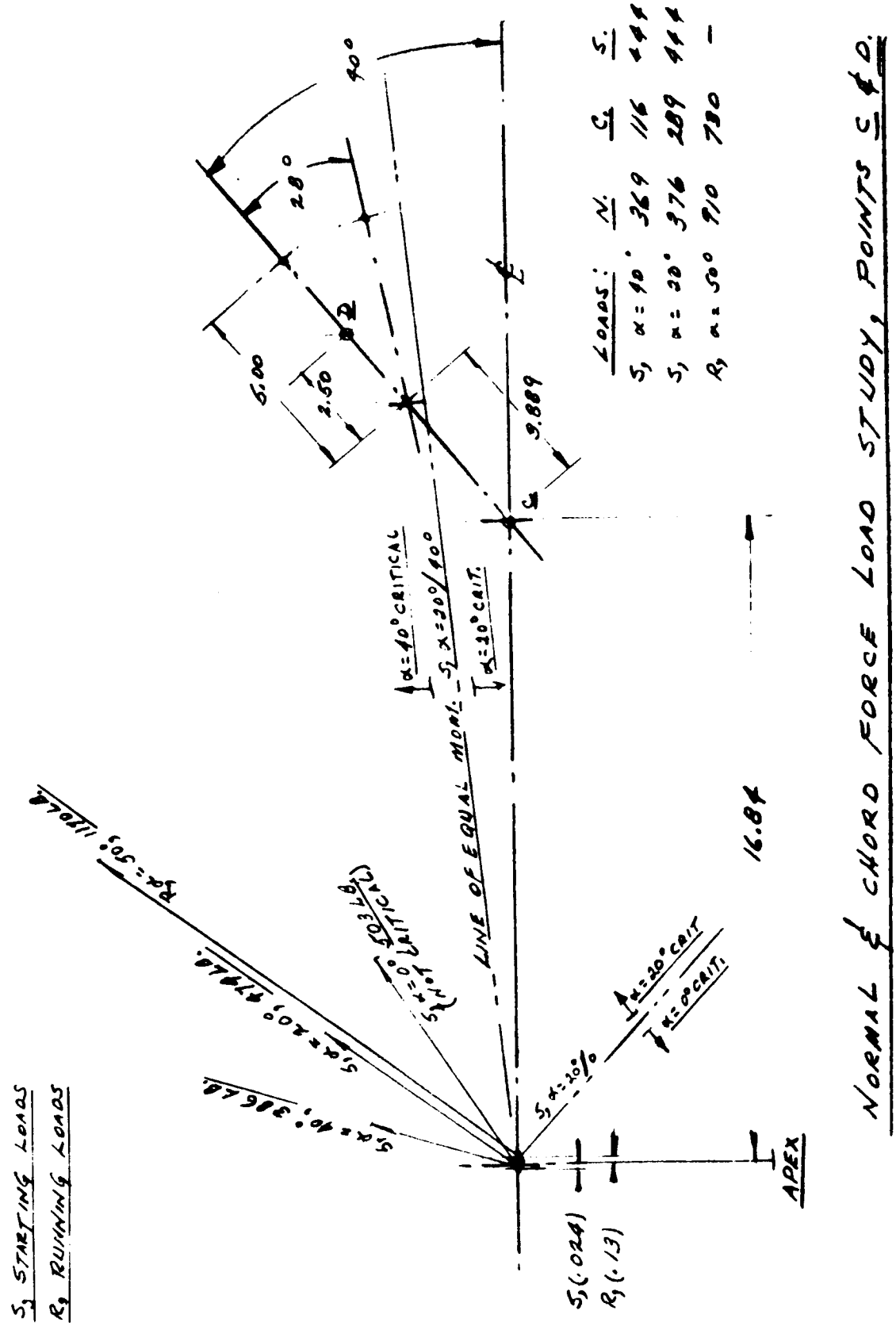

NORMAL ℄ CHORD FORCE LOAD STUDY, POINTS C & D.

PREPARED BY: CBM	NORTH AMERICAN AVIATION, INC.	PAGE NO. OF
CHECKED BY: BRM		REPORT NO.
DATE: 7.27.62		MODEL NO. FS-8

7121-01087

-9 SPACER

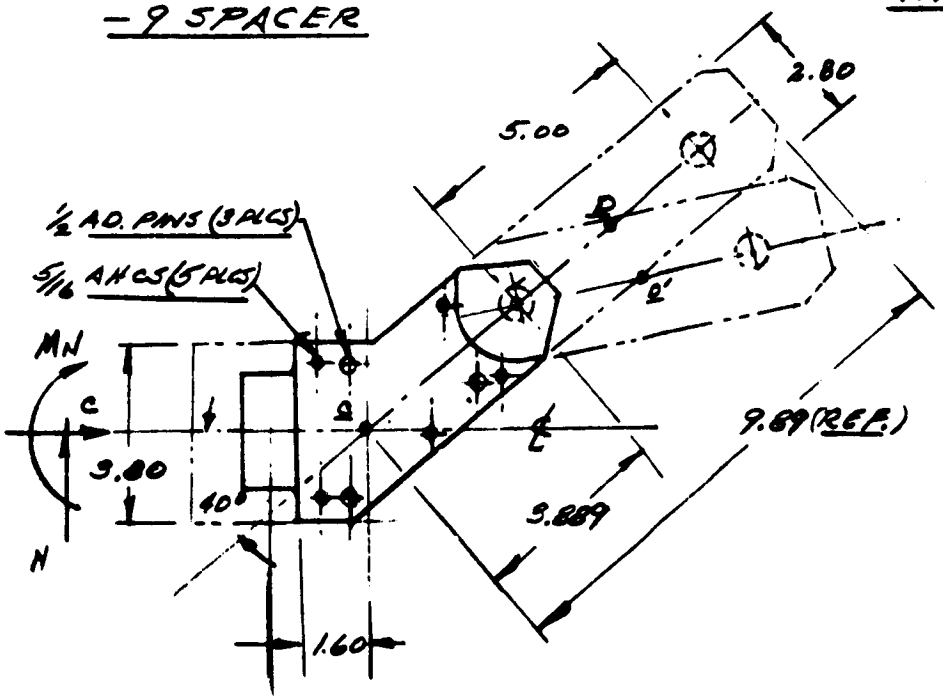

SIDE

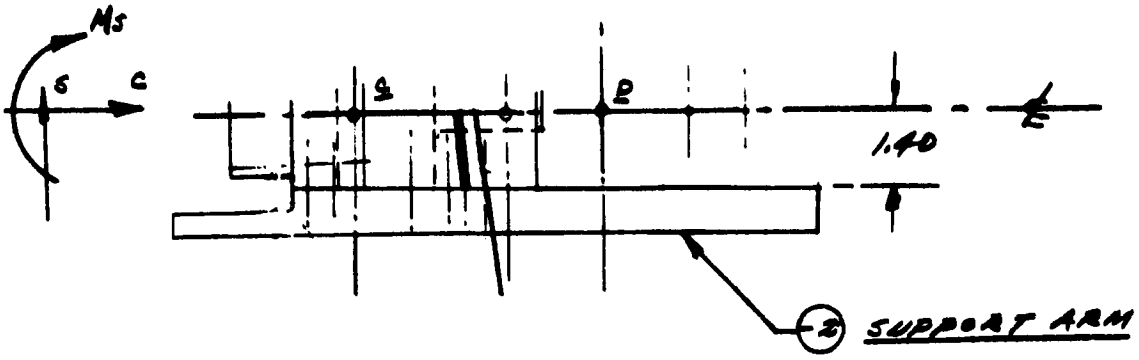

1/2 PLAN

PREPARED BY: CBM	NORTH AMERICAN AVIATION, INC.	PAGE NO. OF
CHECKED BY: DRTK		REPORT NO.
DATE: 7.27.62		MODEL NO. FS-2

7121-01087

-9 SPACER - (CONT.)

ATTACHMENTS - 2 ARM TO -9 SPACER -

PATTERN PROPERTIES

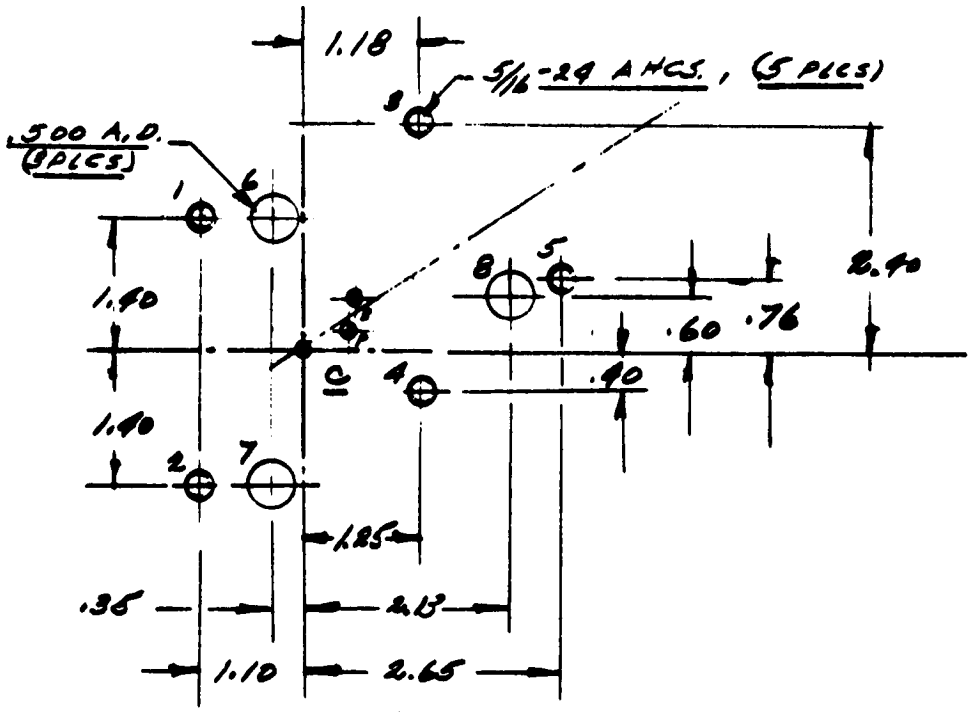

ITEM	Ax	Ax²	Ay	Ay²
1	-1.10	1.21	+1.40	1.96
2	-1.10	1.21	-1.40	1.96
3	+1.18	1.392	+2.40	5.76
4	+1.25	1.563	-.40	.16
5	+2.65	7.023	+.76	.578
	+2.88	12.398	+2.76	10.418
6	-.35	.123	+1.40	1.96
7	-.35	.123	-1.40	1.96
8	+2.13	4.537	+.60	.36
	+1.43	4.783	+.60	4.28

7121-01087

- 9. SPACER (CONT.)

ATTACHMENT PATTERN (CONT.) -

BOLTS -

$$\bar{X}_B = \frac{\Sigma Ax}{\Sigma A} = \frac{+2.88}{5} = +.576$$

$$\bar{Y}_B = \frac{\Sigma Ay}{\Sigma A} = \frac{2.76}{5} = +.552$$

$$I_{X_B} = 2\left[\Sigma Ay^2 - Ay(\bar{y})\right] = 2\left[10.418 - 2.76(.552)\right]$$
$$= 2(8.894) = 17.788$$

$$I_{Y_B} = 2\left[\Sigma Ax^2 - Ax(\bar{x})\right] = 2\left[12.398 - 2.88(.576)\right]$$
$$= 2(10.739) = 21.478$$

$$A_B = 2(5.0) = 10.0$$

PINS -

$$\bar{X}_P = \frac{+1.43}{3} = +.477$$

$$\bar{Y}_P = \frac{+.60}{3} = +.20$$

$$I_{X_P} = 2\left[4.28 - .60(.20)\right] = 2(4.160) = 8.320$$

$$I_{Y_P} = 2\left[4.783 - 1.43(.477)\right] = 2(4.101) = 8.202$$

$$I_{XY_P} = I_{X_P} + I_{Y_P} = 8.320 + 8.202 = 16.522$$

$$A_P = 2(3.0) = 6.0$$

7121-01087

-9 SPACER (CONT.)

PERCENTAGE OF YAW MOMENT RESISTED BY PINS OR BOLTS -

$A_p = (.7854)(.50)^2$

$= .1964 \text{ IN}^2$

$A_B = .0579 \text{ IN}^2$

(REF. 1)

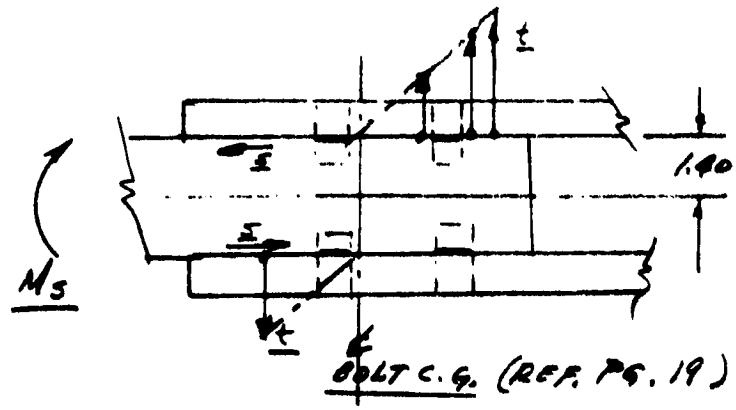

CONSERVATIVELY ASSUME ONLY ONE BOLT PATTERN IS ACTIVE AND THE AXIS OF RESISTANCE IS AT THE PATTERN C.G. ALSO ASSUME THE PERCENTAGE OF LOAD RESISTED BY THE PINS IS A DIRECT PROPORTION OF THE MOMENT OF INERTIA OF THE PINS TO THE SUM OF THE INERTIA OF THE PINS AND BOLTS.

$I_{PINS} = 2A_p(d)^2 = 2(2)(.1964)(1.40)^2 = \underline{2.3097} \text{ IN}^4$

$I_{BOLTS} = A_B(10.739) = .0579(10.739) = \underline{.6218}$, (REF. PG. 20)

$$\lambda_p = \frac{I_p}{(I_p + I_B)} = \frac{2.3097}{(2.3097 + .6218)} = \underline{.788}$$

7121-01087

-9 SPACER ATTACHMENT LOADS

PINS -

STARTING - ($\alpha = 20°$, CRITICAL)

$M_{N_P} = 376(16.84 + .024 + .477) - 289(.29) = \underline{6,460 \text{ IN-LB}}$

$M_{S_P} = 444(17.34) = \underline{7,700 \text{ IN-LB}}$

RUNNING - ($\alpha = 50°$, CRITICAL)

$M_{N_P} = 910(17.34 - .024 - .13) - 730(.20) = \underline{15,639 \text{ IN-LB}}$

$M_{S_P} = 0.0$ -

BOLTS - (ONLY RESIST SIDE LOADS)

STARTING -

$M_{S_B} = 444(17.34 + .576 - .477) = \underline{7,743 \text{ IN-LB}}$

7121-01087

-9 SPACER (CONT.)

SHEAR - (½ IN. A.D. PINS.)

$$P_{s_1} = \left[\left(\frac{M_{x_N} c}{I_{xN_p}}\right)^2 + \left(\frac{M_{x_D} c}{I_{xN_p}} + \frac{M_{s_p}(d)c}{I_{z_p}}\right)^2\right]^{\frac{1}{2}}$$

$$= \left\{\left[\frac{6460(2.65-.477)}{16.522}\right]^2 + \left[\frac{6460(.60-.20)}{16.522} + \frac{7700(.788)(1.40)}{11.79}\right]^2\right\}^{\frac{1}{2}}$$

$$= \left[(849)^2 + (156 + 720)^2\right]^{\frac{1}{2}}$$

$$= (1,488,177)^{\frac{1}{2}} = \underline{1220 \text{ LB./PIN.}}$$

$$P_{e_1} \doteq \frac{15,639(2.65-.477)}{16.522} = \underline{2056 \text{ LB/PIN}}$$

RUNNING LOAD MOST CRITICAL -

$$M.S._1 = \frac{28260}{5(2056)} - 1 = \underline{\underline{1.75}}$$

PREPARED BY: CBM	NORTH AMERICAN AVIATION, INC.	PAGE NO. OF
CHECKED BY: HTN		REPORT NO.
DATE: 7.30.62		MODEL NO. FS-2

7121-01087

-9 SPACER (CONT.)

TENSION - (5/16 A.H.C. SCREWS)

$$t_B = \frac{(1-k)\, M_{S_B}(c)}{I_{Y_B}}$$

$$= \frac{(1-.788)(7743)(2.65-.576)}{10.739}$$

317 LB./SCREW

$$M.S. = \frac{9264}{5(317)} - 1 = \underline{\underline{4.84}}$$

PREPARED BY: CBM	NORTH AMERICAN AVIATION, INC.	PAGE NO. OF
CHECKED BY: HKM		REPORT NO.
DATE: 7.30.62		MODEL NO. FS-2

7121-01087

-2 SUPPORT ARM.

MAT'L - 17-4PH, CRES.
H.T. 190-210 KSI.

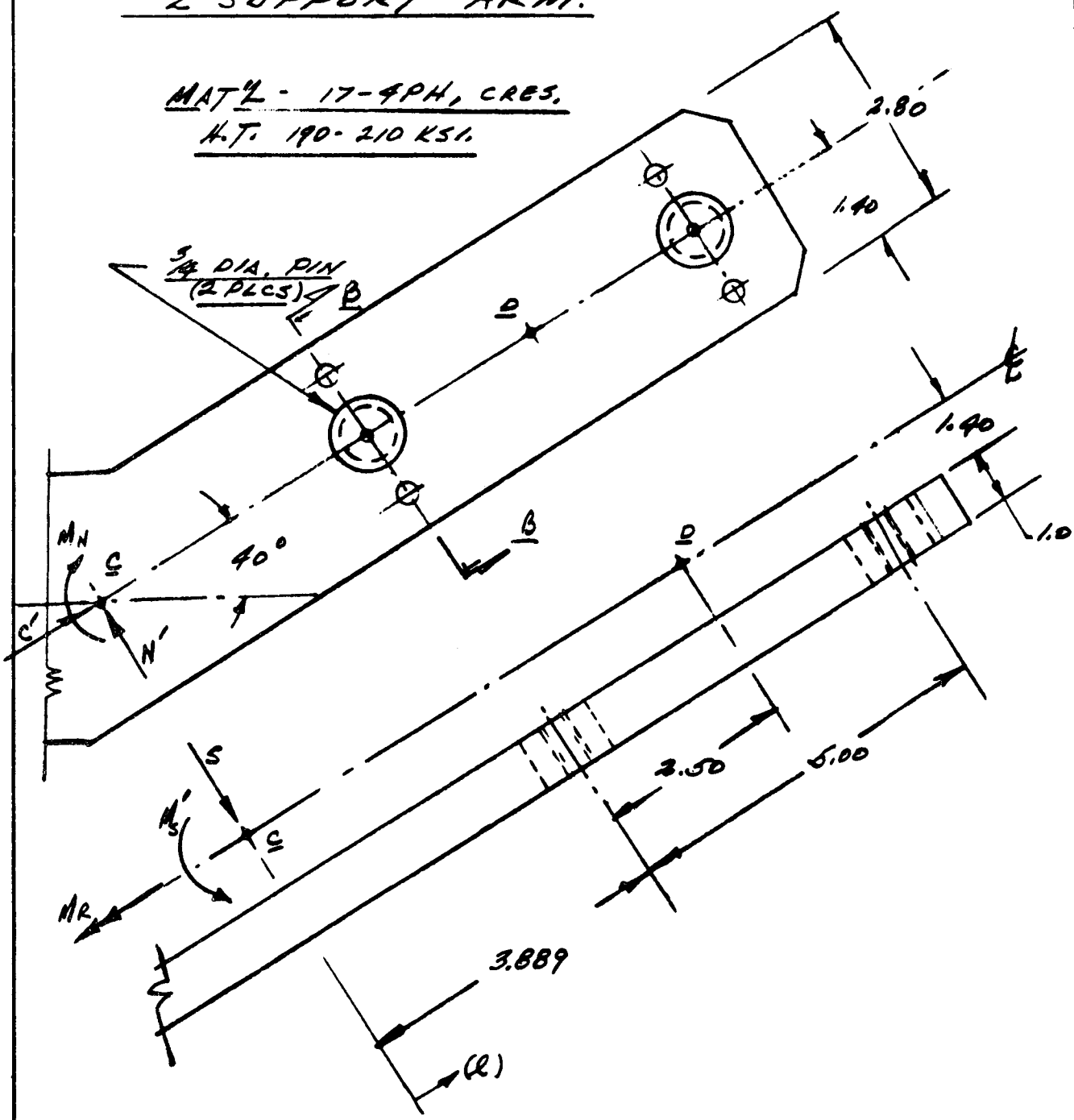

7121-01087

-2 SUPPORT ARM (CONT.)

FOR STARTING CONDITION $\alpha = 40°$ IS CRITICAL (REF. PG. 17)

$M_{N_c} = 369(16.84 + .024) = 6223$ IN-LB

$M_{S_c} = 444(16.864) = 7488$ IN-LB.

$N_c' = 369(\cos 40°) - 116(\sin 40°)$

$= 369(.76604) - 116(.64279)$

$= 282.7 - 75.1 = 207.6$ LB.

$C_c' = 116(.76604) + 369(.64279)$

$= 88.9 + 239.0 = 327.9$ LB.

$S_c = 444$ LB.

$M_R = M_{S_c}(\sin 40°)$

$= 7488(.64279) = 4813.$ IN-LB

$M_S' = M_{S_c}(\cos 40°) + S(\ell)$

$= 444[(16.864)(.76604) + (\ell)]$

$= [5735.8 + 444(\ell)]$ IN-LB.

7121-01087

-2 SUPPORT ARM (CONT.)

RUNNING CONDITION ($\alpha = 50°$)

$M_{N_c} = 910(16.84 - .13) = 15{,}200$ IN-LB

$N' = 910(.76604) - 730(.64279)$

$= 225$ LB.

$C' = 730(.76604) + 910(.64279)$

$= 1150$ LB.

SECTION B-B - BENDING -

$M_{N(B-B)} = M_{N_c} + N'(3.889)$

$= 6223 + 207.6(3.889)$

$= 7030$ IN-LB (START.)

$M_{R(B-B)} = M_{R_c}$

$= 4813$ IN-LB (START)

$M_{S'(B-B)} = 5735.8 + 944(3.889)$

$= 7463$ IN-LB (START)

7121-01087

-2 SUPPORT ARM. (CONT.)

SECTION B-B (CONT.)

$$P_{(BB)/2} = \frac{C'}{2} + \frac{M_{S'(B-B)}}{3.80}$$

$$= \frac{327.9}{2} + \frac{7463}{3.80}$$

$$= \underline{2,128 \text{ LB.}} \text{ (START)}$$

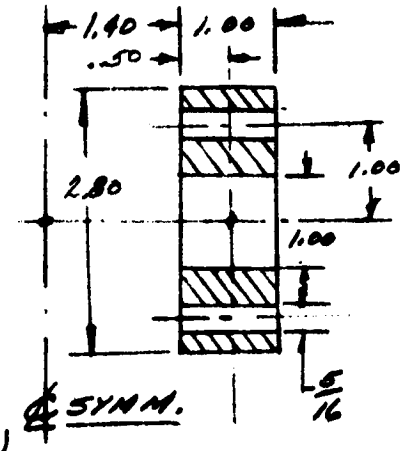

½ SECT. B-B.
(REF. PG. 25)

$$M_{(BB)/2} = \frac{M_{N(BB)}}{2} + \frac{M_{R(B-B)}(3.889)}{3.80}$$

$$= \frac{7030}{2} + \frac{4813(3.889)}{3.80}$$

$$= \underline{8440 \text{ IN-LB}} \text{ (START)}$$

$$P_{(B-B)/2} = \frac{1150}{2} = \underline{575 \text{ LB}} \text{ (RUN)}$$

$$M_{(B-B)/2} = \frac{M_{N_C}}{2} + \frac{N'(3.889)}{2}$$

$$= \frac{15,200}{2} + \frac{225(3.889)}{2}$$

$$= \underline{8,040 \text{ IN-LB}} \text{ (RUN)}$$

PREPARED BY: CBM | NORTH AMERICAN AVIATION, INC. | PAGE NO. OF
CHECKED BY: DRM | REPORT NO.
DATE: 7.30.62 | MODEL NO. FS-2

7121-01087

-2 SUPPORT ARM (CONT.)

SECTION B-B (CONT.)

$$I_{EX} = \frac{b(D^3 - d^3)}{12} - 2[b(5/16)]$$

$$= \frac{1.00(2.80^3 - 1.00^3)}{12} - 2(.3125)(1.00)$$

$$= 1.746 - .6250 = \underline{1.121 \text{ IN}^4}$$

$$\bar{A}_{BB/2} = 1.00(2.80 - 1.00 - .625)$$

$$= \underline{1.175 \text{ IN}^2}$$

$$f_{b_{S_1}} = \frac{Mc}{I} + \frac{P}{A} = \frac{8440(1.40)}{1.121} + \frac{2128}{1.175}$$

$$= \underline{12,350 \text{ PSI}} \text{ (START)}$$

$$f_{b_{R_1}} = \frac{8040(1.40)}{1.121} + \frac{575}{1.175} = \underline{10,530 \text{ PSI}} \text{ (RUN)}$$

STARTING LOAD MOST CRITICAL

$$M.S. = \frac{190}{5(12.55)} - 1 = \underline{\underline{2.07}}$$

7121- 01087

-2 SUPPORT ARM (CONT.)

3/4 IN. DIA. PINS.

$$M_{N_D} = M_{N_C} + N'(3.889 - 2.50)$$

$$= 6223 + \underline{207.6}(6.389)$$

$$= \underline{7,549 \text{ IN-LB.}} \text{ (START)}$$

$$M_{S_D}' = 5735.8 + \underline{444}(6.389)$$

$$= \underline{8,573 \text{ IN-LB.}} \text{ (START)}$$

$$M_{R_D} = M_{R_C}$$

$$= \underline{4,813 \text{ IN-LB.}} \text{ (START)}$$

$$M_{N_D} = 15200 + \underline{225}(6.389)$$

$$= \underline{16,638 \text{ IN-LB}} \text{ (RUN)}$$

$$P_{(PIN)_{S_1}} = \left\{ \left[\frac{M_{N_D}}{2(5.0)} + \frac{N_C'}{2(2)} + \frac{M_{R_D}}{2(2.80)} \right]^2 + \left[\frac{C_c'}{4} + \frac{M_{S_D}'}{2(2.80)} \right] \right\}^{\frac{1}{2}}$$

7121-01087

-2 SUPPORT ARM (CONT.)

3/4 IN. DIA. PINS (CONT.)

$$P_{(PIN)_{S_1}} = \left\{\left[\frac{7599}{10.0} + \frac{207.6}{4.0} + \frac{4813}{5.60}\right]^2 + \left[\frac{327.9}{4.0} + \frac{8573}{5.60}\right]^2\right\}^{\frac{1}{2}}$$

$$= \left[(1666)^2 + (1613)^2\right]^{\frac{1}{2}}$$

$$= \left[5{,}377{,}325\right]^{\frac{1}{2}}$$

$$= \underline{2319 \text{ LB}} \quad \text{(START)}$$

$$P_{(PIN)_{A_1}} = \frac{M_{ND}}{190} + \frac{N_c'}{4}$$

$$= \frac{16{,}636}{10.0} + \frac{225}{4.0}$$

$$= \underline{1720 \text{ LB. (RUN)}}$$

STARTING LOAD MOST CRITICAL -

SHEAR -

$$A_S = (.75)^2(.7854) = \underline{.442 \text{ IN}^2}$$

$$f_S = \frac{P}{A} = \frac{2319}{.442} = \underline{5247 \text{ PSI}}$$

$$M.S. = \frac{125}{5(5.25)} - 1 = \underline{3.76}$$

7121-01087

-2 SUPPORT ARM - (CONT.)

5/16 A.H.C. SCREWS ADJACENT TO 3/4 PINS.

$P_t = N_{s_D} / 5.00(2)$ (CONSERVATIVE)

$= 8573 / 10.0 = \underline{857.3 \text{ LB.}}$

$M.S. = \frac{9264}{5(857)} - 1 = \underline{\underline{1.16}}$

PREPARED BY:	NORTH AMERICAN AVIATION, INC.	PAGE NO. OF
CHECKED BY:		REPORT NO.
DATE: 8·1·62		MODEL NO. FS-2

7121-01087

-6 STING ADAPTOR

MAT'L. 17-4PH CRES
H.T. 190-210 KSI.

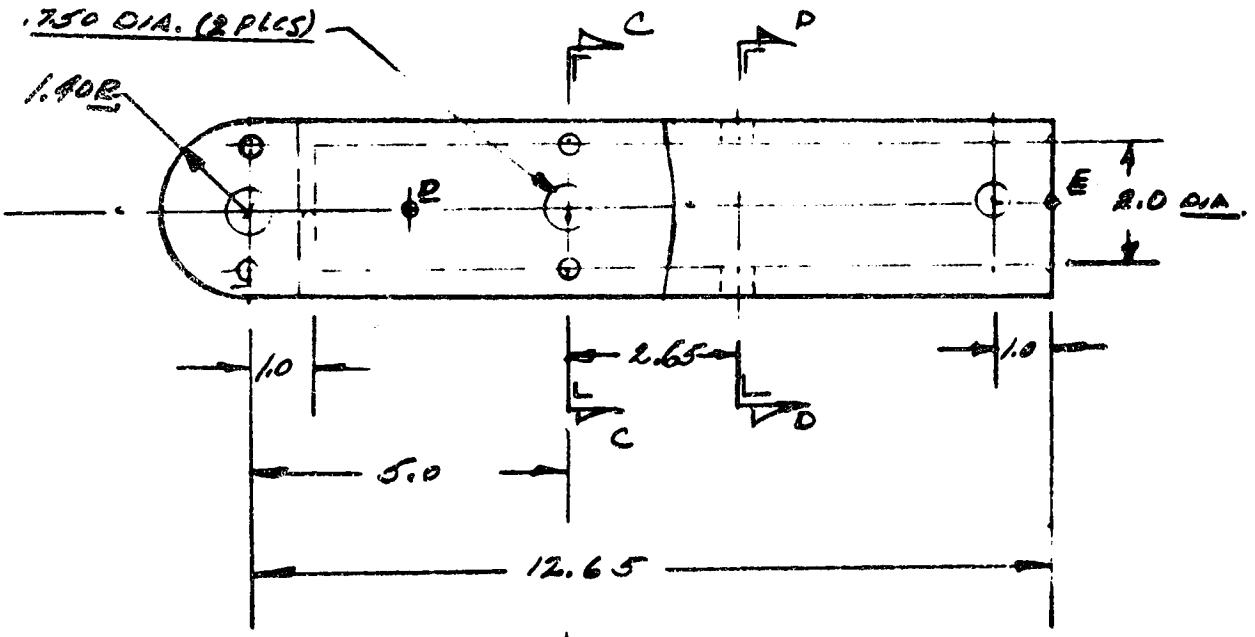

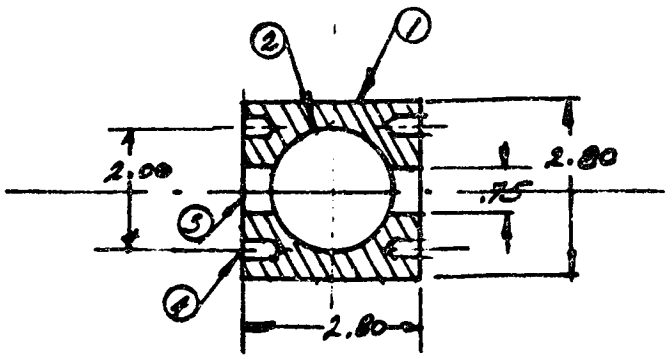

SECT. C-C

7121-01087

-6 STING ADAPTOR (CONT.)

SECTION C~C

SECTION PROPERTIES -

ITEM		A	y	Ay^2	x	Ax^2	I_{ox}	I_{oy}
1	+(1)	+7.8400	—	—	—	—	5.1221	5.1221
2	-(1)	-3.1416	—	—	—	—	-.7856	-.7856
3	-(2)	-.6000	—	—	± 1.20	.8640	-.0141	-.0040
4	-4	-.7812	1.00	.7812	1.087	.9239	—	—
		3.3172		-.7812		-1.7879	4.3224	4.3325

$A = 3.3172 \text{ IN}^2$

$I_{xx} = 4.3224 - .7812 = 3.5412 \text{ IN}^4$

$I_{yy} = 4.3325 - 1.7879 = 2.5446 \text{ IN}^4$

LOADS AT SECTION C~C

$M_{N(C)} = M_{N_0} + N_0'(2.50)$

$= 7549 + 207.6(2.50) = 8068 \text{ IN-LB}$ (S)

$M_{S(C)}' = M_{S_0}' + S_0(2.50)$

$= 8573 + 444(2.50) = 9683 \text{ IN-LB.}$ (S)

PREPARED BY: CBM	NORTH AMERICAN AVIATION, INC.	PAGE NO. OF
CHECKED BY: ARM		REPORT NO.
DATE: 8·1·62		MODEL NO. FS-2

7121 - 01087

- 6 STING ADAPTOR (CONT.)

SECTION C~C (CONT.)

$M_{N_C} = 16,638 + 225(2.50) = 17,200$ IN-LB (R.)

BENDING -

$$f_b = \sum \frac{Mc}{I} + \frac{P}{A}$$

$$= \frac{8068(1.40)}{3.5412} + \frac{9683(1.40)}{2.5446} + \frac{327.9}{3.3172}$$

$= 8,616$ PSI (START)

$$= \frac{17200(1.40)}{3.5412} + \frac{1150}{3.3172}$$

$= 7150$ PSI (RUN)

$$M.S. = \frac{190}{5(8.616)} - 1 = 3.41$$

PREPARED BY: CBM	NORTH AMERICAN AVIATION, INC.	PAGE NO. OF
CHECKED BY: JLM		REPORT NO.
DATE: 8·1·62		MODEL NO. FS-2

7121-01087

-6 STING ADAPTOR (CONT.)

SECTION D-D-

$$I_{xx} = .0491(2.80^4 - 2.00^4) - 2(.50)(.40)(1.20^2)$$

$$= 2.2324 - .5760$$

$$= \underline{1.6564 \text{ IN}^4}$$

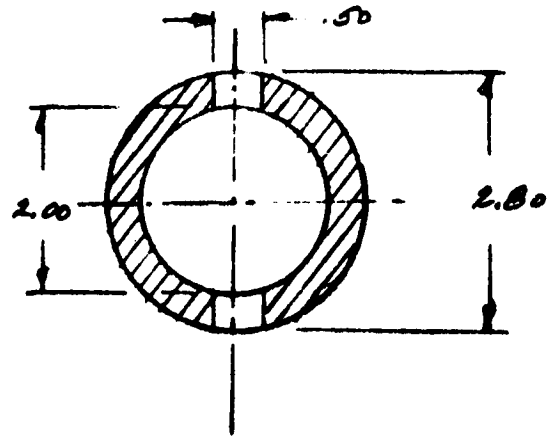

$$A_{D-D} = .7854(2.80^2 - 2.00^2) - 2(.50)(.40)$$

$$= \underline{2.616 \text{ IN}^2}$$

SECT. D-D.

$$M_{N(D-D)_{S_1}} = 8068 + 207.6(2.65) = 8618 \text{ IN-LB.}$$

$$M_{S'(D-D)_{S_1}} = 9683 + 444(2.65) = 10,860 \text{ IN-LB.}$$

$$M_{(D-D)_{S_1}} = \left[(8618)^2 + (10,860)^2\right]^{\frac{1}{2}} = \underline{13,864 \text{ IN-LB.}}$$

$$M_{N(DD)_{R_1}} = 17,200 + 225(2.65) = \underline{17,796 \text{ IN-LB}}$$

PREPARED BY: [illegible]	NORTH AMERICAN AVIATION, INC.	PAGE NO. OF
CHECKED BY: F.R.R.		REPORT NO.
DATE: 8.1.62		MODEL NO. F5-2

7121-01087

- 6 STING ADAPTOR (CONT.)

SECTION D-D (CONT.)

$$f_D = \frac{Mc}{I} + \frac{P}{A} = \frac{17,796(1.48)}{1.6564} + \frac{1150}{2.616}$$

$$= \underline{15,990 \text{ PSI.}}$$

$$F_B = \underline{190 \text{ KSI.}} \quad \text{(REF. 1)}$$

$$M.S. = \frac{190}{5(15.99)} - 1 = \underline{\underline{1.45}}$$

PREPARED BY: CBM	NORTH AMERICAN AVIATION, INC.	PAGE NO. OF
CHECKED BY: HDR		REPORT NO.
DATE: 8·2·62		MODEL NO. F5-2

7121-01081

AMES STING-

SECT. E-E.

MAT'L - M-4PH
H.T. 190-240 KSI

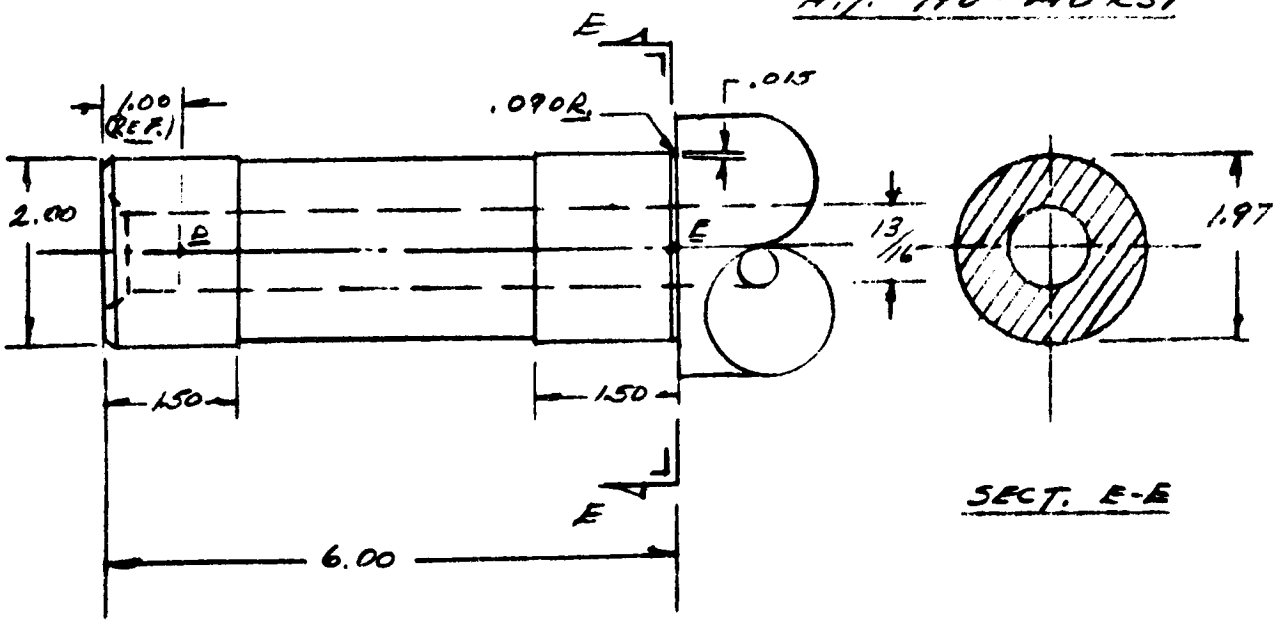

$$I_{EE} = (1.97^4 - .813^4)(.0491) = \underline{.7181 \text{ IN}^4}$$

$$M_{N_R} = M_{DD} + N_R'(5.00)$$

$$= 17{,}796 + 225(5.00) = \underline{18{,}921 \text{ IN.-LB.}}$$

NEGLECTING CHORD COMP. (C_D = 1150 LB.)

BENDING-

$$f_b = \frac{MC}{I} = \frac{18920(.985)}{7181} = \underline{25{,}940 \text{ PSI}}$$

$$M.S. = \frac{190}{5(25.94)} - 1 = \underline{.46}$$

APPENDIX C

MODIFICATION TO UPDATE THE FS-2 MODEL

ABSTRACT

This Appendix presents a structural analysis of the components of the FS-2 Apollo Force Model that have been modified or added to update the model to the latest configuration. Testing will be conducted in the Ames Unitary Plan Wind Tunnel.

The analysis of new or modified components is presented in full. Components that are not modified are analyzed by a comparative analysis for a 90-degree α at 540 q.

NT-65-3

LOADS, APOLLO — WIND TUNNEL MODEL

MODEL FS-2
SCALE 0.105
TUNNEL AMES 9'x7'
TEMP.
MACH NO. 1.55
q = 540 PSF
α = 25°
STEADY STATE LOADS — ☒
TRANSIENT LOADS — ☐

REQUIRED SAFETY FACTORS:—
5 ON ULTIMATE
3 ON YIELD

NOTES:—
(1)-LOADS GIVEN IN POUNDS. DIMS. IN INCHES, (MODEL SCALE).
(2)-

TOTAL CONFIGURATION LOADS:

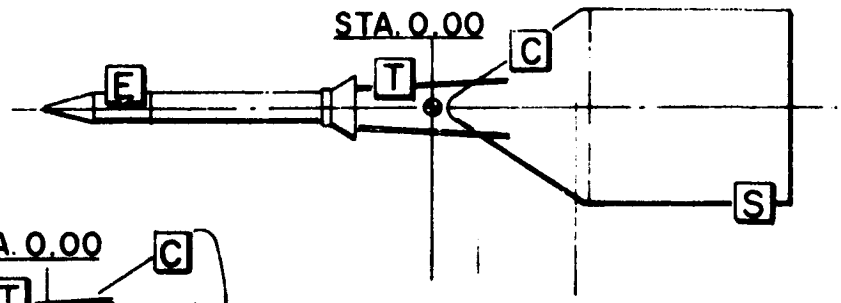

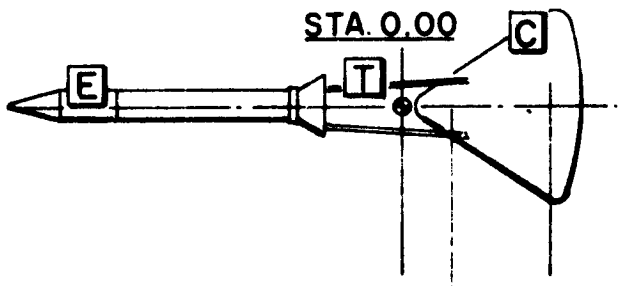

LOADS ON COMPONENTS:

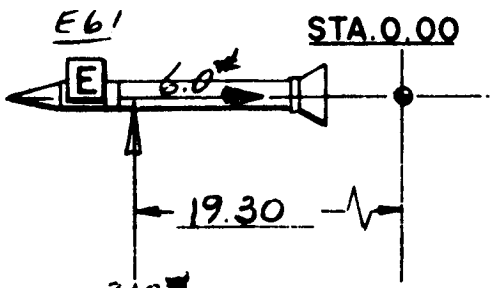

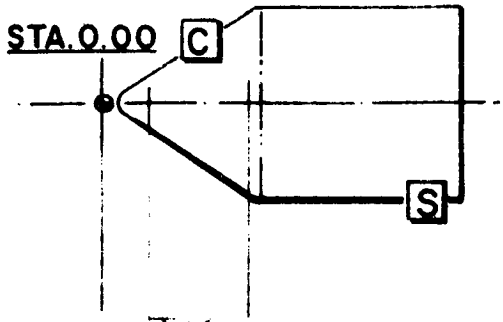

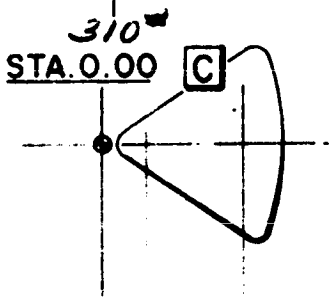

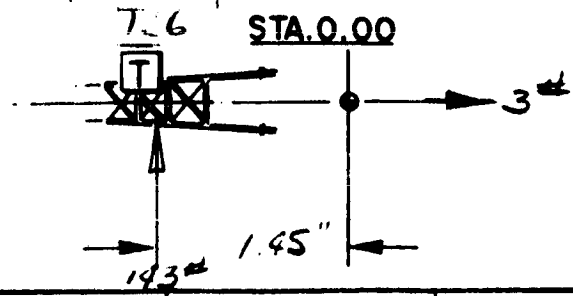

PREPARED BY	APPROVED BY	DATE
P.L.L.		1/8/63
	SHEET 1	OF 2

REF DWG # [illegible]

ENCLOSURE (1)

WTL-63-3

LOADS, APOLLO — WIND TUNNEL MODEL

MODEL FS-2
SCALE 0.105
TUNNEL AMES 9'x7'
TEMP.
MACH NO. 1.55
q = 540 PSF
α = 90°
STEADY STATE LOADS — ☒
TRANSIENT LOADS — ☐

REQUIRED SAFETY FACTORS:—
5 ON ULTIMATE
3 ON YIELD

NOTES:—
(1)—LOADS GIVEN IN POUNDS. DIMS. IN INCHES, (MODEL SCALE).
(2)—

TOTAL CONFIGURATION LOADS:

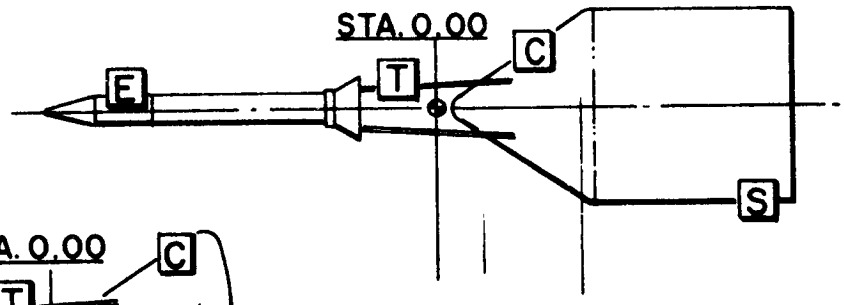

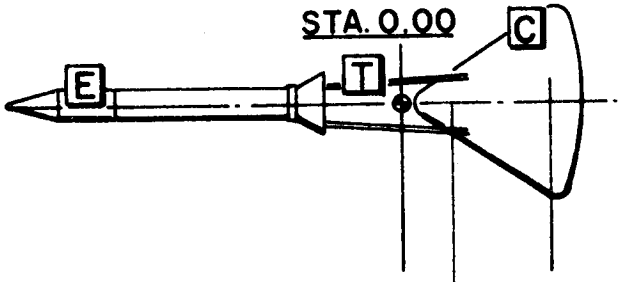

LOADS ON COMPONENTS:

E61

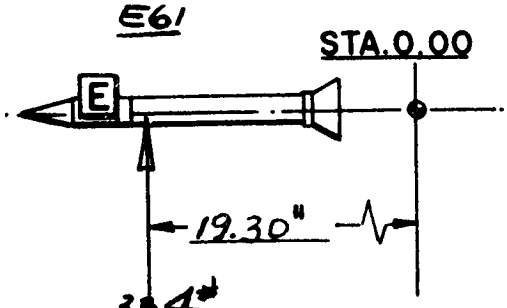

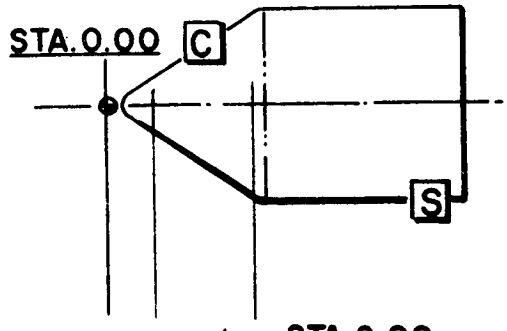

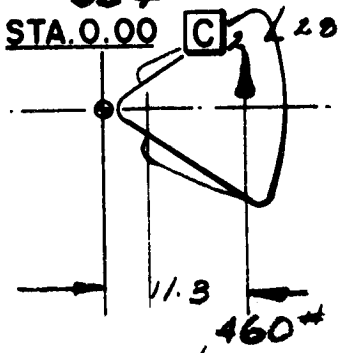

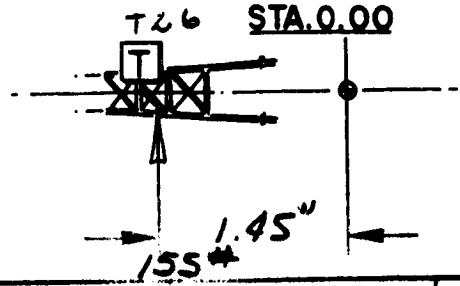

REF. DWG. # 7121-01091

PREPARED BY	APPROVED BY	DATE
P.L.L.	RDR	1-8/63
	SHEET 2 OF 2	

ENCLOSURE (1)

PQ63-1

PREPARED BY: CBM	NORTH AMERICAN AVIATION, INC.	PAGE NO. OF
CHECKED BY:		REPORT NO.
DATE: 1-9-63		MODEL NO. F5-2

7121-01091

ROCKET BODY (7121-01089-3 REF.)

LOADS -

$L/d = (37.472 - 14.99)/2.73 = 8.42$

$C_d = .90$ (REF. ESH CACH Pg 7-103)

$p = 540(.90)(2.73)/144 = 9.21$ LB/IN.

BENDING - SECTION AT X_L 19.964

$M = pL/2 = 9.21(39.718 - 19.964)/2$

$= 91.0$ IN-LB.

$S = .0983(D^4 - d^4)/D$

$= .2779$ IN^3

$f_b = M/S = 91.0/.2779$

$= 327.4$ PSI

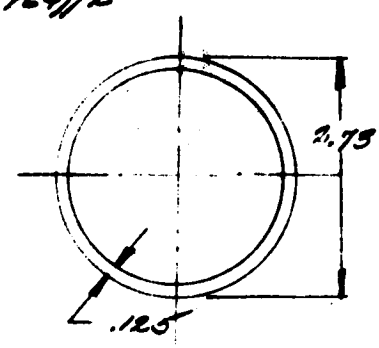

SECTION

M.S. = HIGH.

712.1-01091

ROCKET BASE (-3 SKIRT)

TOWER ATTACHMENT TO ROCKET SKIRT
(STATION X_L 12.60)

$M = 334\ (19.30 + 6.067 - 12.60)$

$= 334\ (12.767) = \underline{4264\ \text{IN-LB.}}$

LOAD PER LEG $= M/2(3.787)$

$= 4264/7.574 = \underline{563\ \text{LB.}}$

WELD SHEAR - ASSUME 1/8 FILLET

$A_s = .70(2)(.125)(.707) = .1237\ \text{IN}^2$

$f_{s_D} = P/A_s = 563/.1237$

$= \underline{4551\ \text{PSI}}$ DIRECT SHEAR

ECCENTRIC LOAD SHEAR

$M_e = 563(.1875) = 105.6\ \text{IN-LB}$

$S = 2(.125)(.707)(.707)^2/6$

$= .0138\ \text{IN}^3$

$f_{s_e} = 105.6/.0138 = \underline{7650\ \text{PSI}}$

$f_s = [(4551)^2 + (7650)^2]^{1/2} = \underline{8{,}900\ \text{PSI}}$

$M.S. = \frac{125}{5(8{,}900)} - 1 = \underline{1.80}$

7121-01091

TOWER LEGS (- 2 TOWER)

LEG LOAD -

$M_{(XL6.06)} = 334(19.30) + 155(1.45)$

$= 6670.9$ IN-LB.

$P_L = M / 2d$

$d = 4.910 - [(4.910 - 3.787)\,5.27/11.60]$

$= 4.910 - .469 = 4.441$ IN.

$P_L = 6671 / 8.88 = 751$ LB./LEG.

COMPRESSION -

$L = (12.18 - 6.27)/.99656^{(a)} = 5.93$ IN.

$P_{CRIT.} = 4\pi EI / L^2$

$= 4(3.1416)(28.5\times10^6)(.0491)(.375)^4/5.93^2$

$= .503\,(.0527) = .02636 \times 10^6$ LB.

$= 26360$ LB.

NOT CRITICAL.

TOWER LOWER BAY LEGS NOT CRITICAL

a. DIRECTION COSINE.

PREPARED BY: CRM	NORTH AMERICAN AVIATION, INC.	PAGE NO. OF
CHECKED BY:		REPORT NO.
DATE: 1.9.65		MODEL NO. F5-2

7121-01091

TOWER BRACING. (- 2 TOWER)

ASSUME MEMBERS ACT IN TENSION ONLY

NORMAL LOAD = 334 + 155 = 489 LB.

P_t = 489/2(.53189)[a] = 459 LB.

f_t = P/A = 459/(.7854)(.25)² = 9,350 PSI

M.S. = 190/5(9.35) - 1 = 3.06

COMMAND MODULE STRAKES -

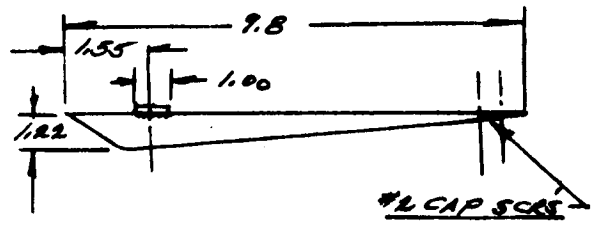

AREA -

A = 9.8(1.22)/2

= 5.978 IN²

LOAD - ASSUME C_d OF 2.0 -

P = 540(5.978)(2.0)/144 = 44.8 LB.

M AT BASE = 44.8(1.22)/3 = 18.2 IN-LB.

WELDED LUG -

ASSUME LUG TAKES 70% OF LOAD.

a. SMALLEST DIRECTION COSINE FOR NORMAL LOADING.

PREPARED BY: CJM	NORTH AMERICAN AVIATION, INC.	PAGE NO. OF
CHECKED BY:		REPORT NO.
DATE: 1.9.63		MODEL NO. FS-2

7121-01091

COMMAND MODULE -

STRAKES - 17-4PH (NOT H.T.)

$M = .70(18.2) = 12.74$ IN-LB

$A_S = 1.00(.125)(.707) = .0884 IN^2$

$P = M/.158 = 12.74/.158 = 80.6$ LB.

$f_S = P/A = 80.6/.088 = 912$ PSI

$F_S = 75$ KSI

$M.S. = \frac{75}{5(915)} - 1 =$ HIGH

TAB BENDING -

$M = 12.74/2 = 6.37$ IN LB.

$S = bd^2/6 = 1.00(.15)^2/6 = .00375 IN^3$

$f_b = 6.37/.00375 = 1670$ PSI

TAB SCREWS - #

$t = M/d = 12.74/.70 = 18.2$ LB.

T #2 CAP = 624 LB

NOT CRITICAL

PREPARED BY: CWM	NORTH AMERICAN AVIATION, INC.	PAGE NO. OF
CHECKED BY:		REPORT NO.
DATE: 1.9.63		MODEL NO. F5-2

7121- 01091-

COMMAND MODULE

STRAKES

AFT SCREWS -

$M = .30(18.2) = 5.46$ IN-LB

$t = M/d = 5.46/2(.070)$

$= \underline{39.0}$ LB. TENSION.

$M.S. = \frac{629}{5(39.0)} - 1 = \underline{2.20}$

PREPARED BY: Cathy	NORTH AMERICAN AVIATION, INC.	PAGE NO. OF
CHECKED BY:		REPORT NO.
DATE: 1.10.69		MODEL NO. F5-2

7121-01091

MODEL MOUNTING SYSTEM -

ROCKET & TOWER LOADS ABOUT APEX. -

$P_A = 334^{(a)} + 155^{(a)} = 489$ LB.

$M_A = 334(19.30)^{(a)} + 155(1.45)^{(a)} = 6671$ IN-LB.

COMPARATIVE LOADS FOR TOWER MOUNT
(REF. APP. A. PG. A-17) (7121-01078)

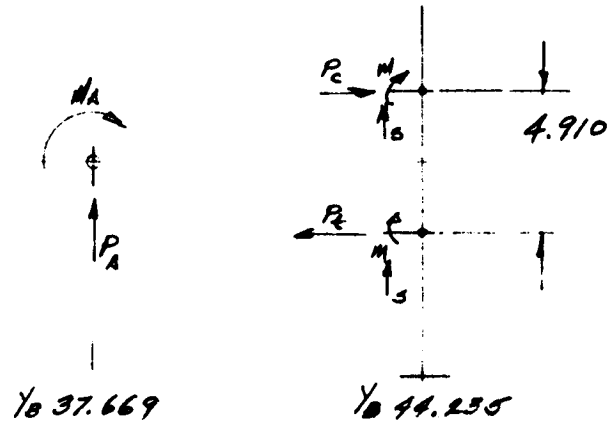

$P_c = P_t = [M_A + P_A(44.235 - 37.669)]/4.910(2)$

$= [6671 + 489(6.566)]/9.82$

$= \underline{1006 \text{ LB.}}$

THIS IS A 20% REDUCTION IN LOAD
(REF. PG. A.17, APP. A.)

a. REF. PG. C-4

PREPARED BY: CHM	NORTH AMERICAN AVIATION, INC.	PAGE NO. OF
CHECKED BY:		REPORT NO.
DATE: 1.10.63		MODEL NO. FS-2

7121-01091
7121-01078

MODEL MOUNTING SYSTEM. -

COMPARATIVE LOADS FOR TOWER MOUNT -

$S = 489/4 = 122.3$ LB

$M = 122.3(.6)(1.00) = 73.4$ IN-LB

P_t, S, & M ARE LOWER THAN PREVIOUS LOADS THAT THE SAME SIZE DETAIL WAS ANALYZED FOR. (REF PG'S A-17 THRU A-20, APP. A.).

- S TOWER MOUNT IS NOT MORE CRITICAL THAN BEFORE AS THE ABOVE LOADS ARE RESISTED BY THE SAME -5 BLOCK AS BEFORE. (REF PG. A-21, APP. A.)

PREPARED BY: CBM	NORTH AMERICAN AVIATION, INC.	PAGE NO. OF
CHECKED BY:		REPORT NO.
DATE: 1.10.63		MODEL NO. FS-2

7121-01091

BALANCE & STING CHECK LOADS -

FORCES & MOMENTS ABOUT CENTER OF ROTATION FOR COMPLETE MODEL:

C.R. IS AT Y_B 46.861 -

$N = P_{C.R.} = 334 + 155 + 460 = \underline{949 \text{ LB.}}$

$P.M. = M_{C.R.} = 334(19.30) + 155(1.45) - 460(11.3) + 949(46.861 - 37.669)$

$= \underline{10,196 \text{ IN-LB.}}$

THESE LOADS ARE LESS THAN 90% STEADY STATE AT THE SAME C.R. FOR PREVIOUS TESTS. (REF. APP. A. PG. A-27.)

APPENDIX D

AUTOMATED STRAKES

CONTENTS

	Page
REMARKS	D-3
REFERENCES	D-4
MARGINS OF SAFETY	D-5
LOADS	D-6
ASSEMBLY SKETCH	D-7
-8 STRAKE	D-8
-13 FWD STRAKE RING	D-13
STRAKE RING BEARINGS	D-17
GEAR TRAIN	D-18
DRIVE SHAFTS	D-25
-9 HOUSING	D-27
MODEL SHELL AND BALANCE BLOCK	D-28

REMARKS

This Appendix presents a structural analysis of the strakes and the strake mounting structure for an automated strake test. Testing will be conducted in the NAA Trisonic Wind Tunnel.

Loads are derived for tunnel starting at Mach 3.5. All components meet a safety factor of three on material ultimate with the exception of the drive gear train. (See pages D-18 through D-25.)

The margin of safety for each component is based on a safety factor of three on material ultimate and loads as shown on page D-6. All margins are shown in Table I, page D-5.

REFERENCES

1. Model Design Structures Manual. NAA No. 52-332. LAD, Rev. 1962.

2. R. J. Roark, Formulas for Stress and Strain. Third Edition, New York, McGraw-Hill Co. (1954).

3. Virgil Moring Faires, Design of Machine Elements. New York, MacMillan Co. (1952).

4. No. 7121-01092, Assembly and Details - Apollo FS-2 Automated Strakes (TWT). NAA/S&ID (25 April 1963).

Table 1. Margins of Safety

Page	Component	Type of Stress	Margin of Safety
D-10	Strake Tab	Bending	1.50
D-11	Tab Screws	Tension	1.60
D-12	Aft Screws	Tension-Shear	-0.20
D-15	-3 Ring	Bending	High
D-17	Ring Bearing	Radial	2.12
D-19	-4 Ring Gear	Teeth Bending	0.40
D-20	-11 Drive Gear	Teeth Bending	0.20
D-22	Mitre Gears	Teeth Bending	-0.46
D-23	H 3248/3222	Teeth Bending	-0.54
D-24	H 3232/3240	Teeth Bending	-0.28
D-25	-10 Shaft	Shear	0.84
D-25	-10 Shaft	Bending	0.60
D-26	Bushings	Bearing	0.79
D-27	-9 Housing Screws	Tension	High

LOADS, APOLLO - WIND TUNNEL MODEL

MAXIMUM LOAD ON STRAKES FOR TRISONIC STRAKE EVALUATION TESTS

Model - FS-2, Strake, L_{28}
Scale - 0.105
Reference area $\approx$ 6.3 in.^{2} per strake

Supersonic Speed Range:

1. Maximum loads occur during starting - axial = 28 psi
   normal = 24 psi

M = 3.5
α = 50°

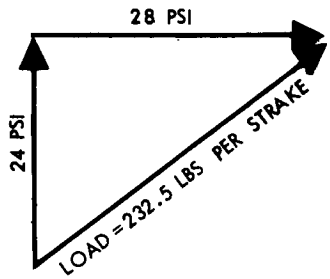

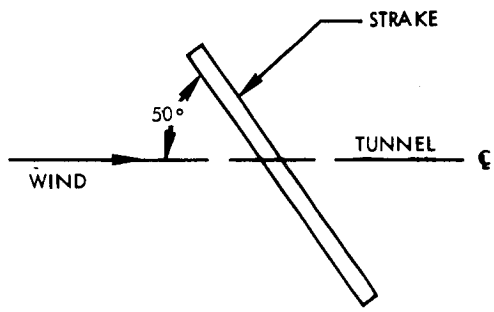

2. Maximum steady-state loading -

M = 2.3
q = 2600 psf Load = 113.8 pounds per strake
α = 90°
Assume C_D = 1.0

Subsonic Speed Range:

No high starting loads - maximum steady-state given

M = 0.9
q = 1600 psf
α = 90°
Assume C_D = 1.0

Load = 70.0 pounds per strake

Note: Loads act through centroid of strake
Reference (PQ-63-77, Enclosure (1))

PREPARED BY: CBM	NORTH AMERICAN AVIATION, INC.	PAGE NO. D-7 OF
CHECKED BY:	AUTOMATED STRAKE	SID 62-104 REPORT NO.
DATE: 5.20.63	MODEL	MODEL NO. FS-2

REF. DRAW. 7121-01092

ASSEM. & DETAILS.-

ASSEMBLY SKETCH.-

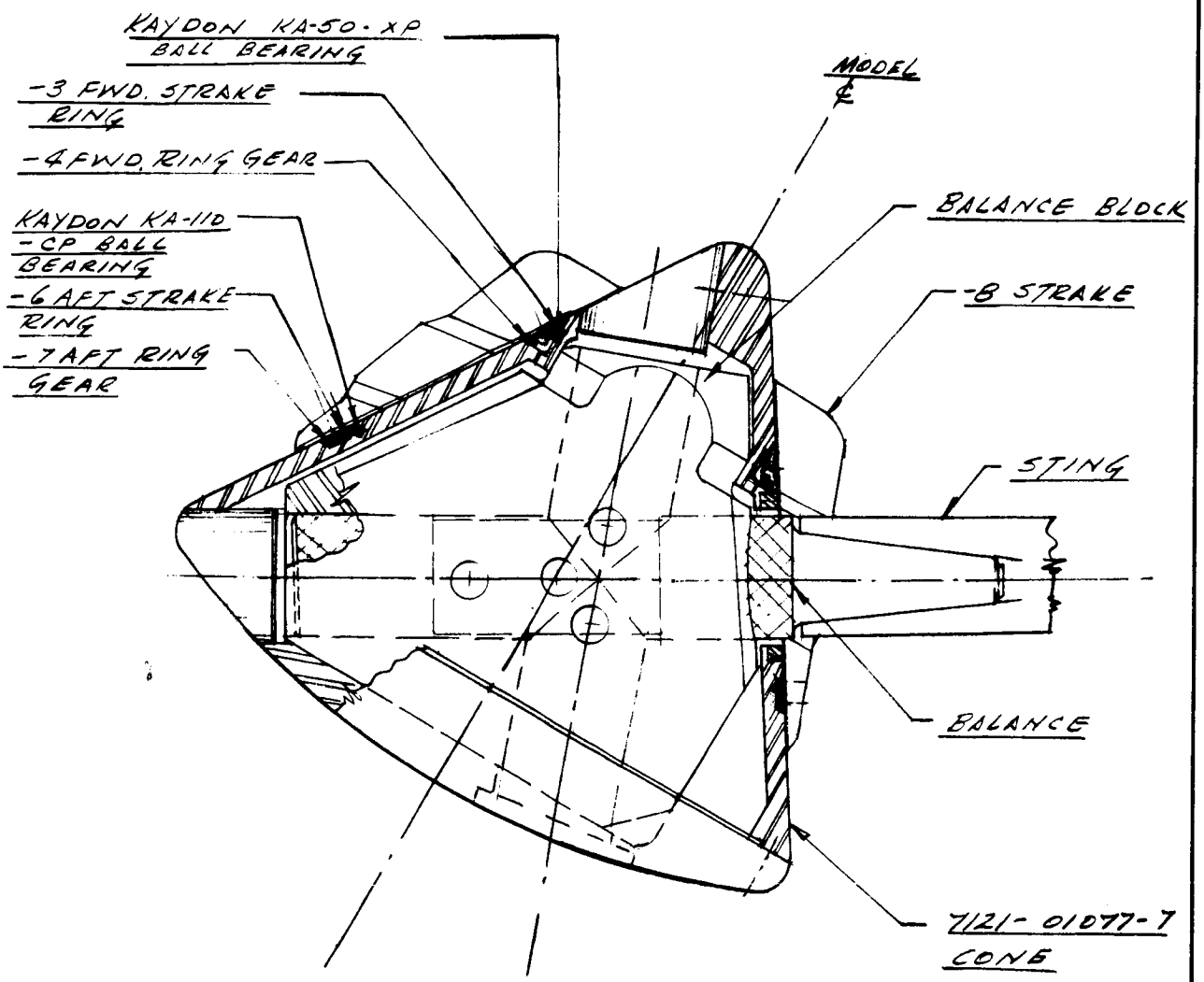

- NOT TO SCALE -

PREPARED BY: CBM	NORTH AMERICAN AVIATION, INC.	PAGE NO. D-8 OF
CHECKED BY:	AUTOMATED STRAKE	SID 62-104 REPORT NO.
DATE: 5. 7. 63	MODEL	MODEL NO. F5-2

REF. DRAW. 7121-01092

ASSEM. & DETAILS :-

- 8 STRAKE - (ARMCO 17-4PH, H. T. 190-210 KSI.)

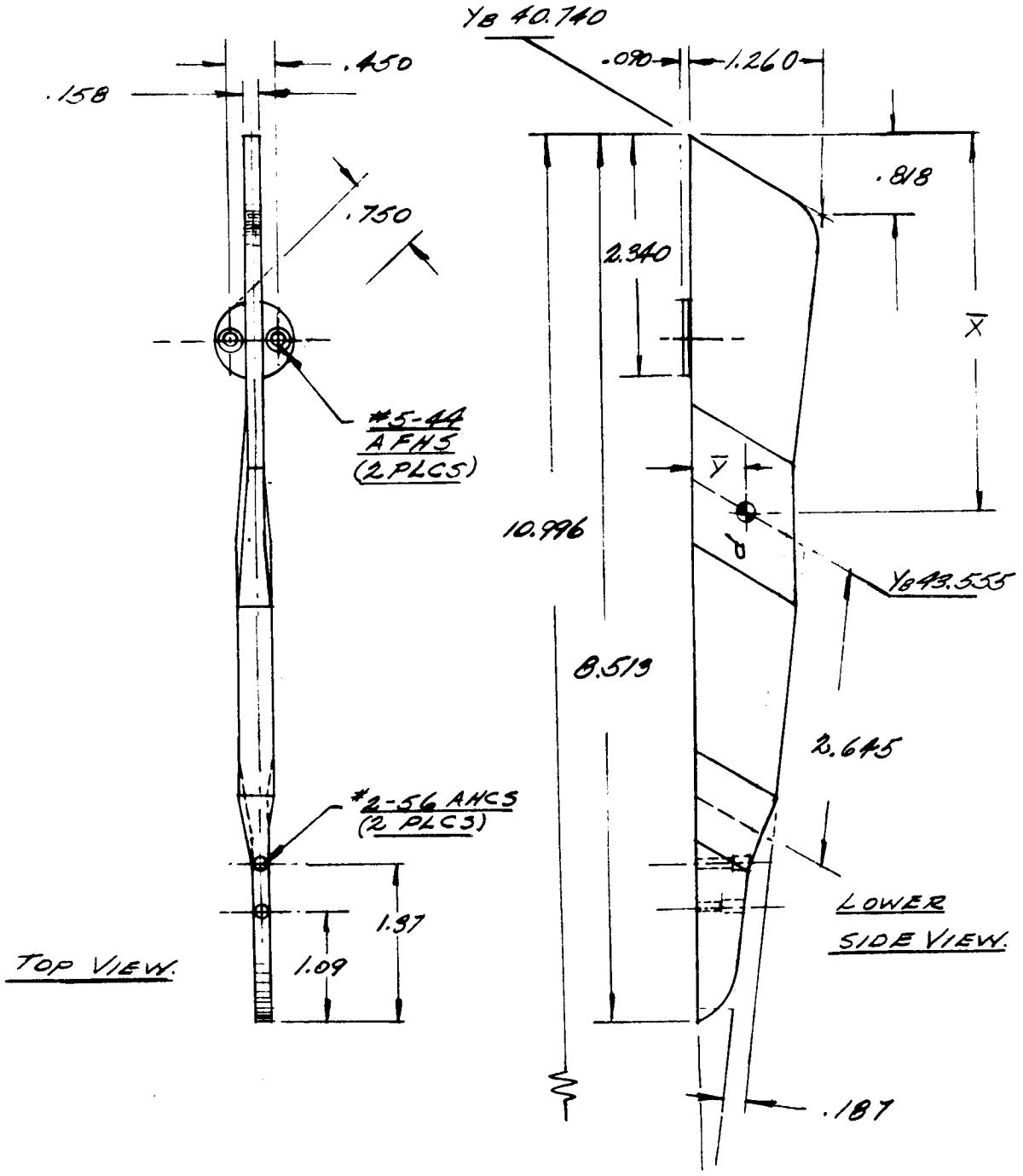

REF. DRAW 7121-01092

ASSEM. & DETAILS:-

-8 STRAKE (CONT.)

STRAKE CENTROID:-

ITEM.	A.	x	y	Ax	Ay
1.	+6.9275	+3.9380	+.4200	+27.280	+2.9096
2.	+.4946	+5.4430	+.7816	+2.692	+.3866
3.	-.4291	+9.2410	+.1099	-4.043	-.0472
	6.993			25.929	3.2490

$\bar{x} = 25.929/6.993 = \underline{3.708 \text{ IN.}}$

$\bar{y} = 3.2490/6.993 = \underline{.465 \text{ IN.}}$

$R_F = (P)(8.513 - (1.09+1.37)/2 - 3.708)/(7.283 - (2.340-.325))$

$= P(3.575)/(5.318) = \underline{.672\,(P)}$

$R_A = (1-.672)P = \underline{.328\,(P)}$

$M_F = (.672)(.465)(P) = \underline{.312\,(P)}$

$M_A = (.328)(.465)(P) = \underline{.153\,(P)}$

REF. DRAW. 7121-01092

ASSEM. & DETAILS:

- B STRAKE (CONT.-)

TAB BENDING.-

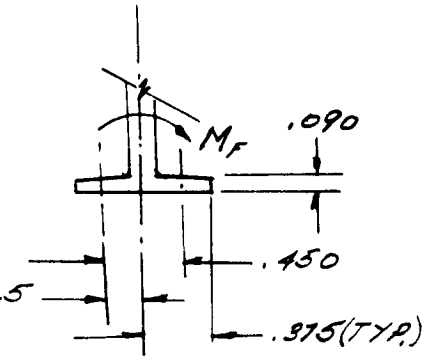

$T = C = M_F / .75^{a.} D$

$D = .375 + .225 = .600$ IN.

$M_F = .312 P$ (REF. PAGE D-9)

$P = 232.5$ LB.
(REF. PAGE D-6)

$M_F = .312 (232.5) = 72.5$ IN-LB.

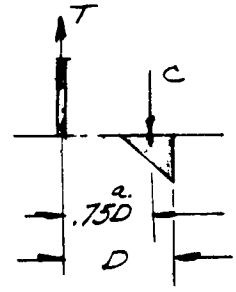

$T = C = 75.5 / .75(.60)$

$= 167.7$ LB.

$M_T = C(.75D - .225)$

$= 167.7(.75(.60) - .225)$

$= 167.7(.225) = 37.7$ IN-LB.

$f_b = 6M / bd^2 = 6(37.7) / .75(.090)^2$

$= \underline{37,200 \text{ PSI.}}$

$F_b = \underline{280 \text{ KSI.}}^{b.}$

$M.S. = \frac{280}{3(37.2)} - 1 = \underline{\underline{1.50}}$

a.) ASSUMED
b.) REF. 1.

REF. DRAW. 7121-01092

ASSEM. & DETAILS:-

-8 STRAKE.- (CONT.)

TAB SCREWS, TENSION.

$T = 167.7$ LB (REF. PAGE D-10)

P_{ALL} (#5-44 AFHCS) = 1312 LB (REF. 1.)

$$M.S. = \frac{1312}{3(167.7)} - 1 = 1.60$$

AFT. SCREWS, TENSION -

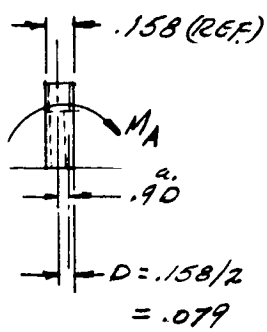

$T = M_A / .9D$ a.

$M_A = .153(P)$ (REF. PAGE D-9)

$P = 232.5$ LB. (REF. PAGE D-6)

$M_A = .153(232.5) = 35.6$ IN-LB.

$T = 35.6 / .9(.079) = 500.7$ LB.

$t_{SCR} = 500.7/2 = 250.4$ LB.

P_{ALL} (#2-56 AHCS) = 624 LB. (REF. 1.)

$R_T = 250.4/624 = .401$

a.) ASSUMED

REF. DRAW. 7121-01092

ASSEM. & DETAILS :-

-8 STRAKE- (CONT.)

AFT SCREW, SHEAR -

$P_S = .328(P)/2$ (REF. PAGE D-9)

$= .328(232.5)/2 = 38.1$ LB.

$P_{S_{ALL}}$ (# 2-56 AHCS) = 323 LB.

$R_S = 38.1/323 = .118$

AFT SCREWS, COMBINED TENSION & SHEAR

$$M.S. = \frac{1}{3(R_T^2+R_S^2)^{\frac{1}{2}}} - 1$$

$$= \frac{1}{3(.401^2+.118^2)^{\frac{1}{2}}} - 1$$

$$= \frac{1}{3(.418)} - 1 = -0.20$$

$$\text{TRUE F.S.} = \frac{1}{.418} = 2.39$$

PREPARED BY: CBW	NORTH AMERICAN AVIATION, INC.	PAGE NO. D-13 OF
CHECKED BY:	AUTOMATED STRAKE	SID 62-104 REPORT NO.
DATE: 5.3.63	MODEL	MODEL NO. FS-2

REF. DRAW. 7121-01092

ASSEM. & DETAILS.-

-3 STRAKE RING.- (ARMCO. 17-4PH, H.T.)

ASSUME RING NON-SUPPORTED (CONSERVATIVE)

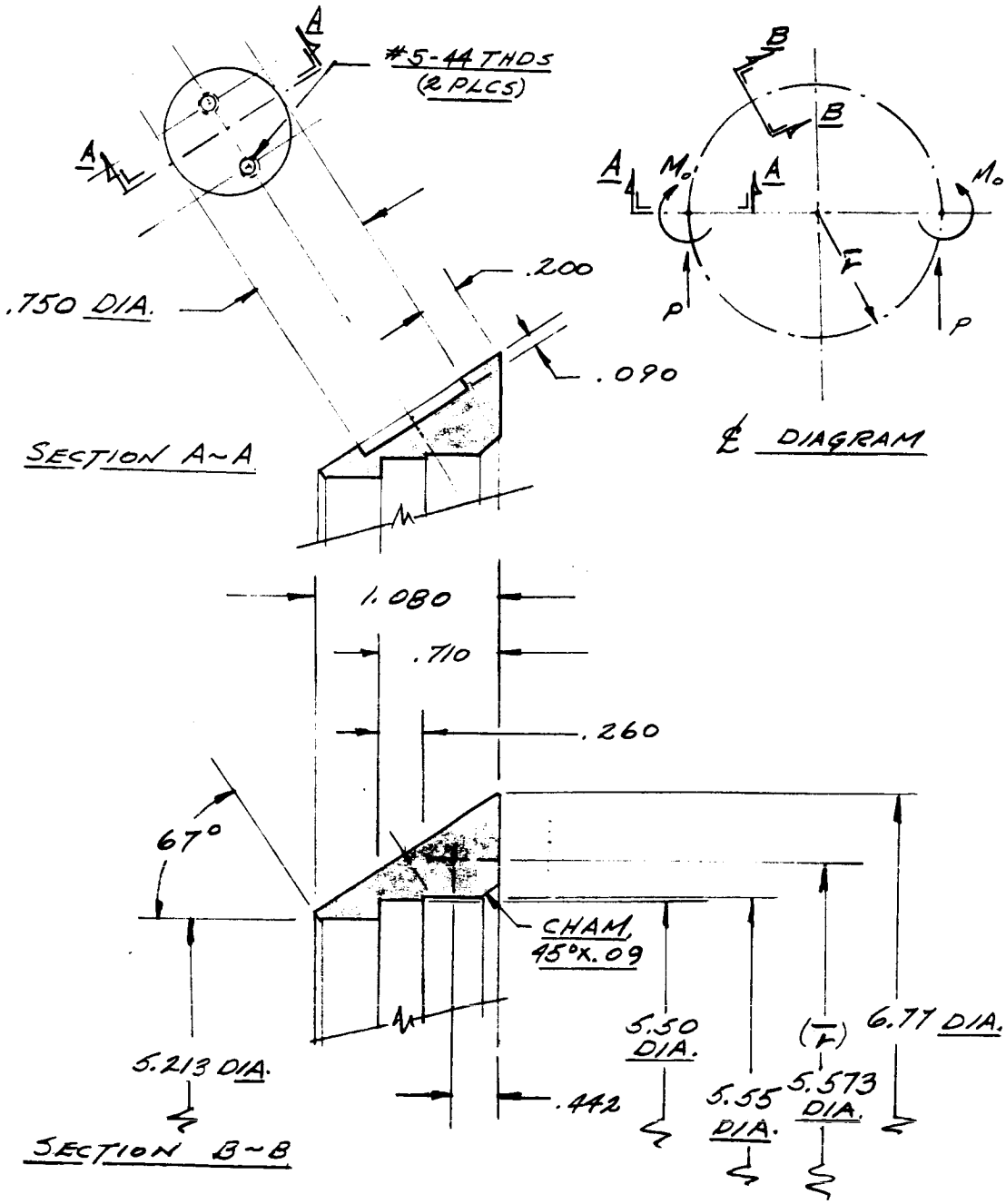

REF. DRAW. 7121-01092

ASSEM. & DETAILS.-

-3 STRAKE RING. (CONT.) -

SECTION PROPERTIES-

ITEM	A	x	y	Ax	Ay	$A(x)^2$	$A(y)^2$	I_{ox}	I_{oy}
1. ◢	.4665	.3995	.2595	.1864	.1211	.0745	.0314	.0157	.0372
2. - ▬	.2038	.3550	.1435	.0723	.0292	.0257	.0042	.0014	.0085
3. - ▬	.0130	.1300	.3120	.0017	.0041	.0002	.0013	—	—
4. - ▪	.0041	.0300	.3670	.0001	.0015	—	.0006	—	—
5. - ▲	.0058	1.1086	.0256	.0064	.0001	.0071	—	—	—
6. - ▰	-.0675	.5151	.4235	.0348	.0286	.0179	.0121	.0005	.0011
Σ 1-5	.2398			.1059	.0862	.0415	.0253	.0143	.0287
Σ 1-6	.1722			.0711	.0576	.0236	.0132	.0138	.0276

$\bar{x}_5 = .1059/.2398 = .4416$ IN.

$\bar{y}_5 = .0862/.2398 = .3595$ IN.

$I_{x-x_5} = .0143 + .0253 - .0862(.3595) = .0086$ IN^4

$I_{y-y_5} = .0287 + .0415 - .1059(.4416) = .0234$ IN^4

$\bar{x}_6 = .0711/.1722 = .4129$ IN.

$\bar{y}_6 = .0576/.1722 = .3345$ IN.

$I_{x-x_6} = .0138 + .0132 - .0576(.3345) = .0077$ IN^4

$I_{y-y_6} = .0276 + .0236 - .0711(.4129) = .0218$ IN^4

REF. DRAW. 7121-01092

ASSEM. & DETAILS:-

-3 STRAKE RING (CONT.)

RING BENDING -

$M_x = \frac{1}{2} M_o^{a.} = \frac{1}{2} M_F (\cos 33°1'30")$

$M_F = 72.5$ IN-LB (REF. PAGE D-10)

$M_x = 72.5(.83843)/2 = \underline{30.4 \text{ IN-LB.}}$

$M_{oy} = M_F (\sin 33°1'30") + R_F (X_6 - \bar{X}_6)^{b.}$

$= 72.5(.5450) + 232.5(.5151 - .4169)(.672)$

$= 54.9$ IN-LB.

$M_y = \frac{1}{2} M_{oy} = 54.9/2 = \underline{27.5 \text{ IN-LB.}}$

$f_b = \pm M_x (C_y)/I_x \mp M_y (C_x)/I_y \pm R_F/A$

$f_{b(MAX)} = +30.4(.444)/.0077 - 27.5(.442)/.0218$

$+ 136.1/.1722$

$= +1752.9 - 557.6 + 790.4$

$= \underline{+1,985.7 \text{ psi.}}$

$F_b = \underline{280 \text{ KSI}}$

$M.S. = \frac{280}{3(1.99)} - 1 = \underline{\text{HIGH.}}$

a.) REF. 2.
b.) REF. PAGE D-14.

REF. DRAW. 7121-01092

ASSEM. & DETAILS.-

FWD. RING GEAR ATTACHMENTS:-

(4- 1/8 DIA. A.D. PINS, 6.40 CENTER DIA. @ 90° O.C.)

$T = P(d)$

$d = (.465^{a.} + .045^{b.}) \cos 33°1'30'' + 5.213^{b.}/2 + 1/6^{c.}$

$= .510(.83843) + 2.607 + .4235$

$= 3.458$ IN.

$T = 232.5(.672)(3.458) = \underline{540.3 \text{ IN-LB.}}$

$P = T / 3.20(4)$

$= 540.3 / 12.80 = \underline{42.2 \text{ LB/PIN.}}$

P_{ALL} (1/8 A.D. PIN.) = 1770 LB. (REF. 1.)

$M.S = \frac{1770}{3(42.2)} - 1 = \underline{\underline{HIGH}}$

a.) REF. PAGE D-9.
b.) REF. PAGE D-13.
c.) REF. PAGE D-14.

REF. DRAW. 7121-01092

ASSEM. & DETAILS.-

STRAKE RING BEARINGS-

FWD.- (KAYDON "REALI-SLIM" KA-50-XP)
AFT.- (KAYDON "REALI-SLIM" KA-110-CP)

$P_{(MAX)} = 2(R_F) = 2(136.1) = \underline{272 \text{ LB.}}$

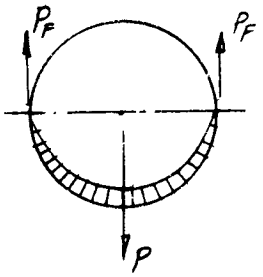

BEARING RATED LOADS (STATIC)

KA-50-XP	RADIAL	2550 LB
	THRUST	7450 LB
KA-110-CP	RADIAL	5500

$$M.S. = \frac{2550}{3(272)} - 1 = \underline{\underline{2.12}}$$

STRAKE BEARING RETAINERS-

THE RETAINERS ARE ONLY LOADED BY VIBRATION LOADS, AND DO NOT PRESENT A STRUCTURAL PROBLEM.

PREPARED BY: CBW	NORTH AMERICAN AVIATION, INC.	PAGE NO. D-18 OF
CHECKED BY:	AUTOMATED STRAKE	SID 62-104 REPORT NO.
DATE: 5.13.63	MODEL	MODEL NO. FS-2

REF. DRAW. 7121-01092

ASSEM. & DETAILS:-

GEAR TRAIN & SHAFTS-

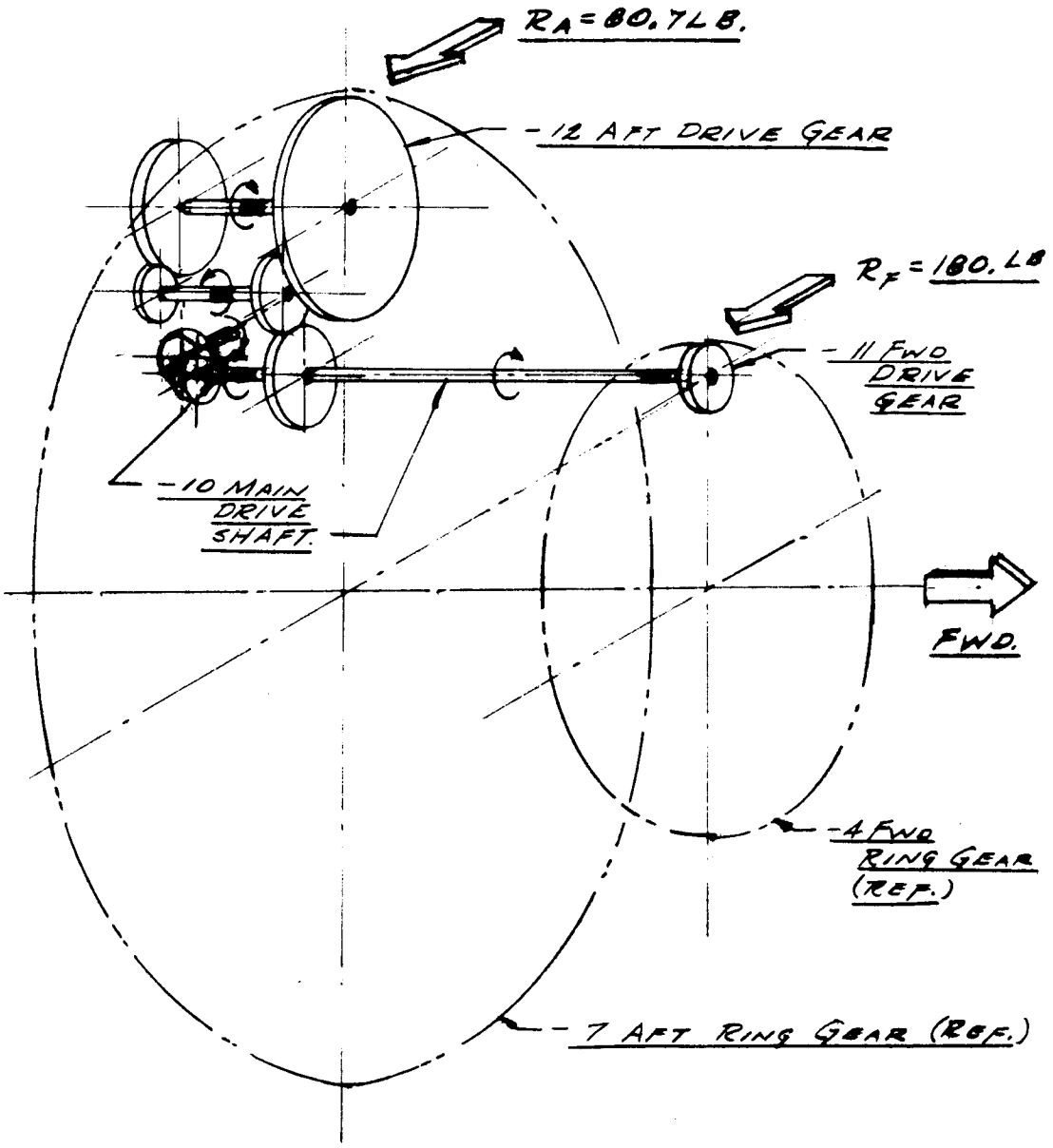

(SHAFT ROTATION

■ SHAFT BUSHING

REF. DRAW. 7121-01092

ASSEM. & DETAILS.-

-4 FWD. RING GEAR -

MAT'L.- (ARMCO 17-4PH, H.T. 190-210 KSI)

GEAR TEETH.-

32 PITCH, 20° PRESSURE ANGLE, 6.00 IN. P.D.

LEWIS' EQUATION - $P = f_b(b)Y/P_d$

OR $f_b = P(P_d)/bY$

$P_F = 2(T)/P.D.$, $T = 540.3$ IN-LB (REF PAGE D-16)

$= 2(540.3)/6.0 = 180$ LB.

$N = (P.D.)(P_d) = 6.0(32) = 192$

$\therefore Y = .463$ (REF. 3, PAGE 204)

$b = .188$

$f_b = 180(32)/(.188)(.463)$

$= 5760/.087$

$= 66,210$ PSI

$F_b = 280$ KSI (REF. 1.)

$M.S. = \frac{280}{3(66.21)} - 1 = 0.40$

REF. DRAW. 7121-01092

ASSEM. & DETAILS.-

- 7. AFT RING GEAR. -

MAT'L - (ARMCO 17-4PH, H.T. 190-210 KSI)

GEAR TEETH:-

32 PITCH, 20° PRESSURE ANGLE, 12.00 IN. P.D.

$P_A = 2T/(P.D.) = 2(R_A)(6.348)/12.00$

$= 2(76.3)(6.348)/12.0 = \underline{80.7 \text{ LB.}}$

$b = .188$ IN.

- 4 GEAR IS MORE CRITICAL, SEE PAGE D-19.

- 11 FWD. DRIVE GEAR - TEETH -

MAT'L - (ARMCO 17-4PH. H.T. 190-210 KSI)
32 PITCH, 20° PRESS L, .750 P.D.

$P = 180$ LB. (REF. PAGE D-19)

$N = (P.D.)(P_d) = .750(32) = 24$

$Y = .337$, $b = .188$ IN.

$f_b = P(P_d)/bY = 180(32)/.188(.337)$

$= \underline{90{,}910 \text{ PSI}}$

$F_b = \underline{280 \text{ KSI}}$ (REF. 1.)

$$M.S. = \frac{280}{3(90.91)} - 1 = \underline{\underline{0.02}}$$

PREPARED BY: CKM	NORTH AMERICAN AVIATION, INC.	PAGE NO. D-21 OF
CHECKED BY:	AUTOMATED STRAKE	SID 62-104 REPORT NO.
DATE: 5.14.63	MODEL	MODEL NO. F5-2

REF. DRAW. 7121-01092

ASSEM. & DETAILS.-

GEAR TRAIN.-

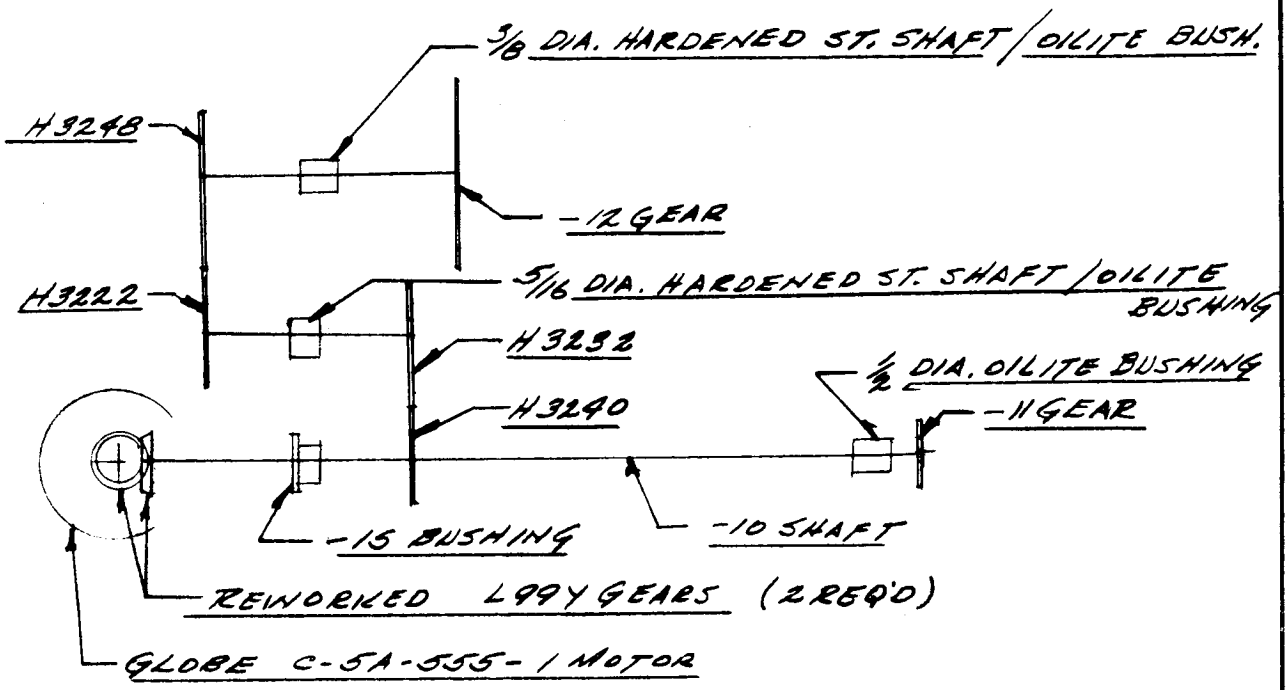

GEAR (No.)	FACE (IN.)	TEETH (No.)	P_d (IN.)	P.D. (IN.)	SHT. DIA. (IN.)	TORQUE (IN.-LB.)	EFF. (%)	R. LD. (LB.)	N. LD. (LB.)
-12	.188	84 [a]	32	2.6257	.375	105.9	—	80.7 [b]	29.4
H3248	1/4	48	↕	1.500	3/8	108.1	.98	144.1	37.3
H3222	↕	22	↕	.688	1/4	49.6	1.00	144.1	37.3
H3232	↕	32	↕	1.000	5/16	50.6	.98	101.2	26.2
H3240	1/4	40	↕	1.250	3/8	63.3	1.00	101.2	26.2
-11	.188	24 [a]	32	.750	.313	67.5	1.00	180.0 [b]	65.5
L99Y	.16	12 [a]	16	.750	5/16	134.8	.97	359.4	92.5/92.5
L99Y	.16	12 [a]	16	.750	5/16	134.8	1.00	359.4	92.5/92.5
MOTOR	—	—	—	—	5/16	135.0	1.00	—	—

MOTOR SPEED-

135.0 / 999 = .2705 IN-LB, (x 16) = 4.33 IN-OZ.
MOTOR RPM = 7000, SHAFT RPM = 4.58 (FOR MAX. LOAD)

a. 20° PRESSURE ANGLE, ALL OTHERS ARE 14½°
b. BASED ON TWT STARTING LOADS, (P STRAKE = 232.5 LB.)

REF. DRAW. 7121-01092

ASSEM. & DETAILS.-

GEAR TRAIN. (CONT.):-

45° MITRE GEARS L99Y (MODIFIED)
(MATERIAL IS NOW ARMCO 17-4PH H.T.)

TOOTH BENDING-

$N_{(EFF)} = (P.D.)(P_d) / \sin 45$
$= .750(16)/.70711 = 17.$

$Y = .302$ (REF. 3)

$f_b = P(P_d)L / Y(b)(L-b)$ (REF. 3)

$L = (P.D.)/2(\sin 45°) = .375/.707 = .530$

$f_b = 359.4^{a.}(16)(.530)/.302(.16)(.530-.16)$

$= 3097.7 / .0179 = \underline{170,450 \text{ PSI.}}$

$F_b = \underline{280 \text{ KSI}}$

$$M.S. = \frac{280}{3(170.45)} - 1 = \underline{-0.46}$$

$$\text{TRUE F.S.} = \frac{280}{170.45} = \underline{1.64}$$

a.) REF. PAGE D-21.

REF. DRAW. 7121-01092

ASSEM. & DETAILS.-

GEAR TRAIN (CONT.)

H3248 & H3222 GEAR SET (BOSTON GEAR STEEL)

TOOTH BENDING.-

$f_b = P(P_d)/b(Y)$

$N = 22$ (H3222), $Y = .292$ (REF. 3)

$f_b = 146.1^{a.}(32)/.25(.292)$

$= 4611.2/.0730 = \underline{63,167 \text{ PSI}}$

F_b (1020 STEEL, NOT HARDENED) = 88KSI (REF. 1.)

$$M.S. = \frac{88}{3(63.17)} - 1 = \underline{\underline{-0.54}}$$

$$\text{TRUE F.S.} = \frac{88}{63.17} = \underline{\underline{1.39}}$$

a) REF. PAGE D-21.

REF. DRAW. 7121-01092

ASSEM. & DETAILS.-

GEAR TRAIN (CONT.).-

H3232 & H3240 GEAR SET (BOSTON GEAR STEEL)

TOOTH BENDING.-

$f_b = P(P_d)/b(Y)$

$N = 32$ (H 3232), $Y = .322$, (REF. 3)

$f_b = 101.2^{a.}(32)/.25(.322)$

$= 3238.4/.0805 = \underline{40,230 \text{ psi}}$

$F_b = \underline{88 \text{ KSI}}$

$M.S. = \dfrac{88}{3(40.23)} - 1 = \underline{\underline{-0.28}}$

TRUE $F.S. = \dfrac{88}{40.23} = \underline{\underline{2.18}}$

a.) REF. PAGE D-21.

REF. DRAW. 7121-01092

ASSEM. & DETAILS.-

DRIVE SHAFTS.-

-10 SHAFT, (ARMCO 17-4PH., H.T.)

SHEAR:-

$f_s = Tc/J$

$J = .0982(D^4) = .0982(.3125)^4 = .000936 \text{ IN}^4$

$T = 135$ IN-LB, (REF. PAGE D-21.)

$f_s = 135(.3125)/2(.000936) = 22{,}550$ psi

$F_s = 125$ KSI.

$M.S. = \frac{125}{3(22.55)} - 1 = +0.84$

BENDING:-

$f_b = Mc/I$

$I = J/2 = .000936/2 = .000468 \text{ IN}^4$

$M = (\overline{359.4}^2 + \overline{92.5}^2)^{\frac{1}{2}}(.578 - .16(.70711))$

$= 172.6$ IN-LB.

$f_b = 172.6(.1563)/.000468 = 58{,}020$ psi

$F_b = 280$ KSI.

$M.S. = \frac{280}{3(58.02)} - 1 = +0.60$

REF. DRAW. 7121-01092

ASSEM. & DETAILS.-

BUSHINGS.-

-15 BUSHING.- (OILITE BRONZE)

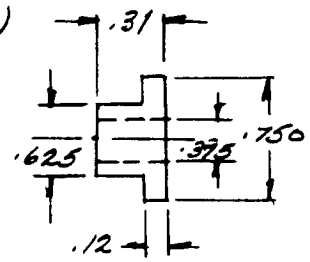

BEARING-

$f_{br} = P/A$

$A_{br} = .375(.31) = .1163 \text{ IN}^2$

$P = \left[(359.4 + 26.2)^2 + (101.2 + 92.5)^2\right]^{\frac{1}{2}}$

$= (386.6^2 + 193.7^2)^{\frac{1}{2}} = 431.5 \text{ LB.}$

$f_{br} = 431.5/.1163 = \underline{3{,}710 \text{ PSI}}$

$F_{br} = \underline{20 \text{ KSI}}$

$M.S. = \frac{20}{3(3.710)} - 1 = \underline{\underline{+0.79}}$

REF. DRAW. 7121-01092

ASSEM. & DETAILS.-

GEAR TRAIN MOUNT.-

-9 GEAR HOUSING ATTACHMENTS.-
(#10-32 AHCS.)

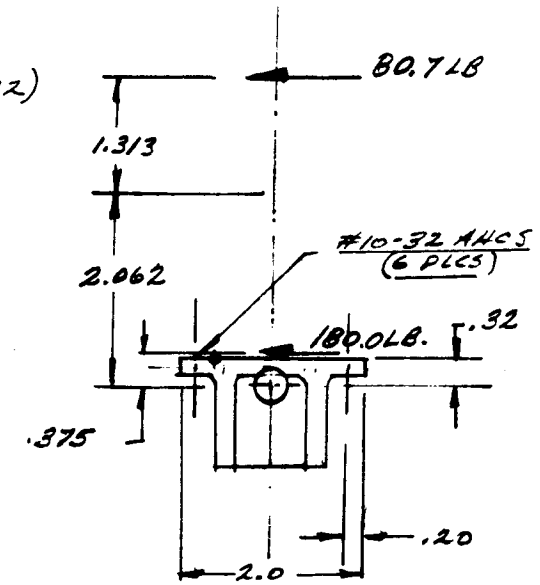

$M_{SCR} = 80.7(1.313 + 2.062 - .32)$
$+ 180.0(.375 - .32)$

$= 256.4$ IN-LB.

$P = M/3(d)$

$d = (2.00 - .20)(.9)$

$= 1.62$ IN.

$P = 256.4/3(1.62)$

$= \underline{52.7 \text{ LBS/SCREW}}$

P_{ALL} (10-32) = 3184 LBS

$M.S. = \frac{3184}{3(52.7)} - 1 =$ HIGH

REF. DRAW. 7121-01092

ASSEM. & DETAILS.-

MODEL SHELL & BALANCE BLOCK.-

(REF. 7121-01077-1 CONE)

THE MODEL SHELL IS MOUNTED BOTH FORE. AND AFT. TO THE RIGID BAL. BLOCK.

LOADS TO THE SHELL ARE ONLY AIR LOADS ON THE CENTER SECTION OF THE CONE, AND THE AFT STRAKE REACTION OF 80.7 LBS.

NO STRUCTURAL PROBLEMS ARE ENCOUNTERED IN THE SHELL STRUCTURE OR THE BALANCE BLOCK.

APPENDIX E

ADDITION OF CANARD PLATE

TO

TOWER STRUCTURE

CONTENTS

	Page
REFERENCES	E-3
REMARKS	E-4
MARGINS OF SAFETY	E-4
PLATE TOWER ASSEMBLY	E-5
LOADS	E-7
PLATE	E-7
FITTING SCREWS	E-8

REFERENCES

1. Hoag, A. L., D. C. McNeese, Engineering and Technical Handbook, 3d Printing, Prentice-Hall, Inc. (1959).

2. NA52-332. Model Design Structures Manual.

3. Popov, E. P., Mechanics of Materials, 8th Printing, Prentice-Hall, Inc. (1958).

4. Timoshenki, S. P., Strength of Materials, Vol. I, 3d Ed., Page 179, D. VanNostrand Company, Inc., New York.

REMARKS

This Appendix presents a structural analysis of a Canard Plate and fittings that have been added to the tower structure of the 0.105-scale Apollo model. Testing of the model will take place in the Ames Unitary Plan Wind Tunnel. The test will be run without the Escape Rocket attached to the tower. Additional tower loads due to the plate were neglected as being much smaller than loads due to the rocket.

Margins of Safety based on a Factor of Safety of 5 on the material ultimate strength and 3 on the material yield strength are all positive. Below is a listing of the Margins of Safety.

Page	Component	Type of Stress	Margin of Safety
8	Plate	Bending	+0.081
8	#3-56 AHCS Screw	Shear	+0.083
9	#3-56 AHCS Screw	Tension	High

PREPARED BY: R.W.B.	NORTH AMERICAN AVIATION, INC.	PAGE NO. 5 OF 9
CHECKED BY:	0.105 SCALE APOLLO	REPORT NO. SID-62-104
DATE: 8-30-63	TOWER CANARD PLATE	MODEL NO. FS-2

TOWER PLATE (MAT'L: 321 0.08 SHT. STL.)

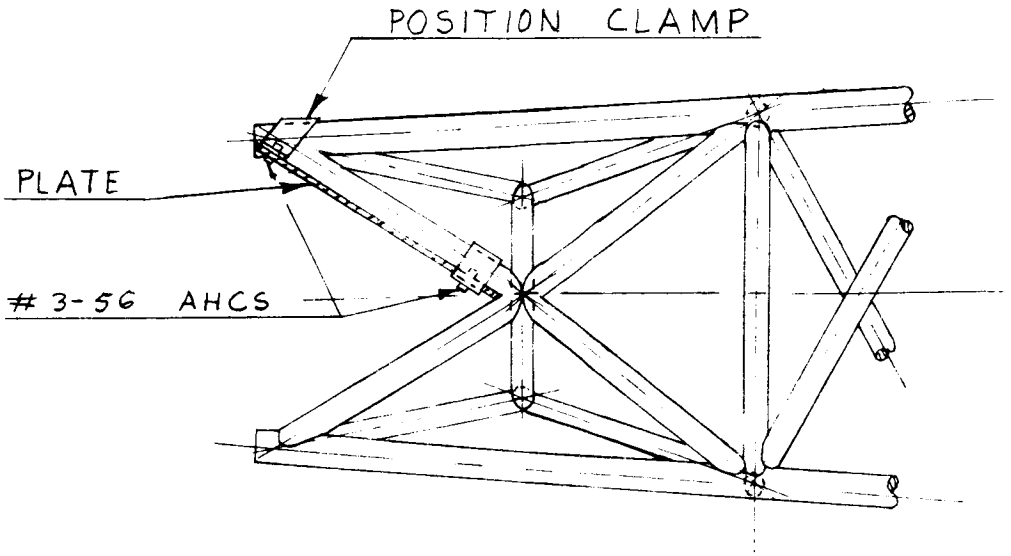

TOWER ASSEM.

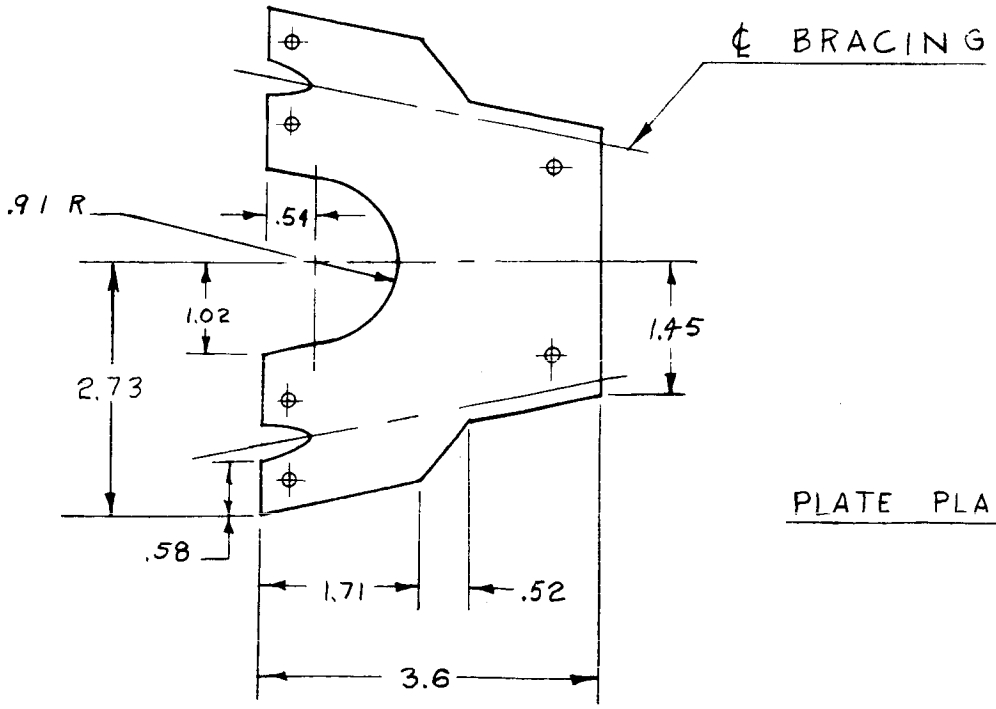

PLATE PLAN VIEW

TOWER PLATE (Cont.)

AREA ⑤ INCLUDES AREAS ① & ②

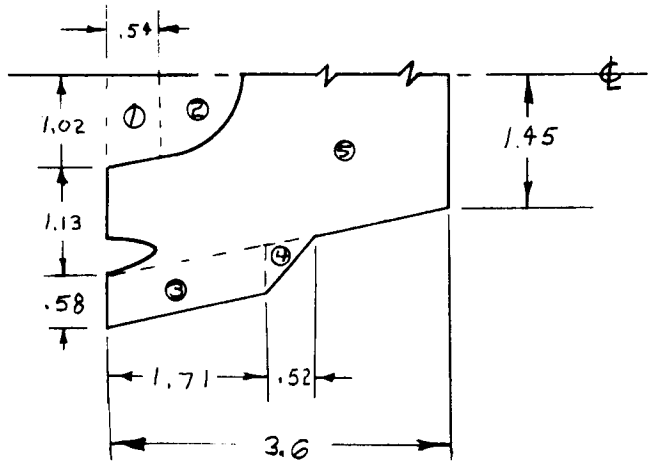

PARTITION	AREA
①	$(.54)\dfrac{(.91+1.02)}{2} = -0.5211 \text{ in}^2$
②	$\dfrac{\pi(.91)^2}{4} = -0.65006 \text{ in}^2$
③	$(1.71)(.58) = 0.9918 \text{ in}^2$
④	$\dfrac{(.58)(.52)}{2} = 0.1508 \text{ in}^2$
⑤	$\dfrac{(2.15)(1.45)}{2}(.36) = 6.48 \text{ in}^2$

$$\Sigma \frac{A}{2} = 6.45 \text{ in}^2$$

$$A = 12.9 \text{ in}^2$$

TOWER PLATE (Cont.)

LOADS

$$p = 1080 \ lb/ft^2 = \underline{7.5 \ psi}$$

PLATE BENDING

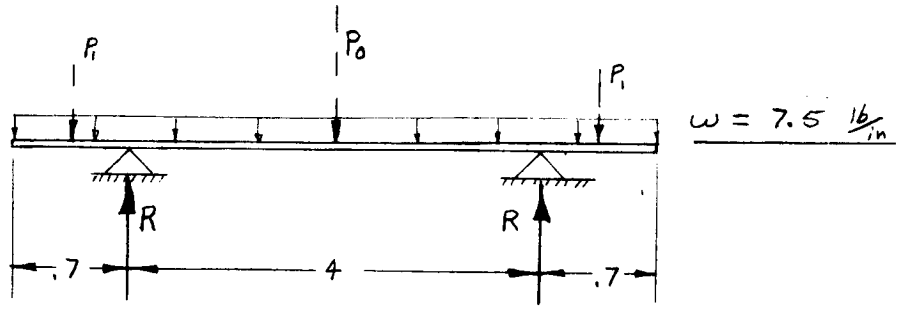

$$P_0 = \omega \ell_0 = (7.5)(4) = \underline{30 \ lb}$$

$$P_1 = \omega \ell_1 = (7.5)(.7) = \underline{5.25 \ lb}$$

$$R = \frac{P_0}{2} + P_1 = \frac{30}{2} + 5.25 = \underline{20.25 \ lb}$$

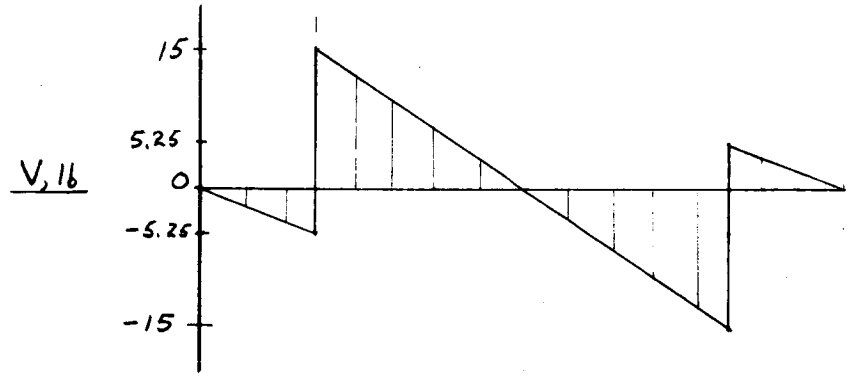

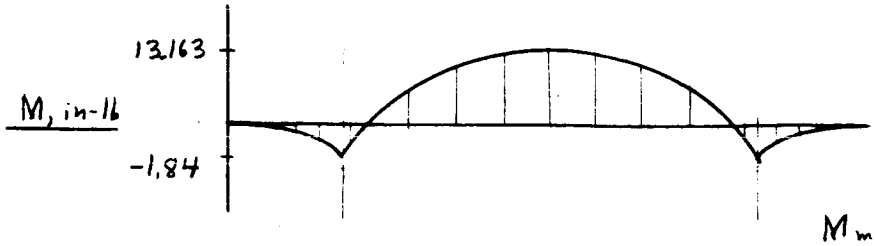

$$M_{max} = \underline{13,163 \ in\text{-}lb}$$

TOWER PLATE

PLATE BENDING (Cont.)

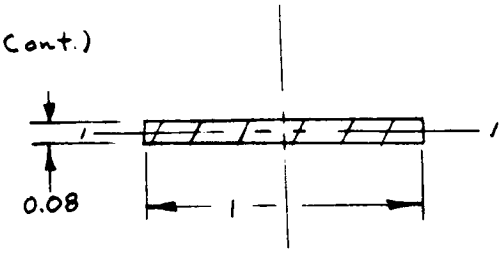

$A = (1)(.08) = \underline{0.08 \text{ in}^2}$

$I_{1-1} = \dfrac{(1)(.08)^3}{12}$

$= \underline{42.7 \times 10^{-6} \text{ in}^4}$

$C = \underline{0.04 \text{ in}}$

$f_b = \dfrac{M_{max}\ C}{I} = \dfrac{(13,163)(.04)}{42.7 \times 10^{-6}} = \underline{\underline{9,248 \text{ PSI}}}$

$F_{bY} = \underline{\underline{30,000 \text{ PSI}}}$

$M.S. = \dfrac{30,000}{3(9,248)} - 1 = \underline{\underline{+0.08}}$

SCREW SHEAR

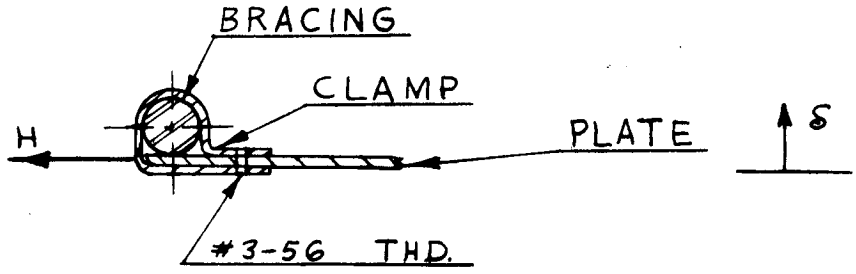

SHEAR FORCE, H, AT $\delta_{max} = \frac{8}{3}\left(\frac{\delta}{l}\right)^2 AE$ (REF. 4)

$\delta_{max} = \dfrac{5wl^4}{384\,EI} = \dfrac{(5)(7.5)(4)^4}{(384)(29 \times 10^6)(42.7 \times 10^{-6})} = \underline{0.0202 \text{ in}}$
(REF. 2)

$H = \dfrac{(8)(.0202)^2(.08)(29 \times 10^6)}{3(4)^2} = \underline{158 \text{ lb}}$

$f_s = \dfrac{H}{2} = \underline{\underline{79 \text{ lb}}}$

$F_s = \underline{\underline{428 \text{ lb}}}$

$M.S. = \dfrac{428}{5(79)} - 1 = \underline{\underline{0.08}}$

TOWER PLATE (Cont.)

SCREW TENSION (REVERSE LOADING)

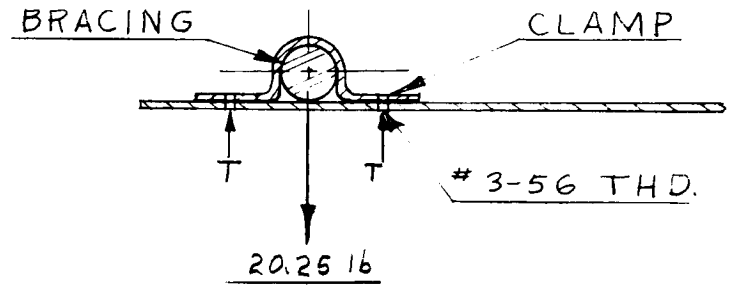

$$T = f_t = \frac{20.25}{2} = \underline{10.125 \text{ lb}}$$

$$F_t = \underline{832 \text{ lb}}$$

$$M.S. = \frac{832}{(10.125)} - 1 = \underline{\text{HIGH}}$$

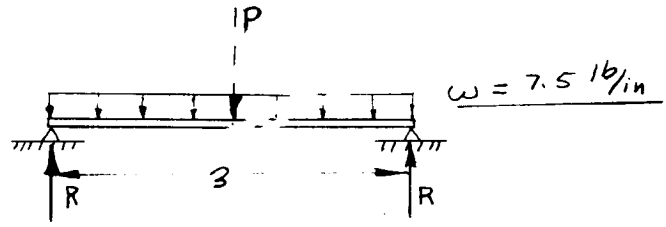

$$P = \omega l = (7.5)(3) = \underline{22.5 \text{ lb}}$$

$$R = \frac{P}{2} = \underline{11.25 \text{ lb}}$$

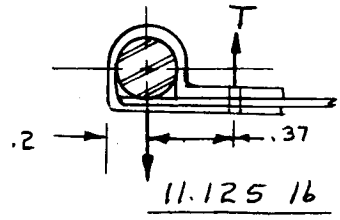

$$T = f_t = \frac{(11.125)(.2)}{.37} = \underline{6.28 \text{ lb}}$$

$$F_t = \underline{832 \text{ lb}}$$

$$M.S. = \frac{832}{5(6.28)} - 1 = \underline{\text{HIGH}}$$

APPENDIX F
COMMAND MODULE ANTENNAS, VENTS AND UMBILICAL FAIRINGS

REMARKS

This Appendix presents a structural analysis of the most critical component of additions to Drawing 7121-01048. The items added are antennas, vents, and umbilical fairings.

Loads for Ames 9 x 7 foot tunnel conditions are used to analyze the -9a antenna. No other item is more critical.

The margin of safety, with a safety factor of five on material ultimate, is 7.34.

LOADS, APOLLO — WIND TUNNEL MODEL

MODEL FS-2
SCALE .105
TUNNEL AMES 9'x7'
TEMP.
MACH NO. 1.55
q = 540 PSF
α = 90°
STEADY STATE LOADS — ☒
TRANSIENT LOADS — ☐

REQUIRED SAFETY FACTORS:—
5 ON ULTIMATE
3 ON YIELD

NOTES:—
(1)-LOADS GIVEN IN POUNDS. DIMS. IN INCHES, (MODEL SCALE).
(2)- DETERMINE THE LOADS ACTING ON ANTENNA'S, VENT & UMBILICAL FAIRING THRU CENTROID OF AREAS WITH C_D = 2.0

TOTAL CONFIGURATION LOADS:

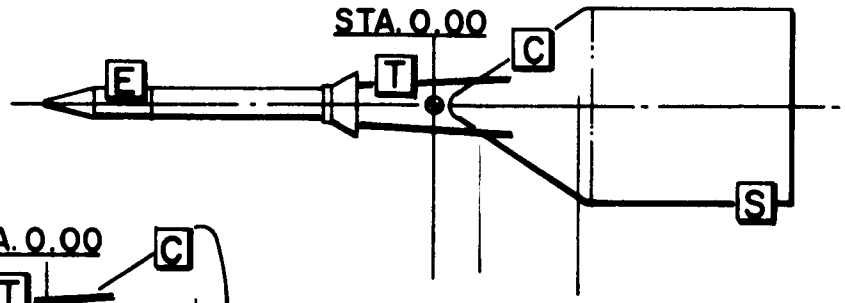

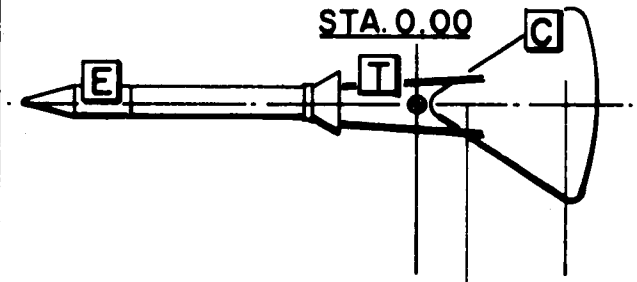

LOADS ON COMPONENTS:

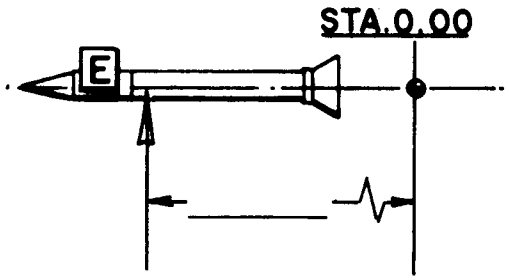

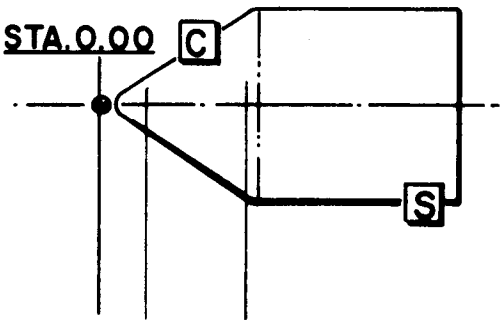

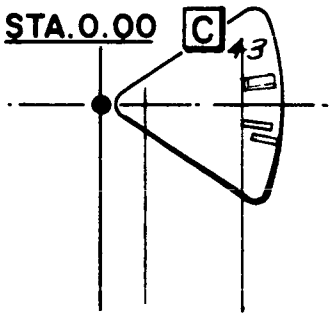

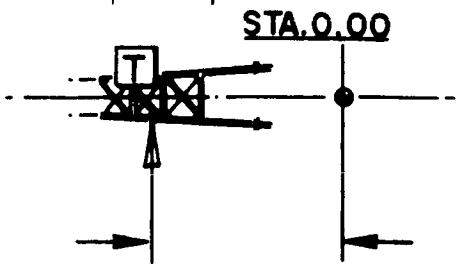

REF. DWG # 7121-01048

PREPARED BY	APPROVED BY	DATE
BWC	E. C. [illegible]	10-28-63
	SHEET 1 OF 1	

PREPARED BY: CBW	NORTH AMERICAN AVIATION, INC.	PAGE NO. F3 OF
CHECKED BY:		REPORT NO. 51062-104
DATE: 10. 28. 63		MODEL NO. F5-2

7121- 01048

TOWER REWORK & UP-DATING-

-9a ANTENNA.-

(MAT'L- 2024-T6 AL. ALLOY)

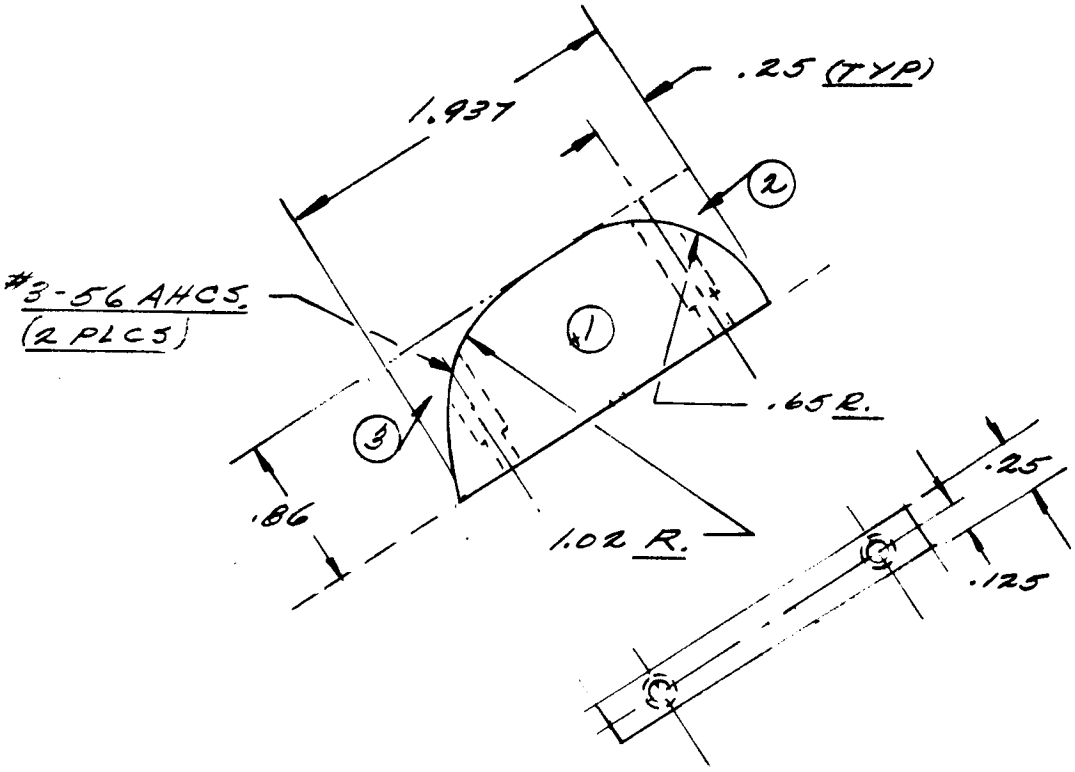

LOADS-

$q = 540$ psf.

$C_D = 2.0$

7121- 01048

TOWER REWORK & UP-DATING -
-9a ANTENNA - (CONT.)

AREA -

ITEM	A	X	Y	AX	AY
1.	1.6658	.9685	.4300	1.6133	.7163
- 2.	-.0908	1.7921	.7151	-.1627	-.0649
- 3.	-.0861	.1918	.6682	-.0165	-.0575
	1.4889			1.4341	.5939

$\bar{X}$ = .9632 IN.

$\bar{Y}$ = .3989 IN.

P = 540 (2.0)(1.4889)/144 = 11.167 LB.

#3-56 SCREW - TENSION -

MOM.(MAX) = P (.3989)[1.437 + .25 - .9632]/1.437

= 11.167 (.201) = 2.244 IN-LB.

SCREW T_t = M/.125 (.90) = 2.244/.1125

= 19.95 LB.

$T_{(ALLOW)}$ = 832 LB. (REF. NAA MODEL DESIGN MANUAL)

$$M.S. = \frac{832}{5(19.95)} - 1 = 7.34$$