NASA
National Aeronautics and
Space Administration

**Lyndon B. Johnson Space Center**
Houston, Texas 77058

DMS DR-2354
NASA CR-151,401

VOLUME 1 OF 4

# RESULTS OF SRB SEPARATION TESTS USING THE 0.010 SCALE SSV MODEL 75-OTS IN THE AEDC VKF TUNNEL A (IA143)

# SPACE SHUTTLE AEROTHERMODYNAMIC DATA REPORT

25-96-0002
D100355 #10

Data Management SERVICES

SPACE DIVISION CHRYSLER CORPORATION

February 1978

DMS DR-2354
NASA CR-151,401

VOLUME 1 OF 4

# RESULTS OF SRB SEPARATION TESTS USING THE 0.010 SCALE SSV MODEL 75-OTS IN THE AEDC VKF TUNNEL A (IA143)

by

J. J. Daileda and J. Marroquin
Shuttle Aero Sciences
Rockwell International Space Division

Prepared under NASA Contract Number NAS9-13247

by

Data Management Services
Chrysler Corporation Michoud Defense-Space Division
New Orleans, La. 70189

for

Engineering Analysis Division

Johnson Space Center
National Aeronautics and Space Administration
Houston, Texas

WIND TUNNEL TEST SPECIFICS:

| | |
|---|---|
| Test Number: | VKF V41A-P8A |
| NASA Series Number: | IA143 |
| Model Number: | 75-OTS |
| Test Dates: | November 8 through November 13, 1976 |
| Occupancy Hours: | 58.2 |

FACILITY COORDINATOR:

L. L. Trimmer
VKF Projects
ARO, Inc.
Arnold Air Force Station
Tennessee 37389

Phone: (615) 455-2611 x7377

PROJECT ENGINEERS:

J. J. Daileda
R. H. Spangler
Mail Code AD38
Rockwell International
Space Division
12214 Lakewood Boulevard
Downey, CA 90241

Phone (213) 922-3785

AERODYNAMICS ANALYSIS ENGINEER:

H. Dresser
Mail Code AC07
Rockwell International
Space Division
12214 Lakewood Boulevard
Downey, CA 90241

Phone (213) 922-1526

DATA MANAGEMENT SERVICES:

Prepared by: Liaison--D. A. Sarver
Operations--J. E. Vaughn

Reviewed by: G. G. McDonald

Approved: J. L. Glynn, Manager
Data Operations

Concurrence: N. D. Kemp, Manager
Data Management Services

Chrysler Corporation Michoud Defense-Space Division assumes no responsibility for the data presented other than display characteristics.

RESULTS OF SRB SEPARATION TEST USING THE 0.010 SCALE SSV MODEL 75-OTS IN THE AEDC VKF TUNNEL A (IA143)

by

J. J. Daileda and J. Marroquin

## ABSTRACT

An experimental investigation (Test IA143) was conducted in the AEDC/VKF Tunnel A from November 8 through November 13, 1976. The objective of this test was to complete data voids in the SRB separation aero data base for both BSM plume-on and plume-off conditions. These data voids were primarily at negative $\alpha$ initial separation conditions. Six-component force and moment data were obtained on the Orbiter/ET, and 4-component force and moment data were obtained on the right SRB. BSM plumes were simulated with high pressure nitrogen exhausting through specially designed nozzles.

(THIS PAGE INTENTIONALLY LEFT BLANK.)

TABLE OF CONTENTS


| | Page |
|---|---|
| ABSTRACT | iii |
| INDEX OF MODEL FIGURES | 2 |
| NOMENCLATURE | 4 |
| INTRODUCTION | 9 |
| CONFIGURATIONS INVESTIGATED | 11 |
| TEST FACILITY DESCRIPTION | 16 |
| DATA REDUCTION | 17 |
| REMARKS | 18 |
| REFERENCES | 19 |
| TABLES | |
| I. TEST CONDITIONS | 21 |
| II. DATA SET/RUN NUMBER COLLATION SUMMARY | 22 |
| III. MODEL DIMENSIONAL DATA | 101 |
| FIGURES | |
| MODEL | 132 |
| APPENDIX | 151 |
| TABULATED SOURCE DATA | |
| VOLUME 1 — Orbiter balance data — pages 1-768 | |
| VOLUME 2 — Right SRB balance data — pages 769-1548 | |
| VOLUME 3 — Model pressure data — pages 1549-2317 | |
| VOLUME 4 — Tunnel operating conditions — pages 2318-3083 | |

INDEX OF MODEL FIGURES


| Figures | Title | Page |
|---|---|---|
| 1 | Axis systems. | |
| | a. General | 132 |
| | b. Booster Separation from Orbiter/External Tank | 133 |
| 2. | Model sketches. | |
| | a. Integrated Vehicle Model 75-OTS Configuration | 134 |
| | b. Orbiter Nomenclature for Test IA143 | 135 |
| | c. External Tank ($T_{35}$) Protrusions | 136 |
| | d. Forward Electrical Conduit (PT29) and $LO_2$ Pressure Line (PT26) | 137 |
| | e. External Tank Hardware and Protrusions | 138 |
| | f. L/H $LH_2$ Pressure Line - $PT_{33}$ and $FR_{19}$ | 139 |
| | g. Orbiter/Tank Forward Support (AT130) | 140 |
| | h. Aft Attachment of External Tank to Orbiter (AT28 and AT131) | 141 |
| | i. LH and $LO_2$ Feedline and Aft Orbiter/Tank Attach Structure ($FL_{10}$, $FL_{11}$) and ($AT_{28}$, $AT_{131}$) | 142 |
| | j. BSRM 0.010 Scale 75-OTS Test IA143 | 143 |
| | k. Sketch of Model Support System for IA143 | 144 |
| | l. Right SRB Thrust Tare Calibration ($F_Y$ and $F_N$) | 145 |
| | m. Right SRB Thrust Tare Calibration ($M_Z$ and $M_Y$) | 146 |
| | n. Right SRB Thrust Tare Calibration (Thrust/Jet) | 147 |
| 3. | Model photographs. | |
| | a. Side View with Left SRB at Large Separation Distance | 148 |

INDEX OF MODEL FIGURES (Concluded)


| Figure | Title | Page |
|---|---|---|
| 3. | Model photographs. (Continued) | |
| | b. Side View With Left SRB at Small Separation Distance | 149 |
| | c. Front View | 150 |

## NOMENCLATURE

| SYMBOL | PLOT SYMBOL | DEFINITION |
|---|---|---|
| AEDC | | Arnold Engineering Development Center |
| $b_{ref}$ | BREF | reference span, in. |
| BSM,BSRM | | booster separation motor |
| $C_A$ | CA | axial force coefficient |
| $C_\ell$ | CBL | body axis rolling moment coefficient |
| $C_m$ | CIM | pitching moment coefficient |
| $C_{m_j}$ | CIMJ | pitching moment coefficient due to BSM thrust |
| $C_{m_T}$ | CIMT | pitching moment coefficient due to both BSM thrust and aerodynamic effects |
| $C_n$ | CYN | body axis yawing moment coefficient |
| $C_{n_j}$ | CYNJ | body axis yawing moment coefficient due to BSM thrust |
| $C_{n_T}$ | CYNT | body axis yawing moment coefficient due to both BSM thrust and aerodynamic effects |
| $C_N$ | CN | normal force coefficient due to aerodynamic loads |
| $C_{N_j}$ | CNJ | normal force coefficient due to BSM thrust |
| $C_{N_T}$ | CNT | normal force coefficient due to both BSM thrust and aerodynamic effects |
| $C_{ref}$ | CREF | reference chord, in. |
| $C_Y$ | CY | side force coefficient |
| $C_{Y_j}$ | CYJ | side force coefficient due to BSM thrust |
| $C_{Y_T}$ | CYT | side force coefficient due to both BSM thrust and aerodynamic effects |
| CTS | | captive trajectory system |

NOMENCLATURE (Continued)

| SYMBOL | PLOT SYMBOL | DEFINITION |
|---|---|---|
| ET | | external tank |
| $\ell_{ref}$ | LREF | reference length, in. |
| $M_\infty$ | MACH | freestream Mach number |
| MRP | | moment reference point |
| $\dot{m}$ | MDOT | total mass flow measured by venturi, lb. mass/sec. |
| p | PA | pressure in supply line to venturi, psia |
| $p_o$ | PO | tunnel stilling chamber pressure, psia |
| $p_\infty$ | PINF | freestream static pressure, psia |
| $p_j$ | JET PC | chamber pressure of simulated BSM jets, psia (identified as "Jet Press" on table II.) |
| $p_s$ | PS | pressure in supply line to BSM, psia |
| $p_b/p_\infty$ | PB/PF | SRB base to freestream static pressure ratio |
| $p_{b_1}/p_\infty$ | PB1/PF | orbiter base to freestream static pressure ratio |
| $p_{b_2}/p_\infty$ | PB2/PF | orbiter base to freestream static pressure ratio |
| $p_c/p_\infty$ | PC/PF | orbiter chamber to freestream static pressure ratio |
| $p_{c_{aft}}$ | PCHA | aft chamber pressure in SRB, psia |
| $p_{c_{fwd}}$ | PCHF | forward chamber pressure in SRB, psia |
| $\Delta p$ | DELP | pressure differential between throat tap and supply line on venturi used to measure mass flow to BSM, psia |
| $q_\infty$ | QINF | freestream dynamic pressure, psia |

NOMENCLATURE (Continued)

| SYMBOL | PLOT SYMBOL | DEFINITION |
|---|---|---|
| $R_e/ft$ | RE/L | unit Reynolds number, per foot |
| $S_{ref}$ | SREF | reference area, ft. |
| SRB | | solid rocket booster |
| SSV | | space shuttle vehicle |
| $T_1$ | T1 | temperature of air to left SRB, $^oF$ |
| $T_2$ | T2 | temperature of air to right SRB, $^oF$ |
| $T_a$ | TA | temperature of air supplied to venturi, $^oR$ |
| $T_o$ | TO | tunnel stilling chamber temperature, $^oR$ |
| $T_\infty$ | TINF | freestream static temperature, $^oR$ |
| VKF | | von Karman Facility |
| $X_{MRP_{O/ET}}$ | XMRP | longitudinal location of mated orbiter/ET MRP, in. $X_T$ |
| $X_{MRP_{SRB}}$ | XMRP | longitudinal location of SRB MRP, in $X_s$ |
| $X_o$ | XO | orbiter longitudinal station, in. |
| $X_s$ | XS | SRB longitudinal station, in. |

NOMENCLATURE (Continued)

| SYMBOL | PLOT SYMBOL | DEFINITION |
|---|---|---|
| $X_T$ | XT | ET longitudinal station, in. |
| $Y_{MRP_{O/ET}}$ | YMRP | lateral location of mated orbiter/ET MRP, in. $Y_T$ |
| $Y_{MRP_{SRB}}$ | YMRP | lateral location of SRB MRP, in. $Y_s$ |
| $Y_O$ | YO | orbiter lateral station, in. |
| $Y_s$ | YS | SRB lateral station, in. |
| $Y_T$ | YT | ET lateral station, in. |
| $Z_{MRP_{O/ET}}$ | ZMRP | vertical location of mated orbiter/ET MRP, in. $Z_T$ |
| $Z_{MRP_{SRB}}$ | ZMRP | vertical location of SRB MRP, in. $Z_s$ |
| $Z_O$ | ZO | orbiter vertical station, in. |
| $Z_s$ | ZS | SRB vertical station, in. |
| $Z_T$ | ZT | ET vertical station, in. |
| $\alpha_{O/T}$ | ALPHA | mated orbiter/ET angle of attack, deg. |
| $\alpha_{SRB}$ | ALPHAB | SRB angle of attack, deg. |
| $\beta_{O/T}$ | BETA | mated orbiter/ET angle of sideslip, deg. |
| $\beta_{SRB}$ | BETAB | SRB angle of sideslip, deg. |
| $\delta_a$ | AILRON | aileron deflection angle, deg. |
| $\delta_{BF}$ | BDFLAP | body flap deflection angle, deg. |
| $\delta_e$ | ELEVON | elevon deflection angle, deg. |
| $\Delta X$ | X | longitudinal displacement of SRB nose parallel to the $X_T$ axis from its mated position with the orbiter and ET, position downstream, in. |
| $\Delta Y$ | Y | lateral displacement of SRB nose parallel to the $Y_T$ axis from its mated position with the orbiter and ET, position to port, in. |

NOMENCLATURE (Concluded)

| SYMBOL | PLOT SYMBOL | DEFINITION |
|---|---|---|
| $\Delta Z$ | Z | vertical displacement of SRB nose parallel to the $Z_T$ axis, from its mated position with the orbiter and ET, positive down, in. |
| $\Delta\alpha$ | DALPHA | incremental angular difference between O/ET and SRB in pitch plane, degrees; $\Delta\alpha = \alpha_{SRB} - \alpha_{O/ET}$ |
| $\Delta\beta$ | DBETA | incremental angular difference between O/ET and SRB in yaw plane, degrees; $\Delta\beta = \beta_{SRB} - \beta_{O/ET}$ |
| $\phi$ | PHI | model roll angle, degrees, positive right wing down |

## INTRODUCTION

The space shuttle solid rocket boosters (SRB's) have small separation motors (BSM's) in the conical nose region which fire during separation sequence. A series of three wind tunnel tests was conducted in the AEDC/VKF Tunnel A on a 0.010 scale model of the space shuttle configuration during SRB separation, with BSM firing simulated with cold jets, to obtain proximity force and moment data for the orbiter, external tank and SRB's. This report presents results from the third test, conducted from November 8 through November 13, 1976. Results from the first test (IA40) are given in reference 1 while reference 2 presents the second test (IA142) results.

The primary objective of IA143 was to complete data voids in the SRB separation aero data base for both plume-on and plume-off conditions. The data from this test, when combined with previously obtained plume-off data (tests IA87 and IA111) and plume-on data (tests IA40 and IA142), provide adequate means for extending, either through extrapolation or interpolation, coverage to all separation conditions bounded by the limits $\alpha_{O/T} = \pm 15^\circ$ and $\beta_{O/T} = \pm 15^\circ$.

IA143 was conducted with a single SRB separating from the orbiter/external tank configuration. The orbiter/ET was sting-mounted through the base of the orbiter of the Tunnel A primary support system. The right SRB was similarly mounted from the captive trajectory system (CTS)

sting. High pressure nitrogen was supplied to the SRB for booster separation motor (BSM) plume simulation.

The majority of the test was run at a Mach number of 4.5 and unit Reynolds number of $1.57 \times 10^6$ per foot. However, some data were obtained at Mach numbers of 4.0 and 5.0 (using a constant dynamic pressure for all Mach numbers) to determine jet-on Mach number effects. Other test variables included orbiter/ET angle of attack and sideslip; SRB angle of attack and sideslip relative to the O/ET; vertical, longitudinal and lateral displacement of the SRB's from the mated position; SRB roll angle; and BSM plenum pressure.

A six-component balance was used to obtain force and moment data on the orbiter/ET; a four-component flow-through balance was used to measure SRB forces and moments. One balance cavity pressure and two base pressures were measured on the orbiter/ET; one base pressure was measured on the SRB.

## CONFIGURATIONS INVESTIGATED

The model was a 0.010 scale representation of the Space Shuttle launch vehicle, designated as Model 75-OTS. A model 72-0 wing was used for simplicity because it was not instrumented as was the 75-0 wing; otherwise, it was identical to the 75-0 wing. The wing represented a 140A/B configuration. The orbiter fuselage represented a 140C modified configuration. The external tank model was built to VC78-000002 lines with an isentropic nose spike. SRB models were built to VC77-000002 lines to represent a modified vehicle 5 configuration. Figure 2a shows the mated configuration. Figure 2b shows the orbiter configuration. Figures 2c through 2f show the external tank configuration and its protuberances. Orbiter to tank attach hardware and feedlines are shown in Figures 2g through 2i. The SRB is shown in Figure 2j. The models were fabricated from stainless steel and aluminum.

The mated orbiter and external tank were mounted on the tunnel modified primary support system using the Rockwell International water cooled strut W-1115S, which allowed manual changes of pitch and yaw angles of the inverted orbiter/external tank. The orbiter was mounted on the 0.85-inch diameter AEDC 4.00-Y-36-049 balance. The balance was mounted in the forward position in the orbiter (balance center at $X_o$ 7.670) for the entire test.

The SRB was installed on the AEDC VKF captive trajectory system by means of the AEDC 4.00-Y-34-065, four-component flow-through balance. Figure 2k shows a sketch of the model installation.

Booster separation motors consisted of two four-nozzle clusters, located at the forward and aft ends of the SRB, as shown in Figure 2j. Each nozzle was supplied with high pressure nitrogen through a common plenum for each cluster. The plenum was designed to provide simultaneous firing of the forward and aft nozzles with identical plenum pressures. Nozzle internal contours were designed to provide plumes simulating full scale plumes. External contours were made to maintain similitude with full scale contours.

The two balances were calibrated by AEDC prior to the test. In-tunnel check loadings were performed after installation to insure total measurement system integrity. All transducers and thermocouples used to measure base, cavity, sting, model plenum pressure and mass flow were calibrated prior to the test. A calibration of balance forces and moments and mass flow as functions of sting pressure was performed for the right SRB. This calibration yielded thrust tares for the balance components and the average thrust for the BSM nozzles. Thrust tares and thrust/jet calibration are presented in Figures 2l, 2m and 2n.

The orbiter model was designated as ORB, where:

$$ORB = B_{62}\ C_{12}\ E_{44}\ F_{10}\ M_{16}\ R_5\ N_{89}\ N_{103}\ V_8\ W_{116}$$

The individual orbiter components were defined as follows:

CONFIGURATIONS INVESTIGATED (Continued)

| Component | Definition | Reference Drawing |
|---|---|---|
| $B_{62}$ | Body | VL70-000140C -202C, -205A, -200B, -203A |
| $C_{12}$ | Canopy | VL70-000140C -202B, -204 |
| $E_{44}$ | Elevon | SAS/AERO/73-344 |
| $F_{10}$ | Body Flap | VL70-000140C, VL70-355114 |
| $M_{16}$ | OMS Pod | VL70-008401, VL70-008410 |
| $N_{89}$ | OMS Nozzles | SS-A01279 |
| $N_{103}$ | MPS Nozzles | SS-A01687 |
| $R_5$ | Rudder | VL70-000146B, VL70-000095 |
| $V_8$ | Vertical Tail | VL70-000140C, VL70-000146B |
| $W_{116}$ | Wing | VL70-000140A/B, VL70-000200 |

The external tank was designated as ET, where:

$$ET = T_{35}\ AT_{28}\ AT_{130}\ AT_{131}\ FL_{10}\ FL_{11}\ FR_{10}\ FR_{14}\ FR_{15}\ FR_{16}\ FR_{17}$$

$$FR_{18}\ FR_{19}\ PT_{23}\ PT_{25}\ PT_{26}\ PT_{29}\ PT_{33}\ PT_{39}$$

where:

| Component | Description |
|---|---|
| $AT_{28}$ | Aft O/ET attach structure per VL78-000063, VL78-000062B |
| $AT_{130}$ | Forward O/ET attach structure, per ICD-2-00001, Rev. B |
| $AT_{131}$ | Aft O/ET attach structure cross-member, per ICD-2-00001, Rev. B |
| $FL_{10}$ | $LH_2$ feedline per VL78-000063, VL78-000062B, VC78-000002 |
| $FL_{11}$ | $LO_2$ feedline per VL78-000063, VL78-000062B, VC78-000002 |
| $FR_{10}$ | Fairing, per VL78-000063, VL78-000062B, Martin-Marietta 82600207000, VC78-000002 |

CONFIGURATIONS INVESTIGATED (Continued)

| Component | Description |
|---|---|
| $FR_{14}$ | ET nose cable fairing |
| $FR_{15}$ | ET nose fairing for $PT_{39}$ |
| $FR_{16}$ | $LO_2$ feedline ($FL_{11}$) fairing |
| $FR_{17}$ | $LO_2$ antigeyser-line ($PT_{23}$) fairing |
| $FR_{18}$ | Aft electrical-conduit ($PT_{25}$) fairing |
| $FR_{19}$ | $LH_2$ pressure line ($PT_{33}$) fairing |
| $PT_{23}$ | $LO_2$ recirculation line per VL78-000063, VL78-000062B, Martin-Marietta 82600207000, VC78-000002 |
| $PT_{25}$ | Aft electrical line, per VL78-000063, VL78-000062B, Martin-Marietta 82600207000, VC78-000002 |
| $PT_{26}$ | $LO_2$ pressure line, per VL78-000063, VL78-000062B, Martin-Marietta 82600207000 |
| $PT_{29}$ | Electrical conduit, per ICD-2-00001, Revision B |
| $PT_{33}$ | $LH_2$ pressure line per ICD-2-00001, Revision B |
| $PT_{39}$ | ET nose probe, per ICD-2-00001, Revision B |
| $T_{35}$ | Modified vehicle 5 external Tank per VC78-000002 |

The solid rocket booster was designated as:

$$SRB = S_{24}\ N_{101}\ N_{102}\ N_{106}\ PS_{20}\ PS_{26}\ PS_{27}\ PS_{28}\ PS_{29}\ PS_{31}\ PS_{32}\ PS_{33}\ PS_{34}\ PS_{35}$$

where:

| Component | Description |
|---|---|
| $N_{101}$ | Forward booster separation motor nozzle block. Reference: ICD-2-00001, Revision B (Model Drawing SS-A01690). |

CONFIGURATIONS INVESTIGATED (Concluded)

| Component | Description |
|---|---|
| $N_{102}$ | Aft booster separation motor nozzle block. Reference: ICD-2-00001, Revision B (Model Drawing SS-A01690). |
| $N_{106}$ | SRB Nozzle, per VL77-000066, VC77-000002A. |
| $PS_{20}$ | Electrical cable tunnel, per ICD-2-00001. Revision B. |
| $PS_{26}$ | SRB aft attach ring, per ICD-2-00001, Revision B. |
| $PS_{27}$ | SRM nozzle actuator struts, per ICD-2-00001, Revision B. |
| $PS_{28}$ | Aft booster separation motor fairing, per ICD-2-00001, Revision B. |
| $PS_{29}$ | Tiedown struts (4) per ICD-2-00001, Revision B. |
| $PS_{31}$ | Command antennae (2) per ICD-2-00001, Revision B. |
| $PS_{32}$ | Data capsule camera, per ICD-2-00001, Revision B. |
| $PS_{33}$ | Intermediate structural rings (3) per ICD-2-00001, Revision B. |
| $PS_{34}$ | Aft cable housing, per ICD-2-00001, Revision B. |
| $PS_{35}$ | Aft structural ring, per ICD-2-00001, Revision B. |
| $S_{24}$ | Modified Vehicle 5 Solid Rocket Booster body. |

## TEST FACILITY DESCRIPTION

Arnold Engineering Development Center (AEDC) is an Air Force facility located in Tullahoma, Tennessee. The tunnel used, Tunnel A, is in the von Karman facility. Engineering and other technical operations in this tunnel are conducted by contractor personnel of ARO, Inc.

Tunnel A is a 40 x 40 inch continuous closed circuit, variable density, supersonic wind tunnel with a Mach number range of 1.5 to 6.0.

The tunnel is served by the main compressor system which provides a wide range of mass flows and stagnation pressures up to a maximum of 200 psia.

The model may be injected into the tunnel for a test run and then retracted for model cooling or model changes without interrupting the tunnel flow.

## DATA REDUCTION

Standard AEDC methods for computing tunnel parameters, balance forces and moments, and model attitudes were used. Six-component force and moment data were recorded and reduced for the orbiter/external tank balance. Base and cavity pressure ratios were computed but corrections were not applied to the balance data. Four-component force and moment data were recorded and reduced for the SRB balance. Thrust tares were removed from these data and coefficients were calculated for the SRB both with and without BSM thrust. One base pressure was measured on the SRB. Attitude and position locations of both models were corrected for sting/balance deflections.

The following reference dimensions were used:

| Symbol | Description | Value | |
|---|---|---|---|
| | | Model Scale | Full Scale |
| $\ell_{ref}$, $C_{ref}$, $b_{ref}$ | reference length, in. | 12.903 | 1290.3 |
| $S_{ref}$ | reference area, ft.$^2$ | 0.269 | 2690.0 |
| $X_{MRP_{O/ET}}$ | orbiter/ET longitudinal location of MRP, in. $X_T$ | 10.97 | 1097.0 |
| $X_{MRP_{SRB}}$ | SRB longitudinal location of MRP, in. $X_s$ | 12.585 | 1258.5 |
| $Y_{MRP_{O/ET}}$ | orbiter/ET lateral location of MRP, in. $Y_T$ | 0.0 | 0.0 |
| $Y_{MRP_{SRB}}$ | SRB lateral location of MRP, in. $Y_s$ | 0.0 | 0.0 |
| $Z_{MRP_{O/ET}}$ | orbiter/ET vertical location of MRP, in. $Z_T$ | 4.50 | 450.0 |
| $Z_{MRP_{SRB}}$ | SRB vertical location of MRP, in. $Z_s$ | 4.00 | 400.0 |

## REMARKS

The following test anomalies were observed during test IA143:

All plume-on data were obtained using nitrogen rather than air. Initial thrust calibrations of the BSM nozzles with air were very erratic and inconsistent. No apparent problems with the air system were identified, but after the high pressure air had been replaced with nitrogen, calibrations became very consistent and repeated throughout the test.

Prior to one series of runs during the third shift of the test, the O/ET was injected into the wind tunnel with the CTS/SRB in the wrong position. This resulted in a collision of the O/ET with the CTS sting and the SRB. This collision rolled the O/ET on the balance and put three large scratches on the left side of the ET surface. The tunnel was shut down and the O/ET was removed from the balance. Alignment between the orbiter and ET was checked and found to be unchanged from pretest measurements. The scratches were filled with epoxy and the model was reinstalled and aligned on the balance. The SRB was checked and found to be undamaged. The test was then resumed after a delay of about three hours.

## REFERENCES


1. NA-73-435, "Structural Analysis of the 0.010-Scale #32-OTS SSV Model, Appendix E," dated May 17, 1976.

2. SAS/AERO/74-588, "Test Requirements for the Booster Separation Test IA40," dated August 14, 1974.

3. SAS/AERO/76-164, "Booster Separation Motor Model Design for Test IA40A," dated March 26, 1976.

4. SAS/WTO/74-186, Addendum #5, "Model Design Information for the 0.010-Scale SSV Model 32-OTS, Task 23 (Test IA40), AEDC Tunnel A," dated November 24, 1975.

5. SAS/WTO/74-186, Addendum #6, "Calibration Requirements for Model 75-OTS SRB Model High Pressure Air System for Test IA40A," dated April 22, 1976.

6. SAS/WTO/74-186, Addendum #7, "Additional Model Design Requirements for SRB Model 72-OTS/75-OTS Test IA40A at AEDC, Tunnel A," dated April 29, 1976.

7. SD76-SH-0126, "Pretest Information for SRB Separation Tests IA40 and IA142 Using the 0.010-Scale SSV Model 75-OTS in the AEDC VKF Tunnel A," dated May 28, 1976.

8. DMS-DR-2293, "Results of SRB Separation Tests Using the 0.010-Scale SSV Model 75-OTS in the AEDC VKF Tunnel A (IA40), October, 1977.

REFERENCES (Concluded)

9. DMS-DR-2346, "Results of SRB Separation Testing Using the 0.010-Scale SSV Model 75-OTS in the AEDC VKF Tunnel A (IA142)," November, 1977.

TABLE I.

TEST : IA143 | DATE :

TEST CONDITIONS

| MACH NUMBER | REYNOLDS NUMBER/FT | DYNAMIC PRESSURE (pounds/sq. inch) | STAGNATION TEMPERATURE (degrees Fahrenheit) |
|---|---|---|---|
| 4.01 | $1.33 \times 10^6$ | 1.155 | 112 |
| 4.50 | $1.57 \times 10^6$ | 1.155 | 114 |
| 5.03 | $1.82 \times 10^6$ | 1.155 | 114 |
| | | | |
| | | | |
| | | | |
| | | | |
| | | | |
| | | | |
| | | | |
| | | | |
| | | | |
| | | | |
| | | | |
| | | | |
| | | | |

BALANCE UTILIZED: 4.00-Y-36-049 in Orbiter; 4.00-Y-34-065* in SRB

| | | CAPACITY: | ACCURACY: | COEFFICIENT TOLERANCE: |
|---|---|---|---|---|
| -049 | NF | 200 lbs | ± 1 lb | |
| | SF | 200 lbs | ± 1 lb | |
| | AF | 50 lbs | ± .25 lbs | |
| | PM | 310 in-lbs | ± 1.55 in-lbs | |
| | RM | 100 in-lbs | ± .5 in-lbs | |
| | YM | 310 in-lbs | ± 1.55 in-lbs | |

| COMMENTS | | | |
|---|---|---|---|
| -065 | NF | 125 lbs | ± .63 lbs |
| | SF | 125 lbs | ± .63 lbs |
| | PM | 451 in-lbs | ± 2.26 in-lbs |
| | YM | 451 in-lbs | ± 2.26 in-lbs |

*Four-Component Flow-through Balance.

TABLE II. DATA SET/RUN NUMBER COLLATION SUMMARY

Key to ΔX and ΔZ Schedules

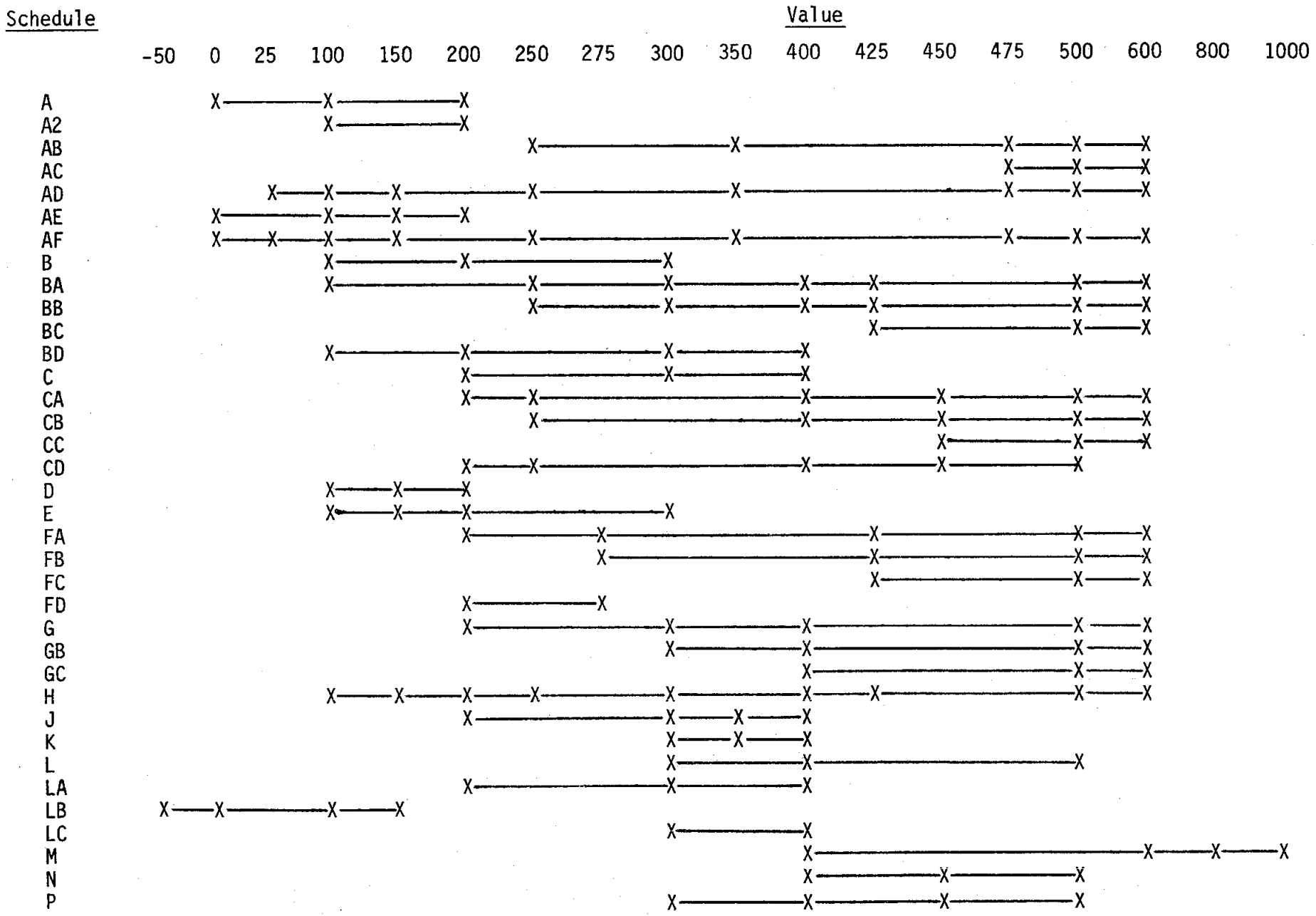

TABLE II. - (Continued)

Key to Dataset Identifier Code

| | |
|---|---|
| OVX ——— | Orbiter balance data; Z or X, ALPHA, BETA, PHI, CN, CLM, CY, CYN, CBL, CA |
| SVX ——— | Right SRB balance data; ALPHAB, BETAB, CNT, CLMT, CYT, CYNT, CN, CLM, CY, CYN |
| PVX ——— | Miscellaneous model pressure data; PHI, PS, TA, PCPF, PB1/PF, PB2/PF, PCHA, PCHF, PB/PF, MACH |
| TVX ——— | Tunnel operating conditions; PA, DELP, PO, TO, PINF, QINF, TINF, MDOT, T1, T2 |

Table II. (cont.)
Mach Number Effects

Page 1

TEST: IA143

DATA SET/RUN NUMBER COLLATION SUMMARY

DATE: Post Test

| DATA SET IDENTIFIER | CONFIGURATION | O/ET. α | O/ET. β | PIN | JET PRESS | SEP. Δα | Δβ | Δx | Δz | MACH No. | ΔY -10 | -50 | -100 | -150 | -200 | | | |
|---|---|---|---|---|---|---|---|---|---|---|---|---|---|---|---|---|---|---|
| VX08 1 | ORB/ET + SRB(R.N.) | 0 | 0 | | 0 | 0 | 0 | A | 0 | 4.0 | 4503 | 4508 | 4509 | | | | | |
| 2 | | | | | | | 0 | | 100 | | 4504 | 4507 | 4510 | | | | | |
| 3 | | | | | | | 0 | | 200 | | 4505 | 4506 | 4511 | | | | | |
| 4 | | | | | | | -4 | | 0 | | | | 4530 | 4535 | 4536 | | | |
| 5 | | | | | | | -4 | | 100 | | | | 4531 | 4534 | 4537 | | | |
| 6 | | | | | | | -4 | | 200 | | | | 4532 | 4533 | 4538 | | | |
| 7 | | | | | 1225 | | 0 | | 0 | | 4512 | 4517 | 4518 | | | | | |
| 8 | | | | | | | 0 | | 100 | | 4513 | 4516 | 4519 | | | | | |
| 9 | | | | | | | 0 | | 200 | | 4514 | 4515 | 4520 | | | | | |
| 10 | | | | | | | -4 | | 0 | | | | 4521 | 4526 | 4527 | | | |
| 11 | | | | | | | -4 | | 100 | | | | 4522 | 4525 | 4528 | | | |
| 12 | | | | | | | -4 | | 200 | | | | 4523 | 4524 | 4529 | | | |
| 13 | | | | | 0 | | 0 | | 0 | 4.5 | 3206 | 3211 | 3212 | | | | | |
| 14 | | | | | | | | | 100 | | 3207 | 3210 | 3213 | | | | | |
| 15 | | | | | | | | | 200 | | 3208 | 3209 | 3214 | | | | | |
| 16 | | | | | 1225 | | | | 0 | | 3233 | 3238 | 3239 | | | | | |
| 17 | | | | | | | | | 100 | | 3234 | 3237 | 3240 | | | | | |
| 18 | | | | | | | | | 200 | | 3235 | 3236 | 3241 | | | | | |

TEST RUN NUMBERS

1 7 13 19 25 31 37 43 49 55 61 67 73 76

IDVAR (1) IDVAR (2) NDV

α OR β SCHEDULES

Table II (Con't.)



TEST: IA143

DATA SET/RUN NUMBER COLLATION SUMMARY

DATE: POST TEST

| DATA SET IDENTIFIER | CONFIGURATION | O/E.T. α | O/E.T. β | PIN | JET PRESS | SEP. Δα | Δβ | Δx | Δz | MACH No. | ΔY -10 | -50 | -100 | -150 | -200 | | | | TEST RUN NUMBERS |
|---|---|---|---|---|---|---|---|---|---|---|---|---|---|---|---|---|---|---|---|
| -VX019 | ORB/ET + SRB(R.H.) | 0 | 0 | | 1225 | 0 | -4 | A | 0 | 4.5 | | | 3215 | 3220 | 3221 | | | | |
| 20 | | | | | 1225 | | -4 | | 100 | 4.5 | | | 3216 | 3219 | 3222 | | | | |
| 21 | | | | | 1225 | | -4 | | 200 | 4.5 | | | 3217 | 3218 | 3223 | | | | |
| 22 | | | | | 0 | | 0 | | 0 | 5.0 | 4539 | 4544 | 4545 | | | | | | |
| 23 | | | | | | | 0 | | 100 | | 4540 | 4543 | 4546 | | | | | | |
| 24 | | | | | | | 0 | | 200 | | 4541 | 4542 | 4547 | | | | | | |
| 25 | | | | | | | -4 | | 0 | | | | 4548 | 4553 | 4554 | | | | |
| 26 | | | | | | | -4 | | 100 | | | | 4549 | 4552 | 4555 | | | | |
| 27 | | | | | | | -4 | | 200 | | | | 4550 | 4551 | 4556 | | | | |
| 28 | | | | | 1225 | | 0 | | 0 | | 4557 | 4562 | 4563 | | | | | | |
| 29 | | | | | | | 0 | | 100 | | 4558 | 4561 | 4564 | | | | | | |
| 30 | | | | | | | 0 | | 200 | | 4559 | 4560 | 4565 | | | | | | |
| 31 | | | | | | | -4 | | 0 | | | | 4566 | 4571 | 4572 | | | | |
| 32 | | | | | | | -4 | | 100 | | | | 4567 | 4570 | 4573 | | | | |
| 33 | | | | | | | -4 | | 200 | | | | 4568 | 4569 | 4574 | | | | |

1 7 13 19 25 31 37 43 49 55 61 67 75 76

IDVAR (1) IDVAR (2) NDV

α OR β SCHEDULES

Table II (Cont.)

Isolated O/ET and SRB Data



TEST: IA143 — DATA SET/RUN NUMBER COLLATION SUMMARY — DATE: Post Test

| DATA SET IDENTIFIER | CONFIGURATION | SCHD. α | SCHD. β | Jet Press. | Angle of Sideslip -30 | -25 | -20 | -15 | -10 | -5 | 0 | 5 | 10 | 15 | 20 | | | |
|---|---|---|---|---|---|---|---|---|---|---|---|---|---|---|---|---|---|---|
| VX034 | Isolated O/ET | -10 | | — | | | | | 2646 | 2750 | | 2862 | | | | | | |
| 35 | | -5 | | — | | | | | 4357 | 4287 | | 4175 | 4497 | | | | | |
| 36 | | 0 | | — | | | | | | | 2425 | | | | | | | |
| 37 | | 10 | | — | | | | | | | 4071 | | | | | | | |
| 38 | Isolated SRB | E | | 0 | 4498 | 4072 | | 3304 | | | 2428 | | | | | | | |
| 39 | | F | | | | | | | | | 2429 | 2648 | | | | | | |
| 40 | | F | | | | | | | | | 2647 | | | | | | | |
| 41 | | D | | | | | 2871 | 2870 | 2869 | 2868 | 2863 | 2864 | 2865 | 2866 | 2867 | | | |
| 42 | | D | | | | | | | | 4853 | 2649 | | 4850 | 4851 | 4852 | | | |
| 43 | | E | | 1225 | | | | | 3923 | 3922 | 3920 | 3921 | | | | | | |

TEST RUN NUMBERS

1 7 13 19 25 31 37 43 49 55 61 67 75 76

IDVAR (1) IDVAR (2) NDV

α OR β SCHEDULES

D: $\alpha_{SRB} = -45°$ to $+15°$ in 5° increments

E: $\alpha_{SRB} = -40°$ to $+15°$ in 5° increments

F: $\alpha_{SRB} = -45°$ to $+10°$ in 5° increments

Table II (Cont.)

# Jet-on Matrix Data



TEST: IA143

## DATA SET/RUN NUMBER COLLATION SUMMARY

DATE: POST TEST

| DATA SET IDENTIFIER | CONFIGURATION | O/ET. α | O/ET. β | PIN | JET PRESS | SEP. Δα | SEP. Δβ | ΔX | ΔZ | ΔY −10 | ΔY −50 | ΔY −100 | ΔY −150 | ΔY −200 | | | | | | | TEST RUN NUMBERS |
|---|---|---|---|---|---|---|---|---|---|---|---|---|---|---|---|---|---|---|---|---|---|
| VX044 | ORB/ET + SRB(R.H.) | 0 | 0 | | 0 | 0 | 0 | A | 0 | 3206 | 3211 | 3212 | | | | | | | | | |
| 45 | | | | | | | | | ↓ | 3299 | | | | | | | | | | | |
| 46 | | | | | | | | | 100 | 3207 | 3210 | 3213 | | | | | | | | | |
| 47 | | | | | | | | | ↓ | 3300 | | | | | | | | | | | |
| 48 | | | | | | | | | 200 | 3208 | 3209 | 3214 | | | | | | | | | |
| 49 | | | | | | | | | ↓ | 3301 | | | | | | | | | | | |
| 50 | | | | | 1225 | | −4 | | 0 | | | 3215 | 3220 | 3221 | | | | | | | |
| 51 | | | | | | | | | ↓ | | | 3296 | | | | | | | | | |
| 52 | | | | | | | | | 100 | | | 3216 | 3219 | 3222 | | | | | | | |
| 53 | | | | | | | | | ↓ | | | 3297 | | | | | | | | | |
| 54 | | | | | | | | | 200 | | | 3217 | 3218 | 3223 | | | | | | | |
| 55 | | | | | | | | | ↓ | | | 3298 | | | | | | | | | |
| 56 | | | | | | | −2 | | 0 | | 3224 | 3229 | 3230 | | | | | | | | |
| 57 | | | | | | | | | 100 | | 3225 | 3228 | 3231 | | | | | | | | |
| 58 | | | | | | | | | 200 | | 3226 | 3227 | 3232 | | | | | | | | |
| 59 | | | | | | | 0 | | 0 | 3233 | 3238 | 3239 | | | | | | | | | |
| 60 | | | | | | | | | 100 | 3234 | 3237 | 3240 | | | | | | | | | |
| 61 | | | | | | | | | 200 | 3235 | 3236 | 3241 | | | | | | | | | |

1 13 19 25 31 37 43 49 55 61 67 75 76

α OR β SCHEDULES

IDVAR (1) IDVAR (2) NDV

Table II (Con't.)

TEST: IA143

DATA SET/RUN NUMBER COLLATION SUMMARY

DATE: POST TEST

| DATA SET IDENTIFIER | CONFIGURATION | O/ET. α | O/ET. β | PIN | JET PRESS | SEP. Δα | SEP. Δβ | SEP. ΔX | SEP. ΔZ | ΔY -10 | ΔY -50 | ΔY -100 | ΔY -150 | ΔY -200 | | | | | | TEST RUN NUMBERS |
|---|---|---|---|---|---|---|---|---|---|---|---|---|---|---|---|---|---|---|---|---|
| VX062 | ORB/ET + SRB(R.H.) | 0 | 0 | | 1225 | 0 | 2 | A | 0 | 3242 | 3247 | 3248 | | | | | | | | |
| 63 | | | | | | | | | 100 | 3243 | 3246 | 3249 | | | | | | | | |
| 64 | | | | | | | | | 200 | 3244 | 3245 | 3250 | | | | | | | | |
| 65 | | | | | | -4 | -4 | | 0 | | | 3251 | 3256 | 3257 | | | | | | |
| 66 | | | | | | | | | 100 | | | 3252 | 3255 | 3258 | | | | | | |
| 67 | | | | | | | | | 200 | | | 3253 | 3254 | 3259 | | | | | | |
| 68 | | | | | | | -2 | | 0 | | 3260 | 3265 | 3266 | | | | | | | |
| 69 | | | | | | | | | | | 3269 | 3274 | 3275 | | | | | | | |
| 70 | | | | | | | | | 100 | | 3261 | 3264 | 3267 | | | | | | | |
| 71 | | | | | | | | | | | 3270 | 3273 | 3276 | | | | | | | |
| 72 | | | | | | | | | 200 | | 3262 | 3263 | 3268 | | | | | | | |
| 73 | | | | | | | | | | | 3271 | 3272 | 3277 | | | | | | | |
| 74 | | | | | | | 0 | | 0 | 3278 | 3283 | 3284 | | | | | | | | |
| 75 | | | | | | | | | 100 | 3279 | 3282 | 3285 | | | | | | | | |
| 76 | | | | | | | | | 200 | 3280 | 3281 | 3286 | | | | | | | | |
| 77 | | | | | | | 2 | | 0 | 3287 | 3292 | 3293 | | | | | | | | |
| 78 | | | | | | | | | 100 | 3288 | 3291 | 3294 | | | | | | | | |
| 79 | | | | | | | | | 200 | 3289 | 3290 | 3295 | | | | | | | | |

1 7 13 19 25 31 37 43 49 55 61 67 75 76

IDVAR (1) IDVAR (2) NDV

α OR β SCHEDULES

Table II. (Cont.)



TEST: IA143

DATA SET/RUN NUMBER COLLATION SUMMARY

DATE: POST TEST

| DATA SET IDENTIFIER | CONFIGURATION | O/ET. α | O/ET. β | PIN | JET PRESS | SEP. PARAMETERS Δα | Δβ | ΔX | ΔZ | ΔY -10 | -50 | -100 | -150 | -200 | | | | |
|---|---|---|---|---|---|---|---|---|---|---|---|---|---|---|---|---|---|---|
| -VX080 | ORB/ET + SRB(R.H.) | 45 | 15 | | 0 | 0 | -4 | A | 0 | | | 2983 | 2988 | 2989 | | | | |
| 81 | | | | | | | | | ↓ | | | 3091 | | | | | | |
| 82 | | | | | | | | | 100 | | | 2984 | 2987 | 2990 | | | | |
| 83 | | | | | | | | | ↓ | | | 3092 | | | | | | |
| 84 | | | | | | | | | 200 | | | 2985 | 2986 | 2991 | | | | |
| 85 | | | | | | | | | ↓ | | | 3093 | | | | | | |
| 86 | | | | | | | -2 | | 0 | | 2992 | 2997 | 2998 | | | | | |
| 87 | | | | | | | | | 100 | | 2993 | 2996 | 2999 | | | | | |
| 88 | | | | | | | | | 200 | | 2994 | 2995 | 3000 | | | | | |
| 89 | | | | | | | 0 | | 0 | 3001 | 3006 | 3007 | | | | | | |
| 90 | | | | | | | | | 100 | 3002 | 3005 | 3008 | | | | | | |
| 91 | | | | | | | | | 200 | 3003 | 3004 | 3009 | | | | | | |
| 92 | | | | | | | 2 | | 0 | 3010 | 3015 | 3016 | | | | | | |
| 93 | | | | | | | | | 100 | 3011 | 3014 | 3017 | | | | | | |
| 94 | | | | | | | | | 200 | 3012 | 3013 | 3018 | | | | | | |
| 95 | | | | | | -4 | -4 | | 0 | | | 3019 | 3024 | 3025 | | | | |
| 96 | | | | | | | | | 100 | | | 3020 | 3023 | 3026 | | | | |
| 97 | | | | | | | | | 200 | | | 3021 | 3022 | 3027 | | | | |

TEST RUN NUMBERS

1 13 15 25 31 37 43 49 55 61 67 75 76

α OR β SCHEDULES

IDVAR (1) IDVAR (2) NDV

Table II. (Con't.)

TEST: IA143

DATA SET/RUN NUMBER COLLATION SUMMARY

DATE: POST TEST

| DATA SET IDENTIFIER | CONFIGURATION | O/E.T. α | O/E.T. β | PIN | JET PRESS | SEP. Δα | SEP. Δβ | SEP. ΔX | SEP. ΔZ | ΔY -10 | ΔY -50 | ΔY -100 | ΔY -150 | ΔY -200 | | | | | |
|---|---|---|---|---|---|---|---|---|---|---|---|---|---|---|---|---|---|---|---|
| -VX098 | ORB/ET + SRB(R.H.) | -15 | 15 | | 0 | -4 | -2 | A | 0 | | 3028 | 3033 | 3034 | | | | | | |
| -VX099 | | | | | | | | | 100 | | 3029 | 3032 | 3035 | | | | | | |
| -VX100 | | | | | | | | | 200 | | 3030 | 3031 | 3036 | | | | | | |
| 101 | | | | | | | 0 | | 0 | 3037 | 3042 | 3043 | | | | | | | |
| 102 | | | | | | | | | 100 | 3038 | 3041 | 3044 | | | | | | | |
| 103 | | | | | | | | | 200 | 3039 | 3040 | 3045 | | | | | | | |
| 104 | | | | | | | 2 | | 0 | 3046 | 3051 | 3052 | | | | | | | |
| 105 | | | | | | | | | 100 | 3047 | 3050 | 3053 | | | | | | | |
| 106 | | | | | | | | | 200 | 3048 | 3049 | 3054 | | | | | | | |
| 107 | | | | | | -8 | -4 | | 100 | | | 3055 | 3060 | 3061 | | | | | |
| 108 | | | | | | | | | 150 | | | 3056 | 3059 | 3062 | | | | | |
| 109 | | | | | | | | | 200 | | | 3057 | 3058 | 3063 | | | | | |
| 110 | | | | | | | -2 | | 100 | | 3064 | 3069 | 3070 | | | | | | |
| 111 | | | | | | | | | 150 | | 3065 | 3068 | 3071 | | | | | | |
| 112 | | | | | | | | | 200 | | 3066 | 3067 | 3072 | | | | | | |
| 113 | | | | | | | 0 | | 100 | 3073 | 3078 | 3079 | | | | | | | |
| 114 | | | | | | | | | 150 | 3074 | 3077 | 3080 | | | | | | | |
| 115 | | | | | | | | | 200 | 3075 | 3076 | 3081 | | | | | | | |

TEST RUN NUMBERS

1 13 19 25 31 37 43 49 55 61 67 75 76

IDVAR (1) IDVAR (2) NDV

α OR β SCHEDULES

Table II (Con't.)



TEST: IA143

DATA SET/RUN NUMBER COLLATION SUMMARY

DATE: POST TEST

| DATA SET IDENTIFIER | CONFIGURATION | O/ET. α | O/ET. β | PIN | JET PRESS | SEP. Δα | SEP. Δβ | SEP. ΔX | SEP. ΔZ | ΔY -70 | ΔY -50 | ΔY -100 | ΔY -150 | ΔY -200 | | | | | TEST RUN NUMBERS |
|---|---|---|---|---|---|---|---|---|---|---|---|---|---|---|---|---|---|---|---|
| VX116 | ORB/ET + SRB(R.H.) | -15 | 15 | | 0 | -8 | 2 | A | 100 | 3082 | 3087 | 3088 | | | | | | | |
| 117 | | | | | | | | | 150 | 3083 | 3086 | 3089 | | | | | | | |
| 118 | | | | | | | | | 200 | 3084 | 3085 | 3090 | | | | | | | |
| 119 | | | | | 1225 | 0 | -4 | | 0 | | | 2872 | 2872 | 2878 | | | | | |
| 120 | | | | | | | | | | | | 2980 | | | | | | | |
| 121 | | | | | | | | | 100 | | | 2873 | 2876 | 2879 | | | | | |
| 122 | | | | | | | | | | | | 2981 | | | | | | | |
| 123 | | | | | | | | | 200 | | | 2874 | 2875 | 2880 | | | | | |
| 124 | | | | | | | | | | | | 2982 | | | | | | | |
| 125 | | | | | | | -2 | | 0 | | 2881 | 2886 | 2887 | | | | | | |
| 126 | | | | | | | | | 100 | | 2882 | 2885 | 2888 | | | | | | |
| 127 | | | | | | | | | 200 | | 2883 | 2884 | 2889 | | | | | | |
| 128 | | | | | | | 0 | | 0 | 2890 | 2895 | 2896 | | | | | | | |
| 129 | | | | | | | | | 100 | 2891 | 2894 | 2897 | | | | | | | |
| 130 | | | | | | | | | 200 | 2892 | 2893 | 2898 | | | | | | | |
| 131 | | | | | | | 2 | | 0 | 2899 | 2904 | 2905 | | | | | | | |
| 132 | | | | | | | | | 100 | 2900 | 2903 | 2906 | | | | | | | |
| 133 | | | | | | | | | 200 | 2901 | 2902 | 2907 | | | | | | | |

1 7 13 15 23 31 37 43 49 55 61 67 73 76

IDVAR (1) IDVAR (2) NDV

α OR β SCHEDULES

Table II (cont.)

TEST: IA143

DATA SET/RUN NUMBER COLLATION SUMMARY

DATE: POST TEST

| DATA SET IDENTIFIER | CONFIGURATION | O/ET α | O/ET β | PIN | JET PRESS | SEP. Δα | Δβ | Δx | Δz | ΔY −10 | −50 | −100 | −150 | −200 | | | | |
|---|---|---|---|---|---|---|---|---|---|---|---|---|---|---|---|---|---|---|
| VX 134 | ORB/ET + SRB(R.H.) | −15 | 15 | | 1225 | −4 | −4 | A | 0 | | | 2908 | 2913 | 2914 | | | | |
| 135 | | | | | | | | | 100 | | | 2909 | 2912 | 2915 | | | | |
| 136 | | | | | | | | | 200 | | | 2910 | 2911 | 2916 | | | | |
| 137 | | | | | | | −2 | | 0 | | 2917 | 2922 | 2923 | | | | | |
| 138 | | | | | | | | | 100 | | 2918 | 2921 | 2924 | | | | | |
| 139 | | | | | | | | | 200 | | 2919 | 2920 | 2925 | | | | | |
| 140 | | | | | | | 0 | | 0 | 2926 | 2931 | 2932 | | | | | | |
| 141 | | | | | | | | | 100 | 2927 | 2930 | 2933 | | | | | | |
| 142 | | | | | | | | | 200 | 2928 | 2929 | 2934 | | | | | | |
| 143 | | | | | | | 2 | | 0 | 2935 | 2940 | 2941 | | | | | | |
| 144 | | | | | | | | | 100 | 2936 | 2939 | 2942 | | | | | | |
| 145 | | | | | | | | | 200 | 2937 | 2938 | 2943 | | | | | | |
| 146 | | | | | | −8 | −4 | | 100 | | | 2944 | 2949 | 2950 | | | | |
| 147 | | | | | | | | | 150 | | | 2945 | 2948 | 2951 | | | | |
| 148 | | | | | | | | | 200 | | | 2946 | 2947 | 2952 | | | | |
| 149 | | | | | | | −2 | | 100 | | 2953 | 2958 | 2959 | | | | | |
| 150 | | | | | | | | | 150 | | 2954 | 2957 | 2960 | | | | | |
| 151 | | | | | | | | | 200 | | 2955 | 2956 | 2961 | | | | | |

TEST RUN NUMBERS

1 7 13 19 25 31 37 43 49 55 61 67 73 76

IDVAR (1) IDVAR (2) NDV

α OR β SCHEDULES

Table II (Cont.)



TEST: IA143

DATA SET/RUN NUMBER COLLATION SUMMARY

DATE: POST TEST

| DATA SET IDENTIFIER | CONFIGURATION | O/ET. α | O/ET. β | PIN | JET PRESS | SEP. Δα | SEP. Δβ | SEP. Δx | SEP. Δz | ΔY -10 | ΔY -50 | ΔY -70 | ΔY -100 | ΔY -120 | ΔY -150 | ΔY -200 | | | TEST RUN NUMBERS |
|---|---|---|---|---|---|---|---|---|---|---|---|---|---|---|---|---|---|---|---|
| -VX 152 | ORB/ET + SRB(R.H.) | -15 | -15 | | 1225 | -8 | 0 | A | 100 | 2962 | 2967 | | 2968 | | | | | | |
| 153 | | | | | | | | | 150 | 2963 | 2966 | | 2969 | | | | | | |
| 154 | | | | | | | | | 200 | 2964 | 2965 | | 2970 | | | | | | |
| 155 | | | | | | | 2 | | 100 | 2971 | 2976 | | 2977 | | | | | | |
| 156 | | | | | | | | | 150 | 2972 | 2975 | | 2978 | | | | | | |
| 157 | | | | | | | | | 200 | 2973 | 2974 | | 2979 | | | | | | |
| 158 | | | -15 | | | 0 | -4 | | 0 | | | | | 3307 | 3312 | 3313 | | | |
| 159 | | | | | | | | | | | | | | | 3567 | | | | |
| 160 | | | | | | | | | 100 | | | | | 3308 | 3311 | 3314 | | | |
| 161 | | | | | | | | | | | | | | | 3568 | | | | |
| 162 | | | | | | | | | 200 | | | | | 3309 | 3310 | 3315 | | | |
| 163 | | | | | | | | | | | | | | | 3569 | | | | |
| 164 | | | | | | | -2 | | 0 | | | 3316 | 3321 | | 3322 | | | | |
| 165 | | | | | | | | | 100 | | | 3317 | 3320 | | 3323 | | | | |
| 166 | | | | | | | | | 200 | | | 3318 | 3319 | | 3324 | | | | |
| 167 | | | | | | | 0 | | 0 | | 3325 | | 3330 | | 3331 | | | | |
| 168 | | | | | | | | | 100 | | 3326 | | 3329 | | 3332 | | | | |
| 169 | | | | | | | | | 200 | | 3327 | | 3328 | | 3333 | | | | |

1 13 19 25 31 37 43 49 55 61 67 73 76

α OR β SCHEDULES

IDVAR (1) IDVAR (2) NDV

Table II (Cont.)

TEST: IA143

DATA SET/RUN NUMBER COLLATION SUMMARY

DATE: POST TEST

| DATA SET IDENTIFIER | CONFIGURATION | O/ET. α | O/ET. β | PIN | JET PRESS | SEP. PARAMETERS Δα | Δβ | ΔX | ΔZ | ΔY -10 | -50 | -70 | -100 | -120 | -150 | -200 | | | TEST RUN NUMBERS |
|---|---|---|---|---|---|---|---|---|---|---|---|---|---|---|---|---|---|---|---|
| VX 170 | ORB/ET + SRB(R.H.) | -15 | -15 | | 1225 | 0 | 2 | A | 0 | | 3334 | | 3339 | | 3340 | | | | |
| 171 | | | | | | | | | 100 | | 3335 | | 3338 | | 3341 | | | | |
| 172 | | | | | | | | | 200 | | 3336 | | 3337 | | 3342 | | | | |
| 173 | | | | | | -4 | -4 | | 0 | | | | | 3343 | 3348 | 3349 | | | |
| 174 | | | | | | | | | 100 | | | | | 3344 | 3347 | 3350 | | | |
| 175 | | | | | | | | | 200 | | | | | 3345 | 3346 | 3503 | | | |
| 176 | | | | | | | -2 | | 0 | | | 3504 | 3509 | | 3510 | | | | |
| 177 | | | | | | | | | 100 | | | 3505 | 3508 | | 3511 | | | | |
| 178 | | | | | | | | | 200 | | | 3506 | 3507 | | 3512 | | | | |
| 179 | | | | | | | 0 | | 0 | | 3513 | | 3518 | | 3519 | | | | |
| 180 | | | | | | | | | 100 | | 3514 | | 3517 | | 3520 | | | | |
| 181 | | | | | | | | | 200 | | 3515 | | 3516 | | 3521 | | | | |
| 182 | | | | | | | 2 | | 0 | | 3522 | | 3527 | | 3528 | | | | |
| 183 | | | | | | | | | 100 | | 3523 | | 3526 | | 3529 | | | | |
| 184 | | | | | | | | | 200 | | 3524 | | 3525 | | 3530 | | | | |
| 185 | | | | | | -8 | -4 | | 100 | | | | | 3531 | 3536 | 3537 | | | |
| 186 | | | | | | | | | 150 | | | | | 3532 | 3535 | 3538 | | | |
| 187 | | | | | | | | | 200 | | | | | 3533 | 3534 | 3539 | | | |

1 7 13 19 25 31 37 43 49 55 61 67 73 76

IDVAR (1) IDVAR (2) NDV

α OR β SCHEDULES

Table II (Con't.)



TEST: IA143

DATA SET/RUN NUMBER COLLATION SUMMARY

DATE: POST TEST

| DATA SET IDENTIFIER | CONFIGURATION | O/ET. α | O/ET. β | PIN | JET PRESS | SEP. Δα | SEP. Δβ | Δx | Δz | ΔY -10 | ΔY -50 | ΔY -70 | ΔY -100 | ΔY -120 | ΔY -150 | ΔY -200 | | | |
|---|---|---|---|---|---|---|---|---|---|---|---|---|---|---|---|---|---|---|---|
| -VX 188 | ORB/ET + SRB(R.H.) | -15 | -15 | | 1225 | -8 | -2 | A | 100 | | | 3540 | 3545 | | 3546 | | | | |
| 189 | | | | | | | | | 150 | | | 3541 | 3544 | | 3547 | | | | |
| 190 | | | | | | | | | 200 | | | 3542 | 3543 | | 3548 | | | | |
| 191 | | | | | | | 0 | | 100 | | 3549 | | 3554 | | 3555 | | | | |
| 192 | | | | | | | | | 150 | | 3550 | | 3553 | | 3556 | | | | |
| 193 | | | | | | | | | 200 | | 3551 | | 3552 | | 3557 | | | | |
| 194 | | | | | | | 2 | | 100 | | 3558 | | 3563 | | 3564 | | | | |
| 195 | | | | | | | | | 150 | | 3559 | | 3562 | | 3565 | | | | |
| 196 | | | | | | | | | 200 | | 3560 | | 3561 | | 3566 | | | | |
| 197 | | | | | 0 | 0 | -4 | | 0 | | | | | 3351 | 3357 | 3358 | | | |
| 198 | | | | | | | | | | | | | | 3352 | 3461 | | | | |
| 199 | | | | | | | | | 100 | | | | | 3353 | 3356 | 3359 | | | |
| 200 | | | | | | | | | | | | | | | 3462 | | | | |
| 201 | | | | | | | | | 200 | | | | | 3354 | 3355 | 3360 | | | |
| 202 | | | | | | | | | | | | | | | 3463 | | | | |
| 203 | | | | | | | -2 | | 0 | | | 3361 | 3366 | | 3367 | | | | |
| 204 | | | | | | | | | 100 | | | 3362 | 3365 | | 3368 | | | | |
| 205 | | | | | | | | | 200 | | | 3363 | 3364 | | 3369 | | | | |

TEST RUN NUMBERS

1 13 15 25 31 37 43 45 55 61 67 75 76

α OR β SCHEDULES

IDVAR (1) IDVAR (2) NDV

Table II (Con't)

TEST: IA143

DATA SET/RUN NUMBER COLLATION SUMMARY

DATE: POST TEST

| DATA SET IDENTIFIER | CONFIGURATION | O/ET. α | O/ET. β | PIN | JET PRESS | SEP. Δα | SEP. Δβ | SEP. Δx | SEP. Δz | ΔY -10 | ΔY -50 | ΔY -70 | ΔY -100 | ΔY -120 | ΔY -150 | ΔY -200 | | | TEST RUN NUMBERS |
|---|---|---|---|---|---|---|---|---|---|---|---|---|---|---|---|---|---|---|---|
| VX 206 | ORB/ET + SRB(R.H.) | -15 | -15 | | 0 | 0 | 0 | A | 0 | | 3370 | | 3375 | | 3376 | | | | |
| 207 | | | | | | | | | 100 | | 3371 | | 3374 | | 3377 | | | | |
| 208 | | | | | | | | | 200 | | 3372 | | 3373 | | 3378 | | | | |
| 209 | | | | | | | 2 | | 0 | | 3379 | | 3384 | | 3385 | | | | |
| 210 | | | | | | | | | 100 | | 3380 | | 3383 | | 3386 | | | | |
| 211 | | | | | | | | | 200 | | 3381 | | 3382 | | 3387 | | | | |
| 212 | | | | | | -4 | -4 | | 0 | | | | | 3388 | 3393 | 3394 | | | |
| 213 | | | | | | | | | 100 | | | | | 3389 | 3392 | 3395 | | | |
| 214 | | | | | | | | | 200 | | | | | 3390 | 3391 | 3396 | | | |
| 215 | | | | | | | -2 | | 0 | | | 3397 | 3402 | | 3403 | | | | |
| 216 | | | | | | | | | 100 | | | 3398 | 3401 | | 3404 | | | | |
| 217 | | | | | | | | | 200 | | | 3399 | 3400 | | 3405 | | | | |
| 218 | | | | | | | 0 | | 0 | | 3406 | | 3411 | | 3412 | | | | |
| 219 | | | | | | | | | 100 | | 3407 | | 3410 | | 3413 | | | | |
| 220 | | | | | | | | | 200 | | 3408 | | 3409 | | 3414 | | | | |
| 221 | | | | | | | 2 | | 0 | | 3415 | | 3420 | | 3421 | | | | |
| 222 | | | | | | | | | 100 | | 3416 | | 3419 | | 3422 | | | | |
| 223 | | | | | | | | | 200 | | 3417 | | 3418 | | 3423 | | | | |

1 13 15 25 31 37 43 49 55 61 67 75 76

IDVAR (1) IDVAR (2) NDV

α OR β SCHEDULES

Table II. (Con't.)

TEST: IA143

DATA SET/RUN NUMBER COLLATION SUMMARY

DATE: POST TEST

| DATA SET IDENTIFIER | CONFIGURATION | O/ET. α | O/ET. β | PIN | JET PRESS | SEP. Δα | SEP. Δβ | SEP. ΔX | SEP. ΔZ | ΔY -10 | ΔY -50 | ΔY -70 | ΔY -100 | ΔY -120 | ΔY -150 | ΔY -200 |
|---|---|---|---|---|---|---|---|---|---|---|---|---|---|---|---|---|
| VX 224 | ORB/ET + SRB(R.H.) | -15 | -15 | | 0 | -8 | -4 | A | 100 | | | | | 3424 | 3429 | 3430 |
| 225 | | | | | | | | | 150 | | | | | 3425 | 3428 | 3431 |
| 226 | | | | | | | | | 200 | | | | | 3426 | 3427 | 3432 |
| 227 | | | | | | | -2 | | 100 | | | 3433 | 3439 | | 3440 | |
| 228 | | | | | | | | | 150 | | | 3434 | 3437 | | 3441 | |
| 229 | | | | | | | | | | | | | 3438 | | | |
| 230 | | | | | | | | | 200 | | | 3435 | 3436 | | 3442 | |
| 231 | | | | | | | 0 | | 100 | | 3443 | | 3448 | | 3449 | |
| 232 | | | | | | | | | 150 | | 3444 | | 3447 | | 3450 | |
| 233 | | | | | | | | | 200 | | 3445 | | 3446 | | 3451 | |
| 234 | | | | | | | 2 | | 100 | | 3452 | | 3457 | | 3458 | |
| 235 | | | | | | | | | 150 | | 3453 | | 3456 | | 3459 | |
| 236 | | | | | | | | | 200 | | 3454 | | 3455 | | 3460 | |
| 237 | | -10 | -10 | | 1235 | -4 | -4 | | 50 | | | | 3633 | 3648 | 3638 | 3639 |
| 238 | | | | | | | | | | | | | | 3684 | 3653 | 3654 |
| 239 | | | | | | | | | 100 | | | | 3634 | 3649 | 3637 | 3640 |
| 240 | | | | | | | | | | | | | | 3685 | 3652 | 3655 |

TEST RUN NUMBERS

1 7 13 19 25 31 37 43 49 55 61 67 75 76

IDVAR (1) IDVAR (2) NDV

α OR β SCHEDULES

Table II (Con't.)

TEST: IA143 — DATA SET/RUN NUMBER COLLATION SUMMARY — DATE: POST TEST

| DATA SET IDENTIFIER | CONFIGURATION | O/E.T. α | O/E.T. β | PIN | JET PRESS | SEP. Δα | SEP. Δβ | SEP. ΔX | SEP. ΔZ | ΔY -10 | ΔY -50 | ΔY -70 | ΔY -100 | ΔY -120 | ΔY -150 | ΔY -200 | | | TEST RUN NUMBERS |
|---|---|---|---|---|---|---|---|---|---|---|---|---|---|---|---|---|---|---|---|
| -VX241 | ORB/ET + SRB(R.H.) | -10 | -10 | | 1225 | -4 | -4 | A | 200 | | | | 3635 | 3650 | 3636 | 3641 | | | |
| 242 | | | | | | | | | | | | | | 3686 | 3651 | 3656 | | | |
| 243 | | | | | | | 2 | | 50 | | | 3657 | 3662 | | 3663 | | | | |
| 244 | | | | | | | | | 100 | | | 3658 | 3661 | | 3664 | | | | |
| 245 | | | | | | | | | 200 | | | 3659 | 3660 | | 3665 | | | | |
| 246 | | | | | | | 0 | | 50 | | 3666 | | 3671 | | 3672 | | | | |
| 247 | | | | | | | | | 100 | | 3667 | | 3670 | | 3673 | | | | |
| 248 | | | | | | | | | 200 | | 3668 | | 3669 | | 3674 | | | | |
| 249 | | | | | | | 2 | | 50 | | 3675 | | 3680 | | 3681 | | | | |
| 250 | | | | | | | | | 100 | | 3676 | | 3679 | | 3682 | | | | |
| 251 | | | | | | | | | 200 | | 3677 | | 3678 | | 3683 | | | | |
| 252 | | | -10 | 0 | 0 | 0 | -4 | | 0 | | | | | 3687 | 3692 | 3693 | | | |
| 253 | | | | | | | | | | | | | | | 3796 | | | | |
| 254 | | | | | | | | | 100 | | | | | 3688 | 3691 | 3694 | | | |
| 255 | | | | | | | | | | | | | | | 3797 | | | | |
| 256 | | | | | | | | | 200 | | | | | | 3690 | 3699 | | | |
| 257 | | | | | | | | | | | | | | | 3798 | | | | |
| 258 | | | | | | | | A2 | | | | | | 3689 | | 3695 | | | |

1 7 13 19 25 31 37 43 49 55 61 67 73 76

IDVAR (1) IDVAR (2) NDV

α OR β SCHEDULES

Table II (Con't.)

TEST: IA143

DATA SET/RUN NUMBER COLLATION SUMMARY

DATE: POST TEST

| DATA SET IDENTIFIER | CONFIGURATION | O/ET. α | O/ET. β | PIN | JET PRESS | SEP. Δα | SEP. Δβ | SEP. ΔX | SEP. ΔZ | ΔY -10 | ΔY -50 | ΔY -70 | ΔY -100 | ΔY -120 | ΔY -150 | ΔY -200 | | | TEST RUN NUMBERS |
|---|---|---|---|---|---|---|---|---|---|---|---|---|---|---|---|---|---|---|---|
| VX 259 | ORB/ET + SRB(R.H.) | -10 | 0 | | 0 | 0 | -2 | A | 0 | | | 3696 | 3702 | | 3703 | | | | |
| 260 | | | | | | | | | 100 | | | 3697 | 3701 | | 3704 | | | | |
| 261 | | | | | | | | | 200 | | | 3698 | 3700 | | 3705 | | | | |
| 262 | | | | | | | 0 | | 0 | | 3706 | | 3711 | | 3712 | | | | |
| 263 | | | | | | | | | 100 | | 3707 | | 3710 | | 3713 | | | | |
| 264 | | | | | | | | | 200 | | 3708 | | 3709 | | 3714 | | | | |
| 265 | | | | | | | 2 | | 0 | | 3715 | | 3720 | | 3721 | | | | |
| 266 | | | | | | | | | 100 | | 3716 | | 3719 | | 3722 | | | | |
| 267 | | | | | | | | | 200 | | 3717 | | 3718 | | 3723 | | | | |
| 268 | | | | | | -4 | -4 | | 0 | | | | | 3724 | 3729 | 3730 | | | |
| 269 | | | | | | | | | 100 | | | | | 3725 | 3728 | 3731 | | | |
| 270 | | | | | | | | | 200 | | | | | 3726 | 3727 | 3732 | | | |
| 271 | | | | | | | -2 | | 0 | | | 3733 | 3738 | | 3739 | | | | |
| 272 | | | | | | | | | 100 | | | 3734 | 3737 | | 3740 | | | | |
| 273 | | | | | | | | | 200 | | | 3735 | 3736 | | 3741 | | | | |
| 274 | | | | | | | 0 | | 0 | | 3742 | | 3747 | | 3748 | | | | |
| 275 | | | | | | | | | 100 | | 3743 | | 3746 | | 3749 | | | | |
| 276 | | | | | | | | | 200 | | 3744 | | 3745 | | 3750 | | | | |

1 7 13 19 25 31 37 43 49 55 61 67 75 76

IDVAR (1) IDVAR (2) NDV

α OR β SCHEDULES

Table II (Con't)

TEST: IA143

DATA SET/RUN NUMBER COLLATION SUMMARY

DATE: POST TEST

| DATA SET IDENTIFIER | CONFIGURATION | O/ET. α | O/ET. β | PIN | JET PRESS | SEP. Δα | SEP. Δβ | SEP. ΔX | SEP. ΔZ | ΔY -10 | ΔY -50 | ΔY -70 | ΔY -100 | ΔY -120 | ΔY -150 | ΔY -200 | | | |
|---|---|---|---|---|---|---|---|---|---|---|---|---|---|---|---|---|---|---|---|
| VX277 | ORB/ET + SRB(R.H.) | -10 | 0 | | 0 | -4 | 2 | A | 0 | | 3751 | | 3756 | | 3757 | | | | |
| 278 | | | | | | -4 | 2 | | 100 | | 3752 | | 3755 | | 3758 | | | | |
| 279 | | | | | | -4 | 2 | | 200 | | 3753 | | 3754 | | 3759 | | | | |
| 280 | | | | | | -8 | -4 | | 100 | | | | | 3760 | 3765 | 3766 | | | |
| 281 | | | | | | | -4 | | 150 | | | | | 3761 | 3764 | 3767 | | | |
| 282 | | | | | | | -4 | | 200 | | | | | 3762 | 3763 | 3768 | | | |
| 283 | | | | | | | -2 | | 100 | | | 3769 | 3774 | | 3775 | | | | |
| 284 | | | | | | | -2 | | 150 | | | 3770 | 3773 | | 3776 | | | | |
| 285 | | | | | | | -2 | | 200 | | | 3771 | 3772 | | 3777 | | | | |
| 286 | | | | | | | 0 | | 100 | | 3778 | | 3783 | | 3784 | | | | |
| 287 | | | | | | | 0 | | 150 | | 3779 | | 3782 | | 3785 | | | | |
| 288 | | | | | | | 0 | | 200 | | 3780 | | 3781 | | 3786 | | | | |
| 289 | | | | | | | 2 | | 100 | | 3787 | | 3792 | | 3793 | | | | |
| 290 | | | | | | | 2 | | 150 | | 3788 | | 3791 | | 3794 | | | | |
| 291 | | | | | | | 2 | | 200 | | 3789 | | 3790 | | 3795 | | | | |

TEST RUN NUMBERS

1 7 13 19 25 31 37 43 49 55 61 67 75 76

IDVAR (1) IDVAR (2) NDV

α OR β SCHEDULES

Table II (Con't.)

TEST: IA143

DATA SET/RUN NUMBER COLLATION SUMMARY

DATE: POST TEST

| DATA SET IDENTIFIER | CONFIGURATION | O/ET. α | O/ET. β | PIN | JET PRESS | SEP. Δα | SEP. Δβ | SEP. ΔX | SEP. ΔZ | ΔY −10 | ΔY −50 | ΔY −70 | ΔY −100 | ΔY −120 | ΔY −150 | ΔY −200 |
|---|---|---|---|---|---|---|---|---|---|---|---|---|---|---|---|---|
| VX292 | ORB/ET + SRB(R.H.) | −10 | 0 | | 1225 | 0 | −4 | A | 0 | | | | | 3799 | 3804 | 3805 |
| 293 | | | | | | | | | | | | | | | 3917 | |
| 294 | | | | | | | | | 100 | | | | | 3800 | 3803 | 3806 |
| 295 | | | | | | | | | | | | | | | 3918 | |
| 296 | | | | | | | | | 200 | | | | | 3801 | 3802 | 3807 |
| 297 | | | | | | | | | | | | | | | 3919 | |
| 298 | | | | | | | −2 | | 0 | | | 3808 | 3813 | | 3814 | |
| 299 | | | | | | | | | 100 | | | 3809 | 3812 | | 3815 | |
| 300 | | | | | | | | | 200 | | | 3810 | 3811 | | 3816 | |
| 301 | | | | | | | 0 | | 0 | | 3817 | | 3822 | | 3823 | |
| 302 | | | | | | | | | 100 | | 3818 | | 3821 | | 3824 | |
| 303 | | | | | | | | | 200 | | 3819 | | 3820 | | 3825 | |
| 304 | | | | | | | 2 | | 0 | | 3826 | | 3831 | | 3832 | |
| 305 | | | | | | | | | 100 | | 3827 | | 3830 | | 3833 | |
| 306 | | | | | | | | | 200 | | 3828 | | 3829 | | 3834 | |

TEST RUN NUMBERS

1 13 19 25 31 37 43 49 55 61 67 75 76

IDVAR (1) IDVAR (2) NDV

α OR β SCHEDULES

Table II (Con't)

TEST: IA143

DATA SET/RUN NUMBER COLLATION SUMMARY

DATE: POST TEST

| DATA SET IDENTIFIER | CONFIGURATION | O/E.T. α | O/E.T. β | PIN | JET PRESS | SEP. Δα | SEP. Δβ | Δx | Δz | ΔY -10 | -50 | -70 | -100 | -120 | -150 | -200 | | | TEST RUN NUMBERS |
|---|---|---|---|---|---|---|---|---|---|---|---|---|---|---|---|---|---|---|---|
| VX307 | ORB/ET + SRB(R.H.) | 10 | 0 | | 1225 | -4 | -4 | A | 0 | | | | | 3835 | 3841 | 3842 | | | |
| 308 | | | | | | | | | | | | | | 3836 | [illegible] | [illegible] | | | |
| 309 | | | | | | | | | | | | | | 3845 | 3850 | 3851 | | | |
| 310 | | | | | | | | | 100 | | | | | 3837 | 3840 | 3843 | | | |
| 311 | | | | | | | | | | | | | | 3846 | 3849 | 3852 | | | |
| 312 | | | | | | | | | 200 | | | | | 3838 | 3839 | 3844 | | | |
| 313 | | | | | | | | | | | | | | 3847 | 3848 | 3853 | | | |
| 314 | | | | | | | -2 | | 0 | | | 3854 | 3859 | | 3860 | | | | |
| 315 | | | | | | | | | 100 | | | 3855 | 3858 | | 3861 | | | | |
| 316 | | | | | | | | | 200 | | | 3856 | 3857 | | 3862 | | | | |
| 317 | | | | | | | 0 | | 0 | | 3863 | | 3868 | | 3869 | | | | |
| 318 | | | | | | | | | 100 | | 3864 | | 3867 | | 3870 | | | | |
| 319 | | | | | | | | | 200 | | 3865 | | 3866 | | 3871 | | | | |
| 320 | | | | | | | 2 | | 0 | | 3872 | | 3877 | | 3878 | | | | |
| 321 | | | | | | | | | 100 | | 3873 | | 3876 | | 3879 | | | | |
| 322 | | | | | | | | | 200 | | 3874 | | 3875 | | 3880 | | | | |

1 7 13 19 25 31 37 43 49 55 61 67 73 76

IDVAR (1) IDVAR (2) NDV

α OR β SCHEDULES

Table II, (Con't)

TEST: IA143

DATA SET/RUN NUMBER COLLATION SUMMARY

DATE: POST TEST

| DATA SET IDENTIFIER | CONFIGURATION | O/E.T. α | O/E.T. β | PIN | JET PRESS | SEP. Δα | SEP. Δβ | SEP. ΔX | SEP. ΔZ | ΔY −10 | ΔY −50 | ΔY −70 | ΔY −100 | ΔY −120 | ΔY −150 | ΔY −200 | | |
|---|---|---|---|---|---|---|---|---|---|---|---|---|---|---|---|---|---|---|
| VX323 | ORB/ET + SRB(R.H.) | -10 | 0 | | 1225 | -8 | -4 | A | 100 | | | | | 3881 | 3886 | 3887 | | |
| 324 | | | | | | | | | 150 | | | | | 3882 | 3885 | 3888 | | |
| 325 | | | | | | | | | 200 | | | | | 3883 | 3884 | 3889 | | |
| 326 | | | | | | | -2 | | 100 | | | 3890 | 3895 | | 3896 | | | |
| 327 | | | | | | | | | 150 | | | 3891 | 3894 | | 3897 | | | |
| 328 | | | | | | | | | 200 | | | 3892 | 3893 | | 3898 | | | |
| 329 | | | | | | | 0 | | 100 | | 3899 | | 3904 | | 3905 | | | |
| 330 | | | | | | | | | 150 | | 3900 | | 3903 | | 3906 | | | |
| 331 | | | | | | | | | 200 | | 3901 | | 3902 | | 3907 | | | |
| 332 | | | | | | | 2 | | 100 | | 3908 | | 3913 | | 3914 | | | |
| 333 | | | | | | | | | 150 | | 3909 | | 3912 | | 3915 | | | |
| 334 | | | | | | | | | 200 | | 3910 | | 3911 | | 3916 | | | |
| 335 | | 10 | 0 | | | 0 | -4 | | 0 | | | | | 3924 | 3929 | 3930 | | |
| 336 | | | | | | | | | | | | | | | 4032 | | | |
| 337 | | | | | | | | | 100 | | | | | 3925 | 3928 | 3931 | | |
| 338 | | | | | | | | | | | | | | | 4033 | | | |
| 339 | | | | | | | | | 200 | | | | | 3926 | 3927 | 3932 | | |
| 340 | | | | | | | | | | | | | | | 4034 | | | |

TEST RUN NUMBERS

1 13 19 25 31 37 43 49 55 61 67 75 76

α OR β SCHEDULES

IDVAR (1) IDVAR (2) NDV

Table II. (Con't.)

TEST: IA143

DATA SET/RUN NUMBER COLLATION SUMMARY

DATE: POST TEST

| DATA SET IDENTIFIER | CONFIGURATION | O/ET. α | O/ET. β | PIN | JET PRESS | SEP. Δα | Δβ | Δx | Δz | ΔY -10 | -50 | -70 | -100 | -120 | -150 | -200 | | | TEST RUN NUMBERS |
|---|---|---|---|---|---|---|---|---|---|---|---|---|---|---|---|---|---|---|---|
| VX 341 | ORB/ET + SRB(R.H.) | 10 | 0 | | 1225 | 0 | -2 | A | 0 | | | 3933 | 3938 | | 3939 | | | | |
| 342 | | | | | | | -2 | | 100 | | | 3934 | 3937 | | 3940 | | | | |
| 343 | | | | | | | -2 | | 200 | | | 3935 | 3936 | | 3941 | | | | |
| 344 | | | | | | | 0 | | 0 | | 3942 | | 3947 | | 3948 | | | | |
| 345 | | | | | | | 0 | | 100 | | 3943 | | 3946 | | 3949 | | | | |
| 346 | | | | | | | 0 | | 200 | | 3944 | | 3945 | | 3950 | | | | |
| 347 | | | | | | | 2 | | 0 | | 3957 | | 3956 | | 3957 | | | | |
| 348 | | | | | | | 2 | | 100 | | 3952 | | 3955 | | 3958 | | | | |
| 349 | | | | | | | 2 | | 200 | | 3953 | | 3954 | | 3959 | | | | |
| 350 | | | | | | -4 | -4 | | 0 | | | | | 3960 | 3965 | 3966 | | | |
| 351 | | | | | | | -4 | | 100 | | | | | 3961 | 3964 | 3967 | | | |
| 352 | | | | | | | -4 | | 200 | | | | | 3962 | 3963 | 3968 | | | |
| 353 | | | | | | | -2 | | 0 | | | 3969 | 3974 | | 3975 | | | | |
| 354 | | | | | | | -2 | | 100 | | | 3970 | 3973 | | 3976 | | | | |
| 355 | | | | | | | -2 | | 200 | | | 3971 | 3972 | | 3977 | | | | |
| 356 | | | | | | | 0 | | 0 | | 3978 | | 3983 | | 3984 | | | | |
| 357 | | | | | | | 0 | | 100 | | 3979 | | 3982 | | 3985 | | | | |
| 358 | | | | | | | 0 | | 200 | | 3980 | | 3981 | | 3986 | | | | |

IDVAR (1) IDVAR (2) NDV

α OR β SCHEDULES

TABLE II (CON'T)

TEST: IA143

DATA SET/RUN NUMBER COLLATION SUMMARY

DATE: POST TEST

| DATA SET IDENTIFIER | CONFIGURATION | O/ET. α | O/ET. β | PIN | JET PRESS | SEP. Δα | SEP. Δβ | SEP. Δx | SEP. Δz | ΔY −10 | ΔY −50 | ΔY −70 | ΔY −100 | ΔY −120 | ΔY −150 | ΔY −200 | | | |
|---|---|---|---|---|---|---|---|---|---|---|---|---|---|---|---|---|---|---|---|
| -VX 359 | ORB/ET + SRB(R.H.) | 10 | 0 | | 1225 | -4 | 2 | A | 0 | | 3987 | | 3992 | | 3993 | | | | |
| 360 | | | | | | | | | 100 | | 3988 | | 3991 | | 3994 | | | | |
| 361 | | | | | | | | | 200 | | 3989 | | 3990 | | 3995 | | | | |
| 362 | | | | | | -8 | -4 | | 100 | | | | | 3996 | 4001 | 4002 | | | |
| 363 | | | | | | | | | 150 | | | | | 3997 | 4000 | 4003 | | | |
| 364 | | | | | | | | | 200 | | | | | 3998 | 3999 | 4004 | | | |
| 365 | | | | | | | -2 | | 100 | | | 4005 | 4010 | | 4011 | | | | |
| 366 | | | | | | | | | 150 | | | 4006 | 4009 | | 4012 | | | | |
| 367 | | | | | | | | | 200 | | | 4007 | 4008 | | 4013 | | | | |
| 368 | | | | | | | 0 | | 100 | | 4014 | | 4019 | | 4020 | | | | |
| 369 | | | | | | | | | 150 | | 4015 | | 4018 | | 4021 | | | | |
| 370 | | | | | | | | | 200 | | 4016 | | 4017 | | 4022 | | | | |
| 371 | | | | | | | 2 | | 100 | | 4023 | | 4028 | | 4029 | | | | |
| 372 | | | | | | | | | 150 | | 4024 | | 4027 | | 4030 | | | | |
| 373 | | | | | | | | | 200 | | 4025 | | 4026 | | 4031 | | | | |
| 374 | | | | | 0 | | -4 | | 100 | | | | | 4035 | 4040 | 4041 | | | |
| 375 | | | | | | | | | 150 | | | | | 4036 | 4039 | 4042 | | | |
| 376 | | | | | | | | | 200 | | | | | 4037 | 4038 | 4043 | | | |

TEST RUN NUMBERS

IDVAR (1) IDVAR (2) NDV

α OR β SCHEDULES

Table II (Con't.)

TEST: IA143

DATA SET/RUN NUMBER COLLATION SUMMARY

DATE: POST TEST

| DATA SET IDENTIFIER | CONFIGURATION | O/ET. α | O/ET. β | PIN | JET PRESS | SEP. Δα | SEP. Δβ | SEP. ΔX | SEP. ΔZ | ΔY -10 | ΔY -50 | ΔY -70 | ΔY -100 | ΔY -120 | ΔY -150 | ΔY -200 | | |
|---|---|---|---|---|---|---|---|---|---|---|---|---|---|---|---|---|---|---|
| VX377 | ORB/ET + SRB(R.H.) | 10 | 0 | | 0 | -8 | -2 | A | 100 | | | 4044 | 4049 | | 4050 | | | |
| 378 | ↓ | ↓ | ↓ | | ↓ | ↓ | ↓ | ↓ | 150 | | | 4045 | 4048 | | 4051 | | | |
| 379 | ↓ | ↓ | ↓ | | ↓ | ↓ | ↓ | ↓ | 200 | | | 4046 | 4047 | | 4052 | | | |
| 380 | ↓ | ↓ | ↓ | | ↓ | ↓ | 0 | ↓ | 100 | | 4053 | | 4058 | | 4059 | | | |
| 381 | ↓ | ↓ | ↓ | | ↓ | ↓ | ↓ | ↓ | 150 | | 4054 | | 4057 | | 4060 | | | |
| 382 | ↓ | ↓ | ↓ | | ↓ | ↓ | ↓ | ↓ | 200 | | 4055 | | 4056 | | 4061 | | | |
| 383 | ↓ | ↓ | ↓ | | ↓ | ↓ | 2 | ↓ | 100 | | 4062 | | 4067 | | 4068 | | | |
| 384 | ↓ | ↓ | ↓ | | ↓ | ↓ | ↓ | ↓ | 150 | | 4063 | | 4066 | | 4069 | | | |
| 385 | ↓ | ↓ | ↓ | | ↓ | ↓ | ↓ | ↓ | 200 | | 4064 | | 4065 | | 4070 | | | |

TEST RUN NUMBERS

1 7 13 19 25 31 37 43 49 55 61 67 73 76

IDVAR (1) IDVAR (2) NDV

α OR β SCHEDULES

Table II. (Con't.)

Jet-off Cube Data



TEST: IA143 — DATA SET/RUN NUMBER COLLATION SUMMARY — DATE: POST TEST

| DATA SET IDENTIFIER | CONFIGURATION | O/ET. α | O/ET. β | | JET PRESS | SEP. PARAMETERS Δα | Δβ | Δx | Δz | ΔY -10 | -100 | -200 | -300 | -400 | -600 | | | Cube I.D. |
|---|---|---|---|---|---|---|---|---|---|---|---|---|---|---|---|---|---|---|
| VX386 | ORB/ET + SRB(R.H.) | 0 | 0 | | 0 | 0 | 0 | 0 | AF | 2323 | 2324 | | | | | | | 1 |
| 387 | | | | | | -5 | 0 | | AD | 2337 | 2338 | | | | | | | |
| 388 | | | | | | 0 | -4 | | AB | 2326 | | | | | | | | |
| 389 | | | | | | -5 | | | AC | 2336 | | | | | | | | |
| 390 | | | | | | 0 | | | AF | | 2325 | | | | | | | |
| 391 | | | | | | -5 | | | AD | | 2335 | | | | | | | |
| 392 | | | | | | 0 | 0 | 300 | BA | 2327 | | 2328 | | | | | | 2 |
| 393 | | | | | | -10 | | | BA | 2360 | | | | | | | | 2 |
| 394 | | | | | | -10 | | | H | | | 2358 | | | | | | 2,3 |
| 395 | | | | | | 0 | -8 | | BB | 2330 | | | | | | | | 2 |
| 396 | | | | | | -10 | | | BC | 2364 | | | | | | | | |
| 397 | | | | | | 0 | | | BA | | | 2329 | | | | | | |
| 398 | | | | | | -10 | | | BA | | | 2363 | | | | | | |
| 399 | | | | | | -5 | 0 | | D | | 2339 | 2340 | | | | | | 3 |
| 400 | | | | | | -10 | 0 | | D | | 2359 | | | | | | | 3 |
| 401 | | | | | | -5 | -4 | | E | | 2342 | | | | | | | 3,4 |
| 402 | | | | | | -10 | | | D | | 2361 | 2362 | | | | | | 3 |
| 403 | | | | | | -5 | | | D | | | 2341 | | | | | | 3 |

TEST RUN NUMBERS

1 13 19 25 31 37 43 49 55 61 67 75 76

IDVAR (1) IDVAR (2) NDV

α OR β SCHEDULES

Table II (Con't.)

TEST: IA143

DATA SET/RUN NUMBER COLLATION SUMMARY

DATE: POST TEST

| DATA SET IDENTIFIER | CONFIGURATION | O/ET α | O/ET β | | JET PRESS | SEP. PARAMETERS Δα | ΔΒ | ΔX | ΔZ | ΔY -10 | -100 | -200 | -300 | -400 | -600 | | | Cube S.D. |
|---|---|---|---|---|---|---|---|---|---|---|---|---|---|---|---|---|---|---|
| VX404 | ORB/ET + SRB(R.N.) | 0 | 0 | | 0 | -6 | -2 | 300 | B | 2356 | | | | | | | | 5 |
| 405 | | | | | | -6 | -2 | 300 | B | 2385 | | | | | | | | 5 |
| 406 | | | | | | 0 | -4 | 600 | CA | | 2333 | | 2334 | | | | | 6 |
| 407 | | | | | | 0 | +4 | | CA | | 3302 | | | | | | | |
| 408 | | | | | | 0 | | | CA | | 4501 | | 4502 | | | | | |
| 409 | | | | | | -15 | | | CA | | 2386 | | 2387 | | | | | |
| 410 | | | | | | -15 | | | CA | | 2424 | | | | | | | |
| 411 | | | | | | 0 | -12 | | CB | | 2331 | | | | | | | |
| 412 | | | | | | -15 | | | CC | | 2392 | | | | | | | |
| 413 | | | | | | 0 | | | CA | | | | 2332 | | | | | |
| 414 | | | | | | 0 | | | CA | | | | 2355 | | | | | |
| 415 | | | | | | -15 | | | CA | | | | 2393 | | | | | |
| 416 | | | | | | -7 | -4 | | C | | | 2357 | | | | | | 7 |
| 417 | | | | | | -5 | 0 | | C | | 2343 | | 2344 | | | | | 9 |
| 418 | | | | | | -10 | 0 | | C | | 2370 | | 2371 | | | | | 9 |
| 419 | | | | | | -5 | -8 | | C | | 2346 | | 2345 | | | | | 9 |
| 420 | | | | | | -10 | | | J | | 2365 | | | | | | | 9,10 |
| 421 | | | | | | -10 | | | C | | | | 2367 | | | | | 9 |

TEST RUN NUMBERS

1 7 13 19 25 31 37 43 49 55 61 67 75 76

IDVAR (1) IDVAR (2) NDV

α OR β SCHEDULES

# Table II. (Con't.)

TEST: IA143

DATA SET/RUN NUMBER COLLATION SUMMARY

DATE: POST TEST

| DATA SET IDENTIFIER | CONFIGURATION | O/ET. α | O/ET. β | | JET PRESS | SEP. PARAMETERS Δα | Δβ | ΔX | ΔZ | ΔY -10 | -100 | -200 | -300 | -400 | -600 | | | Cube I.D. |
|---|---|---|---|---|---|---|---|---|---|---|---|---|---|---|---|---|---|---|
| VX422 | ORB/ET + SRB(R.H.) | O | O | | O | -10 | -4 | 600 | K | | 2369 | | | | | | | 10 |
| 423 | | | | | | -15 | | | K | | 2388 | 2389 | | | | | | 10 |
| 424 | | | | | | -10 | | | J | | | 2368 | | | | | | 10,8 |
| 425 | | | | | | -15 | -8 | | K | | 2391 | 2390 | | | | | | 10 |
| 426 | | | | | | -10 | -8 | | K | | | 2366 | | | | | | 10 |
| 427 | | | | | | -5 | +4 | 900 | FA | | 2349 | | | 2350 | | | | 11 |
| 428 | | | | | | -20 | +4 | | FA | | 2416 | | | 2417 | | | | |
| 429 | | | | | | -5 | -16 | | FB | | 2347 | | | | | | | |
| 430 | | | | | | -20 | | | FC | | 2418 | | | | | | | |
| 431 | | | | | | -5 | | | FA | | | | | 2348 | | | | |
| 432 | | | | | | -20 | | | FA | | | | | 2419 | | | | |
| 433 | | | | | | -10 | 0 | | L | | 2372 | | 2373 | | | | | 12 |
| 434 | | | | | | -15 | 0 | | L | | 2401 | | 2402 | | | | | |
| 435 | | | | | | -10 | -12 | | L | | 2378 | | 2379 | | | | | |
| 436 | | | | | | -15 | -12 | | L | | 2394 | | 2395 | | | | | |
| 437 | | | | | | -12 | -6 | | L | | | 2384 | | | | | | 13 |
| 438 | | | | | | -15 | -6 | | M | | | 2398 | | | | | | 14 |
| 439 | | | | | | -10 | -4 | | K | | | 2374 | 2375 | | | | | 15 |

TEST RUN NUMBERS

1 7 13 19 25 31 37 43 49 55 61 67 73 76

IDVAR (1) IDVAR (2) NDV

α OR β SCHEDULES

Table II. (Cont.)

TEST: IA143

DATA SET/RUN NUMBER COLLATION SUMMARY

DATE: POST TEST

| DATA SET IDENTIFIER | CONFIGURATION | O/ET. α | O/ET. β | | JET PRESS | SEP. PARAMETERS Δα | Δβ | ΔX | ΔZ | ΔY -10 | -100 | -200 | -300 | -400 | -600 | | | Cube I.D. |
|---|---|---|---|---|---|---|---|---|---|---|---|---|---|---|---|---|---|---|
| VX440 | ORB/ET + SRB(R.H.) | 0 | 0 | | 0 | -15 | -4 | 900 | K | | | 2399 | 2400 | | | | | 15 |
| 441 | | | | | | -10 | -8 | | K | | | 2377 | 2376 | | | | | 15 |
| 442 | | | | | | -15 | -8 | | K | | | 2396 | 2397 | | | | | 15 |
| 443 | | | | | | -5 | +4 | 1200 | G | | 2351 | | | | 2352 | | | 16 |
| 444 | | | | | | -25 | +4 | | G | | 2422 | | | | 2423 | | | |
| 445 | | | | | | -5 | -20 | | G | | 2354 | | | | 2353 | | | |
| 446 | | | | | | -25 | -20 | | GB | | 2420 | | | | 2421 | | | |
| 447 | | | | | | -10 | 0 | | L | | | 2382 | | 2383 | | | | 17 |
| 448 | | | | | | -20 | 0 | | L | | | 2414 | | 2415 | | | | |
| 449 | | | | | | -10 | -12 | | L | | | 2380 | | 2381 | | | | |
| 450 | | | | | | -20 | -12 | | L | | | 2408 | | 2409 | | | | |
| 451 | | | | | | -15 | -4 | | N | | | 2403 | 2404 | | | | | 20 |
| 452 | | | | | | -20 | -4 | | N | | | 2410 | 2411 | | | | | |
| 453 | | | | | | -15 | -8 | | N | | | 2406 | | | | | | |
| 454 | | | | | | -20 | | | N | | | 2413 | 2412 | | | | | |
| 455 | | | | | | -15 | | | P | | | | 2405 | | | | | 18,20 |
| 456 | | | | | | -18 | | | M | | | | 2407 | | | | | 19 |

TEST RUN NUMBERS

1 7 13 19 25 31 37 43 49 55 61 67 73 76

IDVAR (1) IDVAR (2) NDV

α OR β SCHEDULES

TABLE II. (Con't.)

TEST: IA143

DATA SET/RUN NUMBER COLLATION SUMMARY

DATE: POST TEST

| DATA SET IDENTIFIER | CONFIGURATION | O/ET α | O/ET β | PIN | JET PRESS | SEP. PARAMETERS Δα | ΔB | ΔX | ΔZ | ΔY -10 | -50 | -100 | -150 | -200 | -300 | -400 | -600 | C&B ±.8 | TEST RUN NUMBERS |
|---|---|---|---|---|---|---|---|---|---|---|---|---|---|---|---|---|---|---|---|
| VX457 | ORB/ET + SRB(R.H.) | -15 | 15 | | 0 | 0 | 0 | 0 | AF | 3094 | | 3095 | | | | | | 1 | |
| 458 | | | | | | -5 | 0 | | AD | 3108 | | 3109 | | | | | | | |
| 459 | | | | | | 0 | -4 | | AB | 3097 | | | | | | | | | |
| 460 | | | | | | -5 | -4 | | AC | 3107 | | | | | | | | | |
| 461 | | | | | | 0 | -4 | | AF | | | 3096 | | | | | | | |
| 462 | | | | | | -5 | -4 | | AD | | | 3106 | | | | | | | |
| 463 | | | | | | 0 | 0 | 300 | BA | 3098 | | 3099 | | | | | | 2 | |
| 464 | | | | | | -10 | 0 | | BA | 3130 | | | | | | | | 2 | |
| 465 | | | | | | -10 | 0 | | H | | | | | 3128 | | | | 2,3 | |
| 466 | | | | | | 0 | -8 | | BB | 3101 | | | | | | | | 2 | |
| 467 | | | | | | -10 | -8 | | BC | 3134 | | | | | | | | | |
| 468 | | | | | | 0 | -8 | | BA | | | | | 3100 | | | | | |
| 469 | | | | | | -10 | -8 | | BA | | | | | 3133 | | | | | |
| 470 | | | | | | -5 | 0 | | D | | | 3110 | | 3111 | | | | 3 | |
| 471 | | | | | | -10 | 0 | | D | | | 3129 | | | | | | 3 | |
| 472 | | | | | | -5 | -4 | | E | | | 3113 | | | | | | 3,4 | |
| 473 | | | | | | -10 | -4 | | D | | | 3131 | | 3132 | | | | 3 | |

1 7 13 19 25 31 37 43 49 55 61 67 75 76

IDVAR (1) IDVAR (2) NDV

α OR β SCHEDULES

Table II. (Con't.)

TEST: IA143

DATA SET/RUN NUMBER COLLATION SUMMARY

DATE: POST TEST

| DATA SET IDENTIFIER | CONFIGURATION | O/ET. α | O/ET. β | PIN | JET PRESS | SEP. PARAMETERS Δα | Δβ | ΔX | ΔZ | ΔY -100 | -200 | -300 | | | | | | Cycle 3 B. |
|---|---|---|---|---|---|---|---|---|---|---|---|---|---|---|---|---|---|---|
| VX 474 | ORB/ET + SRB(R.H.) | -15 | 15 | | 0 | -5 | -4 | 300 | D | | 3112 | | | | | | | 3 |
| 475 | | | | | | -6 | -2 | 300 | B | 3126 | | | | | | | | 5 |
| 476 | | | | | | -6 | -2 | 300 | B | 3155 | | | | | | | | 5 |
| 477 | | | | | | 0 | 4 | 600 | CA | 3104 | | 3105 | | | | | | 6 |
| 478 | | | | | | -15 | 4 | | CA | 3156 | | 3157 | | | | | | |
| 479 | | | | | | 0 | -12 | | CB | 3102 | | | | | | | | |
| 480 | | | | | | -15 | | | CC | 3162 | | | | | | | | |
| 481 | | | | | | 0 | | | CA | | | 3103 | | | | | | |
| 482 | | | | | | 0 | | | CA | | | 3125 | | | | | | |
| 483 | | | | | | -15 | | | CA | | | 3163 | | | | | | |
| 484 | | | | | | -7 | -4 | | C | | 3127 | | | | | | | 7 |
| 485 | | | | | | -10 | -4 | | J | | 3138 | | | | | | | 8 |
| 486 | | | | | | -5 | 0 | | C | 3114 | | 3115 | | | | | | 9 |
| 487 | | | | | | -10 | 0 | | C | 3140 | | 3141 | | | | | | |
| 488 | | | | | | -5 | -8 | | C | 3117 | | 3116 | | | | | | |
| 489 | | | | | | -10 | -8 | | J | 3135 | | | | | | | | 9,10 |
| 490 | | | | | | -10 | -8 | | C | | | 3137 | | | | | | 10 |
| 491 | | | | | | -10 | -4 | | K | 3139 | | | | | | | | 10 |

TEST RUN NUMBERS

1 7 13 19 25 31 37 43 49 55 61 67 73 76

IDVAR (1) IDVAR (2) NDV

α OR β SCHEDULES

TABLE II, (Con't.)

TEST: IA143

DATA SET/RUN NUMBER COLLATION SUMMARY

DATE: POST TEST

| DATA SET IDENTIFIER | CONFIGURATION | O/ET. α | O/ET. β | PIN | JET PRESS | SEP. Δα | SEP. Δβ | SEP. ΔX | SEP. ΔZ | ΔY -100 | ΔY -200 | ΔY -300 | ΔY -400 | | | | | Cube I.D. |
|---|---|---|---|---|---|---|---|---|---|---|---|---|---|---|---|---|---|---|
| VX492 | ORB/ET + SRB(R.H.) | -15 | 15 | | 0 | -15 | -4 | 600 | K | 3158 | 3159 | | | | | | | 10 |
| 493 | | | | | | -10 | -4 | | J | | 3138 | | | | | | | 8,10 |
| 494 | | | | | | -15 | -8 | | K | 3161 | 3160 | | | | | | | 10 |
| 495 | | | | | | -10 | -8 | | K | | 3136 | | | | | | | 10 |
| 496 | | | | | | -5 | 4 | 900 | FA | 3120 | | | | | | | | 11 |
| 497 | | | | | | -5 | 4 | | FD | | | | 3121 | | | | | |
| 498 | | | | | | -5 | 2 | | FA | 3192 | | | 3193 | | | | | |
| 499 | | | | | | -20 | 4 | | FA | 3186 | | | 3187 | | | | | |
| 500 | | | | | | -5 | -16 | | FB | 3118 | | | | | | | | |
| 501 | | | | | | -20 | | | FC | 3188 | | | | | | | | |
| 502 | | | | | | -5 | | | FA | | | | 3119 | | | | | |
| 503 | | | | | | -20 | | | FB | | | | 3197 | | | | | |
| 504 | | | | | | -10 | 0 | | L | 3142 | | 3143 | | | | | | 12 |
| 505 | | | | | | -15 | 0 | | | 3171 | | 3172 | | | | | | |
| 506 | | | | | | -10 | -12 | | | 3148 | | 3149 | | | | | | |
| 507 | | | | | | -15 | -12 | | | 3164 | | 3165 | | | | | | |
| 508 | | | | | | -12 | -6 | | | | 3154 | | | | | | | 13 |
| 509 | | | | | | -15 | -6 | | M | | 3168 | | | | | | | 14 |

TEST RUN NUMBERS

1 7 13 19 25 31 37 43 49 55 61 67 75 76

α OR β SCHEDULES

IDVAR (1) IDVAR (2) NDV

TABLE II. (Con't)

TEST: IA143

DATA SET/RUN NUMBER COLLATION SUMMARY

DATE: POST TEST

| DATA SET IDENTIFIER | CONFIGURATION | O/ET α | O/ET β | PIN | JET PRESS | SEP. PARAMETERS Δα | Δβ | ΔX | ΔZ | ΔY -100 | -200 | -300 | -400 | -600 | | | | C.G.B. |
|---|---|---|---|---|---|---|---|---|---|---|---|---|---|---|---|---|---|---|
| VX510 | ORB/ET + SRB(R.H.) | -15 | 15 | | 0 | -10 | -4 | 900 | K | | 3144 | 3145 | | | | | | 15 |
| 511 | | | | | | -15 | -4 | | | | 3169 | 3170 | | | | | | |
| 512 | | | | | | -10 | -8 | | | | 3147 | 3146 | | | | | | |
| 513 | | | | | | -15 | -8 | | | | 3166 | 3167 | | | | | | |
| 514 | | | | | | -5 | 4 | 1200 | A | 3122 | | | | | | | | 16 |
| 515 | | | | | | -5 | 2 | | A | 3194 | | | | | | | | |
| 516 | | | | | | -15 | -2 | | BD | | | | | 4499 | | | | |
| 517 | | | | | | -25 | 4 | | GB | 3191 | | | | | | | | |
| 518 | | | | | | -25 | 2 | | GB | 3200 | | | | | | | | |
| 519 | | | | | | -25 | -2 | | GB | | | | | 4500 | | | | |
| 520 | | | | | | -5 | -20 | | A | 3124 | | | 3201 | 3123 | | | | |
| 521 | | | | | | -5 | | | A | 3196 | | | | 3195 | | | | |
| 522 | | | | | | -25 | | | GB | 3189 | | | | | | | | |
| 523 | | | | | | | | | GB | 3198 | | | | | | | | |
| 524 | | | | | | | | | GC | | | | | 3190 | | | | |
| 525 | | | | | | | | | GC | | | | | 3199 | | | | |
| 526 | | | | | | -10 | 0 | | LA | | 3152 | | 3153 | | | | | 17 |
| 527 | | | | | | -20 | 0 | | L | | 3184 | | 3185 | | | | | 17 |

TEST RUN NUMBERS

1 7 13 19 25 31 37 43 49 55 61 67 75 76

IDVAR (1) IDVAR (2) NDV

α OR β SCHEDULES

Table II (Con't.)



TEST: IA143

DATA SET/RUN NUMBER COLLATION SUMMARY

DATE: POST TEST

| DATA SET IDENTIFIER | CONFIGURATION | O/ET. α | O/ET. β | PIN | JET PRESS | SEP. PARAMETERS Δα | Δβ | ΔX | ΔZ | ΔY -100 | -200 | -300 | -400 | -600 | | | | Cube I.D. |
|---|---|---|---|---|---|---|---|---|---|---|---|---|---|---|---|---|---|---|
| -VX528 | ORB/ET + SRB(R.H.) | -15 | 15 | | 0 | -10 | -12 | 1200 | LA | | 3150 | | 3151 | | | | | 17 |
| 529 | | | | | | -20 | -12 | | L | | 3178 | | 3179 | | | | | 17 |
| 530 | | | | | | -15 | -4 | | N | | 3173 | 3174 | | | | | | 20 |
| 531 | | | | | | -20 | -4 | | | | 3180 | 3181 | | | | | | |
| 532 | | | | | | -15 | -8 | | | | 3176 | | | | | | | |
| 533 | | | | | | -20 | | | | | 3183 | 3182 | | | | | | |
| 534 | | | | | | -15 | | | P | | | 3175 | | | | | | 18,20 |
| 535 | | | | | | -18 | | | M | | | 3177 | | | | | | 19 |

TEST RUN NUMBERS

IDVAR (1) IDVAR (2) NDV

α OR β SCHEDULES

# Table II. (Con't.)

TEST: IA143

DATA SET/RUN NUMBER COLLATION SUMMARY

DATE: POST TEST

| DATA SET IDENTIFIER | CONFIGURATION | O/ET. α | O/ET. β | | JET PRESS | SEP. PARAMETERS Δα | Δβ | ΔX | ΔZ | ΔY -50 | -100 | -150 | -200 | -300 | -400 | -600 | | Cube I.D. |
|---|---|---|---|---|---|---|---|---|---|---|---|---|---|---|---|---|---|---|
| VX536 | ORB/ET + SRB(R.H.) | -15 | -15 | | 0 | 0 | 0 | 0 | AF | 3464 | | 3465 | | | | | | 1 |
| 537 | | | | | | -5 | 0 | | AD | 3478 | | 3479 | | | | | | |
| 538 | | | | | | 0 | -4 | | AB | 3467 | | | | | | | | |
| 539 | | | | | | -5 | | | AC | 3477 | | | | | | | | |
| 540 | | | | | | 0 | | | AF | | | 3466 | | | | | | |
| 541 | | | | | | -5 | | | AD | | | 3476 | | | | | | |
| 542 | | | | | | 0 | 0 | 300 | BA | 3468 | | | 3469 | | | | | 2 |
| 543 | | | | | | -10 | | | BA | 3502 | | | | | | | | 2 |
| 544 | | | | | | -10 | | | H | | | | 3500 | | | | | 2,3 |
| 545 | | | | | | 0 | -8 | | BB | 3471 | | | | | | | | 2 |
| 546 | | | | | | -10 | | | BC | 3573 | | | | | | | | |
| 547 | | | | | | 0 | | | BA | | | | 3470 | | | | | |
| 548 | | | | | | -10 | | | BA | | | | 3572 | | | | | |
| 549 | | | | | | -5 | 0 | | D | | 3480 | | 3481 | | | | | 3 |
| 550 | | | | | | -10 | 0 | | D | | | 3501 | | | | | | 3 |
| 551 | | | | | | -5 | -4 | | E | | 3483 | | | | | | | 3,4 |
| 552 | | | | | | -10 | | | D | | 3570 | | 3571 | | | | | 3 |
| 553 | | | | | | -5 | | | D | | | | 3482 | | | | | 3 |

TEST RUN NUMBERS

1 7 13 19 25 31 37 43 49 55 61 67 75 76

IDVAR (1) IDVAR (2) NDV

α OR β SCHEDULES

Table II (Con't)

TEST: IA143

DATA SET/RUN NUMBER COLLATION SUMMARY

DATE: POST TEST

| DATA SET IDENTIFIER | CONFIGURATION | O/ET. α | O/ET. β | | JET PRESS | SEP. PARAMETERS Δα | Δβ | ΔX | ΔZ | ΔY -50 | -100 | -150 | -200 | -300 | -400 | -600 | | Cube T.P. |
|---|---|---|---|---|---|---|---|---|---|---|---|---|---|---|---|---|---|---|
| VX554 | ORB/ET + SRB(R.H.) | -15 | -15 | | 0 | -6 | -2 | 300 | B | | 3498 | | | | | | | 5 |
| 555 | | | | | | -6 | -2 | 300 | B | | 3594 | | | | | | | 5 |
| 556 | | | | | | 0 | +4 | 600 | CA | | 3474 | | | 3475 | | | | 6 |
| 557 | | | | | | -15 | +4 | | CA | | 3595 | | | 3596 | | | | |
| 558 | | | | | | 0 | -12 | | CB | | 3472 | | | | | | | |
| 559 | | | | | | -15 | | | CC | | 3601 | | | | | | | |
| 560 | | | | | | 0 | | | CA | | | | | 3473 | | | | |
| 561 | | | | | | 0 | | | CA | | | | | 3497 | | | | |
| 562 | | | | | | -15 | | | CA | | | | | 3602 | | | | |
| 563 | | | | | | -7 | -4 | | C | | | | 3499 | | | | | 7 |
| 564 | | | | | | -5 | 0 | | C | | 3484 | | | 3485 | | | | 9 |
| 565 | | | | | | -10 | 0 | | C | | 3579 | | | 3580 | | | | 9 |
| 566 | | | | | | -5 | -8 | | C | | 3487 | | | 3486 | | | | 9 |
| 567 | | | | | | -10 | | | K | | 3574 | | | | | | | 9,10 |
| 568 | | | | | | -10 | | | C | | | | | 3576 | | | | 9 |
| 569 | | | | | | -10 | -4 | | K | | 3578 | | | | | | | 10 |
| 570 | | | | | | -15 | | | K | | 3597 | | 3598 | | | | | 10 |
| 571 | | | | | | -10 | | | J | | | | 3577 | | | | | 8,10 |

TEST RUN NUMBERS

7 13 19 25 31 37 43 49 55 61 67 75/76

α OR β SCHEDULES

IDVAR (1) IDVAR (2) NDV

Table II (Con't.)

TEST: IA143

DATA SET/RUN NUMBER COLLATION SUMMARY

DATE: POST TEST

| DATA SET IDENTIFIER | CONFIGURATION | O/E.T. α | O/E.T. β | | JET PRESS | SEP. PARAMETERS Δα | Δβ | Δx | Δz | ΔY -50 | -100 | -150 | -200 | -300 | -400 | -600 | | Cube I.D. |
|---|---|---|---|---|---|---|---|---|---|---|---|---|---|---|---|---|---|---|
| VX572 | ORB/ET + SRB(R.H.) | -15 | -15 | | 0 | -15 | -8 | 600 | K | | 3600 | | 3599 | | | | | 10 |
| 573 | | | | | | -10 | -8 | 600 | K | | | | 3575 | | | | | 10 |
| 574 | | | | | | -5 | +4 | 900 | FA | | 3489 | | | | 3490 | | | 11 |
| 575 | | | | | | -20 | +4 | | FA | | 3625 | | | | 3626 | | | |
| 576 | | | | | | -5 | -12 | | FD | | 3488 | | | | | | | |
| 577 | | | | | | -5 | -8 | | FA | | 3495 | | | | | | | |
| 578 | | | | | | -20 | -8 | | FA | | 3627 | | | | | | | |
| 579 | | | | | | -5 | -12 | | FA | | | | | | 3496 | | | |
| 580 | | | | | | -20 | -12 | | FA | | | | | | 3628 | | | |
| 581 | | | | | | -10 | 0 | | L | | 3581 | | | 3582 | | | | 12 |
| 582 | | | | | | -15 | 0 | | L | | 3610 | | | 3611 | | | | |
| 583 | | | | | | -10 | -12 | | L | | 3587 | | | 3588 | | | | |
| 584 | | | | | | -15 | -12 | | L | | 3603 | | | 3604 | | | | |
| 585 | | | | | | -12 | -6 | | L | | | | 3593 | | | | | 13 |
| 586 | | | | | | -15 | -6 | | M | | | | 3607 | | | | | 14 |
| 587 | | | | | | -10 | -4 | | K | | | | 3583 | 3584 | | | | 15 |
| 588 | | | | | | -15 | -4 | | K | | | | 3608 | 3609 | | | | 15 |
| 589 | | | | | | -10 | -8 | | K | | | | 3586 | 3585 | | | | 15 |

TEST RUN NUMBERS

1 13 19 25 31 37 43 49 55 61 67 75 76

IDVAR (1) IDVAR (2) NDV

α OR β SCHEDULES

TABLE II (Con't.)

TEST: IA143

DATA SET/RUN NUMBER COLLATION SUMMARY

DATE: POST TEST

| DATA SET IDENTIFIER | CONFIGURATION | O/ET α | O/ET β | | JET PRESS | SEP. PARAMETERS Δα | Δβ | ΔX | ΔZ | ΔY -50 | -100 | -150 | -200 | -300 | -400 | -600 | | Cube I.D. |
|---|---|---|---|---|---|---|---|---|---|---|---|---|---|---|---|---|---|---|
| VX590 | ORB/ET + SRB(R.H.) | -15 | -15 | | 0 | -15 | -8 | 900 | K | | | | 3605 | 3606 | | | | 15 |
| 591 | | | | | | -15 | +4 | 1200 | A | | 3491 | | | | | 3492 | | 16 |
| 592 | | | | | | -25 | +4 | | GC | | 3631 | | | | | 3632 | | |
| 593 | | | | | | -15 | -8 | | A | | 3494 | | | | | 3493 | | |
| 594 | | | | | | -25 | -8 | | GC | | 3630 | | | | | | | |
| 595 | | | | | | -25 | -12 | | GC | | | | | | | 3629 | | |
| 596 | | | | | | -10 | 0 | | LB | | | | 3591 | | 3592 | | | 17 |
| 597 | | | | | | -20 | 0 | | L | | | | 3623 | | 3624 | | | |
| 598 | | | | | | -10 | -8 | | LB | | | | 3589 | | 3590 | | | |
| 599 | | | | | | -20 | -12 | | L | | | | 3617 | | 3618 | | | |
| 600 | | | | | | -15 | -4 | | N | | | | 3612 | 3613 | | | | 20 |
| 601 | | | | | | -20 | -4 | | N | | | | 3619 | 3620 | | | | |
| 602 | | | | | | -15 | -8 | | N | | | | 3615 | | | | | |
| 603 | | | | | | -20 | | | N | | | | 3622 | 3621 | | | | |
| 604 | | | | | | -15 | | | P | | | | | 3614 | | | | 18,20 |
| 605 | | | | | | -18 | | | M | | | | | 3616 | | | | 19 |

TEST RUN NUMBERS

1 7 13 19 25 31 37 43 49 55 61 67 73 76

IDVAR (1) IDVAR (2) NDV

α OR β SCHEDULES

Table II. (Cont'd)

TEST: IA143

DATA SET/RUN NUMBER COLLATION SUMMARY

DATE: POST TEST

| DATA SET IDENTIFIER | CONFIGURATION | O/ET. α | O/ET. β | | JET PRESS | SEP. PARAMETERS Δα | Δβ | Δx | Δz | ΔY -10 | -100 | -200 | -300 | -400 | -600 | | | Cube I.D. |
|---|---|---|---|---|---|---|---|---|---|---|---|---|---|---|---|---|---|---|
| VX606 | ORB/ET + SRB(R.H.) | -10 | -10 | | 0 | 0 | 0 | 0 | AF | 2542 | 2543 | | | | | | | 1 |
| 607 | | | | | | -5 | 0 | | AD | 2556 | 2557 | | | | | | | |
| 608 | | | | | | 0 | -4 | | AB | 2545 | | | | | | | | |
| 609 | | | | | | -5 | | | AC | 2555 | | | | | | | | |
| 610 | | | | | | 0 | | | AF | | 2544 | | | | | | | |
| 611 | | | | | | -5 | | | AD | | 2554 | | | | | | | |
| 612 | | | | | | 0 | 0 | 300 | BA | 2546 | | 2547 | | | | | | 2 |
| 613 | | | | | | -10 | | | BA | 2575 | | | | | | | | 2 |
| 614 | | | | | | -10 | | | H | | | 2573 | | | | | | 2,3 |
| 615 | | | | | | 0 | -8 | | BB | 2549 | | | | | | | | 2 |
| 616 | | | | | | -10 | | | BC | 2579 | | | | | | | | |
| 617 | | | | | | 0 | | | BA | | | 2548 | | | | | | |
| 618 | | | | | | -10 | | | BA | | | 2578 | | | | | | |
| 619 | | | | | | -5 | 0 | | D | | 2558 | 2559 | | | | | | 3 |
| 620 | | | | | | -10 | 0 | | D | | 2574 | | | | | | | 3 |
| 621 | | | | | | -5 | -4 | | E | | 2561 | | | | | | | 3,4 |
| 622 | | | | | | -10 | | | D | | 2576 | 2577 | | | | | | 3 |
| 623 | | | | | | -5 | | | D | | | 2560 | | | | | | 3 |

TEST RUN NUMBERS

IDVAR (1) IDVAR (2) NDV

α OR β SCHEDULES

TABLE II (Con't.)

TEST: IA143

DATA SET/RUN NUMBER COLLATION SUMMARY

DATE: POST TEST

| DATA SET IDENTIFIER | CONFIGURATION | O/E.T. α | O/E.T. β | JET PRESS | SEP. PARAMETERS Δα | Δβ | ΔX | ΔZ | ΔY -10 | -100 | -200 | -300 | -400 | -600 | | | Cube I.D. |
|---|---|---|---|---|---|---|---|---|---|---|---|---|---|---|---|---|---|
| -VX624 | ORB/ET + SRB(R.H.) | -10 | -10 | 0 | -6 | -2 | 300 | B | | 2571 | | | | | | | 5 |
| 625 | | | | | -6 | -2 | 300 | B | | 2600 | | | | | | | 5 |
| 626 | | | | | 0 | -4 | 600 | CA | | 2552 | | 2553 | | | | | 6 |
| 627 | | | | | 0 | +4 | | CD | | 3642 | | 3643 | | | | | |
| 628 | | | | | -15 | +4 | | CA | | 2601 | | 2602 | | | | | |
| 629 | | | | | 0 | -12 | | CB | | 2550 | | | | | | | |
| 630 | | | | | -15 | | | CC | | 2607 | | | | | | | |
| 631 | | | | | 0 | | | CA | | | | 2551 | | | | | |
| 632 | | | | | 0 | | | CD | | | | 2640 | | | | | |
| 633 | | | | | -15 | | | CA | | | | 2608 | | | | | |
| 634 | | | | | -7 | -4 | | C | | | 2572 | | | | | | 7 |
| 635 | | | | | -5 | 0 | | C | | 2562 | | 2563 | | | | | 9 |
| 636 | | | | | -10 | 0 | | C | | 2585 | | 2586 | | | | | |
| 637 | | | | | -5 | -8 | | C | | 2565 | | 2564 | | | | | |
| 638 | | | | | -10 | | | J | | 2580 | | | | | | | |
| 639 | | | | | -10 | | | C | | | | 2582 | | | | | |
| 640 | | | | | -10 | -4 | | K | | 2584 | | | | | | | 10 |
| 641 | | | | | -15 | -4 | | K | | 2603 | 2604 | | | | | | 10 |

TEST RUN NUMBERS

1 7 13 19 25 31 37 43 49 55 61 67 73 76

IDVAR (1) IDVAR (2) NDV

α OR β SCHEDULES

TABLE II (Cont'd)

TEST: IA143

DATA SET/RUN NUMBER COLLATION SUMMARY

DATE: POST TEST

| DATA SET IDENTIFIER | CONFIGURATION | O/E.T. α | O/E.T. β | | JET PRESS | SEP. PARAMETERS Δα | Δβ | Δx | Δz | ΔY -10 | -100 | -200 | -300 | -400 | -600 | | | Cube I.D. |
|---|---|---|---|---|---|---|---|---|---|---|---|---|---|---|---|---|---|---|
| VX642 | ORB/ET + SRB(R.H.) | -10 | -10 | | 0 | -10 | -4 | 600 | J | | | 2583 | | | | | | 8,10 |
| 643 | | | | | | -15 | -8 | | K | | 2606 | 2605 | | | | | | 10 |
| 644 | | | | | | -10 | -8 | | K | | | 2581 | | | | | | 10 |
| 645 | | | | | | -5 | +4 | 900 | FA | | 2567 | | | 2568 | | | | 11 |
| 646 | | | | | | -20 | +4 | | FA | | 2631 | | | 2632 | | | | |
| 647 | | | | | | -5 | -12 | | FB | | 2635 | | | | | | | |
| 648 | | | | | | -20 | -16 | | FC | | 2633 | | | | | | | |
| 649 | | | | | | -5 | | | FA | | | | | 2566 | | | | |
| 650 | | | | | | -20 | | | FA | | | | | 2634 | | | | |
| 651 | | | | | | -10 | 0 | | L | | 2587 | | 2588 | | | | | 12 |
| 652 | | | | | | -15 | 0 | | L | | 2616 | | 2617 | | | | | |
| 653 | | | | | | -10 | -12 | | L | | 2593 | | 2594 | | | | | |
| 654 | | | | | | -15 | -12 | | L | | 2609 | | 2610 | | | | | |
| 655 | | | | | | -12 | -6 | | L | | | 2599 | | | | | | 13 |
| 656 | | | | | | -15 | -6 | | M | | | 2613 | | | | | | 14 |
| 657 | | | | | | -10 | -4 | | K | | | 2589 | 2590 | | | | | 15 |
| 658 | | | | | | -15 | -4 | | K | | | 2614 | 2615 | | | | | 15 |
| 659 | | | | | | -10 | -8 | | K | | | 2592 | 2591 | | | | | 15 |

TEST RUN NUMBERS

1 7 13 19 23 31 37 43 49 55 61 67 75 76

IDVAR (1) IDVAR (2) NDV

α OR β SCHEDULES

TABLE II. (Cont.)

TEST: IA143

DATA SET/RUN NUMBER COLLATION SUMMARY

DATE: POST TEST

| DATA SET IDENTIFIER | CONFIGURATION | O/E.T. α | O/E.T. β | JET PRESS | SEP. PARAMETERS Δα | Δβ | ΔX | ΔZ | ΔY -10 | -100 | -200 | -300 | -400 | -600 | | | Cube I.D. |
|---|---|---|---|---|---|---|---|---|---|---|---|---|---|---|---|---|---|
| VX660 | ORB/ET + SRB(R.H.) | -10 | -10 | 0 | -15 | -8 | 900 | K | | | 2611 | 2612 | | | | | 15 |
| 661 | | | | | -5 | +4 | 1200 | C | | 2569 | | | | | | | 16 |
| 662 | | | | | -5 | | | AE | | 2636 | | | | 2637 | | | |
| 663 | | | | | -25 | | | G | | 2643 | | | | 2644 | | | |
| 664 | | | | | -5 | -12 | | G | | 2639 | | | | | | | |
| 665 | | | | | -5 | -16 | | G | | | | | | 2638 | | | |
| 666 | | | | | -25 | -16 | | GB | | 2641 | | | | | | | |
| 667 | | | | | -25 | -20 | | GC | | | | | | 2642 | | | |
| 668 | | | | | -10 | 0 | | L | | | 2597 | | 2598 | | | | 17 |
| 669 | | | | | -20 | 0 | | L | | | 2629 | | 2630 | | | | |
| 670 | | | | | -10 | -12 | | L | | | 2595 | | 2596 | | | | |
| 671 | | | | | -20 | -12 | | L | | | 2623 | | 2624 | | | | |
| 672 | | | | | -15 | -4 | | N | | | 2618 | 2619 | | | | | 20 |
| 673 | | | | | -20 | -4 | | N | | | 2625 | 2626 | | | | | |
| 674 | | | | | -15 | -8 | | N | | | 2621 | | | | | | |
| 675 | | | | | -20 | | | N | | | 2628 | 2627 | | | | | |
| 676 | | | | | -15 | | | P | | | | 2620 | | | | | 18,20 |
| 677 | | | | | -18 | | | M | | | | 2622 | | | | | 19 |

TEST RUN NUMBERS

1 7 13 19 25 31 37 43 49 55 61 67 75 76

IDVAR (1) IDVAR (2) NDV

α OR β SCHEDULES

TABLE II (CON'T.)

TEST: IA143

DATA SET/RUN NUMBER COLLATION SUMMARY

DATE: POST TEST

| DATA SET IDENTIFIER | CONFIGURATION | O/ET α | O/ET β | | JET PRESS | SEP. PARAMETERS Δα | Δβ | ΔX | ΔZ | ΔY -10 | -100 | -200 | -300 | -400 | -600 | | | Cube I.D. |
|---|---|---|---|---|---|---|---|---|---|---|---|---|---|---|---|---|---|---|
| -VX678 | ORB/ET + SRB(R.H.) | -10 | -5 | | 0 | 0 | 0 | 0 | AF | 2650 | 2651 | | | | | | | 1 |
| 679 | | | | | | -5 | 0 | | AD | 2664 | 2665 | | | | | | | |
| 680 | | | | | | 0 | -4 | | AB | 2653 | | | | | | | | |
| 681 | | | | | | -5 | | | AC | 2663 | | | | | | | | |
| 682 | | | | | | 0 | | | AF | | 2652 | | | | | | | |
| 683 | | | | | | -5 | | | AD | | 2662 | | | | | | | |
| 684 | | | | | | 0 | 0 | 300 | BA | 2654 | | 2655 | | | | | | 2 |
| 685 | | | | | | -10 | | | BA | 2686 | | | | | | | | 2 |
| 686 | | | | | | -10 | | | H | | | 2684 | | | | | | 2,3 |
| 687 | | | | | | 0 | -8 | | BB | 2657 | | | | | | | | 2 |
| 688 | | | | | | -10 | | | BC | 2690 | | | | | | | | |
| 689 | | | | | | 0 | | | BA | | | 2656 | | | | | | |
| 690 | | | | | | -10 | | | BA | | | 2689 | | | | | | |
| 691 | | | | | | -5 | 0 | | D | | 2666 | 2667 | | | | | | 3 |
| 692 | | | | | | -10 | 0 | | D | | 2685 | | | | | | | 3 |
| 693 | | | | | | -5 | -4 | | E | | 2669 | | | | | | | 3,4 |
| 694 | | | | | | -10 | | | D | | 2687 | 2688 | | | | | | 3 |
| 695 | | | | | | -5 | | | D | | | 2668 | | | | | | 3 |

TEST RUN NUMBERS

IDVAR (1) IDVAR (2) NDV

α OR β SCHEDULES

TABLE II (Con't.)

TEST: IA143

DATA SET/RUN NUMBER COLLATION SUMMARY

DATE: POST TEST

| DATA SET IDENTIFIER | CONFIGURATION | O/E.T. α | O/E.T. β | | JET PRESS | SEP. PARAMETERS Δα | Δβ | ΔX | ΔZ | ΔY -10 | -100 | -200 | -300 | -400 | -600 | | | Cube I.D. |
|---|---|---|---|---|---|---|---|---|---|---|---|---|---|---|---|---|---|---|
| VX696 | ORB/ET + SRB(R.H.) | -10 | -5 | | 0 | -6 | -2 | 300 | B | | 2682 | | | | | | | 5 |
| 697 | | | | | | -6 | -2 | 300 | B | | 2711 | | | | | | | 5 |
| 698 | | | | | | 0 | +4 | 600 | CA | | 2660 | | 2661 | | | | | 6 |
| 699 | | | | | | -15 | +4 | | CA | | 2712 | | 2713 | | | | | |
| 700 | | | | | | -15 | +4 | | CA | | 2749 | | | | | | | |
| 701 | | | | | | 0 | -12 | | CB | | 2658 | | | | | | | |
| 702 | | | | | | -15 | | | CC | | 2718 | | | | | | | |
| 703 | | | | | | 0 | | | CA | | | | 2659 | | | | | |
| 704 | | | | | | 0 | | | CA | | | | 2681 | | | | | |
| 705 | | | | | | 0 | | | CA | | | | 2753 | | | | | |
| 706 | | | | | | -15 | | | CA | | | | 2719 | | | | | |
| 707 | | | | | | -7 | -4 | | C | | | 2683 | | | | | | 7 |
| 708 | | | | | | -5 | 0 | | C | | 2670 | | 2671 | | | | | 9 |
| 709 | | | | | | -10 | 0 | | C | | 2696 | | 2697 | | | | | 9 |
| 710 | | | | | | -5 | -8 | | C | | 2673 | | 2672 | | | | | 9 |
| 711 | | | | | | -10 | | | J | | 2691 | | | | | | | 9,10 |
| 712 | | | | | | -10 | | | C | | | | 2693 | | | | | 9 |
| 713 | | | | | | -10 | -4 | | K | | 2695 | | | | | | | 10 |

TEST RUN NUMBERS

1 7 13 19 25 31 37 43 49 55 61 67 73 76

IDVAR (1) IDVAR (2) NDV

α OR β SCHEDULES

TABLE II (Con't.)

TEST: IA143

DATA SET/RUN NUMBER COLLATION SUMMARY

DATE: POST TEST

| DATA SET IDENTIFIER | CONFIGURATION | O/E.T. α | O/E.T. β | | JET PRESS | SEP. PARAMETERS Δα | Δβ | ΔX | ΔZ | ΔY -10 | -100 | -200 | -300 | -400 | -600 | | | Cube I.D. |
|---|---|---|---|---|---|---|---|---|---|---|---|---|---|---|---|---|---|---|
| VX714 | ORB/ET + SRB(R.H.) | -10 | -5 | | 0 | -15 | -4 | 600 | K | | 2714 | 2715 | | | | | | 10 |
| 715 | | | | | | -10 | -4 | | J | | | 2694 | | | | | | 8,10 |
| 716 | | | | | | -15 | -8 | | K | | 2717 | 2716 | | | | | | 10 |
| 717 | | | | | | -10 | -8 | | K | | | 2692 | | | | | | 10 |
| 718 | | | | | | -5 | +4 | 900 | FA | | 2676 | | | 2677 | | | | 11 |
| 719 | | | | | | -20 | +4 | | FA | | 2742 | | | 2743 | | | | |
| 720 | | | | | | -5 | -16 | | FB | | 2674 | | | | | | | |
| 721 | | | | | | -20 | | | FC | | 2744 | | | | | | | |
| 722 | | | | | | -5 | | | FA | | | | | 2675 | | | | |
| 723 | | | | | | -20 | | | FA | | | | | 2745 | | | | |
| 724 | | | | | | -10 | 0 | | L | | 2698 | | 2699 | | | | | 12 |
| 725 | | | | | | -15 | 0 | | L | | 2727 | | 2728 | | | | | |
| 726 | | | | | | -10 | -12 | | L | | 2704 | | 2705 | | | | | |
| 727 | | | | | | -15 | -12 | | L | | 2720 | | 2721 | | | | | |
| 728 | | | | | | -12 | -6 | | L | | | 2710 | | | | | | 13 |
| 729 | | | | | | -15 | -6 | | M | | | 2724 | | | | | | 14 |
| 730 | | | | | | -10 | -4 | | K | | | 2700 | 2701 | | | | | 15 |
| 731 | | | | | | -15 | -4 | | K | | | 2725 | 2726 | | | | | 15 |

TEST RUN NUMBERS

IDVAR (1) IDVAR (2) NDV

α OR β SCHEDULES

TABLE II (Con't.)

TEST: IA143

DATA SET/RUN NUMBER COLLATION SUMMARY

DATE: POST TEST

| DATA SET IDENTIFIER | CONFIGURATION | O/ET α | O/ET β | | JET PRESS | SEP. PARAMETERS Δα | Δβ | ΔX | ΔZ | ΔY -10 | -100 | -200 | -300 | -400 | -600 | | | Cube Z.O. |
|---|---|---|---|---|---|---|---|---|---|---|---|---|---|---|---|---|---|---|
| VX732 | ORB/ET + SRB(R.H.) | -10 | -5 | | 0 | -10 | -8 | 900 | K | | | 2703 | 2702 | | | | | 15 |
| 733 | | | | | | -15 | -8 | 900 | K | | | 2722 | 2723 | | | | | 15 |
| 734 | | | | | | -5 | +4 | 1200 | G | | 2678 | | | | 2679 | | | 16 |
| 735 | | | | | | -25 | +4 | | G | | 2747 | | | | 2748 | | | |
| 736 | | | | | | -5 | -16 | | G | | 2751 | | | | | | | |
| 737 | | | | | | -25 | -20 | | GB | | 2746 | | | | | | | |
| 738 | | | | | | -25 | -20 | | GC | | 2754 | | | | 2755 | | | |
| 739 | | | | | | -5 | -20 | | G | | | | | | 2680 | | | |
| 740 | | | | | | -5 | -20 | | G | | | | | | 2752 | | | |
| 741 | | | | | | -10 | 0 | | L | | | 2708 | | 2709 | | | | 17 |
| 742 | | | | | | -20 | 0 | | L | | | 2740 | | 2741 | | | | |
| 743 | | | | | | -10 | -12 | | L | | | 2706 | | 2707 | | | | |
| 744 | | | | | | -20 | -12 | | L | | | 2734 | | 2735 | | | | |
| 745 | | | | | | -15 | -4 | | N | | | 2729 | 2730 | | | | | 20 |
| 746 | | | | | | -20 | -4 | | N | | | 2736 | 2737 | | | | | |
| 747 | | | | | | -15 | -8 | | N | | | 2732 | | | | | | |
| 748 | | | | | | -20 | -8 | | N | | | 2739 | 2738 | | | | | |
| 749 | | | | | | -15 | -8 | | P | | | | 2731 | | | | | 18,20 |
| 750 | | | | | | -18 | -8 | | M | | | | 2733 | | | | | 19 |

TEST RUN NUMBERS

IDVAR (1) IDVAR (2) NDV

α OR β SCHEDULES

TABLE II (Con't)

TEST: IA143

DATA SET/RUN NUMBER COLLATION SUMMARY

DATE: POST TEST

| DATA SET IDENTIFIER | CONFIGURATION | O/ET α | O/ET β | | JET PRESS | SEP. PARAMETERS Δα | Δβ | ΔX | ΔZ | ΔY -10 | -100 | -200 | -300 | -400 | -600 | | | Cube I.D. |
|---|---|---|---|---|---|---|---|---|---|---|---|---|---|---|---|---|---|---|
| VX751 | ORB/ET + SRB(R.H.) | -10 | 5 | | 0 | 0 | 0 | 0 | AF | 2757 | 2758 | | | | | | | 1 |
| 752 | | | | | | 0 | | | AF | 2759 | 2760 | | | | | | | |
| 753 | | | | | | -5 | | | AD | 2773 | 2774 | | | | | | | |
| 754 | | | | | | 0 | -4 | | AB | 2762 | | | | | | | | |
| 755 | | | | | | -5 | | | AC | 2772 | | | | | | | | |
| 756 | | | | | | 0 | | | AF | | 2761 | | | | | | | |
| 757 | | | | | | -5 | | | AD | | 2771 | | | | | | | |
| 758 | | | | | | 0 | 0 | 300 | BA | 2763 | | 2764 | | | | | | 2 |
| 759 | | | | | | -10 | | | BA | | 2797 | | | | | | | 2 |
| 760 | | | | | | -10 | | | H | | | 2795 | | | | | | 2,3 |
| 761 | | | | | | 0 | -8 | | BB | 2766 | | | | | | | | 2 |
| 762 | | | | | | -10 | | | BC | 2801 | | | | | | | | |
| 763 | | | | | | 0 | | | BA | | | 2765 | | | | | | |
| 764 | | | | | | -10 | | | BA | | | 2800 | | | | | | |
| 765 | | | | | | -5 | 0 | | D | | 2775 | 2776 | | | | | | 3 |
| 766 | | | | | | -10 | 0 | | D | | 2796 | | | | | | | 3 |
| 767 | | | | | | -5 | -4 | | E | | 2778 | | | | | | | 3,4 |
| 768 | | | | | | -10 | -4 | | D | | 2798 | 2799 | | | | | | 3 |
| 769 | | | | | | -5 | -4 | | D | | | 2777 | | | | | | 3 |

TEST RUN NUMBERS

IDVAR (1) IDVAR (2) NDV

α OR β SCHEDULES

TABLE II (Con't.)

TEST: IA143

DATA SET/RUN NUMBER COLLATION SUMMARY

DATE: POST TEST

| DATA SET IDENTIFIER | CONFIGURATION | O/ET. α | O/ET. β | | JET PRESS | SEP. PARAMETERS Δα | Δβ | ΔX | ΔZ | | ΔY -100 | -200 | -300 | -400 | -600 | | | Cube I.D. |
|---|---|---|---|---|---|---|---|---|---|---|---|---|---|---|---|---|---|---|
| VX 770 | ORB/ET + SRB(R.H.) | -10 | 5 | | 0 | -6 | -2 | 300 | B | | 2792 | | | | | | | 5 |
| 771 | | | | | | -6 | -2 | 300 | B | | 2793 | | | | | | | 5 |
| 772 | | | | | | -6 | -2 | 300 | B | | 2822 | | | | | | | 5 |
| 773 | | | | | | 0 | 4 | 600 | CA | | 2769 | | 2770 | | | | | 6 |
| 774 | | | | | | -15 | 4 | | CA | | 2823 | | 2824 | | | | | |
| 775 | | | | | | -15 | 4 | | CA | | 2861 | | | | | | | |
| 776 | | | | | | 0 | -12 | | CB | | 2767 | | | | | | | |
| 777 | | | | | | -15 | | | CC | | 2829 | | | | | | | |
| 778 | | | | | | 0 | | | CA | | | | 2768 | | | | | |
| 779 | | | | | | 0 | | | CA | | | | 2791 | | | | | |
| 780 | | | | | | -15 | | | CA | | | | 2830 | | | | | |
| 781 | | | | | | -7 | -4 | | C | | | 2794 | | | | | | 7 |
| 782 | | | | | | -5 | 0 | | | | 2779 | | 2780 | | | | | 9 |
| 783 | | | | | | -10 | 0 | | | | 2807 | | 2808 | | | | | 9 |
| 784 | | | | | | -5 | -8 | | | | 2782 | | 2781 | | | | | 9 |
| 785 | | | | | | -10 | -8 | | J | | 2802 | | | | | | | 9,10 |
| 786 | | | | | | -10 | -8 | | C | | | | 2804 | | | | | 9 |
| 787 | | | | | | -10 | -4 | | K | | 2806 | | | | | | | 10 |
| 788 | | | | | | -15 | -4 | | K | | 2825 | 2826 | | | | | | 10 |

TEST RUN NUMBERS

IDVAR (1) IDVAR (2) NDV

α OR β SCHEDULES

TABLE II (Con't.)

TEST: IA143

DATA SET/RUN NUMBER COLLATION SUMMARY

DATE: POST TEST

| DATA SET IDENTIFIER | CONFIGURATION | O/ET. α | O/ET. β | | JET PRESS | SEP. PARAMETERS Δα | Δβ | ΔX | ΔZ | ΔY -10 | -100 | -200 | -300 | -400 | -600 | | | Cube I.D. |
|---|---|---|---|---|---|---|---|---|---|---|---|---|---|---|---|---|---|---|
| VX789 | ORB/ET + SRB(R.H.) | -10 | 5 | | 0 | -10 | -4 | 600 | J | | | 2805 | | | | | | 8,10 |
| 790 | | | | | | -15 | -8 | 600 | K | | 2828 | 2827 | | | | | | 10 |
| 791 | | | | | | -10 | -8 | 600 | K | | | 2803 | | | | | | 10 |
| 792 | | | | | | -5 | 4 | 900 | FA | | 2785 | | | 2786 | | | | 11 |
| 793 | | | | | | -20 | 4 | | FA | | 2853 | | | 2854 | | | | |
| 794 | | | | | | -5 | -16 | | FB | | 2783 | | | | | | | |
| 795 | | | | | | -20 | -16 | | FC | | 2855 | | | | | | | |
| 796 | | | | | | -5 | -16 | | FA | | | | | 2784 | | | | |
| 797 | | | | | | -20 | -16 | | FA | | | | | 2856 | | | | |
| 798 | | | | | | -10 | 0 | | L | | 2809 | | 2810 | | | | | 12 |
| 799 | | | | | | -15 | 0 | | | | 2838 | | 2839 | | | | | |
| 800 | | | | | | -10 | -12 | | | | 2815 | | 2816 | | | | | |
| 801 | | | | | | -15 | -12 | | | | 2831 | | 2832 | | | | | |
| 802 | | | | | | -12 | -6 | | | | | 2821 | | | | | | 13 |
| 803 | | | | | | -15 | -6 | | M | | | 2835 | | | | | | 14 |
| 804 | | | | | | -10 | -4 | | K | | | 2811 | 2812 | | | | | 15 |
| 805 | | | | | | -15 | -4 | | K | | | 2836 | 2837 | | | | | 15 |
| 806 | | | | | | -10 | -8 | | K | | | 2814 | 2813 | | | | | 15 |

TEST RUN NUMBERS

IDVAR (1) IDVAR (2) NDV

α OR β SCHEDULES

TABLE II (Con't.)

TEST: IA143

DATA SET/RUN NUMBER COLLATION SUMMARY

DATE: POST TEST

| DATA SET IDENTIFIER | CONFIGURATION | O/ET. α | O/ET. β | | JET PRESS | SEP. PARAMETERS Δα | Δβ | ΔX | ΔZ | | ΔY -100 | -200 | -300 | -400 | -600 | | | Cube I.D. |
|---|---|---|---|---|---|---|---|---|---|---|---|---|---|---|---|---|---|---|
| VX807 | ORB/ET + SRB(R.H.) | -10 | 5 | | 0 | -15 | -8 | 900 | K | | | 2833 | 2834 | | | | | 15 |
| 808 | | | | | | -5 | 4 | 1200 | G | | 2787 | | | | 2788 | | | 16 |
| 809 | | | | | | -25 | 4 | | G | | 2859 | | | | 2860 | | | |
| 810 | | | | | | -5 | -20 | | G | | 2790 | | | | 2789 | | | |
| 811 | | | | | | -25 | -20 | | GB | | 2857 | | | | | | | |
| 812 | | | | | | -25 | -20 | | GC | | | | | | 2858 | | | |
| 813 | | | | | | -10 | 0 | | L | | | 2819 | | 2820 | | | | 17 |
| 814 | | | | | | -20 | 0 | | | | | 2851 | | 2852 | | | | |
| 815 | | | | | | -10 | -12 | | | | | 2817 | | 2818 | | | | |
| 816 | | | | | | -20 | -12 | | | | | 2845 | | 2846 | | | | |
| 817 | | | | | | -15 | -4 | | N | | | 2840 | | 2841 | | | | 20 |
| 818 | | | | | | -20 | -4 | | | | | 2847 | 2848 | | | | | |
| 819 | | | | | | -15 | -8 | | | | | 2843 | | | | | | |
| 820 | | | | | | -20 | -8 | | | | | 2850 | 2849 | | | | | |
| 821 | | | | | | -15 | -8 | | P | | | | 2842 | | | | | 18,20 |
| 822 | | | | | | -18 | -8 | | M | | | | 2844 | | | | | 19 |

TEST RUN NUMBERS

1 7 13 19 25 31 37 43 49 55 61 67 73 76

IDVAR (1) IDVAR (2) NDV

α OR β SCHEDULES

TABLE II (Con't.)

TEST: IA143

DATA SET/RUN NUMBER COLLATION SUMMARY

DATE: POST TEST

| DATA SET IDENTIFIER | CONFIGURATION | O/ET. α | O/ET. β | | JET PRESS | SEP. PARAMETERS Δα | Δβ | ΔX | ΔZ | ΔY -10 | -100 | -200 | -300 | -400 | -600 | | | Cube I.D. |
|---|---|---|---|---|---|---|---|---|---|---|---|---|---|---|---|---|---|---|
| VX823 | ORB/ET + SRB(R.H.) | -10 | 10 | | 0 | 0 | 0 | 0 | AF | 2430 | 2431 | | | | | | | 1 |
| 824 | | | | | | -5 | 0 | | AD | 2444 | 2445 | | | | | | | |
| 825 | | | | | | 0 | -4 | | AB | 2433 | | | | | | | | |
| 826 | | | | | | -5 | -4 | | AC | 2443 | | | | | | | | |
| 827 | | | | | | 0 | -4 | | AF | | 2432 | | | | | | | |
| 828 | | | | | | -5 | -4 | | AD | | 2442 | | | | | | | |
| 829 | | | | | | 0 | 0 | 300 | BA | 2434 | | 2435 | | | | | | 2 |
| 830 | | | | | | -10 | 0 | | BA | 2466 | | | | | | | | 2 |
| 831 | | | | | | -10 | 0 | | H | | | 2464 | | | | | | 2,3 |
| 832 | | | | | | 0 | -8 | | BB | 2437 | | | | | | | | 2 |
| 833 | | | | | | -10 | -8 | | BC | 2470 | | | | | | | | |
| 834 | | | | | | 0 | -8 | | BA | | | 2436 | | | | | | |
| 835 | | | | | | -10 | -8 | | BA | | | 2469 | | | | | | |
| 836 | | | | | | -5 | 0 | | D | | 2446 | 2447 | | | | | | 3 |
| 837 | | | | | | -10 | 0 | | D | | 2465 | | | | | | | 3 |
| 838 | | | | | | -5 | -4 | | E | | 2449 | | | | | | | 3,4 |
| 839 | | | | | | -10 | -4 | | D | | 2467 | 2468 | | | | | | 3 |
| 840 | | | | | | -5 | -4 | | D | | | 2448 | | | | | | 3 |

TEST RUN NUMBERS

1 7 13 19 25 31 37 43 49 55 61 67 75 76

IDVAR (1) IDVAR (2) NDV

α OR β SCHEDULES

TABLE II (CON'T.)

TEST: IA143

DATA SET/RUN NUMBER COLLATION SUMMARY

DATE: POST TEST

| DATA SET IDENTIFIER | CONFIGURATION | O/E.T. α | O/E.T. β | | JET PRESS | SEP. PARAMETERS Δα | Δβ | ΔX | ΔZ | ΔY -10 | -100 | -200 | -300 | -400 | -600 | | | Cube I.D. |
|---|---|---|---|---|---|---|---|---|---|---|---|---|---|---|---|---|---|---|
| VX841 | ORB/ET + SRB(R.H.) | -10 | 10 | | 0 | -6 | -2 | 300 | B | | 2462 | | | | | | | 5 |
| 842 | | | | | | -6 | -2 | 300 | B | | 2500 | | | | | | | 5 |
| 843 | | | | | | 0 | -4 | 600 | CA | | 2440 | | 2441 | | | | | 6 |
| 844 | | | | | | -15 | 4 | | CA | | 2501 | | 2502 | | | | | |
| 845 | | | | | | -15 | 4 | | CA | | 2541 | | | | | | | |
| 846 | | | | | | 0 | -12 | | CB | | 2438 | | | | | | | |
| 847 | | | | | | -15 | -12 | | CC | | 2507 | | | | | | | |
| 848 | | | | | | 0 | -12 | | CA | | | | 2439 | | | | | |
| 849 | | | | | | 0 | -12 | | CA | | | | 2461 | | | | | |
| 850 | | | | | | -15 | -12 | | CA | | | | 2508 | | | | | |
| 851 | | | | | | -7 | -4 | | C | | | 2463 | | | | | | 7 |
| 852 | | | | | | -5 | 0 | | C | | 2450 | | 2451 | | | | | 9 |
| 853 | | | | | | -10 | 0 | | C | | 2476 | | 2477 | | | | | 9 |
| 854 | | | | | | -5 | -8 | | C | | 2453 | | 2452 | | | | | 9 |
| 855 | | | | | | -10 | -8 | | J | | 2471 | | | | | | | 9,10 |
| 856 | | | | | | -10 | -8 | | C | | | | 2473 | | | | | 9 |
| 857 | | | | | | -10 | -4 | | K | | 2475 | | | | | | | 10 |
| 858 | | | | | | -15 | -4 | | K | | 2503 | 2504 | | | | | | 10 |

TEST RUN NUMBERS

IDVAR (1) IDVAR (2) NDV

α OR β SCHEDULES

TABLE II (Con't)

TEST: IA143

DATA SET/RUN NUMBER COLLATION SUMMARY

DATE: POST TEST

| DATA SET IDENTIFIER | CONFIGURATION | O/ET. α | O/ET. β | | JET PRESS | SEP. PARAMETERS Δα | Δβ | ΔX | ΔZ | ΔY -10 | -100 | -200 | -300 | -400 | -600 | | | Cube I.D. |
|---|---|---|---|---|---|---|---|---|---|---|---|---|---|---|---|---|---|---|
| VX859 | ORB/ET + SRB(R.H.) | -10 | 10 | | 0 | -10 | -4 | 600 | J | | | 2474 | | | | | | 8,10 |
| 860 | | | | | | -15 | -8 | 600 | K | | 2506 | 2505 | | | | | | 10 |
| 861 | | | | | | -10 | -8 | 600 | K | | | 2472 | | | | | | 10 |
| 862 | | | | | | -5 | 4 | 900 | FA | | 2456 | | | 2457 | | | | 11 |
| 863 | | | | | | -20 | 4 | | FA | | 2531 | | | 2532 | | | | |
| 864 | | | | | | -5 | -16 | | FB | | 2454 | | | | | | | |
| 865 | | | | | | -20 | -16 | | FC | | 2533 | | | | | | | |
| 866 | | | | | | -5 | -16 | | FA | | | | | 2455 | | | | |
| 867 | | | | | | -20 | -16 | | FA | | | | | 2534 | | | | |
| 868 | | | | | | -10 | 0 | | L | | 2487 | | | 2488 | | | | 12 |
| 869 | | | | | | -10 | 0 | | LC | | 2478 | | | 2479 | | | | |
| 870 | | | | | | -15 | 0 | | L | | 2516 | | | 2517 | | | | |
| 871 | | | | | | -10 | -12 | | L | | 2493 | | | 2494 | | | | |
| 872 | | | | | | -10 | -12 | | LC | | 2484 | | | 2485 | | | | |
| 873 | | | | | | -15 | -12 | | L | | 2509 | | | 2510 | | | | |
| 874 | | | | | | -12 | -6 | | L | | | 2499 | | | | | | 13 |
| 875 | | | | | | -15 | -6 | | M | | | 2513 | | | | | | 14 |

TEST RUN NUMBERS

IDVAR (1) IDVAR (2) NDV

α OR β SCHEDULES

TABLE II (CON'T.)

TEST: IA143

DATA SET/RUN NUMBER COLLATION SUMMARY

DATE: POST TEST

| DATA SET IDENTIFIER | CONFIGURATION | O/ET. α | O/ET. β | | JET PRESS | SEP. PARAMETERS Δα | Δβ | ΔX | ΔZ | | ΔY -100 | -200 | -300 | -400 | -600 | | | Cube I.D. |
|---|---|---|---|---|---|---|---|---|---|---|---|---|---|---|---|---|---|---|
| VX876 | ORB/ET + SRB(R.H.) | -10 | 10 | | 0 | -10 | -4 | 900 | K | | | 2480 | 2481 | | | | | 15 |
| 877 | | | | | | -10 | -4 | | | | | 2489 | 2490 | | | | | |
| 878 | | | | | | -15 | -4 | | | | | 2514 | 2515 | | | | | |
| 879 | | | | | | -10 | -8 | | | | | 2483 | 2482 | | | | | |
| 880 | | | | | | -10 | -8 | | | | | 2492 | 2491 | | | | | |
| 881 | | | | | | -15 | -8 | | | | | 2511 | 2512 | | | | | |
| 882 | | | | | | -5 | 4 | 1200 | G | | 2458 | | | | | | | 16 |
| 883 | | | | | | -25 | 4 | | | | 2537 | | | | 2538 | | | |
| 884 | | | | | | -25 | 4 | | | | 2539 | | | | 2540 | | | |
| 885 | | | | | | -5 | -20 | | | | 2460 | | | | 2459 | | | |
| 886 | | | | | | -25 | -20 | | GB | | 2535 | | | | 2536 | | | |
| 887 | | | | | | -10 | 0 | | L | | | 2497 | | 2498 | | | | 17 |
| 888 | | | | | | -20 | 0 | | L | | | 2529 | | 2530 | | | | |
| 889 | | | | | | -10 | -12 | | L | | | 2495 | | 2496 | | | | |
| 890 | | | | | | -10 | -12 | | LC | | | 2486 | | | | | | |
| 891 | | | | | | -20 | -12 | | L | | | 2523 | | 2524 | | | | |
| 892 | | | | | | -15 | -4 | | N | | | 2518 | 2519 | | | | | 20 |
| 893 | | | | | | -20 | -4 | | N | | | 2525 | 2526 | | | | | 20 |

TEST RUN NUMBERS

IDVAR (1) IDVAR (2) NDV

α OR β SCHEDULES

TABLE II (Con't.)

TEST: IA143

DATA SET/RUN NUMBER COLLATION SUMMARY

DATE: Post Test

| DATA SET IDENTIFIER | CONFIGURATION | O/E.T. α | O/E.T. β | | JET PRESS | SEP. PARAMETERS Δα | Δβ | ΔX | ΔZ | | ΔY -100 | -200 | -300 | -400 | -600 | | | Cube I.D. |
|---|---|---|---|---|---|---|---|---|---|---|---|---|---|---|---|---|---|---|
| VX894 | ORB/ET + SRB(R.H.) | -10 | 10 | | 0 | -15 | -8 | 1200 | N | | | 2521 | | | | | | 20 |
| 895 | ↓ | ↓ | ↓ | | ↓ | -20 | ↓ | ↓ | N | | | 2528 | 2527 | | | | | 20 |
| 896 | ↓ | ↓ | ↓ | | ↓ | -15 | ↓ | ↓ | P | | | | 2520 | | | | | 18,20 |
| 897 | ↓ | ↓ | ↓ | | ↓ | -18 | ↓ | ↓ | M | | | | 2522 | | | | | 19 |

TEST RUN NUMBERS

1 7 13 19 25 31 37 43 49 55 61 67 75 76

IDVAR (1) IDVAR (2) NDV

α OR β SCHEDULES

TABLE II (Con't.)

TEST: IA143

DATA SET/RUN NUMBER COLLATION SUMMARY

DATE: POST TEST

| DATA SET IDENTIFIER | CONFIGURATION | O/E.T. α | O/E.T. β | | JET PRESS | SEP. PARAMETERS Δα | Δβ | ΔX | ΔZ | ΔY -50 | -100 | -150 | -200 | -300 | -400 | -600 | | Cube I.D. |
|---|---|---|---|---|---|---|---|---|---|---|---|---|---|---|---|---|---|---|
| VX 898 | ORB/ET + SRB(R.H.) | -5 | +10 | | 0 | 0 | 0 | 0 | AF | 4394 | | 4395 | | | | | | 1 |
| 899 | | | | | | -5 | 0 | | AD | 4408 | | 4409 | | | | | | |
| 900 | | | | | | 0 | -4 | | AB | 4397 | | | | | | | | |
| 901 | | | | | | -5 | | | AC | 4407 | | | | | | | | |
| 902 | | | | | | 0 | | | AF | | | 4396 | | | | | | |
| 903 | | | | | | -5 | | | AD | | | 4406 | | | | | | |
| 904 | | | | | | 0 | 0 | 300 | BA | 4398 | | | 4399 | | | | | 2 |
| 905 | | | | | | -10 | | | BA | 4432 | | | | | | | | 2 |
| 906 | | | | | | -10 | | | H | | | | 4430 | | | | | 2,3 |
| 907 | | | | | | 0 | -8 | | BB | 4401 | | | | | | | | 2 |
| 908 | | | | | | -10 | | | BC | 4436 | | | | | | | | |
| 909 | | | | | | 0 | | | BA | | | | 4400 | | | | | |
| 910 | | | | | | -10 | | | BA | | | | 4435 | | | | | |
| 911 | | | | | | -5 | 0 | | D | | 4410 | | 4411 | | | | | 3 |
| 912 | | | | | | -10 | 0 | | D | | | 4431 | | | | | | 3 |
| 913 | | | | | | -5 | -4 | | E | | 4413 | | | | | | | 3,4 |
| 914 | | | | | | -10 | | | D | | 4433 | | 4434 | | | | | 3 |
| 915 | | | | | | -5 | | | D | | | | 4412 | | | | | 3 |

TEST RUN NUMBERS

IDVAR (1) IDVAR (2) NDV

α OR β SCHEDULES

TABLE II (Con't.)

TEST: IA143

DATA SET/RUN NUMBER COLLATION SUMMARY

DATE: POST TEST

| DATA SET IDENTIFIER | CONFIGURATION | O/E T. α | O/E T. β | | JET PRESS | SEP. PARAMETERS Δα | Δβ | ΔX | ΔZ | ΔY -50 | -100 | -150 | -200 | -300 | -400 | -600 | | Cube I.D. |
|---|---|---|---|---|---|---|---|---|---|---|---|---|---|---|---|---|---|---|
| VX916 | ORB/ET + SRB(R.H.) | -5 | +10 | | 0 | -6 | -2 | 300 | B | | 4428 | | | | | | | 5 |
| 917 | | | | | | -6 | -2 | 300 | B | | 4457 | | | | | | | 5 |
| 918 | | | | | | 0 | +4 | 600 | CA | | 4404 | | | 4405 | | | | 6 |
| 919 | | | | | | -15 | | | CA | | 4458 | | | 4459 | | | | |
| 920 | | | | | | -15 | | | CA | | 4496 | | | | | | | |
| 921 | | | | | | 0 | -12 | | CB | | 4402 | | | | | | | |
| 922 | | | | | | -15 | | | CC | | 4464 | | | | | | | |
| 923 | | | | | | 0 | | | CA | | | | | 4403 | | | | |
| 924 | | | | | | 0 | | | CA | | | | | 4427 | | | | |
| 925 | | | | | | -15 | | | CA | | | | | 4465 | | | | |
| 926 | | | | | | -7 | -4 | | C | | | | 4429 | | | | | 7 |
| 927 | | | | | | -5 | 0 | | C | | 4414 | | | 4415 | | | | 9 |
| 928 | | | | | | -10 | 0 | | C | | 4442 | | | 4443 | | | | 9 |
| 929 | | | | | | -5 | -8 | | C | | 4417 | | | 4416 | | | | 9 |
| 930 | | | | | | -10 | | | J | | 4437 | | | | | | | 9,10 |
| 931 | | | | | | -10 | | | C | | | | | 4439 | | | | 9 |
| 932 | | | | | | -10 | -4 | | K | | 4441 | | | | | | | 10 |
| 933 | | | | | | -15 | -4 | | K | | 4460 | | 4461 | | | | | 10 |

TEST RUN NUMBERS

IDVAR (1) IDVAR (2) NDV

α OR β SCHEDULES

TABLE II (Con't.)

TEST: IA143

DATA SET/RUN NUMBER COLLATION SUMMARY

DATE: POST TEST

| DATA SET IDENTIFIER | CONFIGURATION | O/ET. α | O/ET. β | JET PRESS | SEP. PARAMETERS Δα | Δβ | ΔX | ΔZ | ΔY -50 | -100 | -150 | -200 | -300 | -400 | -600 | Cube I.D. |
|---|---|---|---|---|---|---|---|---|---|---|---|---|---|---|---|---|
| VX934 | ORB/ET + SRB(R.H.) | -5 | +10 | 0 | -10 | -4 | 600 | J | | | | 4440 | | | | 8,10 |
| 935 | | | | | -15 | -8 | | K | | 4463 | | 4462 | | | | 10 |
| 936 | | | | | -10 | -8 | | K | | | | 4438 | | | | 10 |
| 937 | | | | | -5 | +4 | 900 | FA | | 4420 | | | | 4421 | | 11 |
| 938 | | | | | -20 | +4 | | FA | | 4488 | | | | 4489 | | |
| 939 | | | | | -5 | -8 | | FB | | 4418 | | | | | | |
| 940 | | | | | -20 | -16 | | FC | | 4490 | | | | | | |
| 941 | | | | | -5 | -12 | | FA | | | | | | 4419 | | |
| 942 | | | | | -20 | -16 | | FA | | | | | | 4491 | | |
| 943 | | | | | -10 | 0 | | L | | 4444 | | | 4445 | | | 12 |
| 944 | | | | | -15 | 0 | | L | | 4473 | | | 4474 | | | |
| 945 | | | | | -10 | -12 | | L | | 4450 | | | 4451 | | | |
| 946 | | | | | -15 | -12 | | L | | 4466 | | | 4467 | | | |
| 947 | | | | | -12 | -6 | | L | | | | 4456 | | | | 13 |
| 948 | | | | | -15 | -6 | | M | | | | 4470 | | | | 14 |
| 949 | | | | | -10 | -4 | | K | | | | 4446 | 4447 | | | 15 |
| 950 | | | | | -15 | -4 | | K | | | | 4471 | 4472 | | | 15 |
| 951 | | | | | -10 | -8 | | K | | | | 4449 | 4448 | | | 15 |

TEST RUN NUMBERS

IDVAR (1) IDVAR (2) NDV

α OR β SCHEDULES

TEST: IA143

DATA SET/RUN NUMBER COLLATION SUMMARY

DATE: POST TEST

| DATA SET IDENTIFIER | CONFIGURATION | O/ET. α | O/ET. β | | JET PRESS | SEP. PARAMETERS Δα | Δβ | ΔX | ΔZ | ΔY -50 | -100 | -150 | -200 | -300 | -400 | -600 | | Cube I.D. |
|---|---|---|---|---|---|---|---|---|---|---|---|---|---|---|---|---|---|---|
| VX952 | ORB/ET + SRB(R.H.) | -5 | +10 | | 0 | -15 | -8 | 900 | K | | | | 4468 | 4469 | | | | 15 |
| 953 | | | | | | -5 | +4 | 1200 | GB | | 4426 | | | | | | | 16 |
| 954 | | | | | | -15 | +2 | | A | | 4422 | | | | | 4423 | | |
| 955 | | | | | | -25 | +4 | | GC | | 4494 | | | | | 4495 | | |
| 956 | | | | | | -15 | -8 | | A | | 4425 | | | | | 4424 | | |
| 957 | | | | | | -25 | -20 | | GC | | 4492 | | | | | 4493 | | |
| 958 | | | | | | -10 | 0 | | LB | | | | 4454 | | 4455 | | | 17 |
| 959 | | | | | | -20 | 0 | | L | | | | 4486 | | 4487 | | | |
| 960 | | | | | | -10 | -8 | | LB | | | | 4452 | | 4453 | | | |
| 961 | | | | | | -20 | -12 | | L | | | | 4480 | | 4481 | | | |
| 962 | | | | | | -15 | -4 | | N | | | | 4475 | 4476 | | | | 20 |
| 963 | | | | | | -20 | -4 | | N | | | | 4482 | 4483 | | | | |
| 964 | | | | | | -15 | -8 | | N | | | | 4478 | | | | | |
| 965 | | | | | | -20 | | | N | | | | 4485 | 4484 | | | | |
| 966 | | | | | | -15 | | | P | | | | | 4477 | | | | 18,20 |
| 967 | | | | | | -18 | | | M | | | | | 4479 | | | | 19 |

TEST RUN NUMBERS

IDVAR (1) IDVAR (2) NDV

α OR β SCHEDULES

TABLE II (Con't.)

TEST: IA143

DATA SET/RUN NUMBER COLLATION SUMMARY

DATE: POST TEST

| DATA SET IDENTIFIER | CONFIGURATION | O/ET. α | O/ET. β | | JET PRESS | SEP. PARAMETERS Δα | Δβ | Δx | Δz | ΔY -50 | -100 | -150 | -200 | -300 | -400 | -600 | | Cube I.D. |
|---|---|---|---|---|---|---|---|---|---|---|---|---|---|---|---|---|---|---|
| VX968 | ORB/ET + SRB(R.H.) | -5 | +5 | | 0 | 0 | 0 | 0 | AF | 4142 | | 4143 | | | | | | 1 |
| 969 | | | | | | -5 | 0 | | AD | 4156 | | 4157 | | | | | | |
| 970 | | | | | | 0 | -4 | | AB | 4145 | | | | | | | | |
| 971 | | | | | | -5 | | | AC | 4155 | | | | | | | | |
| 972 | | | | | | 0 | | | AF | | | 4144 | | | | | | |
| 973 | | | | | | -5 | | | AD | | | 4154 | | | | | | |
| 974 | | | | | | 0 | 0 | 300 | BA | 4146 | | | 4147 | | | | | 2 |
| 975 | | | | | | -10 | | | BA | 4077 | | | | | | | | 2 |
| 976 | | | | | | -10 | | | H | | | | 4075 | | | | | 2,3 |
| 977 | | | | | | 0 | -8 | | BB | 4149 | | | | | | | | 2 |
| 978 | | | | | | -10 | | | BC | 4081 | | | | | | | | |
| 979 | | | | | | 0 | | | BA | | | | 4148 | | | | | |
| 980 | | | | | | -10 | | | BA | | | | 4080 | | | | | |
| 981 | | | | | | -5 | 0 | | D | | 4158 | | 4159 | | | | | 3 |
| 982 | | | | | | -10 | 0 | | D | | | 4076 | | | | | | 3 |
| 983 | | | | | | -5 | -4 | | E | | 4161 | | | | | | | 3,4 |
| 984 | | | | | | -10 | | | D | | 4078 | | 4079 | | | | | 3 |
| 985 | | | | | | -5 | | | D | | | | 4160 | | | | | 3 |

TEST RUN NUMBERS

1 7 13 19 25 31 37 43 49 55 61 67 73 76

IDVAR (1) IDVAR (2) NDV

α OR β SCHEDULES

TABLE II (CON'T.)

TEST: IA143

DATA SET/RUN NUMBER COLLATION SUMMARY

DATE: POST TEST

| DATA SET IDENTIFIER | CONFIGURATION | O/ET. α | O/ET. β | | JET PRESS | SEP. PARAMETERS Δα | Δβ | Δx | Δz | ΔY -50 | -100 | -150 | -200 | -300 | -400 | -600 | | Cube I.D. |
|---|---|---|---|---|---|---|---|---|---|---|---|---|---|---|---|---|---|---|
| VX986 | ORB/ET + SRB(R.H.) | -5 | +5 | | 0 | -6 | -2 | 300 | B | | 4073 | | | | | | | 5 |
| 987 | | | | | | -6 | -2 | 300 | B | | 4102 | | | | | | | 5 |
| 988 | | | | | | 0 | +4 | 600 | CA | | 4152 | | | 4153 | | | | 6 |
| 989 | | | | | | -15 | +4 | | CA | | 4103 | | | 4104 | | | | |
| 990 | | | | | | -15 | +4 | | CA | | 4141 | | | | | | | |
| 991 | | | | | | 0 | -12 | | CB | | 4150 | | | | | | | |
| 992 | | | | | | -15 | | | CC | | 4109 | | | | | | | |
| 993 | | | | | | 0 | | | CA | | | | | 4151 | | | | |
| 994 | | | | | | 0 | | | CA | | | | | 4174 | | | | |
| 995 | | | | | | -15 | | | CA | | | | | 4110 | | | | |
| 996 | | | | | | -7 | -4 | | C | | | | 4074 | | | | | 7 |
| 997 | | | | | | -5 | 0 | | C | | 4162 | | | 4163 | | | | 9 |
| 998 | | | | | | -10 | 0 | | C | | 4087 | | | 4088 | | | | 9 |
| 999 | | | | | | -5 | -8 | | C | | 4165 | | | 4164 | | | | 9 |
| A00 | | | | | | -10 | | | J | | 4082 | | | | | | | 9,10 |
| 01 | | | | | | -10 | | | C | | | | | 4084 | | | | 9 |
| 02 | | | | | | -10 | -4 | | K | | 4086 | | | | | | | 10 |
| 03 | | | | | | -15 | -4 | | K | | 4105 | | 4106 | | | | | 10 |

TEST RUN NUMBERS

1 7 13 19 25 31 37 43 49 55 61 67 75 76

IDVAR (1) IDVAR (2) NDV

α OR β SCHEDULES

TABLE II (Con't.)

TEST: IA143

DATA SET/RUN NUMBER COLLATION SUMMARY

DATE: POST TEST

| DATA SET IDENTIFIER | CONFIGURATION | O/ET. α | O/ET. β | JET PRESS | SEP. PARAMETERS Δα | Δβ | Δx | Δz | ΔY -50 | -100 | -150 | -200 | -300 | -400 | -600 | | Cube I.D. |
|---|---|---|---|---|---|---|---|---|---|---|---|---|---|---|---|---|---|
| VXA04 | ORB/ET + SRB(R.H.) | -5 | +5 | 0 | -10 | -4 | 600 | J | | | | 4085 | | | | | 8,10 |
| 05 | | | | | -15 | -8 | | K | | 4108 | | 4107 | | | | | 10 |
| 06 | | | | | -10 | -8 | | K | | | | 4083 | | | | | 10 |
| 07 | | | | | -5 | +4 | 900 | FA | | 4168 | | | | 4169 | | | 11 |
| 08 | | | | | -20 | +4 | | FA | | 4133 | | | | 4134 | | | |
| 09 | | | | | -5 | -8 | | FA | | 4166 | | | | | | | |
| 10 | | | | | -20 | -16 | | FC | | 4135 | | | | | | | |
| 11 | | | | | -5 | -12 | | FA | | | | | | 4167 | | | |
| 12 | | | | | -20 | -16 | | FA | | | | | | 4136 | | | |
| 13 | | | | | -10 | 0 | | L | | 4089 | | | 4090 | | | | 12 |
| 14 | | | | | -15 | 0 | | L | | 4118 | | | 4119 | | | | |
| 15 | | | | | -10 | -12 | | L | | 4095 | | | 4096 | | | | |
| 16 | | | | | -15 | -12 | | L | | 4111 | | | 4112 | | | | |
| 17 | | | | | -12 | -6 | | L | | | | 4101 | | | | | 13 |
| 18 | | | | | -15 | -6 | | M | | | | 4115 | | | | | 14 |
| 19 | | | | | -10 | -4 | | K | | | | 4091 | 4092 | | | | 15 |
| 20 | | | | | -15 | -4 | | K | | | | 4116 | 4117 | | | | 15 |
| 21 | | | | | -10 | -8 | | K | | | | 4094 | 4093 | | | | 15 |

TEST RUN NUMBERS

IDVAR (1) IDVAR (2) NDV

α OR β SCHEDULES

TABLE II (Con't.)

TEST: IA143

DATA SET/RUN NUMBER COLLATION SUMMARY

DATE: POST TEST

| DATA SET IDENTIFIER | CONFIGURATION | O/ET. α | O/ET. β | | JET PRESS | SEP. Δα | SEP. ΔB | SEP. ΔX | SEP. ΔZ | ΔY -50 | -100 | -150 | -200 | -300 | -400 | -600 | | Cube I.D. |
|---|---|---|---|---|---|---|---|---|---|---|---|---|---|---|---|---|---|---|
| -VXA22 | ORB/ET + SRB(R.H.) | -5 | +5 | | 0 | -15 | -8 | 900 | K | | | | 4113 | 4114 | | | | 15 |
| 23 | | | | | | -15 | +4 | 1200 | A | | 4176 | | | | | 4177 | | 16 |
| 24 | | | | | | -15 | | | A | | 4179 | | | | | 4180 | | |
| 25 | | | | | | -25 | | | GC | | 4139 | | | | | 4140 | | |
| 26 | | | | | | -15 | -8 | | A | | 4182 | | | | | 4181 | | |
| 27 | | | | | | -15 | -20 | | A | | | | | | | 4178 | | |
| 28 | | | | | | -25 | -20 | | GC | | 4137 | | | | | 4138 | | |
| 29 | | | | | | -10 | 0 | | LB | | | | 4099 | | 4100 | | | 17 |
| 30 | | | | | | -20 | 0 | | L | | | | 4131 | | 4132 | | | |
| 31 | | | | | | -10 | -8 | | LB | | | | 4097 | | 4098 | | | |
| 32 | | | | | | -20 | -12 | | L | | | | 4125 | | 4126 | | | |
| 33 | | | | | | -15 | -4 | | N | | | | 4120 | 4121 | | | | 20 |
| 34 | | | | | | -20 | -4 | | N | | | | 4127 | 4128 | | | | |
| 35 | | | | | | -15 | -8 | | N | | | | 4123 | | | | | |
| 36 | | | | | | -20 | | | N | | | | 4130 | 4129 | | | | |
| 37 | | | | | | -15 | | | P | | | | | 4122 | | | | 18,20 |
| 38 | | | | | | -18 | | | M | | | | | 4124 | | | | 19 |

TEST RUN NUMBERS

IDVAR (1) IDVAR (2) NDV

α OR β SCHEDULES

TABLE II (Con't.)

TEST: IA143

DATA SET/RUN NUMBER COLLATION SUMMARY

DATE: POST TEST

| DATA SET IDENTIFIER | CONFIGURATION | O/ET. α | O/ET. β | | JET PRESS | SEP. PARAMETERS Δα | Δβ | Δx | Δz | ΔY -50 | -100 | -150 | -200 | -300 | -400 | -600 | | Cube I.D. |
|---|---|---|---|---|---|---|---|---|---|---|---|---|---|---|---|---|---|---|
| -VXA39 | ORB/ET + SRB(R.H.) | -5 | -5 | | 0 | 0 | 0 | 0 | AF | 4183 | | 4184 | | | | | | 1 |
| 40 | | | | | | -5 | 0 | | AD | 4197 | | 4198 | | | | | | |
| 41 | | | | | | 0 | -4 | | AB | 4186 | | | | | | | | |
| 42 | | | | | | -5 | | | AC | 4196 | | | | | | | | |
| 43 | | | | | | 0 | | | AF | | | 4185 | | | | | | |
| 44 | | | | | | -5 | | | AD | | | 4195 | | | | | | |
| 45 | | | | | | 0 | 0 | 300 | BA | 4187 | | | 4188 | | | | | 2 |
| 46 | | | | | | -10 | | | BA | 4222 | | | | | | | | 2 |
| 47 | | | | | | -10 | | | H | | | | 4220 | | | | | 2,3 |
| 48 | | | | | | 0 | -8 | | BB | 4190 | | | | | | | | 2 |
| 49 | | | | | | -10 | | | BC | 4226 | | | | | | | | |
| 50 | | | | | | 0 | | | BA | | | | 4189 | | | | | |
| 51 | | | | | | -10 | | | BA | | | | 4225 | | | | | |
| 52 | | | | | | -5 | 0 | | D | | 4199 | | 4200 | | | | | 3 |
| 53 | | | | | | -10 | 0 | | D | | | 4221 | | | | | | 3 |
| 54 | | | | | | -5 | -4 | | E | | 4202 | | | | | | | 3,4 |
| 55 | | | | | | -10 | | | D | | 4223 | | 4224 | | | | | 3 |
| 56 | | | | | | -5 | | | D | | | | 4201 | | | | | 3 |

TEST RUN NUMBERS

IDVAR (1) IDVAR (2) NDV

α OR β SCHEDULES

TABLE II (Con't.)

TEST: IA143

DATA SET/RUN NUMBER COLLATION SUMMARY

DATE: POST TEST

| DATA SET IDENTIFIER | CONFIGURATION | O/E.T. α | O/E.T. β | | JET PRESS | SEP. PARAMETERS Δα | Δβ | ΔX | ΔZ | ΔY -50 | -100 | -150 | -200 | -300 | -400 | -600 | | Cube I.D. |
|---|---|---|---|---|---|---|---|---|---|---|---|---|---|---|---|---|---|---|
| VXA57 | ORB/ET + SRB(R.H.) | -5 | -5 | | 0 | -6 | -2 | 300 | B | | 4218 | | | | | | | 5 |
| 58 | | | | | | -6 | -2 | 300 | B | | 4247 | | | | | | | 5 |
| 59 | | | | | | 0 | 4 | 600 | CA | | 4193 | | | 4194 | | | | 6 |
| 60 | | | | | | -15 | | | | | 4248 | | | 4249 | | | | |
| 61 | | | | | | -15 | | | | | 4286 | | | | | | | |
| 62 | | | | | | 0 | -12 | | CB | | 4191 | | | | | | | |
| 63 | | | | | | -15 | | | CC | | 4254 | | | | | | | |
| 64 | | | | | | 0 | | | CA | | | | | 4192 | | | | |
| 65 | | | | | | 0 | | | | | | | | 4217 | | | | |
| 66 | | | | | | -15 | | | | | | | | 4255 | | | | |
| 67 | | | | | | -7 | -4 | | C | | | | 4219 | | | | | 7 |
| 68 | | | | | | -5 | 0 | | | | 4203 | | | 4204 | | | | 9 |
| 69 | | | | | | -10 | 0 | | | | 4232 | | | 4233 | | | | 9 |
| 70 | | | | | | -5 | -8 | | | | 4206 | | | 4205 | | | | 9 |
| 71 | | | | | | -10 | | | J | | 4227 | | | | | | | 9,10 |
| 72 | | | | | | | | | C | | | | | 4229 | | | | 9 |
| 73 | | | | | | | -4 | | K | | 4231 | | | | | | | 10 |
| 74 | | | | | | -15 | -4 | | K | | 4250 | | 4251 | | | | | 10 |

TEST RUN NUMBERS

IDVAR (1) IDVAR (2) NDV

α OR β SCHEDULES

TABLE II (CON'T.)

TEST: IA143

DATA SET/RUN NUMBER COLLATION SUMMARY

DATE: POST TEST

| DATA SET IDENTIFIER | CONFIGURATION | O/ET. α | O/ET. β | | JET PRESS | SEP. PARAMETERS Δα | Δβ | ΔX | ΔZ | ΔY -50 | -100 | -150 | -200 | -300 | -400 | -600 | | Cube F.O. |
|---|---|---|---|---|---|---|---|---|---|---|---|---|---|---|---|---|---|---|
| VXA75 | ORB/ET + SRB(R.H.) | -5 | -5 | | O | -10 | -4 | 600 | J | | | | 4230 | | | | | 8,10 |
| 76 | | | | | | -15 | -8 | | K | | 4253 | | 4252 | | | | | 10 |
| 77 | | | | | | -10 | -8 | | K | | | | 4228 | | | | | 10 |
| 78 | | | | | | -5 | 4 | 900 | FA | | 4209 | | | | 4210 | | | 11 |
| 79 | | | | | | -20 | 4 | | | | 4278 | | | | 4279 | | | |
| 80 | | | | | | -5 | -8 | | | | 4207 | | | | | | | |
| 81 | | | | | | -20 | -16 | | FC | | 4280 | | | | | | | |
| 82 | | | | | | -5 | -12 | | FA | | | | | | 4208 | | | |
| 83 | | | | | | -20 | -16 | | FA | | | | | | 4281 | | | |
| 84 | | | | | | -10 | 0 | | L | | 4234 | | | 4235 | | | | 12 |
| 85 | | | | | | -15 | 0 | | | | 4263 | | | 4264 | | | | |
| 86 | | | | | | -10 | -12 | | | | 4240 | | | 4241 | | | | |
| 87 | | | | | | -15 | -12 | | | | 4256 | | | 4257 | | | | |
| 88 | | | | | | -12 | -6 | | | | | | 4246 | | | | | 13 |
| 89 | | | | | | -15 | -6 | | M | | | | 4260 | | | | | 14 |
| 90 | | | | | | -10 | -4 | | K | | | | 4236 | 4237 | | | | 15 |
| 91 | | | | | | -15 | -4 | | | | | | 4261 | 4262 | | | | 15 |
| 92 | | | | | | -10 | -8 | | | | | | 4239 | 4238 | | | | 15 |

TEST RUN NUMBERS

IDVAR (1) IDVAR (2) NDV

α OR β SCHEDULES

TABLE II (Con't.)

TEST: IA143

DATA SET/RUN NUMBER COLLATION SUMMARY

DATE: POST TEST

| DATA SET IDENTIFIER | CONFIGURATION | O/ET. α | O/ET. β | | JET PRESS | SEP. PARAMETERS Δα | Δβ | ΔX | ΔZ | ΔY -50 | -100 | -150 | -200 | -300 | -400 | -600 | | Cube I.D. |
|---|---|---|---|---|---|---|---|---|---|---|---|---|---|---|---|---|---|---|
| -VXA93 | ORB/ET + SRB(R.H.) | -5 | -5 | | 0 | -15 | -8 | 900 | K | | | | 4258 | 4259 | | | | 15 |
| 94 | | | | | | -15 | 4 | 1200 | A | | 4211 | | | | | 4212 | | 16 |
| 95 | | | | | | -25 | 4 | | GC | | 4284 | | | | | 4285 | | |
| 96 | | | | | | -15 | -8 | | A | | 4214 | | | | | 4213 | | |
| 97 | | | | | | -5 | -16 | | GB | | | 4215 | | | | | | |
| 98 | | | | | | -5 | -20 | | G | | | | | | | 4216 | | |
| 99 | | | | | | -25 | -16 | | GC | | 4282 | | | | | | | |
| -VXB00 | | | | | | -25 | -20 | | GB | | | | | | | 4283 | | |
| 01 | | | | | | -10 | 0 | | LB | | | | 4244 | | 4245 | | | 17 |
| 02 | | | | | | -20 | 0 | | L | | | | 4276 | | 4277 | | | |
| 03 | | | | | | -10 | -8 | | LB | | | | 4242 | | 4243 | | | |
| 04 | | | | | | -20 | -12 | | L | | | | 4270 | | 4271 | | | |
| 05 | | | | | | -15 | -4 | | N | | | | 4265 | 4266 | | | | 20 |
| 06 | | | | | | -20 | -4 | | | | | | 4272 | 4273 | | | | |
| 07 | | | | | | -15 | -8 | | | | | | 4268 | | | | | |
| 08 | | | | | | -20 | | | | | | | 4275 | 4274 | | | | |
| 09 | | | | | | -15 | | | P | | | | | 4267 | | | | 18,20 |
| 10 | | | | | | -18 | | | M | | | | | 4269 | | | | 19 |

TEST RUN NUMBERS

IDVAR (1) IDVAR (2) NDV

α OR β SCHEDULES

TABLE II (Con't.)



TEST: IA143

DATA SET/RUN NUMBER COLLATION SUMMARY

DATE: Post Test

| DATA SET IDENTIFIER | CONFIGURATION | O/E.T. α | O/E.T. β | JET PRESS | SEP. PARAMETERS Δα | Δβ | ΔX | ΔZ | ΔY -50 | -100 | -150 | -200 | -300 | -400 | -600 | | Cube I.D. |
|---|---|---|---|---|---|---|---|---|---|---|---|---|---|---|---|---|---|
| VXB11 | ORB/ET + SRB(R.H.) | -5 | -10 | 0 | 0 | 0 | 0 | AF | 4358 | | 4359 | | | | | | 1 |
| 12 | | | | | -5 | 0 | 0 | AD | 4372 | | 4373 | | | | | | |
| 13 | | | | | 0 | -4 | 0 | AB | 4361 | | | | | | | | |
| 14 | | | | | -5 | -4 | 0 | AC | 4371 | | | | | | | | |
| 15 | | | | | 0 | -4 | 0 | AF | | | 4360 | | | | | | |
| 16 | | | | | -5 | -4 | 0 | AD | | | 4370 | | | | | | |
| 17 | | | | | 0 | 0 | 300 | BA | 4362 | | | 4363 | | | | | 2 |
| 18 | | | | | -10 | 0 | 300 | BA | 4292 | | | | | | | | 2 |
| 19 | | | | | -10 | 0 | 300 | H | | | | 4290 | | | | | 2,3 |
| 20 | | | | | 0 | -8 | 300 | BB | 4365 | | | | | | | | 2 |
| 21 | | | | | -10 | -8 | 300 | BC | 4296 | | | | | | | | |
| 22 | | | | | 0 | -8 | 300 | BA | | | | 4364 | | | | | |
| 23 | | | | | -10 | -8 | 300 | BA | | | | 4295 | | | | | |
| 24 | | | | | -5 | 0 | 300 | D | | 4374 | | 4375 | | | | | 3 |
| 25 | | | | | -10 | 0 | 300 | D | | | 4291 | | | | | | 3 |
| 26 | | | | | -5 | -4 | 300 | E | | 4378 | | | | | | | 3,4 |
| 27 | | | | | -10 | -4 | 300 | D | | 4293 | | 4294 | | | | | 3 |
| 28 | | | | | -5 | -4 | 300 | D | | | | 4377 | | | | | 3 |

TEST RUN NUMBERS

IDVAR (1) IDVAR (2) NDV

α OR β SCHEDULES

TABLE II (Con't)

TEST: IA143

DATA SET/RUN NUMBER COLLATION SUMMARY

DATE: POST TEST

| DATA SET IDENTIFIER | CONFIGURATION | O/ET. α | O/ET. β | | JET PRESS | SEP. PARAMETERS Δα | Δβ | Δx | Δz | ΔY -50 | -100 | -150 | -200 | -300 | -400 | -600 | | Cube I.D. |
|---|---|---|---|---|---|---|---|---|---|---|---|---|---|---|---|---|---|---|
| VXB29 | ORB/ET + SRB(R.H.) | -5 | -10 | | 0 | -6 | -2 | 300 | B | | 4288 | | | | | | | 5 |
| 30 | | | | | | -6 | -2 | 300 | B | | 4317 | | | | | | | 5 |
| 31 | | | | | | 0 | +4 | 600 | CA | | 4368 | | | 4369 | | | | 6 |
| 32 | | | | | | -15 | +4 | | CA | | 4318 | | | 4319 | | | | |
| 33 | | | | | | -15 | +4 | | CA | | 4356 | | | | | | | |
| 34 | | | | | | 0 | -12 | | CB | | 4366 | | | | | | | |
| 35 | | | | | | -15 | -12 | | CC | | 4324 | | | | | | | |
| 36 | | | | | | 0 | -12 | | CA | | | | | 4367 | | | | |
| 37 | | | | | | 0 | -12 | | CA | | | | | 4393 | | | | |
| 38 | | | | | | -15 | -12 | | CA | | | | | 4325 | | | | |
| 39 | | | | | | -7 | -4 | | C | | | | 4289 | | | | | 7 |
| 40 | | | | | | -5 | 0 | | C | | 4379 | | | 4380 | | | | 9 |
| 41 | | | | | | -10 | 0 | | C | | 4302 | | | 4303 | | | | 9 |
| 42 | | | | | | -5 | -8 | | C | | 4382 | | | 4381 | | | | 9 |
| 43 | | | | | | -10 | -8 | | J | | 4297 | | | | | | | 9,10 |
| 44 | | | | | | -10 | -8 | | C | | | | | 4299 | | | | 9 |
| 45 | | | | | | -10 | -4 | | K | | 4301 | | | | | | | 10 |
| 46 | | | | | | -15 | -4 | | K | | 4320 | | 4321 | | | | | 10 |

TEST RUN NUMBERS

1 7 13 19 25 31 37 43 49 55 61 67 75 76

IDVAR (1) IDVAR (2) NDV

α OR β SCHEDULES

TABLE II (Con't.)

TEST: IA143

DATA SET/RUN NUMBER COLLATION SUMMARY

DATE: POST TEST

| DATA SET IDENTIFIER | CONFIGURATION | O/ET. α | O/ET. β | | JET PRESS | SEP. PARAMETERS Δα | Δβ | Δx | Δz | ΔY -50 | -100 | -150 | -200 | -300 | -400 | -600 | | Cube I.D. |
|---|---|---|---|---|---|---|---|---|---|---|---|---|---|---|---|---|---|---|
| VXB47 | ORB/ET + SRB(R.H.) | -5 | -10 | | 0 | -10 | -4 | 600 | J | | | | 4300 | | | | | 8,10 |
| 48 | | | | | | -15 | -8 | | K | | 4323 | | 4322 | | | | | 10 |
| 49 | | | | | | -10 | -8 | | K | | | | 4298 | | | | | 10 |
| 50 | | | | | | -5 | +4 | 900 | FA | | 4385 | | | | 4386 | | | 11 |
| 51 | | | | | | -20 | +4 | | FA | | 4348 | | | | 4349 | | | |
| 52 | | | | | | -5 | -8 | | FB | | 4383 | | | | | | | |
| 53 | | | | | | -20 | -12 | | FC | | 4350 | | | | | | | |
| 54 | | | | | | -5 | -12 | | FA | | | | | | 4384 | | | |
| 55 | | | | | | -20 | -16 | | FA | | | | | | 4351 | | | |
| 56 | | | | | | -10 | 0 | | L | | 4304 | | | 4305 | | | | 12 |
| 57 | | | | | | -15 | 0 | | L | | 4333 | | | 4334 | | | | |
| 58 | | | | | | -10 | -12 | | L | | 4310 | | | 4311 | | | | |
| 59 | | | | | | -15 | -12 | | L | | 4326 | | | 4327 | | | | |
| 60 | | | | | | -12 | -6 | | L | | | | 4316 | | | | | 13 |
| 61 | | | | | | -15 | -6 | | M | | | | 4330 | | | | | 14 |
| 62 | | | | | | -10 | -4 | | K | | | | 4306 | 4307 | | | | 15 |
| 63 | | | | | | -15 | -4 | | K | | | | 4331 | 4332 | | | | 15 |
| 64 | | | | | | -10 | -8 | | K | | | | 4309 | 4308 | | | | 15 |

TEST RUN NUMBERS

1 7 13 19 23 31 37 43 49 55 61 67 75 76

IDVAR (1) IDVAR (2) NDV

α OR β SCHEDULES

TABLE II (Con't)

TEST: IA143

DATA SET/RUN NUMBER COLLATION SUMMARY

DATE: POST TEST

| DATA SET IDENTIFIER | CONFIGURATION | O/ET. α | O/ET. β | | JET PRESS | SEP. PARAMETERS Δα | Δβ | Δx | Δz | ΔY -50 | -100 | -150 | -200 | -300 | -400 | -600 | | Cube I.D. |
|---|---|---|---|---|---|---|---|---|---|---|---|---|---|---|---|---|---|---|
| -VXB65 | ORB/ET + SRB(R.H.) | -5 | -10 | | 0 | -15 | -8 | 900 | K | | | | 4328 | 4329 | | | | 15 |
| 66 | | | | | | -15 | +4 | 1200 | A | | 4387 | | | | | 4388 | | 16 |
| 67 | | | | | | -25 | +4 | | GC | | 4354 | | | | | 4355 | | |
| 68 | | | | | | -5 | -12 | | GB | | 4392 | | | | | | | |
| 69 | | | | | | -15 | -8 | | A | | 4390 | | | | | 4389 | | |
| 70 | | | | | | -25 | -12 | | GC | | | | | | | 4353 | | |
| 71 | | | | | | -5 | -16 | | G | | | | | | | 4391 | | |
| 72 | | | | | | -25 | -16 | | GC | | 4352 | | | | | | | |
| 73 | | | | | | -10 | 0 | | LB | | | | 4314 | | 4315 | | | 17 |
| 74 | | | | | | -20 | 0 | | L | | | | 4346 | | 4347 | | | |
| 75 | | | | | | -10 | -8 | | LB | | | | 4312 | | 4313 | | | |
| 76 | | | | | | -20 | -12 | | L | | | | 4340 | | 4341 | | | |
| 77 | | | | | | -15 | -4 | | N | | | | 4335 | 4336 | | | | 20 |
| 78 | | | | | | -20 | -4 | | N | | | | 4342 | 4343 | | | | |
| 79 | | | | | | -15 | -8 | | N | | | | 4338 | | | | | |
| 80 | | | | | | -20 | -8 | | N | | | | 4345 | 4344 | | | | |
| 81 | | | | | | -15 | -8 | | P | | | | | 4337 | | | | 18,20 |
| 82 | | | | | | -18 | -8 | | M | | | | | 4339 | | | | 19 |

TEST RUN NUMBERS

1 13 19 25 31 37 43 49 55 61 67 75 76

IDVAR (1) IDVAR (2) NDV

α OR β SCHEDULES

TABLE II (CON'T.)

TEST: IA143

DATA SET/RUN NUMBER COLLATION SUMMARY

DATE: POST TEST

| DATA SET IDENTIFIER | CONFIGURATION | O/E.T. α | O/E.T. β | | JET PRESS | SEP. PARAMETERS Δα | Δβ | Δx | Δz | ΔY -50 | -100 | -150 | -200 | -300 | -400 | -600 | | Cube I.D. |
|---|---|---|---|---|---|---|---|---|---|---|---|---|---|---|---|---|---|---|
| VXB83 | ORB/ET + SRB(R.H.) | 0 | +15 | | 0 | 0 | 0 | 0 | AF | 4575 | | 4576 | | | | | | 1 |
| 84 | | | | | | -5 | 0 | | AD | 4589 | 4590 | | | | | | | |
| 85 | | | | | | 0 | -4 | | AB | 4578 | | | | | | | | |
| 86 | | | | | | -5 | | | AC | 4588 | | | | | | | | |
| 87 | | | | | | 0 | | | AF | | | 4577 | | | | | | |
| 88 | | | | | | -5 | | | AD | | | 4587 | | | | | | |
| 89 | | | | | | 0 | 0 | 300 | BA | 4579 | | | 4580 | | | | | 2 |
| 90 | | | | | | -10 | | | BA | 4610 | | | | | | | | 2 |
| 91 | | | | | | -10 | | | H | | | | 4608 | | | | | 2,3 |
| 92 | | | | | | 0 | -8 | | BB | 4582 | | | | | | | | 2 |
| 93 | | | | | | -10 | | | BC | 4614 | | | | | | | | |
| 94 | | | | | | 0 | | | BA | | | | 4581 | | | | | |
| 95 | | | | | | -10 | | | BA | | | | 4613 | | | | | |
| 96 | | | | | | -5 | 0 | | D | | 4591 | | 4592 | | | | | 3 |
| 97 | | | | | | -10 | 0 | | D | | | 4609 | | | | | | 3 |
| 98 | | | | | | -5 | -4 | | E | | 4594 | | | | | | | 3,4 |
| 99 | | | | | | -10 | | | D | | 4611 | | 4612 | | | | | 3 |
| VXC00 | | | | | | -5 | | | D | | | | 4593 | | | | | 3 |

TEST RUN NUMBERS

IDVAR (1) IDVAR (2) NDV

α OR β SCHEDULES

TABLE II (Con't.)

TEST: IA143

DATA SET/RUN NUMBER COLLATION SUMMARY

DATE: POST TEST

| DATA SET IDENTIFIER | CONFIGURATION | O/ET. α | O/ET. β | | JET PRESS | SEP. PARAMETERS Δα | Δβ | Δx | Δz | ΔY -50 | -100 | -150 | -200 | -300 | -400 | -600 | | Cube I.D. |
|---|---|---|---|---|---|---|---|---|---|---|---|---|---|---|---|---|---|---|
| -VXC01 | ORB/ET + SRB(R.H.) | 0 | +15 | | 0 | -6 | -2 | 300 | B | | 4606 | | | | | | | 5 |
| 02 | | | | | | -6 | -2 | 300 | B | | 4635 | | | | | | | 5 |
| 03 | | | | | | 0 | +4 | 600 | CA | | 4585 | | | 4586 | | | | 6 |
| 04 | | | | | | -15 | +4 | | CA | | 4636 | | | 4637 | | | | |
| 05 | | | | | | -15 | +4 | | CA | | 4673 | | | | | | | |
| 06 | | | | | | 0 | -12 | | CB | | 4583 | | | | | | | |
| 07 | | | | | | -15 | | | CC | | 4642 | | | | | | | |
| 08 | | | | | | 0 | | | CA | | | | | 4584 | | | | |
| 09 | | | | | | 0 | | | CA | | | | | 4678 | | | | |
| 10 | | | | | | -15 | | | CA | | | | | 4643 | | | | |
| 11 | | | | | | -7 | -4 | | C | | | | 4607 | | | | | 7 |
| 12 | | | | | | -5 | 0 | | C | | 4595 | | | 4596 | | | | 9 |
| 13 | | | | | | -10 | 0 | | C | | 4620 | | | 4621 | | | | 9 |
| 14 | | | | | | -5 | -8 | | C | | 4598 | | | 4597 | | | | 9 |
| 15 | | | | | | -10 | | | J | | 4615 | | | | | | | 9,10 |
| 16 | | | | | | -10 | | | C | | | | | 4617 | | | | 9 |
| 17 | | | | | | -10 | -4 | | K | | 4619 | | | | | | | 10 |
| 18 | | | | | | -15 | -4 | | K | | 4638 | | 4639 | | | | | 10 |

TEST RUN NUMBERS

1 7 13 19 25 31 37 43 49 55 61 67 75 76

IDVAR (1) IDVAR (2) NDV

α OR β SCHEDULES

TABLE II (Con't.)

TEST: IA143

DATA SET/RUN NUMBER COLLATION SUMMARY

DATE: POST TEST

| DATA SET IDENTIFIER | CONFIGURATION | O/ET. α | O/ET. β | | JET PRESS | SEP. PARAMETERS Δα | Δβ | ΔX | ΔZ | ΔY -50 | -100 | -150 | -200 | -300 | -400 | -600 | | Cube I.D. |
|---|---|---|---|---|---|---|---|---|---|---|---|---|---|---|---|---|---|---|
| _VXC19 | ORB/ET + SRB(R.H.) | 0 | +15 | | 0 | -10 | -4 | 600 | J | | | | 4618 | | | | | 8,10 |
| 20 | | | | | | -15 | -8 | | K | | 4641 | | 4640 | | | | | 10 |
| 21 | | | | | | -10 | -8 | | K | | | | 4616 | | | | | 10 |
| 22 | | | | | | -5 | +4 | 900 | FA | | 4601 | | | | 4602 | | | 11 |
| 23 | | | | | | -20 | +4 | | FA | | 4666 | | | | 4667 | | | |
| 24 | | | | | | -5 | -8 | | FB | | 4599 | | | | | | | |
| 25 | | | | | | -20 | -16 | | FC | | 4668 | | | | | | | |
| 26 | | | | | | -5 | -12 | | FA | | | | | | 4600 | | | |
| 27 | | | | | | -20 | -16 | | FA | | | | | | 4669 | | | |
| 28 | | | | | | -10 | 0 | | L | | 4622 | | | 4623 | | | | 12 |
| 29 | | | | | | -15 | 0 | | L | | 4651 | | | 4652 | | | | |
| 30 | | | | | | -10 | -12 | | L | | 4628 | | | 4629 | | | | |
| 31 | | | | | | -15 | -12 | | L | | 4644 | | | 4645 | | | | |
| 32 | | | | | | -12 | -6 | | L | | | | 4634 | | | | | 13 |
| 33 | | | | | | -15 | -6 | | M | | | | 4648 | | | | | 14 |
| 34 | | | | | | -10 | -4 | | K | | | | 4624 | 4625 | | | | 15 |
| 35 | | | | | | -15 | -4 | | K | | | | 4649 | 4650 | | | | 15 |
| 36 | | | | | | -10 | -8 | | K | | | | 4627 | 4626 | | | | 15 |

TEST RUN NUMBERS

IDVAR (1) IDVAR (2) NDV

α OR β SCHEDULES

TABLE II (Con't.)

TEST: IA143

DATA SET/RUN NUMBER COLLATION SUMMARY

DATE: POST TEST

| DATA SET IDENTIFIER | CONFIGURATION | O/ET. α | O/ET. β | | JET PRESS | SEP. PARAMETERS Δα | Δβ | ΔX | ΔZ | ΔY -50 | -100 | -150 | -200 | -300 | -400 | -600 | | Cube I.D. |
|---|---|---|---|---|---|---|---|---|---|---|---|---|---|---|---|---|---|---|
| VXG37 | ORB/ET + SRB(R.H.) | 0 | +15 | | 0 | -15 | -8 | 900 | K | | | | 4646 | 4647 | | | | 15 |
| 38 | | | | | | -15 | +4 | 1200 | A | | 4603 | | | | | | | 16 |
| 39 | | | | | | -15 | -2 | | A | | 4674 | | | | | 4675 | | |
| 40 | | | | | | -25 | +4 | | GG | | 4672 | | | | | | | |
| 41 | | | | | | -25 | -2 | | GC | | 4679 | | | | | 4680 | | |
| 42 | | | | | | -15 | -8 | | A | | 4605 | | | | | 4604 | | |
| 43 | | | | | | -15 | -8 | | A | | 4677 | | | | | 4676 | | |
| 44 | | | | | | -25 | -20 | | GC | | 4670 | | | | | 4671 | | |
| 45 | | | | | | -10 | 0 | | LB | | | | 4632 | | 4633 | | | 17 |
| 46 | | | | | | -20 | 0 | | L | | | | 4664 | | 4665 | | | |
| 47 | | | | | | -10 | -8 | | LB | | | | 4630 | | 4631 | | | |
| 48 | | | | | | -20 | -12 | | L | | | | 4658 | | 4659 | | | |
| 49 | | | | | | -15 | -4 | | N | | | | 4653 | 4654 | | | | 20 |
| 50 | | | | | | -20 | -4 | | N | | | | 4660 | 4661 | | | | |
| 51 | | | | | | -15 | -8 | | N | | | | 4656 | | | | | |
| 52 | | | | | | -20 | | | N | | | | 4663 | 4662 | | | | |
| 53 | | | | | | -15 | | | P | | | | | 4655 | | | | 18,20 |
| 54 | | | | | | -18 | | | M | | | | | 4657 | | | | 19 |

TEST RUN NUMBERS

IDVAR (1) IDVAR (2) NDV

α OR β SCHEDULES

TABLE II (Con't)

TEST: IA143

DATA SET/RUN NUMBER COLLATION SUMMARY

DATE: POST TEST

| DATA SET IDENTIFIER | CONFIGURATION | O/ET. α | O/ET. β | | JET PRESS | SEP. PARAMETERS Δα | Δβ | Δx | Δz | ΔY -50 | -100 | -150 | -200 | -300 | -400 | -600 | | Cube T.D. |
|---|---|---|---|---|---|---|---|---|---|---|---|---|---|---|---|---|---|---|
| VXC55 | ORB/ET + SRB(R.H.) | 0 | -15 | | 0 | 0 | 0 | 0 | AF | 4681 | | 4682 | | | | | | 1 |
| 56 | | | | | | 0 | | | AF | 4683 | | 4684 | | | | | | |
| 57 | | | | | | -5 | | | AD | 4697 | | 4698 | | | | | | |
| 58 | | | | | | 0 | -4 | | AB | 4686 | | | | | | | | |
| 59 | | | | | | -5 | | | AC | 4696 | | | | | | | | |
| 60 | | | | | | 0 | | | AF | | | 4685 | | | | | | |
| 61 | | | | | | -5 | | | AD | | | 4695 | | | | | | |
| 62 | | | | | | 0 | 0 | 300 | BA | 4687 | | | 4688 | | | | | 2 |
| 63 | | | | | | -10 | | | BA | 4721 | | | | | | | | 2 |
| 64 | | | | | | -10 | | | H | | | | 4719 | | | | | 2,3 |
| 65 | | | | | | 0 | -8 | | BB | 4690 | | | | | | | | 2 |
| 66 | | | | | | -10 | | | BC | 4728 | | | | | | | | |
| 67 | | | | | | 0 | | | BA | | | | 4689 | | | | | |
| 68 | | | | | | -10 | | | | | | | 4724 | | | | | |
| 69 | | | | | | | | | | | | | 4725 | | | | | |
| 70 | | | | | | | | | | | | | 4726 | | | | | |
| 71 | | | | | | | | | | | | | 4727 | | | | | |
| 72 | | | | | | -5 | 0 | | D | | 4699 | | 4700 | | | | | 3 |

TEST RUN NUMBERS

α OR β SCHEDULES

IDVAR (1) IDVAR (2) NDV

TABLE II. (CONT.)

TEST: IA143

DATA SET/RUN NUMBER COLLATION SUMMARY

DATE: POST TEST

| DATA SET IDENTIFIER | CONFIGURATION | O/E.T. α | O/E.T. β | JET PRESS | SEP. PARAMETERS Δα | Δβ | ΔX | ΔZ | ΔY -50 | -100 | -150 | -200 | -300 | -400 | -600 | | Cube I.D. |
|---|---|---|---|---|---|---|---|---|---|---|---|---|---|---|---|---|---|
| -VXC73 | ORB/ET + SRB(R.H.) | 0 | -15 | 0 | -10 | 0 | 300 | D | | | 4720 | | | | | | 3 |
| 74 | | | | | -5 | -4 | | E | | 4702 | | | | | | | 3,4 |
| 75 | | | | | -10 | | | D | | 4722 | | 4723 | | | | | 3 |
| 76 | | | | | -5 | | | D | | | | 4701 | | | | | 3 |
| 77 | | | | | -6 | -2 | | B | | 4717 | | | | | | | 5 |
| 78 | | | | | -6 | -2 | | B | | 4749 | | | | | | | 5 |
| 79 | | | | | 0 | 4 | 600 | CA | | 4693 | | | 4694 | | | | 6 |
| 80 | | | | | -15 | 4 | | CA | | 4750 | | | 4751 | | | | |
| 81 | | | | | 0 | -12 | | CB | | 4691 | | | | | | | |
| 82 | | | | | | | | CA | | | | | 4692 | | | | |
| 83 | | | | | | | | | | | | | 4716 | | | | |
| 84 | | | | | -15 | | | | | | | | 4757 | | | | |
| 85 | | | | | -7 | -4 | | C | | | | 4718 | | | | | 7 |
| 86 | | | | | -5 | 0 | | | | 4703 | | | 4704 | | | | 9 |
| 87 | | | | | -10 | 0 | | | | 4734 | | | 4735 | | | | 9 |
| 88 | | | | | -5 | -8 | | | | 4706 | | | 4705 | | | | 9 |
| 89 | | | | | -10 | | | J | | 4729 | | | | | | | 9,10 |
| 90 | | | | | -10 | | | C | | | | | 4731 | | | | 9 |

TEST RUN NUMBERS

1 7 13 19 25 31 37 43 49 55 61 67 75 76

IDVAR (1) IDVAR (2) NDV

α OR β SCHEDULES

TABLE II. (Con't.)

TEST: IA143

DATA SET/RUN NUMBER COLLATION SUMMARY

DATE: POST TEST

| DATA SET IDENTIFIER | CONFIGURATION | O/ET. α | O/ET. β | JET PRESS | SEP. PARAMETERS Δα | ΔB | ΔX | ΔZ | ΔY -50 | -100 | -150 | -200 | -300 | -400 | -600 | Cube T.B. | TEST RUN NUMBERS |
|---|---|---|---|---|---|---|---|---|---|---|---|---|---|---|---|---|---|
| -VXC 91 | ORB/ET + SRB(R.H.) | 0 | -15 | 0 | -10 | -4 | 600 | K | | 4733 | | | | | | 10 | |
| 92 | | | | | -15 | | | K | | 4752 | | 4753 | | | | 10 | |
| 93 | | | | | -10 | | | J | | | | 4732 | | | | 8,10 | |
| 94 | | | | | -15 | -8 | | K | | 4755 | | 4754 | | | | 10 | |
| 95 | | | | | -10 | -8 | | K | | | | 4730 | | | | 10 | |
| 96 | | | | | -5 | 4 | 900 | FA | | 4709 | | | | 4710 | | 11 | |
| 97 | | | | | | -8 | | FB | | 4707 | | | | | | 11 | |
| 98 | | | | | | -12 | | FA | | | | | | 4708 | | 11 | |
| 99 | | | | | -10 | 0 | | L | | 4736 | | | 4737 | | | 12 | |
| -VXD 00 | | | | | -15 | 0 | | | | 4765 | | | 4766 | | | | |
| 01 | | | | | -10 | -12 | | | | 4742 | | | 4743 | | | | |
| 02 | | | | | -15 | -12 | | | | 4758 | | | 4759 | | | | |
| 03 | | | | | -12 | -6 | | | | | | 4748 | | | | 13 | |
| 04 | | | | | -15 | -6 | | M | | | | 4762 | | | | 14 | |
| 05 | | | | | -10 | -4 | | K | | | | 4738 | 4739 | | | 15 | |
| 06 | | | | | -15 | -4 | | | | | | 4763 | 4764 | | | | |
| 07 | | | | | -10 | -8 | | | | | | 4741 | 4740 | | | | |
| 08 | | | | | -15 | -8 | | | | | | 4760 | 4761 | | | | |

α OR β SCHEDULES

IDVAR (1) IDVAR (2) NDV

TABLE II (Concluded)

TEST: IA143

DATA SET/RUN NUMBER COLLATION SUMMARY

DATE: POST TEST

| DATA SET IDENTIFIER | CONFIGURATION | O/ET. α | O/ET. β | JET PRESS | SEP. PARAMETERS Δα | Δβ | ΔX | ΔZ | ΔY -50 | -100 | -150 | -200 | -300 | -400 | -600 | | Cube I.D. |
|---|---|---|---|---|---|---|---|---|---|---|---|---|---|---|---|---|---|
| VXD09 | ORB/ET + SRB(R.H.) | 0 | -15 | 0 | -15 | 4 | 1200 | A | | 4711 | | | | | 4712 | | 16 |
| 10 | | | | | -15 | -8 | | | | 4714 | | | | | 4713 | | 16 |
| 11 | | | | | -5 | -12 | | | | | | | | | 4715 | | 16 |
| 12 | | | | | -10 | 0 | | LB | | | | 4746 | | 4747 | | | 17 |
| 13 | | | | | -10 | -8 | | LB | | | | 4744 | | 4745 | | | 17 |
| 14 | | | | | -15 | -4 | | N | | | | 4767 | 4768 | | | | 20 |

TEST RUN NUMBERS

1 7 13 19 25 31 37 43 49 55 61 67 75 76

IDVAR (1) IDVAR (2) NDV

α OR β SCHEDULES

TABLE III. MODEL DIMENSIONAL DATA

MODEL COMPONENT: ATTACH STRUCTURE - $AT_{28}$

GENERAL DESCRIPTION: Rear orbiter to ET attach structure (left-hand and right-hand (two members).

MODEL SCALE: 0.010 DRAWING NUMBER: VL78-000063, VL78-000062B

DIMENSIONS:

| MEMBER | | FULL SCALE | | MODEL SCALE |
|---|---|---|---|---|
| #1 | $X_o$ | 1317.00 | | 13.170 |
| | $Y_o$ | - 96.50 | (LH) | - 0.965 |
| | | 96.50 | (RH) | 0.965 |
| | $Z_o$ | 267.50 | | 2.675 |
| | $X_T$ | 2058.0 | | 20.580 |
| | $Y_T$ | - 96.50 | (LH) | - 0.965 |
| | | 96.50 | (RH) | 0.965 |
| | $Z_T$ | 515.50 | | 5.155 |
| #2 | $X_o$ | 1317.0 | | 13.170 |
| | $Y_o$ | - 96.50 | (LH) | - 0.965 |
| | | 96.50 | (RH) | 0.965 |
| | $Z_o$ | 267.50 | | 2.675 |
| | $X_T$ | 1872.0 | | 18.720 |
| | $Y_T$ | - 125.68 | (LH) | - 1.257 |
| | | 125.68 | (RH) | 1.257 |
| | $Z_T$ | 504.5 | | 5.045 |
| Diameter, In. #1 | | 11.5 | | 0.115 |
| #2 | | 15.5 | | 0.155 |

TABLE III. MODEL DIMENSIONAL DATA (Continued)

**MODEL COMPONENT:** ATTACH STRUCTURE - $AT_{130}$

**GENERAL DESCRIPTION:** Forward orbiter/ET attach structure (2 members structure).

**MODEL SCALE:** 0.010

MODEL DRAWING NUMBER: SS-A01692

| DIMENSIONS: | MEMBER | | FULL SCALE | | MODEL SCALE |
|---|---|---|---|---|---|
| Orbiter Attach Point | #1 | $X_O$ | 388.9 | | 3.889 |
| | | $Y_O$ | 0 | (LH) | 0 |
| | | | 0 | (RH) | 0 |
| | | $Z_O$ | 283.8 | | 2.838 |
| | | $X_T$ | 1129.9 | | 11.299 |
| | | $Y_T$ | 0 | (LH) | 0 |
| | | | 0 | (RH) | 0 |
| | | $Z_T$ | 620.3 | | 6.203 |
| Tank Attach Point | | $X_T$ | 388.9 | | 3.889 |
| | | $Y_T$ | 42.75 | (LH) | .4275 |
| | | | 42.75 | (RH) | .4275 |
| | | $Z_T$ | 227.5 | | 2.275 |
| | | $X_O$ | 1129.9 | | 11.299 |
| | | $Y_O$ | 42.75 | (LH) | .4275 |
| | | | 42.75 | (RH) | .4275 |
| | | $Z_O$ | 564.0 | | 5.640 |

TABLE III. MODEL DIMENSIONAL DATA (Continued)

**MODEL COMPONENT:** ATTACH STRUCTURE - $AT_{131}$

**GENERAL DESCRIPTION:** Aft orbiter/ET attach structure

**MODEL SCALE:** 0.010 MODEL DRAWING NUMBER: SS-A01692

**DIMENSIONS:**

| | | FULL SCALE | MODEL SCALE |
|---|---|---|---|
| Upper attach point: | $X_o$ | | 13.170 |
| | $Y_o$ | | .874 |
| | $Z_o$ | | 2.675 |
| | $X_T$ | | 20.580 |
| | $Y_T$ | | .874 |
| | $Z_T$ | | 6.040 |
| ET attach point: | $X_T$ | | 20.580 |
| | $X_T$ | | .140 |
| | $Z_T$ | | 1.725 |
| | $X_o$ | | 13.170 |
| | $Y_o$ | | .140 |
| | $Z_o$ | | 2.360 |

TABLE III. MODEL DIMENSIONAL DATA (Continued)

**MODEL COMPONENT:** BODY - $B_{62}$

**GENERAL DESCRIPTION:** Configuration 140C orbiter fuselage, MCR 200-$R_4$. Similar to 140 A/B fuselage except aft body revised and improved midbody-wing-boot fairing, $X_o$ = 940 to $X_o$ = 1040.

**MODEL SCALE:** 0.010

**DRAWING NUMBER:** VL70-000140C, -000202C, -000205A, -000200B, -000203A

| **DIMENSIONS:** | FULL SCALE | MODEL SCALE |
|---|---|---|
| Length (IML: Fwd Sta. $X_o$=238), In. | 1290.3 | 12.903 |
| Length (OML: Fwd Sta. $X_o$=235), In. | 1293.3 | 12.933 |
| Max Width (@ $X_o$ = 1528.3), In. | 264.0 | 2.640 |
| Max Depth (@ $X_o$ = 1464), In. | 250.0 | 2.500 |
| Fineness Ratio | 4.899 | 4.899 |
| Area - $Ft^2$ | | |
| Max. Cross-Sectional | 340.885 | .03409 |

TABLE III. MODEL DIMENSIONAL DATA (Continued)

**MODEL COMPONENT:** CANOPY - $C_{12}$

**GENERAL DESCRIPTION:** Configuration 140C orbiter canopy, vehicle cabin No. 31 updated to MCR 200-$R_4$. Used with fuselage $B_{62}$.

**MODEL SCALE:** 0.010

**DRAWING NUMBER:** VL70-000140C, -000202B, -000204

| DIMENSIONS: | FULL SCALE | MODEL SCALE |
|---|---|---|
| Length ($X_o$ = 434.643-578), In. | 143.357 | 1.434 |
| Max Width (@ $X_o$ = 513.127), In. | 152.412 | 1.524 |
| Max Depth ($Z_o$ = 501 to 449.39), In. | 51.61 | 0.516 |

TABLE III. MODEL DIMENSIONAL DATA (Continued)

MODEL COMPONENT: ELEVON - $E_{44}$

GENERAL DESCRIPTION: 6.0 in. F. S. gaps machined into $E_{26}$ elevon. Flapper doors, centerbody pieces, and tipseals are not simulated. (Data are for one of two sides).

MODEL SCALE: 0.010

| DIMENSIONS: | FULL SCALE | MODEL SCALE |
|---|---|---|
| Area, $Ft^2$ | 210.00 | 0.021 |
| Span (equivalent), In. | 349.2 | 3.492 |
| Inb'd equivalent chord, In. | 118.0 | 1.180 |
| Outb'd equivalent chord, In. | 55.19 | 0.552 |
| Ratio movable surface chord/ total surface chord | | |
| At Inb'd equiv. chord | 0.2096 | 0.2096 |
| At Outb'd equiv. chord | 0.4004 | 0.4004 |
| Sweep Back Angles, degrees | | |
| Leading Edge | 0.00 | 0.00 |
| Trailing Edge | - 10.056 | - 10.056 |
| Hingeline | 0.00 | 0.00 |
| Area Moment (Product of Area & $\bar{c}$) $Ft^3$ | 1587.25 | 0.00159 |
| Mean Aerodynamic Chord, In. | 90.7 | 0.907 |

TABLE III. MODEL DIMENSIONAL DATA (Continued)

**MODEL COMPONENT:** BODY FLAP - $F_{10}$

**GENERAL DESCRIPTION:** Configuration 140C body flap. Hingeline located at $X_o$ = 1532, $Z_o$ = 238.

**MODEL SCALE:** 0.010

**DRAWING NUMBER:** VL70-000140C, VL70-355114

**DIMENSIONS:**

| | FULL SCALE | MODEL SCALE |
|---|---|---|
| Length ($X_o$ = 1525.5 to $X_o$ = 1613), In. | 87.50 | 0.875 |
| Max Width (@ L.E., $X_o$ = 1525.5), In. | 256.00 | 2.560 |
| Max Depth ($X_o$ = 1532), In. | 19.798 | 0.198 |
| Area - $Ft^2$ | | |
| Max. Cross-Sectional (@H.L.) | 35.196 | .00352 |
| Planform | 135.00 | .01350 |
| Base ($X_o$ = 1613) | 4.89 | |

TABLE III. MODEL DIMENSIONAL DATA (Continued)

**MODEL COMPONENT:** FEEDLINE - $FL_{10}$

**GENERAL DESCRIPTION:** $LH_2$ feedline on upper left-hand side of $T_{35}$.

**MODEL SCALE:** 0.010

**DRAWING NUMBER:** VL78-000063, VL78-000062B

| **DIMENSIONS:** | | FULL SCALE | MODEL SCALE |
|---|---|---|---|
| Leading edge at: | $X_T$ | 2071.5 | 20.715 |
| | $Y_T$ | - 70.0 | - 0.700 |
| | $Z_T$ | 573.934 | 5.739 |
| Trailing edge at: | $X_T$ | 2081.8 | 20.818 |
| | $Y_T$ | - 70.0 | - 0.700 |
| | $Z_T$ | 584.059 | 5.841 |
| Line diameter (17.0 I.D.) | | 18.160 | 0.182 |

Centerline of line located radially at $\phi$ =

TABLE III. MODEL DIMENSIONAL DATA (Continued)

MODEL COMPONENT: FEEDLINE - $FL_{11}$

GENERAL DESCRIPTION: $LO_2$ feedline on upper right-hand side of $T_{35}$.

MODEL SCALE: 0.010

DRAWING NUMBER: VL78-000063, VL78-000062B

DIMENSIONS:

| | | FULL SCALE | MODEL SCALE |
|---|---|---|---|
| Leading edge at: | $X_T$ | 1000.667 | 10.007 |
| | $Y_T$ | 70.00 | 0.700 |
| | $Z_T$ | 150.519 | 1.505 |
| Trailing edge at: | $X_T$ | 2071.5 | 20.715 |
| | $Y_T$ | 70.00 | 0.700 |
| | $Z_T$ | 573.934 | 5.739 |
| Line diameter (17.0 I.D.) | | 18.16 | 0.182 |

Centerline of line located radially at $\phi = 113^{\circ}4'$

TABLE III. MODEL DIMENSIONAL DATA (Continued)

MODEL COMPONENT: FAIRING - $FR_{10}$

GENERAL DESCRIPTION: Umbilical door fairing between aft ET/Orbiter attach structure.

MODEL SCALE: 0.010

DRAWING NUMBER: VL78-000063, VL78-000062B, Martin-Marietta 82600207000

| DIMENSIONS: | FULL SCALE | MODEL SCALE |
|---|---|---|
| Leading edge at $X_T$ | 2052.0 | 20.520 |
| Length | 193.0 | 1.930 |
| Width | 15.00 | 0.150 |

| Component | Definition | |
|---|---|---|
| $FR_{14}$ | External Tank nose cable fairing per model dwg. SS-A01668-5 located at: | |
| | Model Scale | Full Scale |
| | $X_T = 3.490 \rightarrow 3.710$ | $X_T = 349.00 \rightarrow 371.00$ |
| | $\phi = 31^{\circ}31'$ | $\phi = 31^{\circ}31'$ |
| $FR_{15}$ | External Tank nose probe fairing per model dwg. SS-A01668-5 located at: | |
| | Model Scale | Full Scale |
| | $X_T = 3.413 \rightarrow 3.710$ | $X_T = 341.30 \rightarrow 371.00$ |
| $FR_{16}$ | External Tank $LO_2$ feedline ($F_{11}$) fairing per model dwg. SS-A01668-3 located at: | |
| | Model Scale | Full Scale |
| | $X_T = 9.820 \rightarrow 10.420$ | $X_T = 982.00 \rightarrow 1042.00$ |

TABLE III. MODEL DIMENSIONAL DATA (Continued)

| Component | Definition | |
|---|---|---|
| $FR_{17}$ | External Tank $LO_2$ antigeyser line ($PT_{23}$) fairing per model dwg. SS-A01668-3. Located at: | |
| | Model Scale | Full Scale |
| | $X_T$ = 9.860 → 10.460 | $X_T$ = 986.00 → 1046.00 |
| | $\phi$ = 33°45' | $\phi$ = 33°45' |
| $FR_{18}$ | External Tank aft electrical conduit ($PT_{25}$) fairing per model dwg. SS-A01668-3. Located at: | |
| | Model Scale | Full Scale |
| | $X_T$ = 10.670 → 10.820 | $X_T$ = 1067.00 → 1082.00 |
| | $\phi$ = 37°30' | $\phi$ = 37°30' |
| $FR_{19}$ | External Tank $LH_2$ pressure line ($PT_{33}$) fairing per model dwg. SS-A01668-9. Located at: | |
| | Model Scale | Full Scale |
| | $X_T$ = 10.600 → 11.269 | $X_T$ = 1060.00 → 1126.90 |
| | $\phi$ = 30°0' | $\phi$ = 30°0' |

TABLE III. MODEL DIMENSIONAL DATA (Continued)

**MODEL COMPONENT:** OMS POD - $M_{16}$

**GENERAL DESCRIPTION:** Configuration 140C Orbiter OMS Pod - Short pod.

**MODEL SCALE:** 0.010

**DRAWING NUMBER:** VL70-008401, VL70-008410

| **DIMENSIONS:** | **FULL SCALE** | **MODEL SCALE** |
|---|---|---|
| Length (OMS Fwd Sta $X_o$ = 1310.5), In. | 258.50 | 2.585 |
| Max Width (@ $X_o$ = 1511), In. | 136.8 | 1.368 |
| Max Depth (@ $X_o$ = 1511), In. | 74.70 | 0.747 |
| Fineness Ratio | 2.484 | 2.484 |
| Area - $Ft^2$ | | |
| Max. Cross-Sectional | 58.864 | 0.00589 |

TABLE III. MODEL DIMENSIONAL DATA (Continued)

**MODEL COMPONENT:** NOZZLES - $N_{89}$

**GENERAL DESCRIPTION:** OMS nozzle in stowed position which is outboard 8 deg. and down 7 deg. from null position. Use with $M_{16}$.

**MODEL SCALE:** 0.010

**DRAWING NUMBER:** SS-A01279

| DIMENSIONS: | FULL SCALE | MODEL SCALE |
|---|---|---|
| Length - In. | | |
| Gimbal Point to Exit Plane | 56.0 | 0.560 |
| Diameter - In. | | |
| Exit (O.D.) | 50.0 | 0.50 |
| Gimbal Point (station ) - In. | | |
| $X_o$ | 1518.00 | 15.180 |
| $Y_o$ | 88.00 | 0.880 |
| $Z_o$ | 492.0 | 4.920 |
| Null Position - Deg. | | |
| Pitch | 15°49' | 15°49' |
| Yaw | 6°30' | 6°30' |

TABLE III. MODEL DIMENSIONAL DATA (Continued)

**MODEL COMPONENT:** SRB FWD SEPARATION NOZZLE BLOCK - $N_{101}$

**GENERAL DESCRIPTION:** Fwd Separation Nozzles for Vehicle 5 Configuration Solid Rocket Booster.

**MODEL SCALE:** 0.010

**DRAWING NUMBER:** MODEL DRAWING: SS-A01690

| **DIMENSIONS:** | FULL SCALE | MODEL SCALE |
|---|---|---|
| Diameter - In. | | |
| Exit | 12.14 | .1214 |
| Throat | 7.00 | 0.700 |
| Inlet | 7.00 | .0700 |
| Lip $\measuredangle$ | 13° | 13° |
| Area - $Ft^2$ | | |
| Exit | .8038 | .00008038 |
| Throat | .2673 | .00002673 |
| Design Exit Mach No. | 2.64 | 2.64 |
| No of Nozzles | 4 (In two Blocks) | |

Centerline of the two feed nozzles @ $X_s$ 2.854

Centerline of the two aft nozzles @ $X_s$ 3.081

Nozzles canted 20 degrees forward, away from O/ET

TABLE III. MODEL DIMENSIONAL DATA (Continued)

**MODEL COMPONENT:** SRB AFT SEPARATION NOZZLE BLOCK - $N_{102}$

**GENERAL DESCRIPTION:** Aft Separation Nozzles for Vehicle 5 Configuration Solid Rocket Booster.

**MODEL SCALE:** 0.010 MODEL DRAWING: SS-A01690

**DRAWING NUMBER:**

**DIMENSIONS:**

| | FULL SCALE | MODEL SCALE |
|---|---|---|
| Diameter | 12.14 | .1214 |
| Exit | 7.00 | .0700 |
| Throat | 7.00 | .0700 |
| Inlet | 13° | 13° |
| Area, $Ft^2$ | | |
| Exit | .8038 | .00008038 |
| Throat | .2673 | .00002673 |
| Design Exit Mach No. | 2.64 | 2.64 |
| No. of Nozzles | 4 ( In two blocks) | |

Centerline of the four (4) nozzles @ $X_s$ 18.90 - nozzle mounted on SRB aft shut, canted 20° aft, away from O/ET

TABLE III. MODEL DIMENSIONAL DATA (Continued)

**MODEL COMPONENT:** MPS NOZZLES - $N_{103}$

**GENERAL DESCRIPTION:** Non-flow through MPS nozzle dummy nozzle - Same external dim as $N_{87}$

**MODEL SCALE:** 0.010

**DRAWING NUMBER:** SS-A01687

| **DIMENSIONS:** | FULL SCALE | MODEL SCALE |
|---|---|---|
| Gimbal Point (Station) - In. | | |
| Upper Nozzle | | |
| X | 1445.00 | 14.450 |
| Y | 0 | 0 |
| Z | 443.00 | 4.430 |
| Lower Nozzles | | |
| X | 1468.17 | 14.682 |
| Y | + 53.0 | 0.530 |
| Z | 342.64 | 3.426 |
| Null Position - Deg. | | |
| Upper Nozzle | | |
| Pitch | 16° | 16° |
| Yaw | 0° | 0° |
| Lower Nozzle | | |
| Pitch | 10° | 10° |
| Yaw | 0° | 0° |

TABLE III. MODEL DIMENSIONAL DATA (Continued)

MODEL COMPONENT: SOLID ROCKET BOOSTER NOZZLES - $N_{106}$

GENERAL DESCRIPTION: SRB nozzle to lines used with $S_{22}$

MODEL SCALE: 0.010

DRAWING NUMBER: VC77-000002D

| DIMENSIONS: | FULL SCALE | MODEL SCALE |
|---|---|---|
| Diameter, $D_{ax}$ - In. (I.D.) | 145.64 | 1.456 |
| Diameter, $D_{ax}$ - In. (O.D.) | 147.64 | 1.476 |
| Area - $Ft^2$ | 115.688 | 0.0116 |
| Gimbal Center Coordinates: | | |
| Left Nozzle | | |
| $X_B$ - Cold | 1863.458 | 18.635 |
| $X_B$ - Hot | 1875.358 | 18.754 |
| $Y_o$ | - 250.50 | - 2.505 |
| $Z_T$ | 400.0 | 4.000 |
| Right Nozzle | | |
| $X_B$ - Cold | 1863.458 | 1.863 |
| $X_B$ - Hot | 1875.358 | 1.875 |
| $Y_o$ | 250.50 | 2.505 |
| $Z_T$ | 400.0 | 4.000 |
| Null Position - Deg. | | |
| Left Nozzle | | |
| Pitch | ± 8 | ± 8 |
| Yaw | | |
| Right Nozzle | | |
| Pitch | ± 8 | ± 8 |
| Yaw | | |

TABLE III. MODEL DIMENSIONAL DATA (Continued)

**MODEL COMPONENT:** SRB PROTUBERANCE - $PS_{20}$

**GENERAL DESCRIPTION:** Electrical tunnel on SRB side, 30° taper L. E., circular cross-section with mounting flange. Tunnel discontinued from $X_B$ 15.022 to $X_B$ 15.199.

**MODEL SCALE:** 0.010

**DRAWING NUMBER:** SS-A01667 & SS-A01690

| DIMENSIONS: | FULL SCALE | MODEL SCALE |
|---|---|---|
| Length, In. | 1384.7 | 13.847 |
| Tunnel, Depth | 4.30 | .043 |
| Max Width | 16.90 | .169 |
| Max Depth @ L.E. | 7.30 | .073 |
| Radius | 8.30 | .083 |
| Tapes @ L.E. | 30° | 30° |
| Radius @ L.E. | 11.40 | .114 |

TABLE III. MODEL DIMENSIONAL DATA (Continued)

**MODEL COMPONENT:** SRB PROTUBERANCE - $PS_{26}$

**GENERAL DESCRIPTION:** SRB aft attach point stiffener ring, trimmed and enclosed from $PS_{14}$, extends for 292.7 deg. around 146 in. SRB

**MODEL SCALE:** 0.010

**DRAWING NUMBER:** VC77-000002F, ICD 2-000001 Rev. A

**DIMENSIONS:**

| | FULL SCALE | MODEL SCALE |
|---|---|---|
| Length, In. | 17.70 | 0.177 |
| Max Width varies zero to 16.20" | | |
| Location ℄ XB | 1511.1 | 15.111 |

TABLE III. MODEL DIMENSIONAL DATA (Continued)

| Component | Definition |
|---|---|
| $PS_{27}$ | SRB Nozzle Actuator Struts, protuberance on SRB nozzle skirt, defined by ICD-2-00001, Rev. B |
| $PS_{28}$ | Solid Rocket Booster separation rocket motor fairings per model dwg. SS-A01667-38. Located on SRB skirt aft of rear structural ring at<br>$\phi = 0 \rightarrow 360^\circ$ RH<br>$324 \rightarrow 360^\circ$ LH |
| $PS_{29}$ | Solid Rocket Booster tiedown struts located on SRB skirt per model dwg. SS-A01667-30, located at:<br><br>Model Scale: $X_B = 18.603 \rightarrow 19.306$, $\phi = 30^\circ, 150^\circ, 210^\circ, 330^\circ$<br>Full Scale: $X_B = 1860.30 \rightarrow 1930.60$, $\phi = 30^\circ, 150^\circ, 210^\circ, 330^\circ$ |
| $PS_{31}$ | Solid Rocket Booster command antenna per model dwg. SS-A01667-28, located at:<br><br>Model Scale: $X_B = 4.026 \rightarrow 4.526$, $\phi = 0^\circ$ & $180^\circ$<br>Full Scale: $X_B = 402.60 \rightarrow 452.60$, $\phi = 0^\circ$ & $180^\circ$ |

TABLE III. MODEL DIMENSIONAL DATA (Continued)

| Component | Definition | |
|---|---|---|
| $PS_{32}$ | Solid Rocket Booster data capsule and camera per model dwg. SS-A01667-26, located at: | |
| | Model Scale | Full Scale |
| | $X_B$ = 4.017 → 4.402<br>$\phi$ = 90° RH<br>= 270° LH | $X_B$ = 401.70 → 440.20<br>$\phi$ = 90° RH<br>= 270° LH |
| $PS_{33}$ | Solid Rocket Booster 3 intermediate structural rings per model dwg. SS-A01667-8, located at: | |
| | Model Scale | Full Scale |
| | X = 16.559<br>= 17.319<br>= 17.760 | X = 1655.90<br>= 1731.90<br>= 1776.00 |
| $PS_{34}$ | Solid Rocket Booster aft cable housing per model drawing SS-A01667-12, located at: | |
| | Model Scale | Full Scale |
| | $X_B$ = 4.726 → 18.554<br>$\phi$ = 90° RH<br>= 180° LH | $X_B$ = 472.60 → 1855.40<br>$\phi$ = 90° RH<br>= 180° LH |

TABLE III. MODEL DIMENSIONAL DATA (Continued)

**MODEL COMPONENT:** SRB PROTUBERANCE - $PS_{35}$

**GENERAL DESCRIPTION:** Ring stiffener located at the point where the skirt flares. The stiffener is on I-beam.

**MODEL SCALE:** 0.010

**DRAWING NUMBER:** SS-A01690

| **DIMENSIONS:** | FULL SCALE | MODEL SCALE |
|---|---|---|
| Height, In. | 7.9 | .079 |
| Length, In. | 3.0 | .030 |
| Location ℄ $X_B$ = | 1837.4 | 18.374 |

TABLE III. MODEL DIMENSIONAL DATA (Continued)

MODEL COMPONENT: $LO_2$ RECIRCULATION LINE - $PT_{23}$

GENERAL DESCRIPTION: $LO_2$ recirculation line on right-hand upper side of $T_{35}$.

MODEL SCALE: 0.010

DRAWING NUMBER: VL78-000063, VL78-000062B, Martin-Marietta 82600207000

DIMENSIONS:

| | | FULL SCALE | MODEL SCALE |
|---|---|---|---|
| Leading edge at: | $X_T$ | 1040.667 | 10.407 |
| | $Y_T$ | 94.169 | 0.942 |
| | $Z_T$ | 540.934 | 5.409 |
| Trailing edge at: | $X_T$ | 2062.920 | 20.629 |
| | $Y_T$ | 70.0 | 0.700 |
| | $Z_T$ | 573.934 | 5.739 |
| Line diameter | | 4.0 | 0.040 |

Centerline of line located radially at $\phi = 33^{\circ}45'$ (Right of TDC looking forward).

TABLE III. MODEL DIMENSIONAL DATA (Continued)

**MODEL COMPONENT:** EXTERNAL TANK PROTUBERANCES - $PT_{25}$

**GENERAL DESCRIPTION:** Right-hand electrical conduit line on $T_{35}$ with $LH_2$ pressure sensors line and $LO_2$ vent valve actuator line.

**MODEL SCALE:** 0.010

**DRAWING NUMBER:** VL78-000063, VL78-000062B, Martin-Marietta 82600202000

**DIMENSIONS:**

| | | FULL SCALE | MODEL SCALE |
|---|---|---|---|
| Leading edge at: | $X_T$ | 371.0 | |
| Trailing edge at: | $X_T$ | 847.8 | |
| | $Z_T$ | 2.0 x 6.0 | 0.02 x 0.06 |

Centerline of line located radially at $\phi = 31^{\circ}31'$

TABLE III. MODEL DIMENSIONAL DATA (Continued)

MODEL COMPONENT: ELECTRICAL LINE - $PT_{29}$

GENERAL DESCRIPTION: Left-hand electrical conduit line on $T_{35}$

MODEL SCALE: 0.010

| DIMENSIONS: | | FULL SCALE | MODEL SCALE |
|---|---|---|---|
| Leading edge at: | $X_T$ | 371.0 | |
| Trailing edge at: | $X_T$ | 847.8 | |

Centerline of line located radially at $\phi = 31^{\circ}31'$

TABLE III. MODEL DIMENSIONAL DATA (Continued)

| Component | Definition | |
|---|---|---|
| $PT_{33}$ | External Tank $LH_2$ pressure line per model dwg. SS-A01668-9. Located at: | |
| | Model Scale | Full Scale |
| | $X_T$ = 10.600 → 20.580 | $X_T$ = 1060.00 → 2058.00 |
| | $\phi$ = 330°0' | $\phi$ = 330°0' |
| $PT_{39}$ | External Tank nose probe per model dwg. SS-A01668-5. Located at: | |
| | Model Scale | Full Scale |
| | $X_T$ = 3.225 → 3.413 | $X_T$ = 322.5 → 341.3 |
| | Max. Dia. = .069 in. | Max. Dia. = 6.90 in. |

TABLE III. MODEL DIMENSIONAL DATA (Continued)

MODEL COMPONENT: RUDDER - $R_5$

GENERAL DESCRIPTION: Configuration 140C orbiter rudder (identical to configuration 140A/B rudder).

MODEL SCALE: 0.010

DRAWING NUMBER: VL70-000146B, -000095

| DIMENSIONS: | FULL SCALE | MODEL SCALE |
|---|---|---|
| Area, $Ft^2$ | 100.15 | 0.01002 |
| Span (equivalent), In. | 201.00 | 2.010 |
| Inb'd equivalent chord, In. | 91.585 | 0.916 |
| Outb'd equivalent chord, In. | 50.833 | 0.508 |
| Ratio movable surface chord/ total surface chord | | |
| At Inb'd equiv. chord | 0.400 | 0.400 |
| At Outb'd equiv. chord | 0.400 | 0.400 |
| Sweep Back Angles, degrees | | |
| Leading Edge | 34.83 | 34.83 |
| Trailing Edge | 26.25 | 26.25 |
| Hingeline | 34.83 | 34.83 |
| Area Moment (Product of Area and $\bar{c}$), $Ft^3$ | 610.92 | 0.000610 |
| Mean Aerodynamic Chord, In. | 73.2 | 0.732 |

TABLE III. MODEL DIMENSIONAL DATA (Continued)

**MODEL COMPONENT:** BOOSTER SOLID ROCKET MOTOR - $S_{24}$

**GENERAL DESCRIPTION:** Booster Solid Rocket - modified Vehicle 5

**MODEL SCALE:** 0.010

**DRAWING NUMBER:** SS-A01690

| **DIMENSIONS:** | FULL SCALE | MODEL SCALE |
|---|---|---|
| Length (Includes Nozzle) - In. | 1789.6 | 17.896 |
| Max. Width (Tank Dia.) - In. | 150.0 | 1.500 |
| Max Depth (aft Shroud) - In. | 208.0 | 2.08 |
| Fineness Ratio | 11.931 | 11.931 |
| Area - $Ft^2$ | | |
| Max. Cross Sectional | 236.0 | .02360 |
| WP of BSRM Centerline ($Z_T$) - In. | 400.00 | |
| FS of BSRM Nose ($X_T$) - In. | 200.00 | |

TABLE III. MODEL DIMENSIONAL DATA (Continued)

MODEL COMPONENT: EXTERNAL TANK - $T_{35}$

GENERAL DESCRIPTION: External oxygen-hydrogen tank per Rockwell drawings SS-A01692 and SS-A01689, ICD 2-00001 Rev. B

MODEL SCALE: 0.010

DRAWING NUMBER:

DIMENSIONS:

| | FULL SCALE | MODEL SCALE |
|---|---|---|
| Length - In. | 1852.5 | 18.525 |
| Max Width (Dia) - In. | 333 | 3.33 |
| Fineness Ratio L/D | 5.5631 | 5.5631 |
| Max Cross-Sectional, Area - $Ft^2$ | 604.81 | .060581 |
| W.P. of Tank Centerline ($X_T$) In. | 400.0 | 4.00 |

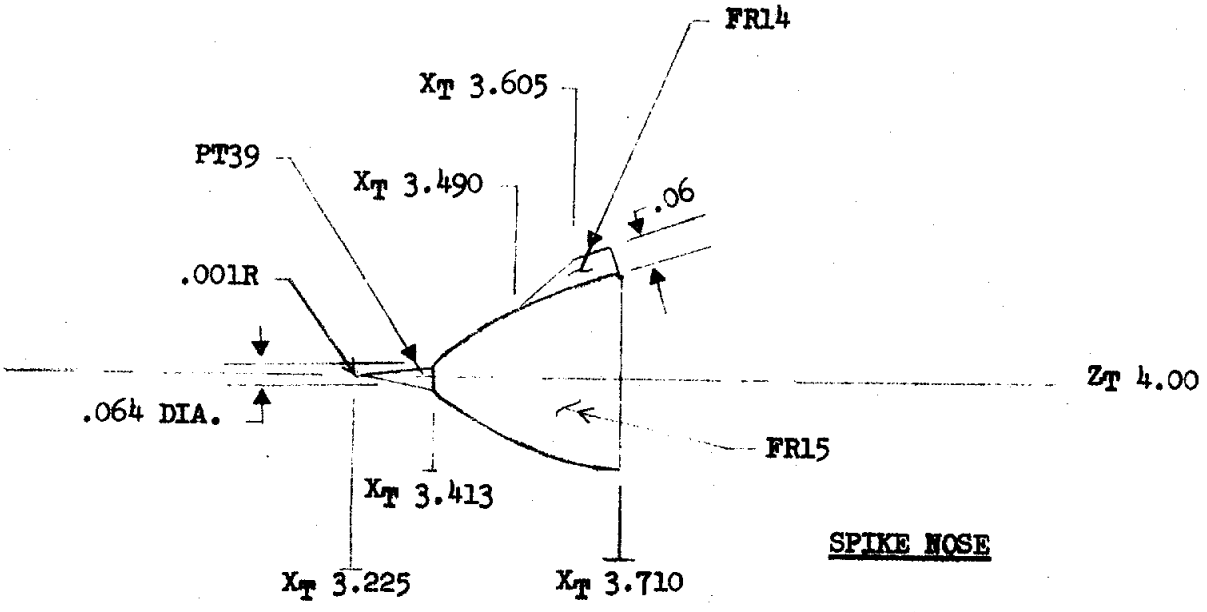

TABLE III. MODEL DIMENSIONAL DATA (Continued)

MODEL COMPONENT: VERTICAL - $V_8$

GENERAL DESCRIPTION: Configuration 140C orbiter vertical tail (identical to configuration 140A/B vertical tail).

MODEL SCALE: 0.010

DRAWING NUMBER: V70-000140C, -000146B

| DIMENSIONS: | FULL SCALE | MODEL SCALE |
|---|---|---|
| TOTAL DATA | | |
| Area (Theo.), $ft^2$ | | |
| Planform | 413.253 | 0.0413 |
| Span (Theo.), in. | 315.720 | 3.157 |
| Aspect Ratio | 1.675 | 1.675 |
| Rate of Taper | 0.507 | 0.507 |
| Taper Ratio | 0.404 | 0.404 |
| Sweep Back Angles, degrees | | |
| Leading Edge | 45.000 | 45.000 |
| Trailing Edge | 26.2 | 26.2 |
| 0.25 Element Line | 41.130 | 41.130 |
| Chords: | | |
| Root (Theo.) WP | 268.500 | 2.685 |
| Tip (Theo.) WP | 108.470 | 1.085 |
| MAC | 199.808 | 1.998 |
| Fus. Sta. of .25 MAC | 1463.50 | 14.635 |
| W.P. of .25 MAC | 635.522 | 6.355 |
| B.L. of .25 MAC | 0.000 | 0.000 |
| Airfoil Section | | |
| Leading Wedge Angle, deg. | 10.000 | 10.000 |
| Trailing Wedge Angle, deg. | 14.920 | 14.920 |
| Leading Edge Radius | 2.00 | 0.008 |
| Void Area | 13.17 | 0.00131 |
| Blanketed Area | 0.00 | 0.000 |

TABLE III. MODEL DIMENSIONAL DATA (Concluded)

MODEL COMPONENT: WING - $W_{116}$

GENERAL DESCRIPTION: Configuration 140A/B orbiter wing.

NOTE: Identical to $W_{114}$ except airfoil thickness. Dihedral angle is along trailing edge of wing.

MODEL SCALE: 0.010 DRAWING NO.: VL70-000140A, -000200

| DIMENSIONS: | FULL SCALE | MODEL SCALE |
|---|---|---|
| TOTAL DATA | | |
| Area (Theo.), $ft^2$ | | |
| Planform | 2690.00 | 0.2690 |
| Span (Theo.), in. | 936.68 | 9.367 |
| Aspect Ratio | 2.265 | 2.265 |
| Rate of Taper | 1.177 | 1.177 |
| Taper Ratio | 0.200 | 0.200 |
| Dihedral Angle, degrees | 3.500 | 3.500 |
| Incidence Angle, degrees | 0.500 | 0.500 |
| Aerodynamic Twist, degrees | + 3.000 | + 3.000 |
| Sweep Back Angles, degrees | | |
| Leading Edge | 45.000 | 45.000 |
| Trailing Edge | - 10.056 | - 10.056 |
| 0.25 Element Line | 35.209 | 35.209 |
| Chords: | | |
| Root (Theo.) B.P.0.0. | 689.24 | 6.892 |
| Tip, (Theo.) B.P. | 137.85 | 1.379 |
| MAC | 474.81 | 4.748 |
| * Fus. Sta. of .25 MAC | 1136.83 | 11.368 |
| * W.P. of .25 MAC | 290.58 | 2.906 |
| * B.L. of .25 MAC | 182.13 | 1.823 |
| EXPOSED DATA | | |
| * Area (Theo.), $ft^2$ | 1751.50 | 0.1752 |
| * Span, (Theo.), in. BP108 | 720.68 | 7.207 |
| * Aspect Ratio | 2.059 | 2.059 |
| Taper Ratio | 0.245 | 0.245 |
| Chords | | |
| * Root BP108 | 562.09 | 5.621 |
| * Tip 1.00 b/2 | 137.85 | 1.379 |
| * MAC | 392.83 | 3.928 |
| * Fus. Sta. of .25 MAC | 1185.98 | 11.860 |
| * W.P. of .25 MAC | 395.40 | 3.954 |
| * B.L. of .25 MAC | 251.77 | 2.518 |
| Airfoil Section (Rockwell Mod NASA) XXXX-64 | | |
| Root b/2 = | 0.113 | 0.113 |
| Tip b/2 = | 0.120 | 0.120 |
| Data for (1) of (2) Sides | | |
| Leading Edge Cuff | | |
| * Planform Area, $ft^2$ | 113.18 | 0.0113 |
| * Leading Edge Intersects Fus M.L. @ Sta | 500.00 | 5.000 |
| * Leading Edge Intersects Wing @ Sta | 1024.00 | 10.240 |

**Notes:**

1. Positive directions of force coefficients, moment coefficients, and angles are indicated by arrows
2. For clarity, origins of wind and stability axes have been displaced from the center of gravity

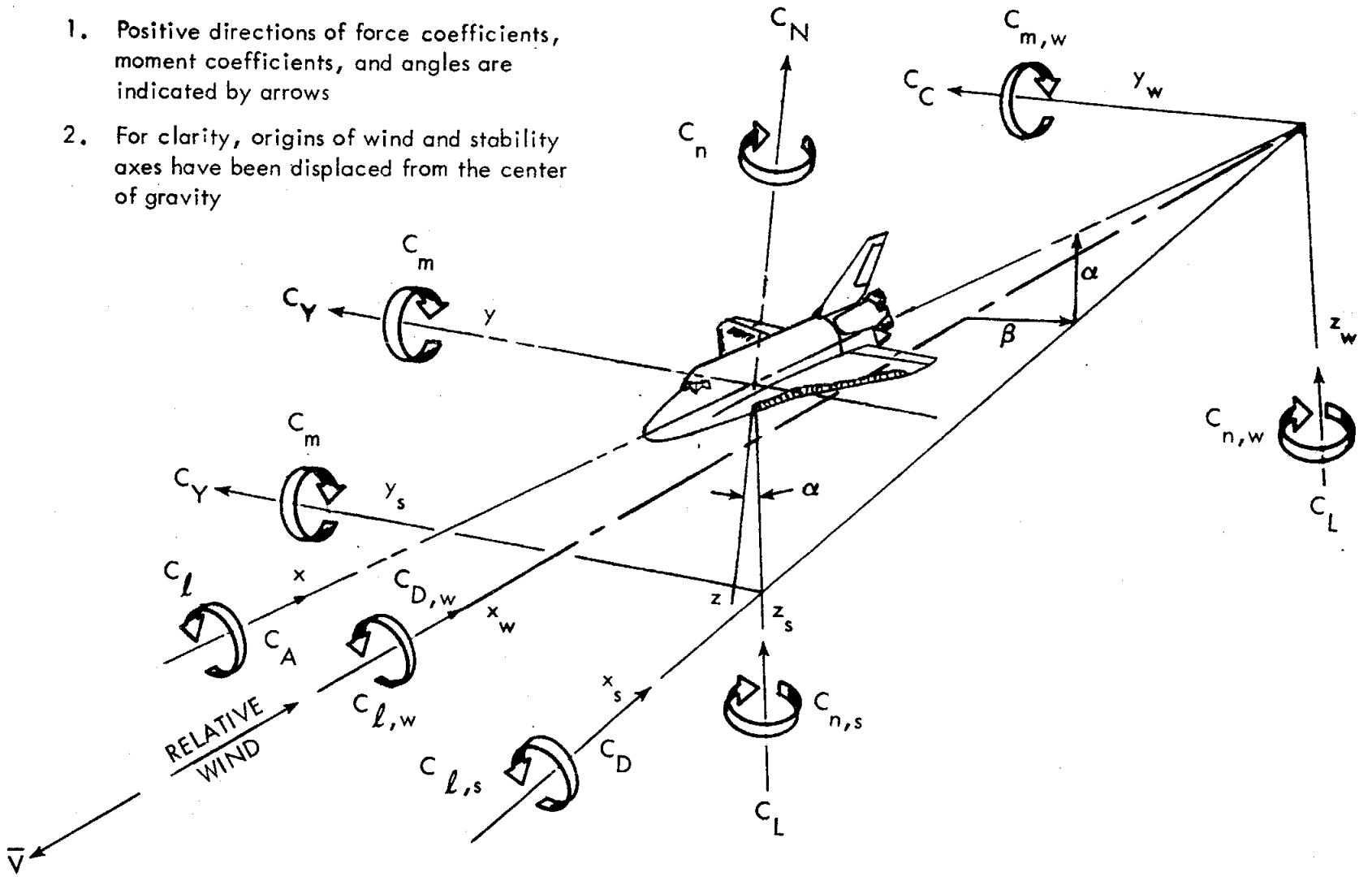


a. General

Figure 1. Axis systems.

NOTES:

1. $\Delta X$, $\Delta Y$, AND $\Delta Z$ ARE DISPLACEMENTS OF THE SRB NOSE FROM THE MATED SRB NOSE POSITION.
2. $\Delta X$ IS MEASURED POSITIVE AFT; $\Delta Y$ IS MEASURED POSITIVE OUTBOARD FOR LEFT SRB, POSITIVE INBOARD FOR RIGHT SRB; $\Delta Z$ IS MEASURED POSITIVE AWAY FROM THE ORBITER.
3. $\Delta\alpha$ AND $\Delta\beta$ ARE DEFINED AS:
   $\Delta\alpha = \alpha SRB - \alpha O/ET$
   $\Delta\beta = \beta SRB - \beta O/ET$
4. $\alpha_{SRB}$, $\alpha_{O/ET}$, $\beta_{SRB}$, $\beta_{O/ET}$ ARE OBTAINED FROM STANDARD AERODYNAMIC DEFINITIONS

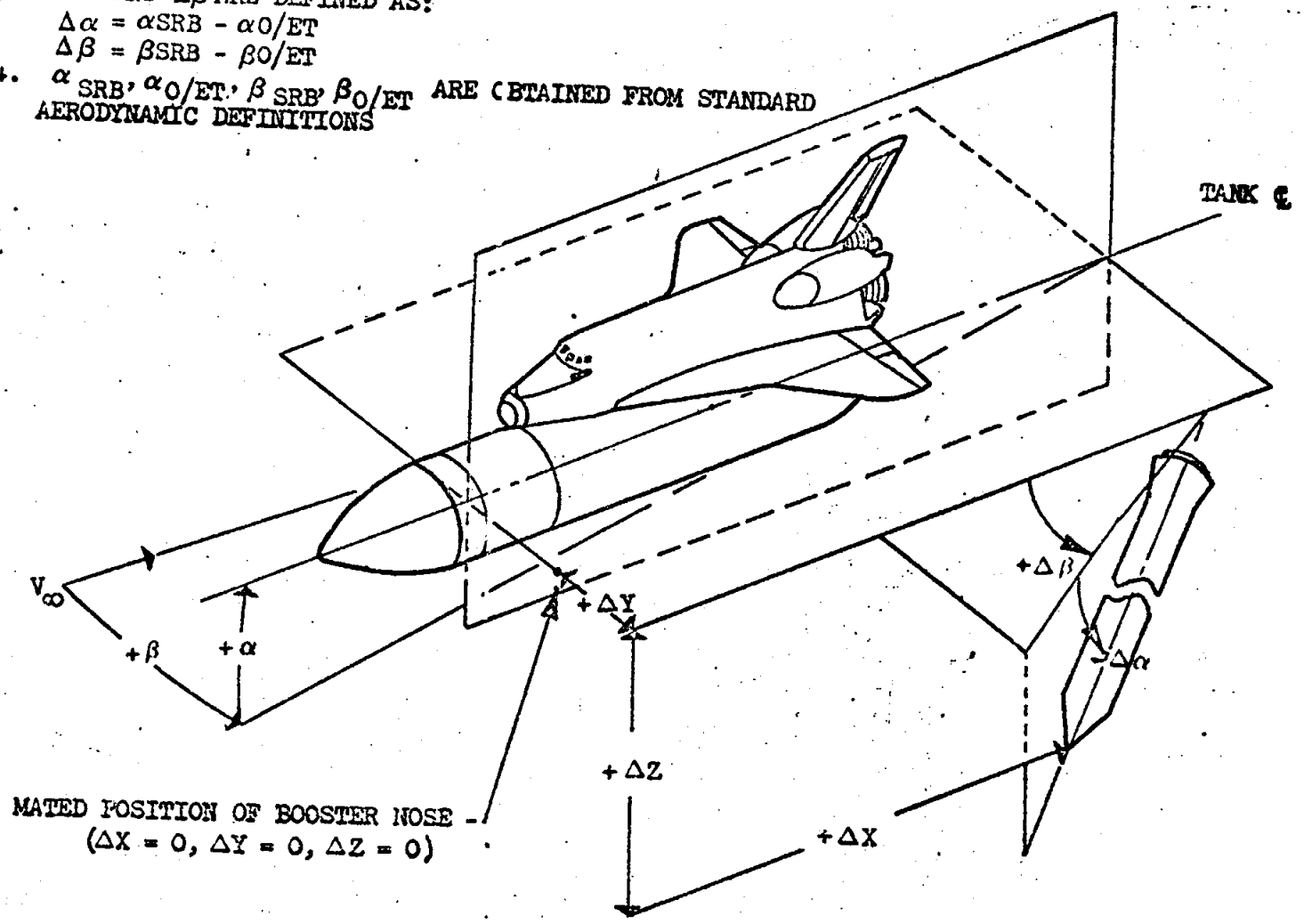


b. Booster Separation from Orbiter/External Tank
Figure 1. Concluded.

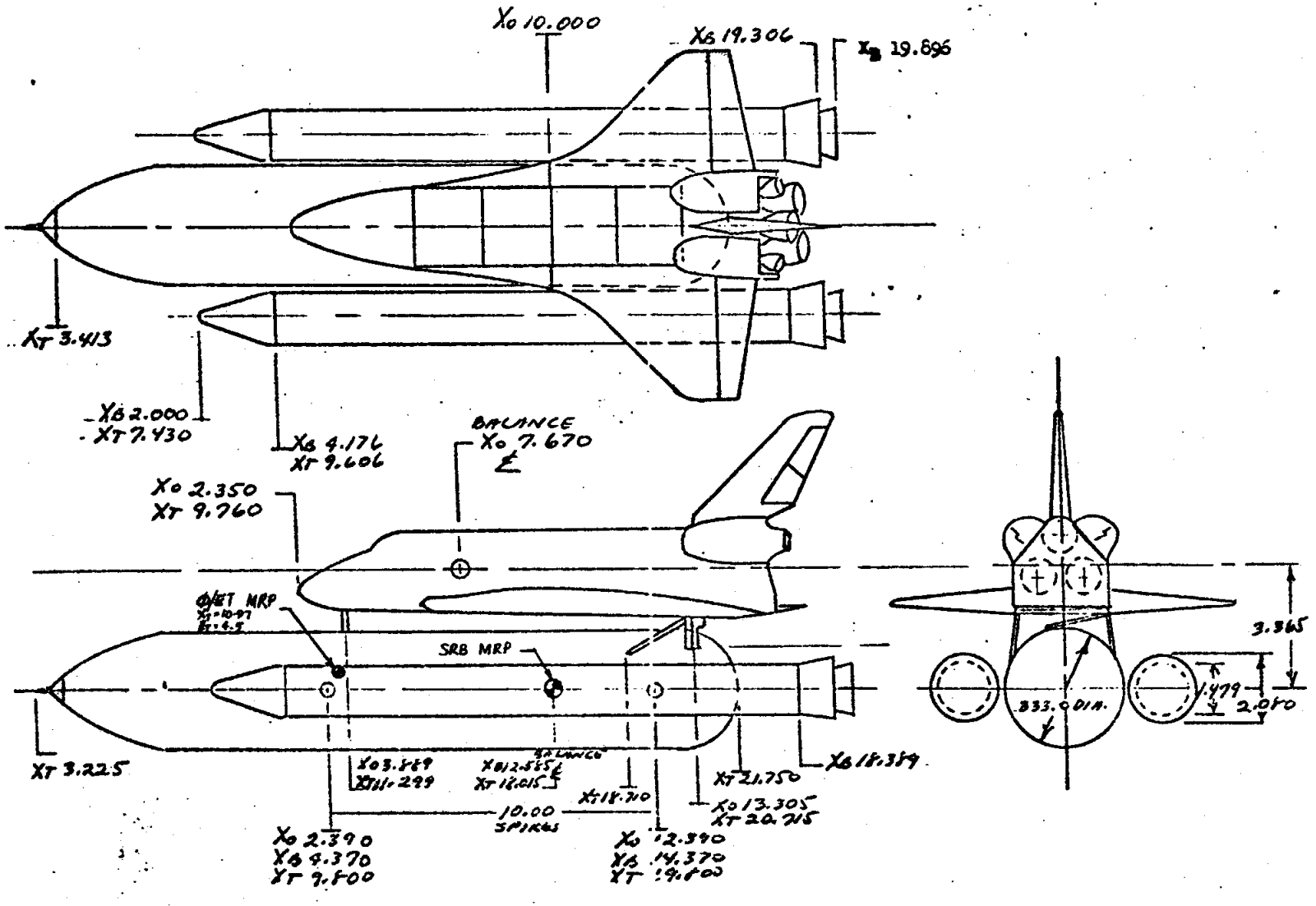


a. Integrated Vehicle Model 75-OTS Configuration
Figure 2. Model sketches.

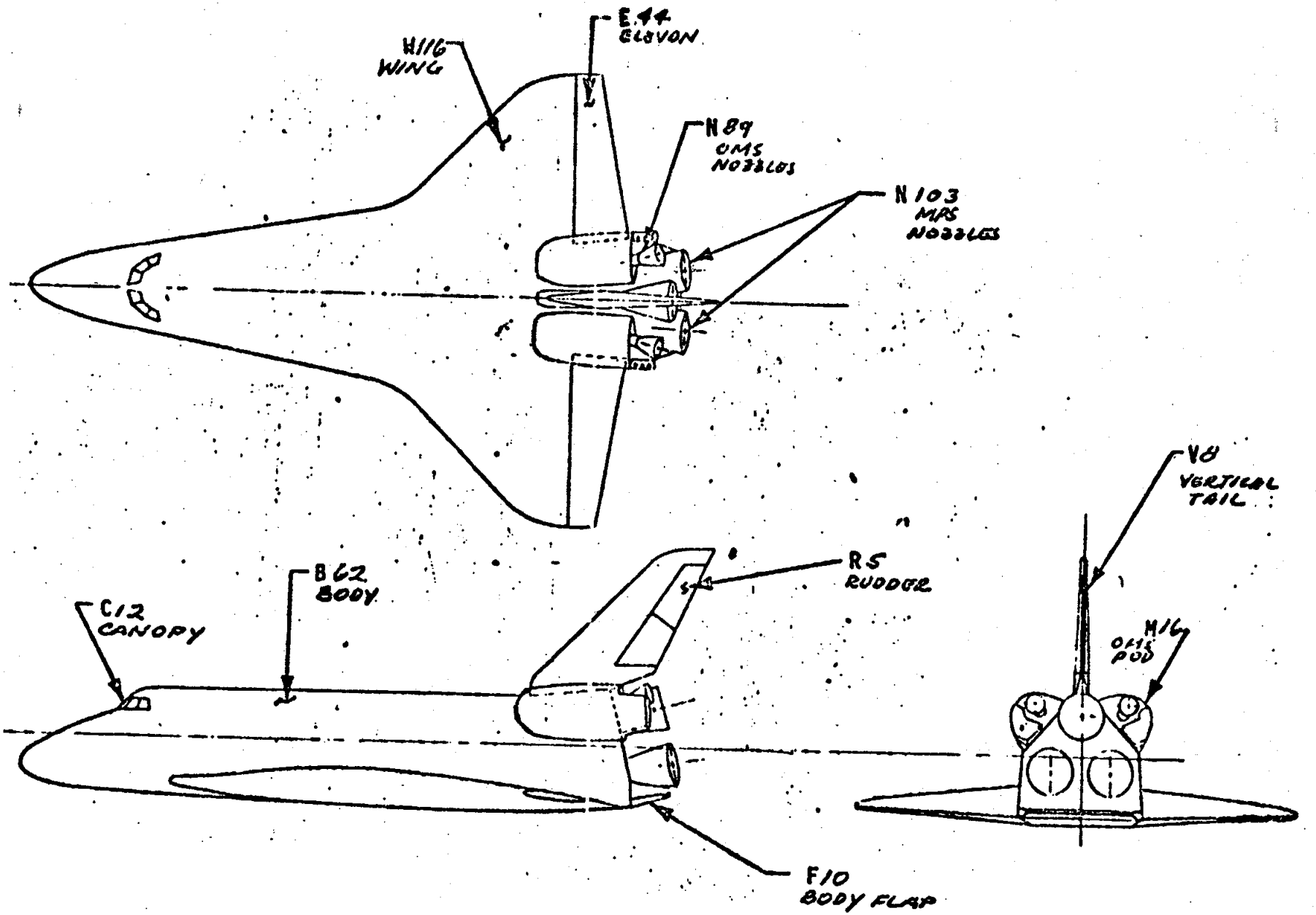


b. Orbiter Nomenclature for Test IA143
Figure 2. Continued.

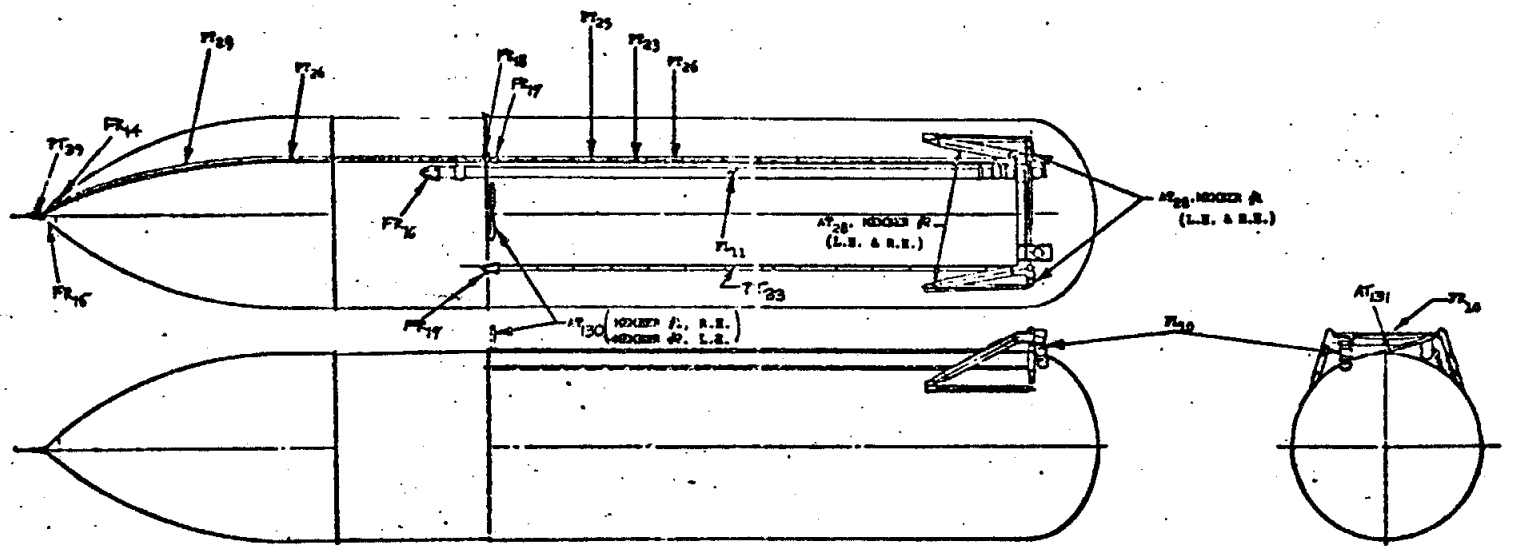

c. External Tank ($T_{35}$) Protrusions
Figure 2. Continued.

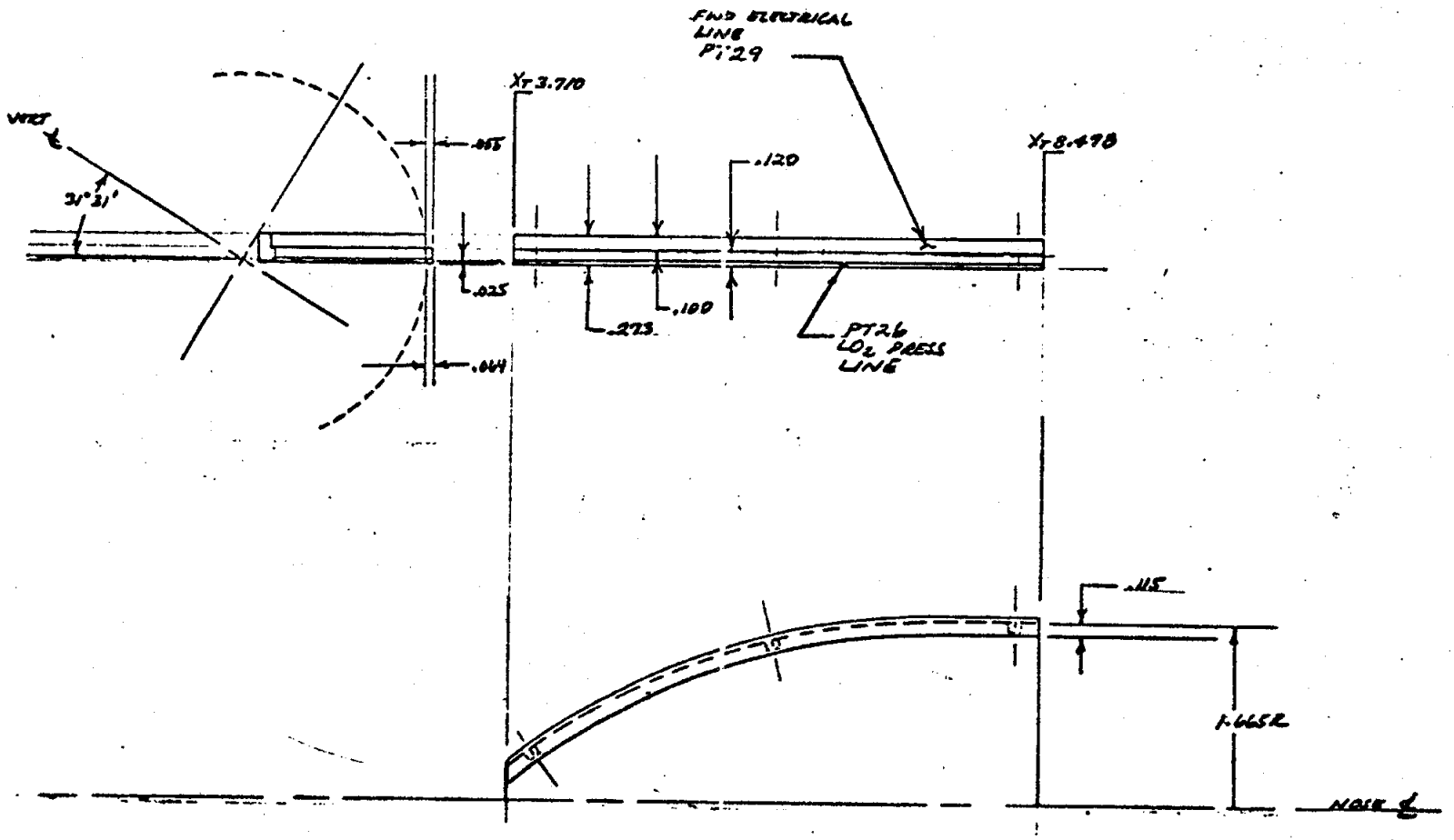


d. Forward Electrical Conduit (PT29) and $LO_2$ Pressure Line (PT26)
Figure 2. Continued.

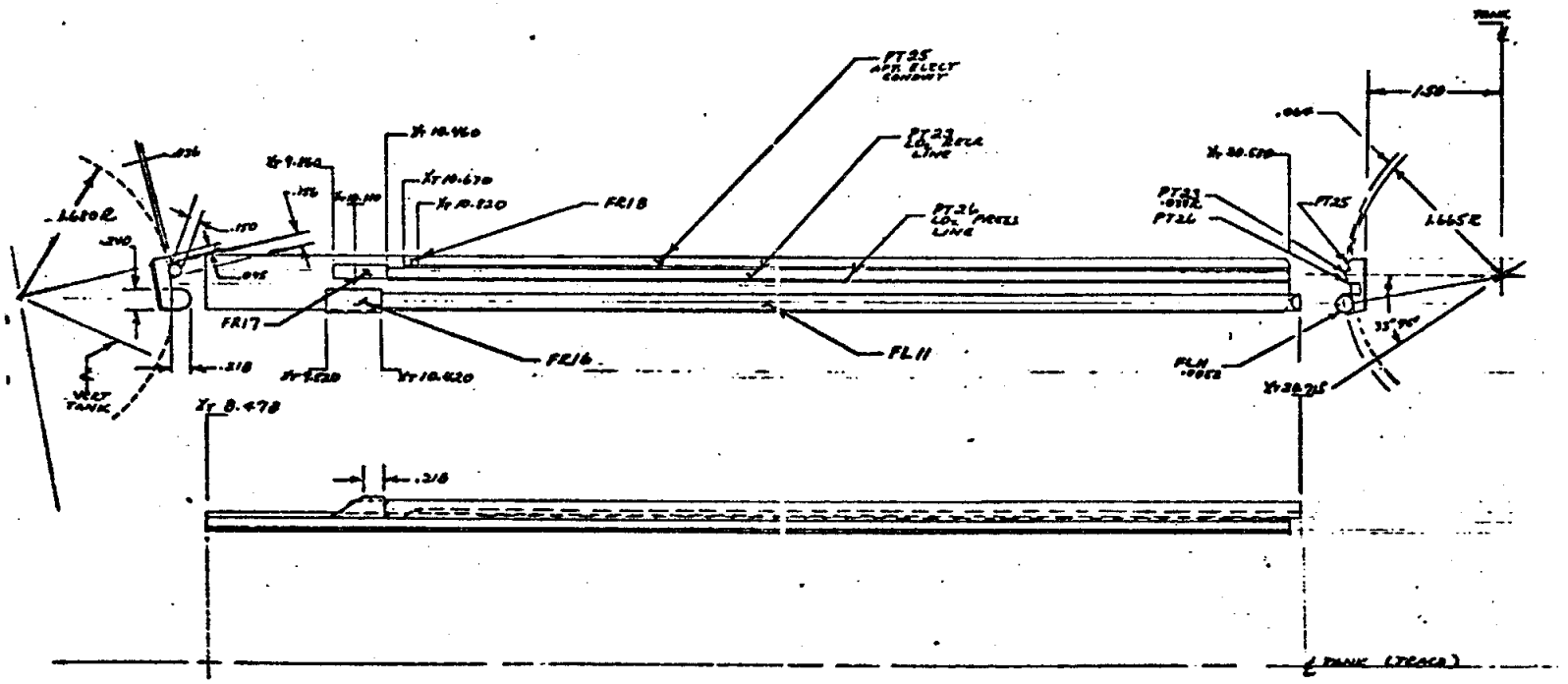


e. External Tank Hardware and Protrusions
Figure 2. Continued.

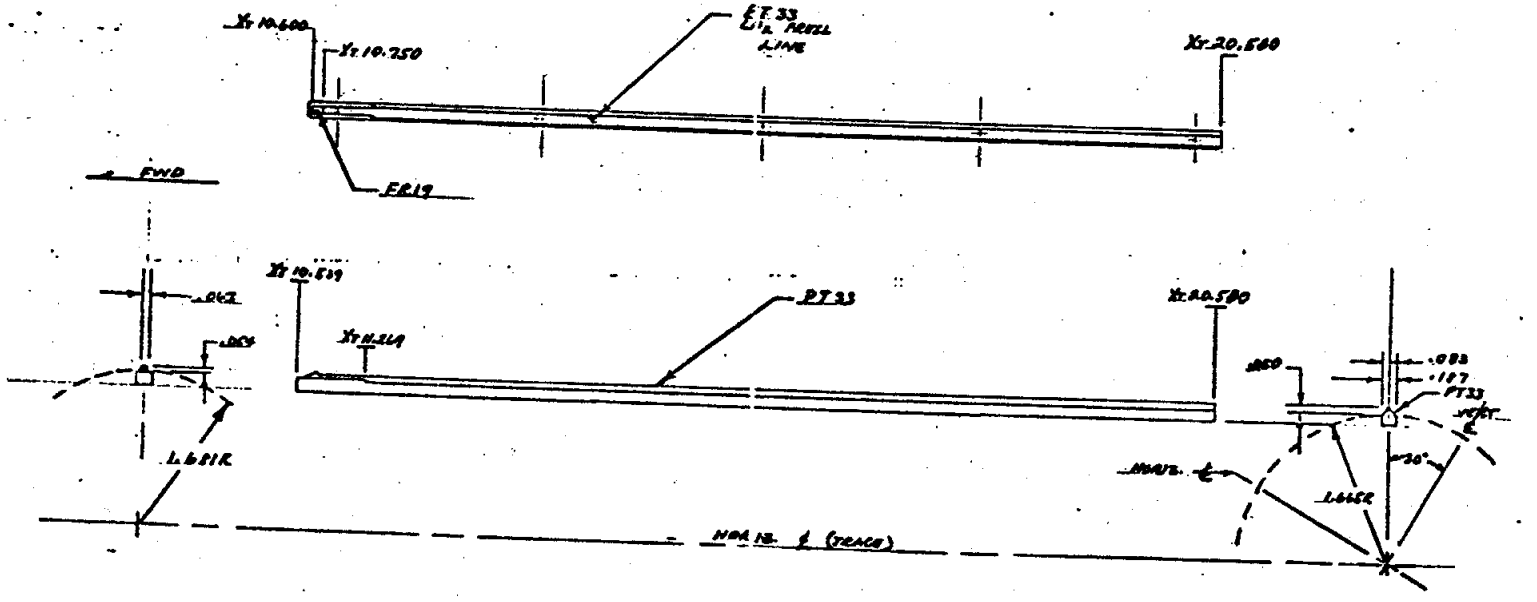


f. L/H $LH_2$ Pressure Line - $PT_{33}$ and $FR_{19}$
Figure 2. Continued.

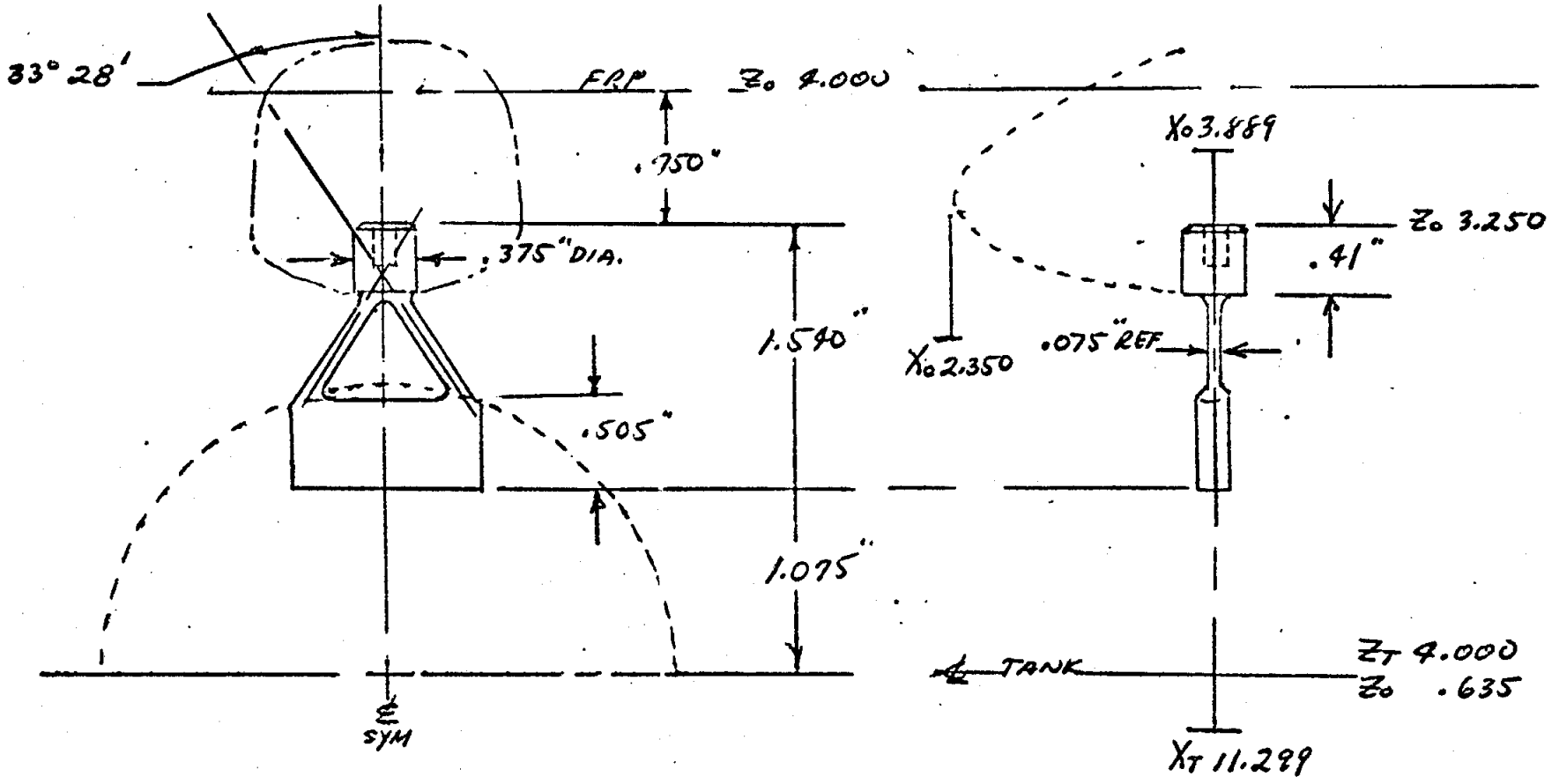


g. Orbiter/Tank Forward Support (AT130)
Figure 2. Continued.

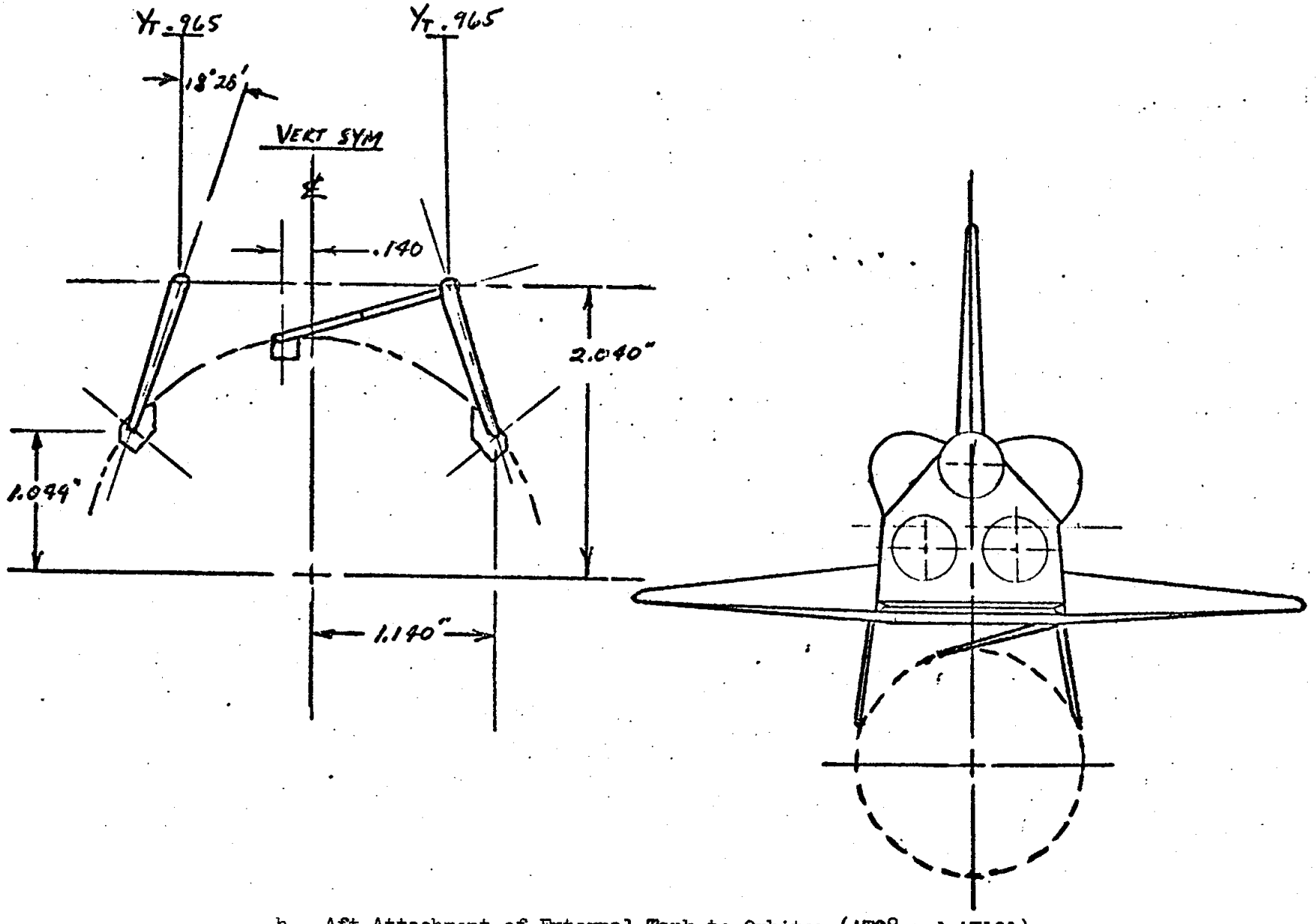


h. Aft Attachment of External Tank to Orbiter (AT28 and AT131)
Figure 2. Continued.

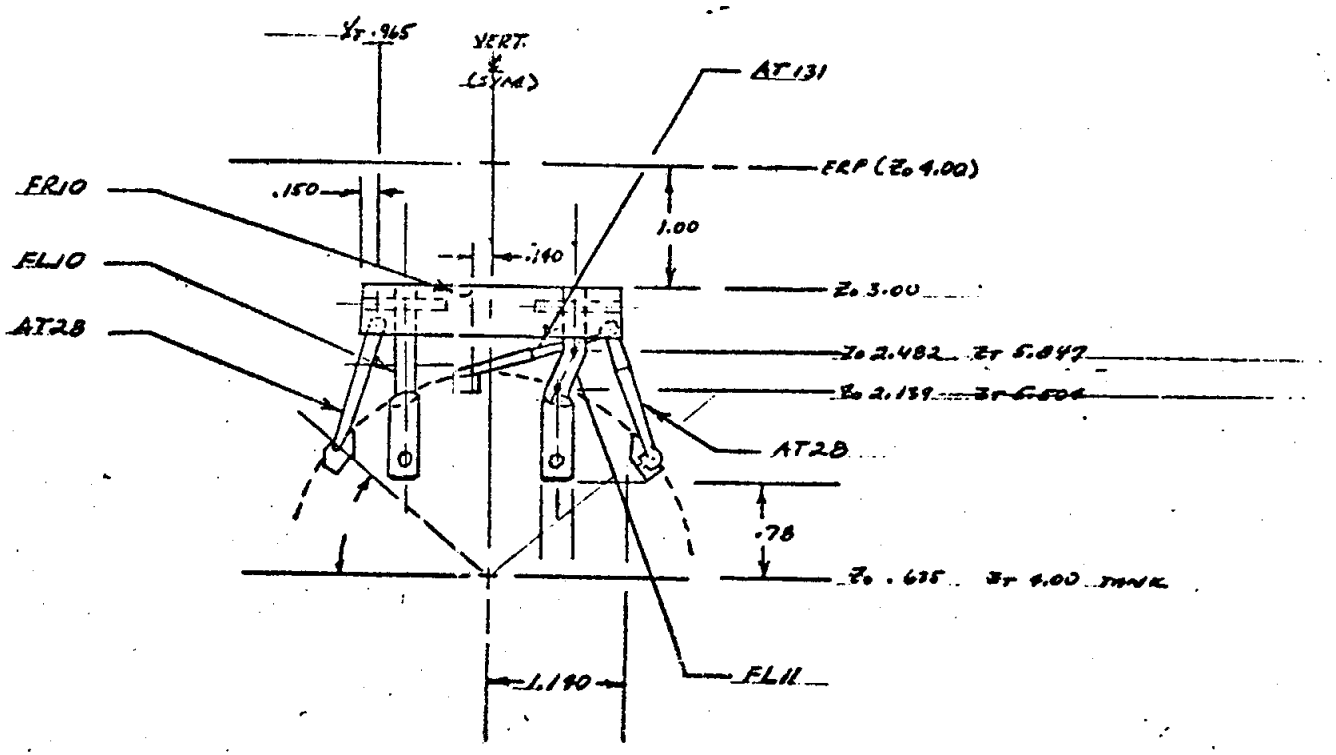


i. LH and $LO_2$ Feedline and Aft Orbiter/Tank Attach Structure ($FL_{10}$, $FL_{11}$) and ($AT_{28}$, $AT_{131}$)
Figure 2. Continued.

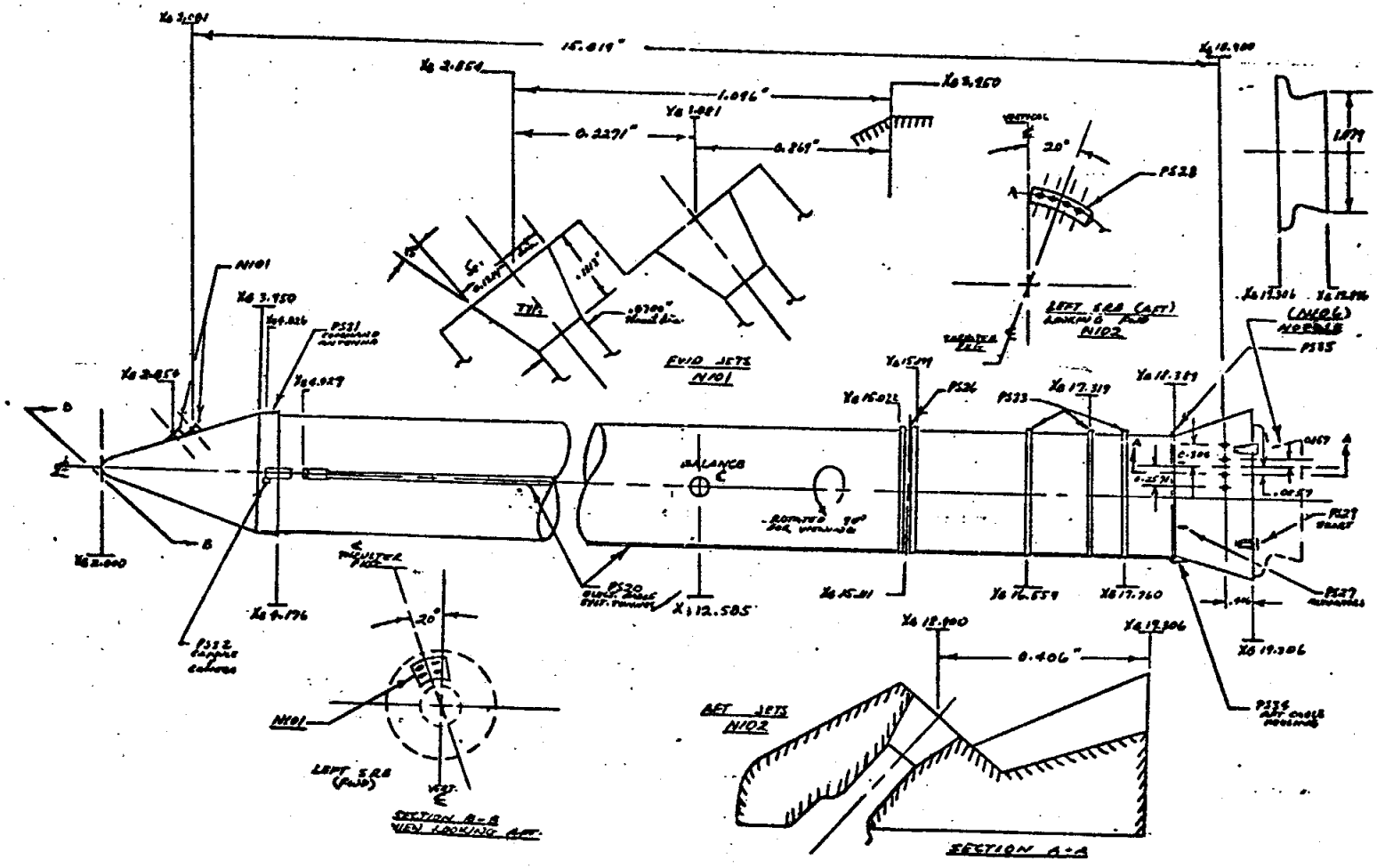


j. BSRM 0.010 Scale 75-OTS Test IA143
Figure 2. Continued.

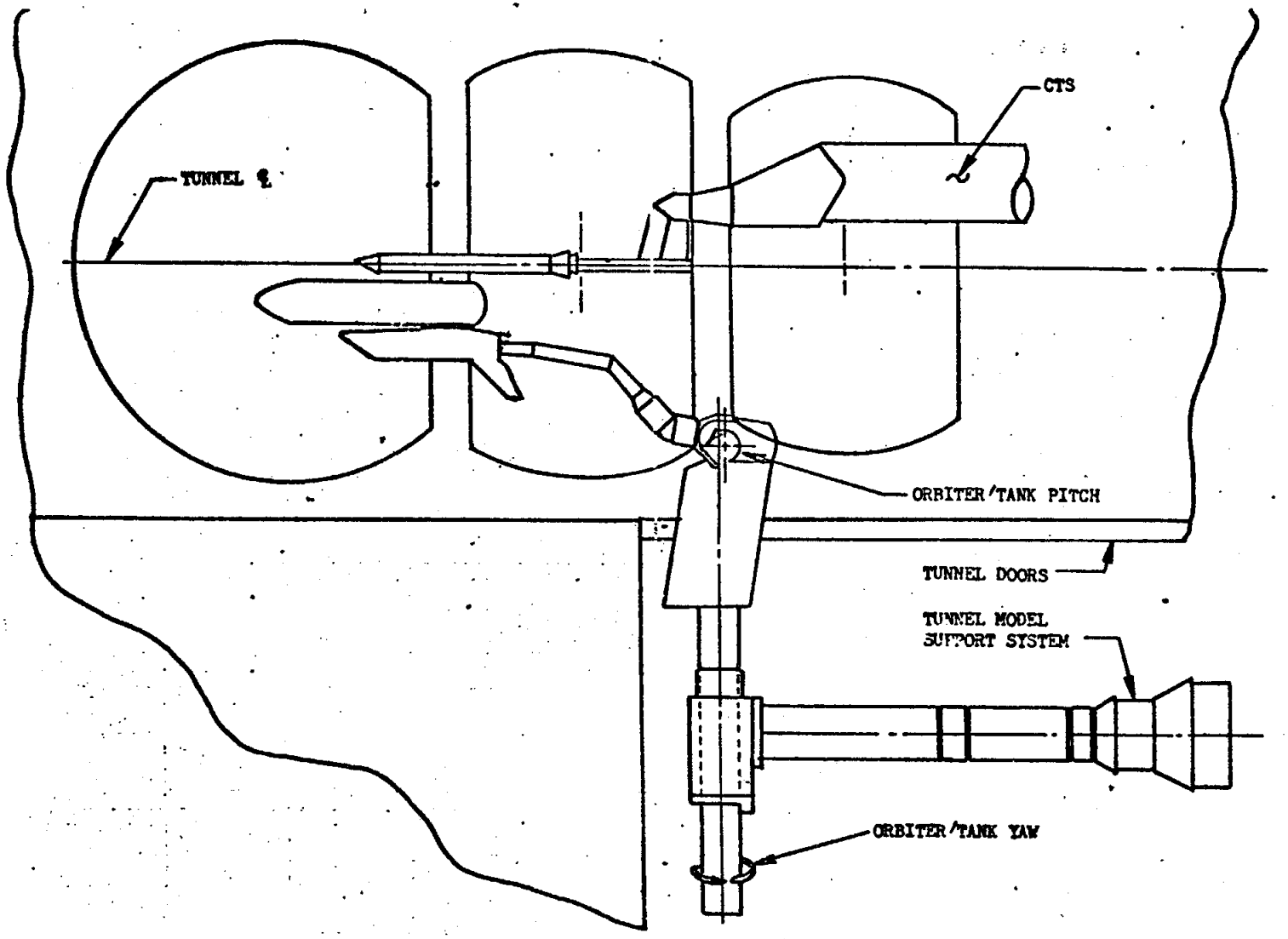


k. Sketch of Model Support System for IA143
Figure 2. Continued.

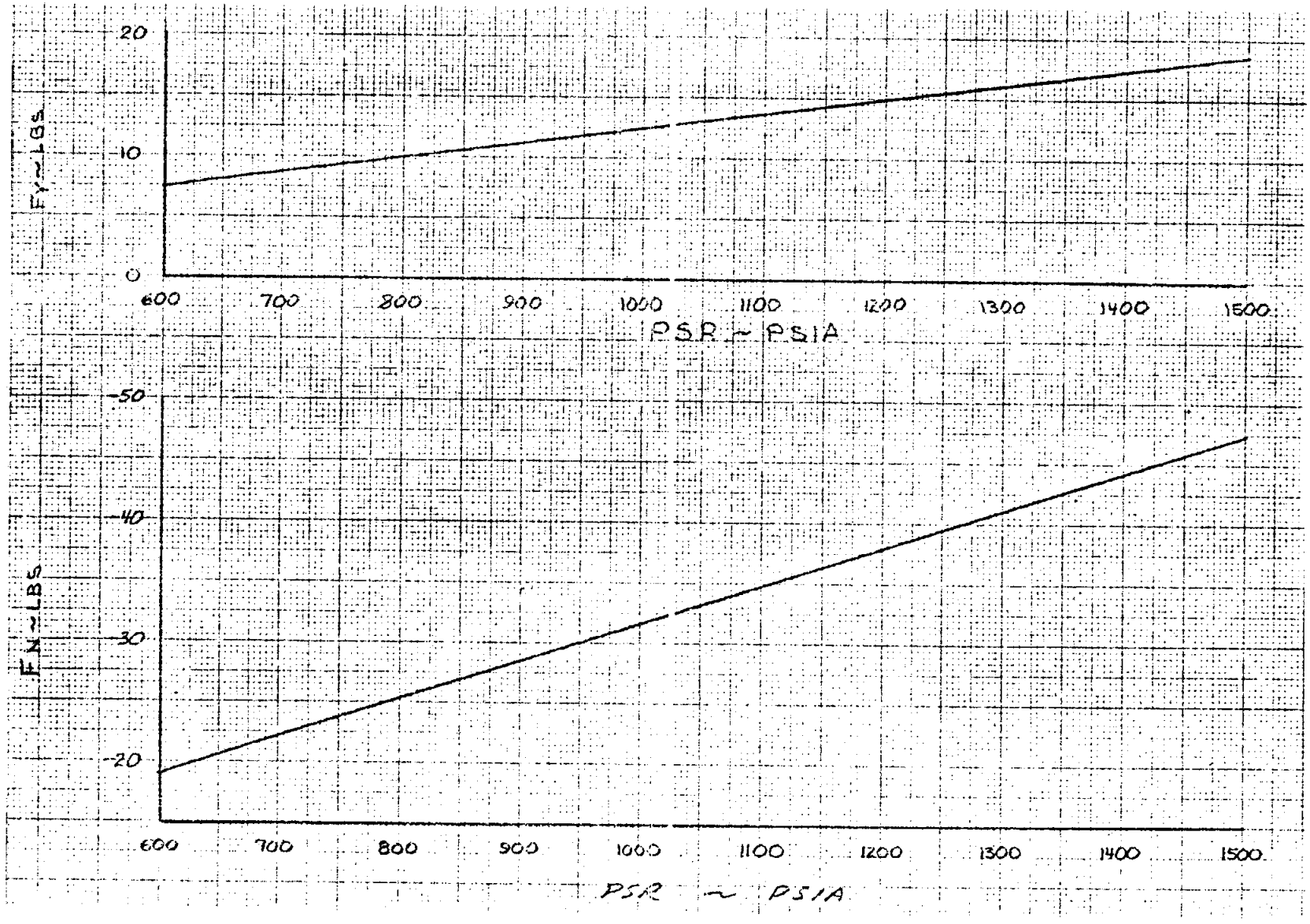


1. Right SRB Thrust Tare Calibration ($F_Y$ and $F_N$)
Figure 2. Continued.

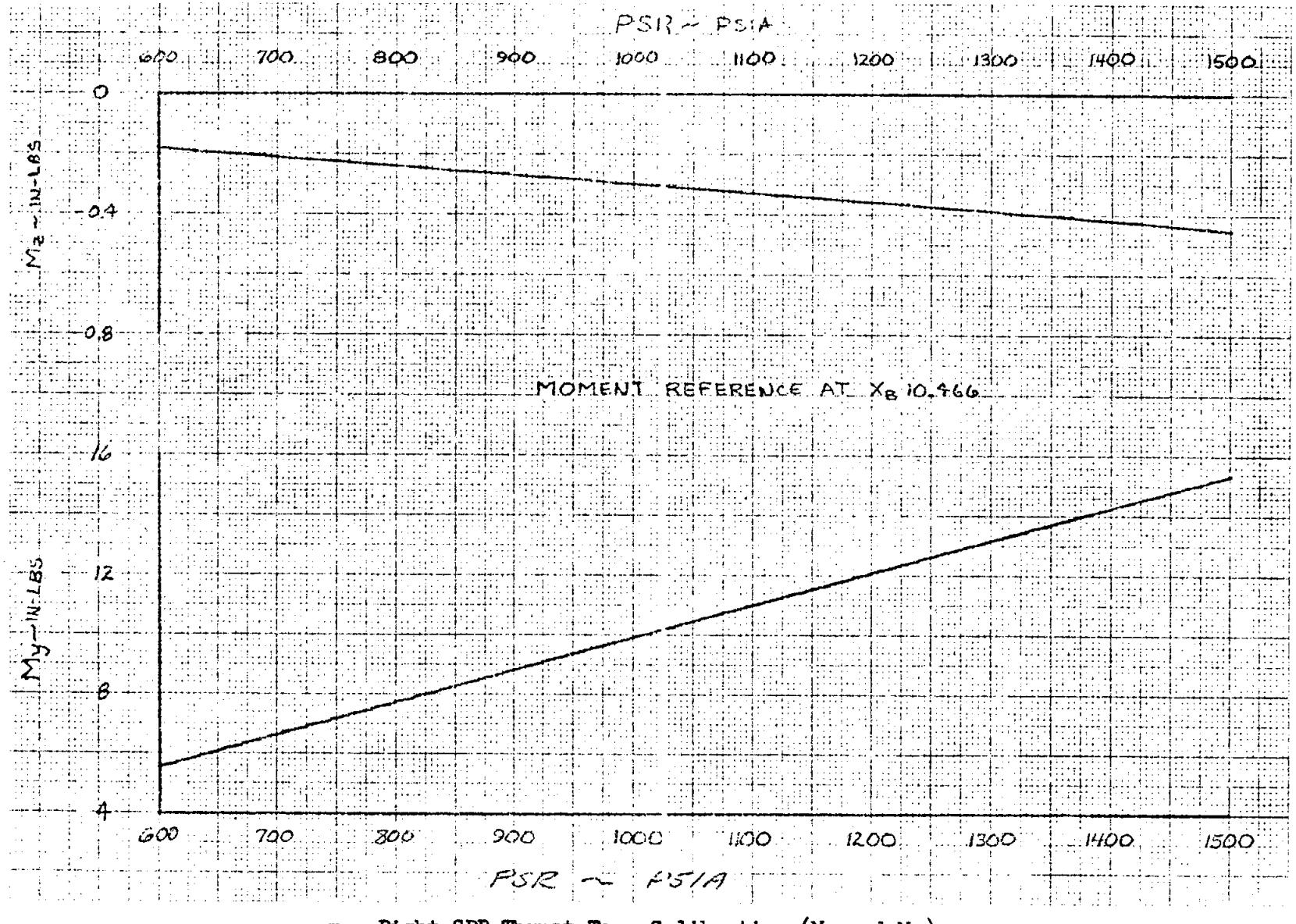


m. Right SRB Thrust Tare Calibration ($M_Z$ and $M_Y$)
Figure 2. Continued.

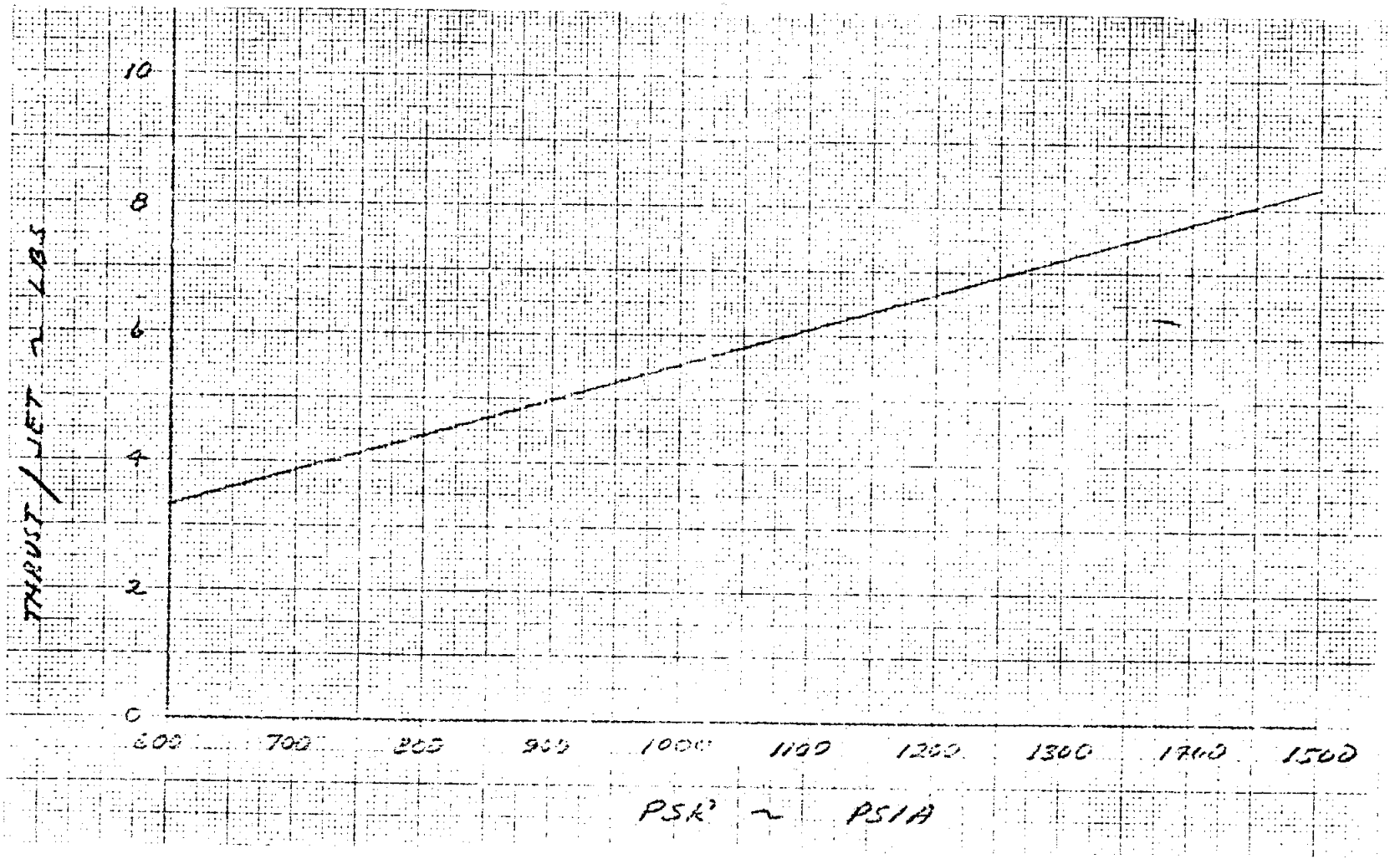


n. Right SRB Thrust Tare Calibration (Thrust/Jet)
Figure 2. Concluded.

a. Side View with Left SRB at Large Separation Distance
Figure 3. Model photographs.

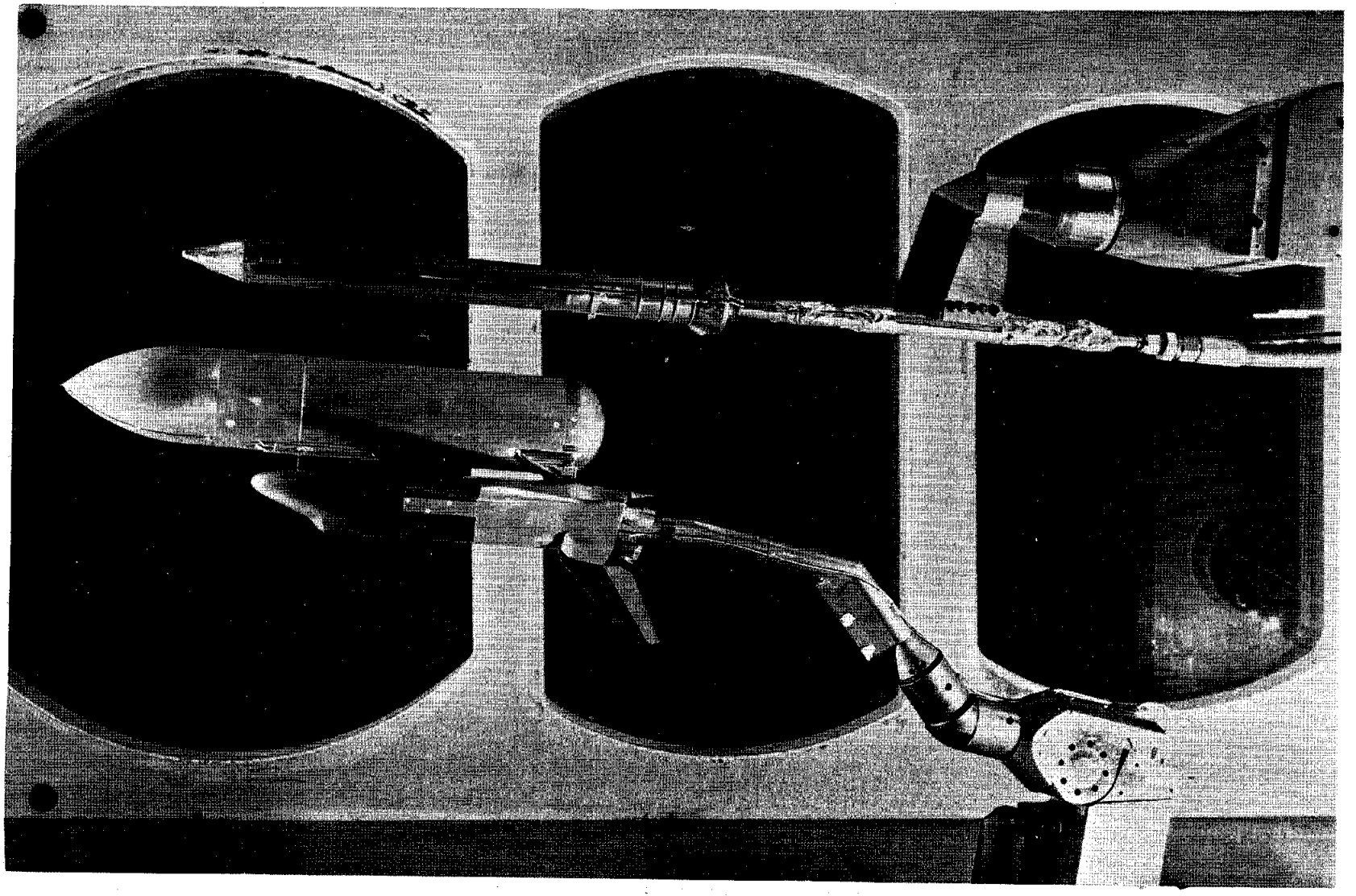

b. Side View With Left SRB at Small Separation Distance
Figure 3. Continued.

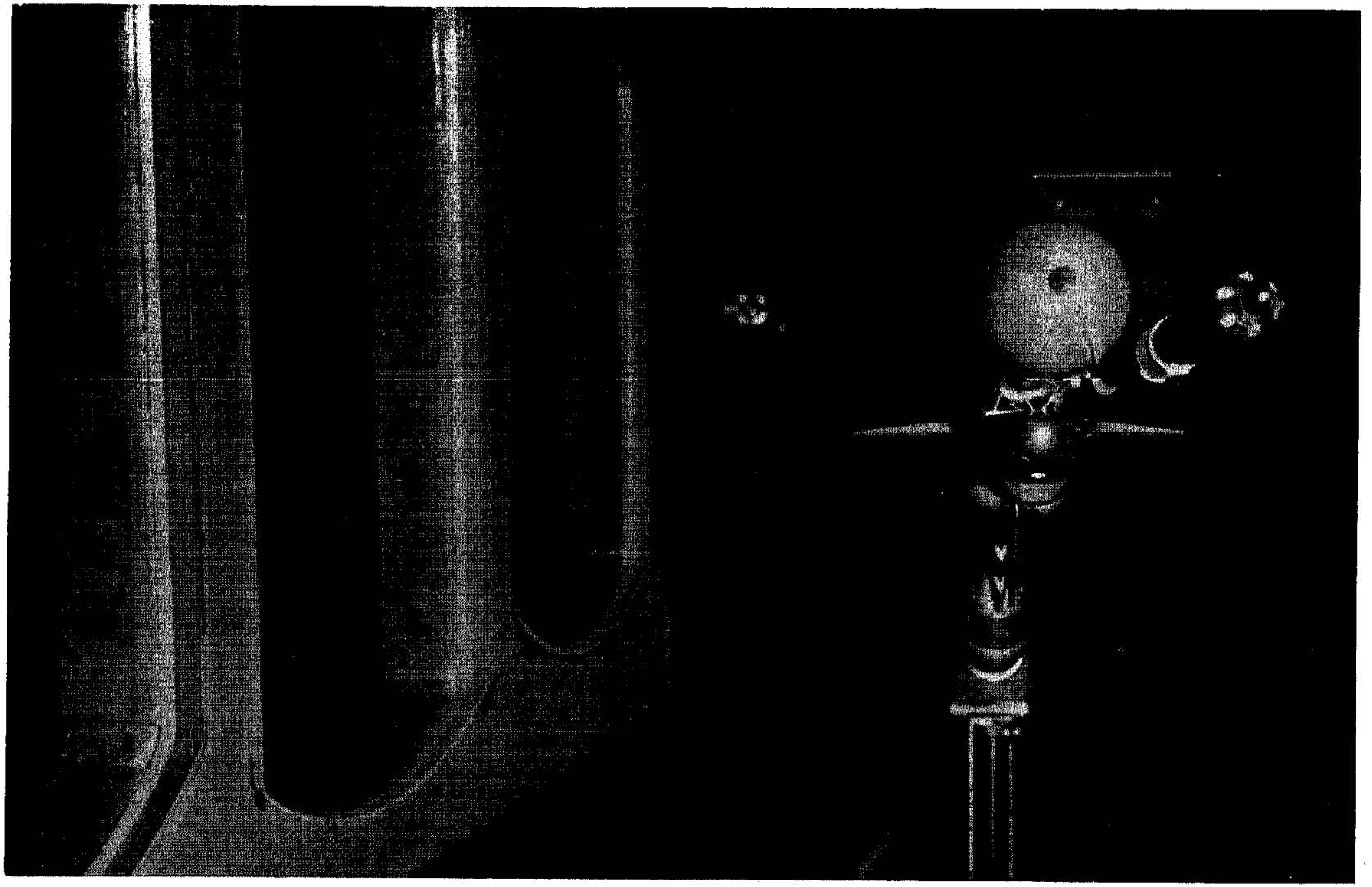

c. Front View
Figure 3. Concluded.

# APPENDIX

## TABULATED SOURCE DATA

Data are separated into four volumes as follows:

| | | |
|---|---|---|
| Volume 1—Orbiter balance data, data sets OVX---, | pages | 1-768 |
| Volume 2—Right SRB balance data, data sets SVX---, | pages | 769-1548 |
| Volume 3—Model pressure data, data sets PVX---, | pages | 1549-2317 |
| Volume 4—Tunnel operating conditions, data sets TVX---, | pages | 2318-3083 |

IA143, AEDC V41A-P8A, O/ET W/R.H. SRB SEPARATING (OVX001) ( 20 MAY 77 )

REFERENCE DATA

SREF = 2690.0000 SQ.FT. XMRP = 1097.0000 IN. XT
LREF = 1290.3000 INCHES YMRP = .0000 IN. YT
BREF = 1290.3000 INCHES ZMRP = 450.0000 IN. ZT
SCALE = .0100

PARAMETRIC DATA

ALPHA = .000 BETA = .000
DALPHA = .000 DBETA = .000
Z = .000 MACH = 4.000
JET PC = .000

RUN NO. 4503/ 0 RN/L = 2.03 GRADIENT INTERVAL = -5.00/ 5.00

| Y | X | Z | ALPHA | BETA | PHI | CN | CLM | CY | CYN | CBL | CA |
|---|---|---|---|---|---|---|---|---|---|---|---|
| -11.741 | -.213 | -1.63900 | -.08405 | .02432 | .00259 | -.05960 | .03112 | -.01841 | -.00071 | -.00186 | .20253 |
| -10.728 | 99.719 | .12099 | -.08459 | .01782 | .00565 | -.05729 | .02950 | -.01812 | .00209 | -.00161 | .20280 |
| -10.893 | 199.890 | .11250 | -.08504 | .01323 | .00846 | -.05490 | .02796 | -.01839 | .00432 | -.00141 | .20330 |
| | GRADIENT | .00000 | .00000 | .00000 | .00000 | .00000 | .00000 | .00000 | .00000 | .00000 | .00000 |

RUN NO. 4508/ 0 RN/L = 2.03 GRADIENT INTERVAL = -5.00/ 5.00

| Y | X | Z | ALPHA | BETA | PHI | CN | CLM | CY | CYN | CBL | CA |
|---|---|---|---|---|---|---|---|---|---|---|---|
| -51.054 | 199.800 | .02679 | -.08445 | .01054 | .00975 | -.05264 | .02701 | -.01949 | .00616 | -.00159 | .20331 |
| -51.256 | 99.811 | -.02191 | -.08441 | .01680 | .00828 | -.05672 | .02940 | -.02103 | .00418 | -.00181 | .20326 |
| -51.804 | -.167 | -.06841 | -.08378 | .02625 | .00403 | -.05952 | .03129 | -.02225 | .00058 | -.00231 | .20259 |
| | GRADIENT | .00000 | .00000 | .00000 | .00000 | .00000 | .00000 | .00000 | .00000 | .00000 | .00000 |

RUN NO. 4509/ 0 RN/L = 2.03 GRADIENT INTERVAL = -5.00/ 5.00

| Y | X | Z | ALPHA | BETA | PHI | CN | CLM | CY | CYN | CBL | CA |
|---|---|---|---|---|---|---|---|---|---|---|---|
| -101.360 | -.137 | -.06471 | -.08379 | .02143 | .00728 | -.05689 | .03000 | -.02464 | .00411 | -.00253 | .20359 |
| -99.532 | 99.803 | .10753 | -.08383 | .01621 | .00908 | -.05358 | .02810 | -.02427 | .00628 | -.00243 | .20403 |
| -100.170 | 199.660 | .03486 | -.08369 | .00891 | .01247 | -.05058 | .02638 | -.02030 | .00736 | -.00132 | .20380 |
| | GRADIENT | .00000 | .00000 | .00000 | .00000 | .00000 | .00000 | .00000 | .00000 | .00000 | .00000 |

IA143, AEDC V41A-P8A, O/ET W/R.H. SRB SEPARATING (OVX002) ( 20 MAY 77 )

REFERENCE DATA

SREF = 2690.0000 SQ.FT. XMRP = 1097.0000 IN. XT
LREF = 1290.3000 INCHES YMRP = .0000 IN. YT
BREF = 1290.3000 INCHES ZMRP = 450.0000 IN. ZT
SCALE = .0100

PARAMETRIC DATA

ALPHA = .000 BETA = .000
DALPHA = .000 DBETA = .000
Z = 100.000 MACH = 4.000
JET PC = .000

RUN NO. 4504/ 0 RN/L = 2.03 GRADIENT INTERVAL = -5.00/ 5.00

| Y | X | Z | ALPHA | BETA | PHI | CN | CLM | CY | CYN | CBL | CA |
|---|---|---|---|---|---|---|---|---|---|---|---|
| -10.749 | 199.820 | 99.83700 | -.08226 | .00374 | .00791 | -.04982 | .02677 | -.01358 | .00322 | -.00068 | .20340 |
| -10.972 | 99.788 | 99.96000 | -.08126 | .01423 | .00628 | -.05194 | .02850 | -.01403 | .00142 | -.00080 | .20330 |
| -11.612 | -.155 | 100.07000 | -.07898 | .02221 | .00506 | -.05451 | .03132 | -.01599 | -.00109 | -.00094 | .20318 |
| | GRADIENT | .00000 | .00000 | .00000 | .00000 | .00000 | .00000 | .00000 | .00000 | .00000 | .00000 |

IA143, AEDC V41A-P8A, O/ET W/R.H. SRB SEPARATING (OVX002) ( 20 MAY 77 )

REFERENCE DATA

SREF = 2690.0000 SQ.FT. XMRP = 1097.0000 IN. XT
LREF = 1290.3000 INCHES YMRP = .0000 IN. YT
BREF = 1290.3000 INCHES ZMRP = 450.0000 IN. ZT
SCALE = .0100

PARAMETRIC DATA

ALPHA = .000 BETA = .000
DALPHA = .000 DBETA = .000
Z = 100.000 MACH = 4.000
JET PC = .000

RUN NO. 4507/ 0 RN/L = 2.03 GRADIENT INTERVAL = -5.00/ 5.00

| Y | X | Z | ALPHA | BETA | PHI | CN | CLM | CY | CYN | CBL | CA |
|---|---|---|---|---|---|---|---|---|---|---|---|
| -50.959 | -.164 | 99.58000 | -.07942 | .02226 | .00625 | -.05408 | .03076 | -.01833 | .00018 | -.00123 | .20337 |
| -50.011 | 99.886 | 99.87800 | -.08118 | .01459 | .00953 | -.05156 | .02846 | -.01687 | .00286 | -.00075 | .20393 |
| -50.471 | 199.750 | 99.88100 | -.08211 | .00850 | .01000 | -.04893 | .02635 | -.01460 | .00434 | -.00056 | .20388 |
| | GRADIENT | .00000 | .00000 | .00000 | .00000 | .00000 | .00000 | .00000 | .00000 | .00000 | .00000 |

RUN NO. 4510/ 0 RN/L = 2.03 GRADIENT INTERVAL = -5.00/ 5.00

| Y | X | Z | ALPHA | BETA | PHI | CN | CLM | CY | CYN | CBL | CA |
|---|---|---|---|---|---|---|---|---|---|---|---|
| -100.980 | 199.780 | 99.96700 | -.08248 | .00740 | .01166 | -.04453 | .02377 | -.01745 | .00645 | -.00095 | .20457 |
| -101.750 | 99.850 | 100.04000 | -.08175 | .01340 | .01253 | -.04730 | .02589 | -.02060 | .00549 | -.00107 | .20493 |
| -101.550 | -.161 | 100.01000 | -.08105 | .01702 | .01037 | -.04943 | .02750 | -.02121 | .00419 | -.00140 | .20471 |
| | GRADIENT | .00000 | .00000 | .00000 | .00000 | .00000 | .00000 | .00000 | .00000 | .00000 | .00000 |

IA143, AEDC V41A-P8A, O/ET W/R.H. SRB SEPARATING (OVX003) ( 20 MAY 77 )

REFERENCE DATA

SREF = 2690.0000 SQ.FT. XMRP = 1097.0000 IN. XT
LREF = 1290.3000 INCHES YMRP = .0000 IN. YT
BREF = 1290.3000 INCHES ZMRP = 450.0000 IN. ZT
SCALE = .0100

PARAMETRIC DATA

ALPHA = .000 BETA = .000
DALPHA = .000 DBETA = .000
Z = 200.000 MACH = 4.000
JET PC = .000

RUN NO. 4505/ 0 RN/L = 2.03 GRADIENT INTERVAL = -5.00/ 5.00

| Y | X | Z | ALPHA | BETA | PHI | CN | CLM | CY | CYN | CBL | CA |
|---|---|---|---|---|---|---|---|---|---|---|---|
| -11.136 | -.128 | 200.31000 | -.07575 | .01649 | .00217 | -.04487 | .02779 | -.01364 | .00018 | -.00141 | .20437 |
| -10.434 | 99.839 | 199.66000 | -.07837 | .01072 | .00208 | -.04232 | .02469 | -.01231 | .00205 | -.00152 | .20404 |
| -10.233 | 199.650 | 199.75000 | -.08095 | .00601 | -.00136 | -.03984 | .02150 | -.01043 | .00313 | -.00213 | .20283 |
| | GRADIENT | .00000 | .00000 | .00000 | .00000 | .00000 | .00000 | .00000 | .00000 | .00000 | .00000 |

RUN NO. 4506/ 0 RN/L = 2.03 GRADIENT INTERVAL = -5.00/ 5.00

| Y | X | Z | ALPHA | BETA | PHI | CN | CLM | CY | CYN | CBL | CA |
|---|---|---|---|---|---|---|---|---|---|---|---|
| -50.956 | 199.710 | 200.07000 | -.08169 | .00581 | -.00102 | -.03668 | .01928 | -.01257 | .00442 | -.00257 | .20310 |
| -51.631 | 99.841 | 200.12000 | -.07946 | .01072 | .00372 | -.03940 | .02249 | -.01524 | .00369 | -.00185 | .20473 |
| -51.455 | -.179 | 200.17000 | -.07793 | .01399 | .00437 | -.04177 | .02479 | -.01559 | .00240 | -.00157 | .20479 |
| | GRADIENT | .00000 | .00000 | .00000 | .00000 | .00000 | .00000 | .00000 | .00000 | .00000 | .00000 |

IA143, AEDC V41A-P8A, O/ET W/R.H. SRB SEPARATING (OVX003) ( 20 MAY 77 )

REFERENCE DATA

SREF = 2690.0000 SQ.FT. XMRP = 1097.0000 IN. XT
LREF = 1290.3000 INCHES YMRP = .0000 IN. YT
BREF = 1290.3000 INCHES ZMRP = 450.0000 IN. ZT
SCALE = .0100

PARAMETRIC DATA

ALPHA = .000 BETA = .000
DALPHA = .000 DBETA = .000
Z = 200.000 MACH = 4.000
JET PC = .000

RUN NO. 4511/ 0 RN/L = 2.03 GRADIENT INTERVAL = -5.00/ 5.00

| Y | X | Z | ALPHA | BETA | PHI | CN | CLM | CY | CYN | CBL | CA |
|---|---|---|---|---|---|---|---|---|---|---|---|
| -100.810 | -.210 | 200.20000 | -.08099 | .00831 | .00733 | -.04025 | .02198 | -.01632 | .00540 | -.00152 | .20421 |
| -100.520 | 99.767 | 199.99000 | -.08159 | .00702 | .00540 | -.03597 | .01925 | -.01725 | .00650 | -.00222 | .20449 |
| -100.460 | 199.690 | 199.75000 | -.08302 | .00407 | .00121 | -.03237 | .01603 | -.01626 | .00729 | -.00308 | .20307 |
| | GRADIENT | .00000 | .00000 | .00000 | .00000 | .00000 | .00000 | .00000 | .00000 | .00000 | .00000 |

IA143, AEDC V41A-P8A, O/ET W/R.H. SRB SEPARATING (OVX004) ( 20 MAY 77 )

REFERENCE DATA

SREF = 2690.0000 SQ.FT. XMRP = 1097.0000 IN. XT
LREF = 1290.3000 INCHES YMRP = .0000 IN. YT
BREF = 1290.3000 INCHES ZMRP = 450.0000 IN. ZT
SCALE = .0100

PARAMETRIC DATA

ALPHA = .000 BETA = .000
DALPHA = .000 DBETA = -4.000
Z = .000 MACH = 4.000
JET PC = .000

RUN NO. 4530/ 0 RN/L = 2.04 GRADIENT INTERVAL = -5.00/ 5.00

| Y | X | Z | ALPHA | BETA | PHI | CN | CLM | CY | CYN | CBL | CA |
|---|---|---|---|---|---|---|---|---|---|---|---|
| -104.250 | -.022 | -1.93160 | -.08558 | .03152 | .01651 | -.05782 | .03007 | -.04673 | .01195 | -.00498 | .20623 |
| -99.671 | 99.701 | .08423 | -.08656 | .02420 | .01781 | -.05425 | .02762 | -.04501 | .01431 | -.00483 | .20699 |
| -99.780 | 199.750 | -.03844 | -.08598 | .01530 | .02062 | -.05026 | .02548 | -.04090 | .01603 | -.00392 | .20650 |
| | GRADIENT | .00000 | .00000 | .00000 | .00000 | .00000 | .00000 | .00000 | .00000 | .00000 | .00000 |

RUN NO. 4535/ 0 RN/L = 2.04 GRADIENT INTERVAL = -5.00/ 5.00

| Y | X | Z | ALPHA | BETA | PHI | CN | CLM | CY | CYN | CBL | CA |
|---|---|---|---|---|---|---|---|---|---|---|---|
| -151.120 | 199.790 | -.27524 | -.08542 | .01016 | .02292 | -.04744 | .02452 | -.03860 | .01707 | -.00327 | .20824 |
| -150.940 | 99.877 | -.05233 | -.08537 | .01575 | .02162 | -.04945 | .02568 | -.04280 | .01689 | -.00411 | .20804 |
| -151.020 | -.148 | -.05963 | -.08590 | .01856 | .01964 | -.05136 | .02645 | -.04283 | .01563 | -.00434 | .20786 |
| | GRADIENT | .00000 | .00000 | .00000 | .00000 | .00000 | .00000 | .00000 | .00000 | .00000 | .00000 |

RUN NO. 4536/ 0 RN/L = 2.04 GRADIENT INTERVAL = -5.00/ 5.00

| Y | X | Z | ALPHA | BETA | PHI | CN | CLM | CY | CYN | CBL | CA |
|---|---|---|---|---|---|---|---|---|---|---|---|
| -199.850 | -.311 | -.04599 | -.08636 | .00400 | .02171 | -.04754 | .02400 | -.03419 | .01738 | -.00293 | .20820 |
| -200.950 | 99.832 | .05289 | -.08656 | .00413 | .02236 | -.04620 | .02325 | -.03525 | .01793 | -.00304 | .20890 |
| -201.130 | 199.770 | .07209 | -.08655 | .00150 | .02215 | -.04607 | .02312 | -.03424 | .01855 | -.00304 | .20858 |
| | GRADIENT | .00000 | .00000 | .00000 | .00000 | .00000 | .00000 | .00000 | .00000 | .00000 | .00000 |

IA143, AEDC V41A-P8A, O/ET W/R.H. SRB SEPARATING (OVX005) ( 20 MAY 77 )

REFERENCE DATA

SREF = 2690.0000 SQ.FT. XMRP = 1097.0000 IN. XT
LREF = 1290.3000 INCHES YMRP = .0000 IN. YT
BREF = 1290.3000 INCHES ZMRP = 450.0000 IN. ZT
SCALE = .0100

PARAMETRIC DATA

ALPHA = .000 BETA = .000
DALPHA = .000 DBETA = -4.000
Z = 100.000 MACH = 4.000
JET PC = .000

RUN NO. 4531/ 0 RN/L = 2.04 GRADIENT INTERVAL = -5.00/ 5.00

| Y | X | Z | ALPHA | BETA | PHI | CN | CLM | CY | CYN | CBL | CA |
|---|---|---|---|---|---|---|---|---|---|---|---|
| -100 | 199.760 | 100.01000 | -.08364 | .01313 | .02007 | -.04491 | .02402 | -.03361 | .01292 | -.00251 | .20793 |
| -101. | 99.917 | 100.04000 | -.08243 | .02027 | .02019 | -.04814 | .02652 | -.03731 | .01176 | -.00283 | .20750 |
| -101.4 | -.118 | 99.98300 | -.08109 | .02540 | .01831 | -.05052 | .02867 | -.03838 | .01002 | -.00310 | .20749 |
| | GRADIENT | .00000 | .00000 | .00000 | .00000 | .00000 | .00000 | .00000 | .00000 | .00000 | .00000 |

RUN NO. 4534/ 0 RN/L = 2.04 GRADIENT INTERVAL = -5.00/ 5.00

| Y | X | Z | ALPHA | BETA | PHI | CN | CLM | CY | CYN | CBL | CA |
|---|---|---|---|---|---|---|---|---|---|---|---|
| -151.200 | -.139 | 99.80300 | -.08412 | .01506 | .01857 | -.04393 | .02327 | -.03494 | .01279 | -.00299 | .20844 |
| -151.130 | 99.908 | 100.01000 | -.08410 | .01298 | .02009 | -.04226 | .02232 | -.03556 | .01408 | -.00296 | .20858 |
| -150.400 | 199.750 | 100.03000 | -.08448 | .00858 | .01935 | -.04042 | .02105 | -.03318 | .01474 | -.00287 | .20853 |
| | GRADIENT | .00000 | .00000 | .00000 | .00000 | .00000 | .00000 | .00000 | .00000 | .00000 | .00000 |

RUN NO. 4537/ 0 RN/L = 2.04 GRADIENT INTERVAL = -5.00/ 5.00

| Y | X | Z | ALPHA | BETA | PHI | CN | CLM | CY | CYN | CBL | CA |
|---|---|---|---|---|---|---|---|---|---|---|---|
| -200.700 | 199.790 | 100.09000 | -.08638 | .00134 | .01687 | -.04033 | .01958 | -.02917 | .01578 | -.00298 | .20718 |
| -200.920 | 99.861 | 99.84500 | -.08622 | .00251 | .01702 | -.04143 | .02035 | -.02916 | .01524 | -.00287 | .20739 |
| -200.430 | -.140 | 99.95700 | -.08617 | .00340 | .01720 | -.04238 | .02110 | -.02933 | .01493 | -.00281 | .20755 |
| | GRADIENT | .00000 | .00000 | .00000 | .00000 | .00000 | .00000 | .00000 | .00000 | .00000 | .00000 |

IA143, AEDC V41A-P8A, O/ET W/R.H. SRB SEPARATING (OVX006) ( 20 MAY 77 )

REFERENCE DATA

SREF = 2690.0000 SQ.FT. XMRP = 1097.0000 IN. XT
LREF = 1290.3000 INCHES YMRP = .0000 IN. YT
BREF = 1290.3000 INCHES ZMRP = 450.0000 IN. ZT
SCALE = .0100

PARAMETRIC DATA

ALPHA = .000 BETA = .000
DALPHA = .000 DBETA = -4.000
Z = 200.000 MACH = 4.000
JET PC = .000

RUN NO. 4532/ 0 RN/L = 2.04 GRADIENT INTERVAL = -5.00/ 5.00

| Y | X | Z | ALPHA | BETA | PHI | CN | CLM | CY | CYN | CBL | CA |
|---|---|---|---|---|---|---|---|---|---|---|---|
| -99.927 | -.214 | 200.24000 | -.08090 | .01510 | .01100 | -.03873 | .02191 | -.02897 | .00942 | -.00319 | .20753 |
| -100.520 | 99.810 | 199.93000 | -.08170 | .01308 | .01006 | -.03655 | .02020 | -.02915 | .01043 | -.00356 | .20777 |
| -99.838 | 199.650 | 199.77000 | -.08334 | .00909 | .00529 | -.03280 | .01685 | -.02739 | .01126 | -.00443 | .20689 |
| | GRADIENT | .00000 | .00000 | .00000 | .00000 | .00000 | .00000 | .00000 | .00000 | .00000 | .00000 |

IA143, AEDC V41A-P8A, O/ET W/R.H. SRB SEPARATING (OVX006) ( 20 MAY 77 )

REFERENCE DATA

SREF = 2690.0000 SQ.FT. XMRP = 1097.0000 IN. XT
LREF = 1290.3000 INCHES YMRP = .0000 IN. YT
BREF = 1290.3000 INCHES ZMRP = 450.0000 IN. ZT
SCALE = .0100

PARAMETRIC DATA

ALPHA = .000 BETA = .000
DALPHA = .000 DBETA = -4.000
Z = 200.000 MACH = 4.000
JET PC = .000

RUN NO. 4533/ 0 RN/L = 2.04 GRADIENT INTERVAL = -5.00/ 5.00

| Y | X | Z | ALPHA | BETA | PHI | CN | CLM | CY | CYN | CBL | CA |
|---|---|---|---|---|---|---|---|---|---|---|---|
| -151.230 | 199.830 | 200.06000 | -.08573 | .00396 | .00764 | -.03308 | .01538 | -.02814 | .01401 | -.00448 | .20553 |
| -150.950 | 99.856 | 199.86000 | -.08488 | .00594 | .01006 | -.03507 | .01725 | -.02831 | .01320 | -.00387 | .20652 |
| -150.560 | -.170 | 199.81000 | -.08457 | .00585 | .01021 | -.03805 | .01902 | -.02632 | .01213 | -.00340 | .20589 |
| | GRADIENT | .00000 | .00000 | .00000 | .00000 | .00000 | .00000 | .00000 | .00000 | .00000 | .00000 |

RUN NO. 4538/ 0 RN/L = 2.04 GRADIENT INTERVAL = -5.00/ 5.00

| Y | X | Z | ALPHA | BETA | PHI | CN | CLM | CY | CYN | CBL | CA |
|---|---|---|---|---|---|---|---|---|---|---|---|
| -200.370 | -.151 | 200.08000 | -.08542 | .00053 | .01311 | -.04414 | .02200 | -.02242 | .01235 | -.00227 | .20506 |
| -200.690 | 99.836 | 199.89000 | -.08635 | -.00108 | .00977 | -.04425 | .02141 | -.02000 | .01172 | -.00252 | .20430 |
| -200.950 | 199.790 | 199.96000 | -.08693 | -.00126 | .00821 | -.04191 | .01969 | -.02093 | .01233 | -.00307 | .20432 |
| | GRADIENT | .00000 | .00000 | .00000 | .00000 | .00000 | .00000 | .00000 | .00000 | .00000 | .00000 |

IA143, AEDC V41A-P8A, O/ET W/R.H. SRB SEPARATING (OVX007) ( 20 MAY 77 )

REFERENCE DATA

SREF = 2690.0000 SQ.FT. XMRP = 1097.0000 IN. XT
LREF = 1290.3000 INCHES YMRP = .0000 IN. YT
BREF = 1290 3000 INCHES ZMRP = 450.0000 IN. ZT
SCALE = .0100

PARAMETRIC DATA

ALPHA = .000 BETA = .000
DALPHA = .000 DBETA = .000
Z = .000 MACH = 4.000
JET PC = 1225.000

RUN NO. 4512/ 0 RN/L = 2.05 GRADIENT INTERVAL = -5.00/ 5.00

| Y | X | Z | ALPHA | BETA | PHI | CN | CLM | CY | CYN | CBL | CA |
|---|---|---|---|---|---|---|---|---|---|---|---|
| -11.036 | -.907 | -.12239 | -.24589 | .21515 | .04189 | -.10904 | -.04422 | -.10502 | -.03819 | -.00030 | .15169 |
| -9.972 | 99.856 | .12376 | -.21488 | .19868 | .04622 | -.09974 | -.03275 | -.08704 | -.04090 | .00359 | .14767 |
| -8.649 | 199.740 | 1.37640 | -.18586 | .14208 | .01036 | -.06732 | -.03400 | -.06089 | -.02994 | -.00180 | .15155 |
| | GRADIENT | .00000 | .00000 | .00000 | .00000 | .00000 | .00000 | .00000 | .00000 | .00000 | .00000 |

RUN NO. 4517/ 0 RN/L = 2.06 GRADIENT INTERVAL = -5.00/ 5.00

| Y | X | Z | ALPHA | BETA | PHI | CN | CLM | CY | CYN | CBL | CA |
|---|---|---|---|---|---|---|---|---|---|---|---|
| -49.690 | 199.820 | -1.21140 | -.17676 | .13734 | .00794 | -.07626 | -.02401 | -.06345 | -.02629 | -.00324 | .14888 |
| -53.298 | 99.851 | -1.43650 | -.20502 | .17314 | .03242 | -.09800 | -.02737 | -.06350 | -.04255 | .00435 | .15071 |
| -51.434 | -.223 | -.39136 | -.22739 | .19281 | .03392 | -.09960 | -.03803 | -.07712 | -.04380 | .00291 | .15365 |
| | GRADIENT | .00000 | .00000 | .00000 | .00000 | .00000 | .00000 | .00000 | .00000 | .00000 | .00000 |

IA143, AEDC V41A-P8A, O/ET W/R.H. SRB SEPARATING (OVX007) ( 20 MAY 77 )

REFERENCE DATA

SREF = 2690.0000 SQ.FT. XMRP = 1097.0000 IN. XT
LREF = 1290.3000 INCHES YMRP = .0000 IN. YT
BREF = 1290.3000 INCHES ZMRP = 450.0000 IN. ZT
SCALE = .0100

PARAMETRIC DATA

ALPHA = .000 BETA = .000
DALPHA = .000 DBETA = .000
Z = .000 MACH = 4.000
JET PC = 1225.000

RUN NO. 4518/ 0 RN/L = 2.05 GRADIENT INTERVAL = -5.00/ 5.00

| Y | X | Z | ALPHA | BETA | PHI | CN | CLM | CY | CYN | CBL | CA |
|---|---|---|---|---|---|---|---|---|---|---|---|
| -100.500 | -.191 | -.07594 | -.20694 | .14698 | .01027 | -.08762 | -.03181 | -.04220 | -.04273 | .00283 | .16329 |
| -100.940 | 99.927 | .45187 | -.19226 | .15844 | .02046 | -.09161 | -.02252 | -.04519 | -.04620 | .00506 | .15631 |
| -100.600 | 199.680 | .38715 | -.17123 | .14991 | .02760 | -.08997 | -.00909 | -.04738 | -.04112 | .00543 | .16655 |
| | GRADIENT | .00000 | .00000 | .00000 | .00000 | .00000 | .00000 | .00000 | .00000 | .00000 | .00000 |

IA143, AEDC V41A-P8A, O/ET W/R.H. SRB SEPARATING (OVX008) ( 20 MAY 77 )

REFERENCE DATA

SREF = 2690.0000 SQ.FT. XMRP = 1097.0000 IN. XT
LREF = 1290.3000 INCHES YMRP = .0000 IN. YT
BREF = 1290.3000 INCHES ZMRP = 450.0000 IN. ZT
SCALE = .0100

PARAMETRIC DATA

ALPHA = .000 BETA = .000
DALPHA = .000 DBETA = .000
Z = 100.000 MACH = 4.000
JET PC = 1225.000

RUN NO. 4513/ 0 RN/L = 2.05 GRADIENT INTERVAL = -5.00/ 5.00

| Y | X | Z | ALPHA | BETA | PHI | CN | CLM | CY | CYN | CBL | CA |
|---|---|---|---|---|---|---|---|---|---|---|---|
| -13.432 | 199.770 | 101.35000 | -.12858 | .27775 | .07652 | -.01986 | -.02497 | -.12440 | -.05572 | .00683 | .16927 |
| -11.211 | 99.814 | 99.71500 | -.13737 | .28918 | .06926 | -.02141 | -.02894 | -.13047 | -.05744 | .00472 | .17001 |
| -11.841 | -.064 | 98.64100 | -.17706 | .32008 | .07059 | -.03655 | -.04218 | -.15378 | -.05822 | .00177 | .17331 |
| | GRADIENT | .00000 | .00000 | .00000 | .00000 | .00000 | .00000 | .00000 | .00000 | .00000 | .00000 |

RUN NO. 4516/ 0 RN/L = 2.05 GRADIENT INTERVAL = -5.00/ 5.00

| Y | X | Z | ALPHA | BETA | PHI | CN | CLM | CY | CYN | CBL | CA |
|---|---|---|---|---|---|---|---|---|---|---|---|
| -51.595 | -.120 | 100.22000 | -.18901 | .30937 | .05965 | -.05417 | -.03953 | -.13883 | -.06175 | .00219 | .16972 |
| -49.987 | 99.764 | 101.23000 | -.14570 | .27015 | .05167 | -.03495 | -.02752 | -.11820 | -.05562 | .00254 | .16201 |
| -49.749 | 199.770 | 100.35000 | -.12950 | .23760 | .04749 | -.02359 | -.02457 | -.10168 | -.05026 | .00321 | .16340 |
| | GRADIENT | .00000 | .00000 | .00000 | .00000 | .00000 | .00000 | .00000 | .00000 | .00000 | .00000 |

RUN NO. 4519/ 0 RN/L = 2.05 GRADIENT INTERVAL = -5.00/ 5.00

| Y | X | Z | ALPHA | BETA | PHI | CN | CLM | CY | CYN | CBL | CA |
|---|---|---|---|---|---|---|---|---|---|---|---|
| -103.130 | 199.730 | 100.89000 | -.15546 | .26602 | .04480 | -.05925 | -.01802 | -.13362 | -.04506 | -.00273 | .16605 |
| -100.430 | 99.828 | 98.49000 | -.18822 | .24521 | .04223 | -.08473 | -.02335 | -.09052 | -.05993 | .00520 | .16015 |
| -100.990 | -.122 | 99.94700 | -.19711 | .24554 | .03388 | -.07344 | -.03240 | -.08959 | -.06050 | .00369 | .17174 |
| | GRADIENT | .00000 | .00000 | .00000 | .00000 | .00000 | .00000 | .00000 | .00000 | .00000 | .00000 |

IA143, AEDC V41A-P8A, O/ET W/R.H. SRB SEPARATING (OVX009) ( 20 MAY 77 )

REFERENCE DATA

SREF = 2690.0000 SQ.FT. XMRP = 1097.0000 IN. XT
LREF = 1290.3000 INCHES YMRP = .0000 IN. YT
BREF = 1290.3000 INCHES ZMRP = 450.0000 IN. ZT
SCALE = .0100

PARAMETRIC DATA

ALPHA = .000 BETA = .000
DALPHA = .000 DBETA = .000
Z = 200.000 MACH = 4.000
JET PC = 1225.000

RUN NO. 4514/ 0 RN/L = 2.05 GRADIENT INTERVAL = -5.00/ 5.00

| Y | X | Z | ALPHA | BETA | PHI | CN | CLM | CY | CYN | CBL | CA |
|---|---|---|---|---|---|---|---|---|---|---|---|
| -11.072 | -.186 | 199.89000 | -.05773 | .54855 | .13965 | .02678 | -.00093 | -.25521 | -.10467 | .00876 | .21644 |
| -12.573 | 99.772 | 200.45000 | -.04304 | .61992 | .18118 | .01068 | .01237 | -.29889 | -.11221 | .01229 | .19576 |
| -8.877 | 199.640 | 200.05000 | -.03760 | .53088 | .17580 | .01397 | .01472 | -.26984 | -.08820 | .01160 | .20085 |
| | GRADIENT | .00000 | .00000 | .00000 | .00000 | .00000 | .00000 | .00000 | .00000 | .00000 | .00000 |

RUN NO. 4515/ 0 RN/L = 2.05 GRADIENT INTERVAL = -5.00/ 5.00

| Y | X | Z | ALPHA | BETA | PHI | CN | CLM | CY | CYN | CBL | CA |
|---|---|---|---|---|---|---|---|---|---|---|---|
| -48.508 | 199.820 | 199.41000 | -.05922 | .41505 | .11978 | .00991 | .00194 | -.19566 | -.07769 | .00899 | .18876 |
| -51.872 | 99.896 | 199.16000 | -.07512 | .45446 | .11814 | .00205 | -.00163 | -.20595 | -.08962 | .00902 | .19317 |
| -46.659 | -.222 | 201.47000 | -.02048 | .26311 | .05048 | .05839 | -.00381 | -.10553 | -.05965 | .00473 | .18990 |
| | GRADIENT | .00000 | .00000 | .00000 | .00000 | .00000 | .00000 | .00000 | .00000 | .00000 | .00000 |

RUN NO. 4520/ 0 RN/L = 2.05 GRADIENT INTERVAL = -5.00/ 5.00

| Y | X | Z | ALPHA | BETA | PHI | CN | CLM | CY | CYN | CBL | CA |
|---|---|---|---|---|---|---|---|---|---|---|---|
| -102.480 | -.148 | 202.19000 | -.10575 | .32260 | .05142 | -.00184 | -.01710 | -.13159 | -.07177 | .00307 | .19249 |
| -101.630 | 99.773 | 199.83000 | -.10634 | .36376 | .07042 | -.01847 | -.01060 | -.15977 | -.07460 | .00341 | .17964 |
| -101.110 | 199.690 | 200.98000 | -.07710 | .36182 | .08002 | .00199 | -.00639 | -.17539 | -.06496 | .00168 | .17665 |
| | GRADIENT | .00000 | .00000 | .00000 | .00000 | .00000 | .00000 | .00000 | .00000 | .00000 | .00000 |

IA143, AEDC V41A-P8A, O/ET W/R.H. SRB SEPARATING (OVX010) ( 20 MAY 77 )

REFERENCE DATA

SREF = 2690.0000 SQ.FT. XMRP = 1097.0000 IN. XT
LREF = 1290.3000 INCHES YMRP = .0000 IN. YT
BREF = 1290.3000 INCHES ZMRP = 450.0000 IN. ZT
SCALE = .0100

PARAMETRIC DATA

ALPHA = .000 BETA = .000
DALPHA = .000 DBETA = -4.000
Z = .000 MACH = 4.000
JET PC = 1225.000

RUN NO. 4521/ 0 RN/L = 2.05 GRADIENT INTERVAL = -5.00/ 5.00

| Y | X | Z | ALPHA | BETA | PHI | CN | CLM | CY | CYN | CBL | CA |
|---|---|---|---|---|---|---|---|---|---|---|---|
| -100.240 | -.840 | -.32094 | -.20743 | .13589 | .00323 | -.07773 | -.03952 | -.05598 | -.02995 | -.00257 | .15560 |
| -100.430 | 99.740 | .31776 | -.19286 | .16015 | .01889 | -.09065 | -.02417 | -.04883 | -.04500 | .00402 | .15341 |
| -100.100 | 199.740 | .57329 | -.17156 | .15222 | .02890 | -.08870 | -.01009 | -.04968 | -.04095 | .00536 | .16675 |
| | GRADIENT | .00000 | .00000 | .00000 | .00000 | .00000 | .00000 | .00000 | .00000 | .00000 | .00000 |

IA143, AEDC V41A-P8A, O/ET W/R.H. SRB SEPARATING (OVX010) ( 20 MAY 77 )

REFERENCE DATA

SREF = 2690.0000 SQ.FT. XMRP = 1097.0000 IN. XT
LREF = 1290.3000 INCHES YMRP = .0000 IN. YT
BREF = 1290.3000 INCHES ZMRP = 450.0000 IN. ZT
SCALE = .0100

PARAMETRIC DATA

ALPHA = .000 BETA = .000
DALPHA = .000 DBETA = -4.000
Z = .000 MACH = 4.000
JET PC = 1225.000

RUN NO. 4526/ 0 RN/L = 2.05 GRADIENT INTERVAL = -5.00/ 5.00

| Y | X | Z | ALPHA | BETA | PHI | CN | CLM | CY | CYN | CBL | CA |
|---|---|---|---|---|---|---|---|---|---|---|---|
| -149.990 | 199.790 | -.00731 | -.16791 | .15194 | .02538 | -.09133 | -.00459 | -.04525 | -.04329 | .00561 | .17500 |
| -150.820 | 99.841 | -.39278 | -.18087 | .14509 | .01298 | -.08528 | -.01945 | -.03740 | -.04464 | .00438 | .15785 |
| -150.810 | -.127 | -.45670 | -.19235 | .13901 | .00506 | -.08080 | -.02804 | -.03657 | -.04234 | .00250 | .16079 |
| | GRADIENT | .00000 | .00000 | .00000 | .00000 | .00000 | .00000 | .00000 | .00000 | .00000 | .00000 |

RUN NO. 4527/ 0 RN/L = 2.05 GRADIENT INTERVAL = -5.00/ 5.00

| Y | X | Z | ALPHA | BETA | PHI | CN | CLM | CY | CYN | CBL | CA |
|---|---|---|---|---|---|---|---|---|---|---|---|
| -200.850 | -.011 | -.04934 | -.18764 | .14984 | .00824 | -.08658 | -.02092 | -.03248 | -.04951 | .00486 | .16514 |
| -200.650 | 99.826 | .29758 | -.17371 | .15178 | .01198 | -.08837 | -.01147 | -.03473 | -.04911 | .00524 | .16669 |
| -200.890 | 199.850 | .38471 | -.16374 | .15636 | .02213 | -.09418 | .00140 | -.04720 | -.04418 | .00481 | .18349 |
| | GRADIENT | .00000 | .00000 | .00000 | .00000 | .00000 | .00000 | .00000 | .00000 | .00000 | .00000 |

IA143, AEDC V41A-P8A, O/ET W/R.H. SRB SEPARATING (OVX011) ( 20 MAY 77 )

REFERENCE DATA

SREF = 2690.0000 SQ.FT. XMRP = 1097.0000 IN. XT
LREF = 1290.3000 INCHES YMRP = .0000 IN. YT
BREF = 1290.3000 INCHES ZMRP = 450.0000 IN. ZT
SCALE = .0100

PARAMETRIC DATA

ALPHA = .000 BETA = .000
DALPHA = .000 DBETA = -4.000
Z = 100.000 MACH = 4.000
JET PC = 1225.000

RUN NO. 4522/ 0 RN/L = 2.05 GRADIENT INTERVAL = -5.00/ 5.00

| Y | X | Z | ALPHA | BETA | PHI | CN | CLM | CY | CYN | CBL | CA |
|---|---|---|---|---|---|---|---|---|---|---|---|
| -101.560 | 199.700 | 99.98000 | -.16425 | .22514 | .04468 | -.08337 | -.00790 | -.09608 | -.04777 | .00304 | .17125 |
| -101.660 | 99.764 | 99.38400 | -.18672 | .23673 | .04084 | -.08634 | -.02206 | -.08710 | -.05803 | .00512 | .15787 |
| -100.680 | -.229 | 99.75500 | -.19971 | .22987 | .03029 | -.06998 | -.03856 | -.09393 | -.05122 | .00091 | .16093 |
| | GRADIENT | .00000 | .00000 | .00000 | .00000 | .00000 | .00000 | .00000 | .00000 | .00000 | .00000 |

RUN NO. 4525/ 0 RN/L = 2.05 GRADIENT INTERVAL = -5.00/ 5.00

| Y | X | Z | ALPHA | BETA | PHI | CN | CLM | CY | CYN | CBL | CA |
|---|---|---|---|---|---|---|---|---|---|---|---|
| -149.580 | -.081 | 98.99600 | -.18695 | .20452 | .01902 | -.07226 | -.02855 | -.07087 | -.05268 | .00209 | .16673 |
| -151.120 | 99.975 | 100.03000 | -.18000 | .21788 | .02906 | -.08676 | -.01699 | -.07299 | -.05751 | .00461 | .16245 |
| -150.190 | 199.770 | 100.32000 | -.16372 | .20564 | .03477 | -.09243 | -.00183 | -.07442 | -.05125 | .00463 | .17393 |
| | GRADIENT | .00000 | .00000 | .00000 | .00000 | .00000 | .00000 | .00000 | .00000 | .00000 | .00000 |

IA143, AEDC V41A-P8A, O/ET W/R.H. SRB SEPARATING (OVX011) ( 20 MAY 77 )

REFERENCE DATA

SREF = 2690.0000 SQ.FT. XMRP = 1097.0000 IN. XT
LREF = 1290.3000 INCHES YMRP = .0000 IN. YT
BREF = 1290.3000 INCHES ZMRP = 450.0000 IN. ZT
SCALE = .0100

PARAMETRIC DATA

ALPHA = .000 BETA = .000
DALPHA = .000 DBETA = -4.000
Z = 100.000 MACH = 4.000
JET PC = 1225.000

RUN NO. 4528/ 0 RN/L = 2.05 GRADIENT INTERVAL = -5.00/ 5.00

| Y | X | Z | ALPHA | BETA | PHI | CN | CLM | CY | CYN | CBL | CA |
|---|---|---|---|---|---|---|---|---|---|---|---|
| -201.460 | 199.730 | 99.79000 | -.16458 | .20700 | .02811 | -.10020 | .00415 | -.07560 | -.05122 | .00308 | .18266 |
| -200.700 | 99.832 | 99.62900 | -.17376 | .20897 | .02245 | -.09119 | -.00924 | -.06688 | -.05693 | .00403 | .16959 |
| -200.750 | -.067 | 99.76500 | -.18152 | .19838 | .01593 | -.08237 | -.01815 | -.06095 | -.05542 | .00329 | .17254 |
| | GRADIENT | .00000 | .00000 | .00000 | .00000 | .00000 | .00000 | .00000 | .00000 | .00000 | .00000 |

IA143, AEDC V41A-P8A, O/ET W/R.H. SRB SEPARATING (OVX012) ( 20 MAY 77 )

REFERENCE DATA

SREF = 2690.0000 SQ.FT. XMRP = 1097.0000 IN. XT
LREF = 1290.3000 INCHES YMRP = .0000 IN. YT
BREF = 1290.3000 INCHES ZMRP = 450.0000 IN. ZT
SCALE = .0100

PARAMETRIC DATA

ALPHA = .000 BETA = .000
DALPHA = .000 DBETA = -4.000
Z = 200.000 MACH = 4.000
JET PC = 1225.000

RUN NO. 4523/ 0 RN/L = 2.05 GRADIENT INTERVAL = -5.00/ 5.00

| Y | X | Z | ALPHA | BETA | PHI | CN | CLM | CY | CYN | CBL | CA |
|---|---|---|---|---|---|---|---|---|---|---|---|
| -102.020 | -.260 | 201.54000 | -.13606 | .29868 | .04192 | -.00091 | -.03907 | -.12721 | -.06360 | .00047 | .17505 |
| -101.510 | 99.767 | 199.51000 | -.13486 | .34213 | .06685 | -.04715 | -.01332 | -.14532 | -.07301 | .00451 | .16606 |
| -100.800 | 199.680 | 201.39000 | -.08401 | .34247 | .07036 | -.00610 | -.00709 | -.16508 | -.06215 | .00074 | .17030 |
| | GRADIENT | .00000 | .00000 | .00000 | .00000 | .00000 | .00000 | .00000 | .00000 | .00000 | .00000 |

RUN NO. 4524/ 0 RN/L = 2.05 GRADIENT INTERVAL = -5.00/ 5.00

| Y | X | Z | ALPHA | BETA | PHI | CN | CLM | CY | CYN | CBL | CA |
|---|---|---|---|---|---|---|---|---|---|---|---|
| -150.460 | 199.760 | 197.70000 | -.15024 | .30654 | .05628 | -.08053 | .00102 | -.13841 | -.06081 | .00141 | .18264 |
| -150.730 | 99.897 | 199.79000 | -.15337 | .30836 | .05030 | -.06443 | -.01189 | -.12411 | -.06980 | .00362 | .17541 |
| -149.910 | -.092 | 200.45000 | -.14753 | .27443 | .03282 | -.03702 | -.02338 | -.10762 | -.06370 | .00141 | .18059 |
| | GRADIENT | .00000 | .00000 | .00000 | .00000 | .00000 | .00000 | .00000 | .00000 | .00000 | .00000 |

RUN NO. 4529/ 0 RN/L = 2.05 GRADIENT INTERVAL = -5.00/ 5.00

| Y | X | Z | ALPHA | BETA | PHI | CN | CLM | CY | CYN | CBL | CA |
|---|---|---|---|---|---|---|---|---|---|---|---|
| -201.900 | -.184 | 200.57000 | -.15350 | .26481 | .02890 | -.05879 | -.01302 | -.09877 | -.06417 | .00192 | .18492 |
| -201.190 | 99.739 | 199.67000 | -.15578 | .28975 | .04114 | -.07909 | -.00328 | -.11610 | -.06582 | .00224 | .18167 |
| -200.820 | 199.720 | 199.78000 | -.15523 | .29004 | .04461 | -.09802 | .00976 | -.13328 | -.05632 | -.00096 | .18917 |
| | GRADIENT | .00000 | .00000 | .00000 | .00000 | .00000 | .00000 | .00000 | .00000 | .00000 | .00000 |

IA143, AEDC V41A-P8A, O/ET W/R.H. SRB SEPARATING (OVX013) ( 20 MAY 77 )

REFERENCE DATA

SREF = 2690.0000 SQ.FT. XMRP = 1097.0000 IN. XT
LREF = 1290.3000 INCHES YMRP = .0000 IN. YT
BREF = 1290.3000 INCHES ZMRP = 450.0000 IN. ZT
SCALE = .0100

PARAMETRIC DATA

ALPHA = .000 BETA = .000
DALPHA = .000 DBETA = .000
Z = .000 MACH = 4.500
JET PC = .000

RUN NO. 3206/ 0 RN/L = 2.35 GRADIENT INTERVAL = -5.00/ 5.00

| Y | X | Z | ALPHA | BETA | PHI | CN | CLM | CY | CYN | CBL | CA |
|---|---|---|---|---|---|---|---|---|---|---|---|
| -11.629 | -.239 | -1.66160 | -.08045 | .02595 | .00791 | -.06055 | .03143 | -.02297 | .00109 | -.00168 | .19237 |
| -10.448 | 99.798 | -.03600 | -.08127 | .01951 | .00987 | -.05908 | .03014 | -.02213 | .00355 | -.00153 | .19263 |
| -10.901 | 199.690 | .02082 | -.08202 | .01464 | .01100 | -.05677 | .02842 | -.02146 | .00539 | -.00149 | .19288 |
| | GRADIENT | .00000 | .00000 | .00000 | .00000 | .00000 | .00000 | .00000 | .00000 | .00000 | .00000 |

RUN NO. 3211/ 0 RN/L = 2.35 GRADIENT INTERVAL = -5.00/ 5.00

| Y | X | Z | ALPHA | BETA | PHI | CN | CLM | CY | CYN | CBL | CA |
|---|---|---|---|---|---|---|---|---|---|---|---|
| -50.863 | 199.640 | -.06385 | -.08157 | .01250 | .01272 | -.05428 | .02732 | -.02251 | .00697 | -.00153 | .19284 |
| -51.005 | 99.810 | -.04837 | -.08128 | .01862 | .01218 | -.05811 | .02979 | -.02494 | .00555 | -.00177 | .19320 |
| -53.546 | -.147 | -.12598 | -.08011 | .02825 | .00961 | -.06038 | .03169 | -.02707 | .00236 | -.00211 | .19280 |
| | GRADIENT | .00000 | .00000 | .00000 | .00000 | .00000 | .00000 | .00000 | .00000 | .00000 | .00000 |

RUN NO. 3212/ 0 RN/L = 2.36 GRADIENT INTERVAL = -5.00/ 5.00

| Y | X | Z | ALPHA | BETA | PHI | CN | CLM | CY | CYN | CBL | CA |
|---|---|---|---|---|---|---|---|---|---|---|---|
| -101.100 | -.272 | -.22754 | -.08082 | .02270 | .01144 | -.05702 | .02951 | -.02904 | .00600 | -.00258 | .19355 |
| -102.340 | 99.863 | -.02668 | -.08121 | .01796 | .01354 | -.05431 | .02780 | -.02857 | .00790 | -.00237 | .19395 |
| -99.788 | 199.700 | .07420 | -.08095 | .01102 | .01573 | -.05153 | .02621 | -.02418 | .00858 | -.00139 | .19357 |
| | GRADIENT | .00000 | .00000 | .00000 | .00000 | .00000 | .00000 | .00000 | .00000 | .00000 | .00000 |

IA143, AEDC V41A-P8A, O/ET W/R.H. SRB SEPARATING (OVX014) ( 20 MAY 77 )

REFERENCE DATA

SREF = 2690.0000 SQ.FT. XMRP = 1097.0000 IN. XT
LREF = 1290.3000 INCHES YMRP = .0000 IN. YT
BREF = 1290.3000 INCHES ZMRP = 450.0000 IN. ZT
SCALE = .0100

PARAMETRIC DATA

ALPHA = .000 BETA = .000
DALPHA = .000 DBETA = .000
Z = 100.000 MACH = 4.500
JET PC = .000

RUN NO. 3207/ 0 RN/L = 2.35 GRADIENT INTERVAL = -5.00/ 5.00

| Y | X | Z | ALPHA | BETA | PHI | CN | CLM | CY | CYN | CBL | CA |
|---|---|---|---|---|---|---|---|---|---|---|---|
| -10.623 | 199.630 | 99.81100 | -.07885 | .01162 | .00947 | -.05039 | .02656 | -.01724 | .00439 | -.00105 | .19295 |
| -11.027 | 99.751 | 99.92700 | -.07788 | .01623 | .00854 | -.05192 | .02799 | -.01807 | .00276 | -.00111 | .19288 |
| -12.070 | -.159 | 100.08000 | -.07561 | .02390 | .00873 | -.05378 | .03043 | -.02074 | .00077 | -.00114 | .19306 |
| | GRADIENT | .00000 | .00000 | .00000 | .00000 | .00000 | .00000 | .00000 | .00000 | .00000 | .00000 |

IA143, AEDC V41A-P8A, O/ET W/R.H. SRB SEPARATING (OVX014) ( 20 MAY 77 )

REFERENCE DATA

SREF = 2690.0000 SQ.FT. XMRP = 1097.0000 IN. XT
LREF = 1290.3000 INCHES YMRP = .0000 IN. YT
BREF = 1290.3000 INCHES ZMRP = 450.0000 IN. ZT
SCALE = .0100

PARAMETRIC DATA

ALPHA = .000 BETA = .000
DALPHA = .000 DBETA = .000
Z = 100.000 MACH = 4.500
JET PC = .000

RUN NO. 3210/ 0 RN/L = 2.35 GRADIENT INTERVAL = -5.00/ 5.00

| Y | X | Z | ALPHA | BETA | PHI | CN | CLM | CY | CYN | CBL | CA |
|---|---|---|---|---|---|---|---|---|---|---|---|
| -50.827 | -.248 | 99.53900 | -.07607 | .02437 | .00963 | -.05359 | .03014 | -.02284 | .00175 | -.00141 | .19318 |
| -49.996 | 99.790 | 99.76500 | -.07813 | .01672 | .01189 | -.05119 | .02768 | -.02116 | .00429 | -.00110 | .19364 |
| -50.224 | 199.740 | 99.93300 | -.07931 | .01055 | .01107 | -.04924 | .02585 | -.01846 | .00557 | -.00108 | .19370 |
| | GRADIENT | .00000 | .00000 | .00000 | .00000 | .00000 | .00000 | .00000 | .00000 | .00000 | .00000 |

RUN NO. 3213/ 0 RN/L = 2.36 GRADIENT INTERVAL = -5.00/ 5.00

| Y | X | Z | ALPHA | BETA | PHI | CN | CLM | CY | CYN | CBL | CA |
|---|---|---|---|---|---|---|---|---|---|---|---|
| -101.840 | 199.620 | 100.02000 | -.07967 | .00933 | .01297 | -.04467 | .02311 | -.02145 | .00781 | -.00146 | .19432 |
| -101.530 | 99.741 | 100.03000 | -.07899 | .01520 | .01501 | -.04683 | .02487 | -.02480 | .00703 | -.00139 | .19462 |
| -101.150 | -.275 | 99.99100 | -.07854 | .01848 | .01315 | -.04901 | .02629 | -.02526 | .00579 | -.00165 | .19424 |
| | GRADIENT | .00000 | .00000 | .00000 | .00000 | .00000 | .00000 | .00000 | .00000 | .00000 | .00000 |

IA143, AEDC V41A-P8A, O/ET W/R.H. SRB SEPARATING (OVX015) ( 20 MAY 77 )

REFERENCE DATA

SREF = 2690.0000 SQ.FT. XMRP = 1097.0000 IN. XT
LREF = 1290.3000 INCHES YMRP = .0000 IN. YT
BREF = 1290.3000 INCHES ZMRP = 450.0000 IN. ZT
SCALE = .0100

PARAMETRIC DATA

ALPHA = .000 BETA = .000
DALPHA = .000 DBETA = .000
Z = 200.000 MACH = 4.500
JET PC = .000

RUN NO. 3208/ 0 RN/L = 2.35 GRADIENT INTERVAL = -5.00/ 5.00

| Y | X | Z | ALPHA | BETA | PHI | CN | CLM | CY | CYN | CBL | CA |
|---|---|---|---|---|---|---|---|---|---|---|---|
| -10.793 | -.139 | 200.34000 | -.07219 | .01857 | .00409 | -.04349 | .02661 | -.01827 | .00181 | -.00192 | .19403 |
| -10.187 | 99.792 | 199.58000 | -.07492 | .01311 | .00371 | -.04226 | .02417 | -.01687 | .00351 | -.00206 | .19332 |
| -10.358 | 199.810 | 199.69000 | -.07748 | .00830 | .00065 | -.04154 | .02188 | -.01392 | .00404 | -.00236 | .19153 |
| | GRADIENT | .00000 | .00000 | .00000 | .00000 | .00000 | .00000 | .00000 | .00000 | .00000 | .00000 |

RUN NO. 3209/ 0 RN/L = 2.34 GRADIENT INTERVAL = -5.00/ 5.00

| Y | X | Z | ALPHA | BETA | PHI | CN | CLM | CY | CYN | CBL | CA |
|---|---|---|---|---|---|---|---|---|---|---|---|
| -52.009 | 199.630 | 200.04000 | -.07853 | .00825 | .00066 | -.03775 | .01915 | -.01698 | .00578 | -.00306 | .19206 |
| -48.715 | 99.832 | 200.16000 | -.07630 | .01260 | .00495 | -.03925 | .02175 | -.01952 | .00523 | -.00245 | .19396 |
| -50.790 | -.246 | 200.09000 | -.07503 | .01546 | .00567 | -.04157 | .02389 | -.01950 | .00392 | -.00209 | .19428 |
| | GRADIENT | .00000 | .00000 | .00000 | .00000 | .00000 | .00000 | .00000 | .00000 | .00000 | .00000 |

IA143, AEDC V41A-P8A, O/ET W/R.H. SRB SEPARATING (OVX015) ( 20 MAY 77 )

REFERENCE DATA

SREF = 2690.0000 SQ.FT. XMRP = 1097.0000 IN. XT
LREF = 1290.3000 INCHES YMRP = .0000 IN. YT
BREF = 1290.3000 INCHES ZMRP = 450.0000 IN. ZT
SCALE = .0100

PARAMETRIC DATA

ALPHA = .000 BETA = .000
DALPHA = .000 DBETA = .000
Z = 200.000 MACH = 4.500
JET PC = .000

RUN NO. 3214/ 0 RN/L = 2.37 GRADIENT INTERVAL = -5.00/ 5.00

| Y | X | Z | ALPHA | BETA | PHI | CN | CLM | CY | CYN | CBL | CA |
|---|---|---|---|---|---|---|---|---|---|---|---|
| -100.200 | -.181 | 200.09000 | -.07845 | .00845 | .00784 | -.04044 | .02113 | -.01950 | .00711 | -.00214 | .19338 |
| -100.760 | 99.789 | 199.81000 | -.07891 | .00820 | .00580 | -.03615 | .01839 | -.02128 | .00823 | -.00299 | .19337 |
| -100.050 | 199.830 | 199.75000 | -.07996 | .00625 | .00273 | -.03393 | .01613 | -.01991 | .00835 | -.00346 | .19175 |
| | GRADIENT | .00000 | .00000 | .00000 | .00000 | .00000 | .00000 | .00000 | .00000 | .00000 | .00000 |

IA143, AEDC V41A-P8A, O/ET W/R.H. SRB SEPARATING (OVX016) ( 20 MAY 77 )

REFERENCE DATA

SREF = 2690.0000 SQ.FT. XMRP = 1097.0000 IN. XT
LREF = 1290.3000 INCHES YMRP = .0000 IN. YT
BREF = 1290.3000 INCHES ZMRP = 450.0000 IN. ZT
SCALE = .0100

PARAMETRIC DATA

ALPHA = .000 BETA = .000
DALPHA = .000 DBETA = .000
Z = .000 MACH = 4.500
JET PC = 1225.000

RUN NO. 3233/ 0 RN/L = 2.37 GRADIENT INTERVAL = -5.00/ 5.00

| Y | X | Z | ALPHA | BETA | PHI | CN | CLM | CY | CYN | CBL | CA |
|---|---|---|---|---|---|---|---|---|---|---|---|
| -10.582 | -.883 | -.35688 | -.24339 | .22541 | .05036 | -.12181 | -.03721 | -.12407 | -.03245 | -.00213 | .14517 |
| -9.739 | 99.787 | .86196 | -.20343 | .20522 | .05193 | -.10335 | -.02525 | -.09880 | -.03750 | .00259 | .14369 |
| -8.895 | 199.650 | .89590 | -.18029 | .15915 | .02344 | -.07449 | -.02709 | -.07476 | -.03017 | -.00102 | .15139 |
| | GRADIENT | .00000 | .00000 | .00000 | .00000 | .00000 | .00000 | .00000 | .00000 | .00000 | .00000 |

RUN NO. 3238/ 0 RN/L = 2.37 GRADIENT INTERVAL = -5.00/ 5.00

| Y | X | Z | ALPHA | BETA | PHI | CN | CLM | CY | CYN | CBL | CA |
|---|---|---|---|---|---|---|---|---|---|---|---|
| -48.941 | 199.700 | -1.34830 | -.17518 | .14910 | .01782 | -.08347 | -.01960 | -.07094 | -.02771 | -.00203 | .14784 |
| -52.779 | 99.889 | -1.34680 | -.20436 | .18665 | .04655 | -.10827 | -.02234 | -.08087 | -.03921 | .00430 | .14657 |
| -51.308 | -.254 | -.56546 | -.22665 | .20217 | .04485 | -.11093 | -.03238 | -.09281 | -.03944 | .00227 | .15177 |
| | GRADIENT | .00000 | .00000 | .00000 | .00000 | .00000 | .00000 | .00000 | .00000 | .00000 | .00000 |

RUN NO. 3239/ 0 RN/L = 2.37 GRADIENT INTERVAL = -5.00/ 5.00

| Y | X | Z | ALPHA | BETA | PHI | CN | CLM | CY | CYN | CBL | CA |
|---|---|---|---|---|---|---|---|---|---|---|---|
| -100.320 | -.310 | .01408 | -.20690 | .15774 | .02346 | -.09881 | -.02674 | -.05894 | -.03838 | .00252 | .15800 |
| -100.830 | 99.935 | .39520 | -.19149 | .16619 | .03309 | -.10099 | -.01791 | -.05999 | -.04158 | .00486 | .15163 |
| -100.440 | 199.600 | .55405 | -.16913 | .15636 | .03856 | -.09834 | -.00460 | -.06041 | -.03693 | .00521 | .16064 |
| | GRADIENT | .00000 | .00000 | .00000 | .00000 | .00000 | .00000 | .00000 | .00000 | .00000 | .00000 |

IA143, AEDC V41A-P8A, O/ET W/R.H. SRB SEPARATING (OVX017) ( 20 MAY 77 )

REFERENCE DATA

SREF = 2690.0000 SQ.FT. XMRP = 1097.0000 IN. XT
LREF = 1290.3000 INCHES YMRP = .0000 IN. YT
BREF = 1290.3000 INCHES ZMRP = 450.0000 IN. ZT
SCALE = .0100

PARAMETRIC DATA

ALPHA = .000 BETA = .000
DALPHA = .000 DBETA = .000
Z = 100.000 MACH = 4.500
JET PC = 1225.000

RUN NO. 3234/ 0 RN/L = 2.37 GRADIENT INTERVAL = -5.00/ 5.00

| Y | X | Z | ALPHA | BETA | PHI | CN | CLM | CY | CYN | CBL | CA |
|---|---|---|---|---|---|---|---|---|---|---|---|
| -13.583 | 199.670 | 101.08000 | -.13136 | .30945 | .09805 | -.03935 | -.01643 | -.15175 | -.05500 | .00732 | .16440 |
| -11.354 | 99.675 | 99.64700 | -.13854 | .31986 | .08727 | -.03923 | -.02077 | -.15519 | -.05781 | .00502 | .16391 |
| -11.910 | -.284 | 98.98600 | -.17283 | .34213 | .08326 | -.05008 | -.03370 | -.17430 | -.05712 | .00135 | .16622 |
| | GRADIENT | .00000 | .00000 | .00000 | .00000 | .00000 | .00000 | .00000 | .00000 | .00000 | .00000 |

RUN NO. 3237/ 0 RN/L = 2.37 GRADIENT INTERVAL = -5.00/ 5.00

| Y | X | Z | ALPHA | BETA | PHI | CN | CLM | CY | CYN | CBL | CA |
|---|---|---|---|---|---|---|---|---|---|---|---|
| -50.636 | -.093 | 99.98600 | -.18118 | .32433 | .07401 | -.06354 | -.03091 | -.16060 | -.05682 | .00134 | .16530 |
| -49.346 | 99.843 | 101.13000 | -.13385 | .27712 | .06170 | -.03759 | -.01969 | -.12956 | -.05281 | .00259 | .16077 |
| -49.845 | 199.700 | 100.41000 | -.12333 | .24788 | .05781 | -.03076 | -.01730 | -.11286 | -.04895 | .00358 | .16218 |
| | GRADIENT | .00000 | .00000 | .00000 | .00000 | .00000 | .00000 | .00000 | .00000 | .00000 | .00000 |

RUN NO. 3240/ 0 RN/L = 2.37 GRADIENT INTERVAL = -5.00/ 5.00

| Y | X | Z | ALPHA | BETA | PHI | CN | CLM | CY | CYN | CBL | CA |
|---|---|---|---|---|---|---|---|---|---|---|---|
| -102.010 | 199.630 | 101.03000 | -.14298 | .26339 | .05172 | -.05057 | -.01780 | -.13656 | -.04268 | -.00205 | .15894 |
| -100.630 | 99.758 | 98.21100 | -.18575 | .25794 | .05736 | -.09547 | -.01705 | -.10895 | -.05557 | .00505 | .15487 |
| -101.370 | -.336 | 99.91200 | -.19711 | .25776 | .04679 | -.08784 | -.02570 | -.10521 | -.05765 | .00372 | .16578 |
| | GRADIENT | .00000 | .00000 | .00000 | .00000 | .00000 | .00000 | .00000 | .00000 | .00000 | .00000 |

IA143, AEDC V41A-P8A, O/ET W/R.H. SRB SEPARATING (OVX018) ( 20 MAY 77 )

REFERENCE DATA

SREF = 2690.0000 SQ.FT. XMRP = 1097.0000 IN. XT
LREF = 1290.3000 INCHES YMRP = .0000 IN. YT
BREF = 1290.3000 INCHES ZMRP = 450.0000 IN. ZT
SCALE = .0100

PARAMETRIC DATA

ALPHA = .000 BETA = .000
DALPHA = .000 DBETA = .000
Z = 200.000 MACH = 4.500
JET PC = 1225.000

RUN NO. 3235/ 0 RN/L = 2.37 GRADIENT INTERVAL = -5.00/ 5.00

| Y | X | Z | ALPHA | BETA | PHI | CN | CLM | CY | CYN | CBL | CA |
|---|---|---|---|---|---|---|---|---|---|---|---|
| -10.672 | -.365 | 199.89000 | -.03808 | .58547 | .15779 | .03033 | .00695 | -.28168 | -.10713 | .00922 | .21054 |
| -12.798 | 99.830 | 200.22000 | -.02110 | .64630 | .20004 | .01005 | .02401 | -.32424 | -.11056 | .01241 | .18982 |
| -9.135 | 199.780 | 200.24000 | -.01831 | .56539 | .19762 | .01525 | .02443 | -.30244 | -.08623 | .01126 | .19811 |
| | GRADIENT | .00000 | .00000 | .00000 | .00000 | .00000 | .00000 | .00000 | .00000 | .00000 | .00000 |

IA143, AEDC V41A-P8A, O/ET W/R.H. SRB SEPARATING (OVX018) ( 20 MAY 77 )

REFERENCE DATA

SREF = 2690.0000 SQ.FT. XMRP = 1097.0000 IN. XT
LREF = 1290.3000 INCHES YMRP = .0000 IN. YT
BREF = 1290.3000 INCHES ZMRP = 450.0000 IN. ZT
SCALE = .0100

PARAMETRIC DATA

ALPHA = .000 BETA = .000
DALPHA = .000 DBETA = .000
Z = 200.000 MACH = 4.500
JET PC = 1225.000

RUN NO. 3236/ 0 RN/L = 2.37 GRADIENT INTERVAL = -5.00/ 5.00

| Y | X | Z | ALPHA | BETA | PHI | CN | CLM | CY | CYN | CBL | CA |
|---|---|---|---|---|---|---|---|---|---|---|---|
| -48.556 | 199.730 | 198.97000 | -.05309 | .45729 | .14482 | -.00163 | .01235 | -.23020 | -.07796 | .00937 | .18973 |
| -51.638 | 99.889 | 199.44000 | -.06480 | .49980 | .14380 | -.00770 | .00888 | -.24160 | -.09081 | .00952 | .18859 |
| -46.974 | -.284 | 200.99000 | -.02284 | .32203 | .07545 | .03772 | .00591 | -.15953 | -.05632 | .00171 | .18553 |
| | GRADIENT | .00000 | .00000 | .00000 | .00000 | .00000 | .00000 | .00000 | .00000 | .00000 | .00000 |

RUN NO. 3241/ 0 RN/L = 2.37 GRADIENT INTERVAL = -5.00/ 5.00

| Y | X | Z | ALPHA | BETA | PHI | CN | CLM | CY | CYN | CBL | CA |
|---|---|---|---|---|---|---|---|---|---|---|---|
| -101.160 | -.329 | 200.18000 | -.10321 | .33377 | .06495 | -.01363 | -.01040 | -.14647 | -.06902 | .00337 | .18611 |
| -101.710 | 99.872 | 199.80000 | -.10413 | .37457 | .08677 | -.03097 | -.00336 | -.17136 | -.07342 | .00501 | .17434 |
| -100.490 | 199.710 | 200.98000 | -.07131 | .36129 | .09069 | -.00577 | .00059 | -.17699 | -.06431 | .00361 | .17320 |
| | GRADIENT | .00000 | .00000 | .00000 | .00000 | .00000 | .00000 | .00000 | .00000 | .00000 | .00000 |

IA143, AEDC V41A-P8A, O/ET W/R.H. SRB SEPARATING (OVX019) ( 20 MAY 77 )

REFERENCE DATA

SREF = 2690.0000 SQ.FT. XMRP = 1097.0000 IN. XT
LREF = 1290.3000 INCHES YMRP = .0000 IN. YT
BREF = 1290.3000 INCHES ZMRP = 450.0000 IN. ZT
SCALE = .0100

PARAMETRIC DATA

ALPHA = .000 BETA = .000
DALPHA = .000 DBETA = -4.000
Z = .000 MACH = 4.500
JET PC = 1225.000

RUN NO. 3215/ 0 RN/L = 2.38 GRADIENT INTERVAL = -5.00/ 5.00

| Y | X | Z | ALPHA | BETA | PHI | CN | CLM | CY | CYN | CBL | CA |
|---|---|---|---|---|---|---|---|---|---|---|---|
| -100.470 | -.918 | -.27710 | -.20737 | .14203 | .01397 | -.08915 | -.03472 | -.07408 | -.02284 | -.00403 | .14934 |
| -100.800 | 99.821 | .46448 | -.19007 | .16578 | .03119 | -.09811 | -.01952 | -.06310 | -.03974 | .00374 | .14887 |
| -100.170 | 199.710 | .35986 | -.16801 | .15524 | .03802 | -.09519 | -.00544 | -.05842 | -.03757 | .00549 | .16248 |
| | GRADIENT | .00000 | .00000 | .00000 | .00000 | .00000 | .00000 | .00000 | .00000 | .00000 | .00000 |

RUN NO. 3220/ 0 RN/L = 2.38 GRADIENT INTERVAL = -5.00/ 5.00

| Y | X | Z | ALPHA | BETA | PHI | CN | CLM | CY | CYN | CBL | CA |
|---|---|---|---|---|---|---|---|---|---|---|---|
| -149.910 | 199.690 | -.15149 | -.16305 | .15386 | .03601 | -.09618 | -.00062 | -.05475 | -.03899 | .00581 | .16851 |
| -151.190 | 99.840 | -.42097 | -.17767 | .14997 | .02603 | -.09209 | -.01517 | -.04897 | -.04044 | .00479 | .15162 |
| -150.520 | -.211 | -.48083 | -.19102 | .14430 | .01866 | -.08994 | -.02352 | -.04999 | -.03729 | .00262 | .15434 |
| | GRADIENT | .00000 | .00000 | .00000 | .00000 | .00000 | .00000 | .00000 | .00000 | .00000 | .00000 |

IA143, AEDC V41A-P8A, O/ET W/R.H. SRB SEPARATING (OVX019) ( 20 MAY 77 )

REFERENCE DATA

SREF = 2690.0000 SQ.FT. XMRP = 1097.0000 IN. XT
LREF = 1290.3000 INCHES YMRP = .0000 IN. YT
BREF = 1290.3000 INCHES ZMRP = 450.0000 IN. ZT
SCALE = .0100

PARAMETRIC DATA

ALPHA = .000 BETA = .000
DALPHA = .000 DBETA = -4.000
Z = .000 MACH = 4.500
JET PC = 1225.000

RUN NO. 3221/ 0 RN/L = 2.38 GRADIENT INTERVAL = -5.00/ 5.00

| Y | X | Z | ALPHA | BETA | PHI | CN | CLM | CY | CYN | CBL | CA |
|---|---|---|---|---|---|---|---|---|---|---|---|
| -200.270 | -.167 | -.04618 | -.18511 | .15428 | .02149 | -.09302 | -.01762 | -.04507 | -.04460 | .00505 | .15760 |
| -200.390 | 99.740 | .35424 | -.16964 | .15550 | .02484 | -.09363 | -.00777 | -.04581 | -.04474 | .00566 | .16006 |
| -200.180 | 199.810 | .42755 | -.15873 | .15667 | .03238 | -.09862 | .00504 | -.05572 | -.03970 | .005[illegible] | .17622 |
| | GRADIENT | .00000 | .00000 | .00000 | .00000 | .00000 | .00000 | .00000 | .00000 | .00000 | .00000 |

IA143, AEDC V41A-P8A, O/ET W/R.H. SRB SEPARATING (OVX020) ( 20 MAY 77 )

REFERENCE DATA

SREF = 2690.0000 SQ.FT. XMRP = 1097.0000 IN. XT
LREF = 1290.3000 INCHES YMRP = .0000 IN. YT
BREF = 1290.3000 INCHES ZMRP = 450.0000 IN. ZT
SCALE = .0100

PARAMETRIC DATA

ALPHA = .000 BETA = .000
DALPHA = .000 DBETA = -4.000
Z = 100.000 MACH = 4.500
JET PC = 1225.000

RUN NO. 3216/ 0 RN/L = 2.38 GRADIENT INTERVAL = -5.00/ 5.00

| Y | X | Z | ALPHA | BETA | PHI | CN | CLM | CY | CYN | CBL | CA |
|---|---|---|---|---|---|---|---|---|---|---|---|
| -101.320 | 199.580 | 100.58000 | -.15173 | .23958 | .05327 | -.07343 | -.00926 | -.11454 | -.04431 | .00168 | .16017 |
| -100.930 | 99.726 | 98.93200 | -.18179 | .24875 | .05590 | -.09356 | -.01670 | -.10304 | -.05491 | .00551 | .15187 |
| -100.930 | -.193 | 99.81900 | -.19888 | .24038 | .04162 | -.07892 | -.03474 | -.11366 | -.04519 | -.00048 | .15385 |
| | GRADIENT | .00000 | .00000 | .00000 | .00000 | .00000 | .00000 | .00000 | .00000 | .00000 | .00000 |

RUN NO. 3219/ 0 RN/L = 2.38 GRADIENT INTERVAL = -5.00/ 5.00

| Y | X | Z | ALPHA | BETA | PHI | CN | CLM | CY | CYN | CBL | CA |
|---|---|---|---|---|---|---|---|---|---|---|---|
| -149.410 | -.143 | 98.97100 | -.18486 | .21435 | .03210 | -.08003 | -.02465 | -.08430 | -.04981 | .00245 | .15954 |
| -150.630 | 99.831 | 100.02000 | -.17542 | .22536 | .04364 | -.09273 | -.01263 | -.08513 | -.05432 | .00543 | .15562 |
| -149.940 | 199.810 | 100.38000 | -.15796 | .21149 | .04733 | -.09509 | .00124 | -.08472 | -.04834 | .00533 | .16678 |
| | GRADIENT | .00000 | .00000 | .00000 | .00000 | .00000 | .00000 | .00000 | .00000 | .00000 | .00000 |

RUN NO. 3222/ 0 RN/L = 2.38 GRADIENT INTERVAL = -5.00/ 5.00

| Y | X | Z | ALPHA | BETA | PHI | CN | CLM | CY | CYN | CBL | CA |
|---|---|---|---|---|---|---|---|---|---|---|---|
| -201.050 | 199.650 | 99.74300 | -.15922 | .20959 | .04050 | -.10297 | .00697 | -.08520 | -.04717 | .00366 | .17492 |
| -200.790 | 99.799 | 99.64100 | -.16894 | .21434 | .03649 | -.09504 | -.00603 | -.07860 | -.05298 | .00467 | .16230 |
| -200.420 | -.232 | 99.74100 | -.17780 | .20546 | .02975 | -.08825 | -.01452 | -.07378 | -.05166 | .00375 | .16504 |
| | GRADIENT | .00000 | .00000 | .00000 | .00000 | .00000 | .00000 | .00000 | .00000 | .00000 | .00000 |

IA143, AEDC V41A-P8A, O/ET W/R.H. SRB SEPARATING (OVX021) ( 20 MAY 77 )

REFERENCE DATA

SREF = 2690.0000 SQ.FT. XMRP = 1097.0000 IN. XT
LREF = 1290.3000 INCHES YMRP = .0000 IN. YT
BREF = 1290.3000 INCHES ZMRP = 450.0000 IN. ZT
SCALE = .0100

PARAMETRIC DATA

ALPHA = .000 BETA = .000
DALPHA = .000 DBETA = -4.000
Z = 200.000 MACH = 4.500
JET PC = 1225.000

RUN NO. 3217/ 0 RN/L = 2.38 GRADIENT INTERVAL = -5.00/ 5.00

| Y | X | Z | ALPHA | BETA | PHI | CN | CLM | CY | CYN | CBL | CA |
|---|---|---|---|---|---|---|---|---|---|---|---|
| -101.630 | -.166 | 201.59000 | -.13003 | .31619 | .05733 | -.00148 | -.03696 | -.14141 | -.06386 | .00170 | .16818 |
| -101.220 | 99.724 | 199.75000 | -.12250 | .35482 | .08386 | -.04911 | -.00689 | -.15893 | -.07163 | .00592 | .15884 |
| -100.130 | 199.730 | 201.27000 | -.07526 | .34084 | .08150 | -.00954 | -.00092 | -.16266 | -.06317 | .00358 | .16687 |
| | GRADIENT | .00000 | .00000 | .00000 | .00000 | .00000 | .00000 | .00000 | .00000 | .00000 | .00000 |

RUN NO. 3218/ 0 RN/L = 2.38 GRADIENT INTERVAL = -5.00/ 5.00

| Y | X | Z | ALPHA | BETA | PHI | CN | CLM | CY | CYN | CBL | CA |
|---|---|---|---|---|---|---|---|---|---|---|---|
| -150.670 | 199.760 | 197.81000 | -.14091 | .31395 | .07068 | -.08067 | .00458 | -.14856 | -.05892 | .00270 | .17531 |
| -150.630 | 99.929 | 199.71000 | -.14493 | .31711 | .06538 | -.06720 | -.00723 | -.13752 | -.06652 | .00435 | .16794 |
| -150.100 | -.237 | 200.15000 | -.14175 | .28346 | .04568 | -.04086 | -.01974 | -.12088 | -.06056 | .00171 | .17257 |
| | GRADIENT | .00000 | .00000 | .00000 | .00000 | .00000 | .00000 | .00000 | .00000 | .00000 | .00000 |

RUN NO. 3223/ 0 RN/L = 2.38 GRADIENT INTERVAL = -5.00/ 5.00

| Y | X | Z | ALPHA | BETA | PHI | CN | CLM | CY | CYN | CBL | CA |
|---|---|---|---|---|---|---|---|---|---|---|---|
| -201.930 | -.249 | 200.70000 | -.14855 | .27179 | .04260 | -.06391 | -.00934 | -.10910 | -.06194 | .00297 | .17648 |
| -200.700 | 99.713 | 199.68000 | -.14889 | .29516 | .05544 | -.08017 | -.00065 | -.12689 | -.06246 | .00316 | .17354 |
| -200.670 | 199.770 | 199.90000 | -.14697 | .29105 | .05735 | -.09597 | .01132 | -.13973 | -.05339 | .00032 | .18082 |
| | GRADIENT | .00000 | .00000 | .00000 | .00000 | .00000 | .00000 | .00000 | .00000 | .00000 | .00000 |

IA143, AEDC V41A-P8A, O/ET W/R.H. SRB SEPARATING (OVX022) ( 20 MAY 77 )

REFERENCE DATA

SREF = 2690.0000 SQ.FT. XMRP = 1097.0000 IN. XT
LREF = 1290.3000 INCHES YMRP = .0000 IN. YT
BREF = 1290.3000 INCHES ZMRP = 450.0000 IN. ZT
SCALE = .0100

PARAMETRIC DATA

ALPHA = .000 BETA = .000
DALPHA = .000 DBETA = .000
Z = .000 MACH = 5.000
JET PC = .000

RUN NO. 4539/ 0 RN/L = 2.81 GRADIENT INTERVAL = -5.00/ 5.00

| Y | X | Z | ALPHA | BETA | PHI | CN | CLM | CY | CYN | CBL | CA |
|---|---|---|---|---|---|---|---|---|---|---|---|
| -12.860 | -.161 | -1.68670 | -.07891 | .02546 | .01013 | -.05231 | .02662 | -.02206 | .00089 | -.00108 | .18691 |
| -10.387 | 99.763 | .07993 | -.07986 | .01728 | .01184 | -.05103 | .02528 | -.02005 | .00345 | -.00083 | .18693 |
| -10.631 | 199.860 | .03192 | -.08100 | .01250 | .01246 | -.04858 | .02324 | -.01898 | .00501 | -.00079 | .18708 |
| | GRADIENT | .00000 | .00000 | .00000 | .00000 | .00000 | .00000 | .00000 | .00000 | .00000 | .00000 |

IA143, AEDC V41A-P8A, O/ET W/R.H. SRB SEPARATING (OVX022) ( 20 MAY 77 )

REFERENCE DATA

SREF = 2690.0000 SQ.FT. XMRP = 1097.0000 IN. XT
LREF = 1290.3000 INCHES YMRP = .0000 IN. YT
BREF = 1290.3000 INCHES ZMRP = 450.0000 IN. ZT
SCALE = .0100

PARAMETRIC DATA

ALPHA = .000 BETA = .000
DALPHA = .000 DBETA = .000
Z = .000 MACH = 5.000
JET PC = .000

RUN NO. 4544/ 0 RN/L = 2.80 GRADIENT INTERVAL = -5.00/ 5.00

| Y | X | Z | ALPHA | BETA | PHI | CN | CLM | CY | CYN | CBL | CA |
|---|---|---|---|---|---|---|---|---|---|---|---|
| -50.788 | 199.750 | .10829 | -.08063 | .01081 | .01444 | -.04634 | .02216 | -.02021 | .00647 | -.00078 | .18702 |
| -51.743 | 99.804 | .01701 | -.07999 | .01769 | .01340 | -.04892 | .02410 | -.02400 | .00548 | -.00138 | .18739 |
| -51.723 | -.277 | -.07825 | -.07886 | .02618 | .01197 | -.05140 | .02615 | -.02518 | .00231 | -.00135 | .18706 |
| | GRADIENT | .00000 | .00000 | .00000 | .00000 | .00000 | .00000 | .00000 | .00000 | .00000 | .00000 |

RUN NO. 4545/ 0 RN/L = 2.79 GRADIENT INTERVAL = -5.00/ 5.00

| Y | X | Z | ALPHA | BETA | PHI | CN | CLM | CY | CYN | CBL | CA |
|---|---|---|---|---|---|---|---|---|---|---|---|
| -101.080 | -.202 | -.07320 | -.08010 | .01860 | .01433 | -.04756 | .02335 | -.02672 | .00659 | -.00174 | .18789 |
| -101.000 | 99.851 | .05583 | -.08028 | .01530 | .01643 | -.04515 | .02188 | -.02654 | .00799 | -.00150 | .18807 |
| -100.360 | 199.760 | .16876 | -.08028 | .00905 | .01814 | -.04268 | .02048 | -.02280 | .00872 | -.00073 | .18815 |
| | GRADIENT | .00000 | .00000 | .00000 | .00000 | .00000 | .00000 | .00000 | .00000 | .00000 | .00000 |

IA143, AEDC V41A-P8A, O/ET W/R.H. SRB SEPARATING (OVX023) ( 20 MAY 77 )

REFERENCE DATA

SREF = 2690.0000 SQ.FT. XMRP = 1097.0000 IN. XT
LREF = 1290.3000 INCHES YMRP = .0000 IN. YT
BREF = 1290.3000 INCHES ZMRP = 450.0000 IN. ZT
SCALE = .0100

PARAMETRIC DATA

ALPHA = .000 BETA = .000
DALPHA = .000 DBETA = .000
Z = 100.000 MACH = 5.000
JET PC = .000

RUN NO. 4540/ 0 RN/L = 2.81 GRADIENT INTERVAL = -5.00/ 5.00

| Y | X | Z | ALPHA | BETA | PHI | CN | CLM | CY | CYN | CBL | CA |
|---|---|---|---|---|---|---|---|---|---|---|---|
| -11.048 | 199.860 | 99.80000 | -.07834 | .00958 | .00888 | -.04208 | .02110 | -.01470 | .00393 | -.00075 | .18738 |
| -10.984 | 99.820 | 100.01000 | -.07693 | .01494 | .00950 | -.04271 | .02227 | -.01654 | .00254 | -.00067 | .18741 |
| -11.866 | -.103 | 100.12000 | -.07446 | .02435 | .00896 | -.04391 | .02437 | -.01977 | .00009 | -.00086 | .18744 |
| | GRADIENT | .00000 | .00000 | .00000 | .00000 | .00000 | .00000 | .00000 | .00000 | .00000 | .00000 |

RUN NO. 4543/ 0 RN/L = 2.80 GRADIENT INTERVAL = -5.00/ 5.00

| Y | X | Z | ALPHA | BETA | PHI | CN | CLM | CY | CYN | CBL | CA |
|---|---|---|---|---|---|---|---|---|---|---|---|
| -51.632 | -.191 | 99.54800 | -.07530 | .02210 | .01179 | -.04362 | .02377 | -.02145 | .00205 | -.00082 | .18777 |
| -50.454 | 99.954 | 99.87200 | -.07731 | .01575 | .01308 | -.04135 | .02140 | -.02097 | .00465 | -.00089 | .18832 |
| -50.233 | 199.790 | 99.80500 | -.07869 | .00885 | .01094 | -.03968 | .01965 | -.01713 | .00562 | -.00093 | .18831 |
| | GRADIENT | .00000 | .00000 | .00000 | .00000 | .00000 | .00000 | .00000 | .00000 | .00000 | .00000 |

IA143, AEDC V41A-P8A, O/ET W/R.H. SRB SEPARATING (OVX023) ( 20 MAY 77 )

REFERENCE DATA

SREF = 2690.0000 SQ.FT. XMRP = 1097.0000 IN. XT
LREF = 1290.3000 INCHES YMRP = .0000 IN. YT
BREF = 1290.3000 INCHES ZMRP = 450.0000 IN. ZT
SCALE = .0100

PARAMETRIC DATA

ALPHA = .000 BETA = .000
DALPHA = .000 DBETA = .000
Z = 100.000 MACH = 5.000
JET PC = .000

RUN NO. 4546/ 0 RN/L = 2.79 GRADIENT INTERVAL = -5.00/ 5.00

| Y | X | Z | ALPHA | BETA | PHI | CN | CLM | CY | CYN | CBL | CA |
|---|---|---|---|---|---|---|---|---|---|---|---|
| -100.570 | 199.690 | 100.20000 | -.07927 | .00740 | .01392 | -.03435 | .01641 | -.02140 | .00868 | -.00139 | .18924 |
| -101.740 | 99.847 | 99.96400 | -.07849 | .01167 | .01563 | -.03750 | .01863 | -.02236 | .00728 | -.00096 | .18904 |
| -101.160 | -.240 | 99.99700 | -.07844 | .01385 | .01438 | -.03882 | .01937 | -.02245 | .00635 | -.00109 | .18871 |
| | GRADIENT | .00000 | .00000 | .00000 | .00000 | .00000 | .00000 | .00000 | .00000 | .00000 | .00000 |

IA143, AEDC V41A-P8A, O/ET W/R.H. SRB SEPARATING (OVX024) ( 20 MAY 77 )

REFERENCE DATA

SREF = 2690.0000 SQ.FT. XMRP = 1097.0000 IN. XT
LREF = 1290.3000 INCHES YMRP = .0000 IN. YT
BREF = 1290.3000 INCHES ZMRP = 450.0000 IN. ZT
SCALE = .0100

PARAMETRIC DATA

ALPHA = .000 BETA = .000
DALPHA = .000 DBETA = .000
Z = 200.000 MACH = 5.000
JET PC = .000

RUN NO. 4541/ 0 RN/L = 2.80 GRADIENT INTERVAL = -5.00/ 5.00

| Y | X | Z | ALPHA | BETA | PHI | CN | CLM | CY | CYN | CBL | CA |
|---|---|---|---|---|---|---|---|---|---|---|---|
| -11.216 | -.189 | 200.43000 | -.07220 | .01581 | .00387 | -.03406 | .02005 | -.01631 | .00201 | -.00172 | .18812 |
| -10.397 | 99.911 | 199.65000 | -.07428 | .01173 | .00373 | -.03268 | .01805 | -.01585 | .00360 | -.00193 | .18805 |
| -10.251 | 199.770 | 199.50000 | -.07674 | .00698 | .00163 | -.03365 | .01671 | -.01227 | .00373 | -.00187 | .18585 |
| | GRADIENT | .00000 | .00000 | .00000 | .00000 | .00000 | .00000 | .00000 | .00000 | .00000 | .00000 |

RUN NO. 4542/ 0 RN/L = 2.80 GRADIENT INTERVAL = -5.00/ 5.00

| Y | X | Z | ALPHA | BETA | PHI | CN | CLM | CY | CYN | CBL | CA |
|---|---|---|---|---|---|---|---|---|---|---|---|
| -51.432 | 199.730 | 200.09000 | -.07779 | .00702 | .00202 | -.02923 | .01357 | -.01573 | .00566 | -.00259 | .18600 |
| -51.404 | 99.900 | 200.17000 | -.07619 | .00992 | .00437 | -.02927 | .01497 | -.01863 | .00597 | -.00256 | .18820 |
| -50.776 | -.162 | 200.00000 | -.07521 | .01244 | .00560 | -.03288 | .01766 | -.01792 | .00444 | -.00196 | .18819 |
| | GRADIENT | .00000 | .00000 | .00000 | .00000 | .00000 | .00000 | .00000 | .00000 | .00000 | .00000 |

RUN NO. 4547/ 0 RN/L = 2.79 GRADIENT INTERVAL = -5.00/ 5.00

| Y | X | Z | ALPHA | BETA | PHI | CN | CLM | CY | CYN | CBL | CA |
|---|---|---|---|---|---|---|---|---|---|---|---|
| -100.470 | -.165 | 199.90000 | -.07895 | .00282 | .00552 | -.03345 | .01527 | -.01431 | .00676 | -.00182 | .18561 |
| -100.530 | 99.854 | 200.14000 | -.07894 | .00435 | .00357 | -.02833 | .01230 | -.01681 | .00748 | -.00270 | .18596 |
| -100.960 | 199.750 | 199.85000 | -.07925 | .00339 | .00549 | -.02942 | .01257 | -.01618 | .00756 | -.00223 | .18487 |
| | GRADIENT | .00000 | .00000 | .00000 | .00000 | .00000 | .00000 | .00000 | .00000 | .00000 | .00000 |

IA143, AEDC V41A-P8A, O/ET W/R.H. SRB SEPARATING (OVX025) ( 20 MAY 77 )

REFERENCE DATA

SREF = 2690.0000 SQ.FT. XMRP = 1097.0000 IN. XT
LREF = 1290.3000 INCHES YMRP = .0000 IN. YT
BREF = 1290.3000 INCHES ZMRP = 450.0000 IN. ZT
SCALE = .0100

PARAMETRIC DATA

ALPHA = .000 BETA = .000
DALPHA = .000 DBETA = -4.000
Z = .000 MACH = 5.000
JET PC = .000

RUN NO. 4548/ 0 RN/L = 2.79 GRADIENT INTERVAL = -5.00/ 5.00

| Y | X | Z | ALPHA | BETA | PHI | CN | CLM | CY | CYN | CBL | CA |
|---|---|---|---|---|---|---|---|---|---|---|---|
| -104.370 | .058 | -1.84030 | -.07953 | .02559 | .02388 | -.04588 | .02259 | -.03896 | .01031 | -.00210 | .18739 |
| -99.872 | 99.769 | .16975 | -.08030 | .02029 | .02421 | -.04388 | .02107 | -.03765 | .01197 | -.00209 | .18792 |
| -99.671 | 199.670 | .02035 | -.08046 | .01284 | .02662 | -.04096 | .01916 | -.03397 | .01328 | -.00128 | .18728 |
| | GRADIENT | .00000 | .00000 | .00000 | .00000 | .00000 | .00000 | .00000 | .00000 | .00000 | .00000 |

RUN NO. 4553/ 0 RN/L = 2.78 GRADIENT INTERVAL = -5.00/ 5.00

| Y | X | Z | ALPHA | BETA | PHI | CN | CLM | CY | CYN | CBL | CA |
|---|---|---|---|---|---|---|---|---|---|---|---|
| -151.160 | 199.790 | -.22899 | -.08074 | .00589 | .02475 | -.03595 | .01628 | -.02963 | .01398 | -.00115 | .18835 |
| -151.360 | 99.854 | -.20334 | -.08092 | .01016 | .02517 | -.03730 | .01699 | -.03245 | .01363 | -.00142 | .18839 |
| -150.320 | -.236 | -.04478 | -.08091 | .00971 | .02417 | -.03885 | .01778 | -.03047 | .01272 | -.00119 | .18793 |
| | GRADIENT | .00000 | .00000 | .00000 | .00000 | .00000 | .00000 | .00000 | .00000 | .00000 | .00000 |

RUN NO. 4554/ 0 RN/L = 2.78 GRADIENT INTERVAL = -5.00/ 5.00

| Y | X | Z | ALPHA | BETA | PHI | CN | CLM | CY | CYN | CBL | CA |
|---|---|---|---|---|---|---|---|---|---|---|---|
| -200.080 | -.141 | .02489 | -.08078 | -.00235 | .01840 | -.03888 | .01773 | -.02111 | .01292 | -.00108 | .18727 |
| -200.870 | 99.771 | .03349 | -.08068 | -.00295 | .01694 | -.03908 | .01787 | -.01920 | .01212 | -.00098 | .18709 |
| -201.180 | 199.750 | -.03533 | -.08092 | -.00287 | .01809 | -.03737 | .01675 | -.02115 | .01318 | -.00119 | .18725 |
| | GRADIENT | .00000 | .00000 | .00000 | .00000 | .00000 | .00000 | .00000 | .00000 | .00000 | .00000 |

IA143, AEDC V41A-P8A, O/ET W/R.H. SRB SEPARATING (OVX026) ( 20 MAY 77 )

REFERENCE DATA

SREF = 2690.0000 SQ.FT. XMRP = 1097.0000 IN. XT
LREF = 1290.3000 INCHES YMRP = .0000 IN. YT
BREF = 1290.3000 INCHES ZMRP = 450.0000 IN. ZT
SCALE = .0100

PARAMETRIC DATA

ALPHA = .000 BETA = .000
DALPHA = .000 DBETA = -4.000
Z = 100.000 MACH = 5.000
JET PC = .000

RUN NO. 4549/ 0 RN/L = 2.78 GRADIENT INTERVAL = -5.00/ 5.00

| Y | X | Z | ALPHA | BETA | PHI | CN | CLM | CY | CYN | CBL | CA |
|---|---|---|---|---|---|---|---|---|---|---|---|
| -100.360 | 199.820 | 100.14000 | -.07887 | .01052 | .02033 | -.03186 | .01516 | -.02794 | .01094 | -.00135 | .18923 |
| -101.500 | 99.816 | 99.97900 | -.07768 | .01599 | .02212 | -.03434 | .01717 | -.03018 | .00972 | -.00112 | .18865 |
| -100.500 | -.091 | 100.03000 | -.07695 | .02007 | .02097 | -.03565 | .01832 | -.03106 | .00838 | -.00127 | .18846 |
| | GRADIENT | .00000 | .00000 | .00000 | .00000 | .00000 | .00000 | .00000 | .00000 | .00000 | .00000 |

IA143, AEDC V41A-P8A, O/ET W/R.H. SRB SEPARATING (OVX026) ( 20 MAY 77 )

REFERENCE DATA

SREF = 2690.0000 SQ.FT. XMRP = 1097.0000 IN. XT
LREF = 1290.3000 INCHES YMRP = .0000 IN. YT
BREF = 1290.3000 INCHES ZMRP = 450.0000 IN. ZT
SCALE = .0100

PARAMETRIC DATA

ALPHA = .000 BETA = .000
DALPHA = .000 DBETA = -4.000
Z = 100.000 MACH = 5.000
JET PC = .000

RUN NO. 4552/ 0 RN/L = 2.78 GRADIENT INTERVAL = -5.00/ 5.00

| Y | X | Z | ALPHA | BETA | PHI | CN | CLM | CY | CYN | CBL | CA |
|---|---|---|---|---|---|---|---|---|---|---|---|
| -151.230 | -.060 | 99.80900 | -.07960 | .00570 | .01773 | -.03314 | .01513 | -.02378 | .01078 | -.00127 | .18758 |
| -151.330 | 99.859 | 100.02000 | -.07966 | .00672 | .01959 | -.03126 | .01421 | -.02635 | .01177 | -.00141 | .18854 |
| -150.630 | 199.680 | 100.03000 | -.07986 | .00422 | .01756 | -.02888 | .01267 | -.02595 | .01267 | -.00191 | .18844 |
| | GRADIENT | .00000 | .00000 | .00000 | .00000 | .00000 | .00000 | .00000 | .00000 | .00000 | .00000 |

RUN NO. 4555/ 0 RN/L = 2.77 GRADIENT INTERVAL = -5.00/ 5.00

| Y | X | Z | ALPHA | BETA | PHI | CN | CLM | CY | CYN | CBL | CA |
|---|---|---|---|---|---|---|---|---|---|---|---|
| -200.510 | 199.710 | 100.07000 | -.08104 | -.00381 | .00976 | -.03345 | .01402 | -.01640 | .01094 | -.00190 | .18555 |
| -200.510 | 99.796 | 99.90700 | -.08072 | -.00339 | .00993 | -.03584 | .01553 | -.01482 | .00986 | -.00146 | .18513 |
| -200.740 | -.189 | 99.96100 | -.08060 | -.00204 | .01351 | -.03591 | .01576 | -.01717 | .01057 | -.00117 | .18560 |
| | GRADIENT | .00000 | .00000 | .00000 | .00000 | .00000 | .00000 | .00000 | .00000 | .00000 | .00000 |

IA143, AEDC V41A-P8A, O/ET W/R.H. SRB SEPARATING (OVX027) ( 20 MAY 77 )

REFERENCE DATA

SREF = 2690.0000 SQ.FT. XMRP = 1097.0000 IN. XT
LREF = 1290.3000 INCHES YMRP = .0000 IN. YT
BREF = 1290.3000 INCHES ZMRP = 450.0000 IN. ZT
SCALE = .0100

PARAMETRIC DATA

ALPHA = .000 BETA = .000
DALPHA = .000 DBETA = -4.000
Z = 200.000 MACH = 5.000
JET PC = .000

RUN NO. 4550/ 0 RN/L = 2.78 GRADIENT INTERVAL = -5.00/ 5.00

| Y | X | Z | ALPHA | BETA | PHI | CN | CLM | CY | CYN | CBL | CA |
|---|---|---|---|---|---|---|---|---|---|---|---|
| -99.871 | -.113 | 200.18000 | -.07755 | .00689 | .00801 | -.02763 | .01288 | -.01986 | .00803 | -.00230 | .18670 |
| -101.420 | 99.787 | 200.12000 | -.07785 | .00718 | .00752 | -.02410 | .01071 | -.02181 | .00900 | -.00283 | .18703 |
| -100.340 | 199.800 | 199.74000 | -.07854 | .00559 | .00652 | -.02395 | .00987 | -.02037 | .00891 | -.00281 | .18533 |
| | GRADIENT | .00000 | .00000 | .00000 | .00000 | .00000 | .00000 | .00000 | .00000 | .00000 | .00000 |

RUN NO. 4551/ 0 RN/L = 2.78 GRADIENT INTERVAL = -5.00/ 5.00

| Y | X | Z | ALPHA | BETA | PHI | CN | CLM | CY | CYN | CBL | CA |
|---|---|---|---|---|---|---|---|---|---|---|---|
| -150.880 | 199.740 | 199.86000 | -.07969 | .00009 | .01166 | -.03230 | .01380 | -.01647 | .00921 | -.00125 | .18398 |
| -150.380 | 99.841 | 199.77000 | -.07939 | -.00018 | .01140 | -.03480 | .01543 | -.01467 | .00832 | -.00090 | .18397 |
| -150.410 | -.188 | 199.89000 | -.07910 | .00033 | .01131 | -.03398 | .01527 | -.01567 | .00866 | -.00111 | .18459 |
| | GRADIENT | .00000 | .00000 | .00000 | .00000 | .00000 | .00000 | .00000 | .00000 | .00000 | .00000 |

IA143, AEDC V41A-P8A, O/ET W/R.H. SRB SEPARATING (OVX027) ( 20 MAY 77 )

REFERENCE DATA

SREF = 2690.0000 SQ.FT. XMRP = 1097.0000 IN. XT
LREF = 1290.3000 INCHES YMRP = .0000 IN. YT
BREF = 1290.3000 INCHES ZMRP = 450.0000 IN. ZT
SCALE = .0100

PARAMETRIC DATA

ALPHA = .000 BETA = .000
DALPHA = .000 DBETA = -4.000
Z = 200.000 MACH = 5.000
JET PC = .000

RUN NO. 4556/ 0 RN/L = 2.77 GRADIENT INTERVAL = -5.00/ 5.00

| Y | X | Z | ALPHA | BETA | PHI | CN | CLM | CY | CYN | CBL | CA |
|---|---|---|---|---|---|---|---|---|---|---|---|
| -200.450 | -.199 | 200.03000 | -.07970 | -.00314 | .00729 | -.03903 | .01767 | -.00898 | .00647 | -.00066 | .18374 |
| -201.240 | 99.774 | 199.93000 | -.07871 | -.00333 | .00877 | -.04330 | .02058 | -.00616 | .00496 | .00029 | .18312 |
| -200.840 | 199.620 | 199.92000 | -.07820 | -.00340 | .00967 | -.04587 | .02236 | -.00419 | .00389 | .00093 | .18288 |
| | GRADIENT | .00000 | .00000 | .00000 | .00000 | .00000 | .00000 | .00000 | .00000 | .00000 | .00000 |

IA143, AEDC V41A-P8A, O/ET W/R.H. SRB SEPARATING (OVX028) ( 20 MAY 77 )

REFERENCE DATA

SREF = 2690.0000 SQ.FT. XMRP = 1097.0000 IN. XT
LREF = 1290.3000 INCHES YMRP = .0000 IN. YT
BREF = 1290.3000 INCHES ZMRP = 450.0000 IN. ZT
SCALE = .0100

PARAMETRIC DATA

ALPHA = .000 BETA = .000
DALPHA = .000 DBETA = .000
Z = .000 MACH = 5.000
JET PC = 1225.000

RUN NO. 4557/ 0 RN/L = 2.76 GRADIENT INTERVAL = -5.00/ 5.00

| Y | X | Z | ALPHA | BETA | PHI | CN | CLM | CY | CYN | CBL | CA |
|---|---|---|---|---|---|---|---|---|---|---|---|
| -11.001 | -.885 | -.20536 | -.23614 | .22169 | .05359 | -.11436 | -.03831 | -.11962 | -.03293 | -.00079 | .13894 |
| -9.994 | 99.916 | .84007 | -.20270 | .20418 | .05644 | -.09772 | -.02873 | -.09063 | -.04134 | .00525 | .13938 |
| -8.779 | 199.760 | .97777 | -.17784 | .15796 | .02530 | -.07071 | -.02900 | -.06609 | -.03425 | .00121 | .14475 |
| | GRADIENT | .00000 | .00000 | .00000 | .00000 | .00000 | .00000 | .00000 | .00000 | .00000 | .00000 |

RUN NO. 4562/ 0 RN/L = 2.78 GRADIENT INTERVAL = -5.00/ 5.00

| Y | X | Z | ALPHA | BETA | PHI | CN | CLM | CY | CYN | CBL | CA |
|---|---|---|---|---|---|---|---|---|---|---|---|
| -49.105 | 199.810 | -1.37050 | -.16817 | .15070 | .02292 | -.07462 | -.02225 | -.06743 | -.03021 | -.00010 | .13974 |
| -53.212 | 99.975 | -1.13050 | -.19628 | .18592 | .04883 | -.09712 | -.02543 | -.07557 | -.04152 | .00586 | .13899 |
| -51.605 | -.200 | -.69411 | -.21759 | .19628 | .04580 | -.10127 | -.03411 | -.08673 | -.04000 | .00340 | .14465 |
| | GRADIENT | .00000 | .00000 | .00000 | .00000 | .00000 | .00000 | .00000 | .00000 | .00000 | .00000 |

RUN NO. 4563/ 0 RN/L = 2.78 GRADIENT INTERVAL = -5.00/ 5.00

| Y | X | Z | ALPHA | BETA | PHI | CN | CLM | CY | CYN | CBL | CA |
|---|---|---|---|---|---|---|---|---|---|---|---|
| -100.620 | -.145 | .15515 | -.19995 | .16132 | .02981 | -.09235 | -.02806 | -.05970 | -.03938 | .00387 | .14958 |
| -100.700 | 99.930 | .29629 | -.18069 | .16394 | .03667 | -.09113 | -.01923 | -.05770 | -.04168 | .00592 | .14253 |
| -100.890 | 199.740 | .64543 | -.15943 | .15556 | .04056 | -.08768 | -.00704 | -.05701 | -.03830 | .00631 | .15139 |
| | GRADIENT | .00000 | .00000 | .00000 | .00000 | .00000 | .00000 | .00000 | .00000 | .00000 | .00000 |

IA143, AEDC V41A-P8A, O/ET W/R.H. SRB SEPARATING (OVX029) ( 20 MAY 77 )

REFERENCE DATA

SREF = 2690.0000 SQ.FT. XMRP = 1097.0000 IN. XT
LREF = 1290.3000 INCHES YMRP = .0000 IN. YT
BREF = 1290.3000 INCHES ZMRP = 450.0000 IN. ZT
SCALE = .0100

PARAMETRIC DATA

ALPHA = .000 BETA = .000
DALPHA = .000 DBETA = .000
Z = 100.000 MACH = 5.000
JET PC = 1225.000

RUN NO. 4558/ 0 RN/L = 2.76 GRADIENT INTERVAL = -5.00/ 5.00

| Y | X | Z | ALPHA | BETA | PHI | CN | CLM | CY | CYN | CBL | CA |
|---|---|---|---|---|---|---|---|---|---|---|---|
| -13.709 | 199.840 | 101.16000 | -.12320 | .29942 | .09448 | -.02782 | -.01955 | -.14020 | -.05664 | .00843 | .15877 |
| -11.576 | 99.783 | 99.66800 | -.13702 | .31418 | .08630 | -.03625 | -.02300 | -.14786 | -.05903 | .00601 | .15694 |
| -11.876 | -.134 | 98.90900 | -.17041 | .34659 | .08820 | -.04526 | -.03677 | -.17735 | -.05701 | .00187 | .15764 |
| | GRADIENT | .00000 | .00000 | .00000 | .00000 | .00000 | .00000 | .00000 | .00000 | .00000 | .00000 |

RUN NO. 4561/ 0 RN/L = 2.77 GRADIENT INTERVAL = -5.00/ 5.00

| Y | X | Z | ALPHA | BETA | PHI | CN | CLM | CY | CYN | CBL | CA |
|---|---|---|---|---|---|---|---|---|---|---|---|
| -51.253 | -.139 | 100.15000 | -.18256 | .32576 | .07746 | -.06565 | -.03279 | -.15804 | -.05853 | .00265 | .15369 |
| -50.003 | 99.943 | 100.62000 | -.15089 | .30410 | .07741 | -.05637 | -.02165 | -.13859 | -.05958 | .00557 | .14580 |
| -49.513 | 199.760 | 101.21000 | -.11926 | .25503 | .06368 | -.02287 | -.02072 | -.11432 | -.05278 | .00514 | .15595 |
| | GRADIENT | .00000 | .00000 | .00000 | .00000 | .00000 | .00000 | .00000 | .00000 | .00000 | .00000 |

RUN NO. 4564/ 0 RN/L = 2.78 GRADIENT INTERVAL = -5.00/ 5.00

| Y | X | Z | ALPHA | BETA | PHI | CN | CLM | CY | CYN | CBL | CA |
|---|---|---|---|---|---|---|---|---|---|---|---|
| -102.810 | 199.690 | 100.36000 | -.15112 | .26170 | .06240 | -.06928 | -.01220 | -.12624 | -.04733 | .00232 | .15485 |
| -101.250 | 99.823 | 98.98100 | -.17587 | .25832 | .06205 | -.08417 | -.01962 | -.10842 | -.05584 | .00613 | .14660 |
| -101.360 | -.216 | 99.92400 | -.18772 | .25502 | .05068 | -.07915 | -.02714 | -.10438 | -.05666 | .00448 | .15683 |
| | GRADIENT | .00000 | .00000 | .00000 | .00000 | .00000 | .00000 | .00000 | .00000 | .00000 | .00000 |

IA143, AEDC V41A-P8A, O/ET W/R.H. SRB SEPARATING (OVX030) ( 20 MAY 77 )

REFERENCE DATA

SREF = 2690.0000 SQ.FT. XMRP = 1097.0000 IN. XT
LREF = 1290.3000 INCHES YMRP = .0000 IN. YT
BREF = 1290.3000 INCHES ZMRP = 450.0000 IN. ZT
SCALE = .0100

PARAMETRIC DATA

ALPHA = .000 BETA = .000
DALPHA = .000 DBETA = .000
Z = 200.000 MACH = 5.000
JET PC = 1225.000

RUN NO. 4559/ 0 RN/L = 2.76 GRADIENT INTERVAL = -5.00/ 5.00

| Y | X | Z | ALPHA | BETA | PHI | CN | CLM | CY | CYN | CBL | CA |
|---|---|---|---|---|---|---|---|---|---|---|---|
| -10.595 | -.307 | 199.67000 | -.04207 | .59741 | .16816 | .03217 | .00141 | -.28349 | -.11083 | .01160 | .20052 |
| -11.536 | 99.830 | 200.32000 | -.02292 | .63972 | .20255 | .01187 | .01971 | -.31665 | -.11129 | .01405 | .17985 |
| -9.094 | 199.730 | 200.09000 | -.02111 | .54484 | .19137 | .01888 | .01869 | -.28689 | -.08496 | .01189 | .18889 |
| | GRADIENT | .00000 | .00000 | .00000 | .00000 | .00000 | .00000 | .00000 | .00000 | .00000 | .00000 |

IA143, AEDC V41A-P8A, O/ET W/R.H. SRB SEPARATING (OVX030) ( 20 MAY 77 )

REFERENCE DATA

SREF = 2690.0000 SQ.FT. XMRP = 1097.0000 IN. XT
LREF = 1290.3000 INCHES YMRP = .0000 IN. YT
BREF = 1290.3000 INCHES ZMRP = 450.0000 IN. ZT
SCALE = .0100

PARAMETRIC DATA

ALPHA = .000 BETA = .000
DALPHA = .000 DBETA = .000
Z = 200.000 MACH = 5.000
JET PC = 1225.000

RUN NO. 4560/ 0 RN/L = 2.77 GRADIENT INTERVAL = -5.00/ 5.00

| Y | X | Z | ALPHA | BETA | PHI | CN | CLM | CY | CYN | CBL | CA |
|---|---|---|---|---|---|---|---|---|---|---|---|
| -48.548 | 199.750 | 199.17000 | -.04912 | .43520 | .13813 | .00871 | .00643 | -.21272 | -.07723 | .01029 | .17961 |
| -51.331 | 99.855 | 199.26000 | -.06139 | .46690 | .13450 | .00334 | .00249 | -.21749 | -.08891 | .01067 | .17963 |
| -47.122 | -.193 | 201.28000 | -.01630 | .28656 | .06529 | .05373 | -.00193 | -.12344 | -.06023 | .00533 | .17526 |
| | GRADIENT | .00000 | .00000 | .00000 | .00000 | .00000 | .00000 | .00000 | .00000 | .00000 | .00000 |

RUN NO. 4565/ 0 RN/L = 2.78 GRADIENT INTERVAL = -5.00/ 5.00

| Y | X | Z | ALPHA | BETA | PHI | CN | CLM | CY | CYN | CBL | CA |
|---|---|---|---|---|---|---|---|---|---|---|---|
| -102.430 | -.111 | 202.04000 | -.09957 | .34144 | .07225 | -.00895 | -.01291 | -.14960 | -.07031 | .00460 | .17690 |
| -102.140 | 99.766 | 199.86000 | -.10517 | .38500 | .09536 | -.02908 | -.00708 | -.17463 | -.07593 | .00668 | .16468 |
| -100.630 | 199.720 | 201.16000 | -.06469 | .36896 | .09646 | .00532 | -.00379 | -.18014 | -.06561 | .00451 | .16506 |
| | GRADIENT | .00000 | .00000 | .00000 | .00000 | .00000 | .00000 | .00000 | .00000 | .00000 | .00000 |

IA143, AEDC V41A-P8A, O/ET W/R.H. SRB SEPARATING (OVX031) ( 20 MAY 77 )

REFERENCE DATA

SREF = 2690.0000 SQ.FT. XMRP = 1097.0000 IN. XT
LREF = 1290.3000 INCHES YMRP = .0000 IN. YT
BREF = 1290.3000 INCHES ZMRP = 450.0000 IN. ZT
SCALE = .0100

PARAMETRIC DATA

ALPHA = .000 BETA = .000
DALPHA = .000 DBETA = -4.000
Z = .000 MACH = 5.000
JET PC = 1225.000

RUN NO. 4566/ 0 RN/L = 2.78 GRADIENT INTERVAL = -5.00/ 5.00

| Y | X | Z | ALPHA | BETA | PHI | CN | CLM | CY | CYN | CBL | CA |
|---|---|---|---|---|---|---|---|---|---|---|---|
| -100.420 | -.825 | -.20286 | -.19975 | .14360 | .01924 | -.08448 | -.03423 | -.07947 | -.02025 | -.00412 | .14187 |
| -100.560 | 99.814 | .28516 | -.18329 | .16558 | .03524 | -.09015 | -.02175 | -.06586 | -.03790 | .00388 | .14086 |
| -100.400 | 199.780 | .47959 | -.16164 | .15627 | .04205 | -.08749 | -.00817 | -.06029 | -.03677 | .00591 | .15253 |
| | GRADIENT | .00000 | .00000 | .00000 | .00000 | .00000 | .00000 | .00000 | .00000 | .00000 | .00000 |

RUN NO. 4571/ 0 RN/L = 2.78 GRADIENT INTERVAL = -5.00/ 5.00

| Y | X | Z | ALPHA | BETA | PHI | CN | CLM | CY | CYN | CBL | CA |
|---|---|---|---|---|---|---|---|---|---|---|---|
| -149.720 | 199.710 | -.10717 | -.15599 | .15398 | .03860 | -.08875 | -.00262 | -.05809 | -.03695 | .00553 | .15941 |
| -150.700 | 99.912 | -.45894 | -.17095 | .15435 | .03175 | -.08612 | -.01604 | -.05288 | -.04001 | .00533 | .14446 |
| -151.280 | -.255 | -.42228 | -.18426 | .15333 | .02850 | -.08631 | -.02369 | -.05713 | -.03721 | .00362 | .14442 |
| | GRADIENT | .00000 | .00000 | .00000 | .00000 | .00000 | .00000 | .00000 | .00000 | .00000 | .00000 |

IA143, AEDC V41A-P8A, O/ET W/R.H. SRB SEPARATING (OVX031) ( 20 MAY 77 )

REFERENCE DATA

SREF = 2690.0000 SQ.FT. XMRP = 1097.0000 IN. XT
LREF = 1290.3000 INCHES YMRP = .0000 IN. YT
BREF = 1290.3000 INCHES ZMRP = 450.0000 IN. ZT
SCALE = .0100

PARAMETRIC DATA

ALPHA = .000 BETA = .000
DALPHA = .000 DBETA = -4.000
Z = .000 MACH = 5.000
JET PC = 1225.000

RUN NO. 4572/ 0 RN/L = 2.78 GRADIENT INTERVAL = -5.00/ 5.00

| Y | X | Z | ALPHA | BETA | PHI | CN | CLM | CY | CYN | CBL | CA |
|---|---|---|---|---|---|---|---|---|---|---|---|
| -200.430 | -.221 | -.02595 | -.17927 | .15754 | .02790 | -.08975 | -.01784 | -.05071 | -.04277 | .00528 | .14901 |
| -200.750 | 99.807 | .45220 | -.16317 | .15737 | .02921 | -.08804 | -.00868 | -.05112 | -.04240 | .00543 | .15265 |
| -200.690 | 199.800 | .23982 | -.15259 | .15730 | .03608 | -.09234 | .00366 | -.06232 | -.03609 | .00427 | .16949 |
| | GRADIENT | .00000 | .00000 | .00000 | .00000 | .00000 | .00000 | .00000 | .00000 | .00000 | .00000 |

IA143, AEDC V41A-P8A, O/ET W/R.H. SRB SEPARATING (OVX032) ( 20 MAY 77 )

REFERENCE DATA

SREF = 2690.0000 SQ.FT. XMRP = 1097.0000 IN. XT
LREF = 1290.3000 INCHES YMRP = .0000 IN. YT
BREF = 1290.3000 INCHES ZMRP = 450.0000 IN. ZT
SCALE = .0100

PARAMETRIC DATA

ALPHA = .000 BETA = .000
DALPHA = .000 DBETA = -4.000
Z = 100.000 MACH = 5.000
JET PC = 1225.000

RUN NO. 4567/ 0 RN/L = 2.78 GRADIENT INTERVAL = -5.00/ 5.00

| Y | X | Z | ALPHA | BETA | PHI | CN | CLM | CY | CYN | CBL | CA |
|---|---|---|---|---|---|---|---|---|---|---|---|
| -101.880 | 199.740 | 100.07000 | -.15649 | .23472 | .06259 | -.08462 | -.00579 | -.10475 | -.04723 | .00542 | .15731 |
| -101.370 | 99.758 | 99.50800 | -.17467 | .24705 | .05880 | -.08511 | -.01907 | -.10539 | -.05245 | .00535 | .14344 |
| -101.480 | -.086 | 99.73800 | -.19132 | .23276 | .04071 | -.07104 | -.03635 | -.11349 | -.04146 | -.00125 | .14593 |
| | GRADIENT | .00000 | .00000 | .00000 | .00000 | .00000 | .00000 | .00000 | .00000 | .00000 | .00000 |

RUN NO. 4570/ 0 RN/L = 2.78 GRADIENT INTERVAL = -5.00/ 5.00

| Y | X | Z | ALPHA | BETA | PHI | CN | CLM | CY | CYN | CBL | CA |
|---|---|---|---|---|---|---|---|---|---|---|---|
| -149.430 | -.188 | 99.07900 | -.17729 | .21654 | .03942 | -.07552 | -.02462 | -.09035 | -.04707 | .00266 | .15031 |
| -151.060 | 99.852 | 100.04000 | -.16731 | .22680 | .04903 | -.08482 | -.01416 | -.09076 | -.05145 | .00526 | .14694 |
| -150.600 | 199.670 | 100.45000 | -.15285 | .21449 | .05101 | -.08842 | -.00130 | -.08984 | -.04650 | .00505 | .15820 |
| | GRADIENT | .00000 | .00000 | .00000 | .00000 | .00000 | .00000 | .00000 | .00000 | .00000 | .00000 |

RUN NO. 4573/ 0 RN/L = 2.78 GRADIENT INTERVAL = -5.00/ 5.00

| Y | X | Z | ALPHA | BETA | PHI | CN | CLM | CY | CYN | CBL | CA |
|---|---|---|---|---|---|---|---|---|---|---|---|
| -201.670 | 199.810 | 99.91500 | -.15275 | .21577 | .04472 | -.09608 | .00544 | -.09584 | -.04373 | .00246 | .16829 |
| -200.780 | 99.773 | 99.65100 | -.16159 | .22034 | .04311 | -.08900 | -.00673 | -.08691 | -.05078 | .00449 | .15492 |
| -200.870 | -.129 | 99.72000 | -.17228 | .21239 | .03751 | -.08472 | -.01521 | -.08125 | -.05041 | .00408 | .15592 |
| | GRADIENT | .00000 | .00000 | .00000 | .00000 | .00000 | .00000 | .00000 | .00000 | .00000 | .00000 |

IA143, AEDC V41A-P8A, O/ET W/R.H. SRB SEPARATING (OVX033) ( 20 MAY 77 )

REFERENCE DATA

SREF = 2690.0000 SQ.FT. XMRP = 1097.0000 IN. XT
LREF = 1290.3000 INCHES YMRP = .0000 IN. YT
BREF = 1290.3000 INCHES ZMRP = 450.0000 IN. ZT
SCALE = .0100

PARAMETRIC DATA

ALPHA = .000 BETA = .000
DALPHA = .000 DBETA = -4.000
Z = 200.000 MACH = 5.000
JET PC = 1225.000

RUN NO. 4568/ 0 RN/L = 2.78 GRADIENT INTERVAL = -5.00/ 5.00

| Y | X | Z | ALPHA | BETA | PHI | CN | CLM | CY | CYN | CBL | CA |
|---|---|---|---|---|---|---|---|---|---|---|---|
| -102.350 | -.141 | 201.39000 | -.13207 | .31571 | .05937 | .00127 | -.04159 | -.14447 | -.06152 | .00130 | .15888 |
| -101.530 | 99.730 | 199.83000 | -.12256 | .35958 | .08849 | -.04614 | -.01025 | -.16482 | -.06994 | .00573 | .15060 |
| -100.420 | 199.780 | 201.01000 | -.08205 | .34841 | .08635 | -.01311 | -.00492 | -.17193 | -.06093 | .00287 | .15647 |
| | GRADIENT | .00000 | .00000 | .00000 | .00000 | .00000 | .00000 | .00000 | .00000 | .00000 | .00000 |

RUN NO. 4569/ 0 RN/L = 2.78 GRADIENT INTERVAL = -5.00/ 5.00

| Y | X | Z | ALPHA | BETA | PHI | CN | CLM | CY | CYN | CBL | CA |
|---|---|---|---|---|---|---|---|---|---|---|---|
| -150.390 | 199.790 | 198.26000 | -.13391 | .31505 | .07521 | -.07225 | .00210 | -.15401 | -.05594 | .00235 | .16708 |
| -151.020 | 99.881 | 199.80000 | -.13834 | .32529 | .07347 | -.05993 | -.00900 | -.14601 | -.06502 | .00454 | .16093 |
| -149.900 | -.093 | 200.00000 | -.13595 | .28958 | .05295 | -.03641 | -.02060 | -.12842 | -.05872 | .00183 | .16422 |
| | GRADIENT | .00000 | .00000 | .00000 | .00000 | .00000 | .00000 | .00000 | .00000 | .00000 | .00000 |

RUN NO. 4574/ 0 RN/L = 2.78 GRADIENT INTERVAL = -5.00/ 5.00

| Y | X | Z | ALPHA | BETA | PHI | CN | CLM | CY | CYN | CBL | CA |
|---|---|---|---|---|---|---|---|---|---|---|---|
| -202.240 | -.114 | 200.69000 | -.14061 | .28479 | .05248 | -.05796 | -.00963 | -.12096 | -.06079 | .00312 | .16910 |
| -201.230 | 99.920 | 199.80000 | -.14087 | .30570 | .06386 | -.07293 | -.00144 | -.13918 | -.06013 | .00278 | .16758 |
| -200.530 | 199.740 | 199.89000 | -.13932 | .30223 | .06558 | -.08711 | .00924 | -.15429 | -.05002 | -.00060 | .17418 |
| | GRADIENT | .00000 | .00000 | .00000 | .00000 | .00000 | .00000 | .00000 | .00000 | .00000 | .00000 |

IA143, AEDC V41A-P8A, ISOLATED O/ET (OVX034) ( 01 SEP 77 )

REFERENCE DATA

SREF = 2690.0000 SQ.FT. XMRP = 1097.0000 IN. XT
LREF = 1290.3000 INCHES YMRP = .0000 IN. YT
BREF = 1290.3000 INCHES ZMRP = 450.0000 IN. ZT
SCALE = .0100

PARAMETRIC DATA

ALPHA = -10.000 MACH = 4.500

RUN NO. 2646/ 0 RN/L = 2.38 GRADIENT INTERVAL = -5.00/ 5.00

| BETA | ALPHA | PHI | CN | CLM | CY | CYN | CBL | CA |
|---|---|---|---|---|---|---|---|---|
| -10.188 | -10.304 | -.16366 | -.32839 | .09656 | .38383 | -.11674 | .03927 | .26025 |
| | GRADIENT | .00000 | .00000 | .00000 | .00000 | .00000 | .00000 | .00000 |

IA143, AEDC V41A-P8A, ISOLATED O/ET (OVX034) ( 01 SEP 77 )

REFERENCE DATA

SREF = 2690.0000 SQ.FT. XMRP = 1097.0000 IN. XT
LREF = 1290.3000 INCHES YMRP = .0000 IN. YT
BREF = 1290.3000 INCHES ZMRP = 450.0000 IN. ZT
SCALE = .0100

PARAMETRIC DATA

ALPHA = -10.000 MACH = 4.500

RUN NO. 2750/ 0 RN/L = 2.37 GRADIENT INTERVAL = -5.00/ 5.00

| BETA | ALPHA | PHI | CN | CLM | CY | CYN | CBL | CA |
|---|---|---|---|---|---|---|---|---|
| -5.093 | -10.267 | -.07432 | -.32114 | .09446 | .18927 | -.05778 | .02072 | .24974 |
| | GRADIENT | .00000 | .00000 | .00000 | .00000 | .00000 | .00000 | .00000 |

RUN NO. 2862/ 0 RN/L = 2.36 GRADIENT INTERVAL = -5.00/ 5.00

| BETA | ALPHA | PHI | CN | CLM | CY | CYN | CBL | CA |
|---|---|---|---|---|---|---|---|---|
| 5.087 | -10.264 | .07130 | -.31930 | .09456 | -.17542 | .05265 | -.01834 | .25026 |
| | GRADIENT | .00000 | .00000 | .00000 | .00000 | .00000 | .00000 | .00000 |

IA143, AEDC V41A-P8A, ISOLATED O/ET (OVX035) ( 01 SEP 77 )

REFERENCE DATA

SREF = 2690.0000 SQ.FT. XMRP = 1097.0000 IN. XT
LREF = 1290.3000 INCHES YMRP = .0000 IN. YT
BREF = 1290.3000 INCHES ZMRP = 450.0000 IN. ZT
SCALE = .0100

PARAMETRIC DATA

ALPHA = -5.000 MACH = 4.500

RUN NO. 4357/ 0 RN/L = 2.37 GRADIENT INTERVAL = -5.00/ 5.00

| BETA | ALPHA | PHI | CN | CLM | CY | CYN | CBL | CA |
|---|---|---|---|---|---|---|---|---|
| -10.198 | -5.211 | -.14423 | -.19227 | .06116 | .36023 | -.10666 | .03817 | .23770 |
| | GRADIENT | .00000 | .00000 | .00000 | .00000 | .00000 | .00000 | .00000 |

RUN NO. 4287/ 0 RN/L = 2.39 GRADIENT INTERVAL = -5.00/ 5.00

| BETA | ALPHA | PHI | CN | CLM | CY | CYN | CBL | CA |
|---|---|---|---|---|---|---|---|---|
| -5.100 | -5.174 | -.06709 | -.19277 | .06627 | .16769 | -.04608 | .01732 | .22484 |
| | GRADIENT | .00000 | .00000 | .00000 | .00000 | .00000 | .00000 | .00000 |

RUN NO. 4175/ 0 RN/L = 2.39 GRADIENT INTERVAL = -5.00/ 5.00

| BETA | ALPHA | PHI | CN | CLM | CY | CYN | CBL | CA |
|---|---|---|---|---|---|---|---|---|
| 5.095 | -5.171 | .06509 | -.18744 | .06400 | -.15711 | .04256 | -.01544 | .22150 |
| | GRADIENT | .00000 | .00000 | .00000 | .00000 | .00000 | .00000 | .00000 |

IA143, AEDC V41A-P8A, ISOLATED O/ET (OVX035) ( 01 SEP 77 )

REFERENCE DATA

SREF = 2690.0000 SQ.FT. XMRP = 1097.0000 IN. XT
LREF = 1290.3000 INCHES YMRP = .0000 IN. YT
BREF = 1290.3000 INCHES ZMRP = 450.0000 IN. ZT
SCALE = .0100

PARAMETRIC DATA

ALPHA = -5.000 MACH = 4.500

RUN NO. 4497/ 0 RN/L = 2.36 GRADIENT INTERVAL = -5.00/ 5.00

| BETA | ALPHA | PHI | CN | CLM | CY | CYN | CBL | CA |
|---|---|---|---|---|---|---|---|---|
| 10.193 | -5.205 | .13853 | -.19124 | .06275 | -.34784 | .10191 | -.03658 | .23664 |
| | GRADIENT | .00000 | .00000 | .00000 | .00000 | .00000 | .00000 | .00000 |

IA143, AEDC V41A-P8A, ISOLATED O/ET (OVX036) ( 01 SEP 77 )

REFERENCE DATA

SREF = 2690.0000 SQ.FT. XMRP = 1097.0000 IN. XT
LREF = 1290.3000 INCHES YMRP = .0000 IN. YT
BREF = 1290.3000 INCHES ZMRP = 450.0000 IN. ZT
SCALE = .0100

PARAMETRIC DATA

ALPHA = .000 MACH = 4.500

RUN NO. 2425/ 0 RN/L = 2.38 GRADIENT INTERVAL = -5.00/ 5.00

| BETA | ALPHA | PHI | CN | CLM | CY | CYN | CBL | CA |
|---|---|---|---|---|---|---|---|---|
| -.004 | -.079 | -.00159 | -.05466 | .02827 | .00544 | -.00129 | .00076 | .18883 |
| | GRADIENT | .00000 | .00000 | .00000 | .00000 | .00000 | .00000 | .00000 |

IA143, AEDC V41A-P8A, ISOLATED O/ET (OVX037) ( 01 SEP 77 )

REFERENCE DATA

SREF = 2690.0000 SQ.FT. XMRP = 1097.0000 IN. XT
LREF = 1290.3000 INCHES YMRP = .0000 IN. YT
BREF = 1290.3000 INCHES ZMRP = 450.0000 IN. ZT
SCALE = .0100

PARAMETRIC DATA

ALPHA = 10.000 MACH = 4.500

RUN NO. 4071/ 0 RN/L = 2.37 GRADIENT INTERVAL = -5.00/ 5.00

| BETA | ALPHA | PHI | CN | CLM | CY | CYN | CBL | CA |
|---|---|---|---|---|---|---|---|---|
| .004 | 10.068 | .00062 | .18017 | -.03007 | .00104 | -.00240 | .00078 | .16199 |
| | GRADIENT | .00000 | .00000 | .00000 | .00000 | .00000 | .00000 | .00000 |

IA143, AEDC V41A-P8A, O/ET W/R.H. SRB SEPARATING (OVX044) ( 20 MAY 77 )

REFERENCE DATA

SREF = 2690.0000 SQ.FT. XMRP = 1097.0000 IN. XT
LREF = 1290.3000 INCHES YMRP = .0000 IN. YT
BREF = 1290.3000 INCHES ZMRP = 450.0000 IN. ZT
SCALE = .0100

PARAMETRIC DATA

ALPHA = .000 BETA = .000
DALPHA = .000 DBETA = .000
Z = .000 MACH = 4.500
JET PC = .000

RUN NO. 3206/ 0 RN/L = 2.35 GRADIENT INTERVAL = -5.00/ 5.00

| Y | X | Z | ALPHA | BETA | PHI | CN | CLM | CY | CYN | CBL | CA |
|---|---|---|---|---|---|---|---|---|---|---|---|
| -11.629 | -.239 | -1.66160 | -.08045 | .02595 | .00791 | -.06055 | .03143 | -.02297 | .00109 | -.00168 | .19237 |
| -10.448 | 99.798 | -.03600 | -.08127 | .01951 | .00987 | -.05908 | .03014 | -.02213 | .00355 | -.00153 | .19263 |
| -10.901 | 199.690 | .02082 | -.08202 | .01464 | .01100 | -.05677 | .02842 | -.02146 | .00539 | -.00149 | .19288 |
| | GRADIENT | .00000 | .00000 | .00000 | .00000 | .00000 | .00000 | .00000 | .00000 | .00000 | .00000 |

RUN NO. 3211/ 0 RN/L = 2.35 GRADIENT INTERVAL = -5.00/ 5.00

| Y | X | Z | ALPHA | BETA | PHI | CN | CLM | CY | CYN | CBL | CA |
|---|---|---|---|---|---|---|---|---|---|---|---|
| -50.863 | 199.640 | -.06385 | -.08157 | .01250 | .01272 | -.05428 | .02732 | -.02251 | .00697 | -.00153 | .19284 |
| -51.005 | 99.810 | -.04837 | -.08128 | .01862 | .01218 | -.05811 | .02979 | -.02494 | .00555 | -.00177 | .19320 |
| -53.546 | -.147 | -.12598 | -.08011 | .02825 | .00961 | -.06038 | .03169 | -.02707 | .00236 | -.00211 | .19280 |
| | GRADIENT | .00000 | .00000 | .00000 | .00000 | .00000 | .00000 | .00000 | .00000 | .00000 | .00000 |

RUN NO. 3212/ 0 RN/L = 2.36 GRADIENT INTERVAL = -5.00/ 5.00

| Y | X | Z | ALPHA | BETA | PHI | CN | CLM | CY | CYN | CBL | CA |
|---|---|---|---|---|---|---|---|---|---|---|---|
| -101.100 | -.272 | -.22754 | -.08082 | .02270 | .01144 | -.05702 | .02951 | -.02904 | .00600 | -.00258 | .19355 |
| -102.340 | 99.863 | -.02668 | -.08121 | .01796 | .01354 | -.05431 | .02780 | -.02857 | .00790 | -.00237 | .19395 |
| -99.788 | 199.700 | .07420 | -.08095 | .01102 | .01573 | -.05153 | .02621 | -.02418 | .00858 | -.00139 | .19357 |
| | GRADIENT | .00000 | .00000 | .00000 | .00000 | .00000 | .00000 | .00000 | .00000 | .00000 | .00000 |

IA143, AEDC V41A-P8A, O/ET W/R.H. SRB SEPARATING (OVX045) ( 20 MAY 77 )

REFERENCE DATA

SREF = 2690.0000 SQ.FT. XMRP = 1097.0000 IN. XT
LREF = 1290.3000 INCHES YMRP = .0000 IN. YT
BREF = 1290.3000 INCHES ZMRP = 450.0000 IN. ZT
SCALE = .0100

PARAMETRIC DATA

ALPHA = .000 BETA = .000
DALPHA = .000 DBETA = .000
Z = .000 MACH = 4.500
JET PC = .000

RUN NO. 3299/ 0 RN/L = 2.37 GRADIENT INTERVAL = -5.00/ 5.00

| Y | X | Z | ALPHA | BETA | PHI | CN | CLM | CY | CYN | CBL | CA |
|---|---|---|---|---|---|---|---|---|---|---|---|
| -12.122 | -.292 | -1.85550 | -.08320 | .02692 | .00888 | -.06663 | .03478 | -.02924 | .00421 | -.00287 | .19803 |
| -10.261 | 99.658 | -.00689 | -.08392 | .01982 | .01062 | -.06508 | .03347 | -.02770 | .00656 | -.00265 | .19817 |
| -10.505 | 199.550 | .00231 | -.08480 | .01504 | .01190 | -.06284 | .03179 | -.02709 | .00839 | -.00258 | .19862 |
| | GRADIENT | .00000 | .00000 | .00000 | .00000 | .00000 | .00000 | .00000 | .00000 | .00000 | .00000 |

IA143, AEDC V41A-P8A, O/ET W/R.H. SRB SEPARATING (OVX046) ( 20 MAY 77 )

REFERENCE DATA

SREF = 2690.0000 SQ.FT. XMRP = 1097.0000 IN. XT
LREF = 1290.3000 INCHES YMRP = .0000 IN. YT
BREF = 1290.3000 INCHES ZMRP = 450.0000 IN. ZT
SCALE = .0100

PARAMETRIC DATA

ALPHA = .000 BETA = .000
DALPHA = .000 DBETA = .000
Z = 100.000 MACH = 4.500
JET PC = .000

RUN NO. 3207/ 0 RN/L = 2.35 GRADIENT INTERVAL = -5.00/ 5.00

| Y | X | Z | ALPHA | BETA | PHI | CN | CLM | CY | CYN | CBL | CA |
|---|---|---|---|---|---|---|---|---|---|---|---|
| -10.623 | 199.630 | 99.81100 | -.07885 | .01162 | .00947 | -.05039 | .02656 | -.01724 | .00439 | -.00105 | .19295 |
| -11.027 | 99.751 | 99.92700 | -.07788 | .01623 | .00854 | -.05192 | .02799 | -.01807 | .00276 | -.00111 | .19288 |
| -12.070 | -.159 | 100.08000 | -.07561 | .02390 | .00873 | -.05378 | .03043 | -.02074 | .00077 | -.00114 | .19306 |
| | GRADIENT | .00000 | .00000 | .00000 | .00000 | .00000 | .00000 | .00000 | .00000 | .00000 | .00000 |

RUN NO. 3210/ 0 RN/L = 2.35 GRADIENT INTERVAL = -5.00/ 5.00

| Y | X | Z | ALPHA | BETA | PHI | CN | CLM | CY | CYN | CBL | CA |
|---|---|---|---|---|---|---|---|---|---|---|---|
| -50.827 | -.248 | 99.53900 | -.07607 | .02437 | .00963 | -.05359 | .03014 | -.02284 | .00175 | -.00141 | .19318 |
| -49.996 | 99.790 | 99.76500 | -.07813 | .01672 | .01189 | -.05119 | .02768 | -.02116 | .00429 | -.00110 | .19364 |
| -50.224 | 199.740 | 99.93300 | -.07931 | .01055 | .01107 | -.04924 | .02585 | -.01846 | .00557 | -.00108 | .19370 |
| | GRADIENT | .00000 | .00000 | .00000 | .00000 | .00000 | .00000 | .00000 | .00000 | .00000 | .00000 |

RUN NO. 3213/ 0 RN/L = 2.36 GRADIENT INTERVAL = -5.00/ 5.00

| Y | X | Z | ALPHA | BETA | PHI | CN | CLM | CY | CYN | CBL | CA |
|---|---|---|---|---|---|---|---|---|---|---|---|
| -101.840 | 199.620 | 100.02000 | -.07967 | .00933 | .01297 | -.04467 | .02311 | -.02145 | .00781 | -.00146 | .19432 |
| -101.530 | 99.741 | 100.03000 | -.07899 | .01520 | .01501 | -.04683 | .02487 | -.02480 | .00703 | -.00139 | .19462 |
| -101.150 | -.275 | 99.99100 | -.07854 | .01848 | .01315 | -.04901 | .02629 | -.02526 | .00579 | -.00165 | .19424 |
| | GRADIENT | .00000 | .00000 | .00000 | .00000 | .00000 | .00000 | .00000 | .00000 | .00000 | .00000 |

IA143, AEDC V41A-P8A, O/ET W/R.H. SRB SEPARATING (OVX047) ( 23 MAY 77 )

REFERENCE DATA

SREF = 2690.0000 SQ.FT. XMRP = 1097.0000 IN. XT
LREF = 1290.3000 INCHES YMRP = .0000 IN. YT
BREF = 1290.3000 INCHES ZMRP = 450.0000 IN. ZT
SCALE = .0100

PARAMETRIC DATA

ALPHA = .000 BETA = .000
DALPHA = .000 DBETA = .000
Z = 100.000 MACH = 4.500
JET PC = .000

RUN NO. 3300/ 0 RN/L = 2.37 GRADIENT INTERVAL = -5.00/ 5.00

| Y | X | Z | ALPHA | BETA | PHI | CN | CLM | CY | CYN | CBL | CA |
|---|---|---|---|---|---|---|---|---|---|---|---|
| -10.593 | 199.560 | 99.79400 | -.08158 | .01212 | .01023 | -.05663 | .03004 | -.02262 | .00720 | -.00210 | .19880 |
| -10.613 | 99.684 | 99.94900 | -.08052 | .01661 | .00935 | -.05816 | .03148 | -.02336 | .00557 | -.00214 | .19864 |
| -11.601 | -.380 | 100.05000 | -.07833 | .02463 | .00998 | -.05999 | .03384 | -.02660 | .00375 | -.00219 | .19874 |
| | GRADIENT | .00000 | .00000 | .00000 | .00000 | .00000 | .00000 | .00000 | .00000 | .00000 | .00000 |

IA143, AEDC V41A-P8A, O/ET W/R.H. SRB SEPARATING (OVX048) ( 20 MAY 77 )

REFERENCE DATA

SREF = 2690.0000 SQ.FT. XMRP = 1097.0000 IN. XT
LREF = 1290.3000 INCHES YMRP = .0000 IN. YT
BREF = 1290.3000 INCHES ZMRP = 450.0000 IN. ZT
SCALE = .0100

PARAMETRIC DATA

ALPHA = .000 BETA = .000
DALPHA = .000 DBETA = .000
Z = 200.000 MACH = 4.500
JET PC = .000

RUN NO. 3208/ 0 RN/L = 2.35 GRADIENT INTERVAL = -5.00/ 5.00

| Y | X | Z | ALPHA | BETA | PHI | CN | CLM | CY | CYN | CBL | CA |
|---|---|---|---|---|---|---|---|---|---|---|---|
| -10.793 | -.139 | 200.34000 | -.07219 | .01857 | .00409 | -.04349 | .02661 | -.01827 | .00181 | -.00192 | .19403 |
| -10.187 | 99.792 | 199.58000 | -.07492 | .01311 | .00371 | -.04226 | .02417 | -.01687 | .00351 | -.00206 | .19332 |
| -10.358 | 199.810 | 199.69000 | -.07748 | .00830 | .00065 | -.04154 | .02188 | -.01392 | .00404 | -.00236 | .19153 |
| | GRADIENT | .00000 | .00000 | .00000 | .00000 | .00000 | .00000 | .00000 | .00000 | .00000 | .00000 |

RUN NO. 3209/ 0 RN/L = 2.34 GRADIENT INTERVAL = -5.00/ 5.00

| Y | X | Z | ALPHA | BETA | PHI | CN | CLM | CY | CYN | CBL | CA |
|---|---|---|---|---|---|---|---|---|---|---|---|
| -52.009 | 199.630 | 200.04000 | -.07853 | .00825 | .00066 | -.03775 | .01915 | -.01698 | .00578 | -.00306 | .19206 |
| -48.715 | 99.832 | 200.16000 | -.07630 | .01260 | .00495 | -.03925 | .02175 | -.01952 | .00523 | -.00245 | .19396 |
| -50.790 | -.246 | 200.09000 | -.07503 | .01546 | .00567 | -.04157 | .02389 | -.01950 | .00392 | -.00209 | .19428 |
| | GRADIENT | .00000 | .00000 | .00000 | .00000 | .00000 | .00000 | .00000 | .00000 | .00000 | .00000 |

RUN NO. 3214/ 0 RN/L = 2.37 GRADIENT INTERVAL = -5.00/ 5.00

| Y | X | Z | ALPHA | BETA | PHI | CN | CLM | CY | CYN | CBL | CA |
|---|---|---|---|---|---|---|---|---|---|---|---|
| -100.200 | -.181 | 200.09000 | -.07845 | .00845 | .00784 | -.04044 | .02113 | -.01950 | .00711 | -.00214 | .19338 |
| -100.760 | 99.789 | 199.81000 | -.07891 | .00820 | .00580 | -.03615 | .01839 | -.02128 | .00823 | -.00299 | .19337 |
| -100.050 | 199.830 | 199.75000 | -.07996 | .00625 | .00273 | -.03393 | .01613 | -.01991 | .00835 | -.00346 | .19175 |
| | GRADIENT | .00000 | .00000 | .00000 | .00000 | .00000 | .00000 | .00000 | .00000 | .00000 | .00000 |

IA143, AEDC V41A-P8A, O/ET W/R.H. SRB SEPARATING (OVX049) ( 23 MAY 77 )

REFERENCE DATA

SREF = 2690.0000 SQ.FT. XMRP = 1097.0000 IN. XT
LREF = 1290.3000 INCHES YMRP = .0000 IN. YT
BREF = 1290.3000 INCHES ZMRP = 450.0000 IN. ZT
SCALE = .0100

PARAMETRIC DATA

ALPHA = .000 BETA = .000
DALPHA = .000 DBETA = .000
Z = 200.000 MACH = 4.500
JET PC = .000

RUN NO. 3301/ 0 RN/L = 2.37 GRADIENT INTERVAL = -5.00/ 5.00

| Y | X | Z | ALPHA | BETA | PHI | CN | CLM | CY | CYN | CBL | CA |
|---|---|---|---|---|---|---|---|---|---|---|---|
| -11.106 | -.399 | 200.31000 | -.07504 | .01882 | .00501 | -.05021 | .03024 | -.02313 | .00445 | -.00284 | .19970 |
| -10.191 | 99.664 | 199.50000 | -.07748 | .01344 | .00483 | -.04796 | .02743 | -.02221 | .00638 | -.00305 | .19927 |
| -7.007 | 199.510 | 199.60000 | -.08008 | .00869 | .00153 | -.04769 | .02537 | -.01914 | .00680 | -.00335 | .19749 |
| | GRADIENT | .00000 | .00000 | .00000 | .00000 | .00000 | .00000 | .00000 | .00000 | .00000 | .00000 |

IA143, AEDC V41A-P8A, O/ET W/R.H. SRB SEPARATING (OVX050) ( 20 MAY 77 )

REFERENCE DATA

SREF = 2690.0000 SQ.FT. XMRP = 1097.0000 IN. XT
LREF = 1290.3000 INCHES YMRP = .0000 IN. YT
BREF = 1290.3000 INCHES ZMRP = 450.0000 IN. ZT
SCALE = .0100

PARAMETRIC DATA

ALPHA = .000 BETA = .000
DALPHA = .000 DBETA = -4.000
Z = .000 MACH = 4.500
JET PC = 1225.000

RUN NO. 3215/ 0 RN/L = 2.38 GRADIENT INTERVAL = -5.00/ 5.00

| Y | X | Z | ALPHA | BETA | PHI | CN | CLM | CY | CYN | CBL | CA |
|---|---|---|---|---|---|---|---|---|---|---|---|
| -100.470 | -.918 | -.27710 | -.20737 | .14203 | .01397 | -.08915 | -.03472 | -.07408 | -.02284 | -.00403 | .14934 |
| -100.800 | 99.821 | .46448 | -.19007 | .16578 | .03119 | -.09811 | -.01952 | -.06310 | -.03974 | .00374 | .14887 |
| -100.170 | 199.710 | .35986 | -.16801 | .15524 | .03802 | -.09519 | -.00544 | -.05842 | -.03757 | .00549 | .16248 |
| | GRADIENT | .00000 | .00000 | .00000 | .00000 | .00000 | .00000 | .00000 | .00000 | .00000 | .00000 |

RUN NO. 3220/ 0 RN/L = 2.38 GRADIENT INTERVAL = -5.00/ 5.00

| Y | X | Z | ALPHA | BETA | PHI | CN | CLM | CY | CYN | CBL | CA |
|---|---|---|---|---|---|---|---|---|---|---|---|
| -149.910 | 199.690 | -.15149 | -.16305 | .15386 | .03601 | -.09618 | -.00062 | -.05475 | -.03899 | .00581 | .16851 |
| -151.190 | 99.840 | -.42097 | -.17767 | .14997 | .02603 | -.09209 | -.01517 | -.04897 | -.04044 | .00479 | .15162 |
| -150.520 | -.211 | -.48083 | -.19102 | .14430 | .01866 | -.08994 | -.02352 | -.04999 | -.03729 | .00262 | .15434 |
| | GRADIENT | .00000 | .00000 | .00000 | .00000 | .00000 | .00000 | .00000 | .00000 | .00000 | .00000 |

RUN NO. 3221/ 0 RN/L = 2.38 GRADIENT INTERVAL = -5.00/ 5.00

| Y | X | Z | ALPHA | BETA | PHI | CN | CLM | CY | CYN | CBL | CA |
|---|---|---|---|---|---|---|---|---|---|---|---|
| -200.270 | -.167 | -.04618 | -.18511 | .15428 | .02149 | -.09302 | -.01762 | -.04507 | -.04460 | .00505 | .15760 |
| -200.390 | 99.740 | .35424 | -.16964 | .15550 | .02484 | -.09363 | -.00777 | -.04581 | -.04474 | .00566 | .16006 |
| -200.180 | 199.810 | .42755 | -.15873 | .15667 | .03238 | -.09862 | .00504 | -.05572 | -.03970 | .00503 | .17622 |
| | GRADIENT | .00000 | .00000 | .00000 | .00000 | .00000 | .00000 | .00000 | .00000 | .00000 | .00000 |

IA143, AEDC V41A-P8A, O/ET W/R.H. SRB SEPARATING (OVX051) ( 20 MAY 77 )

REFERENCE DATA

SREF = 2690.0000 SQ.FT. XMRP = 1097.0000 IN. XT
LREF = 1290.3000 INCHES YMRP = .0000 IN. YT
BREF = 1290.3000 INCHES ZMRP = 450.0000 IN. ZT
SCALE = .0100

PARAMETRIC DATA

ALPHA = .000 BETA = .000
DALPHA = .000 DBETA = -4.000
Z = .000 MACH = 4.500
JET PC = 1225.000

RUN NO. 3296/ 0 RN/L = 2.36 GRADIENT INTERVAL = -5.00/ 5.00

| Y | X | Z | ALPHA | BETA | PHI | CN | CLM | CY | CYN | CBL | CA |
|---|---|---|---|---|---|---|---|---|---|---|---|
| -99.928 | -.985 | -.27402 | -.20830 | .14307 | .01480 | -.09210 | -.03270 | -.07560 | -.02240 | -.00414 | .15265 |
| -100.200 | 99.571 | .37289 | -.19008 | .16495 | .03109 | -.10039 | -.01757 | -.06507 | -.03817 | .00318 | .15111 |
| -99.812 | 199.500 | .53763 | -.16876 | .15723 | .03963 | -.09779 | -.00364 | -.06235 | -.03624 | .00505 | .16548 |
| | GRADIENT | .00000 | .00000 | .00000 | .00000 | .00000 | .00000 | .00000 | .00000 | .00000 | .00000 |

IA143, AEDC V41A-P8A, O/ET W/R.H. SRB SEPARATING (OVX052) ( 20 MAY 77 )

REFERENCE DATA

SREF = 2690.0000 SQ.FT. XMRP = 1097.0000 IN. XT
LREF = 1290.3000 INCHES YMRP = .0000 IN. YT
BREF = 1290.3000 INCHES ZMRP = 450.0000 IN. ZT
SCALE = .0100

PARAMETRIC DATA

ALPHA = .000 BETA = .000
DALPHA = .000 DBETA = -4.000
Z = 100.000 MACH = 4.500
JET PC = 1225.000

RUN NO. 3216/ 0 RN/L = 2.38 GRADIENT INTERVAL = -5.00/ 5.00

| Y | X | Z | ALPHA | BETA | PHI | CN | CLM | CY | CYN | CBL | CA |
|---|---|---|---|---|---|---|---|---|---|---|---|
| -101.320 | 199.580 | 100.58000 | -.15173 | .23958 | .05327 | -.07343 | -.00926 | -.11454 | -.04431 | .00168 | .16017 |
| -100.930 | 99.726 | 98.93200 | -.18179 | .24875 | .05590 | -.09356 | -.01670 | -.10304 | -.05491 | .00551 | .15187 |
| -100.930 | -.193 | 99.81900 | -.19888 | .24038 | .04162 | -.07892 | -.03474 | -.11366 | -.04519 | -.00048 | .15385 |
| | GRADIENT | .00000 | .00000 | .00000 | .00000 | .00000 | .00000 | .00000 | .00000 | .00000 | .00000 |

RUN NO. 3219/ 0 RN/L = 2.38 GRADIENT INTERVAL = -5.00/ 5.00

| Y | X | Z | ALPHA | BETA | PHI | CN | CLM | CY | CYN | CBL | CA |
|---|---|---|---|---|---|---|---|---|---|---|---|
| -149.410 | -.143 | 98.97100 | -.18486 | .21435 | .03210 | -.08003 | -.02465 | -.08430 | -.04981 | .00245 | .15954 |
| -150.630 | 99.831 | 100.02000 | -.17542 | .22536 | .04364 | -.09273 | -.01263 | -.08513 | -.05432 | .00543 | .15562 |
| -149.940 | 199.810 | 100.38000 | -.15796 | .21149 | .04733 | -.09509 | .00124 | -.08472 | -.04834 | .00533 | .16678 |
| | GRADIENT | .00000 | .00000 | .00000 | .00000 | .00000 | .00000 | .00000 | .00000 | .00000 | .00000 |

RUN NO. 3222/ 0 RN/L = 2.38 GRADIENT INTERVAL = -5.00/ 5.00

| Y | X | Z | ALPHA | BETA | PHI | CN | CLM | CY | CYN | CBL | CA |
|---|---|---|---|---|---|---|---|---|---|---|---|
| -201.050 | 199.650 | 99.74300 | -.15922 | .20959 | .04050 | -.10297 | .00697 | -.08520 | -.04717 | .00366 | .17492 |
| -200.790 | 99.799 | 99.64100 | -.16894 | .21434 | .03649 | -.09504 | -.00603 | -.07860 | -.05298 | .00467 | .16230 |
| -200.420 | -.232 | 99.74100 | -.17780 | .20546 | .02975 | -.08825 | -.01452 | -.07378 | -.05166 | .00375 | .16504 |
| | GRADIENT | .00000 | .00000 | .00000 | .00000 | .00000 | .00000 | .00000 | .00000 | .00000 | .00000 |

IA143, AEDC V41A-P8A, O/ET W/R.H. SRB SEPARATING (OVX053) ( 20 MAY 77 )

REFERENCE DATA

SREF = 2690.0000 SQ.FT. XMRP = 1097.0000 IN. XT
LREF = 1290.3000 INCHES YMRP = .0000 IN. YT
BREF = 1290.3000 INCHES ZMRP = 450.0000 IN. ZT
SCALE = .0100

PARAMETRIC DATA

ALPHA = .000 BETA = .000
DALPHA = .000 DBETA = -4.000
Z = 100.000 MACH = 4.500
JET PC = 1225.000

RUN NO. 3297/ 0 RN/L = 2.36 GRADIENT INTERVAL = -5.00/ 5.00

| Y | X | Z | ALPHA | BETA | PHI | CN | CLM | CY | CYN | CBL | CA |
|---|---|---|---|---|---|---|---|---|---|---|---|
| -101.420 | 199.480 | 100.34000 | -.15436 | .23773 | .05464 | -.07981 | -.00619 | -.11643 | -.04242 | .00140 | .16416 |
| -100.860 | 99.626 | 99.08000 | -.18258 | .24636 | .05532 | -.09657 | -.01471 | -.10371 | -.05339 | .00505 | .15476 |
| -100.640 | -.267 | 99.62800 | -.19902 | .24095 | .04207 | -.08206 | -.03222 | -.11555 | -.04431 | -.00080 | .15695 |
| | GRADIENT | .00000 | .00000 | .00000 | .00000 | .00000 | .00000 | .00000 | .00000 | .00000 | .00000 |

IA143, AEDC V41A-P8A, O/ET W/R.H. SRB SEPARATING (OVX054) ( 20 MAY 77 )

REFERENCE DATA

SREF = 2690.0000 SQ.FT. XMRP = 1097.0000 IN. XT
LREF = 1290.3000 INCHES YMRP = .0000 IN. YT
BREF = 1290.3000 INCHES ZMRP = 450.0000 IN. ZT
SCALE = .0100

PARAMETRIC DATA

ALPHA = .000 BETA = .000
DALPHA = .000 DBETA = -4.000
Z = 200.000 MACH = 4.500
JET PC = 1225.000

RUN NO. 3217/ 0 RN/L = 2.38 GRADIENT INTERVAL = -5.00/ 5.00

| Y | X | Z | ALPHA | BETA | PHI | CN | CLM | CY | CYN | CBL | CA |
|---|---|---|---|---|---|---|---|---|---|---|---|
| -101.630 | -.166 | 201.59000 | -.13003 | .31619 | .05733 | -.00148 | -.03696 | -.14141 | -.06386 | .00170 | .16818 |
| -101.220 | 99.724 | 199.75000 | -.12250 | .35482 | .08386 | -.04911 | -.00689 | -.15893 | -.07163 | .00592 | .15884 |
| -100.130 | 199.730 | 201.27000 | -.07526 | .34084 | .08150 | -.00954 | -.00092 | -.16266 | -.06317 | .00358 | .16687 |
| | GRADIENT | .00000 | .00000 | .00000 | .00000 | .00000 | .00000 | .00000 | .00000 | .00000 | .00000 |

RUN NO. 3218/ 0 RN/L = 2.38 GRADIENT INTERVAL = -5.00/ 5.00

| Y | X | Z | ALPHA | BETA | PHI | CN | CLM | CY | CYN | CBL | CA |
|---|---|---|---|---|---|---|---|---|---|---|---|
| -150.670 | 199.760 | 197.81000 | -.14091 | .31395 | .07068 | -.08067 | .00458 | -.14856 | -.05892 | .00270 | .17531 |
| -150.630 | 99.929 | 199.71000 | -.14493 | .31711 | .06538 | -.06720 | -.00723 | -.13752 | -.06652 | .00435 | .16794 |
| -150.100 | -.237 | 200.15000 | -.14175 | .28346 | .04568 | -.04086 | -.01974 | -.12088 | -.06056 | .00171 | .17257 |
| | GRADIENT | .00000 | .00000 | .00000 | .00000 | .00000 | .00000 | .00000 | .00000 | .00000 | .00000 |

RUN NO. 3223/ 0 RN/L = 2.38 GRADIENT INTERVAL = -5.00/ 5.00

| Y | X | Z | ALPHA | BETA | PHI | CN | CLM | CY | CYN | CBL | CA |
|---|---|---|---|---|---|---|---|---|---|---|---|
| -201.930 | -.249 | 200.70000 | -.14855 | .27179 | .04260 | -.06391 | -.00934 | -.10910 | -.06194 | .00297 | .17648 |
| -200.700 | 99.713 | 199.68000 | -.14889 | .29516 | .05544 | -.08017 | -.00065 | -.12689 | -.06246 | .00316 | .17354 |
| -200.670 | 199.770 | 199.90000 | -.14697 | .29105 | .05735 | -.09597 | .01132 | -.13973 | -.05339 | .00032 | .18082 |
| | GRADIENT | .00000 | .00000 | .00000 | .00000 | .00000 | .00000 | .00000 | .00000 | .00000 | .00000 |

IA143, AEDC V41A-P8A, O/ET W/R.H. SRB SEPARATING (OVX055) ( 20 MAY 77 )

REFERENCE DATA

SREF = 2690.0000 SQ.FT. XMRP = 1097.0000 IN. XT
LREF = 1290.3000 INCHES YMRP = .0000 IN. YT
BREF = 1290.3000 INCHES ZMRP = 450.0000 IN. ZT
SCALE = .0100

PARAMETRIC DATA

ALPHA = .000 BETA = .000
DALPHA = .000 DBETA = -4.000
Z = 200.000 MACH = 4.500
JET PC = 1225.000

RUN NO. 3298/ 0 RN/L = 2.36 GRADIENT INTERVAL = -5.00/ 5.00

| Y | X | Z | ALPHA | BETA | PHI | CN | CLM | CY | CYN | CBL | CA |
|---|---|---|---|---|---|---|---|---|---|---|---|
| -101.840 | -.368 | 201.66000 | -.13314 | .31505 | .05689 | -.00692 | -.03517 | -.14358 | -.06215 | .00104 | .17008 |
| -101.060 | 99.638 | 199.63000 | -.12588 | .35162 | .08281 | -.05379 | -.00574 | -.16013 | -.06954 | .00521 | .16058 |
| -99.503 | 199.580 | 201.26000 | -.07950 | .33821 | .08074 | -.01457 | -.00007 | -.16498 | -.06065 | .00270 | .16841 |
| | GRADIENT | .00000 | .00000 | .00000 | .00000 | .00000 | .00000 | .00000 | .00000 | .00000 | .00000 |

IA143, AEDC V41A-P8A, O/ET W/R.H. SRB SEPARATING (OVX056) ( 20 MAY 77 )

REFERENCE DATA

SREF = 2690.0000 SQ.FT. XMRP = 1097.0000 IN. XT
LREF = 1290.3000 INCHES YMRP = .0000 IN. YT
BREF = 1290.3000 INCHES ZMRP = 450.0000 IN. ZT
SCALE = .0100

PARAMETRIC DATA

ALPHA = .000 BETA = .000
DALPHA = .000 DBETA = -2.000
Z = .000 MACH = 4.500
JET PC = 1225.000

RUN NO. 3224/ 0 RN/L = 2.38 GRADIENT INTERVAL = -5.00/ 5.00

| Y | X | Z | ALPHA | BETA | PHI | CN | CLM | CY | CYN | CBL | CA |
|---|---|---|---|---|---|---|---|---|---|---|---|
| -51.087 | -1.074 | -.37149 | -.22720 | .19586 | .04043 | -.10741 | -.03603 | -.10539 | -.02952 | -.00197 | .14600 |
| -50.727 | 99.831 | .49442 | -.20433 | .19464 | .04965 | -.10743 | -.02316 | -.08542 | -.04021 | .00445 | .14467 |
| -48.369 | 199.630 | 1.01230 | -.17337 | .14717 | .02120 | -.08091 | -.02060 | -.06504 | -.03014 | -.00011 | .14536 |
| | GRADIENT | .00000 | .00000 | .00000 | .00000 | .00000 | .00000 | .00000 | .00000 | .00000 | .00000 |

RUN NO. 3229/ 0 RN/L = 2.38 GRADIENT INTERVAL = -5.00/ 5.00

| Y | X | Z | ALPHA | BETA | PHI | CN | CLM | CY | CYN | CBL | CA |
|---|---|---|---|---|---|---|---|---|---|---|---|
| -99.324 | 199.710 | -1.12420 | -.16780 | .15593 | .03795 | -.09561 | -.00572 | -.05905 | -.03748 | .00536 | .15917 |
| -100.780 | 99.774 | -.64876 | -.19094 | .16587 | .03222 | -.09785 | -.02000 | -.05908 | -.04192 | .00485 | .14886 |
| -100.600 | -.180 | -.35645 | -.20654 | .15263 | .02020 | -.09495 | -.02981 | -.05747 | -.03691 | .00182 | .15351 |
| | GRADIENT | .00000 | .00000 | .00000 | .00000 | .00000 | .00000 | .00000 | .00000 | .00000 | .00000 |

RUN NO. 3230/ 0 RN/L = 2.38 GRADIENT INTERVAL = -5.00/ 5.00

| Y | X | Z | ALPHA | BETA | PHI | CN | CLM | CY | CYN | CBL | CA |
|---|---|---|---|---|---|---|---|---|---|---|---|
| -149.960 | -.137 | -.11965 | -.19095 | .15066 | .01989 | -.09503 | -.01967 | -.04922 | -.04057 | .00349 | .15783 |
| -151.050 | 99.810 | .46948 | -.17734 | .15473 | .02643 | -.09587 | -.01239 | -.05041 | -.04180 | .00487 | .15335 |
| -150.450 | 199.590 | .23265 | -.16264 | .15372 | .03418 | -.09794 | .00075 | -.05374 | -.03942 | .00564 | .16849 |
| | GRADIENT | .00000 | .00000 | .00000 | .00000 | .00000 | .00000 | .00000 | .00000 | .00000 | .00000 |

IA143, AEDC V41A-P8A, O/ET W/R.H. SRB SEPARATING (OVX057) ( 20 MAY 77 )

REFERENCE DATA

SREF = 2690.0000 SQ.FT. XMRP = 1097.0000 IN. XT
LREF = 1290.3000 INCHES YMRP = .0000 IN. YT
BREF = 1290.3000 INCHES ZMRP = 450.0000 IN. ZT
SCALE = .0100

PARAMETRIC DATA

ALPHA = .000 BETA = .000
DALPHA = .000 DBETA = -2.000
Z = 100.000 MACH = 4.500
JET PC = 1225.000

RUN NO. 3225/ 0 RN/L = 2.38 GRADIENT INTERVAL = -5.00/ 5.00

| Y | X | Z | ALPHA | BETA | PHI | CN | CLM | CY | CYN | CBL | CA |
|---|---|---|---|---|---|---|---|---|---|---|---|
| -52.755 | 199.710 | 101.26000 | -.12160 | .24051 | .05511 | -.03040 | -.01733 | -.10833 | -.04814 | .00354 | .15843 |
| -52.367 | 99.666 | 99.30700 | -.14723 | .27860 | .06378 | -.05688 | -.01893 | -.13258 | -.05179 | .00243 | .14825 |
| -52.002 | -.181 | 99.11700 | -.18723 | .30848 | .06821 | -.05651 | -.04088 | -.16079 | -.04949 | -.00103 | .15451 |
| | GRADIENT | .00000 | .00000 | .00000 | .00000 | .00000 | .00000 | .00000 | .00000 | .00000 | .00000 |

IA143, AEDC V41A-P8A, O/ET W/R.H. SRB SEPARATING (OVX057) ( 20 MAY 77 )

REFERENCE DATA

SREF = 2690.0000 SQ.FT. XMRP = 1097.0000 IN. XT
LREF = 1290.3000 INCHES YMRP = .0000 IN. YT
BREF = 1290.3000 INCHES ZMRP = 450.0000 IN. ZT
SCALE = .0100

PARAMETRIC DATA

ALPHA = .000 BETA = .000
DALPHA = .000 DBETA = -2.000
Z = 100.000 MACH = 4.500
JET PC = 1225.000

RUN NO. 3228/ 0 RN/L = 2.38 GRADIENT INTERVAL = -5.00/ 5.00

| Y | X | Z | ALPHA | BETA | PHI | CN | CLM | CY | CYN | CBL | CA |
|---|---|---|---|---|---|---|---|---|---|---|---|
| -99.980 | -.189 | 97.7^300 | -.19741 | .25548 | .04676 | -.08623 | -.02819 | -.10744 | -.05540 | .00305 | .15975 |
| -99.965 | 99.872 | 99.98800 | -.18389 | .25508 | .05708 | -.09388 | -.01747 | -.10623 | -.05594 | .00545 | .15286 |
| -100.160 | 199.700 | 101.48000 | -.14029 | .25457 | .04927 | -.04884 | -.01809 | -.12850 | -.04316 | -.00133 | .15503 |
| | GRADIENT | .00000 | .00000 | .00000 | .00000 | .00000 | .00000 | .00000 | .00000 | .00000 | .00000 |

RUN NO. 3231/ 0 RN/L = 2.37 GRADIENT INTERVAL = -5.00/ 5.00

| Y | X | Z | ALPHA | BETA | PHI | CN | CLM | CY | CYN | CBL | CA |
|---|---|---|---|---|---|---|---|---|---|---|---|
| -151.750 | 199.760 | 100.04000 | -.15768 | .21672 | .04767 | -.09596 | .00196 | -.08954 | -.04797 | .00465 | .16684 |
| -151.450 | 99.780 | 99.53100 | -.17494 | .22779 | .04312 | -.09377 | -.01126 | -.08782 | -.05391 | .00487 | .15778 |
| -151.080 | -.089 | 99.67400 | -.18462 | .21842 | .03255 | -.08577 | -.01986 | -.08409 | -.05179 | .00289 | .16547 |
| | GRADIENT | .00000 | .00000 | .00000 | .00000 | .00000 | .00000 | .00000 | .00000 | .00000 | .00000 |

IA143, AEDC V41A-P8A, O/ET W/R.H. SRB SEPARATING (OVX058) ( 20 MAY 77 )

REFERENCE DATA

SREF = 2690.0000 SQ.FT. XMRP = 1097.0000 IN. XT
LREF = 1290.3000 INCHES YMRP = .0000 IN. YT
BREF = 1290.3000 INCHES ZMRP = 450.0000 IN. ZT
SCALE = .0100

PARAMETRIC DATA

ALPHA = .000 BETA = .000
DALPHA = .000 DBETA = -2.000
Z = 200.000 MACH = 4.500
JET PC = 1225.000

RUN NO. 3226/ 0 RN/L = 2.38 GRADIENT INTERVAL = -5.00/ 5.00

| Y | X | Z | ALPHA | BETA | PHI | CN | CLM | CY | CYN | CBL | CA |
|---|---|---|---|---|---|---|---|---|---|---|---|
| -50.728 | -.309 | 199.82000 | -.01381 | .24069 | .04644 | .06412 | -.00770 | -.10927 | -.04776 | .00155 | .17020 |
| -51.509 | 99.823 | 199.95000 | -.06610 | .47207 | .13190 | -.00574 | .00564 | -.22348 | -.08836 | .00925 | .18252 |
| -50.276 | 199.660 | 200.34000 | -.05455 | .43630 | .13381 | -.00150 | .01020 | -.21650 | -.07624 | .00879 | .18423 |
| | GRADIENT | .00000 | .00000 | .00000 | .00000 | .00000 | .00000 | .00000 | .00000 | .00000 | .00000 |

RUN NO. 3227/ 0 RN/L = 2.38 GRADIENT INTERVAL = -5.00/ 5.00

| Y | X | Z | ALPHA | BETA | PHI | CN | CLM | CY | CYN | CBL | CA |
|---|---|---|---|---|---|---|---|---|---|---|---|
| -99.234 | 199.650 | 199.28000 | -.07416 | .35240 | .08697 | -.00770 | -.00054 | -.17031 | -.06408 | .00377 | .17051 |
| -100.870 | 99.885 | 198.60000 | -.11518 | .36588 | .08530 | -.04120 | -.00524 | -.16457 | -.07341 | .00568 | .16791 |
| -100.310 | -.188 | 200.29000 | -.10974 | .32228 | .06156 | -.01321 | -.01602 | -.14537 | -.06446 | .00211 | .17895 |
| | GRADIENT | .00000 | .00000 | .00000 | .00000 | .00000 | .00000 | .00000 | .00000 | .00000 | .00000 |

IA143, AEDC V41A-P8A, O/ET W/R.H. SRB SEPARATING (OVX058) ( 20 MAY 77 )

REFERENCE DATA

SREF = 2690.0000 SQ.FT. XMRP = 1097.0000 IN. XT
LREF = 1290.3000 INCHES YMRP = .0000 IN. YT
BREF = 1290.3000 INCHES ZMRP = 450.0000 IN. ZT
SCALE = .0100

PARAMETRIC DATA

ALPHA = .000 BETA = .000
DALPHA = .000 DBETA = -2.000
Z = 200.000 MACH = 4.500
JET PC = 1225.000

RUN NO. 3232/ 0 RN/L = 2.37 GRADIENT INTERVAL = -5.00/ 5.00

| Y | X | Z | ALPHA | BETA | PHI | CN | CLM | CY | CYN | CBL | CA |
|---|---|---|---|---|---|---|---|---|---|---|---|
| -151.760 | -.186 | 200.97000 | -.14006 | .29329 | .04771 | -.04729 | -.01388 | -.12301 | -.06384 | .00233 | .17764 |
| -151.580 | 99.818 | 199.63000 | -.14333 | .32616 | .06551 | -.06712 | -.00569 | -.14432 | -.06682 | .00346 | .17098 |
| -150.420 | 199.720 | 199.96000 | -.14060 | .32897 | .07166 | -.08071 | .00527 | -.16098 | -.05868 | .00108 | .17730 |
| | GRADIENT | .00000 | .00000 | .00000 | .00000 | .00000 | .00000 | .00000 | .00000 | .00000 | .00000 |

IA143, AEDC V41A-P8A, O/ET W/R.H. SRB SEPARATING (OVX059) ( 20 MAY 77 )

REFERENCE DATA

SREF = 2690.0000 SQ.FT. XMRP = 1097.0000 IN. XT
LREF = 1290.3000 INCHES YMRP = .0000 IN. YT
BREF = 1290.3000 INCHES ZMRP = 450.0000 IN. ZT
SCALE = .0100

PARAMETRIC DATA

ALPHA = .000 BETA = .000
DALPHA = .000 DBETA = .000
Z = .000 MACH = 4.500
JET PC = 1225.000

RUN NO. 3233/ 0 RN/L = 2.37 GRADIENT INTERVAL = -5.00/ 5.00

| Y | X | Z | ALPHA | BETA | PHI | CN | CLM | CY | CYN | CBL | CA |
|---|---|---|---|---|---|---|---|---|---|---|---|
| -10.582 | -.883 | -.35688 | -.24339 | .22541 | .05036 | -.12181 | -.03721 | -.12407 | -.03245 | -.00213 | .14517 |
| -9.739 | 99.787 | .86196 | -.20343 | .20522 | .05193 | -.10335 | -.02525 | -.09880 | -.03750 | .00259 | .14369 |
| -8.895 | 199.650 | .89590 | -.18029 | .15915 | .02344 | -.07449 | -.02709 | -.07476 | -.03017 | -.00102 | .15139 |
| | GRADIENT | .00000 | .00000 | .00000 | .00000 | .00000 | .00000 | .00000 | .00000 | .00000 | .00000 |

RUN NO. 3238/ 0 RN/L = 2.37 GRADIENT INTERVAL = -5.00/ 5.00

| Y | X | Z | ALPHA | BETA | PHI | CN | CLM | CY | CYN | CBL | CA |
|---|---|---|---|---|---|---|---|---|---|---|---|
| -48.941 | 199.700 | -1.34830 | -.17518 | .14910 | .01782 | -.08347 | -.01960 | -.07094 | -.02771 | -.00203 | .14784 |
| -52.779 | 99.889 | -1.34680 | -.20436 | .18665 | .04655 | -.10827 | -.02234 | -.08087 | -.03921 | .00430 | .14657 |
| -51.308 | -.254 | -.56546 | -.22665 | .20217 | .04485 | -.11093 | -.03238 | -.09281 | -.03944 | .00227 | .15177 |
| | GRADIENT | .00000 | .00000 | .00000 | .00000 | .00000 | .00000 | .00000 | .00000 | .00000 | .00000 |

RUN NO. 3239/ 0 RN/L = 2.37 GRADIENT INTERVAL = -5.00/ 5.00

| Y | X | Z | ALPHA | BETA | PHI | CN | CLM | CY | CYN | CBL | CA |
|---|---|---|---|---|---|---|---|---|---|---|---|
| -100.320 | -.310 | .01408 | -.20690 | .15774 | .02346 | -.09881 | -.02674 | -.05894 | -.03838 | .00252 | .15800 |
| -100.830 | 99.935 | .39520 | -.19149 | .16619 | .03309 | -.10099 | -.01791 | -.05999 | -.04158 | .00486 | .15163 |
| -100.440 | 199.600 | .55405 | -.16913 | .15636 | .03856 | -.09834 | -.00460 | -.06041 | -.03693 | .00521 | .16064 |
| | GRADIENT | .00000 | .00000 | .00000 | .00000 | .00000 | .00000 | .00000 | .00000 | .00000 | .00000 |

IA143, AEDC V41A-P8A, O/ET W/R.H. SRB SEPARATING (OVX060) ( 20 MAY 77 )

REFERENCE DATA

SREF = 2690.0000 SQ.FT. XMRP = 1097.0000 IN. XT
LREF = 1290.3000 INCHES YMRP = .0000 IN. YT
BREF = 1290.3000 INCHES ZMRP = 450.0000 IN. ZT
SCALE = .0100

PARAMETRIC DATA

ALPHA = .000 BETA = .000
DALPHA = .000 DBETA = .000
Z = 100.000 MACH = 4.500
JET PC = 1225.000

RUN NO. 3234/ 0 RN/L = 2.37 GRADIENT INTERVAL = -5.00/ 5.00

| Y | X | Z | ALPHA | BETA | PHI | CN | CLM | CY | CYN | CBL | CA |
|---|---|---|---|---|---|---|---|---|---|---|---|
| -13.583 | 199.670 | 101.08000 | -.13136 | .30945 | .09805 | -.03935 | -.01643 | -.15175 | -.05500 | .00732 | .16440 |
| -11.354 | 99.675 | 99.64700 | -.13854 | .31986 | .08727 | -.03923 | -.02077 | -.15519 | -.05781 | .00502 | .16391 |
| -11.910 | -.284 | 98.98600 | -.17283 | .34213 | .08326 | -.05008 | -.03370 | -.17430 | -.05712 | .00135 | .16622 |
| | GRADIENT | .00000 | .00000 | .00000 | .00000 | .00000 | .00000 | .00000 | .00000 | .00000 | .00000 |

RUN NO. 3237/ 0 RN/L = 2.37 GRADIENT INTERVAL = -5.00/ 5.00

| Y | X | Z | ALPHA | BETA | PHI | CN | CLM | CY | CYN | CBL | CA |
|---|---|---|---|---|---|---|---|---|---|---|---|
| -50.636 | -.093 | 99.98600 | -.18118 | .32433 | .07401 | -.06354 | -.03091 | -.16060 | -.05682 | .00134 | .16530 |
| -49.346 | 99.843 | 101.13000 | -.13385 | .27712 | .06170 | -.03759 | -.01969 | -.12956 | -.05281 | .00259 | .16077 |
| -49.845 | 199.700 | 100.41000 | -.12333 | .24788 | .05781 | -.03076 | -.01730 | -.11286 | -.04895 | .00358 | .16218 |
| | GRADIENT | .00000 | .00000 | .00000 | .00000 | .00000 | .00000 | .00000 | .00000 | .00000 | .00000 |

RUN NO. 3240/ 0 RN/L = 2.37 GRADIENT INTERVAL = -5.00/ 5.00

| Y | X | Z | ALPHA | BETA | PHI | CN | CLM | CY | CYN | CBL | CA |
|---|---|---|---|---|---|---|---|---|---|---|---|
| -102.010 | 199.630 | 101.03000 | -.14298 | .26339 | .05172 | -.05057 | -.01780 | -.13656 | -.04268 | -.00205 | .15894 |
| -100.630 | 99.758 | 98.21100 | -.18575 | .25794 | .05736 | -.09547 | -.01705 | -.10895 | -.05557 | .00505 | .15487 |
| -101.370 | -.336 | 99.91200 | -.19711 | .25776 | .04679 | -.08784 | -.02570 | -.10521 | -.05765 | .00372 | .16578 |
| | GRADIENT | .00000 | .00000 | .00000 | .00000 | .00000 | .00000 | .00000 | .00000 | .00000 | .00000 |

IA143, AEDC V41A-P8A, O/ET W/R.H. SRB SEPARATING (OVX061) ( 20 MAY 77 )

REFERENCE DATA

SREF = 2690.0000 SQ.FT. XMRP = 1097.0000 IN. XT
LREF = 1290.3000 INCHES YMRP = .0000 IN. YT
BREF = 1290.3000 INCHES ZMRP = 450.0000 IN. ZT
SCALE = .0100

PARAMETRIC DATA

ALPHA = .000 BETA = .000
DALPHA = .000 DBETA = .000
Z = 200.000 MACH = 4.500
JET PC = 1225.000

RUN NO. 3235/ 0 RN/L = 2.37 GRADIENT INTERVAL = -5.00/ 5.00

| Y | X | Z | ALPHA | BETA | PHI | CN | CLM | CY | CYN | CBL | CA |
|---|---|---|---|---|---|---|---|---|---|---|---|
| -10.672 | -.365 | 199.89000 | -.03808 | .58547 | .15779 | .03033 | .00695 | -.28168 | -.10713 | .00922 | .21054 |
| -12.798 | 99.830 | 200.22000 | -.02110 | .64630 | .20004 | .01005 | .02401 | -.32424 | -.11056 | .01241 | .18982 |
| -9.135 | 199.780 | 200.24000 | -.01831 | .56539 | .19762 | .01525 | .02443 | -.30244 | -.08623 | .01126 | .19811 |
| | GRADIENT | .00000 | .00000 | .00000 | .00000 | .00000 | .00000 | .00000 | .00000 | .00000 | .00000 |

IA143, AEDC V41A-P8A, O/ET W/R.H. SRB SEPARATING (OVX061) ( 20 MAY 77 )

REFERENCE DATA

SREF = 2690.0000 SQ.FT. XMRP = 1097.0000 IN. XT
LREF = 1290.3000 INCHES YMRP = .0000 IN. YT
BREF = 1290.3000 INCHES ZMRP = 450.0000 IN. ZT
SCALE = .0100

PARAMETRIC DATA

ALPHA = .000 BETA = .000
DALPHA = .000 DBETA = .000
Z = 200.000 MACH = 4.500
JET PC = 1225.000

RUN NO. 3236/ 0 RN/L = 2.37 GRADIENT INTERVAL = -5.00/ 5.00

| Y | X | Z | ALPHA | BETA | PHI | CN | CLM | CY | CYN | CBL | CA |
|---|---|---|---|---|---|---|---|---|---|---|---|
| -48.556 | 199.730 | 198.97000 | -.05309 | .45729 | .14482 | -.00163 | .01235 | -.23020 | -.07796 | .00937 | .18973 |
| -51.638 | 99.889 | 199.44000 | -.06480 | .49980 | .14380 | -.00770 | .00888 | -.24160 | -.09081 | .00952 | .18859 |
| -46.974 | -.284 | 200.99000 | -.02284 | .32203 | .07545 | .03772 | .00591 | -.15953 | -.05632 | .00171 | .18553 |
| | GRADIENT | .00000 | .00000 | .00000 | .00000 | .00000 | .00000 | .00000 | .00000 | .00000 | .00000 |

RUN NO. 3241/ 0 RN/L = 2.37 GRADIENT INTERVAL = -5.00/ 5.00

| Y | X | Z | ALPHA | BETA | PHI | CN | CLM | CY | CYN | CBL | CA |
|---|---|---|---|---|---|---|---|---|---|---|---|
| -101.160 | -.329 | 200.18000 | -.10321 | .33377 | .06495 | -.01363 | -.01040 | -.14647 | -.06902 | .00337 | .18611 |
| -101.710 | 99.872 | 199.80000 | -.10413 | .37457 | .08677 | -.03097 | -.00336 | -.17136 | -.07342 | .00501 | .17434 |
| -100.490 | 199.710 | 200.98000 | -.07131 | .36129 | .09069 | -.00577 | .00059 | -.17699 | -.06431 | .00361 | .17320 |
| | GRADIENT | .00000 | .00000 | .00000 | .00000 | .00000 | .00000 | .00000 | .00000 | .00000 | .00000 |

IA143, AEDC V41A-P8A, O/ET W/R.H. SRB SEPARATING (OVX062) ( 20 MAY 77 )

REFERENCE DATA

SREF = 2690.0000 SQ.FT. XMRP = 1097.0000 IN. XT
LREF = 1290.3000 INCHES YMRP = .0000 IN. YT
BREF = 1290.3000 INCHES ZMRP = 450.0000 IN. ZT
SCALE = .0100

PARAMETRIC DATA

ALPHA = .000 BETA = .000
DALPHA = .000 DBETA = 2.000
Z = .000 MACH = 4.500
JET PC = 1225.000

RUN NO. 3242/ 0 RN/L = 2.37 GRADIENT INTERVAL = -5.00/ 5.00

| Y | X | Z | ALPHA | BETA | PHI | CN | CLM | CY | CYN | CBL | CA |
|---|---|---|---|---|---|---|---|---|---|---|---|
| -10.369 | -.910 | -.27027 | -.24402 | .23070 | .05491 | -.12257 | -.03600 | -.11567 | -.03954 | .00111 | .15011 |
| -9.649 | 99.745 | 1.28360 | -.19889 | .19495 | .04345 | -.09557 | -.02609 | -.09561 | -.03462 | .00084 | .14844 |
| -9.180 | 199.720 | .69743 | -.18298 | .15933 | .02122 | -.07725 | -.02635 | -.07603 | -.02948 | -.00178 | .15409 |
| | GRADIENT | .00000 | .00000 | .00000 | .00000 | .00000 | .00000 | .00000 | .00000 | .00000 | .00000 |

RUN NO. 3247/ 0 RN/L = 2.36 GRADIENT INTERVAL = -5.00/ 5.00

| Y | X | Z | ALPHA | BETA | PHI | CN | CLM | CY | CYN | CBL | CA |
|---|---|---|---|---|---|---|---|---|---|---|---|
| -48.589 | 199.720 | -1.35340 | -.17777 | .15255 | .01675 | -.08499 | -.01940 | -.07477 | -.02715 | -.00288 | .15169 |
| -52.849 | 99.746 | -1.40960 | -.20573 | .18685 | .04735 | -.11001 | -.02132 | -.08153 | -.03885 | .00431 | .14967 |
| -51.579 | -.277 | -.55434 | -.22599 | .19667 | .04370 | -.11223 | -.03021 | -.08772 | -.03987 | .00283 | .15686 |
| | GRADIENT | .00000 | .00000 | .00000 | .00000 | .00000 | .00000 | .00000 | .00000 | .00000 | .00000 |

IA143, AEDC V41A-P8A, O/ET W/R.H. SRB SEPARATING (OVX062) ( 20 MAY 77 )

REFERENCE DATA

SREF = 2690.0000 SQ.FT. XMRP = 1097.0000 IN. XT
LREF = 1290.3000 INCHES YMRP = .0000 IN. YT
BREF = 1290.3000 INCHES ZMRP = 450.0000 IN. ZT
SCALE = .0100

PARAMETRIC DATA

ALPHA = .000 BETA = .000
DALPHA = .000 DBETA = 2.000
Z = .000 MACH = 4.500
JET PC = 1225.000

RUN NO. 3248/ 0 RN/L = 2.36 GRADIENT INTERVAL = -5.00/ 5.00

| Y | X | Z | ALPHA | BETA | PHI | CN | CLM | CY | CYN | CBL | CA |
|---|---|---|---|---|---|---|---|---|---|---|---|
| -99.851 | -.295 | -.01377 | -.20807 | .16051 | .02511 | -.10227 | -.02460 | -.06128 | -.03834 | .00251 | .16170 |
| -100.260 | 99.687 | .35505 | -.19153 | .16432 | .03342 | -.10395 | -.01564 | -.06098 | -.04013 | .00455 | .15386 |
| -100.590 | 199.630 | .53214 | -.16910 | .15719 | .03946 | -.10042 | -.00271 | -.06268 | -.03600 | .00493 | .16337 |
| | GRADIENT | .00000 | .00000 | .00000 | .00000 | .00000 | .00000 | .00000 | .00000 | .00000 | .00000 |

IA143, AEDC V41A-P8A, O/ET W/R.H. SRB SEPARATING (OVX063) ( 20 MAY 77 )

REFERENCE DATA

SREF = 2690.0000 SQ.FT. XMRP = 1097.0000 IN. XT
LREF = 1290.3000 INCHES YMRP = .0000 IN. YT
BREF = 1290.3000 INCHES ZMRP = 450.0000 IN. ZT
SCALE = .0100

PARAMETRIC DATA

ALPHA = .000 BETA = .000
DALPHA = .000 DBETA = 2.000
Z = 100.000 MACH = 4.500
JET PC = 1225.000

RUN NO. 3243/ 0 RN/L = 2.37 GRADIENT INTERVAL = -5.00/ 5.00

| Y | X | Z | ALPHA | BETA | PHI | CN | CLM | CY | CYN | CBL | CA |
|---|---|---|---|---|---|---|---|---|---|---|---|
| -14.075 | 199.640 | 100.93000 | -.13738 | .32106 | .10357 | -.04589 | -.01550 | -.15915 | -.05609 | .00756 | .16700 |
| -10.681 | 99.664 | 99.83800 | -.13952 | .32067 | .08647 | -.03841 | -.02081 | -.15319 | -.05932 | .00537 | .16849 |
| -11.340 | -.191 | 98.92300 | -.16973 | .34598 | .08584 | -.05139 | -.02955 | -.17037 | -.06110 | .00306 | .17346 |
| | GRADIENT | .00000 | .00000 | .00000 | .00000 | .00000 | .00000 | .00000 | .00000 | .00000 | .00000 |

RUN NO. 3246/ 0 RN/L = 2.37 GRADIENT INTERVAL = -5.00/ 5.00

| Y | X | Z | ALPHA | BETA | PHI | CN | CLM | CY | CYN | CBL | CA |
|---|---|---|---|---|---|---|---|---|---|---|---|
| -50.902 | -.225 | 99.91800 | -.18252 | .33303 | .07692 | -.06728 | -.02825 | -.15723 | -.06260 | .00331 | .17075 |
| -48.634 | 99.790 | 101.58000 | -.12803 | .27271 | .05914 | -.02894 | -.01959 | -.12825 | -.05161 | .00208 | .16904 |
| -50.113 | 199.600 | 100.23000 | -.12519 | .25418 | .05933 | -.03312 | -.01617 | -.11683 | -.04959 | .00342 | .16595 |
| | GRADIENT | .00000 | .00000 | .00000 | .00000 | .00000 | .00000 | .00000 | .00000 | .00000 | .00000 |

RUN NO. 3249/ 0 RN/L = 2.37 GRADIENT INTERVAL = -5.00/ 5.00

| Y | X | Z | ALPHA | BETA | PHI | CN | CLM | CY | CYN | CBL | CA |
|---|---|---|---|---|---|---|---|---|---|---|---|
| -102.330 | 199.750 | 101.31000 | -.14329 | .26743 | .05463 | -.05221 | -.01590 | -.13925 | -.04299 | -.00178 | .16397 |
| -100.520 | 99.669 | 98.09200 | -.18657 | .25932 | .05732 | -.09673 | -.01642 | -.11074 | -.05527 | .00475 | .15685 |
| -101.280 | -.185 | 99.82200 | -.19651 | .26000 | .04651 | -.08764 | -.02450 | -.10672 | -.05789 | .00349 | .17047 |
| | GRADIENT | .00000 | .00000 | .00000 | .00000 | .00000 | .00000 | .00000 | .00000 | .00000 | .00000 |

IA143, AEDC V41A-P8A, O/ET W/R.H. SRB SEPARATING (OVX064) ( 20 MAY 77 )

REFERENCE DATA

SREF = 2690.0000 SQ.FT. XMRP = 1097.0000 IN. XT
LREF = 1290.3000 INCHES YMRP = .0000 IN. YT
BREF = 1290.3000 INCHES ZMRP = 450.0000 IN. ZT
SCALE = .0100

PARAMETRIC DATA

ALPHA = .000 BETA = .000
DALPHA = .000 DBETA = 2.000
Z = 200.000 MACH = 4.500
JET PC = 1225.000

RUN NO. 3244/ 0 RN/L = 2.37 GRADIENT INTERVAL = -5.00/ 5.00

| Y | X | Z | ALPHA | BETA | PHI | CN | CLM | CY | CYN | CBL | CA |
|---|---|---|---|---|---|---|---|---|---|---|---|
| -10.836 | -.336 | 199.93000 | -.03712 | .58973 | .16141 | .02672 | .01114 | -.28406 | -.10781 | .00975 | .21747 |
| -12.169 | 99.885 | 200.22000 | -.01999 | .64219 | .20037 | .01000 | .02606 | -.32401 | -.10903 | .01231 | .19603 |
| -9.731 | 199.650 | 200.29000 | -.01587 | .57183 | .20245 | .01689 | .02563 | -.30865 | -.08589 | .01136 | .20150 |
| | GRADIENT | .00000 | .00000 | .00000 | .00000 | .00000 | .00000 | .00000 | .00000 | .00000 | .00000 |

RUN NO. 3245/ 0 RN/L = 2.37 GRADIENT INTERVAL = -5.00/ 5.00

| Y | X | Z | ALPHA | BETA | PHI | CN | CLM | CY | CYN | CBL | CA |
|---|---|---|---|---|---|---|---|---|---|---|---|
| -48.087 | 199.580 | 198.88000 | -.05300 | .46851 | .15085 | -.00326 | .01397 | -.23930 | -.07801 | .00934 | .19257 |
| -51.355 | 99.697 | 199.46000 | -.06068 | .50475 | .14603 | -.00441 | .01007 | -.24441 | -.09147 | .00968 | .19192 |
| -47.741 | -.300 | 200.64000 | -.03258 | .36061 | .09017 | .02216 | .01165 | -.21270 | -.04399 | -.00474 | .19580 |
| | GRADIENT | .00000 | .00000 | .00000 | .00000 | .00000 | .00000 | .00000 | .00000 | .00000 | .00000 |

RUN NO. 3250/ 0 RN/L = 2.37 GRADIENT INTERVAL = -5.00/ 5.00

| Y | X | Z | ALPHA | BETA | PHI | CN | CLM | CY | CYN | CBL | CA |
|---|---|---|---|---|---|---|---|---|---|---|---|
| -102.240 | -.135 | 202.61000 | -.09460 | .34296 | .06771 | -.00784 | -.00731 | -.15079 | -.07073 | .00358 | .19278 |
| -101.850 | 99.781 | 199.77000 | -.09847 | .38274 | .08832 | -.02555 | -.00222 | -.17847 | -.07320 | .00429 | .17914 |
| -100.060 | 199.750 | 200.90000 | -.06956 | .36625 | .09386 | -.00425 | .00128 | -.18049 | -.06458 | .00381 | .17575 |
| | GRADIENT | .00000 | .00000 | .00000 | .00000 | .00000 | .00000 | .00000 | .00000 | .00000 | .00000 |

IA143, AEDC V41A-P8A, O/ET W/R.H. SRB SEPARATING (OVX065) ( 20 MAY 77 )

REFERENCE DATA

SREF = 2690.0000 SQ.FT. XMRP = 1097.0000 IN. XT
LREF = 1290.3000 INCHES YMRP = .0000 IN. YT
BREF = 1290.3000 INCHES ZMRP = 450.0000 IN. ZT
SCALE = .0100

PARAMETRIC DATA

ALPHA = .000 BETA = .000
DALPHA = -4.000 DBETA = -4.000
Z = .000 MACH = 4.500
JET PC = 1225.000

RUN NO. 3251/ 0 RN/L = 2.38 GRADIENT INTERVAL = -5.00/ 5.00

| Y | X | Z | ALPHA | BETA | PHI | CN | CLM | CY | CYN | CBL | CA |
|---|---|---|---|---|---|---|---|---|---|---|---|
| -100.390 | -1.013 | -.13844 | -.21333 | .14886 | .00645 | -.09358 | -.03244 | -.09395 | -.01470 | -.00969 | .16293 |
| -100.440 | 99.728 | .17930 | -.20407 | .17651 | .02842 | -.09629 | -.02736 | -.07418 | -.03831 | .00135 | .15435 |
| -99.993 | 199.650 | .58241 | -.17922 | .16134 | .03708 | -.09859 | -.01063 | -.06656 | -.03573 | .00384 | .15904 |
| | GRADIENT | .00000 | .00000 | .00000 | .00000 | .00000 | .00000 | .00000 | .00000 | .00000 | .00000 |

IA143, AEDC V41A-P8A, O/ET W/R.H. SRB SEPARATING (OVX065) ( 20 MAY 77 )

REFERENCE DATA

SREF = 2690.0000 SQ.FT. XMRP = 1097.0000 IN. XT
LREF = 1290.3000 INCHES YMRP = .0000 IN. YT
BREF = 1290.3000 INCHES ZMRP = 450.0000 IN. ZT
SCALE = .0100

PARAMETRIC DATA

ALPHA = .000 BETA = .000
DALPHA = -4.000 DBETA = -4.000
Z = .000 MACH = 4.500
JET PC = 1225.000

RUN NO. 3256/ 0 RN/L = 2.38 GRADIENT INTERVAL = -5.00/ 5.00

| Y | X | Z | ALPHA | BETA | PHI | CN | CLM | CY | CYN | CBL | CA |
|---|---|---|---|---|---|---|---|---|---|---|---|
| -149.000 | 199.720 | .07077 | -.17102 | .15659 | .03277 | -.09928 | -.00444 | -.06000 | -.03729 | .00413 | .16393 |
| -150.530 | 99.746 | -.23358 | -.18924 | .15984 | .02232 | -.09501 | -.01943 | -.06128 | -.03800 | .00188 | .15480 |
| -149.590 | -.180 | -.29474 | -.19825 | .14470 | .00875 | -.09335 | -.02370 | -.06868 | -.02699 | -.00370 | .16342 |
| | GRADIENT | .00000 | .00000 | .00000 | .00000 | .00000 | .00000 | .00000 | .00000 | .00000 | .00000 |

RUN NO. 3257/ 0 RN/L = 2.38 GRADIENT INTERVAL = -5.00/ 5.00

| Y | X | Z | ALPHA | BETA | PHI | CN | CLM | CY | CYN | CBL | CA |
|---|---|---|---|---|---|---|---|---|---|---|---|
| -200.320 | -.231 | -.01331 | -.19458 | .15201 | .01319 | -.09699 | -.01871 | -.05804 | -.03627 | .00018 | .16668 |
| -200.470 | 99.783 | .49852 | -.18160 | .16250 | .01988 | -.09644 | -.01227 | -.05504 | -.04276 | .00301 | .16375 |
| -200.190 | 199.630 | .39852 | -.16609 | .16128 | .02986 | -.10127 | .00174 | -.05963 | -.03956 | .00392 | .17331 |
| | GRADIENT | .00000 | .00000 | .00000 | .00000 | .00000 | .00000 | .00000 | .00000 | .00000 | .00000 |

IA143, AEDC V41A-P8A, O/ET W/R.H. SRB SEPARATING (OVX066) ( 20 MAY 77 )

REFERENCE DATA

SREF = 2690.0000 SQ.FT. XMRP = 1097.0000 IN. XT
LREF = 1290.3000 INCHES YMRP = .0000 IN. YT
BREF = 1290.3000 INCHES ZMRP = 450.0000 IN. ZT
SCALE = .0100

PARAMETRIC DATA

ALPHA = .000 BETA = .000
DALPHA = -4.000 DBETA = -4.000
Z = 100.000 MACH = 4.500
JET PC = 1225.000

RUN NO. 3252/ 0 RN/L = 2.38 GRADIENT INTERVAL = -5.00/ 5.00

| Y | X | Z | ALPHA | BETA | PHI | CN | CLM | CY | CYN | CBL | CA |
|---|---|---|---|---|---|---|---|---|---|---|---|
| -101.840 | 199.600 | 100.33000 | -.16342 | .25707 | .06150 | -.08092 | -.01192 | -.12363 | -.04700 | .00249 | .15847 |
| -100.770 | 99.684 | 99.14000 | -.19550 | .25217 | .05139 | -.09761 | -.02160 | -.12541 | -.04384 | -.00034 | .15465 |
| -100.310 | -.312 | 99.94100 | -.19882 | .21706 | .02693 | -.08203 | -.03066 | -.13436 | -.02290 | -.00994 | .16343 |
| | GRADIENT | .00000 | .00000 | .00000 | .00000 | .00000 | .00000 | .00000 | .00000 | .00000 | .00000 |

RUN NO. 3255/ 0 RN/L = 2.38 GRADIENT INTERVAL = -5.00/ 5.00

| Y | X | Z | ALPHA | BETA | PHI | CN | CLM | CY | CYN | CBL | CA |
|---|---|---|---|---|---|---|---|---|---|---|---|
| -149.050 | -.200 | 98.62500 | -.18313 | .19699 | .02506 | -.08098 | -.02110 | -.09818 | -.03407 | -.00343 | .16813 |
| -151.270 | 99.765 | 99.95300 | -.18540 | .22797 | .04172 | -.09399 | -.01724 | -.09591 | -.04950 | .00275 | .15772 |
| -149.690 | 199.690 | 100.29000 | -.16819 | .21959 | .04834 | -.09917 | -.00365 | -.09577 | -.04573 | .00355 | .16028 |
| | GRADIENT | .00000 | .00000 | .00000 | .00000 | .00000 | .00000 | .00000 | .00000 | .00000 | .00000 |

IA143, AEDC V41A-P8A, O/ET W/R.H. SRB SEPARATING (OVX066) ( 20 MAY 77 )

REFERENCE DATA

SREF = 2690.0000 SQ.FT. XMRP = 1097.0000 IN. XT
LREF = 1290.3000 INCHES YMRP = .0000 IN. YT
BREF = 1290.3000 INCHES ZMRP = 450.0000 IN. ZT
SCALE = .0100

PARAMETRIC DATA

ALPHA = .000 BETA = .000
DALPHA = -4.000 DBETA = -4.000
Z = 100.000 MACH = 4.500
JET PC = 1225.000

RUN NO. 3258/ 0 RN/L = 2.38 GRADIENT INTERVAL = -5.00/ 5.00

| Y | X | Z | ALPHA | BETA | PHI | CN | CLM | CY | CYN | CBL | CA |
|---|---|---|---|---|---|---|---|---|---|---|---|
| -200.910 | 199.580 | 99.81000 | -.16561 | .21893 | .04162 | -.10481 | .00339 | -.09410 | -.04633 | .00248 | .17026 |
| -200.800 | 99.713 | 99.63100 | -.17770 | .22402 | .03868 | -.09809 | -.00862 | -.09084 | -.05049 | .00299 | .16546 |
| -200.440 | -.233 | 99.97600 | -.18074 | .20193 | .02906 | -.09169 | -.01258 | -.08622 | -.04307 | .00050 | .17235 |
| | GRADIENT | .00000 | .00000 | .00000 | .00000 | .00000 | .00000 | .00000 | .00000 | .00000 | .00000 |

IA143, AEDC V41A-P8A, O/ET W/R.H. SRB SEPARATING (OVX067) ( 20 MAY 77 )

REFERENCE DATA

SREF = 2690.0000 SQ.FT. XMRP = 1097.0000 IN. XT
LREF = 1290.3000 INCHES YMRP = .0000 IN. YT
BREF = 1290.3000 INCHES ZMRP = 450.0000 IN. ZT
SCALE = .0100

PARAMETRIC DATA

ALPHA = .000 BETA = .000
DALPHA = -4.000 DBETA = -4.000
Z = 200.000 MACH = 4.500
JET PC = 1225.000

RUN NO. 3253/ 0 RN/L = 2.38 GRADIENT INTERVAL = -5.00/ 5.00

| Y | X | Z | ALPHA | BETA | PHI | CN | CLM | CY | CYN | CBL | CA |
|---|---|---|---|---|---|---|---|---|---|---|---|
| -100.650 | -.309 | 199.83000 | -.08296 | .23116 | .03115 | .02551 | -.02482 | -.14835 | -.02136 | -.01131 | .17124 |
| -102.560 | 99.717 | 198.92000 | -.11303 | .35653 | .08294 | -.03709 | -.00716 | -.18075 | -.05995 | .00078 | .16425 |
| -100.290 | 199.610 | 200.81000 | -.08319 | .36071 | .08902 | -.02103 | .00211 | -.17857 | -.06320 | .00287 | .17082 |
| | GRADIENT | .00000 | .00000 | .00000 | .00000 | .00000 | .00000 | .00000 | .00000 | .00000 | .00000 |

RUN NO. 3254/ 0 RN/L = 2.38 GRADIENT INTERVAL = -5.00/ 5.00

| Y | X | Z | ALPHA | BETA | PHI | CN | CLM | CY | CYN | CBL | CA |
|---|---|---|---|---|---|---|---|---|---|---|---|
| -150.980 | 199.620 | 198.21000 | -.14251 | .33875 | .07766 | -.07682 | .00052 | -.16722 | -.05961 | .00158 | .17113 |
| -150.290 | 99.710 | 200.03000 | -.14391 | .32756 | .06807 | -.06249 | -.00927 | -.15694 | -.06027 | .00116 | .16833 |
| -148.800 | -.238 | 200.47000 | -.13032 | .24702 | .03468 | -.03076 | -.01872 | -.14505 | -.03051 | -.00868 | .17407 |
| | GRADIENT | .00000 | .00000 | .00000 | .00000 | .00000 | .00000 | .00000 | .00000 | .00000 | .00000 |

RUN NO. 3259/ 0 RN/L = 2.38 GRADIENT INTERVAL = -5.00/ 5.00

| Y | X | Z | ALPHA | BETA | PHI | CN | CLM | CY | CYN | CBL | CA |
|---|---|---|---|---|---|---|---|---|---|---|---|
| -201.000 | -.288 | 200.80000 | -.14182 | .25855 | .04358 | -.05935 | -.00735 | -.12165 | -.04891 | -.00064 | .18002 |
| -201.460 | 99.759 | 199.80000 | -.14844 | .31304 | .06217 | -.07671 | -.00214 | -.14308 | -.06151 | .00211 | .17484 |
| -200.550 | 199.710 | 199.96000 | -.14960 | .31677 | .06488 | -.09391 | .00806 | -.15800 | -.05484 | -.00050 | .17860 |
| | GRADIENT | .00000 | .00000 | .00000 | .00000 | .00000 | .00000 | .00000 | .00000 | .00000 | .00000 |

IA143, AEDC V41A-P8A, O/ET W/R.H. SRB SEPARATING (OVX068) ( 20 MAY 77 )

REFERENCE DATA

SREF = 2690.0000 SQ.FT. XMRP = 1097.0000 IN. XT
LREF = 1290.3000 INCHES YMRP = .0000 IN. YT
BREF = 1290.3000 INCHES ZMRP = 450.0000 IN. ZT
SCALE = .0100

PARAMETRIC DATA

ALPHA = .000 BETA = .000
DALPHA = -4.000 DBETA = -2.000
Z = .000 MACH = 4.500
JET PC = 1225.000

RUN NO. 3260/ 0 RN/L = 2.38 GRADIENT INTERVAL = -5.00/ 5.00

| Y | X | Z | ALPHA | BETA | PHI | CN | CLM | CY | CYN | CBL | CA |
|---|---|---|---|---|---|---|---|---|---|---|---|
| -50.759 | -.926 | -.18317 | -.23601 | .18451 | .02239 | -.11284 | -.03510 | -.11579 | -.01860 | -.00890 | .15929 |
| -50.438 | 99.679 | .48658 | -.21850 | .19447 | .03979 | -.10888 | -.02932 | -.08796 | -.03872 | .00181 | .15001 |
| -49.218 | 199.560 | 1.06370 | -.18304 | .15918 | .02623 | -.08920 | -.01970 | -.07533 | -.07981 | -.00059 | .15280 |
| | GRADIENT | .00000 | .00000 | .00000 | .00000 | .00000 | .00000 | .00000 | .00000 | .00000 | .00000 |

RUN NO. 3265/ 0 RN/L = 2.37 GRADIENT INTERVAL = -5.00/ 5.00

| Y | X | Z | ALPHA | BETA | PHI | CN | CLM | CY | CYN | CBL | CA |
|---|---|---|---|---|---|---|---|---|---|---|---|
| -98.851 | 199.530 | -.66005 | -.17809 | .15943 | .03723 | -.10170 | -.00845 | -.06661 | -.03488 | .00374 | .15804 |
| -101.040 | 99.731 | -.42682 | -.20270 | .17204 | .02967 | -.10092 | -.02369 | -.07031 | -.03846 | .00219 | .15515 |
| -100.800 | -.245 | -.25688 | -.21291 | .15336 | .01346 | -.09896 | -.02823 | -.08223 | -.02332 | -.00523 | .16652 |
| | GRADIENT | .00000 | .00000 | .00000 | .00000 | .00000 | .00000 | .00000 | .00000 | .00000 | .00000 |

RUN NO. 3266/ 0 RN/L = 2.37 GRADIENT INTERVAL = -5.00/ 5.00

| Y | X | Z | ALPHA | BETA | PHI | CN | CLM | CY | CYN | CBL | CA |
|---|---|---|---|---|---|---|---|---|---|---|---|
| -150.060 | -.322 | .06250 | -.20055 | .14873 | .01159 | -.09734 | -.02149 | -.06349 | -.03176 | -.00162 | .16909 |
| -150.960 | 99.683 | .33229 | -.19015 | .16129 | .02338 | -.09961 | -.01608 | -.06034 | -.03916 | .00241 | .16001 |
| -150.260 | 199.670 | .49726 | -.17007 | .15473 | .03186 | -.10238 | -.00149 | -.05802 | -.03752 | .00425 | .16636 |
| | GRADIENT | .00000 | .00000 | .00000 | .00000 | .00000 | .00000 | .00000 | .00000 | .00000 | .00000 |

IA143, AEDC V41A-P8A, O/ET W/R.H. SRB SEPARATING (OVX069) ( 20 MAY 77 )

REFERENCE DATA

SREF = 2690.0000 SQ.FT. XMRP = 1097.0000 IN. XT
LREF = 1290.3000 INCHES YMRP = .0000 IN. YT
BREF = 1290.3000 INCHES ZMRP = 450.0000 IN. ZT
SCALE = .0100

PARAMETRIC DATA

ALPHA = .000 BETA = .000
DALPHA = -4.000 DBETA = -2.000
Z = .000 MACH = 4.500
JET PC = 1225.000

RUN NO. 3269/ 0 RN/L = 2.37 GRADIENT INTERVAL = -5.00/ 5.00

| Y | X | Z | ALPHA | BETA | PHI | CN | CLM | CY | CYN | CBL | CA |
|---|---|---|---|---|---|---|---|---|---|---|---|
| -51.250 | -1.052 | -.30735 | -.23605 | .18333 | .02240 | -.11212 | -.03504 | -.11183 | -.02035 | -.00806 | .16200 |
| -50.562 | 99.619 | .49749 | -.21836 | .19364 | .04050 | -.10831 | -.02926 | -.08425 | -.04056 | .00278 | .15230 |
| -49.120 | 199.590 | 1.14920 | -.18224 | .15892 | .02729 | -.08786 | -.01952 | -.07134 | -.03202 | .00055 | .15560 |
| | GRADIENT | .00000 | .00000 | .00000 | .00000 | .00000 | .00000 | .00000 | .00000 | .00000 | .00000 |

IA143, AEDC V41A-P8A, O/ET W/R.H. SRB SEPARATING (OVX069) ( 20 MAY 77 )

REFERENCE DATA

SREF = 2690.0000 SQ.FT. XMRP = 1097.0000 IN. XT
LREF = 1290.3000 INCHES YMRP = .0000 IN. YT
BREF = 1290.3000 INCHES ZMRP = 450.0000 IN. ZT
SCALE = .0100

PARAMETRIC DATA

ALPHA = .000 BETA = .000
DALPHA = -4.000 DBETA = -2.000
Z = .000 MACH = 4.500
JET PC = 1225.000

RUN NO. 3274/ 0 RN/L = 2.37 GRADIENT INTERVAL = -5.00/ 5.00

| Y | X | Z | ALPHA | BETA | PHI | CN | CLM | CY | CYN | CBL | CA |
|---|---|---|---|---|---|---|---|---|---|---|---|
| -98.403 | 199.530 | -.75336 | -.17765 | .15811 | .03767 | -.10042 | -.00859 | -.06243 | -.03658 | .00469 | .15932 |
| -101.440 | 99.727 | -.47704 | -.20255 | .17271 | .03088 | -.09976 | -.02420 | -.06765 | -.04028 | .00310 | .15564 |
| -100.690 | -.308 | -.28890 | -.21329 | .15393 | .01448 | -.09813 | -.02877 | -.07998 | -.02484 | -.00445 | .16733 |
| | GRADIENT | .00000 | .00000 | .00000 | .00000 | .00000 | .00000 | .00000 | .00000 | .00000 | .00000 |

RUN NO. 3275/ 0 RN/L = 2.37 GRADIENT INTERVAL = -5.00/ 5.00

| Y | X | Z | ALPHA | BETA | PHI | CN | CLM | CY | CYN | CBL | CA |
|---|---|---|---|---|---|---|---|---|---|---|---|
| -151.070 | -.229 | .21087 | -.20040 | .14956 | .01288 | -.09670 | -.02172 | -.06085 | -.03364 | -.00069 | .16953 |
| -150.560 | 99.665 | .28324 | -.18963 | .16129 | .02404 | -.09825 | -.01647 | -.05694 | -.04111 | .00335 | .16082 |
| -151.550 | 199.580 | .54816 | -.17002 | .15503 | .03288 | -.10186 | -.00151 | -.05566 | -.03898 | .00503 | .16753 |
| | GRADIENT | .00000 | .00000 | .00000 | .00000 | .00000 | .00000 | .00000 | .00000 | .00000 | .00000 |

IA143, AEDC V41A-P8A, O/ET W/R.H. SRB SEPARATING (OVX070) ( 20 MAY 77 )

REFERENCE DATA

SREF = 2690.0000 SQ.FT. XMRP = 1097.0000 IN. XT
LREF = 1290.3000 INCHES YMRP = .0000 IN. YT
BREF = 1290.3000 INCHES ZMRP = 450.0000 IN. ZT
SCALE = .0100

PARAMETRIC DATA

ALPHA = .000 BETA = .000
DALPHA = -4.000 DBETA = -2.000
Z = 100.000 MACH = 4.500
JET PC = 1225.000

RUN NO. 3261/ 0 RN/L = 2.38 GRADIENT INTERVAL = -5.00/ 5.00

| Y | X | Z | ALPHA | BETA | PHI | CN | CLM | CY | CYN | CBL | CA |
|---|---|---|---|---|---|---|---|---|---|---|---|
| -52.653 | 199.590 | 101.23000 | -.13482 | .26305 | .06596 | -.04517 | -.01502 | -.12274 | -.05032 | .00407 | .16455 |
| -52.111 | 99.614 | 99.19200 | -.16064 | .29720 | .07141 | -.06822 | -.01855 | -.14957 | -.05074 | .00144 | .15520 |
| -51.061 | -.222 | 99.58400 | -.18193 | .27877 | .05009 | -.06673 | -.02919 | -.18101 | -.02462 | -.01155 | .16624 |
| | GRADIENT | .00000 | .00000 | .00000 | .00000 | .00000 | .00000 | .00000 | .00000 | .00000 | .00000 |

RUN NO. 3264/ 0 RN/L = 2.37 GRADIENT INTERVAL = -5.00/ 5.00

| Y | X | Z | ALPHA | BETA | PHI | CN | CLM | CY | CYN | CBL | CA |
|---|---|---|---|---|---|---|---|---|---|---|---|
| -101.420 | -.231 | 100.16000 | -.19741 | .22750 | .03254 | -.08669 | -.02520 | -.12290 | -.03411 | -.00541 | .17234 |
| -101.500 | 99.621 | 99.96600 | -.19638 | .26447 | .05787 | -.09660 | -.02192 | -.11809 | -.05348 | .00354 | .15794 |
| -100.760 | 199.590 | 101.22000 | -.15627 | .26212 | .05834 | -.06987 | -.01370 | -.13287 | -.04425 | .00011 | .16145 |
| | GRADIENT | .00000 | .00000 | .00000 | .00000 | .00000 | .00000 | .00000 | .00000 | .00000 | .00000 |

IA143, AEDC V41A-P8A, O/ET W/R.H. SRB SEPARATING (OVX070) ( 20 MAY 77 )

REFERENCE DATA

SREF = 2690.0000 SQ.FT. XMRP = 1097.0000 IN. XT
LREF = 1290.3000 INCHES YMRP = .0000 IN. YT
BREF = 1290.3000 INCHES ZMRP = 450.0000 IN. ZT
SCALE = .0100

PARAMETRIC DATA

ALPHA = .000 BETA = .000
DALPHA = -4.000 DBETA = -2.000
Z = 100.000 MACH = 4.500
JET PC = 1225.000

RUN NO. 3267/ 0 RN/L = 2.37 GRADIENT INTERVAL = -5.00/ 5.00

| Y | X | Z | ALPHA | BETA | PHI | CN | CLM | CY | CYN | CBL | CA |
|---|---|---|---|---|---|---|---|---|---|---|---|
| -152.490 | 199.650 | 99.90900 | -.16771 | .22628 | .05008 | -.10032 | -.00143 | -.10048 | -.04608 | .00329 | .16590 |
| -151.040 | 99.713 | 99.67300 | -.18465 | .23321 | .04360 | -.09609 | -.01421 | -.09795 | -.05066 | .00303 | .16357 |
| -150.560 | -.276 | 100.15000 | -.18364 | .20566 | .02689 | -.08329 | -.01837 | -.09437 | -.04021 | -.00156 | .17603 |
| | GRADIENT | .00000 | .00000 | .00000 | .00000 | .00000 | .00000 | .00000 | .00000 | .00000 | .00000 |

IA143, AEDC V41A-P8A, O/ET W/R.H. SRB SEPARATING (OVX071) ( 20 MAY 77 )

REFERENCE DATA

SREF = 2690.0000 SQ.FT. XMRP = 1097.0000 IN. XT
LREF = 1290.3000 INCHES YMRP = .0000 IN. YT
BREF = 1290.3000 INCHES ZMRP = 450.0000 IN. ZT
SCALE = .0100

PARAMETRIC DATA

ALPHA = .000 BETA = .000
DALPHA = -4.000 DBETA = -2.000
Z = 100.000 MACH = 4.500
JET PC = 1225.000

RUN NO. 3270/ 0 RN/L = 2.37 GRADIENT INTERVAL = -5.00/ 5.00

| Y | X | Z | ALPHA | BETA | PHI | CN | CLM | CY | CYN | CBL | CA |
|---|---|---|---|---|---|---|---|---|---|---|---|
| -53.648 | 199.610 | 101.14000 | -.13428 | .26082 | .06665 | -.04418 | -.01490 | -.11779 | -.05224 | .00524 | .16676 |
| -52.052 | 99.600 | 99.28400 | -.16099 | .29247 | .07106 | -.06771 | -.01872 | -.14378 | -.05190 | .00238 | .15685 |
| -51.042 | -.183 | 99.62900 | -.18126 | .27611 | .05034 | -.06603 | -.02883 | -.17624 | -.02622 | -.01055 | .16840 |
| | GRADIENT | .00000 | .00000 | .00000 | .00000 | .00000 | .00000 | .00000 | .00000 | .00000 | .00000 |

RUN NO. 3273/ 0 RN/L = 2.37 GRADIENT INTERVAL = -5.00/ 5.00

| Y | X | Z | ALPHA | BETA | PHI | CN | CLM | CY | CYN | CBL | CA |
|---|---|---|---|---|---|---|---|---|---|---|---|
| -101.100 | -.237 | 100.12000 | -.19617 | .22752 | .03331 | -.08528 | -.02515 | -.12056 | -.03552 | -.00469 | .17345 |
| -101.360 | 99.615 | 100.03000 | -.19602 | .26478 | .05859 | -.09563 | -.02212 | -.11491 | -.05549 | .00446 | .15902 |
| -100.710 | 199.570 | 101.38000 | -.15084 | .26195 | .05747 | -.06196 | -.01496 | -.13030 | -.04564 | .00051 | .16254 |
| | GRADIENT | .00000 | .00000 | .00000 | .00000 | .00000 | .00000 | .00000 | .00000 | .00000 | .00000 |

RUN NO. 3276/ 0 RN/L = 2.37 GRADIENT INTERVAL = -5.00/ 5.00

| Y | X | Z | ALPHA | BETA | PHI | CN | CLM | CY | CYN | CBL | CA |
|---|---|---|---|---|---|---|---|---|---|---|---|
| -151.740 | 199.660 | 99.96900 | -.16712 | .22513 | .05042 | -.09892 | -.00192 | -.09690 | -.04762 | .00412 | .16602 |
| -150.930 | 99.654 | 99.58600 | -.18429 | .23246 | .04398 | -.09458 | -.01481 | -.09447 | -.05230 | .00385 | .16405 |
| -150.840 | -.337 | 100.15000 | -.18360 | .20781 | .02887 | -.08280 | -.01864 | -.09308 | -.04194 | -.00069 | .17616 |
| | GRADIENT | .00000 | .00000 | .00000 | .00000 | .00000 | .00000 | .00000 | .00000 | .00000 | .00000 |

IA143, AEDC V41A-P8A, O/ET W/R.H. SRB SEPARATING (OVX072) ( 20 MAY 77 )

REFERENCE DATA

SREF = 2690.0000 SQ.FT. XMRP = 1097.0000 IN. XT
LREF = 1290.3000 INCHES YMRP = .0000 IN. YT
BREF = 1290.3000 INCHES ZMRP = 450.0000 IN. ZT
SCALE = .0100

PARAMETRIC DATA

ALPHA = .000 BETA = .000
DALPHA = -4.000 DBETA = -2.000
Z = 200.000 MACH = 4.500
JET PC = 1225.000

RUN NO. 3262/ 0 RN/L = 2.38 GRADIENT INTERVAL = -5.00/ 5.00

| Y | X | Z | ALPHA | BETA | PHI | CN | CLM | CY | CYN | CBL | CA |
|---|---|---|---|---|---|---|---|---|---|---|---|
| -50.526 | -.269 | 199.90000 | .00204 | .15290 | .02257 | .06767 | -.00642 | -.10811 | -.00860 | -.00931 | .14404 |
| -51.608 | 99.591 | 200.00000 | -.07104 | .51500 | .14551 | -.01705 | .00894 | -.25997 | -.08741 | .00673 | .18056 |
| -48.935 | 199.600 | 200.51000 | -.05725 | .45556 | .14015 | -.00599 | .01149 | -.23289 | -.07573 | .00768 | .18523 |
| | GRADIENT | .00000 | .00000 | .00000 | .00000 | .00000 | .00000 | .00000 | .00000 | .00000 | .00000 |

RUN NO. 3263/ 0 RN/L = 2.38 GRADIENT INTERVAL = -5.00/ 5.00

| Y | X | Z | ALPHA | BETA | PHI | CN | CLM | CY | CYN | CBL | CA |
|---|---|---|---|---|---|---|---|---|---|---|---|
| -98.678 | 199.720 | 199.40000 | -.07795 | .36768 | .09251 | -.01346 | .00197 | -.18080 | -.06499 | .00355 | .17633 |
| -100.820 | 99.654 | 199.24000 | -.10174 | .37529 | .08933 | -.02579 | -.00435 | -.17862 | -.06964 | .00391 | .17730 |
| -98.969 | -.269 | 201.21000 | -.06279 | .23252 | .03719 | .02170 | -.00844 | -.14380 | -.02458 | -.00891 | .18260 |
| | GRADIENT | .00000 | .00000 | .00000 | .00000 | .00000 | .00000 | .00000 | .00000 | .00000 | .00000 |

RUN NO. 3268/ 0 RN/L = 2.37 GRADIENT INTERVAL = -5.00/ 5.00

| Y | X | Z | ALPHA | BETA | PHI | CN | CLM | CY | CYN | CBL | CA |
|---|---|---|---|---|---|---|---|---|---|---|---|
| -151.750 | -.271 | 201.51000 | -.12638 | .27265 | .04526 | -.03959 | -.00905 | -.13953 | -.04520 | -.00342 | .18404 |
| -151.790 | 99.648 | 199.60000 | -.14055 | .34493 | .07308 | -.06001 | -.00728 | -.15923 | -.06693 | .00291 | .17524 |
| -151.180 | 199.600 | 199.90000 | -.13984 | .35726 | .07970 | -.07514 | .00241 | -.17983 | -.06090 | .00040 | .17712 |
| | GRADIENT | .00000 | .00000 | .00000 | .00000 | .00000 | .00000 | .00000 | .00000 | .00000 | .00000 |

IA143, AEDC V41A-P8A, O/ET W/R.H. SRB SEPARATING (OVX073) ( 20 MAY 77 )

REFERENCE DATA

SREF = 2690.0000 SQ.FT. XMRP = 1097.0000 IN. XT
LREF = 1290.3000 INCHES YMRP = .0000 IN. YT
BREF = 1290.3000 INCHES ZMRP = 450.0000 IN. ZT
SCALE = .0100

PARAMETRIC DATA

ALPHA = .000 BETA = .000
DALPHA = -4.000 DBETA = -2.000
Z = 200.000 MACH = 4.500
JET PC = 1225.000

RUN NO. 3271/ 0 RN/L = 2.37 GRADIENT INTERVAL = -5.00/ 5.00

| Y | X | Z | ALPHA | BETA | PHI | CN | CLM | CY | CYN | CBL | CA |
|---|---|---|---|---|---|---|---|---|---|---|---|
| -50.895 | -.322 | 199.92000 | -.00117 | .15664 | .02385 | .06702 | -.00667 | -.10661 | -.01121 | -.00842 | .14954 |
| -52.076 | 99.592 | 200.03000 | -.07008 | .50891 | .14398 | -.01396 | .00804 | -.24977 | -.09049 | .00835 | .18219 |
| -49.908 | 199.640 | 200.58000 | -.05956 | .45530 | .14074 | -.00724 | .01125 | -.22982 | -.07734 | .00849 | .18689 |
| | GRADIENT | .00000 | .00000 | .00000 | .00000 | .00000 | .00000 | .00000 | .00000 | .00000 | .00000 |

IA143, AEDC V41A-P8A, O/ET W/R.H. SRB SEPARATING (OVX073) ( 20 MAY 77 )

REFERENCE DATA

SREF = 2690.0000 SQ.FT. XMRP = 1097.0000 IN. XT
LREF = 1290.3000 INCHES YMRP = .0000 IN. YT
BREF = 1290.3000 INCHES ZMRP = 450.0000 IN. ZT
SCALE = .0100

PARAMETRIC DATA

ALPHA = .000 BETA = .000
DALPHA = -4.000 DBETA = -2.000
Z = 200.000 MACH = 4.500
JET PC = 1225.000

RUN NO. 3272/ 0 RN/L = 2.37 GRADIENT INTERVAL = -5.00/ 5.00

| Y | X | Z | ALPHA | BETA | PHI | CN | CLM | CY | CYN | CBL | CA |
|---|---|---|---|---|---|---|---|---|---|---|---|
| -99.249 | 199.650 | 199.50000 | -.07840 | .36857 | .09438 | -.01332 | .00197 | -.17809 | -.06717 | .00469 | .17820 |
| -100.830 | 99.666 | 199.33000 | -.10118 | .37328 | .09006 | -.02464 | -.00439 | -.17406 | -.07134 | .00498 | .17874 |
| -97.178 | -.270 | 201.12000 | -.06283 | .23217 | .03794 | .02230 | -.00866 | -.14032 | -.02645 | -.00796 | .18342 |
| | GRADIENT | .00000 | .00000 | .00000 | .00000 | .00000 | .00000 | .00000 | .00000 | .00000 | .00000 |

RUN NO. 3277/ 0 RN/L = 2.37 GRADIENT INTERVAL = -5.00/ 5.00

| Y | X | Z | ALPHA | BETA | PHI | CN | CLM | CY | CYN | CBL | CA |
|---|---|---|---|---|---|---|---|---|---|---|---|
| -151.800 | -.291 | 201.35000 | -.12636 | .27375 | .04660 | -.03883 | -.00936 | -.13588 | -.04765 | -.00225 | .18431 |
| -151.860 | 99.758 | 199.81000 | -.13921 | .34647 | .07481 | -.05806 | -.00762 | -.15718 | -.06879 | .00385 | .17539 |
| -150.970 | 199.620 | 199.92000 | -.14009 | .35504 | .07956 | -.07467 | .00203 | -.17561 | -.06232 | .00120 | .17742 |
| | GRADIENT | .00000 | .00000 | .00000 | .00000 | .00000 | .00000 | .00000 | .00000 | .00000 | .00000 |

IA143, AEDC V41A-P8A, O/ET W/R.H. SRB SEPARATING (OVX074) ( 20 MAY 77 )

REFERENCE DATA

SREF = 2690.0000 SQ.FT. XMRP = 1097.0000 IN. XT
LREF = 1290.3000 INCHES YMRP = .0000 IN. YT
BREF = 1290.3000 INCHES ZMRP = 450.0000 IN. ZT
SCALE = .0100

PARAMETRIC DATA

ALPHA = .000 BETA = .000
DALPHA = -4.000 DBETA = .000
Z = .000 MACH = 4.500
JET PC = 1225.000

RUN NO. 3278/ 0 RN/L = 2.37 GRADIENT INTERVAL = -5.00/ 5.00

| Y | X | Z | ALPHA | BETA | PHI | CN | CLM | CY | CYN | CBL | CA |
|---|---|---|---|---|---|---|---|---|---|---|---|
| -10.435 | -1.023 | -.27142 | -.25556 | .21159 | .03340 | -.13022 | -.03696 | -.13290 | -.02130 | -.00864 | .15639 |
| -10.448 | 99.653 | .66683 | -.22949 | .21892 | .05387 | -.12082 | -.02963 | -.10751 | -.03881 | .00195 | .14571 |
| -8.826 | 199.600 | 1.28080 | -.18651 | .16796 | .02931 | -.08111 | -.02524 | -.07975 | -.03129 | -.00035 | .15808 |
| | GRADIENT | .00000 | .00000 | .00000 | .00000 | .00000 | .00000 | .00000 | .00000 | .00000 | .00000 |

RUN NO. 3283/ 0 RN/L = 2.37 GRADIENT INTERVAL = -5.00/ 5.00

| Y | X | Z | ALPHA | BETA | PHI | CN | CLM | CY | CYN | CBL | CA |
|---|---|---|---|---|---|---|---|---|---|---|---|
| -47.997 | 199.570 | -1.09920 | -.18259 | .15786 | .02314 | -.08666 | -.02053 | -.07345 | -.03025 | -.00089 | .15444 |
| -51.766 | 99.639 | -1.16490 | -.21707 | .18739 | .04101 | -.11091 | -.02713 | -.08192 | -.03893 | .00296 | .15100 |
| -51.501 | -.220 | -.32913 | -.23604 | .18091 | .02457 | -.11354 | -.03395 | -.10664 | -.02214 | -.00659 | .16297 |
| | GRADIENT | .00000 | .00000 | .00000 | .00000 | .00000 | .00000 | .00000 | .00000 | .00000 | .00000 |

IA143, AEDC V41A-P8A, O/ET W/R.H. SRB SEPARATING (OVX074) ( 20 MAY 77 )

REFERENCE DATA

SREF = 2690.0000 SQ.FT. XMRP = 1097.0000 IN. XT
LREF = 1290.3000 INCHES YMRP = .0000 IN. YT
BREF = 1290.3000 INCHES ZMRP = 450.0000 IN. ZT
SCALE = .0100

PARAMETRIC DATA

ALPHA = .000 BETA = .000
DALPHA = -4.000 DBETA = .000
Z = .000 MACH = 4.500
JET PC = 1225.000

RUN NO. 3284/ 0 RN/L = 2.37 GRADIENT INTERVAL = -5.00/ 5.00

| Y | X | Z | ALPHA | BETA | PHI | CN | CLM | CY | CYN | CBL | CA |
|---|---|---|---|---|---|---|---|---|---|---|---|
| -100.470 | -.260 | .28721 | -.21403 | .15514 | .01551 | -.09935 | -.02803 | -.07592 | -.02765 | -.00323 | .16918 |
| -102.410 | 99.601 | .29386 | -.20245 | .17141 | .03194 | -.10321 | -.02180 | -.06781 | -.03957 | .00319 | .15694 |
| -100.870 | 199.680 | .54621 | -.17726 | .15937 | .03954 | -.10355 | -.00651 | -.06442 | -.03607 | .00471 | .15963 |
| | GRADIENT | .00000 | .00000 | .00000 | .00000 | .00000 | .00000 | .00000 | .00000 | .00000 | .00000 |

IA143, AEDC V41A-P8A, O/ET W/R.H. SRB SEPARATING (OVX075) ( 20 MAY 77 )

REFERENCE DATA

SREF = 2690.0000 SQ.FT. XMRP = 1097.0000 IN. XT
LREF = 1290.3000 INCHES YMRP = .0000 IN. YT
BREF = 1290.3000 INCHES ZMRP = 450.0000 IN. ZT
SCALE = .0100

PARAMETRIC DATA

ALPHA = .000 BETA = .000
DALPHA = -4.000 DBETA = .000
Z = 100.000 MACH = 4.500
JET PC = 1225.000

RUN NO. 3279/ 0 RN/L = 2.37 GRADIENT INTERVAL = -5.00/ 5.00

| Y | X | Z | ALPHA | BETA | PHI | CN | CLM | CY | CYN | CBL | CA |
|---|---|---|---|---|---|---|---|---|---|---|---|
| -14.065 | 199.620 | 100.80000 | -.15103 | .35324 | .11638 | -.06129 | -.01328 | -.17765 | -.06030 | .00824 | .17206 |
| -13.140 | 99.603 | 98.61700 | -.19434 | .42947 | .13434 | -.11075 | -.01160 | -.28000 | -.03753 | -.00617 | .16252 |
| -9.003 | -.358 | 100.23000 | -.18722 | .36039 | .08624 | -.07680 | -.02384 | -.22616 | -.03637 | -.00866 | .17803 |
| | GRADIENT | .00000 | .00000 | .00000 | .00000 | .00000 | .00000 | .00000 | .00000 | .00000 | .00000 |

RUN NO. 3282/ 0 RN/L = 2.37 GRADIENT INTERVAL = -5.00/ 5.00

| Y | X | Z | ALPHA | BETA | PHI | CN | CLM | CY | CYN | CBL | CA |
|---|---|---|---|---|---|---|---|---|---|---|---|
| -50.964 | -.101 | 100.24000 | -.17079 | .27917 | .05676 | -.06368 | -.02204 | -.16705 | -.03266 | -.00692 | .17756 |
| -50.555 | 99.666 | 100.64000 | -.14579 | .28827 | .06924 | -.04661 | -.01966 | -.13561 | -.05451 | .00357 | .16837 |
| -50.375 | 199.640 | 100.40000 | -.13724 | .26855 | .06868 | -.04343 | -.01655 | -.12630 | -.05074 | .00419 | .16832 |
| | GRADIENT | .00000 | .00000 | .00000 | .00000 | .00000 | .00000 | .00000 | .00000 | .00000 | .00000 |

RUN NO. 3285/ 0 RN/L = 2.37 GRADIENT INTERVAL = -5.00/ 5.00

| Y | X | Z | ALPHA | BETA | PHI | CN | CLM | CY | CYN | CBL | CA |
|---|---|---|---|---|---|---|---|---|---|---|---|
| -102.520 | 199.570 | 101.03000 | -.14996 | .26847 | .05890 | -.06035 | -.01473 | -.13580 | -.04544 | -.00001 | .16529 |
| -100.670 | 99.634 | 98.41600 | -.19563 | .27178 | .05969 | -.09560 | -.02207 | -.12086 | -.05532 | .00381 | .15835 |
| -100.620 | -.235 | 99.97100 | -.19570 | .23961 | .03852 | -.08500 | -.02450 | -.11714 | -.04290 | -.00197 | .17580 |
| | GRADIENT | .00000 | .00000 | .00000 | .00000 | .00000 | .00000 | .00000 | .00000 | .00000 | .00000 |

IA143, AEDC V41A-P8A, O/ET W/R.H. SRB SEPARATING (OVX076) ( 20 MAY 77 )

REFERENCE DATA

SREF = 2690.0000 SQ.FT. XMRP = 1097.0000 IN. XT
LREF = 1290.3000 INCHES YMRP = .0000 IN. YT
BREF = 1290.3000 INCHES ZMRP = 450.0000 IN. ZT
SCALE = .0100

PARAMETRIC DATA

ALPHA = .000 BETA = .000
DALPHA = -4.000 DBETA = .000
Z = 200.000 MACH = 4.500
JET PC = 1225.000

RUN NO. 3280/ 0 RN/L = 2.37 GRADIENT INTERVAL = -5.00/ 5.00

| Y | X | Z | ALPHA | BETA | PHI | CN | CLM | CY | CYN | CBL | CA |
|---|---|---|---|---|---|---|---|---|---|---|---|
| -10.926 | -.437 | 199.88000 | -.04804 | .55249 | .14974 | .02895 | .00252 | -.28737 | -.08897 | .00392 | .21284 |
| -12.957 | 99.633 | 200.31000 | -.02004 | .66273 | .20707 | .01486 | .02107 | -.33373 | -.11328 | .01302 | .18661 |
| -8.936 | 199.620 | 200.34000 | -.02086 | .57115 | .19883 | .01462 | .02344 | -.30535 | -.08754 | .01136 | .19869 |
| | GRADIENT | .00000 | .00000 | .00000 | .00000 | .00000 | .00000 | .00000 | .00000 | .00000 | .00000 |

RUN NO. 3281/ 0 RN/L = 2.37 GRADIENT INTERVAL = -5.00/ 5.00

| Y | X | Z | ALPHA | BETA | PHI | CN | CLM | CY | CYN | CBL | CA |
|---|---|---|---|---|---|---|---|---|---|---|---|
| -48.676 | 199.550 | 199.03000 | -.05823 | .47376 | .14933 | -.00573 | .01219 | -.24254 | -.07851 | .00863 | .19163 |
| -52.514 | 99.663 | 199.51000 | -.06689 | .54659 | .16123 | -.01234 | .01030 | -.26563 | -.09855 | .01090 | .18824 |
| -48.965 | -.284 | 200.44000 | .00833 | .17521 | .03509 | .05577 | .00640 | -.10757 | -.01896 | -.00503 | .15411 |
| | GRADIENT | .00000 | .00000 | .00000 | .00000 | .00000 | .00000 | .00000 | .00000 | .00000 | .00000 |

RUN NO. 3286/ 0 RN/L = 2.37 GRADIENT INTERVAL = -5.00/ 5.00

| Y | X | Z | ALPHA | BETA | PHI | CN | CLM | CY | CYN | CBL | CA |
|---|---|---|---|---|---|---|---|---|---|---|---|
| -100.680 | -.333 | 199.96000 | -.06267 | .26361 | .04837 | .01549 | -.00238 | -.13628 | -.04288 | -.00268 | .19320 |
| -103.090 | 99.631 | 199.08000 | -.09539 | .38571 | .09235 | -.01800 | -.00345 | -.17887 | -.07420 | .00521 | .18532 |
| -100.590 | 199.680 | 200.62000 | -.07497 | .37379 | .09582 | -.00924 | .00211 | -.18255 | -.06682 | .00427 | .18041 |
| | GRADIENT | .00000 | .00000 | .00000 | .00000 | .00000 | .00000 | .00000 | .00000 | .00000 | .00000 |

IA143, AEDC V41A-P8A, O/ET W/R.H. SRB SEPARATING (OVX077) ( 20 MAY 77 )

REFERENCE DATA

SREF = 2690.0000 SQ.FT. XMRP = 1097.0000 IN. XT
LREF = 1290.3000 INCHES YMRP = .0000 IN. YT
BREF = 1290.3000 INCHES ZMRP = 450.0000 IN. ZT
SCALE = .0100

PARAMETRIC DATA

ALPHA = .000 BETA = .000
DALPHA = -4.000 DBETA = 2.000
Z = .000 MACH = 4.500
JET PC = 1225.000

RUN NO. 3287/ 0 RN/L = 2.37 GRADIENT INTERVAL = -5.00/ 5.00

| Y | X | Z | ALPHA | BETA | PHI | CN | CLM | CY | CYN | CBL | CA |
|---|---|---|---|---|---|---|---|---|---|---|---|
| -10.052 | -.961 | -.32479 | -.25787 | .22317 | .04171 | -.13048 | -.03777 | -.12800 | -.02920 | -.00500 | .15732 |
| -10.400 | 99.830 | .83950 | -.22797 | .22415 | .05745 | -.12156 | -.02868 | -.11401 | -.03755 | .00158 | .14426 |
| -9.772 | 199.590 | 1.35070 | -.19045 | .17037 | .03060 | -.08360 | -.02588 | -.08236 | -.03096 | -.00050 | .15915 |
| | GRADIENT | .00000 | .00000 | .00000 | .00000 | .00000 | .00000 | .00000 | .00000 | .00000 | .00000 |

IA143, AEDC V41A-P8A, O/ET W/R.H. SRB SEPARATING (OVX077) ( 20 MAY 77 )

REFERENCE DATA

SREF = 2690.0000 SQ.FT. XMRP = 1097.0000 IN. XT
LREF = 1290.3000 INCHES YMRP = .0000 IN. YT
BREF = 1290.3000 INCHES ZMRP = 450.0000 IN. ZT
SCALE = .0100

PARAMETRIC DATA

ALPHA = .000 BETA = .000
DALPHA = -4.000 DBETA = 2.000
Z = .000 MACH = 4.500
JET PC = 1225.000

RUN NO. 3292/ 0 RN/L = 2.36 GRADIENT INTERVAL = -5.00/ 5.00

| Y | X | Z | ALPHA | BETA | PHI | CN | CLM | CY | CYN | CBL | CA |
|---|---|---|---|---|---|---|---|---|---|---|---|
| -48.801 | 199.610 | -1.09090 | -.18465 | .16087 | .02225 | -.08850 | -.02016 | -.07730 | -.02949 | -.00174 | .15685 |
| -51.618 | 99.680 | -1.24400 | -.21783 | .18473 | .04253 | -.11404 | -.02553 | -.08353 | -.03680 | .00271 | .15178 |
| -51.198 | -.367 | -.33601 | -.23630 | .18844 | .03163 | -.11288 | -.03395 | -.09371 | -.03278 | -.00162 | .16514 |
| | GRADIENT | .00000 | .00000 | .00000 | .00000 | .00000 | .00000 | .00000 | .00000 | .00000 | .00000 |

RUN NO. 3293/ 0 RN/L = 2.36 GRADIENT INTERVAL = -5.00/ 5.00

| Y | X | Z | ALPHA | BETA | PHI | CN | CLM | CY | CYN | CBL | CA |
|---|---|---|---|---|---|---|---|---|---|---|---|
| -99.719 | -.400 | .22784 | -.21780 | .16282 | .02081 | -.10188 | -.02816 | -.06966 | -.03465 | -.00015 | .17182 |
| -100.740 | 99.614 | .38790 | -.20283 | .17302 | .03486 | -.10807 | -.01917 | -.07029 | -.03896 | .00335 | .15733 |
| -100.410 | 199.620 | .63436 | -.17793 | .16252 | .04163 | -.10625 | -.00527 | -.06773 | -.03562 | .00461 | .15976 |
| | GRADIENT | .00000 | .00000 | .00000 | .00000 | .00000 | .00000 | .00000 | .00000 | .00000 | .00000 |

IA143, AEDC V41A-P8A, O/ET W/R.H. SRB SEPARATING (OVX078) ( 20 MAY 77 )

REFERENCE DATA

SREF = 2690.0000 SQ.FT. XMRP = 1097.0000 IN. XT
LREF = 1290.3000 INCHES YMRP = .0000 IN. YT
BREF = 1290.3000 INCHES ZMRP = 450.0000 IN. ZT
SCALE = .0100

PARAMETRIC DATA

ALPHA = .000 BETA = .000
DALPHA = -4.000 DBETA = 2.000
Z = 100.000 MACH = 4.500
JET PC = 1225.000

RUN NO. 3288/ 0 RN/L = 2.37 GRADIENT INTERVAL = -5.00/ 5.00

| Y | X | Z | ALPHA | BETA | PHI | CN | CLM | CY | CYN | CBL | CA |
|---|---|---|---|---|---|---|---|---|---|---|---|
| -14.251 | 199.570 | 100.70000 | -.15485 | .36275 | .12016 | -.06452 | -.01282 | -.18449 | -.06076 | .00811 | .17549 |
| -11.949 | 99.470 | 99.44300 | -.17562 | .41031 | .12229 | -.07453 | -.01992 | -.20752 | -.06941 | .00661 | .17132 |
| -10.706 | -.285 | 99.82000 | -.17337 | .35582 | .09334 | -.08466 | -.01020 | -.28184 | -.00297 | -.02032 | .18256 |
| | GRADIENT | .00000 | .00000 | .00000 | .00000 | .00000 | .00000 | .00000 | .00000 | .00000 | .00000 |

RUN NO. 3291/ 0 RN/L = 2.37 GRADIENT INTERVAL = -5.00/ 5.00

| Y | X | Z | ALPHA | BETA | PHI | CN | CLM | CY | CYN | CBL | CA |
|---|---|---|---|---|---|---|---|---|---|---|---|
| -51.132 | -.111 | 100.23000 | -.16344 | .28202 | .06303 | -.05840 | -.01968 | -.15583 | -.04027 | -.00283 | .18304 |
| -50.354 | 99.707 | 100.75000 | -.14338 | .28769 | .06802 | -.04187 | -.01984 | -.13781 | -.05305 | .00277 | .17388 |
| -50.471 | 199.540 | 100.24000 | -.13967 | .27543 | .07129 | -.04522 | -.01622 | -.13198 | -.05078 | .00394 | .17172 |
| | GRADIENT | .00000 | .00000 | .00000 | .00000 | .00000 | .00000 | .00000 | .00000 | .00000 | .00000 |

IA143, AEDC V41A-P8A, O/ET W/R.H. SRB SEPARATING (OVX078) ( 20 MAY 77 )

REFERENCE DATA

SREF = 2690.0000 SQ.FT. XMRP = 1097.0000 IN. XT
LREF = 1290.3000 INCHES YMRP = .0000 IN. YT
BREF = 1290.3000 INCHES ZMRP = 450.0000 IN. ZT
SCALE = .0100

PARAMETRIC DATA

ALPHA = .000 BETA = .000
DALPHA = -4.000 DBETA = 2.000
Z = 100.000 MACH = 4.500
JET PC = 1225.000

RUN NO. 3294/ 0 RN/L = 2.36 GRADIENT INTERVAL = -5.00/ 5.00

| Y | X | Z | ALPHA | BETA | PHI | CN | CLM | CY | CYN | CBL | CA |
|---|---|---|---|---|---|---|---|---|---|---|---|
| -103.210 | 199.520 | 101.31000 | -.14777 | .27443 | .06025 | -.05702 | -.01461 | -.14034 | -.04556 | -.00037 | .16880 |
| -100.470 | 99.544 | 98.20900 | -.19536 | .27842 | .06063 | -.09576 | -.02145 | -.12551 | -.05565 | .00339 | .15972 |
| -100.110 | -.295 | 100.16000 | -.19495 | .25282 | .04346 | -.08333 | -.02422 | -.11477 | -.05011 | .00050 | .17898 |
| | GRADIENT | .00000 | .00000 | .00000 | .00000 | .00000 | .00000 | .00000 | .00000 | .00000 | .00000 |

IA143, AEDC V41A-P8A, O/ET W/R.H. SRB SEPARATING (OVX079) ( 20 MAY 77 )

REFERENCE DATA

SREF = 2690.0000 SQ.FT. XMRP = 1097.0000 IN. XT
LREF = 1290.3000 INCHES YMRP = .0000 IN. YT
BREF = 1290.3000 INCHES ZMRP = 450.0000 IN. ZT
SCALE = .0100

PARAMETRIC DATA

ALPHA = .000 BETA = .000
DALPHA = -4.000 DBETA = 2.000
Z = 200.000 MACH = 4.500
JET PC = 1225.000

RUN NO. 3289/ 0 RN/L = 2.37 GRADIENT INTERVAL = -5.00/ 5.00

| Y | X | Z | ALPHA | BETA | PHI | CN | CLM | CY | CYN | CBL | CA |
|---|---|---|---|---|---|---|---|---|---|---|---|
| -10.740 | -.497 | 200.02000 | -.03874 | .57064 | .15969 | .02402 | .01284 | -.28425 | -.09890 | .00796 | .22215 |
| -12.605 | 99.652 | 200.17000 | -.01797 | .67350 | .21362 | .01887 | .02140 | -.34259 | -.11282 | .01299 | .19321 |
| -8.817 | 199.680 | 200.49000 | -.01682 | .58415 | .20538 | .01809 | .02461 | -.31482 | -.08807 | .01144 | .20256 |
| | GRADIENT | .00000 | .00000 | .00000 | .00000 | .00000 | .00000 | .00000 | .00000 | .00000 | .00000 |

RUN NO. 3290/ 0 RN/L = 2.37 GRADIENT INTERVAL = -5.00/ 5.00

| Y | X | Z | ALPHA | BETA | PHI | CN | CLM | CY | CYN | CBL | CA |
|---|---|---|---|---|---|---|---|---|---|---|---|
| -48.502 | 199.640 | 199.04000 | -.05444 | .48895 | .15752 | -.00362 | .01431 | -.25198 | -.08016 | .00925 | .19692 |
| -52.061 | 99.674 | 199.44000 | -.06584 | .56586 | .16961 | -.01383 | .01283 | -.28545 | -.09636 | .00951 | .19313 |
| -48.872 | -.177 | 200.52000 | -.00400 | .24673 | .05945 | .04004 | .01260 | -.12985 | -.03895 | -.00005 | .17269 |
| | GRADIENT | .00000 | .00000 | .00000 | .00000 | .00000 | .00000 | .00000 | .00000 | .00000 | .00000 |

RUN NO. 3295/ 0 RN/L = 2.36 GRADIENT INTERVAL = -5.00/ 5.00

| Y | X | Z | ALPHA | BETA | PHI | CN | CLM | CY | CYN | CBL | CA |
|---|---|---|---|---|---|---|---|---|---|---|---|
| -101.520 | -.439 | 199.71000 | -.06566 | .29532 | .05852 | .01340 | -.00086 | -.13798 | -.05640 | .00129 | .20250 |
| -102.570 | 99.606 | 199.19000 | -.09208 | .39634 | .09518 | -.01584 | -.00173 | -.18563 | -.07542 | .00504 | .19040 |
| -100.450 | 199.660 | 200.70000 | -.07204 | .38020 | .09877 | -.00700 | .00311 | -.18761 | -.06684 | .00416 | .18312 |
| | GRADIENT | .00000 | .00000 | .00000 | .00000 | .00000 | .00000 | .00000 | .00000 | .00000 | .00000 |

IA143, AEDC V41A-P8A, O/ET W/R.H. SRB SEPARATING (OVX080) ( 20 MAY 77 )

REFERENCE DATA

SREF = 2690.0000 SQ.FT. XMRP = 1097.0000 IN. XT
LREF = 1290.3000 INCHES YMRP = .0000 IN. YT
BREF = 1290.3000 INCHES ZMRP = 450.0000 IN. ZT
SCALE = .0100

PARAMETRIC DATA

ALPHA = -15.000 BETA = 15.000
DALPHA = .000 DBETA = -4.000
Z = .000 MACH = 4.500
JET PC = .000

RUN NO. 2983/ 0 RN/L = 2.38 GRADIENT INTERVAL = -5.00/ 5.00

| Y | X | Z | ALPHA | BETA | PHI | CN | CLM | CY | CYN | CBL | CA |
|---|---|---|---|---|---|---|---|---|---|---|---|
| -101.290 | -.189 | .15824 | -15.47300 | 15.26100 | .29416 | -.47963 | .13561 | -.72109 | .24672 | -.08014 | .30636 |
| -101.300 | 99.773 | .36125 | -15.47100 | 15.25800 | .29522 | -.47824 | .13701 | -.71700 | .24579 | -.07916 | .30902 |
| -101.180 | 199.660 | .10739 | -15.46900 | 15.25200 | .29765 | -.47602 | .13684 | -.71220 | .24543 | -.07790 | .30961 |
| | GRADIENT | .00000 | .00000 | .00000 | .00000 | .00000 | .00000 | .00000 | .00000 | .00000 | .00000 |

RUN NO. 2988/ 0 RN/L = 2.37 GRADIENT INTERVAL = -5.00/ 5.00

| Y | X | Z | ALPHA | BETA | PHI | CN | CLM | CY | CYN | CBL | CA |
|---|---|---|---|---|---|---|---|---|---|---|---|
| -151.420 | 199.720 | -.84040 | -15.45900 | 15.24500 | .28159 | -.48725 | .14600 | -.67612 | .23040 | -.07376 | .30795 |
| -150.580 | 99.685 | -.21215 | -15.46200 | 15.25000 | .28313 | -.48628 | .14459 | -.68475 | .23282 | -.07509 | .30862 |
| -150.750 | -.133 | -.33092 | -15.46300 | 15.25700 | .27976 | -.48752 | .14395 | -.69051 | .23321 | -.07667 | .30720 |
| | GRADIENT | .00000 | .00000 | .00000 | .00000 | .00000 | .00000 | .00000 | .00000 | .00000 | .00000 |

RUN NO. 2989/ 0 RN/L = 2.37 GRADIENT INTERVAL = -5.00/ 5.00

| Y | X | Z | ALPHA | BETA | PHI | CN | CLM | CY | CYN | CBL | CA |
|---|---|---|---|---|---|---|---|---|---|---|---|
| -199.270 | -.241 | -.59442 | -15.45700 | 15.25700 | .27346 | -.49301 | .14980 | -.67148 | .22333 | -.07374 | .30884 |
| -201.020 | 99.742 | .17568 | -15.45700 | 15.25100 | .27679 | -.49349 | .15061 | -.66760 | .22365 | -.07257 | .30853 |
| -202.260 | 200.040 | .27638 | -15.45500 | 15.24600 | .27501 | -.49265 | .15049 | -.66078 | .22225 | -.07168 | .30771 |
| | GRADIENT | .00000 | .00000 | .00000 | .00000 | .00000 | .00000 | .00000 | .00000 | .00000 | .00000 |

IA143, AEDC V41A-P8A, O/ET W/R.H. SRB SEPARATING (OVX081) ( 20 MAY 77 )

REFERENCE DATA

SREF = 2690.0000 SQ.FT. XMRP = 1097.0000 IN. XT
LREF = 1290.3000 INCHES YMRP = .0000 IN. YT
BREF = 1290.3000 INCHES ZMRP = 450.0000 IN. ZT
SCALE = .0100

PARAMETRIC DATA

ALPHA = -15.000 BETA = 15.000
DALPHA = .000 DBETA = -4.000
Z = .000 MACH = 4.500
JET PC = .000

RUN NO. 3091/ 0 RN/L = 2.38 GRADIENT INTERVAL = -5.00/ 5.00

| Y | X | Z | ALPHA | BETA | PHI | CN | CLM | CY | CYN | CBL | CA |
|---|---|---|---|---|---|---|---|---|---|---|---|
| -101.070 | -.157 | .12490 | -15.47100 | 15.26300 | .29424 | -.47290 | .12970 | -.71723 | .24334 | -.07899 | .29286 |
| -100.950 | 99.687 | .33033 | -15.46900 | 15.26000 | .29530 | -.47156 | .13123 | -.71284 | .24216 | -.07799 | .29547 |
| -101.270 | 199.780 | .13801 | -15.46700 | 15.25500 | .29795 | -.46941 | .13111 | -.70847 | .24202 | -.07679 | .29619 |
| | GRADIENT | .00000 | .00000 | .00000 | .00000 | .00000 | .00000 | .00000 | .00000 | .00000 | .00000 |

IA143, AEDC V41A-P8A, O/ET W/R.H. SRB SEPARATING (OVX082) ( 20 MAY 77 )

REFERENCE DATA

SREF = 2690.0000 SQ.FT. XMRP = 1097.0000 IN. XT
LREF = 1290.3000 INCHES YMRP = .0000 IN. YT
BREF = 1290.3000 INCHES ZMRP = 450.0000 IN. ZT
SCALE = .0100

PARAMETRIC DATA

ALPHA = -15.000 BETA = 15.000
DALPHA = .000 DBETA = -4.000
Z = 100.000 MACH = 4.500
JET PC = .000

RUN NO. 2984/ 0 RN/L = 2.37 GRADIENT INTERVAL = -5.00/ 5.00

| Y | X | Z | ALPHA | BETA | PHI | CN | CLM | CY | CYN | CBL | CA |
|---|---|---|---|---|---|---|---|---|---|---|---|
| -99.842 | 199.540 | 100.92000 | -15.46500 | 15.24600 | .32237 | -.47969 | .14401 | -.70033 | .23851 | -.07000 | .30594 |
| -100.990 | 99.879 | 99.48300 | -15.46800 | 15.24800 | .33047 | -.48160 | .14528 | -.71057 | .24243 | -.07043 | .30749 |
| -100.340 | -.224 | 99.59200 | -15.47200 | 15.25000 | .33962 | -.48364 | .14599 | -.72055 | .24583 | -.07044 | .30727 |
| | GRADIENT | .00000 | .00000 | .00000 | .00000 | .00000 | .00000 | .00000 | .00000 | .00000 | .00000 |

RUN NO. 2987/ 0 RN/L = 2.37 GRADIENT INTERVAL = -5.00/ 5.00

| Y | X | Z | ALPHA | BETA | PHI | CN | CLM | CY | CYN | CBL | CA |
|---|---|---|---|---|---|---|---|---|---|---|---|
| -151.890 | -.043 | 99.53300 | -15.46200 | 15.24900 | .30563 | -.48931 | .14917 | -.68292 | .22955 | -.06961 | .30611 |
| -150.050 | 99.515 | 100.01000 | -15.45900 | 15.24600 | .29884 | -.49050 | .14989 | -.67182 | .22531 | -.06876 | .30396 |
| -151.380 | 199.740 | 100.02000 | -15.45700 | 15.24300 | .29440 | -.49494 | .15259 | -.66281 | .22216 | -.06792 | .30234 |
| | GRADIENT | .00000 | .00000 | .00000 | .00000 | .00000 | .00000 | .00000 | .00000 | .00000 | .00000 |

RUN NO. 2990/ 0 RN/L = 2.37 GRADIENT INTERVAL = -5.00/ 5.00

| Y | X | Z | ALPHA | BETA | PHI | CN | CLM | CY | CYN | CBL | CA |
|---|---|---|---|---|---|---|---|---|---|---|---|
| -200.830 | 199.720 | 100.30000 | -15.45300 | 15.24300 | .28595 | -.50198 | .15750 | -.64948 | .21569 | -.06675 | .30174 |
| -201.030 | 99.837 | 99.53700 | -15.45500 | 15.24600 | .28860 | -.49732 | .15449 | -.65643 | .21804 | -.06759 | .30274 |
| -200.500 | -.284 | 99.70000 | -15.45600 | 15.25000 | .29125 | -.49428 | .15263 | -.66367 | .22004 | -.06839 | .30429 |
| | GRADIENT | .00000 | .00000 | .00000 | .00000 | .00000 | .00000 | .00000 | .00000 | .00000 | .00000 |

IA143, AEDC V41A-P8A, O/ET W/R.H. SRB SEPARATING (OVX083) ( 20 MAY 77 )

REFERENCE DATA

SREF = 2690.0000 SQ.FT. XMRP = 1097.0000 IN. XT
LREF = 1290.3000 INCHES YMRP = .0000 IN. YT
BREF = 1290.3000 INCHES ZMRP = 450.0000 IN. ZT
SCALE = .0100

PARAMETRIC DATA

ALPHA = -15.000 BETA = 15.000
DALPHA = .000 DBETA = -4.000
Z = 100.000 MACH = 4.500
JET PC = .000

RUN NO. 3092/ 0 RN/L = 2.38 GRADIENT INTERVAL = -5.00/ 5.00

| Y | X | Z | ALPHA | BETA | PHI | CN | CLM | CY | CYN | CBL | CA |
|---|---|---|---|---|---|---|---|---|---|---|---|
| -100.010 | 199.700 | 100.99000 | -15.46400 | 15.24800 | .32288 | -.47311 | .13825 | -.69674 | .23537 | -.06892 | .29248 |
| -100.640 | 99.681 | 99.50800 | -15.46600 | 15.25000 | .33073 | -.47526 | .13974 | -.70679 | .23912 | -.06928 | .29427 |
| -100.180 | -.224 | 99.53900 | -15.47000 | 15.25200 | .33954 | -.47720 | .14042 | -.71604 | .24227 | -.06927 | .29359 |
| | GRADIENT | .00000 | .00000 | .00000 | .00000 | .00000 | .00000 | .00000 | .00000 | .00000 | .00000 |

IA143, AEDC V41A-P8A, O/ET W/R.H. SRB SEPARATING (OVX084) ( 20 MAY 77 )

REFERENCE DATA

SREF = 2690.0000 SQ.FT. XMRP = 1097.0000 IN. XT
LREF = 1290.3000 INCHES YMRP = .0000 IN. YT
BREF = 1290.3000 INCHES ZMRP = 450.0000 IN. ZT
SCALE = .0100

PARAMETRIC DATA

ALPHA = -15.000 BETA = 15.000
DALPHA = .000 DBETA = -4.000
Z = 200.000 MACH = 4.500
JET PC = .000

RUN NO. 2985/ 0 RN/L = 2.37 GRADIENT INTERVAL = -5.00/ 5.00

| Y | X | Z | ALPHA | BETA | PHI | CN | CLM | CY | CYN | CBL | CA |
|---|---|---|---|---|---|---|---|---|---|---|---|
| -98.922 | -.593 | 200.05000 | -15.45300 | 15.24400 | .32067 | -.49472 | .15892 | -.67158 | .22372 | -.06398 | .30157 |
| -101.270 | 99.832 | 200.06000 | -15.45100 | 15.24100 | .31450 | -.49796 | .16088 | -.66362 | .22122 | -.06375 | .30171 |
| -101.200 | 199.780 | 200.04000 | -15.45100 | 15.24000 | .30935 | -.50037 | .16156 | -.65862 | .21940 | -.06381 | .30234 |
| | GRADIENT | .00000 | .00000 | .00000 | .00000 | .00000 | .00000 | .00000 | .00000 | .00000 | .00000 |

RUN NO. 2986/ 0 RN/L = 2.37 GRADIENT INTERVAL = -5.00/ 5.00

| Y | X | Z | ALPHA | BETA | PHI | CN | CLM | CY | CYN | CBL | CA |
|---|---|---|---|---|---|---|---|---|---|---|---|
| -150.210 | 199.720 | 198.68000 | -15.44900 | 15.24100 | .28708 | -.50606 | .16218 | -.64020 | .21150 | -.06453 | .30271 |
| -150.620 | 99.694 | 199.62000 | -15.45000 | 15.24100 | .29522 | -.50509 | .16244 | -.64663 | .21420 | -.06419 | .30247 |
| -150.620 | -.155 | 199.63000 | -15.45100 | 15.24200 | .30290 | -.50370 | .16232 | -.65435 | .21681 | -.06410 | .30207 |
| | GRADIENT | .00000 | .00000 | .00000 | .00000 | .00000 | .00000 | .00000 | .00000 | .00000 | .00000 |

RUN NO. 2991/ 0 RN/L = 2.37 GRADIENT INTERVAL = -5.00/ 5.00

| Y | X | Z | ALPHA | BETA | PHI | CN | CLM | CY | CYN | CBL | CA |
|---|---|---|---|---|---|---|---|---|---|---|---|
| -200.080 | -.207 | 200.12000 | -15.44900 | 15.24300 | .29069 | -.50737 | .16386 | -.64200 | .21128 | -.06407 | .30245 |
| -201.140 | 99.627 | 200.12000 | -15.44800 | 15.24200 | .28366 | -.50754 | .16324 | -.63587 | .20888 | -.06425 | .30227 |
| -201.450 | 199.710 | 199.90000 | -15.44700 | 15.24300 | .27671 | -.50872 | .16337 | -.63037 | .20621 | -.06450 | .30227 |
| | GRADIENT | .00000 | .00000 | .00000 | .00000 | .00000 | .00000 | .00000 | .00000 | .00000 | .00000 |

IA143, AEDC V41A-P8A, O/ET W/R.H. SRB SEPARATING (OVX085) ( 20 MAY 77 )

REFERENCE DATA

SREF = 2690.0000 SQ.FT. XMRP = 1097.0000 IN. XT
LREF = 1290.3000 INCHES YMRP = .0000 IN. YT
BREF = 1290.3000 INCHES ZMRP = 450.0000 IN. ZT
SCALE = .0100

PARAMETRIC DATA

ALPHA = -15.000 BETA = 15.000
DALPHA = .000 DBETA = -4.000
Z = 200.000 MACH = 4.500
JET PC = .000

RUN NO. 3093/ 0 RN/L = 2.38 GRADIENT INTERVAL = -5.00/ 5.00

| Y | X | Z | ALPHA | BETA | PHI | CN | CLM | CY | CYN | CBL | CA |
|---|---|---|---|---|---|---|---|---|---|---|---|
| -98.931 | -.393 | 200.25000 | -15.45100 | 15.24600 | .32101 | -.48799 | .15317 | -.66751 | .22030 | -.06279 | .28811 |
| -101.360 | 99.818 | 199.80000 | -15.44900 | 15.24400 | .31516 | -.49172 | .15529 | -.66017 | .21803 | -.06259 | .28812 |
| -101.350 | 199.900 | 200.14000 | -15.44900 | 15.24300 | .31055 | -.49379 | .15603 | -.65580 | .21641 | -.06264 | .28869 |
| | GRADIENT | .00000 | .00000 | .00000 | .00000 | .00000 | .00000 | .00000 | .00000 | .00000 | .00000 |

IA143, AEDC V41A-P8A, O/ET W/R.H. SRB SEPARATING (OVX086) ( 20 MAY 77 )

REFERENCE DATA

SREF = 2690.0000 SQ.FT. XMRP = 1097.0000 IN. XT
LREF = 1290.3000 INCHES YMRP = .0000 IN. YT
BREF = 1290.3000 INCHES ZMRP = 450.0000 IN. ZT
SCALE = .0100

PARAMETRIC DATA

ALPHA = -15.000 BETA = 15.000
DALPHA = .000 DBETA = -2.000
Z = .000 MACH = 4.500
JET PC = .000

RUN NO. 2992/ 0 RN/L = 2.37 GRADIENT INTERVAL = -5.00/ 5.00

| Y | X | Z | ALPHA | BETA | PHI | CN | CLM | CY | CYN | CBL | CA |
|---|---|---|---|---|---|---|---|---|---|---|---|
| -51.828 | -.115 | .46999 | -15.47900 | 15.28800 | .28132 | -.47909 | .13098 | -.72746 | .23910 | -.08252 | .30604 |
| -50.821 | 99.770 | .25336 | -15.47400 | 15.28000 | .28516 | -.48249 | .13652 | -.72205 | .23949 | -.08101 | .30652 |
| -51.022 | 199.690 | .09708 | -15.47000 | 15.26800 | .29140 | -.48143 | .13876 | -.72188 | .24413 | -.08042 | .30834 |
| | GRADIENT | .00000 | .00000 | .00000 | .00000 | .00000 | .00000 | .00000 | .00000 | .00000 | .00000 |

RUN NO. 2997/ 0 RN/L = 2.37 GRADIENT INTERVAL = -5.00/ 5.00

| Y | X | Z | ALPHA | BETA | PHI | CN | CLM | CY | CYN | CBL | CA |
|---|---|---|---|---|---|---|---|---|---|---|---|
| -101.630 | 199.760 | -1.09130 | -15.46300 | 15.25200 | .28606 | -.48053 | .14057 | -.69230 | .23552 | -.07594 | .30767 |
| -100.500 | 99.707 | -.28658 | -15.46400 | 15.25800 | .28110 | -.48314 | .14147 | -.69353 | .23418 | -.07699 | .30760 |
| -100.270 | -.256 | -.43070 | -15.46400 | 15.26400 | .27326 | -.48636 | .14148 | -.69200 | .23143 | -.07793 | .30575 |
| | GRADIENT | .00000 | .00000 | .00000 | .00000 | .00000 | .00000 | .00000 | .00000 | .00000 | .00000 |

RUN NO. 2998/ 0 RN/L = 2.37 GRADIENT INTERVAL = -5.00/ 5.00

| Y | X | Z | ALPHA | BETA | PHI | CN | CLM | CY | CYN | CBL | CA |
|---|---|---|---|---|---|---|---|---|---|---|---|
| -149.220 | -.313 | -.89209 | -15.45700 | 15.26200 | .26578 | -.49237 | .14790 | -.67136 | .22165 | -.07502 | .30652 |
| -151.120 | 99.866 | .36045 | -15.45700 | 15.25500 | .27134 | -.49062 | .14796 | -.66794 | .22249 | -.07351 | .30712 |
| -151.360 | 199.730 | .26335 | -15.45600 | 15.24900 | .27328 | -.48929 | .14747 | -.66518 | .22343 | -.07289 | .30666 |
| | GRADIENT | .00000 | .00000 | .00000 | .00000 | .00000 | .00000 | .00000 | .00000 | .00000 | .00000 |

IA143, AEDC V41A-P8A, O/ET W/R.H. SRB SEPARATING (OVX087) ( 20 MAY 77 )

REFERENCE DATA

SREF = 2690.0000 SQ.FT. XMRP = 1097.0000 IN. XT
LREF = 1290.3000 INCHES YMRP = .0000 IN. YT
BREF = 1290.3000 INCHES ZMRP = 450.0000 IN. ZT
SCALE = .0100

PARAMETRIC DATA

ALPHA = -15.000 BETA = 15.000
DALPHA = .000 DBETA = -2.000
Z = 100.000 MACH = 4.500
JET PC = .000

RUN NO. 2993/ 0 RN/L = 2.37 GRADIENT INTERVAL = -5.00/ 5.00

| Y | X | Z | ALPHA | BETA | PHI | CN | CLM | CY | CYN | CBL | CA |
|---|---|---|---|---|---|---|---|---|---|---|---|
| -49.403 | 199.690 | 101.19000 | -15.46900 | 15.25400 | .33675 | -.47968 | .14533 | -.71839 | .24325 | -.07033 | .30841 |
| -51.094 | 99.964 | 99.65500 | -15.47100 | 15.26200 | .34193 | -.48398 | .14732 | -.72904 | .24461 | -.07100 | .30817 |
| -50.987 | -.185 | 99.80900 | -15.47500 | 15.27100 | .34682 | -.48553 | .14696 | -.74109 | .24674 | -.07206 | .30636 |
| | GRADIENT | .00000 | .00000 | .00000 | .00000 | .00000 | .00000 | .00000 | .00000 | .00000 | .00000 |

IA143, AEDC V41A-P8A, O/ET W/R.H. SRB SEPARATING (OVX087) ( 20 MAY 77 )

REFERENCE DATA

SREF = 2690.0000 SQ.FT. XMRP = 1097.0000 IN. XT
LREF = 1290.3000 INCHES YMRP = .0000 IN. YT
BREF = 1290.3000 INCHES ZMRP = 450.0000 IN. ZT
SCALE = .0100

PARAMETRIC DATA

ALPHA = -15.000 BETA = 15.000
DALPHA = .000 DBETA = -2.000
Z = 100.000 MACH = 4.500
JET PC = .000

RUN NO. 2996/ 0 RN/L = 2.37 GRADIENT INTERVAL = -5.00/ 5.00

| Y | X | Z | ALPHA | BETA | PHI | CN | CLM | CY | CYN | CBL | CA |
|---|---|---|---|---|---|---|---|---|---|---|---|
| -102.180 | -.052 | 99.43300 | -15.46500 | 15.25300 | .31495 | -.48654 | .14726 | -.69518 | .23334 | -.07005 | .30621 |
| -101.250 | 99.737 | 100.16000 | -15.46300 | 15.25000 | .31087 | -.48364 | .14612 | -.68952 | .23191 | -.06983 | .30568 |
| -101.390 | 199.730 | 100.20000 | -15.46000 | 15.24900 | .30453 | -.48284 | .14542 | -.68121 | .22859 | -.06941 | .30404 |
| | GRADIENT | .00000 | .00000 | .00000 | .00000 | .00000 | .00000 | .00000 | .00000 | .00000 | .00000 |

RUN NO. 2999/ 0 RN/L = 2.37 GRADIENT INTERVAL = -5.00/ 5.00

| Y | X | Z | ALPHA | BETA | PHI | CN | CLM | CY | CYN | CBL | CA |
|---|---|---|---|---|---|---|---|---|---|---|---|
| -150.300 | 199.650 | 100.77000 | -15.45500 | 15.24500 | .28897 | -.49526 | .15267 | -.65525 | .21794 | -.06733 | .30054 |
| -150.620 | 99.823 | 99.53800 | -15.45600 | 15.24900 | .29031 | -.49194 | .15056 | -.66212 | .21969 | -.06832 | .30212 |
| -150.560 | -.105 | 99.71800 | -15.45900 | 15.25300 | .29432 | -.49078 | .14994 | -.67130 | .22253 | -.06924 | .30443 |
| | GRADIENT | .00000 | .00000 | .00000 | .00000 | .00000 | .00000 | .00000 | .00000 | .00000 | .00000 |

IA143, AEDC V41A-P8A, O/ET W/R.H. SRB SEPARATING (OVX088) ( 20 MAY 77 )

REFERENCE DATA

SREF = 2690.0000 SQ.FT. XMRP = 1097.0000 IN. XT
LREF = 1290.3000 INCHES YMRP = .0000 IN. YT
BREF = 1290.3000 INCHES ZMRP = 450.0000 IN. ZT
SCALE = .0100

PARAMETRIC DATA

ALPHA = -15.000 BETA = 15.000
DALPHA = .000 DBETA = -2.000
Z = 200.000 MACH = 4.500
JET PC = .000

RUN NO. 2994/ 0 RN/L = 2.37 GRADIENT INTERVAL = -5.00/ 5.00

| Y | X | Z | ALPHA | BETA | PHI | CN | CLM | CY | CYN | CBL | CA |
|---|---|---|---|---|---|---|---|---|---|---|---|
| -48.371 | -.248 | 200.23000 | -15.45400 | 15.25600 | .33622 | -.47890 | .15176 | -.69144 | .22725 | -.06416 | .30105 |
| -51.178 | 99.730 | 199.84000 | -15.45200 | 15.25100 | .32863 | -.48585 | .15528 | -.68070 | .22463 | -.06378 | .30058 |
| -50.956 | 199.830 | 199.91000 | -15.45100 | 15.24600 | .32335 | -.49075 | .15771 | -.67236 | .22277 | -.06339 | .30030 |
| | GRADIENT | .00000 | .00000 | .00000 | .00000 | .00000 | .00000 | .00000 | .00000 | .00000 | .00000 |

RUN NO. 2995/ 0 RN/L = 2.37 GRADIENT INTERVAL = -5.00/ 5.00

| Y | X | Z | ALPHA | BETA | PHI | CN | CLM | CY | CYN | CBL | CA |
|---|---|---|---|---|---|---|---|---|---|---|---|
| -100.610 | 199.690 | 198.66000 | -15.45000 | 15.24000 | .30473 | -.50194 | .16166 | -.65254 | .21650 | -.06341 | .30133 |
| -100.750 | 99.796 | 199.76000 | -15.45100 | 15.24200 | .31112 | -.49986 | .16131 | -.65876 | .21859 | -.06334 | .30096 |
| -100.740 | -.148 | 199.66000 | -15.45100 | 15.24400 | .31300 | -.49728 | .15971 | -.66265 | .21936 | -.06362 | .30020 |
| | GRADIENT | .00000 | .00000 | .00000 | .00000 | .00000 | .00000 | .00000 | .00000 | .00000 | .00000 |

IA143, AEDC V41A-P8A, O/ET W/R.H. SRB SEPARATING (OVX088) ( 20 MAY 77 )

REFERENCE DATA

SREF = 2690.0000 SQ.FT. XMRP = 1097.0000 IN. XT
LREF = 1290.3000 INCHES YMRP = .0000 IN. YT
BREF = 1290.3000 INCHES ZMRP = 450.0000 IN. ZT
SCALE = .0100

PARAMETRIC DATA

ALPHA = -15.000 BETA = 15.000
DALPHA = .000 DBETA = -2.000
Z = 200.000 MACH = 4.500
JET PC = .000

RUN NO. 3000/ 0 RN/L = 2.37 GRADIENT INTERVAL = -5.00/ 5.00

| Y | X | Z | ALPHA | BETA | PHI | CN | CLM | CY | CYN | CBL | CA |
|---|---|---|---|---|---|---|---|---|---|---|---|
| -150.270 | -.320 | 200.17000 | -15.45000 | 15.24300 | .29856 | -.50456 | .16253 | -.64774 | .21319 | -.06354 | .29990 |
| -150.930 | 99.681 | 200.26000 | -15.44900 | 15.24200 | .29179 | -.50521 | .16214 | -.64091 | .21100 | -.06363 | .30014 |
| -151.140 | 199.830 | 200.04000 | -15.44800 | 15.24200 | .28480 | -.50595 | .16173 | -.63504 | .20858 | -.06386 | .30016 |
| | GRADIENT | .00000 | .00000 | .00000 | .00000 | .00000 | .00000 | .00000 | .00000 | .00000 | .00000 |

IA143, AEDC V41A-P8A, O/ET W/R.H. SRB SEPARATING (OVX089) ( 20 MAY 77 )

REFERENCE DATA

SREF = 2690.0000 SQ.FT. XMRP = 1097.0000 IN. XT
LREF = 1290.3000 INCHES YMRP = .0000 IN. YT
BREF = 1290.3000 INCHES ZMRP = 450.0000 IN. ZT
SCALE = .0100

PARAMETRIC DATA

ALPHA = -15.000 BETA = 15.000
DALPHA = .000 DBETA = .000
Z = .000 MACH = 4.500
JET PC = .000

RUN NO. 3001/ 0 RN/L = 2.38 GRADIENT INTERVAL = -5.00/ 5.00

| Y | X | Z | ALPHA | BETA | PHI | CN | CLM | CY | CYN | CBL | CA |
|---|---|---|---|---|---|---|---|---|---|---|---|
| -11.887 | .044 | .33309 | -15.47700 | 15.30700 | .25865 | -.47933 | .12890 | -.71252 | .22445 | -.08284 | .30416 |
| -10.924 | 99.839 | .02265 | -15.47400 | 15.29700 | .26852 | -.48680 | .13599 | -.71467 | .22937 | -.08183 | .30403 |
| -10.744 | 199.650 | .29474 | -15.47200 | 15.28300 | .28019 | -.48745 | .13921 | -.71689 | .23572 | -.08075 | .30451 |
| | GRADIENT | .00000 | .00000 | .00000 | .00000 | .00000 | .00000 | .00000 | .00000 | .00000 | .00000 |

RUN NO. 3006/ 0 RN/L = 2.38 GRADIENT INTERVAL = -5.00/ 5.00

| Y | X | Z | ALPHA | BETA | PHI | CN | CLM | CY | CYN | CBL | CA |
|---|---|---|---|---|---|---|---|---|---|---|---|
| -52.008 | 199.680 | -1.23360 | -15.46400 | 15.27000 | .27473 | -.48217 | .13966 | -.70240 | .23436 | -.07958 | .30501 |
| -50.419 | 99.704 | -.43840 | -15.46600 | 15.27800 | .26799 | -.48571 | .13957 | -.69848 | .22903 | -.07958 | .30367 |
| -50.862 | -.229 | -.49655 | -15.46900 | 15.28800 | .25987 | -.48527 | .13689 | -.69474 | .22351 | -.07994 | .30361 |
| | GRADIENT | .00000 | .00000 | .00000 | .00000 | .00000 | .00000 | .00000 | .00000 | .00000 | .00000 |

RUN NO. 3007/ 0 RN/L = 2.38 GRADIENT INTERVAL = -5.00/ 5.00

| Y | X | Z | ALPHA | BETA | PHI | CN | CLM | CY | CYN | CBL | CA |
|---|---|---|---|---|---|---|---|---|---|---|---|
| -98.020 | -.217 | -1.34380 | -15.45900 | 15.26800 | .25831 | -.48992 | .14414 | -.67501 | .22182 | -.07712 | .30405 |
| -101.140 | 99.738 | .26856 | -15.45800 | 15.26100 | .26895 | -.48727 | .14449 | -.67738 | .22533 | -.07581 | .30538 |
| -101.980 | 200.050 | .32645 | -15.45800 | 15.25400 | .27591 | -.48486 | .14390 | -.67658 | .22697 | -.07450 | .30514 |
| | GRADIENT | .00000 | .00000 | .00000 | .00000 | .00000 | .00000 | .00000 | .00000 | .00000 | .00000 |

IA143, AEDC V41A-P8A, O/ET W/R.H. SRB SEPARATING (OVX090) ( 20 MAY 77 )

REFERENCE DATA

SREF = 2690.0000 SQ.FT. XMRP = 1097.0000 IN. XT
LREF = 1290.3000 INCHES YMRP = .0000 IN. YT
BREF = 1290.3000 INCHES ZMRP = 450.0000 IN. ZT
SCALE = .0100

PARAMETRIC DATA

ALPHA = -15.000 BETA = 15.000
DALPHA = .000 DBETA = .000
Z = 100.000 MACH = 4.500
JET PC = .000

RUN NO. 3002/ 0 RN/L = 2.38 GRADIENT INTERVAL = -5.00/ 5.00

| Y | X | Z | ALPHA | BETA | PHI | CN | CLM | CY | CYN | CBL | CA |
|---|---|---|---|---|---|---|---|---|---|---|---|
| -8.400 | 199.630 | 101.14000 | -15.47300 | 15.26000 | .34520 | -.48640 | .14787 | -.72517 | .24296 | -.06950 | .30616 |
| -11.601 | 99.821 | 99.54900 | -15.47500 | 15.27400 | .34556 | -.48898 | .14846 | -.73708 | .24316 | -.07118 | .30494 |
| -11.505 | -.077 | 99.87400 | -15.47600 | 15.28800 | .34138 | -.49021 | .14793 | -.74393 | .24103 | -.07268 | .30297 |
| | GRADIENT | .00000 | .00000 | .00000 | .00000 | .00000 | .00000 | .00000 | .00000 | 00000 | .00000 |

RUN NO. 3005/ 0 RN/L = 2.38 GRADIENT INTERVAL = -5.00/ 5.00

| Y | X | Z | ALPHA | BETA | PHI | CN | CLM | CY | CYN | CBL | CA |
|---|---|---|---|---|---|---|---|---|---|---|---|
| -52.604 | -.085 | 99.22000 | -15.46800 | 15.27000 | .32286 | -.48677 | .14742 | -.71548 | .23574 | -.07165 | .30541 |
| -50.983 | 99.801 | 100.20000 | -15.46700 | 15.26400 | .32283 | -.48404 | .14649 | -.71105 | .23608 | -.07110 | .30519 |
| -50.855 | 199.670 | 100.21000 | -15.46500 | 15.25600 | .31896 | -.47950 | .14400 | -.70288 | .23558 | -.07063 | .30560 |
| | GRADIENT | .00000 | .00000 | .00000 | .00000 | .00000 | .00000 | .00000 | .00000 | .00000 | .00000 |

RUN NO. 3008/ 0 RN/L = 2.38 GRADIENT INTERVAL = -5.00/ 5.00

| Y | X | Z | ALPHA | BETA | PHI | CN | CLM | CY | CYN | CBL | CA |
|---|---|---|---|---|---|---|---|---|---|---|---|
| -100.180 | 199.700 | 101.15000 | -15.45800 | 15.25100 | .29567 | -.48384 | .14562 | -.67249 | .22356 | -.06923 | .30108 |
| -100.540 | 99.823 | 99.52000 | -15.46000 | 15.25400 | .29972 | -.48502 | .14652 | -.67930 | .22596 | -.06979 | .30317 |
| -100.290 | -.261 | 99.48600 | -15.46200 | 15.25700 | .30210 | -.48862 | .14814 | -.68335 | .22636 | -.06993 | .30354 |
| | GRADIENT | .00000 | .00000 | .00000 | .00000 | .00000 | .00000 | .00000 | .00000 | .00000 | .00000 |

IA143, AEDC V41A-P8A, O/ET W/R.H. SRB SEPARATING (OVX091) ( 20 MAY 77 )

REFERENCE DATA

SREF = 2690.0000 SQ.FT. XMRP = 1097.0000 IN. XT
LREF = 1290.3000 INCHES YMRP = .0000 IN. YT
BREF = 1290.3000 INCHES ZMRP = 450.0000 IN. ZT
SCALE = .0100

PARAMETRIC DATA

ALPHA = -15.000 BETA = 15.000
DALPHA = .000 DBETA = .000
Z = 200.000 MACH = 4.500
JET PC = .000

RUN NO. 3003/ 0 RN/L = 2.38 GRADIENT INTERVAL = -5.00/ 5.00

| Y | X | Z | ALPHA | BETA | PHI | CN | CLM | CY | CYN | CBL | CA |
|---|---|---|---|---|---|---|---|---|---|---|---|
| -8.164 | -.342 | 200.32000 | -15.45500 | 15.26800 | .33996 | -.47010 | .14720 | -.70344 | .22792 | -.06519 | .30053 |
| -10.707 | 99.767 | 199.78000 | -15.45300 | 15.25800 | .33931 | -.47695 | .15112 | -.69304 | .22659 | -.06360 | .29897 |
| -10.216 | 199.710 | 199.92000 | -15.45200 | 15.25000 | .33365 | -.48614 | .15597 | -.68116 | .22466 | -.06279 | .29858 |
| | GRADIENT | .00000 | .00000 | .00000 | .00000 | .00000 | .00000 | .00000 | .00000 | .00000 | .00000 |

IA143, AEDC V41A-P8A, O/ET W/R.H. SRB SEPARATING (OVX091) ( 20 MAY 77 )

REFERENCE DATA

SREF = 2690.0000 SQ.FT. XMRP = 1097.0000 IN. XT
LREF = 1290.3000 INCHES YMRP = .0000 IN. YT
BREF = 1290.3000 INCHES ZMRP = 450.0000 IN. ZT
SCALE = .0100

PARAMETRIC DATA

ALPHA = -15.000 BETA = 15.000
DALPHA = .000 DBETA = .000
Z = 200.000 MACH = 4.500
JET PC = .000

RUN NO. 3004/ 0 RN/L = 2.38 GRADIENT INTERVAL = -5.00/ 5.00

| Y | X | Z | ALPHA | BETA | PHI | CN | CLM | CY | CYN | CBL | CA |
|---|---|---|---|---|---|---|---|---|---|---|---|
| -51.508 | 199.700 | 199.19000 | -15.45000 | 15.24800 | .31743 | -.49290 | .15829 | -.66698 | .21968 | -.06338 | .29805 |
| -50.959 | 99.705 | 199.66000 | -15.45100 | 15.25200 | .32164 | -.48854 | .15607 | -.67449 | .22123 | -.06378 | .29827 |
| -50.594 | -.058 | 199.73000 | -15.45200 | 15.25600 | .32656 | -.48421 | .15369 | -.68215 | .22308 | -.06414 | .29853 |
| | GRADIENT | .00000 | .00000 | .00000 | .00000 | .00000 | .00000 | .00000 | .00000 | .00000 | .00000 |

RUN NO. 3009/ 0 RN/L = 2.39 GRADIENT INTERVAL = -5.00/ 5.00

| Y | X | Z | ALPHA | BETA | PHI | CN | CLM | CY | CYN | CBL | CA |
|---|---|---|---|---|---|---|---|---|---|---|---|
| -99.777 | -.313 | 200.41000 | -15.45100 | 15.24500 | .30862 | -.49836 | .15945 | -.65727 | .21648 | -.06337 | .29740 |
| -101.610 | 100.020 | 200.26000 | -15.44900 | 15.24200 | .30615 | -.50028 | .16053 | -.65285 | .21573 | -.06299 | .29758 |
| -101.370 | 199.730 | 200.23000 | -15.44900 | 15.24000 | .30240 | -.50103 | .16049 | -.64878 | .21451 | -.06298 | .29779 |
| | GRADIENT | .00000 | .00000 | .00000 | .00000 | .00000 | .00000 | .00000 | .00000 | .00000 | .00000 |

IA143, AEDC V41A-P8A, O/ET W/R.H. SRB SEPARATING (OVX092) ( 20 MAY 77 )

REFERENCE DATA

SREF = 2690.0000 SQ.FT. XMRP = 1097.0000 IN. XT
LREF = 1290.3000 INCHES YMRP = .0000 IN. YT
BREF = 1290.3000 INCHES ZMRP = 450.0000 IN. ZT
SCALE = .0100

PARAMETRIC DATA

ALPHA = -15.000 BETA = 15.000
DALPHA = .000 DBETA = 2.000
Z = .000 MACH = 4.500
JET PC = .000

RUN NO. 3010/ 0 RN/L = 2.38 GRADIENT INTERVAL = -5.00/ 5.00

| Y | X | Z | ALPHA | BETA | PHI | CN | CLM | CY | CYN | CBL | CA |
|---|---|---|---|---|---|---|---|---|---|---|---|
| -11.109 | -.139 | .41379 | -15.46800 | 15.30500 | .24039 | -.48337 | .13343 | -.68747 | .21373 | -.08140 | .30270 |
| -11.032 | 99.805 | .20036 | -15.46700 | 15.29400 | .25204 | -.48719 | .13748 | -.69409 | .22129 | -.08107 | .30244 |
| -10.499 | 199.830 | .41539 | -15.46500 | 15.28000 | .26376 | -.48756 | .14033 | -.69764 | .22802 | -.08020 | .30215 |
| | GRADIENT | .00000 | .00000 | .00000 | .00000 | .00000 | .00000 | .00000 | .00000 | .00000 | .00000 |

RUN NO. 3015/ 0 RN/L = 2.38 GRADIENT INTERVAL = -5.00/ 5.00

| Y | X | Z | ALPHA | BETA | PHI | CN | CLM | CY | CYN | CBL | CA |
|---|---|---|---|---|---|---|---|---|---|---|---|
| -52.396 | 200.010 | -1.05660 | -15.45900 | 15.26900 | .26599 | -.48493 | .14196 | -.68905 | .22843 | -.07855 | .30268 |
| -50.596 | 99.780 | -.53771 | -15.46000 | 15.27700 | .25759 | -.48955 | .14281 | -.68317 | .22206 | -.07848 | .30113 |
| -50.595 | -.160 | -.63342 | -15.46100 | 15.28500 | .24853 | -.48976 | .14098 | -.67687 | .21608 | -.07853 | .30119 |
| | GRADIENT | .00000 | .00000 | .00000 | .00000 | .00000 | .00000 | .00000 | .00000 | .00000 | .00000 |

IA143, AEDC V41A-P8A, O/ET W/R.H. SRB SEPARATING (OVX092) ( 20 MAY 77 )

REFERENCE DATA

SREF = 2690.0000 SQ.FT. XMRP = 1097.0000 IN. XT
LREF = 1290.3000 INCHES YMRP = .0000 IN. YT
BREF = 1290.3000 INCHES ZMRP = 450.0000 IN. ZT
SCALE = .0100

PARAMETRIC DATA

ALPHA = -15.000 BETA = 15.000
DALPHA = .000 DBETA = 2.000
Z = .000 MACH = 4.500
JET PC = .000

RUN NO. 3016/ 0 RN/L = 2.38 GRADIENT INTERVAL = -5.00/ 5.00

| Y | X | Z | ALPHA | BETA | PHI | CN | CLM | CY | CYN | CBL | CA |
|---|---|---|---|---|---|---|---|---|---|---|---|
| -98.785 | .012 | -1.15070 | -15.45600 | 15.26800 | .25567 | -.49510 | .14794 | -.66583 | .21712 | -.07565 | .30199 |
| -101.440 | 99.867 | .35353 | -15.45600 | 15.26100 | .26453 | -.49150 | .14737 | -.66771 | .22025 | -.07454 | .30311 |
| -101.240 | 199.860 | .44663 | -15.45600 | 15.25600 | .27012 | -.48867 | .14613 | -.66779 | .22211 | -.07370 | .30340 |
| | GRADIENT | .00000 | .00000 | .00000 | .00000 | .00000 | .00000 | .00000 | .00000 | .00000 | .00000 |

IA143, AEDC V41A-P8A, O/ET W/R.H. SRB SEPARATING (OVX093) ( 20 MAY 77 )

REFERENCE DATA

SREF = 2690.0000 SQ.FT. XMRP = 1097.0000 IN. XT
LREF = 1290.3000 INCHES YMRP = .0000 IN. YT
BREF = 1290.3000 INCHES ZMRP = 450.0000 IN. ZT
SCALE = .0100

PARAMETRIC DATA

ALPHA = -15.000 BETA = 15.000
DALPHA = .000 DBETA = 2.000
Z = 100.000 MACH = 4.500
JET PC = .000

RUN NO. 3011/ 0 RN/L = 2.38 GRADIENT INTERVAL = -5.00/ 5.00

| Y | X | Z | ALPHA | BETA | PHI | CN | CLM | CY | CYN | CBL | CA |
|---|---|---|---|---|---|---|---|---|---|---|---|
| -8.737 | 199.800 | 101.34000 | -15.46900 | 15.26100 | .32855 | -.48716 | .14779 | -.71038 | .23641 | -.06983 | .30430 |
| -11.438 | 99.768 | 99.52900 | -15.47000 | 15.27400 | .32600 | -.48971 | .14847 | -.71905 | .23551 | -.07146 | .30319 |
| -11.583 | -.019 | 99.85000 | -15.47100 | 15.28900 | .31859 | -.49124 | .14768 | -.72473 | .23257 | -.07338 | .30229 |
| | GRADIENT | .00000 | .00000 | .00000 | .00000 | .00000 | .00000 | .00000 | .00000 | .00000 | .00000 |

RUN NO. 3014/ 0 RN/L = 2.38 GRADIENT INTERVAL = -5.00/ 5.00

| Y | X | Z | ALPHA | BETA | PHI | CN | CLM | CY | CYN | CBL | CA |
|---|---|---|---|---|---|---|---|---|---|---|---|
| -52.746 | -.102 | 99.32800 | -15.46500 | 15.27200 | .30777 | -.48640 | .14786 | -.70164 | .22889 | -.07176 | .30349 |
| -51.275 | 99.908 | 100.30000 | -15.46300 | 15.26500 | .30834 | -.48503 | .14661 | -.69816 | .22988 | -.07128 | .30331 |
| -51.067 | 199.860 | 100.24000 | -15.46100 | 15.25900 | .30478 | -.48000 | .14362 | -.69206 | .22995 | -.07112 | .30376 |
| | GRADIENT | .00000 | .00000 | .00000 | .00000 | .00000 | .00000 | .00000 | .00000 | .00000 | .00000 |

RUN NO. 3017/ 0 RN/L = 2.38 GRADIENT INTERVAL = -5.00/ 5.00

| Y | X | Z | ALPHA | BETA | PHI | CN | CLM | CY | CYN | CBL | CA |
|---|---|---|---|---|---|---|---|---|---|---|---|
| -100.580 | 199.770 | 101.19000 | -15.45700 | 15.25100 | .29161 | -.48556 | .14615 | -.66715 | .22122 | -.06897 | .29895 |
| -100.610 | 99.915 | 99.53000 | -15.45800 | 15.25400 | .29405 | -.48666 | .14697 | -.67280 | .22299 | -.06957 | .30107 |
| -100.710 | -.094 | 99.47200 | -15.45900 | 15.25700 | .29437 | -.48993 | .14857 | -.67544 | .22263 | -.06980 | .30155 |
| | GRADIENT | .00000 | .00000 | .00000 | .00000 | .00000 | .00000 | .00000 | .00000 | .00000 | .00000 |

IA143, AEDC V41A-P8A, O/ET W/R.H. SRB SEPARATING (OVX094) ( 20 MAY 77 )

REFERENCE DATA

SREF = 2690.0000 SQ.FT. XMRP = 1097.0000 IN. XT
LREF = 1290.3000 INCHES YMRP = .0000 IN. YT
BREF = 1290.3000 INCHES ZMRP = 450.0000 IN. ZT
SCALE = .0100

PARAMETRIC DATA

ALPHA = -15.000 BETA = 15.000
DALPHA = .000 DBETA = 2.000
Z = 200.000 MACH = 4.500
JET PC = .000

RUN NO. 3012/ 0 RN/L = 2.38 GRADIENT INTERVAL = -5.00/ 5.00

| Y | X | Z | ALPHA | BETA | PHI | CN | CLM | CY | CYN | CBL | CA |
|---|---|---|---|---|---|---|---|---|---|---|---|
| -8.501 | -.334 | 200.42000 | -15.45300 | 15.26800 | .33016 | -.47392 | .14829 | -.69524 | .22415 | -.06542 | .29819 |
| -10.644 | 99.837 | 199.91000 | -15.45200 | 15.26000 | .33028 | -.48049 | .15224 | -.68554 | .22270 | -.06383 | .29673 |
| -10.257 | 199.870 | 200.05000 | -15.45000 | 15.25200 | .32690 | -.48832 | .15657 | -.67569 | .22151 | -.06289 | .29623 |
| | GRADIENT | .00000 | .00000 | .00000 | .00000 | .00000 | .00000 | .00000 | .00000 | .00000 | .00000 |

RUN NO. 3013/ 0 RN/L = 2.38 GRADIENT INTERVAL = -5.00/ 5.00

| Y | X | Z | ALPHA | BETA | PHI | CN | CLM | CY | CYN | CBL | CA |
|---|---|---|---|---|---|---|---|---|---|---|---|
| -51.511 | 199.760 | 199.01000 | -15.44900 | 15.24700 | .31466 | -.49384 | .15816 | -.66408 | .21846 | -.06332 | .29605 |
| -50.804 | 99.746 | 199.75000 | -15.45100 | 15.25300 | .31836 | -.48942 | .15559 | -.67181 | .21992 | -.06390 | .29609 |
| -50.509 | -.164 | 199.66000 | -15.45100 | 15.25500 | .32142 | -.48698 | .15459 | -.67584 | .22088 | -.06399 | .29625 |
| | GRADIENT | .00000 | .00000 | .00000 | .00000 | .00000 | .00000 | .00000 | .00000 | .00000 | .00000 |

RUN NO. 3018/ 0 RN/L = 2.38 GRADIENT INTERVAL = -5.00/ 5.00

| Y | X | Z | ALPHA | BETA | PHI | CN | CLM | CY | CYN | CBL | CA |
|---|---|---|---|---|---|---|---|---|---|---|---|
| -100.140 | -.194 | 200.46000 | -15.45000 | 15.24600 | .30381 | -.49997 | .15970 | -.65351 | .21431 | -.06341 | .29548 |
| -101.060 | 99.814 | 200.37000 | -15.45000 | 15.24300 | .30227 | -.50172 | .16048 | -.64852 | .21364 | -.06298 | .29561 |
| -101.150 | 199.890 | 200.35000 | -15.44900 | 15.24100 | .29898 | -.50171 | .16008 | -.64519 | .21281 | -.06297 | .29580 |
| | GRADIENT | .00000 | .00000 | .00000 | .00000 | .00000 | .00000 | .00000 | .00000 | .00000 | .00000 |

IA143, AEDC V41A-P8A, O/ET W/R.H. SRB SEPARATING (OVX095) ( 20 MAY 77 )

REFERENCE DATA

SREF = 2690.0000 SQ.FT. XMRP = 1097.0000 IN. XT
LREF = 1290.3000 INCHES YMRP = .0000 IN. YT
BREF = 1290.3000 INCHES ZMRP = 450.0000 IN. ZT
SCALE = .0100

PARAMETRIC DATA

ALPHA = -15.000 BETA = 15.000
DALPHA = -4.000 DBETA = -4.000
Z = .000 MACH = 4.500
JET PC = .000

RUN NO. 3019/ 0 RN/L = 2.38 GRADIENT INTERVAL = -5.00/ 5.00

| Y | X | Z | ALPHA | BETA | PHI | CN | CLM | CY | CYN | CBL | CA |
|---|---|---|---|---|---|---|---|---|---|---|---|
| -101.750 | -.006 | .25522 | -15.47200 | 15.28200 | .21520 | -.40160 | .07828 | -.73271 | .25268 | -.09910 | .30426 |
| -101.610 | 99.827 | .17530 | -15.47300 | 15.27100 | .23834 | -.41638 | .08987 | -.73261 | .25504 | -.09466 | .30430 |
| -101.230 | 199.690 | .30355 | -15.47000 | 15.25900 | .26191 | -.43240 | .10458 | -.72679 | .25472 | -.08890 | .30471 |
| | GRADIENT | .00000 | .00000 | .00000 | .00000 | .00000 | .00000 | .00000 | .00000 | .00000 | .00000 |

IA143, AEDC V41A-P8A, O/ET W/R.H. SRB SEPARATING (OVX095) ( 20 MAY 77 )

REFERENCE DATA

SREF = 2690.0000 SQ.FT. XMRP = 1097.0000 IN. XT
LREF = 1290.3000 INCHES YMRP = .0000 IN. YT
BREF = 1290.3000 INCHES ZMRP = 450.0000 IN. ZT
SCALE = .0100

PARAMETRIC DATA

ALPHA = -15.000 BETA = 15.000
DALPHA = -4.000 DBETA = -4.000
Z = .000 MACH = 4.500
JET PC = .000

RUN NO. 3024/ 0 RN/L = 2.38 GRADIENT INTERVAL = -5.00/ 5.00

| Y | X | Z | ALPHA | BETA | PHI | CN | CLM | CY | CYN | CBL | CA |
|---|---|---|---|---|---|---|---|---|---|---|---|
| -151.020 | 199.510 | -.91472 | -15.46200 | 15.25300 | .24519 | -.44194 | .11105 | -.69144 | .23949 | -.08493 | .30187 |
| -150.870 | 99.754 | -.16195 | -15.46400 | 15.26600 | .22038 | -.42228 | .09506 | -.70095 | .24193 | -.09182 | .30204 |
| -150.330 | -.141 | -.02584 | -15.46300 | 15.27800 | .19311 | -.40401 | .08149 | -.70893 | .24432 | -.09900 | .30343 |
| | GRADIENT | .00000 | .00000 | .00000 | .00000 | .00000 | .00000 | .00000 | .00000 | .00000 | .00000 |

RUN NO. 3025/ 0 RN/L = 2.38 GRADIENT INTERVAL = -5.00/ 5.00

| Y | X | Z | ALPHA | BETA | PHI | CN | CLM | CY | CYN | CBL | CA |
|---|---|---|---|---|---|---|---|---|---|---|---|
| -199.730 | -.374 | -.69282 | -15.45700 | 15.27700 | .18678 | -.41036 | .08765 | -.69302 | .23656 | -.09685 | .30479 |
| -200.710 | 99.803 | .14939 | -15.45800 | 15.26600 | .21501 | -.43434 | .10413 | -.68357 | .23290 | -.08906 | .30094 |
| -200.850 | 199.650 | .16675 | -15.45600 | 15.25200 | .24697 | -.45919 | .12463 | -.37318 | .22954 | -.08042 | .30143 |
| | GRADIENT | .00000 | .00000 | .00000 | .00000 | .00000 | .00000 | .00000 | .00000 | .00000 | .00000 |

IA143, AEDC V41A-P8A, O/ET W/R.H. SRB SEPARATING (OVX096) ( 20 MAY 77 )

REFERENCE DATA

SREF = 2690.0000 SQ.FT. XMRP = 1097.0000 IN. XT
LREF = 1290.3000 INCHES YMRP = .0000 IN. YT
BREF = 1290.3000 INCHES ZMRP = 450.0000 IN. ZT
SCALE = .0100

PARAMETRIC DATA

ALPHA = -15.000 BETA = 15.000
DALPHA = -4.000 DBETA = -4.000
Z = 100.000 MACH = 4.500
JET PC = .000

RUN NO. 3020/ 0 RN/L = 2.38 GRADIENT INTERVAL = -5.00/ 5.00

| Y | X | Z | ALPHA | BETA | PHI | CN | CLM | CY | CYN | CBL | CA |
|---|---|---|---|---|---|---|---|---|---|---|---|
| -99.679 | 199.600 | 101.23000 | -15.47300 | 15.24300 | .33017 | -.45896 | .12708 | -.72499 | .25275 | -.07411 | .29987 |
| -100.580 | 99.754 | 99.67700 | -15.47700 | 15.25000 | .33257 | -.45565 | .12368 | -.73839 | .25706 | -.07622 | .30063 |
| -100.740 | -.171 | 99.76000 | -15.48100 | 15.25500 | .33471 | -.45167 | .11925 | -.75231 | .26198 | -.07850 | .29925 |
| | GRADIENT | .00000 | .00000 | .00000 | .00000 | .00000 | .00000 | .00000 | .00000 | .00000 | .00000 |

RUN NO. 3023/ 0 RN/L = 2.38 GRADIENT INTERVAL = -5.00/ 5.00

| Y | X | Z | ALPHA | BETA | PHI | CN | CLM | CY | CYN | CBL | CA |
|---|---|---|---|---|---|---|---|---|---|---|---|
| -152.270 | .029 | 99.33600 | -15.46900 | 15.25000 | .30892 | -.46867 | .13203 | -.70646 | .24186 | -.07419 | .29866 |
| -150.350 | 99.641 | 100.31000 | -15.46500 | 15.24400 | .30632 | -.47125 | .13472 | -.69434 | .23794 | -.07236 | .29815 |
| -150.920 | 199.680 | 100.24000 | -15.46100 | 15.24200 | .29806 | -.47543 | .13778 | -.67804 | .23083 | -.07070 | .29543 |
| | GRADIENT | .00000 | .00000 | .00000 | .00000 | .00000 | .00000 | .00000 | .00000 | .00000 | .00000 |

IA143, AEDC V41A-P8A, O/ET W/R.H. SRB SEPARATING (OVX096) ( 20 MAY 77 )

REFERENCE DATA

SREF = 2690.0000 SQ.FT. XMRP = 1097.0000 IN. XT
LREF = 1290.3000 INCHES YMRP = .0000 IN. YT
BREF = 1290.3000 INCHES ZMRP = 450.0000 IN. ZT
SCALE = .0100

PARAMETRIC DATA

ALPHA = -15.000 BETA = 15.000
DALPHA = -4.000 DBETA = -4.000
Z = 100.000 MACH = 4.500
JET PC = .000

RUN NO. 3026/ 0 RN/L = 2.37 GRADIENT INTERVAL = -5.00/ 5.00

| Y | X | Z | ALPHA | BETA | PHI | CN | CLM | CY | CYN | CBL | CA |
|---|---|---|---|---|---|---|---|---|---|---|---|
| -200.720 | 199.670 | 100.60000 | -15.45500 | 15.24500 | .28251 | -.48493 | .14425 | -.65706 | .21950 | -.06916 | .29412 |
| -200.920 | 99.751 | 99.81500 | -15.45700 | 15.24900 | .28405 | -.47871 | .14015 | -.66733 | .22326 | -.07084 | .29649 |
| -200.850 | -.152 | 99.75000 | -15.46000 | 15.25300 | .28843 | -.47620 | .13859 | -.67815 | .22719 | -.07213 | .29871 |
| | GRADIENT | .00000 | .00000 | .00000 | .00000 | .00000 | .00000 | .00000 | .00000 | .00000 | .00000 |

IA143, AEDC V41A-P8A, O/ET W/R.H. SRB SEPARATING (OVX097) ( 20 MAY 77 )

REFERENCE DATA

SREF = 2690.0000 SQ.FT. XMRP = 1097.0000 IN. XT
LREF = 1290.3000 INCHES YMRP = .0000 IN. YT
BREF = 1290.3000 INCHES ZMRP = 450.0000 IN. ZT
SCALE = .0100

PARAMETRIC DATA

ALPHA = -15.000 BETA = 15.000
DALPHA = -4.000 DBETA = -4.000
Z = 200.000 MACH = 4.500
JET PC = .000

RUN NO. 3021/ 0 RN/L = 2.38 GRADIENT INTERVAL = -5.00/ 5.00

| Y | X | Z | ALPHA | BETA | PHI | CN | CLM | CY | CYN | CBL | CA |
|---|---|---|---|---|---|---|---|---|---|---|---|
| -99.111 | -.356 | 200.66000 | -15.46500 | 15.23900 | .36169 | -.47255 | .14318 | -.71195 | .24369 | -.06430 | .29198 |
| -101.060 | 99.761 | 200.08000 | -15.46000 | 15.23600 | .34976 | -.48058 | .14843 | -.69527 | .23711 | -.06334 | .29259 |
| -101.350 | 199.710 | 200.02000 | -15.45900 | 15.23400 | .34031 | -.48753 | .15212 | -.68222 | .23202 | -.06270 | .29320 |
| | GRADIENT | .00000 | .00000 | .00000 | .00000 | .00000 | .00000 | .00000 | .00000 | .00000 | .00000 |

RUN NO. 3022/ 0 RN/L = 2.38 GRADIENT INTERVAL = -5.00/ 5.00

| Y | X | Z | ALPHA | BETA | PHI | CN | CLM | CY | CYN | CBL | CA |
|---|---|---|---|---|---|---|---|---|---|---|---|
| -149.660 | 199.580 | 198.59000 | -15.45200 | 15.23600 | .30695 | -.49937 | .15778 | -.64993 | .21703 | -.06273 | .29402 |
| -151.130 | 99.905 | 199.85000 | -15.45400 | 15.23700 | .31784 | -.49655 | .15619 | -.66269 | .22234 | -.06303 | .29338 |
| -150.600 | -.263 | 199.59000 | -15.45700 | 15.24000 | .32640 | -.49117 | .15311 | -.67511 | .22681 | -.06374 | .29304 |
| | GRADIENT | .00000 | .00000 | .00000 | .00000 | .00000 | .00000 | .00000 | .00000 | .00000 | .00000 |

RUN NO. 3027/ 0 RN/L = 2.37 GRADIENT INTERVAL = -5.00/ 5.00

| Y | X | Z | ALPHA | BETA | PHI | CN | CLM | CY | CYN | CBL | CA |
|---|---|---|---|---|---|---|---|---|---|---|---|
| -200.560 | -.218 | 200.40000 | -15.45100 | 15.24100 | .30480 | -.50011 | .15816 | -.65290 | .21625 | -.06343 | .29328 |
| -200.990 | 99.745 | 200.24000 | -15.45000 | 15.24000 | .29778 | -.50286 | .15966 | -.64357 | .21268 | -.06302 | .29357 |
| -202.110 | 200.020 | 200.36000 | -15.44900 | 15.24000 | .28890 | -.50368 | .15936 | -.63633 | .20937 | -.06331 | .29398 |
| | GRADIENT | .00000 | .00000 | .00000 | .00000 | .00000 | .00000 | .00000 | .00000 | .00000 | .00000 |

IA143, AEDC V41A-P8A, O/ET W/R.H. SRB SEPARATING (OVX098) ( 20 MAY 77 )

REFERENCE DATA

SREF = 2690.0000 SQ.FT. XMRP = 1097.0000 IN. XT
LREF = 1290.3000 INCHES YMRP = .0000 IN. YT
BREF = 1290.3000 INCHES ZMRP = 450.0000 IN. ZT
SCALE = .0100

PARAMETRIC DATA

ALPHA = -15.000 BETA = 15.000
DALPHA = -4.000 DBETA = -2.000
Z = .000 MACH = 4.500
JET PC = .000

RUN NO. 3028/ 0 RN/L = 2.37 GRADIENT INTERVAL = -5.00/ 5.00

| Y | X | Z | ALPHA | BETA | PHI | CN | CLM | CY | CYN | CBL | CA |
|---|---|---|---|---|---|---|---|---|---|---|---|
| -52.018 | -.103 | .56851 | -15.47600 | 15.30800 | .20001 | -.40925 | .07936 | -.73687 | .24477 | -.10165 | .30461 |
| -51.488 | 99.959 | .41062 | -15.47700 | 15.29800 | .22286 | -.42343 | .09023 | -.73924 | .24794 | -.09773 | .30360 |
| -50.823 | 199.660 | .14344 | -15.47100 | 15.28000 | .25336 | -.44142 | .10818 | -.73749 | .25196 | -.09172 | .30315 |
| | GRADIENT | .00000 | .00000 | .00000 | .00000 | .00000 | .00000 | .00000 | .00000 | .00000 | .00000 |

RUN NO. 3033/ 0 RN/L = 2.37 GRADIENT INTERVAL = -5.00/ 5.00

| Y | X | Z | ALPHA | BETA | PHI | CN | CLM | CY | CYN | CBL | CA |
|---|---|---|---|---|---|---|---|---|---|---|---|
| -101.310 | 199.600 | -1.34590 | -15.46400 | 15.26200 | .24969 | -.44067 | .11023 | -.70805 | .24437 | -.08712 | .30275 |
| -100.640 | 99.736 | -.36872 | -15.46500 | 15.27300 | .22375 | -.42936 | .09936 | -.70936 | .24312 | -.09252 | .30111 |
| -100.830 | -.052 | .03029 | -15.46300 | 15.28500 | .19243 | -.41009 | .08439 | -.70945 | .24130 | -.09877 | .30160 |
| | GRADIENT | .00000 | .00000 | .00000 | .00000 | .00000 | .00000 | .00000 | .00000 | .00000 | .00000 |

RUN NO. 3034/ 0 RN/L = 2.37 GRADIENT INTERVAL = -5.00/ 5.00

| Y | X | Z | ALPHA | BETA | PHI | CN | CLM | CY | CYN | CBL | CA |
|---|---|---|---|---|---|---|---|---|---|---|---|
| -149.140 | -.332 | -.91793 | -15.45700 | 15.28400 | .17972 | -.41558 | .08950 | -.69095 | .23305 | -.09749 | .30220 |
| -150.830 | 99.676 | .05197 | -15.45800 | 15.27100 | .21196 | -.43766 | .10586 | -.68414 | .23096 | -.08948 | .30024 |
| -150.940 | 199.710 | .17608 | -15.45600 | 15.25700 | .24190 | -.45622 | .12180 | -.67670 | .22986 | -.08202 | .30035 |
| | GRADIENT | .00000 | .00000 | .00000 | .00000 | .00000 | .00000 | .00000 | .00000 | .00000 | .00000 |

IA143, AEDC V41A-P8A, O/ET W/R.H. SRB SEPARATING (OVX099) ( 20 MAY 77 )

REFERENCE DATA

SREF = 2690.0000 SQ.FT. XMRP = 1097.0000 IN. XT
LREF = 1290.3000 INCHES YMRP = .0000 IN. YT
BREF = 1290.3000 INCHES ZMRP = 450.0000 IN. ZT
SCALE = .0100

PARAMETRIC DATA

ALPHA = -15.000 BETA = 15.000
DALPHA = -4.000 DBETA = -2.000
Z = 100.000 MACH = 4.500
JET PC = .000

RUN NO. 3029/ 0 RN/L = 2.37 GRADIENT INTERVAL = -5.00/ 5.00

| Y | X | Z | ALPHA | BETA | PHI | CN | CLM | CY | CYN | CBL | CA |
|---|---|---|---|---|---|---|---|---|---|---|---|
| -49.275 | 199.620 | 101.42000 | -15.47800 | 15.25900 | .34277 | -.45851 | .12673 | -.74874 | .25728 | -.07555 | .30010 |
| -51.277 | 99.804 | 99.94100 | -15.48200 | 15.27100 | .34299 | -.46062 | .12645 | -.76341 | .25955 | -.07795 | .30034 |
| -50.978 | -.069 | 99.68000 | -15.48600 | 15.28100 | .33754 | -.45829 | .12196 | -.77611 | .26280 | -.08144 | .29818 |
| | GRADIENT | .00000 | .00000 | .00000 | .00000 | .00000 | .00000 | .00000 | .00000 | .00000 | .00000 |

IA143, AEDC V41A-P8A, O/ET W/R.H. SRB SEPARATING (OVX099) ( 20 MAY 77 )

REFERENCE DATA

SREF = 2690.0000 SQ.FT. XMRP = 1097.0000 IN. XT
LREF = 1290.3000 INCHES YMRP = .0000 IN. YT
BREF = 1290.3000 INCHES ZMRP = 450.0000 IN. ZT
SCALE = .0100

PARAMETRIC DATA

ALPHA = -15.000 BETA = 15.000
DALPHA = -4.000 DBETA = -2.000
Z = 100.000 MACH = 4.500
JET PC = .000

RUN NO. 3032/ 0 RN/L = 2.37 GRADIENT INTERVAL = -5.00/ 5.00

| Y | X | Z | ALPHA | BETA | PHI | CN | CLM | CY | CYN | CBL | CA |
|---|---|---|---|---|---|---|---|---|---|---|---|
| -102.310 | -.102 | 99.35700 | -15.47200 | 15.25900 | .31354 | -.46526 | .12919 | -.72300 | .24645 | -.07630 | .29904 |
| -101.010 | 99.778 | 100.34000 | -15.47000 | 15.25200 | .31565 | -.46473 | .13026 | -.71564 | .24529 | -.07465 | .29901 |
| -101.350 | 199.840 | 100.37000 | -15.46700 | 15.24600 | .31526 | -.46661 | .13234 | -.70603 | .24255 | -.07295 | .29807 |
| | GRADIENT | .00000 | .00000 | .00000 | .00000 | .00000 | .00000 | .00000 | .00000 | .00000 | .00000 |

RUN NO. 3035/ 0 RN/L = 2.37 GRADIENT INTERVAL = -5.00/ 5.00

| Y | X | Z | ALPHA | BETA | PHI | CN | CLM | CY | CYN | CBL | CA |
|---|---|---|---|---|---|---|---|---|---|---|---|
| -151.050 | 199.850 | 101.17000 | -15.45700 | 15.24700 | .28566 | -.47780 | .13918 | -.66748 | .22386 | -.07065 | .29431 |
| -150.480 | 99.727 | 99.64500 | -15.46000 | 15.25000 | .28984 | -.47535 | .13783 | -.67767 | .22778 | -.07184 | .29729 |
| -150.440 | -.366 | 99.56600 | -15.46200 | 15.25600 | .29376 | -.47579 | .13766 | -.68894 | .23090 | -.07314 | .29830 |
| | GRADIENT | .00000 | .00000 | .00000 | .00000 | .00000 | .00000 | .00000 | .00000 | .00000 | .00000 |

IA143, AEDC V41A-P8A, O/ET W/R.H. SRB SEPARATING (OVX100) ( 20 MAY 77 )

REFERENCE DATA

SREF = 2690.0000 SQ.FT. XMRP = 1097.0000 IN. XT
LREF = 1290.3000 INCHES YMRP = .0000 IN. YT
BREF = 1290.3000 INCHES ZMRP = 450.0000 IN. ZT
SCALE = .0100

PARAMETRIC DATA

ALPHA = -15.000 BETA = 15.000
DALPHA = -4.000 DBETA = -2.000
Z = 200.000 MACH = 4.500
JET PC = .000

RUN NO. 3030/ 0 RN/L = 2.37 GRADIENT INTERVAL = -5.00/ 5.00

| Y | X | Z | ALPHA | BETA | PHI | CN | CLM | CY | CYN | CBL | CA |
|---|---|---|---|---|---|---|---|---|---|---|---|
| -48.249 | -.359 | 200.90000 | -15.46800 | 15.25400 | .37923 | -.45541 | .13496 | -.74315 | .25161 | -.06630 | .29274 |
| -51.135 | 99.831 | 200.06000 | -15.46400 | 15.24700 | .37181 | -.46594 | .14174 | -.72374 | .24499 | -.06406 | .29218 |
| -50.500 | 199.690 | 200.00000 | -15.46000 | 15.24000 | .36131 | -.47704 | .14819 | -.70542 | .23920 | -.06270 | .29168 |
| | GRADIENT | .00000 | .00000 | .00000 | .00000 | .00000 | .00000 | .00000 | .00000 | .00000 | .00000 |

RUN NO. 3031/ 0 RN/L = 2.37 GRADIENT INTERVAL = -5.00/ 5.00

| Y | X | Z | ALPHA | BETA | PHI | CN | CLM | CY | CYN | CBL | CA |
|---|---|---|---|---|---|---|---|---|---|---|---|
| -100.140 | 199.560 | 198.55000 | -15.45500 | 15.23800 | .32478 | -.49134 | .15398 | -.67051 | .22498 | -.06311 | .29196 |
| -100.620 | 99.725 | 199.79000 | -15.45600 | 15.24200 | .33042 | -.48600 | .15071 | -.68055 | .22850 | -.06392 | .29171 |
| -100.480 | -.191 | 199.62000 | -15.45900 | 15.24600 | .33441 | -.48005 | .14679 | -.68965 | .23121 | -.06483 | .29153 |
| | GRADIENT | .00000 | .00000 | .00000 | .00000 | .00000 | .00000 | .00000 | .00000 | .00000 | .00000 |

IA143, AEDC V41A-P8A, O/ET W/R.H. SRB SEPARATING (OVX100) ( 20 MAY 77 )

REFERENCE DATA

SREF = 2690.0000 SQ.FT. XMRP = 1097.0000 IN. XT
LREF = 1290.3000 INCHES YMRP = .0000 IN. YT
BREF = 1290.3000 INCHES ZMRP = 450.0000 IN. ZT
SCALE = .0100

PARAMETRIC DATA

ALPHA = -15.000 BETA = 15.000
DALPHA = -4.000 DBETA = -2.000
Z = 200.000 MACH = 4.500
JET PC = .000

RUN NO. 3036/ 0 RN/L = 2.37 GRADIENT INTERVAL = -5.00/ 5.00

| Y | X | Z | ALPHA | BETA | PHI | CN | CLM | CY | CYN | CBL | CA |
|---|---|---|---|---|---|---|---|---|---|---|---|
| -150.090 | -.228 | 200.50000 | -15.45400 | 15.24300 | .31391 | -.49414 | .15457 | -.66416 | .22054 | -.06382 | .29153 |
| -151.070 | 99.865 | 200.28000 | -15.45200 | 15.24000 | .30765 | -.49954 | .15756 | -.65428 | .21738 | -.06316 | .29230 |
| -151.230 | 199.800 | 200.29000 | -15.45100 | 15.23800 | .30073 | -.50087 | .15812 | -.64554 | .21407 | -.06293 | .29238 |
| | GRADIENT | .00000 | .00000 | .00000 | .00000 | .00000 | .00000 | .00000 | .00000 | .00000 | .00000 |

IA143, AEDC V41A-P8A, O/ET W/R.H. SRB SEPARATING (OVX101) ( 20 MAY 77 )

REFERENCE DATA

SREF = 2690.0000 SQ.FT. XMRP = 1097.0000 IN. XT
LREF = 1290.3000 INCHES YMRP = .0000 IN. YT
BREF = 1290.3000 INCHES ZMRP = 450.0000 IN. ZT
SCALE = .0100

PARAMETRIC DATA

ALPHA = -15.000 BETA = 15.000
DALPHA = -4.000 DBETA = .000
Z = .000 MACH = 4.500
JET PC = .000

RUN NO. 3037/ 0 RN/L = 2.37 GRADIENT INTERVAL = -5.00/ 5.00

| Y | X | Z | ALPHA | BETA | PHI | CN | CLM | CY | CYN | CBL | CA |
|---|---|---|---|---|---|---|---|---|---|---|---|
| -11.359 | -.163 | .22913 | -15.47500 | 15.33000 | .18550 | -.42429 | .08760 | -.72287 | .22864 | -.10016 | .30643 |
| -11.061 | 99.833 | .28133 | -15.47600 | 15.31600 | .20537 | -.43058 | .09283 | -.72938 | .23642 | -.09819 | .30271 |
| -10.409 | 199.720 | .47437 | -15.47100 | 15.29600 | .23764 | -.44686 | .10884 | -.73186 | .24311 | -.09282 | .30115 |
| | GRADIENT | .00000 | .00000 | .00000 | .00000 | .00000 | .00000 | .00000 | .00000 | .00000 | .00000 |

RUN NO. 3042/ 0 RN/L = 2.37 GRADIENT INTERVAL = -5.00/ 5.00

| Y | X | Z | ALPHA | BETA | PHI | CN | CLM | CY | CYN | CBL | CA |
|---|---|---|---|---|---|---|---|---|---|---|---|
| -52.070 | 199.740 | -1.44280 | -15.46500 | 15.28100 | .23850 | -.44689 | .11224 | -.71932 | .24290 | -.09082 | .30126 |
| -50.836 | 99.974 | -.20738 | -15.46800 | 15.29700 | .21104 | -.43527 | .10001 | -.71619 | .23720 | -.09522 | .30140 |
| -50.402 | -.228 | -.21172 | -15.46700 | 15.30900 | .17781 | -.41401 | .08407 | -.71230 | .23350 | -.10101 | .30383 |
| | GRADIENT | .00000 | .00000 | .00000 | .00000 | .00000 | .00000 | .00000 | .00000 | .00000 | .00000 |

RUN NO. 3043/ 0 RN/L = 2.37 GRADIENT INTERVAL = -5.00/ 5.00

| Y | X | Z | ALPHA | BETA | PHI | CN | CLM | CY | CYN | CBL | CA |
|---|---|---|---|---|---|---|---|---|---|---|---|
| -97.714 | -.434 | -1.27340 | -15.45800 | 15.28800 | .18017 | -.42090 | .09172 | -.69249 | .23187 | -.09743 | .30000 |
| -101.030 | 99.749 | .07046 | -15.46000 | 15.27600 | .21365 | -.43948 | .10634 | -.69407 | .23431 | -.09108 | .29974 |
| -101.540 | 199.900 | .46675 | -15.45900 | 15.26300 | .24235 | -.45106 | .11760 | -.69201 | .23567 | -.08501 | .30123 |
| | GRADIENT | .00000 | .00000 | .00000 | .00000 | .00000 | .00000 | .00000 | .00000 | .00000 | .00000 |

IA143, AEDC V41A-P8A, O/ET W/R.H. SRB SEPARATING (OVX102) ( 20 MAY 77 )

REFERENCE DATA

SREF = 2690.0000 SQ.FT. XMRP = 1097.0000 IN. XT
LREF = 1290.3000 INCHES YMRP = .0000 IN. YT
BREF = 1290.3000 INCHES ZMRP = 450.0000 IN. ZT
SCALE = .0100

PARAMETRIC DATA

ALPHA = -15.000 BETA = 15.000
DALPHA = -4.000 DBETA = .000
Z = 100.000 MACH = 4.500
JET PC = .000

RUN NO. 3038/ 0 RN/L = 2.37 GRADIENT INTERVAL = -5.00/ 5.00

| Y | X | Z | ALPHA | BETA | PHI | CN | CLM | CY | CYN | CBL | CA |
|---|---|---|---|---|---|---|---|---|---|---|---|
| -8.031 | 199.810 | 101.58000 | -15.48300 | 15.27200 | .34273 | -.45946 | .12463 | -.75924 | .25715 | -.07709 | .29933 |
| -11.866 | 99.822 | 99.59400 | -15.48400 | 15.28700 | .33655 | -.46225 | .12519 | -.76894 | .25628 | -.07962 | .29857 |
| -11.552 | -.212 | 99.68000 | -15.48700 | 15.30400 | .32766 | -.46237 | .12234 | -.77838 | .25453 | -.08252 | .29631 |
| | GRADIENT | .00000 | .00000 | .00000 | .00000 | .00000 | .00000 | .00000 | .00000 | .00000 | .00000 |

RUN NO. 3041/ 0 RN/L = 2.37 GRADIENT INTERVAL = -5.00/ 5.00

| Y | X | Z | ALPHA | BETA | PHI | CN | CLM | CY | CYN | CBL | CA |
|---|---|---|---|---|---|---|---|---|---|---|---|
| -52.206 | -.366 | 99.17700 | -15.47500 | 15.28200 | .31042 | -.46491 | .12765 | -.74421 | .24768 | -.08016 | .29927 |
| -51.078 | 99.847 | 100.43000 | -15.47400 | 15.27200 | .32089 | -.46386 | .12921 | -.74011 | .24899 | -.07764 | .29993 |
| -50.622 | 199.750 | 100.32000 | -15.47200 | 15.26100 | .32584 | -.46384 | .13037 | -.73140 | .24846 | -.07526 | .29898 |
| | GRADIENT | .00000 | .00000 | .00000 | .00000 | .00000 | .00000 | .00000 | .00000 | .00000 | .00000 |

RUN NO. 3044/ 0 RN/L = 2.37 GRADIENT INTERVAL = -5.00/ 5.00

| Y | X | Z | ALPHA | BETA | PHI | CN | CLM | CY | CYN | CBL | CA |
|---|---|---|---|---|---|---|---|---|---|---|---|
| -100.690 | 199.700 | 101.72000 | -15.46300 | 15.25000 | .30275 | -.46968 | .13472 | -.69375 | .23517 | -.07262 | .29753 |
| -100.570 | 99.743 | 99.49900 | -15.46500 | 15.25600 | .30283 | -.47011 | .13427 | -.70158 | .23692 | -.07397 | .29860 |
| -100.730 | -.100 | 99.53100 | -15.46600 | 15.26200 | .30008 | -.47287 | .13502 | -.70539 | .23642 | -.07501 | .29840 |
| | GRADIENT | .00000 | .00000 | .00000 | .00000 | .00000 | .00000 | .00000 | .00000 | .00000 | .00000 |

IA143, AEDC V41A-P8A, O/ET W/R.H. SRB SEPARATING (OVX103) ( 20 MAY 77 )

REFERENCE DATA

SREF = 2690.0000 SQ.FT. XMRP = 1097.0000 IN. XT
LREF = 1290.3000 INCHES YMRP = .0000 IN. YT
BREF = 1290.3000 INCHES ZMRP = 450.0000 IN. ZT
SCALE = .0100

PARAMETRIC DATA

ALPHA = -15.000 BETA = 15.000
DALPHA = -4.000 DBETA = .000
Z = 200.000 MACH = 4.500
JET PC = .000

RUN NO. 3039/ 0 RN/L = 2.37 GRADIENT INTERVAL = -5.00/ 5.00

| Y | X | Z | ALPHA | BETA | PHI | CN | CLM | CY | CYN | CBL | CA |
|---|---|---|---|---|---|---|---|---|---|---|---|
| -7.521 | -.274 | 200.92000 | -15.46700 | 15.26800 | .38369 | -.45497 | .13646 | -.75388 | .25068 | -.06676 | .29369 |
| -10.494 | 99.878 | 199.93000 | -15.46500 | 15.25900 | .37961 | -.46521 | .14257 | -.73553 | .24541 | -.06419 | .29248 |
| -9.960 | 199.660 | 200.08000 | -15.46200 | 15.24700 | .37313 | -.47374 | .14733 | -.71930 | .24227 | -.06270 | .29130 |
| | GRADIENT | .00000 | .00000 | .00000 | .00000 | .00000 | .00000 | .00000 | .00000 | .00000 | .00000 |

IA143, AEDC V41A-P8A, O/ET W/R.H. SRB SEPARATING (OVX103) ( 20 MAY 77 )

REFERENCE DATA

SREF = 2690.0000 SQ.FT. XMRP = 1097.0000 IN. XT
LREF = 1290.3000 INCHES YMRP = .0000 IN. YT
BREF = 1290.3000 INCHES ZMRP = 450.0000 IN. ZT
SCALE = .0100

PARAMETRIC DATA

ALPHA = -15.000 BETA = 15.000
DALPHA = -4.000 DBETA = .000
Z = 200.000 MACH = 4.500
JET PC = .000

RUN NO. 3040/ 0 RN/L = 2.37 GRADIENT INTERVAL = -5.00/ 5.00

| Y | X | Z | ALPHA | BETA | PHI | CN | CLM | CY | CYN | CBL | CA |
|---|---|---|---|---|---|---|---|---|---|---|---|
| -51.382 | 199.600 | 199.08000 | -15.45700 | 15.24600 | .34388 | -.47993 | .14887 | -.69341 | .23197 | -.06351 | .29087 |
| -51.085 | 99.798 | 199.68000 | -15.46000 | 15.25200 | .34643 | -.46915 | .14206 | -.70523 | .23538 | -.06521 | .29148 |
| -50.503 | -.255 | 199.70000 | -15.46100 | 15.26000 | .34572 | -.46121 | .13673 | -.71590 | .23801 | -.06726 | .29266 |
| | GRADIENT | .00000 | .00000 | .00000 | .00000 | .00000 | .00000 | .00000 | .00000 | .00000 | .00000 |

RUN NO. 3045/ 0 RN/L = 2.37 GRADIENT INTERVAL = -5.00/ 5.00

| Y | X | Z | ALPHA | BETA | PHI | CN | CLM | CY | CYN | CBL | CA |
|---|---|---|---|---|---|---|---|---|---|---|---|
| -99.712 | -.269 | 200.66000 | -15.45600 | 15.24900 | .32205 | -.48370 | .14845 | -.68026 | .22582 | -.06521 | .29087 |
| -101.070 | 99.833 | 200.45000 | -15.45400 | 15.24400 | .32122 | -.48968 | .15242 | -.67251 | .22405 | -.06401 | .29067 |
| -101.340 | 199.860 | 200.26000 | -15.45300 | 15.24100 | .31804 | -.49368 | .15494 | -.66494 | .22173 | -.06325 | .29073 |
| | GRADIENT | .00000 | .00000 | .00000 | .00000 | .00000 | .00000 | .00000 | .00000 | .00000 | .00000 |

IA143, AEDC V41A-P8A, O/ET W/R.H. SRB SEPARATING (OVX104) ( 20 MAY 77 )

REFERENCE DATA

SREF = 2690.0000 SQ.FT. XMRP = 1097.0000 IN. XT
LREF = 1290.3000 INCHES YMRP = .0000 IN. YT
BREF = 1290.3000 INCHES ZMRP = 450.0000 IN. ZT
SCALE = .0100

PARAMETRIC DATA

ALPHA = -15.000 BETA = 15.000
DALPHA = -4.000 DBETA = 2.000
Z = .000 MACH = 4.500
JET PC = .000

RUN NO. 3046/ 0 RN/L = 2.38 GRADIENT INTERVAL = -5.00/ 5.00

| Y | X | Z | ALPHA | BETA | PHI | CN | CLM | CY | CYN | CBL | CA |
|---|---|---|---|---|---|---|---|---|---|---|---|
| -11.385 | -.073 | .31017 | -15.46700 | 15.32400 | .16386 | -.42161 | .08730 | -.70555 | .22407 | -.10147 | .30696 |
| -11.313 | 99.776 | .09323 | -15.46700 | 15.31000 | .19703 | -.44241 | .10280 | -.71184 | .23031 | -.09642 | .30242 |
| -10.596 | 199.810 | .62945 | -15.46500 | 15.29300 | .22271 | -.44992 | .11183 | -.71463 | .23641 | -.09242 | .30179 |
| | GRADIENT | .00000 | .00000 | .00000 | .00000 | .00000 | .00000 | .00000 | .00000 | .00000 | .00000 |

RUN NO. 3051/ 0 RN/L = 2.38 GRADIENT INTERVAL = -5.00/ 5.00

| Y | X | Z | ALPHA | BETA | PHI | CN | CLM | CY | CYN | CBL | CA |
|---|---|---|---|---|---|---|---|---|---|---|---|
| -51.797 | 199.640 | -1.15930 | -15.46000 | 15.28100 | .22990 | -.45314 | .11717 | -.70502 | .23588 | -.08950 | .29966 |
| -50.601 | 99.878 | -.58291 | -15.46100 | 15.29500 | .20014 | -.44183 | .10522 | -.69894 | .22934 | -.09378 | .29842 |
| -50.538 | -.177 | -.24968 | -15.46100 | 15.30600 | .16729 | -.42133 | .08926 | -.69584 | .22651 | -.09975 | .30098 |
| | GRADIENT | .00000 | .00000 | .00000 | .00000 | .00000 | .00000 | .00000 | .00000 | .00000 | .00000 |

IA143, AEDC V41A-P8A, O/ET W/R.H. SRB SEPARATING (OVX104) ( 20 MAY 77 )

REFERENCE DATA

SREF = 2690.0000 SQ.FT. XMRP = 1097.0000 IN. XT
LREF = 1290.3000 INCHES YMRP = .0000 IN. YT
BREF = 1290.3000 INCHES ZMRP = 450.0000 IN. ZT
SCALE = .0100

PARAMETRIC DATA

ALPHA = -15.000 BETA = 15.000
DALPHA = -4.000 DBETA = 2.000
Z = .000 MACH = 4.500
JET PC = .000

RUN NO. 3052/ 0 RN/L = 2.38 GRADIENT INTERVAL = -5.00/ 5.00

| Y | X | Z | ALPHA | BETA | PHI | CN | CLM | CY | CYN | CBL | CA |
|---|---|---|---|---|---|---|---|---|---|---|---|
| -98.137 | -.173 | -1.42380 | -15.45300 | 15.28700 | .18692 | -.44447 | .10898 | -.67811 | .22324 | -.09261 | .29940 |
| -101.010 | 99.821 | .28590 | -15.45500 | 15.27700 | .20938 | -.45118 | .11504 | -.68131 | .22700 | -.08898 | .29856 |
| -101.370 | 199.750 | .26890 | -15.45500 | 15.26400 | .24249 | -.46426 | .12753 | -.67919 | .22818 | -.08198 | .30004 |
| | GRADIENT | .00000 | .00000 | .00000 | .00000 | .00000 | .00000 | .00000 | .00000 | .00000 | .00000 |

IA143, AEDC V41A-P8A, O/ET W/R.H. SRB SEPARATING (OVX105) ( 20 MAY 77 )

REFERENCE DATA

SREF = 2690.0000 SQ.FT. XMRP = 1097.0000 IN. XT
LREF = 1290.3000 INCHES YMRP = .0000 IN. YT
BREF = 1290.3000 INCHES ZMRP = 450.0000 IN. ZT
SCALE = .0100

PARAMETRIC DATA

ALPHA = -15.000 BETA = 15.000
DALPHA = -4.000 DBETA = 2.000
Z = 100.000 MACH = 4.500
JET PC = .000

RUN NO. 3047/ 0 RN/L = 2.38 GRADIENT INTERVAL = -5.00/ 5.00

| Y | X | Z | ALPHA | BETA | PHI | CN | CLM | CY | CYN | CBL | CA |
|---|---|---|---|---|---|---|---|---|---|---|---|
| -8.949 | 200.010 | 101.65000 | -15.47600 | 15.27100 | .32308 | -.46551 | .12902 | -.73779 | .24761 | -.07656 | .29882 |
| -11.739 | 99.823 | 99.64600 | -15.47700 | 15.28600 | .31469 | -.46655 | .12822 | -.74635 | .24621 | -.07934 | .29826 |
| -11.520 | -.049 | 99.65100 | -15.47800 | 15.30300 | .30304 | -.46749 | .12683 | -.75148 | .24283 | -.08202 | .29730 |
| | GRADIENT | .00000 | .00000 | .00000 | .00000 | .00000 | .00000 | .00000 | .00000 | .00000 | .00000 |

RUN NO. 3050/ 0 RN/L = 2.38 GRADIENT INTERVAL = -5.00/ 5.00

| Y | X | Z | ALPHA | BETA | PHI | CN | CLM | CY | CYN | CBL | CA |
|---|---|---|---|---|---|---|---|---|---|---|---|
| -52.337 | -.160 | 99.04700 | -15.47000 | 15.28100 | .29820 | -.47211 | .13305 | -.72620 | .23928 | -.07882 | .29853 |
| -50.901 | 99.772 | 100.62000 | -15.46900 | 15.27100 | .30874 | -.46946 | .13331 | -.72469 | .24187 | -.07681 | .29924 |
| -51.040 | 199.780 | 100.31000 | -15.46700 | 15.26100 | .31234 | -.46712 | .13291 | -.71739 | .24224 | -.07511 | .29882 |
| | GRADIENT | .00000 | .00000 | .00000 | .00000 | .00000 | .00000 | .00000 | .00000 | .00000 | .00000 |

RUN NO. 3053/ 0 RN/L = 2.38 GRADIENT INTERVAL = -5.00/ 5.00

| Y | X | Z | ALPHA | BETA | PHI | CN | CLM | CY | CYN | CBL | CA |
|---|---|---|---|---|---|---|---|---|---|---|---|
| -100.910 | 199.870 | 101.72000 | -15.46000 | 15.25200 | .29147 | -.47262 | .13636 | -.68170 | .22907 | -.07229 | .29650 |
| -101.030 | 99.995 | 99.62500 | -15.46100 | 15.25800 | .29181 | -.47358 | .13659 | -.68966 | .23076 | -.07360 | .29815 |
| -100.820 | -.019 | 99.62100 | -15.46200 | 15.26400 | .28914 | -.47680 | .13781 | -.69300 | .23004 | -.07454 | .29837 |
| | GRADIENT | .00000 | .00000 | .00000 | .00000 | .00000 | .00000 | .00000 | .00000 | .00000 | .00000 |

IA143, AEDC V41A-P8A, O/ET W/R.H. SRB SEPARATING (OVX106) ( 20 MAY 77 )

REFERENCE DATA

SREF = 2690.0000 SQ.FT. XMRP = 1097.0000 IN. XT
LREF = 1290.3000 INCHES YMRP = .0000 IN. YT
BREF = 1290.3000 INCHES ZMRP = 450.0000 IN. ZT
SCALE = .0100

PARAMETRIC DATA

ALPHA = -15.000 BETA = 15.000
DALPHA = -4.000 DBETA = 2.000
Z = 200.000 MACH = 4.500
JET PC = .000

RUN NO. 3048/ 0 RN/L = 2.38 GRADIENT INTERVAL = -5.00/ 5.00

| Y | X | Z | ALPHA | BETA | PHI | CN | CLM | CY | CYN | CBL | CA |
|---|---|---|---|---|---|---|---|---|---|---|---|
| -8.232 | -.253 | 200.91000 | -15.46200 | 15.27300 | .35587 | -.45758 | .13671 | -.73324 | .24031 | -.06800 | .29470 |
| -10.232 | 99.819 | 200.27000 | -15.46100 | 15.26200 | .36041 | -.46665 | .14246 | -.72171 | .23820 | -.06504 | .29186 |
| -9.850 | 199.770 | 200.11000 | -15.45900 | 15.25100 | .35671 | -.47577 | .14766 | -.70661 | .23550 | -.06326 | .29065 |
| | GRADIENT | .00000 | .00000 | .00000 | .00000 | .00000 | .00000 | .00000 | .00000 | .00000 | .00000 |

RUN NO. 3049/ 0 RN/L = 2.38 GRADIENT INTERVAL = -5.00/ 5.00

| Y | X | Z | ALPHA | BETA | PHI | CN | CLM | CY | CYN | CBL | CA |
|---|---|---|---|---|---|---|---|---|---|---|---|
| -51.573 | 199.660 | 198.86000 | -15.45400 | 15.25000 | .32927 | -.48163 | .14928 | -.68336 | .22637 | -.06428 | .29014 |
| -50.810 | 99.762 | 199.84000 | -15.45600 | 15.25600 | .33158 | -.47251 | .14348 | -.69451 | .22944 | -.06584 | .29078 |
| -50.511 | -.273 | 199.68000 | -15.45800 | 15.26400 | .32921 | -.46512 | .13850 | -.70278 | .23094 | -.06779 | .29228 |
| | GRADIENT | .00000 | .00000 | .00000 | .00000 | .00000 | .00000 | .00000 | .00000 | .00000 | .00000 |

RUN NO. 3054/ 0 RN/L = 2.38 GRADIENT INTERVAL = -5.00/ 5.00

| Y | X | Z | ALPHA | BETA | PHI | CN | CLM | CY | CYN | CBL | CA |
|---|---|---|---|---|---|---|---|---|---|---|---|
| -100.210 | -.139 | 200.81000 | -15.45400 | 15.25000 | .31403 | -.48675 | .14977 | -.67255 | .22218 | -.06520 | .29032 |
| -101.480 | 99.803 | 200.45000 | -15.45300 | 15.24400 | .31421 | -.49232 | .15350 | -.66593 | .22103 | -.06405 | .29032 |
| -101.040 | 199.790 | 200.45000 | -15.45200 | 15.24100 | .31287 | -.49555 | .15550 | -.66071 | .21967 | -.06334 | .29032 |
| | GRADIENT | .00000 | .00000 | .00000 | .00000 | .00000 | .00000 | .00000 | .00000 | .00000 | .00000 |

IA143, AEDC V41A-P8A, O/ET W/R.H. SRB SEPARATING (OVX107) ( 20 MAY 77 )

REFERENCE DATA

SREF = 2690.0000 SQ.FT. XMRP = 1097.0000 IN. XT
LREF = 1290.3000 INCHES YMRP = .0000 IN. YT
BREF = 1290.3000 INCHES ZMRP = 450.0000 IN. ZT
SCALE = .0100

PARAMETRIC DATA

ALPHA = -15.000 BETA = 15.000
DALPHA = -8.000 DBETA = -4.000
Z = 100.000 MACH = 4.500
JET PC = .000

RUN NO. 3055/ 0 RN/L = 2.38 GRADIENT INTERVAL = -5.00/ 5.00

| Y | X | Z | ALPHA | BETA | PHI | CN | CLM | CY | CYN | CBL | CA |
|---|---|---|---|---|---|---|---|---|---|---|---|
| -101.630 | -.119 | 100.48000 | -15.48500 | 15.28200 | .23843 | -.34951 | .04331 | -.78883 | .28152 | -.10675 | .29932 |
| -101.220 | 99.808 | 100.54000 | -15.48600 | 15.26900 | .26608 | -.37438 | .06111 | -.77331 | .27568 | -.09786 | .29993 |
| -100.800 | 199.600 | 100.33000 | -15.48100 | 15.25200 | .30014 | -.40636 | .08724 | -.75886 | .27110 | -.08802 | .29908 |
| | GRADIENT | .00000 | .00000 | .00000 | .00000 | .00000 | .00000 | .00000 | .00000 | .00000 | .00000 |

IA143, AEDC V41A-P8A, O/ET W/R.H. SRB SEPARATING (OVX107) ( 20 MAY 77 )

REFERENCE DATA

SREF = 2690.0000 SQ.FT. XMRP = 1097.0000 IN. XT
LREF = 1290.3000 INCHES YMRP = .0000 IN. YT
BREF = 1290.3000 INCHES ZMRP = 450.0000 IN. ZT
SCALE = .0100

PARAMETRIC DATA

ALPHA = -15.000 BETA = 15.000
DALPHA = -8.000 DBETA = -4.000
Z = 100.000 MACH = 4.500
JET PC = .000

RUN NO. 3060/ 0 RN/L = 2.38 GRADIENT INTERVAL = -5.00/ 5.00

| Y | X | Z | ALPHA | BETA | PHI | CN | CLM | CY | CYN | CBL | CA |
|---|---|---|---|---|---|---|---|---|---|---|---|
| -151.140 | 199.690 | 99.82800 | -15.46900 | 15.24700 | .27156 | -.42631 | .10002 | -.70889 | .24913 | -.08341 | .29419 |
| -150.640 | 99.631 | 100.18000 | -15.47400 | 15.26000 | .24067 | -.39005 | .07182 | -.72829 | .25748 | -.09390 | .29633 |
| -150.690 | -.344 | 100.04000 | -15.47300 | 15.27200 | .21569 | -.36373 | .05412 | -.74276 | .26304 | -.10204 | .29974 |
| | GRADIENT | .00000 | .00000 | .00000 | .00000 | .00000 | .00000 | .00000 | .00000 | .00000 | .00000 |

RUN NO. 3061/ 0 RN/L = 2.38 GRADIENT INTERVAL = -5.00/ 5.00

| Y | X | Z | ALPHA | BETA | PHI | CN | CLM | CY | CYN | CBL | CA |
|---|---|---|---|---|---|---|---|---|---|---|---|
| -198.810 | -.598 | 99.03700 | -15.46300 | 15.27100 | .20770 | -.39086 | .07445 | -.71028 | .24643 | -.09649 | .29904 |
| -201.090 | 99.712 | 100.38000 | -15.46400 | 15.26500 | .21553 | -.40671 | .08339 | -.69412 | .23914 | -.09141 | .29444 |
| -200.800 | 199.680 | 100.25000 | -15.45800 | 15.25200 | .25283 | -.44626 | .11477 | -.67606 | .23032 | -.07969 | .29296 |
| | GRADIENT | .00000 | .00000 | .00000 | .00000 | .00000 | .00000 | .00000 | .00000 | .00000 | .00000 |

IA143, AEDC V41A-P8A, O/ET W/R.H. SRB SEPARATING (OVX108) ( 20 MAY 77 )

REFERENCE DATA

SREF = 2690.0000 SQ.FT. XMRP = 1097.0000 IN. XT
LREF = 1290.3000 INCHES YMRP = .0000 IN. YT
BREF = 1290.3000 INCHES ZMRP = 450.0000 IN. ZT
SCALE = .0100

PARAMETRIC DATA

ALPHA = -15.000 BETA = 15.000
DALPHA = -8.000 DBETA = -4.000
Z = 150.000 MACH = 4.500
JET PC = .000

RUN NO. 3056/ 0 RN/L = 2.38 GRADIENT INTERVAL = -5.00/ 5.00

| Y | X | Z | ALPHA | BETA | PHI | CN | CLM | CY | CYN | CBL | CA |
|---|---|---|---|---|---|---|---|---|---|---|---|
| -99.988 | 199.520 | 150.47000 | -15.47700 | 15.24400 | .32868 | -.42967 | .10578 | -.74114 | .26149 | -.07803 | .29244 |
| -100.980 | 99.792 | 150.24000 | -15.48300 | 15.25300 | .32521 | -.40821 | .09027 | -.76598 | .27156 | -.08390 | .29490 |
| -100.860 | -.187 | 149.94000 | -15.48900 | 15.26200 | .31427 | -.38501 | .07206 | -.78950 | .28192 | -.09111 | .29621 |
| | GRADIENT | .00000 | .00000 | .00000 | .00000 | .00000 | .00000 | .00000 | .00000 | .00000 | .00000 |

RUN NO. 3059/ 0 RN/L = 2.38 GRADIENT INTERVAL = -5.00/ 5.00

| Y | X | Z | ALPHA | BETA | PHI | CN | CLM | CY | CYN | CBL | CA |
|---|---|---|---|---|---|---|---|---|---|---|---|
| -151.670 | -.074 | 150.00000 | -15.47600 | 15.25800 | .27032 | -.40091 | .08135 | -.73305 | .25765 | -.08845 | .29398 |
| -151.040 | 99.716 | 150.53000 | -15.47000 | 15.24900 | .28904 | -.43212 | .10485 | -.71089 | .24711 | -.07974 | .28992 |
| -150.620 | 199.520 | 150.35000 | -15.46500 | 15.24200 | .29838 | -.45417 | .12138 | -.69485 | .24035 | -.07443 | .28850 |
| | GRADIENT | .00000 | .00000 | .00000 | .00000 | .00000 | .00000 | .00000 | .00000 | .00000 | .00000 |

IA143, AEDC V41A-P8A, O/ET W/R.H. SRB SEPARATING (OVX108) ( 20 MAY 77 )

REFERENCE DATA

SREF = 2690.0000 SQ.FT. XMRP = 1097.0000 IN. XT
LREF = 1290.3000 INCHES YMRP = .0000 IN. YT
BREF = 1290.3000 INCHES ZMRP = 450.0000 IN. ZT
SCALE = .0100

PARAMETRIC DATA

ALPHA = -15.000 BETA = 15.000
DALPHA = -8.000 DBETA = -4.000
Z = 150.000 MACH = 4.500
JET PC = .000

RUN NO. 3062/ 0 RN/L = 2.38 GRADIENT INTERVAL = -5.00/ 5.00

| Y | X | Z | ALPHA | BETA | PHI | CN | CLM | CY | CYN | CBL | CA |
|---|---|---|---|---|---|---|---|---|---|---|---|
| -200.640 | 199.630 | 150.49000 | -15.45500 | 15.24500 | .28294 | -.47738 | .13835 | -.66266 | .22270 | -.07033 | .28861 |
| -200.670 | 99.666 | 149.96000 | -15.45800 | 15.25100 | .27618 | -.46061 | .12616 | -.67626 | .22829 | -.07457 | .28842 |
| -201.000 | -.225 | 150.10000 | -15.46200 | 15.26200 | .24853 | -.42513 | .09952 | -.69362 | .23637 | -.08404 | .29256 |
| | GRADIENT | .00000 | .00000 | .00000 | .00000 | .00000 | .00000 | .00000 | .00000 | .00000 | .00000 |

IA143, AEDC V41A-P8A, O/ET W/R.H. SRB SEPARATING (OVX109) ( 20 MAY 77 )

REFERENCE DATA

SREF = 2690.0000 SQ.FT. XMRP = 1097.0000 IN. XT
LREF = 1290.3000 INCHES YMRP = .0000 IN. YT
BREF = 1290.3000 INCHES ZMRP = 450.0000 IN. ZT
SCALE = .0100

PARAMETRIC DATA

ALPHA = -15.000 BETA = 15.000
DALPHA = -8.000 DBETA = -4.000
Z = 200.000 MACH = 4.500
JET PC = .000

RUN NO. 3057/ 0 RN/L = 2.38 GRADIENT INTERVAL = -5.00/ 5.00

| Y | X | Z | ALPHA | BETA | PHI | CN | CLM | CY | CYN | CBL | CA |
|---|---|---|---|---|---|---|---|---|---|---|---|
| -99.848 | -.381 | 200.37000 | -15.48200 | 15.24800 | .35620 | -.41403 | .09698 | -.76991 | .27253 | -.07811 | .28707 |
| -100.610 | 99.526 | 200.38000 | -15.47300 | 15.24000 | .35820 | -.44357 | .11945 | -.74064 | .25962 | -.07158 | .28661 |
| -100.980 | 199.680 | 200.20000 | -15.46900 | 15.23200 | .35871 | -.46482 | .13402 | -.71994 | .25153 | -.06724 | .28705 |
| | GRADIENT | .00000 | .00000 | .00000 | .00000 | .00000 | .00000 | .00000 | .00000 | .00000 | .00000 |

RUN NO. 3058/ 0 RN/L = 2.38 GRADIENT INTERVAL = -5.00/ 5.00

| Y | X | Z | ALPHA | BETA | PHI | CN | CLM | CY | CYN | CBL | CA |
|---|---|---|---|---|---|---|---|---|---|---|---|
| -148.820 | 199.300 | 198.65000 | -15.46000 | 15.23300 | .32276 | -.48494 | .14580 | -.67661 | .23105 | -.06534 | .28784 |
| -150.910 | 99.767 | 200.02000 | -15.46400 | 15.23800 | .32514 | -.46844 | .13409 | -.69625 | .23965 | -.06900 | .28720 |
| -150.620 | -.303 | 199.73000 | -15.46800 | 15.24500 | .31942 | -.44819 | .11940 | -.71276 | .24610 | -.07352 | .28660 |
| | GRADIENT | .00000 | .00000 | .00000 | .00000 | .00000 | .00000 | .00000 | .00000 | .00000 | .00000 |

RUN NO. 3063/ 0 RN/L = 2.38 GRADIENT INTERVAL = -5.00/ 5.00

| Y | X | Z | ALPHA | BETA | PHI | CN | CLM | CY | CYN | CBL | CA |
|---|---|---|---|---|---|---|---|---|---|---|---|
| -200.310 | -.390 | 200.27000 | -15.45600 | 15.24600 | .29924 | -.47419 | .13800 | -.67512 | .22696 | -.06936 | .28722 |
| -200.900 | 99.674 | 200.35000 | -15.45400 | 15.24000 | .30379 | -.49013 | .14942 | -.66073 | .22121 | -.06553 | .28853 |
| -200.830 | 199.650 | 200.61000 | -15.45200 | 15.23800 | .30187 | -.49846 | .15554 | -.64964 | .21647 | -.06361 | .28894 |
| | GRADIENT | .00000 | .00000 | .00000 | .00000 | .00000 | .00000 | .00000 | .00000 | .00000 | .00000 |

IA143, AEDC V41A-P8A, O/ET W/R.H. SRB SEPARATING (OVX110) ( 20 MAY 77 )

REFERENCE DATA

SREF = 2690.0000 SQ.FT. XMRP = 1097.0000 IN. XT
LREF = 1290.3000 INCHES YMRP = .0000 IN. YT
BREF = 1290.3000 INCHES ZMRP = 450.0000 IN. ZT
SCALE = .0100

PARAMETRIC DATA

ALPHA = -15.000 BETA = 15.000
DALPHA = -8.000 DBETA = -2.000
Z = 100.000 MACH = 4.500
JET PC = .000

RUN NO. 3064/ 0 RN/L = 2.38 GRADIENT INTERVAL = -5.00/ 5.00

| Y | X | Z | ALPHA | BETA | PHI | CN | CLM | CY | CYN | CBL | CA |
|---|---|---|---|---|---|---|---|---|---|---|---|
| -51.769 | -.100 | 100.54000 | -15.48900 | 15.30800 | .24414 | -.36860 | .05445 | -.80376 | .27716 | -.10705 | .29995 |
| -51.581 | 99.874 | 100.76000 | -15.48900 | 15.29600 | .27098 | -.38314 | .06586 | -.79742 | .27580 | -.10031 | .29876 |
| -50.354 | 199.630 | 100.28000 | -15.48400 | 15.27400 | .30608 | -.40818 | .08848 | -.77834 | .27127 | -.08961 | .29824 |
| | GRADIENT | .00000 | .00000 | .00000 | .00000 | .00000 | .00000 | .00000 | .00000 | .00000 | .00000 |

RUN NO. 3069/ 0 RN/L = 2.37 GRADIENT INTERVAL = -5.00/ 5.00

| Y | X | Z | ALPHA | BETA | PHI | CN | CLM | CY | CYN | CBL | CA |
|---|---|---|---|---|---|---|---|---|---|---|---|
| -101.390 | 199.690 | 99.82600 | -15.47400 | 15.25600 | .28708 | -.41879 | .09638 | -.73925 | .26004 | -.08621 | .29831 |
| -100.670 | 99.792 | 99.90600 | -15.47700 | 15.27100 | .25072 | -.39301 | .07468 | -.74790 | .26232 | -.09536 | .29879 |
| -100.830 | -.105 | 100.08000 | -15.47500 | 15.28600 | .21964 | -.36746 | .05704 | -.76113 | .26648 | -.10437 | .30143 |
| | GRADIENT | .00000 | .00000 | .00000 | .00000 | .00000 | .00000 | .00000 | .00000 | .00000 | .00000 |

RUN NO. 3070/ 0 RN/L = 2.37 GRADIENT INTERVAL = -5.00/ 5.00

| Y | X | Z | ALPHA | BETA | PHI | CN | CLM | CY | CYN | CBL | CA |
|---|---|---|---|---|---|---|---|---|---|---|---|
| -148.130 | -.698 | 98.48500 | -15.46600 | 15.27500 | .21115 | -.39155 | .07434 | -.72128 | .25018 | -.09792 | .30003 |
| -151.010 | 99.615 | 100.53000 | -15.46600 | 15.26600 | .22706 | -.40627 | .08396 | -.70791 | .24514 | -.09195 | .29595 |
| -150.890 | 199.600 | 100.41000 | -15.46200 | 15.25200 | .26201 | -.44066 | .11087 | -.69080 | .23790 | -.08109 | .29420 |
| | GRADIENT | .00000 | .00000 | .00000 | .00000 | .00000 | .00000 | .00000 | .00000 | .00000 | .00000 |

IA143, AEDC V41A-P8A, O/ET W/R.H. SRB SEPARATING (OVX111) ( 20 MAY 77 )

REFERENCE DATA

SREF = 2690.0000 SQ.FT. XMRP = 1097.0000 IN. XT
LREF = 1290.3000 INCHES YMRP = .0000 IN. YT
BREF = 1290.3000 INCHES ZMRP = 450.0000 IN. ZT
SCALE = .0100

PARAMETRIC DATA

ALPHA = -15.000 BETA = 15.000
DALPHA = -8.000 DBETA = -2.000
Z = 150.000 MACH = 4.500
JET PC = .000

RUN NO. 3065/ 0 RN/L = 2.37 GRADIENT INTERVAL = -5.00/ 5.00

| Y | X | Z | ALPHA | BETA | PHI | CN | CLM | CY | CYN | CBL | CA |
|---|---|---|---|---|---|---|---|---|---|---|---|
| -49.596 | 199.580 | 150.84000 | -15.48200 | 15.26000 | .34600 | -.41704 | .09968 | -.77356 | .27019 | -.08041 | .29600 |
| -51.730 | 99.765 | 150.06000 | -15.48900 | 15.27400 | .34239 | -.40901 | .09158 | -.79292 | .27529 | -.08482 | .29631 |
| -50.788 | -.226 | 149.72000 | -15.49300 | 15.28600 | .32434 | -.39271 | .07702 | -.81399 | .28335 | -.09281 | .29660 |
| | GRADIENT | .00000 | .00000 | .00000 | .00000 | .00000 | .00000 | .00000 | .00000 | .00000 | .00000 |

IA143, AEDC V41A-P8A, O/ET W/R.H. SRB SEPARATING (OVX111) ( 20 MAY 77 )

REFERENCE DATA

SREF = 2690.0000 SQ.FT. XMRP = 1097.0000 IN. XT
LREF = 1290.3000 INCHES YMRP = .0000 IN. YT
BREF = 1290.3000 INCHES ZMRP = 450.0000 IN. ZT
SCALE = .0100

PARAMETRIC DATA

ALPHA = -15.000 BETA = 15.000
DALPHA = -8.000 DBETA = -2.000
Z = 150.000 MACH = 4.500
JET PC = .000

RUN NO. 3068/ 0 RN/L = 2.37 GRADIENT INTERVAL = -5.00/ 5.00

| Y | X | Z | ALPHA | BETA | PHI | CN | CLM | CY | CYN | CBL | CA |
|---|---|---|---|---|---|---|---|---|---|---|---|
| -101.940 | -.150 | 150.09000 | -15.47900 | 15.26800 | .28473 | -.39808 | .08106 | -.75639 | .26427 | -.08980 | .29663 |
| -100.950 | 99.681 | 150.59000 | -15.47400 | 15.25400 | .30950 | -.42691 | .10394 | -.73783 | .25730 | -.08092 | .29401 |
| -101.130 | 199.660 | 150.47000 | -15.47100 | 15.24800 | .31506 | -.43927 | .11307 | -.72386 | .25158 | -.07686 | .29229 |
| | GRADIENT | .00000 | .00000 | .00000 | .00000 | .00000 | .00000 | .00000 | .00000 | .00000 | .00000 |

RUN NO. 3071/ 0 RN/L = 2.37 GRADIENT INTERVAL = -5.00/ 5.00

| Y | X | Z | ALPHA | BETA | PHI | CN | CLM | CY | CYN | CBL | CA |
|---|---|---|---|---|---|---|---|---|---|---|---|
| -150.530 | 199.640 | 150.66000 | -15.45900 | 15.24600 | .28767 | -.46444 | .12929 | -.67894 | .23056 | -.07291 | .28891 |
| -150.570 | 99.584 | 149.91000 | -15.46200 | 15.25300 | .28283 | -.44983 | .11878 | -.69270 | .23583 | -.07671 | .29058 |
| -150.600 | -.404 | 149.80000 | -15.46600 | 15.26300 | .25887 | -.42125 | .09705 | -.70970 | .24355 | -.08529 | .29422 |
| | GRADIENT | .00000 | .00000 | .00000 | .00000 | .00000 | .00000 | .00000 | .00000 | .00000 | .00000 |

IA143, AEDC V41A-P8A, O/ET W/R.H. SRB SEPARATING (OVX112) ( 20 MAY 77 )

REFERENCE DATA

SREF = 2690.0000 SQ.FT. XMRP = 1097.0000 IN. XT
LREF = 1290.3000 INCHES YMRP = .0000 IN. YT
BREF = 1290.3000 INCHES ZMRP = 450.0000 IN. ZT
SCALE = .0100

PARAMETRIC DATA

ALPHA = -15.000 BETA = 15.000
DALPHA = -8.000 DBETA = -2.000
Z = 200.000 MACH = 4.500
JET PC = .000

RUN NO. 3066/ 0 RN/L = 2.37 GRADIENT INTERVAL = -5.00/ 5.00

| Y | X | Z | ALPHA | BETA | PHI | CN | CLM | CY | CYN | CBL | CA |
|---|---|---|---|---|---|---|---|---|---|---|---|
| -49.098 | -.391 | 200.51000 | -15.48700 | 15.26200 | .38084 | -.41165 | .09852 | -.80274 | .28138 | -.07909 | .29230 |
| -50.951 | 99.817 | 200.70000 | -15.48000 | 15.25800 | .37781 | -.42641 | .11042 | -.77512 | .26823 | -.07379 | .28971 |
| -50.463 | 199.580 | 200.27000 | -15.47400 | 15.24500 | .37948 | -.45014 | .12662 | -.74811 | .25910 | -.06814 | .28707 |
| | GRADIENT | .00000 | .00000 | .00000 | .00000 | .00000 | .00000 | .00000 | .00000 | .00000 | .00000 |

RUN NO. 3067/ 0 RN/L = 2.37 GRADIENT INTERVAL = -5.00/ 5.00

| Y | X | Z | ALPHA | BETA | PHI | CN | CLM | CY | CYN | CBL | CA |
|---|---|---|---|---|---|---|---|---|---|---|---|
| -99.285 | 199.310 | 198.45000 | -15.46300 | 15.23900 | .33642 | -.46840 | .13630 | -.70246 | .24131 | -.06775 | .28780 |
| -100.860 | 99.744 | 200.05000 | -15.46500 | 15.24500 | .33312 | -.45341 | .12627 | -.71583 | .24617 | -.07113 | .28792 |
| -100.870 | -.109 | 199.71000 | -15.47000 | 15.25400 | .32820 | -.43645 | .11374 | -.73127 | .25146 | -.07519 | .28929 |
| | GRADIENT | .00000 | .00000 | .00000 | .00000 | .00000 | .00000 | .00000 | .0 00 | .00000 | .00000 |

IA143, AEDC V41A-P8A, O/ET W/R.H. SRB SEPARATING (OVX112) ( 20 MAY 77 )

REFERENCE DATA

SREF = 2690.0000 SQ.FT. XMRP = 1097.0000 IN. XT
LREF = 1290.3000 INCHES YMRP = .0000 IN. YT
BREF = 1290.3000 INCHES ZMRP = 450.0000 IN. ZT
SCALE = .0100

PARAMETRIC DATA

ALPHA = -15.000 BETA = 15.000
DALPHA = -8.000 DBETA = -2.000
Z = 200.000 MACH = 4.500
JET PC = .000

RUN NO. 3072/ 0 RN/L = 2.37 GRADIENT INTERVAL = -5.00/ 5.00

| Y | X | Z | ALPHA | BETA | PHI | CN | CLM | CY | CYN | CBL | CA |
|---|---|---|---|---|---|---|---|---|---|---|---|
| -150.350 | -.270 | 200.34000 | -15.45900 | 15.25000 | .30481 | -.46275 | .13071 | -.69103 | .23362 | -.07152 | .28770 |
| -150.990 | 99.749 | 200.46000 | -15.45800 | 15.24300 | .30848 | -.47791 | .14091 | -.67669 | .22844 | -.06792 | .28794 |
| -151.150 | 199.750 | 200.52000 | -15.45600 | 15.23800 | .31043 | -.49018 | .14966 | -.66327 | .22317 | -.06484 | .28800 |
| | GRADIENT | .00000 | .00000 | .00000 | .00000 | .00000 | .00000 | .00000 | .00000 | .00000 | .00000 |

IA143, AEDC V41A-P8A, O/ET W/R.H. SRB SEPARATING (OVX113) ( 20 MAY 77 )

REFERENCE DATA

SREF = 2690.0000 SQ.FT. XMRP = 1097.0000 IN. XT
LREF = 1290.3000 INCHES YMRP = .0000 IN. YT
BREF = 1290.3000 INCHES ZMRP = 450.0000 IN. ZT
SCALE = .0100

PARAMETRIC DATA

ALPHA = -15.000 BETA = 15.000
DALPHA = -8.000 DBETA = .000
Z = 100.000 MACH = 4.500
JET PC = .000

RUN NO. 3073/ 0 RN/L = 2.37 GRADIENT INTERVAL = -5.00/ 5.00

| Y | X | Z | ALPHA | BETA | PHI | CN | CLM | CY | CYN | CBL | CA |
|---|---|---|---|---|---|---|---|---|---|---|---|
| -11.989 | -.184 | 100.82000 | -15.48800 | 15.34000 | .22396 | -.36768 | .05173 | -.80452 | .26476 | -.10943 | .29738 |
| -10.345 | 99.698 | 100.80000 | -15.49100 | 15.31500 | .26147 | -.38376 | .06435 | -.80274 | .27085 | -.10227 | .29771 |
| -9.580 | 199.540 | 100.41000 | -15.48600 | 15.28900 | .30147 | -.41121 | .08852 | -.78943 | .27068 | -.09202 | .29828 |
| | GRADIENT | .00000 | .00000 | .00000 | .00000 | .00000 | .00000 | .00000 | .00000 | .00000 | .00000 |

RUN NO. 3078/ 0 RN/L = 2.37 GRADIENT INTERVAL = -5.00/ 5.00

| Y | X | Z | ALPHA | BETA | PHI | CN | CLM | CY | CYN | CBL | CA |
|---|---|---|---|---|---|---|---|---|---|---|---|
| -51.869 | 199.680 | 99.43400 | -15.47700 | 15.27300 | .29302 | -.42064 | .09749 | -.75980 | .26263 | -.08833 | .29884 |
| -50.905 | 99.705 | 100.02000 | -15.47900 | 15.29300 | .25891 | -.40326 | .08182 | -.77098 | .26381 | -.09721 | .29927 |
| -50.421 | -.299 | 100.05000 | -15.47800 | 15.31100 | .21805 | -.37818 | .06229 | -.77637 | .26348 | -.10645 | .30143 |
| | GRADIENT | .00000 | .00000 | .00000 | .00000 | .00000 | .00000 | .00000 | .00000 | .00000 | .00000 |

RUN NO. 3079/ 0 RN/L = 2.37 GRADIENT INTERVAL = -5.00/ 5.00

| Y | X | Z | ALPHA | BETA | PHI | CN | CLM | CY | CYN | CBL | CA |
|---|---|---|---|---|---|---|---|---|---|---|---|
| -97.686 | -.654 | 98.38900 | -15.46800 | 15.28400 | .21605 | -.39291 | .07510 | -.73789 | .25459 | -.09996 | .30078 |
| -100.960 | 99.650 | 100.71000 | -15.47100 | 15.27400 | .23837 | -.40412 | .08279 | -.73247 | .25378 | -.09440 | .29862 |
| -101.300 | 199.740 | 100.52000 | -15.46900 | 15.25800 | .27704 | -.43019 | .10464 | -.72251 | .25099 | -.08451 | .29787 |
| | GRADIENT | .00000 | .00000 | .00000 | .00000 | .00000 | .00000 | .00000 | .00000 | .00000 | .00000 |

IA143, AEDC V41A-P8A, O/ET W/R.H. SRB SEPARATING (OVX114) ( 20 MAY 77 )

REFERENCE DATA

SREF = 2690.0000 SQ.FT. XMRP = 1097.0000 IN. XT
LREF = 1290.3000 INCHES YMRP = .0000 IN. YT
BREF = 1290.3000 INCHES ZMRP = 450.0000 IN. ZT
SCALE = .0100

PARAMETRIC DATA

ALPHA = -15.000 BETA = 15.000
DALPHA = -8.000 DBETA = .000
Z = 150.000 MACH = 4.500
JET PC = .000

RUN NO. 3074/ 0 RN/L = 2.37 GRADIENT INTERVAL = -5.00/ 5.00

| Y | X | Z | ALPHA | BETA | PHI | CN | CLM | CY | CYN | CBL | CA |
|---|---|---|---|---|---|---|---|---|---|---|---|
| -9.005 | 199.590 | 150.80000 | -15.48600 | 15.27300 | .35077 | -.41757 | .09926 | -.78715 | .27102 | -.08155 | .29731 |
| -12.068 | 99.813 | 149.82000 | -15.48900 | 15.29200 | .33929 | -.41194 | .09324 | -.80229 | .27197 | -.08619 | .29630 |
| -11.879 | -.165 | 149.83000 | -15.49500 | 15.31200 | .31129 | -.38945 | .07305 | -.82335 | .27787 | -.09596 | .29586 |
| | GRADIENT | .00000 | .00000 | .00000 | .00000 | .00000 | .00000 | .00000 | .00000 | .00000 | .00000 |

RUN NO. 3077/ 0 RN/L = 2.37 GRADIENT INTERVAL = -5.00/ 5.00

| Y | X | Z | ALPHA | BETA | PHI | CN | CLM | CY | CYN | CBL | CA |
|---|---|---|---|---|---|---|---|---|---|---|---|
| -51.997 | -.201 | 149.86000 | -15.48100 | 15.28800 | .29834 | -.40696 | .08826 | -.78002 | .26639 | -.09066 | .29799 |
| -50.593 | 99.569 | 150.76000 | -15.47900 | 15.27100 | .33027 | -.42438 | .10419 | -.77054 | .26499 | -.08247 | .29736 |
| -50.467 | 199.640 | 150.65000 | -15.47600 | 15.26200 | .33012 | -.42599 | .10601 | -.75485 | .26089 | -.07965 | .29627 |
| | GRADIENT | .00000 | .00000 | .00000 | .00000 | .00000 | .00000 | .00000 | .00000 | .00000 | .00000 |

RUN NO. 3080/ 0 RN/L = 2.37 GRADIENT INTERVAL = -5.00/ 5.00

| Y | X | Z | ALPHA | BETA | PHI | CN | CLM | CY | CYN | CBL | CA |
|---|---|---|---|---|---|---|---|---|---|---|---|
| -100.390 | 199.640 | 150.72000 | -15.46500 | 15.25100 | .30374 | -.44894 | .12044 | -.70695 | .24197 | -.07534 | .29231 |
| -100.620 | 99.582 | 149.84000 | -15.46700 | 15.25700 | .29994 | -.44123 | .11479 | -.71896 | .24653 | -.07854 | .29434 |
| -100.580 | -.240 | 149.62000 | -15.47000 | 15.26800 | .27345 | -.41810 | .09615 | -.73099 | .25120 | -.08652 | .29656 |
| | GRADIENT | .00000 | .00000 | .00000 | .00000 | .00000 | .00000 | .00000 | .00000 | .00000 | .00000 |

IA143, AEDC V41A-P8A, O/ET W/R.H. SRB SEPARATING (OVX115) ( 20 MAY 77 )

REFERENCE DATA

SREF = 2690.0000 SQ.FT. XMRP = 1097.0000 IN. XT
LREF = 1290.3000 INCHES YMRP = .0000 IN. YT
BREF = 1290.3000 INCHES ZMRP = 450.0000 IN. ZT
SCALE = .0100

PARAMETRIC DATA

ALPHA = -15.000 BETA = 15.000
DALPHA = -8.000 DBETA = .000
Z = 200.000 MACH = 4.500
JET PC = .000

RUN NO. 3075/ 0 RN/L = 2.37 GRADIENT INTERVAL = -5.00/ 5.00

| Y | X | Z | ALPHA | BETA | PHI | CN | CLM | CY | CYN | CBL | CA |
|---|---|---|---|---|---|---|---|---|---|---|---|
| -9.003 | -.373 | 200.37000 | -15.48800 | 15.28100 | .38427 | -.41419 | .10128 | -.81364 | .27821 | -.07949 | .29362 |
| -10.160 | 99.666 | 200.65000 | -15.48000 | 15.27400 | .37831 | -.42247 | .10887 | -.78692 | .26688 | -.07510 | .29131 |
| -9.762 | 199.630 | 200.33000 | -15.47700 | 15.25700 | .38449 | -.44319 | .12226 | -.76381 | .26162 | -.06971 | .28805 |
| | GRADIENT | .00000 | .00000 | .00000 | .00000 | .00000 | .00000 | .00000 | .00000 | .00000 | .00000 |

IA143, AEDC V41A-P8A, O/ET W/R.H. SRB SEPARATING (OVX115) ( 20 MAY 77 )

REFERENCE DATA

SREF = 2690.0000 SQ.FT. XMRP = 1097.0000 IN. XT
LREF = 1290.3000 INCHES YMRP = .0000 IN. YT
BREF = 1290.3000 INCHES ZMRP = 450.0000 IN. ZT
SCALE = .0100

PARAMETRIC DATA

ALPHA = -15.000 BETA = 15.000
DALPHA = -8.000 DBETA = .000
Z = 200.000 MACH = 4.500
JET PC = .000

RUN NO. 3076/ 0 RN/L = 2.37 GRADIENT INTERVAL = -5.00/ 5.00

| Y | X | Z | ALPHA | BETA | PHI | CN | CLM | CY | CYN | CBL | CA |
|---|---|---|---|---|---|---|---|---|---|---|---|
| -50.759 | 199.370 | 199.00000 | -15.46700 | 15.24900 | .35912 | -.45747 | .13164 | -.72981 | .24926 | -.06819 | .28742 |
| -51.076 | 99.616 | 199.77000 | -15.47000 | 15.25900 | .35240 | -.43605 | .11753 | -.74767 | .25544 | -.07309 | .29050 |
| -50.851 | -.206 | 199.70000 | -15.47400 | 15.26700 | .35207 | -.42916 | .11230 | -.76637 | .26208 | -.07687 | .29522 |
| | GRADIENT | .00000 | .00000 | .00000 | .00000 | .00000 | .00000 | .00000 | .00000 | .00000 | .00000 |

RUN NO. 3081/ 0 RN/L = 2.37 GRADIENT INTERVAL = -5.00/ 5.00

| Y | X | Z | ALPHA | BETA | PHI | CN | CLM | CY | CYN | CBL | CA |
|---|---|---|---|---|---|---|---|---|---|---|---|
| -100.280 | -.302 | 200.40000 | -15.46200 | 15.25700 | .31217 | -.44740 | .12204 | -.71086 | .24037 | -.07390 | .29005 |
| -101.000 | 99.601 | 200.75000 | -15.46100 | 15.24900 | .31663 | -.45987 | .13025 | -.69955 | .23707 | -.07082 | .28843 |
| -101.310 | 199.740 | 200.61000 | -15.45900 | 15.24300 | .32137 | -.47242 | .13894 | -.68846 | .23318 | -.06765 | .28789 |
| | GRADIENT | .00000 | .00000 | .00000 | .00000 | .00000 | .00000 | .00000 | .00000 | .00000 | .00000 |

IA143, AEDC V41A-P8A, O/ET W/R.H. SRB SEPARATING (OVX116) ( 20 MAY 77 )

REFERENCE DATA

SREF = 2690.0000 SQ.FT. XMRP = 1097.0000 IN. XT
LREF = 1290.3000 INCHES YMRP = .0000 IN. YT
BREF = 1290.3000 INCHES ZMRP = 450.0000 IN. ZT
SCALE = .0100

PARAMETRIC DATA

ALPHA = -15.000 BETA = 15.000
DALPHA = -8.000 DBETA = 2.000
Z = 100.000 MACH = 4.500
JET PC = .000

RUN NO. 3082/ 0 RN/L = 2.37 GRADIENT INTERVAL = -5.00/ 5.00

| Y | X | Z | ALPHA | BETA | PHI | CN | CLM | CY | CYN | CBL | CA |
|---|---|---|---|---|---|---|---|---|---|---|---|
| -11.572 | -.089 | 100.51000 | -15.47900 | 15.33100 | .21498 | -.38928 | .06860 | -.78027 | .25667 | -.10658 | .30080 |
| -10.490 | 99.730 | 100.79000 | -15.48200 | 15.31200 | .24686 | -.40064 | .07710 | -.77777 | .26015 | -.10009 | .29798 |
| -10.141 | 199.700 | 100.58000 | -15.47900 | 15.28800 | .28369 | -.42071 | .09552 | -.76521 | .25981 | -.09060 | .29899 |
| | GRADIENT | .00000 | .00000 | .00000 | .00000 | .00000 | .00000 | .00000 | .00000 | .00000 | .00000 |

RUN NO. 3087/ 0 RN/L = 2.37 GRADIENT INTERVAL = -5.00/ 5.00

| Y | X | Z | ALPHA | BETA | PHI | CN | CLM | CY | CYN | CBL | CA |
|---|---|---|---|---|---|---|---|---|---|---|---|
| -51.652 | 199.640 | 99.51100 | -15.47200 | 15.27200 | .28640 | -.43157 | .10585 | -.74686 | .25680 | -.08696 | .29899 |
| -50.838 | 99.760 | 100.06000 | -15.47300 | 15.29400 | .24365 | -.40933 | .08619 | -.75510 | .25651 | -.09697 | .29885 |
| -50.252 | -.314 | 99.86400 | -15.47100 | 15.30700 | .21273 | -.39747 | .07661 | -.75496 | .25370 | -.10296 | .30023 |
| | GRADIENT | .00000 | .00000 | .00000 | .00000 | .00000 | .00000 | .00000 | .00000 | .00000 | .00000 |

IA143, AEDC V41A-P8A, O/ET W/R.H. SRB SEPARATING (OVX116) ( 20 MAY 77 )

REFERENCE DATA

SREF = 2690.0000 SQ.FT. XMRP = 1097.0000 IN. XT
LREF = 1290.3000 INCHES YMRP = .0000 IN. YT
BREF = 1290.3000 INCHES ZMRP = 450.0000 IN. ZT
SCALE = .0100

PARAMETRIC DATA

ALPHA = -15.000 BETA = 15.000
DALPHA = -8.000 DBETA = 2.000
Z = 100.000 MACH = 4.500
JET PC = .000

RUN NO. 3088/ 0 RN/L = 2.37 GRADIENT INTERVAL = -5.00/ 5.00

| Y | X | Z | ALPHA | BETA | PHI | CN | CLM | CY | CYN | CBL | CA |
|---|---|---|---|---|---|---|---|---|---|---|---|
| -98.058 | -.534 | 98.12900 | -15.46300 | 15.28200 | .22406 | -.42093 | .09570 | -.71902 | .24395 | -.09395 | .30076 |
| -101.600 | 99.897 | 100.98000 | -15.46500 | 15.27500 | .23087 | -.41718 | .09248 | -.71542 | .24459 | -.09209 | .29841 |
| -101.150 | 199.620 | 100.48000 | -15.46400 | 15.25800 | .27160 | -.44346 | .11443 | -.70537 | .24184 | -.08178 | .29782 |
| | GRADIENT | .00000 | .00000 | .00000 | .00000 | .00000 | .00000 | .00000 | .00000 | .00000 | .00000 |

IA143, AEDC V41A-P8A, O/ET W/R.H. SRB SEPARATING (OVX117) ( 20 MAY 77 )

REFERENCE DATA

SREF = 2690.0000 SQ.FT. XMRP = 1097.0000 IN. XT
LREF = 1290.3000 INCHES YMRP = .0000 IN. YT
BREF = 1290.3000 INCHES ZMRP = 450.0000 IN. ZT
SCALE = .0100

PARAMETRIC DATA

ALPHA = -15.000 BETA = 15.000
DALPHA = -8.000 DBETA = 2.000
Z = 150.000 MACH = 4.500
JET PC = .000

RUN NO. 3083/ 0 RN/L = 2.37 GRADIENT INTERVAL = -5.00/ 5.00

| Y | X | Z | ALPHA | BETA | PHI | CN | CLM | CY | CYN | CBL | CA |
|---|---|---|---|---|---|---|---|---|---|---|---|
| -9.757 | 199.820 | 150.90000 | -15.48000 | 15.27300 | .33404 | -.42699 | .10585 | -.76617 | .26145 | -.08051 | .29748 |
| -11.928 | 99.693 | 149.80000 | -15.48100 | 15.29100 | .32306 | -.42459 | .10264 | -.77825 | .26116 | -.08448 | .29711 |
| -11.768 | -.133 | 149.72000 | -15.48200 | 15.31000 | .29364 | -.41066 | .09003 | -.78965 | .26212 | -.09239 | .29709 |
| | GRADIENT | .00000 | .00000 | .00000 | .00000 | .00000 | .00000 | .00000 | .00000 | .00000 | .00000 |

RUN NO. 3086/ 0 RN/L = 2.37 GRADIENT INTERVAL = -5.00/ 5.00

| Y | X | Z | ALPHA | BETA | PHI | CN | CLM | CY | CYN | CBL | CA |
|---|---|---|---|---|---|---|---|---|---|---|---|
| -50.431 | -.535 | 149.64000 | -15.47500 | 15.28900 | .28472 | -.41993 | .09780 | -.75931 | .25620 | -.08900 | .29857 |
| -50.692 | 99.674 | 150.72000 | -15.47300 | 15.27000 | .31895 | -.43409 | .11161 | -.75251 | .25664 | -.08093 | .29729 |
| -50.659 | 199.650 | 150.61000 | -15.47100 | 15.26100 | .31978 | -.43438 | .11254 | -.73976 | .25399 | -.07857 | .29626 |
| | GRADIENT | .00000 | .00000 | .00000 | .00000 | .00000 | .00000 | .00000 | .00000 | .00000 | .00000 |

RUN NO. 3089/ 0 RN/L = 2.38 GRADIENT INTERVAL = -5.00/ 5.00

| Y | X | Z | ALPHA | BETA | PHI | CN | CLM | CY | CYN | CBL | CA |
|---|---|---|---|---|---|---|---|---|---|---|---|
| -101.190 | 199.760 | 150.31000 | -15.46100 | 15.25400 | .29092 | -.45540 | .12464 | -.69320 | .23467 | -.07492 | .29252 |
| -100.940 | 99.711 | 149.96000 | -15.46300 | 15.25900 | .29384 | -.45150 | .12238 | -.70626 | .23932 | -.07691 | .29536 |
| -100.240 | -.263 | 149.53000 | -15.46500 | 15.26900 | .26849 | -.43216 | .10665 | -.71675 | .24327 | -.08427 | .29739 |
| | GRADIENT | .00000 | .00000 | .00000 | .00000 | .00000 | .00000 | .00000 | .00000 | .00000 | .00000 |

IA143, AEDC V41A-P8A, O/ET W/R.H. SRB SEPARATING (OVX118) ( 20 MAY 77 )

REFERENCE DATA

SREF = 2690.0000 SQ.FT. XMRP = 1097.0000 IN. XT
LREF = 1290.3000 INCHES YMRP = .0000 IN. YT
BREF = 1290.3000 INCHES ZMRP = 450.0000 IN. ZT
SCALE = .0100

PARAMETRIC DATA

ALPHA = -15.000 BETA = 15.000
DALPHA = -8.000 DBETA = 2.000
Z = 200.000 MACH = 4.500
JET PC = .000

RUN NO. 3084/ 0 RN/L = 2.37 GRADIENT INTERVAL = -5.00/ 5.00

| Y | X | Z | ALPHA | BETA | PHI | CN | CLM | CY | CYN | CBL | CA |
|---|---|---|---|---|---|---|---|---|---|---|---|
| -9.452 | -.228 | 200.56000 | -15.47700 | 15.28200 | .35738 | -.42840 | .11231 | -.78018 | .26203 | -.07775 | .29552 |
| -10.165 | 99.738 | 200.93000 | -15.47300 | 15.27500 | .35931 | -.43129 | .11530 | -.76476 | .25651 | -.07430 | .29168 |
| -9.880 | 199.740 | 200.43000 | -15.47100 | 15.25900 | .36628 | -.44958 | .12686 | -.74543 | .25234 | -.06942 | .28839 |
| | GRADIENT | .00000 | .00000 | .00000 | .00000 | .00000 | .00000 | .00000 | .00000 | .00000 | .00000 |

RUN NO. 3085/ 0 RN/L = 2.37 GRADIENT INTERVAL = -5.00/ 5.00

| Y | X | Z | ALPHA | BETA | PHI | CN | CLM | CY | CYN | CBL | CA |
|---|---|---|---|---|---|---|---|---|---|---|---|
| -51.284 | 199.440 | 198.78000 | -15.46300 | 15.25300 | .33821 | -.45805 | .13150 | -.71504 | .24169 | -.06926 | .28807 |
| -50.746 | 99.585 | 199.80000 | -15.46500 | 15.26200 | .33403 | -.44034 | .12056 | -.73068 | .24669 | -.07325 | .29140 |
| -50.626 | -.179 | 199.82000 | -15.46800 | 15.26900 | .33834 | -.43915 | .11987 | -.74672 | .25202 | -.07539 | .29545 |
| | GRADIENT | .00000 | .00000 | .00000 | .00000 | .00000 | .00000 | .00000 | .00000 | .00000 | .00000 |

RUN NO. 3090/ 0 RN/L = 2.38 GRADIENT INTERVAL = -5.00/ 5.00

| Y | X | Z | ALPHA | BETA | PHI | CN | CLM | CY | CYN | CBL | CA |
|---|---|---|---|---|---|---|---|---|---|---|---|
| -100.350 | -.284 | 200.52000 | -15.46000 | 15.25900 | .29980 | -.45047 | .12375 | -.70036 | .23508 | -.07418 | .29059 |
| -101.290 | 99.781 | 200.76000 | -15.45900 | 15.25200 | .30580 | -.46291 | .13181 | -.69025 | .23217 | -.07103 | .28843 |
| -100.920 | 199.630 | 200.85000 | -15.45800 | 15.24600 | .31153 | -.47574 | .14051 | -.68019 | .22859 | -.06784 | .28790 |
| | GRADIENT | .00000 | .00000 | .00000 | .00000 | .00000 | .00000 | .00000 | .00000 | .00000 | .00000 |

IA143, AEDC V41A-P8A, O/ET W/R.H. SRB SEPARATING (OVX119) ( 20 MAY 77 )

REFERENCE DATA

SREF = 2690.0000 SQ.FT. XMRP = 1097.0000 IN. XT
LREF = 1290.3000 INCHES YMRP = .0000 IN. YT
BREF = 1290.3000 INCHES ZMRP = 450.0000 IN. ZT
SCALE = .0100

PARAMETRIC DATA

ALPHA = -15.000 BETA = 15.000
DALPHA = .000 DBETA = -4.000
Z = .000 MACH = 4.500
JET PC = 1225.000

RUN NO. 2872/ 0 RN/L = 2.38 GRADIENT INTERVAL = -5.00/ 5.00

| Y | X | Z | ALPHA | BETA | PHI | CN | CLM | CY | CYN | CBL | CA |
|---|---|---|---|---|---|---|---|---|---|---|---|
| -101.130 | -.783 | -.31514 | -15.37300 | 15.23100 | .16775 | -.28701 | .02624 | -.34201 | .06345 | -.02390 | .15526 |
| -100.970 | 99.890 | -.09801 | -15.46300 | 15.31600 | .19409 | -.33903 | .01588 | -.37288 | .03768 | -.01884 | .16959 |
| -100.960 | 199.760 | .00724 | -15.51100 | 15.36000 | .21728 | -.37108 | .01210 | -.39974 | .02945 | -.01664 | .16854 |
| | GRADIENT | .00000 | .00000 | .00000 | .00000 | .00000 | .00000 | .00000 | .00000 | .00000 | .00000 |

IA143, AEDC V41A-P8A, O/ET W/R.H. SRB SEPARATING (OVX119) ( 20 MAY 77 )

REFERENCE DATA

SREF = 2690.0000 SQ.FT. XMRP = 1097.0000 IN. XT
LREF = 1290.3000 INCHES YMRP = .0000 IN. YT
BREF = 1290.3000 INCHES ZMRP = 450.0000 IN. ZT
SCALE = .0100

PARAMETRIC DATA

ALPHA = -15.000 BETA = 15.000
DALPHA = .000 DBETA = -4.000
Z = .000 MACH = 4.500
JET PC = 1225.000

RUN NO. 2877/ 0 RN/L = 2.37 GRADIENT INTERVAL = -5.00/ 5.00

| Y | X | Z | ALPHA | BETA | PHI | CN | CLM | CY | CYN | CBL | CA |
|---|---|---|---|---|---|---|---|---|---|---|---|
| -149.070 | 199.160 | -.80668 | -15.51500 | 15.36700 | .20505 | -.37559 | .01177 | -.39677 | .02533 | -.01800 | .17598 |
| -149.250 | 99.335 | .99196 | -15.46700 | 15.32000 | .18197 | -.33974 | .01341 | -.36866 | .03453 | -.02019 | .17865 |
| -148.590 | -.932 | 1.67910 | -15.38000 | 15.24300 | .15145 | -.28588 | .02191 | -.33284 | .05459 | -.02451 | .16800 |
| | GRADIENT | .00000 | .00000 | .00000 | .00000 | .00000 | .00000 | .00000 | .00000 | .00000 | .00000 |

RUN NO. 2878/ 0 RN/L = 2.37 GRADIENT INTERVAL = -5.00/ 5.00

| Y | X | Z | ALPHA | BETA | PHI | CN | CLM | CY | CYN | CBL | CA |
|---|---|---|---|---|---|---|---|---|---|---|---|
| -201.510 | .038 | -.28348 | -15.40500 | 15.26600 | .13943 | -.30142 | .01885 | -.32717 | .04169 | -.02419 | .18219 |
| -201.080 | 99.911 | -.02380 | -15.48200 | 15.33700 | .16922 | -.35403 | .01451 | -.36427 | .02568 | -.02085 | .18966 |
| -201.080 | 199.730 | .00982 | -15.52100 | 15.38100 | .19125 | -.38892 | .01702 | -.39376 | .01889 | -.01945 | .18616 |
| | GRADIENT | .00000 | .00000 | .00000 | .00000 | .00000 | .00000 | .00000 | .00000 | .00000 | .00000 |

IA143, AEDC V41A-P8A, O/ET W/R.H. SRB SEPARATING (OVX120) ( 20 MAY 77 )

REFERENCE DATA

SREF = 2690.0000 SQ.FT. XMRP = 1097.0000 IN. XT
LREF = 1290.3000 INCHES YMRP = .0000 IN. YT
BREF = 1290.3000 INCHES ZMRP = 450.0000 IN. ZT
SCALE = .0100

PARAMETRIC DATA

ALPHA = -15.000 BETA = 15.000
DALPHA = .000 DBETA = -4.000
Z = .000 MACH = 4.500
JET PC = 1225.000

RUN NO. 2980/ 0 RN/L = 2.38 GRADIENT INTERVAL = -5.00/ 5.00

| Y | X | Z | ALPHA | BETA | PHI | CN | CLM | CY | CYN | CBL | CA |
|---|---|---|---|---|---|---|---|---|---|---|---|
| -101.420 | -.732 | -.38413 | -15.37500 | 15.23100 | .16387 | -.29586 | .02993 | -.33838 | .06176 | -.02379 | .16002 |
| -102.770 | 100.330 | -1.81840 | -15.46600 | 15.31600 | .19339 | -.34898 | .02024 | -.37310 | .03778 | -.01898 | .17348 |
| -102.050 | 199.990 | -1.00880 | -15.51500 | 15.36200 | .21613 | -.38264 | .01705 | -.40108 | .02862 | -.01678 | .17273 |
| | GRADIENT | .00000 | .00000 | .00000 | .00000 | .00000 | .00000 | .00000 | .00000 | .00000 | .00000 |

IA143, AEDC V41A-P8A, O/ET W/R.H. SRB SEPARATING (OVX121) ( 20 MAY 77 )

REFERENCE DATA

SRLF = 2690.0000 SQ.FT. XMRP = 1097.0000 IN. XT
LREF = 1290.3000 INCHES YMRP = .0000 IN. YT
BREF = 1290.3000 INCHES ZMRP = 450.0000 IN. ZT
SCALE = .0100

PARAMETRIC DATA

ALPHA = -15.000 BETA = 15.000
DALPHA = .000 DBETA = -4.000
Z = 100.000 MACH = 4.500
JET PC = 1225.000

RUN NO. 2873/ 0 RN/L = 2.38 GRADIENT INTERVAL = -5.00/ 5.00

| Y | X | Z | ALPHA | BETA | PHI | CN | CLM | CY | CYN | CBL | CA |
|---|---|---|---|---|---|---|---|---|---|---|---|
| -101.020 | 199.670 | 99.90600 | -15.50400 | 15.42600 | .24733 | -.38336 | .03261 | -.46208 | .02972 | -.01930 | .17529 |
| -98.948 | 99.251 | 101.33000 | -15.42900 | 15.35400 | .22022 | -.33864 | .04240 | -.42128 | .04383 | -.02126 | .17604 |
| -101.220 | .042 | 99.63700 | -15.33000 | 15.25400 | .19380 | -.28344 | .05367 | -.37818 | .06970 | -.02457 | .15478 |
| | GRADIENT | .00000 | .00000 | .00000 | .00000 | .00000 | .00000 | .00000 | .00000 | .00000 | .00000 |

RUN NO. 2876/ 0 RN/L = 2.37 GRADIENT INTERVAL = -5.00/ 5.00

| Y | X | Z | ALPHA | BETA | PHI | CN | CLM | CY | CYN | CBL | CA |
|---|---|---|---|---|---|---|---|---|---|---|---|
| -149.620 | -.628 | 98.36400 | -15.35300 | 15.26900 | .17189 | -.29114 | .04492 | -.36279 | .05655 | -.02484 | .16796 |
| -151.310 | 99.918 | 99.81700 | -15.45300 | 15.37200 | .20455 | -.34576 | .03302 | -.41349 | .03269 | -.02161 | .18811 |
| -150.950 | 199.740 | 99.81400 | -15.51300 | 15.43300 | .22847 | -.38713 | .02918 | -.45485 | .02456 | -.02133 | .18751 |
| | GRADIENT | .00000 | .00000 | .00000 | .00000 | .00000 | .00000 | .00000 | .00000 | .00000 | .00000 |

RUN NO. 2879/ 0 RN/L = 2.37 GRADIENT INTERVAL = -5.00/ 5.00

| Y | X | Z | ALPHA | BETA | PHI | CN | CLM | CY | CYN | CBL | CA |
|---|---|---|---|---|---|---|---|---|---|---|---|
| -200.810 | 199.690 | 99.83900 | -15.52200 | 15.44100 | .21716 | -.39803 | .03104 | -.45477 | .02171 | -.02324 | .19800 |
| -198.730 | 99.171 | 100.99000 | -15.46400 | 15.37600 | .19068 | -.35525 | .03273 | -.40992 | .03036 | -.02364 | .19866 |
| -198.340 | -.733 | 101.65000 | -15.37200 | 15.28100 | .15635 | -.30184 | .04159 | -.35896 | .05077 | -.02663 | .18280 |
| | GRADIENT | .00000 | .00000 | .00000 | .00000 | .00000 | .00000 | .00000 | .00000 | .00000 | .00000 |

IA143, AEDC V41A-P8A, O/ET W/R.H. SRB SEPARATING (OVX122) ( 20 MAY 77 )

REFERENCE DATA

SREF = 2690.0000 SQ.FT. XMRP = 1097.0000 IN. XT
LREF = 1290.3000 INCHES YMRP = .0000 IN. YT
BREF = 1290.3000 INCHES ZMRP = 450.0000 IN. ZT
SCALE = .0100

PARAMETRIC DATA

ALPHA = -15.000 BETA = 15.000
DALPHA = .000 DBETA = -4.000
Z = 100.000 MACH = 4.500
JET PC = 1225.000

RUN NO. 2981/ 0 RN/L = 2.38 GRADIENT INTERVAL = -5.00/ 5.00

| Y | X | Z | ALPHA | BETA | PHI | CN | CLM | CY | CYN | CBL | CA |
|---|---|---|---|---|---|---|---|---|---|---|---|
| -102.100 | 200.060 | 100.69000 | -15.50600 | 15.42800 | .24414 | -.39388 | .03719 | -.46137 | .02820 | -.01952 | .17959 |
| -99.512 | 99.396 | 101.37000 | -15.43600 | 15.36000 | .21760 | -.35042 | .04528 | -.42031 | .04045 | -.02104 | .18023 |
| -98.721 | -.624 | 101.89000 | -15.33500 | 15.25500 | .19388 | -.29441 | .05803 | -.37735 | .06880 | -.02425 | .15903 |
| | GRADIENT | .00000 | .00000 | .00000 | .00000 | .00000 | .00000 | .00000 | .00000 | .00000 | .00000 |

IA143, AEDC V41A-P8A, O/ET W/R.H. SRB SEPARATING (OVX123) ( 20 MAY 77 )

REFERENCE DATA

SREF = 2690.0000 SQ.FT. XMRP = 1097.0000 IN. XT
LREF = 1290.3000 INCHES YMRP = .0000 IN. YT
BREF = 1290.3000 INCHES ZMRP = 450.0000 IN. ZT
SCALE = .0100

PARAMETRIC DATA

ALPHA = -15.000 BETA = 15.000
DALPHA = .000 DBETA = -4.000
Z = 200.000 MACH = 4.500
JET PC = 1225.000

RUN NO. 2874/ 0 RN/L = 2.38 GRADIENT INTERVAL = -5.00/ 5.00

| Y | X | Z | ALPHA | BETA | PHI | CN | CLM | CY | CYN | CBL | CA |
|---|---|---|---|---|---|---|---|---|---|---|---|
| -101.100 | -.231 | 199.79000 | -15.28400 | 15.31300 | .20530 | -.26034 | .07473 | -.41441 | .06110 | -.02607 | .17028 |
| -100.830 | 99.737 | 200.14000 | -15.38700 | 15.45300 | .24171 | -.31050 | .06280 | -.48429 | .03008 | -.02372 | .19788 |
| -101.070 | 199.640 | 199.81000 | -15.47400 | 15.56800 | .28872 | -.35642 | .05143 | -.56593 | .01604 | -.02344 | .19608 |
| | GRADIENT | .00000 | .00000 | .00000 | .00000 | .00000 | .00000 | .00000 | .00000 | .00000 | .00000 |

RUN NO. 2875/ 0 RN/L = 2.37 GRADIENT INTERVAL = -5.00/ 5.00

| Y | X | Z | ALPHA | BETA | PHI | CN | CLM | CY | CYN | CBL | CA |
|---|---|---|---|---|---|---|---|---|---|---|---|
| -150.320 | 199.490 | 199.08000 | -15.49800 | 15.55100 | .26987 | -.37720 | .04752 | -.54484 | .01471 | -.02412 | .20403 |
| -150.180 | 99.616 | 201.26000 | -15.42900 | 15.46500 | .23449 | -.33480 | .05312 | -.48108 | .02323 | -.02360 | .20546 |
| -146.190 | -1.334 | 201.72000 | -15.31900 | 15.32500 | .19133 | -.28155 | .06726 | -.40811 | .05349 | -.02683 | .18146 |
| | GRADIENT | .00000 | .00000 | .00000 | .00000 | .00000 | .00000 | .00000 | .00000 | .00000 | .00000 |

RUN NO. 2880/ 0 RN/L = 2.37 GRADIENT INTERVAL = -5.00/ 5.00

| Y | X | Z | ALPHA | BETA | PHI | CN | CLM | CY | CYN | CBL | CA |
|---|---|---|---|---|---|---|---|---|---|---|---|
| -201.070 | -.145 | 199.69000 | -15.35800 | 15.33600 | .17712 | -.30725 | .06141 | -.40797 | .04985 | -.02920 | .19615 |
| -200.840 | 99.733 | 199.98000 | -15.45000 | 15.45300 | .21519 | -.35235 | .04962 | -.47296 | .02644 | -.02697 | .21341 |
| -200.950 | 199.700 | 199.89000 | -15.51100 | 15.54300 | .25336 | -.39122 | .04669 | -.53909 | .01692 | -.02703 | .21204 |
| | GRADIENT | .00000 | .00000 | .00000 | .00000 | .00000 | .00000 | .00000 | .00000 | .00000 | .00000 |

IA143, AEDC V41A-P8A, O/ET W/R.H. SRB SEPARATING (OVX124) ( 20 MAY 77 )

REFERENCE DATA

SREF = 2690.0000 SQ.FT. XMRP = 1097.0000 IN. XT
LREF = 1290.3000 INCHES YMRP = .0000 IN. YT
BREF = 1290.3000 INCHES ZMRP = 450.0000 IN. ZT
SCALE = .0100

PARAMETRIC DATA

ALPHA = -15.000 BETA = 15.000
DALPHA = .000 DBETA = -4.000
Z = 200.000 MACH = 4.500
JET PC = 1225.000

RUN NO. 2982/ 0 RN/L = 2.38 GRADIENT INTERVAL = -5.00/ 5.00

| Y | X | Z | ALPHA | BETA | PHI | CN | CLM | CY | CYN | CBL | CA |
|---|---|---|---|---|---|---|---|---|---|---|---|
| -101.950 | .163 | 201.23000 | -15.29500 | 15.31700 | .20311 | -.27363 | .07736 | -.41326 | .05862 | -.02589 | .17602 |
| -100.960 | 99.788 | 199.94000 | -15.40300 | 15.45800 | .24168 | -.32657 | .06388 | -.48308 | .02690 | -.02299 | .20175 |
| -101.130 | 199.860 | 199.74000 | -15.48400 | 15.56900 | .28941 | -.36544 | .05146 | -.55515 | .00947 | -.02070 | .19998 |
| | GRADIENT | .00000 | .00000 | .00000 | .00000 | .00000 | .00000 | .00000 | .00000 | .00000 | .00000 |

IA143, AEDC V41A-P8A, O/ET W/R.H. SRB SEPARATING (OVX125) ( 20 MAY 77 )

REFERENCE DATA

SREF = 2690.0000 SQ.FT. XMRP = 1097.0000 IN. XT
LREF = 1290.3000 INCHES YMRP = .0000 IN. YT
BREF = 1290.3000 INCHES ZMRP = 450.0000 IN. ZT
SCALE = .0100

PARAMETRIC DATA

ALPHA = -15.000 BETA = 15.000
DALPHA = .000 DBETA = -2.000
Z = .000 MACH = 4.500
JET PC = 1225.000

RUN NO. 2881/ 0 RN/L = 2.37 GRADIENT INTERVAL = -5.00/ 5.00

| Y | X | Z | ALPHA | BETA | PHI | CN | CLM | CY | CYN | CBL | CA |
|---|---|---|---|---|---|---|---|---|---|---|---|
| -51.591 | -.801 | -.31876 | -15.36800 | 15.22500 | .18887 | -.29959 | .03898 | -.38379 | .08672 | -.02895 | .15509 |
| -51.184 | 99.892 | -.02521 | -15.45800 | 15.30100 | .21657 | -.35453 | .03077 | -.41786 | .06699 | -.02505 | .17198 |
| -51.090 | 199.680 | -.04549 | -15.51200 | 15.35200 | .24128 | -.38306 | .02164 | -.44360 | .05449 | -.02164 | .16965 |
| | GRADIENT | .00000 | .00000 | .00000 | .00000 | .00000 | .00000 | .00000 | .00000 | .00000 | .00000 |

RUN NO. 2886/ 0 RN/L = 2.38 GRADIENT INTERVAL = -5.00/ 5.00

| Y | X | Z | ALPHA | BETA | PHI | CN | CLM | CY | CYN | CBL | CA |
|---|---|---|---|---|---|---|---|---|---|---|---|
| -98.907 | 199.170 | -.84433 | -15.51300 | 15.36300 | .22647 | -.37965 | .01780 | -.42695 | .04164 | -.02035 | .17251 |
| -99.468 | 99.530 | .92611 | -15.46500 | 15.31700 | .20218 | -.34772 | .02246 | -.39983 | .05107 | -.02298 | .17777 |
| -98.389 | -1.008 | 1.73260 | -15.37300 | 15.23300 | .17215 | -.29644 | .03495 | -.36452 | .07460 | -.02784 | .16680 |
| | GRADIENT | .00000 | .00000 | .00000 | .00000 | .00000 | .00000 | .00000 | .00000 | .00000 | .00000 |

RUN NO. 2887/ 0 RN/L = 2.38 GRADIENT INTERVAL = -5.00/ 5.00

| Y | X | Z | ALPHA | BETA | PHI | CN | CLM | CY | CYN | CBL | CA |
|---|---|---|---|---|---|---|---|---|---|---|---|
| -151.070 | -.170 | -.21163 | -15.38400 | 15.24700 | .15548 | -.29397 | .02723 | -.34676 | .05971 | -.02643 | .17858 |
| -151.140 | 99.908 | .17951 | -15.46900 | 15.32200 | .18717 | -.34526 | .01786 | -.38525 | .04252 | -.02271 | .18503 |
| -150.910 | 199.780 | -.01722 | -15.51500 | 15.36800 | .21049 | -.38093 | .01701 | -.41416 | .03418 | -.02075 | .18007 |
| | GRADIENT | .00000 | .00000 | .00000 | .00000 | .00000 | .00000 | .00000 | .00000 | .00000 | .00000 |

IA143, AEDC V41A-P8A, O/ET W/R.H. SRB SEPARATING (OVX126) ( 20 MAY 77 )

REFERENCE DATA

SREF = 2690.0000 SQ.FT. XMRP = 1097.0000 IN. XT
LREF = 1290.3000 INCHES YMRP = .0000 IN. YT
BREF = 1290.3000 INCHES ZMRP = 450.0000 IN. ZT
SCALE = .0100

PARAMETRIC DATA

ALPHA = -15.000 BETA = 15.000
DALPHA = .000 DBETA = -2.000
Z = 100.000 MACH = 4.500
JET PC = 1225.000

RUN NO. 2882/ 0 RN/L = 2.37 GRADIENT INTERVAL = -5.00/ 5.00

| Y | X | Z | ALPHA | BETA | PHI | CN | CLM | CY | CYN | CBL | CA |
|---|---|---|---|---|---|---|---|---|---|---|---|
| -50.832 | 199.840 | 99.85900 | -15.49600 | 15.46300 | .27739 | -.37251 | .03519 | -.51621 | .03875 | -.02210 | .16856 |
| -48.705 | 99.184 | 102.09000 | -15.40000 | 15.38500 | .24616 | -.31426 | .05065 | -.47362 | .05520 | -.02504 | .18001 |
| -47.983 | -.953 | 101.53000 | -15.30500 | 15.27100 | .22756 | -.27268 | .06837 | -.43390 | .08867 | -.02839 | .15716 |
| | GRADIENT | .00000 | .00000 | .00000 | .00000 | .00000 | .00000 | .00000 | .00000 | .00000 | .00000 |

IA143, AEDC V41A-P8A, O/ET W/R.H. SRB SEPARATING (OVX126) ( 20 MAY 77 )

REFERENCE DATA

SREF = 2690.0000 SQ.FT. XMRP = 1097.0000 IN. XT
LREF = 1290.3000 INCHES YMRP = .0000 IN. YT
BREF = 1290.3000 INCHES ZMRP = 450.0000 IN. ZT
SCALE = .0100

PARAMETRIC DATA

ALPHA = -15.000 BETA = 15.000
DALPHA = .000 DBETA = -2.000
Z = 100.000 MACH = 4.500
JET PC = 1225.000

RUN NO. 2885/ 0 RN/L = 2.38 GRADIENT INTERVAL = -5.00/ 5.00

| Y | X | Z | ALPHA | BETA | PHI | CN | CLM | CY | CYN | CBL | CA |
|---|---|---|---|---|---|---|---|---|---|---|---|
| -99.659 | -.483 | 97.81000 | -15.33200 | 15.26400 | .19843 | -.29116 | .06089 | -.39953 | .07647 | -.02767 | .16690 |
| -101.280 | 99.832 | 100.13000 | -15.43700 | 15.36400 | .22910 | -.34284 | .04389 | -.44815 | .05266 | -.02458 | .18520 |
| -100.860 | 199.740 | 99.84000 | -15.50700 | 15.43400 | .25651 | -.38742 | .03485 | -.48821 | .03921 | -.02251 | .17808 |
| | GRADIENT | .00000 | .00000 | .00000 | .00000 | .00000 | .00000 | .00000 | .00000 | .00000 | .00000 |

RUN NO. 2888/ 0 RN/L = 2.38 GRADIENT INTERVAL = -5.00/ 5.00

| Y | X | Z | ALPHA | BETA | PHI | CN | CLM | CY | CYN | CBL | CA |
|---|---|---|---|---|---|---|---|---|---|---|---|
| -151.190 | 199.700 | 99.91000 | -15.51400 | 15.44000 | .23798 | -.38841 | .03142 | -.47467 | .03092 | -.02315 | .19073 |
| -149.110 | 99.341 | 101.18000 | -15.45200 | 15.37400 | .21387 | -.34664 | .03735 | -.43488 | .04240 | -.02422 | .19443 |
| -147.850 | -1.028 | 101.65000 | -15.35100 | 15.27700 | .18073 | -.29353 | .05188 | -.38593 | .06491 | -.02763 | .18044 |
| | GRADIENT | .00000 | .00000 | .00000 | .00000 | .00000 | .00000 | .00000 | .00000 | .00000 | .00000 |

IA143, AEDC V41A-P8A, O/ET W/R.H. SRB SEPARATING (OVX127) ( 20 MAY 77 )

REFERENCE DATA

SREF = 2690.0000 SQ.FT. XMRP = 1097.0000 IN. XT
LREF = 1290.3000 INCHES YMRP = .0000 IN. YT
BREF = 1290.3000 INCHES ZMRP = 450.0000 IN. ZT
SCALE = .0100

PARAMETRIC DATA

ALPHA = -15.000 BETA = 15.000
DALPHA = .000 DBETA = -2.000
Z = 200.000 MACH = 4.500
JET PC = 1225.000

RUN NO. 2883/ 0 RN/L = 2.37 GRADIENT INTERVAL = -5.00/ 5.00

| Y | X | Z | ALPHA | BETA | PHI | CN | CLM | CY | CYN | CBL | CA |
|---|---|---|---|---|---|---|---|---|---|---|---|
| -51.038 | -.160 | 199.78000 | -15.21800 | 15.31100 | .22218 | -.22077 | .09001 | -.44388 | .07620 | -.02902 | .16055 |
| -51.136 | 99.964 | 200.05000 | -15.27500 | 15.39500 | .25701 | -.24969 | .08917 | -.51441 | .07208 | -.03125 | .18781 |
| -51.369 | 199.910 | 199.83000 | -15.42100 | 15.56000 | .32289 | -.31408 | .06198 | -.75458 | .12141 | -.05954 | .19580 |
| | GRADIENT | .00000 | .00000 | .00000 | .00000 | .00000 | .00000 | .00000 | .00000 | .00000 | .00000 |

RUN NO. 2884/ 0 RN/L = 2.38 GRADIENT INTERVAL = -5.00/ 5.00

| Y | X | Z | ALPHA | BETA | PHI | CN | CLM | CY | CYN | CBL | CA |
|---|---|---|---|---|---|---|---|---|---|---|---|
| -100.980 | 199.800 | 199.87000 | -15.46800 | 15.57400 | .29429 | -.35213 | .05358 | -.58510 | .02321 | -.02607 | .19684 |
| -97.003 | 98.934 | 201.56000 | -15.37300 | 15.45800 | .24922 | -.30148 | .06854 | -.51136 | .04202 | -.02781 | .20518 |
| -97.010 | -1.133 | 201.58000 | -15.27300 | 15.32200 | .21219 | -.25551 | .08179 | -.43827 | .06912 | -.02921 | .18110 |
| | GRADIENT | .00000 | .00000 | .00000 | .00000 | .00000 | .00000 | .00000 | .00000 | .00000 | .00000 |

IA143, AEDC V41A-P8A, O/ET W/R.H. SRB SEPARATING (OVX127) ( 20 MAY 77 )

REFERENCE DATA

SREF = 2690.0000 SQ.FT. XMRP = 1097.0000 IN. XT
LREF = 1290.3000 INCHES YMRP = .0000 IN. YT
BREF = 1290.3000 INCHES ZMRP = 450.0000 IN. ZT
SCALE = .0100

PARAMETRIC DATA

ALPHA = -15.000 BETA = 15.000
DALPHA = .000 DBETA = -2.000
Z = 200.000 MACH = 4.500
JET PC = 1225.000

RUN NO. 2889/ 0 RN/L = 2.38 GRADIENT INTERVAL = -5.00/ 5.00

| Y | X | Z | ALPHA | BETA | PHI | CN | CLM | CY | CYN | CBL | CA |
|---|---|---|---|---|---|---|---|---|---|---|---|
| -151.330 | -.029 | 199.80000 | -15.32800 | 15.33900 | .20032 | -.28536 | .06931 | -.43201 | .05897 | -.02922 | .19455 |
| -150.790 | 99.760 | 200.08000 | -15.42500 | 15.46500 | .24152 | -.32883 | .05443 | -.49938 | .03280 | -.02625 | .21140 |
| -150.860 | 199.800 | 199.83000 | -15.49500 | 15.56000 | .28095 | -.36842 | .04722 | -.56246 | .01842 | -.02484 | .20875 |
| | GRADIENT | .00000 | .00000 | .00000 | .00000 | .00000 | .00000 | .00000 | .00000 | .00000 | .00000 |

IA143, AEDC V41A-P8A, O/ET W/R.H. SRB SEPARATING (OVX128) ( 20 MAY 77 )

REFERENCE DATA

SREF = 2690.0000 SQ.FT. XMRP = 1097.0000 IN. XT
LREF = 1290.3000 INCHES YMRP = .0000 IN. YT
BREF = 1290.3000 INCHES ZMRP = 450.0000 IN. ZT
SCALE = .0100

PARAMETRIC DATA

ALPHA = -15.000 BETA = 15.000
DALPHA = .000 DBETA = .000
Z = .000 MACH = 4.500
JET PC = 1225.000

RUN NO. 2890/ 0 RN/L = 2.38 GRADIENT INTERVAL = -5.00/ 5.00

| Y | X | Z | ALPHA | BETA | PHI | CN | CLM | CY | CYN | CBL | CA |
|---|---|---|---|---|---|---|---|---|---|---|---|
| -11.988 | -.625 | -.77063 | -15.42000 | 15.25200 | .22027 | -.34095 | .04429 | -.45873 | .11268 | -.03718 | .17710 |
| -10.754 | 99.803 | -.04326 | -15.54600 | 15.36900 | .26159 | -.40619 | .02145 | -.49885 | .07483 | -.02849 | .17824 |
| -10.998 | 199.850 | -.00327 | -15.56800 | 15.40600 | .28670 | -.42069 | .02110 | -.51842 | .06571 | -.02470 | .17017 |
| | GRADIENT | .00000 | .00000 | .00000 | .00000 | .00000 | .00000 | .00000 | .00000 | .00000 | .00000 |

RUN NO. 2895/ 0 RN/L = 2.38 GRADIENT INTERVAL = -5.00/ 5.00

| Y | X | Z | ALPHA | BETA | PHI | CN | CLM | CY | CYN | CBL | CA |
|---|---|---|---|---|---|---|---|---|---|---|---|
| -48.734 | 199.390 | -1.46070 | -15.51100 | 15.34900 | .24559 | -.39465 | .02932 | -.44393 | .05566 | -.02098 | .16943 |
| -49.808 | 99.635 | .99659 | -15.46500 | 15.30500 | .22157 | -.36412 | .03432 | -.41840 | .06489 | -.02379 | .17634 |
| -49.272 | -.571 | 1.81610 | -15.37200 | 15.22800 | .19044 | -.31044 | .04590 | -.38424 | .08555 | -.02852 | .16614 |
| | GRADIENT | .00000 | .00000 | .00000 | .00000 | .00000 | .00000 | .00000 | .00000 | .00000 | .00000 |

RUN NO. 2896/ 0 RN/L = 2.38 GRADIENT INTERVAL = -5.00/ 5.00

| Y | X | Z | ALPHA | BETA | PHI | CN | CLM | CY | CYN | CBL | CA |
|---|---|---|---|---|---|---|---|---|---|---|---|
| -101.130 | -.144 | -.37758 | -15.38300 | 15.23500 | .17650 | -.30885 | .03909 | -.35715 | .06855 | -.02492 | .17615 |
| -101.000 | 100.010 | .05196 | -15.47300 | 15.31800 | .20997 | -.35875 | .02609 | -.39947 | .04960 | -.02110 | .18058 |
| -101.220 | 199.950 | .06656 | -15.51600 | 15.36100 | .23168 | -.38811 | .02183 | -.42085 | .03852 | -.01796 | .17183 |
| | GRADIENT | .00000 | .0$000 | .00000 | .00000 | .00000 | .0$000 | .00000 | .00000 | .00000 | .00000 |

IA143, AEDC V41A-P8A, O/ET W/R.H. SRB SEPARATING (OVX129) ( 20 MAY 77 )

REFERENCE DATA

SREF = 2690.0000 SQ.FT. XMRP = 1097.0000 IN. XT
LREF = 1290.3000 INCHES YMRP = .0000 IN. YT
BREF = 1290.3000 INCHES ZMRP = 450.0000 IN. ZT
SCALE = .0100

PARAMETRIC DATA

ALPHA = -15.000 BETA = 15.000
DALPHA = .000 DBETA = .000
Z = 100.000 MACH = 4.500
JET PC = 1225.000

RUN NO. 2891/ 0 RN/L = 2.38 GRADIENT INTERVAL = -5.00/ 5.00

| Y | X | Z | ALPHA | BETA | PHI | CN | CLM | CY | CYN | CBL | CA |
|---|---|---|---|---|---|---|---|---|---|---|---|
| -10.882 | 199.830 | 99.97500 | -15.49100 | 15.48700 | .33874 | -.37325 | .05407 | -.64775 | .09351 | -.03666 | .18983 |
| -11.036 | 99.828 | 99.86900 | -15.33800 | 15.35700 | .26914 | -.27803 | .06842 | -.50690 | .08437 | -.02953 | .18306 |
| -8.407 | -.742 | 101.32000 | -15.26000 | 15.28300 | .24488 | -.24429 | .08091 | -.46868 | .10061 | -.03164 | .15443 |
| | GRADIENT | .00000 | .00000 | .00000 | .00000 | .00000 | .00000 | .00000 | .00000 | .00000 | .00000 |

RUN NO. 2894/ 0 RN/L = 2.38 GRADIENT INTERVAL = -5.00/ 5.00

| Y | X | Z | ALPHA | BETA | PHI | CN | CLM | CY | CYN | CBL | CA |
|---|---|---|---|---|---|---|---|---|---|---|---|
| -50.807 | -.057 | 99.83200 | -15.31800 | 15.28100 | .22669 | -.28618 | .07198 | -.42717 | .08057 | -.02639 | .16836 |
| -51.018 | 99.963 | 100.12000 | -15.42000 | 15.39500 | .25382 | -.32720 | .04956 | -.47274 | .04911 | -.02242 | .18546 |
| -51.011 | 199.830 | 99.81500 | -15.50300 | 15.47300 | .28335 | -.37852 | .03586 | -.51373 | .03176 | -.01945 | .16734 |
| | GRADIENT | .00000 | .00000 | .00000 | .00000 | .00000 | .00000 | .00000 | .00000 | .00000 | .00000 |

RUN NO. 2897/ 0 RN/L = 2.38 GRADIENT INTERVAL = -5.00/ 5.00

| Y | X | Z | ALPHA | BETA | PHI | CN | CLM | CY | CYN | CBL | CA |
|---|---|---|---|---|---|---|---|---|---|---|---|
| -100.590 | 199.850 | 100.05000 | -15.51100 | 15.43800 | .26686 | -.39258 | .03728 | -.48910 | .03648 | -.02008 | .17657 |
| -99.285 | 99.461 | 101.03000 | -15.44500 | 15.37500 | .23912 | -.34850 | .04533 | -.45336 | .04921 | -.02270 | .18781 |
| -98.408 | -.784 | 101.83000 | -15.33600 | 15.27100 | .20653 | -.29634 | .06512 | -.40331 | .07437 | -.02622 | .17608 |
| | GRADIENT | .00000 | .00000 | .00000 | .00000 | .00000 | .00000 | .00000 | .00000 | .00000 | .00000 |

IA143, AEDC V41A-P8A, O/ET W/R.H. SRB SEPARATING (OVX130) ( 20 MAY 77 )

REFERENCE DATA

SREF = 2690.0000 SQ.FT. XMRP = 1097.0000 IN. XT
LREF = 1290.3000 INCHES YMRP = .0000 IN. YT
BREF = 1290.3000 INCHES ZMRP = 450.0000 IN. ZT
SCALE = .0100

PARAMETRIC DATA

ALPHA = -15.000 BETA = 15.000
DALPHA = .000 DBETA = .000
Z = 200.000 MACH = 4.500
JET PC = 1225.000

RUN NO. 2892/ 0 RN/L = 2.39 GRADIENT INTERVAL = -5.00/ 5.00

| Y | X | Z | ALPHA | BETA | PHI | CN | CLM | CY | CYN | CBL | CA |
|---|---|---|---|---|---|---|---|---|---|---|---|
| -10.901 | -.893 | 200.32000 | -15.16400 | 15.31400 | .25039 | -.19676 | .10841 | -.47349 | .08823 | -.02936 | .14472 |
| -10.877 | 99.772 | 200.16000 | -15.42300 | 15.65100 | .37277 | -.26811 | .04885 | -.67147 | .02567 | -.02246 | .20968 |
| -11.078 | 199.900 | 199.60000 | -15.50700 | 15.75400 | .42693 | -.29961 | .03252 | -.67454 | -.02746 | -.00346 | .21060 |
| | GRADIENT | .00000 | .00000 | .00000 | .00000 | .00000 | .00000 | .00000 | .00000 | .00000 | .00000 |

IA143, AEDC V41A-P8A, O/ET W/R.H. SRB SEPARATING (OVX130) ( 20 MAY 77 )

REFERENCE DATA

SREF = 2690.0000 SQ.FT. XMRP = 1097.0000 IN. XT
LREF = 1290.3000 INCHES YMRP = .0000 IN. YT
BREF = 1290.3000 INCHES ZMRP = 450.0000 IN. ZT
SCALE = .0100

PARAMETRIC DATA

ALPHA = -15.000 BETA = 15.000
DALPHA = .000 DBETA = .000
Z = 200.000 MACH = 4.500
JET PC = 1225.000

RUN NO. 2893/ 0 RN/L = 2.38 GRADIENT INTERVAL = -5.00/ 5.00

| Y | X | Z | ALPHA | BETA | PHI | CN | CLM | CY | CYN | CBL | CA |
|---|---|---|---|---|---|---|---|---|---|---|---|
| -47.881 | 199.130 | 200.53000 | -15.43700 | 15.58300 | .35911 | -.31654 | .06179 | -.70365 | .07789 | -.03804 | .19814 |
| -50.758 | 99.950 | 199.87000 | -15.27300 | 15.39400 | .26798 | -.25003 | .09314 | -.51542 | .07191 | -.02910 | .19081 |
| -48.595 | -.670 | 200.57000 | -15.21500 | 15.31600 | .23081 | -.22286 | .09643 | -.44714 | .07472 | -.02747 | .16758 |
| | GRADIENT | .00000 | .00000 | .00000 | .00000 | .00000 | .00000 | .00000 | .00000 | .00000 | .00000 |

RUN NO. 2898/ 0 RN/L = 2.38 GRADIENT INTERVAL = -5.00/ 5.00

| Y | X | Z | ALPHA | BETA | PHI | CN | CLM | CY | CYN | CBL | CA |
|---|---|---|---|---|---|---|---|---|---|---|---|
| -101.030 | -.035 | 199.75000 | -15.28500 | 15.33400 | .22261 | -.26309 | .08344 | -.44429 | .06581 | -.02742 | .18886 |
| -100.710 | 99.926 | 200.22000 | -15.38300 | 15.46800 | .25927 | -.30534 | .06702 | -.51338 | .03725 | -.02528 | .20671 |
| -100.870 | 200.000 | 199.93000 | -15.47100 | 15.57900 | .30280 | -.35596 | .05552 | -.59231 | .02373 | -.02539 | .19616 |
| | GRADIENT | .00000 | .00000 | .00000 | .00000 | .00000 | .00000 | .00000 | .00000 | .00000 | .00000 |

IA143, AEDC V41A-P8A, O/ET W/R.H. SRB SEPARATING (OVX131) ( 20 MAY 77 )

REFERENCE DATA

SREF = 2690.0000 SQ.FT. XMRP = 1097.0000 IN. XT
LREF = 1290.3000 INCHES YMRP = .0000 IN. YT
BREF = 1290.3000 INCHES ZMRP = 450.0000 IN. ZT
SCALE = .0100

PARAMETRIC DATA

ALPHA = -15.000 BETA = 15.000
DALPHA = .000 DBETA = 2.000
Z = .000 MACH = 4.500
JET PC = 1225.000

RUN NO. 2899/ 0 RN/L = 2.38 GRADIENT INTERVAL = -5.00/ 5.00

| Y | X | Z | ALPHA | BETA | PHI | CN | CLM | CY | CYN | CBL | CA |
|---|---|---|---|---|---|---|---|---|---|---|---|
| -10.944 | -.822 | -.81935 | -15.40700 | 15.24200 | .21142 | -.34626 | .05502 | -.43890 | .10734 | -.03538 | .18423 |
| -11.027 | 99.828 | -.12186 | -15.53200 | 15.35000 | .25803 | -.41071 | .03149 | -.48710 | .07771 | -.02800 | .18130 |
| -10.707 | 199.910 | .00799 | -15.55900 | 15.39300 | .28486 | -.42731 | .02921 | -.50721 | .06561 | -.02346 | .16952 |
| | GRADIENT | .00000 | .00000 | .00000 | .00000 | .00000 | .00000 | .00000 | .00000 | .00000 | .00000 |

RUN NO. 2904/ 0 RN/L = 2.37 GRADIENT INTERVAL = -5.00/ 5.00

| Y | X | Z | ALPHA | BETA | PHI | CN | CLM | CY | CYN | CBL | CA |
|---|---|---|---|---|---|---|---|---|---|---|---|
| -48.145 | 199.210 | -1.17450 | -15.51200 | 15.35100 | .25029 | -.40107 | .03422 | -.46405 | .06504 | -.02432 | .17276 |
| -50.160 | 99.698 | .91465 | -15.47400 | 15.31200 | .23053 | -.37323 | .03759 | -.44485 | .07519 | -.02729 | .18373 |
| -49.109 | -.472 | 1.72390 | -15.37900 | 15.23300 | .19925 | -.32272 | .05422 | -.40966 | .09625 | -.03200 | .18132 |
| | GRADIENT | .00000 | .00000 | .00000 | .00000 | .00000 | .00000 | .00000 | .00000 | .00000 | .00000 |

IA143, AEDC V41A-P8A, O/ET W/R.H. SRB SEPARATING (OVX131) ( 20 MAY 77 )

REFERENCE DATA

SREF = 2690.0000 SQ.FT. XMRP = 1097.0000 IN. XT
LREF = 1290.3000 INCHES YMRP = .0000 IN. YT
BREF = 1290.3000 INCHES ZMRP = 450.0000 IN. ZT
SCALE = .0100

PARAMETRIC DATA

ALPHA = -15.000 BETA = 15.000
DALPHA = .000 DBETA = 2.000
Z = .000 MACH = 4.500
JET PC = 1225.000

RUN NO. 2905/ 0 RN/L = 2.37 GRADIENT INTERVAL = -5.00/ 5.00

| Y | X | Z | ALPHA | BETA | PHI | CN | CLM | CY | CYN | CBL | CA |
|---|---|---|---|---|---|---|---|---|---|---|---|
| -101.160 | .001 | -.17879 | -15.39000 | 15.24100 | .18391 | -.31947 | .04471 | -.38068 | .07826 | -.02826 | .18598 |
| -101.160 | 99.952 | .18277 | -15.47400 | 15.31800 | .21490 | -.36704 | .03228 | -.42030 | .06036 | -.02471 | .18655 |
| -101.090 | 200.020 | .08071 | -15.51800 | 15.36200 | .23694 | -.39687 | .02788 | -.44192 | .04926 | -.02154 | .17653 |
| | GRADIENT | .00000 | .00000 | .00000 | .00000 | .00000 | .00000 | .00000 | .00000 | .00000 | .00000 |

IA143, AEDC V41A-P8A, O/ET W/R.H. SRB SEPARATING (OVX132) ( 20 MAY 77 )

REFERENCE DATA

SREF = 2690.0000 SQ.FT. XMRP = 1097.0000 IN. XT
LREF = 1290.3000 INCHES YMRP = .0000 IN. YT
BREF = 1290.3000 INCHES ZMRP = 450.0000 IN. ZT
SCALE = .0100

PARAMETRIC DATA

ALPHA = -15.000 BETA = 15.000
DALPHA = .000 DBETA = 2.000
Z = 100.000 MACH = 4.500
JET PC = 1225.000

RUN NO. 2900/ 0 RN/L = 2.37 GRADIENT INTERVAL = -5.00/ 5.00

| Y | X | Z | ALPHA | BETA | PHI | CN | CLM | CY | CYN | CBL | CA |
|---|---|---|---|---|---|---|---|---|---|---|---|
| -10.148 | 199.720 | 99.83200 | -15.48700 | 15.47900 | .33049 | -.38873 | .06343 | -.64145 | .09502 | -.03770 | .18836 |
| -10.767 | 99.891 | 99.87100 | -15.33700 | 15.35300 | .27347 | -.28884 | .07592 | -.50951 | .08720 | -.02947 | .18316 |
| -9.416 | -.507 | 101.17000 | -15.26900 | 15.29800 | .24207 | -.25320 | .08285 | -.46366 | .09111 | -.03004 | .16270 |
| | GRADIENT | .00000 | .00000 | .00000 | .00000 | .00000 | .00000 | .00000 | .00000 | .00000 | .00000 |

RUN NO. 2903/ 0 RN/L = 2.37 GRADIENT INTERVAL = -5.00/ 5.00

| Y | X | Z | ALPHA | BETA | PHI | CN | CLM | CY | CYN | CBL | CA |
|---|---|---|---|---|---|---|---|---|---|---|---|
| -50.834 | -.005 | 100.00000 | -15.31900 | 15.29100 | .23318 | -.28837 | .07692 | -.45089 | .08800 | -.02955 | .18123 |
| -50.918 | 99.947 | 99.76600 | -15.41800 | 15.40000 | .26303 | -.32871 | .05507 | -.49886 | .06046 | -.02598 | .19216 |
| -51.195 | 200.010 | 99.91800 | -15.50300 | 15.48200 | .29011 | -.37988 | .03864 | -.53437 | .03812 | -.02195 | .17137 |
| | GRADIENT | .00000 | .00000 | .00000 | .00000 | .00000 | .00000 | .00000 | .00000 | .00000 | .00000 |

RUN NO. 2906/ 0 RN/L = 2.38 GRADIENT INTERVAL = -5.00/ 5.00

| Y | X | Z | ALPHA | BETA | PHI | CN | CLM | CY | CYN | CBL | CA |
|---|---|---|---|---|---|---|---|---|---|---|---|
| -100.290 | 199.780 | 99.80400 | -15.51200 | 15.44400 | .27508 | -.39702 | .04186 | -.51281 | .04597 | -.02326 | .18124 |
| -99.382 | 99.614 | 101.10000 | -15.45100 | 15.38700 | .24792 | -.35535 | .04927 | -.47834 | .05661 | -.02557 | .19488 |
| -98.328 | -.747 | 101.90000 | -15.34300 | 15.27900 | .21561 | -.30423 | .07034 | -.42883 | .08355 | -.02937 | .18818 |
| | GRADIENT | .00000 | .00000 | .00000 | .00000 | .00000 | .00000 | .00000 | .00000 | .00000 | .00000 |

IA143, AEDC V41A-P8A, O/ET W/R.H. SRB SEPARATING (OVX133) ( 20 MAY 77 )

REFERENCE DATA

SREF = 2690.0000 SQ.FT. XMRP = 1097.0000 IN. XT
LREF = 1290.3000 INCHES YMRP = .0000 IN. YT
BREF = 1290.3000 INCHES ZMRP = 450.0000 IN. ZT
SCALE = .0100

PARAMETRIC DATA

ALPHA = -15.000 BETA = 15.000
DALPHA = .000 DBETA = 2.000
Z = 200.000 MACH = 4.500
JET PC = 1225.000

RUN NO. 2901/ 0 RN/L = 2.37 GRADIENT INTERVAL = -5.00/ 5.00

| Y | X | Z | ALPHA | BETA | PHI | CN | CLM | CY | CYN | CBL | CA |
|---|---|---|---|---|---|---|---|---|---|---|---|
| -11.077 | -.008 | 199.90000 | -15.16200 | 15.32600 | .26246 | -.19852 | .11570 | -.50679 | .09956 | -.03327 | .15603 |
| -10.939 | 99.959 | 200.00000 | -15.42300 | 15.66800 | .37885 | -.27076 | .05424 | -.69233 | .02877 | -.02472 | .21893 |
| -10.878 | 199.920 | 199.82000 | -15.50300 | 15.76800 | .43401 | -.29462 | .03382 | -.69558 | -.02313 | -.00566 | .21256 |
| | GRADIENT | .00000 | .00000 | .00000 | .00000 | .00000 | .00000 | .00000 | .00000 | .00000 | .00000 |

RUN NO. 2902/ 0 RN/L = 2.37 GRADIENT INTERVAL = -5.00/ 5.00

| Y | X | Z | ALPHA | BETA | PHI | CN | CLM | CY | CYN | CBL | CA |
|---|---|---|---|---|---|---|---|---|---|---|---|
| -49.118 | 199.540 | 200.18000 | -15.46400 | 15.64000 | .38841 | -.31743 | .05460 | -.73087 | .06242 | -.03340 | .20139 |
| -50.403 | 99.793 | 199.78000 | -15.27700 | 15.40900 | .28167 | -.25434 | .09801 | -.54626 | .08026 | -.03193 | .19848 |
| -48.833 | -.615 | 200.80000 | -15.20900 | 15.32300 | .24090 | -.22288 | .10337 | -.47565 | .08614 | -.03121 | .17581 |
| | GRADIENT | .00000 | .00000 | .00000 | .00000 | .00000 | .00000 | .00000 | .00000 | .00000 | .00000 |

RUN NO. 2907/ 0 RN/L = 2.38 GRADIENT INTERVAL = -5.00/ 5.00

| Y | X | Z | ALPHA | BETA | PHI | CN | CLM | CY | CYN | CBL | CA |
|---|---|---|---|---|---|---|---|---|---|---|---|
| -101.110 | -.077 | 199.79000 | -15.28300 | 15.34500 | .23088 | -.26598 | .09066 | -.47195 | .07479 | -.03101 | .19981 |
| -100.950 | 99.967 | 200.08000 | -15.37200 | 15.46700 | .26793 | -.30475 | .07612 | -.54031 | .05141 | -.02952 | .21372 |
| -101.380 | 200.070 | 199.90000 | -15.45900 | 15.57600 | .31114 | -.34683 | .05910 | -.60219 | .03029 | -.02618 | .19988 |
| | GRADIENT | .00000 | .00000 | .00000 | .00000 | .00000 | .00000 | .00000 | .00000 | .00000 | .00000 |

IA143, AEDC V41A-P8A, O/ET W/R.H. SRB SEPARATING (OVX134) ( 20 MAY 77 )

REFERENCE DATA

SREF = 2690.0000 SQ.FT. XMRP = 1097.0000 IN. XT
LREF = 1290.3000 INCHES YMRP = .0000 IN. YT
BREF = 1290.3000 INCHES ZMRP = 450.0000 IN. ZT
SCALE = .0100

PARAMETRIC DATA

ALPHA = -15.000 BETA = 15.000
DALPHA = -4.000 DBETA = -4.000
Z = .000 MACH = 4.500
JET PC = 1225.000

RUN NO. 2908/ 0 RN/L = 2.39 GRADIENT INTERVAL = -5.00/ 5.00

| Y | X | Z | ALPHA | BETA | PHI | CN | CLM | CY | CYN | CBL | CA |
|---|---|---|---|---|---|---|---|---|---|---|---|
| -102.080 | -.683 | -.40067 | -15.33600 | 15.21600 | .13183 | -.26866 | .03042 | -.33353 | .07009 | -.03109 | .15667 |
| -102.000 | 100.190 | .10602 | -15.44400 | 15.31400 | .16762 | -.32271 | .01370 | -.37155 | .04104 | -.02460 | .17491 |
| -100.700 | 199.740 | -.07704 | -15.50900 | 15.37200 | .19814 | -.36868 | .00985 | -.40650 | .02933 | -.02145 | .17382 |
| | GRADIENT | .00000 | .00000 | .00000 | .00000 | .00000 | .00000 | .00000 | .00000 | .00000 | .00000 |

IA143, AEDC V41A-P8A, O/ET W/R.H. SRB SEPARATING (OVX134) ( 20 MAY 77 )

REFERENCE DATA

SREF = 2690.0000 SQ.FT. XMRP = 1097.0000 IN. XT
LREF = 1290.3000 INCHES YMRP = .0000 IN. YT
BREF = 1290.3000 INCHES ZMRP = 450.0000 IN. ZT
SCALE = .0100

PARAMETRIC DATA

ALPHA = -15.000 BETA = 15.000
DALPHA = -4.000 DBETA = -4.000
Z = .000 MACH = 4.500
JET PC = 1225.000

RUN NO. 2913/ 0 RN/L = 2.38 GRADIENT INTERVAL = -5.00/ 5.00

| Y | X | Z | ALPHA | BETA | PHI | CN | CLM | CY | CYN | CBL | CA |
|---|---|---|---|---|---|---|---|---|---|---|---|
| -149.530 | 199.270 | -.76312 | -15.51100 | 15.37200 | .18860 | -.36861 | .00925 | -.39896 | .02628 | -.02185 | .18288 |
| -149.490 | 99.381 | 1.44040 | -15.44500 | 15.31300 | .15482 | -.32025 | .01147 | -.36124 | .03697 | -.02515 | .18324 |
| -149.080 | -.786 | 1.93910 | -15.34500 | 15.22600 | .11748 | -.26655 | .02464 | -.32498 | .06209 | -.03160 | .16741 |
| | GRADIENT | .00000 | .00000 | .00000 | .00000 | .00000 | .00000 | .00000 | .00000 | .00000 | .00000 |

RUN NO. 2914/ 0 RN/L = 2.38 GRADIENT INTERVAL = -5.00/ 5.00

| Y | X | Z | ALPHA | BETA | PHI | CN | CLM | CY | CYN | CBL | CA |
|---|---|---|---|---|---|---|---|---|---|---|---|
| -202.850 | .306 | -.11672 | -15.37000 | 15.24500 | .11256 | -.28157 | .02179 | -.32049 | .05150 | -.03035 | .17993 |
| -201.160 | 99.899 | -.04922 | -15.46100 | 15.32700 | .14649 | -.33626 | .01298 | -.35875 | .02990 | -.02543 | .19432 |
| -201.110 | 199.810 | -.02702 | -15.51800 | 15.38300 | .17904 | -.38208 | .01447 | -.39487 | .02030 | -.02239 | .19237 |
| | GRADIENT | .00000 | .00000 | .00000 | .00000 | .00000 | .00000 | .00000 | .00000 | .00000 | .00000 |

IA143, AEDC V41A-P8A, O/ET W/R.H. SRB SEPARATING (OVX135) ( 20 MAY 77 )

REFERENCE DATA

SREF = 2690.0000 SQ.FT. XMRP = 1097.0000 IN. XT
LREF = 1290.3000 INCHES YMRP = .0000 IN. YT
BREF = 1290.3000 INCHES ZMRP = 450.0000 IN. ZT
SCALE = .0100

PARAMETRIC DATA

ALPHA = -15.000 BETA = 15.000
DALPHA = -4.000 DBETA = -4.000
Z = 100.000 MACH = 4.500
JET PC = 1225.000

RUN NO. 2909/ 0 RN/L = 2.38 GRADIENT INTERVAL = -5.00/ 5.00

| Y | X | Z | ALPHA | BETA | PHI | CN | CLM | CY | CYN | CBL | CA |
|---|---|---|---|---|---|---|---|---|---|---|---|
| -100.660 | 199.490 | 99.98800 | -15.50200 | 15.44000 | .23729 | -.38125 | .03164 | -.47115 | .02913 | -.02255 | .17860 |
| -98.871 | 99.329 | 101.78000 | -15.41100 | 15.34900 | .20040 | -.32520 | .04075 | -.42054 | .04766 | -.02582 | .17507 |
| -100.440 | -.282 | 99.71300 | -15.29900 | 15.22900 | .16770 | -.26421 | .05252 | -.37792 | .08405 | -.03211 | .14233 |
| | GRADIENT | .00000 | .00000 | .00000 | .00000 | .00000 | .00000 | .00000 | .00000 | .00000 | .00000 |

RUN NO. 2912/ 0 RN/L = 2.38 GRADIENT INTERVAL = -5.00/ 5.00

| Y | X | Z | ALPHA | BETA | PHI | CN | CLM | CY | CYN | CBL | CA |
|---|---|---|---|---|---|---|---|---|---|---|---|
| -149.760 | -.508 | 98.89900 | -15.32100 | 15.24500 | .15022 | -.27481 | .04807 | -.35793 | .06781 | -.03040 | .16216 |
| -150.750 | 99.897 | 100.03000 | -15.42300 | 15.35000 | .18392 | -.32977 | .03661 | -.40209 | .03895 | -.02522 | .18671 |
| -150.660 | 199.630 | 100.02000 | -15.50700 | 15.43800 | .22012 | -.38304 | .02990 | -.45589 | .02338 | -.02303 | .19174 |
| | GRADIENT | .00000 | .00000 | .00000 | .00000 | .00000 | .00000 | .00000 | .00000 | .00000 | .00000 |

IA143, AEDC V41A-P8A, O/ET W/R.H. SRB SEPARATING (OVX135) ( 20 MAY 77 )

REFERENCE DATA

SREF = 2690.0000 SQ.FT. XMRP = 1097.0000 IN. XT
LREF = 1290.3000 INCHES YMRP = .0000 IN. YT
BREF = 1290.3000 INCHES ZMRP = 450.0000 IN. ZT
SCALE = .0100

PARAMETRIC DATA

ALPHA = -15.000 BETA = 15.000
DALPHA = -4.000 DBETA = -4.000
Z = 100.000 MACH = 4.500
JET PC = 1225.000

RUN NO. 2915/ 0 RN/L = 2.38 GRADIENT INTERVAL = -5.00/ 5.00

| Y | X | Z | ALPHA | BETA | PHI | CN | CLM | CY | CYN | CBL | CA |
|---|---|---|---|---|---|---|---|---|---|---|---|
| -200.460 | 199.690 | 99.98700 | -15.51300 | 15.43900 | .20889 | -.39085 | .03215 | -.45314 | .02274 | -.02486 | .20343 |
| -199.130 | 99.479 | 101.40000 | -15.44000 | 15.36200 | .17393 | -.34261 | .03653 | -.40075 | .03417 | -.02643 | .20078 |
| -198.630 | -.781 | 101.93000 | -15.34000 | 15.25700 | .13755 | -.28851 | .04708 | -.35200 | .06020 | -.03100 | .17842 |
| | GRADIENT | .00000 | .00000 | .00000 | .00000 | .00000 | .00000 | .00000 | .00000 | .00000 | .00000 |

IA143, AEDC V41A-P8A, O/ET W/R.H. SRB SEPARATING (OVX136) ( 20 MAY 77 )

REFERENCE DATA

SREF = 2690.0000 SQ.FT. XMRP = 1097.0000 IN. XT
LREF = 1290.3000 INCHES YMRP = .0000 IN. YT
BREF = 1290.3000 INCHES ZMRP = 450.0000 IN. ZT
SCALE = .0100

PARAMETRIC DATA

ALPHA = -15.000 BETA = 15.000
DALPHA = -4.000 DBETA = -4.000
Z = 200.000 MACH = 4.500
JET PC = 1225.000

RUN NO. 2910/ 0 RN/L = 2.38 GRADIENT INTERVAL = -5.00/ 5.00

| Y | X | Z | ALPHA | BETA | PHI | CN | CLM | CY | CYN | CBL | CA |
|---|---|---|---|---|---|---|---|---|---|---|---|
| -101.290 | -.079 | 200.05000 | -15.26400 | 15.27400 | .20136 | -.25654 | .07801 | -.42276 | .08426 | -.03159 | .15498 |
| -101.150 | 100.050 | 200.17000 | -15.37100 | 15.43100 | .23661 | -.30508 | .06553 | -.48389 | .04060 | -.02625 | .19213 |
| -101.110 | 199.790 | 199.87000 | -15.47100 | 15.56700 | .28659 | -.35607 | .05279 | -.56689 | .01707 | -.02412 | .19917 |
| | GRADIENT | .00000 | .00000 | .00000 | .00000 | .00000 | .00000 | .00000 | .00000 | .00000 | .00000 |

RUN NO. 2911/ 0 RN/L = 2.38 GRADIENT INTERVAL = -5.00/ 5.00

| Y | X | Z | ALPHA | BETA | PHI | CN | CLM | CY | CYN | CBL | CA |
|---|---|---|---|---|---|---|---|---|---|---|---|
| -150.580 | 199.700 | 199.53000 | -15.48700 | 15.54200 | .26355 | -.36791 | .04757 | -.53641 | .01444 | -.02411 | .20744 |
| -148.210 | 99.148 | 201.54000 | -15.39900 | 15.43100 | .22319 | -.32163 | .05854 | -.46931 | .03381 | -.02592 | .20049 |
| -147.620 | -.998 | 201.74000 | -15.29500 | 15.28900 | .17875 | -.27400 | .07053 | -.40790 | .07156 | -.03218 | .16739 |
| | GRADIENT | .00000 | .00000 | .00000 | .00000 | .00000 | .00000 | .00000 | .00000 | .00000 | .00000 |

RUN NO. 2916/ 0 RN/L = 2.38 GRADIENT INTERVAL = -5.00/ 5.00

| Y | X | Z | ALPHA | BETA | PHI | CN | CLM | CY | CYN | CBL | CA |
|---|---|---|---|---|---|---|---|---|---|---|---|
| -200.930 | -.135 | 200.05000 | -15.32600 | 15.30200 | .15574 | -.28893 | .06222 | -.39761 | .06262 | -.03412 | .18667 |
| -201.210 | 100.070 | 200.01000 | -15.42300 | 15.42900 | .20339 | -.34314 | .05664 | -.46199 | .03315 | -.02890 | .21210 |
| -200.640 | 199.710 | 199.86000 | -15.49700 | 15.53300 | .24502 | -.38415 | .05014 | -.53142 | .01821 | -.02786 | .21701 |
| | GRADIENT | .00000 | .00000 | .00000 | .00000 | .00000 | .00000 | .00000 | .00000 | .00000 | .00000 |

IA143, AEDC V41A-P8A, O/ET W/R.H. SRB SEPARATING (OVX137) ( 20 MAY 77 )

REFERENCE DATA

SREF = 2690.0000 SQ.FT. XMRP = 1097.0000 IN. XT
LREF = 1290.3000 INCHES YMRP = .0000 IN. YT
BREF = 1290.3000 INCHES ZMRP = 450.0000 IN. ZT
SCALE = .0100

PARAMETRIC DATA

ALPHA = -15.000 BETA = 15.000
DALPHA = -4.000 DBETA = -2.000
Z = .000 MACH = 4.500
JET PC = 1225.000

RUN NO. 2917/ 0 RN/L = 2.38 GRADIENT INTERVAL = -5.00/ 5.00

| Y | X | Z | ALPHA | BETA | PHI | CN | CLM | CY | CYN | CBL | CA |
|---|---|---|---|---|---|---|---|---|---|---|---|
| -51.836 | -.777 | -.40386 | -15.33800 | 15.21400 | .14820 | -.27204 | .03445 | -.36823 | .08855 | -.03551 | .15982 |
| -51.054 | 99.942 | .20753 | -15.44500 | 15.30300 | .17889 | -.32931 | .01880 | -.40331 | .06231 | -.03005 | .17758 |
| -52.152 | 200.040 | .13174 | -15.51100 | 15.36100 | .21449 | -.37702 | .01608 | -.43750 | .05009 | -.02569 | .17341 |
| | GRADIENT | .00000 | .00000 | .00000 | .00000 | .00000 | .00000 | .00000 | .00000 | .00000 | .00000 |

RUN NO. 2922/ 0 RN/L = 2.38 GRADIENT INTERVAL = -5.00/ 5.00

| Y | X | Z | ALPHA | BETA | PHI | CN | CLM | CY | CYN | CBL | CA |
|---|---|---|---|---|---|---|---|---|---|---|---|
| -99.300 | 199.340 | -.82271 | -15.51300 | 15.36700 | .20485 | -.37025 | .01126 | -.41766 | .03719 | -.02288 | .17976 |
| -99.355 | 99.570 | 1.45080 | -15.44800 | 15.30900 | .17148 | -.32448 | .01528 | -.38780 | .05205 | -.02782 | .18530 |
| -99.237 | -.671 | 1.95420 | -15.34600 | 15.22000 | .13445 | -.26901 | .02883 | -.35058 | .07729 | -.03412 | .17045 |
| | GRADIENT | .00000 | .00000 | .00000 | .00000 | .00000 | .00000 | .00000 | .00000 | .00000 | .00000 |

RUN NO. 2923/ 0 RN/L = 2.38 GRADIENT INTERVAL = -5.00/ 5.00

| Y | X | Z | ALPHA | BETA | PHI | CN | CLM | CY | CYN | CBL | CA |
|---|---|---|---|---|---|---|---|---|---|---|---|
| -151.110 | -.068 | .01874 | -15.35800 | 15.23300 | .12207 | -.27238 | .02456 | -.33329 | .06300 | -.03199 | .18030 |
| -150.950 | 99.909 | -.06456 | -15.45400 | 15.31500 | .15982 | -.32725 | .01287 | -.37487 | .04318 | -.02703 | .19140 |
| -150.910 | 199.770 | .09892 | -15.51400 | 15.37100 | .19411 | -.37366 | .01221 | -.40680 | .03081 | -.02256 | .18749 |
| | GRADIENT | .00000 | .00000 | .00000 | .00000 | .00000 | .00000 | .00000 | .00000 | .00000 | .00000 |

IA143, AEDC V41A-P8A, O/ET W/R.H. SRB SEPARATING (OVX138) ( 20 MAY 77 )

REFERENCE DATA

SREF = 2690.0000 SQ.FT. XMRP = 1097.0000 IN. XT
LREF = 1290.3000 INCHES YMRP = .0000 IN. YT
BREF = 1290.3000 INCHES ZMRP = 450.0000 IN. ZT
SCALE = .0100

PARAMETRIC DATA

ALPHA = -15.000 BETA = 15.000
DALPHA = -4.000 DBETA = -2.000
Z = 100.000 MACH = 4.500
JET PC = 1225.000

RUN NO. 2918/ 0 RN/L = 2.38 GRADIENT INTERVAL = -5.00/ 5.00

| Y | X | Z | ALPHA | BETA | PHI | CN | CLM | CY | CYN | CBL | CA |
|---|---|---|---|---|---|---|---|---|---|---|---|
| -50.960 | 199.650 | 100.02000 | -15.47700 | 15.45100 | .25580 | -.35884 | .03680 | -.50691 | .04172 | -.02576 | .17867 |
| -48.583 | 99.166 | 101.96000 | -15.37900 | 15.36600 | .22058 | -.29769 | .04823 | -.45775 | .05822 | -.02858 | .17839 |
| -48.224 | -.841 | 102.13000 | -15.27100 | 15.24000 | .19461 | -.24788 | .06427 | -.41939 | .09925 | -.03482 | .14406 |
| | GRADIENT | .00000 | .00000 | .00000 | .00000 | .00000 | .00000 | .00000 | .00000 | .00000 | .00000 |

IA143, AEDC V41A-P8A, O/ET W/R.H. SRB SEPARATING (OVX138) ( 20 MAY 77 )

REFERENCE DATA

SREF = 2690.0000 SQ.FT. XMRP = 1097.0000 IN. XT
LREF = 1290.3000 INCHES YMRP = .0000 IN. YT
BREF = 1290.3000 INCHES ZMRP = 450.0000 IN. ZT
SCALE = .0100

PARAMETRIC DATA

ALPHA = -15.000 BETA = 15.000
DALPHA = -4.000 DBETA = -2.000
Z = 100.000 MACH = 4.500
JET PC = 1225.000

RUN NO. 2921/ 0 RN/L = 2.38 GRADIENT INTERVAL = -5.00/ 5.00

| Y | X | Z | ALPHA | BETA | PHI | CN | CLM | CY | CYN | CBL | CA |
|---|---|---|---|---|---|---|---|---|---|---|---|
| -99.864 | -.601 | 98.02700 | -15.30300 | 15.23700 | .17397 | -.27097 | .05957 | -.38363 | .08320 | -.03152 | .16126 |
| -101.460 | 99.997 | 100.08000 | -15.41900 | 15.35500 | .21059 | -.32998 | .04410 | -.43170 | .05028 | -.02574 | .18738 |
| -100.780 | 199.660 | 100.11000 | -15.50500 | 15.44300 | .24627 | -.38259 | .03385 | -.48098 | .03240 | -.02259 | .18480 |
| | GRADIENT | .00000 | .00000 | .00000 | .00000 | .00000 | .00000 | .00000 | .00000 | .00000 | .00000 |

RUN NO. 2924/ 0 RN/L = 2.37 GRADIENT INTERVAL = -5.00/ 5.00

| Y | X | Z | ALPHA | BETA | PHI | CN | CLM | CY | CYN | CBL | CA |
|---|---|---|---|---|---|---|---|---|---|---|---|
| -150.980 | 199.860 | 100.14000 | -15.51100 | 15.44100 | .23150 | -.38657 | .03310 | -.46732 | .02738 | -.02292 | .19717 |
| -148.540 | 99.201 | 101.49000 | -15.43000 | 15.35700 | .19812 | -.33540 | .04077 | -.41866 | .04317 | -.02531 | .19635 |
| -148.520 | -.635 | 102.10000 | -15.32200 | 15.25100 | .15923 | -.27759 | .05380 | -.36635 | .06832 | -.02979 | .17547 |
| | GRADIENT | .00000 | .00000 | .00000 | .00000 | .00000 | .00000 | .00000 | .00000 | .00000 | .00000 |

IA143, AEDC V41A-P8A, O/ET W/R.H. SRB SEPARATING (OVX139) ( 20 MAY 77 )

REFERENCE DATA

SREF = 2690.0000 SQ.FT. XMRP = 1097.0000 IN. XT
LREF = 1290.3000 INCHES YMRP = .0000 IN. YT
BREF = 1290.3000 INCHES ZMRP = 450.0000 IN. ZT
SCALE = .0100

PARAMETRIC DATA

ALPHA = -15.000 BETA = 15.000
DALPHA = -4.000 DBETA = -2.000
Z = 200.000 MACH = 4.500
JET PC = 1225.000

RUN NO. 2919/ 0 RN/L = 2.38 GRADIENT INTERVAL = -5.00/ 5.00

| Y | X | Z | ALPHA | BETA | PHI | CN | CLM | CY | CYN | CBL | CA |
|---|---|---|---|---|---|---|---|---|---|---|---|
| -51.252 | -.160 | 200.01000 | -15.20500 | 15.26500 | .22378 | -.22208 | .09352 | -.44659 | .09917 | -.03262 | .14658 |
| -51.230 | 99.837 | 200.14000 | -15.28500 | 15.39800 | .24968 | -.25862 | .08676 | -.50365 | .06562 | -.03023 | .18378 |
| -51.687 | 200.080 | 199.93000 | -15.36400 | 15.46300 | .29968 | -.30744 | .08326 | -.67140 | .12304 | -.05269 | .19620 |
| | GRADIENT | .00000 | .00000 | .00000 | .00000 | .00000 | .00000 | .00000 | .00000 | .00000 | .00000 |

RUN NO. 2920/ 0 RN/L = 2.38 GRADIENT INTERVAL = -5.00/ 5.00

| Y | X | Z | ALPHA | BETA | PHI | CN | CLM | CY | CYN | CBL | CA |
|---|---|---|---|---|---|---|---|---|---|---|---|
| -101.000 | 199.780 | 199.90000 | -15.46300 | 15.56600 | .29019 | -.35265 | .05752 | -.57735 | .02302 | -.02578 | .20447 |
| -97.412 | 99.006 | 201.87000 | -15.35900 | 15.43100 | .24241 | -.29518 | .06989 | -.48993 | .04292 | -.02626 | .20337 |
| -97.682 | -.994 | 202.06000 | -15.25400 | 15.28500 | .20562 | -.25138 | .08513 | -.42853 | .08162 | -.03111 | .16786 |
| | GRADIENT | .00000 | .00000 | .00000 | .00000 | .00000 | .00000 | .00000 | .00000 | .00000 | .00000 |

IA143, AEDC V41A-P8A, O/ET W/R.H. SRB SEPARATING (OVX139) ( 20 MAY 77 )

REFERENCE DATA

SREF = 2690.0000 SQ.FT. XMRP = 1097.0000 IN. XT
LREF = 1290.3000 INCHES YMRP = .0000 IN. YT
BREF = 1290.3000 INCHES ZMRP = 450.0000 IN. ZT
SCALE = .0100

PARAMETRIC DATA

ALPHA = -15.000 BETA = 15.000
DALPHA = -4.000 DBETA = -2.000
Z = 200.000 MACH = 4.500
JET PC = 1225.000

RUN NO. 2925/ 0 RN/L = 2.37 GRADIENT INTERVAL = -5.00/ 5.00

| Y | X | Z | ALPHA | BETA | PHI | CN | CLM | CY | CYN | CBL | CA |
|---|---|---|---|---|---|---|---|---|---|---|---|
| -150.970 | -.195 | 199.80000 | -15.29900 | 15.30200 | .17953 | -.26896 | .06923 | -.41350 | .06863 | -.03240 | .18412 |
| -150.800 | 100.130 | 199.73000 | -15.40500 | 15.44100 | .23210 | -.32373 | .06068 | -.48235 | .03552 | -.02620 | .21127 |
| -151.040 | 199.780 | 199.97000 | -15.48200 | 15.54300 | .27299 | -.36282 | .05033 | -.54066 | .01549 | -.02294 | .21365 |
| | GRADIENT | .00000 | .00000 | .00000 | .00000 | .00000 | .00000 | .00000 | .00000 | .00000 | .00000 |

IA143, AEDC V41A-P8A, O/ET W/R.H. SRB SEPARATING (OVX140) ( 20 MAY 77 )

REFERENCE DATA

SREF = 2690.0000 SQ.FT. XMRP = 1097.0000 IN. XT
LREF = 1290.3000 INCHES YMRP = .0000 IN. YT
BREF = 1290.3000 INCHES ZMRP = 450.0000 IN. ZT
SCALE = .0100

PARAMETRIC DATA

ALPHA = -15.000 BETA = 15.000
DALPHA = -4.000 DBETA = .000
Z = .000 MACH = 4.500
JET PC = 1225.000

RUN NO. 2926/ 0 RN/L = 2.37 GRADIENT INTERVAL = -5.00/ 5.00

| Y | X | Z | ALPHA | BETA | PHI | CN | CLM | CY | CYN | CBL | CA |
|---|---|---|---|---|---|---|---|---|---|---|---|
| -11.206 | -.770 | -.78540 | -15.36000 | 15.21700 | .16042 | -.29361 | .04046 | -.41757 | .11302 | -.04380 | .17811 |
| -10.921 | 99.847 | .06536 | -15.51100 | 15.33800 | .21060 | -.37045 | .01400 | -.46353 | .07608 | -.03425 | .18935 |
| -11.032 | 199.850 | -.02481 | -15.56800 | 15.40200 | .25660 | -.41176 | .01228 | -.49707 | .05905 | -.02687 | .17568 |
| | GRADIENT | .00000 | .00000 | .00000 | .00000 | .00000 | .00000 | .00000 | .00000 | .00000 | .00000 |

RUN NO. 2931/ 0 RN/L = 2.37 GRADIENT INTERVAL = -5.00/ 5.00

| Y | X | Z | ALPHA | BETA | PHI | CN | CLM | CY | CYN | CBL | CA |
|---|---|---|---|---|---|---|---|---|---|---|---|
| -48.717 | 199.300 | -2.03030 | -15.51400 | 15.35500 | .21744 | -.38215 | .01868 | -.44841 | .05852 | -.02792 | .17974 |
| -49.637 | 99.658 | 1.31920 | -15.45300 | 15.30400 | .18345 | -.33635 | .02149 | -.42259 | .07239 | -.03345 | .18828 |
| -49.051 | -.737 | 2.28180 | -15.34100 | 15.21300 | .14285 | -.27304 | .03605 | -.38498 | .09868 | -.04057 | .17593 |
| | GRADIENT | .00000 | .00000 | .00000 | .00000 | .00000 | .00000 | .00000 | .00000 | .00000 | .00000 |

RUN NO. 2932/ 0 RN/L = 2.38 GRADIENT INTERVAL = -5.00/ 5.00

| Y | X | Z | ALPHA | BETA | PHI | CN | CLM | CY | CYN | CBL | CA |
|---|---|---|---|---|---|---|---|---|---|---|---|
| -101.250 | -.250 | -.31163 | -15.35500 | 15.22400 | .13482 | -.27514 | .03047 | -.36216 | .08211 | -.03643 | .18483 |
| -101.850 | 100.100 | .10004 | -15.45500 | 15.31300 | .17198 | -.33154 | .01688 | -.39831 | .05561 | -.02977 | .19189 |
| -100.800 | 199.930 | .04381 | -15.51400 | 15.36700 | .20817 | -.37633 | .01520 | -.42871 | .04322 | -.02470 | .18443 |
| | GRADIENT | .00000 | .00000 | .00000 | .00000 | .00000 | .00000 | .00000 | .00000 | .00000 | .00000 |

IA143, AEDC V41A-P8A, O/ET W/R.H. SRB SEPARATING (OVX141) ( 20 MAY 77 )

REFERENCE DATA

SREF = 2690.0000 SQ.FT. XMRP = 1097.0000 IN. XT
LREF = 1290.3000 INCHES YMRP = .0000 IN. YT
BREF = 1290.3000 INCHES ZMRP = 450.0000 IN. ZT
SCALE = .0100

PARAMETRIC DATA

ALPHA = -15.000 BETA = 15.000
DALPHA = -4.000 DBETA = .000
Z = 100.000 MACH = 4.500
JET PC = 1225.000

RUN NO. 2927/ 0 RN/L = 2.37 GRADIENT INTERVAL = -5.00/ 5.00

| Y | X | Z | ALPHA | BETA | PHI | CN | CLM | CY | CYN | CBL | CA |
|---|---|---|---|---|---|---|---|---|---|---|---|
| -10.663 | 199.710 | 99.89300 | -15.48100 | 15.47900 | .31543 | -.36711 | .05262 | -.61722 | .08343 | -.03558 | .19002 |
| -10.539 | 99.574 | 99.44900 | -15.31700 | 15.33800 | .23435 | -.26429 | .06407 | -.47063 | .07699 | -.03047 | .17126 |
| -9.321 | -.426 | 101.53000 | -15.24800 | 15.26300 | .21042 | -.22659 | .06844 | -.44303 | .09958 | -.03498 | .14432 |
| | GRADIENT | .00000 | .00000 | .00000 | .00000 | .00000 | .00000 | .00000 | .00000 | .00000 | .00000 |

RUN NO. 2930/ 0 RN/L = 2.37 GRADIENT INTERVAL = -5.00/ 5.00

| Y | X | Z | ALPHA | BETA | PHI | CN | CLM | CY | CYN | CBL | CA |
|---|---|---|---|---|---|---|---|---|---|---|---|
| -50.374 | -.531 | 97.52900 | -15.27700 | 15.25000 | .19399 | -.25835 | .07199 | -.41764 | .09377 | -.03389 | .16471 |
| -51.057 | 99.983 | 100.10000 | -15.38300 | 15.37000 | .22459 | -.30463 | .05347 | -.46093 | .05761 | -.02812 | .19031 |
| -51.133 | 199.840 | 100.10000 | -15.46300 | 15.44000 | .25950 | -.35297 | .04337 | -.50895 | .04754 | -.02616 | .18792 |
| | GRADIENT | .00000 | .00000 | .00000 | .00000 | .00000 | .00000 | .00000 | .00000 | .00000 | .00000 |

RUN NO. 2933/ 0 RN/L = 2.38 GRADIENT INTERVAL = -5.00/ 5.00

| Y | X | Z | ALPHA | BETA | PHI | CN | CLM | CY | CYN | CBL | CA |
|---|---|---|---|---|---|---|---|---|---|---|---|
| -101.020 | 199.960 | 100.03000 | -15.50700 | 15.45100 | .25456 | -.38479 | .03651 | -.49244 | .03358 | -.02265 | .19024 |
| -98.353 | 99.291 | 101.80000 | -15.41900 | 15.36400 | .22118 | -.33089 | .04846 | -.44998 | .05481 | -.02681 | .19820 |
| -98.691 | -.816 | 102.20000 | -15.30400 | 15.24900 | .18317 | -.27802 | .06906 | -.39866 | .08471 | -.03198 | .17782 |
| | GRADIENT | .00000 | .00000 | .00000 | .00000 | .00000 | .00000 | .00000 | .00000 | .00000 | .00000 |

IA143, AEDC V41A-P8A, O/ET W/R.H. SRB SEPARATING (OVX142) ( 20 MAY 77 )

REFERENCE DATA

SREF = 2690.0000 SQ.FT. XMRP = 1097.0000 IN. XT
LREF = 1290.3000 INCHES YMRP = .0000 IN. YT
BREF = 1290.3000 INCHES ZMRP = 450.0000 IN. ZT
SCALE = .0100

PARAMETRIC DATA

ALPHA = -15.000 BETA = 15.000
DALPHA = -4.000 DBETA = .000
Z = 200.000 MACH = 4.500
JET PC = 1225.000

RUN NO. 2928/ 0 RN/L = 2.37 GRADIENT INTERVAL = -5.00/ 5.00

| Y | X | Z | ALPHA | BETA | PHI | CN | CLM | CY | CYN | CBL | CA |
|---|---|---|---|---|---|---|---|---|---|---|---|
| -11.178 | -.183 | 200.11000 | -15.15800 | 15.28600 | .24601 | -.19900 | .10951 | -.48395 | .10744 | -.03464 | .13652 |
| -9.886 | 99.740 | 200.41000 | -15.27100 | 15.44700 | .31410 | -.25746 | .10635 | -.65133 | .11739 | -.04597 | .18146 |
| -11.121 | 199.850 | 199.96000 | -15.49800 | 15.75000 | .42019 | -.29505 | .03518 | -.68571 | -.01829 | -.00791 | .21711 |
| | GRADIENT | .00000 | .00000 | .00000 | .00000 | .00000 | .00000 | .00000 | .00000 | .00000 | .00000 |

IA143, AEDC V41A-P8A, O/ET W/R.H. SRB SEPARATING (OVX142) ( 20 MAY 77 )

REFERENCE DATA

SREF = 2690.0000 SQ.FT. XMRP = 1097.0000 IN. XT
LREF = 1290.3000 INCHES YMRP = .0000 IN. YT
BREF = 1290.3000 INCHES ZMRP = 450.0000 IN. ZT
SCALE = .0100

PARAMETRIC DATA

ALPHA = -15.000 BETA = 15.000
DALPHA = -4.000 DBETA = .000
Z = 200.000 MACH = 4.500
JET PC = 1225.000

RUN NO. 2929/ 0 RN/L = 2.37 GRADIENT INTERVAL = -5.00/ 5.00

| Y | X | Z | ALPHA | BETA | PHI | CN | CLM | CY | CYN | CBL | CA |
|---|---|---|---|---|---|---|---|---|---|---|---|
| -46.734 | 199.010 | 200.96000 | -15.41300 | 15.56600 | .34315 | -.30196 | .06594 | -.64478 | .05438 | -.02929 | .20942 |
| -50.728 | 99.865 | 199.99000 | -15.27200 | 15.39200 | .25540 | -.25165 | .09292 | -.51038 | .07159 | -.03095 | .19374 |
| -48.205 | -.845 | 201.38000 | -15.19300 | 15.27900 | .22544 | -.22033 | .10299 | -.45330 | .09620 | -.03281 | .15851 |
| | GRADIENT | .00000 | .00000 | .00000 | .00000 | .00000 | .00000 | .00000 | .00000 | .00000 | .00000 |

RUN NO. 2934/ 0 RN/L = 2.38 GRADIENT INTERVAL = -5.00/ 5.00

| Y | X | Z | ALPHA | BETA | PHI | CN | CLM | CY | CYN | CBL | CA |
|---|---|---|---|---|---|---|---|---|---|---|---|
| -100.960 | -.201 | 199.96000 | -15.25800 | 15.30400 | .20567 | -.24955 | .08674 | -.43893 | .07871 | -.03215 | .18591 |
| -100.840 | 99.875 | 200.03000 | -15.35300 | 15.43500 | .24794 | -.29278 | .07520 | -.50197 | .04730 | -.02754 | .21183 |
| -101.050 | 199.890 | 200.44000 | -15.44100 | 15.54800 | .28838 | -.34144 | .06345 | -.57554 | .03077 | -.02710 | .21024 |
| | GRADIENT | .00000 | .00000 | .00000 | .00000 | .00000 | .00000 | .00000 | .00000 | .00000 | .00000 |

IA143, AEDC V41A-P8A, O/ET W/R.H. SRB SEPARATING (OVX143) ( 20 MAY 77 )

REFERENCE DATA

SREF = 2690.0000 SQ.FT. XMRP = 1097.0000 IN. XT
LREF = 1290.3000 INCHES YMRP = .0000 IN. YT
BREF = 1290.3000 INCHES ZMRP = 450.0000 IN. ZT
SCALE = .0100

PARAMETRIC DATA

ALPHA = -15.000 BETA = 15.000
DALPHA = -4.000 DBETA = 2.000
Z = .000 MACH = 4.500
JET PC = 1225.000

RUN NO. 2935/ 0 RN/L = 2.38 GRADIENT INTERVAL = -5.00/ 5.00

| Y | X | Z | ALPHA | BETA | PHI | CN | CLM | CY | CYN | CBL | CA |
|---|---|---|---|---|---|---|---|---|---|---|---|
| -10.748 | -.947 | -.72155 | -15.36100 | 15.22500 | .15167 | -.29403 | .04236 | -.43059 | .11792 | -.04825 | .19241 |
| -11.305 | 99.875 | -.17036 | -15.51900 | 15.34600 | .20990 | -.37756 | .01564 | -.48072 | .08203 | -.03778 | .19685 |
| -12.175 | 200.070 | -.90097 | -15.56600 | 15.40000 | .25538 | -.41668 | .01708 | -.51078 | .06826 | -.03052 | .18017 |
| | GRADIENT | .00000 | .00000 | .00000 | .00000 | .00000 | .00000 | .00000 | .00000 | .00000 | .00000 |

RUN NO. 2940/ 0 RN/L = 2.38 GRADIENT INTERVAL = -5.00/ 5.00

| Y | X | Z | ALPHA | BETA | PHI | CN | CLM | CY | CYN | CBL | CA |
|---|---|---|---|---|---|---|---|---|---|---|---|
| -49.010 | 199.390 | -1.84590 | -15.51800 | 15.35600 | .22265 | -.38968 | .02262 | -.46445 | .06643 | -.03039 | .18274 |
| -49.441 | 99.588 | 1.19370 | -15.46200 | 15.30900 | .18809 | -.34561 | .02406 | -.44447 | .08187 | -.03709 | .19559 |
| -48.575 | -.818 | 2.07610 | -15.35500 | 15.22200 | .14846 | -.28366 | .03889 | -.40855 | .10736 | -.04414 | .19154 |
| | GRADIENT | .00000 | .00000 | .00000 | .00000 | .00000 | .00000 | .00000 | .00000 | .00000 | .00000 |

IA143, AEDC V41A-P8A, O/ET W/R.H. SRB SEPARATING (OVX143) ( 20 MAY 77 )

REFERENCE DATA

SREF = 2690.0000 SQ.FT. XMRP = 1097.0000 IN. XT
LREF = 1290.3000 INCHES YMRP = .0000 IN. YT
BREF = 1290.3000 INCHES ZMRP = 450.0000 IN. ZT
SCALE = .0100

PARAMETRIC DATA

ALPHA = -15.000 BETA = 15.000
DALPHA = -4.000 DBETA = 2.000
Z = .000 MACH = 4.500
JET PC = 1225.000

RUN NO. 2941/ 0 RN/L = 2.38 GRADIENT INTERVAL = -5.00/ 5.00

| Y | X | Z | ALPHA | BETA | PHI | CN | CLM | CY | CYN | CBL | CA |
|---|---|---|---|---|---|---|---|---|---|---|---|
| -101.410 | -.107 | -.22101 | -15.36600 | 15.22600 | .15033 | -.29466 | .04043 | -.38070 | .08947 | -.03700 | .19488 |
| -103.210 | 100.460 | -1.72330 | -15.46500 | 15.31700 | .18247 | -.34539 | .02251 | -.41897 | .06435 | -.03189 | .19781 |
| -102.990 | 200.300 | -1.02570 | -15.51900 | 15.36700 | .21694 | -.38666 | .02069 | -.44335 | .05033 | -.02609 | .18648 |
| | GRADIENT | .00000 | .00000 | .00000 | .00000 | .00000 | .00000 | .00000 | .00000 | .00000 | .00000 |

IA143, AEDC V41A-P8A, O/ET W/R.H. SRB SEPARATING (OVX144) ( 20 MAY 77 )

REFERENCE DATA

SREF = 2690.0000 SQ.FT. XMRP = 1097.0000 IN. XT
LREF = 1290.3000 INCHES YMRP = .0000 IN. YT
BREF = 1290.3000 INCHES ZMRP = 450.0000 IN. ZT
SCALE = .0100

PARAMETRIC DATA

ALPHA = -15.000 BETA = 15.000
DALPHA = -4.000 DBETA = 2.000
Z = 100.000 MACH = 4.500
JET PC = 1225.000

RUN NO. 2936/ 0 RN/L = 2.38 GRADIENT INTERVAL = -5.00/ 5.00

| Y | X | Z | ALPHA | BETA | PHI | CN | CLM | CY | CYN | CBL | CA |
|---|---|---|---|---|---|---|---|---|---|---|---|
| -10.698 | 199.790 | 100.35000 | -15.50000 | 15.51300 | .32898 | -.37859 | .05269 | -.63409 | .07526 | -.03392 | .19414 |
| -10.434 | 99.708 | 100.65000 | -15.29800 | 15.33300 | .24201 | -.26533 | .07779 | -.48890 | .08859 | -.03327 | .17789 |
| -9.387 | -.628 | 101.09000 | -15.24300 | 15.27600 | .21059 | -.23458 | .08022 | -.45234 | .09856 | -.03608 | .16050 |
| | GRADIENT | .00000 | .00000 | .00000 | .00000 | .00000 | .00000 | .00000 | .00000 | .00000 | .00000 |

RUN NO. 2939/ 0 RN/L = 2.38 GRADIENT INTERVAL = -5.00/ 5.00

| Y | X | Z | ALPHA | BETA | PHI | CN | CLM | CY | CYN | CBL | CA |
|---|---|---|---|---|---|---|---|---|---|---|---|
| -49.939 | -.480 | 97.72400 | -15.27700 | 15.26100 | .20324 | -.26665 | .08198 | -.43560 | .09738 | -.03507 | .17942 |
| -51.338 | 99.956 | 100.37000 | -15.37800 | 15.37000 | .23513 | -.30433 | .05978 | -.47629 | .06532 | -.02934 | .19816 |
| -53.126 | 200.360 | 98.20500 | -15.47100 | 15.44900 | .26951 | -.36227 | .04732 | -.52434 | .05093 | -.02682 | .19242 |
| | GRADIENT | .00000 | .00000 | .00000 | .00000 | .00000 | .00000 | .00000 | .00000 | .00000 | .00000 |

RUN NO. 2942/ 0 RN/L = 2.38 GRADIENT INTERVAL = -5.00/ 5.00

| Y | X | Z | ALPHA | BETA | PHI | CN | CLM | CY | CYN | CBL | CA |
|---|---|---|---|---|---|---|---|---|---|---|---|
| -102.140 | 199.970 | 100.15000 | -15.51400 | 15.46700 | .26917 | -.38804 | .03838 | -.51374 | .03662 | -.02317 | .19209 |
| -97.907 | 99.001 | 101.85000 | -15.42200 | 15.37100 | .23526 | -.33581 | .05399 | -.47155 | .06199 | -.02808 | .20480 |
| -97.739 | -.837 | 102.13000 | -15.31100 | 15.25800 | .19282 | -.28652 | .07399 | -.41481 | .08820 | -.03284 | .18863 |
| | GRADIENT | .00000 | .00000 | .00000 | .00000 | .00000 | .00000 | .00000 | .00000 | .00000 | .00000 |

IA143, AEDC V41A-P8A, O/ET W/R.H. SRB SEPARATING (OVX145) ( 20 MAY 77 )

REFERENCE DATA

SREF = 2690.0000 SQ.FT. XMRP = 1097.0000 IN. XT
LREF = 1290.3000 INCHES YMRP = .0000 IN. YT
BREF = 1290.3000 INCHES ZMRP = 450.0000 IN. ZT
SCALE = .0100

PARAMETRIC DATA

ALPHA = -15.000 BETA = 15.000
DALPHA = -4.000 DBETA = 2.000
Z = 200.000 MACH = 4.500
JET PC = 1225.000

RUN NO. 2937/ 0 RN/L = 2.38 GRADIENT INTERVAL = -5.00/ 5.00

| Y | X | Z | ALPHA | BETA | PHI | CN | CLM | CY | CYN | CBL | CA |
|---|---|---|---|---|---|---|---|---|---|---|---|
| -11.480 | -.076 | 200.00000 | -15.15300 | 15.30000 | .25437 | -.20143 | .11904 | -.50364 | .11089 | -.03623 | .15077 |
| -12.737 | 100.220 | 200.10000 | -15.31100 | 15.50300 | .34930 | -.26184 | .09488 | -.83121 | .18824 | -.07542 | .18684 |
| -11.517 | 199.980 | 200.25000 | -15.49300 | 15.76200 | .42556 | -.29443 | .03998 | -.70185 | -.01601 | -.00938 | .22132 |
| | GRADIENT | .00000 | .00000 | .00000 | .00000 | .00000 | .00000 | .00000 | .00000 | .00000 | .00000 |

RUN NO. 2938/ 0 RN/L = 2.38 GRADIENT INTERVAL = -5.00/ 5.00

| Y | X | Z | ALPHA | BETA | PHI | CN | CLM | CY | CYN | CBL | CA |
|---|---|---|---|---|---|---|---|---|---|---|---|
| -48.368 | 199.310 | 200.67000 | -15.43100 | 15.60000 | .36942 | -.31439 | .06925 | -.75276 | .09598 | -.04570 | .21310 |
| -50.725 | 99.736 | 199.55000 | -15.25200 | 15.38100 | .26638 | -.24971 | .10579 | -.53224 | .08772 | -.03428 | .19895 |
| -48.800 | -.790 | 200.89000 | -15.19900 | 15.29700 | .23354 | -.22355 | .10718 | -.47098 | .09665 | -.03374 | .17623 |
| | GRADIENT | .00000 | .00000 | .00000 | .00000 | .00000 | .00000 | .00000 | .00000 | .00000 | .00000 |

RUN NO. 2943/ 0 RN/L = 2.38 GRADIENT INTERVAL = -5.00/ 5.00

| Y | X | Z | ALPHA | BETA | PHI | CN | CLM | CY | CYN | CBL | CA |
|---|---|---|---|---|---|---|---|---|---|---|---|
| -101.780 | .111 | 201.81000 | -15.25600 | 15.31900 | .21079 | -.24821 | .09070 | -.46160 | .08394 | -.03515 | .19740 |
| -101.480 | 99.930 | 200.23000 | -15.34900 | 15.44500 | .25597 | -.29394 | .08149 | -.52143 | .05304 | -.02957 | .21846 |
| -100.960 | 199.770 | 200.12000 | -15.42900 | 15.54200 | .29945 | -.33834 | .07101 | -.59354 | .04238 | -.02915 | .21490 |
| | GRADIENT | .00000 | .00000 | .00000 | .00000 | .00000 | .00000 | .00000 | .00000 | .00000 | .00000 |

IA143, AEDC V41A-P8A, O/ET W/R.H. SRB SEPARATING (OVX146) ( 20 MAY 77 )

REFERENCE DATA

SREF = 2690.0000 SQ.FT. XMRP = 1097.0000 IN. XT
LREF = 1290.3000 INCHES YMRP = .0000 IN. YT
BREF = 1290.3000 INCHES ZMRP = 450.0000 IN. ZT
SCALE = .0100

PARAMETRIC DATA

ALPHA = -15.000 BETA = 15.000
DALPHA = -8.000 DBETA = -4.000
Z = 100.000 MACH = 4.500
JET PC = 1225.000

RUN NO. 2944/ 0 RN/L = 2.37 GRADIENT INTERVAL = -5.00/ 5.00

| Y | X | Z | ALPHA | BETA | PHI | CN | CLM | CY | CYN | CBL | CA |
|---|---|---|---|---|---|---|---|---|---|---|---|
| -100.820 | -1.115 | 100.32000 | -15.25400 | 15.19600 | .12848 | -.23916 | .05724 | -.35808 | .09353 | -.03893 | .14696 |
| -104.100 | 100.680 | 100.57000 | -15.37600 | 15.32600 | .16918 | -.29325 | .03838 | -.39609 | .04913 | -.02906 | .18277 |
| -101.330 | 199.730 | 100.24000 | -15.49800 | 15.45400 | .22566 | -.36401 | .02626 | -.46315 | .01940 | -.02233 | .19358 |
| | GRADIENT | .00000 | .00000 | .00000 | .00000 | .00000 | .00000 | .00000 | .00000 | .00000 | .00000 |

IA143, AEDC V41A-P8A, O/ET W/R.H. SRB SEPARATING (OVX146) ( 20 MAY 77 )

REFERENCE DATA

SREF = 2690.0000 SQ.FT. XMRP = 1097.0000 IN. XT
LREF = 1290.3000 INCHES YMRP = .0000 IN. YT
BREF = 1290.3000 INCHES ZMRP = 450.0000 IN. ZT
SCALE = .0100

PARAMETRIC DATA

ALPHA = -15.000 BETA = 15.000
DALPHA = -8.000 DBETA = -4.000
Z = 100.000 MACH = 4.500
JET PC = 1225.000

RUN NO. 2949/ 0 RN/L = 2.39 GRADIENT INTERVAL = -5.00/ 5.00

| Y | X | Z | ALPHA | BETA | PHI | CN | CLM | CY | CYN | CBL | CA |
|---|---|---|---|---|---|---|---|---|---|---|---|
| -149.930 | 199.410 | 99.38600 | -15.49300 | 15.43400 | .21022 | -.36765 | .02944 | -.44706 | .02216 | -.02369 | .19958 |
| -148.490 | 99.166 | 102.24000 | -15.39000 | 15.33100 | .16055 | -.30279 | .03576 | -.38908 | .04356 | -.02898 | .18862 |
| -148.180 | -.926 | 102.41000 | -15.27500 | 15.20800 | .11555 | -.25085 | .05266 | -.34418 | .08166 | -.03778 | .15796 |
| | GRADIENT | .00000 | .00000 | .00000 | .00000 | .00000 | .00000 | .00000 | .00000 | .00000 | .00000 |

RUN NO. 2950/ 0 RN/L = 2.38 GRADIENT INTERVAL = -5.00/ 5.00

| Y | X | Z | ALPHA | BETA | PHI | CN | CLM | CY | CYN | CBL | CA |
|---|---|---|---|---|---|---|---|---|---|---|---|
| -201.550 | -.200 | 99.55900 | -15.30700 | 15.22600 | .11008 | -.27232 | .05062 | -.33535 | .06904 | -.03572 | .17545 |
| -203.690 | 100.560 | 98.33900 | -15.40800 | 15.33600 | .14765 | -.32030 | .03699 | -.38082 | .03829 | -.02967 | .20171 |
| -203.460 | 200.390 | 98.71300 | -15.49500 | 15.42600 | .19336 | -.37798 | .03335 | -.43690 | .02187 | -.02567 | .20956 |
| | GRADIENT | .00000 | .00000 | .00000 | .00000 | .00000 | .00000 | .00000 | .00000 | .00000 | .00000 |

IA143, AEDC V41A-P8A, O/ET W/R.H. SRB SEPARATING (OVX147) ( 20 MAY 77 )

REFERENCE DATA

SREF = 2690.0000 SQ.FT. XMRP = 1097.0000 IN. XT
LREF = 1290.3000 INCHES YMRP = .0000 IN. YT
BREF = 1290.3000 INCHES ZMRP = 450.0000 IN. ZT
SCALE = .0100

PARAMETRIC DATA

ALPHA = -15.000 BETA = 15.000
DALPHA = -8.000 DBETA = -4.000
Z = 150.000 MACH = 4.500
JET PC = 1225.000

RUN NO. 2945/ 0 RN/L = 2.38 GRADIENT INTERVAL = -5.00/ 5.00

| Y | X | Z | ALPHA | BETA | PHI | CN | CLM | CY | CYN | CBL | CA |
|---|---|---|---|---|---|---|---|---|---|---|---|
| -102.710 | 200.060 | 151.24000 | -15.48500 | 15.52000 | .25914 | -.35832 | .04064 | -.52232 | .01826 | -.02373 | .20207 |
| -97.542 | 98.942 | 152.41000 | -15.36400 | 15.37300 | .20003 | -.29031 | .05237 | -.43600 | .04562 | -.02782 | .18993 |
| -97.507 | -1.204 | 152.43000 | -15.23900 | 15.21000 | .15543 | -.23401 | .06746 | -.38622 | .09972 | -.03832 | .14498 |
| | GRADIENT | .00000 | .00000 | .00000 | .00000 | .00000 | .00000 | .00000 | .00000 | .00000 | .00000 |

RUN NO. 2948/ 0 RN/L = 2.38 GRADIENT INTERVAL = -5.00/ 5.00

| Y | X | Z | ALPHA | BETA | PHI | CN | CLM | CY | CYN | CBL | CA |
|---|---|---|---|---|---|---|---|---|---|---|---|
| -150.260 | -.503 | 149.76000 | -15.27600 | 15.22600 | .13748 | -.25787 | .06154 | -.36674 | .08296 | -.03667 | .16218 |
| -151.620 | 99.987 | 150.38000 | -15.38500 | 15.36600 | .18546 | -.30885 | .04958 | -.41922 | .04101 | -.02770 | .19595 |
| -151.260 | 199.740 | 150.35000 | -15.47700 | 15.47500 | .23436 | -.35932 | .04076 | -.48160 | .01897 | -.02309 | .20673 |
| | GRADIENT | .00000 | .00000 | .00000 | .00000 | .00000 | .00000 | .00000 | .00000 | .00000 | .00000 |

IA143, AEDC V41A-P8A, O/ET W/R.H. SRB SEPARATING (OVX147) ( 20 MAY 77 )

REFERENCE DATA

SREF = 2690.0000 SQ.FT. XMRP = 1097.0000 IN. XT
LREF = 1290.3000 INCHES YMRP = .0000 IN. YT
BREF = 1290.3000 INCHES ZMRP = 450.0000 IN. ZT
SCALE = .0100

PARAMETRIC DATA

ALPHA = -15.000 BETA = 15.000
DALPHA = -8.000 DBETA = -4.000
Z = 150.000 MACH = 4.500
JET PC = 1225.000

RUN NO. 2951/ 0 RN/L = 2.38 GRADIENT INTERVAL = -5.00/ 5.00

| Y | X | Z | ALPHA | BETA | PHI | CN | CLM | CY | CYN | CBL | CA |
|---|---|---|---|---|---|---|---|---|---|---|---|
| -202.110 | 200.160 | 150.89000 | -15.48800 | 15.47300 | .21707 | -.37876 | .04508 | -.47649 | .01934 | -.02603 | .21721 |
| -198.180 | 98.888 | 151.89000 | -15.39700 | 15.36500 | .17183 | -.32337 | .05070 | -.41150 | .03889 | -.02914 | .20508 |
| -197.680 | -1.175 | 151.97000 | -15.30100 | 15.24200 | .12859 | -.27730 | .06108 | -.35908 | .07253 | -.03584 | .17717 |
| | GRADIENT | | .00000 | .00000 | .00000 | .00000 | .00000 | .00000 | .00000 | .00000 | .00000 |

IA143, AEDC V41A-P8A, O/ET W/R.H. SRB SEPARATING (OVX148) ( 20 MAY 77 )

REFERENCE DATA

SREF = 2690.0000 SQ.FT. XMRP = 1097.0000 IN. XT
LREF = 1290.3000 INCHES YMRP = .0000 IN. YT
BREF = 1290.3000 INCHES ZMRP = 450.0000 IN. ZT
SCALE = .0100

PARAMETRIC DATA

ALPHA = -15.000 BETA = 15.000
DALPHA = -8.000 DBETA = -4.000
Z = 200.000 MACH = 4.500
JET PC = 1225.000

RUN NO. 2946/ 0 RN/L = 2.39 GRADIENT INTERVAL = -5.00/ 5.00

| Y | X | Z | ALPHA | BETA | PHI | CN | CLM | CY | CYN | CBL | CA |
|---|---|---|---|---|---|---|---|---|---|---|---|
| -100.850 | -.252 | 200.34000 | -15.23800 | 15.22800 | .18054 | -.24166 | .07796 | -.41708 | .10530 | -.03841 | .14855 |
| -101.120 | 99.799 | 200.16000 | -15.34900 | 15.40300 | .22378 | -.28935 | .06646 | -.46625 | .04568 | -.02726 | .19376 |
| -100.970 | 199.670 | 200.43000 | -15.45200 | 15.55300 | .27977 | -.35324 | .06263 | -.56514 | .02381 | -.02638 | .20755 |
| | GRADIENT | | .00000 | .00000 | .00000 | .00000 | .00000 | .00000 | .00000 | .00000 | .00000 |

RUN NO. 2947/ 0 RN/L = 2.39 GRADIENT INTERVAL = -5.00/ 5.00

| Y | X | Z | ALPHA | BETA | PHI | CN | CLM | CY | CYN | CBL | CA |
|---|---|---|---|---|---|---|---|---|---|---|---|
| -150.410 | 199.470 | 199.72000 | -15.46500 | 15.52400 | .25536 | -.35887 | .05472 | -.51978 | .01503 | -.02352 | .21498 |
| -148.050 | 99.090 | 201.70000 | -15.36900 | 15.40000 | .20900 | -.30717 | .06455 | -.45047 | .03971 | -.02713 | .20224 |
| -147.660 | -1.181 | 201.68000 | -15.27100 | 15.24900 | .16156 | -.26427 | .07423 | -.39575 | .08552 | -.03619 | .16739 |
| | GRADIENT | | .00000 | .00000 | .00000 | .00000 | .00000 | .00000 | .00000 | .00000 | .00000 |

RUN NO. 2952/ 0 RN/L = 2.38 GRADIENT INTERVAL = -5.00/ 5.00

| Y | X | Z | ALPHA | BETA | PHI | CN | CLM | CY | CYN | CBL | CA |
|---|---|---|---|---|---|---|---|---|---|---|---|
| -201.410 | -.185 | 200.29000 | -15.30300 | 15.26700 | .14560 | -.28467 | .06968 | -.38545 | .07357 | -.03623 | .18333 |
| -201.740 | 99.872 | 200.15000 | -15.39500 | 15.40300 | .19162 | -.33293 | .06434 | -.44527 | .03757 | -.02967 | .21314 |
| -200.850 | 199.860 | 200.26000 | -15.47700 | 15.51800 | .23737 | -.37691 | .05688 | -.51746 | .01829 | -.02747 | .22237 |
| | GRADIENT | | .00000 | .00000 | .00000 | .00000 | .00000 | .00000 | .00000 | .00000 | .00000 |

IA143, AEDC V41A-P8A, O/ET W/R.H. SRB SEPARATING (OVX149) ( 20 MAY 77 )

REFERENCE DATA

SREF = 2690.0000 SQ.FT. XMRP = 1097.0000 IN. XT
LREF = 1290.3000 INCHES YMRP = .0000 IN. YT
BREF = 1290.3000 INCHES ZMRP = 450.0000 IN. ZT
SCALE = .0100

PARAMETRIC DATA

ALPHA = -15.000 BETA = 15.000
DALPHA = -8.000 DBETA = -2.000
Z = 100.000 MACH = 4.500
JET PC = 1225.000

RUN NO. 2953/ 0 RN/L = 2.38 GRADIENT INTERVAL = -5.00/ 5.00

| Y | X | Z | ALPHA | BETA | PHI | CN | CLM | CY | CYN | CBL | CA |
|---|---|---|---|---|---|---|---|---|---|---|---|
| -50.840 | -1.192 | 100.27000 | -15.21900 | 15.20500 | .14595 | -.20907 | .06086 | -.39243 | .10658 | -.04222 | .13710 |
| -51.130 | 99.718 | 100.44000 | -15.34100 | 15.34000 | .18134 | -.26299 | .04206 | -.42828 | .05856 | -.03257 | .17664 |
| -52.747 | 200.200 | 98.87800 | -15.41700 | 15.41000 | .22060 | -.31468 | .04098 | -.47954 | .04992 | -.03043 | .19249 |
| | GRADIENT | .00000 | .00000 | .00000 | .00000 | .00000 | .00000 | .00000 | .00000 | .00000 | .00000 |

RUN NO. 2958/ 0 RN/L = 2.38 GRADIENT INTERVAL = -5.00/ 5.00

| Y | X | Z | ALPHA | BETA | PHI | CN | CLM | CY | CYN | CBL | CA |
|---|---|---|---|---|---|---|---|---|---|---|---|
| -99.607 | 199.340 | 99.19900 | -15.50200 | 15.46300 | .23352 | -.36263 | .02444 | -.47966 | .02349 | -.02368 | .19191 |
| -97.402 | 98.969 | 102.61000 | -15.38000 | 15.33800 | .17737 | -.28874 | .03674 | -.42024 | .05569 | -.03182 | .18843 |
| -100.800 | -.353 | 100.10000 | -15.25500 | 15.21000 | .13103 | -.23112 | .05434 | -.36983 | .09322 | -.04002 | .15367 |
| | GRADIENT | .00000 | .00000 | .00000 | .00000 | .00000 | .00000 | .00000 | .00000 | .00000 | .00000 |

RUN NO. 2959/ 0 RN/L = 2.38 GRADIENT INTERVAL = -5.00/ 5.00

| Y | X | Z | ALPHA | BETA | PHI | CN | CLM | CY | CYN | CBL | CA |
|---|---|---|---|---|---|---|---|---|---|---|---|
| -151.190 | -.134 | 99.50300 | -15.28300 | 15.22100 | .12121 | -.25058 | .05159 | -.35137 | .07902 | -.03725 | .16737 |
| -150.990 | 99.882 | 100.58000 | -15.39400 | 15.33500 | .16352 | -.30166 | .03455 | -.40114 | .04828 | -.03082 | .19303 |
| -153.490 | 200.240 | 98.38900 | -15.49500 | 15.43500 | .21554 | -.36856 | .02969 | -.45604 | .02577 | -.02442 | .19998 |
| | GRADIENT | .00000 | .00000 | .00000 | .00000 | .00000 | .00000 | .00000 | .00000 | .00000 | .00000 |

IA143, AEDC V41A-P8A, O/ET W/R.H. SRB SEPARATING (OVX150) ( 20 MAY 77 )

REFERENCE DATA

SREF = 2690.0000 SQ.FT. XMRP = 1097.0000 IN. XT
LREF = 1290.3000 INCHES YMRP = .0000 IN. YT
BREF = 1290.3000 INCHES ZMRP = 450.0000 IN. ZT
SCALE = .0100

PARAMETRIC DATA

ALPHA = -15.000 BETA = 15.000
DALPHA = -8.000 DBETA = -2.000
Z = 150.000 MACH = 4.500
JET PC = 1225.000

RUN NO. 2954/ 0 RN/L = 2.38 GRADIENT INTERVAL = -5.00/ 5.00

| Y | X | Z | ALPHA | BETA | PHI | CN | CLM | CY | CYN | CBL | CA |
|---|---|---|---|---|---|---|---|---|---|---|---|
| -51.465 | 199.940 | 151.86000 | -15.36800 | 15.42200 | .25411 | -.29664 | .06583 | -.53288 | .07018 | -.03421 | .19606 |
| -49.335 | 99.287 | 151.60000 | -15.29600 | 15.35400 | .21173 | -.24802 | .06413 | -.46085 | .06676 | -.03219 | .17363 |
| -48.408 | -.892 | 151.84000 | -15.20000 | 15.21200 | .17400 | -.20373 | .07214 | -.41496 | .11220 | -.04049 | .13198 |
| | GRADIENT | .00000 | .00000 | .00000 | .00000 | .00000 | .00000 | .00000 | .00000 | .00000 | .00000 |

IA143, AEDC V41A-P8A, O/ET W/R.H. SRB SEPARATING (OVX150) ( 20 MAY 77 )

REFERENCE DATA

SREF = 2690.0000 SQ.FT. XMRP = 1097.0000 IN. XT
LREF = 1290.3000 INCHES YMRP = .0000 IN. YT
BREF = 1290.3000 INCHES ZMRP = 450.0000 IN. ZT
SCALE = .0100

PARAMETRIC DATA

ALPHA = -15.000 BETA = 15.000
DALPHA = -8.000 DBETA = -2.000
Z = 150.000 MACH = 4.500
JET PC = 1225.000

RUN NO. 2957/ 0 RN/L = 2.38 GRADIENT INTERVAL = -5.00/ 5.00

| Y | X | Z | ALPHA | BETA | PHI | CN | CLM | CY | CYN | CBL | CA |
|---|---|---|---|---|---|---|---|---|---|---|---|
| -100.240 | -.392 | 149.34000 | -15.24400 | 15.22700 | .15645 | -.23304 | .06719 | -.39262 | .09514 | -.03831 | .15516 |
| -101.220 | 99.885 | 150.38000 | -15.36200 | 15.37400 | .20429 | -.28821 | .05315 | -.44514 | .04938 | -.02881 | .19273 |
| -100.940 | 199.650 | 150.56000 | -15.47100 | 15.50900 | .25707 | -.35346 | .04495 | -.52418 | .02399 | -.02524 | .20173 |
| | GRADIENT | .00000 | .00000 | .00000 | .00000 | .00000 | .00000 | .00000 | .00000 | .00000 | .00000 |

RUN NO. 2960/ 0 RN/L = 2.38 GRADIENT INTERVAL = -5.00/ 5.00

| Y | X | Z | ALPHA | BETA | PHI | CN | CLM | CY | CYN | CBL | CA |
|---|---|---|---|---|---|---|---|---|---|---|---|
| -152.580 | 200.200 | 151.02000 | -15.48300 | 15.48800 | .24740 | -.36187 | .04175 | -.49755 | .02001 | -.02281 | .20765 |
| -148.120 | 99.001 | 152.12000 | -15.38300 | 15.37500 | .19637 | -.30257 | .04998 | -.43538 | .04465 | -.02831 | .19920 |
| -148.400 | -.758 | 152.29000 | -15.26900 | 15.23800 | .14588 | -.25160 | .06473 | -.37679 | .08228 | -.03625 | .16706 |
| | GRADIENT | .00000 | .00000 | .00000 | .00000 | .00000 | .00000 | .00000 | .00000 | .00000 | .00000 |

IA143, AEDC V41A-P8A, O/ET W/R.H. SRB SEPARATING (OVX151) ( 20 MAY 77 )

REFERENCE DATA

SREF = 2690.0000 SQ.FT. XMRP = 1097.0000 IN. XT
LREF = 1290.3000 INCHES YMRP = .0000 IN. YT
BREF = 1290.3000 INCHES ZMRP = 450.0000 IN. ZT
SCALE = .0100

PARAMETRIC DATA

ALPHA = -15.000 BETA = 15.000
DALPHA = -8.000 DBETA = -2.000
Z = 200.000 MACH = 4.500
JET PC = 1225.000

RUN NO. 2955/ 0 RN/L = 2.38 GRADIENT INTERVAL = -5.00/ 5.00

| Y | X | Z | ALPHA | BETA | PHI | CN | CLM | CY | CYN | CBL | CA |
|---|---|---|---|---|---|---|---|---|---|---|---|
| -50.906 | -.131 | 200.71000 | -15.18500 | 15.22200 | .20336 | -.20706 | .08790 | -.44364 | .12025 | -.03974 | .13201 |
| -50.855 | 99.738 | 200.39000 | -15.27600 | 15.38700 | .23766 | -.25041 | .08460 | -.49597 | .06817 | -.03206 | .18144 |
| -53.105 | 200.410 | 199.20000 | -15.34600 | 15.45600 | .28731 | -.29829 | .08620 | -.62207 | .10049 | -.04479 | .19630 |
| | GRADIENT | .00000 | .00000 | .00000 | .00000 | .00000 | .00000 | .00000 | .00000 | .00000 | .00000 |

RUN NO. 2956/ 0 RN/L = 2.38 GRADIENT INTERVAL = -5.00/ 5.00

| Y | X | Z | ALPHA | BETA | PHI | CN | CLM | CY | CYN | CBL | CA |
|---|---|---|---|---|---|---|---|---|---|---|---|
| -101.320 | 199.850 | 200.41000 | -15.44200 | 15.55200 | .27965 | -.34325 | .06333 | -.56459 | .02398 | -.02631 | .21116 |
| -97.300 | 98.833 | 202.24000 | -15.32500 | 15.40100 | .22790 | -.27822 | .07504 | -.47675 | .05173 | -.02878 | .19944 |
| -97.120 | -1.160 | 201.81000 | -15.22700 | 15.24500 | .18752 | -.23471 | .08423 | -.42045 | .09847 | -.03634 | .15887 |
| | GRADIENT | .00000 | .00000 | .00000 | .00000 | .00000 | .00000 | .00000 | .00000 | .00000 | .00000 |

IA143, AEDC V41A-P8A, O/ET W/R.H. SRB SEPARATING (OVX151) ( 20 MAY 77 )

REFERENCE DATA

SREF = 2690.0000 SQ.FT. XMRP = 1097.0000 IN. XT
LREF = 1290.3000 INCHES YMRP = .0000 IN. YT
BREF = 1290.3000 INCHES ZMRP = 450.0000 IN. ZT
SCALE = .0100

PARAMETRIC DATA

ALPHA = -15.000 BETA = 15.000
DALPHA = -8.000 DBETA = -2.000
Z = 200.000 MACH = 4.500
JET PC = 1225.000

RUN NO. 2961/ 0 RN/L = 2.38 GRADIENT INTERVAL = -5.00/ 5.00

| Y | X | Z | ALPHA | BETA | PHI | CN | CLM | CY | CYN | CBL | CA |
|---|---|---|---|---|---|---|---|---|---|---|---|
| -151.180 | -.072 | 200.38000 | -15.26800 | 15.26200 | .16618 | -.26135 | .07707 | -.39958 | .08112 | -.03512 | .17383 |
| -150.530 | 99.743 | 200.19000 | -15.36400 | 15.40400 | .21627 | -.30491 | .06780 | -.46218 | .04358 | -.02790 | .20542 |
| -151.370 | 199.890 | 200.39000 | -15.46100 | 15.52700 | .26484 | -.35173 | .05478 | -.52852 | .01717 | -.02320 | .21447 |
| | GRADIENT | .00000 | .00000 | .00000 | .00000 | .00000 | .00000 | .00000 | .00000 | .00000 | .00000 |

IA143, AEDC V41A-P8A, O/ET W/R.H. SRB SEPARATING (OVX152) ( 20 MAY 77 )

REFERENCE DATA

SREF = 2690.0000 SQ.FT. XMRP = 1097.0000 IN. XT
LREF = 1290.3000 INCHES YMRP = .0000 IN. YT
BREF = 1290.3000 INCHES ZMRP = 450.0000 IN. ZT
SCALE = .0100

PARAMETRIC DATA

ALPHA = -15.000 BETA = 15.000
DALPHA = -8.000 DBETA = .000
Z = 100.000 MACH = 4.500
JET PC = 1225.000

RUN NO. 2962/ 0 RN/L = 2.38 GRADIENT INTERVAL = -5.00/ 5.00

| Y | X | Z | ALPHA | BETA | PHI | CN | CLM | CY | CYN | CBL | CA |
|---|---|---|---|---|---|---|---|---|---|---|---|
| -11.811 | -.943 | 99.97500 | -15.20800 | 15.23300 | .16022 | -.19718 | .06359 | -.42874 | .11189 | -.04529 | .13659 |
| -13.444 | 100.310 | 98.51700 | -15.29800 | 15.33500 | .19243 | -.23567 | .05006 | -.45739 | .07644 | -.03723 | .16474 |
| -10.906 | 199.810 | 100.35000 | -15.49200 | 15.52200 | .30702 | -.35106 | .03709 | -.63767 | .07613 | -.03926 | .18868 |
| | GRADIENT | .00000 | .00000 | .00000 | .00000 | .00000 | .00000 | .00000 | .00000 | .00000 | .00000 |

RUN NO. 2967/ 0 RN/L = 2.37 GRADIENT INTERVAL = -5.00/ 5.00

| Y | X | Z | ALPHA | BETA | PHI | CN | CLM | CY | CYN | CBL | CA |
|---|---|---|---|---|---|---|---|---|---|---|---|
| -49.808 | 199.380 | 99.17900 | -15.40000 | 15.39200 | .22435 | -.30496 | .04616 | -.48998 | .06362 | -.03323 | .19725 |
| -49.403 | 99.317 | 101.55000 | -15.32900 | 15.34000 | .18564 | -.25718 | .04770 | -.44725 | .06886 | -.03599 | .18203 |
| -48.028 | -.885 | 102.58000 | -15.21900 | 15.22100 | .14360 | -.20985 | .06448 | -.40974 | .10888 | -.04552 | .15177 |
| | GRADIENT | .00000 | .00000 | .00000 | .00000 | .00000 | .00000 | .00000 | .00000 | .00000 | .00000 |

RUN NO. 2968/ 0 RN/L = 2.37 GRADIENT INTERVAL = -5.00/ 5.00

| Y | X | Z | ALPHA | BETA | PHI | CN | CLM | CY | CYN | CBL | CA |
|---|---|---|---|---|---|---|---|---|---|---|---|
| -100.690 | -.268 | 99.13200 | -15.26300 | 15.22300 | .13598 | -.23764 | .05817 | -.38837 | .09680 | -.04219 | .16935 |
| -101.120 | 99.877 | 100.45000 | -15.38700 | 15.34800 | .18116 | -.29318 | .03757 | -.43728 | .06025 | -.03414 | .19635 |
| -100.720 | 199.710 | 100.34000 | -15.50300 | 15.47100 | .24046 | -.36551 | .02750 | -.49644 | .02839 | -.02535 | .19464 |
| | GRADIENT | .00000 | .00000 | .00000 | .00000 | .00000 | .00000 | .00000 | .00000 | .00000 | .00000 |

IA143, AEDC V41A-P8A, O/ET W/R.H. SRB SEPARATING (OVX153) ( 20 MAY 77 )

REFERENCE DATA

SREF = 2690.0000 SQ.FT. XMRP = 1097.0000 IN. XT
LREF = 1290.3000 INCHES YMRP = .0000 IN. YT
BREF = 1290.3000 INCHES ZMRP = 450.0000 IN. ZT
SCALE = .0100

PARAMETRIC DATA

ALPHA = -15.000 BETA = 15.000
DALPHA = -8.000 DBETA = .000
Z = 150.000 MACH = 4.500
JET PC = 1225.000

RUN NO. 2963/ 0 RN/L = 2.38 GRADIENT INTERVAL = -5.00/ 5.00

| Y | X | Z | ALPHA | BETA | PHI | CN | CLM | CY | CYN | CBL | CA |
|---|---|---|---|---|---|---|---|---|---|---|---|
| -11.635 | 199.880 | 150.21000 | -15.53700 | 15.67100 | .38818 | -.33528 | .02480 | -.68069 | .01999 | -.01981 | .20421 |
| -10.911 | 99.529 | 149.26000 | -15.24800 | 15.34400 | .23758 | -.22157 | .07652 | -.50492 | .09303 | -.03720 | .15753 |
| -8.421 | -.724 | 151.62000 | -15.17000 | 15.24600 | .19964 | -.18441 | .08204 | -.46491 | .12159 | -.04380 | .12413 |
| | GRADIENT | .00000 | .00000 | .00000 | .00000 | .00000 | .00000 | .00000 | .00000 | .00000 | .00000 |

RUN NO. 2966/ 0 RN/L = 2.37 GRADIENT INTERVAL = -5.00/ 5.00

| Y | X | Z | ALPHA | BETA | PHI | CN | CLM | CY | CYN | CBL | CA |
|---|---|---|---|---|---|---|---|---|---|---|---|
| -50.877 | -1.087 | 150.31000 | -15.19900 | 15.22500 | .17379 | -.20546 | .07736 | -.42540 | .11222 | -.04206 | .14593 |
| -50.921 | 99.734 | 150.29000 | -15.29600 | 15.36400 | .21679 | -.24995 | .06774 | -.47272 | .06819 | -.03302 | .18111 |
| -52.747 | 200.310 | 149.15000 | -15.37200 | 15.42600 | .26956 | -.30888 | .07388 | -.57327 | .08922 | -.03970 | .19983 |
| | GRADIENT | .00000 | .00000 | .00000 | .00000 | .00000 | .00000 | .00000 | .00000 | .00000 | .00000 |

RUN NO. 2969/ 0 RN/L = 2.37 GRADIENT INTERVAL = -5.00/ 5.00

| Y | X | Z | ALPHA | BETA | PHI | CN | CLM | CY | CYN | CBL | CA |
|---|---|---|---|---|---|---|---|---|---|---|---|
| -101.940 | 200.040 | 151.74000 | -15.45200 | 15.49900 | .26014 | -.34536 | .05244 | -.53266 | .03323 | -.02720 | .20725 |
| -98.093 | 99.017 | 152.31000 | -15.34800 | 15.37500 | .21311 | -.28286 | .06130 | -.46467 | .05860 | -.03116 | .19921 |
| -97.765 | -.989 | 152.29000 | -15.23900 | 15.24200 | .16542 | -.23316 | .07419 | -.40985 | .09655 | -.03908 | .16639 |
| | GRADIENT | .00000 | .00000 | .00000 | .00000 | .00000 | .00000 | .00000 | .00000 | .00000 | .00000 |

IA143, AEDC V41A-P8A, O/ET W/R.H. SRB SEPARATING (OVX154) ( 20 MAY 77 )

REFERENCE DATA

SREF = 2690.0000 SQ.FT. XMRP = 1097.0000 IN. XT
LREF = 1290.3000 INCHES YMRP = .0000 IN. YT
BREF = 1290.3000 INCHES ZMRP = 450.0000 IN. ZT
SCALE = .0100

PARAMETRIC DATA

ALPHA = -15.000 BETA = 15.000
DALPHA = -8.000 DBETA = .000
Z = 200.000 MACH = 4.500
JET PC = 1225.000

RUN NO. 2964/ 0 RN/L = 2.37 GRADIENT INTERVAL = -5.00/ 5.00

| Y | X | Z | ALPHA | BETA | PHI | CN | CLM | CY | CYN | CBL | CA |
|---|---|---|---|---|---|---|---|---|---|---|---|
| -11.023 | -.105 | 200.61000 | -15.15100 | 15.26100 | .23266 | -.18869 | .10118 | -.49587 | .12770 | -.04226 | .12264 |
| -13.205 | 100.280 | 199.24000 | -15.20800 | 15.35300 | .26734 | -.21727 | .10281 | -.53511 | .10240 | -.03675 | .16035 |
| -11.907 | 200.010 | 200.84000 | -15.48700 | 15.75100 | .41719 | -.28196 | .03425 | -.69194 | -.01523 | -.00988 | .22126 |
| | GRADIENT | .00000 | .00000 | .00000 | .00000 | .00000 | .00000 | .00000 | .00000 | .00000 | .00000 |

IA143, AEDC V41A-P8A, O/ET W/R.H. SRB SEPARATING (OVX154) ( 20 MAY 77 )

REFERENCE DATA

SREF = 2690.0000 SQ.FT. XMRP = 1097.0000 IN. XT
LREF = 1290.3000 INCHES YMRP = .0000 IN. YT
BREF = 1290.3000 INCHES ZMRP = 450.0000 IN. ZT
SCALE = .0100

PARAMETRIC DATA

ALPHA = -15.000 BETA = 15.000
DALPHA = -8.000 DBETA = .000
Z = 200.000 MACH = 4.500
JET PC = 1225.000

RUN NO. 2965/ 0 RN/L = 2.37 GRADIENT INTERVAL = -5.00/ 5.00

| Y | X | Z | ALPHA | BETA | PHI | CN | CLM | CY | CYN | CBL | CA |
|---|---|---|---|---|---|---|---|---|---|---|---|
| -47.002 | 199.000 | 201.06000 | -15.39700 | 15.55600 | .34012 | -.29505 | .06992 | -.65885 | .06771 | -.03400 | .20693 |
| -46.385 | 98.775 | 202.19000 | -15.25500 | 15.38700 | .24697 | -.24439 | .09555 | -.51417 | .07687 | -.03406 | .18744 |
| -47.411 | -1.037 | 201.58000 | -15.17700 | 15.24400 | .21020 | -.20801 | .09877 | -.45450 | .11523 | -.03911 | .14705 |
| | GRADIENT | .00000 | .00000 | .00000 | .00000 | .00000 | .00000 | .00000 | .00000 | .00000 | .00000 |

RUN NO. 2970/ 0 RN/L = 2.37 GRADIENT INTERVAL = -5.00/ 5.00

| Y | X | Z | ALPHA | BETA | PHI | CN | CLM | CY | CYN | CBL | CA |
|---|---|---|---|---|---|---|---|---|---|---|---|
| -101.310 | -.125 | 200.48000 | -15.22900 | 15.26400 | .19435 | -.24077 | .09190 | -.43278 | .09567 | -.03626 | .17342 |
| -101.310 | 99.865 | 200.17000 | -15.32400 | 15.40400 | .23627 | -.27922 | .07940 | -.48985 | .05669 | -.02971 | .20693 |
| -100.900 | 199.840 | 200.58000 | -15.41900 | 15.53200 | .28167 | -.33529 | .07218 | -.57229 | .03735 | -.02905 | .21671 |
| | GRADIENT | .00000 | .00000 | .00000 | .00000 | .00000 | .00000 | .00000 | .00000 | .00000 | .00000 |

IA143, AEDC V41A-P8A, O/ET W/R.H. SRB SEPARATING (OVX155) ( 20 MAY 77 )

REFERENCE DATA

SREF = 2690.0000 SQ.FT. XMRP = 1097.0000 IN. XT
LREF = 1290.3000 INCHES YMRP = .0000 IN. YT
BREF = 1290.3000 INCHES ZMRP = 450.0000 IN. ZT
SCALE = .0100

PARAMETRIC DATA

ALPHA = -15.000 BETA = 15.000
DALPHA = -8.000 DBETA = 2.000
Z = 100.000 MACH = 4.500
JET PC = 1225.000

RUN NO. 2971/ 0 RN/L = 2.37 GRADIENT INTERVAL = -5.00/ 5.00

| Y | X | Z | ALPHA | BETA | PHI | CN | CLM | CY | CYN | CBL | CA |
|---|---|---|---|---|---|---|---|---|---|---|---|
| -11.297 | -1.018 | 99.83900 | -15.20800 | 15.25100 | .15982 | -.19671 | .06694 | -.44454 | .11221 | -.04764 | .14925 |
| -12.862 | 100.200 | 98.49100 | -15.29700 | 15.33800 | .19934 | -.23956 | .05540 | -.47658 | .08494 | -.03986 | .17254 |
| -11.269 | 199.790 | 100.28000 | -15.57700 | 15.60300 | .33492 | -.39079 | .02096 | -.63552 | .03312 | -.02644 | .19688 |
| | GRADIENT | .00000 | .00000 | .00000 | .00000 | .00000 | .00000 | .00000 | .00000 | .00000 | .00000 |

RUN NO. 2976/ 0 RN/L = 2.39 GRADIENT INTERVAL = -5.00/ 5.00

| Y | X | Z | ALPHA | BETA | PHI | CN | CLM | CY | CYN | CBL | CA |
|---|---|---|---|---|---|---|---|---|---|---|---|
| -48.087 | 198.900 | 99.77500 | -15.41100 | 15.40800 | .24174 | -.31879 | .05294 | -.53571 | .08018 | -.03882 | .20397 |
| -49.252 | 99.248 | 101.82000 | -15.32900 | 15.34400 | .18915 | -.25682 | .04981 | -.46519 | .07684 | -.03906 | .19004 |
| -48.103 | -.857 | 102.52000 | -15.22200 | 15.23400 | .14790 | -.21140 | .06829 | -.43047 | .11390 | -.04837 | .16617 |
| | GRADIENT | .00000 | .00000 | .00000 | .00000 | .00000 | .00000 | .00000 | .00000 | .00000 | .00000 |

IA143, AEDC V41A-P8A, O/ET W/R.H. SRB SEPARATING (OVX155) ( 20 MAY 77 )

REFERENCE DATA

SREF = 2690.0000 SQ.FT. XMRP = 1097.0000 IN. XT
LREF = 1290.3000 INCHES YMRP = .0000 IN. YT
BREF = 1290.3000 INCHES ZMRP = 450.0000 IN. ZT
SCALE = .0100

PARAMETRIC DATA

ALPHA = -15.000 BETA = 15.000
DALPHA = -8.000 DBETA = 2.000
Z = 100.000 MACH = 4.500
JET PC = 1225.000

RUN NO. 2977/ 0 RN/L = 2.38 GRADIENT INTERVAL = -5.00/ 5.00

| Y | X | Z | ALPHA | BETA | PHI | CN | CLM | CY | CYN | CBL | CA |
|---|---|---|---|---|---|---|---|---|---|---|---|
| -100.990 | -.227 | 98.92100 | -15.27500 | 15.23800 | .15194 | -.25010 | .06476 | -.41256 | .10142 | -.04305 | .18226 |
| -101.210 | 99.831 | 100.41000 | -15.38600 | 15.35200 | .19100 | -.29346 | .04134 | -.45929 | .06927 | -.03664 | .20172 |
| -101.070 | 199.830 | 100.36000 | -15.49700 | 15.47300 | .24890 | -.36669 | .03367 | -.51365 | .03611 | -.02728 | .19839 |
| | GRADIENT | .00000 | .00000 | .00000 | .00000 | .00000 | .00000 | .00000 | .00000 | .00000 | .00000 |

IA143, AEDC V41A-P8A, O/ET W/R.H. SRB SEPARATING (OVX156) ( 20 MAY 77 )

REFERENCE DATA

SREF = 2690.0000 SQ.FT. XMRP = 1097.0000 IN. XT
LREF = 1290.3000 INCHES YMRP = .0000 IN. YT
BREF = 1290.3000 INCHES ZMRP = 450.0000 IN. ZT
SCALE = .0100

PARAMETRIC DATA

ALPHA = -15.000 BETA = 15.000
DALPHA = -8.000 DBETA = 2.000
Z = 150.000 MACH = 4.500
JET PC = 1225.000

RUN NO. 2972/ 0 RN/L = 2.38 GRADIENT INTERVAL = -5.00/ 5.00

| Y | X | Z | ALPHA | BETA | PHI | CN | CLM | CY | CYN | CBL | CA |
|---|---|---|---|---|---|---|---|---|---|---|---|
| -10.992 | 199.670 | 150.24000 | -15.54100 | 15.69200 | .39607 | -.33223 | .02380 | -.67784 | .00532 | -.01491 | .20946 |
| -7.224 | 98.787 | 151.23000 | -15.23300 | 15.32700 | .25640 | -.22205 | .08945 | -.53247 | .11425 | -.04054 | .16462 |
| -9.220 | -.499 | 151.19000 | -15.17000 | 15.26500 | .20393 | -.18678 | .08825 | -.48537 | .12331 | -.04607 | .13739 |
| | GRADIENT | .00000 | .00000 | .00000 | .00000 | .00000 | .00000 | .00000 | .00000 | .00000 | .00000 |

RUN NO. 2975/ 0 RN/L = 2.39 GRADIENT INTERVAL = -5.00/ 5.00

| Y | X | Z | ALPHA | BETA | PHI | CN | CLM | CY | CYN | CBL | CA |
|---|---|---|---|---|---|---|---|---|---|---|---|
| -50.317 | -.419 | 149.25000 | -15.20200 | 15.24500 | .18295 | -.21260 | .08523 | -.44471 | .11258 | -.04297 | .15966 |
| -50.969 | 99.781 | 150.45000 | -15.29100 | 15.36200 | .22714 | -.24885 | .07316 | -.48836 | .07650 | -.03444 | .18662 |
| -51.155 | 199.780 | 150.15000 | -15.41000 | 15.47900 | .30244 | -.33785 | .07775 | -.64111 | .09822 | -.04402 | .20567 |
| | GRADIENT | .00000 | .00000 | .00000 | .00000 | .00000 | .00000 | .00000 | .00000 | .00000 | .00000 |

RUN NO. 2978/ 0 RN/L = 2.38 GRADIENT INTERVAL = -5.00/ 5.00

| Y | X | Z | ALPHA | BETA | PHI | CN | CLM | CY | CYN | CBL | CA |
|---|---|---|---|---|---|---|---|---|---|---|---|
| -101.910 | 200.190 | 152.59000 | -15.42400 | 15.47400 | .26974 | -.33705 | .06540 | -.54858 | .05273 | -.03050 | .21397 |
| -98.352 | 98.976 | 151.65000 | -15.34500 | 15.38100 | .22612 | -.28558 | .06810 | -.48348 | .06503 | -.03216 | .20520 |
| -97.976 | -.822 | 151.92000 | -15.24500 | 15.25800 | .17[illegible]74 | -.24554 | .08408 | -.43173 | .09958 | -.03996 | .18021 |
| | GRADIENT | .00000 | .00000 | .00000 | .00000 | .00000 | .00000 | .00000 | .00000 | .00000 | .00000 |

IA143, AEDC V41A-P8A, O/ET W/R.H. SRB SEPARATING (OVX157) ( 20 MAY 77 )

REFERENCE DATA

SREF = 2690.0000 SQ.FT. XMRP = 1097.0000 IN. XT
LREF = 1290.3000 INCHES YMRP = .0000 IN. YT
BREF = 1290.3000 INCHES ZMRP = 450.0000 IN. ZT
SCALE = .0100

PARAMETRIC DATA

ALPHA = -15.000 BETA = 15.000
DALPHA = -8.000 DBETA = 2.000
Z = 200.000 MACH = 4.500
JET PC = 1225.000

RUN NO. 2973/ 0 RN/L = 2.38 GRADIENT INTERVAL = -5.00/ 5.00

| Y | X | Z | ALPHA | BETA | PHI | CN | CLM | CY | CYN | CBL | CA |
|---|---|---|---|---|---|---|---|---|---|---|---|
| -11.090 | .014 | 200.76000 | -15.14400 | 15.27900 | .23965 | -.19405 | .11419 | -.51036 | .12645 | -.04270 | .14155 |
| -12.676 | 100.200 | 199.00000 | -15.20900 | 15.36200 | .29021 | -.22287 | .11226 | -.57265 | .11645 | -.03957 | .17147 |
| -11.578 | 200.050 | 200.99000 | -15.48100 | 15.76100 | .42381 | -.27759 | .03846 | -.70406 | -.01355 | -.01057 | .22810 |
| | GRADIENT | .00000 | .00000 | .00000 | .00000 | .00000 | .00000 | .00000 | .00000 | .00000 | .00000 |

RUN NO. 2974/ 0 RN/L = 2.39 GRADIENT INTERVAL = -5.00/ 5.00

| Y | X | Z | ALPHA | BETA | PHI | CN | CLM | CY | CYN | CBL | CA |
|---|---|---|---|---|---|---|---|---|---|---|---|
| -47.734 | 199.110 | 200.44000 | -15.44000 | 15.63200 | .37111 | -.29528 | .05596 | -.65913 | .02851 | -.02158 | .21794 |
| -50.651 | 99.677 | 199.82000 | -15.25300 | 15.38400 | .25662 | -.24376 | .09942 | -.52460 | .08325 | -.03455 | .19377 |
| -47.596 | -.845 | 201.45000 | -15.17700 | 15.26400 | .21854 | -.21503 | .10807 | -.46958 | .11352 | -.03932 | .16252 |
| | GRADIENT | .00000 | .00000 | .00000 | .00000 | .00000 | .00000 | .00000 | .00000 | .00000 | .00000 |

RUN NO. 2979/ 0 RN/L = 2.38 GRADIENT INTERVAL = -5.00/ 5.00

| Y | X | Z | ALPHA | BETA | PHI | CN | CLM | CY | CYN | CBL | CA |
|---|---|---|---|---|---|---|---|---|---|---|---|
| -101.570 | .094 | 200.71000 | -15.23000 | 15.28000 | .20622 | -.24717 | .10032 | -.45076 | .09679 | -.03653 | .18634 |
| -100.920 | 99.895 | 200.31000 | -15.32300 | 15.41700 | .24837 | -.28162 | .08603 | -.51184 | .06130 | -.03099 | .21515 |
| -99.601 | 199.370 | 200.35000 | -15.39300 | 15.50300 | .29030 | -.32491 | .08241 | -.57965 | .05388 | -.03081 | .22176 |
| | GRADIENT | .00000 | .00000 | .00000 | .00000 | .00000 | .00000 | .00000 | .00000 | .00000 | .00000 |

IA143, AEDC V41A-P8A, O/ET W/R.H. SRB SEPARATING (OVX158) ( 23 MAY 77 )

REFERENCE DATA

SREF = 2690.0000 SQ.FT. XMRP = 1097.0000 IN. XT
LREF = 1290.3000 INCHES YMRP = .0000 IN. YT
BREF = 1290.3000 INCHES ZMRP = 450.0000 IN. ZT
SCALE = .0100

PARAMETRIC DATA

ALPHA = -15.000 BETA = -15.000
DALPHA = .000 DBETA = -4.000
Z = .000 MACH = 4.500
JET PC = 1225.000

RUN NO. 3307/ 0 RN/L = 2.38 GRADIENT INTERVAL = -5.00/ 5.00

| Y | X | Z | ALPHA | BETA | PHI | CN | CLM | CY | CYN | CBL | CA |
|---|---|---|---|---|---|---|---|---|---|---|---|
| -120.010 | -1.269 | -.17773 | -15.63900 | -15.15700 | -.25129 | -.62076 | .09814 | .48818 | -.16971 | .04395 | .24786 |
| -119.660 | 99.280 | .22902 | -15.61600 | -15.14200 | -.24730 | -.61996 | .10955 | .49794 | -.18295 | .04824 | .24766 |
| -120.420 | 199.060 | .48908 | -15.57700 | -15.12200 | -.21056 | -.60488 | .11819 | .46232 | -.17680 | .04984 | .25377 |
| | GRADIENT | .00000 | .00000 | .00000 | .00000 | .00000 | .00000 | .00000 | .00000 | .00000 | .00000 |

IA143, AEDC V41A-P8A, O/ET W/R.H. SRB SEPARATING (OVX158) ( 23 MAY 77 )

REFERENCE DATA

SREF = 2690.0000 SQ.FT. XMRP = 1097.0000 IN. XT
LREF = 1290.3000 INCHES YMRP = .0000 IN. YT
BREF = 1290.3000 INCHES ZMRP = 450.0000 IN. ZT
SCALE = .0100

PARAMETRIC DATA

ALPHA = -15.000 BETA = -15.000
DALPHA = .000 DBETA = -4.000
Z = .000 MACH = 4.500
JET PC = 1225.000

RUN NO. 3312/ 0 RN/L = 2.38 GRADIENT INTERVAL = -5.00/ 5.00

| Y | X | Z | ALPHA | BETA | PHI | CN | CLM | CY | CYN | CBL | CA |
|---|---|---|---|---|---|---|---|---|---|---|---|
| -147.360 | 200.140 | -.11677 | -15.57500 | -15.14300 | -.22072 | -.60876 | .12436 | .48935 | -.18102 | .05222 | .25601 |
| -150.000 | 99.349 | -.81085 | -15.61100 | -15.15500 | -.25289 | -.61841 | .11430 | .51412 | -.18534 | .04972 | .25331 |
| -149.860 | -.487 | -.19530 | -15.62100 | -15.17900 | -.25799 | -.58849 | .09150 | .48272 | -.15584 | .03965 | .24681 |
| | GRADIENT | .00000 | .00000 | .00000 | .00000 | .00000 | .00000 | .00000 | .00000 | .00000 | .00000 |

RUN NO. 3313/ 0 RN/L = 2.38 GRADIENT INTERVAL = -5.00/ 5.00

| Y | X | Z | ALPHA | BETA | PHI | CN | CLM | CY | CYN | CBL | CA |
|---|---|---|---|---|---|---|---|---|---|---|---|
| -200.220 | -.523 | .31548 | -15.60000 | -15.18300 | -.24606 | -.57160 | .09225 | .47406 | -.15023 | .04000 | .24742 |
| -200.190 | 99.250 | -.33819 | -15.59800 | -15.16900 | -.25322 | -.59826 | .11025 | .51058 | -.17682 | .04787 | .25218 |
| -200.320 | 199.190 | .16523 | -15.56900 | -15.14600 | -.22885 | -.61380 | .13418 | .49544 | -.18161 | .05147 | .26625 |
| | GRADIENT | .00000 | .00000 | .00000 | .00000 | .00000 | .00000 | .00000 | .00000 | .00000 | .00000 |

IA143, AEDC V41A-P8A, O/ET W/R.H. SRB SEPARATING (OVX159) ( 23 MAY 77 )

REFERENCE DATA

SREF = 2690.0000 SQ.FT. XMRP = 1097.0000 IN. XT
LREF = 1290.3000 INCHES YMRP = .0000 IN. YT
BREF = 1290.3000 INCHES ZMRP = 450.0000 IN. ZT
SCALE = .0100

PARAMETRIC DATA

ALPHA = -15.000 BETA = -15.000
DALPHA = .000 DBETA = -4.000
Z = .000 MACH = 4.500
JET PC = 1225.000

RUN NO. 3567/ 0 RN/L = 2.38 GRADIENT INTERVAL = -5.00/ 5.00

| Y | X | Z | ALPHA | BETA | PHI | CN | CLM | CY | CYN | CBL | CA |
|---|---|---|---|---|---|---|---|---|---|---|---|
| -150.550 | -.810 | -.05347 | -15.61700 | -15.17800 | -.25374 | -.58191 | .08899 | .47191 | -.15048 | .03817 | .24467 |
| -150.530 | 99.389 | -.30129 | -15.61200 | -15.15300 | -.25049 | -.61504 | .11116 | .50355 | -.18050 | .04802 | .25102 |
| -150.550 | 199.240 | .55791 | -15.57500 | -15.14100 | -.21796 | -.60864 | .12347 | .48263 | -.17834 | .05145 | .25480 |
| | GRADIENT | .00000 | .00000 | .00000 | .00000 | .00000 | .00000 | .00000 | .00000 | .00000 | .00000 |

IA143, AEDC V41A-P8A, O/ET W/R.H. SRB SEPARATING (OVX160) ( 23 MAY 77 )

REFERENCE DATA

SREF = 2690.0000 SQ.FT. XMRP = 1097.0000 IN. XT
LREF = 1290.3000 INCHES YMRP = .0000 IN. YT
BREF = 1290.3000 INCHES ZMRP = 450.0000 IN. ZT
SCALE = .0100

PARAMETRIC DATA

ALPHA = -15.000 BETA = -15.000
DALPHA = .000 DBETA = -4.000
Z = 100.000 MACH = 4.500
JET PC = 1225.000

RUN NO. 3308/ 0 RN/L = 2.38 GRADIENT INTERVAL = -5.00/ 5.00

| Y | X | Z | ALPHA | BETA | PHI | CN | CLM | CY | CYN | CBL | CA |
|---|---|---|---|---|---|---|---|---|---|---|---|
| -122.100 | 198.620 | 100.05000 | -15.52500 | -15.01600 | -.16149 | -.55187 | .10500 | .35195 | -.17076 | .04328 | .25424 |
| -119.770 | 99.284 | 99.10700 | -15.55000 | -15.01200 | -.17112 | -.57611 | .10611 | .36275 | -.17722 | .04383 | .25523 |
| -119.700 | -.613 | 99.09900 | -15.58500 | -15.01800 | -.17715 | -.58590 | .09467 | .37624 | -.18145 | .04524 | .26211 |
| | GRADIENT | .00000 | .00000 | .00000 | .00000 | .00000 | .00000 | .00000 | .00000 | .00000 | .00000 |

RUN NO. 3311/ 0 RN/L = 2.38 GRADIENT INTERVAL = -5.00/ 5.00

| Y | X | Z | ALPHA | BETA | PHI | CN | CLM | CY | CYN | CBL | CA |
|---|---|---|---|---|---|---|---|---|---|---|---|
| -146.770 | .140 | 98.42400 | -15.60100 | -15.03700 | -.18502 | -.62452 | .11195 | .39007 | -.17941 | .04520 | .27188 |
| -150.650 | 99.059 | 100.08000 | -15.57500 | -15.01300 | -.17185 | -.61629 | .11837 | .37231 | -.18214 | .04578 | .26964 |
| -150.380 | 199.210 | 100.77000 | -15.53600 | -15.02100 | -.16441 | -.57035 | .11089 | .35218 | -.16806 | .04229 | .25945 |
| | GRADIENT | .00000 | .00000 | .00000 | .00000 | .00000 | .00000 | .00000 | .00000 | .00000 | .00000 |

RUN NO. 3314/ 0 RN/L = 2.38 GRADIENT INTERVAL = -5.00/ 5.00

| Y | X | Z | ALPHA | BETA | PHI | CN | CLM | CY | CYN | CBL | CA |
|---|---|---|---|---|---|---|---|---|---|---|---|
| -202.710 | 198.390 | 99.36900 | -15.54700 | -15.01000 | -.15269 | -.62667 | .14088 | .33645 | -.16551 | .04207 | .28478 |
| -198.320 | 99.565 | 98.86100 | -15.59000 | -15.04700 | -.18934 | -.63709 | .12761 | .41155 | -.18583 | .04834 | .27480 |
| -199.180 | -.426 | 100.04000 | -15.59600 | -15.09300 | -.21183 | -.61347 | .11545 | .43519 | -.17511 | .04539 | .27326 |
| | GRADIENT | .00000 | .00000 | .00000 | .00000 | .00000 | .00000 | .00000 | .00000 | .00000 | .00000 |

IA143, AEDC V41A-P8A, O/ET W/R.H. SRB SEPARATING (OVX161) ( 23 MAY 77 )

REFERENCE DATA

SREF = 2690.0000 SQ.FT. XMRP = 1097.0000 IN. XT
LREF = 1290.3000 INCHES YMRP = .0000 IN. YT
BREF = 1290.3000 INCHES ZMRP = 450.0000 IN. ZT
SCALE = .0100

PARAMETRIC DATA

ALPHA = -15.000 BETA = -15.000
DALPHA = .000 DBETA = -4.000
Z = 100.000 MACH = 4.500
JET PC = 1225.000

RUN NO. 3568/ 0 RN/L = 2.38 GRADIENT INTERVAL = -5.00/ 5.00

| Y | X | Z | ALPHA | BETA | PHI | CN | CLM | CY | CYN | CBL | CA |
|---|---|---|---|---|---|---|---|---|---|---|---|
| -153.090 | 198.490 | 99.68000 | -15.53700 | -15.02000 | -.16149 | -.57005 | .11051 | .34643 | -.16570 | .04178 | .25903 |
| -150.040 | 99.472 | 98.74700 | -15.57500 | -15.01500 | -.17086 | -.61623 | .11851 | .36953 | -.17992 | .04532 | .26862 |
| -149.760 | -.277 | 99.50300 | -15.59900 | -15.04400 | -.18386 | -.62721 | .11485 | .38829 | -.17529 | .04454 | .27277 |
| | GRADIENT | .00000 | .00000 | .00000 | .00000 | .00000 | .00000 | .00000 | .00000 | .00000 | .00000 |

IA143, AEDC V41A-P8A, O/ET W/R.H. SRB SEPARATING (OVX162) ( 23 MAY 77 )

REFERENCE DATA

SREF = 2690.0000 SQ.FT. XMRP = 1097.0000 IN. XT
LREF = 1290.3000 INCHES YMRP = .0000 IN. YT
BREF = 1290.3000 INCHES ZMRP = 450.0000 IN. ZT
SCALE = .0100

PARAMETRIC DATA

ALPHA = -15.000 BETA = -15.000
DALPHA = .000 DBETA = -4.000
Z = 200.000 MACH = 4.500
JET PC = 1225.000

RUN NO. 3309/ 0 RN/L = 2.38 GRADIENT INTERVAL = -5.00/ 5.00

| Y | X | Z | ALPHA | BETA | PHI | CN | CLM | CY | CYN | CBL | CA |
|---|---|---|---|---|---|---|---|---|---|---|---|
| -122.730 | -1.361 | 202.36000 | -15.45000 | -14.91600 | -.14190 | -.48980 | .10941 | .29500 | -.18801 | .04189 | .27534 |
| -120.700 | 99.100 | 199.06000 | -15.44800 | -14.87800 | -.11597 | -.53612 | .13445 | .27622 | -.19821 | .04615 | .28754 |
| -119.910 | 199.420 | 199.56000 | -15.44800 | -14.87200 | -.10515 | -.55062 | .14424 | .28039 | -.20471 | .05002 | .30263 |
| | GRADIENT | .00000 | .00000 | .00000 | .00000 | .00000 | .00000 | .00000 | .00000 | .00000 | .00000 |

RUN NO. 3310/ 0 RN/L = 2.38 GRADIENT INTERVAL = -5.00/ 5.00

| Y | X | Z | ALPHA | BETA | PHI | CN | CLM | CY | CYN | CBL | CA |
|---|---|---|---|---|---|---|---|---|---|---|---|
| -148.540 | 199.730 | 200.12000 | -15.45800 | -14.92000 | -.12486 | -.53240 | .12912 | .30148 | -.19175 | .04693 | .28473 |
| -150.340 | 99.202 | 199.36000 | -15.47300 | -14.91300 | -.13276 | -.54481 | .12920 | .29788 | -.19224 | .04485 | .28610 |
| -149.900 | -.721 | 198.68000 | -15.52100 | -14.90500 | -.14395 | -.55852 | .11267 | .30289 | -.19740 | .04403 | .29518 |
| | GRADIENT | .00000 | .00000 | .00000 | .00000 | .00000 | .00000 | .00000 | .00000 | .00000 | .00000 |

RUN NO. 3315/ 0 RN/L = 2.38 GRADIENT INTERVAL = -5.00/ 5.00

| Y | X | Z | ALPHA | BETA | PHI | CN | CLM | CY | CYN | CBL | CA |
|---|---|---|---|---|---|---|---|---|---|---|---|
| -203.100 | -1.679 | 200.01000 | -15.53700 | -14.94400 | -.15873 | -.59199 | .12808 | .32430 | -.18902 | .04271 | .30188 |
| -200.050 | 99.451 | 200.60000 | -15.49300 | -14.91800 | -.12798 | -.58562 | .14507 | .29036 | -.18613 | .04385 | .30570 |
| -199.840 | 199.440 | 200.31000 | -15.47800 | -14.93500 | -.12910 | -.55136 | .13052 | .29812 | -.18216 | .04406 | .28704 |
| | GRADIENT | .00000 | .00000 | .00000 | .00000 | .00000 | .00000 | .00000 | .00000 | .00000 | .00000 |

IA143, AEDC V41A-P8A, O/ET W/R.H. SRB SEPARATING (OVX163) ( 23 MAY 77 )

REFERENCE DATA

SREF = 2690.0000 SQ.FT. XMRP = 1097.0000 IN. XT
LREF = 1290.3000 INCHES YMRP = .0000 IN. YT
BREF = 1290.3000 INCHES ZMRP = 450.0000 IN. ZT
SCALE = .0100

PARAMETRIC DATA

ALPHA = -15.000 BETA = -15.000
DALPHA = .000 DBETA = -4.000
Z = 200.000 MACH = 4.500
JET PC = 1225.000

RUN NO. 3569/ 0 RN/L = 2.38 GRADIENT INTERVAL = -5.00/ 5.00

| Y | X | Z | ALPHA | BETA | PHI | CN | CLM | CY | CYN | CBL | CA |
|---|---|---|---|---|---|---|---|---|---|---|---|
| -153.910 | -1.393 | 200.72000 | -15.52600 | -14.90000 | -.13948 | -.57000 | .11597 | .29077 | -.19331 | .04259 | .29684 |
| -150.370 | 99.442 | 200.92000 | -15.47000 | -14.91200 | -.13164 | -.54307 | .12974 | .29174 | -.18934 | .04377 | .28732 |
| -150.090 | 199.530 | 200.17000 | -15.45500 | -14.92200 | -.12411 | -.52691 | .12714 | .29540 | -.18757 | .04558 | .28191 |
| | GRADIENT | .00000 | .00000 | .00000 | .00000 | .00000 | .00000 | .00000 | .00000 | .00000 | .00000 |

IA143, AEDC V41A-P8A, O/ET W/R.H. SRB SEPARATING (OVX164) ( 23 MAY 77 )

REFERENCE DATA

SREF = 2690.0000 SQ.FT. XMRP = 1097.0000 IN. XT
LREF = 1290.3000 INCHES YMRP = .0000 IN. YT
BREF = 1290.3000 INCHES ZMRP = 450.0000 IN. ZT
SCALE = .0100

PARAMETRIC DATA

ALPHA = -15.000 BETA = -15.000
DALPHA = .000 DBETA = -2.000
Z = .000 MACH = 4.500
JET PC = 1225.000

RUN NO. 3316/ 0 RN/L = 2.38 GRADIENT INTERVAL = -5.00/ 5.00

| Y | X | Z | ALPHA | BETA | PHI | CN | CLM | CY | CYN | CBL | CA |
|---|---|---|---|---|---|---|---|---|---|---|---|
| -69.555 | -1.312 | -.23884 | -15.64900 | -15.11200 | -.23603 | -.62912 | .09193 | .46230 | -.17836 | .04477 | .24419 |
| -69.721 | 99.268 | .42527 | -15.61800 | -15.10100 | -.22595 | -.62421 | .10481 | .47222 | -.19013 | .05007 | .24357 |
| -69.717 | 199.330 | 1.31510 | -15.55800 | -15.11000 | -.20563 | -.56597 | .10208 | .44063 | -.17097 | .04684 | .24141 |
| | GRADIENT | .00000 | .00000 | .00000 | .00000 | .00000 | .00000 | .00000 | .00000 | .00000 | .00000 |

RUN NO. 3321/ 0 RN/L = 2.38 GRADIENT INTERVAL = -5.00/ 5.00

| Y | X | Z | ALPHA | BETA | PHI | CN | CLM | CY | CYN | CBL | CA |
|---|---|---|---|---|---|---|---|---|---|---|---|
| -96.841 | 200.160 | .36920 | -15.56800 | -15.11300 | -.20940 | -.58167 | .10675 | .44558 | -.17169 | .04685 | .24470 |
| -99.243 | 99.421 | -1.02840 | -15.61600 | -15.12700 | -.23697 | -.61214 | .10148 | .48549 | -.18414 | .04877 | .24178 |
| -100.000 | -.582 | -.68736 | -15.64300 | -15.14600 | -.25320 | -.61538 | .09319 | .48071 | -.17067 | .04260 | .25199 |
| | GRADIENT | .00000 | .00000 | .00000 | .00000 | .00000 | .00000 | .00000 | .00000 | .00000 | .00000 |

RUN NO. 3322/ 0 RN/L = 2.38 GRADIENT INTERVAL = -5.00/ 5.00

| Y | X | Z | ALPHA | BETA | PHI | CN | CLM | CY | CYN | CBL | CA |
|---|---|---|---|---|---|---|---|---|---|---|---|
| -150.180 | -.584 | .73362 | -15.61500 | -15.17100 | -.25349 | -.57178 | .08456 | .48147 | -.15901 | .04084 | .24968 |
| -149.850 | 99.277 | -.48383 | -15.61100 | -15.14900 | -.24961 | -.60621 | .10554 | .50867 | -.18514 | .04960 | .24865 |
| -150.320 | 199.130 | .44768 | -15.57600 | -15.13800 | -.21957 | -.60367 | .11897 | .47825 | -.17688 | .05020 | .25125 |
| | GRADIENT | .00000 | .00000 | .00000 | .00000 | .00000 | .00000 | .00000 | .00000 | .00000 | .00000 |

IA143, AEDC V41A-P8A, O/ET W/R.H. SRB SEPARATING (OVX165) ( 23 MAY 77 )

REFERENCE DATA

SREF = 2690.0000 SQ.FT. XMRP = 1097.0000 IN. XT
LREF = 1290.3000 INCHES YMRP = .0000 IN. YT
BREF = 1290.3000 INCHES ZMRP = 450.0000 IN. ZT
SCALE = .0100

PARAMETRIC DATA

ALPHA = -15.000 BETA = -15.000
DALPHA = .000 DBETA = -2.000
Z = 100.000 MACH = 4.500
JET PC = 1225.000

RUN NO. 3317/ 0 RN/L = 2.38 GRADIENT INTERVAL = -5.00/ 5.00

| Y | X | Z | ALPHA | BETA | PHI | CN | CLM | CY | CYN | CBL | CA |
|---|---|---|---|---|---|---|---|---|---|---|---|
| -69.530 | 199.260 | 99.68800 | -15.55500 | -14.93200 | -.12841 | -.60908 | .11848 | .33306 | -.20350 | .05250 | .28523 |
| -70.976 | 98.948 | 98.67600 | -15.57600 | -14.86900 | -.11026 | -.65438 | .12531 | .28571 | -.20884 | .05032 | .27415 |
| -68.396 | -.345 | 99.32600 | -15.63000 | -14.91800 | -.15615 | -.63511 | .09127 | .30884 | -.19296 | .04166 | .27052 |
| | GRADIENT | .00000 | .00000 | .00000 | .00000 | .00000 | .00000 | .00000 | .00000 | .00000 | .00000 |

IA143, AEDC V41A-P8A, O/ET W/R.H. SRB SEPARATING (OVX165) ( 23 MAY 77 )

REFERENCE DATA

SREF = 2690.0000 SQ.FT. XMRP = 1097.0000 IN. XT
LREF = 1290.3000 INCHES YMRP = .0000 IN. YT
BREF = 1290.3000 INCHES ZMRP = 450.0000 IN. ZT
SCALE = .0100

PARAMETRIC DATA

ALPHA = -15.000 BETA = -15.000
DALPHA = .000 DBETA = -2.000
Z = 100.000 MACH = 4.500
JET PC = 1225.000

RUN NO. 3320/ 0 RN/L = 2.38 GRADIENT INTERVAL = -5.00/ 5.00

| Y | X | Z | ALPHA | BETA | PHI | CN | CLM | CY | CYN | CBL | CA |
|---|---|---|---|---|---|---|---|---|---|---|---|
| -95.886 | .288 | 97.52600 | -15.57200 | -14.99000 | -.16951 | -.58593 | .09995 | .34591 | -.17825 | .04191 | .26499 |
| -100.190 | 99.290 | 100.14000 | -15.54200 | -14.97400 | -.15609 | -.57096 | .10449 | .33594 | -.18202 | .04387 | .25876 |
| -100.040 | 199.310 | 99.67200 | -15.53800 | -14.97200 | -.14204 | -.57556 | .10875 | .33392 | -.18355 | .04671 | .26731 |
| | GRADIENT | .00000 | .00000 | .00000 | .00000 | .00000 | .00000 | .00000 | .00000 | .00000 | .00000 |

RUN NO. 3323/ 0 RN/L = 2.38 GRADIENT INTERVAL = -5.00/ 5.00

| Y | X | Z | ALPHA | BETA | PHI | CN | CLM | CY | CYN | CBL | CA |
|---|---|---|---|---|---|---|---|---|---|---|---|
| -152.490 | 198.440 | 99.80900 | -15.53600 | -15.01500 | -.16190 | -.56702 | .10824 | .34409 | -.16642 | .04140 | .25811 |
| -150.250 | 99.238 | 98.43900 | -15.58000 | -15.01200 | -.17504 | -.61892 | .11794 | .37509 | -.18382 | .04576 | .27130 |
| -149.210 | -.524 | 99.58400 | -15.59700 | -15.04100 | -.19072 | -.61979 | .11320 | .39516 | -.17950 | .04471 | .27649 |
| | GRADIENT | .00000 | .00000 | .00000 | .00000 | .00000 | .00000 | .00000 | .00000 | .00000 | .00000 |

IA143, AEDC V41A-P8A, O/ET W/R.H. SRB SEPARATING (OVX166) ( 23 MAY 77 )

REFERENCE DATA

SREF = 2690.0000 SQ.FT. XMRP = 1097.0000 IN. XT
LREF = 1290.3000 INCHES YMRP = .0000 IN. YT
BREF = 1290.3000 INCHES ZMRP = 450.0000 IN. ZT
SCALE = .0100

PARAMETRIC DATA

ALPHA = -15.000 BETA = -15.000
DALPHA = .000 DBETA = -2.000
Z = 200.000 MACH = 4.500
JET PC = 1225.000

RUN NO. 3318/ 0 RN/L = 2.38 GRADIENT INTERVAL = -5.00/ 5.00

| Y | X | Z | ALPHA | BETA | PHI | CN | CLM | CY | CYN | CBL | CA |
|---|---|---|---|---|---|---|---|---|---|---|---|
| -70.116 | -.701 | 199.70000 | -15.44500 | -14.70700 | -.07185 | -.51648 | .11545 | .19283 | -.23699 | .04938 | .30879 |
| -68.935 | 99.656 | 199.70000 | -15.42700 | -14.76800 | -.06753 | -.55152 | .15036 | .21535 | -.22156 | .05111 | .31962 |
| -69.903 | 199.300 | 199.61000 | -15.42300 | -14.77100 | -.04963 | -.56489 | .16083 | .18807 | -.20741 | .04875 | .33420 |
| | GRADIENT | .00000 | .00000 | .00000 | .00000 | .00000 | .00000 | .00000 | .00000 | .00000 | .00000 |

RUN NO. 3319/ 0 RN/L = 2.38 GRADIENT INTERVAL = -5.00/ 5.00

| Y | X | Z | ALPHA | BETA | PHI | CN | CLM | CY | CYN | CBL | CA |
|---|---|---|---|---|---|---|---|---|---|---|---|
| -97.999 | 199.730 | 200.00000 | -15.44100 | -14.84400 | -.08810 | -.55679 | .15094 | .26478 | -.21113 | .05230 | .31490 |
| -100.850 | 99.045 | 199.89000 | -15.43900 | -14.83300 | -.10060 | -.53863 | .13978 | .25775 | -.21125 | .04871 | .30301 |
| -99.736 | -.603 | 199.96000 | -15.44800 | -14.84600 | -.12135 | -.51573 | .12220 | .24732 | -.19663 | .04064 | .28800 |
| | GRADIENT | .00000 | .00000 | .00000 | .00000 | .00000 | .00000 | .00000 | .00000 | .00000 | .00000 |

IA143, AEDC V41A-P8A, O/ET W/R.H. SRB SEPARATING (OVX166) ( 23 MAY 77 )

REFERENCE DATA

SREF = 2690.0000 SQ.FT. XMRP = 1097.0000 IN. XT
LREF = 1290.3000 INCHES YMRP = .0000 IN. YT
BREF = 1290.3000 INCHES ZMRP = 450.0000 IN. ZT
SCALE = .0100

PARAMETRIC DATA

ALPHA = -15.000 BETA = -15.000
DALPHA = .000 DBETA = -2.000
Z = 200.000 MACH = 4.500
JET PC = 1225.000

RUN NO. 3324/ 0 RN/L = 2.38 GRADIENT INTERVAL = -5.00/ 5.00

| Y | X | Z | ALPHA | BETA | PHI | CN | CLM | CY | CYN | CBL | CA |
|---|---|---|---|---|---|---|---|---|---|---|---|
| -153.070 | -1.473 | 200.72000 | -15.51700 | -14.89600 | -.14318 | -.57357 | .12553 | .29374 | -.19624 | .04268 | .30480 |
| -149.760 | 99.367 | 200.83000 | -15.46800 | -14.90200 | -.13259 | -.53838 | .12884 | .29536 | -.19565 | .04503 | .29164 |
| -150.230 | 199.170 | 199.89000 | -15.45400 | -14.90700 | -.12095 | -.52962 | .12946 | .29273 | -.19334 | .04672 | .28857 |
| | GRADIENT | .0$000 | .00000 | .0$000 | .00000 | .0$000 | .00000 | .0$000 | .00000 | .00000 | .00000 |

IA143, AEDC V41A-P8A, O/ET W/R.H. SRB SEPARATING (OVX167) ( 23 MAY 77 )

REFERENCE DATA

SREF = 2690.0000 SQ.FT. XMRP = 1097.0000 IN. XT
LREF = 1290.3000 INCHES YMRP = .0000 IN. YT
BREF = 1290.3000 INCHES ZMRP = 450.0000 IN. ZT
SCALE = .0100

PARAMETRIC DATA

ALPHA = -15.000 BETA = -15.000
DALPHA = .000 DBETA = .000
Z = .000 MACH = 4.500
JET PC = 1225 000

RUN NO. 3325/ 0 RN/L = 2.38 GRADIENT INTERVAL = -5.00/ 5.00

| Y | X | Z | ALPHA | BETA | PHI | CN | CLM | CY | CYN | CBL | CA |
|---|---|---|---|---|---|---|---|---|---|---|---|
| -49.544 | -1.385 | -1.72990 | -15.64400 | -15.10100 | -.23214 | -.60349 | .07827 | .44867 | -.17657 | .04335 | .24122 |
| -49.944 | 99.142 | .19831 | -15.61200 | -15.08700 | -.21283 | -.60937 | .09623 | .45949 | -.19114 | .05115 | .23934 |
| -50.071 | 199.150 | 2.00140 | -15.52600 | -15.11100 | -.19465 | -.50756 | .08087 | .39213 | -.14460 | .03813 | .22320 |
| | GRADIENT | .00000 | .00000 | .00000 | .00000 | .00000 | .00000 | .00000 | .00000 | .00000 | .00000 |

RUN NO. 3330/ 0 RN/L = 2.38 GRADIENT INTERVAL = -5.00/ 5.00

| Y | X | Z | ALPHA | BETA | PHI | CN | CLM | CY | CYN | CBL | CA |
|---|---|---|---|---|---|---|---|---|---|---|---|
| -96.590 | 200.040 | .45440 | -15.56700 | -15.11000 | -.20855 | -.57134 | .10096 | .43596 | -.16787 | .04510 | .24182 |
| -99.310 | 99.328 | -1.18310 | -15.61600 | -15.11900 | -.23181 | -.60213 | .09435 | .48087 | -.18588 | .04949 | .23952 |
| -100.090 | -.506 | -.52703 | -15.64100 | -15.13800 | -.24797 | -.60657 | .08879 | .48532 | -.17767 | .04547 | .25514 |
| | GRADIENT | .00000 | .00000 | .00000 | .00000 | .00000 | .00000 | .00000 | .00000 | .00000 | .00000 |

RUN NO. 3331/ 0 RN/L = 2.38 GRADIENT INTERVAL = -5.00/ 5.00

| Y | X | Z | ALPHA | BETA | PHI | CN | CLM | CY | CYN | CBL | CA |
|---|---|---|---|---|---|---|---|---|---|---|---|
| -149.990 | -.658 | .79232 | -15.61400 | -15.16600 | -.25218 | -.56070 | .07828 | .47800 | -.15971 | .04079 | .24971 |
| -150.080 | 99.216 | -.41231 | -15.61300 | -15.14500 | -.24711 | -.59824 | .09868 | .50250 | -.18412 | .04913 | .24531 |
| -150.360 | 199.160 | .51375 | -15.57800 | -15.13500 | -.21695 | -.59572 | .11228 | .46953 | -.17399 | .04910 | .24797 |
| | GRADIENT | .00000 | .00000 | .00000 | .00000 | .00000 | .00000 | .00000 | .00000 | .00000 | .00000 |

IA143, AEDC V41A-P8A, O/ET W/R.H. SRB SEPARATING (OVX168) ( 23 MAY 77 )

REFERENCE DATA

SREF = 2690.0000 SQ.FT. XMRP = 1097.0000 IN. XT
LREF = 1290.3000 INCHES YMRP = .0000 IN. YT
BREF = 1290.3000 INCHES ZMRP = 450.0000 IN. ZT
SCALE = .0100

PARAMETRIC DATA

ALPHA = -15.000 BETA = -15.000
DALPHA = .000 DBETA = .000
Z = 100.000 MACH = 4.500
JET PC = 1225.000

RUN NO. 3326/ 0 RN/L = 2.38 GRADIENT INTERVAL = -5.00/ 5.00

| Y | X | Z | ALPHA | BETA | PHI | CN | CLM | CY | CYN | CBL | CA |
|---|---|---|---|---|---|---|---|---|---|---|---|
| -50.422 | 199.060 | 99.63400 | -15.55000 | -14.88100 | -.09493 | -.61926 | .12328 | .29249 | -.20883 | .05450 | .29819 |
| -50.596 | 99.169 | 99.21300 | -15.57100 | -14.84900 | -.10822 | -.63071 | .11578 | .28221 | -.21622 | .05141 | .28527 |
| -49.135 | -.636 | 99.17900 | -15.62600 | -14.88300 | -.14545 | -.62427 | .08387 | .27636 | -.19267 | .03919 | .26985 |
| | GRADIENT | .00000 | .00000 | .00000 | .00000 | .00000 | .00000 | .00000 | .00000 | .00000 | .00000 |

RUN NO. 3329/ 0 RN/L = 2.38 GRADIENT INTERVAL = -5.00/ 5.00

| Y | X | Z | ALPHA | BETA | PHI | CN | CLM | CY | CYN | CBL | CA |
|---|---|---|---|---|---|---|---|---|---|---|---|
| -96.215 | .176 | 96.95000 | -15.60100 | -14.95100 | -.15460 | -.62606 | .10584 | .28727 | -.16593 | .03475 | .27689 |
| -99.806 | 99.344 | 101.40000 | -15.53800 | -14.96100 | -.15011 | -.56330 | .10159 | .32490 | -.18237 | .04358 | .26077 |
| -99.615 | 199.350 | 99.51500 | -15.54000 | -14.96500 | -.13739 | -.57357 | .10661 | .32834 | -.18437 | .04703 | .26975 |
| | GRADIENT | .00000 | .00000 | .00000 | .00000 | .00000 | .00000 | .00000 | .00000 | .00000 | .00000 |

RUN NO. 3332/ 0 RN/L = 2.38 GRADIENT INTERVAL = -5.00/ 5.00

| Y | X | Z | ALPHA | BETA | PHI | CN | CLM | CY | CYN | CBL | CA |
|---|---|---|---|---|---|---|---|---|---|---|---|
| -153.240 | 198.240 | 100.10000 | -15.53000 | -15.01000 | -.15977 | -.55395 | .10278 | .33765 | -.16555 | .04081 | .25514 |
| -149.040 | 99.441 | 98.58400 | -15.57200 | -15.00300 | -.16972 | -.60099 | .11019 | .36481 | -.18280 | .04531 | .26673 |
| -149.970 | -.725 | 99.41300 | -15.59100 | -15.03500 | -.18780 | -.60368 | .10655 | .38830 | -.17860 | .04423 | .27528 |
| | GRADIENT | .00000 | .00000 | .00000 | .00000 | .00000 | .00000 | .00000 | .00000 | .00000 | .00000 |

IA143, AEDC V41A-P8A, O/ET W/R.H. SRB SEPARATING (OVX169) ( 23 MAY 77 )

REFERENCE DATA

SREF = 2690.0000 SQ.FT. XMRP = 1097.0000 IN. XT
LREF = 1290.3000 INCHES YMRP = .0000 IN. YT
BREF = 1290.3000 INCHES ZMRP = 450.0000 IN. ZT
SCALE = .0100

PARAMETRIC DATA

ALPHA = -15.000 BETA = -15.000
DALPHA = .000 DBETA = .000
Z = 200.000 MACH = 4.500
JET PC = 1225.000

RUN NO. 3327/ 0 RN/L = 2.38 GRADIENT INTERVAL = -5.00/ 5.00

| Y | X | Z | ALPHA | BETA | PHI | CN | CLM | CY | CYN | CBL | CA |
|---|---|---|---|---|---|---|---|---|---|---|---|
| -50.084 | -.808 | 199.40000 | -15.39700 | -14.66300 | -.05029 | -.51172 | .13722 | .15981 | -.24205 | .04993 | .31788 |
| -48.910 | 99.604 | 199.73000 | -15.38200 | -14.69700 | -.03252 | -.52442 | .15387 | .15961 | -.22794 | .05141 | .32788 |
| -48.845 | 199.460 | 199.22000 | -15.39300 | -14.73000 | -.02471 | -.54002 | .15861 | .15471 | -.21063 | .04966 | .33633 |
| | GRADIENT | .00000 | .00000 | .00000 | .00000 | .00000 | .00000 | .00000 | .00000 | .00000 | .00000 |

IA143, AEDC V41A-P8A, O/ET W/R.H. SRB SEPARATING (OVX169) ( 23 MAY 77 )

REFERENCE DATA

SREF = 2690.0000 SQ.FT. XMRP = 1097.0000 IN. XT
LREF = 1290.3000 INCHES YMRP = .0000 IN. YT
BREF = 1290.3000 INCHES ZMRP = 450.0000 IN. ZT
SCALE = .0100

PARAMETRIC DATA

ALPHA = -15.000 BETA = -15.000
DALPHA = .000 DBETA = .000
Z = 200.000 MACH = 4.500
JET PC = 1225.000

RUN NO. 3328/ 0 RN/L = 2.38 GRADIENT INTERVAL = -5.00/ 5.00

| Y | X | Z | ALPHA | BETA | PHI | CN | CLM | CY | CYN | CBL | CA |
|---|---|---|---|---|---|---|---|---|---|---|---|
| -97.408 | 199.520 | 199.37000 | -15.43800 | -14.83100 | -.08319 | -.55617 | .15231 | .25878 | -.21443 | .05298 | .32111 |
| -100.530 | 99.131 | 200.04000 | -15.43800 | -14.82100 | -.09807 | -.53704 | .14078 | .25565 | -.21582 | .04966 | .31124 |
| -100.520 | -.892 | 199.35000 | -15.45700 | -14.79800 | -.10395 | -.54535 | .13404 | .23133 | -.21192 | .04436 | .30715 |
| | GRADIENT | .00000 | .00000 | .00000 | .00000 | .00000 | .00000 | .00000 | .00000 | .00000 | .00000 |

RUN NO. 3333/ 0 RN/L = 2.38 GRADIENT INTERVAL = -5.00/ 5.00

| Y | X | Z | ALPHA | BETA | PHI | CN | CLM | CY | CYN | CBL | CA |
|---|---|---|---|---|---|---|---|---|---|---|---|
| -153.060 | -1.413 | 200.82000 | -15.50700 | -14.89000 | -.14132 | -.56346 | .12538 | .29771 | -.20185 | .04454 | .30753 |
| -150.160 | 99.261 | 200.71000 | -15.46000 | -14.89100 | -.12890 | -.53073 | .12838 | .29174 | -.19942 | .04588 | .29381 |
| -150.380 | 199.120 | 199.79000 | -15.44700 | -14.88800 | -.11393 | -.52655 | .13087 | .28488 | -.19873 | .04791 | .29384 |
| | GRADIENT | .00000 | .00000 | .00000 | .00000 | .00000 | .00000 | .00000 | .00000 | .00000 | .00000 |

IA143, AEDC V41A-P8A, O/ET W/R.H. SRB SEPARATING (OVX170) ( 23 MAY 77 )

REFERENCE DATA

SREF = 2690.0000 SQ.FT. XMRP = 1097.0000 IN. XT
LREF = 1290.3000 INCHES YMRP = .0000 IN. YT
BREF = 1290.3000 INCHES ZMRP = 450.0000 IN. ZT
SCALE = .0100

PARAMETRIC DATA

ALPHA = -15.000 BETA = -15.000
DALPHA = .000 DBETA = 2.000
Z = .000 MACH = 4.500
JET PC = 1225.000

RUN NO. 3334/ 0 RN/L = 2.38 GRADIENT INTERVAL = -5.00/ 5.00

| Y | X | Z | ALPHA | BETA | PHI | CN | CLM | CY | CYN | CBL | CA |
|---|---|---|---|---|---|---|---|---|---|---|---|
| -49.386 | -1.189 | -1.67810 | -15.61800 | -15.10800 | -.21869 | -.55613 | .06211 | .42129 | -.15951 | .03960 | .23381 |
| -50.257 | 99.168 | -.46676 | -15.61200 | -15.08200 | -.20747 | -.59879 | .08749 | .45123 | -.18960 | .05087 | .23268 |
| -50.214 | 199.170 | 1.93550 | -15.52200 | -15.10700 | -.19132 | -.50120 | .07782 | .38325 | -.14184 | .03711 | .21969 |
| | GRADIENT | .00000 | .00000 | .00000 | .00000 | .00000 | .00000 | .00000 | .00000 | .00000 | .00000 |

RUN NO. 3339/ 0 RN/L = 2.39 GRADIENT INTERVAL = -5.00/ 5.00

| Y | X | Z | ALPHA | BETA | PHI | CN | CLM | CY | CYN | CBL | CA |
|---|---|---|---|---|---|---|---|---|---|---|---|
| -96.025 | 200.240 | .54363 | -15.56700 | -15.10700 | -.20918 | -.56524 | .09628 | .43420 | -.16813 | .04476 | .23775 |
| -99.011 | 99.482 | -1.05550 | -15.61800 | -15.11700 | -.23307 | -.59534 | .08864 | .47792 | -.18500 | .04867 | .23675 |
| -100.120 | -.765 | -.52857 | -15.64100 | -15.13200 | -.24514 | -.59774 | .08231 | .47577 | -.17565 | .04440 | .25210 |
| | GRADIENT | .00000 | .00000 | .00000 | .00000 | .00000 | .00000 | .00000 | .00000 | .00000 | .00000 |

IA143, AEDC V41A-P8A, O/ET W/R.H. SRB SEPARATING (OVX170) ( 23 MAY 77 )

REFERENCE DATA

SREF = 2690.0000 SQ.FT. XMRP = 1097.0000 IN. XT
LREF = 1290.3000 INCHES YMRP = .0000 IN. YT
BREF = 1290.3000 INCHES ZMRP = 450.0000 IN. ZT
SCALE = .0100

PARAMETRIC DATA

ALPHA = -15.000 BETA = -15.000
DALPHA = .000 DBETA = 2.000
Z = .000 MACH = 4.500
JET PC = 1225.000

RUN NO. 3340/ 0 RN/L = 2.39 GRADIENT INTERVAL = -5.00/ 5.00

| Y | X | Z | ALPHA | BETA | PHI | CN | CLM | CY | CYN | CBL | CA |
|---|---|---|---|---|---|---|---|---|---|---|---|
| -149.760 | -.614 | .86013 | -15.61300 | -15.15900 | -.24879 | -.54809 | .06982 | .47832 | -.16377 | .04218 | .24543 |
| -150.090 | 99.253 | -.43496 | -15.60800 | -15.14400 | -.23888 | -.58282 | .08967 | .48631 | -.17651 | .04735 | .23832 |
| -150.640 | 199.040 | .20664 | -15.57800 | -15.13000 | -.21233 | -.59063 | .10828 | .45608 | -.16944 | .04742 | .24684 |
| | GRADIENT | .00000 | .00000 | .00000 | .00000 | .00000 | .00000 | .00000 | .00000 | .00000 | .00000 |

IA143, AEDC V41A-P8A, O/ET W/R.H. SRB SEPARATING (OVX171) ( 23 MAY 77 )

REFERENCE DATA

SREF = 2690.0000 SQ.FT. XMRP = 1097.0000 IN. XT
LREF = 1290.3000 INCHES YMRP = .0000 IN. YT
BREF = 1290.3000 INCHES ZMRP = 450.0000 IN. ZT
SCALE = .0100

PARAMETRIC DATA

ALPHA = -15.000 BETA = -15.000
DALPHA = .000 DBETA = 2.000
Z = 100.000 MACH = 4.500
JET PC = 1225.000

RUN NO. 3335/ 0 RN/L = 2.39 GRADIENT INTERVAL = -5.00/ 5.00

| Y | X | Z | ALPHA | BETA | PHI | CN | CLM | CY | CYN | CBL | CA |
|---|---|---|---|---|---|---|---|---|---|---|---|
| -49.989 | 199.320 | 99.76500 | -15.54400 | -14.86300 | -.08702 | -.61374 | .12203 | .28081 | -.21146 | .05489 | .29915 |
| -50.495 | 99.210 | 99.16400 | -15.57100 | -14.83900 | -.10238 | -.62669 | .11226 | .27768 | -.21917 | .05243 | .28585 |
| -49.076 | -.605 | 99.42500 | -15.62000 | -14.87400 | -.14012 | -.62067 | .08515 | .27130 | -.19428 | .03984 | .27294 |
| | GRADIENT | .00000 | .00000 | .00000 | .00000 | .00000 | .00000 | .00000 | .00000 | .00000 | .00000 |

RUN NO. 3338/ 0 RN/L = 2.39 GRADIENT INTERVAL = -5.00/ 5.00

| Y | X | Z | ALPHA | BETA | PHI | CN | CLM | CY | CYN | CBL | CA |
|---|---|---|---|---|---|---|---|---|---|---|---|
| -96.564 | .107 | 97.05000 | -15.60200 | -14.94000 | -.14875 | -.62146 | .10178 | .29970 | -.17820 | .03962 | .28026 |
| -99.820 | 99.326 | 101.23000 | -15.54100 | -14.94100 | -.14036 | -.56818 | .10088 | .31954 | -.19020 | .04607 | .26357 |
| -99.631 | 199.330 | 99.73900 | -15.53800 | -14.95700 | -.13395 | -.56909 | .10407 | .32307 | -.18559 | .04718 | .27043 |
| | GRADIENT | .00000 | .00000 | .00000 | .00000 | .00000 | .00000 | .00000 | .00000 | .00000 | .00000 |

RUN NO. 3341/ 0 RN/L = 2.39 GRADIENT INTERVAL = -5.00/ 5.00

| Y | X | Z | ALPHA | BETA | PHI | CN | CLM | CY | CYN | CBL | CA |
|---|---|---|---|---|---|---|---|---|---|---|---|
| -153.220 | 198.310 | 100.31000 | -15.52500 | -15.00300 | -.15741 | -.54498 | .09951 | .33045 | -.16497 | .04019 | .25339 |
| -150.040 | 99.189 | 98.79700 | -15.56600 | -14.99700 | -.16693 | -.58595 | .10338 | .35560 | -.18083 | .04426 | .26258 |
| -149.100 | -.495 | 99.65900 | -15.58300 | -15.02900 | -.18639 | -.58094 | .09587 | .38933 | -.18231 | .04524 | .26759 |
| | GRADIENT | .00000 | .00000 | .00000 | .00000 | .00000 | .00000 | .00000 | .00000 | .00000 | .00000 |

IA143, AEDC V41A-P8A, O/ET W/R.H. SRB SEPARATING (OVX172) ( 23 MAY 77 )

REFERENCE DATA

SREF = 2690.0000 SQ.FT. XMRP = 1097.0000 IN. XT
LREF = 1290.3000 INCHES YMRP = .0000 IN. YT
BREF = 1290.3000 INCHES ZMRP = 450.0000 IN. ZT
SCALE = .0100

PARAMETRIC DATA

ALPHA = -15.000 BETA = -15.000
DALPHA = .000 DBETA = 2.000
Z = 200.000 MACH = 4.500
JET PC = 1225.000

RUN NO. 3336/ 0 RN/L = 2.39 GRADIENT INTERVAL = -5.00/ 5.00

| Y | X | Z | ALPHA | BETA | PHI | CN | CLM | CY | CYN | CBL | CA |
|---|---|---|---|---|---|---|---|---|---|---|---|
| -50.196 | -.652 | 199.65000 | -15.38600 | -14.65200 | -.04302 | -.51727 | .14667 | .14335 | -.23880 | .04858 | .32378 |
| -49.427 | 99.481 | 199.50000 | -15.37800 | -14.68200 | -.03043 | -.52208 | .15601 | .15230 | -.23117 | .05130 | .33633 |
| -49.280 | 199.520 | 199.64000 | -15.37800 | -14.71000 | -.01431 | -.53158 | .16041 | .13999 | -.21294 | .05007 | .33870 |
| | GRADIENT | .00000 | .00000 | .00000 | .00000 | .00000 | .00000 | .00000 | .00000 | .00000 | .00000 |

RUN NO. 3337/ 0 RN/L = 2.39 GRADIENT INTERVAL = -5.00/ 5.00

| Y | X | Z | ALPHA | BETA | PHI | CN | CLM | CY | CYN | CBL | CA |
|---|---|---|---|---|---|---|---|---|---|---|---|
| -97.706 | 199.840 | 199.36000 | -15.43400 | -14.80900 | -.07386 | -.55856 | .15506 | .24439 | -.21807 | .05343 | .32711 |
| -99.886 | 99.231 | 200.07000 | -15.43200 | -14.80100 | -.09300 | -.53379 | .14146 | .24605 | -.22059 | .05007 | .31376 |
| -99.666 | -.599 | 199.26000 | -15.45900 | -14.80000 | -.10803 | -.54375 | .13345 | .23998 | -.21570 | .04532 | .31120 |
| | GRADIENT | .00000 | .00000 | .00000 | .00000 | .00000 | .00000 | .00000 | .00000 | .00000 | .00000 |

RUN NO. 3342/ 0 RN/L = 2.39 GRADIENT INTERVAL = -5.00/ 5.00

| Y | X | Z | ALPHA | BETA | PHI | CN | CLM | CY | CYN | CBL | CA |
|---|---|---|---|---|---|---|---|---|---|---|---|
| -153.460 | -1.577 | 200.88000 | -15.49300 | -14.88700 | -.14162 | -.54567 | .12220 | .30227 | -.20581 | .04573 | .30413 |
| -150.100 | 99.258 | 200.55000 | -15.45500 | -14.87900 | -.12347 | -.52471 | .12631 | .28372 | -.20131 | .04615 | .29249 |
| -149.680 | 199.230 | 199.92000 | -15.44400 | -14.88400 | -.11350 | -.51831 | .12733 | .28152 | -.19894 | .04756 | .29144 |
| | GRADIENT | .00000 | .00000 | .00000 | .00000 | .00000 | .00000 | .00000 | .00000 | .00000 | .00000 |

IA143, AEDC V41A-P8A, O/ET W/R.H. SRB SEPARATING (OVX173) ( 23 MAY 77 )

REFERENCE DATA

SREF = 2690.0000 SQ.FT. XMRP = 1097.0000 IN. XT
LREF = 1290.3000 INCHES YMRP = .0000 IN. YT
BREF = 1290.3000 INCHES ZMRP = 450.0000 IN. ZT
SCALE = .0100

PARAMETRIC DATA

ALPHA = -15.000 BETA = -15.000
DALPHA = -4.000 DBETA = -4.000
Z = .000 MACH = 4.500
JET PC = 1225.000

RUN NO. 3343/ 0 RN/L = 2.39 GRADIENT INTERVAL = -5.00/ 5.00

| Y | X | Z | ALPHA | BETA | PHI | CN | CLM | CY | CYN | CBL | CA |
|---|---|---|---|---|---|---|---|---|---|---|---|
| -119.990 | -1.383 | .00212 | -15.63800 | -15.15800 | -.25498 | -.59546 | .08633 | .47019 | -.15892 | .03896 | .25667 |
| -119.940 | 99.079 | -.27860 | -15.63300 | -15.13700 | -.24602 | -.62542 | .10370 | .48674 | -.17901 | .04632 | .25206 |
| -120.270 | 199.070 | .63303 | -15.59400 | -15.12600 | -.21797 | -.60652 | .11023 | .46830 | -.17719 | .04922 | .25099 |
| | GRADIENT | .00000 | .00000 | .00000 | .00000 | .00000 | .00000 | .00000 | .00000 | .00000 | .00000 |

IA143, AEDC V41A-P8A, O/ET W/R.H. SRB SEPARATING (OVX173) ( 23 MAY 77 )

REFERENCE DATA

SREF = 2690.0000 SQ.FT. XMRP = 1097.0000 IN. XT
LREF = 1290.3000 INCHES YMRP = .0000 IN. YT
BREF = 1290.3000 INCHES ZMRP = 450.0000 IN. ZT
SCALE = .0100

PARAMETRIC DATA

ALPHA = -15.000 BETA = -15.000
DALPHA = -4.000 DBETA = -4.000
Z = .000 MACH = 4.500
JET PC = 1225.000

RUN NO. 3348/ 0 RN/L = 2.39 GRADIENT INTERVAL = -5.00/ 5.00

| Y | X | Z | ALPHA | BETA | PHI | CN | CLM | CY | CYN | CBL | CA |
|---|---|---|---|---|---|---|---|---|---|---|---|
| -147.290 | 200.370 | -.28841 | -15.59200 | -15.13400 | -.22142 | -.60751 | .11303 | .47454 | -.17655 | .04928 | .25175 |
| -149.800 | 99.317 | -.68086 | -15.62800 | -15.15100 | -.25272 | -.61042 | .09969 | .49654 | -.17710 | .04601 | .25355 |
| -149.990 | -.723 | 1.01610 | -15.60100 | -15.17700 | -.24958 | -.54800 | .07957 | .45379 | -.14156 | .03510 | .25160 |
| | GRADIENT | .00000 | .00000 | .00000 | .00000 | .00000 | .00000 | .00000 | .00000 | .00000 | .00000 |

RUN NO. 3349/ 0 RN/L = 2.39 GRADIENT INTERVAL = -5.00/ 5.00

| Y | X | Z | ALPHA | BETA | PHI | CN | CLM | CY | CYN | CBL | CA |
|---|---|---|---|---|---|---|---|---|---|---|---|
| -200.080 | -.702 | .57450 | -15.57300 | -15.17500 | -.23384 | -.54075 | .08835 | .44067 | -.13700 | .03576 | .25078 |
| -199.910 | 99.368 | -1.23590 | -15.61400 | -15.16200 | -.24794 | -.59109 | .09574 | .48462 | -.16607 | .04359 | .25185 |
| -199.990 | 199.190 | .14965 | -15.58900 | -15.14500 | -.23212 | -.60917 | .11856 | .48171 | -.17428 | .04774 | .25721 |
| | GRADIENT | .00000 | .00000 | .00000 | .00000 | .00000 | .00000 | .00000 | .00000 | .00000 | .00000 |

IA143, AEDC V41A-P8A, O/ET W/R.H. SRB SEPARATING (OVX174) ( 23 MAY 77 )

REFERENCE DATA

SREF = 2690.0000 SQ.FT. XMRP = 1097.0000 IN. XT
LREF = 1290.3000 INCHES YMRP = .0000 IN. YT
BREF = 1290.3000 INCHES ZMRP = 450.0000 IN. ZT
SCALE = .0100

PARAMETRIC DATA

ALPHA = -15.000 BETA = -15.000
DALPHA = -4.000 DBETA = -4.000
Z = 100.000 MACH = 4.500
JET PC = 1225.000

RUN NO. 3344/ 0 RN/L = 2.39 GRADIENT INTERVAL = -5.00/ 5.00

| Y | X | Z | ALPHA | BETA | PHI | CN | CLM | CY | CYN | CBL | CA |
|---|---|---|---|---|---|---|---|---|---|---|---|
| -122.250 | 198.250 | 100.35000 | -15.52600 | -15.00200 | -.15552 | -.56273 | .11032 | .33723 | -.16980 | .04229 | .25892 |
| -119.950 | 99.294 | 99.47800 | -15.54600 | -15.00500 | -.16791 | -.58019 | .11073 | .34257 | -.16986 | .04049 | .25883 |
| -119.700 | -.603 | 99.59800 | -15.56800 | -15.02000 | -.17338 | -.59050 | .10712 | .34543 | -.16348 | .03876 | .26417 |
| | GRADIENT | .00000 | .00000 | .00000 | .00000 | .00000 | .00000 | .00000 | .00000 | .00000 | .00000 |

RUN NO. 3347/ 0 RN/L = 2.38 GRADIENT INTERVAL = -5.00/ 5.00

| Y | X | Z | ALPHA | BETA | PHI | CN | CLM | CY | CYN | CBL | CA |
|---|---|---|---|---|---|---|---|---|---|---|---|
| -146.800 | .255 | 99.15900 | -15.58100 | -15.03900 | -.17791 | -.61423 | .11704 | .36300 | -.16381 | .04036 | .27646 |
| -150.660 | 99.077 | 99.56200 | -15.57700 | -14.99400 | -.16418 | -.62105 | .11878 | .35581 | -.18276 | .04515 | .27101 |
| -150.050 | 199.330 | 101.00000 | -15.33500 | -15.00300 | -.15481 | -.57471 | .11293 | .33835 | -.16984 | .04261 | .26242 |
| | GRADIENT | .00000 | .00000 | .00000 | .00000 | .00000 | .00000 | .00000 | .00000 | .00000 | .00000 |

IA143, AEDC V41A-P8A, O/ET W/R.H. SRB SEPARATING (OVX174) ( 23 MAY 77 )

REFERENCE DATA

SREF = 2690.0000 SQ.FT. XMRP = 1097.0000 IN. XT
LREF = 1290.3000 INCHES YMRP = .0000 IN. YT
BREF = 1290.3000 INCHES ZMRP = 450.0000 IN. ZT
SCALE = .0100

PARAMETRIC DATA

ALPHA = -15.000 BETA = -15.000
DALPHA = -4.000 DBETA = -4.000
Z = 100.000 MACH = 4.500
JET PC = 1225.000

RUN NO. 3350/ 0 RN/L = 2.39 GRADIENT INTERVAL = -5.00/ 5.00

| Y | X | Z | ALPHA | BETA | PHI | CN | CLM | CY | CYN | CBL | CA |
|---|---|---|---|---|---|---|---|---|---|---|---|
| -203.500 | 198.150 | 99.90500 | -15.54300 | -14.99600 | -.14421 | -.63244 | .14614 | .32564 | -.16751 | .04263 | .29197 |
| -198.340 | 99.667 | 99.37600 | -15.57900 | -15.02100 | -.17382 | -.62997 | .12642 | .37865 | -.18168 | .04623 | .27679 |
| -197.310 | .027 | 100.50000 | -15.57200 | -15.06900 | -.19275 | -.60292 | .12026 | .39891 | -.16839 | .04316 | .27930 |
| | GRADIENT | .00000 | .00000 | .00000 | .00000 | .00000 | .00000 | .00000 | .00000 | .00000 | .00000 |

IA143, AEDC V41A-P8A, O/ET W/R.H. SRB SEPARATING (OVX175) ( 23 MAY 77 )

REFERENCE DATA

SREF = 2690.0000 SQ.FT. XMRP = 1097.0000 IN. XT
LREF = 1290.3000 INCHES YMRP = .0000 IN. YT
BREF = 1290.3000 INCHES ZMRP = 450.0000 IN. ZT
SCALE = .0100

PARAMETRIC DATA

ALPHA = -15.000 BETA = -15.000
DALPHA = -4.000 DBETA = -4.000
Z = 200.000 MACH = 4.500
JET PC = 1225.000

RUN NO. 3345/ 0 RN/L = 2.39 GRADIENT INTERVAL = -5.00/ 5.00

| Y | X | Z | ALPHA | BETA | PHI | CN | CLM | CY | CYN | CBL | CA |
|---|---|---|---|---|---|---|---|---|---|---|---|
| -121.690 | -1.126 | 202.82000 | -15.41800 | -14.95800 | -.14663 | -.47915 | .12249 | .30272 | -.17178 | .03955 | .26672 |
| -121.500 | 98.878 | 198.71000 | -15.44200 | -14.88800 | -.12288 | -.53197 | .13667 | .26953 | -.18898 | .04234 | .28562 |
| -119.800 | 199.340 | 199.52000 | -15.44400 | -14.87200 | -.10675 | -.54539 | .14348 | .27530 | -.20172 | .04848 | .30191 |
| | GRADIENT | .00000 | .00000 | .00000 | .00000 | .00000 | .00000 | .00000 | .00000 | .00000 | .00000 |

RUN NO. 3346/ 0 RN/L = 2.39 GRADIENT INTERVAL = -5.00/ 5.00

| Y | X | Z | ALPHA | BETA | PHI | CN | CLM | CY | CYN | CBL | CA |
|---|---|---|---|---|---|---|---|---|---|---|---|
| -148.250 | 199.680 | 200.19000 | -15.45100 | -14.92100 | -.12642 | -.52787 | .13108 | .29520 | -.18773 | .04508 | .28681 |
| -148.840 | 99.483 | 199.63000 | -15.46700 | -14.91500 | -.13551 | -.54326 | .13274 | .28832 | -.18529 | .04184 | .28848 |
| -149.940 | -.690 | 198.76000 | -15.51400 | -14.91400 | -.13694 | -.57973 | .12851 | .28000 | -.18110 | .03968 | .29738 |
| | GRADIENT | .00000 | .00000 | .00000 | .00000 | .00000 | .00000 | .00000 | .00000 | .00000 | .00000 |

RUN NO. 3503/ 0 RN/L = 2.36 GRADIENT INTERVAL = -5.00/ 5.00

| Y | X | Z | ALPHA | BETA | PHI | CN | CLM | CY | CYN | CBL | CA |
|---|---|---|---|---|---|---|---|---|---|---|---|
| -200.280 | -1.123 | 199.46000 | -15.52500 | -14.94800 | -.14602 | -.59418 | .13411 | .30569 | -.17836 | .04104 | .29895 |
| -200.910 | 99.218 | 200.27000 | -15.49800 | -14.91000 | -.12690 | -.59102 | .14370 | .29219 | -.19086 | .04502 | .30041 |
| -200.010 | 199.510 | 200.69000 | -15.46600 | -14.92600 | -.12497 | -.54289 | .13085 | .29504 | -.18517 | .04496 | .28587 |
| | GRADIENT | .00000 | .00000 | .00000 | .00000 | .00000 | .00000 | .00000 | .00000 | .00000 | .00000 |

IA143, AEDC V41A-P8A, O/ET W/R.H. SRB SEPARATING (OVX176) ( 23 MAY 77 )

REFERENCE DATA

SREF = 2690.0000 SQ.FT. XMRP = 1097.0000 IN. XT
LREF = 1290.3000 INCHES YMRP = .0000 IN. YT
BREF = 1290.3000 INCHES ZMRP = 450.0000 IN. ZT
SCALE = .0100

PARAMETRIC DATA

ALPHA = -15.000 BETA = -15.000
DALPHA = -4.000 DBETA = -2.000
Z = .000 MACH = 4.500
JET PC = 1225.000

RUN NO. 3504/ 0 RN/L = 2.36 GRADIENT INTERVAL = -5.00/ 5.00

| Y | X | Z | ALPHA | BETA | PHI | CN | CLM | CY | CYN | CBL | CA |
|---|---|---|---|---|---|---|---|---|---|---|---|
| -69.296 | -.503 | -.51934 | -15.65400 | -15.10300 | -.23144 | -.62439 | .08633 | .45257 | -.17740 | .04416 | .24954 |
| -70.181 | 99.380 | .15294 | -15.63000 | -15.09900 | -.22274 | -.61952 | .09365 | .45830 | -.18368 | .04781 | .23788 |
| -70.132 | 199.440 | 1.38310 | -15.56700 | -15.10200 | -.19878 | -.56576 | .09371 | .42850 | -.16859 | .04615 | .23564 |
| | GRADIENT | .00000 | .00000 | .00000 | .00000 | .00000 | .00000 | .00000 | .00000 | .00000 | .00000 |

RUN NO. 3509/ 0 RN/L = 2.36 GRADIENT INTERVAL = -5.00/ 5.00

| Y | X | Z | ALPHA | BETA | PHI | CN | CLM | CY | CYN | CBL | CA |
|---|---|---|---|---|---|---|---|---|---|---|---|
| -99.929 | 199.480 | .01223 | -15.58900 | -15.11100 | -.21232 | -.58849 | .09836 | .45636 | -.17835 | .04884 | .24039 |
| -99.057 | 99.669 | -.84023 | -15.63100 | -15.12100 | -.23621 | -.61307 | .09291 | .48110 | -.18475 | .04840 | .24232 |
| -100.080 | -.455 | -.05608 | -15.64200 | -15.13700 | -.24464 | -.60456 | .08740 | .46721 | -.16847 | .04215 | .25825 |
| | GRADIENT | .00000 | .00000 | .00000 | .00000 | .00000 | .00000 | .00000 | .00000 | .00000 | .00000 |

RUN NO. 3510/ 0 RN/L = 2.36 GRADIENT INTERVAL = -5.00/ 5.00

| Y | X | Z | ALPHA | BETA | PHI | CN | CLM | CY | CYN | CBL | CA |
|---|---|---|---|---|---|---|---|---|---|---|---|
| -150.390 | -.367 | 1.38180 | -15.59800 | -15.16500 | -.24507 | -.53946 | .07425 | .45382 | -.14760 | .03692 | .24938 |
| -150.050 | 99.354 | -1.14860 | -15.62700 | -15.14300 | -.24539 | -.59915 | .09040 | .49076 | -.17864 | .04693 | .24532 |
| -150.680 | 199.290 | .49586 | -15.59300 | -15.12600 | -.21672 | -.59660 | .10241 | .46363 | -.17489 | .04841 | .24170 |
| | GRADIENT | .00000 | .00000 | .00000 | .00000 | .00000 | .00000 | .00000 | .00000 | .00000 | .00000 |

IA143, AEDC V41A-P8A, O/ET W/R.H. SRB SEPARATING (OVX177) ( 23 MAY 77 )

REFERENCE DATA

SREF = 2690.0000 SQ.FT. XMRP = 1097.0000 IN. XT
LREF = 1290.3000 INCHES YMRP = .0000 IN. YT
BREF = 1290.3000 INCHES ZMRP = 450.0000 IN. ZT
SCALE = .0100

PARAMETRIC DATA

ALPHA = -15.000 BETA = -15.000
DALPHA = -4.000 DBETA = -2.000
Z = 100.000 MACH = 4.500
JET PC = 1225.000

RUN NO. 3505/ 0 RN/L = 2.36 GRADIENT INTERVAL = -5.00/ 5.00

| Y | X | Z | ALPHA | BETA | PHI | CN | CLM | CY | CYN | CBL | CA |
|---|---|---|---|---|---|---|---|---|---|---|---|
| -74.227 | 198.210 | 98.79900 | -15.55200 | -14.92300 | -.12460 | -.60706 | .11775 | .31831 | -.19959 | .05060 | .28076 |
| -69.016 | 99.686 | 98.80700 | -15.57900 | -14.84500 | -.10491 | -.65688 | .12119 | .26440 | -.20882 | .04838 | .26728 |
| -69.096 | -.236 | 100.03000 | -15.62300 | -14.91000 | -.15232 | -.63431 | .09473 | .28190 | -.18216 | .03690 | .27393 |
| | GRADIENT | .00000 | .00000 | .00000 | .00000 | .00000 | .00000 | .00000 | .00000 | .00000 | .00000 |

IA143, AEDC V41A-P8A, O/ET W/R.H. SRB SEPARATING (OVX177) ( 23 MAY 77 )

REFERENCE DATA

SREF = 2690.0000 SQ.FT. XMRP = 1097.0000 IN. XT
LREF = 1290.3000 INCHES YMRP = .0000 IN. YT
BREF = 1290.3000 INCHES ZMRP = 450.0000 IN. ZT
SCALE = .0100

PARAMETRIC DATA

ALPHA = -15.000 BETA = -15.000
DALPHA = -4.000 DBETA = -2.000
Z = 100.000 MACH = 4.500
JET PC = 1225.000

RUN NO. 3508/ 0 RN/L = 2.36 GRADIENT INTERVAL = -5.00/ 5.00

| Y | X | Z | ALPHA | BETA | PHI | CN | CLM | CY | CYN | CBL | CA |
|---|---|---|---|---|---|---|---|---|---|---|---|
| -96.908 | .443 | 99.18300 | -15.50200 | -14.99200 | -.15890 | -.55784 | .11919 | .27130 | -.13668 | .02700 | .24969 |
| -100.270 | 99.457 | 98.73800 | -15.53300 | -14.94300 | -.14006 | -.57941 | .11094 | .30580 | -.18162 | .04282 | .25848 |
| -99.975 | 199.460 | 100.16000 | -15.53000 | -14.95200 | -.13133 | -.57351 | .10953 | .32057 | -.18653 | .04749 | .26519 |
| | GRADIENT | .00000 | .00000 | .00000 | .00000 | .00000 | .00000 | .00000 | .00000 | .00000 | .00000 |

RUN NO. 3511/ 0 RN/L = 2.36 GRADIENT INTERVAL = -5.00/ 5.00

| Y | X | Z | ALPHA | BETA | PHI | CN | CLM | CY | CYN | CBL | CA |
|---|---|---|---|---|---|---|---|---|---|---|---|
| -152.780 | 198.450 | 100.51000 | -15.52600 | -14.99500 | -.15123 | -.55699 | .10510 | .33202 | -.17025 | .04250 | .25512 |
| -149.710 | 99.456 | 98.47800 | -15.57800 | -14.98200 | -.15926 | -.61526 | .11240 | .35556 | -.18886 | .04706 | .26829 |
| -151.470 | -.862 | 100.70000 | -15.55600 | -15.02500 | -.17220 | -.58402 | .11225 | .35850 | -.16862 | .04167 | .27385 |
| | GRADIENT | .00000 | .00000 | .00000 | .00000 | .00000 | .00000 | .00000 | .00000 | .00000 | .00000 |

IA143, AEDC V41A-P8A, O/ET W/R.H. SRB SEPARATING (OVX178) ( 23 MAY 77 )

REFERENCE DATA

SREF = 2690.0000 SQ.FT. XMRP = 1097.0000 IN. XT
LREF = 1290.3000 INCHES YMRP = .0000 IN. YT
BREF = 1290.3000 INCHES ZMRP = 450.0000 IN. ZT
SCALE = .0100

PARAMETRIC DATA

ALPHA = -15.000 BETA = -15.000
DALPHA = -4.000 DBETA = -2.000
Z = 200.000 MACH = 4.500
JET PC = 1225.000

RUN NO. 3506/ 0 RN/L = 2.36 GRADIENT INTERVAL = -5.00/ 5.00

| Y | X | Z | ALPHA | BETA | PHI | CN | CLM | CY | CYN | CBL | CA |
|---|---|---|---|---|---|---|---|---|---|---|---|
| -70.053 | -.604 | 199.67000 | -15.44800 | -14.73100 | -.08673 | -.52618 | .12088 | .19282 | -.22400 | .04426 | .30334 |
| -70.238 | 99.588 | 200.20000 | -15.40900 | -14.74000 | -.05912 | -.53982 | .15063 | .18491 | -.21881 | .04808 | .31718 |
| -70.017 | 199.470 | 199.61000 | -15.40700 | -14.75600 | -.04146 | -.54909 | .15796 | .17848 | -.20967 | .04942 | .33091 |
| | GRADIENT | .00000 | .00000 | .00000 | .00000 | .00000 | .00000 | .00000 | .00000 | .00000 | .00000 |

RUN NO. 3507/ 0 RN/L = 2.36 GRADIENT INTERVAL = -5.00/ 5.00

| Y | X | Z | ALPHA | BETA | PHI | CN | CLM | CY | CYN | CBL | CA |
|---|---|---|---|---|---|---|---|---|---|---|---|
| -98.129 | 200.020 | 200.12000 | -15.43100 | -14.83100 | -.08209 | -.54817 | .14984 | .25515 | -.21254 | .05239 | .31385 |
| -100.430 | 99.361 | 200.17000 | -15.42600 | -14.83500 | -.10454 | -.52741 | .14030 | .24759 | -.20391 | .04531 | .29654 |
| -100.450 | -.700 | 199.89000 | -15.42900 | -14.86000 | -.11461 | -.53809 | .14247 | .16358 | .14397 | .02192 | .27473 |
| | GRADIENT | .00000 | .00000 | .00000 | .00000 | .00000 | .00000 | .00000 | .00000 | .00000 | .00000 |

IA143, AEDC V41A-P8A, O/ET W/R.H. SRB SEPARATING (OVX178) ( 23 MAY 77 )

REFERENCE DATA

SREF = 2690.0000 SQ.FT. XMRP = 1097.0000 IN. XT
LREF = 1290.3000 INCHES YMRP = .0000 IN. YT
BREF = 1290.3000 INCHES ZMRP = 450.0000 IN. ZT
SCALE = .0100

PARAMETRIC DATA

ALPHA = -15.000 BETA = -15.000
DALPHA = -4.000 DBETA = -2.000
Z = 200.000 MACH = 4.500
JET PC = 1225.000

RUN NO. 3512/ 0 RN/L = 2.36 GRADIENT INTERVAL = -5.00/ 5.00

| Y | X | Z | ALPHA | BETA | PHI | CN | CLM | CY | CYN | CBL | CA |
|---|---|---|---|---|---|---|---|---|---|---|---|
| -152.690 | -1.331 | 200.40000 | -15.49200 | -14.91200 | -.13295 | -.56901 | .13468 | .27556 | -.17992 | .03969 | .29985 |
| -150.100 | 99.546 | 200.85000 | -15.45400 | -14.90200 | -.13098 | -.52941 | .13011 | .28369 | -.18971 | .04277 | .28754 |
| -150.310 | 199.360 | 200.13000 | -15.43800 | -14.90400 | -.11844 | -.51625 | .12916 | .28781 | -.19216 | .04635 | .28367 |
| | GRADIENT | .00000 | .00000 | .00000 | .00000 | .00000 | .00000 | .00000 | .00000 | .00000 | .00000 |

IA143, AEDC V41A-P8A, O/ET W/R.H. SRB SEPARATING (OVX179) ( 23 MAY 77 )

REFERENCE DATA

SREF = 2690.0000 SQ.FT. XMRP = 1097.0000 IN. XT
LREF = 1290.3000 INCHES YMRP = .0000 IN. YT
BREF = 1290.3000 INCHES ZMRP = 450.0000 IN. ZT
SCALE = .0100

PARAMETRIC DATA

ALPHA = -15.000 BETA = -15.000
DALPHA = -4.000 DBETA = .000
Z = .000 MACH = 4.500
JET PC = 1225.000

RUN NO. 3513/ 0 RN/L = 2.36 GRADIENT INTERVAL = -5.00/ 5.00

| Y | X | Z | ALPHA | BETA | PHI | CN | CLM | CY | CYN | CBL | CA |
|---|---|---|---|---|---|---|---|---|---|---|---|
| -49.397 | -.783 | -.30083 | -15.60400 | -15.10700 | -.22040 | -.54629 | .06485 | .40780 | -.15201 | .03612 | .23558 |
| -50.598 | 99.347 | -.39712 | -15.61100 | -15.09800 | -.20921 | -.56395 | .06560 | .41794 | -.16334 | .04164 | .22031 |
| -50.536 | 199.290 | 1.19400 | -15.54200 | -15.09800 | -.18947 | -.52146 | .07766 | .39513 | -.15291 | .04086 | .22213 |
| | GRADIENT | .00000 | .00000 | .00000 | .00000 | .00000 | .00000 | .00000 | .00000 | .00000 | .00000 |

RUN NO. 3518/ 0 RN/L = 2.37 GRADIENT INTERVAL = -5.00/ 5.00

| Y | X | Z | ALPHA | BETA | PHI | CN | CLM | CY | CYN | CBL | CA |
|---|---|---|---|---|---|---|---|---|---|---|---|
| -100.560 | 199.420 | -.07897 | -15.58700 | -15.10900 | -.21263 | -.57420 | .08962 | .44358 | -.17199 | .04593 | .23441 |
| -99.999 | 99.440 | -1.00990 | -15.63100 | -15.11400 | -.23216 | -.60373 | .08513 | .47678 | -.18594 | .04876 | .23627 |
| -100.420 | -.604 | .03456 | -15.64200 | -15.13000 | -.24453 | -.59331 | .07979 | .46775 | -.17183 | .04272 | .25589 |
| | GRADIENT | .00000 | .00000 | .00000 | .00000 | .00000 | .00000 | .00000 | .00000 | .00000 | .00000 |

RUN NO. 3519/ 0 RN/L = 2.37 GRADIENT INTERVAL = -5.00/ 5.00

| Y | X | Z | ALPHA | BETA | PHI | CN | CLM | CY | CYN | CBL | CA |
|---|---|---|---|---|---|---|---|---|---|---|---|
| -149.810 | -.504 | 1.48970 | -15.59200 | -15.15600 | -.24003 | -.52591 | .06718 | .45599 | -.15372 | .03919 | .24412 |
| -150.130 | 99.413 | -1.20230 | -15.62400 | -15.13600 | -.24019 | -.58711 | .08241 | .48123 | -.17700 | .04636 | .23886 |
| -150.430 | 199.330 | .43141 | -15.59300 | -15.12600 | -.21519 | -.58840 | .09600 | .45522 | -.17007 | .04676 | .23615 |
| | GRADIENT | .00000 | .00000 | .00000 | .00000 | .00000 | .00000 | .00000 | .00000 | .00000 | .00000 |

IA143, AEDC V41A-P8A, O/ET W/R.H. SRB SEPARATING (OVX180) ( 23 MAY 77 )

REFERENCE DATA

SREF = 2690.0000 SQ.FT. XMRP = 1097.0000 IN. XT
LREF = 1290.3000 INCHES YMRP = .0000 IN. YT
BREF = 1290.3000 INCHES ZMRP = 450.0000 IN. ZT
SCALE = .0100

PARAMETRIC DATA

ALPHA = -15.000 BETA = -15.000
DALPHA = -4.000 DBETA = .000
Z = 100.000 MACH = 4.500
JET PC = 1225.000

RUN NO. 3514/ 0 RN/L = 2.37 GRADIENT INTERVAL = -5.00/ 5.00

| Y | X | Z | ALPHA | BETA | PHI | CN | CLM | CY | CYN | CBL | CA |
|---|---|---|---|---|---|---|---|---|---|---|---|
| -50.652 | 199.240 | 99.92300 | -15.54500 | -14.85200 | -.08256 | -.62596 | .12655 | .27469 | -.21385 | .05529 | .29736 |
| -51.127 | 99.090 | 99.54100 | -15.56200 | -14.81500 | -.09209 | -.64351 | .12278 | .24162 | -.21124 | .04816 | .27945 |
| -49.118 | -.307 | 99.64400 | -15.60900 | -14.86900 | -.13116 | -.61146 | .08327 | .25543 | -.18929 | .03860 | .26990 |
| | GRADIENT | .00000 | .00000 | .00000 | .00000 | .00000 | .00000 | .00000 | .00000 | .00000 | .00000 |

RUN NO. 3517/ 0 RN/L = 2.37 GRADIENT INTERVAL = -5.00/ 5.00

| Y | X | Z | ALPHA | BETA | PHI | CN | CLM | CY | CYN | CBL | CA |
|---|---|---|---|---|---|---|---|---|---|---|---|
| -97.627 | .050 | 97.92300 | -15.54900 | -14.95000 | -.14487 | -.60227 | .11745 | .25152 | -.14702 | .02866 | .26679 |
| -100.160 | 99.549 | 100.12000 | -15.54000 | -14.92400 | -.13159 | -.58251 | .10719 | .30285 | -.18964 | .04538 | .26190 |
| -99.757 | 199.500 | 100.23000 | -15.53100 | -14.94400 | -.12675 | -.57096 | .10604 | .31586 | -.18817 | .04801 | .26623 |
| | GRADIENT | .00000 | .00000 | .00000 | .00000 | .00000 | .00000 | .00000 | .00000 | .00000 | .00000 |

RUN NO. 3520/ 0 RN/L = 2.37 GRADIENT INTERVAL = -5.00/ 5.00

| Y | X | Z | ALPHA | BETA | PHI | CN | CLM | CY | CYN | CBL | CA |
|---|---|---|---|---|---|---|---|---|---|---|---|
| -153.260 | 198.400 | 100.84000 | -15.52000 | -14.99000 | -.14867 | -.54764 | .10126 | .32457 | -.16891 | .04173 | .25215 |
| -149.600 | 99.466 | 98.46300 | -15.57100 | -14.97500 | -.15657 | -.60085 | .10644 | .35214 | -.19038 | .04735 | .26503 |
| -148.980 | -.142 | 101.31000 | -15.53800 | -15.02300 | -.17365 | -.55563 | .10417 | .35907 | -.16978 | .04160 | .26651 |
| | GRADIENT | .00000 | .00000 | .00000 | .00000 | .00000 | .00000 | .00000 | .00000 | .00000 | .00000 |

IA143, AEDC V41A-P8A, O/ET W/R.H. SRB SEPARATING (OVX181) ( 23 MAY 77 )

REFERENCE DATA

SREF = 2690.0000 SQ.FT. XMRP = 1097.0000 IN. XT
LREF = 1290.3000 INCHES YMRP = .0000 IN. YT
BREF = 1290.3000 INCHES ZMRP = 450.0000 IN. ZT
SCALE = .0100

PARAMETRIC DATA

ALPHA = -15.000 BETA = -15.000
DALPHA = -4.000 DBETA = .000
Z = 200.000 MACH = 4.500
JET PC = 1225.000

RUN NO. 3515/ 0 RN/L = 2.37 GRADIENT INTERVAL = -5.00/ 5.00

| Y | X | Z | ALPHA | BETA | PHI | CN | CLM | CY | CYN | CBL | CA |
|---|---|---|---|---|---|---|---|---|---|---|---|
| -50.795 | -.736 | 199.99000 | -15.38900 | -14.66700 | -.05796 | -.50735 | .13887 | .14492 | -.23096 | .04446 | .31318 |
| -49.878 | 99.594 | 199.74000 | -15.37300 | -14.68900 | -.03608 | -.51299 | .15173 | .15147 | -.22682 | .04932 | .32462 |
| -49.837 | 199.520 | 199.64000 | -15.37500 | -14.71700 | -.01797 | -.52676 | .15895 | .14694 | -.21320 | .05034 | .33458 |
| | GRADIENT | .00000 | .00000 | .00000 | .00000 | .00000 | .00000 | .00000 | .00000 | .00000 | .00000 |

IA143, AEDC V41A-P8A, O/ET W/R.H. SRB SEPARATING (OVX181) ( 23 MAY 77 )

REFERENCE DATA

SREF = 2690.0000 SQ.FT. XMRP = 1097.0000 IN. XT
LREF = 1290.3000 INCHES YMRP = .0000 IN. YT
BREF = 1290.3000 INCHES ZMRP = 450.0000 IN. ZT
SCALE = .0100

PARAMETRIC DATA

ALPHA = -15.000 BETA = -15.000
DALPHA = -4.000 DBETA = .000
Z = 200.000 MACH = 4.500
JET PC = 1225.000

RUN NO. 3516/ 0 RN/L = 2.37 GRADIENT INTERVAL = -5.00/ 5.00

| Y | X | Z | ALPHA | BETA | PHI | CN | CLM | CY | CYN | CBL | CA |
|---|---|---|---|---|---|---|---|---|---|---|---|
| -97.601 | 200.020 | 199.44000 | -15.42400 | -14.80600 | -.06994 | -.55037 | .15367 | .24005 | -.21736 | .05350 | .32278 |
| -99.723 | 99.598 | 200.38000 | -15.42100 | -14.80000 | -.08905 | -.53258 | .14477 | .23414 | -.21488 | .04829 | .30925 |
| -100.080 | -.358 | 199.78000 | -15.43300 | -14.83100 | -.10382 | -.54315 | .14425 | .19916 | -.17873 | .03462 | .29187 |
| | GRADIENT | .00000 | .00000 | .00000 | .00000 | .00000 | .00000 | .00000 | .00000 | .00000 | .00000 |

RUN NO. 3521/ 0 RN/L = 2.37 GRADIENT INTERVAL = -5.00/ 5.00

| Y | X | Z | ALPHA | BETA | PHI | CN | CLM | CY | CYN | CBL | CA |
|---|---|---|---|---|---|---|---|---|---|---|---|
| -152.340 | -1.168 | 201.17000 | -15.44700 | -14.92900 | -.14016 | -.52329 | .13394 | .29178 | -.18042 | .04057 | .29181 |
| -150.910 | 99.169 | 199.87000 | -15.44100 | -14.89400 | -.12746 | -.51362 | .12708 | .28491 | -.19415 | .04437 | .28494 |
| -150.440 | 199.280 | 199.77000 | -15.43700 | -14.88300 | -.11017 | -.52016 | .13118 | .27836 | -.19790 | .04762 | .28936 |
| | GRADIENT | .00000 | .00000 | .00000 | .00000 | .00000 | .00000 | .00000 | .00000 | .00000 | .00000 |

IA143, AEDC V41A-P8A, O/ET W/R.H. SRB SEPARATING (OVX182) ( 23 MAY 77 )

REFERENCE DATA

SREF = 2690.0000 SQ.FT. XMRP = 1097.0000 IN. XT
LREF = 1290.3000 INCHES YMRP = .0000 IN. YT
BREF = 1290.3000 INCHES ZMRP = 450.0000 IN. ZT
SCALE = .0100

PARAMETRIC DATA

ALPHA = -15.000 BETA = -15.000
DALPHA = -4.000 DBETA = 2.000
Z = .000 MACH = 4.500
JET PC = 1225.000

RUN NO. 3522/ 0 RN/L = 2.37 GRADIENT INTERVAL = -5.00/ 5.00

| Y | X | Z | ALPHA | BETA | PHI | CN | CLM | CY | CYN | CBL | CA |
|---|---|---|---|---|---|---|---|---|---|---|---|
| -48.489 | -.645 | .00589 | -15.58900 | -15.10700 | -.20890 | -.50889 | .04845 | .38540 | -.14087 | .03358 | .22949 |
| -49.903 | 99.526 | -.57057 | -15.59900 | -15.09600 | -.19752 | -.53737 | .05295 | .40010 | -.15544 | .04028 | .21065 |
| -50.057 | 199.320 | 1.42040 | -15.52600 | -15.09300 | -.18280 | -.49492 | .06857 | .37254 | -.14328 | .03754 | .21465 |
| | GRADIENT | .00000 | .00000 | .00000 | .00000 | .00000 | .00000 | .00000 | .00000 | .00000 | .00000 |

RUN NO. 3527/ 0 RN/L = 2.37 GRADIENT INTERVAL = -5.00/ 5.00

| Y | X | Z | ALPHA | BETA | PHI | CN | CLM | CY | CYN | CBL | CA |
|---|---|---|---|---|---|---|---|---|---|---|---|
| -98.310 | 199.930 | .22631 | -15.57800 | -15.10100 | -.20661 | -.55780 | .08295 | .42491 | -.16584 | .04357 | .22964 |
| -98.879 | 99.811 | -1.08700 | -15.63000 | -15.11400 | -.23228 | -.58885 | .07559 | .47119 | -.18262 | .04742 | .23128 |
| -97.693 | .064 | .09310 | -15.64300 | -15.11900 | -.23976 | -.58628 | .07246 | .47050 | -.17896 | .04520 | .25039 |
| | GRADIENT | .00000 | .00000 | .00000 | .00000 | .00000 | .00000 | .00000 | .00000 | .00000 | .00000 |

IA143, AEDC V41A-P8A, O/ET W/R.H. SRB SEPARATING (OVX182) ( 23 MAY 77 )

REFERENCE DATA

SREF = 2690.0000 SQ.FT. XMRP = 1097.0000 IN. XT
LREF = 1290.3000 INCHES YMRP = .0000 IN. YT
BREF = 1290.3000 INCHES ZMRP = 450.0000 IN. ZT
SCALE = .0100

PARAMETRIC DATA

ALPHA = -15.000 BETA = -15.000
DALPHA = -4.000 DBETA = 2.000
Z = .000 MACH = 4.500
JET PC = 1225.000

RUN NO. 3528/ 0 RN/L = 2.37 GRADIENT INTERVAL = -5.00/ 5.00

| Y | X | Z | ALPHA | BETA | PHI | CN | CLM | CY | CYN | CBL | CA |
|---|---|---|---|---|---|---|---|---|---|---|---|
| -149.480 | -.270 | 1.82590 | -15.59100 | -15.14700 | -.23816 | -.51134 | .05846 | .46005 | -.16040 | .04118 | .24408 |
| -149.870 | 99.395 | -1.32190 | -15.62100 | -15.13400 | -.23575 | -.57652 | .07668 | .47444 | -.17477 | .04599 | .23823 |
| -150.180 | 199.370 | .31655 | -15.59200 | -15.12600 | -.21147 | -.57873 | .09032 | .44677 | -.16588 | .04571 | .23578 |
| | GRADIENT | .00000 | .00000 | .00000 | .00000 | .00000 | .00000 | .00000 | .00000 | .00000 | .00000 |

IA143, AEDC V41A-P8A, O/ET W/R.H. SRB SEPARATING (OVX183) ( 23 MAY 77 )

REFERENCE DATA

SREF = 2690.0000 SQ.FT. XMRP = 1097.0000 IN. XT
LREF = 1290.3000 INCHES YMRP = .0000 IN. YT
BREF = 1290.3000 INCHES ZMRP = 450.0000 IN. ZT
SCALE = .0100

PARAMETRIC DATA

ALPHA = -15.000 BETA = -15.000
DALPHA = -4.000 DBETA = 2.000
Z = 100.000 MACH = 4.500
JET PC = 1225.000

RUN NO. 3523/ 0 RN/L = 2.37 GRADIENT INTERVAL = -5.00/ 5.00

| Y | X | Z | ALPHA | BETA | PHI | CN | CLM | CY | CYN | CBL | CA |
|---|---|---|---|---|---|---|---|---|---|---|---|
| -50.131 | 199.290 | 100.04000 | -15.53900 | -14.83800 | -.07581 | -.62081 | .12494 | .27134 | -.21920 | .05704 | .29705 |
| -50.540 | 99.263 | 99.33600 | -15.56300 | -14.80500 | -.08533 | -.63718 | .11754 | .23826 | -.21524 | .04971 | .28112 |
| -48.219 | -.049 | 99.95500 | -15.60500 | -14.86700 | -.13370 | -.61319 | .08910 | .26251 | -.19359 | .03977 | .27903 |
| | GRADIENT | .00000 | .00000 | .00000 | .00000 | .00000 | .00000 | .00000 | .00000 | .00000 | .00000 |

RUN NO. 3526/ 0 RN/L = 2.37 GRADIENT INTERVAL = -5.00/ 5.00

| Y | X | Z | ALPHA | BETA | PHI | CN | CLM | CY | CYN | CBL | CA |
|---|---|---|---|---|---|---|---|---|---|---|---|
| -96.630 | .361 | 99.00900 | -15.54200 | -14.93400 | -.13850 | -.60017 | .11688 | .20675 | -.13038 | .02103 | .25817 |
| -98.753 | 99.901 | 100.42000 | -15.53100 | -14.93600 | -.12931 | -.56538 | .10077 | .31014 | -.19314 | .04744 | .25790 |
| -100.410 | 199.330 | 99.70500 | -15.53400 | -14.93100 | -.12134 | -.57102 | .10333 | .31130 | -.19238 | .04913 | .26790 |
| | GRADIENT | .00000 | .00000 | .00000 | .00000 | .00000 | .00000 | .00000 | .00000 | .00000 | .00000 |

RUN NO. 3529/ 0 RN/L = 2.37 GRADIENT INTERVAL = -5.00/ 5.00

| Y | X | Z | ALPHA | BETA | PHI | CN | CLM | CY | CYN | CBL | CA |
|---|---|---|---|---|---|---|---|---|---|---|---|
| -152.940 | 198.550 | 100.90000 | -15.51700 | -14.98500 | -.14564 | -.54097 | .09882 | .31821 | -.16818 | .04134 | .25279 |
| -150.260 | 99.320 | 98.69000 | -15.56500 | -14.97000 | -.15373 | -.58835 | .10226 | .34575 | -.18960 | .04691 | .26478 |
| -149.400 | -.377 | 102.15000 | -15.49800 | -15.01400 | -.16955 | -.50761 | .09626 | .36000 | -.17496 | .04338 | .25681 |
| | GRADIENT | .00000 | .00000 | .00000 | .00000 | .00000 | .00000 | .00000 | .00000 | .00000 | .00000 |

IA143, AEDC V41A-P8A, O/ET W/R.H. SRB SEPARATING (OVX184) ( 23 MAY 77 )

REFERENCE DATA

SREF = 2690.0000 SQ.FT. XMRP = 1097.0000 IN. XT
LREF = 1290.3000 INCHES YMRP = .0000 IN. YT
BREF = 1290.3000 INCHES ZMRP = 450.0000 IN. ZT
SCALE = .0100

PARAMETRIC DATA

ALPHA = -15.000 BETA = -15.000
DALPHA = -4.000 DBETA = 2.000
Z = 200.000 MACH = 4.500
JET PC = 1225.000

RUN NO. 3524/ 0 RN/L = 2.37 GRADIENT INTERVAL = -5.00/ 5.00

| Y | X | Z | ALPHA | BETA | PHI | CN | CLM | CY | CYN | CBL | CA |
|---|---|---|---|---|---|---|---|---|---|---|---|
| -50.085 | -.722 | 199.54000 | -15.39000 | -14.66500 | -.04651 | -.52247 | .14666 | .14865 | -.23553 | .04809 | .31893 |
| -50.004 | 99.562 | 199.91000 | -15.36600 | -14.66900 | -.02742 | -.50938 | .15234 | .14591 | -.23429 | .05148 | .32967 |
| -48.676 | 199.740 | 199.78000 | -15.36300 | -14.69700 | -.00878 | -.51777 | .15926 | .13406 | -.21677 | .05096 | .33685 |
| | GRADIENT | .00000 | .00000 | .00000 | .00000 | .00000 | .00000 | .00000 | .00000 | .00000 | .00000 |

RUN NO. 3525/ 0 RN/L = 2.37 GRADIENT INTERVAL = -5.00/ 5.00

| Y | X | Z | ALPHA | BETA | PHI | CN | CLM | CY | CYN | CBL | CA |
|---|---|---|---|---|---|---|---|---|---|---|---|
| -96.944 | 200.230 | 199.32000 | -15.42200 | -14.80100 | -.07047 | -.54480 | .15165 | .24057 | -.22015 | .05391 | .32200 |
| -100.320 | 99.426 | 200.22000 | -15.41900 | -14.78100 | -.08245 | -.53113 | .14455 | .23256 | -.22356 | .05077 | .31369 |
| -100.780 | -.779 | 198.88000 | -15.46000 | -14.77100 | -.09041 | -.56084 | .13702 | .15548 | -.18417 | .03199 | .30463 |
| | GRADIENT | .00000 | .00000 | .00000 | .00000 | .00000 | .00000 | .00000 | .00000 | .00000 | .00000 |

RUN NO. 3530/ 0 RN/L = 2.37 GRADIENT INTERVAL = -5.00/ 5.00

| Y | X | Z | ALPHA | BETA | PHI | CN | CLM | CY | CYN | CBL | CA |
|---|---|---|---|---|---|---|---|---|---|---|---|
| -152.600 | -1.145 | 199.83000 | -15.46000 | -14.90200 | -.14238 | -.51568 | .12254 | .30184 | -.19837 | .04436 | .29652 |
| -150.630 | 99.297 | 200.41000 | -15.43100 | -14.88500 | -.12434 | -.50181 | .12523 | .28255 | -.19773 | .04523 | .28547 |
| -150.780 | 199.200 | 199.50000 | -15.43200 | -14.87400 | -.10596 | -.51315 | .12878 | .26574 | -.19572 | .04633 | .28999 |
| | GRADIENT | .00000 | .00000 | .00000 | .00000 | .00000 | .00000 | .00000 | .00000 | .00000 | .00000 |

IA143, AEDC V41A-P8A, O/ET W/R.H. SRB SEPARATING (OVX185) ( 23 MAY 77 )

REFERENCE DATA

SREF = 2690.0000 SQ.FT. XMRP = 1097.0000 IN. XT
LREF = 1290.3000 INCHES YMRP = .0000 IN. YT
BREF = 1290.3000 INCHES ZMRP = 450.0000 IN. ZT
SCALE = .0100

PARAMETRIC DATA

ALPHA = -15.000 BETA = -15.000
DALPHA = -8.000 DBETA = -4.000
Z = 100.000 MACH = 4.500
JET PC = 1225.000

RUN NO. 3531/ 0 RN/L = 2.37 GRADIENT INTERVAL = -5.00/ 5.00

| Y | X | Z | ALPHA | BETA | PHI | CN | CLM | CY | CYN | CBL | CA |
|---|---|---|---|---|---|---|---|---|---|---|---|
| -119.760 | -1.000 | 101.55000 | -15.45200 | -15.04100 | -.17901 | -.49739 | .11838 | .33438 | -.14668 | .03339 | .25118 |
| -120.940 | 99.222 | 98.70800 | -15.49900 | -14.99600 | -.16229 | -.53578 | .10990 | .32190 | -.16284 | .03757 | .25675 |
| -120.410 | 199.330 | 99.79500 | -15.50900 | -14.98500 | -.14764 | -.54379 | .10623 | .31564 | -.16632 | .04025 | .25746 |
| | GRADIENT | .00000 | .00000 | .00000 | .00000 | .00000 | .00000 | .00000 | .00000 | .00000 | .00000 |

IA143, AEDC V41A-P8A, O/ET W/R.H. SRB SEPARATING (OVX185) ( 23 MAY 77 )

REFERENCE DATA

SREF = 2690.0000 SQ.FT. XMRP = 1097.0000 IN. XT
LREF = 1290.3000 INCHES YMRP = .0000 IN. YT
BREF = 1290.3000 INCHES ZMRP = 450.0000 IN. ZT
SCALE = .0100

PARAMETRIC DATA

ALPHA = -15.000 BETA = -15.000
DALPHA = -8.000 DBETA = -4.000
Z = 100.000 MACH = 4.500
JET PC = 1225.000

RUN NO. 3536/ 0 RN/L = 2.37 GRADIENT INTERVAL = -5.00/ 5.00

| Y | X | Z | ALPHA | BETA | PHI | CN | CLM | CY | CYN | CBL | CA |
|---|---|---|---|---|---|---|---|---|---|---|---|
| -149.460 | 199.550 | 99.36900 | -15.52800 | -14.98100 | -.14931 | -.56014 | .10619 | .32145 | -.17149 | .04156 | .26271 |
| -149.970 | 99.501 | 98.91100 | -15.58000 | -14.97400 | -.16071 | -.61374 | .11181 | .33402 | -.18039 | .04234 | .27557 |
| -149.780 | -.352 | 101.30000 | -15.55100 | -15.02100 | -.17325 | -.58572 | .11830 | .34092 | -.16076 | .03769 | .28533 |
| | GRADIENT | .00000 | .00000 | .00000 | .00000 | .00000 | .00000 | .00000 | .00000 | .00000 | .00000 |

RUN NO. 3537/ 0 RN/L = 2.37 GRADIENT INTERVAL = -5.00/ 5.00

| Y | X | Z | ALPHA | BETA | PHI | CN | CLM | CY | CYN | CBL | CA |
|---|---|---|---|---|---|---|---|---|---|---|---|
| -199.870 | -.295 | 100.69000 | -15.54500 | -15.05400 | -.18662 | -.57600 | .11817 | .35611 | -.15201 | .03571 | .27992 |
| -200.720 | 99.313 | 99.21400 | -15.57700 | -14.99400 | -.17224 | -.61252 | .11547 | .34811 | -.17730 | .04147 | .27470 |
| -200.960 | 199.230 | 100.56000 | -15.54100 | -14.98100 | -.14469 | -.61938 | .13688 | .31937 | -.17078 | .04208 | .28425 |
| | GRADIENT | .00000 | .00000 | .00000 | .00000 | .00000 | .00000 | .00000 | .00000 | .00000 | .00000 |

IA143, AEDC V41A-P8A, O/ET W/R.H. SRB SEPARATING (OVX186) ( 23 MAY 77 )

REFERENCE DATA

SREF = 2690.0000 SQ.FT. XMRP = 1097.0000 IN. XT
LREF = 1290.3000 INCHES YMRP = .0000 IN. YT
BREF = 1290.3000 INCHES ZMRP = 450.0000 IN. ZT
SCALE = .0100

PARAMETRIC DATA

ALPHA = -15.000 BETA = -15.000
DALPHA = -8.000 DBETA = -4.000
Z = 150.000 MACH = 4.500
JET PC = 1225.000

RUN NO. 3532/ 0 RN/L = 2.37 GRADIENT INTERVAL = -5.00/ 5.00

| Y | X | Z | ALPHA | BETA | PHI | CN | CLM | CY | CYN | CBL | CA |
|---|---|---|---|---|---|---|---|---|---|---|---|
| -121.710 | 198.930 | 150.46000 | -15.47100 | -14.91800 | -.12174 | -.54492 | .12624 | .28329 | -.18298 | .04359 | .27626 |
| -119.740 | 99.509 | 151.26000 | -15.43700 | -14.95100 | -.14303 | -.51061 | .12724 | .29242 | -.16982 | .03844 | .26203 |
| -119.100 | -.235 | 152.01000 | -15.37600 | -15.02500 | -.16418 | -.47553 | .14436 | .30396 | -.13900 | .03094 | .24120 |
| | GRADIENT | .00000 | .00000 | .00000 | .00000 | .00000 | .00000 | .00000 | .00000 | .00000 | .00000 |

RUN NO. 3535/ 0 RN/L = 2.37 GRADIENT INTERVAL = -5.00/ 5.00

| Y | X | Z | ALPHA | BETA | PHI | CN | CLM | CY | CYN | CBL | CA |
|---|---|---|---|---|---|---|---|---|---|---|---|
| -149.840 | -.290 | 149.58000 | -15.53700 | -14.95800 | -.14616 | -.59666 | .12793 | .29601 | -.16815 | .03803 | .29508 |
| -150.580 | 99.258 | 150.83000 | -15.50300 | -14.93300 | -.13739 | -.56950 | .12661 | .28906 | -.17709 | .04027 | .28101 |
| -149.940 | 199.360 | 150.76000 | -15.47600 | -14.94500 | -.13210 | -.53624 | .11969 | .29609 | -.17612 | .04222 | .27003 |
| | GRADIENT | .00000 | .00000 | .00000 | .00000 | .00000 | .00000 | .00000 | .00000 | .00000 | .00000 |

IA143, AEDC V41A-P8A, O/ET W/R.H. SRB SEPARATING (OVX186) ( 23 MAY 77 )

REFERENCE DATA

SREF = 2690.0000 SQ.FT. XMRP = 1097.0000 IN. XT
LREF = 1290.3000 INCHES YMRP = .0000 IN. YT
BREF = 1290.3000 INCHES ZMRP = 450.0000 IN. ZT
SCALE = .0100

PARAMETRIC DATA

ALPHA = -15.000 BETA = -15.000
DALPHA = -8.000 DBETA = -4.000
Z = 150.000 MACH = 4.500
JET PC = 1225.000

RUN NO. 3538/ 0 RN/L = 2.37 GRADIENT INTERVAL = -5.00/ 5.00

| Y | X | Z | ALPHA | BETA | PHI | CN | CLM | CY | CYN | CBL | CA |
|---|---|---|---|---|---|---|---|---|---|---|---|
| -201.040 | 199.130 | 151.04000 | -15.49700 | -14.94100 | -.12473 | -.57972 | .13540 | .28883 | -.17498 | .04253 | .28786 |
| -199.380 | 99.449 | 149.20000 | -15.54500 | -14.94600 | -.14583 | -.61185 | .13111 | .31695 | -.18578 | .04384 | .29205 |
| -199.280 | -.308 | 150.34000 | -15.54800 | -14.99800 | -.16455 | -.60190 | .13010 | .32754 | -.16485 | .03821 | .29917 |
| | GRADIENT | .00000 | .00000 | .00000 | .00000 | .00000 | .00000 | .00000 | .00000 | .00000 | .00000 |

IA143, AEDC V41A-P8A, O/ET W/R.H. SRB SEPARATING (OVX187) ( 23 MAY 77 )

REFERENCE DATA

SREF = 2690.0000 SQ.FT. XMRP = 1097.0000 IN. XT
LREF = 1290.3000 INCHES YMRP = .0000 IN. YT
BREF = 1290.3000 INCHES ZMRP = 450.0000 IN. ZT
SCALE = .0100

PARAMETRIC DATA

ALPHA = -15.000 BETA = -15.000
DALPHA = -8.000 DBETA = -4.000
Z = 200.000 MACH = 4.500
JET PC = 1225.000

RUN NO. 3533/ 0 RN/L = 2.37 GRADIENT INTERVAL = -5.00/ 5.00

| Y | X | Z | ALPHA | BETA | PHI | CN | CLM | CY | CYN | CBL | CA |
|---|---|---|---|---|---|---|---|---|---|---|---|
| -120.480 | -.683 | 200.13000 | -15.35800 | -15.00000 | -.14716 | -.46840 | .14781 | .29922 | -.15036 | .03555 | .24608 |
| -122.420 | 98.971 | 198.01000 | -15.41600 | -14.88600 | -.12186 | -.51745 | .14195 | .26029 | -.18490 | .04058 | .28353 |
| -121.000 | 199.250 | 199.61000 | -15.42500 | -14.86900 | -.10433 | -.53359 | .14623 | .26115 | -.19568 | .04601 | .29814 |
| | GRADIENT | .00000 | .00000 | .00000 | .00000 | .00000 | .00000 | .00000 | .00000 | .00000 | .00000 |

RUN NO. 3534/ 0 RN/L = 2.37 GRADIENT INTERVAL = -5.00/ 5.00

| Y | X | Z | ALPHA | BETA | PHI | CN | CLM | CY | CYN | CBL | CA |
|---|---|---|---|---|---|---|---|---|---|---|---|
| -149.440 | 199.790 | 200.53000 | -15.43100 | -14.91000 | -.12058 | -.51921 | .13594 | .28516 | -.18781 | .04486 | .28526 |
| -150.240 | 99.405 | 199.64000 | -15.45300 | -14.90400 | -.12837 | -.53951 | .13720 | .27547 | -.18437 | .04132 | .29029 |
| -149.740 | -.459 | 199.00000 | -15.49400 | -14.92000 | -.13083 | -.57866 | .13990 | .26866 | -.17265 | .03801 | .30225 |
| | GRADIENT | .00000 | .00000 | .00000 | .00000 | .00000 | .00000 | .00000 | .00000 | .00000 | .00000 |

RUN NO. 3539/ 0 RN/L = 2.37 GRADIENT INTERVAL = -5.00/ 5.00

| Y | X | Z | ALPHA | BETA | PHI | CN | CLM | CY | CYN | CBL | CA |
|---|---|---|---|---|---|---|---|---|---|---|---|
| -200.610 | -.606 | 200.41000 | -15.51700 | -14.95400 | -.14710 | -.58941 | .13788 | .30122 | -.17293 | .03933 | .30606 |
| -201.090 | 99.169 | 200.11000 | -15.49800 | -14.90700 | -.12623 | -.59034 | .14386 | .29058 | -.19153 | .04507 | .30471 |
| -200.400 | 199.330 | 201.08000 | -15.45800 | -14.91900 | -.11920 | -.54757 | .13880 | .28521 | -.18395 | .04454 | .29389 |
| | GRADIENT | .00000 | .00000 | .00000 | .00000 | .00000 | .00000 | .00000 | .00000 | .00000 | .00000 |

IA143, AEDC V41A-P8A, O/ET W/R.H. SRB SEPARATING (OVX188) ( 23 MAY 77 )

REFERENCE DATA

SREF = 2690.0000 SQ.FT. XMRP = 1097.0000 IN. XT
LREF = 1290.3000 INCHES YMRP = .0000 IN. YT
BREF = 1290.3000 INCHES ZMRP = 450.0000 IN. ZT
SCALE = .0100

PARAMETRIC DATA

ALPHA = -15.000 BETA = -15.000
DALPHA = -8.000 DBETA = -2.000
Z = 100.000 MACH = 4.500
JET PC = 1225.000

RUN NO. 3540/ 0 RN/L = 2.37 GRADIENT INTERVAL = -5.00/ 5.00

| Y | X | Z | ALPHA | BETA | PHI | CN | CLM | CY | CYN | CBL | CA |
|---|---|---|---|---|---|---|---|---|---|---|---|
| -69.400 | -.713 | 99.60200 | -15.61800 | -14.89300 | -.13822 | -.64362 | .10600 | .26514 | -.18219 | .03745 | .30009 |
| -71.596 | 98.936 | 100.28000 | -15.57600 | -14.82300 | -.09417 | -.64839 | .11638 | .23059 | -.20141 | .04463 | .27151 |
| -68.797 | 199.700 | 101.11000 | -15.54800 | -14.88300 | -.10729 | -.61707 | .12398 | .29165 | -.20587 | .05133 | .29328 |
| | GRADIENT | .00000 | .00000 | .00000 | .00000 | .00000 | .00000 | .00000 | .00000 | .00000 | .00000 |

RUN NO. 3545/ 0 RN/L = 2.36 GRADIENT INTERVAL = -5.00/ 5.00

| Y | X | Z | ALPHA | BETA | PHI | CN | CLM | CY | CYN | CBL | CA |
|---|---|---|---|---|---|---|---|---|---|---|---|
| -98.360 | 199.880 | 100.04000 | -15.51700 | -14.94100 | -.12709 | -.56423 | .11012 | .30419 | -.18296 | .04545 | .26705 |
| -99.929 | 99.495 | 101.26000 | -15.48900 | -14.96300 | -.14672 | -.53250 | .11010 | .30724 | -.17231 | .04016 | .25687 |
| -100.460 | -.760 | 99.52500 | -15.40600 | -15.03300 | -.17404 | -.47238 | .12699 | .31266 | -.13887 | .03009 | .24118 |
| | GRADIENT | .00000 | .00000 | .00000 | .00000 | .00000 | .00000 | .00000 | .00000 | .00000 | .00000 |

RUN NO. 3546/ 0 RN/L = 2.36 GRADIENT INTERVAL = -5.00/ 5.00

| Y | X | Z | ALPHA | BETA | PHI | CN | CLM | CY | CYN | CBL | CA |
|---|---|---|---|---|---|---|---|---|---|---|---|
| -150.290 | -.441 | 100.17000 | -15.53900 | -15.01900 | -.17365 | -.56569 | .11194 | .34540 | -.16402 | .03875 | .27916 |
| -151.230 | 99.221 | 99.01500 | -15.57400 | -14.96500 | -.15847 | -.60230 | .10674 | .33599 | -.18611 | .04397 | .27208 |
| -150.010 | 199.480 | 101.46000 | -15.52400 | -14.97700 | -.14728 | -.55315 | .10323 | .32031 | -.17273 | .04201 | .25965 |
| | GRADIENT | .00000 | .00000 | .00000 | .00000 | .00000 | .00000 | .00000 | .00000 | .00000 | .00000 |

IA143, AEDC V41A-P8A, O/ET W/R.H. SRB SEPARATING (OVX189) ( 23 MAY 77 )

REFERENCE DATA

SREF = 2690.0000 SQ.FT. XMRP = 1097.0000 IN. XT
LREF = 1290.3000 INCHES YMRP = .0000 IN. YT
BREF = 1290.3000 INCHES ZMRP = 450.0000 IN. ZT
SCALE = .0100

PARAMETRIC DATA

ALPHA = -15.000 BETA = -15.000
DALPHA = -8.000 DBETA = -2.000
Z = 150.000 MACH = 4.500
JET PC = 1225.000

RUN NO. 3541/ 0 RN/L = 2.37 GRADIENT INTERVAL = -5.00/ 5.00

| Y | X | Z | ALPHA | BETA | PHI | CN | CLM | CY | CYN | CBL | CA |
|---|---|---|---|---|---|---|---|---|---|---|---|
| -72.416 | 198.920 | 151.15000 | -15.48100 | -14.80800 | -.06221 | -.59755 | .14505 | .22286 | -.20801 | .05121 | .31208 |
| -71.329 | 98.948 | 150.39000 | -15.47200 | -14.74400 | -.05657 | -.59337 | .13914 | .17640 | -.21260 | .04642 | .29051 |
| -68.047 | -.082 | 149.50000 | -15.52500 | -14.80900 | -.10271 | -.59399 | .11969 | .22234 | -.20224 | .04181 | .29183 |
| | GRADIENT | .00000 | .00000 | .00000 | .00000 | .00000 | .00000 | .00000 | .00000 | .00000 | .00000 |

IA143, AEDC V41A-P8A, O/ET W/R.H. SRB SEPARATING (OVX189) ( 23 MAY 77 )

REFERENCE DATA

SREF = 2690.0000 SQ.FT. XMRP = 1097.0000 IN. XT
LREF = 1290.3000 INCHES YMRP = .0000 IN. YT
BREF = 1290.3000 INCHES ZMRP = 450.0000 IN. ZT
SCALE = .0100

PARAMETRIC DATA

ALPHA = -15.000 BETA = -15.000
DALPHA = -8.000 DBETA = -2.000
Z = 150.000 MACH = 4.500
JET PC = 1225.000

RUN NO. 3544/ 0 RN/L = 2.37 GRADIENT INTERVAL = -5.00/ 5.00

| Y | X | Z | ALPHA | BETA | PHI | CN | CLM | CY | CYN | CBL | CA |
|---|---|---|---|---|---|---|---|---|---|---|---|
| -99.3 | -.216 | 150.46000 | -15.42800 | -14.92000 | -.13414 | -.52404 | .13704 | .24170 | -.15702 | .03106 | .25816 |
| -100.S. | 99.239 | 148.75000 | -15.46900 | -14.86800 | -.11052 | -.55546 | .13032 | .25340 | -.19089 | .04287 | .27970 |
| -99.915 | 199.440 | 149.78000 | -15.48300 | -14.86400 | -.09930 | -.57174 | .13270 | .26654 | -.20155 | .04874 | .29337 |
| | GRADIENT | .00000 | .00000 | .00000 | .00000 | .00000 | .00000 | .00000 | .00000 | .00000 | .00000 |

RUN NO. 3547/ 0 RN/L = 2.36 GRADIENT INTERVAL = -5.00/ 5.00

| Y | X | Z | ALPHA | BETA | PHI | CN | CLM | CY | CYN | CBL | CA |
|---|---|---|---|---|---|---|---|---|---|---|---|
| -150.920 | 199.130 | 150.90000 | -15.47400 | -14.93900 | -.12951 | -.52947 | .11597 | .29658 | -.17931 | .04332 | .26961 |
| -150.620 | 99.285 | 149.32000 | -15.50700 | -14.92100 | -.13581 | -.56787 | .12304 | .29531 | -.18641 | .04293 | .28410 |
| -149.170 | -.272 | 150.51000 | -15.50800 | -14.97000 | -.15256 | -.56328 | .12540 | .30784 | -.16830 | .03843 | .28787 |
| | GRADIENT | .00000 | .00000 | .00000 | .00000 | .00000 | .00000 | .00000 | .00000 | .00000 | .00000 |

IA143, AEDC V41A-P8A, O/ET W/R.H. SRB SEPARATING (OVX190) ( 23 MAY 77 )

REFERENCE DATA

SREF = 2690.0000 SQ.FT. XMRP = 1097.0000 IN. XT
LREF = 1290.3000 INCHES YMRP = .0000 IN. YT
BREF = 1290.3000 INCHES ZMRP = 450.0000 IN. ZT
SCALE = .0100

PARAMETRIC DATA

ALPHA = -15.000 BETA = -15.000
DALPHA = -8.000 DBETA = -2.000
Z = 200.000 MACH = 4.500
JET PC = 1225.000

RUN NO. 3542/ 0 RN/L = 2.36 GRADIENT INTERVAL = -5.00/ 5.00

| Y | X | Z | ALPHA | BETA | PHI | CN | CLM | CY | CYN | CBL | CA |
|---|---|---|---|---|---|---|---|---|---|---|---|
| -70.997 | -.762 | 201.66000 | -15.44500 | -14.77300 | -.09701 | -.55121 | .14245 | .21002 | -.21286 | .04286 | .31077 |
| -70.678 | 99.301 | 200.59000 | -15.40200 | -14.75300 | -.06703 | -.53934 | .15671 | .19138 | -.21546 | .04684 | .31979 |
| -69.913 | 199.370 | 199.98000 | -15.40100 | -14.77100 | -.05095 | -.54484 | .16067 | .19115 | -.20872 | .04911 | .32752 |
| | GRADIENT | .00000 | .00000 | .00000 | .00000 | .00000 | .00000 | .00000 | .00000 | .00000 | .00000 |

RUN NO. 3543/ 0 RN/L = 2.37 GRADIENT INTERVAL = -5.00/ 5.00

| Y | X | Z | ALPHA | BETA | PHI | CN | CLM | CY | CYN | CBL | CA |
|---|---|---|---|---|---|---|---|---|---|---|---|
| -97.127 | 200.260 | 200.54000 | -15.41400 | -14.83100 | -.08419 | -.53526 | .15146 | .25045 | -.20977 | .05085 | .30915 |
| -100.210 | 99.356 | 200.36000 | -15.40900 | -14.83800 | -.10432 | -.52020 | .14635 | .24607 | -.20147 | .04475 | .29719 |
| -99.901 | -.380 | 199.93000 | -15.41600 | -14.88200 | -.11651 | -.54483 | .15664 | .17152 | -.13752 | .02166 | .28044 |
| | GRADIENT | .00000 | .00000 | .00000 | .00000 | .00000 | .00000 | .00000 | .00000 | .00000 | .00000 |

IA143, AEDC V41A-P8A, O/ET W/R.H. SRB SEPARATING (OVX190) ( 23 MAY 77 )

REFERENCE DATA

SREF = 2690.0000 SQ.FT. XMRP = 1097.0000 IN. XT
LREF = 1290.3000 INCHES YMRP = .0000 IN. YT
BREF = 1290.3000 INCHES ZMRP = 450.0000 IN. ZT
SCALE = .0100

PARAMETRIC DATA

ALPHA = -15.000 BETA = -15.000
DALPHA = -8.000 DBETA = -2.000
Z = 200.000 MACH = 4.500
JET PC = 1225.000

RUN NO. 3548/ 0 RN/L = 2.36 GRADIENT INTERVAL = -5.00/ 5.00

| Y | X | Z | ALPHA | BETA | PHI | CN | CLM | CY | CYN | CBL | CA |
|---|---|---|---|---|---|---|---|---|---|---|---|
| -150.790 | -.593 | 200.67000 | -15.46300 | -14.93400 | -.13881 | -.55334 | .14518 | .28158 | -.17231 | .03814 | .30469 |
| -150.490 | 99.368 | 200.66000 | -15.43500 | -14.90100 | -.12781 | -.51828 | .13494 | .28210 | -.18927 | .04312 | .29166 |
| -149.960 | 199.430 | 200.23000 | -15.42800 | -14.90400 | -.11789 | -.51128 | .13275 | .28532 | -.19102 | .04593 | .28683 |
| | GRADIENT | .00000 | .00000 | .00000 | .00000 | .00000 | .00000 | .00000 | .00000 | .00000 | .00000 |

IA143, AEDC V41A-P8A, O/ET W/R.H. SRB SEPARATING (OVX191) ( 23 MAY 77 )

REFERENCE DATA

SREF = 2690.0000 SQ.FT. XMRP = 1097.0000 IN. XT
LREF = 1290.3000 INCHES YMRP = .0000 IN. YT
BREF = 1290.3000 INCHES ZMRP = 450.0000 IN. ZT
SCALE = .0100

PARAMETRIC DATA

ALPHA = -15.000 BETA = -15.000
DALPHA = -8.000 DBETA = .000
Z = 100.000 MACH = 4.500
JET PC = 1225.000

RUN NO. 3549/ 0 RN/L = 2.36 GRADIENT INTERVAL = -5.00/ 5.00

| Y | X | Z | ALPHA | BETA | PHI | CN | CLM | CY | CYN | CBL | CA |
|---|---|---|---|---|---|---|---|---|---|---|---|
| -49.083 | -.790 | 100.03000 | -15.60100 | -14.86700 | -.13630 | -.60799 | .09203 | .24621 | -.18410 | .03544 | .29395 |
| -51.577 | 99.156 | 99.91500 | -15.57200 | -14.80400 | -.09113 | -.63819 | .11191 | .22405 | -.20699 | .04520 | .27254 |
| -49.389 | 199.500 | 100.73000 | -15.54000 | -14.83300 | -.07511 | -.62653 | .12907 | .26067 | -.21593 | .05516 | .30206 |
| | GRADIENT | .00000 | .00000 | .00000 | .00000 | .00000 | .00000 | .00000 | .00000 | .00000 | .00000 |

RUN NO. 3554/ 0 RN/L = 2.36 GRADIENT INTERVAL = -5.00/ 5.00

| Y | X | Z | ALPHA | BETA | PHI | CN | CLM | CY | CYN | CBL | CA |
|---|---|---|---|---|---|---|---|---|---|---|---|
| -98.750 | 199.730 | 99.44100 | -15.53000 | -14.91800 | -.11649 | -.57546 | .10776 | .29892 | -.19234 | .04840 | .27037 |
| -100.270 | 99.446 | 101.09000 | -15.50700 | -14.93500 | -.13750 | -.54470 | .10426 | .29968 | -.18209 | .04256 | .25705 |
| -100.530 | -.623 | 102.00000 | -15.44300 | -14.98600 | -.15812 | -.52030 | .13016 | .22849 | -.11555 | .01779 | .24480 |
| | GRADIENT | .00000 | .00000 | .00000 | .00000 | .00000 | .00000 | .00000 | .00000 | .00000 | .00000 |

RUN NO. 3555/ 0 RN/L = 2.36 GRADIENT INTERVAL = -5.00/ 5.00

| Y | X | Z | ALPHA | BETA | PHI | CN | CLM | CY | CYN | CBL | CA |
|---|---|---|---|---|---|---|---|---|---|---|---|
| -149.000 | -.105 | 99.13800 | -15.52000 | -15.00900 | -.17343 | -.53377 | .10292 | .35467 | -.17412 | .04173 | .27283 |
| -150.750 | 99.255 | 98.44600 | -15.57100 | -14.95100 | -.15469 | -.59433 | .10290 | .33695 | -.19332 | .04607 | .27039 |
| -150.490 | 199.390 | 101.53000 | -15.51600 | -14.97200 | -.14625 | -.53946 | .09925 | .31429 | -.17213 | .04129 | .25776 |
| | GRADIENT | .00000 | .00000 | .00000 | .00000 | .00000 | .00000 | .00000 | .00000 | .00000 | .00000 |

IA143, AEDC V41A-P8A, O/ET W/R.H. SRB SEPARATING (OVX192) ( 23 MAY 77 )

REFERENCE DATA

SREF = 2690.0000 SQ.FT. XMRP = 1097.0000 IN. XT
LREF = 1290.3000 INCHES YMRP = .0000 IN. YT
BREF = 1290.3000 INCHES ZMRP = 450.0000 IN. ZT
SCALE = .0100

PARAMETRIC DATA

ALPHA = -15.000 BETA = -15.000
DALPHA = -8.000 DBETA = .000
Z = 150.000 MACH = 4.500
JET PC = 1225.000

RUN NO. 3550/ 0 RN/L = 2.36 GRADIENT INTERVAL = -5.00/ 5.00

| Y | X | Z | ALPHA | BETA | PHI | CN | CLM | CY | CYN | CBL | CA |
|---|---|---|---|---|---|---|---|---|---|---|---|
| -52.591 | 198.720 | 151.45000 | -15.45900 | -14.75800 | -.03513 | -.57955 | .14112 | .17637 | -.20839 | .05024 | .31324 |
| -51.263 | 98.962 | 150.52000 | -15.45000 | -14.70900 | -.04658 | -.57163 | .13907 | .16215 | -.22233 | .04797 | .30310 |
| -49.036 | -.396 | 149.50000 | -15.50600 | -14.76100 | -.08431 | -.58427 | .12180 | .18442 | -.20571 | .04075 | .30037 |
| | GRADIENT | .00000 | .00000 | .00000 | .00000 | .00000 | .00000 | .00000 | .00000 | .00000 | .00000 |

RUN NO. 3553/ 0 RN/L = 2.36 GRADIENT INTERVAL = -5.00/ 5.00

| Y | X | Z | ALPHA | BETA | PHI | CN | CLM | CY | CYN | CBL | CA |
|---|---|---|---|---|---|---|---|---|---|---|---|
| -99.756 | -.431 | 149.65000 | -15.48400 | -14.87600 | -.12213 | -.57814 | .13726 | .17109 | -.13960 | .02077 | .28049 |
| -100.900 | 99.277 | 149.63000 | -15.48600 | -14.80300 | -.08291 | -.58870 | .13546 | .20475 | -.19720 | .04264 | .28891 |
| -99.147 | 199.700 | 150.56000 | -15.48100 | -14.84800 | -.09179 | -.56731 | .13038 | .26262 | -.20767 | .05069 | .29559 |
| | GRADIENT | .00000 | .00000 | .00000 | .00000 | .00000 | .00000 | .00000 | .00000 | .00000 | .00000 |

RUN NO. 3556/ 0 RN/L = 2.37 GRADIENT INTERVAL = -5.00/ 5.00

| Y | X | Z | ALPHA | BETA | PHI | CN | CLM | CY | CYN | CBL | CA |
|---|---|---|---|---|---|---|---|---|---|---|---|
| -151.260 | 198.990 | 150.91000 | -15.46600 | -14.93000 | -.12566 | -.51855 | .11338 | .29163 | -.18141 | .04376 | .26793 |
| -149.820 | 99.532 | 149.71000 | -15.48900 | -14.92000 | -.13565 | -.54086 | .11697 | .30127 | -.19036 | .04445 | .27948 |
| -148.630 | -.110 | 151.26000 | -15.46300 | -14.98300 | -.16116 | -.51213 | .12239 | .32315 | -.16974 | .03914 | .28229 |
| | GRADIENT | .00000 | .00000 | .00000 | .00000 | .00000 | .00000 | .00000 | .00000 | .00000 | .00000 |

IA143, AEDC V41A-P8A, O/ET W/R.H. SRB SEPARATING (OVX193) ( 23 MAY 77 )

REFERENCE DATA

SREF = 2690.0000 SQ.FT. XMRP = 1097.0000 IN. XT
LREF = 1290.3000 INCHES YMRP = .0000 IN. YT
BREF = 1290.3000 INCHES ZMRP = 450.0000 IN. ZT
SCALE = .0100

PARAMETRIC DATA

ALPHA = -15.000 BETA = -15.000
DALPHA = -8.000 DBETA = .000
Z = 200.000 MACH = 4.500
JET PC = 1225.000

RUN NO. 3551/ 0 RN/L = 2.36 GRADIENT INTERVAL = -5.00/ 5.00

| Y | X | Z | ALPHA | BETA | PHI | CN | CLM | CY | CYN | CBL | CA |
|---|---|---|---|---|---|---|---|---|---|---|---|
| -51.907 | -.945 | 202.26000 | -15.39300 | -14.70300 | -.06603 | -.52334 | .15204 | .17009 | -.22724 | .04583 | .32626 |
| -50.971 | 99.197 | 200.20000 | -15.36800 | -14.69200 | -.04017 | -.51385 | .15699 | .15322 | -.22591 | .04859 | .32966 |
| -50.155 | 199.330 | 200.17000 | -15.36000 | -14.71800 | -.02025 | -.51616 | .16243 | .14745 | -.21310 | .04992 | .33530 |
| | GRADIENT | .00000 | .00000 | .00000 | .00000 | .00000 | .00000 | .00000 | .00000 | .00000 | .00000 |

IA143, AEDC V41A-P8A, O/ET W/R.H. SRB SEPARATING (OVX193) ( 23 MAY 77 )

REFERENCE DATA

SREF = 2690.0000 SQ.FT. XMRP = 1097.0000 IN. XT
LREF = 1290.3000 INCHES YMRP = .0000 IN. YT
BREF = 1290.3000 INCHES ZMRP = 450.0000 IN. ZT
SCALE = .0100

PARAMETRIC DATA

ALPHA = -15.000 BETA = -15.000
DALPHA = -8.000 DBETA = .000
Z = 200.000 MACH = 4.500
JET PC = 1225.000

RUN NO. 3552/ 0 RN/L = 2.36 GRADIENT INTERVAL = -5.00/ 5.00

| Y | X | Z | ALPHA | BETA | PHI | CN | CLM | CY | CYN | CBL | CA |
|---|---|---|---|---|---|---|---|---|---|---|---|
| -98.292 | 199.980 | 199.80000 | -15.40800 | -14.81100 | -.07465 | -.53247 | .15219 | .24461 | -.21715 | .05315 | .31612 |
| -100.260 | 99.423 | 200.28000 | -15.40600 | -14.80800 | -.09049 | -.51980 | .14617 | .23741 | -.21274 | .04812 | .30521 |
| -100.450 | -.632 | 199.04000 | -15.44800 | -14.81600 | -.10540 | -.56050 | .14967 | .19557 | -.18371 | .03457 | .31027 |
| | GRADIENT | .00000 | .00000 | .00000 | .00000 | .00000 | .00000 | .00000 | .00000 | .00000 | .00000 |

RUN NO. 3557/ 0 RN/L = 2.37 GRADIENT INTERVAL = -5.00/ 5.00

| Y | X | Z | ALPHA | BETA | PHI | CN | CLM | CY | CYN | CBL | CA |
|---|---|---|---|---|---|---|---|---|---|---|---|
| -150.710 | -.711 | 200.24000 | -15.43600 | -14.93900 | -.14927 | -.51011 | .13618 | .30778 | -.18318 | .04144 | .29734 |
| -150.870 | 99.284 | 200.22000 | -15.41700 | -14.90100 | -.12783 | -.49909 | .13362 | .27592 | -.18614 | .04179 | .28686 |
| -150.370 | 199.370 | 199.69000 | -15.42200 | -14.88800 | -.11170 | -.50712 | .13249 | .28131 | -.19717 | .04761 | .28848 |
| | GRADIENT | .00000 | .00000 | .00000 | .00000 | .00000 | .00000 | .00000 | .00000 | .00000 | .00000 |

IA143, AEDC V41A-P8A, O/ET W/R.H. SRB SEPARATING (OVX194) ( 23 MAY 77 )

REFERENCE DATA

SREF = 2690.0000 SQ.FT. XMRP = 1097.0000 IN. XT
LREF = 1290.3000 INCHES YMRP = .0000 IN. YT
BREF = 1290.3000 INCHES ZMRP = 450.0000 IN. ZT
SCALE = .0100

PARAMETRIC DATA

ALPHA = -15.000 BETA = -15.000
DALPHA = -8.000 DBETA = 2.000
Z = 100.000 MACH = 4.500
JET PC = 1225.000

RUN NO. 3558/ 0 RN/L = 2.38 GRADIENT INTERVAL = -5.00/ 5.00

| Y | X | Z | ALPHA | BETA | PHI | CN | CLM | CY | CYN | CBL | CA |
|---|---|---|---|---|---|---|---|---|---|---|---|
| -49.363 | -.934 | 100.06000 | -15.59500 | -14.85700 | -.12957 | -.60115 | .08984 | .25602 | -.19536 | .04001 | .29258 |
| -51.071 | 99.148 | 100.19000 | -15.56200 | -14.78600 | -.08589 | -.62951 | .11104 | .22733 | -.21788 | .04846 | .27083 |
| -49.064 | 199.630 | 100.52000 | -15.53600 | -14.82100 | -.07103 | -.62105 | .12633 | .25910 | -.22071 | .05653 | .29893 |
| | GRADIENT | .00000 | .00000 | .00000 | .00000 | .00000 | .00000 | .00000 | .00000 | .00000 | .00000 |

RUN NO. 3563/ 0 RN/L = 2.38 GRADIENT INTERVAL = -5.00/ 5.00

| Y | X | Z | ALPHA | BETA | PHI | CN | CLM | CY | CYN | CBL | CA |
|---|---|---|---|---|---|---|---|---|---|---|---|
| -99.409 | 199.640 | 99.47900 | -15.52900 | -14.91400 | -.11565 | -.56639 | .10335 | .29653 | -.19288 | .04834 | .27042 |
| -100.750 | 99.254 | 100.05000 | -15.53500 | -14.90500 | -.12520 | -.57989 | .10682 | .25417 | -.17198 | .03705 | .26090 |
| -98.862 | -.269 | 102.59000 | -15.46100 | -14.94500 | -.14946 | -.50442 | .10811 | .30172 | -.17713 | .03961 | .24837 |
| | GRADIENT | .00000 | .00000 | .00000 | .00000 | .00000 | .00000 | .00000 | .00000 | .00000 | .00000 |

IA143, AEDC V41A-P8A, O/ET W/R.H. SRB SEPARATING (OVX194) ( 23 MAY 77 )

REFERENCE DATA

SREF = 2690.0000 SQ.FT. XMRP = 1097.0000 IN. XT
LREF = 1290.3000 INCHES YMRP = .0000 IN. YT
BREF = 1290.3000 INCHES ZMRP = 450.0000 IN. ZT
SCALE = .0100

PARAMETRIC DATA

ALPHA = -15.000 BETA = -15.000
DALPHA = -8.000 DBETA = 2.000
Z = 100.000 MACH = 4.500
JET PC = 1225.000

RUN NO. 3564/ 0 RN/L = 2.38 GRADIENT INTERVAL = -5.00/ 5.00

| Y | X | Z | ALPHA | BETA | PHI | CN | CLM | CY | CYN | CBL | CA |
|---|---|---|---|---|---|---|---|---|---|---|---|
| -148.720 | -.128 | 100.84000 | -15.47000 | -15.01000 | -.17323 | -.48078 | .10019 | .35585 | -.17415 | .04196 | .26855 |
| -149.670 | 99.576 | 99.90700 | -15.56300 | -14.94600 | -.15184 | -.57927 | .09927 | .33151 | -.19315 | .04584 | .27574 |
| -149.680 | 199.330 | 101.48000 | -15.51000 | -14.97000 | -.14461 | -.52655 | .09598 | .31084 | -.17120 | .04103 | .26163 |
| | GRADIENT | .00000 | .00000 | .00000 | .00000 | .00000 | .00000 | .00000 | .00000 | .00000 | .00000 |

IA143, AEDC V41A-P8A, O/ET W/R.H. SRB SEPARATING (OVX195) ( 23 MAY 77 )

REFERENCE DATA

SREF = 2690.0000 SQ.FT. XMRP = 1097.0000 IN. XT
LREF = 1290.3000 INCHES YMRP = .0000 IN. YT
BREF = 1290.3000 INCHES ZMRP = 450.0000 IN. ZT
SCALE = .0100

PARAMETRIC DATA

ALPHA = -15.000 BETA = -15.000
DALPHA = -8.000 DBETA = 2.000
Z = 150.000 MACH = 4.500
JET PC = 1225.000

RUN NO. 3559/ 0 RN/L = 2.38 GRADIENT INTERVAL = -5.00/ 5.00

| Y | X | Z | ALPHA | BETA | PHI | CN | CLM | CY | CYN | CBL | CA |
|---|---|---|---|---|---|---|---|---|---|---|---|
| -52.167 | 198.830 | 151.33000 | -15.45500 | -14.73800 | -.02578 | -.57635 | .14024 | .16795 | -.21427 | .05189 | .31540 |
| -50.967 | 99.197 | 150.40000 | -15.45100 | -14.68400 | -.03480 | -.56789 | .13447 | .15928 | -.23339 | .05173 | .30584 |
| -48.776 | -.231 | 149.83000 | -15.50300 | -14.74300 | -.08363 | -.57974 | .12233 | .17343 | -.20760 | .03964 | .30895 |
| | GRADIENT | .00000 | .00000 | .00000 | .00000 | .00000 | .00000 | .00000 | .00000 | .00000 | .00000 |

RUN NO. 3562/ 0 RN/L = 2.38 GRADIENT INTERVAL = -5.00/ 5.00

| Y | X | Z | ALPHA | BETA | PHI | CN | CLM | CY | CYN | CBL | CA |
|---|---|---|---|---|---|---|---|---|---|---|---|
| -99.456 | -.299 | 148.81000 | -15.53800 | -14.82900 | -.12177 | -.59094 | .11713 | .22753 | -.19327 | .03723 | .30380 |
| -101.570 | 99.118 | 150.91000 | -15.48300 | -14.79500 | -.08259 | -.57771 | .13063 | .20934 | -.20379 | .04439 | .29093 |
| -100.030 | 199.360 | 150.33000 | -15.47900 | -14.84400 | -.09158 | -.56009 | .12696 | .26349 | -.21033 | .05129 | .29519 |
| | GRADIENT | .00000 | .00000 | .00000 | .00000 | .00000 | .00000 | .00000 | .00000 | .00000 | .00000 |

RUN NO. 3565/ 0 RN/L = 2.38 GRADIENT INTERVAL = -5.00/ 5.00

| Y | X | Z | ALPHA | BETA | PHI | CN | CLM | CY | CYN | CBL | CA |
|---|---|---|---|---|---|---|---|---|---|---|---|
| -150.870 | 199.070 | 150.78000 | -15.46200 | -14.92100 | -.12101 | -.51431 | .11311 | .28799 | -.18437 | .04468 | .27293 |
| -150.320 | 99.391 | 150.06000 | -15.47300 | -14.92100 | -.13478 | -.51892 | .11256 | .30153 | -.19025 | .04464 | .27801 |
| -148.840 | -.241 | 152.03000 | -15.42000 | -14.97800 | -.16286 | -.47068 | .12183 | .33138 | -.17684 | .04104 | .27630 |
| | GRADIENT | .00000 | .00000 | .00000 | .00000 | .00000 | .00000 | .00000 | .00000 | .00000 | .00000 |

IA143, AEDC V41A-P8A, O/ET W/R.H. SRB SEPARATING (OVX196) ( 23 MAY 77 )

REFERENCE DATA

SREF = 2690.0000 SQ.FT. XMRP = 1097.0000 IN. XT
LREF = 1290.3000 INCHES YMRP = .0000 IN. YT
BREF = 1290.3000 INCHES ZMRP = 450.0000 IN. ZT
SCALE = .0100

PARAMETRIC DATA

ALPHA = -15.000 BETA = -15.000
DALPHA = -8.000 DBETA = 2.000
Z = 200.000 MACH = 4.500
JET PC = 1225.000

RUN NO. 3560/ 0 RN/L = 2.38 GRADIENT INTERVAL = -5.00/ 5.00

| Y | X | Z | ALPHA | BETA | PHI | CN | CLM | CY | CYN | CBL | CA |
|---|---|---|---|---|---|---|---|---|---|---|---|
| -52.330 | -.925 | 202.14000 | -15.39600 | -14.69600 | -.06228 | -.52763 | .15416 | .16955 | -.23024 | .04702 | .33407 |
| -50.912 | 99.163 | 200.68000 | -15.35000 | -14.66200 | -.02543 | -.49649 | .15502 | .14583 | -.23745 | .05238 | .33394 |
| -49.862 | 199.410 | 199.82000 | -15.35100 | -14.69500 | -.00943 | -.50884 | .16092 | .13647 | -.21878 | .05148 | .33740 |
| | GRADIENT | .00000 | .00000 | .00000 | .00000 | .00000 | .00000 | .00000 | .00000 | .00000 | .00000 |

RUN NO. 3561/ 0 RN/L = 2.38 GRADIENT INTERVAL = -5.00/ 5.00

| Y | X | Z | ALPHA | BETA | PHI | CN | CLM | CY | CYN | CBL | CA |
|---|---|---|---|---|---|---|---|---|---|---|---|
| -97.050 | 200.180 | 199.47000 | -15.41000 | -14.79200 | -.06776 | -.53507 | .15200 | .23563 | -.22164 | .05399 | .32123 |
| -100.280 | 99.515 | 200.39000 | -15.40700 | -14.78500 | -.08197 | -.52172 | .14572 | .22662 | -.21854 | .04926 | .31043 |
| -100.280 | -.556 | 198.75000 | -15.46400 | -14.77100 | -.10170 | -.55196 | .13453 | .20877 | -.21235 | .04165 | .31899 |
| | GRADIENT | .00000 | .00000 | .00000 | .00000 | .00000 | .00000 | .00000 | .00000 | .00000 | .00000 |

RUN NO. 3566/ 0 RN/L = 2.38 GRADIENT INTERVAL = -5.00/ 5.00

| Y | X | Z | ALPHA | BETA | PHI | CN | CLM | CY | CYN | CBL | CA |
|---|---|---|---|---|---|---|---|---|---|---|---|
| -149.970 | -.519 | 201.23000 | -15.36700 | -14.96400 | -.15785 | -.43930 | .13326 | .33127 | -.18380 | .04311 | .27857 |
| -151.800 | 98.997 | 197.99000 | -15.42000 | -14.88800 | -.12290 | -.49712 | .12972 | .26546 | -.18692 | .04146 | .28886 |
| -149.830 | 199.480 | 199.86000 | -15.42000 | -14.87700 | -.10780 | -.50357 | .13096 | .27505 | -.19926 | .04785 | .29109 |
| | GRADIENT | .00000 | .00000 | .00000 | .00000 | .00000 | .00000 | .00000 | .00000 | .00000 | .00000 |

IA143, AEDC V41A-P8A, O/ET W/R.H. SRB SEPARATING (OVX197) ( 23 MAY 77 )

REFERENCE DATA

SREF = 2690.0000 SQ.FT. XMRP = 1097.0000 IN. XT
LREF = 1290.3000 INCHES YMRP = .0000 IN. YT
BREF = 1290.3000 INCHES ZMRP = 450.0000 IN. ZT
SCALE = .0100

PARAMETRIC DATA

ALPHA = -15.000 BETA = -15.000
DALPHA = .000 DBETA = -4.000
Z = .000 MACH = 4.500
JET PC = .000

RUN NO. 3351/ 0 RN/L = 2.39 GRADIENT INTERVAL = -5.00/ 5.00

| Y | X | Z | ALPHA | BETA | PHI | CN | CLM | CY | CYN | CBL | CA |
|---|---|---|---|---|---|---|---|---|---|---|---|
| -120.110 | -.637 | -.11945 | -15.43800 | -15.22900 | -.23570 | -.49731 | .15384 | .57412 | -.18615 | .06201 | .29787 |
| -118.380 | 99.375 | -.51348 | -15.43900 | -15.23600 | -.24567 | -.49528 | .15387 | .58767 | -.18944 | .06238 | .29748 |
| -118.620 | 199.460 | -.42824 | -15.44100 | -15.24100 | -.25413 | -.49519 | .15390 | .59759 | -.19158 | .06235 | .29764 |
| | GRADIENT | .00000 | .00000 | .00000 | .00000 | .00000 | .00000 | .00000 | .00000 | .00000 | .00000 |

IA143, AEDC V41A-P8A, O/ET W/R.H. SRB SEPARATING (OVX197) ( 23 MAY 77 )

REFERENCE DATA

SREF = 2690.0000 SQ.FT. XMRP = 1097.0000 IN. XT
LREF = 1290.3000 INCHES YMRP = .0000 IN. YT
BREF = 1290.3000 INCHES ZMRP = 450.0000 IN. ZT
SCALE = .0100

PARAMETRIC DATA

ALPHA = -15.000 BETA = -15.000
DALPHA = .000 DBETA = -4.000
Z = .000 MACH = 4.500
JET PC = .000

RUN NO. 3357/ 0 RN/L = 2.38 GRADIENT INTERVAL = -5.00/ 5.00

| Y | X | Z | ALPHA | BETA | PHI | CN | CLM | CY | CYN | CBL | CA |
|---|---|---|---|---|---|---|---|---|---|---|---|
| -151.860 | 199.370 | .69511 | -15.44200 | -15.24300 | -.25727 | -.48920 | .15057 | .60105 | -.19190 | .06226 | .29703 |
| -150.800 | 99.287 | .19663 | -15.43900 | -15.23900 | -.25094 | -.48695 | .14982 | .59251 | -.18972 | .06202 | .29702 |
| -151.710 | -.597 | .28685 | -15.43600 | -15.23500 | -.23947 | -.48536 | .14859 | .57728 | -.18484 | .06147 | .29794 |
| | GRADIENT | .00000 | .00000 | .00000 | .00000 | .00000 | .00000 | .00000 | .00000 | .00000 | .00000 |

RUN NO. 3358/ 0 RN/L = 2.38 GRADIENT INTERVAL = -5.00/ 5.00

| Y | X | Z | ALPHA | BETA | PHI | CN | CLM | CY | CYN | CBL | CA |
|---|---|---|---|---|---|---|---|---|---|---|---|
| -201.670 | -.589 | .19725 | -15.43900 | -15.24100 | -.25316 | -.47642 | .14414 | .59164 | -.18844 | .06125 | .29643 |
| -198.510 | 99.225 | -.32900 | -15.44200 | -15.24300 | -.26135 | -.48146 | .14649 | .60390 | -.19297 | .06199 | .29528 |
| -198.680 | 199.280 | -.74290 | -15.44500 | -15.24500 | -.26312 | -.48625 | .14802 | .60830 | -.19438 | .06251 | .29477 |
| | GRADIENT | .00000 | .00000 | .00000 | .00000 | .00000 | .00000 | .00000 | .00000 | .00000 | .00000 |

IA143, AEDC V41A-P8A, O/ET W/R.H. SRB SEPARATING (OVX198) ( 23 MAY 77 )

REFERENCE DATA

SREF = 2690.0000 SQ.FT. XMRP = 1097.0000 IN. XT
LREF = 1290.3000 INCHES YMRP = .0000 IN. YT
BREF = 1290.3000 INCHES ZMRP = 450.0000 IN. ZT
SCALE = .0100

PARAMETRIC DATA

ALPHA = -15.000 BETA = -15.000
DALPHA = .000 DBETA = -4.000
Z = .000 MACH = 4.500
JET PC = .000

RUN NO. 3352/ 0 RN/L = 2.38 GRADIENT INTERVAL = -5.00/ 5.00

| Y | X | Z | ALPHA | BETA | PHI | CN | CLM | CY | CYN | CBL | CA |
|---|---|---|---|---|---|---|---|---|---|---|---|
| -119.630 | -.551 | .03108 | -15.43900 | -15.22800 | -.23425 | -.49634 | .15248 | .57137 | -.18521 | .06177 | .29802 |
| -118.700 | 99.169 | -.66101 | -15.43900 | -15.23400 | -.24305 | -.49649 | .15404 | .58527 | -.18898 | .06249 | .29736 |
| -119.230 | 199.420 | -.43482 | -15.44100 | -15.24100 | -.25185 | -.49506 | .15374 | .59527 | -.19066 | .06240 | .29760 |
| | GRADIENT | .00000 | .00000 | .00000 | .00000 | .00000 | .00000 | .00000 | .00000 | .00000 | .00000 |

RUN NO. 3461/ 0 RN/L = 2.38 GRADIENT INTERVAL = -5.00/ 5.00

| Y | X | Z | ALPHA | BETA | PHI | CN | CLM | CY | CYN | CBL | CA |
|---|---|---|---|---|---|---|---|---|---|---|---|
| -150.760 | -.784 | .03405 | -15.43600 | -15.23400 | -.23908 | -.48552 | .14807 | .57641 | -.18475 | .06146 | .29550 |
| -148.810 | 99.298 | -.60299 | -15.43900 | -15.23900 | -.25069 | -.48629 | .14911 | .59199 | -.18964 | .06204 | .29445 |
| -149.260 | 199.340 | -.48750 | -15.44200 | -15.24400 | -.25756 | -.48850 | .14988 | .60138 | -.19211 | .06234 | .29472 |
| | GRADIENT | .00000 | .00000 | .00000 | .00000 | .00000 | .00000 | .00000 | .00000 | .00000 | .00000 |

IA143, AEDC V41A-P8A, O/ET W/R.H. SRB SEPARATING (OVX199) ( 23 MAY 77 )

REFERENCE DATA

SREF = 2690.0000 SQ.FT. XMRP = 1097.0000 IN. XT
LREF = 1290.3000 INCHES YMRP = .0000 IN. YT
BREF = 1290.3000 INCHES ZMRP = 450.0000 IN. ZT
SCALE = .0100

PARAMETRIC DATA

ALPHA = -15.000 BETA = -15.000
DALPHA = .000 DBETA = -4.000
Z = 100.000 MACH = 4.500
JET PC = .000

RUN NO. 3353/ 0 RN/L = 2.38 GRADIENT INTERVAL = -5.00/ 5.00

| Y | X | Z | ALPHA | BETA | PHI | CN | CLM | CY | CYN | CBL | CA |
|---|---|---|---|---|---|---|---|---|---|---|---|
| -118.160 | 199.240 | 98.92000 | -15.43500 | -15.23900 | -.25733 | -.49316 | .15641 | .61278 | -.20071 | .06531 | .29591 |
| -120.460 | 99.245 | 100.02000 | -15.43400 | -15.23900 | -.25423 | -.49429 | .15719 | .61047 | -.19953 | .06541 | .29623 |
| -120.680 | -.697 | 100.23000 | -15.43000 | -15.23600 | -.24633 | -.49312 | .15777 | .60232 | -.19753 | .06560 | .29666 |
| | GRADIENT | .00000 | .00000 | .00000 | .00000 | .00000 | .00000 | .00000 | .00000 | .00000 | .00000 |

RUN NO. 3356/ 0 RN/L = 2.38 GRADIENT INTERVAL = -5.00/ 5.00

| Y | X | Z | ALPHA | BETA | PHI | CN | CLM | CY | CYN | CBL | CA |
|---|---|---|---|---|---|---|---|---|---|---|---|
| -150.470 | -.679 | 100.37000 | -15.43100 | -15.23900 | -.24847 | -.48928 | .15541 | .60520 | -.19723 | .06550 | .29645 |
| -149.200 | 99.079 | 99.06800 | -15.43600 | -15.24100 | -.25809 | -.48950 | .15426 | .61443 | -.20029 | .06534 | .29556 |
| -149.300 | 199.240 | 99.38500 | -15.43900 | -15.24300 | -.26288 | -.49222 | .15464 | .61983 | -.20206 | .06537 | .29543 |
| | GRADIENT | .00000 | .00000 | .00000 | .00000 | .00000 | .00000 | .00000 | .00000 | .00000 | .00000 |

RUN NO. 3359/ 0 RN/L = 2.38 GRADIENT INTERVAL = -5.00/ 5.00

| Y | X | Z | ALPHA | BETA | PHI | CN | CLM | CY | CYN | CBL | CA |
|---|---|---|---|---|---|---|---|---|---|---|---|
| -197.970 | 199.290 | 98.86000 | -15.44200 | -15.24500 | -.26710 | -.49284 | .15358 | .62503 | -.20342 | .06544 | .29469 |
| -200.590 | 99.357 | 100.38000 | -15.43800 | -15.24300 | -.26370 | -.48841 | .15260 | .62180 | -.20291 | .06559 | .29412 |
| -201.090 | -.580 | 100.19000 | -15.43500 | -15.24300 | -.25797 | -.48459 | .15173 | .61500 | -.20001 | .06538 | .29498 |
| | GRADIENT | .00000 | .00000 | .00000 | .00000 | .00000 | .00000 | .00000 | .00000 | .00000 | .00000 |

IA143, AEDC V41A-P8A, O/ET W/R.H. SRB SEPARATING (OVX200) ( 23 MAY 77 )

REFERENCE DATA

SREF = 2690.0000 SQ.FT. XMRP = 1097.0000 IN. XT
LREF = 1290.3000 INCHES YMRP = .0000 IN. YT
BREF = 1290.3000 INCHES ZMRP = 450.0000 IN. ZT
SCALE = .0100

PARAMETRIC DATA

ALPHA = -15.000 BETA = -15.000
DALPHA = .000 DBETA = -4.000
Z = 100.000 MACH = 4.500
JET PC = .000

RUN NO. 3462/ 0 RN/L = 2.38 GRADIENT INTERVAL = -5.00/ 5.00

| Y | X | Z | ALPHA | BETA | PHI | CN | CLM | CY | CYN | CBL | CA |
|---|---|---|---|---|---|---|---|---|---|---|---|
| -148.190 | 199.310 | 98.92500 | -15.43800 | -15.24300 | -.26282 | -.49066 | .15374 | .61931 | -.20203 | .06536 | .29288 |
| -150.890 | 99.279 | 100.15000 | -15.43600 | -15.24200 | -.25894 | -.48844 | .15318 | .61564 | -.20061 | .06541 | .29323 |
| -151.490 | -.495 | 100.35000 | -15.43100 | -15.23900 | -.24907 | -.48755 | .15422 | .60496 | -.19721 | .06545 | .29358 |
| | GRADIENT | .00000 | .00000 | .00000 | .00000 | .00000 | .00000 | .00000 | .00000 | .00000 | .00000 |

IA143, AEDC V41A-P8A, O/ET W/R.H. SRB SEPARATING (OVX201) ( 23 MAY 77 )

REFERENCE DATA

SREF = 2690.0000 SQ.FT. XMRP = 1097.0000 IN. XT
LREF = 1290.3000 INCHES YMRP = .0000 IN. YT
BREF = 1290.3000 INCHES ZMRP = 450.0000 IN. ZT
SCALE = .0100

PARAMETRIC DATA

ALPHA = -15.000 BETA = -15.000
DALPHA = .000 DBETA = -4.000
Z = 200.000 MACH = 4.500
JET PC = .000

RUN NO. 3354/ 0 RN/L = 2.38 GRADIENT INTERVAL = -5.00/ 5.00

| Y | X | Z | ALPHA | BETA | PHI | CN | CLM | CY | CYN | CBL | CA |
|---|---|---|---|---|---|---|---|---|---|---|---|
| -119.890 | -.588 | 199.19000 | -15.43000 | -15.23700 | -.25902 | -.48172 | .15290 | .61770 | -.20412 | .06614 | .29613 |
| -118.760 | 99.279 | 199.18000 | -15.43500 | -15.24000 | -.26515 | -.48676 | .15379 | .62421 | -.20567 | .06608 | .29590 |
| -119.170 | 199.410 | 199.41000 | -15.43800 | -15.24100 | -.26862 | -.48941 | .15431 | .62792 | -.20680 | .06605 | .29583 |
| | GRADIENT | .00000 | .00000 | .00000 | .00000 | .00000 | .00000 | .00000 | .00000 | .00000 | .00000 |

RUN NO. 3355/ 0 RN/L = 2.38 GRADIENT INTERVAL = -5.00/ 5.00

| Y | X | Z | ALPHA | BETA | PHI | CN | CLM | CY | CYN | CBL | CA |
|---|---|---|---|---|---|---|---|---|---|---|---|
| -150.420 | 199.300 | 200.06000 | -15.44100 | -15.24200 | -.27112 | -.49081 | .15392 | .63045 | -.20732 | .06595 | .29541 |
| -150.680 | 99.314 | 200.08000 | -15.43800 | -15.24100 | -.26827 | -.48712 | .15274 | .62754 | -.20629 | .06598 | .29534 |
| -151.740 | -.807 | 200.34000 | -15.43300 | -15.23900 | -.26265 | -.48212 | .15186 | .62133 | -.20456 | .06602 | .29558 |
| | GRADIENT | .00000 | .00000 | .00000 | .00000 | .00000 | .00000 | .00000 | .00000 | .00000 | .00000 |

RUN NO. 3360/ 0 RN/L = 2.38 GRADIENT INTERVAL = -5.00/ 5.00

| Y | X | Z | ALPHA | BETA | PHI | CN | CLM | CY | CYN | CBL | CA |
|---|---|---|---|---|---|---|---|---|---|---|---|
| -199.140 | -.744 | 199.03000 | -15.43900 | -15.24200 | -.26842 | -.48483 | .15116 | .62729 | -.20608 | .06591 | .29476 |
| -198.800 | 99.368 | 199.12000 | -15.44200 | -15.24300 | -.27227 | -.48911 | .15257 | .63098 | -.20734 | .06586 | .29413 |
| -198.920 | 199.190 | 199.22000 | -15.44400 | -15.24400 | -.27382 | -.49302 | .15387 | .63314 | -.20776 | .06586 | .29474 |
| | GRADIENT | .00000 | .00000 | .00000 | .00000 | .00000 | .00000 | .00000 | .00000 | .00000 | .00000 |

IA143, AEDC V41A-P8A, O/ET W/R.H. SRB SEPARATING (OVX202) ( 23 MAY 77 )

REFERENCE DATA

SREF = 2690.0000 SQ.FT. XMRP = 1097.0000 IN. XT
LREF = 1290.3000 INCHES YMRP = .0000 IN. YT
BREF = 1290.3000 INCHES ZMRP = 450.0000 IN. ZT
SCALE = .0100

PARAMETRIC DATA

ALPHA = -15.000 BETA = -15.000
DALPHA = .000 DBETA = -4.000
Z = 200.000 MACH = 4.500
JET PC = .000

RUN NO. 3463/ 0 RN/L = 2.38 GRADIENT INTERVAL = -5.00/ 5.00

| Y | X | Z | ALPHA | BETA | PHI | CN | CLM | CY | CYN | CBL | CA |
|---|---|---|---|---|---|---|---|---|---|---|---|
| -149.830 | -.530 | 199.19000 | -15.43300 | -15.23900 | -.26292 | -.48042 | .15064 | .62159 | -.20471 | .06603 | .29296 |
| -148.890 | 99.449 | 199.17000 | -15.43800 | -15.24200 | -.26838 | -.48552 | .15160 | .62721 | -.20614 | .06594 | .29273 |
| -149.510 | 199.500 | 199.31000 | -15.44100 | -15.24200 | -.27173 | -.48905 | .15276 | .63050 | -.20733 | .06595 | .29295 |
| | GRADIENT | .00000 | .00000 | .00000 | .00000 | .00000 | .00000 | .00000 | .00000 | .00000 | .00000 |

IA143, AEDC V41A-P8A, O/ET W/R.H. SRB SEPARATING (OVX203) ( 23 MAY 77 )

REFERENCE DATA

SREF = 2690.0000 SQ.FT. XMRP = 1097.0000 IN. XT
LREF = 1290.3000 INCHES YMRP = .0000 IN. YT
BREF = 1290.3000 INCHES ZMRP = 450.0000 IN. ZT
SCALE = .0100

PARAMETRIC DATA

ALPHA = -15.000 BETA = -15.000
DALPHA = .000 DBETA = -2.000
Z = .000 MACH = 4.500
JET PC = .000

RUN NO. 3361/ 0 RN/L = 2.38 GRADIENT INTERVAL = -5.00/ 5.00

| Y | X | Z | ALPHA | BETA | PHI | CN | CLM | CY | CYN | CBL | CA |
|---|---|---|---|---|---|---|---|---|---|---|---|
| -69.895 | -.719 | .01411 | -15.44500 | -15.22000 | -.23311 | -.50623 | .15374 | .56943 | -.18823 | .06220 | .29741 |
| -68.936 | 99.357 | -.39484 | -15.44300 | -15.22900 | -.24238 | -.50343 | .15517 | .58455 | -.19112 | .06288 | .29692 |
| -69.126 | 199.320 | -.38759 | -15.44300 | -15.23400 | -.24621 | -.50384 | .15622 | .59246 | -.19273 | .06347 | .29625 |
| | GRADIENT | .00000 | .00000 | .00000 | .00000 | .00000 | .00000 | .00000 | .00000 | .00000 | .00000 |

RUN NO. 3366/ 0 RN/L = 2.38 GRADIENT INTERVAL = -5.00/ 5.00

| Y | X | Z | ALPHA | BETA | PHI | CN | CLM | CY | CYN | CBL | CA |
|---|---|---|---|---|---|---|---|---|---|---|---|
| -101.580 | 199.260 | .72361 | -15.44200 | -15.24000 | -.25606 | -.49441 | .15310 | .60033 | -.19315 | .06261 | .29689 |
| -100.560 | 99.200 | .05622 | -15.44000 | -15.23400 | -.24796 | -.49585 | .15325 | .59044 | -.19133 | .06256 | .29660 |
| -100.850 | -.694 | .18761 | -15.44000 | -15.22800 | -.24049 | -.49705 | .15287 | .57913 | -.18888 | .06215 | .29745 |
| | GRADIENT | .00000 | .00000 | .00000 | .00000 | .00000 | .00000 | .00000 | .00000 | .00000 | .00000 |

RUN NO. 3367/ 0 RN/L = 2.38 GRADIENT INTERVAL = -5.00/ 5.00

| Y | X | Z | ALPHA | BETA | PHI | CN | CLM | CY | CYN | CBL | CA |
|---|---|---|---|---|---|---|---|---|---|---|---|
| -151.140 | -.580 | .71834 | -15.43800 | -15.23600 | -.24932 | -.48358 | .14771 | .58904 | -.18951 | .06184 | .29657 |
| -148.070 | 99.383 | -.63336 | -15.44000 | -15.24000 | -.25706 | -.48639 | .14928 | .60078 | -.19325 | .06246 | .29545 |
| -149.240 | 199.280 | -.61768 | -15.44300 | -15.24400 | -.26127 | -.48909 | .15031 | .60766 | -.19497 | .06286 | .29560 |
| | GRADIENT | .00000 | .00000 | .00000 | .00000 | .00000 | .00000 | .00000 | .00000 | .00000 | .00000 |

IA143, AEDC V41A-P8A, O/ET W/R.H. SRB SEPARATING (OVX204) ( 23 MAY 77 )

REFERENCE DATA

SREF = 2690.0000 SQ.FT. XMRP = 1097.0000 IN. XT
LREF = 1290.3000 INCHES YMRP = .0000 IN. YT
BREF = 1290.3000 INCHES ZMRP = 450.0000 IN. ZT
SCALE = .0100

PARAMETRIC DATA

ALPHA = -15.000 BETA = -15.000
DALPHA = .000 DBETA = -2.000
Z = 100.000 MACH = 4.500
JET PC = .000

RUN NO. 3362/ 0 RN/L = 2.38 GRADIENT INTERVAL = -5.00/ 5.00

| Y | X | Z | ALPHA | BETA | PHI | CN | CLM | CY | CYN | CBL | CA |
|---|---|---|---|---|---|---|---|---|---|---|---|
| -67.871 | 199.370 | 98.86100 | -15.43700 | -15.23700 | -.25570 | -.50162 | .15955 | .61330 | -.20184 | .06587 | .29558 |
| -70.343 | 99.163 | 100.10000 | -15.43500 | -15.23500 | -.25331 | -.50103 | .16010 | .61020 | -.20144 | .06586 | .29577 |
| -70.495 | -.661 | 99.95100 | -15.43100 | -15.23200 | -.24763 | -.49798 | .15955 | .60359 | -.19997 | .06588 | .29637 |
| | GRADIENT | .00000 | .00000 | .00000 | .00000 | .00000 | .00000 | .00000 | .00000 | .00000 | .00000 |

IA143, AEDC V41A-P8A, O/ET W/R.H. SRB SEPARATING (OVX204) ( 23 MAY 77 )

REFERENCE DATA

SREF = 2690.0000 SQ.FT. XMRP = 1097.0000 IN. XT
LREF = 1290.3000 INCHES YMRP = .0000 IN. YT
BREF = 1290.3000 INCHES ZMRP = 450.0000 IN. ZT
SCALE = .0100

PARAMETRIC DATA

ALPHA = -15.000 BETA = -15.000
DALPHA = .000 DBETA = -2.000
Z = 100.000 MACH = 4.500
JET PC = .000

RUN NO. 3365/ 0 RN/L = 2.38 GRADIENT INTERVAL = -5.00/ 5.00

| Y | X | Z | ALPHA | BETA | PHI | CN | CLM | CY | CYN | CBL | CA |
|---|---|---|---|---|---|---|---|---|---|---|---|
| -99.493 | -.733 | 100.24000 | -15.43200 | -15.23600 | -.25026 | -.49373 | .15764 | .60634 | -.19941 | .06565 | .29627 |
| -99.347 | 99.297 | 99.38500 | -15.43500 | -15.23900 | -.25502 | -.49540 | .15740 | .61184 | -.20036 | .06558 | .29567 |
| -99.540 | 199.290 | 99.54300 | -15.43600 | -15.23900 | -.25842 | -.49437 | .15646 | .61514 | -.20171 | .06556 | .29531 |
| | GRADIENT | .00000 | .00000 | .00000 | .00000 | .00000 | .00000 | .00000 | .00000 | .00000 | .00000 |

RUN NO. 3368/ 0 RN/L = 2.38 GRADIENT INTERVAL = -5.00/ 5.00

| Y | X | Z | ALPHA | BETA | PHI | CN | CLM | CY | CYN | CBL | CA |
|---|---|---|---|---|---|---|---|---|---|---|---|
| -147.590 | 199.430 | 98.94200 | -15.44000 | -15.24300 | -.26482 | -.49324 | .15468 | .62343 | -.20352 | .06570 | .29428 |
| -150.240 | 99.435 | 100.13000 | -15.43700 | -15.24200 | -.26131 | -.49041 | .15407 | .61931 | -.20236 | .06566 | .29435 |
| -151.020 | -.654 | 100.34000 | -15.43200 | -15.24000 | -.25247 | -.48964 | .15517 | .60987 | -.19884 | .06562 | .29510 |
| | GRADIENT | .00000 | .00000 | .00000 | .00000 | .00000 | .00000 | .00000 | .00000 | .00000 | .00000 |

IA143, AEDC V41A-P8A, O/ET W/R.H. SRB SEPARATING (OVX205) ( 23 MAY 77 )

REFERENCE DATA

SREF = 2690.0000 SQ.FT. XMRP = 1097.0000 IN. XT
LREF = 1290.3000 INCHES YMRP = .0000 IN. YT
BREF = 1290.3000 INCHES ZMRP = 450.0000 IN. ZT
SCALE = .0100

PARAMETRIC DATA

ALPHA = -15.000 BETA = -15.000
DALPHA = .000 DBETA = -2.000
Z = 200.000 MACH = 4.500
JET PC = .000

RUN NO. 3363/ 0 RN/L = 2.38 GRADIENT INTERVAL = -5.00/ 5.00

| Y | X | Z | ALPHA | BETA | PHI | CN | CLM | CY | CYN | CBL | CA |
|---|---|---|---|---|---|---|---|---|---|---|---|
| -69.948 | -.544 | 199.32000 | -15.42900 | -15.23400 | -.25821 | -.48535 | .15545 | .61717 | -.20504 | .06643 | .29578 |
| -69.153 | 99.313 | 199.34000 | -15.43300 | -15.23800 | -.26289 | -.48986 | .15638 | .62251 | -.20579 | .06631 | .29550 |
| -69.468 | 199.190 | 199.34000 | -15.43600 | -15.24000 | -.26500 | -.49291 | .15698 | .62536 | -.20631 | .06634 | .29549 |
| | GRADIENT | .00000 | .00000 | .00000 | .00000 | .00000 | .00000 | .00000 | .00000 | .00000 | .00000 |

RUN NO. 3364/ 0 RN/L = 2.38 GRADIENT INTERVAL = -5.00/ 5.00

| Y | X | Z | ALPHA | BETA | PHI | CN | CLM | CY | CYN | CBL | CA |
|---|---|---|---|---|---|---|---|---|---|---|---|
| -100.590 | 199.290 | 200.17000 | -15.43900 | -15.24100 | -.26937 | -.49069 | .15467 | .62935 | -.20745 | .06620 | .29522 |
| -100.490 | 99.269 | 199.99000 | -15.43600 | -15.24000 | -.26567 | -.48804 | .15413 | .62521 | -.20604 | .06616 | .29501 |
| -100.580 | -.639 | 200.28000 | -15.43100 | -15.23700 | -.26021 | -.48376 | .15338 | .61968 | -.20477 | .06628 | .29543 |
| | GRADIENT | .00000 | .00000 | .00000 | .00000 | .00000 | .00000 | .00000 | .00000 | .00000 | .00000 |

IA143, AEDC V41A-P8A, O/ET W/R.H. SRB SEPARATING (OVX205) ( 23 MAY 77 )

REFERENCE DATA

SREF = 2690.0000 SQ.FT. XMRP = 1097.0000 IN. XT
LREF = 1290.3000 INCHES YMRP = .0000 IN. YT
BREF = 1290.3000 INCHES ZMRP = 450.0000 IN. ZT
SCALE = .0100

PARAMETRIC DATA

ALPHA = -15.000 BETA = -15.000
DALPHA = .000 DBETA = -2.000
Z = 200.000 MACH = 4.500
JET PC = .000

RUN NO. 3369/ 0 RN/L = 2.37 GRADIENT INTERVAL = -5.00/ 5.00

| Y | X | Z | ALPHA | BETA | PHI | CN | CLM | CY | CYN | CBL | CA |
|---|---|---|---|---|---|---|---|---|---|---|---|
| -149.340 | -.583 | 199.20000 | -15.43500 | -15.24000 | -.26447 | -.48475 | .15246 | .62402 | -.20549 | .06614 | .29456 |
| -148.530 | 99.419 | 199.15000 | -15.44000 | -15.24200 | -.26992 | -.48908 | .15314 | .63008 | -.20729 | .06614 | .29431 |
| -149.310 | 199.290 | 199.29000 | -15.44200 | -15.24300 | -.27256 | -.49230 | .15424 | .63252 | -.20803 | .06606 | .29437 |
| | GRADIENT | .00000 | .00000 | .00000 | .00000 | .00000 | .00000 | .00000 | .00000 | .00000 | .00000 |

IA143, AEDC V41A-P8A, O/ET W/R.H. SRB SEPARATING (OVX206) ( 23 MAY 77 )

REFERENCE DATA

SREF = 2690.0000 SQ.FT. XMRP = 1097.0000 IN. XT
LREF = 1290.3000 INCHES YMRP = .0000 IN. YT
BREF = 1290.3000 INCHES ZMRP = 450.0000 IN. ZT
SCALE = .0100

PARAMETRIC DATA

ALPHA = -15.000 BETA = -15.000
DALPHA = .000 DBETA = .000
Z = .000 MACH = 4.500
JET PC = .000

RUN NO. 3370/ 0 RN/L = 2.37 GRADIENT INTERVAL = -5.00/ 5.00

| Y | X | Z | ALPHA | BETA | PHI | CN | CLM | CY | CYN | CBL | CA |
|---|---|---|---|---|---|---|---|---|---|---|---|
| -49.844 | -.716 | -.19732 | -15.44900 | -15.21900 | -.23794 | -.50907 | .15419 | .57610 | -.19162 | .06267 | .29720 |
| -49.387 | 99.348 | -.27370 | -15.44600 | -15.22800 | -.24615 | -.50482 | .15454 | .58881 | -.19378 | .06312 | .29652 |
| -49.464 | 199.210 | -.19634 | -15.44500 | -15.23300 | -.25025 | -.50431 | .15576 | .59714 | -.19523 | .06366 | .29599 |
| | GRADIENT | .00000 | .00000 | .00000 | .00000 | .00000 | .00000 | .00000 | .00000 | .00000 | .00000 |

RUN NO. 3375/ 0 RN/L = 2.39 GRADIENT INTERVAL = -5.00/ 5.00

| Y | X | Z | ALPHA | BETA | PHI | CN | CLM | CY | CYN | CBL | CA |
|---|---|---|---|---|---|---|---|---|---|---|---|
| -101.690 | 199.160 | .69258 | -15.44300 | -15.24100 | -.25899 | -.49371 | .15267 | .60549 | -.19528 | .06306 | .29578 |
| -100.710 | 99.189 | .04842 | -15.44200 | -15.23700 | -.25390 | -.49403 | .15235 | .59737 | -.19354 | .06274 | .29547 |
| -100.970 | -.888 | .16918 | -15.44100 | -15.23000 | -.24699 | -.49290 | .15080 | .58636 | -.19088 | .06211 | .29658 |
| | GRADIENT | .00000 | .00000 | .00000 | .00000 | .00000 | .00000 | .00000 | .00000 | .00000 | .00000 |

RUN NO. 3376/ 0 RN/L = 2.39 GRADIENT INTERVAL = -5.00/ 5.00

| Y | X | Z | ALPHA | BETA | PHI | CN | CLM | CY | CYN | CBL | CA |
|---|---|---|---|---|---|---|---|---|---|---|---|
| -151.260 | -.630 | .52764 | -15.44000 | -15.23600 | -.25663 | -.48518 | .14871 | .60002 | -.19474 | .06270 | .29484 |
| -148.590 | 99.262 | -.61201 | -15.44200 | -15.24100 | -.26589 | -.48693 | .14966 | .61268 | -.19856 | .06317 | .29441 |
| -149.570 | 199.080 | -.59084 | -15.44400 | -15.24300 | -.26654 | -.49039 | .15080 | .61584 | -.19909 | .06354 | .29438 |
| | GRADIENT | .00000 | .00000 | .00000 | .00000 | .00000 | .00000 | .00000 | .00000 | .00000 | .00000 |

IA143, AEDC V41A-P8A, O/ET W/R.H. SRB SEPARATING (OVX207) ( 23 MAY 77 )

REFERENCE DATA

SREF = 2690.0000 SQ.FT. XMRP = 1097.0000 IN. XT
LREF = 1290.3000 INCHES YMRP = .0000 IN. YT
BREF = 1290.3000 INCHES ZMRP = 450.0000 IN. ZT
SCALE = .0100

PARAMETRIC DATA

ALPHA = -15.000 BETA = -15.000
DALPHA = .000 DBETA = .000
Z = 100.000 MACH = 4.500
JET PC = .000

RUN NO. 3371/ 0 RN/L = 2.38 GRADIENT INTERVAL = -5.00/ 5.00

| Y | X | Z | ALPHA | BETA | PHI | CN | CLM | CY | CYN | CBL | CA |
|---|---|---|---|---|---|---|---|---|---|---|---|
| -48.134 | 199.290 | 98.78700 | -15.43900 | -15.23700 | -.25746 | -.50380 | .16006 | .61507 | -.20255 | .06589 | .29507 |
| -50.151 | 99.309 | 100.05000 | -15.43700 | -15.23400 | -.25415 | -.50396 | .16075 | .61114 | -.20222 | .06596 | .29523 |
| -50.493 | -.757 | 99.98100 | -15.43400 | -15.23100 | -.24975 | -.50215 | .16045 | .60566 | -.20118 | .06591 | .29579 |
| | GRADIENT | .00000 | .00000 | .00000 | .00000 | .00000 | .00000 | .00000 | .00000 | .00000 | .00000 |

RUN NO. 3374/ 0 RN/L = 2.39 GRADIENT INTERVAL = -5.00/ 5.00

| Y | X | Z | ALPHA | BETA | PHI | CN | CLM | CY | CYN | CBL | CA |
|---|---|---|---|---|---|---|---|---|---|---|---|
| -100.160 | -.726 | 100.35000 | -15.43400 | -15.23800 | -.25362 | -.49348 | .15675 | .61026 | -.20007 | .06564 | .29523 |
| -99.192 | 99.312 | 99.28100 | -15.43700 | -15.24000 | -.25848 | -.49512 | .15667 | .61625 | -.20173 | .06573 | .29490 |
| -99.775 | 199.150 | 99.49600 | -15.43800 | -15.24000 | -.26008 | -.49517 | .15638 | .61771 | -.20238 | .06571 | .29446 |
| | GRADIENT | .00000 | .00000 | .00000 | .00000 | .00000 | .00000 | .00000 | .00000 | .00000 | .00000 |

RUN NO. 3377/ 0 RN/L = 2.39 GRADIENT INTERVAL = -5.00/ 5.00

| Y | X | Z | ALPHA | BETA | PHI | CN | CLM | CY | CYN | CBL | CA |
|---|---|---|---|---|---|---|---|---|---|---|---|
| -148.130 | 199.320 | 99.00300 | -15.44200 | -15.24400 | -.26818 | -.49482 | .15506 | .62762 | -.20536 | .06593 | .29388 |
| -149.560 | 99.542 | 100.13000 | -15.43900 | -15.24200 | -.26588 | -.49247 | .15462 | .62542 | -.20517 | .06600 | .29384 |
| -150.970 | -.883 | 100.28000 | -15.43400 | -15.24100 | -.25846 | -.49060 | .15517 | .61758 | -.20221 | .06597 | .29411 |
| | GRADIENT | .00000 | .00000 | .00000 | .00000 | .00000 | .00000 | .00000 | .00000 | .00000 | .00000 |

IA143, AEDC V41A-P8A, O/ET W/R.H. SRB SEPARATING (OVX208) ( 23 MAY 77 )

REFERENCE DATA

SREF = 2690.0000 SQ.FT. XMRP = 1097.0000 IN. XT
LREF = 1290.3000 INCHES YMRP = .0000 IN. YT
BREF = 1290.3000 INCHES ZMRP = 450.0000 IN. ZT
SCALE = .0100

PARAMETRIC DATA

ALPHA = -15.000 BETA = -15.000
DALPHA = .000 DBETA = .000
Z = 200.000 MACH = 4.500
JET PC = .000

RUN NO. 3372/ 0 RN/L = 2.39 GRADIENT INTERVAL = -5.00/ 5.00

| Y | X | Z | ALPHA | BETA | PHI | CN | CLM | CY | CYN | CBL | CA |
|---|---|---|---|---|---|---|---|---|---|---|---|
| -50.111 | -.703 | 199.41000 | -15.43000 | -15.23400 | -.25877 | -.48788 | .15618 | .61788 | -.20551 | .06646 | .29540 |
| -48.873 | 99.475 | 199.39000 | -15.43400 | -15.23800 | -.26335 | -.49190 | .15685 | .62328 | -.20607 | .06637 | .29488 |
| -49.417 | 199.410 | 199.55000 | -15.43700 | -15.24000 | -.26565 | -.49441 | .15709 | .62597 | -.20657 | .06635 | .29494 |
| | GRADIENT | .00000 | .00000 | .00000 | .00000 | .00000 | .00000 | .00000 | .00000 | .00000 | .00000 |

IA143, AEDC V41A-P8A, O/ET W/R.H. SRB SEPARATING (OVX208) ( 23 MAY 77 )

REFERENCE DATA

SREF = 2690.0000 SQ.FT. XMRP = 1097.0000 IN. XT
LREF = 1290.3000 INCHES YMRP = .0000 IN. YT
BREF = 1290.3000 INCHES ZMRP = 450.0000 IN. ZT
SCALE = .0100

PARAMETRIC DATA

ALPHA = -15.000 BETA = -15.000
DALPHA = .000 DBETA = .000
Z = 200.000 MACH = 4.500
JET PC = .000

RUN NO. 3373/ 0 RN/L = 2.39 GRADIENT INTERVAL = -5.00/ 5.00

| Y | X | Z | ALPHA | BETA | PHI | CN | CLM | CY | CYN | CBL | CA |
|---|---|---|---|---|---|---|---|---|---|---|---|
| -101.210 | 199.070 | 200.35000 | -15.44000 | -15.24200 | -.27028 | -.49214 | .15493 | .63032 | -.20763 | .06619 | .29448 |
| -100.210 | 99.297 | 199.88000 | -15.43800 | -15.24100 | -.26723 | -.49049 | .15461 | .62735 | -.20659 | .06623 | .29434 |
| -99.802 | -.568 | 200.32000 | -15.43300 | -15.23800 | -.26265 | -.48664 | .15413 | .62197 | -.20548 | .06624 | .29430 |
| | GRADIENT | .00000 | .00000 | .00000 | .00000 | .00000 | .00000 | .00000 | .00000 | .00000 | .00000 |

RUN NO. 3378/ 0 RN/L = 2.39 GRADIENT INTERVAL = -5.00/ 5.00

| Y | X | Z | ALPHA | BETA | PHI | CN | CLM | CY | CYN | CBL | CA |
|---|---|---|---|---|---|---|---|---|---|---|---|
| -149.670 | -.671 | 199.13000 | -15.43700 | -15.24000 | -.26676 | -.48753 | .15333 | .62680 | -.20654 | .06623 | .29371 |
| -149.050 | 99.341 | 199.08000 | -15.44100 | -15.24200 | -.27175 | -.49105 | .15378 | .63174 | -.20792 | .06613 | .29313 |
| -149.110 | 199.340 | 199.30000 | -15.44300 | -15.24300 | -.27406 | -.49403 | .15476 | .63410 | -.20853 | .06609 | .29382 |
| | GRADIENT | .00000 | .00000 | .00000 | .00000 | .00000 | .00000 | .00000 | .00000 | .00000 | .00000 |

IA143, AEDC V41A-P8A, O/ET W/R.H. SRB SEPARATING (OVX209) ( 23 MAY 77 )

REFERENCE DATA

SREF = 2690.0000 SQ.FT. XMRP = 1097.0000 IN. XT
LREF = 1290.3000 INCHES YMRP = .0000 IN. YT
BREF = 1290.3000 INCHES ZMRP = 450.0000 IN. ZT
SCALE = .0100

PARAMETRIC DATA

ALPHA = -15.000 BETA = -15.000
DALPHA = .000 DBETA = 2.000
Z = .000 MACH = 4.500
JET PC = .000

RUN NO. 3379/ 0 RN/L = 2.39 GRADIENT INTERVAL = -5.00/ 5.00

| Y | X | Z | ALPHA | BETA | PHI | CN | CLM | CY | CYN | CBL | CA |
|---|---|---|---|---|---|---|---|---|---|---|---|
| -49.344 | -.690 | -.04808 | -15.44900 | -15.22200 | -.24726 | -.50408 | .15254 | .58589 | -.19454 | .06261 | .29672 |
| -49.356 | 99.359 | -.18260 | -15.44700 | -15.23100 | -.25217 | -.50253 | .15421 | .59563 | -.19550 | .06315 | .29618 |
| -49.414 | 199.270 | -.23791 | -15.44600 | -15.23500 | -.25514 | -.50171 | .15479 | .60135 | -.19623 | .06346 | .29583 |
| | GRADIENT | .00000 | .00000 | .00000 | .00000 | .00000 | .00000 | .00000 | .00000 | .00000 | .00000 |

RUN NO. 3384/ 0 RN/L = 2.39 GRADIENT INTERVAL = -5.00/ 5.00

| Y | X | Z | ALPHA | BETA | PHI | CN | CLM | CY | CYN | CBL | CA |
|---|---|---|---|---|---|---|---|---|---|---|---|
| -101.330 | 199.110 | .57321 | -15.44400 | -15.24200 | -.26381 | -.49367 | .15269 | .61241 | -.19846 | .06360 | .29490 |
| -100.150 | 99.305 | .06895 | -15.44300 | -15.23800 | -.25929 | -.49456 | .15293 | .60649 | -.19727 | .06352 | .29477 |
| -100.870 | -.940 | .14069 | -15.44200 | -15.23300 | -.25408 | -.49296 | .15138 | .59755 | -.19540 | .06299 | .29526 |
| | GRADIENT | .00000 | .00000 | .00000 | .00000 | .00000 | .00000 | .00000 | .00000 | .00000 | .00000 |

IA143, AEDC V41A-P8A, O/ET W/R.H. SRB SEPARATING (OVX209) ( 23 MAY 77 )

REFERENCE DATA

SREF = 2690.0000 SQ.FT. XMRP = 1097.0000 IN. XT
LREF = 1290.3000 INCHES YMRP = .0000 IN. YT
BREF = 1290.3000 INCHES ZMRP = 450.0000 IN. ZT
SCALE = .0100

PARAMETRIC DATA

ALPHA = -15.000 BETA = -15.000
DALPHA = .000 DBETA = 2.000
Z = .000 MACH = 4.500
JET PC = .000

RUN NO. 3385/ 0 RN/L = 2.39 GRADIENT INTERVAL = -5.00/ 5.00

| Y | X | Z | ALPHA | BETA | PHI | CN | CLM | CY | CYN | CBL | CA |
|---|---|---|---|---|---|---|---|---|---|---|---|
| -151.290 | -.819 | .42965 | -15.44000 | -15.23700 | -.26231 | -.48885 | .15131 | .61117 | -.20009 | .06393 | .29411 |
| -147.800 | 99.470 | -.65899 | -15.44400 | -15.24100 | -.27006 | -.49062 | .15174 | .62094 | -.20273 | .06413 | .29423 |
| -149.190 | 199.310 | -.50125 | -15.44500 | -15.24300 | -.26942 | -.49314 | .15265 | .62206 | -.20242 | .06439 | .29394 |
| | GRADIENT | .00000 | .00000 | .00000 | .00000 | .00000 | .00000 | .00000 | .00000 | .00000 | .00000 |

IA143, AEDC V41A-P8A, O/ET W/R.H. SRB SEPARATING (OVX210) ( 23 MAY 77 )

REFERENCE DATA

SREF = 2690.0000 SQ.FT. XMRP = 1097.0000 IN. XT
LREF = 1290.3000 INCHES YMRP = .0000 IN. YT
BREF = 1290.3000 INCHES ZMRP = 450.0000 IN. ZT
SCALE = .0100

PARAMETRIC DATA

ALPHA = -15.000 BETA = -15.000
DALPHA = .000 DBETA = 2.000
Z = 100.000 MACH = 4.500
JET PC = .000

RUN NO. 3380/ 0 RN/L = 2.39 GRADIENT INTERVAL = -5.00/ 5.00

| Y | X | Z | ALPHA | BETA | PHI | CN | CLM | CY | CYN | CBL | CA |
|---|---|---|---|---|---|---|---|---|---|---|---|
| -48.414 | 199.300 | 98.78200 | -15.43900 | -15.23900 | -.25824 | -.50132 | .15867 | .61664 | -.20250 | .06595 | .29489 |
| -50.172 | 99.237 | 99.91200 | -15.43700 | -15.23700 | -.25580 | -.50148 | .15933 | .61322 | -.20210 | .06591 | .29460 |
| -50.098 | -.738 | 99.88300 | -15.43500 | -15.23400 | -.25276 | -.49841 | .15851 | .60842 | -.20112 | .06575 | .29524 |
| | GRADIENT | .00000 | .00000 | .00000 | .00000 | .00000 | .00000 | .00000 | .00000 | .00000 | .00000 |

RUN NO. 3383/ 0 RN/L = 2.39 GRADIENT INTERVAL = -5.00/ 5.00

| Y | X | Z | ALPHA | BETA | PHI | CN | CLM | CY | CYN | CBL | CA |
|---|---|---|---|---|---|---|---|---|---|---|---|
| -99.830 | -.731 | 100.27000 | -15.43600 | -15.23900 | -.25783 | -.49527 | .15722 | .61629 | -.20229 | .06596 | .29442 |
| -99.311 | 99.397 | 99.32800 | -15.43800 | -15.24100 | -.26176 | -.49596 | .15678 | .62079 | -.20365 | .06600 | .29414 |
| -99.480 | 199.330 | 99.59500 | -15.44000 | -15.24200 | -.26420 | -.49618 | .15655 | .62314 | -.20444 | .06597 | .29407 |
| | GRADIENT | .00000 | .00000 | .00000 | .00000 | .00000 | .00000 | .00000 | .00000 | .00000 | .00000 |

RUN NO. 3386/ 0 RN/L = 2.39 GRADIENT INTERVAL = -5.00/ 5.00

| Y | X | Z | ALPHA | BETA | PHI | CN | CLM | CY | CYN | CBL | CA |
|---|---|---|---|---|---|---|---|---|---|---|---|
| -147.840 | 199.490 | 99.11500 | -15.44300 | -15.24300 | -.27119 | -.49681 | .15589 | .63143 | -.20720 | .06608 | .29374 |
| -150.450 | 99.234 | 100.21000 | -15.44100 | -15.24200 | -.26973 | -.49405 | .15532 | .62971 | -.20726 | .06615 | .29367 |
| -150.530 | -.722 | 100.38000 | -15.43700 | -15.24100 | -.26604 | -.49172 | .15544 | .62577 | -.20606 | .06618 | .29365 |
| | GRADIENT | .00000 | .00000 | .00000 | .00000 | .00000 | .00000 | .00000 | .00000 | .00000 | .00000 |

IA143, AEDC V41A-P8A, O/ET W/R.H. SRB SEPARATING (OVX211) ( 23 MAY 77 )

REFERENCE DATA

SREF = 2690.0000 SQ.FT. XMRP = 1097.0000 IN. XT
LREF = 1290.3000 INCHES YMRP = .0000 IN. YT
BREF = 1290.3000 INCHES ZMRP = 450.0000 IN. ZT
SCALE = .0100

PARAMETRIC DATA

ALPHA = -15.000 BETA = -15.000
DALPHA = .000 DBETA = 2.000
Z = 200.000 MACH = 4.500
JET PC = .000

RUN NO. 3381/ 0 RN/L = 2.39 GRADIENT INTERVAL = -5.00/ 5.00

| Y | X | Z | ALPHA | BETA | PHI | CN | CLM | CY | CYN | CBL | CA |
|---|---|---|---|---|---|---|---|---|---|---|---|
| -49.730 | -.528 | 199.37000 | -15.43200 | -15.23600 | -.26128 | -.48873 | .15584 | .62025 | -.20579 | .06632 | .29442 |
| -49.319 | 99.357 | 199.53000 | -15.43600 | -15.23900 | -.26474 | -.49220 | .15627 | .62452 | -.20622 | .06630 | .29423 |
| -49.549 | 199.210 | 199.46000 | -15.43800 | -15.24000 | -.26681 | -.49431 | .15666 | .62702 | -.20681 | .06630 | .29440 |
| | GRADIENT | .00000 | .00000 | .00000 | .00000 | .00000 | .00000 | .00000 | .00000 | .00000 | .00000 |

RUN NO. 3382/ 0 RN/L = 2.39 GRADIENT INTERVAL = -5.00/ 5.00

| Y | X | Z | ALPHA | BETA | PHI | CN | CLM | CY | CYN | CBL | CA |
|---|---|---|---|---|---|---|---|---|---|---|---|
| -100.690 | 199.190 | 200.28000 | -15.44200 | -15.24200 | -.27222 | -.49400 | .15516 | .63229 | -.20812 | .06613 | .29391 |
| -99.907 | 99.363 | 199.95000 | -15.43900 | -15.24100 | -.26908 | -.49229 | .15500 | .62903 | -.20711 | .06618 | .29342 |
| -100.640 | -.628 | 200.32000 | -15.43600 | -15.23900 | -.26563 | -.48945 | .15488 | .62527 | -.20654 | .06627 | .29363 |
| | GRADIENT | .00000 | .00000 | .00000 | .00000 | .00000 | .00000 | .00000 | .00000 | .00000 | .00000 |

RUN NO. 3387/ 0 RN/L = 2.39 GRADIENT INTERVAL = -5.00/ 5.00

| Y | X | Z | ALPHA | BETA | PHI | CN | CLM | CY | CYN | CBL | CA |
|---|---|---|---|---|---|---|---|---|---|---|---|
| -149.230 | -.601 | 199.20000 | -15.43900 | -15.24100 | -.26999 | -.49042 | .15424 | .63037 | -.20779 | .06628 | .29407 |
| -149.010 | 99.190 | 199.14000 | -15.44300 | -15.24300 | -.27402 | -.49284 | .15444 | .63336 | -.20855 | .06606 | .29344 |
| -149.020 | 199.360 | 199.28000 | -15.44400 | -15.24400 | -.27526 | -.49553 | .15531 | .63541 | -.20895 | .06608 | .29371 |
| | GRADIENT | .00000 | .00000 | .00000 | .00000 | .00000 | .00000 | .00000 | .00000 | .00000 | .00000 |

IA143, AEDC V41A-P8A, O/ET W/R.H. SRB SEPARATING (OVX212) ( 23 MAY 77 )

REFERENCE DATA

SREF = 2690.0000 SQ.FT. XMRP = 1097.0000 IN. XT
LREF = 1290.3000 INCHES YMRP = .0000 IN. YT
BREF = 1290.3000 INCHES ZMRP = 450.0000 IN. ZT
SCALE = .0100

PARAMETRIC DATA

ALPHA = -15.000 BETA = -15.000
DALPHA = -4.000 DBETA = -4.000
Z = .000 MACH = 4.500
JET PC = .000

RUN NO. 3388/ 0 RN/L = 2.39 GRADIENT INTERVAL = -5.00/ 5.00

| Y | X | Z | ALPHA | BETA | PHI | CN | CLM | CY | CYN | CBL | CA |
|---|---|---|---|---|---|---|---|---|---|---|---|
| -119.860 | -.557 | -.04801 | -15.44800 | -15.22400 | -.24147 | -.47450 | .13473 | .54587 | -.17222 | .05464 | .29537 |
| -118.410 | 99.215 | -.78368 | -15.44700 | -15.23100 | -.25107 | -.47535 | .13740 | .56595 | -.17860 | .05648 | .29492 |
| -118.890 | 199.200 | -.50709 | -15.44700 | -15.23800 | -.25633 | -.48030 | .14201 | .58067 | -.18315 | .05822 | .29546 |
| | GRADIENT | .00000 | .00000 | .00000 | .00000 | .00000 | .00000 | .00000 | .00000 | .00000 | .00000 |

IA143, AEDC V41A-P8A, O/ET W/R.H. SRB SEPARATING (OVX212) ( 23 MAY 77 )

REFERENCE DATA

SREF = 2690.0000 SQ.FT. XMRP = 1097.0000 IN. XT
LREF = 1290.3000 INCHES YMRP = .0000 IN. YT
BREF = 1290.3000 INCHES ZMRP = 450.0000 IN. ZT
SCALE = .0100

PARAMETRIC DATA

ALPHA = -15.000 BETA = -15.000
DALPHA = -4.000 DBETA = -4.000
Z = .000 MACH = 4.500
JET PC = .000

RUN NO. 3393/ 0 RN/L = 2.39 GRADIENT INTERVAL = -5.00/ 5.00

| Y | X | Z | ALPHA | BETA | PHI | CN | CLM | CY | CYN | CBL | CA |
|---|---|---|---|---|---|---|---|---|---|---|---|
| -152.560 | 199.340 | 1.26030 | -15.44800 | -15.24200 | -.26236 | -.47528 | .13943 | .58823 | -.18494 | .05833 | .29556 |
| -150.580 | 99.330 | .46144 | -15.44800 | -15.23600 | -.26019 | -.46700 | .13398 | .57580 | -.18071 | .05631 | .29484 |
| -151.900 | -.654 | .50765 | -15.44400 | -15.23000 | -.24662 | -.46705 | .13367 | .55500 | -.17368 | .05508 | .29533 |
| | GRADIENT | .00000 | .00000 | .00000 | .00000 | .00000 | .00000 | .00000 | .00000 | .00000 | .00000 |

RUN NO. 3394/ 0 RN/L = 2.39 GRADIENT INTERVAL = -5.00/ 5.00

| Y | X | Z | ALPHA | BETA | PHI | CN | CLM | CY | CYN | CBL | CA |
|---|---|---|---|---|---|---|---|---|---|---|---|
| -200.710 | -.410 | .30128 | -15.44700 | -15.23800 | -.26256 | -.45446 | .12781 | .57190 | -.17739 | .05479 | .29507 |
| -197.760 | 99.184 | -.46123 | -15.45200 | -15.24100 | -.27352 | -.45838 | .12859 | .58806 | -.18388 | .05582 | .29448 |
| -199.010 | 199.130 | -.74909 | -15.45000 | -15.24500 | -.26817 | -.47139 | .13686 | .59735 | -.18778 | .05884 | .29497 |
| | GRADIENT | .00000 | .00000 | .00000 | .00000 | .00000 | .00000 | .00000 | .00000 | .00000 | .00000 |

IA143, AEDC V41A-P8A, O/ET W/R.H. SRB SEPARATING (OVX213) ( 23 MAY 77 )

REFERENCE DATA

SREF = 2690.0000 SQ.FT. XMRP = 1097.0000 IN. XT
LREF = 1290.3000 INCHES YMRP = .0000 IN. YT
BREF = 1290.3000 INCHES ZMRP = 450.0000 IN. ZT
SCALE = .0100

PARAMETRIC DATA

ALPHA = -15.000 BETA = -15.000
DALPHA = -4.000 DBETA = -4.000
Z = 100.000 MACH = 4.500
JET PC = .000

RUN NO. 3389/ 0 RN/L = 2.38 GRADIENT INTERVAL = -5.00/ 5.00

| Y | X | Z | ALPHA | BETA | PHI | CN | CLM | CY | CYN | CBL | CA |
|---|---|---|---|---|---|---|---|---|---|---|---|
| -117.300 | 199.240 | 98.70000 | -15.43400 | -15.23800 | -.25043 | -.49180 | .15471 | .60160 | -.19556 | .06431 | .29498 |
| -119.290 | 99.447 | 100.42000 | -15.43400 | -15.23600 | -.24761 | -.49420 | .15560 | .59667 | -.19400 | .06398 | .29546 |
| -120.670 | -.668 | 100.51000 | -15.43200 | -15.23100 | -.24125 | -.49125 | .15433 | .58540 | -.19080 | .06323 | .29530 |
| | GRADIENT | .00000 | .00000 | .00000 | .00000 | .00000 | .00000 | .00000 | .00000 | .00000 | .00000 |

RUN NO. 3392/ 0 RN/L = 2.38 GRADIENT INTERVAL = -5.00/ 5.00

| Y | X | Z | ALPHA | BETA | PHI | CN | CLM | CY | CYN | CBL | CA |
|---|---|---|---|---|---|---|---|---|---|---|---|
| -150.520 | -.612 | 100.60000 | -15.43200 | -15.23700 | -.24449 | -.48259 | .14978 | .58748 | -.18904 | .06254 | .29558 |
| -148.600 | 99.198 | 99.10700 | -15.43500 | -15.24000 | -.25082 | -.48752 | .15178 | .59994 | -.19360 | .06371 | .29468 |
| -149.300 | 199.180 | 99.51500 | -15.43700 | -15.24200 | -.25566 | -.48969 | .15273 | .60843 | -.19676 | .06441 | .29419 |
| | GRADIENT | .00000 | .00000 | .00000 | .00000 | .00000 | .00000 | .00000 | .00000 | .00000 | .00000 |

IA143, AEDC V41A-P8A, O/ET W/R.H. SRB SEPARATING (OVX213) ( 23 MAY 77 )

REFERENCE DATA

SREF = 2690.0000 SQ.FT. XMRP = 1097.0000 IN. XT
LREF = 1290.3000 INCHES YMRP = .0000 IN. YT
BREF = 1290.3000 INCHES ZMRP = 450.0000 IN. ZT
SCALE = .0100

PARAMETRIC DATA

ALPHA = -15.000 BETA = -15.000
DALPHA = -4.000 DBETA = -4.000
Z = 100.000 MACH = 4.500
JET PC = .000

RUN NO. 3395/ 0 RN/L = 2.38 GRADIENT INTERVAL = -5.00/ 5.00

| Y | X | Z | ALPHA | BETA | PHI | CN | CLM | CY | CYN | CBL | CA |
|---|---|---|---|---|---|---|---|---|---|---|---|
| -197.620 | 198.910 | 98.75400 | -15.44100 | -15.24500 | -.25994 | -.48753 | .14992 | .61386 | -.19794 | .06448 | .29261 |
| -200.930 | 99.348 | 100.61000 | -15.43800 | -15.24200 | -.25918 | -.48085 | .14719 | .60830 | -.19620 | .06359 | .29236 |
| -201.260 | -.621 | 100.46000 | -15.43600 | -15.24100 | -.25279 | -.47673 | .14543 | .59666 | -.19087 | .06241 | .29408 |
| | GRADIENT | .00000 | .00000 | .00000 | .00000 | .00000 | .00000 | .00000 | .00000 | .00000 | .00000 |

IA143, AEDC V41A-P8A, O/ET W/R.H. SRB SEPARATING (OVX214) ( 23 MAY 77 )

REFERENCE DATA

SREF = 2690.0000 SQ.FT. XMRP = 1097.0000 IN. XT
LREF = 1290.3000 INCHES YMRP = .0000 IN. YT
BREF = 1290.3000 INCHES ZMRP = 450.0000 IN. ZT
SCALE = .0100

PARAMETRIC DATA

ALPHA = -15.000 BETA = -15.000
DALPHA = -4.000 DBETA = -4.000
Z = 200.000 MACH = 4.500
JET PC = .000

RUN NO. 3390/ 0 RN/L = 2.38 GRADIENT INTERVAL = -5.00/ 5.00

| Y | X | Z | ALPHA | BETA | PHI | CN | CLM | CY | CYN | CBL | CA |
|---|---|---|---|---|---|---|---|---|---|---|---|
| -119.500 | -.718 | 199.32000 | -15.42500 | -15.23400 | -.25102 | -.48000 | .15272 | .60674 | -.20003 | .06563 | .29442 |
| -118.780 | 99.231 | 199.08000 | -15.43100 | -15.23800 | -.25828 | -.48515 | .15362 | .61523 | -.20225 | .06568 | .29431 |
| -119.370 | 199.220 | 199.37000 | -15.43500 | -15.24000 | -.26273 | -.48762 | .15361 | .62020 | -.20345 | .06568 | .29427 |
| | GRADIENT | .00000 | .00000 | .00000 | .00000 | .00000 | .00000 | .00000 | .00000 | .00000 | .00000 |

RUN NO. 3391/ 0 RN/L = 2.38 GRADIENT INTERVAL = -5.00/ 5.00

| Y | X | Z | ALPHA | BETA | PHI | CN | CLM | CY | CYN | CBL | CA |
|---|---|---|---|---|---|---|---|---|---|---|---|
| -150.750 | 199.200 | 200.31000 | -15.43800 | -15.24200 | -.26483 | -.48701 | .15198 | .62232 | -.20358 | .06554 | .29364 |
| -150.490 | 99.278 | 200.40000 | -15.43500 | -15.24200 | -.26117 | -.48349 | .15078 | .61853 | -.20187 | .06549 | .29382 |
| -151.110 | -.575 | 200.65000 | -15.43000 | -15.23900 | -.25426 | -.47860 | .15017 | .61057 | -.19975 | .06547 | .29430 |
| | GRADIENT | .00000 | .00000 | .00000 | .00000 | .00000 | .00000 | .00000 | .00000 | .00000 | .00000 |

RUN NO. 3396/ 0 RN/L = 2.38 GRADIENT INTERVAL = -5.00/ 5.00

| Y | X | Z | ALPHA | BETA | PHI | CN | CLM | CY | CYN | CBL | CA |
|---|---|---|---|---|---|---|---|---|---|---|---|
| -198.600 | -.791 | 198.96000 | -15.43500 | -15.24200 | -.25887 | -.48002 | .14865 | .61543 | -.20039 | .06530 | .29337 |
| -198.760 | 99.174 | 199.18000 | -15.43800 | -15.24300 | -.26422 | -.48444 | .15006 | .62151 | -.20276 | .06540 | .29279 |
| -198.660 | 199.240 | 199.36000 | -15.44200 | -15.24400 | -.26870 | -.48899 | .15145 | .62596 | -.20425 | .06538 | .29256 |
| | GRADIENT | .00000 | .00000 | .00000 | .00000 | .00000 | .00000 | .00000 | .00000 | .00000 | .00000 |

IA143, AEDC V41A-P8A, O/ET W/R.H. SRB SEPARATING (OVX215) ( 23 MAY 77 )

REFERENCE DATA

SREF = 2690.0000 SQ.FT. XMRP = 1097.0000 IN. XT
LREF = 1290.3000 INCHES YMRP = .0000 IN. YT
BREF = 1290.3000 INCHES ZMRP = 450.0000 IN. ZT
SCALE = .0100

PARAMETRIC DATA

ALPHA = -15.000 BETA = -15.000
DALPHA = -4.000 DBETA = -2.000
Z = .000 MACH = 4.500
JET PC = .000

RUN NO. 3397/ 0 RN/L = 2.38 GRADIENT INTERVAL = -5.00/ 5.00

| Y | X | Z | ALPHA | BETA | PHI | CN | CLM | CY | CYN | CBL | CA |
|---|---|---|---|---|---|---|---|---|---|---|---|
| -69.896 | -.787 | .04320 | -15.45800 | -15.21400 | -.24508 | -.48670 | .13648 | .54920 | -.17810 | .05526 | .29521 |
| -69.086 | 99.230 | -.42363 | -15.45500 | -15.22400 | -.25406 | -.48348 | .13784 | .56691 | -.18215 | .05552 | .29441 |
| -69.175 | 199.290 | -.31300 | -15.45000 | -15.23100 | -.25403 | -.48711 | .14322 | .57794 | -.18494 | .05858 | .29475 |
| | GRADIENT | .00000 | .00000 | .00000 | .00000 | .00000 | .00000 | .00000 | .00000 | .00000 | .00000 |

RUN NO. 3402/ 0 RN/L = 2.38 GRADIENT INTERVAL = -5.00/ 5.00

| Y | X | Z | ALPHA | BETA | PHI | CN | CLM | CY | CYN | CBL | CA |
|---|---|---|---|---|---|---|---|---|---|---|---|
| -102.090 | 199.330 | 1.23910 | -15.44800 | -15.23800 | -.26068 | -.48206 | .14286 | .58757 | -.18648 | .05877 | .29583 |
| -100.850 | 99.091 | .20008 | -15.45000 | -15.23000 | -.25745 | -.47764 | .13813 | .57354 | -.18264 | .05687 | .29487 |
| -100.840 | -.753 | .53973 | -15.45100 | -15.22200 | -.25059 | -.47721 | .13574 | .55632 | -.17760 | .05506 | .29547 |
| | GRADIENT | .00000 | .00000 | .00000 | .00000 | .00000 | .00000 | .00000 | .00000 | .00000 | .00000 |

RUN NO. 3403/ 0 RN/L = 2.38 GRADIENT INTERVAL = -5.00/ 5.00

| Y | X | Z | ALPHA | BETA | PHI | CN | CLM | CY | CYN | CBL | CA |
|---|---|---|---|---|---|---|---|---|---|---|---|
| -151.120 | -.405 | 1.00080 | -15.44600 | -15.23300 | -.25902 | -.46253 | .13197 | .57000 | -.17907 | .05548 | .29516 |
| -147.950 | 99.203 | -.93128 | -15.45100 | -15.23700 | -.26980 | -.46597 | .13284 | .58648 | -.18501 | .05653 | .29493 |
| -149.240 | 199.280 | -.56173 | -15.44900 | -15.24200 | -.26677 | -.47567 | .13985 | .59513 | -.18790 | .05882 | .29553 |
| | GRADIENT | .00000 | .00000 | .00000 | .00000 | .00000 | .00000 | .00000 | .00000 | .00000 | .00000 |

IA143, AEDC V41A-P8A, O/ET W/R.H. SRB SEPARATING (OVX216) ( 23 MAY 77 )

REFERENCE DATA

SREF = 2690.0000 SQ.FT. XMRP = 1097.0000 IN. XT
LREF = 1290.3000 INCHES YMRP = .0000 IN. YT
BREF = 1290.3000 INCHES ZMRP = 450.0000 IN. ZT
SCALE = .0100

PARAMETRIC DATA

ALPHA = -15.000 BETA = -15.000
DALPHA = -4.000 DBETA = -2.000
Z = 100.000 MACH = 4.500
JET PC = .000

RUN NO. 3398/ 0 RN/L = 2.38 GRADIENT INTERVAL = -5.00/ 5.00

| Y | X | Z | ALPHA | BETA | PHI | CN | CLM | CY | CYN | CBL | CA |
|---|---|---|---|---|---|---|---|---|---|---|---|
| -67.536 | 198.980 | 98.44800 | -15.43800 | -15.23600 | -.25064 | -.50269 | .15884 | .60328 | -.19756 | .06484 | .29468 |
| -70.191 | 99.324 | 100.41000 | -15.43600 | -15.23200 | -.24766 | -.50121 | .15854 | .59796 | -.19651 | .06453 | .29500 |
| -70.675 | -.724 | 100.28000 | -15.43400 | -15.22700 | -.24217 | -.49830 | .15711 | .58799 | -.19420 | .06392 | .29525 |
| | GRADIENT | .00000 | .00000 | .00000 | .00000 | .00000 | .00000 | .00000 | .00000 | .00000 | .00000 |

IA143, AEDC V41A-P8A, O/ET W/R.H. SRB SEPARATING (OVX216) ( 23 MAY 77 )

REFERENCE DATA

SREF = 2690.0000 SQ.FT. XMRP = 1097.0000 IN. XT
LREF = 1290.3000 INCHES YMRP = .0000 IN. YT
BREF = 1290.3000 INCHES ZMRP = 450.0000 IN. ZT
SCALE = .0100

PARAMETRIC DATA

ALPHA = -15.000 BETA = -15.000
DALPHA = -4.000 DBETA = -2.000
Z = 100.000 MACH = 4.500
JET PC = .000

RUN NO. 3401/ 0 RN/L = 2.38 GRADIENT INTERVAL = -5.00/ 5.00

| Y | X | Z | ALPHA | BETA | PHI | CN | CLM | CY | CYN | CBL | CA |
|---|---|---|---|---|---|---|---|---|---|---|---|
| -100.530 | -.769 | 100.37000 | -15.43300 | -15.23100 | -.24616 | -.49183 | .15444 | .59095 | -.19341 | .06337 | .29527 |
| -99.240 | 99.233 | 99.36300 | -15.43500 | -15.23500 | -.25001 | -.49528 | .15584 | .59983 | -.19569 | .06415 | .29515 |
| -99.454 | 199.210 | 99.61000 | -15.43600 | -15.23800 | -.25229 | -.49333 | .15494 | .60439 | -.19690 | .06453 | .29444 |
| | GRADIENT | .00000 | .00000 | .00000 | .00000 | .00000 | .00000 | .00000 | .00000 | .00000 | .00000 |

RUN NO. 3404/ 0 RN/L = 2.38 GRADIENT INTERVAL = -5.00/ 5.00

| Y | X | Z | ALPHA | BETA | PHI | CN | CLM | CY | CYN | CBL | CA |
|---|---|---|---|---|---|---|---|---|---|---|---|
| -147.610 | 199.060 | 98.77400 | -15.43900 | -15.24300 | -.25921 | -.49010 | .15214 | .61301 | -.19851 | .06460 | .29340 |
| -150.350 | 99.200 | 100.52000 | -15.43700 | -15.24100 | -.25530 | -.48564 | .15022 | .60522 | -.19563 | .06388 | .29291 |
| -151.140 | -.732 | 100.72000 | -15.43400 | -15.23800 | -.24881 | -.48348 | .14963 | .59396 | -.19128 | .06290 | .29430 |
| | GRADIENT | .00000 | .00000 | .00000 | .00000 | .00000 | .00000 | .00000 | .00000 | .00000 | .00000 |

IA143, AEDC V41A-P8A, O/ET W/R.H. SRB SEPARATING (OVX217) ( 23 MAY 77 )

REFERENCE DATA

SREF = 2690.0000 SQ.FT. XMRP = 1097.0000 IN. XT
LREF = 1290.3000 INCHES YMRP = .0000 IN. YT
BREF = 1290.3000 INCHES ZMRP = 450.0000 IN. ZT
SCALE = .0100

PARAMETRIC DATA

ALPHA = -15.000 BETA = -15.000
DALPHA = -4.000 DBETA = -2.000
Z = 200.000 MACH = 4.500
JET PC = .000

RUN NO. 3399/ 0 RN/L = 2.38 GRADIENT INTERVAL = -5.00/ 5.00

| Y | X | Z | ALPHA | BETA | PHI | CN | CLM | CY | CYN | CBL | CA |
|---|---|---|---|---|---|---|---|---|---|---|---|
| -69.502 | -.746 | 199.23000 | -15.42500 | -15.23100 | -.24919 | -.48718 | .15678 | .60548 | -.20104 | .06600 | .29472 |
| -69.086 | 99.243 | 199.32000 | -15.43000 | -15.23600 | -.25630 | -.49087 | .15718 | .61413 | -.20302 | .06606 | .29417 |
| -69.682 | 199.280 | 199.43000 | -15.43500 | -15.23900 | -.26024 | -.49403 | .15741 | .61889 | -.20390 | .06610 | .29420 |
| | GRADIENT | .00000 | .00000 | .00000 | .00000 | .00000 | .00000 | .00000 | .00000 | .00000 | .00000 |

RUN NO. 3400/ 0 RN/L = 2.38 GRADIENT INTERVAL = -5.00/ 5.00

| Y | X | Z | ALPHA | BETA | PHI | CN | CLM | CY | CYN | CBL | CA |
|---|---|---|---|---|---|---|---|---|---|---|---|
| -100.420 | 199.370 | 200.62000 | -15.43600 | -15.24000 | -.26341 | -.48834 | .15362 | .62085 | -.20367 | .06564 | .29385 |
| -100.340 | 99.080 | 200.07000 | -15.43300 | -15.23900 | -.25885 | -.48642 | .15368 | .61582 | -.20221 | .06566 | .29393 |
| -100.910 | -.773 | 200.47000 | -15.42700 | -15.23400 | -.25199 | -.48211 | .15343 | .60807 | -.20066 | .06570 | .29433 |
| | GRADIENT | .00000 | .00000 | .00000 | .00000 | .00000 | .00000 | .00000 | .00000 | .00000 | .00000 |

IA143, AEDC V41A-P8A, O/ET W/R.H. SRB SEPARATING (OVX217) ( 23 MAY 77 )

REFERENCE DATA

SREF = 2690.0000 SQ.FT. XMRP = 1097.0000 IN. XT
LREF = 1290.3000 INCHES YMRP = .0000 IN. YT
BREF = 1290.3000 INCHES ZMRP = 450.0000 IN. ZT
SCALE = .0100

PARAMETRIC DATA

ALPHA = -15.000 BETA = -15.000
DALPHA = -4.000 DBETA = -2.000
Z = 200.000 MACH = 4.500
JET PC = .000

RUN NO. 3405/ 0 RN/L = 2.38 GRADIENT INTERVAL = -5.00/ 5.00

| Y | X | Z | ALPHA | BETA | PHI | CN | CLM | CY | CYN | CBL | CA |
|---|---|---|---|---|---|---|---|---|---|---|---|
| -148.930 | -.749 | 199.11000 | -15.43100 | -15.23900 | -.25625 | -.48065 | .15040 | .61259 | -.20030 | .06541 | .29339 |
| -148.720 | 99.291 | 199.10000 | -15.43700 | -15.24200 | -.26362 | -.48502 | .15104 | .62074 | -.20279 | .06545 | .29300 |
| -149.050 | 199.310 | 199.44000 | -15.43900 | -15.24200 | -.26659 | -.48894 | .15235 | .62425 | -.20421 | .06556 | .29254 |
| | GRADIENT | .00000 | .00000 | .00000 | .00000 | .00000 | .00000 | .00000 | .00000 | .00000 | .00000 |

IA143, AEDC V41A-P8A, O/ET W/R.H. SRB SEPARATING (OVX218) ( 23 MAY 77 )

REFERENCE DATA

SREF = 2690.0000 SQ.FT. XMRP = 1097.0000 IN. XT
LREF = 1290.3000 INCHES YMRP = .0000 IN. YT
BREF = 1290.3000 INCHES ZMRP = 450.0000 IN. ZT
SCALE = .0100

PARAMETRIC DATA

ALPHA = -15.000 BETA = -15.000
DALPHA = -4.000 DBETA = .000
Z = .000 MACH = 4.500
JET PC = .000

RUN NO. 3406/ 0 RN/L = 2.38 GRADIENT INTERVAL = -5.00/ 5.00

| Y | X | Z | ALPHA | BETA | PHI | CN | CLM | CY | CYN | CBL | CA |
|---|---|---|---|---|---|---|---|---|---|---|---|
| -49.822 | -.689 | -.05523 | -15.46100 | -15.21400 | -.25385 | -.48802 | .13665 | .55944 | -.18286 | .05566 | .29524 |
| -49.068 | 99.263 | -.34785 | -15.45800 | -15.22200 | -.25984 | -.48611 | .13819 | .57483 | -.18681 | .05720 | .29388 |
| -49.226 | 199.320 | -.22576 | -15.45300 | -15.22900 | -.25982 | -.48875 | .14298 | .58399 | -.18888 | .05883 | .29406 |
| | GRADIENT | .00000 | .00000 | .00000 | .00000 | .00000 | .00000 | .00000 | .00000 | .00000 | .00000 |

RUN NO. 3411/ 0 RN/L = 2.38 GRADIENT INTERVAL = -5.00/ 5.00

| Y | X | Z | ALPHA | BETA | PHI | CN | CLM | CY | CYN | CBL | CA |
|---|---|---|---|---|---|---|---|---|---|---|---|
| -102.410 | 199.170 | 1.10510 | -15.44900 | -15.23900 | -.26474 | -.48215 | .14315 | .59355 | -.18887 | .05916 | .29593 |
| -101.240 | 98.977 | .15734 | -15.45200 | -15.23200 | -.26605 | -.47577 | .13718 | .58316 | -.18596 | .05694 | .29519 |
| -100.960 | -.795 | .57578 | -15.45100 | -15.22600 | -.25934 | -.47237 | .13473 | .56824 | -.18112 | .05545 | .29625 |
| | GRADIENT | .00000 | .00000 | .00000 | .00000 | .00000 | .00000 | .00000 | .00000 | .00000 | .00000 |

RUN NO. 3412/ 0 RN/L = 2.38 GRADIENT INTERVAL = -5.00/ 5.00

| Y | X | Z | ALPHA | BETA | PHI | CN | CLM | CY | CYN | CBL | CA |
|---|---|---|---|---|---|---|---|---|---|---|---|
| -151.420 | -.514 | .83291 | -15.44800 | -15.23400 | -.26739 | -.46681 | .13485 | .58574 | -.18639 | .05717 | .29579 |
| -148.030 | 99.226 | -.88127 | -15.45100 | -15.23900 | -.27289 | -.47232 | .13761 | .59819 | -.19047 | .05840 | .29543 |
| -149.100 | 199.290 | -.51274 | -15.44900 | -15.24300 | -.27086 | -.47889 | .14237 | .60519 | -.19284 | .06017 | .29563 |
| | GRADIENT | .00000 | .00000 | .00000 | .00000 | .00000 | .00000 | .00000 | .00000 | .00000 | .00000 |

IA143, AEDC V41A-P8A, O/ET W/R.H. SRB SEPARATING (OVX219) ( 23 MAY 77 )

REFERENCE DATA

SREF = 2690.0000 SQ.FT. XMRP = 1097.0000 IN. XT
LREF = 1290.3000 INCHES YMRP = .0000 IN. YT
BREF = 1290.3000 INCHES ZMRP = 450.0000 IN. ZT
SCALE = .0100

PARAMETRIC DATA

ALPHA = -15.000 BETA = -15.000
DALPHA = -4.000 DBETA = .000
Z = 100.000 MACH = 4.500
JET PC = .000

RUN NO. 3407/ 0 RN/L = 2.38 GRADIENT INTERVAL = -5.00/ 5.00

| Y | X | Z | ALPHA | BETA | PHI | CN | CLM | CY | CYN | CBL | CA |
|---|---|---|---|---|---|---|---|---|---|---|---|
| -47.377 | 199.190 | 98.43400 | -15.44000 | -15.23500 | -.25340 | -.50421 | .15918 | .60593 | -.19882 | .06484 | .29448 |
| -50.191 | 99.224 | 100.24000 | -15.43800 | -15.23100 | -.25007 | -.50385 | .15903 | .60011 | -.19802 | .06457 | .29445 |
| -50.705 | -.809 | 100.37000 | -15.43600 | -15.22600 | -.24524 | -.50129 | .15791 | .59158 | -.19614 | .06405 | .29505 |
| | GRADIENT | .00000 | .00000 | .00000 | .00000 | .00000 | .00000 | .00000 | .00000 | .00000 | .00000 |

RUN NO. 3410/ 0 RN/L = 2.38 GRADIENT INTERVAL = -5.00/ 5.00

| Y | X | Z | ALPHA | BETA | PHI | CN | CLM | CY | CYN | CBL | CA |
|---|---|---|---|---|---|---|---|---|---|---|---|
| -100.310 | -.682 | 100.48000 | -15.43400 | -15.23400 | -.24877 | -.48874 | .15235 | .59417 | -.19322 | .06321 | .29511 |
| -99.199 | 99.348 | 99.43600 | -15.43700 | -15.23800 | -.25237 | -.49292 | .15418 | .60301 | -.19599 | .06421 | .29398 |
| -99.929 | 199.140 | 99.56700 | -15.43700 | -15.23900 | -.25407 | -.49343 | .15472 | .60768 | -.19790 | .06480 | .29387 |
| | GRADIENT | .00000 | .00000 | .00000 | .00000 | .00000 | .00000 | .00000 | .00000 | .00000 | .00000 |

RUN NO. 3413/ 0 RN/L = 2.38 GRADIENT INTERVAL = -5.00/ 5.00

| Y | X | Z | ALPHA | BETA | PHI | CN | CLM | CY | CYN | CBL | CA |
|---|---|---|---|---|---|---|---|---|---|---|---|
| -147.820 | 199.130 | 98.89900 | -15.44100 | -15.24400 | -.26323 | -.49107 | .15231 | .61883 | -.20099 | .06497 | .29284 |
| -150.800 | 99.145 | 100.49000 | -15.43900 | -15.24200 | -.26114 | -.48717 | .15081 | .61456 | -.19991 | .06465 | .29244 |
| -151.200 | -.838 | 100.63000 | -15.43600 | -15.24000 | -.25398 | -.48542 | .15046 | .60323 | -.19530 | .06379 | .29315 |
| | GRADIENT | .00000 | .00000 | .00000 | .00000 | .00000 | .00000 | .00000 | .00000 | .00000 | .00000 |

IA143, AEDC V41A-P8A, O/ET W/R.H. SRB SEPARATING (OVX220) ( 23 MAY 77 )

REFERENCE DATA

SREF = 2690.0000 SQ.FT. XMRP = 1097.0000 IN. XT
LREF = 1290.3000 INCHES YMRP = .0000 IN. YT
BREF = 1290.3000 INCHES ZMRP = 450.0000 IN. ZT
SCALE = .0100

PARAMETRIC DATA

ALPHA = -15.000 BETA = -15.000
DALPHA = -4.000 DBETA = .000
Z = 200.000 MACH = 4.500
JET PC = .000

RUN NO. 3408/ 0 RN/L = 2.38 GRADIENT INTERVAL = -5.00/ 5.00

| Y | X | Z | ALPHA | BETA | PHI | CN | CLM | CY | CYN | CBL | CA |
|---|---|---|---|---|---|---|---|---|---|---|---|
| -49.446 | -.704 | 199.31000 | -15.42700 | -15.23000 | -.25159 | -.48983 | .15743 | .60769 | -.20229 | .06598 | .29444 |
| -48.817 | 99.456 | 199.52000 | -15.43200 | -15.23600 | -.25719 | -.49237 | .15740 | .61497 | -.20329 | .06605 | .29386 |
| -49.406 | 199.280 | 199.47000 | -15.43500 | -15.23800 | -.26001 | -.49575 | .15776 | .61883 | -.20389 | .06610 | .29370 |
| | GRADIENT | .00000 | .00000 | .00000 | .00000 | .00000 | .00000 | .00000 | .00000 | .00000 | .00000 |

IA143, AEDC V41A-P8A, O/ET W/R.H. SRB SEPARATING (OVX220) ( 23 MAY 77 )

REFERENCE DATA

SREF = 2690.0000 SQ.FT. XMRP = 1097.0000 IN. XT
LREF = 1290.3000 INCHES YMRP = .0000 IN. YT
BREF = 1290.3000 INCHES ZMRP = 450.0000 IN. ZT
SCALE = .0100

PARAMETRIC DATA

ALPHA = -15.000 BETA = -15.000
DALPHA = -4.000 DBETA = .000
Z = 200.000 MACH = 4.500
JET PC = .000

RUN NO. 3409/ 0 RN/L = 2.38 GRADIENT INTERVAL = -5.00/ 5.00

| Y | X | Z | ALPHA | BETA | PHI | CN | CLM | CY | CYN | CBL | CA |
|---|---|---|---|---|---|---|---|---|---|---|---|
| -100.620 | 199.250 | 200.89000 | -15.43700 | -15.24100 | -.26484 | -.48950 | .15368 | .62244 | -.20421 | .06565 | .29316 |
| -100.100 | 99.279 | 200.21000 | -15.43500 | -15.24000 | -.26097 | -.48743 | .15327 | .61832 | -.20276 | .06564 | .29346 |
| -101.030 | -.804 | 200.63000 | -15.42900 | -15.23600 | -.25490 | -.48241 | .15245 | .61073 | -.20086 | .06554 | .29383 |
| | GRADIENT | .00000 | .00000 | .00000 | .00000 | .00000 | .00000 | .00000 | .00000 | .00000 | .00000 |

RUN NO. 3414/ 0 RN/L = 2.38 GRADIENT INTERVAL = -5.00/ 5.00

| Y | X | Z | ALPHA | BETA | PHI | CN | CLM | CY | CYN | CBL | CA |
|---|---|---|---|---|---|---|---|---|---|---|---|
| -149.050 | -.671 | 199.15000 | -15.43400 | -15.24100 | -.25917 | -.48335 | .15118 | .61694 | -.20184 | .06568 | .29296 |
| -148.890 | 99.195 | 199.18000 | -15.43900 | -15.24200 | -.26657 | -.48782 | .15192 | .62521 | -.20479 | .06577 | .29206 |
| -149.330 | 199.320 | 199.38000 | -15.44200 | -15.24300 | -.26980 | -.49178 | .15325 | .62889 | -.20604 | .06584 | .29278 |
| | GRADIENT | .00000 | .00000 | .00000 | .00000 | .00000 | .00000 | .00000 | .00000 | .00000 | .00000 |

IA143, AEDC V41A-P8A, O/ET W/R.H. SRB SEPARATING (OVX221) ( 23 MAY 77 )

REFERENCE DATA

SREF = 2690.0000 SQ.FT. XMRP = 1097.0000 IN. XT
LREF = 1290.3000 INCHES YMRP = .0000 IN. YT
BREF = 1290.3000 INCHES ZMRP = 450.0000 IN. ZT
SCALE = .0100

PARAMETRIC DATA

ALPHA = -15.000 BETA = -15.000
DALPHA = -4.000 DBETA = 2.000
Z = .000 MACH = 4.500
JET PC = .000

RUN NO. 3415/ 0 RN/L = 2.38 GRADIENT INTERVAL = -5.00/ 5.00

| Y | X | Z | ALPHA | BETA | PHI | CN | CLM | CY | CYN | CBL | CA |
|---|---|---|---|---|---|---|---|---|---|---|---|
| -49.677 | -.623 | -.06762 | -15.45900 | -15.21800 | -.25719 | -.48543 | .13729 | .56615 | -.18406 | .05608 | .29646 |
| -49.014 | 99.345 | -.30181 | -15.45900 | -15.22500 | -.26701 | -.48408 | .13825 | .58253 | -.18890 | .05715 | .29504 |
| -49.319 | 199.350 | -.16218 | -15.45200 | -15.23100 | -.26240 | -.48950 | .14473 | .58995 | -.19070 | .05941 | .29516 |
| | GRADIENT | .00000 | .00000 | .00000 | .00000 | .00000 | .00000 | .00000 | .00000 | .00000 | .00000 |

RUN NO. 3420/ 0 RN/L = 2.39 GRADIENT INTERVAL = -5.00/ 5.00

| Y | X | Z | ALPHA | BETA | PHI | CN | CLM | CY | CYN | CBL | CA |
|---|---|---|---|---|---|---|---|---|---|---|---|
| -101.990 | 199.170 | .99397 | -15.44900 | -15.24000 | -.26799 | -.48320 | .14426 | .60089 | -.19209 | .06007 | .29574 |
| -100.330 | 99.231 | .29453 | -15.45100 | -15.23500 | -.26845 | -.47981 | .14078 | .59368 | -.19017 | .05864 | .29530 |
| -100.980 | -.905 | .50660 | -15.45200 | -15.22900 | -.26588 | -.47472 | .13673 | .58127 | -.18645 | .05681 | .29634 |
| | GRADIENT | .00000 | .00000 | .00000 | .00000 | .00000 | .00000 | .00000 | .00000 | .00000 | .00000 |

IA143, AEDC V41A-P8A, O/ET W/R.H. SRB SEPARATING (OVX221) ( 23 MAY 77 )

REFERENCE DATA

SREF = 2690.0000 SQ.FT. XMRP = 1097.0000 IN. XT
LREF = 1290.3000 INCHES YMRP = .0000 IN. YT
BREF = 1290.3000 INCHES ZMRP = 450.0000 IN. ZT
SCALE = .0100

PARAMETRIC DATA

ALPHA = -15.000 BETA = -15.000
DALPHA = -4.000 DBETA = 2.000
Z = .000 MACH = 4.500
JET PC = .000

RUN NO. 3421/ 0 RN/L = 2.39 GRADIENT INTERVAL = -5.00/ 5.00

| Y | X | Z | ALPHA | BETA | PHI | CN | CLM | CY | CYN | CBL | CA |
|---|---|---|---|---|---|---|---|---|---|---|---|
| -150.830 | -.443 | .75562 | -15.44800 | -15.23500 | -.27265 | -.47354 | .13995 | .59949 | -.19310 | .05909 | .29641 |
| -148.070 | 99.275 | -.76127 | -15.45100 | -15.23900 | -.27937 | -.47614 | .14109 | .60980 | -.19622 | .05963 | .29535 |
| -148.900 | 199.260 | -.54007 | -15.45000 | -15.24200 | -.27695 | -.48133 | .14423 | .61378 | -.19734 | .06086 | .29519 |
| | GRADIENT | .00000 | .00000 | .00000 | .00000 | .00000 | .00000 | .00000 | .00000 | .00000 | .00000 |

IA143, AEDC V41A-P8A, O/ET W/R.H. SRB SEPARATING (OVX222) ( 23 MAY 77 )

REFERENCE DATA

SREF = 2690.0000 SQ.FT. XMRP = 1097.0000 IN. XT
LREF = 1290.3000 INCHES YMRP = .0000 IN. YT
BREF = 1290.3000 INCHES ZMRP = 450.0000 IN. ZT
SCALE = .0100

PARAMETRIC DATA

ALPHA = -15.000 BETA = -15.000
DALPHA = -4.000 DBETA = 2.000
Z = 100.000 MACH = 4.500
JET PC = .000

RUN NO. 3416/ 0 RN/L = 2.38 GRADIENT INTERVAL = -5.00/ 5.00

| Y | X | Z | ALPHA | BETA | PHI | CN | CLM | CY | CYN | CBL | CA |
|---|---|---|---|---|---|---|---|---|---|---|---|
| -47.795 | 199.250 | 98.71600 | -15.43900 | -15.23700 | -.25333 | -.50151 | .15791 | .60634 | -.19846 | .06486 | .29428 |
| -49.876 | 99.206 | 100.22000 | -15.43900 | -15.23300 | -.25184 | -.50139 | .15765 | .60178 | -.19778 | .06441 | .29423 |
| -50.384 | -.644 | 100.23000 | -15.43700 | -15.22900 | -.24849 | -.49797 | .15612 | .59456 | -.19616 | .06385 | .29474 |
| | GRADIENT | .00000 | .00000 | .00000 | .00000 | .00000 | .00000 | .00000 | .00000 | .00000 | .00000 |

RUN NO. 3419/ 0 RN/L = 2.39 GRADIENT INTERVAL = -5.00/ 5.00

| Y | X | Z | ALPHA | BETA | PHI | CN | CLM | CY | CYN | CBL | CA |
|---|---|---|---|---|---|---|---|---|---|---|---|
| -100.420 | -.804 | 100.39000 | -15.43700 | -15.23700 | -.25439 | -.48892 | .15218 | .60247 | -.19622 | .06377 | .29381 |
| -99.066 | 99.329 | 99.34300 | -15.43700 | -15.23900 | -.25512 | -.49343 | .15444 | .60803 | -.19809 | .06471 | .29318 |
| -99.392 | 199.240 | 99.72400 | -15.43800 | -15.24100 | -.25797 | -.49373 | .15466 | .61277 | -.19977 | .06505 | .29330 |
| | GRADIENT | .00000 | .00000 | .00000 | .00000 | .00000 | .00000 | .00000 | .00000 | .00000 | .00000 |

RUN NO. 3422/ 0 RN/L = 2.39 GRADIENT INTERVAL = -5.00/ 5.00

| Y | X | Z | ALPHA | BETA | PHI | CN | CLM | CY | CYN | CBL | CA |
|---|---|---|---|---|---|---|---|---|---|---|---|
| -147.810 | 199.350 | 98.91800 | -15.44300 | -15.24400 | -.26730 | -.49368 | .15362 | .62487 | -.20397 | .06550 | .29297 |
| -150.440 | 99.210 | 100.45000 | -15.44000 | -15.24100 | -.26588 | -.49000 | .15236 | .62194 | -.20352 | .06527 | .29274 |
| -151.050 | -.788 | 100.75000 | -15.43700 | -15.24000 | -.26078 | -.48762 | .15222 | .61500 | -.20089 | .06495 | .29284 |
| | GRADIENT | .00000 | .00000 | .00000 | .00000 | .00000 | .00000 | .00000 | .00000 | .00000 | .00000 |

IA143, AEDC V41A-P8A, O/ET W/R.H. SRB SEPARATING (OVX223) ( 23 MAY 77 )

REFERENCE DATA

SREF = 2690.0000 SQ.FT. XMRP = 1097.0000 IN. XT
LREF = 1290.3000 INCHES YMRP = .0000 IN. YT
BREF = 1290.3000 INCHES ZMRP = 450.0000 IN. ZT
SCALE = .0100

PARAMETRIC DATA

ALPHA = -15.000 BETA = -15.000
DALPHA = -4.000 DBETA = 2.000
Z = 200.000 MACH = 4.500
JET PC = .000

RUN NO. 3417/ 0 RN/L = 2.38 GRADIENT INTERVAL = -5.00/ 5.00

| Y | X | Z | ALPHA | BETA | PHI | CN | CLM | CY | CYN | CBL | CA |
|---|---|---|---|---|---|---|---|---|---|---|---|
| -49.599 | -.688 | 199.45000 | -15.42900 | -15.23300 | -.25316 | -.48823 | .15595 | .60916 | -.20193 | .06582 | .29410 |
| -49.242 | 99.252 | 199.40000 | -15.43300 | -15.23700 | -.25788 | -.49157 | .15627 | .61557 | -.20290 | .06594 | .29354 |
| -49.976 | 199.250 | 199.57000 | -15.43600 | -15.24000 | -.26132 | -.49390 | .15636 | .61960 | -.20366 | .06593 | .29342 |
| | GRADIENT | .00000 | .00000 | .00000 | .00000 | .00000 | .00000 | .00000 | .00000 | .00000 | .00000 |

RUN NO. 3418/ 0 RN/L = 2.39 GRADIENT INTERVAL = -5.00/ 5.00

| Y | X | Z | ALPHA | BETA | PHI | CN | CLM | CY | CYN | CBL | CA |
|---|---|---|---|---|---|---|---|---|---|---|---|
| -100.550 | 199.260 | 200.70000 | -15.43900 | -15.24200 | -.26635 | -.49102 | .15390 | .62448 | -.20495 | .06580 | .29291 |
| -100.050 | 99.302 | 200.13000 | -15.43600 | -15.24100 | -.26293 | -.48894 | .15344 | .62107 | -.20365 | .06580 | .29236 |
| -100.430 | -.739 | 200.59000 | -15.43200 | -15.23800 | -.25768 | -.48425 | .15259 | .61430 | -.20186 | .06565 | .29298 |
| | GRADIENT | .00000 | .00000 | .00000 | .00000 | .00000 | .00000 | .00000 | .00000 | .00000 | .00000 |

RUN NO. 3423/ 0 RN/L = 2.39 GRADIENT INTERVAL = -5.00/ 5.00

| Y | X | Z | ALPHA | BETA | PHI | CN | CLM | CY | CYN | CBL | CA |
|---|---|---|---|---|---|---|---|---|---|---|---|
| -149.270 | -.735 | 199.15000 | -15.43600 | -15.24100 | -.26389 | -.48631 | .15218 | .62287 | -.20450 | .06599 | .29180 |
| -148.720 | 99.290 | 199.09000 | -15.44000 | -15.24200 | -.26935 | -.49027 | .15315 | .62858 | -.20649 | .06598 | .29248 |
| -149.170 | 199.280 | 199.49000 | -15.44300 | -15.24300 | -.27220 | -.49352 | .15409 | .63166 | -.20736 | .06598 | .29247 |
| | GRADIENT | .00000 | .00000 | .00000 | .00000 | .00000 | .00000 | .00000 | .00000 | .00000 | .00000 |

IA143, AEDC V41A-P8A, O/ET W/R.H. SRB SEPARATING (OVX224) ( 23 MAY 77 )

REFERENCE DATA

SREF = 2690.0000 SQ.FT. XMRP = 1097.0000 IN. XT
LREF = 1290.3000 INCHES YMRP = .0000 IN. YT
BREF = 1290.3000 INCHES ZMRP = 450.0000 IN. ZT
SCALE = .0100

PARAMETRIC DATA

ALPHA = -15.000 BETA = -15.000
DALPHA = -8.000 DBETA = -4.000
Z = 100.000 MACH = 4.500
JET PC = .000

RUN NO. 3424/ 0 RN/L = 2.39 GRADIENT INTERVAL = -5.00/ 5.00

| Y | X | Z | ALPHA | BETA | PHI | CN | CLM | CY | CYN | CBL | CA |
|---|---|---|---|---|---|---|---|---|---|---|---|
| -120.340 | -.810 | 100.45000 | -15.43900 | -15.22600 | -.24570 | -.47294 | .13908 | .56253 | -.17995 | .05730 | .29328 |
| -118.980 | 99.147 | 99.19100 | -15.44300 | -15.23200 | -.25417 | -.47655 | .14115 | .57713 | -.18441 | .05836 | .29351 |
| -118.810 | 199.260 | 99.64600 | -15.44000 | -15.23500 | -.25355 | -.48192 | .14588 | .58673 | -.18798 | .06037 | .29389 |
| | GRADIENT | .00000 | .00000 | .00000 | .00000 | .00000 | .00000 | .00000 | .00000 | .00000 | .00000 |

IA143, AEDC V41A-P8A, O/ET W/R.H. SRB SEPARATING (OVX224) ( 23 MAY 77 )

REFERENCE DATA

SREF = 2690.0000 SQ.FT. XMRP = 1097.0000 IN. XT
LREF = 1290.3000 INCHES YMRP = .0000 IN. YT
BREF = 1290.3000 INCHES ZMRP = 450.0000 IN. ZT
SCALE = .0100

PARAMETRIC DATA

ALPHA = -15.000 BETA = -15.000
DALPHA = -8.000 DBETA = -4.000
Z = 100.000 MACH = 4.500
JET PC = .000

RUN NO. 3429/ 0 RN/L = 2.39 GRADIENT INTERVAL = -5.00/ 5.00

| Y | X | Z | ALPHA | BETA | PHI | CN | CLM | CY | CYN | CBL | CA |
|---|---|---|---|---|---|---|---|---|---|---|---|
| -150.780 | 199.310 | 100.79000 | -15.44400 | -15.24000 | -.26190 | -.47548 | .14143 | .59305 | -.18816 | .05957 | .29414 |
| -150.760 | 99.228 | 100.70000 | -15.44300 | -15.23700 | -.25827 | -.46983 | .13760 | .58184 | -.18408 | .05806 | .29362 |
| -151.240 | -.563 | 101.06000 | -15.43800 | -15.23100 | -.24869 | -.46762 | .13738 | .56729 | -.17985 | .05734 | .29346 |
| | GRADIENT | .00000 | .00000 | .00000 | .00000 | .00000 | .00000 | .00000 | .00000 | .00000 | .00000 |

RUN NO. 3430/ 0 RN/L = 2.39 GRADIENT INTERVAL = -5.00/ 5.00

| Y | X | Z | ALPHA | BETA | PHI | CN | CLM | CY | CYN | CBL | CA |
|---|---|---|---|---|---|---|---|---|---|---|---|
| -201.760 | -.340 | 101.26000 | -15.44300 | -15.23900 | -.26036 | -.45706 | .13048 | .57611 | -.17970 | .05615 | .29413 |
| -197.640 | 99.143 | 99.19100 | -15.44800 | -15.24000 | -.27174 | -.45780 | .12981 | .58909 | -.18514 | .05649 | .29342 |
| -198.780 | 199.050 | 99.19400 | -15.44700 | -15.24400 | -.26807 | -.47118 | .13768 | .59890 | -.18915 | .05925 | .29308 |
| | GRADIENT | .00000 | .00000 | .00000 | .00000 | .00000 | .00000 | .00000 | .00000 | .00000 | .00000 |

IA143, AEDC V41A-P8A, O/ET W/R.H. SRB SEPARATING (OVX225) ( 23 MAY 77 )

REFERENCE DATA

SREF = 2690.0000 SQ.FT. XMRP = 1097.0000 IN. XT
LREF = 1290.3000 INCHES YMRP = .0000 IN. YT
BREF = 1290.3000 INCHES ZMRP = 450.0000 IN. ZT
SCALE = .0100

PARAMETRIC DATA

ALPHA = -15.000 BETA = -15.000
DALPHA = -8.000 DBETA = -4.000
Z = 150.000 MACH = 4.500
JET PC = .000

RUN NO. 3425/ 0 RN/L = 2.39 GRADIENT INTERVAL = -5.00/ 5.00

| Y | X | Z | ALPHA | BETA | PHI | CN | CLM | CY | CYN | CBL | CA |
|---|---|---|---|---|---|---|---|---|---|---|---|
| -119.010 | 199.090 | 149.64000 | -15.43400 | -15.23800 | -.25068 | -.48829 | .15261 | .59751 | -.19298 | .06329 | .29435 |
| -120.640 | 99.215 | 150.52000 | -15.43500 | -15.23600 | -.24793 | -.48672 | .15082 | .58890 | -.18949 | .06210 | .29411 |
| -120.890 | -.701 | 150.91000 | -15.43100 | -15.22900 | -.24314 | -.47913 | .14743 | .57738 | -.18691 | .06105 | .29387 |
| | GRADIENT | .00000 | .00000 | .00000 | .00000 | .00000 | .00000 | .00000 | .00000 | .00000 | .00000 |

RUN NO. 3428/ 0 RN/L = 2.39 GRADIENT INTERVAL = -5.00/ 5.00

| Y | X | Z | ALPHA | BETA | PHI | CN | CLM | CY | CYN | CBL | CA |
|---|---|---|---|---|---|---|---|---|---|---|---|
| -149.870 | -.544 | 150.64000 | -15.43200 | -15.23500 | -.24854 | -.47000 | .14251 | .58294 | -.18693 | .06072 | .29384 |
| -148.590 | 98.980 | 148.98000 | -15.43600 | -15.24000 | -.25282 | -.48204 | .14800 | .59473 | -.19027 | .06199 | .29427 |
| -149.390 | 199.070 | 149.56000 | -15.43600 | -15.24100 | -.25475 | -.48452 | .14979 | .60238 | -.19386 | .06329 | .29356 |
| | GRADIENT | .00000 | .00000 | .00000 | .00000 | .00000 | .00000 | .00000 | .00000 | .00000 | .00000 |

IA143, AEDC V41A-P8A, O/ET W/R.H. SRB SEPARATING (OVX225) ( 23 MAY 77 )

REFERENCE DATA

SREF = 2690.0000 SQ.FT. XMRP = 1097.0000 IN. XT
LREF = 1290.3000 INCHES YMRP = .0000 IN. YT
BREF = 1290.3000 INCHES ZMRP = 450.0000 IN. ZT
SCALE = .0100

PARAMETRIC DATA

ALPHA = -15.000 BETA = -15.000
DALPHA = -8.000 DBETA = -4.000
Z = 150.000 MACH = 4.500
JET PC = .000

RUN NO. 3431/ 0 RN/L = 2.39 GRADIENT INTERVAL = -5.00/ 5.00

| Y | X | Z | ALPHA | BETA | PHI | CN | CLM | CY | CYN | CBL | CA |
|---|---|---|---|---|---|---|---|---|---|---|---|
| -198.800 | 199.180 | 149.56000 | -15.44200 | -15.24500 | -.26115 | -.48233 | .14626 | .60967 | -.19543 | .06323 | .29221 |
| -200.790 | 99.385 | 150.99000 | -15.44100 | -15.24200 | -.26292 | -.47231 | .14090 | .60147 | -.19210 | .06115 | .29248 |
| -201.340 | -.487 | 150.93000 | -15.43900 | -15.24100 | -.25693 | -.46695 | .13835 | .59015 | -.18673 | .05997 | .29349 |
| | GRADIENT | .00000 | .00000 | .00000 | .00000 | .00000 | .00000 | .00000 | .00000 | .00000 | .00000 |

IA143, AEDC V41A-P8A, O/ET W/R.H. SRB SEPARATING (OVX226) ( 23 MAY 77 )

REFERENCE DATA

SREF = 2690.0000 SQ.FT. XMRP = 1097.0000 IN. XT
LREF = 1290.3000 INCHES YMRP = .0000 IN. YT
BREF = 1290.3000 INCHES ZMRP = 450.0000 IN. ZT
SCALE = .0100

PARAMETRIC DATA

ALPHA = -15.000 BETA = -15.000
DALPHA = -8.000 DBETA = -4.000
Z = 200.000 MACH = 4.500
JET PC = .000

RUN NO. 3426/ 0 RN/L = 2.39 GRADIENT INTERVAL = -5.00/ 5.00

| Y | X | Z | ALPHA | BETA | PHI | CN | CLM | CY | CYN | CBL | CA |
|---|---|---|---|---|---|---|---|---|---|---|---|
| -119.690 | -.707 | 199.69000 | -15.42500 | -15.23200 | -.24421 | -.47858 | .15113 | .59153 | -.19335 | .06385 | .29392 |
| -118.880 | 99.089 | 199.10000 | -15.43000 | -15.23700 | -.25072 | -.48448 | .15300 | .60213 | -.19611 | .06444 | .29401 |
| -118.860 | 199.300 | 199.59000 | -15.43300 | -15.24000 | -.25485 | -.48834 | .15406 | .60885 | -.19792 | .06479 | .29407 |
| | GRADIENT | .00000 | .00000 | .00000 | .00000 | .00000 | .00000 | .00000 | .00000 | .00000 | .00000 |

RUN NO. 3427/ 0 RN/L = 2.39 GRADIENT INTERVAL = -5.00/ 5.00

| Y | X | Z | ALPHA | BETA | PHI | CN | CLM | CY | CYN | CBL | CA |
|---|---|---|---|---|---|---|---|---|---|---|---|
| -151.870 | 198.900 | 200.59000 | -15.43500 | -15.24200 | -.25632 | -.48477 | .15126 | .61052 | -.19791 | .06479 | .29349 |
| -150.620 | 99.263 | 200.69000 | -15.43300 | -15.24200 | -.25335 | -.48177 | .14977 | .60540 | -.19530 | .06420 | .29396 |
| -151.190 | -.497 | 201.09000 | -15.42800 | -15.23700 | -.24717 | -.47368 | .14716 | .59396 | -.19200 | .06336 | .29425 |
| | GRADIENT | .00000 | .00000 | .00000 | .00000 | .00000 | .00000 | .00000 | .00000 | .00000 | .00000 |

RUN NO. 3432/ 0 RN/L = 2.39 GRADIENT INTERVAL = -5.00/ 5.00

| Y | X | Z | ALPHA | BETA | PHI | CN | CLM | CY | CYN | CBL | CA |
|---|---|---|---|---|---|---|---|---|---|---|---|
| -198.760 | -.637 | 199.52000 | -15.43400 | -15.24300 | -.25213 | -.47540 | .14528 | .60085 | -.19265 | .06344 | .29330 |
| -198.480 | 99.016 | 199.14000 | -15.43600 | -15.24300 | -.25702 | -.48056 | .14772 | .60957 | -.19666 | .06425 | .29275 |
| -199.150 | 199.100 | 199.45000 | -15.44000 | -15.24500 | -.26060 | -.48564 | .14935 | .61598 | -.19894 | .06478 | .29242 |
| | GRADIENT | .00000 | .00000 | .00000 | .00000 | .00000 | .00000 | .00000 | .00000 | .00000 | .00000 |

IA143, AEDC V41A-P8A, O/ET W/R.H. SRB SEPARATING (OVX227) ( 23 MAY 77 )

REFERENCE DATA

SREF = 2690.0000 SQ.FT. XMRP = 1097.0000 IN. XT
LREF = 1290.3000 INCHES YMRP = .0000 IN. YT
BREF = 1290.3000 INCHES ZMRP = 450.0000 IN. ZT
SCALE = .0100

PARAMETRIC DATA

ALPHA = -15.000 BETA = -15.000
DALPHA = -8.000 DBETA = -2.000
Z = 100.000 MACH = 4.500
JET PC = .000

RUN NO. 3433/ 0 RN/L = 2.39 GRADIENT INTERVAL = -5.00/ 5.00

| Y | X | Z | ALPHA | BETA | PHI | CN | CLM | CY | CYN | CBL | CA |
|---|---|---|---|---|---|---|---|---|---|---|---|
| -69.630 | -.594 | 100.33000 | -15.44500 | -15.21800 | -.24943 | -.48220 | .14164 | .56609 | -.18526 | .05790 | .29264 |
| -69.237 | 99.168 | 99.53400 | -15.44600 | -15.22800 | -.25630 | -.48638 | .14508 | .58123 | -.18831 | .05910 | .29355 |
| -69.061 | 199.160 | 99.74700 | -15.44400 | -15.23300 | -.25602 | -.49186 | .14955 | .59049 | -.19087 | .06087 | .29383 |
| | GRADIENT | .00000 | .00000 | .00000 | .00000 | .00000 | .00000 | .00000 | .00000 | .00000 | .00000 |

RUN NO. 3439/ 0 RN/L = 2.40 GRADIENT INTERVAL = -5.00/ 5.00

| Y | X | Z | ALPHA | BETA | PHI | CN | CLM | CY | CYN | CBL | CA |
|---|---|---|---|---|---|---|---|---|---|---|---|
| -100.780 | 199.220 | 100.66000 | -15.44200 | -15.23600 | -.25716 | -.48203 | .14556 | .59017 | -.18945 | .06039 | .29434 |
| -100.370 | 99.166 | 100.58000 | -15.44500 | -15.23100 | -.25968 | -.47604 | .14044 | .58195 | -.18664 | .05825 | .29415 |
| -100.640 | -.678 | 100.83000 | -15.44200 | -15.22500 | -.25233 | -.47353 | .13948 | .56951 | -.18352 | .05754 | .29415 |
| | GRADIENT | .00000 | .00000 | .00000 | .00000 | .00000 | .00000 | .00000 | .00000 | .00000 | .00000 |

RUN NO. 3440/ 0 RN/L = 2.40 GRADIENT INTERVAL = -5.00/ 5.00

| Y | X | Z | ALPHA | BETA | PHI | CN | CLM | CY | CYN | CBL | CA |
|---|---|---|---|---|---|---|---|---|---|---|---|
| -151.280 | -.382 | 101.74000 | -15.44200 | -15.23400 | -.25768 | -.46447 | .13512 | .57530 | -.18177 | .05695 | .29392 |
| -148.260 | 99.145 | 99.01000 | -15.44700 | -15.23800 | -.26716 | -.46543 | .13449 | .58780 | -.18586 | .05740 | .29406 |
| -148.940 | 199.210 | 99.36200 | -15.44500 | -15.24100 | -.26624 | -.47468 | .14079 | .59783 | -.19012 | .05969 | .29366 |
| | GRADIENT | .00000 | .00000 | .00000 | .00000 | .00000 | .00000 | .00000 | .00000 | .00000 | .00000 |

IA143, AEDC V41A-P8A, O/ET W/R.H. SRB SEPARATING (OVX228) ( 23 MAY 77 )

REFERENCE DATA

SREF = 2690.0000 SQ.FT. XMRP = 1097.0000 IN. XT
LREF = 1290.3000 INCHES YMRP = .0000 IN. YT
BREF = 1290.3000 INCHES ZMRP = 450.0000 IN. ZT
SCALE = .0100

PARAMETRIC DATA

ALPHA = -15.000 BETA = -15.000
DALPHA = -8.000 DBETA = -2.000
Z = 150.000 MACH = 4.500
JET PC = .000

RUN NO. 3434/ 0 RN/L = 2.39 GRADIENT INTERVAL = -5.00/ 5.00

| Y | X | Z | ALPHA | BETA | PHI | CN | CLM | CY | CYN | CBL | CA |
|---|---|---|---|---|---|---|---|---|---|---|---|
| -68.992 | 199.110 | 149.58000 | -15.43700 | -15.23700 | -.25371 | -.49851 | .15753 | .60241 | -.19617 | .06389 | .29465 |
| -70.845 | 99.107 | 150.48000 | -15.43600 | -15.23200 | -.24973 | -.49513 | .15509 | .59283 | -.19336 | .06290 | .29413 |
| -70.771 | -.741 | 150.55000 | -15.43300 | -15.22500 | -.24351 | -.49078 | .15314 | .58132 | -.19128 | .06222 | .29416 |
| | GRADIENT | .00000 | .00000 | .00000 | .00000 | .00000 | .00000 | .00000 | .00000 | .00000 | .00000 |

IA143, AEDC V41A-P8A, O/ET W/R.H. SRB SEPARATING (OVX228) ( 23 MAY 77 )

REFERENCE DATA

SREF = 2690.0000 SQ.FT. XMRP = 1097.0000 IN. XT
LREF = 1290.3000 INCHES YMRP = .0000 IN. YT
BREF = 1290.3000 INCHES ZMRP = 450.0000 IN. ZT
SCALE = .0100

PARAMETRIC DATA

ALPHA = -15.000 BETA = -15.000
DALPHA = -8.000 DBETA = -2.000
Z = 150.000 MACH = 4.500
JET PC = .000

RUN NO. 3437/ 0 RN/L = 2.38 GRADIENT INTERVAL = -5.00/ 5.00

| Y | X | Z | ALPHA | BETA | PHI | CN | CLM | CY | CYN | CBL | CA |
|---|---|---|---|---|---|---|---|---|---|---|---|
| -100.630 | -.772 | 150.21000 | -15.43300 | -15.22800 | -.24654 | -.48385 | .14976 | .58227 | -.18971 | .06145 | .29426 |
| -98.773 | 99.176 | 149.29000 | -15.43600 | -15.23500 | -.25116 | -.49058 | .15286 | .59339 | -.19245 | .06254 | .29460 |
| -99.620 | 199.290 | 149.86000 | -15.43600 | -15.23800 | -.25281 | -.49093 | .15388 | .60054 | -.19475 | .06359 | .29479 |
| | GRADIENT | .00000 | .00000 | .00000 | .00000 | .00000 | .00000 | .00000 | .00000 | .00000 | .00000 |

RUN NO. 3441/ 0 RN/L = 2.40 GRADIENT INTERVAL = -5.00/ 5.00

| Y | X | Z | ALPHA | BETA | PHI | CN | CLM | CY | CYN | CBL | CA |
|---|---|---|---|---|---|---|---|---|---|---|---|
| -148.600 | 199.180 | 149.53000 | -15.43800 | -15.24200 | -.25792 | -.48398 | .14886 | .60642 | -.19539 | .06346 | .29301 |
| -150.570 | 99.368 | 150.79000 | -15.44000 | -15.24200 | -.26019 | -.47777 | .14471 | .60090 | -.19237 | .06176 | .29338 |
| -151.080 | -.573 | 151.22000 | -15.43600 | -15.23800 | -.25314 | -.47092 | .14192 | .58813 | -.18784 | .06066 | .29389 |
| | GRADIENT | .00000 | .00000 | .00000 | .00000 | .00000 | .00000 | .00000 | .00000 | .00000 | .00000 |

IA143, AEDC V41A-P8A, O/ET W/R.H. SRB SEPARATING (OVX229) ( 23 MAY 77 )

REFERENCE DATA

SREF = 2690.0000 SQ.FT. XMRP = 1097.0000 IN. XT
LREF = 1290.3000 INCHES YMRP = .0000 IN. YT
BREF = 1290.3000 INCHES ZMRP = 450.0000 IN. ZT
SCALE = .0100

PARAMETRIC DATA

ALPHA = -15.000 BETA = -15.000
DALPHA = -8.000 DBETA = -2.000
Z = 150.000 MACH = 4.500
JET PC = .000

RUN NO. 3438/ 0 RN/L = 2.39 GRADIENT INTERVAL = -5.00/ 5.00

| Y | X | Z | ALPHA | BETA | PHI | CN | CLM | CY | CYN | CBL | CA |
|---|---|---|---|---|---|---|---|---|---|---|---|
| -99.760 | -.533 | 150.53000 | -15.43300 | -15.22700 | -.24672 | -.48473 | .15018 | .58182 | -.18999 | .06145 | .29416 |
| -98.827 | 99.224 | 149.52000 | -15.43600 | -15.23400 | -.25113 | -.49041 | .15278 | .59295 | -.19242 | .06250 | .29423 |
| -99.631 | 199.230 | 149.95000 | -15.43600 | -15.23800 | -.25288 | -.49050 | .15360 | .60019 | -.19466 | .06352 | .29439 |
| | GRADIENT | .00000 | .00000 | .00000 | .00000 | .00000 | .00000 | .00000 | .00000 | .00000 | .00000 |

IA143, AEDC V41A-P8A, O/ET W/R.H. SRB SEPARATING (OVX230) ( 23 MAY 77 )

REFERENCE DATA

SREF = 2690.0000 SQ.FT. XMRP = 1097.0000 IN. XT
LREF = 1290.3000 INCHES YMRP = .0000 IN. YT
BREF = 1290.3000 INCHES ZMRP = 450.0000 IN. ZT
SCALE = .0100

PARAMETRIC DATA

ALPHA = -15.000 BETA = -15.000
DALPHA = -8.000 DBETA = -2.000
Z = 200.000 MACH = 4.500
JET PC = .000

RUN NO. 3435/ 0 RN/L = 2.39 GRADIENT INTERVAL = -5.00/ 5.00

| Y | X | Z | ALPHA | BETA | PHI | CN | CLM | CY | CYN | CBL | CA |
|---|---|---|---|---|---|---|---|---|---|---|---|
| -69.372 | -.789 | 199.69000 | -15.42500 | -15.22800 | -.24330 | -.48899 | .15684 | .59194 | -.19593 | .06452 | .29478 |
| -69.168 | 99.073 | 199.42000 | -15.42900 | -15.23400 | -.24959 | -.49197 | .15739 | .60195 | -.19770 | .06494 | .29429 |
| -69.447 | 199.240 | 199.62000 | -15.43300 | -15.23800 | -.25523 | -.49446 | .15747 | .61007 | -.19966 | .06518 | .29414 |
| | GRADIENT | .00000 | .00000 | .00000 | .00000 | .00000 | .00000 | .00000 | .00000 | .00000 | .00000 |

RUN NO. 3436/ 0 RN/L = 2.39 GRADIENT INTERVAL = -5.00/ 5.00

| Y | X | Z | ALPHA | BETA | PHI | CN | CLM | CY | CYN | CBL | CA |
|---|---|---|---|---|---|---|---|---|---|---|---|
| -100.990 | 199.190 | 200.93000 | -15.43400 | -15.24000 | -.25525 | -.48862 | .15417 | .60946 | -.19838 | .06496 | .29386 |
| -100.270 | 99.297 | 200.45000 | -15.43000 | -15.23700 | -.25131 | -.48580 | .15353 | .60354 | -.19687 | .06466 | .29410 |
| -100.870 | -.742 | 200.76000 | -15.42600 | -15.23200 | -.24595 | -.48064 | .15208 | .59390 | -.19468 | .06407 | .29423 |
| | GRADIENT | .00000 | .00000 | .00000 | .00000 | .00000 | .00000 | .00000 | .00000 | .00000 | .00000 |

RUN NO. 3442/ 0 RN/L = 2.40 GRADIENT INTERVAL = -5.00/ 5.00

| Y | X | Z | ALPHA | BETA | PHI | CN | CLM | CY | CYN | CBL | CA |
|---|---|---|---|---|---|---|---|---|---|---|---|
| -149.160 | -.602 | 199.58000 | -15.43100 | -15.24000 | -.24992 | -.47637 | .14739 | .59899 | -.19346 | .06378 | .29357 |
| -148.330 | 99.190 | 198.93000 | -15.43500 | -15.24300 | -.25530 | -.48290 | .14980 | .60845 | -.19660 | .06449 | .29318 |
| -149.110 | 199.100 | 199.55000 | -15.43700 | -15.24300 | -.25854 | -.48564 | .15084 | .61380 | -.19915 | .06499 | .29260 |
| | GRADIENT | .00000 | .00000 | .00000 | .00000 | .00000 | .00000 | .00000 | .00000 | .00000 | .00000 |

IA143, AEDC V41A-P8A, O/ET W/R.H. SRB SEPARATING (OVX231) ( 23 MAY 77 )

REFERENCE DATA

SREF = 2690.0000 SQ.FT. XMRP = 1097.0000 IN. XT
LREF = 1290.3000 INCHES YMRP = .0000 IN. YT
BREF = 1290.3000 INCHES ZMRP = 450.0000 IN. ZT
SCALE = .0100

PARAMETRIC DATA

ALPHA = -15.000 BETA = -15.000
DALPHA = -8.000 DBETA = .000
Z = 100.000 MACH = 4.500
JET PC = .000

RUN NO. 3443/ 0 RN/L = 2.39 GRADIENT INTERVAL = -5.00/ 5.00

| Y | X | Z | ALPHA | BETA | PHI | CN | CLM | CY | CYN | CBL | CA |
|---|---|---|---|---|---|---|---|---|---|---|---|
| -49.942 | -.691 | 100.27000 | -15.44800 | -15.21800 | -.25563 | -.48530 | .14279 | .57417 | -.18907 | .05835 | .29348 |
| -49.175 | 99.182 | 99.47200 | -15.44900 | -15.22600 | -.26028 | -.48892 | .14575 | .58566 | -.19119 | .05940 | .29366 |
| -49.578 | 199.170 | 99.94000 | -15.44700 | -15.23300 | -.26000 | -.49362 | .14993 | .59489 | -.19298 | .06103 | .29415 |
| | GRADIENT | .00000 | .00000 | .00000 | .00000 | .00000 | .00000 | .00000 | .00000 | .00000 | .00000 |

IA143, AEDC V41A-P8A, O/ET W/R.H. SRB SEPARATING (OVX231) ( 23 MAY 77 )

REFERENCE DATA

SREF = 2690.0000 SQ.FT. XMRP = 1097.0000 IN. XT
LREF = 1290.3000 INCHES YMRP = .0000 IN. YT
BREF = 1290.3000 INCHES ZMRP = 450.0000 IN. ZT
SCALE = .0100

PARAMETRIC DATA

ALPHA = -15.000 BETA = -15.000
DALPHA = -8.000 DBETA = .000
Z = 100.000 MACH = 4.500
JET PC = .000

RUN NO. 3448/ 0 RN/L = 2.39 GRADIENT INTERVAL = -5.00/ 5.00

| Y | X | Z | ALPHA | BETA | PHI | CN | CLM | CY | CYN | CBL | CA |
|---|---|---|---|---|---|---|---|---|---|---|---|
| -101.010 | 199.110 | 100.51000 | -15.44400 | -15.23700 | -.26129 | -.48112 | .14480 | .59506 | -.19090 | .06046 | .29432 |
| -100.470 | 99.236 | 100.58000 | -15.44700 | -15.23400 | -.26535 | -.47347 | .13898 | .58768 | -.18775 | .05806 | .29476 |
| -101.150 | -.786 | 100.92000 | -15.44400 | -15.23000 | -.25927 | -.46852 | .13696 | .57582 | -.18400 | .05708 | .29552 |
| | GRADIENT | .00000 | .00000 | .00000 | .00000 | .00000 | .00000 | .00000 | .00000 | .00000 | .00000 |

RUN NO. 3449/ 0 RN/L = 2.39 GRADIENT INTERVAL = -5.00/ 5.00

| Y | X | Z | ALPHA | BETA | PHI | CN | CLM | CY | CYN | CBL | CA |
|---|---|---|---|---|---|---|---|---|---|---|---|
| -151.200 | -.467 | 101.36000 | -15.44500 | -15.23700 | -.26622 | -.46519 | .13533 | .58571 | -.18542 | .05724 | .29482 |
| -148.680 | 99.050 | 98.99800 | -15.44900 | -15.23900 | -.27355 | -.46702 | .13546 | .59752 | -.19023 | .05814 | .29385 |
| -149.150 | 199.130 | 99.44700 | -15.44800 | -15.24200 | -.27204 | -.47692 | .14180 | .60773 | -.19439 | .06059 | .29307 |
| | GRADIENT | .00000 | .00000 | .00000 | .00000 | .00000 | .00000 | .00000 | .00000 | .00000 | .00000 |

IA143, AEDC V41A-P8A, O/ET W/R.H. SRB SEPARATING (OVX232) ( 23 MAY 77 )

REFERENCE DATA

SREF = 2690.0000 SQ.FT. XMRP = 1097.0000 IN. XT
LREF = 1290.3000 INCHES YMRP = .0000 IN. YT
BREF = 1290.3000 INCHES ZMRP = 450.0000 IN. ZT
SCALE = .0100

PARAMETRIC DATA

ALPHA = -15.000 BETA = -15.000
DALPHA = -8.000 DBETA = .000
Z = 150.000 MACH = 4.500
JET PC = .000

RUN NO. 3444/ 0 RN/L = 2.40 GRADIENT INTERVAL = -5.00/ 5.00

| Y | X | Z | ALPHA | BETA | PHI | CN | CLM | CY | CYN | CBL | CA |
|---|---|---|---|---|---|---|---|---|---|---|---|
| -49.095 | 199.140 | 149.51000 | -15.43900 | -15.23700 | -.25593 | -.50049 | .15785 | .60491 | -.19753 | .06405 | .29438 |
| -50.328 | 99.237 | 150.52000 | -15.43900 | -15.23200 | -.25306 | -.49745 | .15569 | .59672 | -.19548 | .06310 | .29455 |
| -51.038 | -.820 | 150.60000 | -15.43600 | -15.22500 | -.24737 | -.49211 | .15312 | .58507 | -.19307 | .06232 | .29454 |
| | GRADIENT | .00000 | .00000 | .00000 | .00000 | .00000 | .00000 | .00000 | .00000 | .00000 | .00000 |

RUN NO. 3447/ 0 RN/L = 2.39 GRADIENT INTERVAL = -5.00/ 5.00

| Y | X | Z | ALPHA | BETA | PHI | CN | CLM | CY | CYN | CBL | CA |
|---|---|---|---|---|---|---|---|---|---|---|---|
| -99.338 | -.480 | 150.37000 | -15.43500 | -15.23300 | -.24978 | -.47789 | .14613 | .58464 | -.18864 | .06100 | .29498 |
| -99.204 | 99.144 | 149.27000 | -15.43700 | -15.23800 | -.25382 | -.48603 | .15012 | .59588 | -.19216 | .06229 | .29412 |
| -99.751 | 199.160 | 149.78000 | -15.43600 | -15.24000 | -.25512 | -.48734 | .15156 | .60316 | -.19521 | .06356 | .29393 |
| | GRADIENT | .00000 | .00000 | .00000 | .00000 | .00000 | .00000 | .00000 | .00000 | .00000 | .00000 |

IA143, AEDC V41A-P8A, O/ET W/R.H. SRB SEPARATING (OVX232) ( 23 MAY 77 )

REFERENCE DATA

SREF = 2690.0000 SQ.FT. XMRP = 1097.0000 IN. XT
LREF = 1290.3000 INCHES YMRP = .0000 IN. YT
BREF = 1290.3000 INCHES ZMRP = 450.0000 IN. ZT
SCALE = .0100

PARAMETRIC DATA

ALPHA = -15.000 BETA = -15.000
DALPHA = -8.000 DBETA = .000
Z = 150.000 MACH = 4.500
JET PC = .000

RUN NO. 3450/ 0 RN/L = 2.39 GRADIENT INTERVAL = -5.00/ 5.00

| Y | X | Z | ALPHA | BETA | PHI | CN | CLM | CY | CYN | CBL | CA |
|---|---|---|---|---|---|---|---|---|---|---|---|
| -149.190 | 199.240 | 149.57000 | -15.44100 | -15.24300 | -.26277 | -.48560 | .14905 | .61349 | -.19829 | .06395 | .29235 |
| -150.890 | 99.146 | 150.84000 | -15.44200 | -15.24200 | -.26517 | -.47860 | .14494 | .60887 | -.19620 | .06250 | .29223 |
| -150.270 | -.463 | 151.28000 | -15.43900 | -15.23900 | -.25994 | -.47174 | .14175 | .59552 | -.19049 | .06074 | .29335 |
| | GRADIENT | .00000 | .00000 | .00000 | .00000 | .00000 | .00000 | .00000 | .00000 | .00000 | .00000 |

IA143, AEDC V41A-P8A, O/ET W/R.H. SRB SEPARATING (OVX233) ( 23 MAY 77 )

REFERENCE DATA

SREF = 2690.0000 SQ.FT. XMRP = 1097.0000 IN. XT
LREF = 1290.3000 INCHES YMRP = .0000 IN. YT
BREF = 1290.3000 INCHES ZMRP = 450.0000 IN. ZT
SCALE = .0100

PARAMETRIC DATA

ALPHA = -15.000 BETA = -15.000
DALPHA = -8.000 DBETA = .000
Z = 200.000 MACH = 4.500
JET PC = .000

RUN NO. 3445/ 0 RN/L = 2.40 GRADIENT INTERVAL = -5.00/ 5.00

| Y | X | Z | ALPHA | BETA | PHI | CN | CLM | CY | CYN | CBL | CA |
|---|---|---|---|---|---|---|---|---|---|---|---|
| -49.676 | -.737 | 199.73000 | -15.42800 | -15.22800 | -.24629 | -.49058 | .15698 | .59501 | -.19733 | .06461 | .29460 |
| -48.833 | 99.298 | 199.44000 | -15.43200 | -15.23400 | -.25231 | -.49442 | .15787 | .60518 | -.19924 | .06504 | .29407 |
| -49.403 | 199.280 | 199.74000 | -15.43500 | -15.23800 | -.25660 | -.49617 | .15799 | .61127 | -.20048 | .06524 | .29372 |
| | GRADIENT | .00000 | .00000 | .00000 | .00000 | .00000 | .00000 | .00000 | .00000 | .00000 | .00000 |

RUN NO. 3446/ 0 RN/L = 2.39 GRADIENT INTERVAL = -5.00/ 5.00

| Y | X | Z | ALPHA | BETA | PHI | CN | CLM | CY | CYN | CBL | CA |
|---|---|---|---|---|---|---|---|---|---|---|---|
| -101.010 | 199.530 | 201.45000 | -15.43500 | -15.24100 | -.25684 | -.48718 | .15268 | .61150 | -.19886 | .06493 | .29337 |
| -100.410 | 99.190 | 200.47000 | -15.43200 | -15.24000 | -.25335 | -.48465 | .15195 | .60572 | -.19690 | .06457 | .29330 |
| -100.810 | -.708 | 200.83000 | -15.42800 | -15.23500 | -.24774 | -.47840 | .14994 | .59628 | -.19434 | .06398 | .29430 |
| | GRADIENT | .00000 | .00000 | .00000 | .00000 | .00000 | .00000 | .00000 | .00000 | .00000 | .00000 |

RUN NO. 3451/ 0 RN/L = 2.39 GRADIENT INTERVAL = -5.00/ 5.00

| Y | X | Z | ALPHA | BETA | PHI | CN | CLM | CY | CYN | CBL | CA |
|---|---|---|---|---|---|---|---|---|---|---|---|
| -148.950 | -.556 | 199.57000 | -15.43200 | -15.24100 | -.25295 | -.47825 | .14791 | .60450 | -.19556 | .06424 | .29262 |
| -148.710 | 99.197 | 199.15000 | -15.43700 | -15.24300 | -.25987 | -.48308 | .14923 | .61403 | -.19897 | .06470 | .29231 |
| -149.380 | 199.120 | 199.56000 | -15.44000 | -15.24400 | -.26321 | -.48652 | .15035 | .61844 | -.20080 | .06492 | .29207 |
| | GRADIENT | .00000 | .00000 | .00000 | .00000 | .00000 | .00000 | .00000 | .00000 | .00000 | .00000 |

IA143, AEDC V41A-P8A, O/ET W/R.H. SRB SEPARATING (OVX234) ( 23 MAY 77 )

REFERENCE DATA

SREF = 2690.0000 SQ.FT. XMRP = 1097.0000 IN. XT
LREF = 1290.3000 INCHES YMRP = .0000 IN. YT
BREF = 1290.3000 INCHES ZMRP = 450.0000 IN. ZT
SCALE = .0100

PARAMETRIC DATA

ALPHA = -15.000 BETA = -15.000
DALPHA = -8.000 DBETA = 2.000
Z = 100.000 MACH = 4.500
JET PC = .000

RUN NO. 3452/ 0 RN/L = 2.39 GRADIENT INTERVAL = -5.00/ 5.00

| Y | X | Z | ALPHA | BETA | PHI | CN | CLM | CY | CYN | CBL | CA |
|---|---|---|---|---|---|---|---|---|---|---|---|
| -49.799 | -.594 | 100.39000 | -15.44900 | -15.22200 | -.26083 | -.48101 | .14125 | .57741 | -.18812 | .05761 | .29583 |
| -49.006 | 99.317 | 99.65300 | -15.45100 | -15.22800 | -.26627 | -.48488 | .14353 | .58795 | -.19099 | .05844 | .29508 |
| -49.162 | 199.410 | 99.92600 | -15.44700 | -15.23300 | -.26160 | -.49204 | .14917 | .59551 | -.19301 | .06077 | .29454 |
| | GRADIENT | .00000 | .00000 | .00000 | .00000 | .00000 | .00000 | .00000 | .00000 | .00000 | .00000 |

RUN NO. 3457/ 0 RN/L = 2.39 GRADIENT INTERVAL = -5.00/ 5.00

| Y | X | Z | ALPHA | BETA | PHI | CN | CLM | CY | CYN | CBL | CA |
|---|---|---|---|---|---|---|---|---|---|---|---|
| -100.630 | 199.260 | 100.66000 | -15.44500 | -15.23900 | -.26481 | -.48162 | .14508 | .60029 | -.19282 | .06077 | .29409 |
| -100.420 | 99.212 | 100.47000 | -15.44900 | -15.23600 | -.27072 | -.47317 | .13844 | .59330 | -.18964 | .05805 | .29444 |
| -100.700 | -.719 | 100.84000 | -15.44600 | -15.23200 | -.26628 | -.46767 | .13642 | .58368 | -.18641 | .05708 | .29548 |
| | GRADIENT | .00000 | .00000 | .00000 | .00000 | .00000 | .00000 | .00000 | .00000 | .00000 | .00000 |

RUN NO. 3458/ 0 RN/L = 2.39 GRADIENT INTERVAL = -5.00/ 5.00

| Y | X | Z | ALPHA | BETA | PHI | CN | CLM | CY | CYN | CBL | CA |
|---|---|---|---|---|---|---|---|---|---|---|---|
| -151.000 | -.507 | 101.34000 | -15.44700 | -15.23700 | -.27682 | -.46751 | .13719 | .60068 | -.19245 | .05830 | .29435 |
| -148.460 | 99.205 | 98.95700 | -15.45000 | -15.23800 | -.28003 | -.47124 | .13829 | .60926 | -.19625 | .05944 | .29269 |
| -149.340 | 199.200 | 99.55800 | -15.44800 | -15.24200 | -.27521 | -.48094 | .14451 | .61549 | -.19861 | .06173 | .29282 |
| | GRADIENT | .00000 | .00000 | .00000 | .00000 | .00000 | .00000 | .00000 | .00000 | .00000 | .00000 |

IA143, AEDC V41A-P8A, O/ET W/R.H. SRB SEPARATING (OVX235) ( 23 MAY 77 )

REFERENCE DATA

SREF = 2690.0000 SQ.FT. XMRP = 1097.0000 IN. XT
LREF = 1290.3000 INCHES YMRP = .0000 IN. YT
BREF = 1290.3000 INCHES ZMRP = 450.0000 IN. ZT
SCALE = .0100

PARAMETRIC DATA

ALPHA = -15.000 BETA = -15.000
DALPHA = -8.000 DBETA = 2.000
Z = 150.000 MACH = 4.500
JET PC = .000

RUN NO. 3453/ 0 RN/L = 2.39 GRADIENT INTERVAL = -5.00/ 5.00

| Y | X | Z | ALPHA | BETA | PHI | CN | CLM | CY | CYN | CBL | CA |
|---|---|---|---|---|---|---|---|---|---|---|---|
| -48.726 | 199.230 | 149.45000 | -15.43900 | -15.23700 | -.25577 | -.49841 | .15671 | .60457 | -.19717 | .06394 | .29415 |
| -50.791 | 99.178 | 150.61000 | -15.43900 | -15.23200 | -.25471 | -.49430 | .15392 | .59716 | -.19522 | .06278 | .29428 |
| -50.485 | -.717 | 150.51000 | -15.43700 | -15.22600 | -.25020 | -.48924 | .15130 | .58695 | -.19295 | .06191 | .29462 |
| | GRADIENT | .00000 | .00000 | .00000 | .00000 | .00000 | .00000 | .00000 | .00000 | .00000 | .00000 |

IA143, AEDC V41A-P8A, O/ET W/R.H. SRB SEPARATING (OVX235) ( 23 MAY 77 )

REFERENCE DATA

SREF = 2690.0000 SQ.FT. XMRP = 1097.0000 IN. XT
LREF = 1290.3000 INCHES YMRP = .0000 IN. YT
BREF = 1290.3000 INCHES ZMRP = 450.0000 IN. ZT
SCALE = .0100

PARAMETRIC DATA

ALPHA = -15.000 BETA = -15.000
DALPHA = -8.000 DBETA = 2.000
Z = 150.000 MACH = 4.500
JET PC = .000

RUN NO. 3456/ 0 RN/L = 2.39 GRADIENT INTERVAL = -5.00/ 5.00

| Y | X | Z | ALPHA | BETA | PHI | CN | CLM | CY | CYN | CBL | CA |
|---|---|---|---|---|---|---|---|---|---|---|---|
| -101.090 | -.989 | 150.33000 | -15.43700 | -15.23500 | -.25603 | -.47835 | .14603 | .59264 | -.19119 | .06128 | .29429 |
| -98.834 | 99.301 | 149.28000 | -15.43900 | -15.24000 | -.25749 | -.48631 | .15002 | .60215 | -.19436 | .06281 | .29353 |
| -99.340 | 199.280 | 149.69000 | -15.43800 | -15.24100 | -.25692 | -.48824 | .15175 | .60679 | -.19662 | .06394 | .29340 |
| | GRADIENT | .00000 | .00000 | .00000 | .00000 | .00000 | .00000 | .00000 | .00000 | .00000 | .00000 |

RUN NO. 3459/ 0 RN/L = 2.38 GRADIENT INTERVAL = -5.00/ 5.00

| Y | X | Z | ALPHA | BETA | PHI | CN | CLM | CY | CYN | CBL | CA |
|---|---|---|---|---|---|---|---|---|---|---|---|
| -149.180 | 199.250 | 149.71000 | -15.44300 | -15.24400 | -.26735 | -.48834 | .15043 | .62086 | -.20170 | .06458 | .29216 |
| -150.950 | 99.142 | 150.67000 | -15.44200 | -15.24200 | -.26774 | -.48318 | .14782 | .61723 | -.20050 | .06378 | .29216 |
| -151.120 | -.728 | 151.16000 | -15.43900 | -15.23900 | -.26468 | -.47717 | .14508 | .60752 | -.19648 | .06237 | .29271 |
| | GRADIENT | .00000 | .00000 | .00000 | .00000 | .00000 | .00000 | .00000 | .00000 | .00000 | .00000 |

IA143, AEDC V41A-P8A, O/ET W/R.H. SRB SEPARATING (OVX236) ( 23 MAY 77 )

REFERENCE DATA

SREF = 2690.0000 SQ.FT. XMRP = 1097.0000 IN. XT
LREF = 1290.3000 INCHES YMRP = .0000 IN. YT
BREF = 1290.3000 INCHES ZMRP = 450.0000 IN. ZT
SCALE = .0100

PARAMETRIC DATA

ALPHA = -15.000 BETA = -15.000
DALPHA = -8.000 DBETA = 2.000
Z = 200.000 MACH = 4.500
JET PC = .000

RUN NO. 3454/ 0 RN/L = 2.39 GRADIENT INTERVAL = -5.00/ 5.00

| Y | X | Z | ALPHA | BETA | PHI | CN | CLM | CY | CYN | CBL | CA |
|---|---|---|---|---|---|---|---|---|---|---|---|
| -49.192 | -.674 | 199.65000 | -15.42800 | -15.22900 | -.24687 | -.48928 | .15586 | .59601 | -.19711 | .06457 | .29427 |
| -49.122 | 99.417 | 199.67000 | -15.43200 | -15.23500 | -.25233 | -.49243 | .15659 | .60549 | -.19887 | .06503 | .29403 |
| -49.589 | 199.210 | 199.71000 | -15.43500 | -15.23900 | -.25596 | -.49378 | .15653 | .61050 | -.19971 | .06516 | .29350 |
| | GRADIENT | .00000 | .00000 | .00000 | .00000 | .00000 | .00000 | .00000 | .00000 | .00000 | .00000 |

RUN NO. 3455/ 0 RN/L = 2.39 GRADIENT INTERVAL = -5.00/ 5.00

| Y | X | Z | ALPHA | BETA | PHI | CN | CLM | CY | CYN | CBL | CA |
|---|---|---|---|---|---|---|---|---|---|---|---|
| -100.880 | 199.340 | 201.05000 | -15.43700 | -15.24200 | -.25959 | -.48776 | .15239 | .61463 | -.20004 | .06502 | .29305 |
| -100.410 | 99.265 | 200.51000 | -15.43400 | -15.24100 | -.25573 | -.48585 | .15184 | .60972 | -.19818 | .06483 | .29292 |
| -100.610 | -.582 | 200.92000 | -15.43000 | -15.23700 | -.25142 | -.47948 | .14983 | .60142 | -.19596 | .06422 | .29308 |
| | GRADIENT | .00000 | .00000 | .00000 | .00000 | .00000 | .00000 | .00000 | .00000 | .00000 | .00000 |

IA143, AEDC V41A-P8A, O/ET W/R.H. SRB SEPARATING (OVX236) ( 23 MAY 77 )

REFERENCE DATA

SREF = 2690.0000 SQ.FT. XMRP = 1097.0000 IN. XT
LREF = 1290.3000 INCHES YMRP = .0000 IN. YT
BREF = 1290.3000 INCHES ZMRP = 450.0000 IN. ZT
SCALE = .0100

PARAMETRIC DATA

ALPHA = -15.000 BETA = -15.000
DALPHA = -8.000 DBETA = 2.000
Z = 200.000 MACH = 4.500
JET PC = .000

RUN NO. 3460/ 0 RN/L = 2.38 GRADIENT INTERVAL = -5.00/ 5.00

| Y | X | Z | ALPHA | BETA | PHI | CN | CLM | CY | CYN | CBL | CA |
|---|---|---|---|---|---|---|---|---|---|---|---|
| -149.190 | -.571 | 199.66000 | -15.43500 | -15.24100 | -.25892 | -.48125 | .14926 | .61303 | -.19944 | .06483 | .29253 |
| -149.180 | 99.156 | 198.96000 | -15.44000 | -15.24300 | -.26581 | -.48515 | .15003 | .62130 | -.20252 | .06507 | .29236 |
| -149.150 | 199.280 | 199.49000 | -15.44200 | -15.24400 | -.26843 | -.48892 | .15122 | .62464 | -.20356 | .06518 | .29220 |
| | GRADIENT | .00000 | .00000 | .00000 | .00000 | .00000 | .00000 | .00000 | .00000 | .00000 | .00000 |

IA143, AEDC V41A-P8A, O/ET W/R.H. SRB SEPARATING (OVX237) ( 23 MAY 77 )

REFERENCE DATA

SREF = 2690.0000 SQ.FT. XMRP = 1097.0000 IN. XT
LREF = 1290.3000 INCHES YMRP = .0000 IN. YT
BREF = 1290.3000 INCHES ZMRP = 450.0000 IN. ZT
SCALE = .0100

PARAMETRIC DATA

ALPHA = -10.000 BETA = -10.000
DALPHA = -4.000 DBETA = -4.000
Z = 50.000 MACH = 4.500
JET PC = 1225.000

RUN NO. 3633/ 0 RN/L = 2.38 GRADIENT INTERVAL = -5.00/ 5.00

| Y | X | Z | ALPHA | BETA | PHI | CN | CLM | CY | CYN | CBL | CA |
|---|---|---|---|---|---|---|---|---|---|---|---|
| -100.140 | -.886 | 49.59800 | -10.47900 | -10.01000 | -.10781 | -.40190 | .02030 | .20104 | -.09969 | .02192 | .22064 |
| -100.230 | 99.611 | 50.60100 | -10.45200 | -9.99910 | -.09949 | -.39652 | .02984 | .20095 | -.10534 | .02451 | .21379 |
| -100.400 | 199.510 | 51.08100 | -10.40700 | -10.00600 | -.08189 | -.35707 | .03062 | .17758 | -.09050 | .02252 | .21044 |
| | GRADIENT | .00000 | .00000 | .00000 | .00000 | .00000 | .00000 | .00000 | .00000 | .00000 | .00000 |

RUN NO. 3648/ 0 RN/L = 2.39 GRADIENT INTERVAL = -5.00/ 5.00

| Y | X | Z | ALPHA | BETA | PHI | CN | CLM | CY | CYN | CBL | CA |
|---|---|---|---|---|---|---|---|---|---|---|---|
| -119.990 | -.687 | 49.92200 | -10.46900 | -10.03900 | -.11865 | -.38289 | .01819 | .22417 | -.09851 | .02291 | .22352 |
| -120.290 | 99.490 | 49.88700 | -10.46000 | -10.01100 | -.10494 | -.39713 | .02809 | .21942 | -.10988 | .02683 | .21581 |
| -121.140 | 199.400 | 50.73700 | -10.42200 | -10.00300 | -.08504 | -.38092 | .03839 | .19176 | -.09943 | .02536 | .21747 |
| | GRADIENT | .00000 | .00000 | .00000 | .00000 | .00000 | .00000 | .00000 | .00000 | .00000 | .00000 |

RUN NO. 3638/ 0 RN/L = 2.39 GRADIENT INTERVAL = -5.00/ 5.00

| Y | X | Z | ALPHA | BETA | PHI | CN | CLM | CY | CYN | CBL | CA |
|---|---|---|---|---|---|---|---|---|---|---|---|
| -148.730 | 199.700 | 49.34700 | -10.42800 | -10.01100 | -.08138 | -.39445 | .04228 | .20364 | -.10266 | .02825 | .21970 |
| -149.950 | 99.708 | 49.58500 | -10.45500 | -10.03300 | -.10998 | -.39056 | .02720 | .23172 | -.10629 | .02690 | .21672 |
| -150.130 | -.251 | 50.44200 | -10.44700 | -10.06300 | -.12038 | -.36211 | .01837 | .22977 | -.09070 | .02203 | .22331 |
| | GRADIENT | .00000 | .00000 | .00000 | .00000 | .00000 | .00000 | .00000 | .00000 | .00000 | .00000 |

IA143, AEDC V41A-P8A, O/ET W/R.H. SRB SEPARATING (OVX237) ( 23 MAY 77 )

REFERENCE DATA

SREF = 2690.0000 SQ.FT. XMRP = 1097.0000 IN. XT
LREF = 1290.3000 INCHES YMRP = .0000 IN. YT
BREF = 1290.3000 INCHES ZMRP = 450.0000 IN. ZT
SCALE = .0100

PARAMETRIC DATA

ALPHA = -10.000 BETA = -10.000
DALPHA = -4.000 DBETA = -4.000
Z = 50.000 MACH = 4.500
JET PC = 1225.000

RUN NO. 3639/ 0 RN/L = 2.38 GRADIENT INTERVAL = -5.00/ 5.00

| Y | X | Z | ALPHA | BETA | PHI | CN | CLM | CY | CYN | CBL | CA |
|---|---|---|---|---|---|---|---|---|---|---|---|
| -200.670 | -.450 | 50.79900 | -10.42700 | -10.07300 | -.12206 | -.35283 | .02430 | .22043 | -.08069 | .01880 | .22172 |
| -200.480 | 99.513 | 49.13100 | -10.44700 | -10.04700 | -.11601 | -.38502 | .02947 | .23720 | -.10229 | .02578 | .21838 |
| -200.520 | 199.520 | 50.29300 | -10.42400 | -10.03400 | -.08926 | -.39861 | .04781 | .22242 | -.10202 | .02918 | .21886 |
| | GRADIENT | .00000 | .00000 | .00000 | .00000 | .00000 | .00000 | .00000 | .00000 | .00000 | .00000 |

IA143, AEDC V41A-P8A, O/ET W/R.H. SRB SEPARATING (OVX238) ( 23 MAY 77 )

REFERENCE DATA

SREF = 2690.0000 SQ.FT. XMRP = 1097.0000 IN. XT
LREF = 1290.3000 INCHES YMRP = .0000 IN. YT
BREF = 1290.3000 INCHES ZMRP = 450.0000 IN. ZT
SCALE = .0100

PARAMETRIC DATA

ALPHA = -10.000 BETA = -10.000
DALPHA = -4.000 DBETA = -4.000
Z = 50.000 MACH = 4.500
JET PC = 1225.000

RUN NO. 3684/ 0 RN/L = 2.40 GRADIENT INTERVAL = -5.00/ 5.00

| Y | X | Z | ALPHA | BETA | PHI | CN | CLM | CY | CYN | CBL | CA |
|---|---|---|---|---|---|---|---|---|---|---|---|
| -119.770 | -.723 | 49.81800 | -10.46300 | -10.04600 | -.12018 | -.37656 | .01805 | .21842 | -.09225 | .02081 | .22249 |
| -120.080 | 99.625 | 49.90000 | -10.46000 | -10.01600 | -.10762 | -.39730 | .02853 | .21588 | -.10545 | .02507 | .21568 |
| -120.600 | 199.350 | 50.61400 | -10.42500 | -10.00000 | -.08472 | -.38586 | .03989 | .18283 | -.09596 | .02361 | .21777 |
| | GRADIENT | .00000 | .00000 | .00000 | .00000 | .00000 | .00000 | .00000 | .00000 | .00000 | .00000 |

RUN NO. 3653/ 0 RN/L = 2.38 GRADIENT INTERVAL = -5.00/ 5.00

| Y | X | Z | ALPHA | BETA | PHI | CN | CLM | CY | CYN | CBL | CA |
|---|---|---|---|---|---|---|---|---|---|---|---|
| -148.460 | 199.800 | 49.50500 | -10.43100 | -10.01400 | -.08566 | -.39543 | .04229 | .20601 | -.10234 | .02773 | .21849 |
| -150.180 | 99.620 | 49.55500 | -10.45900 | -10.03700 | -.11576 | -.39199 | .02726 | .23441 | -.10561 | .02606 | .21722 |
| -150.360 | -.282 | 50.44800 | -10.44800 | -10.06600 | -.12351 | -.36156 | .01833 | .23023 | -.08928 | .02133 | .22304 |
| | GRADIENT | .00000 | .00000 | .00000 | .00000 | .00000 | .00000 | .00000 | .00000 | .00000 | .00000 |

RUN NO. 3654/ 0 RN/L = 2.37 GRADIENT INTERVAL = -5.00/ 5.00

| Y | X | Z | ALPHA | BETA | PHI | CN | CLM | CY | CYN | CBL | CA |
|---|---|---|---|---|---|---|---|---|---|---|---|
| -200.940 | -.540 | 50.49300 | -10.42900 | -10.07500 | -.12549 | -.35520 | .02574 | .22080 | -.07953 | .01808 | .22172 |
| -200.240 | 99.561 | 49.24700 | -10.45000 | -10.04600 | -.11883 | -.38683 | .03055 | .23603 | -.10217 | .02513 | .21857 |
| -200.470 | 199.550 | 50.34300 | -10.42700 | -10.03300 | -.09128 | -.40087 | .04907 | .22018 | -.10132 | .02843 | .21953 |
| | GRADIENT | .00000 | .00000 | .00000 | .00000 | .00000 | .00000 | .00000 | .00000 | .00000 | .00000 |

IA143, AEDC V41A-P8A, O/ET W/R.H. SRB SEPARATING (OVX239) ( 23 MAY 77 )

REFERENCE DATA

SREF = 2690.0000 SQ.FT. XMRP = 1097.0000 IN. XT
LREF = 1290.3000 INCHES YMRP = .0000 IN. YT
BREF = 1290.3000 INCHES ZMRP = 450.0000 IN. ZT
SCALE = .0100

PARAMETRIC DATA

ALPHA = -10.000 BETA = -10.000
DALPHA = -4.000 DBETA = -4.000
Z = 100.000 MACH = 4.500
JET PC = 1225.000

RUN NO. 3634/ 0 RN/L = 2.38 GRADIENT INTERVAL = -5.00/ 5.00

| Y | X | Z | ALPHA | BETA | PHI | CN | CLM | CY | CYN | CBL | CA |
|---|---|---|---|---|---|---|---|---|---|---|---|
| -101.640 | 199.120 | 100.20000 | -10.38000 | -9.94160 | -.05812 | -.33589 | .03179 | .13569 | -.09843 | .02268 | .21854 |
| -100.130 | 99.556 | 99.20100 | -10.41600 | -9.94170 | -.08069 | -.35908 | .02677 | .13680 | -.09718 | .01797 | .21836 |
| -99.729 | -.183 | 100.42000 | -10.41400 | -9.96560 | -.08019 | -.33849 | .01626 | .14673 | -.09182 | .01866 | .21813 |
| | GRADIENT | .00000 | .00000 | .00000 | .00000 | .00000 | .00000 | .00000 | .00000 | .00000 | .00000 |

RUN NO. 3649/ 0 RN/L = 2.39 GRADIENT INTERVAL = -5.00/ 5.00

| Y | X | Z | ALPHA | BETA | PHI | CN | CLM | CY | CYN | CBL | CA |
|---|---|---|---|---|---|---|---|---|---|---|---|
| -121.750 | 199.110 | 100.48000 | -10.39100 | -9.95020 | -.06703 | -.34875 | .03527 | .14356 | -.09808 | .02198 | .21839 |
| -120.100 | 99.583 | 99.07400 | -10.43000 | -9.94410 | -.08123 | -.38225 | .03425 | .15604 | -.10678 | .02218 | .22121 |
| -119.790 | -.275 | 99.98500 | -10.44200 | -9.97540 | -.08857 | -.37425 | .02540 | .16884 | -.09906 | .02129 | .22630 |
| | GRADIENT | .00000 | .00000 | .00000 | .00000 | .00000 | .00000 | .00000 | .00000 | .00000 | .00000 |

RUN NO. 3637/ 0 RN/L = 2.38 GRADIENT INTERVAL = -5.00/ 5.00

| Y | X | Z | ALPHA | BETA | PHI | CN | CLM | CY | CYN | CBL | CA |
|---|---|---|---|---|---|---|---|---|---|---|---|
| -148.130 | .026 | 98.27000 | -10.43700 | -9.99330 | -.09045 | -.37301 | .02797 | .18865 | -.10182 | .02408 | .23161 |
| -151.220 | 99.477 | 99.75400 | -10.43900 | -9.94580 | -.07726 | -.39313 | .03525 | .17187 | -.11527 | .02650 | .22703 |
| -151.150 | 199.470 | 100.98000 | -10.40100 | -9.94080 | -.06062 | -.37172 | .04265 | .14241 | -.10235 | .02374 | .22525 |
| | GRADIENT | .00000 | .00000 | .00000 | .00000 | .00000 | .00000 | .00000 | .00000 | .00000 | .00000 |

RUN NO. 3640/ 0 RN/L = 2.38 GRADIENT INTERVAL = -5.00/ 5.00

| Y | X | Z | ALPHA | BETA | PHI | CN | CLM | CY | CYN | CBL | CA |
|---|---|---|---|---|---|---|---|---|---|---|---|
| -201.430 | 199.260 | 99.89700 | -10.42000 | -9.96720 | -.06296 | -.40536 | .05329 | .17682 | -.10934 | .02926 | .23148 |
| -199.600 | 99.655 | 99.90900 | -10.44100 | -9.99090 | -.09654 | -.39101 | .03573 | .20422 | -.11118 | .02650 | .22665 |
| -199.650 | -.309 | 100.96000 | -10.41400 | -10.02800 | -.10490 | -.35775 | .03342 | .19782 | -.08970 | .02051 | .22808 |
| | GRADIENT | .00000 | .00000 | .00000 | .00000 | .00000 | .00000 | .00000 | .00000 | .00000 | .00000 |

IA143, AEDC V41A-P8A, O/ET W/R.H. SRB SEPARATING (OVX240) ( 23 MAY 77 )

REFERENCE DATA

SREF = 2690.0000 SQ.FT. XMRP = 1097.0000 IN. XT
LREF = 1290.3000 INCHES YMRP = .0000 IN. YT
BREF = 1290.3000 INCHES ZMRP = 450.0000 IN. ZT
SCALE = .0100

PARAMETRIC DATA

ALPHA = -10.000 BETA = -10.000
DALPHA = -4.000 DBETA = -4.000
Z = 100.000 MACH = 4.500
JET PC = 1225.000

RUN NO. 3685/ 0 RN/L = 2.40 GRADIENT INTERVAL = -5.00/ 5.00

| Y | X | Z | ALPHA | BETA | PHI | CN | CLM | CY | CYN | CBL | CA |
|---|---|---|---|---|---|---|---|---|---|---|---|
| -121.670 | 199.150 | 100.73000 | -10.39100 | -9.94850 | -.06721 | -.35215 | .03690 | .13443 | -.09376 | .01996 | .21754 |
| -120.230 | 99.434 | 98.92700 | -10.43500 | -9.94220 | -.08143 | -.38965 | .03591 | .15413 | -.10658 | .02183 | .22313 |
| -119.860 | -.247 | 100.21000 | -10.44000 | -9.98010 | -.09027 | -.37512 | .02708 | .16555 | -.09490 | .01983 | .22570 |
| | GRADIENT | .00000 | .00000 | .00000 | .00000 | .00000 | .00000 | .00000 | .00000 | .00000 | .00000 |

RUN NO. 3652/ 0 RN/L = 2.38 GRADIENT INTERVAL = -5.00/ 5.00

| Y | X | Z | ALPHA | BETA | PHI | CN | CLM | CY | CYN | CBL | CA |
|---|---|---|---|---|---|---|---|---|---|---|---|
| -147.830 | .104 | 98.46500 | -10.43600 | -9.99810 | -.09319 | -.37103 | .02852 | .18978 | -.10005 | .02349 | .23053 |
| -151.240 | 99.550 | 99.61400 | -10.44500 | -9.95530 | -.08547 | -.39592 | .03545 | .18103 | -.11535 | .02621 | .22685 |
| -150.610 | 199.490 | 101.05000 | -10.40500 | -9.94120 | -.06398 | -.37472 | .04349 | .14368 | -.10253 | .02332 | .22544 |
| | GRADIENT | .00000 | .00000 | .00000 | .00000 | .00000 | .00000 | .00000 | .00000 | .00000 | .00000 |

RUN NO. 3655/ 0 RN/L = 2.37 GRADIENT INTERVAL = -5.00/ 5.00

| Y | X | Z | ALPHA | BETA | PHI | CN | CLM | CY | CYN | CBL | CA |
|---|---|---|---|---|---|---|---|---|---|---|---|
| -203.130 | 198.850 | 99.82500 | -10.42200 | -9.96440 | -.06500 | -.40753 | .05464 | .17513 | -.10951 | .02867 | .23244 |
| -200.720 | 99.322 | 99.85500 | -10.44100 | -9.98190 | -.09565 | -.39260 | .03733 | .19664 | -.11113 | .02567 | .22718 |
| -200.110 | -.322 | 101.05000 | -10.41400 | -10.03100 | -.10741 | -.35686 | .03430 | .19796 | -.08861 | .01995 | .22734 |
| | GRADIENT | .00000 | .00000 | .00000 | .00000 | .00000 | .00000 | .00000 | .00000 | .00000 | .00000 |

IA143, AEDC V41A-P8A, O/ET W/R.H. SRB SEPARATING (OVX241) ( 23 MAY 77 )

REFERENCE DATA

SREF = 2690.0000 SQ.FT. XMRP = 1097.0000 IN. XT
LREF = 1290.3000 INCHES YMRP = .0000 IN. YT
BREF = 1290.3000 INCHES ZMRP = 450.0000 IN. ZT
SCALE = .0100

PARAMETRIC DATA

ALPHA = -10.000 BETA = -10.000
DALPHA = -4.000 DBETA = -4.000
Z = 200.000 MACH = 4.500
JET PC = 1225.000

RUN NO. 3635/ 0 RN/L = 2.38 GRADIENT INTERVAL = -5.00/ 5.00

| Y | X | Z | ALPHA | BETA | PHI | CN | CLM | CY | CYN | CBL | CA |
|---|---|---|---|---|---|---|---|---|---|---|---|
| -99.743 | -.389 | 200.25000 | -10.25800 | -9.89800 | -.05074 | -.24737 | .04770 | .05393 | -.07318 | .00861 | .21417 |
| -101.460 | 99.443 | 198.89000 | -10.29200 | -9.81170 | -.03248 | -.29679 | .05959 | .06294 | -.11933 | .02083 | .23905 |
| -100.240 | 199.550 | 199.89000 | -10.29100 | -9.80800 | -.01313 | -.30174 | .06270 | .06607 | -.12433 | .02607 | .24783 |
| | GRADIENT | .00000 | .00000 | .00000 | .00000 | .00000 | .00000 | .00000 | .00000 | .00000 | .00000 |

IA143, AEDC V41A-P8A, O/ET W/R.H. SRB SEPARATING (OVX241) ( 23 MAY 77 )

REFERENCE DATA

SREF = 2690.0000 SQ.FT. XMRP = 1097.0000 IN. XT
LREF = 1290.3000 INCHES YMRP = .0000 IN. YT
BREF = 1290.3000 INCHES ZMRP = 450.0000 IN. ZT
SCALE = .0100

PARAMETRIC DATA

ALPHA = -10.000 BETA = -10.000
DALPHA = -4.000 DBETA = -4.000
Z = 200.000 MACH = 4.500
JET PC = 1225.000

RUN NO. 3650/ 0 RN/L = 2.38 GRADIENT INTERVAL = -5.00/ 5.00

| Y | X | Z | ALPHA | BETA | PHI | CN | CLM | CY | CYN | CBL | CA |
|---|---|---|---|---|---|---|---|---|---|---|---|
| -121.200 | -.564 | 199.31000 | -10.33600 | -9.86790 | -.05540 | -.29961 | .04046 | .07571 | -.09856 | .01475 | .24261 |
| -121.170 | 99.501 | 199.74000 | -10.33000 | -9.81310 | -.03983 | -.33057 | .06026 | .07444 | -.12417 | .02174 | .24623 |
| -119.630 | 199.650 | 200.78000 | -10.30300 | -9.84480 | -.03290 | -.29735 | .05527 | .08679 | -.11715 | .02385 | .24143 |
| | GRADIENT | .00000 | .00000 | .00000 | .00000 | .00000 | .00000 | .00000 | .00000 | .00000 | .00000 |

RUN NO. 3636/ 0 RN/L = 2.38 GRADIENT INTERVAL = -5.00/ 5.00

| Y | X | Z | ALPHA | BETA | PHI | CN | CLM | CY | CYN | CBL | CA |
|---|---|---|---|---|---|---|---|---|---|---|---|
| -149.520 | 199.590 | 199.55000 | -10.31700 | -9.85030 | -.03145 | -.31364 | .05566 | .08438 | -.11372 | .02324 | .24083 |
| -150.830 | 99.422 | 198.72000 | -10.35900 | -9.80900 | -.03516 | -.35923 | .06020 | .08648 | -.13356 | .02584 | .25062 |
| -149.020 | -.184 | 200.81000 | -10.34400 | -9.88920 | -.05704 | -.31672 | .04588 | .10074 | -.10299 | .01861 | .24460 |
| | GRADIENT | .00000 | .00000 | .00000 | .00000 | .00000 | .00000 | .00000 | .00000 | .00000 | .00000 |

RUN NO. 3641/ 0 RN/L = 2.38 GRADIENT INTERVAL = -5.00/ 5.00

| Y | X | Z | ALPHA | BETA | PHI | CN | CLM | CY | CYN | CBL | CA |
|---|---|---|---|---|---|---|---|---|---|---|---|
| -202.740 | -.809 | 200.53000 | -10.36400 | -9.92110 | -.06594 | -.34739 | .05466 | .12701 | -.10232 | .02043 | .24625 |
| -201.740 | 99.241 | 199.49000 | -10.37500 | -9.84770 | -.04635 | -.37079 | .05899 | .10816 | -.12707 | .02561 | .24994 |
| -200.570 | 199.390 | 200.38000 | -10.34500 | -9.84800 | -.01452 | -.38231 | .08225 | .08107 | -.11426 | .02636 | .25969 |
| | GRADIENT | .00000 | .00000 | .00000 | .00000 | .00000 | .00000 | .00000 | .00000 | .00000 | .00000 |

IA143, AEDC V41A-P8A, O/ET W/R.H. SRB SEPARATING (OVX242) ( 23 MAY 77 )

REFERENCE DATA

SREF = 2690.0000 SQ.FT. XMRP = 1097.0000 IN. XT
LREF = 1290.3000 INCHES YMRP = .0000 IN. YT
BREF = 1290.3000 INCHES ZMRP = 450.0000 IN. ZT
SCALE = .0100

PARAMETRIC DATA

ALPHA = -10.000 BETA = -10.000
DALPHA = -4.000 DBETA = -4.000
Z = 200.000 MACH = 4.500
JET PC = 1225.000

RUN NO. 3686/ 0 RN/L = 2.40 GRADIENT INTERVAL = -5.00/ 5.00

| Y | X | Z | ALPHA | BETA | PHI | CN | CLM | CY | CYN | CBL | CA |
|---|---|---|---|---|---|---|---|---|---|---|---|
| -122.070 | -.782 | 202.28000 | -10.32900 | -9.88110 | -.05935 | -.29181 | .04013 | .08936 | -.09988 | .01609 | .24052 |
| -121.580 | 99.320 | 199.47000 | -10.33400 | -9.81600 | -.04172 | -.33461 | .06074 | .06966 | -.12004 | .02002 | .24592 |
| -119.770 | 199.470 | 200.81000 | -10.30500 | -9.84830 | -.03480 | -.29870 | .05499 | .08079 | -.11202 | .02181 | .23979 |
| | GRADIENT | .00000 | .00000 | .00000 | .00000 | .00000 | .00000 | .00000 | .00000 | .00000 | .00000 |

IA143, AEDC V41A-P8A, O/ET W/R.H. SRB SEPARATING (OVX242) ( 23 MAY 77 )

REFERENCE DATA

SREF = 2690.0000 SQ.FT. XMRP = 1097.0000 IN. XT
LREF = 1290.3000 INCHES YMRP = .0000 IN. YT
BREF = 1290.3000 INCHES ZMRP = 450.0000 IN. ZT
SCALE = .0100

PARAMETRIC DATA

ALPHA = -10.000 BETA = -10.000
DALPHA = -4.000 DBETA = -4.000
Z = 200.000 MACH = 4.500
JET PC = 1225.000

RUN NO. 3651/ 0 RN/L = 2.37 GRADIENT INTERVAL = -5.00/ 5.00

| Y | X | Z | ALPHA | BETA | PHI | CN | CLM | CY | CYN | CBL | CA |
|---|---|---|---|---|---|---|---|---|---|---|---|
| -150.540 | 199.470 | 199.67000 | -10.32000 | -9.85010 | -.03394 | -.31874 | .05790 | .08489 | -.11369 | .02282 | .24188 |
| -150.830 | 99.449 | 198.68000 | -10.36000 | -9.81270 | -.03952 | -.35920 | .06009 | .09034 | -.13366 | .02551 | .25009 |
| -149.140 | -.172 | 200.57000 | -10.35100 | -9.89380 | -.06154 | -.31985 | .04573 | .10804 | -.10471 | .01902 | .24550 |
| | GRADIENT | .00000 | .00000 | .00000 | .00000 | .00000 | .00000 | .00000 | .00000 | .00000 | .00000 |

RUN NO. 3656/ 0 RN/L = 2.37 GRADIENT INTERVAL = -5.00/ 5.00

| Y | X | Z | ALPHA | BETA | PHI | CN | CLM | CY | CYN | CBL | CA |
|---|---|---|---|---|---|---|---|---|---|---|---|
| -202.790 | -.860 | 200.47000 | -10.36700 | -9.92220 | -.06929 | -.34877 | .05453 | .12889 | -.10252 | .02009 | .24496 |
| -201.520 | 99.363 | 199.58000 | -10.38000 | -9.85780 | -.05149 | -.37194 | .05816 | .11448 | -.12526 | .02523 | .24741 |
| -200.730 | 199.440 | 200.47000 | -10.35200 | -9.85250 | -.01994 | -.38410 | .08050 | .08657 | -.11454 | .02609 | .25792 |
| | GRADIENT | .00000 | .00000 | .00000 | .00000 | .00000 | .00000 | .00000 | .00000 | .00000 | .00000 |

IA143, AEDC V41A-P8A, O/ET W/R.H. SRB SEPARATING (OVX243) ( 23 MAY 77 )

REFERENCE DATA

SREF = 2690.0000 SQ.FT. XMRP = 1097.0000 IN. XT
LREF = 1290.3000 INCHES YMRP = .0000 IN. YT
BREF = 1290.3000 INCHES ZMRP = 450.0000 IN. ZT
SCALE = .0100

PARAMETRIC DATA

ALPHA = -10.000 BETA = -10.000
DALPHA = -4.000 DBETA = -2.000
Z = 50.000 MACH = 4.500
JET PC = 1225.000

RUN NO. 3657/ 0 RN/L = 2.37 GRADIENT INTERVAL = -5.00/ 5.00

| Y | X | Z | ALPHA | BETA | PHI | CN | CLM | CY | CYN | CBL | CA |
|---|---|---|---|---|---|---|---|---|---|---|---|
| -70.997 | -.999 | 49.34100 | -10.46000 | -9.99240 | -.09297 | -.36600 | .00742 | .18187 | -.09825 | .02213 | .21212 |
| -70.570 | 99.566 | 50.50200 | -10.43600 | -9.98280 | -.08136 | -.35888 | .01356 | .17219 | -.09812 | .02313 | .20122 |
| -70.163 | 199.590 | 50.98200 | -10.39200 | -9.99200 | -.07308 | -.32534 | .01913 | .15588 | -.08543 | .02055 | .20306 |
| | GRADIENT | .00000 | .00000 | .00000 | .00000 | .00000 | .00000 | .00000 | .00000 | .00000 | .00000 |

RUN NO. 3662/ 0 RN/L = 2.37 GRADIENT INTERVAL = -5.00/ 5.00

| Y | X | Z | ALPHA | BETA | PHI | CN | CLM | CY | CYN | CBL | CA |
|---|---|---|---|---|---|---|---|---|---|---|---|
| -98.957 | 199.720 | 49.69700 | -10.40900 | -9.99480 | -.07864 | -.35504 | .02838 | .17166 | -.09256 | .02274 | .20883 |
| -100.300 | 99.544 | 48.91600 | -10.45700 | -9.99730 | -.09818 | -.39257 | .02562 | .20884 | -.11074 | .02685 | .21240 |
| -100.370 | -.459 | 49.75700 | -10.47400 | -10.00700 | -.10944 | -.38821 | .01748 | .21186 | -.10692 | .02436 | .22572 |
| | GRADIENT | .00000 | .00000 | .00000 | .00000 | .00000 | .00000 | .00000 | .00000 | .00000 | .00000 |

IA143, AEDC V41A-P8A, O/ET W/R.H. SRB SEPARATING (OVX243) ( 23 MAY 77 )

REFERENCE DATA

SREF = 2690.0000 SQ.FT. XMRP = 1097.0000 IN. XT
LREF = 1290.3000 INCHES YMRP = .0000 IN. YT
BREF = 1290.3000 INCHES ZMRP = 450.0000 IN. ZT
SCALE = .0100

PARAMETRIC DATA

ALPHA = -10.000 BETA = -10.000
DALPHA = -4.000 DBETA = -2.000
Z = 50.000 MACH = 4.500
JET PC = 1225.000

RUN NO. 3663/ 0 RN/L = 2.37 GRADIENT INTERVAL = -5.00/ 5.00

| Y | X | Z | ALPHA | BETA | PHI | CN | CLM | CY | CYN | CBL | CA |
|---|---|---|---|---|---|---|---|---|---|---|---|
| -149.170 | -.048 | 51.10400 | -10.44100 | -10.06100 | -.12401 | -.34865 | .01482 | .22143 | -.08658 | .01951 | .22286 |
| -150.610 | 99.308 | 49.26500 | -10.45700 | -10.02400 | -.10850 | -.38557 | .02277 | .22555 | -.10700 | .02648 | .21452 |
| -151.080 | 199.270 | 50.41800 | -10.43100 | -9.99800 | -.08092 | -.39303 | .04034 | .19484 | -.10390 | .02734 | .21880 |
| | GRADIENT | .00000 | .00000 | .00000 | .00000 | .00000 | .00000 | .00000 | .00000 | .00000 | .00000 |

IA143, AEDC V41A-P8A, O/ET W/R.H. SRB SEPARATING (OVX244) ( 23 MAY 77 )

REFERENCE DATA

SREF = 2690.0000 SQ.FT. XMRP = 1097.0000 IN. XT
LREF = 1290.3000 INCHES YMRP = .0000 IN. YT
BREF = 1290.3000 INCHES ZMRP = 450.0000 IN. ZT
SCALE = .0100

PARAMETRIC DATA

ALPHA = -10.000 BETA = -10.000
DALPHA = -4.000 DBETA = -2.000
Z = 100.000 MACH = 4.500
JET PC = 1225.000

RUN NO. 3658/ 0 RN/L = 2.37 GRADIENT INTERVAL = -5.00/ 5.00

| Y | X | Z | ALPHA | BETA | PHI | CN | CLM | CY | CYN | CBL | CA |
|---|---|---|---|---|---|---|---|---|---|---|---|
| -72.737 | 199.000 | 99.47400 | -10.39500 | -9.87960 | -.03502 | -.35332 | .03423 | .10981 | -.11396 | .02621 | .23218 |
| -71.311 | 99.310 | 99.44500 | -10.41800 | -9.84330 | -.03969 | -.37438 | .03108 | .08407 | -.11575 | .02185 | .22504 |
| -70.223 | -.362 | 99.12700 | -10.47000 | -9.84230 | -.05573 | -.39335 | .01747 | .10425 | -.12622 | .02305 | .23857 |
| | GRADIENT | .00000 | .00000 | .00000 | .00000 | .00000 | .00000 | .00000 | .00000 | .00000 | .00000 |

RUN NO. 3661/ 0 RN/L = 2.37 GRADIENT INTERVAL = -5.00/ 5.00

| Y | X | Z | ALPHA | BETA | PHI | CN | CLM | CY | CYN | CBL | CA |
|---|---|---|---|---|---|---|---|---|---|---|---|
| -100.060 | -.339 | 100.33000 | -10.39300 | -9.96410 | -.07333 | -.32621 | .02242 | .14163 | -.09015 | .01919 | .22191 |
| -101.690 | 99.297 | 99.50500 | -10.40900 | -9.92450 | -.06688 | -.34820 | .02405 | .14094 | -.10843 | .02323 | .21943 |
| -100.820 | 199.450 | 100.55000 | -10.37900 | -9.92550 | -.05223 | -.33294 | .03113 | .12634 | -.10088 | .02301 | .21819 |
| | GRADIENT | .00000 | .00000 | .00000 | .00000 | .00000 | .00000 | .00000 | .00000 | .00000 | .00000 |

RUN NO. 3664/ 0 RN/L = 2.38 GRADIENT INTERVAL = -5.00/ 5.00

| Y | X | Z | ALPHA | BETA | PHI | CN | CLM | CY | CYN | CBL | CA |
|---|---|---|---|---|---|---|---|---|---|---|---|
| -151.770 | 199.230 | 100.68000 | -10.40100 | -9.93160 | -.06030 | -.36901 | .04172 | .13890 | -.10455 | .02370 | .22520 |
| -153.250 | 98.958 | 99.06400 | -10.43800 | -9.93990 | -.07753 | -.38631 | .03237 | .17197 | -.11791 | .02694 | .22512 |
| -149.370 | -.165 | 100.80000 | -10.42400 | -9.99590 | -.09556 | -.35904 | .02892 | .18073 | -.09582 | .02104 | .23348 |
| | GRADIENT | .00000 | .00000 | .00000 | .00000 | .00000 | .00000 | .00000 | .00000 | .00000 | .00000 |

IA143, AEDC V41A-P8A, O/ET W/R.H. SRB SEPARATING (OVX245) ( 23 MAY 77 )

REFERENCE DATA

SREF = 2690.0000 SQ.FT. XMRP = 1097.0000 IN. XT
LREF = 1290.3000 INCHES YMRP = .0000 IN. YT
BREF = 1290.3000 INCHES ZMRP = 450.0000 IN. ZT
SCALE = .0100

PARAMETRIC DATA

ALPHA = -10.000 BETA = -10.000
DALPHA = -4.000 DBETA = -2.000
Z = 200.000 MACH = 4.500
JET PC = 1225.000

RUN NO. 3659/ 0 RN/L = 2.37 GRADIENT INTERVAL = -5.00/ 5.00

| Y | X | Z | ALPHA | BETA | PHI | CN | CLM | CY | CYN | CBL | CA |
|---|---|---|---|---|---|---|---|---|---|---|---|
| -70.517 | -.541 | 199.89000 | -10.32900 | -9.67420 | -.00836 | -.30713 | .04462 | .00460 | -.15102 | .02240 | .25932 |
| -67.828 | 99.878 | 201.25000 | -10.26600 | -9.74160 | -.00394 | -.28875 | .06893 | .03085 | -.13522 | .02462 | .25036 |
| -70.675 | 199.460 | 199.64000 | -10.27500 | -9.73430 | .01668 | -.30463 | .07418 | .03280 | -.14122 | .03009 | .26543 |
| | GRADIENT | .00000 | .00000 | .00000 | .00000 | .00000 | .00000 | .00000 | .00000 | .00000 | .00000 |

RUN NO. 3660/ 0 RN/L = 2.37 GRADIENT INTERVAL = -5.00/ 5.00

| Y | X | Z | ALPHA | BETA | PHI | CN | CLM | CY | CYN | CBL | CA |
|---|---|---|---|---|---|---|---|---|---|---|---|
| -99.063 | 199.650 | 200.04000 | -10.29000 | -9.80190 | -.01274 | -.29519 | .06084 | .06817 | -.12793 | .02702 | .25158 |
| -100.120 | 99.515 | 200.00000 | -10.29900 | -9.80440 | -.03172 | -.29714 | .05734 | .07064 | -.12671 | .02326 | .24492 |
| -99.450 | -.310 | 201.65000 | -10.24200 | -9.90370 | -.05012 | -.25338 | .06183 | .02781 | -.05579 | .00235 | .21709 |
| | GRADIENT | .00000 | .00000 | .00000 | .00000 | .00000 | .00000 | .00000 | .00000 | .00000 | .00000 |

RUN NO. 3665/ 0 RN/L = 2.39 GRADIENT INTERVAL = -5.00/ 5.00

| Y | X | Z | ALPHA | BETA | PHI | CN | CLM | CY | CYN | CBL | CA |
|---|---|---|---|---|---|---|---|---|---|---|---|
| -152.600 | -.741 | 201.58000 | -10.33200 | -9.88930 | -.05642 | -.31612 | .05511 | .09975 | -.10216 | .01854 | .25092 |
| -150.310 | 99.352 | 199.00000 | -10.35700 | -9.79990 | -.03611 | -.35737 | .06114 | .08803 | -.13826 | .02662 | .25381 |
| -149.690 | 199.610 | 201.57000 | -10.30900 | -9.84170 | -.03201 | -.30242 | .05462 | .08274 | -.11634 | .02333 | .24006 |
| | GRADIENT | .00000 | .00000 | .00000 | .00000 | .00000 | .00000 | .00000 | .00000 | .00000 | .00000 |

IA143, AEDC V41A-P8A, O/ET W/R.H. SRB SEPARATING (OVX246) ( 23 MAY 77 )

REFERENCE DATA

SREF = 2690.0000 SQ.FT. XMRP = 1097.0000 IN. XT
LREF = 1290.3000 INCHES YMRP = .0000 IN. YT
BREF = 1290.3000 INCHES ZMRP = 450.0000 IN. ZT
SCALE = .0100

PARAMETRIC DATA

ALPHA = -10.000 BETA = -10.000
DALPHA = -4.000 DBETA = .000
Z = 50.000 MACH = 4.500
JET PC = 1225.000

RUN NO. 3666/ 0 RN/L = 2.39 GRADIENT INTERVAL = -5.00/ 5.00

| Y | X | Z | ALPHA | BETA | PHI | CN | CLM | CY | CYN | CBL | CA |
|---|---|---|---|---|---|---|---|---|---|---|---|
| -48.863 | -.637 | 50.85000 | -10.42200 | -9.98540 | -.08499 | -.34236 | .01464 | .12125 | -.06802 | .01042 | .21386 |
| -50.423 | 99.420 | 49.40800 | -10.43600 | -9.94750 | -.06208 | -.35744 | .01021 | .14700 | -.10174 | .02399 | .20788 |
| -49.793 | 199.570 | 50.98300 | -10.39800 | -9.96980 | -.05732 | -.32130 | .01167 | .14599 | -.09129 | .02327 | .20792 |
| | GRADIENT | .00000 | .00000 | .00000 | .00000 | .00000 | .00000 | .00000 | .00000 | .00000 | .00000 |

IA143, AEDC V41A-P8A, O/ET W/R.H. SRB SEPARATING (OVX246) ( 23 MAY 77 )

REFERENCE DATA

SREF = 2690.0000 SQ.FT. XMRP = 1097.0000 IN. XT
LREF = 1290.3000 INCHES YMRP = .0000 IN. YT
BREF = 1290.3000 INCHES ZMRP = 450.0000 IN. ZT
SCALE = .0100

PARAMETRIC DATA

ALPHA = -10.000 BETA = -10.000
DALPHA = -4.000 DBETA = .000
Z = 50.000 MACH = 4.500
JET PC = 1225.000

RUN NO. 3671/ 0 RN/L = 2.40 GRADIENT INTERVAL = -5.00/ 5.00

| Y | X | Z | ALPHA | BETA | PHI | CN | CLM | CY | CYN | CBL | CA |
|---|---|---|---|---|---|---|---|---|---|---|---|
| -99.224 | 199.660 | 49.76900 | -10.40400 | -9.98530 | -.07392 | -.34684 | .02536 | .16486 | -.09348 | .02289 | .20686 |
| -99.713 | 99.538 | 48.95900 | -10.45600 | -9.99000 | -.09297 | -.38331 | .01943 | .20530 | -.11249 | .02769 | .20907 |
| -99.419 | -.263 | 49.70700 | -10.47500 | -10.00200 | -.11178 | -.38180 | .01346 | .20931 | -.10795 | .02367 | .22676 |
| | GRADIENT | .00000 | .00000 | .00000 | .00000 | .00000 | .00000 | .00000 | .00000 | .00000 | .00000 |

RUN NO. 3672/ 0 RN/L = 2.40 GRADIENT INTERVAL = -5.00/ 5.00

| Y | X | Z | ALPHA | BETA | PHI | CN | CLM | CY | CYN | CBL | CA |
|---|---|---|---|---|---|---|---|---|---|---|---|
| -149.320 | -.227 | 51.08800 | -10.44200 | -10.04600 | -.11907 | -.34193 | .01010 | .22509 | -.09572 | .02254 | .22238 |
| -150.580 | 99.379 | 49.31100 | -10.45500 | -10.01000 | -.10017 | -.37915 | .01912 | .21925 | -.11050 | .02789 | .21195 |
| -151.170 | 199.330 | 50.31500 | -10.42800 | -9.98490 | -.07808 | -.38607 | .03766 | .18239 | -.10315 | .02604 | .21863 |
| | GRADIENT | .00000 | .00000 | .00000 | .00000 | .00000 | .00000 | .00000 | .00000 | .00000 | .00000 |

IA143, AEDC V41A-P8A, O/ET W/R.H. SRB SEPARATING (OVX247) ( 23 MAY 77 )

REFERENCE DATA

SREF = 2690.0000 SQ.FT. XMRP = 1097.0000 IN. XT
LREF = 1290.3000 INCHES YMRP = .0000 IN. YT
BREF = 1290.3000 INCHES ZMRP = 450.0000 IN. ZT
SCALE = .0100

PARAMETRIC DATA

ALPHA = -10.000 BETA = -10.000
DALPHA = -4.000 DBETA = .000
Z = 100.000 MACH = 4.500
JET PC = 1225.000

RUN NO. 3667/ 0 RN/L = 2.39 GRADIENT INTERVAL = -5.00/ 5.00

| Y | X | Z | ALPHA | BETA | PHI | CN | CLM | CY | CYN | CBL | CA |
|---|---|---|---|---|---|---|---|---|---|---|---|
| -52.552 | 199.210 | 99.41200 | -10.40100 | -9.84170 | -.01658 | -.36083 | .03431 | .09434 | -.12411 | .02937 | .24031 |
| -51.603 | 99.165 | 99.07600 | -10.43600 | -9.76320 | -.00929 | -.40239 | .03358 | .05608 | -.13917 | .02773 | .22964 |
| -46.278 | .352 | 99.91000 | -10.47200 | -9.81060 | -.04545 | -.39149 | .01512 | .09222 | -.13484 | .02477 | .24597 |
| | GRADIENT | .00000 | .00000 | .00000 | .00000 | .00000 | .00000 | .00000 | .00000 | .00000 | .00000 |

RUN NO. 3670/ 0 RN/L = 2.40 GRADIENT INTERVAL = -5.00/ 5.00

| Y | X | Z | ALPHA | BETA | PHI | CN | CLM | CY | CYN | CBL | CA |
|---|---|---|---|---|---|---|---|---|---|---|---|
| -99.690 | -.128 | 100.25000 | -10.36900 | -9.97060 | -.07636 | -.30114 | .02182 | .13956 | -.08577 | .01757 | .22206 |
| -100.930 | 99.408 | 98.97300 | -10.40500 | -9.91180 | -.05943 | -.34283 | .02246 | .13882 | -.11365 | .02527 | .22160 |
| -100.280 | 199.560 | 100.50000 | -10.37800 | -9.91940 | -.04853 | -.32856 | .02928 | .12580 | -.10357 | .02414 | .21824 |
| | GRADIENT | .00000 | .00000 | .00000 | .00000 | .00000 | .00000 | .00000 | .00000 | .00000 | .00000 |

IA143, AEDC V41A-P8A, O/ET W/R.H. SRB SEPARATING (OVX247) ( 23 MAY 77 )

REFERENCE DATA

SREF = 2690.0000 SQ.FT. XMRP = 1097.0000 IN. XT
LREF = 1290.3000 INCHES YMRP = .0000 IN. YT
BREF = 1290.3000 INCHES ZMRP = 450.0000 IN. ZT
SCALE = .0100

PARAMETRIC DATA

ALPHA = -10.000 BETA = -10.000
DALPHA = -4.000 DBETA = .000
Z = 100.000 MACH = 4.500
JET PC = 1225.000

RUN NO. 3673/ 0 RN/L = 2.40 GRADIENT INTERVAL = -5.00/ 5.00

| Y | X | Z | ALPHA | BETA | PHI | CN | CLM | CY | CYN | CBL | CA |
|---|---|---|---|---|---|---|---|---|---|---|---|
| -151.540 | 199.230 | 100.71000 | -10.39500 | -9.92480 | -.05924 | -.35621 | .03687 | .12869 | -.10200 | .02207 | .22230 |
| -149.050 | 99.628 | 99.09600 | -10.43600 | -9.92690 | -.07062 | -.38228 | .02987 | .16827 | -.12234 | .02852 | .22385 |
| -149.510 | -.198 | 100.63000 | -10.42600 | -9.97440 | -.09338 | -.34979 | .02171 | .18484 | -.10810 | .02400 | .23230 |
| | GRADIENT | .00000 | .00000 | .00000 | .00000 | .00000 | .00000 | .00000 | .00000 | .00000 | .00000 |

IA143, AEDC V41A-P8A, O/ET W/R.H. SRB SEPARATING (OVX248) ( 23 MAY 77 )

REFERENCE DATA

SREF = 2690.0000 SQ.FT. XMRP = 1097.0000 IN. XT
LREF = 1290.3000 INCHES YMRP = .0000 IN. YT
BREF = 1290.3000 INCHES ZMRP = 450.0000 IN. ZT
SCALE = .0100

PARAMETRIC DATA

ALPHA = -10.000 BETA = -10.000
DALPHA = -4.000 DBETA = .000
Z = 200.000 MACH = 4.500
JET PC = 1225.000

RUN NO. 3668/ 0 RN/L = 2.39 GRADIENT INTERVAL = -5.00/ 5.00

| Y | X | Z | ALPHA | BETA | PHI | CN | CLM | CY | CYN | CBL | CA |
|---|---|---|---|---|---|---|---|---|---|---|---|
| -50.657 | -.679 | 199.91000 | -10.28700 | -9.61700 | .01525 | -.29553 | .05994 | -.03261 | -.15826 | .02306 | .26647 |
| -49.298 | 99.656 | 200.68000 | -10.24800 | -9.65590 | .03259 | -.29030 | .07838 | -.00308 | -.15835 | .03089 | .26700 |
| -49.876 | 199.720 | 199.59000 | -10.25800 | -9.67660 | .04629 | -.30848 | .08522 | .00122 | -.15243 | .03342 | .28147 |
| | GRADIENT | .00000 | .00000 | .00000 | .00000 | .00000 | .00000 | .00000 | .00000 | .00000 | .00000 |

RUN NO. 3669/ 0 RN/L = 2.39 GRADIENT INTERVAL = -5.00/ 5.00

| Y | X | Z | ALPHA | BETA | PHI | CN | CLM | CY | CYN | CBL | CA |
|---|---|---|---|---|---|---|---|---|---|---|---|
| -98.228 | 199.910 | 200.01000 | -10.28200 | -9.78900 | -.00614 | -.28701 | .06012 | .06468 | -.13249 | .02858 | .25334 |
| -100.220 | 99.554 | 199.97000 | -10.28900 | -9.78730 | -.02380 | -.28961 | .05815 | .06792 | -.13360 | .02558 | .24788 |
| -99.452 | -.264 | 201.76000 | -10.22100 | -9.90880 | -.04321 | -.25995 | .07739 | -.04224 | -.01460 | -.01260 | .21604 |
| | GRADIENT | .00000 | .00000 | .00000 | .00000 | .00000 | .00000 | .00000 | .00000 | .00000 | .00000 |

RUN NO. 3674/ 0 RN/L = 2.40 GRADIENT INTERVAL = -5.00/ 5.00

| Y | X | Z | ALPHA | BETA | PHI | CN | CLM | CY | CYN | CBL | CA |
|---|---|---|---|---|---|---|---|---|---|---|---|
| -152.380 | -.816 | 201.90000 | -10.32500 | -9.87320 | -.06140 | -.30011 | .05045 | .11549 | -.11803 | .02221 | .25482 |
| -151.960 | 99.115 | 198.74000 | -10.35200 | -9.79110 | -.03196 | -.34879 | .05880 | .08649 | -.14167 | .02779 | .25337 |
| -149.620 | 199.650 | 201.50000 | -10.30400 | -9.83600 | -.02947 | -.29526 | .05207 | .08096 | -.11822 | .02389 | .23893 |
| | GRADIENT | .00000 | .00000 | .00000 | .00000 | .00000 | .00000 | .00000 | .00000 | .00000 | .00000 |

IA143, AEDC V41A-P8A, O/ET W/R.H. SRB SEPARATING (OVX249) ( 23 MAY 77 )

REFERENCE DATA

SREF = 2690.0000 SQ.FT. XMRP = 1097.0000 IN. XT
LREF = 1290.3000 INCHES YMRP = .0000 IN. YT
BREF = 1290.3000 INCHES ZMRP = 450.0000 IN. ZT
SCALE = .0100

PARAMETRIC DATA

ALPHA = -10.000 BETA = -10.000
DALPHA = -4.000 DBETA = 2.000
Z = 50.000 MACH = 4.500
JET PC = 1225.000

RUN NO. 3675/ 0 RN/L = 2.40 GRADIENT INTERVAL = -5.00/ 5.00

| Y | X | Z | ALPHA | BETA | PHI | CN | CLM | CY | CYN | CBL | CA |
|---|---|---|---|---|---|---|---|---|---|---|---|
| -48.909 | -.678 | 50.80800 | -10.38800 | -9.98540 | -.08088 | -.30120 | .00908 | .15318 | -.08630 | .01867 | .21083 |
| -50.741 | 99.525 | 48.84000 | -10.42700 | -9.94680 | -.05774 | -.33921 | .00508 | .14670 | -.10214 | .02497 | .20707 |
| -50.021 | 199.560 | 50.83900 | -10.39300 | -9.96400 | -.05170 | -.30975 | .00666 | .14147 | -.09184 | .02388 | .20546 |
| | GRADIENT | .00000 | .00000 | .00000 | .00000 | .00000 | .00000 | .00000 | .00000 | .00000 | .00000 |

RUN NO. 3680/ 0 RN/L = 2.40 GRADIENT INTERVAL = -5.00/ 5.00

| Y | X | Z | ALPHA | BETA | PHI | CN | CLM | CY | CYN | CBL | CA |
|---|---|---|---|---|---|---|---|---|---|---|---|
| -98.514 | 199.780 | 49.82000 | -10.39700 | -9.98110 | -.07266 | -.33658 | .02224 | .15490 | -.08989 | .02117 | .20427 |
| -99.532 | 99.580 | 48.76700 | -10.45300 | -9.98240 | -.08590 | -.37494 | .01469 | .20069 | -.11397 | .02871 | .20566 |
| -99.941 | -.337 | 49.76700 | -10.47500 | -9.99270 | -.10830 | -.37302 | .00708 | .21403 | -.11494 | .02613 | .22444 |
| | GRADIENT | .00000 | .00000 | .00000 | .00000 | .00000 | .00000 | .00000 | .00000 | .00000 | .00000 |

RUN NO. 3681/ 0 RN/L = 2.40 GRADIENT INTERVAL = -5.00/ 5.00

| Y | X | Z | ALPHA | BETA | PHI | CN | CLM | CY | CYN | CBL | CA |
|---|---|---|---|---|---|---|---|---|---|---|---|
| -149.350 | -.227 | 51.18600 | -10.43800 | -10.03300 | -.11407 | -.33389 | .00624 | .22624 | -.10304 | .02486 | .22138 |
| -150.710 | 99.384 | 49.08200 | -10.45400 | -10.00700 | -.09518 | -.37601 | .01696 | .21320 | -.10907 | .02783 | .21016 |
| -151.280 | 199.350 | 50.45700 | -10.42600 | -9.97370 | -.07579 | -.38306 | .03696 | .16835 | -.10059 | .02411 | .22052 |
| | GRADIENT | .00000 | .00000 | .00000 | .00000 | .00000 | .00000 | .00000 | .00000 | .00000 | .00000 |

IA143, AEDC V41A-P8A, O/ET W/R.H. SRB SEPARATING (OVX250) ( 23 MAY 77 )

REFERENCE DATA

SREF = 2690.0000 SQ.FT. XMRP = 1097.0000 IN. XT
LREF = 1290.3000 INCHES YMRP = .0000 IN. YT
BREF = 1290.3000 INCHES ZMRP = 450.0000 IN. ZT
SCALE = .0100

PARAMETRIC DATA

ALPHA = -10.000 BETA = -10.000
DALPHA = -4.000 DBETA = 2.000
Z = 100.000 MACH = 4.500
JET PC = 1225.000

RUN NO. 3676/ 0 RN/L = 2.40 GRADIENT INTERVAL = -5.00/ 5.00

| Y | X | Z | ALPHA | BETA | PHI | CN | CLM | CY | CYN | CBL | CA |
|---|---|---|---|---|---|---|---|---|---|---|---|
| -52.222 | 199.120 | 99.19300 | -10.39800 | -9.82280 | -.00609 | -.36229 | .03605 | .08929 | -.13074 | .03185 | .24427 |
| -51.166 | 99.226 | 99.41400 | -10.42300 | -9.77910 | -.01141 | -.37907 | .03089 | .08469 | -.14772 | .03272 | .24159 |
| -49.883 | -.302 | 99.46800 | -10.47000 | -9.79870 | -.03947 | -.38823 | .01424 | .08899 | -.13896 | .02618 | .24884 |
| | GRADIENT | .00000 | .00000 | .00000 | .00000 | .00000 | .00000 | .00000 | .00000 | .00000 | .00000 |

IA143, AEDC V41A-P8A, O/ET W/R.H. SRB SEPARATING (OVX250) ( 23 MAY 77 )

REFERENCE DATA

SREF = 2690.0000 SQ.FT. XMRP = 1097.0000 IN. XT
LREF = 1290.3000 INCHES YMRP = .0000 IN. YT
BREF = 1290.3000 INCHES ZMRP = 450.0000 IN. ZT
SCALE = .0100

PARAMETRIC DATA

ALPHA = -10.000 BETA = -10.000
DALPHA = -4.000 DBETA = 2.000
Z = 100.000 MACH = 4.500
JET PC = 1225.000

RUN NO. 3679/ 0 RN/L = 2.40 GRADIENT INTERVAL = -5.00/ 5.00

| Y | X | Z | ALPHA | BETA | PHI | CN | CLM | CY | CYN | CBL | CA |
|---|---|---|---|---|---|---|---|---|---|---|---|
| -99.987 | -.187 | 100.09000 | -10.34700 | -9.96100 | -.07184 | -.27240 | .01606 | .14760 | -.09505 | .02110 | .21705 |
| -100.950 | 99.282 | 98.35400 | -10.40100 | -9.90130 | -.05286 | -.33720 | .02034 | .13494 | -.11676 | .02656 | .21967 |
| -100.760 | 199.540 | 100.64000 | -10.37400 | -9.90880 | -.04242 | -.32553 | .02763 | .11815 | -.10475 | .02446 | .21815 |
| | GRADIENT | .00000 | .00000 | .00000 | .00000 | .00000 | .00000 | .00000 | .00000 | .00000 | .00000 |

RUN NO. 3682/ 0 RN/L = 2.40 GRADIENT INTERVAL = -5.00/ 5.00

| Y | X | Z | ALPHA | BETA | PHI | CN | CLM | CY | CYN | CBL | CA |
|---|---|---|---|---|---|---|---|---|---|---|---|
| -151.570 | 199.300 | 100.81000 | -10.39100 | -9.91990 | -.05835 | -.34986 | .03476 | .12088 | -.09991 | .02081 | .22125 |
| -149.290 | 99.523 | 98.90900 | -10.43500 | -9.91710 | -.06562 | -.37969 | .02791 | .16140 | -.12337 | .02873 | .22276 |
| -149.600 | -.223 | 100.68000 | -10.42500 | -9.95600 | -.08969 | -.34050 | .01579 | .18294 | -.11577 | .02566 | .23082 |
| | GRADIENT | .00000 | .00000 | .00000 | .00000 | .00000 | .00000 | .00000 | .00000 | .00000 | .00000 |

IA143, AEDC V41A-P8A, O/ET W/R.H. SRB SEPARATING (OVX251) ( 23 MAY 77 )

REFERENCE DATA

SREF = 2690.0000 SQ.FT. XMRP = 1097.0000 IN. XT
LREF = 1290.3000 INCHES YMRP = .0000 IN. YT
BREF = 1290.3000 INCHES ZMRP = 450.0000 IN. ZT
SCALE = .0100

PARAMETRIC DATA

ALPHA = -10.000 BETA = -10.000
DALPHA = -4.000 DBETA = 2.000
Z = 200.000 MACH = 4.500
JET PC = 1225.000

RUN NO. 3677/ 0 RN/L = 2.40 GRADIENT INTERVAL = -5.00/ 5.00

| Y | X | Z | ALPHA | BETA | PHI | CN | CLM | CY | CYN | CBL | CA |
|---|---|---|---|---|---|---|---|---|---|---|---|
| -50.316 | -.629 | 199.96000 | -10.28400 | -9.60270 | .01823 | -.29920 | .06446 | -.03029 | -.16618 | .02524 | .27235 |
| -49.084 | 99.663 | 200.91000 | -10.24500 | -9.64460 | .03697 | -.28749 | .07865 | -.00412 | -.16334 | .03242 | .27135 |
| -49.785 | 199.530 | 199.67000 | -10.25000 | -9.66070 | .05550 | -.30305 | .08590 | -.00397 | -.15742 | .03534 | .28294 |
| | GRADIENT | .00000 | .00000 | .00000 | .00000 | .00000 | .00000 | .00000 | .00000 | .00000 | .00000 |

RUN NO. 3678/ 0 RN/L = 2.40 GRADIENT INTERVAL = -5.00/ 5.00

| Y | X | Z | ALPHA | BETA | PHI | CN | CLM | CY | CYN | CBL | CA |
|---|---|---|---|---|---|---|---|---|---|---|---|
| -97.845 | 199.960 | 199.98000 | -10.27700 | -9.77320 | .00082 | -.28216 | .05996 | .05832 | -.13662 | .02976 | .25563 |
| -99.908 | 99.646 | 199.84000 | -10.28500 | -9.77570 | -.01876 | -.28521 | .05743 | .06660 | -.13865 | .02720 | .24947 |
| -99.175 | -.143 | 201.29000 | -10.23900 | -9.84940 | -.04530 | -.25279 | .06668 | .04537 | -.09075 | .01130 | .23659 |
| | GRADIENT | .00000 | .00000 | .00000 | .00000 | .00000 | .00000 | .00000 | .00000 | .00000 | .00000 |

IA143, AEDC V41A-P8A, O/ET W/R.H. SRB SEPARATING (OVX251) ( 23 MAY 77 )

REFERENCE DATA

SREF = 2690.0000 SQ.FT. XMRP = 1097.0000 IN. XT
LREF = 1290.3000 INCHES YMRP = .0000 IN. YT
BREF = 1290.3000 INCHES ZMRP = 450.0000 IN. ZT
SCALE = .0100

PARAMETRIC DATA

ALPHA = -10.000 BETA = -10.000
DALPHA = -4.000 DBETA = 2.000
Z = 200.000 MACH = 4.500
JET PC = 1225.000

RUN NO. 3683/ 0 RN/L = 2.40 GRADIENT INTERVAL = -5.00/ 5.00

| Y | X | Z | ALPHA | BETA | PHI | CN | CLM | CY | CYN | CBL | CA |
|---|---|---|---|---|---|---|---|---|---|---|---|
| -152.240 | -.842 | 202.01000 | -10.31800 | -9.85960 | -.06258 | -.28472 | .04580 | .12530 | -.12970 | .02517 | .25601 |
| -151.970 | 99.191 | 198.69000 | -10.34600 | -9.77770 | -.02657 | -.34279 | .05796 | .08085 | -.14510 | .02863 | .25439 |
| -149.870 | 199.610 | 201.59000 | -10.29900 | -9.83160 | -.02819 | -.28693 | .05022 | .07667 | -.11789 | .02350 | .23824 |
| | GRADIENT | .00000 | .00000 | .00000 | .00000 | .00000 | .00000 | .00000 | .00000 | .00000 | .00000 |

IA143, AEDC V41A-P8A, O/ET W/R.H. SRB SEPARATING (OVX252) ( 23 MAY 77 )

REFERENCE DATA

SREF = 2690.0000 SQ.FT. XMRP = 1097.0000 IN. XT
LREF = 1290.3000 INCHES YMRP = .0000 IN. YT
BREF = 1290.3000 INCHES ZMRP = 450.0000 IN. ZT
SCALE = .0100

PARAMETRIC DATA

ALPHA = -10.000 BETA = .000
DALPHA = .000 DBETA = -4.000
Z = .000 MACH = 4.500
JET PC = .000

RUN NO. 3687/ 0 RN/L = 2.40 GRADIENT INTERVAL = -5.00/ 5.00

| Y | X | Z | ALPHA | BETA | PHI | CN | CLM | CY | CYN | CBL | CA |
|---|---|---|---|---|---|---|---|---|---|---|---|
| -120.620 | -.390 | .04035 | -10.26100 | .01470 | .04064 | -.30844 | .08542 | -.05657 | .02181 | -.00295 | .24931 |
| -120.090 | 99.640 | .00664 | -10.25900 | .00818 | .03963 | -.30671 | .08565 | -.04974 | .02105 | -.00207 | .24913 |
| -119.350 | 199.480 | .02592 | -10.25700 | .00137 | .03703 | -.30434 | .08544 | -.04122 | .01959 | -.00116 | .24925 |
| | GRADIENT | .00000 | .00000 | .00000 | .00000 | .00000 | .00000 | .00000 | .00000 | .00000 | .00000 |

RUN NO. 3692/ 0 RN/L = 2.38 GRADIENT INTERVAL = -5.00/ 5.00

| Y | X | Z | ALPHA | BETA | PHI | CN | CLM | CY | CYN | CBL | CA |
|---|---|---|---|---|---|---|---|---|---|---|---|
| -151.860 | 199.670 | -.13301 | -10.25400 | -.00190 | .03240 | -.30711 | .08834 | -.02994 | .01511 | .00021 | .24899 |
| -151.280 | 99.602 | -.05319 | -10.25500 | .00182 | .03587 | -.30603 | .08716 | -.03748 | .01735 | -.00049 | .24939 |
| -150.920 | -.320 | -.16578 | -10.25600 | .00437 | .03789 | -.30692 | .08688 | -.04129 | .01816 | -.00073 | .24983 |
| | GRADIENT | .00000 | .00000 | .00000 | .00000 | .00000 | .00000 | .00000 | .00000 | .00000 | .00000 |

RUN NO. 3693/ 0 RN/L = 2.38 GRADIENT INTERVAL = -5.00/ 5.00

| Y | X | Z | ALPHA | BETA | PHI | CN | CLM | CY | CYN | CBL | CA |
|---|---|---|---|---|---|---|---|---|---|---|---|
| -199.750 | -.392 | -.18804 | -10.25200 | -.00554 | .02116 | -.30821 | .08925 | -.01705 | .01044 | .00045 | .24701 |
| -200.470 | 99.505 | -.09286 | -10.25200 | -.00474 | .02021 | -.30773 | .08904 | -.01665 | .00992 | .00038 | .24707 |
| -200.850 | 199.570 | .02839 | -10.25200 | -.00622 | .01912 | -.30688 | .08853 | -.01504 | .00979 | .00041 | .24693 |
| | GRADIENT | .00000 | .00000 | .00000 | .00000 | .00000 | .00000 | .00000 | .00000 | .00000 | .00000 |

IA143, AEDC V41A-P8A, O/ET W/R.H. SRB SEPARATING (OVX253) ( 23 MAY 77 )

REFERENCE DATA

SREF = 2690.0000 SQ.FT. XMRP = 1097.0000 IN. XT
LREF = 1290.3000 INCHES YMRP = .0000 IN. YT
BREF = 1290.3000 INCHES ZMRP = 450.0000 IN. ZT
SCALE = .0100

PARAMETRIC DATA

ALPHA = -10.000 BETA = .000
DALPHA = .000 DBETA = -4.000
Z = .000 MACH = 4.500
JET PC = .000

RUN NO. 3796/ 0 RN/L = 2.38 GRADIENT INTERVAL = -5.00/ 5.00

| Y | X | Z | ALPHA | BETA | PHI | CN | CLM | CY | CYN | CBL | CA |
|---|---|---|---|---|---|---|---|---|---|---|---|
| -150.540 | -.407 | .08029 | -10.25500 | .00609 | .03805 | -.30273 | .08409 | -.04144 | .01744 | -.00062 | .24390 |
| -150.550 | 99.635 | .13028 | -10.25300 | .00334 | .03630 | -.30195 | .08441 | -.03743 | .01660 | -.00028 | .24385 |
| -150.290 | 199.660 | -.04753 | -10.25200 | -.00049 | .03261 | -.30278 | .08567 | -.02961 | .01426 | .00043 | .24315 |
| | GRADIENT | .00000 | .00000 | .00000 | .00000 | .00000 | .00000 | .00000 | .00000 | .00000 | .00000 |

IA143, AEDC V41A-P8A, O/ET W/R.H. SRB SEPARATING (OVX254) ( 23 MAY 77 )

REFERENCE DATA

SREF = 2690.0000 SQ.FT. XMRP = 1097.0000 IN. XT
LREF = 1290.3000 INCHES YMRP = .0000 IN. YT
BREF = 1290.3000 INCHES ZMRP = 450.0000 IN. ZT
SCALE = .0100

PARAMETRIC DATA

ALPHA = -10.000 BETA = .000
DALPHA = .000 DBETA = -4.000
Z = 100.000 MACH = 4.500
JET PC = .000

RUN NO. 3688/ 0 RN/L = 2.40 GRADIENT INTERVAL = -5.00/ 5.00

| Y | X | Z | ALPHA | BETA | PHI | CN | CLM | CY | CYN | CBL | CA |
|---|---|---|---|---|---|---|---|---|---|---|---|
| -118.780 | 199.460 | 100.01000 | -10.25000 | .00116 | .02225 | -.30612 | .08951 | -.01866 | .00819 | .00077 | .24463 |
| -121.180 | 99.718 | 100.15000 | -10.25000 | .00636 | .02834 | -.30138 | .08724 | -.02898 | .01112 | .00011 | .24621 |
| -120.830 | -.416 | 100.10000 | -10.24900 | .01043 | .03770 | -.30170 | .08781 | -.03688 | .01294 | .00063 | .24765 |
| | GRADIENT | .00000 | .00000 | .00000 | .00000 | .00000 | .00000 | .00000 | .00000 | .00000 | .00000 |

RUN NO. 3691/ 0 RN/L = 2.38 GRADIENT INTERVAL = -5.00/ 5.00

| Y | X | Z | ALPHA | BETA | PHI | CN | CLM | CY | CYN | CBL | CA |
|---|---|---|---|---|---|---|---|---|---|---|---|
| -151.510 | -.401 | 99.76700 | -10.24900 | .00431 | .02317 | -.30433 | .08871 | -.02108 | .00801 | .00067 | .24576 |
| -150.660 | 99.655 | 99.92900 | -10.24900 | .00244 | .01932 | -.30390 | .08833 | -.01794 | .00742 | .00040 | .24579 |
| -150.290 | 199.490 | 99.79200 | -10.24900 | -.00004 | .01504 | -.30689 | .08977 | -.01161 | .00534 | .00074 | .24478 |
| | GRADIENT | .00000 | .00000 | .00000 | .00000 | .00000 | .00000 | .00000 | .00000 | .00000 | .00000 |

RUN NO. 3694/ 0 RN/L = 2.38 GRADIENT INTERVAL = -5.00/ 5.00

| Y | X | Z | ALPHA | BETA | PHI | CN | CLM | CY | CYN | CBL | CA |
|---|---|---|---|---|---|---|---|---|---|---|---|
| -200.130 | 199.410 | 100.31000 | -10.24900 | -.00446 | .01216 | -.30867 | .09068 | -.00409 | .00338 | .00153 | .24398 |
| -200.360 | 99.560 | 99.95600 | -10.24900 | -.00398 | .01307 | -.30858 | .09092 | -.00521 | .00372 | .00150 | .24409 |
| -200.340 | -.325 | 99.92000 | -10.24900 | -.00444 | .01400 | -.30866 | .09084 | -.00553 | .00403 | .00160 | .24395 |
| | GRADIENT | .00000 | .00000 | .00000 | .00000 | .00000 | .00000 | .00000 | .00000 | .00000 | .00000 |

IA143, AEDC V41A-P8A, O/ET W/R.H. SRB SEPARATING (OVX255) ( 23 MAY 77 )

REFERENCE DATA

SREF = 2690.0000 SQ.FT. XMRP = 1097.0000 IN. XT
LREF = 1290.3000 INCHES YMRP = .0000 IN. YT
BREF = 1290.3000 INCHES ZMRP = 450.0000 IN. ZT
SCALE = .0100

PARAMETRIC DATA

ALPHA = -10.000 BETA = .000
DALPHA = .000 DBETA = -4.000
Z = 100.000 MACH = 4.500
JET PC = .000

RUN NO. 3797/ 0 RN/L = 2.38 GRADIENT INTERVAL = -5.00/ 5.00

| Y | X | Z | ALPHA | BETA | PHI | CN | CLM | CY | CYN | CBL | CA |
|---|---|---|---|---|---|---|---|---|---|---|---|
| -149.570 | 199.520 | 100.24000 | -10.24700 | .00119 | .01544 | -.30246 | .08697 | -.01082 | .00430 | .00110 | .23902 |
| -150.840 | 99.706 | 100.15000 | -10.24700 | .00400 | .02030 | -.29930 | .08549 | -.01815 | .00674 | .00068 | .23999 |
| -150.830 | -.336 | 99.96400 | -10.24700 | .00625 | .02418 | -.29969 | .08585 | -.02157 | .00731 | .00091 | .23985 |
| | GRADIENT | .00000 | .00000 | .00000 | .00000 | .00000 | .00000 | .00000 | .00000 | .00000 | .00000 |

IA143, AEDC V41A-P8A, O/ET W/R.H. SRB SEPARATING (OVX256) ( 23 MAY 77 )

REFERENCE DATA

SREF = 2690.0000 SQ.FT. XMRP = 1097.0000 IN. XT
LREF = 1290.3000 INCHES YMRP = .0000 IN. YT
BREF = 1290.3000 INCHES ZMRP = 450.0000 IN. ZT
SCALE = .0100

PARAMETRIC DATA

ALPHA = -10.000 BETA = .000
DALPHA = .000 DBETA = -4.000
Z = 200.000 MACH = 4.500
JET PC = .000

RUN NO. 3690/ 0 RN/L = 2.38 GRADIENT INTERVAL = -5.00/ 5.00

| Y | X | Z | ALPHA | BETA | PHI | CN | CLM | CY | CYN | CBL | CA |
|---|---|---|---|---|---|---|---|---|---|---|---|
| -151.310 | 199.500 | 199.93000 | -10.24600 | -.00328 | .00859 | -.30978 | .09327 | .00205 | -.00033 | .00223 | .24487 |
| -151.060 | 99.646 | 200.18000 | -10.24500 | -.00216 | .01107 | -.30898 | .09347 | -.00028 | .00026 | .00233 | .24455 |
| -150.690 | -.281 | 199.80000 | -10.24500 | -.00200 | .01164 | -.30840 | .09317 | -.00068 | .00038 | .00236 | .24411 |
| | GRADIENT | .00000 | .00000 | .00000 | .00000 | .00000 | .00000 | .00000 | .00000 | .00000 | .00000 |

RUN NO. 3699/ 0 RN/L = 2.37 GRADIENT INTERVAL = -5.00/ 5.00

| Y | X | Z | ALPHA | BETA | PHI | CN | CLM | CY | CYN | CBL | CA |
|---|---|---|---|---|---|---|---|---|---|---|---|
| -200.030 | -.354 | 199.93000 | -10.24800 | -.00346 | .00561 | -.30663 | .08912 | .00632 | -.00241 | .00254 | .23938 |
| -201.070 | 99.506 | 199.95000 | -10.24800 | -.00339 | .00529 | -.30688 | .08929 | .00663 | -.00258 | .00255 | .23962 |
| -200.770 | 199.540 | 199.91000 | -10.24900 | -.00351 | .00553 | -.30707 | .08918 | .00648 | -.00247 | .00256 | .23972 |
| | GRADIENT | .00000 | .00000 | .00000 | .00000 | .00000 | .00000 | .00000 | .00000 | .00000 | .00000 |

IA143, AEDC V41A-P8A, O/ET W/R.H. SRB SEPARATING (OVX257) ( 23 MAY 77 )

REFERENCE DATA

SREF = 2690.0000 SQ.FT. XMRP = 1097.0000 IN. XT
LREF = 1290.3000 INCHES YMRP = .0000 IN. YT
BREF = 1290.3000 INCHES ZMRP = 450.0000 IN. ZT
SCALE = .0100

PARAMETRIC DATA

ALPHA = -10.000 BETA = .000
DALPHA = .000 DBETA = -4.000
Z = 200.000 MACH = 4.500
JET PC = .000

RUN NO. 3798/ 0 RN/L = 2.38 GRADIENT INTERVAL = -5.00/ 5.00

| Y | X | Z | ALPHA | BETA | PHI | CN | CLM | CY | CYN | CBL | CA |
|---|---|---|---|---|---|---|---|---|---|---|---|
| -149.600 | -.358 | 199.86000 | -10.24300 | -.00048 | .01243 | -.30412 | .09062 | -.00020 | -.00065 | .00276 | .23813 |
| -150.620 | 99.660 | 199.91000 | -10.24300 | -.00071 | .01204 | -.30459 | .09097 | .00021 | -.00075 | .00275 | .23872 |
| -150.260 | 199.590 | 199.66000 | -10.24400 | -.00179 | .00900 | -.30556 | .09067 | .00274 | -.00143 | .00258 | .23874 |
| | GRADIENT | .00000 | .00000 | .00000 | .00000 | .00000 | .00000 | .00000 | .00000 | .00000 | .00000 |

IA143, AEDC V41A-P8A, O/ET W/R.H. SRB SEPARATING (OVX258) ( 23 MAY 77 )

REFERENCE DATA

SREF = 2690.0000 SQ.FT. XMRP = 1097.0000 IN. XT
LREF = 1290.3000 INCHES YMRP = .0000 IN. YT
BREF = 1290.3000 INCHES ZMRP = 450.0000 IN. ZT
SCALE = .0100

PARAMETRIC DATA

ALPHA = -10.000 BETA = .000
DALPHA = .000 DBETA = -2.000
Z = 200.000 MACH = 4.500
JET PC = .000

RUN NO. 3689/ 0 RN/L = 2.38 GRADIENT INTERVAL = -5.00/ 5.00

| Y | X | Z | ALPHA | BETA | PHI | CN | CLM | CY | CYN | CBL | CA |
|---|---|---|---|---|---|---|---|---|---|---|---|
| -119.400 | -.461 | 199.86000 | -10.24300 | .00293 | .01645 | -.30739 | .09381 | -.00678 | .00115 | .00237 | .24450 |
| -120.790 | 99.595 | 199.61000 | -10.24400 | .00072 | .01435 | -.30847 | .09406 | -.00436 | .00098 | .00231 | .24474 |
| -120.000 | 199.590 | 199.59000 | -10.24500 | -.00170 | .01075 | -.30959 | .09399 | -.00091 | .00043 | .00214 | .24487 |
| -120.480 | 99.645 | 200.00000 | -10.24300 | .00037 | .01416 | -.30788 | .09382 | -.00336 | .00058 | .00248 | .24454 |
| -119.340 | 199.450 | 199.46000 | -10.24400 | -.00191 | .01062 | -.30925 | .09383 | .00003 | .00001 | .00232 | .24491 |
| | GRADIENT | .00000 | .00000 | .00000 | .00000 | .00000 | .00000 | .00000 | .00000 | .00000 | .00000 |

RUN NO. 3695/ 0 RN/L = 2.39 GRADIENT INTERVAL = -5.00/ 5.00

| Y | X | Z | ALPHA | BETA | PHI | CN | CLM | CY | CYN | CBL | CA |
|---|---|---|---|---|---|---|---|---|---|---|---|
| -199.860 | -.336 | 199.90000 | -10.24900 | -.00481 | .00571 | -.30947 | .09114 | .00565 | -.00142 | .00232 | .24391 |
| -200.730 | 99.507 | 199.95000 | -10.24900 | -.00459 | .00541 | -.30976 | .09124 | .00570 | -.00152 | .00228 | .24414 |
| -201.090 | 199.560 | 200.00000 | -10.25000 | -.00471 | .00561 | -.31000 | .09123 | .00549 | -.00137 | .00227 | .24446 |
| -200.950 | 99.611 | 199.89000 | -10.24900 | -.00469 | .00549 | -.30944 | .09100 | .00607 | -.00169 | .00237 | .24378 |
| -200.740 | 199.610 | 199.86000 | -10.24900 | -.00482 | .00565 | -.30954 | .09096 | .00596 | -.00158 | .00237 | .24389 |
| | GRADIENT | .00000 | .00000 | .00000 | .00000 | .00000 | .00000 | .00000 | .00000 | .00000 | .00000 |

IA143, AEDC V41A-P8A, O/ET W/R.H. SRB SEPARATING (OVX259) ( 23 MAY 77 )

REFERENCE DATA

SREF = 2690.0000 SQ.FT. XMRP = 1097.0000 IN. XT
LREF = 1290.3000 INCHES YMRP = .0000 IN. YT
BREF = 1290.3000 INCHES ZMRP = 450.0000 IN. ZT
SCALE = .0100

PARAMETRIC DATA

ALPHA = -10.000 BETA = .000
DALPHA = .000 DBETA = -2.000
Z = .000 MACH = 4.500
JET PC = .000

RUN NO. 3696/ 0 RN/L = 2.39 GRADIENT INTERVAL = -5.00/ 5.00

| Y | X | Z | ALPHA | BETA | PHI | CN | CLM | CY | CYN | CBL | CA |
|---|---|---|---|---|---|---|---|---|---|---|---|
| -70.554 | -.319 | .03525 | -10.26400 | .02394 | .03648 | -.31551 | .08737 | -.05499 | .01695 | -.00280 | .24881 |
| -69.922 | 99.596 | .04384 | -10.26100 | .01389 | .03573 | -.31157 | .08647 | -.04609 | .01664 | -.00164 | .24826 |
| -69.825 | 199.540 | -.00618 | -10.25900 | .00536 | .03213 | -.30763 | .08570 | -.03722 | .01588 | -.00100 | .24893 |
| | GRADIENT | .00000 | .00000 | .00000 | .00000 | .00000 | .00000 | .00000 | .00000 | .00000 | .00000 |

RUN NO. 3702/ 0 RN/L = 2.37 GRADIENT INTERVAL = -5.00/ 5.00

| Y | X | Z | ALPHA | BETA | PHI | CN | CLM | CY | CYN | CBL | CA |
|---|---|---|---|---|---|---|---|---|---|---|---|
| -101.640 | 199.630 | -.09821 | -10.25500 | .00296 | .03228 | -.30454 | .08502 | -.03232 | .01422 | -.00001 | .24452 |
| -101.840 | 99.641 | -.11978 | -10.25700 | .01091 | .03476 | -.30797 | .08581 | -.04075 | .01510 | -.00084 | .24412 |
| -101.640 | -.353 | -.22684 | -10.25900 | .01837 | .03263 | -.31005 | .08571 | -.04563 | .01458 | -.00190 | .24443 |
| | GRADIENT | .00000 | .00000 | .00000 | .00000 | .00000 | .00000 | .00000 | .00000 | .00000 | .00000 |

RUN NO. 3703/ 0 RN/L = 2.37 GRADIENT INTERVAL = -5.00/ 5.00

| Y | X | Z | ALPHA | BETA | PHI | CN | CLM | CY | CYN | CBL | CA |
|---|---|---|---|---|---|---|---|---|---|---|---|
| -150.230 | -.328 | .09737 | -10.25300 | .00545 | .02966 | -.30742 | .08762 | -.02917 | .01151 | .00031 | .24459 |
| -150.140 | 99.589 | -.02305 | -10.25300 | .00357 | .02890 | -.30622 | .08736 | -.02729 | .01138 | .00044 | .24454 |
| -150.390 | 199.640 | .03356 | -10.25200 | .00018 | .02545 | -.30575 | .08741 | -.02136 | .00989 | .00080 | .24396 |
| | GRADIENT | .00000 | .00000 | .00000 | .00000 | .00000 | .00000 | .00000 | .00000 | .00000 | .00000 |

IA143, AEDC V41A-P8A, O/ET W/R.H. SRB SEPARATING (OVX260) ( 23 MAY 77 )

REFERENCE DATA

SREF = 2690.0000 SQ.FT. XMRP = 1097.0000 IN. XT
LREF = 1290.3000 INCHES YMRP = .0000 IN. YT
BREF = 1290.3000 INCHES ZMRP = 450.0000 IN. ZT
SCALE = .0100

PARAMETRIC DATA

ALPHA = -10.000 BETA = .000
DALPHA = .000 DBETA = -2.000
Z = 100.000 MACH = 4.500
JET PC = .000

RUN NO. 3697/ 0 RN/L = 2.39 GRADIENT INTERVAL = -5.00/ 5.00

| Y | X | Z | ALPHA | BETA | PHI | CN | CLM | CY | CYN | CBL | CA |
|---|---|---|---|---|---|---|---|---|---|---|---|
| -69.285 | 199.420 | 99.78100 | -10.24900 | .00315 | .02525 | -.30868 | .09069 | -.01783 | .00655 | .00179 | .24387 |
| -71.293 | 99.641 | 100.24000 | -10.25000 | .00933 | .03018 | -.30520 | .08879 | -.02779 | .00891 | .00102 | .24577 |
| -72.083 | -.283 | 100.16000 | -10.25000 | .01690 | .04274 | -.30644 | .08983 | -.03991 | .01122 | .00154 | .24801 |
| | GRADIENT | .00000 | .00000 | .00000 | .00000 | .00000 | .00000 | .00000 | .00000 | .00000 | .00000 |

IA143, AEDC V41A-P8A, O/ET W/R.H. SRB SEPARATING (OVX260) ( 23 MAY 77 )

REFERENCE DATA

SREF = 2690.0000 SQ.FT. XMRP = 1097.0000 IN. XT
LREF = 1290.3000 INCHES YMRP = .0000 IN. YT
BREF = 1290.3000 INCHES ZMRP = 450.0000 IN. ZT
SCALE = .0100

PARAMETRIC DATA

ALPHA = -10.000 BETA = .000
DALPHA = .000 DBETA = -2.000
Z = 100.000 MACH = 4.500
JET PC = .000

RUN NO. 3701/ 0 RN/L = 2.37 GRADIENT INTERVAL = -5.00/ 5.00

| Y | X | Z | ALPHA | BETA | PHI | CN | CLM | CY | CYN | CBL | CA |
|---|---|---|---|---|---|---|---|---|---|---|---|
| -101.920 | -.276 | 99.73400 | -10.24800 | .01337 | .03251 | -.30094 | .08660 | -.03011 | .00817 | .00128 | .24340 |
| -100.600 | 99.628 | 99.76300 | -10.24800 | .00885 | .02324 | -.30065 | .08599 | -.02212 | .00649 | .00076 | .24181 |
| -99.805 | 199.600 | 99.70700 | -10.24800 | .00313 | .01853 | -.30527 | .08830 | -.01208 | .00387 | .00163 | .23981 |
| | GRADIENT | .00000 | .00000 | .00000 | .00000 | .00000 | .00000 | .00000 | .00000 | .00000 | .00000 |

RUN NO. 3704/ 0 RN/L = 2.37 GRADIENT INTERVAL = -5.00/ 5.00

| Y | X | Z | ALPHA | BETA | PHI | CN | CLM | CY | CYN | CBL | CA |
|---|---|---|---|---|---|---|---|---|---|---|---|
| -149.730 | 199.570 | 100.12000 | -10.24800 | .00101 | .01211 | -.30548 | .08861 | -.00649 | .00222 | .00135 | .23965 |
| -150.930 | 99.643 | 100.15000 | -10.24800 | .00367 | .01360 | -.30310 | .08749 | -.01101 | .00342 | .00082 | .24091 |
| -150.930 | -.382 | 100.05000 | -10.24800 | .00500 | .01559 | -.30422 | .08824 | -.01228 | .00336 | .00106 | .24076 |
| | GRADIENT | .00000 | .00000 | .00000 | .00000 | .00000 | .00000 | .00000 | .00000 | .00000 | .00000 |

IA143, AEDC V41A-P8A, O/ET W/R.H. SRB SEPARATING (OVX261) ( 23 MAY 77 )

REFERENCE DATA

SREF = 2690.0000 SQ.FT. XMRP = 1097.0000 IN. XT
LREF = 1290.3000 INCHES YMRP = .0000 IN. YT
BREF = 1290.3000 INCHES ZMRP = 450.0000 IN. ZT
SCALE = .0100

PARAMETRIC DATA

ALPHA = -10.000 BETA = .000
DALPHA = .000 DBETA = -2.000
Z = 200.000 MACH = 4.500
JET PC = .000

RUN NO. 3698/ 0 RN/L = 2.39 GRADIENT INTERVAL = -5.00/ 5.00

| Y | X | Z | ALPHA | BETA | PHI | CN | CLM | CY | CYN | CBL | CA |
|---|---|---|---|---|---|---|---|---|---|---|---|
| -69.813 | -.296 | 200.01000 | -10.24000 | .00710 | .02407 | -.30218 | .09177 | -.01253 | .00184 | .00303 | .24354 |
| -70.137 | 99.542 | 199.38000 | -10.24200 | .00334 | .01448 | -.30701 | .09367 | -.00325 | -.00087 | .00278 | .24373 |
| -69.894 | 199.380 | 199.44000 | -10.24400 | -.00094 | .01024 | -.30887 | .09359 | .00148 | -.00122 | .00263 | .24397 |
| | GRADIENT | .00000 | .00000 | .00000 | .00000 | .00000 | .00000 | .00000 | .00000 | .00000 | .00000 |

RUN NO. 3700/ 0 RN/L = 2.37 GRADIENT INTERVAL = -5.00/ 5.00

| Y | X | Z | ALPHA | BETA | PHI | CN | CLM | CY | CYN | CBL | CA |
|---|---|---|---|---|---|---|---|---|---|---|---|
| -100.720 | 199.650 | 199.80000 | -10.24400 | -.00072 | .00917 | -.30708 | .09203 | .00307 | -.00212 | .00278 | .24002 |
| -101.560 | 99.643 | 200.20000 | -10.24200 | .00242 | .01245 | -.30599 | .09230 | -.00059 | -.00177 | .00288 | .23995 |
| -101.780 | -.220 | 200.21000 | -10.24100 | .00525 | .01523 | -.30454 | .09185 | -.00387 | -.00145 | .00294 | .23937 |
| | GRADIENT | .00000 | .00000 | .00000 | .00000 | .00000 | .00000 | .00000 | .00000 | .00000 | .00000 |

IA143, AEDC V41A-P8A, O/ET W/R.H. SRB SEPARATING (OVX261) ( 23 MAY 77 )

REFERENCE DATA

SREF = 2690.0000 SQ.FT. XMRP = 1097.0000 IN. XT
LREF = 1290.3000 INCHES YMRP = .0000 IN. YT
BREF = 1290.3000 INCHES ZMRP = 450.0000 IN. ZT
SCALE = .0100

PARAMETRIC DATA

ALPHA = -10.000 BETA = .000
DALPHA = .000 DBETA = -2.000
Z = 200.000 MACH = 4.500
JET PC = .000

RUN NO. 3705/ 0 RN/L = 2.37 GRADIENT INTERVAL = -5.00/ 5.00

| Y | X | Z | ALPHA | BETA | PHI | CN | CLM | CY | CYN | CBL | CA |
|---|---|---|---|---|---|---|---|---|---|---|---|
| -149.820 | -.350 | 199.99000 | -10.24400 | -.00162 | .00852 | -.30675 | .09135 | .00391 | -.00213 | .00276 | .23967 |
| -150.780 | 99.613 | 199.87000 | -10.24400 | -.00158 | .00874 | -.30673 | .09153 | .00370 | -.00205 | .00276 | .23979 |
| -150.560 | 199.360 | 199.51000 | -10.24600 | -.00228 | .00681 | -.30765 | .09135 | .00510 | -.00236 | .00261 | .24006 |
| | GRADIENT | .00000 | .00000 | .00000 | .00000 | .00000 | .00000 | .00000 | .00000 | .00000 | .00000 |

IA143, AEDC V41A-P8A, O/ET W/R.H. SRB SEPARATING (OVX262) ( 23 MAY 77 )

REFERENCE DATA

SREF = 2690.0000 SQ.FT. XMRP = 1097.0000 IN. XT
LREF = 1290.3000 INCHES YMRP = .0000 IN. YT
BREF = 1290.3000 INCHES ZMRP = 450.0000 IN. ZT
SCALE = .0100

PARAMETRIC DATA

ALPHA = -10.000 BETA = .000
DALPHA = .000 DBETA = .000
Z = .000 MACH = 4.500
JET PC = .000

RUN NO. 3706/ 0 RN/L = 2.37 GRADIENT INTERVAL = -5.00/ 5.00

| Y | X | Z | ALPHA | BETA | PHI | CN | CLM | CY | CYN | CBL | CA |
|---|---|---|---|---|---|---|---|---|---|---|---|
| -51.023 | -.257 | -.04222 | -10.26400 | .02756 | .02888 | -.31736 | .08745 | -.04584 | .01077 | -.00212 | .24460 |
| -49.522 | 99.614 | .05851 | -10.26100 | .01539 | .02789 | -.31256 | .08612 | -.03713 | .01156 | -.00121 | .24406 |
| -50.226 | 199.690 | .03870 | -10.25800 | .00753 | .02649 | -.30821 | .08527 | -.03105 | .01187 | -.00067 | .24437 |
| | GRADIENT | .00000 | .00000 | .00000 | .00000 | .00000 | .00000 | .00000 | .00000 | .00000 | .00000 |

RUN NO. 3711/ 0 RN/L = 2.37 GRADIENT INTERVAL = -5.00/ 5.00

| Y | X | Z | ALPHA | BETA | PHI | CN | CLM | CY | CYN | CBL | CA |
|---|---|---|---|---|---|---|---|---|---|---|---|
| -101.720 | 199.590 | -.08994 | -10.25400 | .00222 | .02702 | -.30752 | .08755 | -.02361 | .01009 | .00078 | .24439 |
| -101.970 | 99.670 | -.19021 | -10.25500 | .00932 | .02982 | -.31130 | .08877 | -.03130 | .01092 | .00013 | .24447 |
| -101.630 | -.379 | -.06259 | -10.25700 | .01577 | .02787 | -.31415 | .08927 | -.03521 | .01030 | -.00074 | .24416 |
| | GRADIENT | .00000 | .00000 | .00000 | .00000 | .00000 | .00000 | .00000 | .00000 | .00000 | .00000 |

RUN NO. 3712/ 0 RN/L = 2.37 GRADIENT INTERVAL = -5.00/ 5.00

| Y | X | Z | ALPHA | BETA | PHI | CN | CLM | CY | CYN | CBL | CA |
|---|---|---|---|---|---|---|---|---|---|---|---|
| -150.520 | -.199 | -.03904 | -10.25200 | .00352 | .02344 | -.30919 | .08914 | -.02049 | .00802 | .00080 | .24415 |
| -150.990 | 99.642 | .03780 | -10.25200 | .00255 | .02413 | -.30809 | .08884 | -.02045 | .00840 | .00089 | .24389 |
| -150.490 | 199.580 | -.10682 | -10.25200 | -.00041 | .02086 | -.30735 | .08853 | -.01586 | .00744 | .00101 | .24361 |
| | GRADIENT | .00000 | .00000 | .00000 | .00000 | .00000 | .00000 | .00000 | .00000 | .00000 | .00000 |

IA143, AEDC V41A-P8A, O/ET W/R.H. SRB SEPARATING (OVX263) ( 23 MAY 77 )

REFERENCE DATA

SREF = 2690.0000 SQ.FT. XMRP = 1097.0000 IN. XT
LREF = 1290.3000 INCHES YMRP = .0000 IN. YT
BREF = 1290.3000 INCHES ZMRP = 450.0000 IN. ZT
SCALE = .0100

PARAMETRIC DATA

ALPHA = -10.000 BETA = .000
DALPHA = .000 DBETA = .000
Z = 100.000 MACH = 4.500
JET PC = .000

RUN NO. 3707/ 0 RN/L = 2.37 GRADIENT INTERVAL = -5.00/ 5.00

| Y | X | Z | ALPHA | BETA | PHI | CN | CLM | CY | CYN | CBL | CA |
|---|---|---|---|---|---|---|---|---|---|---|---|
| -49.472 | 199.460 | 99.87300 | -10.24900 | .00463 | .02321 | -.30857 | .08995 | -.01457 | .00421 | .00219 | .23976 |
| -51.221 | 99.669 | 100.11000 | -10.25000 | .01039 | .02516 | -.30583 | .08828 | -.02181 | .00547 | .00136 | .24146 |
| -51.713 | -.284 | 100.19000 | -10.25000 | .01971 | .03716 | -.30761 | .08964 | -.03470 | .00746 | .00170 | .24383 |
| | GRADIENT | .00000 | .00000 | .00000 | .00000 | .00000 | .00000 | .00000 | .00000 | .00000 | .00000 |

RUN NO. 3710/ 0 RN/L = 2.37 GRADIENT INTERVAL = -5.00/ 5.00

| Y | X | Z | ALPHA | BETA | PHI | CN | CLM | CY | CYN | CBL | CA |
|---|---|---|---|---|---|---|---|---|---|---|---|
| -102.010 | -.284 | 99.81500 | -10.24900 | .01253 | .02304 | -.30258 | .08732 | -.02199 | .00475 | .00101 | .24321 |
| -100.400 | 99.706 | 99.74400 | -10.24800 | .00882 | .01588 | -.30265 | .08704 | -.01563 | .00346 | .00063 | .24129 |
| -99.930 | 199.670 | 99.75700 | -10.24800 | .00331 | .01354 | -.30752 | .08955 | -.00706 | .00136 | .00170 | .23951 |
| | GRADIENT | .00000 | .00000 | .00000 | .00000 | .00000 | .00000 | .00000 | .00000 | .00000 | .00000 |

RUN NO. 3713/ 0 RN/L = 2.37 GRADIENT INTERVAL = -5.00/ 5.00

| Y | X | Z | ALPHA | BETA | PHI | CN | CLM | CY | CYN | CBL | CA |
|---|---|---|---|---|---|---|---|---|---|---|---|
| -150.130 | 199.630 | 100.30000 | -10.24800 | .00010 | .01095 | -.30671 | .08928 | -.00433 | .00151 | .00152 | .23961 |
| -151.490 | 99.669 | 100.18000 | -10.24800 | .00207 | .01155 | -.30462 | .08827 | -.00733 | .00224 | .00111 | .24054 |
| -150.980 | -.420 | 100.04000 | -10.24800 | .00313 | .01277 | -.30558 | .08901 | -.00810 | .00209 | .00127 | .24078 |
| | GRADIENT | .00000 | .00000 | .00000 | .00000 | .00000 | .00000 | .00000 | .00000 | .00000 | .00000 |

IA143, AEDC V41A-P8A, O/ET W/R.H. SRB SEPARATING (OVX264) ( 23 MAY 77 )

REFERENCE DATA

SREF = 2690.0000 SQ.FT. XMRP = 1097.0000 IN. XT
LREF = 1290.3000 INCHES YMRP = .0000 IN. YT
BREF = 1290.3000 INCHES ZMRP = 450.0000 IN. ZT
SCALE = .0100

PARAMETRIC DATA

ALPHA = -10.000 BETA = .000
DALPHA = .000 DBETA = .000
Z = 200.000 MACH = 4.500
JET PC = .000

RUN NO. 3708/ 0 RN/L = 2.37 GRADIENT INTERVAL = -5.00/ 5.00

| Y | X | Z | ALPHA | BETA | PHI | CN | CLM | CY | CYN | CBL | CA |
|---|---|---|---|---|---|---|---|---|---|---|---|
| -50.275 | -.258 | 200.10000 | -10.24000 | .00993 | .02281 | -.30155 | .09127 | -.01164 | .00015 | .00315 | .23986 |
| -49.696 | 99.657 | 199.39000 | -10.24200 | .00452 | .01189 | -.30646 | .09252 | -.00066 | -.00266 | .00289 | .23988 |
| -50.166 | 199.560 | 199.39000 | -10.24400 | .00031 | .00835 | -.30774 | .09223 | .00347 | -.00276 | .00276 | .24013 |
| | GRADIENT | .00000 | .00000 | .00000 | .00000 | .00000 | .00000 | .00000 | .00000 | .00000 | .00000 |

IA143, AEDC V41A-P8A, O/ET W/R.H. SRB SEPARATING (OVX264) ( 23 MAY 77 )

REFERENCE DATA

SREF = 2690.0000 SQ.FT. XMRP = 1097.0000 IN. XT
LREF = 1290.3000 INCHES YMRP = .0000 IN. YT
BREF = 1290.3000 INCHES ZMRP = 450.0000 IN. ZT
SCALE = .0100

PARAMETRIC DATA

ALPHA = -10.000 BETA = .000
DALPHA = .000 DBETA = .000
Z = 200.000 MACH = 4.500
JET PC = .000

RUN NO. 3709/ 0 RN/L = 2.37 GRADIENT INTERVAL = -5.00/ 5.00

| Y | X | Z | ALPHA | BETA | PHI | CN | CLM | CY | CYN | CBL | CA |
|---|---|---|---|---|---|---|---|---|---|---|---|
| -101.560 | 199.570 | 200.44000 | -10.24400 | -.00094 | .00741 | -.30798 | .09218 | .00447 | -.00267 | .00270 | .24005 |
| -101.650 | 99.605 | 200.13000 | -10.24300 | .00165 | .01089 | -.30672 | .09247 | .00080 | -.00208 | .00281 | .23993 |
| -101.410 | -.375 | 200.17000 | -10.24300 | .00390 | .01221 | -.30633 | .09250 | -.00077 | -.00233 | .00288 | .23996 |
| | GRADIENT | .00000 | .00000 | .00000 | .00000 | .00000 | .00000 | .00000 | .00000 | .00000 | .00000 |

RUN NO. 3714/ 0 RN/L = 2.36 GRADIENT INTERVAL = -5.00/ 5.00

| Y | X | Z | ALPHA | BETA | PHI | CN | CLM | CY | CYN | CBL | CA |
|---|---|---|---|---|---|---|---|---|---|---|---|
| -150.090 | -.301 | 199.95000 | -10.24500 | -.00192 | .00608 | -.30759 | .09139 | .00570 | -.00280 | .00261 | .23992 |
| -150.680 | 99.681 | 199.91000 | -10.24500 | -.00181 | .00672 | -.30753 | .09142 | .00519 | -.00262 | .00264 | .23977 |
| -150.740 | 199.520 | 199.61000 | -10.24600 | -.00251 | .00548 | -.30816 | .09142 | .00639 | -.00287 | .00260 | .24006 |
| | GRADIENT | .00000 | .00000 | .00000 | .00000 | .00000 | .00000 | .00000 | .00000 | .00000 | .00000 |

IA143, AEDC V41A-P8A, O/ET W/R.H. SRB SEPARATING (OVX265) ( 23 MAY 77 )

REFERENCE DATA

SREF = 2690.0000 SQ.FT. XMRP = 1097.0000 IN. XT
LREF = 1290.3000 INCHES YMRP = .0000 IN. YT
BREF = 1290.3000 INCHES ZMRP = 450.0000 IN. ZT
SCALE = .0100

PARAMETRIC DATA

ALPHA = -10.000 BETA = .000
DALPHA = .000 DBETA = 2.000
Z = .000 MACH = 4.500
JET PC = .000

RUN NO. 3715/ 0 RN/L = 2.37 GRADIENT INTERVAL = -5.00/ 5.00

| Y | X | Z | ALPHA | BETA | PHI | CN | CLM | CY | CYN | CBL | CA |
|---|---|---|---|---|---|---|---|---|---|---|---|
| -50.814 | -.342 | -.03596 | -10.26200 | .02385 | .02317 | -.31953 | .08986 | -.03594 | .00737 | -.00137 | .24371 |
| -49.648 | 99.715 | .14898 | -10.25900 | .01251 | .02253 | -.31500 | .08868 | -.02814 | .00825 | -.00052 | .24376 |
| -50.214 | 199.420 | -.02121 | -10.25700 | .00556 | .02267 | -.30969 | .08698 | -.02375 | .00898 | .00002 | .24427 |
| | GRADIENT | .00000 | .00000 | .00000 | .00000 | .00000 | .00000 | .00000 | .00000 | .00000 | .00000 |

RUN NO. 3720/ 0 RN/L = 2.38 GRADIENT INTERVAL = -5.00/ 5.00

| Y | X | Z | ALPHA | BETA | PHI | CN | CLM | CY | CYN | CBL | CA |
|---|---|---|---|---|---|---|---|---|---|---|---|
| -101.500 | 199.570 | .03366 | -10.25300 | .00241 | .02116 | -.30902 | .08873 | -.01737 | .00696 | .00094 | .24407 |
| -101.700 | 99.633 | -.21266 | -10.25500 | .00825 | .02434 | -.31159 | .08949 | -.02448 | .00802 | .00042 | .24476 |
| -101.160 | -.420 | -.02191 | -10.25600 | .01360 | .02241 | -.31483 | .09054 | -.02713 | .00720 | -.00024 | .24427 |
| | GRADIENT | .00000 | .00000 | .00000 | .00000 | .00000 | .00000 | .00000 | .00000 | .00000 | .00000 |

IA143, AEDC V41A-P8A, O/ET W/R.H. SRB SEPARATING (OVX265) ( 23 MAY 77 )

REFERENCE DATA

SREF = 2690.0000 SQ.FT. XMRP = 1097.0000 IN. XT
LREF = 1290.3000 INCHES YMRP = .0000 IN. YT
BREF = 1290.3000 INCHES ZMRP = 450.0000 IN. ZT
SCALE = .0100

PARAMETRIC DATA

ALPHA = -10.000 BETA = .000
DALPHA = .000 DBETA = 2.000
Z = .000 MACH = 4.500
JET PC = .000

RUN NO. 3721/ 0 RN/L = 2.38 GRADIENT INTERVAL = -5.00/ 5.00

| Y | X | Z | ALPHA | BETA | PHI | CN | CLM | CY | CYN | CBL | CA |
|---|---|---|---|---|---|---|---|---|---|---|---|
| -149.820 | -.426 | -.27385 | -10.25200 | .00132 | .02162 | -.31042 | .09013 | -.01615 | .00674 | .00124 | .24368 |
| -150.790 | 99.710 | .07288 | -10.25100 | .00092 | .02137 | -.30952 | .08991 | -.01607 | .00690 | .00118 | .24390 |
| -150.570 | 199.610 | .03237 | -10.25100 | -.00109 | .01826 | -.30834 | .08926 | -.01268 | .00617 | .00112 | .24341 |
| | GRADIENT | .00000 | .00000 | .00000 | .00000 | .00000 | .00000 | .00000 | .00000 | .00000 | .00000 |

IA143, AEDC V41A-P8A, O/ET W/R.H. SRB SEPARATING (OVX266) ( 23 MAY 77 )

REFERENCE DATA

SREF = 2690.0000 SQ.FT. XMRP = 1097.0000 IN. XT
LREF = 1290.3000 INCHES YMRP = .0000 IN. YT
BREF = 1290.3000 INCHES ZMRP = 450.0000 IN. ZT
SCALE = .0100

PARAMETRIC DATA

ALPHA = -10.000 BETA = .000
DALPHA = .000 DBETA = 2.000
Z = 100.000 MACH = 4.500
JET PC = .000

RUN NO. 3716/ 0 RN/L = 2.38 GRADIENT INTERVAL = -5.00/ 5.00

| Y | X | Z | ALPHA | BETA | PHI | CN | CLM | CY | CYN | CBL | CA |
|---|---|---|---|---|---|---|---|---|---|---|---|
| -49.920 | 199.590 | 99.78100 | -10.24900 | .00428 | .01687 | -.30966 | .09037 | -.00911 | .00180 | .00203 | .23980 |
| -51.238 | 99.680 | 100.18000 | -10.25000 | .00960 | .01722 | -.30673 | .08853 | -.01500 | .00264 | .00112 | .24131 |
| -51.689 | -.355 | 100.21000 | -10.25000 | .01796 | .02791 | -.30797 | .08976 | -.02629 | .00427 | .00148 | .24398 |
| | GRADIENT | .00000 | .00000 | .00000 | .00000 | .00000 | .00000 | .00000 | .00000 | .00000 | .00000 |

RUN NO. 3719/ 0 RN/L = 2.38 GRADIENT INTERVAL = -5.00/ 5.00

| Y | X | Z | ALPHA | BETA | PHI | CN | CLM | CY | CYN | CBL | CA |
|---|---|---|---|---|---|---|---|---|---|---|---|
| -101.730 | -.322 | 99.86400 | -10.24800 | .01082 | .01717 | -.30437 | .08833 | -.01646 | .00289 | .00087 | .24253 |
| -100.170 | 99.693 | 99.78900 | -10.24900 | .00785 | .01232 | -.30471 | .08814 | -.01156 | .00190 | .00071 | .24103 |
| -99.775 | 199.520 | 99.78100 | -10.24800 | .00285 | .01093 | -.30877 | .09026 | -.00467 | .00044 | .00164 | .23919 |
| | GRADIENT | .00000 | .00000 | .00000 | .00000 | .00000 | .00000 | .00000 | .00000 | .00000 | .00000 |

RUN NO. 3722/ 0 RN/L = 2.38 GRADIENT INTERVAL = -5.00/ 5.00

| Y | X | Z | ALPHA | BETA | PHI | CN | CLM | CY | CYN | CBL | CA |
|---|---|---|---|---|---|---|---|---|---|---|---|
| -150.090 | 199.630 | 100.08000 | -10.24800 | -.00031 | .00995 | -.30756 | .08970 | -.00301 | .00104 | .00158 | .23960 |
| -151.100 | 99.625 | 100.02000 | -10.24800 | .00092 | .00970 | -.30598 | .08889 | -.00463 | .00141 | .00123 | .24022 |
| -150.900 | -.359 | 99.96900 | -10.24800 | .00110 | .01022 | -.30683 | .08951 | -.00440 | .00115 | .00142 | .24011 |
| | GRADIENT | .00000 | .00000 | .00000 | .00000 | .00000 | .00000 | .00000 | .00000 | .00000 | .00000 |

IA143, AEDC V41A-P8A, O/ET W/R.H. SRB SEPARATING (OVX267) ( 23 MAY 77 )

REFERENCE DATA

SREF = 2690.0000 SQ.FT. XMRP = 1097.0000 IN. XT
LREF = 1290.3000 INCHES YMRP = .0000 IN. YT
BREF = 1290.3000 INCHES ZMRP = 450.0000 IN. ZT
SCALE = .0100

PARAMETRIC DATA

ALPHA = -10.000 BETA = .000
DALPHA = .000 DBETA = 2.000
Z = 200.000 MACH = 4.500
JET PC = .000

RUN NO. 3717/ 0 RN/L = 2.38 GRADIENT INTERVAL = -5.00/ 5.00

| Y | X | Z | ALPHA | BETA | PHI | CN | CLM | CY | CYN | CBL | CA |
|---|---|---|---|---|---|---|---|---|---|---|---|
| -50.099 | -.439 | 200.14000 | -10.24000 | .00893 | .01806 | -.30400 | .09226 | -.00742 | -.00138 | .00301 | .23966 |
| -49.986 | 99.682 | 199.46000 | -10.24300 | .00378 | .00992 | -.30781 | .09299 | .00138 | -.00331 | .00288 | .23981 |
| -50.108 | 199.560 | 199.46000 | -10.24500 | .00012 | .00681 | -.30907 | .09266 | .00484 | -.00332 | .00272 | .23992 |
| | GRADIENT | .00000 | .00000 | .00000 | .00000 | .00000 | .00000 | .00000 | .00000 | .00000 | .00000 |

RUN NO. 3718/ 0 RN/L = 2.38 GRADIENT INTERVAL = -5.00/ 5.00

| Y | X | Z | ALPHA | BETA | PHI | CN | CLM | CY | CYN | CBL | CA |
|---|---|---|---|---|---|---|---|---|---|---|---|
| -101.280 | 199.590 | 200.39000 | -10.24500 | -.00127 | .00622 | -.30853 | .09217 | .00557 | -.00304 | .00266 | .23981 |
| -101.270 | 99.678 | 200.06000 | -10.24300 | .00083 | .00952 | -.30745 | .09250 | .00224 | -.00240 | .00278 | .23996 |
| -101.070 | -.311 | 200.09000 | -10.24300 | .00215 | .01043 | -.30661 | .09215 | .00119 | -.00249 | .00283 | .24003 |
| | GRADIENT | .00000 | .00000 | .00000 | .00000 | .00000 | .00000 | .00000 | .00000 | .00000 | .00000 |

RUN NO. 3723/ 0 RN/L = 2.38 GRADIENT INTERVAL = -5.00/ 5.00

| Y | X | Z | ALPHA | BETA | PHI | CN | CLM | CY | CYN | CBL | CA |
|---|---|---|---|---|---|---|---|---|---|---|---|
| -150.030 | -.182 | 199.97000 | -10.24600 | -.00241 | .00429 | -.30819 | .09112 | .00732 | -.00334 | .00256 | .23980 |
| -150.700 | 99.629 | 200.02000 | -10.24600 | -.00225 | .00510 | -.30815 | .09145 | .00669 | -.00313 | .00261 | .23966 |
| -150.710 | 199.570 | 199.68000 | -10.24600 | -.00249 | .00437 | -.30847 | .09125 | .00717 | -.00323 | .00253 | .23953 |
| | GRADIENT | .00000 | .00000 | .00000 | .00000 | .00000 | .00000 | .00000 | .00000 | .00000 | .00000 |

IA143, AEDC V41A-P8A, O/ET W/R.H. SRB SEPARATING (OVX268) ( 23 MAY 77 )

REFERENCE DATA

SREF = 2690.0000 SQ.FT. XMRP = 1097.0000 IN. XT
LREF = 1290.3000 INCHES YMRP = .0000 IN. YT
BREF = 1290.3000 INCHES ZMRP = 450.0000 IN. ZT
SCALE = .0100

PARAMETRIC DATA

ALPHA = -10.000 BETA = .000
DALPHA = -4.000 DBETA = -4.000
Z = .000 MACH = 4.500
JET PC = .000

RUN NO. 3724/ 0 RN/L = 2.38 GRADIENT INTERVAL = -5.00/ 5.00

| Y | X | Z | ALPHA | BETA | PHI | CN | CLM | CY | CYN | CBL | CA |
|---|---|---|---|---|---|---|---|---|---|---|---|
| -120.490 | -.353 | .12584 | -10.27100 | .01736 | .01798 | -.26954 | .05624 | -.07181 | .03091 | -.01121 | .24903 |
| -119.830 | 99.554 | .12256 | -10.26800 | .01102 | .02406 | -.27564 | .06168 | -.06343 | .02864 | -.00841 | .24776 |
| -119.330 | 199.440 | .24427 | -10.26100 | .00226 | .02738 | -.28270 | .06915 | -.05229 | .02615 | -.00573 | .24649 |
| | GRADIENT | .00000 | .00000 | .00000 | .00000 | .00000 | .00000 | .00000 | .00000 | .00000 | .00000 |

IA143, AEDC V41A-P8A, O/ET W/R.H. SRB SEPARATING (OVX268) ( 23 MAY 77 )

REFERENCE DATA

SREF = 2690.0000 SQ.FT. XMRP = 1097.0000 IN. XT
LREF = 1290.3000 INCHES YMRP = .0000 IN. YT
BREF = 1290.3000 INCHES ZMRP = 450.0000 IN. ZT
SCALE = .0100

PARAMETRIC DATA

ALPHA = -10.000 BETA = .000
DALPHA = -4.000 DBETA = -4.000
Z = .000 MACH = 4.500
JET PC = .000

RUN NO. 3729/ 0 RN/L = 2.38 GRADIENT INTERVAL = -5.00/ 5.00

| Y | X | Z | ALPHA | BETA | PHI | CN | CLM | CY | CYN | CBL | CA |
|---|---|---|---|---|---|---|---|---|---|---|---|
| -151.900 | 199.630 | -.00033 | -10.25800 | -.00117 | .02119 | -.28391 | .07108 | -.04238 | .02265 | -.00506 | .24487 |
| -151.040 | 99.640 | .23749 | -10.26300 | .00315 | .01711 | -.27484 | .06331 | -.05263 | .02675 | -.00801 | .24623 |
| -150.770 | -.418 | .14222 | -10.26800 | .00645 | .00673 | -.26137 | .05310 | -.06060 | .03053 | -.01189 | .24775 |
| | GRADIENT | .00000 | .00000 | .00000 | .00000 | .00000 | .00000 | .00000 | .00000 | .00000 | .00000 |

RUN NO. 3730/ 0 RN/L = 2.38 GRADIENT INTERVAL = -5.00/ 5.00

| Y | X | Z | ALPHA | BETA | PHI | CN | CLM | CY | CYN | CBL | CA |
|---|---|---|---|---|---|---|---|---|---|---|---|
| -199.460 | -.412 | -.06556 | -10.26400 | -.00304 | -.01313 | -.26428 | .05620 | -.03354 | .02128 | -.01071 | .24385 |
| -200.550 | 99.614 | .15678 | -10.25900 | -.00342 | .00197 | -.28250 | .06957 | -.02628 | .01618 | -.00575 | .24223 |
| -200.870 | 199.500 | .12393 | -10.25500 | -.00544 | .01091 | -.29143 | .07711 | -.02176 | .01385 | -.00288 | .24207 |
| | GRADIENT | .00000 | .00000 | .00000 | .00000 | .00000 | .00000 | .00000 | .00000 | .00000 | .00000 |

IA143, AEDC V41A-P8A, O/ET W/R.H. SRB SEPARATING (OVX269) ( 23 MAY 77 )

REFERENCE DATA

SREF = 2690.0000 SQ.FT. XMRP = 1097.0000 IN. XT
LREF = 1290.3000 INCHES YMRP = .0000 IN. YT
BREF = 1290.3000 INCHES ZMRP = 450.0000 IN. ZT
SCALE = .0100

PARAMETRIC DATA

ALPHA = -10.000 BETA = .000
DALPHA = -4.000 DBETA = -4.000
Z = 100.000 MACH = 4.500
JET PC = .000

RUN NO. 3725/ 0 RN/L = 2.38 GRADIENT INTERVAL = -5.00/ 5.00

| Y | X | Z | ALPHA | BETA | PHI | CN | CLM | CY | CYN | CBL | CA |
|---|---|---|---|---|---|---|---|---|---|---|---|
| -118.520 | 199.440 | 100.09000 | -10.25000 | .00215 | .03102 | -.29740 | .08304 | -.03027 | .01354 | .00012 | .23998 |
| -121.350 | 99.582 | 100.23000 | -10.25000 | .00794 | .03977 | -.29363 | .08080 | -.04269 | .01716 | -.00040 | .24208 |
| -120.870 | -.366 | 100.24000 | -10.25200 | .01304 | .04753 | -.29139 | .07886 | -.05403 | .02056 | -.00092 | .24316 |
| | GRADIENT | .00000 | .00000 | .00000 | .00000 | .00000 | .00000 | .00000 | .00000 | .00000 | .00000 |

RUN NO. 3728/ 0 RN/L = 2.38 GRADIENT INTERVAL = -5.00/ 5.00

| Y | X | Z | ALPHA | BETA | PHI | CN | CLM | CY | CYN | CBL | CA |
|---|---|---|---|---|---|---|---|---|---|---|---|
| -151.910 | -.318 | 100.06000 | -10.25000 | .00483 | .03416 | -.29589 | .08245 | -.03564 | .01507 | -.00023 | .24144 |
| -150.530 | 99.531 | 100.10000 | -10.24900 | .00291 | .03118 | -.29671 | .08323 | -.03051 | .01331 | .00016 | .24122 |
| -150.320 | 199.520 | 99.78500 | -10.24900 | -.00029 | .02273 | -.29875 | .08420 | -.02125 | .01026 | .00020 | .24023 |
| | GRADIENT | .00000 | .00000 | .00000 | .00000 | .00000 | .00000 | .00000 | .00000 | .00000 | .00000 |

IA143, AEDC V41A-P8A, O/ET W/R.H. SRB SEPARATING (OVX269) ( 23 MAY 77 )

REFERENCE DATA

SREF = 2690.0000 SQ.FT. XMRP = 1097.0000 IN. XT
LREF = 1290.3000 INCHES YMRP = .0000 IN. YT
BREF = 1290.3000 INCHES ZMRP = 450.0000 IN. ZT
SCALE = .0100

PARAMETRIC DATA

ALPHA = -10.000 BETA = .000
DALPHA = -4.000 DBETA = -4.000
Z = 100.000 MACH = 4.500
JET PC = .000

RUN NO. 3731/ 0 RN/L = 2.38 GRADIENT INTERVAL = -5.00/ 5.00

| Y | X | Z | ALPHA | BETA | PHI | CN | CLM | CY | CYN | CBL | CA |
|---|---|---|---|---|---|---|---|---|---|---|---|
| -199.830 | 199.450 | 100.33000 | -10.24900 | -.00376 | .01431 | -.30111 | .08530 | -.00917 | .00574 | .00087 | .23846 |
| -200.770 | 99.574 | 100.09000 | -10.24900 | -.00341 | .01575 | -.29994 | .08476 | -.01178 | .00693 | .00061 | .23905 |
| -200.610 | -.399 | 99.97200 | -10.24900 | -.00394 | .01803 | -.29842 | .08360 | -.01508 | .00885 | .00032 | .23912 |
| | GRADIENT | .00000 | .00000 | .00000 | .00000 | .00000 | .00000 | .00000 | .00000 | .00000 | .00000 |

IA143, AEDC V41A-P8A, O/ET W/R.H. SRB SEPARATING (OVX270) ( 23 MAY 77 )

REFERENCE DATA

SREF = 2690.0000 SQ.FT. XMRP = 1097.0000 IN. XT
LREF = 1290.3000 INCHES YMRP = .0000 IN. YT
BREF = 1290.3000 INCHES ZMRP = 450.0000 IN. ZT
SCALE = .0100

PARAMETRIC DATA

ALPHA = -10.000 BETA = .000
DALPHA = -4.000 DBETA = -4.000
Z = 200.000 MACH = 4.500
JET PC = .000

RUN NO. 3726/ 0 RN/L = 2.38 GRADIENT INTERVAL = -5.00/ 5.00

| Y | X | Z | ALPHA | BETA | PHI | CN | CLM | CY | CYN | CBL | CA |
|---|---|---|---|---|---|---|---|---|---|---|---|
| -118.790 | -.480 | 200.05000 | -10.24100 | .00381 | .03541 | -.30028 | .08909 | -.02142 | .00745 | .00325 | .23806 |
| -119.930 | 99.593 | 199.84000 | -10.24100 | .00080 | .02961 | -.30132 | .08963 | -.01488 | .00563 | .00325 | .23823 |
| -119.400 | 199.410 | 199.68000 | -10.24300 | -.00195 | .02295 | -.30326 | .09007 | -.00841 | .00379 | .00308 | .23877 |
| | GRADIENT | .00000 | .00000 | .00000 | .00000 | .00000 | .00000 | .00000 | .00000 | .00000 | .00000 |

RUN NO. 3727/ 0 RN/L = 2.38 GRADIENT INTERVAL = -5.00/ 5.00

| Y | X | Z | ALPHA | BETA | PHI | CN | CLM | CY | CYN | CBL | CA |
|---|---|---|---|---|---|---|---|---|---|---|---|
| -151.530 | 199.560 | 200.32000 | -10.24400 | -.00271 | .01662 | -.30436 | .08994 | -.00293 | .00156 | .00290 | .23837 |
| -151.090 | 99.628 | 200.33000 | -10.24300 | -.00139 | .02250 | -.30305 | .08981 | -.00814 | .00342 | .00308 | .23803 |
| -150.750 | -.243 | 200.00000 | -10.24300 | -.00138 | .02608 | -.30215 | .08913 | -.01157 | .00506 | .00308 | .23766 |
| | GRADIENT | .00000 | .00000 | .00000 | .00000 | .00000 | .00000 | .00000 | .00000 | .00000 | .00000 |

RUN NO. 3732/ 0 RN/L = 2.38 GRADIENT INTERVAL = -5.00/ 5.00

| Y | X | Z | ALPHA | BETA | PHI | CN | CLM | CY | CYN | CBL | CA |
|---|---|---|---|---|---|---|---|---|---|---|---|
| -199.620 | -.399 | 199.98000 | -10.24600 | -.00445 | .01351 | -.30495 | .08880 | .00026 | .00082 | .00282 | .23725 |
| -200.310 | 99.663 | 200.27000 | -10.24700 | -.00429 | .01103 | -.30511 | .08874 | .00224 | -.00017 | .00275 | .23775 |
| -200.490 | 199.450 | 200.11000 | -10.24700 | -.00421 | .00966 | -.30531 | .08867 | .00331 | -.00069 | .00269 | .23847 |
| | GRADIENT | .00000 | .00000 | .00000 | .00000 | .00000 | .00000 | .00000 | .00000 | .00000 | .00000 |

IA143, AEDC V41A-P8A, O/ET W/R.H. SRB SEPARATING (OVX271) ( 23 MAY 77 )

REFERENCE DATA

SREF = 2690.0000 SQ.FT. XMRP = 1097.0000 IN. XT
LREF = 1290.3000 INCHES YMRP = .0000 IN. YT
BREF = 1290.3000 INCHES ZMRP = 450.0000 IN. ZT
SCALE = .0100

PARAMETRIC DATA

ALPHA = -10.000 BETA = .000
DALPHA = -4.000 DBETA = -2.000
Z = .000 MACH = 4.500
JET PC = .000

RUN NO. 3733/ 0 RN/L = 2.38 GRADIENT INTERVAL = -5.00/ 5.00

| Y | X | Z | ALPHA | BETA | PHI | CN | CLM | CY | CYN | CBL | CA |
|---|---|---|---|---|---|---|---|---|---|---|---|
| -70.512 | -.393 | .16640 | -10.27300 | .02892 | .01478 | -.28397 | .06362 | -.07146 | .02564 | -.01102 | .24875 |
| -69.712 | 99.634 | .10867 | -10.27000 | .01723 | .02143 | -.28472 | .06545 | -.06043 | .02431 | -.00785 | .24793 |
| -69.814 | 199.480 | .10480 | -10.26400 | .00723 | .02449 | -.28912 | .07169 | -.04828 | .02184 | -.00509 | .24757 |
| | GRADIENT | .00000 | .00000 | .00000 | .00000 | .00000 | .00000 | .00000 | .00000 | .00000 | .00000 |

RUN NO. 3738/ 0 RN/L = 2.38 GRADIENT INTERVAL = -5.00/ 5.00

| Y | X | Z | ALPHA | BETA | PHI | CN | CLM | CY | CYN | CBL | CA |
|---|---|---|---|---|---|---|---|---|---|---|---|
| -102.200 | 199.510 | .27146 | -10.26100 | .00346 | .02168 | -.28734 | .07216 | -.04468 | .02177 | -.00514 | .24651 |
| -102.080 | 99.599 | .00597 | -10.26600 | .01169 | .01960 | -.28438 | .06765 | -.05566 | .02432 | -.00755 | .24711 |
| -101.700 | -.332 | .11255 | -10.27000 | .01974 | .00871 | -.27673 | .06075 | -.06324 | .02574 | -.01111 | .24854 |
| | GRADIENT | .00000 | .00000 | .00000 | .00000 | .00000 | .00000 | .00000 | .00000 | .00000 | .00000 |

RUN NO. 3739/ 0 RN/L = 2.38 GRADIENT INTERVAL = -5.00/ 5.00

| Y | X | Z | ALPHA | BETA | PHI | CN | CLM | CY | CYN | CBL | CA |
|---|---|---|---|---|---|---|---|---|---|---|---|
| -150.110 | -.449 | .16069 | -10.26700 | .00662 | -.00787 | -.26548 | .05589 | -.04603 | .02343 | -.01174 | .24659 |
| -150.510 | 99.543 | .05151 | -10.26100 | .00390 | .01014 | -.28251 | .06893 | -.04079 | .02031 | -.00677 | .24496 |
| -150.400 | 199.510 | .15340 | -10.25600 | -.00079 | .01674 | -.29140 | .07662 | -.03169 | .01684 | -.00356 | .24460 |
| | GRADIENT | .00000 | .00000 | .00000 | .00000 | .00000 | .00000 | .00000 | .00000 | .00000 | .00000 |

IA143, AEDC V41A-P8A, O/ET W/R.H. SRB SEPARATING (OVX272) ( 23 MAY 77 )

REFERENCE DATA

SREF = 2690.0000 SQ.FT. XMRP = 1097.0000 IN. XT
LREF = 1290.3000 INCHES YMRP = .0000 IN. YT
BREF = 1290.3000 INCHES ZMRP = 450.0000 IN. ZT
SCALE = .0100

PARAMETRIC DATA

ALPHA = -10.000 BETA = .000
DALPHA = -4.000 DBETA = -2.000
Z = 100.000 MACH = 4.500
JET PC = .000

RUN NO. 3734/ 0 RN/L = 2.38 GRADIENT INTERVAL = -5.00/ 5.00

| Y | X | Z | ALPHA | BETA | PHI | CN | CLM | CY | CYN | CBL | CA |
|---|---|---|---|---|---|---|---|---|---|---|---|
| -69.005 | 199.440 | 99.80600 | -10.25100 | .00563 | .03151 | -.30014 | .08391 | -.03108 | .01236 | .00029 | .23974 |
| -71.488 | 99.581 | 100.48000 | -10.25200 | .01239 | .04036 | -.29757 | .08203 | -.04455 | .01611 | -.00038 | .24255 |
| -71.868 | -.348 | 100.26000 | -10.25500 | .02160 | .05155 | -.29834 | .08164 | -.05941 | .01932 | -.00068 | .24411 |
| | GRADIENT | .00000 | .00000 | .00000 | .00000 | .00000 | .00000 | .00000 | .00000 | .00000 | .00000 |

IA143, AEDC V41A-P8A, O/ET W/R.H. SRB SEPARATING (OVX272) ( 23 MAY 77 )

REFERENCE DATA

SREF = 2690.0000 SQ.FT. XMRP = 1097.0000 IN. XT
LREF = 1290.3000 INCHES YMRP = .0000 IN. YT
BREF = 1290.3000 INCHES ZMRP = 450.0000 IN. ZT
SCALE = .0100

PARAMETRIC DATA

ALPHA = -10.000 BETA = .000
DALPHA = -4.000 DBETA = -2.000
Z = 100.000 MACH = 4.500
JET PC = .000

RUN NO. 3737/ 0 RN/L = 2.38 GRADIENT INTERVAL = -5.00/ 5.00

| Y | X | Z | ALPHA | BETA | PHI | CN | CLM | CY | CYN | CBL | CA |
|---|---|---|---|---|---|---|---|---|---|---|---|
| -102.410 | -.353 | 99.93300 | -10.25100 | .01551 | .04226 | -.29809 | .08329 | -.04636 | .01553 | -.00015 | .24406 |
| -100.130 | 99.552 | 99.87100 | -10.25000 | .00900 | .03538 | -.29792 | .08375 | -.03665 | .01362 | .00010 | .24234 |
| -99.808 | 199.440 | 99.88000 | -10.24900 | .00300 | .02618 | -.30080 | .08522 | -.02412 | .01008 | .00053 | .24003 |
| | GRADIENT | .00000 | .00000 | .00000 | .00000 | .00000 | .00000 | .00000 | .00000 | .00000 | .00000 |

RUN NO. 3740/ 0 RN/L = 2.38 GRADIENT INTERVAL = -5.00/ 5.00

| Y | X | Z | ALPHA | BETA | PHI | CN | CLM | CY | CYN | CBL | CA |
|---|---|---|---|---|---|---|---|---|---|---|---|
| -149.590 | 199.480 | 100.24000 | -10.24900 | .00087 | .01543 | -.30038 | .08515 | -.01447 | .00650 | .00023 | .23992 |
| -151.070 | 99.611 | 100.25000 | -10.24900 | .00336 | .02085 | -.29929 | .08481 | -.02059 | .00836 | .00020 | .24109 |
| -150.930 | -.323 | 100.06000 | -10.24900 | .00433 | .02289 | -.29967 | .08496 | -.02301 | .00911 | .00016 | .24114 |
| | GRADIENT | .00000 | .00000 | .00000 | .00000 | .00000 | .00000 | .00000 | .00000 | .00000 | .00000 |

IA143, AEDC V41A-P8A, O/ET W/R.H. SRB SEPARATING (OVX273) ( 23 MAY 77 )

REFERENCE DATA

SREF = 2690.0000 SQ.FT. XMRP = 1097.0000 IN. XT
LREF = 1290.3000 INCHES YMRP = .0000 IN. YT
BREF = 1290.3000 INCHES ZMRP = 450.0000 IN. ZT
SCALE = .0100

PARAMETRIC DATA

ALPHA = -10.000 BETA = .000
DALPHA = -4.000 DBETA = -2.000
Z = 200.000 MACH = 4.500
JET PC = .000

RUN NO. 3735/ 0 RN/L = 2.38 GRADIENT INTERVAL = -5.00/ 5.00

| Y | X | Z | ALPHA | BETA | PHI | CN | CLM | CY | CYN | CBL | CA |
|---|---|---|---|---|---|---|---|---|---|---|---|
| -69.476 | -.416 | 200.34000 | -10.23900 | .00977 | .04511 | -.29562 | .08779 | -.03217 | .00998 | .00333 | .23877 |
| -69.599 | 99.471 | 199.51000 | -10.24100 | .00443 | .03149 | -.30174 | .09038 | -.01742 | .00524 | .00334 | .23854 |
| -70.007 | 199.440 | 199.53000 | -10.24300 | -.00103 | .02387 | -.30412 | .09077 | -.00915 | .00371 | .00319 | .23905 |
| | GRADIENT | .00000 | .00000 | .00000 | .00000 | .00000 | .00000 | .00000 | .00000 | .00000 | .00000 |

RUN NO. 3736/ 0 RN/L = 2.38 GRADIENT INTERVAL = -5.00/ 5.00

| Y | X | Z | ALPHA | BETA | PHI | CN | CLM | CY | CYN | CBL | CA |
|---|---|---|---|---|---|---|---|---|---|---|---|
| -101.820 | 199.510 | 200.48000 | -10.24300 | -.00129 | .01904 | -.30454 | .09077 | -.00487 | .00181 | .00308 | .23886 |
| -101.750 | 99.617 | 200.45000 | -10.24200 | .00230 | .02477 | -.30313 | .09062 | -.01091 | .00310 | .00322 | .23844 |
| -101.180 | -.414 | 200.29000 | -10.24100 | .00634 | .03096 | -.30065 | .08941 | -.01836 | .00492 | .00315 | .23787 |
| | GRADIENT | .00000 | .00000 | .00000 | .00000 | .00000 | .00000 | .00000 | .00000 | .00000 | .00000 |

IA143, AEDC V41A-P8A, O/ET W/R.H. SRB SEPARATING (OVX273) ( 23 MAY 77 )

REFERENCE DATA

SREF = 2690.0000 SQ.FT. XMRP = 1097.0000 IN. XT
LREF = 1290.3000 INCHES YMRP = .0000 IN. YT
BREF = 1290.3000 INCHES ZMRP = 450.0000 IN. ZT
SCALE = .0100

PARAMETRIC DATA

ALPHA = -10.000 BETA = .000
DALPHA = -4.000 DBETA = -2.000
Z = 200.000 MACH = 4.500
JET PC = .000

RUN NO. 3741/ 0 RN/L = 2.38 GRADIENT INTERVAL = -5.00/ 5.00

| Y | X | Z | ALPHA | BETA | PHI | CN | CLM | CY | CYN | CBL | CA |
|---|---|---|---|---|---|---|---|---|---|---|---|
| -149.770 | -.439 | 200.07000 | -10.24300 | -.00144 | .01800 | -.30442 | .09032 | -.00430 | .00164 | .00297 | .23772 |
| -150.770 | 99.575 | 200.08000 | -10.24300 | -.00146 | .01634 | -.30499 | .09076 | -.00273 | .00090 | .00296 | .23859 |
| -150.800 | 199.480 | 199.82000 | -10.24500 | -.00231 | .01262 | -.30577 | .09054 | .00009 | .00001 | .00274 | .23873 |
| | GRADIENT | .00000 | .00000 | .00000 | .00000 | .00000 | .00000 | .00000 | .00000 | .00000 | .00000 |

IA143, AEDC V41A-P8A, O/ET W/R.H. SRB SEPARATING (OVX274) ( 23 MAY 77 )

REFERENCE DATA

SREF = 2690.0000 SQ.FT. XMRP = 1097.0000 IN. XT
LREF = 1290.3000 INCHES YMRP = .0000 IN. YT
BREF = 1290.3000 INCHES ZMRP = 450.0000 IN. ZT
SCALE = .0100

PARAMETRIC DATA

ALPHA = -10.000 BETA = .000
DALPHA = -4.000 DBETA = .000
Z = .000 MACH = 4.500
JET PC = .000

RUN NO. 3742/ 0 RN/L = 2.38 GRADIENT INTERVAL = -5.00/ 5.00

| Y | X | Z | ALPHA | BETA | PHI | CN | CLM | CY | CYN | CBL | CA |
|---|---|---|---|---|---|---|---|---|---|---|---|
| -50.955 | -.344 | .10947 | -10.27400 | .03120 | .00548 | -.28918 | .06591 | -.06301 | .02059 | -.01095 | .24878 |
| -49.384 | 99.529 | .17755 | -10.26900 | .01813 | .01461 | -.29239 | .07029 | -.05014 | .01865 | -.00692 | .24760 |
| -50.208 | 199.420 | .03264 | -10.26400 | .00860 | .01881 | -.29395 | .07427 | -.04158 | .01789 | -.00470 | .24772 |
| | GRADIENT | .00000 | .00000 | .00000 | .00000 | .00000 | .00000 | .00000 | .00000 | .00000 | .00000 |

RUN NO. 3747/ 0 RN/L = 2.38 GRADIENT INTERVAL = -5.00/ 5.00

| Y | X | Z | ALPHA | BETA | PHI | CN | CLM | CY | CYN | CBL | CA |
|---|---|---|---|---|---|---|---|---|---|---|---|
| -102.330 | 199.450 | .18141 | -10.25900 | .00346 | .01672 | -.29276 | .07623 | -.03511 | .01680 | -.00404 | .24555 |
| -101.740 | 99.613 | -.02174 | -10.26400 | .01113 | .01241 | -.28977 | .07164 | -.04628 | .01988 | -.00701 | .24560 |
| -101.640 | -.477 | .12212 | -10.27000 | .01876 | -.00417 | -.27796 | .06152 | -.05331 | .02163 | -.01173 | .24688 |
| | GRADIENT | .00000 | .00000 | .00000 | .00000 | .00000 | .00000 | .00000 | .00000 | .00000 | .00000 |

RUN NO. 3748/ 0 RN/L = 2.38 GRADIENT INTERVAL = -5.00/ 5.00

| Y | X | Z | ALPHA | BETA | PHI | CN | CLM | CY | CYN | CBL | CA |
|---|---|---|---|---|---|---|---|---|---|---|---|
| -149.840 | -.404 | -.03965 | -10.26100 | .00507 | -.00069 | -.28441 | .06991 | -.03427 | .01697 | -.00757 | .24565 |
| -150.710 | 99.565 | .20094 | -10.25800 | .00385 | .00890 | -.29095 | .07508 | -.03230 | .01566 | -.00509 | .24409 |
| -150.310 | 199.470 | .14546 | -10.25500 | -.00064 | .01531 | -.29737 | .08100 | -.02493 | .01308 | -.00231 | .24454 |
| | GRADIENT | .00000 | .00000 | .00000 | .00000 | .00000 | .00000 | .00000 | .00000 | .00000 | .00000 |

IA143, AEDC V41A-P8A, O/ET W/R.H. SRB SEPARATING (OVX275) ( 23 MAY 77 )

REFERENCE DATA

SREF = 2690.0000 SQ.FT. XMRP = 1097.0000 IN. XT
LREF = 1290.3000 INCHES YMRP = .0000 IN. YT
BREF = 1290.3000 INCHES ZMRP = 450.0000 IN. ZT
SCALE = .0100

PARAMETRIC DATA

ALPHA = -10.000 BETA = .000
DALPHA = -4.000 DBETA = .000
Z = 100.000 MACH = 4.500
JET PC = .000

RUN NO. 3743/ 0 RN/L = 2.38 GRADIENT INTERVAL = -5.00/ 5.00

| Y | X | Z | ALPHA | BETA | PHI | CN | CLM | CY | CYN | CBL | CA |
|---|---|---|---|---|---|---|---|---|---|---|---|
| -49.527 | 199.480 | 99.81000 | -10.25100 | .00681 | .02826 | -.30376 | .08575 | -.02725 | .00992 | .00054 | .23984 |
| -51.264 | 99.643 | 100.34000 | -10.25300 | .01288 | .03444 | -.30258 | .08469 | -.03698 | .01210 | .00010 | .24235 |
| -51.868 | -.307 | 100.35000 | -10.25500 | .02464 | .04395 | -.30322 | .08401 | -.05220 | .01447 | -.00047 | .24404 |
| | GRADIENT | .00000 | .00000 | .00000 | .00000 | .00000 | .00000 | .00000 | .00000 | .00000 | .00000 |

RUN NO. 3746/ 0 RN/L = 2.38 GRADIENT INTERVAL = -5.00/ 5.00

| Y | X | Z | ALPHA | BETA | PHI | CN | CLM | CY | CYN | CBL | CA |
|---|---|---|---|---|---|---|---|---|---|---|---|
| -102.170 | -.310 | 99.93800 | -10.25000 | .01421 | .03438 | -.30129 | .08592 | -.03602 | .01096 | .00040 | .24357 |
| -100.440 | 99.543 | 99.83300 | -10.25000 | .00888 | .02653 | -.30055 | .08538 | -.02757 | .00929 | .00023 | .24249 |
| -99.608 | 199.630 | 99.84800 | -10.24900 | .00331 | .01932 | -.30328 | .08661 | -.01702 | .00650 | .00068 | .24008 |
| | GRADIENT | .00000 | .00000 | .00000 | .00000 | .00000 | .00000 | .00000 | .00000 | .00000 | .00000 |

RUN NO. 3749/ 0 RN/L = 2.38 GRADIENT INTERVAL = -5.00/ 5.00

| Y | X | Z | ALPHA | BETA | PHI | CN | CLM | CY | CYN | CBL | CA |
|---|---|---|---|---|---|---|---|---|---|---|---|
| -149.690 | 199.550 | 100.31000 | -10.24900 | .00083 | .01268 | -.30217 | .08613 | -.01133 | .00497 | .00035 | .24032 |
| -151.330 | 99.579 | 100.33000 | -10.24900 | .00316 | .01584 | -.30155 | .08606 | -.01558 | .00603 | .00023 | .24135 |
| -150.790 | -.329 | 100.12000 | -10.24900 | .00406 | .01763 | -.30228 | .08656 | -.01700 | .00627 | .00037 | .24159 |
| | GRADIENT | .00000 | .00000 | .00000 | .00000 | .00000 | .00000 | .00000 | .00000 | .00000 | .00000 |

IA143, AEDC V41A-P8A, O/ET W/R.H. SRB SEPARATING (OVX276) ( 23 MAY 77 )

REFERENCE DATA

SREF = 2690.0000 SQ.FT. XMRP = 1097.0000 IN. XT
LREF = 1290.3000 INCHES YMRP = .0000 IN. YT
BREF = 1290.3000 INCHES ZMRP = 450.0000 IN. ZT
SCALE = .0100

PARAMETRIC DATA

ALPHA = -10.000 BETA = .000
DALPHA = -4.000 DBETA = .000
Z = 200.000 MACH = 4.500
JET PC = .000

RUN NO. 3744/ 0 RN/L = 2.38 GRADIENT INTERVAL = -5.00/ 5.00

| Y | X | Z | ALPHA | BETA | PHI | CN | CLM | CY | CYN | CBL | CA |
|---|---|---|---|---|---|---|---|---|---|---|---|
| -49.763 | -.287 | 200.26000 | -10.23900 | .01233 | .04103 | -.29847 | .08959 | -.02931 | .00753 | .00326 | .23904 |
| -49.691 | 99.474 | 199.53000 | -10.24100 | .00528 | .02734 | -.30428 | .09151 | -.01404 | .00328 | .00327 | .23877 |
| -49.906 | 199.500 | 199.55000 | -10.24300 | -.00026 | .02092 | -.30587 | .09140 | -.00685 | .00230 | .00312 | .23932 |
| | GRADIENT | .00000 | .00000 | .00000 | .00000 | .00000 | .00000 | .00000 | .00000 | .00000 | .00000 |

IA143, AEDC V41A-P8A, O/ET W/R.H. SRB SEPARATING (OVX276) ( 23 MAY 77 )

REFERENCE DATA

SREF = 2690.0000 SQ.FT. XMRP = 1097.0000 IN. XT
LREF = 1290.3000 INCHES YMRP = .0000 IN. YT
BREF = 1290.3000 INCHES ZMRP = 450.0000 IN. ZT
SCALE = .0100

PARAMETRIC DATA

ALPHA = -10.000 BETA = .000
DALPHA = -4.000 DBETA = .000
Z = 200.000 MACH = 4.500
JET PC = .000

RUN NO. 3745/ 0 RN/L = 2.38 GRADIENT INTERVAL = -5.00/ 5.00

| Y | X | Z | ALPHA | BETA | PHI | CN | CLM | CY | CYN | CBL | CA |
|---|---|---|---|---|---|---|---|---|---|---|---|
| -101.760 | 199.520 | 200.78000 | -10.24300 | -.00044 | .01419 | -.30625 | .09151 | -.00147 | -.00010 | .00286 | .23888 |
| -101.680 | 99.692 | 200.40000 | -10.24200 | .00289 | .01856 | -.30550 | .09183 | -.00620 | .00067 | .00297 | .23870 |
| -101.220 | -.364 | 200.33000 | -10.24200 | .00640 | .02263 | -.30376 | .09102 | -.01138 | .00164 | .00292 | .23824 |
| | GRADIENT | .00000 | .00000 | .00000 | .00000 | .00000 | .00000 | .00000 | .00000 | .00000 | .00000 |

RUN NO. 3750/ 0 RN/L = 2.38 GRADIENT INTERVAL = -5.00/ 5.00

| Y | X | Z | ALPHA | BETA | PHI | CN | CLM | CY | CYN | CBL | CA |
|---|---|---|---|---|---|---|---|---|---|---|---|
| -149.650 | -.257 | 200.10000 | -10.24400 | -.00145 | .01392 | -.30604 | .09095 | -.00115 | .00020 | .00280 | .23867 |
| -150.680 | 99.583 | 200.04000 | -10.24400 | -.00145 | .01321 | -.30634 | .09120 | -.00052 | -.00009 | .00279 | .23900 |
| -150.720 | 199.570 | 199.84000 | -10.24500 | -.00227 | .01045 | -.30693 | .09101 | .00172 | -.00076 | .00264 | .23919 |
| | GRADIENT | .00000 | .00000 | .00000 | .00000 | .00000 | .00000 | .00000 | .00000 | .00000 | .00000 |

IA143, AEDC V41A-P8A, O/ET W/R.H. SRB SEPARATING (OVX277) ( 23 MAY 77 )

REFERENCE DATA

SREF = 2690.0000 SQ.FT. XMRP = 1097.0000 IN. XT
LREF = 1290.3000 INCHES YMRP = .0000 IN. YT
BREF = 1290.3000 INCHES ZMRP = 450.0000 IN. ZT
SCALE = .0100

PARAMETRIC DATA

ALPHA = -10.000 BETA = .000
DALPHA = -4.000 DBETA = 2.000
Z = .000 MACH = 4.500
JET PC = .000

RUN NO. 3751/ 0 RN/L = 2.38 GRADIENT INTERVAL = -5.00/ 5.00

| Y | X | Z | ALPHA | BETA | PHI | CN | CLM | CY | CYN | CBL | CA |
|---|---|---|---|---|---|---|---|---|---|---|---|
| -50.729 | -.442 | .09744 | -10.27300 | .02803 | -.00801 | -.28717 | .06503 | -.05268 | .01734 | -.01178 | .24758 |
| -49.544 | 99.599 | .19390 | -10.26700 | .01514 | .00823 | -.29597 | .07346 | -.04175 | .01583 | -.00661 | .24644 |
| -50.023 | 199.490 | .23523 | -10.26200 | .00643 | .01377 | -.29641 | .07684 | -.03501 | .01561 | -.00446 | .24645 |
| | GRADIENT | .00000 | .00000 | .00000 | .00000 | .00000 | .00000 | .00000 | .00000 | .00000 | .00000 |

RUN NO. 3756/ 0 RN/L = 2.40 GRADIENT INTERVAL = -5.00/ 5.00

| Y | X | Z | ALPHA | BETA | PHI | CN | CLM | CY | CYN | CBL | CA |
|---|---|---|---|---|---|---|---|---|---|---|---|
| -101.540 | 199.500 | .23785 | -10.25700 | .00322 | .01398 | -.29808 | .08021 | -.02711 | .01263 | -.00282 | .24518 |
| -101.990 | 99.622 | -.02361 | -10.26200 | .01034 | .00736 | -.29476 | .07561 | -.03662 | .01522 | -.00596 | .24507 |
| -101.270 | -.432 | .09533 | -10.26600 | .01669 | -.00369 | -.29023 | .07093 | -.04115 | .01573 | -.00898 | .24607 |
| | GRADIENT | .00000 | .00000 | .00000 | .00000 | .00000 | .00000 | .00000 | .00000 | .00000 | .00000 |

IA143, AEDC V41A-P8A, O/ET W/R.H. SRB SEPARATING (OVX277) ( 23 MAY 77 )

REFERENCE DATA

SREF = 2690.0000 SQ.FT. XMRP = 1097.0000 IN. XT
LREF = 1290.3000 INCHES YMRP = .0000 IN. YT
BREF = 1290.3000 INCHES ZMRP = 450.0000 IN. ZT
SCALE = .0100

PARAMETRIC DATA

ALPHA = -10.000 BETA = .000
DALPHA = -4.000 DBETA = 2.000
Z = .000 MACH = 4.500
JET PC = .000

RUN NO. 3757/ 0 RN/L = 2.40 GRADIENT INTERVAL = -5.00/ 5.00

| Y | X | Z | ALPHA | BETA | PHI | CN | CLM | CY | CYN | CBL | CA |
|---|---|---|---|---|---|---|---|---|---|---|---|
| -149.760 | -.473 | -.14361 | -10.25600 | .00078 | .01137 | -.29890 | .08103 | -.02696 | .01388 | -.00354 | .24524 |
| -150.840 | 99.564 | .25048 | -10.25600 | .00151 | .01128 | -.29838 | .08069 | -.02553 | .01275 | -.00318 | .24390 |
| -150.640 | 199.430 | .26414 | -10.25300 | -.00215 | .01659 | -.30277 | .08494 | -.02005 | .01093 | -.00101 | .24425 |
| | GRADIENT | .00000 | .00000 | .00000 | .00000 | .00000 | .00000 | .00000 | .00000 | .00000 | .00000 |

IA143, AEDC V41A-P8A, O/ET W/R.H. SRB SEPARATING (OVX278) ( 23 MAY 77 )

REFERENCE DATA

SREF = 2690.0000 SQ.FT. XMRP = 1097.0000 IN. XT
LREF = 1290.3000 INCHES YMRP = .0000 IN. YT
BREF = 1290.3000 INCHES ZMRP = 450.0000 IN. ZT
SCALE = .0100

PARAMETRIC DATA

ALPHA = -10.000 BETA = .000
DALPHA = -4.000 DBETA = 2.000
Z = 100.000 MACH = 4.500
JET PC = .000

RUN NO. 3752/ 0 RN/L = 2.39 GRADIENT INTERVAL = -5.00/ 5.00

| Y | X | Z | ALPHA | BETA | PHI | CN | CLM | CY | CYN | CBL | CA |
|---|---|---|---|---|---|---|---|---|---|---|---|
| -49.681 | 199.590 | 99.84400 | -10.25100 | .00551 | .02244 | -.30625 | .08756 | -.02002 | .00692 | .00083 | .24013 |
| -50.912 | 99.563 | 100.30000 | -10.25200 | .01080 | .02796 | -.30589 | .08731 | -.02806 | .00856 | .00057 | .24240 |
| -52.269 | -.367 | 100.35000 | -10.25300 | .02118 | .03754 | -.30743 | .08781 | -.04069 | .01011 | .00052 | .24410 |
| | GRADIENT | .00000 | .00000 | .00000 | .00000 | .00000 | .00000 | .00000 | .00000 | .00000 | .00000 |

RUN NO. 3755/ 0 RN/L = 2.40 GRADIENT INTERVAL = -5.00/ 5.00

| Y | X | Z | ALPHA | BETA | PHI | CN | CLM | CY | CYN | CBL | CA |
|---|---|---|---|---|---|---|---|---|---|---|---|
| -102.010 | -.429 | 100.01000 | -10.25000 | .01266 | .02563 | -.30249 | .08645 | -.02711 | .00736 | .00041 | .24358 |
| -99.795 | 99.581 | 99.84600 | -10.25000 | .00893 | .01855 | -.30197 | .08616 | -.02037 | .00585 | .00014 | .24214 |
| -99.739 | 199.490 | 99.88700 | -10.24900 | .00347 | .01366 | -.30445 | .08726 | -.01159 | .00383 | .00069 | .23990 |
| | GRADIENT | .00000 | .00000 | .00000 | .00000 | .00000 | .00000 | .00000 | .00000 | .00000 | .00000 |

RUN NO. 3758/ 0 RN/L = 2.40 GRADIENT INTERVAL = -5.00/ 5.00

| Y | X | Z | ALPHA | BETA | PHI | CN | CLM | CY | CYN | CBL | CA |
|---|---|---|---|---|---|---|---|---|---|---|---|
| -149.560 | 199.540 | 100.34000 | -10.24900 | -.00020 | .01142 | -.30316 | .08677 | -.00854 | .00398 | .00064 | .23983 |
| -150.990 | 99.629 | 100.26000 | -10.24900 | .00134 | .01302 | -.30303 | .08688 | -.01115 | .00461 | .00050 | .24114 |
| -150.720 | -.314 | 100.00000 | -10.24900 | .00159 | .01435 | -.30365 | .08734 | -.01221 | .00498 | .00057 | .24138 |
| | GRADIENT | .00000 | .00000 | .00000 | .00000 | .00000 | .00000 | .00000 | .00000 | .00000 | .00000 |

IA143, AEDC V41A-P8A, O/ET W/R.H. SRB SEPARATING (OVX279) ( 23 MAY 77 )

REFERENCE DATA

SREF = 2690.0000 SQ.FT. XMRP = 1097.0000 IN. XT
LREF = 1290.3000 INCHES YMRP = .0000 IN. YT
BREF = 1290.3000 INCHES ZMRP = 450.0000 IN. ZT
SCALE = .0100

PARAMETRIC DATA

ALPHA = -10.000 BETA = .000
DALPHA = -4.000 DBETA = 2.000
Z = 200.000 MACH = 4.500
JET PC = .000

RUN NO. 3753/ 0 RN/L = 2.39 GRADIENT INTERVAL = -5.00/ 5.00

| Y | X | Z | ALPHA | BETA | PHI | CN | CLM | CY | CYN | CBL | CA |
|---|---|---|---|---|---|---|---|---|---|---|---|
| -49.596 | -.298 | 200.36000 | -10.24000 | .01147 | .03217 | -.30078 | .09033 | -.02133 | .00413 | .00310 | .23888 |
| -49.838 | 99.618 | 199.56000 | -10.24200 | .00547 | .02050 | -.30628 | .09230 | -.00866 | .00071 | .00301 | .23906 |
| -50.091 | 199.490 | 199.50000 | -10.24400 | .00030 | .01557 | -.30737 | .09188 | -.00274 | .00016 | .00292 | .23913 |
| | GRADIENT | .00000 | .00000 | .00000 | .00000 | .00000 | .00000 | .00000 | .00000 | .00000 | .00000 |

RUN NO. 3754/ 0 RN/L = 2.39 GRADIENT INTERVAL = -5.00/ 5.00

| Y | X | Z | ALPHA | BETA | PHI | CN | CLM | CY | CYN | CBL | CA |
|---|---|---|---|---|---|---|---|---|---|---|---|
| -101.150 | 199.470 | 200.76000 | -10.24400 | -.00085 | .01152 | -.30738 | .09187 | .00080 | -.00098 | .00276 | .23944 |
| -101.370 | 99.617 | 200.41000 | -10.24300 | .00197 | .01576 | -.30672 | .09231 | -.00352 | -.00018 | .00290 | .23922 |
| -101.390 | -.270 | 200.33000 | -10.24200 | .00463 | .01782 | -.30627 | .09210 | -.00654 | .00011 | .00286 | .23921 |
| | GRADIENT | .00000 | .00000 | .00000 | .00000 | .00000 | .00000 | .00000 | .00000 | .00000 | .00000 |

RUN NO. 3759/ 0 RN/L = 2.40 GRADIENT INTERVAL = -5.00/ 5.00

| Y | X | Z | ALPHA | BETA | PHI | CN | CLM | CY | CYN | CBL | CA |
|---|---|---|---|---|---|---|---|---|---|---|---|
| -149.820 | -.297 | 200.12000 | -10.24500 | -.00197 | .01065 | -.30735 | .09121 | .00146 | -.00076 | .00265 | .23909 |
| -150.620 | 99.552 | 200.24000 | -10.24500 | -.00188 | .01058 | -.30711 | .09119 | .00161 | -.00089 | .00267 | .23928 |
| -150.600 | 199.530 | 199.82000 | -10.24600 | -.00252 | .00853 | -.30767 | .09115 | .00333 | -.00139 | .00257 | .23940 |
| | GRADIENT | .00000 | .00000 | .00000 | .00000 | .00000 | .00000 | .00000 | .00000 | .00000 | .00000 |

IA143, AEDC V41A-P8A, O/ET W/R.H. SRB SEPARATING (OVX280) ( 23 MAY 77 )

REFERENCE DATA

SREF = 2690.0000 SQ.FT. XMRP = 1097.0000 IN. XT
LREF = 1290.3000 INCHES YMRP = .0000 IN. YT
BREF = 1290.3000 INCHES ZMRP = 450.0000 IN. ZT
SCALE = .0100

PARAMETRIC DATA

ALPHA = -10.000 BETA = .000
DALPHA = -8.000 DBETA = -4.000
Z = 100.000 MACH = 4.500
JET PC = .000

RUN NO. 3760/ 0 RN/L = 2.40 GRADIENT INTERVAL = -5.00/ 5.00

| Y | X | Z | ALPHA | BETA | PHI | CN | CLM | CY | CYN | CBL | CA |
|---|---|---|---|---|---|---|---|---|---|---|---|
| -120.770 | -.536 | 100.29000 | -10.27200 | .01952 | .00475 | -.22767 | .03083 | -.07964 | .03537 | -.01577 | .24806 |
| -119.550 | 99.572 | 99.90800 | -10.26600 | .01338 | .01153 | -.24864 | .04610 | -.06414 | .02894 | -.01114 | .24440 |
| -119.190 | 199.420 | 99.94700 | -10.25700 | .00384 | .01890 | -.27094 | .06344 | -.04839 | .02391 | -.00659 | .24146 |
| | GRADIENT | .00000 | .00000 | .00000 | .00000 | .00000 | .00000 | .00000 | .00000 | .00000 | .00000 |

IA143, AEDC V41A-P8A, O/ET W/R.H. SRB SEPARATING (OVX280) ( 23 MAY 77 )

REFERENCE DATA

SREF = 2690.0000 SQ.FT. XMRP = 1097.0000 IN. XT
LREF = 1290.3000 INCHES YMRP = .0000 IN. YT
BREF = 1290.3000 INCHES ZMRP = 450.0000 IN. ZT
SCALE = .0100

PARAMETRIC DATA

ALPHA = -10.000 BETA = .000
DALPHA = -8.000 DBETA = -4.000
Z = 100.000 MACH = 4.500
JET PC = .000

RUN NO. 3765/ 0 RN/L = 2.40 GRADIENT INTERVAL = -5.00/ 5.00

| Y | X | Z | ALPHA | BETA | PHI | CN | CLM | CY | CYN | CBL | CA |
|---|---|---|---|---|---|---|---|---|---|---|---|
| -150.990 | 199.460 | 100.35000 | -10.25600 | .00051 | .01408 | -.27606 | .06713 | -.03812 | .02005 | -.00552 | .24045 |
| -151.290 | 99.649 | 100.59000 | -10.26400 | .00722 | .00158 | -.25236 | .04904 | -.05212 | .02582 | -.01102 | .24208 |
| -151.060 | -.571 | 100.24000 | -10.26800 | .00965 | -.00616 | -.23674 | .03807 | -.06273 | .03128 | -.01499 | .24565 |
| | GRADIENT | .00000 | .00000 | .00000 | .00000 | .00000 | .00000 | .00000 | .00000 | .00000 | .00000 |

RUN NO. 3766/ 0 RN/L = 2.39 GRADIENT INTERVAL = -5.00/ 5.00

| Y | X | Z | ALPHA | BETA | PHI | CN | CLM | CY | CYN | CBL | CA |
|---|---|---|---|---|---|---|---|---|---|---|---|
| -199.440 | -.591 | 99.99100 | -10.26400 | -.00024 | -.01713 | -.25251 | .04899 | -.03767 | .02263 | -.01234 | .24193 |
| -200.700 | 99.621 | 100.47000 | -10.26200 | -.00054 | -.01511 | -.26136 | .05441 | -.03074 | .01872 | -.01033 | .23882 |
| -200.230 | 199.440 | 100.20000 | -10.25400 | -.00378 | .00512 | -.28301 | .07188 | -.02177 | .01356 | -.00404 | .23927 |
| | GRADIENT | .00000 | .00000 | .00000 | .00000 | .00000 | .00000 | .00000 | .00000 | .00000 | .00000 |

IA143, AEDC V41A-P8A, O/ET W/R.H. SRB SEPARATING (OVX281) ( 23 MAY 77 )

REFERENCE DATA

SREF = 2690.0000 SQ.FT. XMRP = 1097.0000 IN. XT
LREF = 1290.3000 INCHES YMRP = .0000 IN. YT
BREF = 1290.3000 INCHES ZMRP = 450.0000 IN. ZT
SCALE = .0100

PARAMETRIC DATA

ALPHA = -10.000 BETA = .000
DALPHA = -8.000 DBETA = -4.000
Z = 150.000 MACH = 4.500
JET PC = .000

RUN NO. 3761/ 0 RN/L = 2.39 GRADIENT INTERVAL = -5.00/ 5.00

| Y | X | Z | ALPHA | BETA | PHI | CN | CLM | CY | CYN | CBL | CA |
|---|---|---|---|---|---|---|---|---|---|---|---|
| -119.720 | 199.310 | 150.02000 | -10.25000 | .00228 | .02976 | -.28904 | .07758 | -.03478 | .01611 | -.00118 | .23783 |
| -121.320 | 99.586 | 150.61000 | -10.25200 | .00771 | .03376 | -.27581 | .06877 | -.05149 | .02268 | -.00376 | .23884 |
| -121.020 | -.399 | 150.53000 | -10.25700 | .01413 | .03308 | -.26049 | .05722 | -.06579 | .02781 | -.00674 | .24070 |
| | GRADIENT | .00000 | .00000 | .00000 | .00000 | .00000 | .00000 | .00000 | .00000 | .00000 | .00000 |

RUN NO. 3764/ 0 RN/L = 2.39 GRADIENT INTERVAL = -5.00/ 5.00

| Y | X | Z | ALPHA | BETA | PHI | CN | CLM | CY | CYN | CBL | CA |
|---|---|---|---|---|---|---|---|---|---|---|---|
| -151.320 | -.431 | 150.33000 | -10.25600 | .00577 | .01706 | -.26838 | .06178 | -.04613 | .02190 | -.00634 | .23888 |
| -150.310 | 99.497 | 150.11000 | -10.25100 | .00288 | .02585 | -.28454 | .07436 | -.03796 | .01794 | -.00273 | .23811 |
| -149.950 | 199.450 | 149.92000 | -10.24900 | -.00091 | .02371 | -.29359 | .08076 | -.02518 | .01267 | -.00053 | .23775 |
| | GRADIENT | .00000 | .00000 | .00000 | .00000 | .00000 | .00000 | .00000 | .00000 | .00000 | .00000 |

IA143, AEDC V41A-P8A, O/ET W/R.H. SRB SEPARATING (OVX281) ( 23 MAY 77 )

REFERENCE DATA

SREF = 2690.0000 SQ.FT. XMRP = 1097.0000 IN. XT
LREF = 1290.3000 INCHES YMRP = .0000 IN. YT
BREF = 1290.3000 INCHES ZMRP = 450.0000 IN. ZT
SCALE = .0100

PARAMETRIC DATA

ALPHA = -10.000 BETA = .000
DALPHA = -8.000 DBETA = -4.000
Z = 150.000 MACH = 4.500
JET PC = .000

RUN NO. 3767/ 0 RN/L = 2.39 GRADIENT INTERVAL = -5.00/ 5.00

| Y | X | Z | ALPHA | BETA | PHI | CN | CLM | CY | CYN | CBL | CA |
|---|---|---|---|---|---|---|---|---|---|---|---|
| -199.700 | 199.460 | 150.25000 | -10.24800 | -.00427 | .01773 | -.30050 | .08523 | -.01161 | .00707 | .00103 | .23678 |
| -200.650 | 99.522 | 150.23000 | -10.24900 | -.00455 | .01737 | -.29437 | .08097 | -.01862 | .01117 | -.00068 | .23714 |
| -200.080 | -.410 | 150.17000 | -10.25400 | -.00298 | .00896 | -.28143 | .07064 | -.02571 | .01510 | -.00405 | .23715 |
| | GRADIENT | .00000 | .00000 | .00000 | .00000 | .00000 | .00000 | .00000 | .00000 | .00000 | .00000 |

IA143, AEDC V41A-P8A, O/ET W/R.H. SRB SEPARATING (OVX282) ( 23 MAY 77 )

REFERENCE DATA

SREF = 2690.0000 SQ.FT. XMRP = 1097.0000 IN. XT
LREF = 1290.3000 INCHES YMRP = .0000 IN. YT
BREF = 1290.3000 INCHES ZMRP = 450.0000 IN. ZT
SCALE = .0100

PARAMETRIC DATA

ALPHA = -10.000 BETA = .000
DALPHA = -8.000 DBETA = -4.000
Z = 200.000 MACH = 4.500
JET PC = .000

RUN NO. 3762/ 0 RN/L = 2.40 GRADIENT INTERVAL = -5.00/ 5.00

| Y | X | Z | ALPHA | BETA | PHI | CN | CLM | CY | CYN | CBL | CA |
|---|---|---|---|---|---|---|---|---|---|---|---|
| -119.460 | -.502 | 200.12000 | -10.24600 | .00755 | .04256 | -.28582 | .07754 | -.04575 | .01883 | -.00052 | .23647 |
| -119.720 | 99.514 | 200.02000 | -10.24300 | .00290 | .04175 | -.29568 | .08499 | -.03347 | .01414 | .00180 | .23739 |
| -119.080 | 199.420 | 199.86000 | -10.24300 | -.00248 | .03733 | -.30062 | .08832 | -.02356 | .01140 | .00272 | .23773 |
| | GRADIENT | .00000 | .00000 | .00000 | .00000 | .00000 | .00000 | .00000 | .00000 | .00000 | .00000 |

RUN NO. 3763/ 0 RN/L = 2.39 GRADIENT INTERVAL = -5.00/ 5.00

| Y | X | Z | ALPHA | BETA | PHI | CN | CLM | CY | CYN | CBL | CA |
|---|---|---|---|---|---|---|---|---|---|---|---|
| -151.300 | 199.580 | 200.58000 | -10.24400 | -.00410 | .02915 | -.30213 | .08867 | -.01528 | .00814 | .00271 | .23741 |
| -151.160 | 99.594 | 200.65000 | -10.24400 | -.00161 | .03566 | -.29947 | .08719 | -.02421 | .01149 | .00228 | .23770 |
| -150.740 | -.376 | 200.27000 | -10.24600 | .00003 | .03647 | -.29385 | .08241 | -.03214 | .01514 | .00074 | .23661 |
| | GRADIENT | .00000 | .00000 | .00000 | .00000 | .00000 | .00000 | .00000 | .00000 | .00000 | .00000 |

RUN NO. 3768/ 0 RN/L = 2.39 GRADIENT INTERVAL = -5.00/ 5.00

| Y | X | Z | ALPHA | BETA | PHI | CN | CLM | CY | CYN | CBL | CA |
|---|---|---|---|---|---|---|---|---|---|---|---|
| -199.880 | -.466 | 200.28000 | -10.24600 | -.00566 | .02530 | -.30245 | .08739 | -.01388 | .00838 | .00208 | .23590 |
| -200.640 | 99.521 | 200.37000 | -10.24600 | -.00537 | .02037 | -.30211 | .08717 | -.00794 | .00531 | .00238 | .23668 |
| -200.650 | 199.430 | 200.27000 | -10.24600 | -.00512 | .01636 | -.30384 | .08785 | -.00330 | .00290 | .00258 | .23685 |
| | GRADIENT | .00000 | .00000 | .00000 | .00000 | .00000 | .00000 | .00000 | .00000 | .00000 | .00000 |

IA143, AEDC V41A-P8A, O/ET W/R.H. SRB SEPARATING (OVX283) ( 23 MAY 77 )

REFERENCE DATA

SREF = 2690.0000 SQ.FT. XMRP = 1097.0000 IN. XT
LREF = 1290.3000 INCHES YMRP = .0000 IN. YT
BREF = 1290.3000 INCHES ZMRP = 450.0000 IN. ZT
SCALE = .0100

PARAMETRIC DATA

ALPHA = -10.000 BETA = .000
DALPHA = -8.000 DBETA = -2.000
Z = 100.000 MACH = 4.500
JET PC = .000

RUN NO. 3769/ 0 RN/L = 2.39 GRADIENT INTERVAL = -5.00/ 5.00

| Y | X | Z | ALPHA | BETA | PHI | CN | CLM | CY | CYN | CBL | CA |
|---|---|---|---|---|---|---|---|---|---|---|---|
| -70.609 | -.415 | 100.27000 | -10.27300 | .02990 | .01170 | -.24257 | .03908 | -.08299 | .03192 | -.01427 | .24839 |
| -69.519 | 99.461 | 100.04000 | -10.26800 | .01870 | .01344 | -.25605 | .04964 | -.06346 | .02598 | -.01021 | .24615 |
| -69.649 | 199.290 | 99.70300 | -10.25900 | .00824 | .02009 | -.27577 | .06561 | -.04804 | .02159 | -.00594 | .24197 |
| | GRADIENT | .00000 | .00000 | .00000 | .00000 | .00000 | .00000 | .00000 | .00000 | .00000 | .00000 |

RUN NO. 3774/ 0 RN/L = 2.39 GRADIENT INTERVAL = -5.00/ 5.00

| Y | X | Z | ALPHA | BETA | PHI | CN | CLM | CY | CYN | CBL | CA |
|---|---|---|---|---|---|---|---|---|---|---|---|
| -101.270 | 199.460 | 100.40000 | -10.25700 | .00521 | .01456 | -.27673 | .06709 | -.04179 | .01992 | -.00594 | .24166 |
| -102.330 | 99.650 | 100.71000 | -10.26500 | .01413 | .00818 | -.25783 | .05228 | -.05743 | .02511 | -.01030 | .24441 |
| -101.800 | -.434 | 100.51000 | -10.27100 | .02232 | .00132 | -.24123 | .03961 | -.07321 | .03075 | -.01485 | .24774 |
| | GRADIENT | .00000 | .00000 | .00000 | .00000 | .00000 | .00000 | .00000 | .00000 | .00000 | .00000 |

RUN NO. 3775/ 0 RN/L = 2.39 GRADIENT INTERVAL = -5.00/ 5.00

| Y | X | Z | ALPHA | BETA | PHI | CN | CLM | CY | CYN | CBL | CA |
|---|---|---|---|---|---|---|---|---|---|---|---|
| -150.440 | -.510 | 100.19000 | -10.26400 | .00895 | -.01219 | -.25281 | .04953 | -.04676 | .02311 | -.01269 | .24440 |
| -150.270 | 99.610 | 100.38000 | -10.26100 | .00792 | -.00490 | -.26312 | .05657 | -.04075 | .01963 | -.00978 | .24148 |
| -150.030 | 199.440 | 99.87200 | -10.25400 | .00141 | .00917 | -.28340 | .07234 | -.02809 | .01440 | -.00424 | .24078 |
| | GRADIENT | .00000 | .00000 | .00000 | .00000 | .00000 | .00000 | .00000 | .00000 | .00000 | .00000 |

IA143, AEDC V41A-P8A, O/ET W/R.H. SRB SEPARATING (OVX284) ( 23 MAY 77 )

REFERENCE DATA

SREF = 2690.0000 SQ.FT. XMRP = 1097.0000 IN. XT
LREF = 1290.3000 INCHES YMRP = .0000 IN. YT
BREF = 1290.3000 INCHES ZMRP = 450.0000 IN. ZT
SCALE = .0100

PARAMETRIC DATA

ALPHA = -10.000 BETA = .000
DALPHA = -8.000 DBETA = -2.000
Z = 150.000 MACH = 4.500
JET PC = .000

RUN NO. 3770/ 0 RN/L = 2.39 GRADIENT INTERVAL = -5.00/ 5.00

| Y | X | Z | ALPHA | BETA | PHI | CN | CLM | CY | CYN | CBL | CA |
|---|---|---|---|---|---|---|---|---|---|---|---|
| -69.973 | 199.340 | 150.02000 | -10.25000 | .00580 | .03102 | -.29278 | .07951 | -.03536 | .01472 | -.00078 | .23833 |
| -71.975 | 99.721 | 150.95000 | -10.25300 | .01342 | .03703 | -.28090 | .07146 | -.05439 | .02142 | -.00330 | .23955 |
| -72.036 | -.303 | 150.60000 | -10.25700 | .02299 | .03984 | -.26866 | .06250 | -.07039 | .02578 | -.00568 | .24307 |
| | GRADIENT | .00000 | .00000 | .00000 | .00000 | .00000 | .00000 | .00000 | .00000 | .00000 | .00000 |

IA143, AEDC V41A-P8A, O/ET W/R.H. SRB SEPARATING (OVX284) ( 23 MAY 77 )

REFERENCE DATA

SREF = 2690.0000 SQ.FT. XMRP = 1097.0000 IN. XT
LREF = 1290.3000 INCHES YMRP = .0000 IN. YT
BREF = 1290.3000 INCHES ZMRP = 450.0000 IN. ZT
SCALE = .0100

PARAMETRIC DATA

ALPHA = -10.000 BETA = .000
DALPHA = -8.000 DBETA = -2.000
Z = 150.000 MACH = 4.500
JET PC = .000

RUN NO. 3773/ 0 RN/L = 2.39 GRADIENT INTERVAL = -5.00/ 5.00

| Y | X | Z | ALPHA | BETA | PHI | CN | CLM | CY | CYN | CBL | CA |
|---|---|---|---|---|---|---|---|---|---|---|---|
| -101.960 | -.415 | 150.36000 | -10.25500 | .01690 | .02924 | -.27027 | .06426 | -.05763 | .02226 | -.00551 | .24172 |
| -100.350 | 99.410 | 149.91000 | -10.25100 | .00907 | .03118 | -.28293 | .07374 | -.04544 | .01886 | -.00284 | .23925 |
| -99.344 | 199.350 | 149.81000 | -10.24900 | .00282 | .02786 | -.29473 | .08148 | -.02886 | .01270 | -.00021 | .23819 |
| | GRADIENT | .00000 | .00000 | .00000 | .00000 | .00000 | .00000 | .00000 | .00000 | .00000 | .00000 |

RUN NO. 3776/ 0 RN/L = 2.38 GRADIENT INTERVAL = -5.00/ 5.00

| Y | X | Z | ALPHA | BETA | PHI | CN | CLM | CY | CYN | CBL | CA |
|---|---|---|---|---|---|---|---|---|---|---|---|
| -150.080 | 199.490 | 150.21000 | -10.24700 | -.00020 | .01887 | -.29918 | .08482 | -.01670 | .00797 | .00040 | .23817 |
| -150.970 | 99.647 | 150.49000 | -10.24900 | .00262 | .01966 | -.29304 | .08053 | -.02585 | .01174 | -.00133 | .23868 |
| -150.980 | -.479 | 150.37000 | -10.25300 | .00420 | .01357 | -.28244 | .07212 | -.03233 | .01514 | -.00404 | .23857 |
| | GRADIENT | .00000 | .00000 | .00000 | .00000 | .00000 | .00000 | .00000 | .00000 | .00000 | .00000 |

IA143, AEDC V41A-P8A, O/ET W/R.H. SRB SEPARATING (OVX285) ( 23 MAY 77 )

REFERENCE DATA

SREF = 2690.0000 SQ.FT. XMRP = 1097.0000 IN. XT
LREF = 1290.3000 INCHES YMRP = .0000 IN. YT
BREF = 1290.3000 INCHES ZMRP = 450.0000 IN. ZT
SCALE = .0100

PARAMETRIC DATA

ALPHA = -10.000 BETA = .000
DALPHA = -8.000 DBETA = -2.000
Z = 200.000 MACH = 4.500
JET PC = .000

RUN NO. 3771/ 0 RN/L = 2.39 GRADIENT INTERVAL = -5.00/ 5.00

| Y | X | Z | ALPHA | BETA | PHI | CN | CLM | CY | CYN | CBL | CA |
|---|---|---|---|---|---|---|---|---|---|---|---|
| -70.145 | -.433 | 200.35000 | -10.24400 | .01526 | .05370 | -.28443 | .07817 | -.05742 | .02095 | -.00019 | .23839 |
| -69.728 | 99.480 | 199.71000 | -10.24300 | .00777 | .04675 | -.29531 | .08531 | -.03869 | .01443 | .00205 | .23787 |
| -69.319 | 199.400 | 199.59000 | -10.24300 | -.00003 | .03789 | -.30235 | .08921 | -.02470 | .01087 | .00276 | .23792 |
| | GRADIENT | .00000 | .00000 | .00000 | .00000 | .00000 | .00000 | .00000 | .00000 | .00000 | .00000 |

RUN NO. 3772/ 0 RN/L = 2.39 GRADIENT INTERVAL = -5.00/ 5.00

| Y | X | Z | ALPHA | BETA | PHI | CN | CLM | CY | CYN | CBL | CA |
|---|---|---|---|---|---|---|---|---|---|---|---|
| -101.690 | 199.480 | 200.84000 | -10.24300 | -.00141 | .03246 | -.30271 | .08966 | -.01892 | .00869 | .00279 | .23818 |
| -101.800 | 99.553 | 200.66000 | -10.24300 | .00402 | .03801 | -.29916 | .08756 | -.02825 | .01099 | .00226 | .23804 |
| -101.610 | -.393 | 200.66000 | -10.24400 | .01003 | .03978 | -.29007 | .08115 | -.04018 | .01479 | .00033 | .23740 |
| | GRADIENT | .00000 | .00000 | .00000 | .00000 | .00000 | .00000 | .00000 | .00000 | .00000 | .00000 |

IA143, AEDC V41A-P8A, O/ET W/R.H. SRB SEPARATING (OVX285) ( 23 MAY 77 )

REFERENCE DATA

SREF = 2690.0000 SQ.FT. XMRP = 1097.0000 IN. XT
LREF = 1290.3000 INCHES YMRP = .0000 IN. YT
BREF = 1290.3000 INCHES ZMRP = 450.0000 IN. ZT
SCALE = .0100

PARAMETRIC DATA

ALPHA = -10.000 BETA = .000
DALPHA = -8.000 DBETA = -2.000
Z = 200.000 MACH = 4.500
JET PC = .000

RUN NO. 3777/ 0 RN/L = 2.38 GRADIENT INTERVAL = -5.00/ 5.00

| Y | X | Z | ALPHA | BETA | PHI | CN | CLM | CY | CYN | CBL | CA |
|---|---|---|---|---|---|---|---|---|---|---|---|
| -150.140 | -.421 | 200.28000 | -10.24500 | -.00046 | .02848 | -.30003 | .08667 | -.02033 | .00936 | .00166 | .23671 |
| -150.690 | 99.561 | 200.33000 | -10.24300 | -.00079 | .02688 | -.30211 | .08882 | -.01503 | .00667 | .00251 | .23742 |
| -150.290 | 199.470 | 200.07000 | -10.24400 | -.00271 | .02127 | -.30355 | .08921 | -.00850 | .00433 | .00264 | .23745 |
| | GRADIENT | .00000 | .00000 | .00000 | .00000 | .00000 | .00000 | .00000 | .00000 | .00000 | .00000 |

IA143, AEDC V41A-P8A, O/ET W/R.H. SRB SEPARATING (OVX286) ( 23 MAY 77 )

REFERENCE DATA

SREF = 2690.0000 SQ.FT. XMRP = 1097.0000 IN. XT
LREF = 1290.3000 INCHES YMRP = .0000 IN. YT
BREF = 1290.3000 INCHES ZMRP = 450.0000 IN. ZT
SCALE = .0100

PARAMETRIC DATA

ALPHA = -10.000 BETA = .000
DALPHA = -8.000 DBETA = .000
Z = 100.000 MACH = 4.500
JET PC = .000

RUN NO. 3778/ 0 RN/L = 2.37 GRADIENT INTERVAL = -5.00/ 5.00

| Y | X | Z | ALPHA | BETA | PHI | CN | CLM | CY | CYN | CBL | CA |
|---|---|---|---|---|---|---|---|---|---|---|---|
| -54.507 | .151 | 100.45000 | -10.27300 | .03222 | .00545 | -.25294 | .04566 | -.07355 | .02606 | -.01331 | .24826 |
| -49.387 | 99.499 | 99.75300 | -10.26700 | .01945 | .00829 | -.26557 | .05542 | -.05544 | .02152 | -.00943 | .24602 |
| -50.388 | 199.390 | 99.83700 | -10.25900 | .00976 | .01643 | -.28056 | .06828 | -.04286 | .01827 | -.00544 | .24273 |
| | GRADIENT | .00000 | .00000 | .00000 | .00000 | .00000 | .00000 | .00000 | .00000 | .00000 | .00000 |

RUN NO. 3783/ 0 RN/L = 2.37 GRADIENT INTERVAL = -5.00/ 5.00

| Y | X | Z | ALPHA | BETA | PHI | CN | CLM | CY | CYN | CBL | CA |
|---|---|---|---|---|---|---|---|---|---|---|---|
| -101.280 | 199.460 | 100.39000 | -10.25600 | .00511 | .00909 | -.28273 | .07108 | -.03174 | .01475 | -.00483 | .24132 |
| -102.140 | 99.592 | 100.59000 | -10.26200 | .01351 | .00166 | -.26632 | .05835 | -.04657 | .01981 | -.00928 | .24332 |
| -101.610 | -.396 | 100.50000 | -10.26700 | .01984 | -.00182 | -.25631 | .05063 | -.06054 | .02502 | -.01280 | .24673 |
| | GRADIENT | .00000 | .00000 | .00000 | .00000 | .00000 | .00000 | .00000 | .00000 | .00000 | .00000 |

RUN NO. 3784/ 0 RN/L = 2.37 GRADIENT INTERVAL = -5.00/ 5.00

| Y | X | Z | ALPHA | BETA | PHI | CN | CLM | CY | CYN | CBL | CA |
|---|---|---|---|---|---|---|---|---|---|---|---|
| -150.270 | -.554 | 100.12000 | -10.26000 | .00823 | -.01218 | -.26790 | .06039 | -.03402 | .01629 | -.00981 | .24378 |
| -150.510 | 99.651 | 100.46000 | -10.25900 | .00798 | -.00789 | -.27294 | .06358 | -.03159 | .01470 | -.00832 | .24099 |
| -149.940 | 199.370 | 100.02000 | -10.25300 | .00162 | .00749 | -.28989 | .07711 | -.02113 | .01053 | -.00299 | .24086 |
| | GRADIENT | .00000 | .00000 | .00000 | .00000 | .00000 | .00000 | .00000 | .000 | .00000 | .00000 |

IA143, AEDC V41A-P8A, O/ET W/R.H. SRB SEPARATING (OVX287) ( 23 MAY 77 )

REFERENCE DATA

SREF = 2690.0000 SQ.FT. XMRP = 1097.0000 IN. XT
LREF = 1290.3000 INCHES YMRP = .0000 IN. YT
BREF = 1290.3000 INCHES ZMRP = 450.0000 IN. ZT
SCALE = .0100

PARAMETRIC DATA

ALPHA = -10.000 BETA = .000
DALPHA = -8.000 DBETA = .000
Z = 150.000 MACH = 4.500
JET PC = .000

RUN NO. 3779/ 0 RN/L = 2.37 GRADIENT INTERVAL = -5.00/ 5.00

| Y | X | Z | ALPHA | BETA | PHI | CN | CLM | CY | CYN | CBL | CA |
|---|---|---|---|---|---|---|---|---|---|---|---|
| -49.778 | 199.300 | 150.00000 | -10.25000 | .00692 | .02833 | -.29710 | .08212 | -.03131 | .01214 | -.00036 | .23889 |
| -52.484 | 99.651 | 150.78000 | -10.25200 | .01451 | .03144 | -.28805 | .07589 | -.04631 | .01683 | -.00259 | .23931 |
| -51.980 | -.404 | 150.74000 | -10.25700 | .02612 | .03573 | -.27757 | .06809 | -.06413 | .02116 | -.00492 | .24375 |
| | GRADIENT | .00000 | .00000 | .00000 | .00000 | .00000 | .00000 | .00000 | .00000 | .00000 | .00000 |

RUN NO. 3782/ 0 RN/L = 2.37 GRADIENT INTERVAL = -5.00/ 5.00

| Y | X | Z | ALPHA | BETA | PHI | CN | CLM | CY | CYN | CBL | CA |
|---|---|---|---|---|---|---|---|---|---|---|---|
| -101.720 | -.427 | 150.33000 | -10.25200 | .01507 | .02625 | -.28021 | .07167 | -.04677 | .01724 | -.00380 | .24155 |
| -100.090 | 99.513 | 149.84000 | -10.24900 | .00869 | .02547 | -.28993 | .07882 | -.03429 | .01323 | -.00156 | .23955 |
| -99.408 | 199.460 | 149.81000 | -10.24800 | .00265 | .02340 | -.30110 | .08586 | -.02029 | .00831 | .00077 | .23840 |
| | GRADIENT | .00000 | .00000 | .00000 | .00000 | .00000 | .00000 | .00000 | .00000 | .00000 | .00000 |

RUN NO. 3785/ 0 RN/L = 2.37 GRADIENT INTERVAL = -5.00/ 5.00

| Y | X | Z | ALPHA | BETA | PHI | CN | CLM | CY | CYN | CBL | CA |
|---|---|---|---|---|---|---|---|---|---|---|---|
| -150.030 | 199.510 | 150.27000 | -10.24700 | .00032 | .01521 | -.30147 | .08633 | -.01169 | .00520 | .00079 | .23816 |
| -151.400 | 99.624 | 150.41000 | -10.24800 | .00275 | .01475 | -.29609 | .08284 | -.01800 | .00767 | -.00060 | .23949 |
| -150.960 | -.451 | 150.26000 | -10.25100 | .00388 | .01162 | -.29119 | .07875 | -.02271 | .01005 | -.00229 | .23917 |
| | GRADIENT | .00000 | .00000 | .00000 | .00000 | .00000 | .00000 | .00000 | .00000 | .00000 | .00000 |

IA143, AEDC V41A-P8A, O/ET W/R.H. SRB SEPARATING (OVX288) ( 23 MAY 77 )

REFERENCE DATA

SREF = 2690.0000 SQ.FT. XMRP = 1097.0000 IN. XT
LREF = 1290.3000 INCHES YMRP = .0000 IN. YT
BREF = 1290.3000 INCHES ZMRP = 450.0000 IN. ZT
SCALE = .0100

PARAMETRIC DATA

ALPHA = -10.000 BETA = .000
DALPHA = -8.000 DBETA = .000
Z = 200.000 MACH = 4.500
JET PC = .000

RUN NO. 3780/ 0 RN/L = 2.37 GRADIENT INTERVAL = -5.00/ 5.00

| Y | X | Z | ALPHA | BETA | PHI | CN | CLM | CY | CYN | CBL | CA |
|---|---|---|---|---|---|---|---|---|---|---|---|
| -50.151 | -.335 | 200.35000 | -10.24300 | .01824 | .04774 | -.28933 | .08170 | -.05061 | .01623 | .00027 | .23895 |
| -49.447 | 99.454 | 199.62000 | -10.24300 | .00878 | .04171 | -.30028 | .08827 | -.03289 | .01112 | .00234 | .23841 |
| -50.045 | 199.370 | 199.65000 | -10.24400 | .00091 | .03459 | -.30462 | .09045 | -.02157 | .00894 | .00282 | .23874 |
| | GRADIENT | .00000 | .00000 | .00000 | .00000 | .00000 | .00000 | .00000 | .00000 | .00000 | .00000 |

IA143, AEDC V41A-P8A, O/ET W/R.H. SRB SEPARATING (OVX289) ( 23 MAY 77 )

REFERENCE DATA

SREF = 2690.0000 SQ.FT. XMRP = 1097.0000 IN. XT
LREF = 1290.3000 INCHES YMRP = .0000 IN. YT
BREF = 1290.3000 INCHES ZMRP = 450.0000 IN. ZT
SCALE = .0100

PARAMETRIC DATA

ALPHA = -10.000 BETA = .000
DALPHA = -8.000 DBETA = .000
Z = 200.000 MACH = 4.500
JET PC = .000

RUN NO. 3781/ 0 RN/L = 2.37 GRADIENT INTERVAL = -5.00/ 5.00

| Y | X | Z | ALPHA | BETA | PHI | CN | CLM | CY | CYN | CBL | CA |
|---|---|---|---|---|---|---|---|---|---|---|---|
| -101.290 | 199.620 | 201.20000 | -10.24300 | -.00094 | .02560 | -.30460 | .09057 | -.01235 | .00533 | .00283 | .23826 |
| -101.500 | 99.571 | 200.63000 | -10.24300 | .00415 | .03012 | -.30226 | .08944 | -.01988 | .00685 | .00246 | .23861 |
| -101.420 | -.428 | 200.62000 | -10.24400 | .00951 | .03179 | -.29578 | .08503 | -.02935 | .00958 | .00102 | .23782 |
| | GRADIENT | .00000 | .00000 | .00000 | .00000 | .00000 | .00000 | .00000 | .00000 | .00000 | .00000 |

RUN NO. 3786/ 0 RN/L = 2.37 GRADIENT INTERVAL = -5.00/ 5.00

| Y | X | Z | ALPHA | BETA | PHI | CN | CLM | CY | CYN | CBL | CA |
|---|---|---|---|---|---|---|---|---|---|---|---|
| -150.200 | -.485 | 200.30000 | -10.24400 | -.00024 | .02227 | -.30256 | .08839 | -.01263 | .00543 | .00208 | .23724 |
| -150.710 | 99.613 | 200.36000 | -10.24400 | -.00085 | .02178 | -.30403 | .08997 | -.00925 | .00385 | .00270 | .23764 |
| -150.380 | 199.490 | 199.99000 | -10.24400 | -.00237 | .01799 | -.30494 | .09012 | -.00489 | .00241 | .00277 | .23784 |
| | GRADIENT | .00000 | .00000 | .00000 | .00000 | .00000 | .00000 | .00000 | .00000 | .00000 | .00000 |

IA143, AEDC V41A-P8A, O/ET W/R.H. SRB SEPARATING (OVX289) ( 23 MAY 77 )

REFERENCE DATA

SREF = 2690.0000 SQ.FT. XMRP = 1097.0000 IN. XT
LREF = 1290.3000 INCHES YMRP = .0000 IN. YT
BREF = 1290.3000 INCHES ZMRP = 450.0000 IN. ZT
SCALE = .0100

PARAMETRIC DATA

ALPHA = -10.000 BETA = .000
DALPHA = -8.000 DBETA = 2.000
Z = 100.000 MACH = 4.500
JET PC = .000

RUN NO. 3787/ 0 RN/L = 2.38 GRADIENT INTERVAL = -5.00/ 5.00

| Y | X | Z | ALPHA | BETA | PHI | CN | CLM | CY | CYN | CBL | CA |
|---|---|---|---|---|---|---|---|---|---|---|---|
| -53.593 | .016 | 100.41000 | -10.26900 | .02854 | .00126 | -.26494 | .05453 | -.06238 | .02181 | -.01193 | .24733 |
| -49.124 | 99.436 | 99.89600 | -10.26500 | .01692 | .00077 | -.27133 | .05973 | -.04687 | .01848 | -.00930 | .24474 |
| -50.069 | 199.480 | 99.79000 | -10.25800 | .00782 | .01112 | -.28493 | .07140 | -.03453 | .01491 | -.00483 | .24226 |
| | GRADIENT | .00000 | .00000 | .00000 | .00000 | .00000 | .00000 | .00000 | .00000 | .00000 | .00000 |

RUN NO. 3792/ 0 RN/L = 2.38 GRADIENT INTERVAL = -5.00/ 5.00

| Y | X | Z | ALPHA | BETA | PHI | CN | CLM | CY | CYN | CBL | CA |
|---|---|---|---|---|---|---|---|---|---|---|---|
| -101.130 | 199.400 | 100.38000 | -10.25400 | .00496 | .00595 | -.28867 | .07562 | -.02395 | .01069 | -.00374 | .24148 |
| -102.140 | 99.589 | 100.62000 | -10.26000 | .01314 | -.00463 | -.27349 | .06353 | -.03654 | .01485 | -.00838 | .24283 |
| -101.670 | -.569 | 100.45000 | -10.26300 | .01815 | -.00356 | -.26879 | .06013 | -.04712 | .01840 | -.01022 | .24656 |
| | GRADIENT | .00000 | .00000 | .00000 | .00000 | .00000 | .00000 | .00000 | .00000 | .00000 | .00000 |

IA143, AEDC V41A-P8A, O/ET W/R.H. SRB SEPARATING (OVX289) ( 23 MAY 77 )

REFERENCE DATA

SREF = 2690.0000 SQ.FT. XMRP = 1097.0000 IN. XT
LREF = 1290.3000 INCHES YMRP = .0000 IN. YT
BREF = 1290.3000 INCHES ZMRP = 450.0000 IN. ZT
SCALE = .0100

PARAMETRIC DATA

ALPHA = -10.000 BETA = .000
DALPHA = -8.000 DBETA = 2.000
Z = 100.000 MACH = 4.500
JET PC = .000

RUN NO. 3793/ 0 RN/L = 2.38 GRADIENT INTERVAL = -5.00/ 5.00

| Y | X | Z | ALPHA | BETA | PHI | CN | CLM | CY | CYN | CBL | CA |
|---|---|---|---|---|---|---|---|---|---|---|---|
| -150.260 | -.526 | 99.91500 | -10.25700 | .00468 | -.00321 | -.28227 | .07098 | -.02589 | .01265 | -.00622 | .24329 |
| -150.720 | 99.565 | 100.51000 | -10.25400 | .00434 | .00398 | -.28752 | .07507 | -.02369 | .01099 | -.00416 | .24187 |
| -150.120 | 199.520 | 100.13000 | -10.25100 | .00045 | .00881 | -.29461 | .08061 | -.01706 | .00867 | -.00185 | .24129 |
| | GRADIENT | .00000 | .00000 | .00000 | .00000 | .00000 | .00000 | .00000 | .00000 | .00000 | .00000 |

IA143, AEDC V41A-P8A, O/ET W/R.H. SRB SEPARATING (OVX290) ( 23 MAY 77 )

REFERENCE DATA

SREF = 2690.0000 SQ.FT. XMRP = 1097.0000 IN. XT
LREF = 1290.3000 INCHES YMRP = .0000 IN. YT
BREF = 1290.3000 INCHES ZMRP = 450.0000 IN. ZT
SCALE = .0100

PARAMETRIC DATA

ALPHA = -10.000 BETA = .000
DALPHA = -8.000 DBETA = 2.000
Z = 150.000 MACH = 4.500
JET PC = .000

RUN NO. 3788/ 0 RN/L = 2.38 GRADIENT INTERVAL = -5.00/ 5.00

| Y | X | Z | ALPHA | BETA | PHI | CN | CLM | CY | CYN | CBL | CA |
|---|---|---|---|---|---|---|---|---|---|---|---|
| -50.031 | 199.430 | 150.00000 | -10.25000 | .00538 | .02473 | -.30209 | .08560 | -.02325 | .00862 | .00058 | .23879 |
| -51.258 | 99.599 | 150.87000 | -10.25100 | .01276 | .02473 | -.29339 | .07970 | -.03489 | .01175 | -.00157 | .23955 |
| -52.203 | -.407 | 150.79000 | -10.25400 | .02292 | .02971 | -.28460 | .07367 | -.05196 | .01627 | -.00367 | .24336 |
| | GRADIENT | .00000 | .00000 | .00000 | .00000 | .00000 | .00000 | .00000 | .00000 | .00000 | .00000 |

RUN NO. 3791/ 0 RN/L = 2.38 GRADIENT INTERVAL = -5.00/ 5.00

| Y | X | Z | ALPHA | BETA | PHI | CN | CLM | CY | CYN | CBL | CA |
|---|---|---|---|---|---|---|---|---|---|---|---|
| -101.460 | -.446 | 150.21000 | -10.25100 | .01344 | .02054 | -.28824 | .07735 | -.03525 | .01198 | -.00253 | .24154 |
| -100.040 | 99.442 | 149.98000 | -10.24800 | .00887 | .01900 | -.29503 | .08253 | -.02524 | .00858 | -.00089 | .23995 |
| -99.802 | 199.530 | 149.86000 | -10.24700 | .00284 | .01837 | -.30371 | .08774 | -.01360 | .00486 | .00122 | .23852 |
| | GRADIENT | .00000 | .00000 | .00000 | .00000 | .00000 | .00000 | .00000 | .00000 | .00000 | .00000 |

RUN NO. 3794/ 0 RN/L = 2.38 GRADIENT INTERVAL = -5.00/ 5.00

| Y | X | Z | ALPHA | BETA | PHI | CN | CLM | CY | CYN | CBL | CA |
|---|---|---|---|---|---|---|---|---|---|---|---|
| -150.080 | 199.450 | 150.32000 | -10.24700 | -.00047 | .01358 | -.30337 | .08757 | -.00856 | .00394 | .00110 | .23857 |
| -151.380 | 99.454 | 150.42000 | -10.24800 | .00146 | .01245 | -.29842 | .08436 | -.01341 | .00587 | -.00014 | .23963 |
| -150.890 | -.479 | 150.23000 | -10.24900 | .00122 | .01253 | -.29709 | .08324 | -.01600 | .00742 | -.00073 | .23999 |
| | GRADIENT | .00000 | .00000 | .00000 | .00000 | .00000 | .00000 | .00000 | .00000 | .00000 | .00000 |

IA143, AEDC V41A-P8A, O/ET W/R.H. SRB SEPARATING (OVX291) ( 23 MAY 77 )

REFERENCE DATA

SREF = 2690.0000 SQ.FT. XMRP = 1097.0000 IN. XT
LREF = 1290.3000 INCHES YMRP = .0000 IN. YT
BREF = 1290.3000 INCHES ZMRP = 450.0000 IN. ZT
SCALE = .0100

PARAMETRIC DATA

ALPHA = -10.000 BETA = .000
DALPHA = -8.000 DBETA = 2.000
Z = 200.000 MACH = 4.500
JET PC = .000

RUN NO. 3789/ 0 RN/L = 2.38 GRADIENT INTERVAL = -5.00/ 5.00

| Y | X | Z | ALPHA | BETA | PHI | CN | CLM | CY | CYN | CBL | CA |
|---|---|---|---|---|---|---|---|---|---|---|---|
| -50.051 | -.353 | 200.40000 | -10.24200 | .01642 | .04086 | -.29413 | .08502 | -.04027 | .01180 | .00101 | .23917 |
| -49.788 | 99.608 | 199.74000 | -10.24300 | .00801 | .03309 | -.30372 | .09035 | -.02343 | .00684 | .00256 | .23874 |
| -50.041 | 199.330 | 199.66000 | -10.24400 | .00072 | .02819 | -.30621 | .09132 | -.01480 | .00574 | .00295 | .23862 |
| | GRADIENT | .00000 | .00000 | .00000 | .00000 | .00000 | .00000 | .00000 | .00000 | .00000 | .00000 |

RUN NO. 3790/ 0 RN/L = 2.38 GRADIENT INTERVAL = -5.00/ 5.00

| Y | X | Z | ALPHA | BETA | PHI | CN | CLM | CY | CYN | CBL | CA |
|---|---|---|---|---|---|---|---|---|---|---|---|
| -101.180 | 199.580 | 201.18000 | -10.24300 | -.00018 | .01937 | -.30570 | .09111 | -.00675 | .00233 | .00280 | .23838 |
| -101.640 | 99.645 | 200.67000 | -10.24300 | .00413 | .02340 | -.30410 | .09038 | -.01310 | .00360 | .00253 | .23799 |
| -101.090 | -.517 | 200.60000 | -10.24400 | .00877 | .02231 | -.29872 | .08654 | -.01957 | .00517 | .00114 | .23841 |
| | GRADIENT | .00000 | .00000 | .00000 | .00000 | .00000 | .00000 | .00000 | .00000 | .00000 | .00000 |

RUN NO. 3795/ 0 RN/L = 2.38 GRADIENT INTERVAL = -5.00/ 5.00

| Y | X | Z | ALPHA | BETA | PHI | CN | CLM | CY | CYN | CBL | CA |
|---|---|---|---|---|---|---|---|---|---|---|---|
| -149.870 | -.469 | 200.29000 | -10.24500 | -.00142 | .01743 | -.30442 | .08953 | -.00686 | .00312 | .00226 | .23822 |
| -150.410 | 99.675 | 200.46000 | -10.24400 | -.00151 | .01737 | -.30554 | .09055 | -.00507 | .00216 | .00266 | .23835 |
| -150.460 | 199.470 | 199.93000 | -10.24500 | -.00273 | .01510 | -.30627 | .09071 | -.00201 | .00118 | .00277 | .23840 |
| | GRADIENT | .00000 | .00000 | .00000 | .00000 | .00000 | .00000 | .00000 | .00000 | .00000 | .00000 |

IA143, AEDC V41A-P8A, O/ET W/R.H. SRB SEPARATING (OVX292) ( 23 MAY 77 )

REFERENCE DATA

SREF = 2690.0000 SQ.FT. XMRP = 1097.0000 IN. XT
LREF = 1290.3000 INCHES YMRP = .0000 IN. YT
BREF = 1290.3000 INCHES ZMRP = 450.0000 IN. ZT
SCALE = .0100

PARAMETRIC DATA

ALPHA = -10.000 BETA = .000
DALPHA = .000 DBETA = -4.000
Z = .000 MACH = 4.500
JET PC = 1225.000

RUN NO. 3799/ 0 RN/L = 2.37 GRADIENT INTERVAL = -5.00/ 5.00

| Y | X | Z | ALPHA | BETA | PHI | CN | CLM | CY | CYN | CBL | CA |
|---|---|---|---|---|---|---|---|---|---|---|---|
| -120.750 | -.845 | -.36170 | -10.36600 | .10205 | .00367 | -.26366 | -.02002 | -.02936 | -.03070 | .00142 | .16674 |
| -120.960 | 99.570 | -.54466 | -10.38400 | .13013 | .02196 | -.29496 | -.01364 | -.03023 | -.04458 | .00724 | .16039 |
| -120.450 | 199.700 | .29544 | -10.36500 | .13067 | .04164 | -.30678 | .00450 | -.04037 | -.04070 | .00926 | .16126 |
| | GRADIENT | .00000 | .00000 | .00000 | .00000 | .00000 | .00000 | .00000 | .00000 | .00000 | .00000 |

IA143, AEDC V41A-P8A, O/ET W/R.H. SRB SEPARATING (OVX292) ( 23 MAY 77 )

REFERENCE DATA

SREF = 2690.0000 SQ.FT. XMRP = 1097.0000 IN. XT
LREF = 1290.3000 INCHES YMRP = .0000 IN. YT
BREF = 1290.3000 INCHES ZMRP = 450.0000 IN. ZT
SCALE = .0100

PARAMETRIC DATA

ALPHA = -10.000 BETA = .000
DALPHA = .000 DBETA = -4.000
Z = .000 MACH = 4.500
JET PC = 1225.000

RUN NO. 3804/ 0 RN/L = 2.37 GRADIENT INTERVAL = -5.00/ 5.00

| Y | X | Z | ALPHA | BETA | PHI | CN | CLM | CY | CYN | CBL | CA |
|---|---|---|---|---|---|---|---|---|---|---|---|
| -149.500 | 199.740 | -.10296 | -10.36200 | .12976 | .03469 | -.31421 | .01048 | -.03969 | -.04011 | .00783 | .16070 |
| -150.290 | 99.683 | -.55920 | -10.37700 | .12678 | .01466 | -.30606 | -.00310 | -.02599 | -.04484 | .00636 | .16077 |
| -150.160 | -.213 | .84326 | -10.36300 | .10257 | -.00079 | -.27715 | -.01047 | -.02032 | -.03569 | .00255 | .16783 |
| | GRADIENT | .00000 | .00000 | .00000 | .00000 | .00000 | .00000 | .00000 | .00000 | .00000 | .00000 |

RUN NO. 3805/ 0 RN/L = 2.38 GRADIENT INTERVAL = -5.00/ 5.00

| Y | X | Z | ALPHA | BETA | PHI | CN | CLM | CY | CYN | CBL | CA |
|---|---|---|---|---|---|---|---|---|---|---|---|
| -200.470 | -.229 | -.73364 | -10.37500 | .11585 | -.00422 | -.30433 | .00031 | -.01284 | -.04574 | .00447 | .17438 |
| -200.670 | 99.577 | -.02444 | -10.37700 | .13362 | .01189 | -.32546 | .00982 | -.02539 | -.04810 | .00637 | .16724 |
| -200.620 | 199.510 | .00746 | -10.36100 | .13729 | .02949 | -.33256 | .02453 | -.04172 | -.04204 | .00675 | .17204 |
| | GRADIENT | .00000 | .00000 | .00000 | .00000 | .00000 | .00000 | .00000 | .00000 | .00000 | .00000 |

IA143, AEDC V41A-P8A, O/ET W/R.H. SRB SEPARATING (OVX293) ( 25 MAY 77 )

REFERENCE DATA

SREF = 2690.0000 SQ.FT. XMRP = 1097.0000 IN. XT
LREF = 1290.3000 INCHES YMRP = .0000 IN. YT
BREF = 1290.3000 INCHES ZMRP = 450.0000 IN. ZT
SCALE = .0100

PARAMETRIC DATA

ALPHA = -10.000 BETA = .000
DALPHA = .000 DBETA = -4.000
Z = .000 MACH = 4.500
JET PC = 1225.000

RUN NO. 3917/ 0 RN/L = 2.37 GRADIENT INTERVAL = -5.00/ 5.00

| Y | X | Z | ALPHA | BETA | PHI | CN | CLM | CY | CYN | CBL | CA |
|---|---|---|---|---|---|---|---|---|---|---|---|
| -150.550 | -.937 | -.04351 | -10.36700 | .10637 | -.00079 | -.28689 | -.00431 | -.03019 | -.03189 | .00056 | .17980 |
| -150.900 | 99.541 | -.39334 | -10.38000 | .12960 | .01472 | -.31231 | .00176 | -.03760 | -.03964 | .00391 | .17248 |
| -150.380 | 199.550 | .19266 | -10.36300 | .13167 | .03353 | -.32309 | .01751 | -.05181 | -.03413 | .00493 | .17287 |
| | GRADIENT | .00000 | .00000 | .00000 | .00000 | .00000 | .00000 | .00000 | .00000 | .00000 | .00000 |

IA143, AEDC V41A-P8A, O/ET W/R.H. SRB SEPARATING (OVX294) ( 23 MAY 77 )

REFERENCE DATA

SREF = 2690.0000 SQ.FT. XMRP = 1097.0000 IN. XT
LREF = 1290.3000 INCHES YMRP = .0000 IN. YT
BREF = 1290.3000 INCHES ZMRP = 450.0000 IN. ZT
SCALE = .0100

PARAMETRIC DATA

ALPHA = -10.000 BETA = .000
DALPHA = .000 DBETA = -4.000
Z = 100.000 MACH = 4.500
JET PC = 1225.000

RUN NO. 3800/ 0 RN/L = 2.37 GRADIENT INTERVAL = -5.00/ 5.00

| Y | X | Z | ALPHA | BETA | PHI | CN | CLM | CY | CYN | CBL | CA |
|---|---|---|---|---|---|---|---|---|---|---|---|
| -122.080 | 199.560 | 99.78500 | -10.36100 | .21487 | .06654 | -.30962 | .00889 | -.09391 | -.05141 | .00844 | .16417 |
| -120.300 | 99.556 | 99.87700 | -10.37000 | .21095 | .04675 | -.29802 | -.00322 | -.07720 | -.05738 | .00764 | .16334 |
| -119.350 | -.282 | 100.99000 | -10.33400 | .15966 | .02297 | -.24075 | -.01451 | -.06588 | -.03827 | .00137 | .17015 |
| | GRADIENT | .00000 | .00000 | .00000 | .00000 | .00000 | .00000 | .00000 | .00000 | .00000 | .00000 |

RUN NO. 3803/ 0 RN/L = 2.37 GRADIENT INTERVAL = -5.00/ 5.00

| Y | X | Z | ALPHA | BETA | PHI | CN | CLM | CY | CYN | CBL | CA |
|---|---|---|---|---|---|---|---|---|---|---|---|
| -148.080 | -.317 | 99.04000 | -10.33400 | .15524 | .01794 | -.25280 | -.00641 | -.05460 | -.04218 | .00255 | .17346 |
| -151.080 | 99.708 | 98.77500 | -10.36900 | .19766 | .03734 | -.30328 | .00163 | -.07029 | -.05435 | .00620 | .16863 |
| -150.920 | 199.550 | 100.29000 | -10.35800 | .20439 | .05776 | -.31544 | .01441 | -.09410 | -.04575 | .00570 | .16529 |
| | GRADIENT | .00000 | .00000 | .00000 | .00000 | .00000 | .00000 | .00000 | .00000 | .00000 | .00000 |

RUN NO. 3806/ 0 RN/L = 2.39 GRADIENT INTERVAL = -5.00/ 5.00

| Y | X | Z | ALPHA | BETA | PHI | CN | CLM | CY | CYN | CBL | CA |
|---|---|---|---|---|---|---|---|---|---|---|---|
| -201.970 | 199.570 | 100.27000 | -10.36000 | .21218 | .05506 | -.33654 | .02882 | -.10030 | -.04560 | .00423 | .17871 |
| -200.260 | 99.685 | 99.83300 | -10.37200 | .20558 | .03259 | -.32288 | .01301 | -.07652 | -.05415 | .00430 | .17577 |
| -199.820 | -.360 | 100.44000 | -10.35500 | .17254 | .01182 | -.28853 | .00440 | -.05485 | -.04947 | .00236 | .18300 |
| | GRADIENT | .00000 | .00000 | .00000 | .00000 | .00000 | .00000 | .00000 | .00000 | .00000 | .00000 |

IA143, AEDC V41A-P8A, O/ET W/R.H. SRB SEPARATING (OVX295) ( 25 MAY 77 )

REFERENCE DATA

SREF = 2690.0000 SQ.FT. XMRP = 1097.0000 IN. XT
LREF = 1290.3000 INCHES YMRP = .0000 IN. YT
BREF = 1290.3000 INCHES ZMRP = 450.0000 IN. ZT
SCALE = .0100

PARAMETRIC DATA

ALPHA = -10.000 BETA = .000
DALPHA = .000 DBETA = -4.000
Z = 100.000 MACH = 4.500
JET PC = 1225.000

RUN NO. 3918/ 0 RN/L = 2.37 GRADIENT INTERVAL = -5.00/ 5.00

| Y | X | Z | ALPHA | BETA | PHI | CN | CLM | CY | CYN | CBL | CA |
|---|---|---|---|---|---|---|---|---|---|---|---|
| -152.110 | 199.590 | 99.92300 | -10.36000 | .21061 | .05873 | -.32474 | .02198 | -.10989 | -.03983 | .00274 | .17884 |
| -150.110 | 99.515 | 99.90100 | -10.36900 | .20515 | .03963 | -.30806 | .00719 | -.08785 | -.04812 | .00320 | .17975 |
| -149.560 | -.311 | 100.82000 | -10.33700 | .16629 | .02070 | -.26209 | .00021 | -.07065 | -.03844 | .00024 | .18602 |
| | GRADIENT | .00000 | .00000 | .00000 | .00000 | .00000 | .00000 | .00000 | .00000 | .00000 | .00000 |

IA143, AEDC V41A-P8A, O/ET W/R.H. SRB SEPARATING (OVX296) ( 23 MAY 77 )

REFERENCE DATA

SREF = 2690.0000 SQ.FT. XMRP = 1097.0000 IN. XT
LREF = 1290.3000 INCHES YMRP = .0000 IN. YT
BREF = 1290.3000 INCHES ZMRP = 450.0000 IN. ZT
SCALE = .0100

PARAMETRIC DATA

ALPHA = -10.000 BETA = .000
DALPHA = .000 DBETA = -4.000
Z = 200.000 MACH = 4.500
JET PC = 1225.000

RUN NO. 3801/ 0 RN/L = 2.37 GRADIENT INTERVAL = -5.00/ 5.00

| Y | X | Z | ALPHA | BETA | PHI | CN | CLM | CY | CYN | CBL | CA |
|---|---|---|---|---|---|---|---|---|---|---|---|
| -122.000 | -.395 | 202.21000 | -10.22900 | .23398 | .04589 | -.18157 | .01560 | -.11405 | -.04723 | .00062 | .18623 |
| -122.480 | 99.489 | 197.87000 | -10.30300 | .33692 | .08051 | -.26200 | .01938 | -.15242 | -.07581 | .00674 | .18443 |
| -121.570 | 199.590 | 200.45000 | -10.28300 | .35391 | .09847 | -.26710 | .03458 | -.19196 | -.06281 | .00280 | .18919 |
| | GRADIENT | .00000 | .00000 | .00000 | .00000 | .00000 | .00000 | .00000 | .00000 | .00000 | .00000 |

RUN NO. 3802/ 0 RN/L = 2.37 GRADIENT INTERVAL = -5.00/ 5.00

| Y | X | Z | ALPHA | BETA | PHI | CN | CLM | CY | CYN | CBL | CA |
|---|---|---|---|---|---|---|---|---|---|---|---|
| -150.090 | 199.580 | 198.45000 | -10.31700 | .34314 | .10302 | -.29645 | .03224 | -.17632 | -.06710 | .00666 | .18966 |
| -149.910 | 99.689 | 200.16000 | -10.31400 | .32537 | .07707 | -.27434 | .02019 | -.14972 | -.07166 | .00576 | .18468 |
| -148.990 | -.396 | 200.86000 | -10.28100 | .26344 | .04740 | -.22905 | .01489 | -.11543 | -.06017 | .00275 | .19410 |
| | GRADIENT | .00000 | .00000 | .00000 | .00000 | .00000 | .00000 | .00000 | .00000 | .00000 | .00000 |

RUN NO. 3807/ 0 RN/L = 2.39 GRADIENT INTERVAL = -5.00/ 5.00

| Y | X | Z | ALPHA | BETA | PHI | CN | CLM | CY | CYN | CBL | CA |
|---|---|---|---|---|---|---|---|---|---|---|---|
| -202.450 | -.387 | 200.68000 | -10.31900 | .27198 | .03842 | -.27126 | .01864 | -.11583 | -.06314 | .00127 | .19992 |
| -201.590 | 99.593 | 199.32000 | -10.33600 | .31943 | .07038 | -.30592 | .02743 | -.15555 | -.06505 | .00251 | .19015 |
| -200.910 | 199.700 | 199.90000 | -10.33000 | .31796 | .09427 | -.32340 | .04210 | -.18315 | -.05089 | .00134 | .19711 |
| | GRADIENT | .00000 | .00000 | .00000 | .00000 | .00000 | .00000 | .00000 | .00000 | .00000 | .00000 |

IA143, AEDC V41A-P8A, O/ET W/R.H. SRB SEPARATING (OVX297) ( 25 MAY 77 )

REFERENCE DATA

SREF = 2690.0000 SQ.FT. XMRP = 1097.0000 IN. XT
LREF = 1290.3000 INCHES YMRP = .0000 IN. YT
BREF = 1290.3000 INCHES ZMRP = 450.0000 IN. ZT
SCALE = .0100

PARAMETRIC DATA

ALPHA = -10.000 BETA = .000
DALPHA = .000 DBETA = -4.000
Z = 200.000 MACH = 4.500
JET PC = 1225.000

RUN NO. 3919/ 0 RN/L = 2.37 GRADIENT INTERVAL = -5.00/ 5.00

| Y | X | Z | ALPHA | BETA | PHI | CN | CLM | CY | CYN | CBL | CA |
|---|---|---|---|---|---|---|---|---|---|---|---|
| -152.930 | -.333 | 200.74000 | -10.29000 | .27525 | .04964 | -.24078 | .01947 | -.13166 | -.05667 | .00034 | .20698 |
| -151.870 | 99.489 | 199.15000 | -10.31400 | .33317 | .07887 | -.27994 | .02608 | -.16636 | -.06613 | .00291 | .19793 |
| -151.050 | 199.500 | 199.59000 | -10.31500 | .34946 | .10630 | -.29985 | .03844 | -.19353 | -.06036 | .00379 | .20235 |
| | GRADIENT | .00000 | .00000 | .00000 | .00000 | .00000 | .00000 | .00000 | .00000 | .00000 | .00000 |

IA143, AEDC V41A-P8A, O/ET W/R.H. SRB SEPARATING (OVX298) ( 23 MAY 77 )

REFERENCE DATA

SREF = 2690.0000 SQ.FT. XMRP = 1097.0000 IN. XT
LREF = 1290.3000 INCHES YMRP = .0000 IN. YT
BREF = 1290.3000 INCHES ZMRP = 450.0000 IN. ZT
SCALE = .0100

PARAMETRIC DATA

ALPHA = -10.000 BETA = .000
DALPHA = .000 DBETA = -2.000
Z = .000 MACH = 4.500
JET PC = 1225.000

RUN NO. 3808/ 0 RN/L = 2.39 GRADIENT INTERVAL = -5.00/ 5.00

| Y | X | Z | ALPHA | BETA | PHI | CN | CLM | CY | CYN | CBL | CA |
|---|---|---|---|---|---|---|---|---|---|---|---|
| -71.155 | -.925 | -.49143 | -10.39600 | .12957 | .01500 | -.27080 | -.03408 | -.05119 | -.03203 | .00085 | .16411 |
| -70.760 | 99.721 | -.14607 | -10.39700 | .15102 | .04082 | -.29797 | -.02051 | -.05144 | -.04375 | .00798 | .15495 |
| -70.497 | 199.620 | .31294 | -10.37600 | .14279 | .05283 | -.30629 | -.00309 | -.05753 | -.03751 | .00864 | .15596 |
| | GRADIENT | .00000 | .00000 | .00000 | .00000 | .00000 | .00000 | .00000 | .00000 | .00000 | .00000 |

RUN NO. 3813/ 0 RN/L = 2.39 GRADIENT INTERVAL = -5.00/ 5.00

| Y | X | Z | ALPHA | BETA | PHI | CN | CLM | CY | CYN | CBL | CA |
|---|---|---|---|---|---|---|---|---|---|---|---|
| -98.478 | 199.560 | -.50137 | -10.36700 | .13438 | .04323 | -.30760 | .00234 | -.05132 | -.03640 | .00736 | .15474 |
| -100.760 | 99.570 | -.29780 | -10.38800 | .13895 | .02881 | -.29596 | -.01577 | -.04414 | -.04135 | .00617 | .15646 |
| -100.400 | -.257 | .47522 | -10.37100 | .11358 | .00696 | -.26141 | -.02454 | -.03583 | -.03262 | .00147 | .16605 |
| | GRADIENT | .00000 | .00000 | .00000 | .00000 | .00000 | .00000 | .00000 | .00000 | .00000 | .00000 |

RUN NO. 3814/ 0 RN/L = 2.39 GRADIENT INTERVAL = -5.00/ 5.00

| Y | X | Z | ALPHA | BETA | PHI | CN | CLM | CY | CYN | CBL | CA |
|---|---|---|---|---|---|---|---|---|---|---|---|
| -150.490 | -.241 | -.25435 | -10.36600 | .11053 | -.00082 | -.28004 | -.00922 | -.01987 | -.03954 | .00320 | .17039 |
| -151.210 | 99.704 | -.47597 | -10.37800 | .13093 | .01553 | -.30845 | -.00220 | -.03157 | -.04370 | .00557 | .16149 |
| -150.830 | 199.660 | .33895 | -10.36200 | .13248 | .03320 | -.32008 | .01400 | -.04574 | -.03788 | .00632 | .16046 |
| | GRADIENT | .00000 | .00000 | .00000 | .00000 | .00000 | .00000 | .00000 | .00000 | .00000 | .00000 |

IA143, AEDC V41A-P8A, O/ET W/R.H. SRB SEPARATING (OVX299) ( 23 MAY 77 )

REFERENCE DATA

SREF = 2690.0000 SQ.FT. XMRP = 1097.0000 IN. XT
LREF = 1290.3000 INCHES YMRP = .0000 IN. YT
BREF = 1290.3000 INCHES ZMRP = 450.0000 IN. ZT
SCALE = .0100

PARAMETRIC DATA

ALPHA = -10.000 BETA = .000
DALPHA = .000 DBETA = -2.000
Z = 100.000 MACH = 4.500
JET PC = 1225.000

RUN NO. 3809/ 0 RN/L = 2.39 GRADIENT INTERVAL = -5.00/ 5.00

| Y | X | Z | ALPHA | BETA | PHI | CN | CLM | CY | CYN | CBL | CA |
|---|---|---|---|---|---|---|---|---|---|---|---|
| -72.801 | 199.640 | 101.48000 | -10.31200 | .23279 | .06347 | -.26016 | .00863 | -.12618 | -.04126 | .00161 | .16383 |
| -71.573 | 99.577 | 99.22100 | -10.35200 | .26231 | .07456 | -.28309 | -.00368 | -.11905 | -.05971 | .00778 | .15407 |
| -69.827 | -.413 | 101.66000 | -10.28500 | .19705 | .04716 | -.20389 | -.00822 | -.10258 | -.03677 | .00091 | .16835 |
| | GRADIENT | .00000 | .00000 | .00000 | .00000 | .00000 | .00000 | .00000 | .00000 | .00000 | .00000 |

IA143, AEDC V41A-P8A, O/ET W/R.H. SRB SEPARATING (OVX299) ( 23 MAY 77 )

REFERENCE DATA

SREF = 2690.0000 SQ.FT. XMRP = 1097.0000 IN. XT
LREF = 1290.3000 INCHES YMRP = .0000 IN. YT
BREF = 1290.3000 INCHES ZMRP = 450.0000 IN. ZT
SCALE = .0100

PARAMETRIC DATA

ALPHA = -10.000 BETA = .000
DALPHA = .000 DBETA = -2.000
Z = 100.000 MACH = 4.500
JET PC = 1225.000

RUN NO. 3812/ 0 RN/L = 2.39 GRADIENT INTERVAL = -5.00/ 5.00

| Y | X | Z | ALPHA | BETA | PHI | CN | CLM | CY | CYN | CBL | CA |
|---|---|---|---|---|---|---|---|---|---|---|---|
| -101.040 | -.166 | 100.14000 | -10.34300 | .20639 | .03894 | -.25230 | -.01166 | -.08836 | -.04338 | .00303 | .17501 |
| -101.490 | 99.612 | 99.11200 | -10.36900 | .25163 | .06250 | -.29682 | -.00331 | -.10345 | -.06262 | .00796 | .16301 |
| -100.790 | 199.630 | 100.28000 | -10.34800 | .24594 | .07176 | -.29871 | .01100 | -.12294 | -.04979 | .00512 | .16840 |
| | GRADIENT | .00000 | .00000 | .00000 | .00000 | .00000 | .00000 | .00000 | .00000 | .00000 | .00000 |

RUN NO. 3815/ 0 RN/L = 2.39 GRADIENT INTERVAL = -5.00/ 5.00

| Y | X | Z | ALPHA | BETA | PHI | CN | CLM | CY | CYN | CBL | CA |
|---|---|---|---|---|---|---|---|---|---|---|---|
| -152.530 | 199.510 | 99.93000 | -10.35700 | .21793 | .06225 | -.31635 | .01553 | -.10820 | -.04446 | .00443 | .16647 |
| -150.250 | 99.565 | 99.72600 | -10.36800 | .21654 | .04361 | -.30409 | .00294 | -.08834 | -.05346 | .00478 | .16918 |
| -150.130 | -.332 | 100.79000 | -10.33800 | .17886 | .02013 | -.26186 | -.00226 | -.06421 | -.04782 | .00249 | .17869 |
| | GRADIENT | .00000 | .00000 | .00000 | .00000 | .00000 | .00000 | .00000 | .00000 | .00000 | .00000 |

IA143, AEDC V41A-P8A, O/ET W/R.H. SRB SEPARATING (OVX300) ( 23 MAY 77 )

REFERENCE DATA

SREF = 2690.0000 SQ.FT. XMRP = 1097.0000 IN. XT
LREF = 1290.3000 INCHES YMRP = .0000 IN. YT
BREF = 1290.3000 INCHES ZMRP = 450.0000 IN. ZT
SCALE = .0100

PARAMETRIC DATA

ALPHA = -10.000 BETA = .000
DALPHA = .000 DBETA = -2.000
Z = 200.000 MACH = 4.500
JET PC = 1225.000

RUN NO. 3810/ 0 RN/L = 2.39 GRADIENT INTERVAL = -5.00/ 5.00

| Y | X | Z | ALPHA | BETA | PHI | CN | CLM | CY | CYN | CBL | CA |
|---|---|---|---|---|---|---|---|---|---|---|---|
| -70.921 | -.337 | 199.86000 | -10.11600 | .19154 | .04485 | -.10543 | .03034 | -.10473 | -.03290 | -.00047 | .16048 |
| -71.294 | 99.682 | 199.95000 | -10.25300 | .41235 | .11304 | -.22132 | .02565 | -.20670 | -.08260 | .00677 | .19026 |
| -70.555 | 199.520 | 200.27000 | -10.24100 | .38290 | .11839 | -.21951 | .03189 | -.20745 | -.06896 | .00566 | .19060 |
| | GRADIENT | .00000 | .00000 | .00000 | .00000 | .00000 | .00000 | .00000 | .00000 | .00000 | .00000 |

RUN NO. 3811/ 0 RN/L = 2.39 GRADIENT INTERVAL = -5.00/ 5.00

| Y | X | Z | ALPHA | BETA | PHI | CN | CLM | CY | CYN | CBL | CA |
|---|---|---|---|---|---|---|---|---|---|---|---|
| -99.708 | 199.610 | 199.42000 | -10.24800 | .34013 | .09467 | -.22638 | .02989 | -.19040 | -.05708 | .00135 | .18353 |
| -101.380 | 99.639 | 199.18000 | -10.27600 | .38930 | .10405 | -.24133 | .02388 | -.18507 | -.08344 | .00813 | .19024 |
| -100.740 | -.290 | 199.51000 | -10.17200 | .22022 | .04764 | -.14700 | .02708 | -.11753 | -.03909 | -.00077 | .18281 |
| | GRADIENT | .00000 | .00000 | .00000 | .00000 | .00000 | .00000 | .00000 | .00000 | .00000 | .00000 |

IA143, AEDC V41A-P8A, O/ET W/R.H. SRB SEPARATING (OVX300) ( 23 MAY 77 )

REFERENCE DATA

SREF = 2690.0000 SQ.FT. XMRP = 1097.0000 IN. XT
LREF = 1290.3000 INCHES YMRP = .0000 IN. YT
BREF = 1290.3000 INCHES ZMRP = 450.0000 IN. ZT
SCALE = .0100

PARAMETRIC DATA

ALPHA = -10.000 BETA = .000
DALPHA = .000 DBETA = -2.000
Z = 200.000 MACH = 4.500
JET PC = 1225.000

RUN NO. 3816/ 0 RN/L = 2.39 GRADIENT INTERVAL = -5.00/ 5.00

| Y | X | Z | ALPHA | BETA | PHI | CN | CLM | CY | CYN | CBL | CA |
|---|---|---|---|---|---|---|---|---|---|---|---|
| -151.930 | -.289 | 201.04000 | -10.28300 | .28885 | .04954 | -.23748 | .01979 | -.12920 | -.06428 | .00185 | .20091 |
| -152.320 | 99.645 | 199.06000 | -10.31100 | .34528 | .08344 | -.27322 | .02227 | -.16554 | -.07240 | .00493 | .18978 |
| -150.650 | 199.660 | 199.64000 | -10.31100 | .35786 | .10880 | -.29380 | .03525 | -.19296 | -.06492 | .00512 | .19419 |
| | GRADIENT | .00000 | .00000 | .00000 | .00000 | .00000 | .00000 | .00000 | .00000 | .00000 | .00000 |

IA143, AEDC V41A-P8A, O/ET W/R.H. SRB SEPARATING (OVX301) ( 23 MAY 77 )

REFERENCE DATA

SREF = 2690.0000 SQ.FT. XMRP = 1097.0000 IN. XT
LREF = 1290.3000 INCHES YMRP = .0000 IN. YT
BREF = 1290.3000 INCHES ZMRP = 450.0000 IN. ZT
SCALE = .0100

PARAMETRIC DATA

ALPHA = -10.000 BETA = .000
DALPHA = .000 DBETA = .000
Z = .000 MACH = 4.500
JET PC = 1225.000

RUN NO. 3817/ 0 RN/L = 2.38 GRADIENT INTERVAL = -5.00/ 5.00

| Y | X | Z | ALPHA | BETA | PHI | CN | CLM | CY | CYN | CBL | CA |
|---|---|---|---|---|---|---|---|---|---|---|---|
| -50.945 | -.849 | -.40323 | -10.41200 | .15513 | .02619 | -.28341 | -.03557 | -.06649 | -.03609 | .00161 | .16550 |
| -50.966 | 99.727 | -.08417 | -10.40700 | .16751 | .05084 | -.30542 | -.02231 | -.07023 | -.04163 | .00705 | .15327 |
| -50.927 | 199.560 | .28811 | -10.38300 | .15966 | .06310 | -.30867 | -.00649 | -.07746 | -.03494 | .00753 | .15501 |
| | GRADIENT | .00000 | .00000 | .00000 | .00000 | .00000 | .00000 | .00000 | .00000 | .00000 | .00000 |

RUN NO. 3822/ 0 RN/L = 2.38 GRADIENT INTERVAL = -5.00/ 5.00

| Y | X | Z | ALPHA | BETA | PHI | CN | CLM | CY | CYN | CBL | CA |
|---|---|---|---|---|---|---|---|---|---|---|---|
| -98.415 | 199.590 | -.70480 | -10.36800 | .13680 | .04421 | -.31148 | .00411 | -.05738 | -.03418 | .00635 | .15536 |
| -101.180 | 99.620 | -.32534 | -10.38700 | .14058 | .02976 | -.30023 | -.01259 | -.04797 | -.04005 | .00561 | .15934 |
| -100.380 | -.209 | .48796 | -10.37000 | .11724 | .00909 | -.26235 | -.02235 | -.03431 | -.03536 | .00256 | .17183 |
| | GRADIENT | .00000 | .00000 | .00000 | .00000 | .00000 | .00000 | .00000 | .00000 | .00000 | .00000 |

RUN NO. 3823/ 0 RN/L = 2.38 GRADIENT INTERVAL = -5.00/ 5.00

| Y | X | Z | ALPHA | BETA | PHI | CN | CLM | CY | CYN | CBL | CA |
|---|---|---|---|---|---|---|---|---|---|---|---|
| -150.800 | -.303 | -.32598 | -10.37000 | .11774 | .00224 | -.28449 | -.00784 | -.02216 | -.04187 | .00387 | .17755 |
| -151.280 | 99.633 | -.46025 | -10.38100 | .13589 | .01907 | -.31297 | -.00037 | -.03645 | -.04354 | .00558 | .16557 |
| -150.880 | 199.610 | .14475 | -10.36400 | .13734 | .03670 | -.32468 | .01631 | -.05086 | -.03751 | .00625 | .16569 |
| | GRADIENT | .00000 | .00000 | .00000 | .00000 | .00000 | .00000 | .00000 | .00000 | .00000 | .00000 |

IA143, AEDC V41A-P8A, O/ET W/R.H. SRB SEPARATING (OVX302) ( 23 MAY 77 )

REFERENCE DATA

SREF = 2690.0000 SQ.FT. XMRP = 1097.0000 IN. XT
LREF = 1290.3000 INCHES YMRP = .0000 IN. YT
BREF = 1290.3000 INCHES ZMRP = 450.0000 IN. ZT
SCALE = .0100

PARAMETRIC DATA

ALPHA = -10.000 BETA = .000
DALPHA = .000 DBETA = .000
Z = 100.000 MACH = 4.500
JET PC = 1225.000

RUN NO. 3818/ 0 RN/L = 2.39 GRADIENT INTERVAL = -5.00/ 5.00

| Y | X | Z | ALPHA | BETA | PHI | CN | CLM | CY | CYN | CBL | CA |
|---|---|---|---|---|---|---|---|---|---|---|---|
| -53.138 | 199.530 | 101.79000 | -10.31100 | .26023 | .08630 | -.24893 | .00349 | -.14433 | -.04548 | .00440 | .16982 |
| -52.113 | 99.579 | 99.06700 | -10.33800 | .29249 | .09535 | -.28323 | .00766 | -.22015 | -.01851 | -.00873 | .16730 |
| -50.990 | -.321 | 99.55000 | -10.21500 | .19382 | .04710 | -.16697 | .01014 | -.10626 | -.03321 | -.00018 | .16601 |
| | GRADIENT | .00000 | .00000 | .00000 | .00000 | .00000 | .00000 | .00000 | .00000 | .00000 | .00000 |

RUN NO. 3821/ 0 RN/L = 2.38 GRADIENT INTERVAL = -5.00/ 5.00

| Y | X | Z | ALPHA | BETA | PHI | CN | CLM | CY | CYN | CBL | CA |
|---|---|---|---|---|---|---|---|---|---|---|---|
| -100.960 | -.225 | 100.13000 | -10.33700 | .21668 | .04063 | -.25175 | -.00784 | -.08880 | -.05304 | .00404 | .17936 |
| -102.070 | 99.701 | 99.09600 | -10.36800 | .25811 | .06641 | -.29528 | -.00308 | -.11107 | -.06154 | .00751 | .16517 |
| -101.490 | 199.680 | 100.61000 | -10.34200 | .25651 | .07159 | -.29368 | .01228 | -.13696 | -.04672 | .00259 | .17152 |
| | GRADIENT | .00000 | .00000 | .00000 | .00000 | .00000 | .00000 | .00000 | .00000 | .00000 | .00000 |

RUN NO. 3824/ 0 RN/L = 2.38 GRADIENT INTERVAL = -5.00/ 5.00

| Y | X | Z | ALPHA | BETA | PHI | CN | CLM | CY | CYN | CBL | CA |
|---|---|---|---|---|---|---|---|---|---|---|---|
| -152.540 | 199.650 | 99.85600 | -10.35900 | .22729 | .06869 | -.32016 | .01842 | -.11625 | -.04471 | .00465 | .17280 |
| -150.600 | 99.610 | 99.81200 | -10.37000 | .22567 | .04806 | -.30671 | .00366 | -.09600 | -.05375 | .00467 | .17255 |
| -149.930 | -.254 | 100.71000 | -10.34400 | .19085 | .02242 | -.26535 | -.00252 | -.06901 | -.05080 | .00274 | .18480 |
| | GRADIENT | .00000 | .00000 | .00000 | .00000 | .00000 | .00000 | .00000 | .00000 | .00000 | .00000 |

IA143, AEDC V41A-P8A, O/ET W/R.H. SRB SEPARATING (OVX303) ( 23 MAY 77 )

REFERENCE DATA

SREF = 2690.0000 SQ.FT. XMRP = 1097.0000 IN. XT
LREF = 1290.3000 INCHES YMRP = .0000 IN. YT
BREF = 1290.3000 INCHES ZMRP = 450.0000 IN. ZT
SCALE = .0100

PARAMETRIC DATA

ALPHA = -10.000 BETA = .000
DALPHA = .000 DBETA = .000
Z = 200.000 MACH = 4.500
JET PC = 1225.000

RUN NO. 3819/ 0 RN/L = 2.38 GRADIENT INTERVAL = -5.00/ 5.00

| Y | X | Z | ALPHA | BETA | PHI | CN | CLM | CY | CYN | CBL | CA |
|---|---|---|---|---|---|---|---|---|---|---|---|
| -54.222 | -.331 | 200.72000 | -10.17100 | .32709 | .08296 | -.16916 | .04015 | -.22257 | -.03211 | -.00955 | .17956 |
| -51.471 | 99.593 | 200.03000 | -10.26500 | .57079 | .16427 | -.24675 | .03635 | -.27638 | -.12036 | .01327 | .20288 |
| -48.782 | 199.530 | 200.94000 | -10.23400 | .45315 | .15266 | -.21861 | .03850 | -.24694 | -.08186 | .00912 | .20684 |
| | GRADIENT | .00000 | .00000 | .00000 | .00000 | .00000 | .00000 | .00000 | .00000 | .00000 | .00000 |

IA143, AEDC V41A-P8A, O/ET W/R.H. SRB SEPARATING (OVX303) ( 23 MAY 77 )

REFERENCE DATA

SREF = 2690.0000 SQ.FT. XMRP = 1097.0000 IN. XT
LREF = 1290.3000 INCHES YMRP = .0000 IN. YT
BREF = 1290.3000 INCHES ZMRP = 450.0000 IN. ZT
SCALE = .0100

PARAMETRIC DATA

ALPHA = -10.000 BETA = .000
DALPHA = .000 DBETA = .000
Z = 200.000 MACH = 4.500
JET PC = 1225.000

RUN NO. 3820/ 0 RN/L = 2.38 GRADIENT INTERVAL = -5.00/ 5.00

| Y | X | Z | ALPHA | BETA | PHI | CN | CLM | CY | CYN | CBL | CA |
|---|---|---|---|---|---|---|---|---|---|---|---|
| -98.537 | 199.630 | 199.69000 | -10.24100 | .34811 | .09827 | -.21891 | .03002 | -.19994 | -.05567 | .00052 | .18601 |
| -101.260 | 99.751 | 198.91000 | -10.27100 | .39131 | .10687 | -.23643 | .02532 | -.19163 | -.08085 | .00737 | .19506 |
| -100.730 | -.381 | 199.71000 | -10.17400 | .24236 | .05061 | -.15366 | .03233 | -.12634 | -.04457 | -.00057 | .19239 |
| | GRADIENT | .00000 | .00000 | .00000 | .00000 | .00000 | .00000 | .00000 | .00000 | .00000 | .00000 |

RUN NO. 3825/ 0 RN/L = 2.38 GRADIENT INTERVAL = -5.00/ 5.00

| Y | X | Z | ALPHA | BETA | PHI | CN | CLM | CY | CYN | CBL | CA |
|---|---|---|---|---|---|---|---|---|---|---|---|
| -153.670 | -.392 | 201.24000 | -10.28700 | .30932 | .05454 | -.23970 | .02072 | -.14038 | -.06774 | .00181 | .20778 |
| -152.150 | 99.591 | 199.19000 | -10.31000 | .35873 | .09048 | -.27265 | .02379 | -.17534 | -.07373 | .00520 | .19410 |
| -151.070 | 199.520 | 199.64000 | -10.30900 | .37237 | .11699 | -.29415 | .03814 | -.20382 | -.06611 | .00545 | .20127 |
| | GRADIENT | .00000 | .00000 | .00000 | .00000 | .00000 | .00000 | .00000 | .00000 | .00000 | .00000 |

IA143, AEDC V41A-P8A, O/ET W/R.H. SRB SEPARATING (OVX304) ( 23 MAY 77 )

REFERENCE DATA

SREF = 2690.0000 SQ.FT. XMRP = 1097.0000 IN. XT
LREF = 1290.3000 INCHES YMRP = .0000 IN. YT
BREF = 1290.3000 INCHES ZMRP = 450.0000 IN. ZT
SCALE = .0100

PARAMETRIC DATA

ALPHA = -10.000 BETA = .000
DALPHA = .000 DBETA = 2.000
Z = .000 MACH = 4.500
JET PC = 1225.000

RUN NO. 3826/ 0 RN/L = 2.38 GRADIENT INTERVAL = -5.00/ 5.00

| Y | X | Z | ALPHA | BETA | PHI | CN | CLM | CY | CYN | CBL | CA |
|---|---|---|---|---|---|---|---|---|---|---|---|
| -51.520 | -.982 | -.26405 | -10.40500 | .15286 | .02767 | -.28090 | -.03206 | -.05820 | -.03981 | .00368 | .17032 |
| -50.756 | 99.631 | -.40621 | -10.40400 | .16457 | .05003 | -.30606 | -.01974 | -.07040 | -.04007 | .00661 | .15509 |
| -50.746 | 199.610 | .39266 | -10.38100 | .15905 | .06247 | -.30985 | -.00401 | -.08077 | -.03273 | .00658 | .15637 |
| | GRADIENT | .00000 | .00000 | .00000 | .00000 | .00000 | .00000 | .00000 | .00000 | .00000 | .00000 |

RUN NO. 3831/ 0 RN/L = 2.38 GRADIENT INTERVAL = -5.00/ 5.00

| Y | X | Z | ALPHA | BETA | PHI | CN | CLM | CY | CYN | CBL | CA |
|---|---|---|---|---|---|---|---|---|---|---|---|
| -98.049 | 199.350 | -.81902 | -10.36800 | .13776 | .04426 | -.31445 | .00675 | -.06023 | -.03300 | .00577 | .15813 |
| -100.650 | 99.651 | -.24186 | -10.38800 | .14156 | .03093 | -.30244 | -.01130 | -.05061 | -.03916 | .00534 | .16277 |
| -99.841 | -.351 | .33889 | -10.37100 | .11991 | .01081 | -.26444 | -.02040 | -.03522 | -.03622 | .00291 | .17656 |
| | GRADIENT | .00000 | .00000 | .00000 | .00000 | .00000 | .00000 | .00000 | .00000 | .00000 | .00000 |

IA143, AEDC V41A-P8A, O/ET W/R.H. SRB SEPARATING (OVX304) ( 23 MAY 77 )

REFERENCE DATA

SREF = 2690.0000 SQ.FT. XMRP = 1097.0000 IN. XT
LREF = 1290.3000 INCHES YMRP = .0000 IN. YT
BREF = 1290.3000 INCHES ZMRP = 450.0000 IN. ZT
SCALE = .0100

PARAMETRIC DATA

ALPHA = -10.000 BETA = .000
DALPHA = .000 DBETA = 2.000
Z = .000 MACH = 4.500
JET PC = 1225.000

RUN NO. 3832/ 0 RN/L = 2.38 GRADIENT INTERVAL = -5.00/ 5.00

| Y | X | Z | ALPHA | BETA | PHI | CN | CLM | CY | CYN | CBL | CA |
|---|---|---|---|---|---|---|---|---|---|---|---|
| -151.470 | -.424 | -.38318 | -10.37500 | .12352 | .00372 | -.28808 | -.00735 | -.02507 | -.04299 | .00394 | .18206 |
| -151.060 | 99.739 | -.29646 | -10.38300 | .13933 | .02225 | -.31501 | .00070 | -.04058 | -.04305 | .00557 | .16956 |
| -151.130 | 199.670 | .33452 | -10.36600 | .14241 | .03933 | -.32807 | .01802 | -.05537 | -.03755 | .00616 | .17013 |
| | GRADIENT | .00000 | .00000 | .00000 | .00000 | .00000 | .00000 | .00000 | .00000 | .00000 | .00000 |

IA143, AEDC V41A-P8A, O/ET W/R.H. SRB SEPARATING (OVX305) ( 23 MAY 77 )

REFERENCE DATA

SREF = 2690.0000 SQ.FT. XMRP = 1097.0000 IN. XT
LREF = 1290.3000 INCHES YMRP = .0000 IN. YT
BREF = 1290.3000 INCHES ZMRP = 450.0000 IN. ZT
SCALE = .0100

PARAMETRIC DATA

ALPHA = -10.000 BETA = .000
DALPHA = .000 DBETA = 2.000
Z = 100.000 MACH = 4.500
JET PC = 1225.000

RUN NO. 3827/ 0 RN/L = 2.38 GRADIENT INTERVAL = -5.00/ 5.00

| Y | X | Z | ALPHA | BETA | PHI | CN | CLM | CY | CYN | CBL | CA |
|---|---|---|---|---|---|---|---|---|---|---|---|
| -53.151 | 199.510 | 101.68000 | -10.31300 | .26809 | .08810 | -.25119 | .00499 | -.15043 | -.04575 | .00394 | .17312 |
| -50.962 | 99.438 | 100.18000 | -10.31800 | .27202 | .08335 | -.24162 | -.00326 | -.14356 | -.05115 | .00478 | .17607 |
| -50.540 | -.366 | 99.24600 | -10.22700 | .20843 | .04684 | -.17423 | .01000 | -.10977 | -.03793 | -.00000 | .17500 |
| | GRADIENT | .00000 | .00000 | .00000 | .00000 | .00000 | .00000 | .00000 | .00000 | .00000 | .00000 |

RUN NO. 3830/ 0 RN/L = 2.38 GRADIENT INTERVAL = -5.00/ 5.00

| Y | X | Z | ALPHA | BETA | PHI | CN | CLM | CY | CYN | CBL | CA |
|---|---|---|---|---|---|---|---|---|---|---|---|
| -100.670 | -.157 | 100.21000 | -10.33800 | .22946 | .04243 | -.25100 | -.00720 | -.09540 | -.05540 | .00384 | .18601 |
| -101.090 | 99.709 | 99.01200 | -10.36900 | .26551 | .07018 | -.29567 | -.00264 | -.11784 | -.06147 | .00731 | .16788 |
| -101.930 | 199.740 | 100.69000 | -10.33700 | .25971 | .06700 | -.29005 | .01394 | -.14633 | -.04262 | -.00033 | .17565 |
| | GRADIENT | .00000 | .00000 | .00000 | .00000 | .00000 | .00000 | .00000 | .00000 | .00000 | .00000 |

RUN NO. 3833/ 0 RN/L = 2.38 GRADIENT INTERVAL = -5.00/ 5.00

| Y | X | Z | ALPHA | BETA | PHI | CN | CLM | CY | CYN | CBL | CA |
|---|---|---|---|---|---|---|---|---|---|---|---|
| -152.790 | 199.560 | 99.67200 | -10.36200 | .23603 | .07492 | -.32203 | .01900 | -.12420 | -.04477 | .00482 | .17796 |
| -150.570 | 99.582 | 100.03000 | -10.37300 | .23233 | .05164 | -.31032 | .00550 | -.10221 | -.05355 | .00448 | .17718 |
| -150.140 | -.350 | 100.65000 | -10.35000 | .19898 | .02266 | -.26864 | -.00219 | -.07324 | -.05201 | .00236 | .19075 |
| | GRADIENT | .00000 | .00000 | .00000 | .00000 | .00000 | .00000 | .00000 | .00000 | .00000 | .00000 |

IA143, AEDC V41A-P8A, O/ET W/R.H. SRB SEPARATING (OVX306) ( 23 MAY 77 )

REFERENCE DATA

SREF = 2690.0000 SQ.FT. XMRP = 1097.0000 IN. XT
LREF = 1290.3000 INCHES YMRP = .0000 IN. YT
BREF = 1290.3000 INCHES ZMRP = 450.0000 IN. ZT
SCALE = .0100

PARAMETRIC DATA

ALPHA = -10.000 BETA = .000
DALPHA = .000 DBETA = 2.000
Z = 200.000 MACH = 4.500
JET PC = 1225.000

RUN NO. 3828/ 0 RN/L = 2.38 GRADIENT INTERVAL = -5.00/ 5.00

| Y | X | Z | ALPHA | BETA | PHI | CN | CLM | CY | CYN | CBL | CA |
|---|---|---|---|---|---|---|---|---|---|---|---|
| -54.529 | -.148 | 200.67000 | -10.17700 | .35212 | .08785 | -.18633 | .04925 | -.25728 | -.02449 | -.01468 | .19151 |
| -51.269 | 99.552 | 200.12000 | -10.26300 | .58202 | .17093 | -.24247 | .03636 | -.28303 | -.12238 | .01402 | .20809 |
| -48.858 | 199.550 | 200.84000 | -10.23300 | .46758 | .16010 | -.21724 | .03946 | -.25547 | -.08424 | .00980 | .21188 |
| | GRADIENT | .00000 | .00000 | .00000 | .00000 | .00000 | .00000 | .00000 | .00000 | .00000 | .00000 |

RUN NO. 3829/ 0 RN/L = 2.38 GRADIENT INTERVAL = -5.00/ 5.00

| Y | X | Z | ALPHA | BETA | PHI | CN | CLM | CY | CYN | CBL | CA |
|---|---|---|---|---|---|---|---|---|---|---|---|
| -98.992 | 199.600 | 199.66000 | -10.24000 | .35815 | .10282 | -.21686 | .03075 | -.20848 | -.05584 | .00026 | .19027 |
| -101.200 | 99.647 | 198.98000 | -10.26700 | .39695 | .10896 | -.23267 | .02624 | -.19888 | -.07939 | .00653 | .19852 |
| -98.231 | -.243 | 202.41000 | -10.17400 | .26212 | .05341 | -.15150 | .03270 | -.13653 | -.04817 | -.00089 | .20127 |
| | GRADIENT | .00000 | .00000 | .00000 | .00000 | .00000 | .00000 | .00000 | .00000 | .00000 | .00000 |

RUN NO. 3834/ 0 RN/L = 2.38 GRADIENT INTERVAL = -5.00/ 5.00

| Y | X | Z | ALPHA | BETA | PHI | CN | CLM | CY | CYN | CBL | CA |
|---|---|---|---|---|---|---|---|---|---|---|---|
| -153.830 | -.258 | 201.26000 | -10.28900 | .32316 | .05783 | -.23901 | .02035 | -.14902 | -.06965 | .00157 | .21376 |
| -152.430 | 99.561 | 199.42000 | -10.31100 | .37246 | .09598 | -.27506 | .02562 | -.18497 | -.07503 | .00516 | .19913 |
| -151.250 | 199.610 | 199.56000 | -10.30600 | .37728 | .12052 | -.29248 | .04010 | -.21004 | -.06511 | .00513 | .20607 |
| | GRADIENT | .00000 | .00000 | .00000 | .00000 | .00000 | .00000 | .00000 | .00000 | .00000 | .00000 |

IA143, AEDC V41A-P8A, O/ET W/R.H. SRB SEPARATING (OVX307) ( 23 MAY 77 )

REFERENCE DATA

SREF = 2690.0000 SQ.FT. XMRP = 1097.0000 IN. XT
LREF = 1290.3000 INCHES YMRP = .0000 IN. YT
BREF = 1290.3000 INCHES ZMRP = 450.0000 IN. ZT
SCALE = .0100

PARAMETRIC DATA

ALPHA = -10.000 BETA = .000
DALPHA = -4.000 DBETA = -4.000
Z = .000 MACH = 4.500
JET PC = 1225.000

RUN NO. 3835/ 0 RN/L = 2.38 GRADIENT INTERVAL = -5.00/ 5.00

| Y | X | Z | ALPHA | BETA | PHI | CN | CLM | CY | CYN | CBL | CA |
|---|---|---|---|---|---|---|---|---|---|---|---|
| -120.330 | -1.017 | -.00489 | -10.34000 | .08836 | -.00869 | -.25612 | -.00754 | -.04641 | -.01383 | -.00620 | .17374 |
| -121.400 | 99.578 | -1.16030 | -10.38700 | .13045 | .01012 | -.29519 | -.01317 | -.04048 | -.03799 | .00229 | .16793 |
| -120.770 | 199.470 | .02103 | -10.37700 | .13717 | .03425 | -.31786 | .00407 | -.05573 | -.03449 | .00457 | .16013 |
| | GRADIENT | .00000 | .00000 | .00000 | .00000 | .00000 | .00000 | .00000 | .00000 | .00000 | .00000 |

IA143, AEDC V41A-P8A, O/ET W/R.H. SRB SEPARATING (OVX307) ( 23 MAY 77 )

REFERENCE DATA

SREF = 2690.0000 SQ.FT. XMRP = 1097.0000 IN. XT
LREF = 1290.3000 INCHES YMRP = .0000 IN. YT
BREF = 1290.3000 INCHES ZMRP = 450.0000 IN. ZT
SCALE = .0100

PARAMETRIC DATA

ALPHA = -10.000 BETA = .000
DALPHA = -4.000 DBETA = -4.000
Z = .000 MACH = 4.500
JET PC = 1225.000

RUN NO. 3841/ 0 RN/L = 2.39 GRADIENT INTERVAL = -5.00/ 5.00

| Y | X | Z | ALPHA | BETA | PHI | CN | CLM | CY | CYN | CBL | CA |
|---|---|---|---|---|---|---|---|---|---|---|---|
| -148.440 | 199.460 | -.02553 | -10.37500 | .13763 | .03138 | -.32027 | .00771 | -.04958 | -.03788 | .00538 | .16546 |
| -150.590 | 99.506 | .14882 | -10.38400 | .13173 | .00810 | -.30249 | -.00680 | -.03365 | -.04231 | .00351 | .17184 |
| -150.190 | -.374 | .77817 | -10.35100 | .09454 | -.00648 | -.26943 | -.00528 | -.03485 | -.02335 | -.00262 | .17986 |
| | GRADIENT | .00000 | .00000 | .00000 | .00000 | .00000 | .00000 | .00000 | .00000 | .00000 | .00000 |

RUN NO. 3842/ 0 RN/L = 2.39 GRADIENT INTERVAL = -5.00/ 5.00

| Y | X | Z | ALPHA | BETA | PHI | CN | CLM | CY | CYN | CBL | CA |
|---|---|---|---|---|---|---|---|---|---|---|---|
| -200.950 | -.476 | -.60985 | -10.37100 | .11547 | -.00689 | -.29572 | .00047 | -.02124 | -.04061 | .00191 | .18827 |
| -200.710 | 99.583 | -.39606 | -10.38800 | .14407 | .00834 | -.32353 | .00504 | -.03397 | -.04778 | .00437 | .17884 |
| -200.540 | 199.540 | .23355 | -10.37500 | .15132 | .02982 | -.33680 | .02034 | -.05271 | -.04231 | .00530 | .17806 |
| | GRADIENT | .00000 | .00000 | .00000 | .00000 | .00000 | .00000 | .00000 | .00000 | .00000 | .00000 |

IA143, AEDC V41A-P8A, O/ET W/R.H. SRB SEPARATING (OVX308) ( 23 MAY 77 )

REFERENCE DATA

SREF = 2690.0000 SQ.FT. XMRP = 1097.0000 IN. XT
LREF = 1290.3000 INCHES YMRP = .0000 IN. YT
BREF = 1290.3000 INCHES ZMRP = 450.0000 IN. ZT
SCALE = .0100

PARAMETRIC DATA

ALPHA = -10.000 BETA = .000
DALPHA = -4.000 DBETA = -4.000
Z = .000 MACH = 4.500
JET PC = 1225.000

RUN NO. 3836/ 0 RN/L = 2.39 GRADIENT INTERVAL = -5.00/ 5.00

| Y | X | Z | ALPHA | BETA | PHI | CN | CLM | CY | CYN | CBL | CA |
|---|---|---|---|---|---|---|---|---|---|---|---|
| -120.260 | -.997 | .06338 | -10.33700 | .08503 | -.00902 | -.24848 | -.01020 | -.04233 | -.01461 | -.00556 | .17587 |
| -121.040 | 99.486 | -1.15190 | -10.38700 | .12719 | .00983 | -.28901 | -.01691 | -.03485 | -.03972 | .00331 | .17065 |
| -120.630 | 199.440 | .04379 | -10.37800 | .13483 | .03418 | -.31142 | -.00005 | -.04958 | -.03689 | .00582 | .16300 |
| | GRADIENT | .00000 | .00000 | .00000 | .00000 | .00000 | .00000 | .00000 | .00000 | .00000 | .00000 |

IA143, AEDC V41A-P8A, O/ET W/R.H. SRB SEPARATING (OVX309) ( 23 MAY 77 )

REFERENCE DATA

SREF = 2690.0000 SQ.FT. XMRP = 1097.0000 IN. XT
LREF = 1290.3000 INCHES YMRP = .0000 IN. YT
BREF = 1290.3000 INCHES ZMRP = 450.0000 IN. ZT
SCALE = .0100

PARAMETRIC DATA

ALPHA = -10.000 BETA = .000
DALPHA = -4.000 DBETA = -4.000
Z = .000 MACH = 4.500
JET PC = 1225.000

RUN NO. 3845/ 0 RN/L = 2.38 GRADIENT INTERVAL = -5.00/ 5.00

| Y | X | Z | ALPHA | BETA | PHI | CN | CLM | CY | CYN | CBL | CA |
|---|---|---|---|---|---|---|---|---|---|---|---|
| -120.230 | -.955 | .04600 | -10.33900 | .08650 | -.00898 | -.25079 | -.00995 | -.04535 | -.01356 | -.00614 | .17474 |
| -121.150 | 99.596 | -1.16880 | -10.38600 | .12755 | .00925 | -.28881 | -.01611 | -.03751 | -.03823 | .00257 | .16923 |
| -120.730 | 199.470 | .05626 | -10.37700 | .13509 | .03344 | -.31345 | .00183 | -.05320 | -.03486 | .00483 | .16128 |
| | GRADIENT | .00000 | .00000 | .00000 | .00000 | .00000 | .00000 | .00000 | .00000 | .00000 | .00000 |

RUN NO. 3850/ 0 RN/L = 2.38 GRADIENT INTERVAL = -5.00/ 5.00

| Y | X | Z | ALPHA | BETA | PHI | CN | CLM | CY | CYN | CBL | CA |
|---|---|---|---|---|---|---|---|---|---|---|---|
| -148.590 | 199.460 | -.04383 | -10.37500 | .13763 | .03096 | -.32136 | .00818 | -.05122 | -.03701 | .00493 | .16491 |
| -150.560 | 99.541 | -.07456 | -10.38400 | .13153 | .00789 | -.30430 | -.00619 | -.03545 | -.04123 | .00305 | .17093 |
| -150.420 | -.391 | .88510 | -10.35300 | .09686 | -.00624 | -.27232 | -.00489 | -.03704 | -.02325 | -.00290 | .17994 |
| | GRADIENT | .00000 | .00000 | .00000 | .00000 | .00000 | .00000 | .00000 | .00000 | .00000 | .00000 |

RUN NO. 3851/ 0 RN/L = 2.38 GRADIENT INTERVAL = -5.00/ 5.00

| Y | X | Z | ALPHA | BETA | PHI | CN | CLM | CY | CYN | CBL | CA |
|---|---|---|---|---|---|---|---|---|---|---|---|
| -200.720 | -.430 | -.52411 | -10.37100 | .11504 | -.00698 | -.29573 | .00027 | -.02309 | -.03940 | .00144 | .18748 |
| -200.790 | 99.584 | -.50036 | -10.38800 | .14611 | .00855 | -.32614 | .00627 | -.03708 | -.04706 | .00385 | .17877 |
| -200.940 | 199.500 | .30602 | -10.37500 | .15239 | .02942 | -.33823 | .02097 | -.05454 | -.04174 | .00486 | .17799 |
| | GRADIENT | .00000 | .00000 | .00000 | .00000 | .00000 | .00000 | .00000 | .00000 | .00000 | .00000 |

IA143, AEDC V41A-P8A, O/ET W/R.H. SRB SEPARATING (OVX310) ( 23 MAY 77 )

REFERENCE DATA

SREF = 2690.0000 SQ.FT. XMRP = 1097.0000 IN. XT
LREF = 1290.3000 INCHES YMRP = .0000 IN. YT
BREF = 1290.3000 INCHES ZMRP = 450.0000 IN. ZT
SCALE = .0100

PARAMETRIC DATA

ALPHA = -10.000 BETA = .000
DALPHA = -4.000 DBETA = -4.000
Z = 100.000 MACH = 4.500
JET PC = 1225.000

RUN NO. 3837/ 0 RN/L = 2.39 GRADIENT INTERVAL = -5.00/ 5.00

| Y | X | Z | ALPHA | BETA | PHI | CN | CLM | CY | CYN | CBL | CA |
|---|---|---|---|---|---|---|---|---|---|---|---|
| -122.570 | 199.570 | 100.18000 | -10.36900 | .24472 | .07253 | -.30996 | .00579 | -.11485 | -.05385 | .00706 | .16850 |
| -120.570 | 99.470 | 100.43000 | -10.36700 | .22750 | .04803 | -.28834 | -.00465 | -.09500 | -.05511 | .00501 | .17531 |
| -119.050 | -.468 | 101.52000 | -10.30000 | .15377 | .02597 | -.23417 | .00317 | -.08160 | -.02697 | -.00200 | .17888 |
| | GRADIENT | .00000 | .00000 | .00000 | .00000 | .00000 | .00000 | .00000 | .00000 | .00000 | .00000 |

IA143, AEDC V41A-P8A, O/ET W/R.H. SRB SEPARATING (OVX310) ( 23 MAY 77 )

REFERENCE DATA

SREF = 2690.0000 SQ.FT. XMRP = 1097.0000 IN. XT
LREF = 1290.3000 INCHES YMRP = .0000 IN. YT
BREF = 1290.3000 INCHES ZMRP = 450.0000 IN. ZT
SCALE = .0100

PARAMETRIC DATA

ALPHA = -10.000 BETA = .000
DALPHA = -4.000 DBETA = -4.000
Z = 100.000 MACH = 4.500
JET PC = 1225.000

RUN NO. 3840/ 0 RN/L = 2.39 GRADIENT INTERVAL = -5.00/ 5.00

| Y | X | Z | ALPHA | BETA | PHI | CN | CLM | CY | CYN | CBL | CA |
|---|---|---|---|---|---|---|---|---|---|---|---|
| -148.210 | -.404 | 98.99300 | -10.31700 | .16132 | .02142 | -.24836 | .00289 | -.07212 | -.03537 | -.00029 | .18313 |
| -151.740 | 99.630 | 98.83000 | -10.37000 | .22178 | .04077 | -.29770 | .00010 | -.08890 | -.05520 | .00437 | .17775 |
| -150.790 | 199.400 | 99.87200 | -10.36600 | .23518 | .06660 | -.31726 | .01252 | -.11431 | -.04907 | .00514 | .17066 |
| | GRADIENT | .00000 | .00000 | .00000 | .00000 | .00000 | .00000 | .00000 | .00000 | .00000 | .00000 |

RUN NO. 3843/ 0 RN/L = 2.39 GRADIENT INTERVAL = -5.00/ 5.00

| Y | X | Z | ALPHA | BETA | PHI | CN | CLM | CY | CYN | CBL | CA |
|---|---|---|---|---|---|---|---|---|---|---|---|
| -201.900 | 199.410 | 100.25000 | -10.36700 | .23620 | .06097 | -.33808 | .02704 | -.11408 | -.04932 | .00405 | .18501 |
| -200.210 | 99.509 | 99.92800 | -10.37700 | .22550 | .03548 | -.32253 | .01260 | -.08875 | -.05664 | .00353 | .18650 |
| -199.360 | -.437 | 100.89000 | -10.34700 | .17838 | .01450 | -.28163 | .00749 | -.06391 | -.04723 | .00127 | .19372 |
| | GRADIENT | .00000 | .00000 | .00000 | .00000 | .00000 | .00000 | .00000 | .00000 | .00000 | .00000 |

IA143, AEDC V41A-P8A, O/ET W/R.H. SRB SEPARATING (OVX311) ( 23 MAY 77 )

REFERENCE DATA

SREF = 2690.0000 SQ.FT. XMRP = 1097.0000 IN. XT
LREF = 1290.3000 INCHES YMRP = .0000 IN. YT
BREF = 1290.3000 INCHES ZMRP = 450.0000 IN. ZT
SCALE = .0100

PARAMETRIC DATA

ALPHA = -10.000 BETA = .000
DALPHA = -4.000 DBETA = -4.000
Z = 100.000 MACH = 4.500
JET PC = 1225.000

RUN NO. 3846/ 0 RN/L = 2.38 GRADIENT INTERVAL = -5.00/ 5.00

| Y | X | Z | ALPHA | BETA | PHI | CN | CLM | CY | CYN | CBL | CA |
|---|---|---|---|---|---|---|---|---|---|---|---|
| -122.480 | 199.440 | 100.08000 | -10.36800 | .24136 | .07140 | -.31034 | .00594 | -.11621 | -.05140 | .00625 | .16670 |
| -120.340 | 99.601 | 100.36000 | -10.36700 | .22877 | .04818 | -.28914 | -.00404 | -.09867 | -.05356 | .00427 | .17322 |
| -119.400 | -.300 | 101.78000 | -10.30400 | .15644 | .02616 | -.23670 | .00260 | -.08519 | -.02610 | -.00261 | .17801 |
| | GRADIENT | .00000 | .00000 | .00000 | .00000 | .00000 | .00000 | .00000 | .00000 | .00000 | .00000 |

RUN NO. 3849/ 0 RN/L = 2.38 GRADIENT INTERVAL = -5.00/ 5.00

| Y | X | Z | ALPHA | BETA | PHI | CN | CLM | CY | CYN | CBL | CA |
|---|---|---|---|---|---|---|---|---|---|---|---|
| -148.180 | -.378 | 98.92500 | -10.31700 | .16222 | .02212 | -.24879 | .00288 | -.07500 | -.03428 | -.00073 | .18195 |
| -151.370 | 99.579 | 98.78500 | -10.37000 | .22323 | .04108 | -.29978 | .00079 | -.09204 | -.05434 | .00388 | .17707 |
| -150.730 | 199.440 | 99.90300 | -10.36600 | .23418 | .06621 | -.31816 | .01241 | -.11638 | -.04768 | .00458 | .16955 |
| | GRADIENT | .00000 | .00000 | .00000 | .00000 | .00000 | .00000 | .00000 | .00000 | .00000 | .00000 |

IA143, AEDC V41A-P8A, O/ET W/R.H. SRB SEPARATING (OVX311) ( 23 MAY 77 )

REFERENCE DATA

SREF = 2690.0000 SQ.FT. XMRP = 1097.0000 IN. XT
LREF = 1290.3000 INCHES YMRP = .0000 IN. YT
BREF = 1290.3000 INCHES ZMRP = 450.0000 IN. ZT
SCALE = .0100

PARAMETRIC DATA

ALPHA = -10.000 BETA = .000
DALPHA = -4.000 DBETA = -4.000
Z = 100.000 MACH = 4.500
JET PC = 1225.000

RUN NO. 3852/ 0 RN/L = 2.38 GRADIENT INTERVAL = -5.00/ 5.00

| Y | X | Z | ALPHA | BETA | PHI | CN | CLM | CY | CYN | CBL | CA |
|---|---|---|---|---|---|---|---|---|---|---|---|
| -201.930 | 199.420 | 100.14000 | -10.36700 | .23729 | .06163 | -.33894 | .02742 | -.11722 | -.04825 | .00360 | .18499 |
| -199.980 | 99.523 | 100.02000 | -10.37700 | .22467 | .03476 | -.32326 | .01219 | -.08967 | -.05583 | .00313 | .18586 |
| -199.330 | -.405 | 100.95000 | -10.34700 | .17846 | .01422 | -.28254 | .00797 | -.06655 | -.04582 | .00063 | .19326 |
| | GRADIENT | .00000 | .00000 | .00000 | .00000 | .00000 | .00000 | .00000 | .00000 | .00000 | .00000 |

IA143, AEDC V41A-P8A, O/ET W/R.H. SRB SEPARATING (OVX312) ( 23 MAY 77 )

REFERENCE DATA

SREF = 2690.0000 SQ.FT. XMRP = 1097.0000 IN. XT
LREF = 1290.3000 INCHES YMRP = .0000 IN. YT
BREF = 1290.3000 INCHES ZMRP = 450.0000 IN. ZT
SCALE = .0100

PARAMETRIC DATA

ALPHA = -10.000 BETA = .000
DALPHA = -4.000 DBETA = -4.000
Z = 200.000 MACH = 4.500
JET PC = 1225.000

RUN NO. 3838/ 0 RN/L = 2.39 GRADIENT INTERVAL = -5.00/ 5.00

| Y | X | Z | ALPHA | BETA | PHI | CN | CLM | CY | CYN | CBL | CA |
|---|---|---|---|---|---|---|---|---|---|---|---|
| -122.000 | -.420 | 201.61000 | -10.23000 | .22897 | .04312 | -.18432 | .01785 | -.12244 | -.03997 | -.00228 | .19266 |
| -123.040 | 99.565 | 198.20000 | -10.29500 | .34969 | .08243 | -.25394 | .02165 | -.16010 | -.07745 | .00628 | .19586 |
| -121.510 | 199.470 | 199.55000 | -10.30000 | .38707 | .11475 | -.28042 | .03472 | -.20169 | -.07385 | .00649 | .19820 |
| | GRADIENT | .00000 | .00000 | .00000 | .00000 | .00000 | .00000 | .00000 | .00000 | .00000 | .00000 |

RUN NO. 3839/ 0 RN/L = 2.39 GRADIENT INTERVAL = -5.00/ 5.00

| Y | X | Z | ALPHA | BETA | PHI | CN | CLM | CY | CYN | CBL | CA |
|---|---|---|---|---|---|---|---|---|---|---|---|
| -149.870 | 199.450 | 199.77000 | -10.31200 | .36743 | .10802 | -.28896 | .03196 | -.18991 | -.07096 | .00633 | .19535 |
| -150.030 | 99.526 | 200.20000 | -10.30400 | .33675 | .07637 | -.26252 | .02190 | -.15576 | -.07338 | .00501 | .19658 |
| -148.490 | -.373 | 200.97000 | -10.26800 | .24902 | .04452 | -.21753 | .01683 | -.12062 | -.05035 | -.00012 | .20075 |
| | GRADIENT | .00000 | .00000 | .00000 | .00000 | .00000 | .00000 | .00000 | .00000 | .00000 | .00000 |

RUN NO. 3844/ 0 RN/L = 2.39 GRADIENT INTERVAL = -5.00/ 5.00

| Y | X | Z | ALPHA | BETA | PHI | CN | CLM | CY | CYN | CBL | CA |
|---|---|---|---|---|---|---|---|---|---|---|---|
| -202.430 | -.332 | 200.79000 | -10.30800 | .26267 | .03565 | -.26054 | .02046 | -.12187 | -.05505 | -.00143 | .20554 |
| -202.190 | 99.641 | 199.38000 | -10.33300 | .33745 | .07020 | -.29987 | .02757 | -.16223 | -.06959 | .00221 | .19953 |
| -200.730 | 199.560 | 200.07000 | -10.32600 | .33908 | .09880 | -.31595 | .04125 | -.19199 | -.05587 | .00177 | .20067 |
| | GRADIENT | .00000 | .00000 | .00000 | .00000 | .00000 | .00000 | .00000 | .00000 | .00000 | .00000 |

IA143, AEDC V41A-P8A, O/ET W/R.H. SRB SEPARATING (OVX313) ( 23 MAY 77 )

REFERENCE DATA

SREF = 2690.0000 SQ.FT. XMRP = 1097.0000 IN. XT
LREF = 1290.3000 INCHES YMRP = .0000 IN. YT
BREF = 1290.3000 INCHES ZMRP = 450.0000 IN. ZT
SCALE = .0100

PARAMETRIC DATA

ALPHA = -10.000 BETA = .000
DALPHA = -4.000 DBETA = -4.000
Z = 200.000 MACH = 4.500
JET PC = 1225.000

RUN NO. 3847/ 0 RN/L = 2.38 GRADIENT INTERVAL = -5.00/ 5.00

| Y | X | Z | ALPHA | BETA | PHI | CN | CLM | CY | CYN | CBL | CA |
|---|---|---|---|---|---|---|---|---|---|---|---|
| -121.930 | -.449 | 201.60000 | -10.22800 | .22804 | .04233 | -.18337 | .01786 | -.12527 | -.03788 | -.00317 | .19076 |
| -122.730 | 99.489 | 198.05000 | -10.29600 | .35062 | .08260 | -.25546 | .02161 | -.16254 | -.07667 | .00586 | .19458 |
| -121.750 | 199.610 | 199.68000 | -10.29900 | .38807 | .11578 | -.28078 | .03510 | -.20426 | -.07305 | .00622 | .19705 |
| | GRADIENT | .00000 | .00000 | .00000 | .00000 | .00000 | .00000 | .00000 | .00000 | .00000 | .00000 |

RUN NO. 3848/ 0 RN/L = 2.38 GRADIENT INTERVAL = -5.00/ 5.00

| Y | X | Z | ALPHA | BETA | PHI | CN | CLM | CY | CYN | CBL | CA |
|---|---|---|---|---|---|---|---|---|---|---|---|
| -150.000 | 199.380 | 199.67000 | -10.31200 | .36349 | .10644 | -.28876 | .03194 | -.19061 | -.06862 | .00555 | .19353 |
| -149.430 | 99.530 | 200.28000 | -10.30300 | .33695 | .07625 | -.26320 | .02239 | -.15792 | -.07247 | .00455 | .19503 |
| -148.670 | -.352 | 201.07000 | -10.26900 | .25346 | .04542 | -.21821 | .01676 | -.12497 | -.05006 | -.00059 | .20005 |
| | GRADIENT | .00000 | .00000 | .00000 | .00000 | .00000 | .00000 | .00000 | .00000 | .00000 | .00000 |

RUN NO. 3853/ 0 RN/L = 2.38 GRADIENT INTERVAL = -5.00/ 5.00

| Y | X | Z | ALPHA | BETA | PHI | CN | CLM | CY | CYN | CBL | CA |
|---|---|---|---|---|---|---|---|---|---|---|---|
| -202.230 | -.327 | 200.83000 | -10.30800 | .26324 | .03606 | -.26109 | .02036 | -.12471 | -.05400 | -.00189 | .20538 |
| -201.770 | 99.624 | 199.16000 | -10.33300 | .33521 | .06934 | -.30117 | .02779 | -.16408 | -.06767 | .00150 | .19889 |
| -200.830 | 199.520 | 200.06000 | -10.32600 | .34101 | .09909 | -.31688 | .04169 | -.19556 | -.05502 | .00122 | .20084 |
| | GRADIENT | .00000 | .00000 | .00000 | .00000 | .00000 | .00000 | .00000 | .00000 | .00000 | .00000 |

IA143, AEDC V41A-P8A, O/ET W/R.H. SRB SEPARATING (OVX314) ( 23 MAY 77 )

REFERENCE DATA

SREF = 2690.0000 SQ.FT. XMRP = 1097.0000 IN. XT
LREF = 1290.3000 INCHES YMRP = .0000 IN. YT
BREF = 1290.3000 INCHES ZMRP = 450.0000 IN. ZT
SCALE = .0100

PARAMETRIC DATA

ALPHA = -10.000 BETA = .000
DALPHA = -4.000 DBETA = -2.000
Z = .000 MACH = 4.500
JET PC = 1225.000

RUN NO. 3854/ 0 RN/L = 2.37 GRADIENT INTERVAL = -5.00/ 5.00

| Y | X | Z | ALPHA | BETA | PHI | CN | CLM | CY | CYN | CBL | CA |
|---|---|---|---|---|---|---|---|---|---|---|---|
| -71.005 | -.996 | -.65488 | -10.36200 | .10700 | .00243 | -.24600 | -.02640 | -.06474 | -.01308 | -.00662 | .17517 |
| -71.761 | 99.583 | -1.10340 | -10.40600 | .15209 | .02832 | -.29322 | -.02700 | -.06064 | -.03821 | .00322 | .16419 |
| -70.872 | 199.480 | .37282 | -10.38500 | .14914 | .04638 | -.30650 | -.00884 | -.07325 | -.03120 | .00409 | .15574 |
| | GRADIENT | .00000 | .00000 | .00000 | .00000 | .00000 | .00000 | .00000 | .00000 | .00000 | .00000 |

IA143, AEDC V41A-P8A, O/ET W/R.H. SRB SEPARATING (OVX314) ( 23 MAY 77 )

REFERENCE DATA

SREF = 2690.0000 SQ.FT. XMRP = 1097.0000 IN. XT
LREF = 1290.3000 INCHES YMRP = .0000 IN. YT
BREF = 1290.3000 INCHES ZMRP = 450.0000 IN. ZT
SCALE = .0100

PARAMETRIC DATA

ALPHA = -10.000 BETA = .000
DALPHA = -4.000 DBETA = -2.000
Z = .000 MACH = 4.500
JET PC = 1225.000

RUN NO. 3859/ 0 RN/L = 2.37 GRADIENT INTERVAL = -5.00/ 5.00

| Y | X | Z | ALPHA | BETA | PHI | CN | CLM | CY | CYN | CBL | CA |
|---|---|---|---|---|---|---|---|---|---|---|---|
| -98.037 | 199.510 | -.31517 | -10.37800 | .14007 | .03753 | -.31134 | -.00152 | -.06335 | -.03185 | .00376 | .15635 |
| -100.550 | 99.698 | -.11372 | -10.39300 | .13851 | .01692 | -.29075 | -.02004 | -.04875 | -.03766 | .00247 | .16603 |
| -100.110 | -.293 | 1.41040 | -10.33800 | .09938 | -.00111 | -.24120 | -.01583 | -.04615 | -.01972 | -.00367 | .17383 |
| | GRADIENT | .00000 | .00000 | .00000 | .00000 | .00000 | .00000 | .00000 | .00000 | .00000 | .00000 |

RUN NO. 3860/ 0 RN/L = 2.37 GRADIENT INTERVAL = -5.00/ 5.00

| Y | X | Z | ALPHA | BETA | PHI | CN | CLM | CY | CYN | CBL | CA |
|---|---|---|---|---|---|---|---|---|---|---|---|
| -151.100 | -.351 | -.49988 | -10.35600 | .10947 | -.00355 | -.26975 | -.00773 | -.02879 | -.03391 | .00049 | .18200 |
| -151.020 | 99.598 | -.71966 | -10.38700 | .13766 | .01066 | -.30694 | -.00535 | -.03915 | -.04217 | .00324 | .17295 |
| -150.890 | 199.640 | .10587 | -10.37500 | .14466 | .03428 | -.32549 | .01118 | -.05793 | -.03675 | .00462 | .16759 |
| | GRADIENT | .00000 | .00000 | .00000 | .00000 | .00000 | .00000 | .00000 | .00000 | .00000 | .00000 |

IA143, AEDC V41A-P8A, O/ET W/R.H. SRB SEPARATING (OVX315) ( 23 MAY 77 )

REFERENCE DATA

SREF = 2690.0000 SQ.FT. XMRP = 1097.0000 IN. XT
LREF = 1290.3000 INCHES YMRP = .0000 IN. YT
BREF = 1290.3000 INCHES ZMRP = 450.0000 IN. ZT
SCALE = .0100

PARAMETRIC DATA

ALPHA = -10.000 BETA = .000
DALPHA = -4.000 DBETA = -2.000
Z = 100.000 MACH = 4.500
JET PC = 1225.000

RUN NO. 3855/ 0 RN/L = 2.37 GRADIENT INTERVAL = -5.00/ 5.00

| Y | X | Z | ALPHA | BETA | PHI | CN | CLM | CY | CYN | CBL | CA |
|---|---|---|---|---|---|---|---|---|---|---|---|
| -73.169 | 199.590 | 101.51000 | -10.32100 | .24419 | .06748 | -.26108 | .00537 | -.13747 | -.04054 | .00072 | .17164 |
| -70.941 | 99.608 | 99.77800 | -10.34100 | .24999 | .06802 | -.25839 | -.00788 | -.12744 | -.04892 | .00357 | .17208 |
| -70.696 | -.438 | 99.89400 | -10.23000 | .16464 | .03286 | -.18309 | .01289 | -.10407 | -.01993 | -.00488 | .17305 |
| | GRADIENT | .00000 | .00000 | .00000 | .00000 | .00000 | .00000 | .00000 | .00000 | .00000 | .00000 |

RUN NO. 3858/ 0 RN/L = 2.37 GRADIENT INTERVAL = -5.00/ 5.00

| Y | X | Z | ALPHA | BETA | PHI | CN | CLM | CY | CYN | CBL | CA |
|---|---|---|---|---|---|---|---|---|---|---|---|
| -100.290 | -.117 | 100.28000 | -10.29700 | .17720 | .02946 | -.22449 | .00016 | -.09106 | -.03274 | -.00174 | .18208 |
| -102.080 | 99.662 | 98.21100 | -10.36900 | .25383 | .05845 | -.28736 | -.00699 | -.11156 | -.05886 | .00539 | .17289 |
| -101.130 | 199.610 | 100.14000 | -10.36100 | .26463 | .07950 | -.30359 | .00678 | -.13311 | -.05336 | .00583 | .17025 |
| | GRADIENT | .00000 | .00000 | .00000 | .00000 | .00000 | .00000 | .00000 | .00000 | .00000 | .00000 |

IA143, AEDC V41A-P8A, O/ET W/R.H. SRB SEPARATING (OVX315) ( 23 MAY 77 )

REFERENCE DATA

SREF = 2690.0000 SQ.FT. XMRP = 1097.0000 IN. XT
LREF = 1290.3000 INCHES YMRP = .0000 IN. YT
BREF = 1290.3000 INCHES ZMRP = 450.0000 IN. ZT
SCALE = .0100

PARAMETRIC DATA

ALPHA = -10.000 BETA = .000
DALPHA = -4.000 DBETA = -2.000
Z = 100.000 MACH = 4.500
JET PC = 1225.000

RUN NO. 3861/ 0 RN/L = 2.37 GRADIENT INTERVAL = -5.00/ 5.00

| Y | X | Z | ALPHA | BETA | PHI | CN | CLM | CY | CYN | CBL | CA |
|---|---|---|---|---|---|---|---|---|---|---|---|
| -153.230 | 199.590 | 100.11000 | -10.36600 | .24485 | .07013 | -.31815 | .01318 | -.12546 | -.04781 | .00412 | .17254 |
| -150.380 | 99.613 | 100.12000 | -10.37200 | .23939 | .04674 | -.30033 | .00075 | -.10249 | -.05631 | .00385 | .17955 |
| -149.490 | -.362 | 101.35000 | -10.32400 | .18209 | .02308 | -.25051 | .00114 | -.07436 | -.04384 | .00104 | .18844 |
| | GRADIENT | .00000 | .00000 | .00000 | .00000 | .00000 | .00000 | .00000 | .00000 | .00000 | .00000 |

IA143, AEDC V41A-P8A, O/ET W/R.H. SRB SEPARATING (OVX316) ( 23 MAY 77 )

REFERENCE DATA

SREF = 2690.0000 SQ.FT. XMRP = 1097.0000 IN. XT
LREF = 1290.3000 INCHES YMRP = .0000 IN. YT
BREF = 1290.3000 INCHES ZMRP = 450.0000 IN. ZT
SCALE = .0100

PARAMETRIC DATA

ALPHA = -10.000 BETA = .000
DALPHA = -4.000 DBETA = -2.000
Z = 200.000 MACH = 4.500
JET PC = 1225.000

RUN NO. 3856/ 0 RN/L = 2.37 GRADIENT INTERVAL = -5.00/ 5.00

| Y | X | Z | ALPHA | BETA | PHI | CN | CLM | CY | CYN | CBL | CA |
|---|---|---|---|---|---|---|---|---|---|---|---|
| -71.581 | -.420 | 199.91000 | -10.11300 | .16154 | .03569 | -.12142 | .04060 | -.11236 | -.01410 | -.00637 | .15601 |
| -71.203 | 99.699 | 200.11000 | -10.24500 | .40760 | .10955 | -.21430 | .02777 | -.20490 | -.08130 | .00612 | .19737 |
| -70.935 | 199.540 | 199.82000 | -10.24300 | .39679 | .12172 | -.22229 | .03336 | -.21867 | -.06957 | .00487 | .19755 |
| | GRADIENT | .00000 | .00000 | .00000 | .00000 | .00000 | .00000 | .00000 | .00000 | .00000 | .00000 |

RUN NO. 3857/ 0 RN/L = 2.37 GRADIENT INTERVAL = -5.00/ 5.00

| Y | X | Z | ALPHA | BETA | PHI | CN | CLM | CY | CYN | CBL | CA |
|---|---|---|---|---|---|---|---|---|---|---|---|
| -99.912 | 199.520 | 199.62000 | -10.25500 | .36337 | .10187 | -.23319 | .03277 | -.20226 | -.06168 | .00185 | .19543 |
| -100.010 | 99.657 | 199.48000 | -10.27800 | .40039 | .10294 | -.23786 | .02325 | -.18977 | -.08579 | .00760 | .19983 |
| -100.480 | -.410 | 199.71000 | -10.15900 | .19733 | .03822 | -.14871 | .03580 | -.11800 | -.02758 | -.00457 | .18208 |
| | GRADIENT | .00000 | .00000 | .00000 | .00000 | .00000 | .00000 | .00000 | .00000 | .00000 | .00000 |

RUN NO. 3862/ 0 RN/L = 2.38 GRADIENT INTERVAL = -5.00/ 5.00

| Y | X | Z | ALPHA | BETA | PHI | CN | CLM | CY | CYN | CBL | CA |
|---|---|---|---|---|---|---|---|---|---|---|---|
| -154.100 | -.254 | 201.08000 | -10.27000 | .27212 | .04427 | -.22344 | .02064 | -.12891 | -.05634 | -.00043 | .20725 |
| -152.500 | 99.632 | 199.07000 | -10.30500 | .35082 | .07903 | -.26277 | .02150 | -.16786 | -.07355 | .00388 | .19953 |
| -151.500 | 199.510 | 199.70000 | -10.31100 | .37569 | .11197 | -.28847 | .03282 | -.20103 | -.06891 | .00525 | .19643 |
| | GRADIENT | .00000 | .00000 | .00000 | .00000 | .00000 | .00000 | .00000 | .00000 | .00000 | .00000 |

IA143, AEDC V41A-P8A, O/ET W/R.H. SRB SEPARATING (OVX317) ( 23 MAY 77 )

REFERENCE DATA

SREF = 2690.0000 SQ.FT. XMRP = 1097.0000 IN. XT
LREF = 1290.3000 INCHES YMRP = .0000 IN. YT
BREF = 1290.3000 INCHES ZMRP = 450.0000 IN. ZT
SCALE = .0100

PARAMETRIC DATA

ALPHA = -10.000 BETA = .000
DALPHA = -4.000 DBETA = .000
Z = .000 MACH = 4.500
JET PC = 1225.000

RUN NO. 3863/ 0 RN/L = 2.39 GRADIENT INTERVAL = -5.00/ 5.00

| Y | X | Z | ALPHA | BETA | PHI | CN | CLM | CY | CYN | CBL | CA |
|---|---|---|---|---|---|---|---|---|---|---|---|
| -50.997 | -.906 | -.41491 | -10.39800 | .14025 | .01337 | -.26767 | -.03350 | -.08202 | -.01951 | -.00583 | .17847 |
| -51.544 | 99.629 | -.48677 | -10.41800 | .17774 | .04285 | -.30429 | -.02757 | -.08202 | -.03906 | .00330 | .16050 |
| -50.789 | 199.640 | .36906 | -10.39700 | .17496 | .06459 | -.31265 | -.01146 | -.09469 | -.03247 | .00500 | .15861 |
| | GRADIENT | .00000 | .00000 | .00000 | .00000 | .00000 | .00000 | .00000 | .00000 | .00000 | .00000 |

RUN NO. 3868/ 0 RN/L = 2.38 GRADIENT INTERVAL = -5.00/ 5.00

| Y | X | Z | ALPHA | BETA | PHI | CN | CLM | CY | CYN | CBL | CA |
|---|---|---|---|---|---|---|---|---|---|---|---|
| -98.367 | 199.480 | -.50904 | -10.37700 | .14230 | .03962 | -.31231 | -.00022 | -.06644 | -.03132 | .00367 | .15804 |
| -100.760 | 99.621 | -.14770 | -10.39300 | .14293 | .01945 | -.29345 | -.01800 | -.05241 | -.03785 | .00250 | .16896 |
| -100.520 | -.333 | 1.28570 | -10.34500 | .11005 | .00241 | -.24330 | -.01740 | -.04166 | -.02741 | -.00111 | .17873 |
| | GRADIENT | .00000 | .00000 | .00000 | .00000 | .00000 | .00000 | .00000 | .00000 | .00000 | .00000 |

RUN NO. 3869/ 0 RN/L = 2.38 GRADIENT INTERVAL = -5.00/ 5.00

| Y | X | Z | ALPHA | BETA | PHI | CN | CLM | CY | CYN | CBL | CA |
|---|---|---|---|---|---|---|---|---|---|---|---|
| -151.030 | -.438 | -.45593 | -10.36200 | .11620 | -.00153 | -.27118 | -.00815 | -.02848 | -.03729 | .00149 | .18867 |
| -151.390 | 99.699 | -.49312 | -10.38800 | .14091 | .01403 | -.30863 | -.00445 | -.04275 | -.04195 | .00339 | .17624 |
| -150.940 | 199.530 | .08741 | -10.37600 | .14618 | .03645 | -.32714 | .01253 | -.06015 | -.03634 | .00469 | .17132 |
| | GRADIENT | .00000 | .00000 | .00000 | .00000 | .00000 | .00000 | .00000 | .00000 | .00000 | .00000 |

IA143, AEDC V41A-P8A, O/ET W/R.H. SRB SEPARATING (OVX318) ( 23 MAY 77 )

REFERENCE DATA

SREF = 2690.0000 SQ.FT. XMRP = 1097.0000 IN. XT
LREF = 1290.3000 INCHES YMRP = .0000 IN. YT
BREF = 1290.3000 INCHES ZMRP = 450.0000 IN. ZT
SCALE = .0100

PARAMETRIC DATA

ALPHA = -10.000 BETA = .000
DALPHA = -4.000 DBETA = .000
Z = 100.000 MACH = 4.500
JET PC = 1225.000

RUN NO. 3864/ 0 RN/L = 2.39 GRADIENT INTERVAL = -5.00/ 5.00

| Y | X | Z | ALPHA | BETA | PHI | CN | CLM | CY | CYN | CBL | CA |
|---|---|---|---|---|---|---|---|---|---|---|---|
| -53.759 | 199.500 | 101.59000 | -10.33400 | .30192 | .10542 | -.26801 | .00401 | -.16960 | -.05207 | .00579 | .17998 |
| -51.987 | 99.403 | 99.14700 | -10.36700 | .34731 | .10957 | -.28951 | -.00371 | -.20741 | -.05201 | .00123 | .17600 |
| -50.879 | -.378 | 99.67400 | -10.15700 | .15939 | .03389 | -.14172 | .02768 | -.10293 | -.01823 | -.00476 | .16064 |
| | GRADIENT | .00000 | .00000 | .00000 | .00000 | .00000 | .00000 | .00000 | .00000 | .00000 | .00000 |

IA143, AEDC V41A-P8A, O/ET W/R.H. SRB SEPARATING (OVX318) ( 23 MAY 77 )

REFERENCE DATA

SREF = 2690.0000 SQ.FT. XMRP = 1097.0000 IN. XT
LREF = 1290.3000 INCHES YMRP = .0000 IN. YT
BREF = 1290.3000 INCHES ZMRP = 450.0000 IN. ZT
SCALE = .0100

PARAMETRIC DATA

ALPHA = -10.000 BETA = .000
DALPHA = -4.000 DBETA = .000
Z = 100.000 MACH = 4.500
JET PC = 1225.000

RUN NO. 3867/ 0 RN/L = 2.38 GRADIENT INTERVAL = -5.00/ 5.00

| Y | X | Z | ALPHA | BETA | PHI | CN | CLM | CY | CYN | CBL | CA |
|---|---|---|---|---|---|---|---|---|---|---|---|
| -101.250 | -.260 | 100.08000 | -10.29800 | .19180 | .03099 | -.22293 | .00003 | -.08772 | -.04144 | .00041 | .18725 |
| -102.210 | 99.594 | 98.36900 | -10.36400 | .26143 | .06147 | -.28414 | -.00531 | -.11891 | -.05834 | .00488 | .17541 |
| -101.170 | 199.610 | 100.33000 | -10.35100 | .26766 | .07598 | -.29494 | .00880 | -.14195 | -.04942 | .00322 | .17497 |
| | GRADIENT | .00000 | .00000 | .00000 | .00000 | .00000 | .00000 | .00000 | .00000 | .00000 | .00000 |

RUN NO. 3870/ 0 RN/L = 2.38 GRADIENT INTERVAL = -5.00/ 5.00

| Y | X | Z | ALPHA | BETA | PHI | CN | CLM | CY | CYN | CBL | CA |
|---|---|---|---|---|---|---|---|---|---|---|---|
| -153.410 | 199.530 | 100.22000 | -10.36600 | .25009 | .07498 | -.31739 | .01371 | -.13083 | -.04757 | .00432 | .17680 |
| -150.590 | 99.603 | 100.04000 | -10.37300 | .24847 | .05175 | -.29993 | .00037 | -.10957 | -.05690 | .00397 | .18254 |
| -149.640 | -.358 | 101.21000 | -10.33000 | .19641 | .02594 | -.25188 | -.00010 | -.07872 | -.04825 | .00170 | .19587 |
| | GRADIENT | .00000 | .00000 | .00000 | .00000 | .00000 | .00000 | .00000 | .00000 | .00000 | .00000 |

IA143, AEDC V41A-P8A, O/ET W/R.H. SRB SEPARATING (OVX319) ( 23 MAY 77 )

REFERENCE DATA

SREF = 2690.0000 SQ.FT. XMRP = 1097.0000 IN. XT
LREF = 1290.3000 INCHES YMRP = .0000 IN. YT
BREF = 1290.3000 INCHES ZMRP = 450.0000 IN. ZT
SCALE = .0100

PARAMETRIC DATA

ALPHA = -10.000 BETA = .000
DALPHA = -4.000 DBETA = .000
Z = 200.000 MACH = 4.500
JET PC = 1225.000

RUN NO. 3865/ 0 RN/L = 2.39 GRADIENT INTERVAL = -5.00/ 5.00

| Y | X | Z | ALPHA | BETA | PHI | CN | CLM | CY | CYN | CBL | CA |
|---|---|---|---|---|---|---|---|---|---|---|---|
| -51.444 | -.400 | 201.54000 | -10.08400 | .18286 | .04982 | -.11393 | .05051 | -.12056 | -.02043 | -.00363 | .14685 |
| -51.534 | 99.717 | 200.24000 | -10.26800 | .58121 | .15915 | -.24298 | .03436 | -.28417 | -.12039 | .01110 | .20980 |
| -48.515 | 199.590 | 201.20000 | -10.22700 | .46099 | .15275 | -.21177 | .04007 | -.25326 | -.08205 | .00828 | .21220 |
| | GRADIENT | .00000 | .00000 | .00000 | .00000 | .00000 | .00000 | .00000 | .00000 | .00000 | .00000 |

RUN NO. 3866/ 0 RN/L = 2.39 GRADIENT INTERVAL = -5.00/ 5.00

| Y | X | Z | ALPHA | BETA | PHI | CN | CLM | CY | CYN | CBL | CA |
|---|---|---|---|---|---|---|---|---|---|---|---|
| -98.971 | 199.610 | 199.40000 | -10.24700 | .37019 | .10537 | -.22455 | .03268 | -.20930 | -.06115 | .00149 | .19735 |
| -101.050 | 99.650 | 199.69000 | -10.26100 | .39263 | .10201 | -.22091 | .02364 | -.20096 | -.07600 | .00430 | .20261 |
| -101.100 | -.400 | 199.69000 | -10.15000 | .21112 | .03803 | -.14343 | .03954 | -.12058 | -.03247 | -.00422 | .18987 |
| | GRADIENT | .00000 | .00000 | .00000 | .00000 | .00000 | .00000 | .00000 | .00000 | .00000 | .00000 |

IA143, AEDC V41A-P8A, O/ET W/R.H. SRB SEPARATING (OVX319) ( 23 MAY 77 )

REFERENCE DATA

SREF = 2690.0000 SQ.FT. XMRP = 1097.0000 IN. XT
LREF = 1290.3000 INCHES YMRP = .0000 IN. YT
BREF = 1290.3000 INCHES ZMRP = 450.0000 IN. ZT
SCALE = .0100

PARAMETRIC DATA

ALPHA = -10.000 BETA = .000
DALPHA = -4.000 DBETA = .000
Z = 200.000 MACH = 4.500
JET PC = 1225.000

RUN NO. 3871/ 0 RN/L = 2.38 GRADIENT INTERVAL = -5.00/ 5.00

| Y | X | Z | ALPHA | BETA | PHI | CN | CLM | CY | CYN | CBL | CA |
|---|---|---|---|---|---|---|---|---|---|---|---|
| -152.960 | -.281 | 201.54000 | -10.26800 | .28883 | .04792 | -.21881 | .02096 | -.13581 | -.06041 | -.00004 | .21581 |
| -152.860 | 99.631 | 198.98000 | -10.30600 | .36845 | .08602 | -.26199 | .02180 | -.17687 | -.07714 | .00461 | .20526 |
| -151.240 | 199.600 | 199.78000 | -10.30700 | .38591 | .11711 | -.28494 | .03403 | -.20820 | -.07004 | .00547 | .20162 |
| | GRADIENT | .00000 | .00000 | 00000 | .00000 | .00000 | .00000 | .00000 | .00000 | .00000 | .00000 |

IA143, AEDC V41A-P8A, O/ET W/R.H. SRB SEPARATING (OVX320) ( 23 MAY 77 )

REFERENCE DATA

SREF = 2690.0000 SQ.FT. XMRP = 1097.0000 IN. XT
LREF = 1290.3000 INCHES YMRP = .0000 IN. YT
BREF = 1290.3000 INCHES ZMRP = 450.0000 IN. ZT
SCALE = .0100

PARAMETRIC DATA

ALPHA = -10.000 BETA = .000
DALPHA = -4.000 DBETA = 2.000
Z = .000 MACH = 4.500
JET PC = 1225.000

RUN NO. 3872/ 0 RN/L = 2.38 GRADIENT INTERVAL = -5.00/ 5.00

| Y | X | Z | ALPHA | BETA | PHI | CN | CLM | CY | CYN | CBL | CA |
|---|---|---|---|---|---|---|---|---|---|---|---|
| -50.768 | -.939 | -.20519 | -10.39500 | .14837 | .01990 | -.26506 | -.03280 | -.07193 | -.02940 | -.00151 | .18206 |
| -51.157 | 99.730 | -.57626 | -10.41800 | .18035 | .04534 | -.30610 | -.02628 | -.08528 | -.03870 | .00331 | .16379 |
| -50.751 | 199.580 | .43365 | -10.39800 | .17537 | .06640 | -.31334 | -.01070 | -.09800 | -.03092 | .00466 | .16089 |
| | GRADIENT | .00000 | .00000 | .00000 | .00000 | .00000 | .00000 | .00000 | .00000 | .00000 | .00000 |

RUN NO. 3877/ 0 RN/L = 2.37 GRADIENT INTERVAL = -5.00/ 5.00

| Y | X | Z | ALPHA | BETA | PHI | CN | CLM | CY | CYN | CBL | CA |
|---|---|---|---|---|---|---|---|---|---|---|---|
| -97.736 | 199.560 | -.63067 | -10.37700 | .14704 | .04244 | -.31531 | .00241 | -.07154 | -.03089 | .00347 | .16180 |
| -100.370 | 99.640 | -.07298 | -10.39300 | .14673 | .02194 | -.29578 | -.01627 | -.05727 | -.03710 | .00220 | .17099 |
| -99.942 | -.349 | 1.21690 | -10.34900 | .11531 | .00477 | -.24368 | -.01802 | -.04308 | -.02925 | -.00054 | .18433 |
| | GRADIENT | .00000 | .00000 | .00000 | .00000 | .00000 | .00000 | .00000 | .00000 | .00000 | .00000 |

RUN NO. 3878/ 0 RN/L = 2.37 GRADIENT INTERVAL = -5.00/ 5.00

| Y | X | Z | ALPHA | BETA | PHI | CN | CLM | CY | CYN | CBL | CA |
|---|---|---|---|---|---|---|---|---|---|---|---|
| -150.600 | -.323 | -.52603 | -10.36600 | .12278 | .00178 | -.27586 | -.00725 | -.03121 | -.03910 | .00206 | .19253 |
| -151.790 | 99.597 | -.68552 | -10.39100 | .14627 | .01814 | -.31348 | -.00303 | -.04740 | -.04210 | .00360 | .17876 |
| -151.230 | 199.500 | .28727 | -10.37700 | .15076 | .04008 | -.33022 | .01373 | -.06505 | -.03609 | .00471 | .17367 |
| | GRADIENT | .00000 | .00000 | .00000 | .00000 | .00000 | .00000 | .00000 | .00000 | .00000 | .00000 |

IA143, AEDC V41A-P8A, O/ET W/R.H. SRB SEPARATING (OVX321) ( 23 MAY 77 )

REFERENCE DATA

SREF = 2690.0000 SQ.FT. XMRP = 1097.0000 IN. XT
LREF = 1290.3000 INCHES YMRP = .0000 IN. YT
BREF = 1290.3000 INCHES ZMRP = 450.0000 IN. ZT
SCALE = .0100

PARAMETRIC DATA

ALPHA = -10.000 BETA = .000
DALPHA = -4.000 DBETA = 2.000
Z = 100.000 MACH = 4.500
JET PC = 1225.000

RUN NO. 3873/ 0 RN/L = 2.38 GRADIENT INTERVAL = -5.00/ 5.00

| Y | X | Z | ALPHA | BETA | PHI | CN | CLM | CY | CYN | CBL | CA |
|---|---|---|---|---|---|---|---|---|---|---|---|
| -53.501 | 199.550 | 101.63000 | -10.33200 | .30342 | .10591 | -.26693 | .00521 | -.17179 | -.05150 | .00548 | .18248 |
| -51.869 | 99.629 | 98.86800 | -10.38100 | .36794 | .11935 | -.29164 | -.00871 | -.19616 | -.06863 | .00744 | .18373 |
| -50.686 | -.466 | 99.62500 | -10.16000 | .17384 | .03627 | -.14237 | .02800 | -.10077 | -.02631 | -.00271 | .16864 |
| | GRADIENT | .00000 | .00000 | .00000 | .00000 | .00000 | .00000 | .00000 | .00000 | .00000 | .00000 |

RUN NO. 3876/ 0 RN/L = 2.38 GRADIENT INTERVAL = -5.00/ 5.00

| Y | X | Z | ALPHA | BETA | PHI | CN | CLM | CY | CYN | CBL | CA |
|---|---|---|---|---|---|---|---|---|---|---|---|
| -100.600 | -.227 | 100.23000 | -10.28300 | .20457 | .03344 | -.21324 | .00448 | -.09489 | -.04354 | .00021 | .19385 |
| -102.010 | 99.753 | 98.08800 | -10.36100 | .27129 | .06602 | -.28075 | -.00454 | -.12869 | -.05786 | .00436 | .17907 |
| -101.160 | 199.600 | 100.33000 | -10.34800 | .27305 | .07760 | -.29297 | .01014 | -.15016 | -.04752 | .00209 | .17979 |
| | GRADIENT | .00000 | .00000 | .00000 | .00000 | .00000 | .00000 | .00000 | .00000 | .00000 | .00000 |

RUN NO. 3879/ 0 RN/L = 2.37 GRADIENT INTERVAL = -5.00/ 5.00

| Y | X | Z | ALPHA | BETA | PHI | CN | CLM | CY | CYN | CBL | CA |
|---|---|---|---|---|---|---|---|---|---|---|---|
| -153.280 | 199.450 | 100.25000 | -10.36600 | .26144 | .08127 | -.31782 | .01467 | -.13979 | -.04826 | .00444 | .18110 |
| -150.590 | 99.569 | 100.04000 | -10.37500 | .25732 | .05602 | -.30247 | .00149 | -.11802 | -.05667 | .00362 | .18559 |
| -149.890 | -.369 | 101.18000 | -10.33600 | .20923 | .02865 | -.25493 | -.00037 | -.08498 | -.05085 | .00176 | .20177 |
| | GRADIENT | .00000 | .00000 | .00000 | .00000 | .00000 | .00000 | .00000 | .00000 | .00000 | .00000 |

IA143, AEDC V41A-P8A, O/ET W/R.H. SRB SEPARATING (OVX322) ( 23 MAY 77 )

REFERENCE DATA

SREF = 2690.0000 SQ.FT. XMRP = 1097.0000 IN. XT
LREF = 1290.3000 INCHES YMRP = .0000 IN. YT
BREF = 1290.3000 INCHES ZMRP = 450.0000 IN. ZT
SCALE = .0100

PARAMETRIC DATA

ALPHA = -10.000 BETA = .000
DALPHA = -4.000 DBETA = 2.000
Z = 200.000 MACH = 4.500
JET PC = 1225.000

RUN NO. 3874/ 0 RN/L = 2.38 GRADIENT INTERVAL = -5.00/ 5.00

| Y | X | Z | ALPHA | BETA | PHI | CN | CLM | CY | CYN | CBL | CA |
|---|---|---|---|---|---|---|---|---|---|---|---|
| -51.453 | -.152 | 201.72000 | -10.08100 | .19582 | .04936 | -.11713 | .05627 | -.14103 | -.01485 | -.00752 | .15534 |
| -51.682 | 99.657 | 200.37000 | -10.26300 | .59349 | .16597 | -.23827 | .03546 | -.29191 | -.12241 | .01174 | .21627 |
| -48.356 | 199.570 | 201.10000 | -10.22700 | .48214 | .16170 | -.21089 | .04066 | -.26384 | -.08665 | .00936 | .21774 |
| | GRADIENT | .00000 | .00000 | .00000 | .00000 | .00000 | .00000 | .00000 | .00000 | .00000 | .00000 |

IA143, AEDC V41A-P8A, O/ET W/R.H. SRB SEPARATING (OVX322) ( 23 MAY 77 )

REFERENCE DATA

SREF = 2690.0000 SQ.FT. XMRP = 1097.0000 IN. XT
LREF = 1290.3000 INCHES YMRP = .0000 IN. YT
BREF = 1290.3000 INCHES ZMRP = 450.0000 IN. ZT
SCALE = .0100

PARAMETRIC DATA

ALPHA = -10.000 BETA = .000
DALPHA = -4.000 DBETA = 2.000
Z = 200.000 MACH = 4.500
JET PC = 1225.000

RUN NO. 3875/ 0 RN/L = 2.38 GRADIENT INTERVAL = -5.00/ 5.00

| Y | X | Z | ALPHA | BETA | PHI | CN | CLM | CY | CYN | CBL | CA |
|---|---|---|---|---|---|---|---|---|---|---|---|
| -99.051 | 199.500 | 199.51000 | -10.24200 | .37741 | .10911 | -.21883 | .03291 | -.21740 | -.06025 | .00098 | .20069 |
| -101.130 | 99.714 | 199.74000 | -10.25500 | .39607 | .10325 | -.21336 | .02427 | -.19907 | -.07867 | .00523 | .20912 |
| -100.750 | -.261 | 200.02000 | -10.14400 | .22377 | .04026 | -.13748 | .04113 | -.12544 | -.03572 | -.00396 | .19789 |
| | GRADIENT | .00000 | .00000 | .00000 | .00000 | .00000 | .00000 | .00000 | .00000 | .00000 | .00000 |

RUN NO. 3880/ 0 RN/L = 2.37 GRADIENT INTERVAL = -5.00/ 5.00

| Y | X | Z | ALPHA | BETA | PHI | CN | CLM | CY | CYN | CBL | CA |
|---|---|---|---|---|---|---|---|---|---|---|---|
| -153.050 | -.359 | 201.58000 | -10.27000 | .30882 | .05204 | -.21955 | .02199 | -.14591 | -.06436 | -.00001 | .22449 |
| -152.630 | 99.549 | 198.97000 | -10.30700 | .38074 | .09122 | -.26322 | .02318 | -.18659 | -.07773 | .00438 | .20982 |
| -151.470 | 199.570 | 199.87000 | -10.30500 | .39468 | .12334 | -.28543 | .03661 | -.21744 | -.06935 | .00534 | .20660 |
| | GRADIENT | .00000 | .00000 | .00000 | .00000 | .00000 | .00000 | .00000 | .00000 | .00000 | .00000 |

IA143, AEDC V41A-P8A, O/ET W/R.H. SRB SEPARATING (OVX323) ( 23 MAY 77 )

REFERENCE DATA

SREF = 2690.0000 SQ.FT. XMRP = 1097.0000 IN. XT
LREF = 1290.3000 INCHES YMRP = .0000 IN. YT
BREF = 1290.3000 INCHES ZMRP = 450.0000 IN. ZT
SCALE = .0100

PARAMETRIC DATA

ALPHA = -10.000 BETA = .000
DALPHA = -8.000 DBETA = -4.000
Z = 100.000 MACH = [illegible].500
JET PC = 1225.000

RUN NO. 3881/ 0 RN/L = 2.37 GRADIENT INTERVAL = -5.00/ 5.00

| Y | X | Z | ALPHA | BETA | PHI | CN | CLM | CY | CYN | CBL | CA |
|---|---|---|---|---|---|---|---|---|---|---|---|
| -119.900 | -1.123 | 100.34000 | -10.27500 | .13342 | .01051 | -.22647 | .01513 | -.11881 | .00449 | -.01540 | .18696 |
| -122.560 | 99.563 | 98.17100 | -10.36200 | .24843 | .04532 | -.27952 | -.00394 | -.11629 | -.05263 | .00102 | .18756 |
| -121.380 | 199.390 | 99.73600 | -10.37200 | .28102 | .07729 | -.31218 | .00692 | -.14066 | -.05643 | .00475 | .17740 |
| | GRADIENT | .00000 | .00000 | .00000 | .00000 | .00000 | .00000 | .00000 | .00000 | .00000 | .00000 |

RUN NO. 3886/ 0 RN/L = 2.37 GRADIENT INTERVAL = -5.00/ 5.00

| Y | X | Z | ALPHA | BETA | PHI | CN | CLM | CY | CYN | CBL | CA |
|---|---|---|---|---|---|---|---|---|---|---|---|
| -148.980 | 199.410 | 99.71700 | -10.37000 | .27065 | .07404 | -.31654 | .01091 | -.13810 | -.05293 | .00392 | .17927 |
| -149.680 | 99.614 | 100.54000 | -10.36400 | .24580 | .04185 | -.28722 | -.00040 | -.11090 | -.05420 | .00131 | .19006 |
| -148.750 | -.520 | 101.72000 | -10.29900 | .14448 | .01254 | -.24683 | .01495 | -.11818 | -.00115 | -.01402 | .19500 |
| | GRADIENT | .00000 | .00000 | .00000 | .00000 | .00000 | .00000 | .00000 | .00000 | .00000 | .00000 |

IA143, AEDC V41A-P8A, O/ET W/R.H. SRB SEPARATING (OVX323) ( 23 MAY 77 )

REFERENCE DATA

SREF = 2690.0000 SQ.FT. XMRP = 1097.0000 IN. XT
LREF = 1290.3000 INCHES YMRP = .0000 IN. YT
BREF = 1290.3000 INCHES ZMRP = 450.0000 IN. ZT
SCALE = .0100

PARAMETRIC DATA

ALPHA = -10.000 BETA = .000
DALPHA = -8.000 DBETA = -4.000
Z = 100.000 MACH = 4.500
JET PC = 1225.000

RUN NO. 3887/ 0 RN/L = 2.37 GRADIENT INTERVAL = -5.00/ 5.00

| Y | X | Z | ALPHA | BETA | PHI | CN | CLM | CY | CYN | CBL | CA |
|---|---|---|---|---|---|---|---|---|---|---|---|
| -200.750 | -.373 | 99.43100 | -10.33400 | .17582 | .01333 | -.27223 | .01151 | -.07660 | -.03897 | -.00206 | .20423 |
| -201.760 | 99.605 | 99.21400 | -10.37800 | .24387 | .03360 | -.31522 | .00970 | -.10158 | -.05789 | .00150 | .19721 |
| -200.930 | 199.510 | 100.18000 | -10.37300 | .26273 | .06643 | -.33716 | .02417 | -.13306 | -.05151 | .00283 | .19155 |
| | GRADIENT | .00000 | .00000 | .00000 | .00000 | .00000 | .00000 | .00000 | .00000 | .00000 | .00000 |

IA143, AEDC V41A-P8A, O/ET W/R.H. SRB SEPARATING (OVX324) ( 23 MAY 77 )

REFERENCE DATA

SREF = 2690.0000 SQ.FT. XMRP = 1097.0000 IN. XT
LREF = 1290.3000 INCHES YMRP = .0000 IN. YT
BREF = 1290.3000 INCHES ZMRP = 450.0000 IN. ZT
SCALE = .0100

PARAMETRIC DATA

ALPHA = -10.000 BETA = .000
DALPHA = -8.000 DBETA = -4.000
Z = 150.000 MACH = 4.500
JET PC = 1225.000

RUN NO. 3882/ 0 RN/L = 2.37 GRADIENT INTERVAL = -5.00/ 5.00

| Y | X | Z | ALPHA | BETA | PHI | CN | CLM | CY | CYN | CBL | CA |
|---|---|---|---|---|---|---|---|---|---|---|---|
| -122.440 | 199.480 | 150.99000 | -10.33800 | .35821 | .10277 | -.29646 | .02054 | -.18542 | -.06889 | .00557 | .19006 |
| -119.250 | 99.426 | 151.03000 | -10.31400 | .30401 | .06513 | -.25303 | .01032 | -.14745 | -.06233 | .00218 | .19634 |
| -118.940 | -.453 | 151.91000 | -10.24300 | .18159 | .03072 | -.21113 | .02573 | -.12950 | -.01333 | -.00998 | .19363 |
| | GRADIENT | .00000 | .00000 | .00000 | .00000 | .00000 | .00000 | .00000 | .00000 | .00000 | .00000 |

RUN NO. 3885/ 0 RN/L = 2.37 GRADIENT INTERVAL = -5.00/ 5.00

| Y | X | Z | ALPHA | BETA | PHI | CN | CLM | CY | CYN | CBL | CA |
|---|---|---|---|---|---|---|---|---|---|---|---|
| -149.630 | -.499 | 149.74000 | -10.27600 | .18564 | .02799 | -.23524 | .02207 | -.12668 | -.01653 | -.00965 | .19863 |
| -152.340 | 99.586 | 148.91000 | -10.33600 | .29755 | .05893 | -.27598 | .01155 | -.13947 | -.06332 | .00219 | .19900 |
| -151.300 | 199.500 | 149.89000 | -10.34400 | .33254 | .09193 | -.30531 | .02204 | -.17139 | -.06427 | .00463 | .19003 |
| | GRADIENT | .00000 | .00000 | .00000 | .00000 | .00000 | .00000 | .00000 | .00000 | .00000 | .00000 |

RUN NO. 3888/ 0 RN/L = 2.37 GRADIENT INTERVAL = -5.00/ 5.00

| Y | X | Z | ALPHA | BETA | PHI | CN | CLM | CY | CYN | CBL | CA |
|---|---|---|---|---|---|---|---|---|---|---|---|
| -201.860 | 199.500 | 150.75000 | -10.35100 | .31434 | .08460 | -.32765 | .03267 | -.16890 | -.05664 | .00229 | .19787 |
| -200.030 | 99.549 | 150.38000 | -10.35500 | .29751 | .05248 | -.30712 | .02014 | -.13654 | -.06446 | .00144 | .20607 |
| -198.560 | -.378 | 151.30000 | -10.31400 | .21484 | .02677 | -.26517 | .02042 | -.10356 | -.04286 | -.00252 | .20952 |
| | GRADIENT | .00000 | .00000 | .00000 | .00000 | .00000 | .00000 | .00000 | .00000 | .00000 | .00000 |

IA143, AEDC V41A-P8A, O/ET W/R.H. SRB SEPARATING (OVX325) ( 23 MAY 77 )

REFERENCE DATA

SREF = 2690.0000 SQ.FT. XMRP = 1097.0000 IN. XT
LREF = 1290.3000 INCHES YMRP = .0000 IN. YT
BREF = 1290.3000 INCHES ZMRP = 450.0000 IN. ZT
SCALE = .0100

PARAMETRIC DATA

ALPHA = -10.000 BETA = .000
DALPHA = -8.000 DBETA = -4.000
Z = 200.000 MACH = 4.500
JET PC = 1225.000

RUN NO. 3883/ 0 RN/L = 2.37 GRADIENT INTERVAL = -5.00/ 5.00

| Y | X | Z | ALPHA | BETA | PHI | CN | CLM | CY | CYN | CBL | CA |
|---|---|---|---|---|---|---|---|---|---|---|---|
| -120.680 | -.403 | 200.70000 | -10.22100 | .20833 | .04183 | -.20566 | .03696 | -.14222 | -.01940 | -.00855 | .19922 |
| -123.050 | 99.549 | 198.94000 | -10.28000 | .33536 | .07414 | -.24079 | .02439 | -.16171 | -.06947 | .00312 | .20314 |
| -122.280 | 199.440 | 199.54000 | -10.29700 | .40331 | .11666 | -.27981 | .03628 | -.21560 | -.07375 | .00488 | .19939 |
| | GRADIENT | .00000 | .00000 | .00000 | .00000 | .00000 | .00000 | .00000 | .00000 | .00000 | .00000 |

RUN NO. 3884/ 0 RN/L = 2.37 GRADIENT INTERVAL = -5.00/ 5.00

| Y | X | Z | ALPHA | BETA | PHI | CN | CLM | CY | CYN | CBL | CA |
|---|---|---|---|---|---|---|---|---|---|---|---|
| -149.950 | 199.490 | 200.07000 | -10.30900 | .38356 | .10727 | -.28775 | .03380 | -.20160 | -.07185 | .00465 | .19863 |
| -149.190 | 99.611 | 200.92000 | -10.28900 | .33216 | .07059 | -.25115 | .02518 | -.16038 | -.06849 | .00242 | .20409 |
| -148.100 | -.341 | 201.29000 | -10.24900 | .22402 | .04048 | -.22410 | .03272 | -.13759 | -.02912 | -.00666 | .20516 |
| | GRADIENT | .00000 | .00000 | .00000 | .00000 | .00000 | .00000 | .00000 | .00000 | .00000 | .00000 |

RUN NO. 3889/ 0 RN/L = 2.37 GRADIENT INTERVAL = -5.00/ 5.00

| Y | X | Z | ALPHA | BETA | PHI | CN | CLM | CY | CYN | CBL | CA |
|---|---|---|---|---|---|---|---|---|---|---|---|
| -201.040 | -.452 | 200.78000 | -10.29100 | .24943 | .03291 | -.25330 | .02752 | -.12446 | -.04751 | -.00351 | .21498 |
| -202.370 | 99.493 | 199.33000 | -10.32400 | .33851 | .06296 | -.29172 | .03002 | -.16354 | -.06905 | .00047 | .21021 |
| -201.300 | 199.460 | 200.26000 | -10.32000 | .36020 | .09919 | -.31100 | .04276 | -.20171 | -.06034 | .00117 | .20510 |
| | GRADIENT | .00000 | .00000 | .00000 | .00000 | .00000 | .00000 | .00000 | .00000 | .00000 | .00000 |

IA143, AEDC V41A-P8A, O/ET W/R.H. SRB SEPARATING (OVX326) ( 23 MAY 77 )

REFERENCE DATA

SREF = 2690.0000 SQ.FT. XMRP = 1097.0000 IN. XT
LREF = 1290.3000 INCHES YMRP = .0000 IN. YT
BREF = 1290.3000 INCHES ZMRP = 450.0000 IN. ZT
SCALE = .0100

PARAMETRIC DATA

ALPHA = -10.000 BETA = .000
DALPHA = -8.000 DBETA = -2.000
Z = 100.000 MACH = 4.500
JET PC = 1225.000

RUN NO. 3890/ 0 RN/L = 2.37 GRADIENT INTERVAL = -5.00/ 5.00

| Y | X | Z | ALPHA | BETA | PHI | CN | CLM | CY | CYN | CBL | CA |
|---|---|---|---|---|---|---|---|---|---|---|---|
| -70.884 | -1.137 | 100.64000 | -10.18500 | .13329 | .01239 | -.16934 | .03069 | -.11978 | .00493 | -.01522 | .17341 |
| -72.089 | 99.553 | 98.88300 | -10.25400 | .20940 | .04084 | -.19559 | .00858 | -.11651 | -.03426 | -.00277 | .18430 |
| -72.351 | 199.440 | 98.24100 | -10.33100 | .27145 | .07634 | -.26349 | .00303 | -.15262 | -.04531 | .00114 | .18103 |
| | GRADIENT | .00000 | .00000 | .00000 | .00000 | .00000 | .00000 | .00000 | .00000 | .00000 | .00000 |

IA143, AEDC V41A-P8A, O/ET W/R.H. SRB SEPARATING (OVX326) ( 23 MAY 77 )

REFERENCE DATA

SREF = 2690.0000 SQ.FT. XMRP = 1097.0000 IN. XT
LREF = 1290.3000 INCHES YMRP = .0000 IN. YT
BREF = 1290.3000 INCHES ZMRP = 450.0000 IN. ZT
SCALE = .0100

PARAMETRIC DATA

ALPHA = -10.000 BETA = .000
DALPHA = -8.000 DBETA = -2.000
Z = 100.000 MACH = 4.500
JET PC = 1225.000

RUN NO. 3895/ 0 RN/L = 2.36 GRADIENT INTERVAL = -5.00/ 5.00

| Y | X | Z | ALPHA | BETA | PHI | CN | CLM | CY | CYN | CBL | CA |
|---|---|---|---|---|---|---|---|---|---|---|---|
| -100.040 | 199.420 | 99.07200 | -10.35600 | .29300 | .08228 | -.29549 | .00742 | -.15566 | -.05405 | .00329 | .18144 |
| -99.934 | 99.572 | 101.10000 | -10.33200 | .24939 | .04834 | -.25126 | -.00278 | -.12669 | -.04749 | -.00063 | .18841 |
| -98.763 | -.523 | 102.27000 | -10.23900 | .14461 | .01560 | -.19970 | .02091 | -.11752 | -.00181 | -.01319 | .18906 |
| | GRADIENT | .00000 | .00000 | .00000 | .00000 | .00000 | .00000 | .00000 | .00000 | .00000 | .00000 |

RUN NO. 3896/ 0 RN/L = 2.37 GRADIENT INTERVAL = -5.00/ 5.00

| Y | X | Z | ALPHA | BETA | PHI | CN | CLM | CY | CYN | CBL | CA |
|---|---|---|---|---|---|---|---|---|---|---|---|
| -150.970 | -.416 | 98.57400 | -10.30800 | .17856 | .02273 | -.23844 | .00583 | -.08197 | -.03798 | -.00103 | .19897 |
| -153.020 | 99.611 | 98.74600 | -10.37000 | .25750 | .04572 | -.29115 | -.00017 | -.11314 | -.05855 | .00246 | .19395 |
| -151.170 | 199.470 | 100.15000 | -10.37200 | .27458 | .07645 | -.31614 | .01088 | -.14112 | -.05320 | .00402 | .18343 |
| | GRADIENT | .00000 | .00000 | .00000 | .00000 | .00000 | .00000 | .00000 | .00000 | .00000 | .00000 |

IA143, AEDC V41A-P8A, O/ET W/R.H. SRB SEPARATING (OVX327) ( 23 MAY 77 )

REFERENCE DATA

SREF = 2690.0000 SQ.FT. XMRP = 1097.0000 IN. XT
LREF = 1290.3000 INCHES YMRP = .0000 IN. YT
BREF = 1290.3000 INCHES ZMRP = 450.0000 IN. ZT
SCALE = .0100

PARAMETRIC DATA

ALPHA = -10.000 BETA = .000
DALPHA = -8.000 DBETA = -2.000
Z = 150.000 MACH = 4.500
JET PC = 1225.000

RUN NO. 3891/ 0 RN/L = 2.36 GRADIENT INTERVAL = -5.00/ 5.00

| Y | X | Z | ALPHA | BETA | PHI | CN | CLM | CY | CYN | CBL | CA |
|---|---|---|---|---|---|---|---|---|---|---|---|
| -72.841 | 199.530 | 151.02000 | -10.29300 | .35745 | .10593 | -.24589 | .01764 | -.19739 | -.06216 | .00349 | .19423 |
| -71.581 | 99.515 | 150.43000 | -10.28400 | .36510 | .09449 | -.24407 | .02098 | -.25524 | -.03231 | -.01177 | .19001 |
| -70.969 | -.515 | 150.14000 | -10.14400 | .14222 | .02715 | -.15459 | .04349 | -.11803 | -.00135 | -.01093 | .16471 |
| | GRADIENT | .00000 | .00000 | .00000 | .00000 | .00000 | .00000 | .00000 | .00000 | .00000 | .00000 |

RUN NO. 3894/ 0 RN/L = 2.36 GRADIENT INTERVAL = -5.00/ 5.00

| Y | X | Z | ALPHA | BETA | PHI | CN | CLM | CY | CYN | CBL | CA |
|---|---|---|---|---|---|---|---|---|---|---|---|
| -100.340 | -.417 | 149.31000 | -10.19900 | .17057 | .02895 | -.18194 | .03341 | -.11933 | -.01385 | -.00880 | .18890 |
| -102.660 | 99.648 | 148.76000 | -10.26900 | .28289 | .06050 | -.21910 | .01639 | -.16009 | -.04509 | -.00326 | .19728 |
| -101.750 | 199.430 | 149.15000 | -10.30500 | .33752 | .09209 | -.26321 | .02066 | -.18495 | -.05894 | .00190 | .19459 |
| | GRADIENT | .00000 | .00000 | .00000 | .00000 | .00000 | .00000 | .00000 | .00000 | .00000 | .00000 |

IA143, AEDC V41A-P8A, O/ET W/R.H. SRB SEPARATING (OVX327) ( 23 MAY 77 )

REFERENCE DATA

SREF = 2690.0000 SQ.FT. XMRP = 1097.0000 IN. XT
LREF = 1290.3000 INCHES YMRP = .0000 IN. YT
BREF = 1290.3000 INCHES ZMRP = 450.0000 IN. ZT
SCALE = .0100

PARAMETRIC DATA

ALPHA = -10.000 BETA = .000
DALPHA = -8.000 DBETA = -2.000
Z = 150.000 MACH = 4.500
JET PC = 1225.000

RUN NO. 3897/ 0 RN/L = 2.38 GRADIENT INTERVAL = -5.00/ 5.00

| Y | X | Z | ALPHA | BETA | PHI | CN | CLM | CY | CYN | CBL | CA |
|---|---|---|---|---|---|---|---|---|---|---|---|
| -152.180 | 199.520 | 150.88000 | -10.34500 | .34239 | .09594 | -.30374 | .02156 | -.17607 | -.06640 | .00512 | .19389 |
| -150.030 | 99.434 | 150.63000 | -10.33500 | .31588 | .06442 | -.27367 | .01164 | -.14575 | -.06868 | .00326 | .20455 |
| -148.720 | -.462 | 151.83000 | -10.27600 | .21695 | .03509 | -.22432 | .01790 | -.10617 | -.04302 | -.00114 | .20689 |
| | GRADIENT | .00000 | .00000 | .00000 | .00000 | .00000 | .00000 | .00000 | .00000 | .00000 | .00000 |

IA143, AEDC V41A-P8A, O/ET W/R.H. SRB SEPARATING (OVX328) ( 23 MAY 77 )

REFERENCE DATA

SREF = 2690.0000 SQ.FT. XMRP = 1097.0000 IN. XT
LREF = 1290.3000 INCHES YMRP = .0000 IN. YT
BREF = 1290.3000 INCHES ZMRP = 450.0000 IN. ZT
SCALE = .0100

PARAMETRIC DATA

ALPHA = -10.000 BETA = .000
DALPHA = -8.000 DBETA = -2.000
Z = 200.000 MACH = 4.500
JET PC = 1225.000

RUN NO. 3892/ 0 RN/L = 2.36 GRADIENT INTERVAL = -5.00/ 5.00

| Y | X | Z | ALPHA | BETA | PHI | CN | CLM | CY | CYN | CBL | CA |
|---|---|---|---|---|---|---|---|---|---|---|---|
| -71.304 | -.402 | 200.71000 | -10.12100 | .15490 | .03797 | -.14848 | .05433 | -.12722 | -.00292 | -.00975 | .16762 |
| -71.422 | 99.552 | 199.98000 | -10.23400 | .40505 | .10719 | -.22073 | .03833 | -.26646 | -.04535 | -.00874 | .20047 |
| -70.289 | 199.500 | 200.37000 | -10.23500 | .40072 | .12043 | -.21621 | .03609 | -.22216 | -.06929 | .00405 | .20363 |
| | GRADIENT | .00000 | .00000 | .00000 | .00000 | .00000 | .00000 | .00000 | .00000 | .00000 | .00000 |

RUN NO. 3893/ 0 RN/L = 2.36 GRADIENT INTERVAL = -5.00/ 5.00

| Y | X | Z | ALPHA | BETA | PHI | CN | CLM | CY | CYN | CBL | CA |
|---|---|---|---|---|---|---|---|---|---|---|---|
| -100.450 | 199.510 | 199.65000 | -10.25400 | .38370 | .10746 | -.23794 | .03719 | -.21312 | -.06561 | .00210 | .20288 |
| -99.440 | 99.628 | 201.48000 | -10.21500 | .31749 | .07304 | -.19334 | .03380 | -.18686 | -.04718 | -.00414 | .20304 |
| -98.054 | -.382 | 201.52000 | -10.15900 | .18723 | .03563 | -.16435 | .04692 | -.12332 | -.01979 | -.00707 | .19149 |
| | GRADIENT | .00000 | .00000 | .00000 | .00000 | .00000 | .00000 | .00000 | .00000 | .00000 | .00000 |

RUN NO. 3898/ 0 RN/L = 2.38 GRADIENT INTERVAL = -5.00/ 5.00

| Y | X | Z | ALPHA | BETA | PHI | CN | CLM | CY | CYN | CBL | CA |
|---|---|---|---|---|---|---|---|---|---|---|---|
| -151.110 | -.463 | 200.77000 | -10.25100 | .24999 | .03993 | -.21439 | .02789 | -.12289 | -.04926 | -.00156 | .21401 |
| -153.120 | 99.445 | 199.23000 | -10.29400 | .35001 | .07347 | -.25392 | .02546 | -.16723 | -.07305 | .00274 | .21058 |
| -151.870 | 199.590 | 199.75000 | -10.30800 | .39152 | .11077 | -.29580 | .03437 | -.20694 | -.07282 | .00477 | .20317 |
| | GRADIENT | .00000 | .00000 | .00000 | .00000 | .00000 | .00000 | .00000 | .00000 | .00000 | .00000 |

IA143, AEDC V41A-P8A, O/ET W/R.H. SRB SEPARATING (OVX329) ( 23 MAY 77 )

REFERENCE DATA

SREF = 2690.0000 SQ.FT. XMRP = 1097.0000 IN. XT
LREF = 1290.3000 INCHES YMRP = .0000 IN. YT
BREF = 1290.3000 INCHES ZMRP = 450.0000 IN. ZT
SCALE = .0100

PARAMETRIC DATA

ALPHA = -10.000 BETA = .000
DALPHA = -8.000 DBETA = .000
Z = 100.000 MACH = 4.500
JET PC = 1225.000

RUN NO. 3899/ 0 RN/L = 2.38 GRADIENT INTERVAL = -5.00/ 5.00

| Y | X | Z | ALPHA | BETA | PHI | CN | CLM | CY | CYN | CBL | CA |
|---|---|---|---|---|---|---|---|---|---|---|---|
| -50.633 | -1.201 | 100.61000 | -10.14200 | .13686 | .01953 | -.14487 | .03783 | -.11408 | -.00049 | -.01208 | .15871 |
| -51.132 | 99.727 | 100.17000 | -10.40500 | .41253 | .12031 | -.30265 | -.01424 | -.20648 | -.08352 | .00848 | .19320 |
| -50.344 | 199.410 | 101.09000 | -10.36600 | .38181 | .14559 | -.30121 | .00598 | -.22688 | -.05994 | .00716 | .18676 |
| | GRADIENT | .00000 | .00000 | .00000 | .00000 | .00000 | .00000 | .00000 | .00000 | .00000 | .00000 |

RUN NO. 3904/ 0 RN/L = 2.38 GRADIENT INTERVAL = -5.00/ 5.00

| Y | X | Z | ALPHA | BETA | PHI | CN | CLM | CY | CYN | CBL | CA |
|---|---|---|---|---|---|---|---|---|---|---|---|
| -99.841 | 199.430 | 99.04600 | -10.35100 | .29590 | .08303 | -.28982 | .00827 | -.15998 | -.05283 | .00262 | .18604 |
| -99.647 | 99.617 | 100.88000 | -10.33100 | .25920 | .05261 | -.24827 | -.00241 | -.13084 | -.04980 | -.00000 | .19415 |
| -98.971 | -.432 | 102.50000 | -10.23100 | .17459 | .02367 | -.18344 | .01656 | -.09084 | -.03120 | -.00314 | .19323 |
| | GRADIENT | .00000 | .00000 | .00000 | .00000 | .00000 | .00000 | .00000 | .00000 | .00000 | .00000 |

RUN NO. 3905/ 0 RN/L = 2.37 GRADIENT INTERVAL = -5.00/ 5.00

| Y | X | Z | ALPHA | BETA | PHI | CN | CLM | CY | CYN | CBL | CA |
|---|---|---|---|---|---|---|---|---|---|---|---|
| -150.640 | -.512 | 98.36800 | -10.30900 | .18946 | .02420 | -.23514 | .00497 | -.08106 | -.04360 | .00028 | .20601 |
| -152.300 | 99.605 | 98.61100 | -10.37200 | .26793 | .05047 | -.29041 | -.00082 | -.12052 | -.05950 | .00253 | .19743 |
| -151.040 | 199.430 | 100.12000 | -10.37200 | .28603 | .08330 | -.31586 | .01099 | -.14818 | -.05501 | .00471 | .18595 |
| | GRADIENT | .00000 | .00000 | .00000 | .00000 | .00000 | .00000 | .00000 | .00000 | .00000 | .00000 |

IA143, AEDC V41A-P8A, O/ET W/R.H. SRB SEPARATING (OVX330) ( 23 MAY 77 )

REFERENCE DATA

SREF = 2690.0000 SQ.FT. XMRP = 1097.0000 IN. XT
LREF = 1290.3000 INCHES YMRP = .0000 IN. YT
BREF = 1290.3000 INCHES ZMRP = 450.0000 IN. ZT
SCALE = .0100

PARAMETRIC DATA

ALPHA = -10.000 BETA = .000
DALPHA = -8.000 DBETA = .000
Z = 150.000 MACH = 4.500
JET PC = 1225.000

RUN NO. 3900/ 0 RN/L = 2.38 GRADIENT INTERVAL = -5.00/ 5.00

| Y | X | Z | ALPHA | BETA | PHI | CN | CLM | CY | CYN | CBL | CA |
|---|---|---|---|---|---|---|---|---|---|---|---|
| -53.043 | 199.430 | 151.33000 | -10.31700 | .48909 | .17369 | -.27380 | .02216 | -.26795 | -.08858 | .01157 | .20234 |
| -51.435 | 99.503 | 149.41000 | -10.35800 | .51749 | .14100 | -.27997 | .00374 | -.25118 | -.10826 | .01019 | .20929 |
| -50.260 | -.496 | 149.93000 | -10.11800 | .15728 | .03627 | -.13733 | .04598 | -.12122 | -.00722 | -.00858 | .15183 |
| | GRADIENT | .00000 | .00000 | .00000 | .00000 | .00000 | .00000 | .00000 | .00000 | .00000 | .00000 |

IA143, AEDC V41A-P8A, O/ET W/R.H. SRB SEPARATING (OVX330) ( 23 MAY 77 )

REFERENCE DATA

SREF = 2690.0000 SQ.FT. XMRP = 1097.0000 IN. XT
LREF = 1290.3000 INCHES YMRP = .0000 IN. YT
BREF = 1290.3000 INCHES ZMRP = 450.0000 IN. ZT
SCALE = .0100

PARAMETRIC DATA

ALPHA = -10.000 BETA = .000
DALPHA = -8.000 DBETA = .000
Z = 150.000 MACH = 4.500
JET PC = 1225.000

RUN NO. 3903/ 0 RN/L = 2.38 GRADIENT INTERVAL = -5.00/ 5.00

| Y | X | Z | ALPHA | BETA | PHI | CN | CLM | CY | CYN | CBL | CA |
|---|---|---|---|---|---|---|---|---|---|---|---|
| -100.270 | -.444 | 149.18000 | -10.18600 | .18862 | .03031 | -.16947 | .03471 | -.10320 | -.03125 | -.00353 | .19361 |
| -103.420 | 99.567 | 148.28000 | -10.27200 | .30137 | .06604 | -.21607 | .01485 | -.15369 | -.05753 | .00072 | .20420 |
| -101.810 | 199.490 | 149.39000 | -10.30000 | .34238 | .09549 | -.25691 | .02057 | -.18939 | -.05873 | .00191 | .19638 |
| | GRADIENT | .00000 | .00000 | .00000 | .00000 | .00000 | .00000 | .00000 | .00000 | .00000 | .00000 |

RUN NO. 3906/ 0 RN/L = 2.38 GRADIENT INTERVAL = -5.00/ 5.00

| Y | X | Z | ALPHA | BETA | PHI | CN | CLM | CY | CYN | CBL | CA |
|---|---|---|---|---|---|---|---|---|---|---|---|
| -152.980 | 199.490 | 150.90000 | -10.34300 | .35419 | .10335 | -.29980 | .02112 | -.18370 | -.06801 | .00581 | .19683 |
| -149.950 | 99.625 | 150.65000 | -10.33500 | .33288 | .07181 | -.27131 | .01139 | -.15487 | -.07184 | .00397 | .20817 |
| -148.050 | -.513 | 151.80000 | -10.27400 | .23575 | .03991 | -.21884 | .01771 | -.10794 | -.05103 | .00084 | .21582 |
| | GRADIENT | .00000 | .00000 | .00000 | .00000 | .00000 | .00000 | .00000 | .00000 | .00000 | .00000 |

IA143, AEDC V41A-P8A, O/ET W/R.H. SRB SEPARATING (OVX331) ( 23 MAY 77 )

REFERENCE DATA

SREF = 2690.0000 SQ.FT. XMRP = 1097.0000 IN. XT
LREF = 1290.3000 INCHES YMRP = .0000 IN. YT
BREF = 1290.3000 INCHES ZMRP = 450.0000 IN. ZT
SCALE = .0100

PARAMETRIC DATA

ALPHA = -10.000 BETA = .000
DALPHA = -8.000 DBETA = .000
Z = 200.000 MACH = 4.500
JET PC = 1225.000

RUN NO. 3901/ 0 RN/L = 2.38 GRADIENT INTERVAL = -5.00/ 5.00

| Y | X | Z | ALPHA | BETA | PHI | CN | CLM | CY | CYN | CBL | CA |
|---|---|---|---|---|---|---|---|---|---|---|---|
| -50.620 | -.413 | 200.69000 | -10.09300 | .17027 | .04656 | -.13269 | .05744 | -.12477 | -.01203 | -.00621 | .15026 |
| -52.265 | 99.612 | 200.55000 | -10.26800 | .58800 | .15509 | -.23871 | .03337 | -.29275 | -.11841 | .00872 | .21780 |
| -49.275 | 199.440 | 201.08000 | -10.23100 | .50724 | .16828 | -.22642 | .04797 | -.28672 | -.08580 | .00730 | .21934 |
| | GRADIENT | .00000 | .00000 | .00000 | .00000 | .00000 | .00000 | .00000 | .00000 | .00000 | .00000 |

RUN NO. 3902/ 0 RN/L = 2.38 GRADIENT INTERVAL = -5.00/ 5.00

| Y | X | Z | ALPHA | BETA | PHI | CN | CLM | CY | CYN | CBL | CA |
|---|---|---|---|---|---|---|---|---|---|---|---|
| -98.152 | 199.430 | 200.06000 | -10.24300 | .38811 | .11036 | -.22274 | .03574 | -.21652 | -.06579 | .00222 | .20612 |
| -99.321 | 99.543 | 201.12000 | -10.21300 | .33604 | .07819 | -.18182 | .03052 | -.17389 | -.06331 | .00127 | .21190 |
| -97.888 | -.470 | 201.79000 | -10.14400 | .19829 | .03416 | -.14975 | .04811 | -.11514 | -.02926 | -.00475 | .19617 |
| | GRADIENT | .00000 | .00000 | .00000 | .00000 | .00000 | .00000 | .00000 | .00000 | .00000 | .00000 |

IA143, AEDC V41A-P8A, O/ET W/R.H. SRB SEPARATING (OVX331) ( 23 MAY 77 )

REFERENCE DATA

SREF = 2690.0000 SQ.FT. XMRP = 1097.0000 IN. XT
LREF = 1290.3000 INCHES YMRP = .0000 IN. YT
BREF = 1290.3000 INCHES ZMRP = 450.0000 IN. ZT
SCALE = .0100

PARAMETRIC DATA

ALPHA = -10.000 BETA = .000
DALPHA = -8.000 DBETA = .000
Z = 200.000 MACH = 4.500
JET PC = 1225.000

RUN NO. 3907/ 0 RN/L = 2.38 GRADIENT INTERVAL = -5.00/ 5.00

| Y | X | Z | ALPHA | BETA | PHI | CN | CLM | CY | CYN | CBL | CA |
|---|---|---|---|---|---|---|---|---|---|---|---|
| -151.480 | -.431 | 200.90000 | -10.24900 | .26823 | .04296 | -.20710 | .02741 | -.12624 | -.05587 | -.00040 | .22476 |
| -152.920 | 99.601 | 199.19000 | -10.29100 | .36461 | .07981 | -.24762 | .02495 | -.17422 | -.07625 | .00354 | .21599 |
| -151.450 | 199.510 | 199.77000 | -10.30500 | .40705 | .11907 | -.28259 | .03532 | -.21614 | -.07532 | .00555 | .20792 |
| | GRADIENT | .00000 | .00000 | .00000 | .00000 | .00000 | .00000 | .00000 | .00000 | .00000 | .00000 |

IA143, AEDC V41A-P8A, O/ET W/R.H. SRB SEPARATING (OVX332) ( 23 MAY 77 )

REFERENCE DATA

SREF = 2690.0000 SQ.FT. XMRP = 1097.0000 IN. XT
LREF = 1290.3000 INCHES YMRP = .0000 IN. YT
BREF = 1290.3000 INCHES ZMRP = 450.0000 IN. ZT
SCALE = .0100

PARAMETRIC DATA

ALPHA = -10.000 BETA = .000
DALPHA = -8.000 DBETA = 2.000
Z = 100.000 MACH = 4.500
JET PC = 1225.000

RUN NO. 3908/ 0 RN/L = 2.38 GRADIENT INTERVAL = -5.00/ 5.00

| Y | X | Z | ALPHA | BETA | PHI | CN | CLM | CY | CYN | CBL | CA |
|---|---|---|---|---|---|---|---|---|---|---|---|
| -50.834 | -1.181 | 100.22000 | -10.14700 | .16124 | .02668 | -.13960 | .03391 | -.09721 | -.02167 | -.00491 | .16593 |
| -51.256 | 99.601 | 100.16000 | -10.40800 | .42381 | .12412 | -.30437 | -.01331 | -.20893 | -.08739 | .00948 | .19788 |
| -50.568 | 199.280 | 100.98000 | -10.37400 | .40411 | .16121 | -.30769 | .00676 | -.22566 | -.07183 | .01238 | .19050 |
| | GRADIENT | .00000 | .00000 | .00000 | .00000 | .00000 | .00000 | .00000 | .00000 | .00000 | .00000 |

RUN NO. 3913/ 0 RN/L = 2.37 GRADIENT INTERVAL = -5.00/ 5.00

| Y | X | Z | ALPHA | BETA | PHI | CN | CLM | CY | CYN | CBL | CA |
|---|---|---|---|---|---|---|---|---|---|---|---|
| -99.661 | 199.490 | 99.15200 | -10.34200 | .28969 | .07920 | -.28086 | .00934 | -.16204 | -.04849 | .00086 | .19013 |
| -100.170 | 99.633 | 100.60000 | -10.33400 | .26665 | .05640 | -.25091 | -.00212 | -.13673 | -.05027 | .00002 | .19723 |
| -98.671 | -.391 | 102.67000 | -10.23200 | .18836 | .02552 | -.18241 | .01711 | -.09192 | -.03708 | -.00201 | .19975 |
| | GRADIENT | .00000 | .00000 | .00000 | .00000 | .00000 | .00000 | .00000 | .00000 | .00000 | .00000 |

RUN NO. 3914/ 0 RN/L = 2.37 GRADIENT INTERVAL = -5.00/ 5.00

| Y | X | Z | ALPHA | BETA | PHI | CN | CLM | CY | CYN | CBL | CA |
|---|---|---|---|---|---|---|---|---|---|---|---|
| -150.270 | -.488 | 98.14300 | -10.31800 | .20560 | .03000 | -.24082 | .00471 | -.08667 | -.04828 | .00140 | .21280 |
| -152.580 | 99.602 | 98.88100 | -10.37500 | .28049 | .05708 | -.29408 | -.00018 | -.12801 | -.06169 | .00319 | .19952 |
| -151.090 | 199.500 | 100.19000 | -10.37300 | .29205 | .08898 | -.31727 | .01226 | -.15387 | -.05484 | .00502 | .18752 |
| | GRADIENT | .00000 | .00000 | .00000 | .00000 | .00000 | .00000 | .00000 | .00000 | .00000 | .00000 |

IA143, AEDC V41A-P8A, O/ET W/R.H. SRB SEPARATING (OVX333) ( 23 MAY 77 )

REFERENCE DATA

SREF = 2690.0000 SQ.FT. XMRP = 1097.0000 IN. XT
LREF = 1290.3000 INCHES YMRP = .0000 IN. YT
BREF = 1290.3000 INCHES ZMRP = 450.0000 IN. ZT
SCALE = .0100

PARAMETRIC DATA

ALPHA = -10.000 BETA = .000
DALPHA = -8.000 DBETA = 2.000
Z = 150.000 MACH = 4.500
JET PC = 1225.000

RUN NO. 3909/ 0 RN/L = 2.37 GRADIENT INTERVAL = -5.00/ 5.00

| Y | X | Z | ALPHA | BETA | PHI | CN | CLM | CY | CYN | CBL | CA |
|---|---|---|---|---|---|---|---|---|---|---|---|
| -52.147 | 199.410 | 151.96000 | -10.30400 | .47727 | .17071 | -.26103 | .02377 | -.26339 | -.08522 | .01105 | .20879 |
| -51.605 | 99.559 | 149.22000 | -10.35300 | .52942 | .15055 | -.27831 | .00657 | -.25629 | -.11164 | .01197 | .21360 |
| -50.436 | -.490 | 150.13000 | -10.11100 | .17685 | .04015 | -.13076 | .04748 | -.11067 | -.02235 | -.00394 | .15764 |
| | GRADIENT | .00000 | .00000 | .00000 | .00000 | .00000 | .00000 | .00000 | .00000 | .00000 | .00000 |

RUN NO. 3912/ 0 RN/L = 2.37 GRADIENT INTERVAL = -5.00/ 5.00

| Y | X | Z | ALPHA | BETA | PHI | CN | CLM | CY | CYN | CBL | CA |
|---|---|---|---|---|---|---|---|---|---|---|---|
| -100.240 | -.469 | 149.23000 | -10.17800 | .19844 | .03413 | -.16386 | .03716 | -.10526 | -.03486 | -.00248 | .19897 |
| -103.070 | 99.664 | 148.32000 | -10.26700 | .31043 | .07227 | -.21076 | .01557 | -.16029 | -.05850 | .00122 | .20820 |
| -101.770 | 199.460 | 149.37000 | -10.29600 | .34596 | .09766 | -.25280 | .02158 | -.19532 | -.05721 | .00128 | .20074 |
| | GRADIENT | .00000 | .00000 | .00000 | .00000 | .00000 | .00000 | .00000 | .00000 | .00000 | .00000 |

RUN NO. 3915/ 0 RN/L = 2.37 GRADIENT INTERVAL = -5.00/ 5.00

| Y | X | Z | ALPHA | BETA | PHI | CN | CLM | CY | CYN | CBL | CA |
|---|---|---|---|---|---|---|---|---|---|---|---|
| -152.420 | 199.490 | 151.01000 | -10.34200 | .36462 | .10839 | -.30075 | .02311 | -.19125 | -.06888 | .00590 | .20158 |
| -150.470 | 99.460 | 150.50000 | -10.34000 | .34309 | .07717 | -.27637 | .01243 | -.16109 | -.07347 | .00444 | .21164 |
| -148.640 | -.509 | 151.77000 | -10.28000 | .25062 | .04420 | -.22273 | .01796 | -.11350 | -.05501 | .00154 | .22234 |
| | GRADIENT | .00000 | .00000 | .00000 | .00000 | .00000 | .00000 | .00000 | .00000 | .00000 | .00000 |

IA143, AEDC V41A-P8A, O/ET W/R.H. SRB SEPARATING (OVX334) ( 23 MAY 77 )

REFERENCE DATA

SREF = 2690.0000 SQ.FT. XMRP = 1097.0000 IN. XT
LREF = 1290.3000 INCHES YMRP = .0000 IN. YT
BREF = 1290.3000 INCHES ZMRP = 450.0000 IN. ZT
SCALE = .0100

PARAMETRIC DATA

ALPHA = -10.000 BETA = .000
DALPHA = -8.000 DBETA = 2.000
Z = 200.000 MACH = 4.500
JET PC = 1225.000

RUN NO. 3910/ 0 RN/L = 2.37 GRADIENT INTERVAL = -5.00/ 5.00

| Y | X | Z | ALPHA | BETA | PHI | CN | CLM | CY | CYN | CBL | CA |
|---|---|---|---|---|---|---|---|---|---|---|---|
| -51.523 | -.344 | 200.67000 | -10.08900 | .19113 | .05004 | -.12915 | .05935 | -.12173 | -.02357 | -.00327 | .15901 |
| -51.542 | 99.555 | 200.73000 | -10.26400 | .60267 | .16095 | -.23337 | .03316 | -.29727 | -.12312 | .01003 | .22078 |
| -49.470 | 199.410 | 201.05000 | -10.23000 | .52655 | .17560 | -.22513 | .04881 | -.29660 | -.08967 | .00800 | .22525 |
| | GRADIENT | .00000 | .00000 | .00000 | .00000 | .00000 | .00000 | .00000 | .00000 | .00000 | .00000 |

IA143, AEDC V41A-P8A, O/ET W/R.H. SRB SEPARATING (OVX334) ( 23 MAY 77 )

REFERENCE DATA

SREF = 2690.0000 SQ.FT. XMRP = 1097.0000 IN. XT
LREF = 1290.3000 INCHES YMRP = .0000 IN. YT
BREF = 1290.3000 INCHES ZMRP = 450.0000 IN. ZT
SCALE = .0100

PARAMETRIC DATA

ALPHA = -10.000 BETA = .000
DALPHA = -8.000 DBETA = 2.000
Z = 200.000 MACH = 4.500
JET PC = 1225.000

RUN NO. 3911/ 0 RN/L = 2.37 GRADIENT INTERVAL = -5.00/ 5.00

| Y | X | Z | ALPHA | BETA | PHI | CN | CLM | CY | CYN | CBL | CA |
|---|---|---|---|---|---|---|---|---|---|---|---|
| -97.722 | 199.490 | 200.11000 | -10.24000 | .39638 | .11574 | -.22014 | .03695 | -.22381 | -.06584 | .00229 | .21065 |
| -100.030 | 99.681 | 200.98000 | -10.21800 | .35994 | .08685 | -.18238 | .02989 | -.18384 | -.06915 | .00252 | .21981 |
| -97.666 | -.493 | 202.16000 | -10.13600 | .20952 | .03624 | -.14366 | .05040 | -.11735 | -.03334 | -.00400 | .20182 |
| | GRADIENT | .00000 | .00000 | .00000 | .00000 | .00000 | .00000 | .00000 | .00000 | .00000 | .00000 |

RUN NO. 3916/ 0 RN/L = 2.37 GRADIENT INTERVAL = -5.00/ 5.00

| Y | X | Z | ALPHA | BETA | PHI | CN | CLM | CY | CYN | CBL | CA |
|---|---|---|---|---|---|---|---|---|---|---|---|
| -151.490 | -.469 | 201.14000 | -10.24700 | .28377 | .04768 | -.20498 | .02901 | -.13338 | -.05927 | .00007 | .23184 |
| -153.340 | 99.519 | 199.00000 | -10.29600 | .38285 | .08751 | -.25302 | .02580 | -.18452 | -.07949 | .00417 | .22055 |
| -151.200 | 199.480 | 199.88000 | -10.30500 | .41322 | .12348 | -.28385 | .03748 | -.22303 | -.07458 | .00536 | .21259 |
| | GRADIENT | .00000 | .00000 | .00000 | .00000 | .00000 | .00000 | .00000 | .00000 | .00000 | .00000 |

IA143, AEDC V41A-P8A, O/ET W/R.H. SRB SEPARATING (OVX335) ( 23 MAY 77 )

REFERENCE DATA

SREF = 2690.0000 SQ.FT. XMRP = 1097.0000 IN. XT
LREF = 1290.3000 INCHES YMRP = .0000 IN. YT
BREF = 1290.3000 INCHES ZMRP = 450.0000 IN. ZT
SCALE = .0100

PARAMETRIC DATA

ALPHA = 10.000 BETA = .000
DALPHA = .000 DBETA = -4.000
Z = .000 MACH = 4.500
JET PC = 1225.000

RUN NO. 3924/ 0 RN/L = 2.37 GRADIENT INTERVAL = -5.00/ 5.00

| Y | X | Z | ALPHA | BETA | PHI | CN | CLM | CY | CYN | CBL | CA |
|---|---|---|---|---|---|---|---|---|---|---|---|
| -119.930 | -1.077 | -.38606 | 10.00200 | .16437 | .03712 | .12352 | -.04155 | -.08408 | -.02528 | -.00026 | .13232 |
| -120.260 | 99.827 | .17990 | 10.01400 | .16125 | .04506 | .12996 | -.03713 | -.07378 | -.02900 | .00343 | .13994 |
| -121.460 | 199.800 | -.40718 | 10.00600 | .17456 | .04438 | .12304 | -.03297 | -.10330 | -.01853 | -.00255 | .15987 |
| | GRADIENT | .00000 | .00000 | .00000 | .00000 | .00000 | .00000 | .00000 | .00000 | .00000 | .00000 |

RUN NO. 3929/ 0 RN/L = 2.36 GRADIENT INTERVAL = -5.00/ 5.00

| Y | X | Z | ALPHA | BETA | PHI | CN | CLM | CY | CYN | CBL | CA |
|---|---|---|---|---|---|---|---|---|---|---|---|
| -149.260 | 199.820 | -.83535 | 9.99700 | .17579 | .05088 | .10774 | -.02845 | -.10516 | -.01768 | -.00159 | .16350 |
| -150.030 | 99.791 | .02030 | 10.01300 | .16166 | .04486 | .12609 | -.03330 | -.07630 | -.02789 | .00287 | .14943 |
| -150.790 | -.036 | -.51423 | 10.00600 | .16394 | .04240 | .12549 | -.03930 | -.07896 | -.02762 | .00194 | .13901 |
| | GRADIENT | .00000 | .00000 | .00000 | .00000 | .00000 | .00000 | .00000 | .00000 | .00000 | .00000 |

IA143, AEDC V41A-P8A, O/ET W/R.H. SRB SEPARATING (OVX335) ( 23 MAY 77 )

REFERENCE DATA

SREF = 2690.0000 SQ.FT. XMRP = 1097.0000 IN. XT
LREF = 1290.3000 INCHES YMRP = .0000 IN. YT
BREF = 1290.3000 INCHES ZMRP = 450.0000 IN. ZT
SCALE = .0100

PARAMETRIC DATA

ALPHA = 10.000 BETA = .000
DALPHA = .000 DBETA = -4.000
Z = .000 MACH = 4.500
JET PC = 1225.000

RUN NO. 3930/ 0 RN/L = 2.36 GRADIENT INTERVAL = -5.00/ 5.00

| Y | X | Z | ALPHA | BETA | PHI | CN | CLM | CY | CYN | CBL | CA |
|---|---|---|---|---|---|---|---|---|---|---|---|
| -200.250 | -.095 | -.27284 | 10.01200 | .16672 | .04841 | .12905 | -.03559 | -.07064 | -.03304 | .00521 | .14800 |
| -200.830 | 99.824 | -.20163 | 10.01500 | .15872 | .05124 | .11956 | -.02532 | -.08270 | -.02238 | .00242 | .16075 |
| -201.600 | 199.840 | -.81129 | 9.99160 | .18983 | .06099 | .09656 | -.02251 | -.12774 | -.01068 | -.00380 | .17483 |
| | GRADIENT | .00000 | .00000 | .00000 | .00000 | .00000 | .00000 | .00000 | .00000 | .00000 | .00000 |

IA143, AEDC V41A-P8A, O/ET W/R.H. SRB SEPARATING (OVX336) ( 23 MAY 77 )

REFERENCE DATA

SREF = 2690.0000 SQ.FT. XMRP = 1097.0000 IN. XT
LREF = 1290.3000 INCHES YMRP = .0000 IN. YT
BREF = 1290.3000 INCHES ZMRP = 450.0000 IN. ZT
SCALE = .0100

PARAMETRIC DATA

ALPHA = 10.000 BETA = .000
DALPHA = .000 DBETA = -4.000
Z = .000 MACH = 4.500
JET PC = 1225.000

RUN NO. 4032/ 0 RN/L = 2.38 GRADIENT INTERVAL = -5.00/ 5.00

| Y | X | Z | ALPHA | BETA | PHI | CN | CLM | CY | CYN | CBL | CA |
|---|---|---|---|---|---|---|---|---|---|---|---|
| -149.950 | -.992 | -.57058 | 10.00500 | .16810 | .04344 | .12354 | -.03793 | -.08735 | -.02465 | .00049 | .14169 |
| -150.160 | 99.747 | .11272 | 10.01200 | .16712 | .04626 | .12388 | -.03180 | -.08513 | -.02531 | .00150 | .15139 |
| -151.260 | 199.720 | -.55921 | 9.99690 | .18047 | .05151 | .10574 | -.02691 | -.11430 | -.01467 | -.00322 | .16543 |
| | GRADIENT | .00000 | .00000 | .00000 | .00000 | .00000 | .00000 | .00000 | .00000 | .00000 | .00000 |

IA143, AEDC V41A-P8A, O/ET W/R.H. SRB SEPARATING (OVX337) ( 23 MAY 77 )

REFERENCE DATA

SREF = 2690.0000 SQ.FT. XMRP = 1097.0000 IN. XT
LREF = 1290.3000 INCHES YMRP = .0000 IN. YT
BREF = 1290.3000 INCHES ZMRP = 450.0000 IN. ZT
SCALE = .0100

PARAMETRIC DATA

ALPHA = 10.000 BETA = .000
DALPHA = .000 DBETA = -4.000
Z = 100.000 MACH = 4.500
JET PC = 1225.000

RUN NO. 3925/ 0 RN/L = 2.37 GRADIENT INTERVAL = -5.00/ 5.00

| Y | X | Z | ALPHA | BETA | PHI | CN | CLM | CY | CYN | CBL | CA |
|---|---|---|---|---|---|---|---|---|---|---|---|
| -122.050 | 199.740 | 100.30000 | 10.02500 | .24629 | .04731 | .13873 | -.03429 | -.13573 | -.03309 | -.00431 | .14536 |
| -120.100 | 99.806 | 99.76300 | 10.02100 | .24602 | .05007 | .13543 | -.03577 | -.11632 | -.04368 | .00068 | .14158 |
| -120.950 | -.180 | 99.66400 | 10.01300 | .25595 | .04261 | .13400 | -.04001 | -.11447 | -.04992 | .00037 | .13901 |
| | GRADIENT | .00000 | .00000 | .00000 | .00000 | .00000 | .00000 | .00000 | .00000 | .00000 | .00000 |

RUN NO. 3928/ 0 RN/L = 2.36 GRADIENT INTERVAL = -5.00/ 5.00

| Y | X | Z | ALPHA | BETA | PHI | CN | CLM | CY | CYN | CBL | CA |
|---|---|---|---|---|---|---|---|---|---|---|---|
| -149.420 | -.200 | 98.93800 | 10.01500 | .24609 | .04173 | .13834 | -.04093 | -.09775 | -.05489 | .00335 | .14140 |
| -150.660 | 99.966 | 100.14000 | 10.02200 | .23350 | .04690 | .13712 | -.03535 | -.10471 | -.04478 | .00186 | .14473 |
| -150.920 | 199.910 | 99.63600 | 10.01800 | .23325 | .03875 | .13958 | -.03712 | -.12854 | -.03187 | -.00525 | .15376 |
| | GRADIENT | .00000 | .00000 | .00000 | .00000 | .00000 | .00000 | .00000 | .00000 | .00000 | .00000 |

RUN NO. 3931/ 0 RN/L = 2.36 GRADIENT INTERVAL = -5.00/ 5.00

| Y | X | Z | ALPHA | BETA | PHI | CN | CLM | CY | CYN | CBL | CA |
|---|---|---|---|---|---|---|---|---|---|---|---|
| -201.750 | 199.820 | 100.35000 | 10.00700 | .23680 | .05726 | .11164 | -.02366 | -.13076 | -.03077 | -.00189 | .16877 |
| -199.690 | 99.857 | 100.25000 | 10.02300 | .21712 | .05080 | .12897 | -.02781 | -.09409 | -.04297 | .00391 | .15410 |
| -200.660 | -.160 | 99.72100 | 10.01800 | .22722 | .04604 | .13724 | -.03740 | -.08231 | -.05453 | .00639 | .14764 |
| | GRADIENT | .00000 | .00000 | .00000 | .00000 | .00000 | .00000 | .00000 | .00000 | .00000 | .00000 |

IA143, AEDC V41A-P8A, O/ET W/R.H. SRB SEPARATING (OVX338) ( 23 MAY 77 )

REFERENCE DATA

SREF = 2690.0000 SQ.FT. XMRP = 1097.0000 IN. XT
LREF = 1290.3000 INCHES YMRP = .0000 IN. YT
BREF = 1290.3000 INCHES ZMRP = 450.0000 IN. ZT
SCALE = .0100

PARAMETRIC DATA

ALPHA = 10.000 BETA = .000
DALPHA = .000 DBETA = -4.000
Z = 100.000 MACH = 4.500
JET PC = 1225.000

RUN NO. 4033/ 0 RN/L = 2.38 GRADIENT INTERVAL = -5.00/ 5.00

| Y | X | Z | ALPHA | BETA | PHI | CN | CLM | CY | CYN | CBL | CA |
|---|---|---|---|---|---|---|---|---|---|---|---|
| -152.230 | 199.690 | 100.51000 | 10.01700 | .23696 | .03875 | .13668 | -.03563 | -.13619 | -.02934 | -.00672 | .15580 |
| -150.090 | 99.811 | 99.80500 | 10.02100 | .23440 | .04726 | .13479 | -.03401 | -.11090 | -.04164 | .00056 | .14721 |
| -150.990 | -.130 | 99.58100 | 10.01400 | .24829 | .04249 | .13600 | -.03964 | -.10351 | -.05262 | .00233 | .14364 |
| | GRADIENT | .00000 | .00000 | .00000 | .00000 | .00000 | .00000 | .00000 | .00000 | .00000 | .00000 |

IA143, AEDC V41A-P8A, O/ET W/R.H. SRB SEPARATING (OVX339) ( 23 MAY 77 )

REFERENCE DATA

SREF = 2690.0000 SQ.FT. XMRP = 1097.0000 IN. XT
LREF = 1290.3000 INCHES YMRP = .0000 IN. YT
BREF = 1290.3000 INCHES ZMRP = 450.0000 IN. ZT
SCALE = .0100

PARAMETRIC DATA

ALPHA = 10.000 BETA = .000
DALPHA = .000 DBETA = -4.000
Z = 200.000 MACH = 4.500
JET PC = 1225.000

RUN NO. 3926/ 0 RN/L = 2.36 GRADIENT INTERVAL = -5.00/ 5.00

| Y | X | Z | ALPHA | BETA | PHI | CN | CLM | CY | CYN | CBL | CA |
|---|---|---|---|---|---|---|---|---|---|---|---|
| -121.940 | -.126 | 200.72000 | 10.05900 | .34242 | .06379 | .16239 | -.02830 | -.14372 | -.07159 | .00395 | .14700 |
| -120.590 | 99.925 | 199.74000 | 10.05800 | .33562 | .08020 | .14925 | -.02153 | -.15248 | -.06214 | .00463 | .14550 |
| -120.330 | 199.830 | 199.43000 | 10.05300 | .32069 | .07312 | .14451 | -.02173 | -.16190 | -.05055 | .00001 | .14435 |
| | GRADIENT | .00000 | .00000 | .00000 | .00000 | .00000 | .00000 | .00000 | .00000 | .00000 | .00000 |

RUN NO. 3927/ 0 RN/L = 2.36 GRADIENT INTERVAL = -5.00/ 5.00

| Y | X | Z | ALPHA | BETA | PHI | CN | CLM | CY | CYN | CBL | CA |
|---|---|---|---|---|---|---|---|---|---|---|---|
| -150.280 | 199.850 | 199.51000 | 10.04200 | .29764 | .06282 | .14146 | -.02458 | -.15268 | -.04604 | -.00150 | .15196 |
| -150.490 | 99.878 | 199.69000 | 10.05000 | .30548 | .06855 | .14390 | -.02269 | -.13607 | -.05847 | .00399 | .14771 |
| -151.000 | -.152 | 199.92000 | 10.05300 | .32052 | .05706 | .15398 | -.02646 | -.12958 | -.07002 | .00433 | .15021 |
| | GRADIENT | .00000 | .00000 | .00000 | .00000 | .00000 | .00000 | .00000 | .00000 | .00000 | .00000 |

RUN NO. 3932/ 0 RN/L = 2.37 GRADIENT INTERVAL = -5.00/ 5.00

| Y | X | Z | ALPHA | BETA | PHI | CN | CLM | CY | CYN | CBL | CA |
|---|---|---|---|---|---|---|---|---|---|---|---|
| -201.680 | -.166 | 200.58000 | 10.04500 | .28628 | .05187 | .14640 | -.02511 | -.10081 | -.07089 | .00750 | .15532 |
| -200.510 | 99.916 | 199.54000 | 10.04400 | .27833 | .06476 | .13707 | -.02111 | -.11542 | -.05790 | .00606 | .15115 |
| -200.560 | 199.810 | 199.52000 | 10.03200 | .27901 | .07256 | .12578 | -.01993 | -.13746 | -.04524 | .00257 | .15970 |
| | GRADIENT | .00000 | .00000 | .00000 | .00000 | .00000 | .00000 | .00000 | .00000 | .00000 | .00000 |

IA143, AEDC V41A-P8A, O/ET W/R.H. SRB SEPARATING (OVX340) ( 23 MAY 77 )

REFERENCE DATA

SREF = 2690.0000 SQ.FT. XMRP = 1097.0000 IN. XT
LREF = 1290.3000 INCHES YMRP = .0000 IN. YT
BREF = 1290.3000 INCHES ZMRP = 450.0000 IN. ZT
SCALE = .0100

PARAMETRIC DATA

ALPHA = 10.000 BETA = .000
DALPHA = .000 DBETA = -4.000
Z = 200.000 MACH = 4.500
JET PC = 1225.000

RUN NO. 4034/ 0 RN/L = 2.38 GRADIENT INTERVAL = -5.00/ 5.00

| Y | X | Z | ALPHA | BETA | PHI | CN | CLM | CY | CYN | CBL | CA |
|---|---|---|---|---|---|---|---|---|---|---|---|
| -151.980 | -.305 | 200.67000 | 10.05100 | .32088 | .05604 | .15162 | -.02530 | -.13400 | -.06729 | .00294 | .15277 |
| -150.570 | 99.715 | 199.65000 | 10.04900 | .30862 | .06829 | .14112 | -.02100 | -.14253 | -.05642 | .00270 | .14940 |
| -150.760 | 199.690 | 199.54000 | 10.04100 | .30081 | .06307 | .13808 | -.02279 | -.15912 | -.04381 | -.00271 | .15406 |
| | GRADIENT | .00000 | .00000 | .00000 | .00000 | .00000 | .00000 | .00000 | .00000 | .00000 | .00000 |

IA143, AEDC V41A-P8A, O/ET W/R.H. SRB SEPARATING (OVX341) ( 23 MAY 77 )

REFERENCE DATA

SREF = 2690.0000 SQ.FT. XMRP = 1097.0000 IN. XT
LREF = 1290.3000 INCHES YMRP = .0000 IN. YT
BREF = 1290.3000 INCHES ZMRP = 450.0000 IN. ZT
SCALE = .0100

PARAMETRIC DATA

ALPHA = 10.000 BETA = .000
DALPHA = .000 DBETA = -2.000
Z = .000 MACH = 4.500
JET PC = 1225.000

RUN NO. 3933/ 0 RN/L = 2.38 GRADIENT INTERVAL = -5.00/ 5.00

| Y | X | Z | ALPHA | BETA | PHI | CN | CLM | CY | CYN | CBL | CA |
|---|---|---|---|---|---|---|---|---|---|---|---|
| -70.118 | -.898 | -.45504 | 9.99230 | .17991 | .03952 | .11062 | -.03948 | -.08108 | -.03398 | .00202 | .13366 |
| -71.564 | 99.934 | .42476 | 10.01900 | .17305 | .03988 | .13291 | -.03659 | -.08427 | -.02897 | .00086 | .13570 |
| -66.976 | 199.770 | -.39466 | 10.00700 | .13873 | .02659 | .13697 | -.04511 | -.03422 | -.04238 | .00734 | .13969 |
| | GRADIENT | .00000 | .00000 | .00000 | .00000 | .00000 | .00000 | .00000 | .00000 | .00000 | .00000 |

RUN NO. 3938/ 0 RN/L = 2.38 GRADIENT INTERVAL = -5.00/ 5.00

| Y | X | Z | ALPHA | BETA | PHI | CN | CLM | CY | CYN | CBL | CA |
|---|---|---|---|---|---|---|---|---|---|---|---|
| -99.801 | 199.830 | -.27679 | 10.04300 | .12774 | .02080 | .15676 | -.03797 | -.06831 | -.01870 | -.00241 | .12970 |
| -101.200 | 99.768 | -1.24370 | 10.01300 | .15870 | .03897 | .12766 | -.03642 | -.07166 | -.02958 | .00257 | .13780 |
| -100.670 | -.078 | -.54333 | 10.00000 | .17534 | .03623 | .11965 | -.03984 | -.06984 | -.03839 | .00363 | .13463 |
| | GRADIENT | .00000 | .00000 | .00000 | .00000 | .00000 | .00000 | .00000 | .00000 | .00000 | .00000 |

RUN NO. 3939/ 0 RN/L = 2.38 GRADIENT INTERVAL = -5.00/ 5.00

| Y | X | Z | ALPHA | BETA | PHI | CN | CLM | CY | CYN | CBL | CA |
|---|---|---|---|---|---|---|---|---|---|---|---|
| -151.110 | -.121 | -.62147 | 10.00500 | .16669 | .04063 | .12609 | -.03939 | -.06364 | -.03759 | .00530 | .14279 |
| -150.570 | 99.868 | .19711 | 10.01200 | .16071 | .04133 | .12464 | -.03209 | -.07205 | -.03010 | .00308 | .15169 |
| -151.300 | 199.830 | -.59466 | 9.99560 | .18048 | .04766 | .10745 | -.02854 | -.10714 | -.01894 | -.00235 | .16598 |
| | GRADIENT | .00000 | .00000 | .00000 | .00000 | .00000 | .00000 | .00000 | .00000 | .00000 | .00000 |

IA143, AEDC V41A-P8A, O/ET W/R.H. SRB SEPARATING (OVX342) ( 23 MAY 77 )

REFERENCE DATA

SREF = 2690.0000 SQ.FT. XMRP = 1097.0000 IN. XT
LREF = 1290.3000 INCHES YMRP = .0000 IN. YT
BREF = 1290.3000 INCHES ZMRP = 450.0000 IN. ZT
SCALE = .0100

PARAMETRIC DATA

ALPHA = 10.000 BETA = .000
DALPHA = .000 DBETA = -2.000
Z = 100.000 MACH = 4.500
JET PC = 1225.000

RUN NO. 3934/ 0 RN/L = 2.38 GRADIENT INTERVAL = -5.00/ 5.00

| Y | X | Z | ALPHA | BETA | PHI | CN | CLM | CY | CYN | CBL | CA |
|---|---|---|---|---|---|---|---|---|---|---|---|
| -74.608 | 199.910 | 100.44000 | 10.03900 | .25309 | .07086 | .15824 | -.03698 | -.08536 | -.06273 | .01238 | .14799 |
| -72.358 | 99.792 | 100.17000 | 10.04500 | .25988 | .07430 | .16284 | -.03677 | -.09769 | -.05869 | .01071 | .14766 |
| -72.135 | -.195 | 98.55300 | 10.00300 | .30645 | .06385 | .12575 | -.04087 | -.13702 | -.05880 | .00293 | .13928 |
| | GRADIENT | .00000 | .00000 | .00000 | .00000 | .00000 | .00000 | .00000 | .00000 | .00000 | .00000 |

IA143, AEDC V41A-P8A, O/ET W/R.H. SRB SEPARATING (OVX342) ( 23 MAY 77 )

REFERENCE DATA

SREF = 2690.0000 SQ.FT. XMRP = 1097.0000 IN. XT
LREF = 1290.3000 INCHES YMRP = .0000 IN. YT
BREF = 1290.3000 INCHES ZMRP = 450.0000 IN. ZT
SCALE = .0100

PARAMETRIC DATA

ALPHA = 10.000 BETA = .000
DALPHA = .000 DBETA = -2.000
Z = 100.000 MACH = 4.500
JET PC = 1225.000

RUN NO. 3937/ 0 RN/L = 2.38 GRADIENT INTERVAL = -5.00/ 5.00

| Y | X | Z | ALPHA | BETA | PHI | CN | CLM | CY | CYN | CBL | CA |
|---|---|---|---|---|---|---|---|---|---|---|---|
| -99.348 | -.122 | 98.30500 | 10.00600 | .28560 | .05447 | .12287 | -.03619 | -.11784 | -.06066 | .00400 | .14512 |
| -100.680 | 99.927 | 100.01000 | 10.02100 | .26932 | .05714 | .13009 | -.03240 | -.12421 | -.04945 | .00192 | .14154 |
| -100.130 | 199.810 | 100.62000 | 10.04400 | .22855 | .06351 | .16110 | -.03894 | -.08829 | -.05041 | .00852 | .13537 |
| | GRADIENT | .00000 | .00000 | .00000 | .00000 | .00000 | .00000 | .00000 | .00000 | .00000 | .00000 |

RUN NO. 3940/ 0 RN/L = 2.38 GRADIENT INTERVAL = -5.00/ 5.00

| Y | X | Z | ALPHA | BETA | PHI | CN | CLM | CY | CYN | CBL | CA |
|---|---|---|---|---|---|---|---|---|---|---|---|
| -151.950 | 199.780 | 100.52000 | 10.01500 | .23570 | .03921 | .13384 | -.03445 | -.12712 | -.03384 | -.00463 | .15733 |
| -150.220 | 99.869 | 99.80300 | 10.02100 | .23132 | .04535 | .13322 | -.03256 | -.10098 | -.04597 | .00224 | .14864 |
| -150.530 | -.144 | 99.61700 | 10.01100 | .24668 | .04188 | .13282 | -.03856 | -.09141 | -.05868 | .00487 | .14726 |
| | GRADIENT | .00000 | .00000 | .00000 | .00000 | .00000 | .00000 | .00000 | .00000 | .00000 | .00000 |

IA143, AEDC V41A-P8A, O/ET W/R.H. SRB SEPARATING (OVX343) ( 23 MAY 77 )

REFERENCE DATA

SREF = 2690.0000 SQ.FT. XMRP = 1097.0000 IN. XT
LREF = 1290.3000 INCHES YMRP = .0000 IN. YT
BREF = 1290.3000 INCHES ZMRP = 450.0000 IN. ZT
SCALE = .0100

PARAMETRIC DATA

ALPHA = 10.000 BETA = .000
DALPHA = .000 DBETA = -2.000
Z = 200.000 MACH = 4.500
JET PC = 1225.000

RUN NO. 3935/ 0 RN/L = 2.38 GRADIENT INTERVAL = -5.00/ 5.00

| Y | X | Z | ALPHA | BETA | PHI | CN | CLM | CY | CYN | CBL | CA |
|---|---|---|---|---|---|---|---|---|---|---|---|
| -72.276 | -.128 | 202.03000 | 10.09300 | .39755 | .08583 | .19003 | -.02148 | -.16666 | -.08223 | .00689 | .16136 |
| -70.207 | 99.892 | 200.53000 | 10.12900 | .37373 | .09960 | .21623 | -.01760 | -.15188 | -.07855 | .01130 | .15657 |
| -70.812 | 199.740 | 199.57000 | 10.12700 | .37721 | .11607 | .20519 | -.01351 | -.15804 | -.07536 | .01334 | .15052 |
| | GRADIENT | .00000 | .00000 | .00000 | .00000 | .00000 | .00000 | .00000 | .00000 | .00000 | .00000 |

RUN NO. 3936/ 0 RN/L = 2.38 GRADIENT INTERVAL = -5.00/ 5.00

| Y | X | Z | ALPHA | BETA | PHI | CN | CLM | CY | CYN | CBL | CA |
|---|---|---|---|---|---|---|---|---|---|---|---|
| -101.120 | 199.870 | 199.23000 | 10.10600 | .34588 | .10287 | .19519 | -.02156 | -.14569 | -.06901 | .01138 | .14264 |
| -101.060 | 100.000 | 198.40000 | 10.06600 | .35855 | .08925 | .15466 | -.02048 | -.16133 | -.06711 | .00602 | .14443 |
| -100.880 | -.139 | 199.95000 | 10.06900 | .37563 | .07689 | .16913 | -.02442 | -.15597 | -.07879 | .00602 | .15636 |
| | GRADIENT | .00000 | .00000 | .00000 | .00000 | .00000 | .00000 | .00000 | .00000 | .00000 | .00000 |

IA143, AEDC V41A-P8A, O/ET W/R.H. SRB SEPARATING (OVX343) ( 23 MAY 77 )

REFERENCE DATA

SREF = 2690.0000 SQ.FT. XMRP = 1097.0000 IN. XT
LREF = 1290.3000 INCHES YMRP = .0000 IN. YT
BREF = 1290.3000 INCHES ZMRP = 450.0000 IN. ZT
SCALE = .0100

PARAMETRIC DATA

ALPHA = 10.000 BETA = .000
DALPHA = .000 DBETA = -2.000
Z = 200.000 MACH = 4.500
JET PC = 1225.000

RUN NO. 3941/ 0 RN/L = 2.38 GRADIENT INTERVAL = -5.00/ 5.00

| Y | X | Z | ALPHA | BETA | PHI | CN | CLM | CY | CYN | CBL | CA |
|---|---|---|---|---|---|---|---|---|---|---|---|
| -151.960 | -.204 | 200.66000 | 10.05100 | .32669 | .06026 | .15020 | -.02369 | -.12477 | -.07517 | .00647 | .15780 |
| -150.700 | 99.860 | 199.66000 | 10.04900 | .31019 | .06916 | .14019 | -.02083 | -.13630 | -.06057 | .00441 | .14941 |
| -150.730 | 199.780 | 199.56000 | 10.04300 | .29834 | .06206 | .13815 | -.02246 | -.15177 | -.04690 | -.00140 | .15235 |
| | GRADIENT | .00000 | .00000 | .00000 | .00000 | .00000 | .00000 | .00000 | .00000 | .00000 | .00000 |

IA143, AEDC V41A-P8A, O/ET W/R.H. SRB SEPARATING (OVX344) ( 23 MAY 77 )

REFERENCE DATA

SREF = 2690.0000 SQ.FT. XMRP = 1097.0000 IN. XT
LREF = 1290.3000 INCHES YMRP = .0000 IN. YT
BREF = 1290.3000 INCHES ZMRP = 450.0000 IN. ZT
SCALE = .0100

PARAMETRIC DATA

ALPHA = 10.000 BETA = .000
DALPHA = .000 DBETA = .000
Z = .000 MACH = 4.500
JET PC = 1225.000

RUN NO. 3942/ 0 RN/L = 2.37 GRADIENT INTERVAL = -5.00/ 5.00

| Y | X | Z | ALPHA | BETA | PHI | CN | CLM | CY | CYN | CBL | CA |
|---|---|---|---|---|---|---|---|---|---|---|---|
| -50.092 | -.896 | -.38538 | 9.98120 | .19128 | .04204 | .09987 | -.03903 | -.07086 | -.04476 | .00568 | .13642 |
| -47.955 | 99.921 | .42514 | 9.99270 | .16304 | .03640 | .13393 | -.04934 | -.04322 | -.04776 | .00892 | .14951 |
| -50.175 | 199.840 | -.20180 | 9.98840 | .15039 | .02899 | .12901 | -.04878 | -.03298 | -.04829 | .00893 | .15024 |
| | GRADIENT | .00000 | .00000 | .00000 | .00000 | .00000 | .00000 | .00000 | .00000 | .00000 | .00000 |

RUN NO. 3947/ 0 RN/L = 2.37 GRADIENT INTERVAL = -5.00/ 5.00

| Y | X | Z | ALPHA | BETA | PHI | CN | CLM | CY | CYN | CBL | CA |
|---|---|---|---|---|---|---|---|---|---|---|---|
| -99.402 | 199.750 | -.29656 | 10.04100 | .12585 | .01794 | .15544 | -.03804 | -.06688 | -.01882 | -.00278 | .13218 |
| -102.020 | 99.903 | -1.10130 | 10.01200 | .15852 | .03263 | .12903 | -.03697 | -.07163 | -.03004 | .00134 | .14169 |
| -101.240 | -.101 | -.65395 | 9.99860 | .17311 | .03141 | .11940 | -.04007 | -.06191 | -.04226 | .00436 | .13767 |
| | GRADIENT | .00000 | .00000 | .00000 | .00000 | .00000 | .00000 | .00000 | .00000 | .00000 | .00000 |

RUN NO. 3948/ 0 RN/L = 2.37 GRADIENT INTERVAL = -5.00/ 5.00

| Y | X | Z | ALPHA | BETA | PHI | CN | CLM | CY | CYN | CBL | CA |
|---|---|---|---|---|---|---|---|---|---|---|---|
| -150.960 | -.217 | -.49016 | 10.00200 | .16538 | .03608 | .12620 | -.04021 | -.05705 | -.04107 | .00584 | .14529 |
| -150.710 | 99.961 | .16006 | 10.01200 | .15954 | .03823 | .12511 | -.03211 | -.06776 | -.03223 | .00339 | .15361 |
| -151.640 | 199.770 | -.46630 | 9.99470 | .18315 | .04469 | .10733 | -.02856 | -.10840 | -.01972 | -.00302 | .16794 |
| | GRADIENT | .00000 | .00000 | .00000 | .00000 | .00000 | .00000 | .00000 | .00000 | .00000 | .00000 |

IA143, AEDC V41A-P8A, O/ET W/R.H. SRB SEPARATING (OVX345) ( 23 MAY 77 )

REFERENCE DATA

SREF = 2690.0000 SQ.FT. XMRP = 1097.0000 IN. XT
LREF = 1290.3000 INCHES YMRP = .0000 IN. YT
BREF = 1290.3000 INCHES ZMRP = 450.0000 IN. ZT
SCALE = .0100

PARAMETRIC DATA

ALPHA = 10.000 BETA = .000
DALPHA = .000 DBETA = .000
Z = 100.000 MACH = 4.500
JET PC = 1225.000

RUN NO. 3943/ 0 RN/L = 2.37 GRADIENT INTERVAL = -5.00/ 5.00

| Y | X | Z | ALPHA | BETA | PHI | CN | CLM | CY | CYN | CBL | CA |
|---|---|---|---|---|---|---|---|---|---|---|---|
| -54.050 | 199.760 | 100.81000 | 10.03800 | .27442 | .07392 | .15265 | -.03254 | -.09340 | -.06787 | .01267 | .15581 |
| -51.492 | 99.767 | 99.69600 | 10.04100 | .27835 | .07242 | .16102 | -.03552 | -.09620 | -.06817 | .01200 | .15863 |
| -53.568 | -.203 | 98.82500 | 10.00500 | .34205 | .07546 | .12327 | -.03772 | -.14573 | -.06928 | .00571 | .14201 |
| | GRADIENT | .00000 | .00000 | .00000 | .00000 | .00000 | .00000 | .00000 | .00000 | .00000 | .00000 |

RUN NO. 3946/ 0 RN/L = 2.38 GRADIENT INTERVAL = -5.00/ 5.00

| Y | X | Z | ALPHA | BETA | PHI | CN | CLM | CY | CYN | CBL | CA |
|---|---|---|---|---|---|---|---|---|---|---|---|
| -99.259 | -.114 | 98.25200 | 10.00400 | .29116 | .05406 | .12047 | -.03521 | -.11458 | -.06494 | .00504 | .14938 |
| -100.890 | 100.010 | 100.08000 | 10.01900 | .26839 | .05609 | .12708 | -.03124 | -.12272 | -.04994 | .00199 | .14411 |
| -99.931 | 199.890 | 100.64000 | 10.04200 | .23204 | .06438 | .15900 | -.03853 | -.08947 | -.05122 | .00865 | .13688 |
| | GRADIENT | .00000 | .00000 | .00000 | .00000 | .00000 | .00000 | .00000 | .00000 | .00000 | .00000 |

RUN NO. 3949/ 0 RN/L = 2.37 GRADIENT INTERVAL = -5.00/ 5.00

| Y | X | Z | ALPHA | BETA | PHI | CN | CLM | CY | CYN | CBL | CA |
|---|---|---|---|---|---|---|---|---|---|---|---|
| -152.230 | 199.870 | 100.31000 | 10.01400 | .23706 | .03994 | .12884 | -.03173 | -.12649 | -.03475 | -.00425 | .16104 |
| -150.490 | 99.903 | 99.90700 | 10.01900 | .23188 | .04419 | .12850 | -.03027 | -.09927 | -.04725 | .00245 | .15167 |
| -151.240 | -.173 | 99.48900 | 10.00700 | .24846 | .04079 | .12763 | -.03689 | -.09031 | -.06033 | .00507 | .15125 |
| | GRADIENT | .00000 | .00000 | .00000 | .00000 | .00000 | .00000 | .00000 | .00000 | .00000 | .00000 |

IA143, AEDC V41A-P8A, O/ET W/R.H. SRB SEPARATING (OVX346) ( 23 MAY 77 )

REFERENCE DATA

SREF = 2690.0000 SQ.FT. XMRP = 1097.0000 IN. XT
LREF = 1290.3000 INCHES YMRP = .0000 IN. YT
BREF = 1290.3000 INCHES ZMRP = 450.0000 IN. ZT
SCALE = .0100

PARAMETRIC DATA

ALPHA = 10.000 BETA = .000
DALPHA = .000 DBETA = .000
Z = 200.000 MACH = 4.500
JET PC = 1225.000

RUN NO. 3944/ 0 RN/L = 2.37 GRADIENT INTERVAL = -5.00/ 5.00

| Y | X | Z | ALPHA | BETA | PHI | CN | CLM | CY | CYN | CBL | CA |
|---|---|---|---|---|---|---|---|---|---|---|---|
| -51.191 | -.328 | 199.69000 | 10.12300 | .39247 | .09640 | .21935 | -.01864 | -.16288 | -.08127 | .00949 | .17360 |
| -51.602 | 99.895 | 199.99000 | 10.13600 | .42302 | .11752 | .21838 | -.01322 | -.17947 | -.08418 | .01193 | .16389 |
| -50.426 | 199.780 | 199.72000 | 10.14300 | .41346 | .13112 | .21481 | -.00753 | -.17959 | -.07876 | .01392 | .15976 |
| | GRADIENT | .00000 | .00000 | .00000 | .00000 | .00000 | .00000 | .00000 | .00000 | .00000 | .00000 |

IA143, AEDC V41A-P8A, O/ET W/R.H. SRB SEPARATING (OVX346) ( 23 MAY 77 )

REFERENCE DATA

SREF = 2690.0000 SQ.FT. XMRP = 1097.0000 IN. XT
LREF = 1290.3000 INCHES YMRP = .0000 IN. YT
BREF = 1290.3000 INCHES ZMRP = 450.0000 IN. ZT
SCALE = .0100

PARAMETRIC DATA

ALPHA = 10.000 BETA = .000
DALPHA = .000 DBETA = .000
Z = 200.000 MACH = 4.500
JET PC = 1225.000

RUN NO. 3945/ 0 RN/L = 2.37 GRADIENT INTERVAL = -5.00/ 5.00

| Y | X | Z | ALPHA | BETA | PHI | CN | CLM | CY | CYN | CBL | CA |
|---|---|---|---|---|---|---|---|---|---|---|---|
| -101.020 | 199.820 | 198.69000 | 10.10400 | .35484 | .10479 | .19341 | -.02091 | -.14917 | -.07088 | .01156 | .14480 |
| -101.020 | 99.821 | 198.30000 | 10.06400 | .36007 | .08875 | .15229 | -.01974 | -.16097 | -.06814 | .00614 | .14711 |
| -101.160 | -.124 | 200.08000 | 10.06900 | .38499 | .07951 | .16725 | -.02211 | -.15217 | -.08519 | .00812 | .16338 |
| | GRADIENT | .00000 | .00000 | .00000 | .00000 | .00000 | .00000 | .00000 | .00000 | .00000 | .00000 |

RUN NO. 3950/ 0 RN/L = 2.37 GRADIENT INTERVAL = -5.00/ 5.00

| Y | X | Z | ALPHA | BETA | PHI | CN | CLM | CY | CYN | CBL | CA |
|---|---|---|---|---|---|---|---|---|---|---|---|
| -152.200 | -.097 | 200.62000 | 10.05000 | .33353 | .06227 | .14741 | -.02153 | -.12645 | -.07738 | .00700 | .16227 |
| -150.360 | 99.787 | 199.71000 | 10.04800 | .31774 | .07085 | .13591 | -.01818 | -.13922 | -.06234 | .00463 | .15283 |
| -150.770 | 199.720 | 199.61000 | 10.04300 | .30039 | .06016 | .13471 | -.01966 | -.15227 | -.04774 | -.00172 | .15507 |
| | GRADIENT | .00000 | .00000 | .00000 | .00000 | .00000 | .00000 | .00000 | .00000 | .00000 | .00000 |

IA143, AEDC V41A-P8A, O/ET W/R.H. SRB SEPARATING (OVX347) ( 23 MAY 77 )

REFERENCE DATA

SREF = 2690.0000 SQ.FT. XMRP = 1097.0000 IN. XT
LREF = 1290.3000 INCHES YMRP = .0000 IN. YT
BREF = 1290.3000 INCHES ZMRP = 450.0000 IN. ZT
SCALE = .0100

PARAMETRIC DATA

ALPHA = 10.000 BETA = .000
DALPHA = .000 DBETA = 2.000
Z = .000 MACH = 4.500
JET PC = 1225.000

RUN NO. 3951/ 0 RN/L = 2.37 GRADIENT INTERVAL = -5.00/ 5.00

| Y | X | Z | ALPHA | BETA | PHI | CN | CLM | CY | CYN | CBL | CA |
|---|---|---|---|---|---|---|---|---|---|---|---|
| -50.383 | -.941 | -.32150 | 9.98080 | .18964 | .03649 | .10105 | -.03930 | -.06723 | -.04651 | .00532 | .13937 |
| -47.712 | 99.912 | .42200 | 9.98670 | .15665 | .03000 | .13463 | -.05289 | -.03833 | -.04808 | .00835 | .15103 |
| -50.748 | 199.780 | -.16763 | 9.98300 | .14972 | .02631 | .12961 | -.05207 | -.02864 | -.05059 | .00935 | .15115 |
| | GRADIENT | .00000 | .00000 | .00000 | .00000 | .00000 | .00000 | .00000 | .00000 | .00000 | .00000 |

RUN NO. 3956/ 0 RN/L = 2.37 GRADIENT INTERVAL = -5.00/ 5.00

| Y | X | Z | ALPHA | BETA | PHI | CN | CLM | CY | CYN | CBL | CA |
|---|---|---|---|---|---|---|---|---|---|---|---|
| -98.586 | 199.800 | -.49610 | 10.03000 | .13006 | .01644 | .15059 | -.04055 | -.06415 | -.02243 | -.00214 | .13629 |
| -101.700 | 99.757 | -.71435 | 10.01100 | .15963 | .02967 | .12868 | -.03670 | -.07054 | -.03141 | .00108 | .14543 |
| -100.840 | -.124 | -.61372 | 9.99590 | .17208 | .02762 | .11808 | -.04014 | -.05893 | -.04385 | .00426 | .14103 |
| | GRADIENT | .00000 | .00000 | .00000 | .00000 | .00000 | .00000 | .00000 | .00000 | .00000 | .00000 |

IA143, AEDC V41A-P8A, O/ET W/R.H. SRB SEPARATING (OVX347) ( 23 MAY 77 )

REFERENCE DATA

SREF = 2690.0000 SQ.FT. XMRP = 1097.0000 IN. XT
LREF = 1290.3000 INCHES YMRP = .0000 IN. YT
BREF = 1290.3000 INCHES ZMRP = 450.0000 IN. ZT
SCALE = .0100

PARAMETRIC DATA

ALPHA = 10.000 BETA = .000
DALPHA = .000 DBETA = 2.000
Z = .000 MACH = 4.500
JET PC = 1225.000

RUN NO. 3957/ 0 RN/L = 2.37 GRADIENT INTERVAL = -5.00/ 5.00

| Y | X | Z | ALPHA | BETA | PHI | CN | CLM | CY | CYN | CBL | CA |
|---|---|---|---|---|---|---|---|---|---|---|---|
| -150.900 | -.155 | -.57135 | 10.00100 | .16383 | .03236 | .12698 | -.04060 | -.05153 | -.04377 | .00628 | .14876 |
| -150.550 | 99.783 | .11475 | 10.01100 | .15881 | .03764 | .12385 | -.03102 | -.06477 | -.03361 | .00391 | .15737 |
| -151.620 | 199.700 | -.53238 | 9.99310 | .18567 | .04342 | .10560 | -.02772 | -.10958 | -.02033 | -.00335 | .17153 |
| | GRADIENT | .00000 | .00000 | .00000 | .00000 | .00000 | .00000 | .00000 | .00000 | .00000 | .00000 |

IA143, AEDC V41A-P8A, O/ET W/R.H. SRB SEPARATING (OVX348) ( 23 MAY 77 )

REFERENCE DATA

SREF = 2690.0000 SQ.FT. XMRP = 1097.0000 IN. XT
LREF = 1290.3000 INCHES YMRP = .0000 IN. YT
BREF = 1290.3000 INCHES ZMRP = 450.0000 IN. ZT
SCALE = .0100

PARAMETRIC DATA

ALPHA = 10.000 BETA = .000
DALPHA = .000 DBETA = 2.000
Z = 100.000 MACH = 4.500
JET PC = 1225.000

RUN NO. 3952/ 0 RN/L = 2.37 GRADIENT INTERVAL = -5.00/ 5.00

| Y | X | Z | ALPHA | BETA | PHI | CN | CLM | CY | CYN | CBL | CA |
|---|---|---|---|---|---|---|---|---|---|---|---|
| -53.863 | 199.760 | 100.89000 | 10.03500 | .27664 | .07255 | .15089 | -.03310 | -.09304 | -.06914 | .01263 | .15811 |
| -51.331 | 99.765 | 99.84200 | 10.03600 | .28225 | .06965 | .15790 | -.03584 | -.09644 | -.06997 | .01166 | .16216 |
| -53.937 | -.294 | 98.94100 | 10.00300 | .34767 | 07572 | .12218 | -.03703 | -.14303 | -.07337 | .00679 | .14768 |
| | GRADIENT | .00000 | .00000 | .00000 | .00000 | .00000 | .00000 | .00000 | .00000 | .00000 | .00000 |

RUN NO. 3955/ 0 RN/L = 2.37 GRADIENT INTERVAL = -5.00/ 5.00

| Y | X | Z | ALPHA | BETA | PHI | CN | CLM | CY | CYN | CBL | CA |
|---|---|---|---|---|---|---|---|---|---|---|---|
| -99.531 | -.215 | 98.13200 | 10.00000 | .29341 | .05372 | .11814 | -.03510 | -.11476 | -.06614 | .00515 | .15257 |
| -100.340 | 99.907 | 100.12000 | 10.01700 | .27100 | .05632 | .12289 | -.02984 | -.12291 | -.05107 | .00219 | .14657 |
| -99.823 | 199.890 | 100.45000 | 10.03800 | .24071 | .06811 | .15582 | -.03790 | -.09319 | -.05288 | .00916 | .14111 |
| | GRADIENT | .00000 | .00000 | .00000 | .00000 | .00000 | .00000 | .00000 | .00000 | .00000 | .00000 |

RUN NO. 3958/ 0 RN/L = 2.36 GRADIENT INTERVAL = -5.00/ 5.00

| Y | X | Z | ALPHA | BETA | PHI | CN | CLM | CY | CYN | CBL | CA |
|---|---|---|---|---|---|---|---|---|---|---|---|
| -151.840 | 199.800 | 100.44000 | 10.01100 | .23576 | .04267 | .12155 | -.02838 | -.12356 | -.03559 | -.00314 | .16465 |
| -150.230 | 99.701 | 99.95200 | 10.01300 | .23324 | .04494 | .12212 | -.02755 | -.09705 | -.04913 | .00322 | .15489 |
| -151.030 | -.182 | 99.50200 | 10.00300 | .24963 | .03887 | .12446 | -.03634 | -.08788 | -.06231 | .00532 | .15549 |
| | GRADIENT | .00000 | .00000 | .00000 | .00000 | .00000 | .00000 | .00000 | .00000 | .00000 | .00000 |

IA143, AEDC V41A-P8A, O/ET W/R.H. SRB SEPARATING (OVX349) ( 23 MAY 77 )

REFERENCE DATA

SREF = 2690.0000 SQ.FT. XMRP = 1097.0000 IN. XT
LREF = 1290.3000 INCHES YMRP = .0000 IN. YT
BREF = 1290.3000 INCHES ZMRP = 450.0000 IN. ZT
SCALE = .0100

PARAMETRIC DATA

ALPHA = 10.000 BETA = .000
DALPHA = .000 DBETA = 2.000
Z = 200.000 MACH = 4.500
JET PC = 1225.000

RUN NO. 3953/ 0 RN/L = 2.37 GRADIENT INTERVAL = -5.00/ 5.00

| Y | X | Z | ALPHA | BETA | PHI | CN | CLM | CY | CYN | CBL | CA |
|---|---|---|---|---|---|---|---|---|---|---|---|
| -50.842 | -.226 | 199.72000 | 10.12200 | .40645 | .10087 | .21798 | -.01647 | -.16729 | -.08486 | .01034 | .18203 |
| -51.202 | 99.808 | 199.93000 | 10.13600 | .43513 | .12069 | .21642 | -.01066 | -.18417 | -.08702 | .01238 | .16919 |
| -50.340 | 199.930 | 199.74000 | 10.14200 | .42000 | .13318 | .21248 | -.00628 | -.18419 | -.07903 | .01373 | .16276 |
| | GRADIENT | .00000 | .00000 | .00000 | .00000 | .00000 | .00000 | .00000 | .00000 | .00000 | .00000 |

RUN NO. 3954/ 0 RN/L = 2.37 GRADIENT INTERVAL = -5.00/ 5.00

| Y | X | Z | ALPHA | BETA | PHI | CN | CLM | CY | CYN | CBL | CA |
|---|---|---|---|---|---|---|---|---|---|---|---|
| -101.120 | 199.740 | 198.58000 | 10.10200 | .36221 | .10627 | .19206 | -.02094 | -.15377 | -.07161 | .01133 | .14669 |
| -100.860 | 99.889 | 198.49000 | 10.06400 | .36853 | .08938 | .15261 | -.01947 | -.16354 | -.07046 | .00626 | .14874 |
| -101.130 | -.113 | 199.90000 | 10.06800 | .39133 | .07994 | .16675 | -.02143 | -.15337 | -.08734 | .00836 | .16685 |
| | GRADIENT | .00000 | .00000 | .00000 | .00000 | .00000 | .00000 | .00000 | .00000 | .00000 | .00000 |

RUN NO. 3959/ 0 RN/L = 2.36 GRADIENT INTERVAL = -5.00/ 5.00

| Y | X | Z | ALPHA | BETA | PHI | CN | CLM | CY | CYN | CBL | CA |
|---|---|---|---|---|---|---|---|---|---|---|---|
| -152.370 | -.019 | 200.84000 | 10.04800 | .33782 | .06316 | .14435 | -.01976 | -.12634 | -.07936 | .00751 | .16656 |
| -150.710 | 99.733 | 199.66000 | 10.04700 | .32497 | .07110 | .13383 | -.01685 | -.14076 | -.06464 | .00480 | .15595 |
| -150.660 | 199.860 | 199.59000 | 10.04200 | .30445 | .06178 | .13135 | -.01792 | -.15340 | -.04887 | -.00137 | .15673 |
| | GRADIENT | .00000 | .00000 | .00000 | .00000 | .00000 | .00000 | .00000 | .00000 | .00000 | .00000 |

IA143, AEDC V41A-P8A, O/ET W/R.H. SRB SEPARATING (OVX350) ( 23 MAY 77 )

REFERENCE DATA

SREF = 2690.0000 SQ.FT. XMRP = 1097.0000 IN. XT
LREF = 1290.3000 INCHES YMRP = .0000 IN. YT
BREF = 1290.3000 INCHES ZMRP = 450.0000 IN. ZT
SCALE = .0100

PARAMETRIC DATA

ALPHA = 10.000 BETA = .000
DALPHA = -4.000 DBETA = -4.000
Z = .000 MACH = 4.500
JET PC = 1225.000

RUN NO. 3960/ 0 RN/L = 2.37 GRADIENT INTERVAL = -5.00/ 5.00

| Y | X | Z | ALPHA | BETA | PHI | CN | CLM | CY | CYN | CBL | CA |
|---|---|---|---|---|---|---|---|---|---|---|---|
| -120.430 | -.914 | -.28930 | 9.98680 | .17423 | .04015 | .10178 | -.03613 | -.09405 | -.02396 | -.00126 | .13972 |
| -119.980 | 99.784 | .50675 | 10.00400 | .17681 | .04289 | .11942 | -.03664 | -.08273 | -.03139 | .00208 | .13940 |
| -121.390 | 199.730 | .00238 | 10.00300 | .17939 | .04981 | .11421 | -.03080 | -.09636 | -.02434 | .00048 | .15414 |
| | GRADIENT | .00000 | .00000 | .00000 | .00000 | .00000 | .00000 | .00000 | .00000 | .00000 | .00000 |

IA143, AEDC V41A-P8A, O/ET W/R.H. SRB SEPARATING (OVX350) ( 23 MAY 77 )

REFERENCE DATA

SREF = 2690.0000 SQ.FT. XMRP = 1097.0000 IN. XT
LREF = 1290.3000 INCHES YMRP = .0000 IN. YT
BREF = 1290.3000 INCHES ZMRP = 450.0000 IN. ZT
SCALE = .0100

PARAMETRIC DATA

ALPHA = 10.000 BETA = .000
DALPHA = -4.000 DBETA = -4.000
Z = .000 MACH = 4.500
JET PC = 1225.000

RUN NO. 3965/ 0 RN/L = 2.38 GRADIENT INTERVAL = -5.00/ 5.00

| Y | X | Z | ALPHA | BETA | PHI | CN | CLM | CY | CYN | CBL | CA |
|---|---|---|---|---|---|---|---|---|---|---|---|
| -149.460 | 199.840 | -.31068 | 10.00000 | .17784 | .05152 | .10919 | -.02791 | -.09717 | -.02307 | .00052 | .16082 |
| -150.340 | 99.748 | -.01284 | 10.00700 | .16822 | .04769 | .11982 | -.03377 | -.07432 | -.03171 | .00433 | .14452 |
| -150.680 | -.180 | -.58166 | 9.99220 | .15612 | .03478 | .10701 | -.03471 | -.09451 | -.01595 | -.00368 | .14603 |
| | GRADIENT | .00000 | .00000 | .00000 | .00000 | .00000 | .00000 | .00000 | .00000 | .00000 | .00000 |

RUN NO. 3966/ 0 RN/L = 2.38 GRADIENT INTERVAL = -5.00/ 5.00

| Y | X | Z | ALPHA | BETA | PHI | CN | CLM | CY | CYN | CBL | CA |
|---|---|---|---|---|---|---|---|---|---|---|---|
| -199.880 | -.175 | .19446 | 10.00600 | .15377 | .03447 | .11100 | -.02857 | -.10168 | -.01088 | -.00554 | .14874 |
| -201.010 | 99.758 | .26017 | 10.01300 | .16380 | .04934 | .12298 | -.03103 | -.07435 | -.02956 | .00433 | .14939 |
| -200.870 | 199.650 | -.29699 | 10.00200 | .17551 | .05309 | .10541 | -.02294 | -.10272 | -.01879 | -.00060 | .16813 |
| | GRADIENT | .00000 | .00000 | .00000 | .00000 | .00000 | .00000 | .00000 | .00000 | .00000 | .00000 |

IA143, AEDC V41A-P8A, O/ET W/R.H. SRB SEPARATING (OVX351) ( 23 MAY 77 )

REFERENCE DATA

SREF = 2690.0000 SQ.FT. XMRP = 1097.0000 IN. XT
LREF = 1290.3000 INCHES YMRP = .0000 IN. YT
BREF = 1290.3000 INCHES ZMRP = 450.0000 IN. ZT
SCALE = .0100

PARAMETRIC DATA

ALPHA = 10.000 BETA = .000
DALPHA = -4.000 DBETA = -4.000
Z = 100.000 MACH = 4.500
JET PC = 1225.000

RUN NO. 3961/ 0 RN/L = 2.36 GRADIENT INTERVAL = -5.00/ 5.00

| Y | X | Z | ALPHA | BETA | PHI | CN | CLM | CY | CYN | CBL | CA |
|---|---|---|---|---|---|---|---|---|---|---|---|
| -121.440 | 199.710 | 100.34000 | 10.02100 | .24111 | .05239 | .12748 | -.03106 | -.12305 | -.03754 | -.00074 | .14042 |
| -121.020 | 99.801 | 99.45100 | 10.01300 | .26616 | .06260 | .11475 | -.02918 | -.12116 | -.04927 | .00345 | .13803 |
| -120.920 | -.139 | 99.57100 | 10.00200 | .25982 | .05008 | .11841 | -.03595 | -.14074 | -.03641 | -.00393 | .14521 |
| | GRADIENT | .00000 | .00000 | .00000 | .00000 | .00000 | .00000 | .00000 | .00000 | .00000 | .00000 |

RUN NO. 3964/ 0 RN/L = 2.38 GRADIENT INTERVAL = -5.00/ 5.00

| Y | X | Z | ALPHA | BETA | PHI | CN | CLM | CY | CYN | CBL | CA |
|---|---|---|---|---|---|---|---|---|---|---|---|
| -149.460 | -.063 | 98.77400 | 10.00400 | .24385 | .04427 | .12368 | -.03684 | -.11476 | -.04417 | -.00021 | .15062 |
| -151.240 | 99.811 | 100.18000 | 10.01300 | .25181 | .05804 | .11938 | -.03078 | -.10794 | -.05054 | .00460 | .14331 |
| -150.530 | 199.750 | 99.91100 | 10.01400 | .23137 | .05208 | .12189 | -.02994 | -.11584 | -.03720 | .00017 | .15030 |
| | GRADIENT | .00000 | .00000 | .00000 | .00000 | .00000 | .00000 | .00000 | .00000 | .00000 | .00000 |

IA143, AEDC V41A-P8A, O/ET W/R.H. SRB SEPARATING (OVX351) ( 23 MAY 77 )

REFERENCE DATA

SREF = 2690.0000 SQ.FT. XMRP = 1097.0000 IN. XT
LREF = 1290.3000 INCHES YMRP = .0000 IN. YT
BREF = 1290.3000 INCHES ZMRP = 450.0000 IN. ZT
SCALE = .0100

PARAMETRIC DATA

ALPHA = 10.000 BETA = .000
DALPHA = -4.000 DBETA = -4.000
Z = 100.000 MACH = 4.500
JET PC = 1225.000

RUN NO. 3967/ 0 RN/L = 2.38 GRADIENT INTERVAL = -5.00/ 5.00

| Y | X | Z | ALPHA | BETA | PHI | CN | CLM | CY | CYN | CBL | CA |
|---|---|---|---|---|---|---|---|---|---|---|---|
| -201.170 | 199.710 | 100.27000 | 10.01400 | .22200 | .05293 | .11610 | -.02423 | -.10895 | -.03667 | .00125 | .15966 |
| -200.540 | 99.684 | 99.92600 | 10.01700 | .22989 | .05007 | .12687 | -.03097 | -.09635 | -.04752 | .00413 | .14947 |
| -200.500 | -.155 | 99.79000 | 10.01400 | .22681 | .03996 | .12933 | -.03344 | -.09243 | -.04922 | .00286 | .15492 |
| | GRADIENT | .00000 | .00000 | .00000 | .00000 | .00000 | .00000 | .00000 | .00000 | .00000 | .00000 |

IA143, AEDC V41A-P8A, O/ET W/R.H. SRB SEPARATING (OVX352) ( 23 MAY 77 )

REFERENCE DATA

SREF = 2690.0000 SQ.FT. XMRP = 1097.0000 IN. XT
LREF = 1290.3000 INCHES YMRP = .0000 IN. YT
BREF = 1290.3000 INCHES ZMRP = 450.0000 IN. ZT
SCALE = .0100

PARAMETRIC DATA

ALPHA = 10.000 BETA = 000
DALPHA = -4.000 DBETA = -4.000
Z = 200.000 MACH = 4.500
JET PC = 1225.000

RUN NO. 3962/ 0 RN/L = 2.36 GRADIENT INTERVAL = -5.00/ 5.00

| Y | X | Z | ALPHA | BETA | PHI | CN | CLM | CY | CYN | CBL | CA |
|---|---|---|---|---|---|---|---|---|---|---|---|
| -121.180 | -.290 | 201.28000 | 10.05200 | .32782 | .06700 | .16800 | -.03438 | -.15611 | -.05766 | .00069 | .15317 |
| -121.100 | 99.842 | 199.85000 | 10.05900 | .35317 | .08177 | .14229 | -.01847 | -.16835 | -.06128 | .00256 | .13921 |
| -120.240 | 199.680 | 199.90000 | 10.05700 | .33979 | .08353 | .14156 | -.01877 | -.16998 | -.05408 | .00158 | .14086 |
| | GRADIENT | .00000 | .00000 | .00000 | .00000 | .00000 | .00000 | .00000 | .00000 | .00000 | .00000 |

RUN NO. 3963/ 0 RN/L = 2.36 GRADIENT INTERVAL = -5.00/ 5.00

| Y | X | Z | ALPHA | BETA | PHI | CN | CLM | CY | CYN | CBL | CA |
|---|---|---|---|---|---|---|---|---|---|---|---|
| -150.330 | 199.670 | 199.46000 | .0.04500 | .31580 | .07261 | .13541 | -.02101 | -.15599 | -.05181 | .00096 | .14623 |
| -150.870 | 99.806 | 199.96000 | 10.05100 | .33269 | .07417 | .13828 | -.01957 | -.14872 | -.06356 | .00415 | 14384 |
| -150.120 | -.245 | 199.90000 | 10.04900 | .30318 | .05699 | .15575 | -.02812 | -.13823 | -.05717 | .00109 | .15702 |
| | GRADIENT | .00000 | .00000 | .00000 | .00000 | .00000 | .00000 | .00000 | .00000 | .00000 | .00000 |

RUN NO. 3968/ 0 RN/L = 2.38 GRADIENT INTERVAL = -5.00/ 5.00

| Y | X | Z | ALPHA | BETA | PHI | CN | CLM | CY | CYN | CBL | CA |
|---|---|---|---|---|---|---|---|---|---|---|---|
| -201.560 | -.293 | 200.64000 | 10.04700 | .28296 | .05193 | .14615 | -.02183 | -.10912 | -.06466 | .00536 | .16344 |
| -200.960 | 99.860 | 199.96000 | 10.04800 | .30376 | .06336 | .13831 | -.01963 | -.12614 | -.06377 | .00516 | .15187 |
| -200.260 | 199.720 | 199.68000 | 10.04000 | .28897 | .06587 | .13025 | -.01935 | -.13672 | -.05085 | .00217 | .15273 |
| | GRADIENT | .00000 | .00000 | .00000 | .00000 | .00000 | .00000 | .00000 | .00000 | .00000 | .00000 |

IA143, AEDC V41A-P8A, O/ET W/R.H. SRB SEPARATING (OVX353) ( 23 MAY 77 )

REFERENCE DATA

SREF = 2690.0000 SQ.FT. XMRP = 1097.0000 IN. XT
LREF = 1290.3000 INCHES YMRP = .0000 IN. YT
BREF = 1290.3000 INCHES ZMRP = 450.0000 IN. ZT
SCALE = .0100

PARAMETRIC DATA

ALPHA = 10.000 BETA = .000
DALPHA = -4.000 DBETA = -2.000
Z = .000 MACH = 4.500
JET PC = 1225.000

RUN NO. 3969/ 0 RN/L = 2.38 GRADIENT INTERVAL = -5.00/ 5.00

| Y | X | Z | ALPHA | BETA | PHI | CN | CLM | CY | CYN | CBL | CA |
|---|---|---|---|---|---|---|---|---|---|---|---|
| -69.987 | -1.084 | -.12396 | 9.97900 | .18261 | .02982 | .09317 | -.03581 | -.10691 | -.02150 | -.00562 | .13881 |
| -70.733 | 99.827 | .49822 | 9.99680 | .18646 | .03559 | .11096 | -.03674 | -.08450 | -.03541 | .00095 | .13525 |
| -67.279 | 199.530 | .18862 | 9.99510 | .16526 | .03548 | .12841 | -.04450 | -.04580 | -.04742 | .00832 | .15078 |
| | GRADIENT | .00000 | .00000 | .00000 | .00000 | .00000 | .00000 | .00000 | .00000 | .00000 | .00000 |

RUN NO. 3974/ 0 RN/L = 2.37 GRADIENT INTERVAL = -5.00/ 5.00

| Y | X | Z | ALPHA | BETA | PHI | CN | CLM | CY | CYN | CBL | CA |
|---|---|---|---|---|---|---|---|---|---|---|---|
| -101.370 | 199.700 | .01732 | 10.01600 | .18629 | .03991 | .13431 | -.03591 | -.10756 | -.02207 | -.00352 | .15023 |
| -99.731 | 99.702 | -.66313 | 10.00300 | .17858 | .03928 | .11762 | -.03618 | -.07575 | -.03641 | .00311 | .13950 |
| -100.940 | -.110 | -.85237 | 9.98490 | .16600 | .03061 | .09518 | -.03332 | -.09992 | -.01777 | -.00502 | .13993 |
| | GRADIENT | .00000 | .00000 | .00000 | .00000 | .00000 | .00000 | .00000 | .00000 | .00000 | .00000 |

RUN NO. 3975/ 0 RN/L = 2.37 GRADIENT INTERVAL = -5.00/ 5.00

| Y | X | Z | ALPHA | BETA | PHI | CN | CLM | CY | CYN | CBL | CA |
|---|---|---|---|---|---|---|---|---|---|---|---|
| -150.420 | -.270 | .14662 | 9.99420 | .15870 | .03532 | .10707 | -.03299 | -.08467 | -.02261 | -.00112 | .14849 |
| -150.820 | 99.683 | .33342 | 10.00800 | .16856 | .04778 | .11839 | -.03251 | -.06767 | -.03570 | .00592 | .14577 |
| -151.210 | 199.660 | -.04976 | 10.00100 | .17717 | .04874 | .10817 | -.02641 | -.09380 | -.02493 | .00073 | .16391 |
| | GRADIENT | .00000 | .00000 | .00000 | .00000 | .00000 | .00000 | .00000 | .00000 | .00000 | .00000 |

IA143, AEDC V41A-P8A, O/ET W/R.H. SRB SEPARATING (OVX354) ( 23 MAY 77 )

REFERENCE DATA

SREF = 2690.0000 SQ.FT. XMRP = 1097.0000 IN. XT
LREF = 1290.3000 INCHES YMRP = .0000 IN. YT
BREF = 1290.3000 INCHES ZMRP = 450.0000 IN. ZT
SCALE = .0100

PARAMETRIC DATA

ALPHA = 10.000 BETA = .000
DALPHA = -4.000 DBETA = -2.000
Z = 100.000 MACH = 4.500
JET PC = 1225.000

RUN NO. 3970/ 0 RN/L = 2.38 GRADIENT INTERVAL = -5.00/ 5.00

| Y | X | Z | ALPHA | BETA | PHI | CN | CLM | CY | CYN | CBL | CA |
|---|---|---|---|---|---|---|---|---|---|---|---|
| -73.409 | 199.760 | 100.61000 | 10.03600 | .27470 | .07415 | .14639 | -.03022 | -.09525 | -.06681 | .01227 | .15579 |
| -71.903 | 99.734 | 99.33200 | 10.01600 | .29734 | .07272 | .11935 | -.02959 | -.12909 | -.05831 | .00582 | .14020 |
| -71.968 | -.260 | 99.46400 | 9.99740 | .31763 | .07058 | .10976 | -.03271 | -.16154 | -.04972 | -.00058 | .14909 |
| | GRADIENT | .00000 | .00000 | .00000 | .00000 | .00000 | .00000 | .00000 | .00000 | .00000 | .00000 |

IA143, AEDC V41A-P8A, O/ET W/R.H. SRB SEPARATING (OVX354) ( 23 MAY 77 )

REFERENCE DATA

SREF = 2690.0000 SQ.FT. XMRP = 1097.0000 IN. XT
LREF = 1290.3000 INCHES YMRP = .0000 IN. YT
BREF = 1290.3000 INCHES ZMRP = 450.0000 IN. ZT
SCALE = .0100

PARAMETRIC DATA

ALPHA = 10.000 BETA = .000
DALPHA = -4.000 DBETA = -2.000
Z = 100.000 MACH = 4.500
JET PC = 1225.000

RUN NO. 3973/ 0 RN/L = 2.37 GRADIENT INTERVAL = -5.00/ 5.00

| Y | X | Z | ALPHA | BETA | PHI | CN | CLM | CY | CYN | CBL | CA |
|---|---|---|---|---|---|---|---|---|---|---|---|
| -99.941 | -.117 | 98.05500 | 9.99940 | .29386 | .06186 | .11053 | -.03132 | -.14295 | -.04993 | .00030 | .15188 |
| -100.340 | 99.843 | 100.03000 | 10.00900 | .28943 | .06865 | .10804 | -.02683 | -.12751 | -.05595 | .00484 | .14026 |
| -98.576 | 199.750 | 100.52000 | 10.03300 | .26803 | .07290 | .14926 | -.03467 | -.09501 | -.06404 | .01163 | .15031 |
| | GRADIENT | .00000 | .00000 | .00000 | .00000 | .00000 | .00000 | .00000 | .00000 | .00000 | .00000 |

RUN NO. 3976/ 0 RN/L = 2.37 GRADIENT INTERVAL = -5.00/ 5.00

| Y | X | Z | ALPHA | BETA | PHI | CN | CLM | CY | CYN | CBL | CA |
|---|---|---|---|---|---|---|---|---|---|---|---|
| -151.980 | 199.720 | 100.15000 | 10.01400 | .23033 | .05076 | .11863 | -.02742 | -.11177 | -.03900 | .00074 | .15392 |
| -151.140 | 99.659 | 99.77600 | 10.01200 | .25059 | .05556 | .11668 | -.02857 | -.10512 | -.05170 | .00466 | .14737 |
| -150.650 | -.219 | 99.57000 | 10.00300 | .24979 | .04519 | .12126 | -.03440 | -.10088 | -.05463 | .00358 | .15715 |
| | GRADIENT | .00000 | .00000 | .00000 | .00000 | .00000 | .00000 | .00000 | .00000 | .00000 | .00000 |

IA143, AEDC V41A-P8A, O/ET W/R.H. SRB SEPARATING (OVX355) ( 23 MAY 77 )

REFERENCE DATA

SREF = 2690.0000 SQ.FT. XMRP = 1097.0000 IN. XT
LREF = 1290.3000 INCHES YMRP = .0000 IN. YT
BREF = 1290.3000 INCHES ZMRP = 450.0000 IN. ZT
SCALE = .0100

PARAMETRIC DATA

ALPHA = 10.000 BETA = .000
DALPHA = -4.000 DBETA = -2.000
Z = 200.000 MACH = 4.500
JET PC = 1225.000

RUN NO. 3971/ 0 RN/L = 2.37 GRADIENT INTERVAL = -5.00/ 5.00

| Y | X | Z | ALPHA | BETA | PHI | CN | CLM | CY | CYN | CBL | CA |
|---|---|---|---|---|---|---|---|---|---|---|---|
| -70.757 | -.209 | 199.94000 | 10.10000 | .36047 | .08901 | .20344 | -.02324 | -.17314 | -.06144 | .00342 | .17147 |
| -71.541 | 99.859 | 200.15000 | 10.11800 | .38869 | .09853 | .19598 | -.01072 | -.17176 | -.07428 | .00757 | .16187 |
| -70.542 | 199.650 | 200.09000 | 10.13000 | .39190 | .11454 | .19736 | -.00522 | -.16856 | -.07639 | .01168 | .15813 |
| | GRADIENT | .00000 | .00000 | .00000 | .00000 | .00000 | .00000 | .00000 | .00000 | .00000 | .00000 |

RUN NO. 3972/ 0 RN/L = 2.38 GRADIENT INTERVAL = -5.00/ 5.00

| Y | X | Z | ALPHA | BETA | PHI | CN | CLM | CY | CYN | CBL | CA |
|---|---|---|---|---|---|---|---|---|---|---|---|
| -100.780 | 199.720 | 199.34000 | 10.11100 | .36394 | .10092 | .18742 | -.01248 | -.15024 | -.07475 | .01120 | .15059 |
| -101.650 | 99.834 | 198.83000 | 10.07100 | .38556 | .09593 | .15048 | -.01531 | -.17184 | -.07317 | .00686 | .14386 |
| -100.590 | -.148 | 200.16000 | 10.07200 | .36095 | .08121 | .16934 | -.02054 | -.16636 | -.06602 | .00347 | .16704 |
| | GRADIENT | .00000 | .00000 | .00000 | .00000 | .00000 | .00000 | .00000 | .00000 | .00000 | .00000 |

IA143, AEDC V41A-P8A, O/ET W/R.H. SRB SEPARATING (OVX355) ( 23 MAY 77 )

REFERENCE DATA

SREF = 2690.0000 SQ.FT. XMRP = 1097.0000 IN. XT
LREF = 1290.3000 INCHES YMRP = .0000 IN. YT
BREF = 1290.3000 INCHES ZMRP = 450.0000 IN. ZT
SCALE = .0100

PARAMETRIC DATA

ALPHA = 10.000 BETA = .000
DALPHA = -4.000 DBETA = -2.000
Z = 200.000 MACH = 4.500
JET PC = 1225.000

RUN NO. 3977/ 0 RN/L = 2.37 GRADIENT INTERVAL = -5.00/ 5.00

| Y | X | Z | ALPHA | BETA | PHI | CN | CLM | CY | CYN | CBL | CA |
|---|---|---|---|---|---|---|---|---|---|---|---|
| -151.700 | -.245 | 201.19000 | 10.05200 | .31585 | .06310 | .14929 | -.02013 | -.12883 | -.06783 | .00535 | .16760 |
| -151.500 | 99 739 | 199.73000 | 10.05100 | .33902 | .07601 | .13713 | -.01728 | -.14523 | -.06834 | .00578 | .15016 |
| -150.400 | 199.580 | 199.83000 | 10.04500 | .32152 | .07175 | .13486 | -.01957 | -.15706 | -.05393 | .00096 | .14990 |
| | GRADIENT | .00000 | .00000 | .00000 | .00000 | .00000 | .00000 | .00000 | .00000 | .00000 | .00000 |

IA143, AEDC V41A-P8A, O/ET W/R.H. SRB SEPARATING (OVX356) ( 23 MAY 77 )

REFERENCE DATA

SREF = 2690.0000 SQ.FT. XMRP = 1097.0000 IN. XT
LREF = 1290.3000 INCHES YMRP = .0000 IN. YT
BREF = 1290.3000 INCHES ZMRP = 450.0000 IN. ZT
SCALE = .0100

PARAMETRIC DATA

ALPHA = 10.000 BETA = .000
DALPHA = -4.000 DBETA = .000
Z = .000 MACH = 4.500
JET PC = 1225.000

RUN NO. 3978/ 0 RN/L = 2.37 GRADIENT INTERVAL = -5.00/ 5.00

| Y | X | Z | ALPHA | BETA | PHI | CN | CLM | CY | CYN | CBL | CA |
|---|---|---|---|---|---|---|---|---|---|---|---|
| -49.826 | -1.049 | -.37993 | 9.96670 | .19306 | .03550 | .08305 | -.03634 | -.10032 | -.02956 | -.00224 | .14172 |
| -48.090 | 99.829 | 1.03970 | 9.98860 | .17503 | .03670 | .12944 | -.04733 | -.06236 | -.04243 | .00541 | .15738 |
| -50.370 | 199.690 | .04807 | 9.98590 | .17158 | .03533 | .12585 | -.04659 | -.04263 | -.05215 | .00947 | .15854 |
| | GRADIENT | .00000 | .00000 | .00000 | .00000 | .00000 | .00000 | .00000 | .00000 | .00000 | .00000 |

RUN NO. 3983/ 0 RN/L = 2.37 GRADIENT INTERVAL = -5.00/ 5.00

| Y | X | Z | ALPHA | BETA | PHI | CN | CLM | CY | CYN | CBL | CA |
|---|---|---|---|---|---|---|---|---|---|---|---|
| -100.600 | 199.670 | -.16204 | 10.01500 | .17707 | .03608 | .13632 | -.03867 | -.09074 | -.02756 | -.00107 | .14696 |
| -101.230 | 99.709 | -.72178 | 10.00300 | .17602 | .03939 | .11442 | -.03316 | -.07317 | -.03663 | .00353 | .14313 |
| -101.490 | -.170 | -.83981 | 9.98410 | .17823 | .03949 | .09523 | -.03326 | -.08114 | -.03328 | .00190 | .14263 |
| | GRADIENT | .00000 | .00000 | .00000 | .00000 | .00000 | .00000 | .00000 | .00000 | .00000 | .00000 |

RUN NO. 3984/ 0 RN/L = 2.37 GRADIENT INTERVAL = -5.00/ 5.00

| Y | X | Z | ALPHA | BETA | PHI | CN | CLM | CY | CYN | CBL | CA |
|---|---|---|---|---|---|---|---|---|---|---|---|
| -150.290 | -.225 | .23684 | 9.99540 | .17579 | .04247 | .11238 | -.03510 | -.06403 | -.04141 | .00622 | .15006 |
| -151.480 | 99.799 | .26167 | 10.00700 | .16786 | .04414 | .11855 | -.03247 | -.06538 | -.03692 | .00568 | .14777 |
| -150.870 | 199.690 | .02324 | 10.00200 | .17237 | .04530 | .10868 | -.02590 | -.08906 | -.02560 | .00079 | .16431 |
| | GRADIENT | .00000 | .00000 | .00000 | .00000 | .00000 | .00000 | .00000 | .00000 | .00000 | .00000 |

IA143, AEDC V41A-P8A, O/ET W/R.H. SRB SEPARATING (OVX357) ( 23 MAY 77 )

REFERENCE DATA

SREF = 2690.0000 SQ.FT. XMRP = 1097.0000 IN. XT
LREF = 1290.3000 INCHES YMRP = .0000 IN. YT
BREF = 1290.3000 INCHES ZMRP = 450.0000 IN. ZT
SCALE = .0100

PARAMETRIC DATA

ALPHA = 10.000 BETA = .000
DALPHA = -4.000 DBETA = .000
Z = 100.000 MACH = 4.500
JET PC = 1225.000

RUN NO. 3979/ 0 RN/L = 2.37 GRADIENT INTERVAL = -5.00/ 5.00

| Y | X | Z | ALPHA | BETA | PHI | CN | CLM | CY | CYN | CBL | CA |
|---|---|---|---|---|---|---|---|---|---|---|---|
| -53.461 | 199.650 | 100.85000 | 10.03500 | .28710 | .07921 | .14713 | -.02972 | -.10290 | -.06787 | .01241 | .16197 |
| -51.696 | 99.644 | 99.73500 | 10.03300 | .29934 | .07747 | .14615 | -.03043 | -.11205 | -.06857 | .01085 | .16243 |
| -53.119 | -.182 | 99.21100 | 10.00600 | .34727 | .07876 | .11407 | -.02873 | -.16399 | -.06134 | .00258 | .15610 |
| | GRADIENT | .00000 | .00000 | .00000 | .00000 | .00000 | .00000 | .00000 | .00000 | .00000 | .00000 |

RUN NO. 3982/ 0 RN/L = 2.37 GRADIENT INTERVAL = -5.00/ 5.00

| Y | X | Z | ALPHA | BETA | PHI | CN | CLM | CY | CYN | CBL | CA |
|---|---|---|---|---|---|---|---|---|---|---|---|
| -99.857 | -.257 | 97.93100 | 9.99700 | .30159 | .06265 | .10763 | -.02989 | -.13624 | -.05720 | .00256 | .15707 |
| -100.880 | 99.779 | 100.08000 | 10.00700 | .29431 | .06877 | .10571 | -.02575 | -.12841 | -.05768 | .00501 | .14436 |
| -99.177 | 199.620 | 100.73000 | 10.03200 | .27654 | .07107 | .14817 | -.03394 | -.09803 | -.06631 | .01115 | .15330 |
| | GRADIENT | .00000 | .00000 | .00000 | .00000 | .00000 | .00000 | .00000 | .00000 | .00000 | .00000 |

RUN NO. 3985/ 0 RN/L = 2.37 GRADIENT INTERVAL = -5.00/ 5.00

| Y | X | Z | ALPHA | BETA | PHI | CN | CLM | CY | CYN | CBL | CA |
|---|---|---|---|---|---|---|---|---|---|---|---|
| -152.040 | 199.660 | 100.16000 | 10.01300 | .23259 | .04878 | .11703 | - 02635 | -.11240 | -.03993 | .00040 | .15619 |
| -150.870 | 99.725 | 99.71300 | 10.01000 | .25217 | .05340 | .11422 | -.02758 | -.10465 | -.05291 | .00447 | .15107 |
| -151.070 | -.242 | 99.66000 | 10.00100 | .25566 | .04449 | .11927 | -.03372 | -.09932 | -.05826 | .00422 | .16110 |
| | GRADIENT | .00000 | .00000 | .00000 | .00000 | .00000 | .00000 | .00000 | .00000 | .00000 | .00000 |

IA143, AEDC V41A-P8A, O/ET W/R.H. SRB SEPARATING (OVX358) ( 23 MAY 77 )

REFERENCE DATA

SREF = 2690.0000 SQ.FT. XMRP = 1097.0000 IN. XT
LREF = 1290.3000 INCHES YMRP = .0000 IN. YT
BREF = 1290.3000 INCHES ZMRP = 450.0000 IN. ZT
SCALE = .0100

PARAMETRIC DATA

ALPHA = 10.000 BETA = .000
DALPHA = -4.000 DBETA = .000
Z = 200.000 MACH = 4.500
JET PC = 1225.000

RUN NO. 3980/ 0 RN/L = 2.37 GRADIENT INTERVAL = -5.00/ 5.00

| Y | X | Z | ALPHA | BETA | PHI | CN | CLM | CY | CYN | CBL | CA |
|---|---|---|---|---|---|---|---|---|---|---|---|
| -51.045 | -.263 | 199.84000 | 10.12300 | .31091 | .08342 | .21465 | -.01553 | -.14762 | -.05340 | .00465 | .17561 |
| -53.967 | 99.810 | 200.15000 | 10.13900 | .48142 | .13259 | .20451 | -.00234 | -.21772 | -.08831 | .01024 | .16724 |
| -49.793 | 199.550 | 200.20000 | 10.14700 | .45218 | .13946 | .20842 | -.00107 | -.20748 | -.08016 | .01186 | .16244 |
| | GRADIENT | .00000 | .00000 | .00000 | .00000 | .00000 | .00000 | .00000 | .00000 | .00000 | .00000 |

IA143, AEDC V41A-P8A, O/ET W/R.H. SRB SEPARATING (OVX358) ( 23 MAY 77 )

REFERENCE DATA

SREF = 2690.0000 SQ.FT. XMRP = 1097.0000 IN. XT
LREF = 1290.3000 INCHES YMRP = .0000 IN. YT
BREF = 1290.3000 INCHES ZMRP = 450.0000 IN. ZT
SCALE = .0100

PARAMETRIC DATA

ALPHA = 10.000 BETA = .000
DALPHA = -4.000 DBETA = .000
Z = 200.000 MACH = 4.500
JET PC = 1225.000

RUN NO. 3981/ 0 RN/L = 2.37 GRADIENT INTERVAL = -5.00/ 5.00

| Y | X | Z | ALPHA | BETA | PHI | CN | CLM | CY | CYN | CBL | CA |
|---|---|---|---|---|---|---|---|---|---|---|---|
| -99.436 | 199.650 | 198.78000 | 10.11200 | .37603 | .10453 | .18774 | -.01095 | -.15536 | -.07736 | .01164 | .15415 |
| -101.680 | 99.812 | 198.97000 | 10.07700 | .39014 | .09612 | .15931 | -.01535 | -.16768 | -.07745 | .00814 | .15036 |
| -100.970 | -.323 | 199.98000 | 10.07600 | .37420 | .08606 | .16657 | -.01469 | -.16046 | -.07508 | .00673 | .17589 |
| | GRADIENT | .00000 | .00000 | .00000 | .00000 | .00000 | .00000 | .00000 | .00000 | .00000 | .00000 |

RUN NO. 3986/ 0 RN/L = 2.37 GRADIENT INTERVAL = -5.00/ 5.00

| Y | X | Z | ALPHA | BETA | PHI | CN | CLM | CY | CYN | CBL | CA |
|---|---|---|---|---|---|---|---|---|---|---|---|
| -152.030 | -.161 | 201.17000 | 10.05300 | .32792 | .06433 | .14772 | -.01739 | -.12743 | -.07415 | .00680 | .17335 |
| -151.270 | 99.750 | 199.94000 | 10.05300 | .34958 | .07712 | .13830 | -.01595 | -.15017 | -.07029 | .00560 | .15426 |
| -150.310 | 199.710 | 199.78000 | 10.04600 | .33125 | .07386 | .13393 | -.01795 | -.16179 | -.05559 | .00099 | .15263 |
| | GRADIENT | .00000 | .00000 | .00000 | .00000 | .00000 | .00000 | .00000 | .00000 | .00000 | .00000 |

IA143, AEDC V41A-P8A, O/ET W/R.H. SRB SEPARATING (OVX359) ( 23 MAY 77 )

REFERENCE DATA

SREF = 2690.0000 SQ.FT. XMRP = 1097.0000 IN. XT
LREF = 1290.3000 INCHES YMRP = .0000 IN. YT
BREF = 1290.3000 INCHES ZMRP = 450.0000 IN. ZT
SCALE = .0100

PARAMETRIC DATA

ALPHA = 10.000 BETA = .000
DALPHA = -4.000 DBETA = 2.000
Z = .000 MACH = 4.500
JET PC = 1225.000

RUN NO. 3987/ 0 RN/L = 2.36 GRADIENT INTERVAL = -5.00/ 5.00

| Y | X | Z | ALPHA | BETA | PHI | CN | CLM | CY | CYN | CBL | CA |
|---|---|---|---|---|---|---|---|---|---|---|---|
| -49.756 | -.883 | -.23105 | 9.96470 | .20287 | .04111 | .08284 | -.03699 | -.08968 | -.03969 | .00202 | .14370 |
| -48.274 | 99.885 | 1.12430 | 9.98420 | .18264 | .03679 | .12543 | -.04790 | -.05707 | -.04898 | .00721 | .15586 |
| -50.044 | 199.750 | .02002 | 9.97980 | .17157 | .03251 | .12360 | -.04847 | -.04017 | -.05374 | .00948 | .15989 |
| | GRADIENT | .00000 | .00000 | .00000 | .00000 | .00000 | .00000 | .00000 | .00000 | .00000 | .00000 |

RUN NO. 3992/ 0 RN/L = 2.37 GRADIENT INTERVAL = -5.00/ 5.00

| Y | X | Z | ALPHA | BETA | PHI | CN | CLM | CY | CYN | CBL | CA |
|---|---|---|---|---|---|---|---|---|---|---|---|
| -101.180 | 199.580 | -.49147 | 10.00700 | .16800 | .03336 | .13344 | -.04199 | -.06836 | -.03612 | .00289 | .14420 |
| -100.570 | 99.790 | -.62134 | 10.00200 | .17375 | .03958 | .11103 | -.03142 | -.07020 | -.03732 | .00411 | .14484 |
| -101.130 | -.212 | -.83719 | 9.98040 | .19022 | .04366 | .09763 | -.03620 | -.06565 | -.04715 | .00713 | .14516 |
| | GRADIENT | .00000 | .00000 | .00000 | .00000 | .00000 | .00000 | .00000 | .00000 | .00000 | .00000 |

IA143, AEDC V41A-P8A, O/ET W/R.H. SRB SEPARATING (OVX359) ( 23 MAY 77 )

REFERENCE DATA

SREF = 2690.0000 SQ.FT. XMRP = 1097.0000 IN. XT
LREF = 1290.3000 INCHES YMRP = .0000 IN. YT
BREF = 1290.3000 INCHES ZMRP = 450.0000 IN. ZT
SCALE = .0100

PARAMETRIC DATA

ALPHA = 10.000 BETA = .000
DALPHA = -4.000 DBETA = 2.000
Z = .000 MACH = 4.500
JET PC = 1225.000

RUN NO. 3993/ 0 RN/L = 2.36 GRADIENT INTERVAL = -5.00/ 5.00

| Y | X | Z | ALPHA | BETA | PHI | CN | CLM | CY | CYN | CBL | CA |
|---|---|---|---|---|---|---|---|---|---|---|---|
| -150.340 | -.296 | .41121 | 9.99440 | .18050 | .03881 | .11645 | -.03726 | -.05795 | -.04733 | .00726 | .15355 |
| -150.920 | 99.800 | .30720 | 10.00500 | .16793 | .04106 | .11864 | -.03290 | -.06352 | -.03829 | .00552 | .15045 |
| -150.900 | 199.730 | .07197 | 10.00300 | .16804 | .04235 | .10882 | -.02518 | -.08422 | -.02655 | .00100 | .16657 |
| | GRADIENT | .00000 | .00000 | .00000 | .00000 | .00000 | .00000 | .00000 | .00000 | .00000 | .00000 |

IA143, AEDC V41A-P8A, O/ET W/R.H. SRB SEPARATING (OVX360) ( 23 MAY 77 )

REFERENCE DATA

SREF = 2690.0000 SQ.FT. XMRP = 1097.0000 IN. XT
LREF = 1290.3000 INCHES YMRP = .0000 IN. YT
BREF = 1290.3000 INCHES ZMRP = 450.0000 IN. ZT
SCALE = .0100

PARAMETRIC DATA

ALPHA = 10.000 BETA = .000
DALPHA = -4.000 DBETA = 2.000
Z = 100.000 MACH = 4.500
JET PC = 1225.000

RUN NO. 3988/ 0 RN/L = 2.37 GRADIENT INTERVAL = -5.00/ 5.00

| Y | X | Z | ALPHA | BETA | PHI | CN | CLM | CY | CYN | CBL | CA |
|---|---|---|---|---|---|---|---|---|---|---|---|
| -53.815 | 199.630 | 100.86000 | 10.03100 | .29463 | .07816 | .14492 | -.03041 | -.10698 | -.06913 | .01180 | .16533 |
| -51.400 | 99.744 | 99.68500 | 10.02900 | .30532 | .07797 | .14332 | -.03018 | -.11369 | -.07033 | .01100 | .16619 |
| -52.930 | -.246 | 99.17300 | 10.00500 | .35689 | .08127 | .11178 | -.02715 | -.16092 | -.06730 | .00446 | .16037 |
| | GRADIENT | .00000 | .00000 | .00000 | .00000 | .00000 | .00000 | .00000 | .00000 | .00000 | .00000 |

RUN NO. 3991/ 0 RN/L = 2.36 GRADIENT INTERVAL = -5.00/ 5.00

| Y | X | Z | ALPHA | BETA | PHI | CN | CLM | CY | CYN | CBL | CA |
|---|---|---|---|---|---|---|---|---|---|---|---|
| -99.492 | -.318 | 97.81500 | 9.99400 | .30608 | .06393 | .10831 | -.03124 | -.12497 | -.06547 | .00572 | .16054 |
| -100.210 | 99.913 | 100.14000 | 10.00600 | .29731 | .06812 | .10584 | -.02600 | -.12760 | -.05957 | .00528 | .14747 |
| -98.517 | 199.650 | 100.96000 | 10.03100 | .28064 | .07061 | .14557 | -.03258 | -.09974 | -.06746 | .01102 | .15607 |
| | GRADIENT | .00000 | .00000 | .00000 | .00000 | .00000 | .00000 | .00000 | .00000 | .00000 | .00000 |

RUN NO. 3994/ 0 RN/L = 2.36 GRADIENT INTERVAL = -5.00/ 5.00

| Y | X | Z | ALPHA | BETA | PHI | CN | CLM | CY | CYN | CBL | CA |
|---|---|---|---|---|---|---|---|---|---|---|---|
| -151.790 | 199.740 | 100.04000 | 10.01200 | .23242 | .04816 | .11448 | -.02488 | -.11126 | -.04052 | .00052 | .15775 |
| -152.450 | 99.740 | 99.69200 | 10.00900 | .25610 | .05175 | .11384 | -.02713 | -.10472 | -.05482 | .00443 | .15439 |
| -150.980 | -.212 | 99.81700 | 10.00200 | .25935 | .04351 | .11921 | -.03207 | -.09435 | -.06284 | .00544 | .16520 |
| | GRADIENT | .00000 | .00000 | .00000 | .00000 | .00000 | .00000 | .00000 | .00000 | .00000 | .00000 |

IA143, AEDC V41A-P8A, O/ET W/R.H. SRB SEPARATING (OVX361) ( 23 MAY 77 )

REFERENCE DATA

SREF = 2690.0000 SQ.FT. XMRP = 1097.0000 IN. XT
LREF = 1290.3000 INCHES YMRP = .0000 IN. YT
BREF = 1290.3000 INCHES ZMRP = 450.0000 IN. ZT
SCALE = .0100

PARAMETRIC DATA

ALPHA = 10.000 BETA = .000
DALPHA = -4.000 DBETA = 2.100
Z = 200.000 MACH = 4.500
JET PC = 1225.000

RUN NO. 3989/ 0 RN/L = 2.37 GRADIENT INTERVAL = -5.00/ 5.00

| Y | X | Z | ALPHA | BETA | PHI | CN | CLM | CY | CYN | CBL | CA |
|---|---|---|---|---|---|---|---|---|---|---|---|
| -51.101 | -.303 | 199.87000 | 10.12200 | .32594 | .08898 | .21086 | -.01206 | -.13963 | -.06436 | .00864 | .18347 |
| -53.926 | 99.782 | 200.12000 | 10.13800 | .49335 | .13573 | .20389 | -.00139 | -.22284 | -.09072 | .01053 | .17201 |
| -49.681 | 199.800 | 200.21000 | 10.14500 | .45292 | .14021 | .20862 | -.00128 | -.20771 | -.08043 | .01205 | .16649 |
| | GRADIENT | .00000 | .00000 | .00000 | .00000 | .00000 | .00000 | .00000 | .00000 | .00000 | .00000 |

RUN NO. 3990/ 0 RN/L = 2.36 GRADIENT INTERVAL = -5.00/ 5.00

| Y | X | Z | ALPHA | BETA | PHI | CN | CLM | CY | CYN | CBL | CA |
|---|---|---|---|---|---|---|---|---|---|---|---|
| -99.448 | 199.720 | 198.67000 | 10.11300 | .38434 | .10659 | .18823 | -.01011 | -.15925 | -.07882 | .01175 | .15743 |
| -101.390 | 99.757 | 199.28000 | 10.09000 | .38957 | .09521 | .17483 | -.01453 | -.16211 | -.08052 | .00924 | .16109 |
| -100.840 | -.273 | 199.48000 | 10.07500 | .38310 | .08577 | .16601 | -.01387 | -.15479 | -.08242 | .00861 | .18132 |
| | GRADIENT | .00000 | .00000 | .00000 | .00000 | .00000 | .00000 | .00000 | .00000 | .00000 | .00000 |

RUN NO. 3995/ 0 RN/L = 2.36 GRADIENT INTERVAL = -5.00/ 5.00

| Y | X | Z | ALPHA | BETA | PHI | CN | CLM | CY | CYN | CBL | CA |
|---|---|---|---|---|---|---|---|---|---|---|---|
| -152.200 | -.258 | 201.18000 | 10.05300 | .33423 | .06363 | .14762 | -.01626 | -.12659 | -.07750 | .00729 | .17751 |
| -151.440 | 99.750 | 199.90000 | 10.05300 | .35460 | .07646 | .13776 | -.01507 | -.15153 | -.07192 | .00552 | .15838 |
| -150.790 | 199.660 | 199.73000 | 10.04600 | .33897 | .07476 | .13306 | -.01662 | -.16564 | -.05690 | .00082 | .15529 |
| | GRADIENT | .00000 | .00000 | .00000 | .00000 | .00000 | .00000 | .00000 | .00000 | .00000 | .00000 |

IA143, AEDC V41A-P8A, O/ET W/R.H. SRB SEPARATING (OVX362) ( 23 MAY 77 )

REFERENCE DATA

SREF = 2690.0000 SQ.FT. XMRP = 1097.0000 IN. XT
LREF = 1290.3000 INCHES YMRP = .0000 IN. YT
BREF = 1290.3000 INCHES ZMRP = 450.0000 IN. ZT
SCALE = .0100

PARAMETRIC DATA

ALPHA = 10.000 BETA = .000
DALPHA = -8.000 DBETA = -4.000
Z = 100.000 MACH = 4.500
JET PC = 1225.000

RUN NO. 3996/ 0 RN/L = 2.36 GRADIENT INTERVAL = -5.00/ 5.00

| Y | X | Z | ALPHA | BETA | PHI | CN | CLM | CY | CYN | CBL | CA |
|---|---|---|---|---|---|---|---|---|---|---|---|
| -120.950 | -.964 | 99.70500 | 10.00000 | .26503 | .06086 | .10663 | -.02621 | -.14340 | -.03648 | -.00206 | .16216 |
| -120.460 | 99.659 | 100.12000 | 10.00500 | .27002 | .06102 | .10480 | -.02639 | -.13880 | -.04132 | -.00062 | .14503 |
| -120.070 | 199.710 | 100.42000 | 10.01400 | .24826 | .06128 | .11540 | -.02729 | -.12313 | -.04006 | .00147 | .14449 |
| | GRADIENT | .00000 | .00000 | .00000 | .00000 | .00000 | .00000 | .00000 | .00000 | .00000 | .00000 |

IA143, AEDC V41A-P8A, O/ET W/R.H. SRB SEPARATING (OVX362) ( 23 MAY 77 )

REFERENCE DATA

SREF = 2690.0000 SQ.FT. XMRP = 1097.0000 IN. XT
LREF = 1290.3000 INCHES YMRP = .0000 IN. YT
BREF = 1290.3000 INCHES ZMRP = 450.0000 IN. ZT
SCALE = .0100

PARAMETRIC DATA

ALPHA = 10.000 BETA = .000
DALPHA = -8.000 DBETA = -4.000
Z = 100.000 MACH = 4.500
JET PC = 1225.000

RUN NO. 4001/ 0 RN/L = 2.38 GRADIENT INTERVAL = -5.00/ 5.00

| Y | X | Z | ALPHA | BETA | PHI | CN | CLM | CY | CYN | CBL | CA |
|---|---|---|---|---|---|---|---|---|---|---|---|
| -150.120 | 199.630 | 99.99000 | 10.01500 | .23998 | .05797 | .11794 | -.02766 | -.11622 | -.04046 | .00185 | .14795 |
| -151.390 | 99.605 | 99.71600 | 10.00800 | .25776 | .05534 | .11435 | -.02955 | -.12286 | -.04514 | .00108 | .14798 |
| -150.870 | -.216 | 99.94900 | 10.00400 | .23505 | .04580 | .11409 | -.02708 | -.12977 | -.03155 | -.00400 | .16729 |
| | GRADIENT | .00000 | .00000 | .00000 | .00000 | .00000 | .00000 | .00000 | .00000 | .00000 | .00000 |

RUN NO. 4002/ 0 RN/L = 2.38 GRADIENT INTERVAL = -5.00/ 5.00

| Y | X | Z | ALPHA | BETA | PHI | CN | CLM | CY | CYN | CBL | CA |
|---|---|---|---|---|---|---|---|---|---|---|---|
| -200.020 | -.174 | 100.24000 | 10.01400 | .21608 | .03353 | .12046 | -.02493 | -.11791 | -.03047 | -.00502 | .16855 |
| -200.560 | 99.607 | 100.20000 | 10.01400 | .24013 | .04399 | .12619 | -.03169 | -.11016 | -.04500 | .00050 | .15384 |
| -199.990 | 199.550 | 100.20000 | 10.01700 | .23065 | .05043 | .12234 | -.02723 | -.10947 | -.04054 | .00126 | .15565 |
| | GRADIENT | .00000 | .00000 | .00000 | .00000 | .00000 | .00000 | .00000 | .00000 | .00000 | .00000 |

IA143, AEDC V41A-P8A, O/ET W/R.H. SRB SEPARATING (OVX363) ( 23 MAY 77 )

REFERENCE DATA

SREF = 2690.0000 SQ.FT. XMRP = 1097.0000 IN. XT
LREF = 1290.3000 INCHES YMRP = .0000 IN. YT
BREF = 1290.3000 INCHES ZMRP = 450.0000 IN. ZT
SCALE = .0100

PARAMETRIC DATA

ALPHA = 10.000 BETA = .000
DALPHA = -8.000 DBETA = -4.000
Z = 150.000 MACH = 4.500
JET PC = 1225.000

RUN NO. 3997/ 0 RN/L = 2.37 GRADIENT INTERVAL = -5.00/ 5.00

| Y | X | Z | ALPHA | BETA | PHI | CN | CLM | CY | CYN | CBL | CA |
|---|---|---|---|---|---|---|---|---|---|---|---|
| -121.570 | 199.530 | 150.19000 | 10.02700 | .30437 | .07674 | .11967 | -.02234 | -.14672 | -.05137 | .00307 | .14391 |
| -121.520 | 99.628 | 149.80000 | 10.02400 | .31894 | .07222 | .11542 | -.02110 | -.15867 | -.05184 | .00050 | .14769 |
| -120.080 | -.354 | 149.96000 | 10.02200 | .29477 | .06869 | .12389 | -.02344 | -.14931 | -.04622 | .00023 | .16503 |
| | GRADIENT | .00000 | .00000 | .00000 | .00000 | .00000 | .00000 | .00000 | .00000 | .00000 | .00000 |

RUN NO. 4000/ 0 RN/L = 2.38 GRADIENT INTERVAL = -5.00/ 5.00

| Y | X | Z | ALPHA | BETA | PHI | CN | CLM | CY | CYN | CBL | CA |
|---|---|---|---|---|---|---|---|---|---|---|---|
| -151.200 | -.090 | 149.42000 | 10.02500 | .26806 | .05515 | .12818 | -.02337 | -.13461 | -.04326 | -.00093 | .16887 |
| -151.150 | 99.691 | 150.01000 | 10.02500 | .30291 | .06611 | .12000 | -.02253 | -.13942 | -.05572 | .00258 | .14912 |
| -150.080 | 199.510 | 149.97000 | 10.02600 | .28483 | .06573 | .12152 | -.02367 | -.13651 | -.04907 | .00189 | .14704 |
| | GRADIENT | .00000 | .00000 | .00000 | .00000 | .00000 | .00000 | .00000 | .00000 | .00000 | .00000 |

IA143, AEDC V41A-P8A, O/ET W/R.H. SRB SEPARATING (OVX363) ( 23 MAY 77 )

REFERENCE DATA

SREF = 2690.0000 SQ.FT. XMRP = 1097.0000 IN. XT
LREF = 1290.3000 INCHES YMRP = .0000 IN. YT
BREF = 1290.3000 INCHES ZMRP = 450.0000 IN. ZT
SCALE = .0100

PARAMETRIC DATA

ALPHA = 10.000 BETA = .000
DALPHA = -8.000 DBETA = -4.000
Z = 150.000 MACH = 4.500
JET PC = 1225.000

RUN NO. 4003/ 0 RN/L = 2.38 GRADIENT INTERVAL = -5.00/ 5.00

| Y | X | Z | ALPHA | BETA | PHI | CN | CLM | CY | CYN | CBL | CA |
|---|---|---|---|---|---|---|---|---|---|---|---|
| -200. | 199.470 | 150.07000 | 10.02700 | .26750 | .05688 | .12491 | -.02362 | -.12531 | -.04809 | .00151 | .15347 |
| -200 | 99.689 | 149.82000 | 10.02800 | .27674 | .05495 | .12743 | -.02379 | -.12018 | -.05538 | .00296 | .15509 |
| -200.530 | -.302 | 150.00000 | 10.02900 | .23693 | .03588 | .12896 | -.02086 | -.12817 | -.03413 | -.00543 | .17079 |
| | GRADIENT | .00000 | .00000 | .00000 | .00000 | .00000 | .00000 | .00000 | .00000 | .00000 | .00000 |

IA143, AEDC V41A-P8A, O/ET W/R.H. SRB SEPARATING (OVX364) ( 23 MAY 77 )

REFERENCE DATA

SREF = 2690.0000 SQ.FT. XMRP = 1097.0000 IN. XT
LREF = 1290.3000 INCHES YMRP = .0000 IN. YT
BREF = 1290.3000 INCHES ZMRP = 450.0000 IN. ZT
SCALE = .0100

PARAMETRIC DATA

ALPHA = 10.000 BETA = .000
DALPHA = -8.000 DBETA = -4.000
Z = 200.000 MACH = 4.500
JET PC = 1225.000

RUN NO. 3998/ 0 RN/L = 2.37 GRADIENT INTERVAL = -5.00/ 5.00

| Y | X | Z | ALPHA | BETA | PHI | CN | CLM | CY | CYN | CBL | CA |
|---|---|---|---|---|---|---|---|---|---|---|---|
| -120.930 | -.337 | 200.77000 | 10.05500 | .30360 | .07298 | .15290 | -.02073 | -.15147 | -.04878 | .00122 | .16692 |
| -121.540 | 99.555 | 200.16000 | 10.06300 | .36470 | .08441 | .14067 | -.01235 | -.17813 | -.06092 | .00166 | .15243 |
| -120.420 | 199.570 | 200.13000 | 10.06400 | .35424 | .09058 | .14411 | -.01545 | -.16897 | -.06079 | .00423 | .14426 |
| | GRADIENT | .00000 | .00000 | .00000 | .00000 | .00000 | .00000 | .00000 | .00000 | .00000 | .00000 |

RUN NO. 3999/ 0 RN/L = 2.38 GRADIENT INTERVAL = -5.00/ 5.00

| Y | X | Z | ALPHA | BETA | PHI | CN | CLM | CY | CYN | CBL | CA |
|---|---|---|---|---|---|---|---|---|---|---|---|
| -150.540 | 199.650 | 199.57000 | 10.04900 | .33802 | .08054 | .13533 | -.01847 | -.16140 | -.05834 | .00284 | .14647 |
| -150.800 | 99.772 | 200.08000 | 10.05300 | .34174 | .07499 | .13650 | -.01534 | -.15879 | -.06205 | .00265 | .15296 |
| -149.450 | -.282 | 199.84000 | 10.05000 | .27865 | .05936 | .14717 | -.01945 | -.13696 | -.04649 | .00011 | .17145 |
| | GRADIENT | .00000 | .00000 | .00000 | .00000 | .00000 | .00000 | .00000 | .00000 | .00000 | .00000 |

RUN NO. 4004/ 0 RN/L = 2.38 GRADIENT INTERVAL = -5.00/ 5.00

| Y | X | Z | ALPHA | BETA | PHI | CN | CLM | CY | CYN | CBL | CA |
|---|---|---|---|---|---|---|---|---|---|---|---|
| -200.290 | -.341 | 200.44000 | 10.04900 | .25934 | .04476 | .14272 | -.01746 | -.12759 | -.04406 | -.00196 | .17118 |
| -201.470 | 99.602 | 200.12000 | 10.05100 | .31541 | .06471 | .13712 | -.01610 | -.13656 | -.06320 | .00386 | .15733 |
| -200.750 | 199.500 | 199.86000 | 10.04300 | .30902 | .06589 | .13267 | -.01897 | -.14636 | -.05469 | .00139 | .15251 |
| | GRADIENT | .00000 | .00000 | .00000 | .00000 | .00000 | .00000 | .00000 | .00000 | .00000 | .00000 |

IA143, AEDC V41A-P8A, O/ET W/R.H. SRB SEPARATING (OVX365) ( 23 MAY 77 )

REFERENCE DATA

SREF = 2690.0000 SQ.FT. XMRP = 1097.0000 IN. XT
LREF = 1290.3000 INCHES YMRP = .0000 IN. YT
BREF = 1290.3000 INCHES ZMRP = 450.0000 IN. ZT
SCALE = .0100

PARAMETRIC DATA

ALPHA = 10.000 BETA = .000
DALPHA = -8.000 DBETA = -2.000
Z = 100.000 MACH = 4.500
JET PC = 1225.000

RUN NO. 4005/ 0 RN/L = 2.37 GRADIENT INTERVAL = -5.00/ 5.00

| Y | X | Z | ALPHA | BETA | PHI | CN | CLM | CY | CYN | CBL | CA |
|---|---|---|---|---|---|---|---|---|---|---|---|
| -71.187 | -1.111 | 99.63500 | 9.99460 | .32532 | .08000 | .09531 | -.02237 | -.15834 | -.05425 | .00253 | .16477 |
| -70.734 | 99.684 | 100.39000 | 10.00500 | .30806 | .06903 | .10154 | -.02574 | -.16119 | -.04560 | -.00149 | .14016 |
| -69.022 | 199.670 | 100.73000 | 10.02900 | .28685 | .07335 | .14065 | -.02896 | -.11251 | -.06288 | .00905 | .16519 |
| | GRADIENT | .00000 | .00000 | .00000 | .00000 | .00000 | .00000 | .00000 | .00000 | .00000 | .00000 |

RUN NO. 4010/ 0 RN/L = 2.37 GRADIENT INTERVAL = -5.00/ 5.00

| Y | X | Z | ALPHA | BETA | PHI | CN | CLM | CY | CYN | CBL | CA |
|---|---|---|---|---|---|---|---|---|---|---|---|
| -99.882 | 199.660 | 99.21100 | 10.02900 | .27930 | .06988 | .14096 | -.03037 | -.10250 | -.06530 | .01013 | .16038 |
| -101.960 | 99.697 | 99.09500 | 9.99950 | .28541 | .06285 | .09716 | -.02479 | -.14461 | -.04504 | -.00048 | .14594 |
| -101.000 | -.193 | 99.94400 | 9.99610 | .28617 | .06223 | .09747 | -.02255 | -.15293 | -.04074 | -.00248 | .16565 |
| | GRADIENT | .00000 | .00000 | .00000 | .00000 | .00000 | .00000 | .00000 | .00000 | .00000 | .00000 |

RUN NO. 4011/ 0 RN/L = 2.37 GRADIENT INTERVAL = -5.00/ 5.00

| Y | X | Z | ALPHA | BETA | PHI | CN | CLM | CY | CYN | CBL | CA |
|---|---|---|---|---|---|---|---|---|---|---|---|
| -149.340 | -.196 | 100.07000 | 10.00600 | .23716 | .04192 | .11042 | -.02311 | -.12466 | -.03575 | -.00342 | .17260 |
| -150.900 | 99.722 | 100.17000 | 10.00800 | .26480 | .05550 | .11206 | -.02734 | -.11811 | -.05102 | .00270 | .15233 |
| -150.660 | 199.610 | 100.26000 | 10.01500 | .24371 | .05698 | .11433 | -.02447 | -.11519 | -.04282 | .00215 | .15230 |
| | GRADIENT | .00000 | .00000 | .00000 | .00000 | .00000 | .00000 | .00000 | .00000 | .00000 | .00000 |

IA143, AEDC V41A-P8A, O/ET W/R.H. SRB SEPARATING (OVX366) ( 23 MAY 77 )

REFERENCE DATA

SREF = 2690.0000 SQ.FT. XMRP = 1097.0000 IN. XT
LREF = 1290.3000 INCHES YMRP = .0000 IN. YT
BREF = 1290.3000 INCHES ZMRP = 450.0000 IN. ZT
SCALE = .0100

PARAMETRIC DATA

ALPHA = 10.000 BETA = .000
DALPHA = -8.000 DBETA = -2.000
Z = 150.000 MACH = 4.500
JET PC = 1225.000

RUN NO. 4006/ 0 RN/L = 2.37 GRADIENT INTERVAL = -5.00/ 5.00

| Y | X | Z | ALPHA | BETA | PHI | CN | CLM | CY | CYN | CBL | CA |
|---|---|---|---|---|---|---|---|---|---|---|---|
| -72.601 | 199.530 | 150.80000 | 10.07000 | .35785 | .09894 | .15588 | -.01489 | -.14996 | -.07243 | .01049 | .16276 |
| -71.402 | 99.631 | 149.71000 | 10.05900 | .34823 | .08410 | .14629 | -.01488 | -.16469 | -.06099 | .00353 | .16528 |
| -71.098 | -.232 | 149.68000 | 10.05000 | .34978 | .09744 | .13533 | -.01040 | -.16696 | -.05931 | .00572 | .18033 |
| | GRADIENT | .00000 | .00000 | .00000 | .00000 | .00000 | .00000 | .00000 | .00000 | .00000 | .00000 |

IA143, AEDC V41A-P8A, O/ET W/R.H. SRB SEPARATING (OVX366) ( 23 MAY 77 )

REFERENCE DATA

SREF = 2690.0000 SQ.FT. XMRP = 1097.0000 IN. XT
LREF = 1290.3000 INCHES YMRP = .0000 IN. YT
BREF = 1290.3000 INCHES ZMRP = 450.0000 IN. ZT
SCALE = .0100

PARAMETRIC DATA

ALPHA = 10.000 BETA = .000
DALPHA = -8.000 DBETA = -2.000
Z = 150.000 MACH = 4.500
JET PC = 1225.000

RUN NO. 4009/ 0 RN/L = 2.37 GRADIENT INTERVAL = -5.00/ 5.00

| Y | X | Z | ALPHA | BETA | PHI | CN | CLM | CY | CYN | CBL | CA |
|---|---|---|---|---|---|---|---|---|---|---|---|
| -101.290 | -.274 | 148.66000 | 10.02600 | .33036 | .08087 | .11759 | -.01558 | -.15586 | -.05795 | .00365 | .17338 |
| -100.880 | 99.604 | 150.10000 | 10.02900 | .34507 | .08172 | .11396 | -.01658 | -.16873 | -.05750 | .00193 | .14932 |
| -99.521 | 199.570 | 150.99000 | 10.06600 | .33452 | .08695 | .15496 | -.01709 | -.13241 | -.07258 | .01053 | .16032 |
| | GRADIENT | .00000 | .00000 | .00000 | .00000 | .00000 | .00000 | .00000 | .00000 | .00000 | .00000 |

RUN NO. 4012/ 0 RN/L = 2.37 GRADIENT INTERVAL = -5.00/ 5.00

| Y | X | Z | ALPHA | BETA | PHI | CN | CLM | CY | CYN | CBL | CA |
|---|---|---|---|---|---|---|---|---|---|---|---|
| -151.740 | 199.520 | 150.06000 | 10.02600 | .29248 | .06538 | .11957 | -.02163 | -.13909 | -.05120 | .00179 | .15130 |
| -151.040 | 99.680 | 149.87000 | 10.02600 | .30673 | .06550 | .11868 | -.02015 | -.13747 | -.05860 | .00318 | .15521 |
| -150.270 | -.310 | 150.04000 | 10.02600 | .26367 | .04679 | .12285 | -.01730 | -.13667 | -.04075 | -.00336 | .17776 |
| | GRADIENT | .00000 | .00000 | .00000 | .00000 | .00000 | .00000 | .00000 | .00000 | .00000 | .00000 |

IA143, AEDC V41A-P8A, O/ET W/R.H. SRB SEPARATING (OVX367) ( 23 MAY 77 )

REFERENCE DATA

SREF = 2690.0000 SQ.FT. XMRP = 1097.0000 IN. XT
LREF = 1290.3000 INCHES YMRP = .0000 IN. YT
BREF = 1290.3000 INCHES ZMRP = 450.0000 IN. ZT
SCALE = .0100

PARAMETRIC DATA

ALPHA = 10.000 BETA = .000
DALPHA = -8.000 DBETA = -2.000
Z = 200.000 MACH = 4.500
JET PC = 1225.000

RUN NO. 4007/ 0 RN/L = 2.38 GRADIENT INTERVAL = -5.00/ 5.00

| Y | X | Z | ALPHA | BETA | PHI | CN | CLM | CY | CYN | CBL | CA |
|---|---|---|---|---|---|---|---|---|---|---|---|
| -68.386 | -.341 | 201.30000 | 10.10200 | .22506 | .06916 | .18242 | -.01069 | -.12256 | -.02908 | .00149 | .16607 |
| -74.292 | 99.612 | 200.19000 | 10.11200 | .39972 | .10343 | .18397 | -.00420 | -.19128 | -.06817 | .00487 | .17460 |
| -70.996 | 199.570 | 200.45000 | 10.12600 | .41382 | .12135 | .18957 | -.00194 | -.18387 | -.07742 | .01109 | .16410 |
| | GRADIENT | .00000 | .00000 | .00000 | .00000 | .00000 | .00000 | .00000 | .00000 | .00000 | .00000 |

RUN NO. 4008/ 0 RN/L = 2.37 GRADIENT INTERVAL = -5.00/ 5.00

| Y | X | Z | ALPHA | BETA | PHI | CN | CLM | CY | CYN | CBL | CA |
|---|---|---|---|---|---|---|---|---|---|---|---|
| -100.210 | 199.630 | 199.49000 | 10.11000 | .37602 | .10254 | .18093 | -.00648 | -.15645 | -.07690 | .01101 | .16117 |
| -101.590 | 99.633 | 199.26000 | 10.08400 | .38756 | .09520 | .15611 | -.00680 | -.17631 | -.07160 | .00582 | .16160 |
| -99.555 | -.331 | 199.85000 | 10.08000 | .31907 | .08453 | .16242 | -.00775 | -.14923 | -.05618 | .00508 | .18456 |
| | GRADIENT | .00000 | .00000 | .00000 | .00000 | .00000 | .00000 | .00000 | .00000 | .00000 | .00000 |

IA143, AEDC V41A-P8A, O/ET W/R.H. SRB SEPARATING (OVX367) ( 23 MAY 77 )

REFERENCE DATA

SREF = 2690.0000 SQ.FT. XMRP = 1097.0000 IN. XT
LREF = 1290.3000 INCHES YMRP = .0000 IN. YT
BREF = 1290.3000 INCHES ZMRP = 450.0000 IN. ZT
SCALE = .0100

PARAMETRIC DATA

ALPHA = 10.000 BETA = .000
DALPHA = -8.000 DBETA = -2.000
Z = 200.000 MACH = 4.500
JET PC = 1225.000

RUN NO. 4013/ 0 RN/L = 2.37 GRADIENT INTERVAL = -5.00/ 5.00

| Y | X | Z | ALPHA | BETA | PHI | CN | CLM | CY | CYN | CBL | CA |
|---|---|---|---|---|---|---|---|---|---|---|---|
| -151.050 | -.217 | 200.74000 | 10.05400 | .28510 | .05489 | .14447 | -.01345 | -.13961 | -.04831 | -.00092 | .18025 |
| -152.260 | 99.706 | 199.96000 | 10.05500 | .34989 | .07611 | .13655 | -.01281 | -.15607 | -.06713 | .00405 | .15858 |
| -150.550 | 199.570 | 199.92000 | 10.05000 | .34468 | .08014 | .13524 | -.01700 | -.16412 | -.05994 | .00262 | .15059 |
| | GRADIENT | .00000 | .00000 | .00000 | .00000 | .00000 | .00000 | .00000 | .00000 | .00000 | .00000 |

IA143, AEDC V41A-P8A, O/ET W/R.H. SRB SEPARATING (OVX368) ( 23 MAY 77 )

REFERENCE DATA

SREF = 2690.0000 SQ.FT. XMRP = 1097.0000 IN. XT
LREF = 1290.3000 INCHES YMRP = .0000 IN. YT
BREF = 1290.3000 INCHES ZMRP = 450.0000 IN. ZT
SCALE = .0100

PARAMETRIC DATA

ALPHA = 10.000 BETA = .000
DALPHA = -8.000 DBETA = .000
Z = 100.000 MACH = 4.500
JET PC = 1225.000

RUN NO. 4014/ 0 RN/L = 2.37 GRADIENT INTERVAL = -5.00/ 5.00

| Y | X | Z | ALPHA | BETA | PHI | CN | CLM | CY | CYN | CBL | CA |
|---|---|---|---|---|---|---|---|---|---|---|---|
| -51.121 | -1.092 | 99.41100 | 10.00400 | .36102 | .09147 | .09551 | -.01432 | -.17826 | -.05855 | .00273 | .17779 |
| -49.061 | 99.694 | 100.72000 | 10.02500 | .30230 | .07346 | .13534 | -.02677 | -.14449 | -.05208 | .00284 | .17211 |
| -50.400 | 199.550 | 100.24000 | 10.02700 | .30784 | .08379 | .14064 | -.02909 | -.12529 | -.06452 | .00965 | .16896 |
| | GRADIENT | .00000 | .00000 | .00000 | .00000 | .00000 | .00000 | .00000 | .00000 | .00000 | .00000 |

RUN NO. 4019/ 0 RN/L = 2.37 GRADIENT INTERVAL = -5.00/ 5.00

| Y | X | Z | ALPHA | BETA | PHI | CN | CLM | CY | CYN | CBL | CA |
|---|---|---|---|---|---|---|---|---|---|---|---|
| -99.434 | 199.550 | 99.19200 | 10.02700 | .28984 | .07350 | .13786 | -.02917 | -.10506 | -.06848 | .01102 | .16170 |
| -102.160 | 99.518 | 98.81700 | 9.99630 | .29749 | .06677 | .09637 | -.02584 | -.13611 | -.05500 | .00308 | .14760 |
| -101.330 | -.301 | 100.03000 | 9.99520 | .28891 | .06082 | .09637 | -.02157 | -.14487 | -.04661 | -.00071 | .16957 |
| | GRADIENT | .00000 | .00000 | .00000 | .00000 | .00000 | .00000 | .00000 | .00000 | .00000 | .00000 |

RUN NO. 4020/ 0 RN/L = 2.37 GRADIENT INTERVAL = -5.00/ 5.00

| Y | X | Z | ALPHA | BETA | PHI | CN | CLM | CY | CYN | CBL | CA |
|---|---|---|---|---|---|---|---|---|---|---|---|
| -149.970 | -.315 | 100.11000 | 10.00300 | .25041 | .04534 | .10841 | -.02320 | -.11894 | -.04470 | -.00052 | .17245 |
| -150.940 | 99.695 | 100.19000 | 10.00800 | .27578 | .05957 | .10848 | -.02484 | -.11517 | -.05747 | .00497 | .15431 |
| -150.400 | 199.570 | 100.21000 | 10.01500 | .25059 | .05788 | .11010 | -.02174 | -.11801 | -.04437 | .00217 | .15395 |
| | GRADIENT | .00000 | .00000 | .00000 | .00000 | .00000 | .00000 | .00000 | .00000 | .00000 | .00000 |

IA143, AEDC V41A-P8A, O/ET W/R.H. SRB SEPARATING (OVX369) ( 23 MAY 77 )

REFERENCE DATA

SREF = 2690.0000 SQ.FT. XMRP = 1097.0000 IN. XT
LREF = 1290.3000 INCHES YMRP = .0000 IN. YT
BREF = 1290.3000 INCHES ZMRP = 450.0000 IN. ZT
SCALE = .0100

PARAMETRIC DATA

ALPHA = 10.000 BETA = .000
DALPHA = -8.000 DBETA = .000
Z = 150.000 MACH = 4.500
JET PC = 1225.000

RUN NO. 4015/ 0 RN/L = 2.37 GRADIENT INTERVAL = -5.00/ 5.00

| Y | X | Z | ALPHA | BETA | PHI | CN | CLM | CY | CYN | CBL | CA |
|---|---|---|---|---|---|---|---|---|---|---|---|
| -53.354 | 199.570 | 150.88000 | 10.07500 | .41169 | .12220 | .15713 | -.01246 | -.18689 | -.07468 | .01040 | .16340 |
| -51.866 | 99.550 | 149.67000 | 10.06600 | .44046 | .11476 | .14559 | -.00982 | -.21803 | -.07100 | .00384 | .16763 |
| -47.423 | -.294 | 150.34000 | 10.07700 | .26938 | .07781 | .16893 | -.01365 | -.14048 | -.03879 | .00224 | .18236 |
| | GRADIENT | .00000 | .00000 | .00000 | .00000 | .00000 | .00000 | .00000 | .00000 | .00000 | .00000 |

RUN NO. 4018/ 0 RN/L = 2.37 GRADIENT INTERVAL = -5.00/ 5.00

| Y | X | Z | ALPHA | BETA | PHI | CN | CLM | CY | CYN | CBL | CA |
|---|---|---|---|---|---|---|---|---|---|---|---|
| -101.500 | -.286 | 148.42000 | 10.02900 | .32453 | .07416 | .11628 | -.01159 | -.16224 | -.05210 | .00043 | .18033 |
| -101.510 | 99.654 | 150.12000 | 10.03100 | .35636 | .08566 | .11653 | -.01653 | -.16156 | -.06645 | .00516 | .15193 |
| -99.729 | 199.580 | 151.07000 | 10.06600 | .34371 | .08855 | .15573 | -.01716 | -.13586 | -.07469 | .01070 | .16233 |
| | GRADIENT | .00000 | .00000 | .00000 | .00000 | .00000 | .00000 | .00000 | .00000 | .00000 | .00000 |

RUN NO. 4021/ 0 RN/L = 2.37 GRADIENT INTERVAL = -5.00/ 5.00

| Y | X | Z | ALPHA | BETA | PHI | CN | CLM | CY | CYN | CBL | CA |
|---|---|---|---|---|---|---|---|---|---|---|---|
| -151.540 | 199.610 | 150.16000 | 10.02500 | .30208 | .06686 | .11670 | -.01985 | -.14313 | -.05323 | .00183 | .15413 |
| -150.880 | 99.596 | 149.99000 | 10.02500 | .31814 | .06954 | .11617 | -.01847 | -.13720 | -.06371 | .00486 | .15733 |
| -149.930 | -.278 | 150.00000 | 10.02600 | .27539 | .04826 | .11887 | -.01450 | -.13845 | -.04509 | -.00262 | .18096 |
| | GRADIENT | .00000 | .00000 | .00000 | .00000 | .00000 | .00000 | .00000 | .00000 | .00000 | .00000 |

IA143, AEDC V41A-P8A, O/ET W/R.H. SRB SEPARATING (OVX370) ( 23 MAY 77 )

REFERENCE DATA

SREF = 2690.0000 SQ.FT. XMRP = 1097.0000 IN. XT
LREF = 1290.3000 INCHES YMRP = .0000 IN. YT
BREF = 1290.3000 INCHES ZMRP = 450.0000 IN. ZT
SCALE = .0100

PARAMETRIC DATA

ALPHA = 10.000 BETA = .000
DALPHA = -8.000 DBETA = .000
Z = 200.000 MACH = 4.500
JET PC = 1225.000

RUN NO. 4016/ 0 RN/L = 2.37 GRADIENT INTERVAL = -5.00/ 5.00

| Y | X | Z | ALPHA | BETA | PHI | CN | CLM | CY | CYN | CBL | CA |
|---|---|---|---|---|---|---|---|---|---|---|---|
| -49.640 | -.211 | 200.97000 | 10.12100 | .20264 | .06556 | .18506 | -.00524 | -.11402 | -.02395 | .00118 | .15002 |
| -51.658 | 99.562 | 200.17000 | 10.14900 | .57719 | .16492 | .18792 | .01345 | -.29636 | -.08593 | .00539 | .16789 |
| -48.890 | 199.550 | 200.26000 | 10.14100 | .48862 | .15285 | .19778 | .00194 | -.23682 | -.07945 | .01036 | .16471 |
| | GRADIENT | .00000 | .00000 | .00000 | .00000 | .00000 | .00000 | .00000 | .00000 | .00000 | .00000 |

IA143, AEDC V41A-P8A, O/ET W/R.H. SRB SEPARATING (OVX370) ( 23 MAY 77 )

REFERENCE DATA

SREF = 2690.0000 SQ.FT. XMRP = 1097.0000 IN. XT
LREF = 1290.3000 INCHES YMRP = .0000 IN. YT
BREF = 1290.3000 INCHES ZMRP = 450.0000 IN. ZT
SCALE = .0100

PARAMETRIC DATA

ALPHA = 10.000 BETA = .000
DALPHA = -8.000 DBETA = .000
Z = 200.000 MACH = 4.500
JET PC = 1225.000

RUN NO. 4017/ 0 RN/L = 2.37 GRADIENT INTERVAL = -5.00/ 5.00

| Y | X | Z | ALPHA | BETA | PHI | CN | CLM | CY | CYN | CBL | CA |
|---|---|---|---|---|---|---|---|---|---|---|---|
| -98.693 | 199.540 | 198.89000 | 10.11000 | .38585 | .10436 | .18207 | -.00678 | -.16087 | -.07872 | .01102 | .16407 |
| -101.600 | 99.695 | 199.40000 | 10.09200 | .39498 | .09792 | .16370 | -.00506 | -.17374 | -.07625 | .00748 | .16898 |
| -98.980 | -.263 | 199.96000 | 10.09100 | .29450 | .07376 | .17112 | -.00493 | -.14765 | -.04669 | .00161 | .19210 |
| | GRADIENT | .00000 | .00000 | .00000 | .00000 | .00000 | .00000 | .00000 | .00000 | .00000 | .00000 |

RUN NO. 4022/ 0 RN/L = 2.37 GRADIENT INTERVAL = -5.00/ 5.00

| Y | X | Z | ALPHA | BETA | PHI | CN | CLM | CY | CYN | CBL | CA |
|---|---|---|---|---|---|---|---|---|---|---|---|
| -150.990 | -.171 | 200.72000 | 10.05700 | .29355 | .05431 | .14148 | -.00868 | -.14136 | -.05125 | -.00084 | .18655 |
| -151.920 | 99.671 | 200.00000 | 10.05700 | .36309 | .07941 | .13717 | -.01142 | -.16041 | -.07058 | .00466 | .16198 |
| -150.500 | 199.530 | 200.00000 | 10.05300 | .36020 | .08276 | .13677 | -.01510 | -.17163 | -.06269 | .00253 | .15397 |
| | GRADIENT | .00000 | .00000 | .00000 | .00000 | .00000 | .00000 | .00000 | .00000 | .00000 | .00000 |

IA143, AEDC V41A-P8A, O/ET W/R.H. SRB SEPARATING (OVX371) ( 23 MAY 77 )

REFERENCE DATA

SREF = 2690.0000 SQ.FT. XMRP = 1097.0000 IN. XT
LREF = 1290.3000 INCHES YMRP = .0000 IN. YT
BREF = 1290.3000 INCHES ZMRP = 450.0000 IN. ZT
SCALE = .0100

PARAMETRIC DATA

ALPHA = 10.000 BETA = .000
DALPHA = -8.000 DBETA = 2.000
Z = 100.000 MACH = 4.500
JET PC = 1225.000

RUN NO. 4023/ 0 RN/L = 2.36 GRADIENT INTERVAL = -5.00/ 5.00

| Y | X | Z | ALPHA | BETA | PHI | CN | CLM | CY | CYN | CBL | CA |
|---|---|---|---|---|---|---|---|---|---|---|---|
| -51.350 | -1.096 | 99.36500 | 10.00300 | .36588 | .09077 | .09618 | -.01493 | -.17690 | -.06173 | .00329 | .17989 |
| -49.205 | 99.686 | 100.79000 | 10.02200 | .31705 | .07850 | .13462 | -.02764 | -.13810 | -.06200 | .00633 | .17398 |
| -50.357 | 199.580 | 100.34000 | 10.02500 | .31567 | .08511 | .13721 | -.02819 | -.12462 | -.06844 | .01062 | .17057 |
| | GRADIENT | .00000 | .00000 | .00000 | .00000 | .00000 | .00000 | .00000 | .00000 | .00000 | .00000 |

RUN NO. 4028/ 0 RN/L = 2.36 GRADIENT INTERVAL = -5.00/ 5.00

| Y | X | Z | ALPHA | BETA | PHI | CN | CLM | CY | CYN | CBL | CA |
|---|---|---|---|---|---|---|---|---|---|---|---|
| -98.911 | 199.610 | 99.24600 | 10.02700 | .29410 | .07507 | .13613 | -.02779 | -.10605 | -.06991 | .01144 | .16403 |
| -101.810 | 99.668 | 98.77400 | 9.99530 | .30746 | .07187 | .09662 | -.02620 | -.12800 | -.06364 | .00663 | .14908 |
| -100.890 | -.241 | 100.10000 | 9.99260 | .29644 | .06307 | .10022 | -.02516 | -.13062 | -.05783 | .00353 | .17023 |
| | GRADIENT | .00000 | .00000 | .00000 | .00000 | .00000 | .00000 | .00000 | .00000 | .00000 | .00000 |

IA143, AEDC V41A-P8A, O/ET W/R.H. SRB SEPARATING (OVX371) ( 23 MAY 77 )

REFERENCE DATA

SREF = 2690.0000 SQ.FT. XMRP = 1097.0000 IN. XT
LREF = 1290.3000 INCHES YMRP = .0000 IN. YT
BREF = 1290.3000 INCHES ZMRP = 450.0000 IN. ZT
SCALE = .0100

PARAMETRIC DATA

ALPHA = 10.000 BETA = .000
DALPHA = -8.000 DBETA = 2.000
Z = 100.000 MACH = 4.500
JET PC = 1225.000

RUN NO. 4029/ 0 RN/L = 2.36 GRADIENT INTERVAL = -5.00/ 5.00

| Y | X | Z | ALPHA | BETA | PHI | CN | CLM | CY | CYN | CBL | CA |
|---|---|---|---|---|---|---|---|---|---|---|---|
| -149.930 | -.282 | 100.12000 | 10.00100 | .26851 | .05106 | .11103 | -.02581 | -.10567 | -.06003 | .00495 | .17279 |
| -152.460 | 99.697 | 100.16000 | 10.00700 | .27842 | .05967 | .10692 | -.02339 | -.11234 | -.06016 | .00581 | .15755 |
| -150.540 | 199.640 | 100.23000 | 10.01300 | .25447 | .05675 | .10782 | -.02097 | -.11936 | -.04547 | .00192 | .15646 |
| | GRADIENT | .00000 | .00000 | .00000 | .00000 | .00000 | .00000 | .00000 | .00000 | .00000 | .00000 |

IA143, AEDC V41A-P8A, O/ET W/R.H. SRB SEPARATING (OVX372) ( 23 MAY 77 )

REFERENCE DATA

SREF = 2690.0000 SQ.FT. XMRP = 1097.0000 IN. XT
LREF = 1290.3000 INCHES YMRP = .0000 IN. YT
BREF = 1290.3000 INCHES ZMRP = 450.0000 IN. ZT
SCALE = .0100

PARAMETRIC DATA

ALPHA = 10.000 BETA = .000
DALPHA = -8.000 DBETA = 2.000
Z = 150.000 MACH = 4.500
JET PC = 1225.000

RUN NO. 4024/ 0 RN/L = 2.36 GRADIENT INTERVAL = -5.00/ 5.00

| Y | X | Z | ALPHA | BETA | PHI | CN | CLM | CY | CYN | CBL | CA |
|---|---|---|---|---|---|---|---|---|---|---|---|
| -53.107 | 199.500 | 150.85000 | 10.07300 | .41583 | .12245 | .15502 | -.01172 | -.18887 | -.07582 | .01040 | .16591 |
| -51.903 | 99.579 | 149.62000 | 10.06500 | .45067 | .11865 | .14760 | -.01101 | -.21027 | -.08011 | .00722 | .16982 |
| -47.315 | -.344 | 150.30000 | 10.07600 | .27700 | .07502 | .16346 | -.00954 | -.14884 | -.03822 | .00043 | .18937 |
| | GRADIENT | .00000 | .00000 | .00000 | .00000 | .00000 | .00000 | .00000 | .00000 | .00000 | .00000 |

RUN NO. 4027/ 0 RN/L = 2.35 GRADIENT INTERVAL = -5.00/ 5.00

| Y | X | Z | ALPHA | BETA | PHI | CN | CLM | CY | CYN | CBL | CA |
|---|---|---|---|---|---|---|---|---|---|---|---|
| -101.500 | -.175 | 148.24000 | 10.02800 | .32797 | .07501 | .11751 | -.01165 | -.15690 | -.05725 | .00224 | .18332 |
| -101.350 | 99.690 | 150.21000 | 10.03500 | .36276 | .08785 | .12343 | -.01726 | -.15454 | -.07363 | .00779 | .15698 |
| -99.935 | 199.580 | 151.05000 | 10.06500 | .34821 | .08922 | .15611 | -.01741 | -.13801 | -.07566 | .01070 | .16421 |
| | GRADIENT | .00000 | .00000 | .00000 | .00000 | .00000 | .00000 | .00000 | .00000 | .00000 | .00000 |

RUN NO. 4030/ 0 RN/L = 2.36 GRADIENT INTERVAL = -5.00/ 5.00

| Y | X | Z | ALPHA | BETA | PHI | CN | CLM | CY | CYN | CBL | CA |
|---|---|---|---|---|---|---|---|---|---|---|---|
| -151.890 | 199.610 | 150.26000 | 10.02300 | .30729 | .06723 | .11443 | -.01882 | -.14470 | -.05470 | .00191 | .15658 |
| -150.960 | 99.662 | 149.96000 | 10.02400 | .32569 | .07114 | .11504 | -.01807 | -.13604 | -.06761 | .00595 | .15946 |
| -150.350 | -.174 | 150.01000 | 10.02400 | .29248 | .05626 | .12082 | -.01656 | -.12550 | -.05935 | .00308 | .18060 |
| | GRADIENT | .00000 | .00000 | .00000 | .00000 | .00000 | .00000 | .00000 | .00000 | .00000 | .00000 |

IA143, AEDC V41A-P8A, O/ET W/R.H. SRB SEPARATING (OVX373) ( 23 MAY 77 )

REFERENCE DATA

SREF = 2690.0000 SQ.FT. XMRP = 1097.0000 IN. XT
LREF = 1290.3000 INCHES YMRP = .0000 IN. YT
BREF = 1290.3000 INCHES ZMRP = 450.0000 IN. ZT
SCALE = .0100

PARAMETRIC DATA

ALPHA = 10.000 BETA = .000
DALPHA = -8.000 DBETA = 2.000
Z = 200.000 MACH = 4.500
JET PC = 1225.000

RUN NO. 4025/ 0 RN/L = 2.36 GRADIENT INTERVAL = -5.00/ 5.00

| Y | X | Z | ALPHA | BETA | PHI | CN | CLM | CY | CYN | CBL | CA |
|---|---|---|---|---|---|---|---|---|---|---|---|
| -49.521 | -.171 | 201.00000 | 10.11700 | .21805 | .06170 | .18377 | -.00356 | -.12328 | -.02640 | -.00053 | .16211 |
| -51.664 | 99.615 | 200.16000 | 10.14500 | .59459 | .17273 | .18581 | .01262 | -.29777 | -.09340 | .00808 | .16946 |
| -48.516 | 199.610 | 200.37000 | 10.14100 | .49783 | .15521 | .19921 | .00269 | -.24344 | -.08069 | .01022 | .16864 |
| | GRADIENT | .00000 | .00000 | .00000 | .00000 | .00000 | .00000 | .00000 | .00000 | .00000 | .00000 |

RUN NO. 4026/ 0 RN/L = 2.36 GRADIENT INTERVAL = -5.00/ 5.00

| Y | X | Z | ALPHA | BETA | PHI | CN | CLM | CY | CYN | CBL | CA |
|---|---|---|---|---|---|---|---|---|---|---|---|
| -98.564 | 199.690 | 199.07000 | 10.11000 | .39155 | .10620 | .18333 | -.00636 | -.16411 | -.08007 | .01125 | .16655 |
| -101.230 | 99.788 | 199.41000 | 10.09600 | .39695 | .09867 | .17034 | -.00544 | -.16908 | -.08030 | .00900 | .17476 |
| -99.065 | -.295 | 199.93000 | 10.09300 | .29970 | .07191 | .17282 | -.00319 | -.14753 | -.04974 | .00177 | .19860 |
| | GRADIENT | .00000 | .00000 | .00000 | .00000 | .00000 | .00000 | .00000 | .00000 | .00000 | .00000 |

RUN NO. 4031/ 0 RN/L = 2.36 GRADIENT INTERVAL = -5.00/ 5.00

| Y | X | Z | ALPHA | BETA | PHI | CN | CLM | CY | CYN | CBL | CA |
|---|---|---|---|---|---|---|---|---|---|---|---|
| -150.880 | -.237 | 200.92000 | 10.05800 | .31417 | .06043 | .14168 | -.00703 | -.14092 | -.06037 | .00191 | .18997 |
| -151.960 | 99.733 | 200.01000 | 10.05800 | .37480 | .08154 | .13849 | -.01106 | -.16112 | -.07540 | .00575 | .16450 |
| -151.400 | 199.680 | 199.99000 | 10.05300 | .36655 | .08193 | .13652 | -.01440 | -.17556 | -.06326 | .00186 | .15771 |
| | GRADIENT | .00000 | .00000 | .00000 | .00000 | .00000 | .00000 | .00000 | .00000 | .00000 | .00000 |

IA143, AEDC V41A-P8A, O/ET W/R.H. SRB SEPARATING (OVX374) ( 23 MAY 77 )

REFERENCE DATA

SREF = 2690.0000 SQ.FT. XMRP = 1097.0000 IN. XT
LREF = 1290.3000 INCHES YMRP = .0000 IN. YT
BREF = 1290.3000 INCHES ZMRP = 450.0000 IN. ZT
SCALE = .0100

PARAMETRIC DATA

ALPHA = 10.000 BETA = .000
DALPHA = -8.000 DBETA = -4.000
Z = 100.000 MACH = 4.500
JET PC = .000

RUN NO. 4035/ 0 RN/L = 2.37 GRADIENT INTERVAL = -5.00/ 5.00

| Y | X | Z | ALPHA | BETA | PHI | CN | CLM | CY | CYN | CBL | CA |
|---|---|---|---|---|---|---|---|---|---|---|---|
| -124.670 | -.935 | 103.06000 | 10.07200 | .03456 | .02221 | .19780 | -.03768 | -.03688 | .00658 | -.00153 | .16407 |
| -120.060 | 99.508 | 100.06000 | 10.06800 | .03007 | .01387 | .20128 | -.04186 | -.03499 | .00692 | -.00305 | .16321 |
| -119.680 | 199.600 | 100.03000 | 10.06900 | .02580 | .02525 | .19247 | -.03613 | -.03457 | .00956 | -.00103 | .16371 |
| | GRADIENT | .00000 | .00000 | .00000 | .00000 | .00000 | .00000 | .00000 | .00000 | .00000 | .00000 |

IA143, AEDC V41A-P8A, O/ET W/R.H. SRB SEPARATING (OVX374) ( 23 MAY 77 )

REFERENCE DATA

SREF = 2690.0000 SQ.FT. XMRP = 1097.0000 IN. XT
LREF = 1290.3000 INCHES YMRP = .0000 IN. YT
BREF = 1290.3000 INCHES ZMRP = 450.0000 IN. ZT
SCALE = .0100

PARAMETRIC DATA

ALPHA = 10.000 BETA = .000
DALPHA = -8.000 DBETA = -4.000
Z = 100.000 MACH = 4.500
JET PC = .000

RUN NO. 4040/ 0 RN/L = 2.37 GRADIENT INTERVAL = -5.00/ 5.00

| Y | X | Z | ALPHA | BETA | PHI | CN | CLM | CY | CYN | CBL | CA |
|---|---|---|---|---|---|---|---|---|---|---|---|
| -150.360 | 199.530 | 100.04000 | 10.06600 | .02172 | .02325 | .19689 | -.04037 | -.03395 | .01094 | -.00159 | .16387 |
| -150.620 | 99.571 | 100.17000 | 10.06400 | .02257 | .00896 | .20715 | -.04792 | -.03460 | .00976 | -.00446 | .16394 |
| -150.220 | -.311 | 99.92600 | 10.06700 | .02503 | .01696 | .19913 | -.04127 | -.03272 | .00822 | -.00229 | .16395 |
| | GRADIENT | .00000 | .00000 | .00000 | .00000 | .00000 | .00000 | .00000 | .00000 | .00000 | .00000 |

RUN NO. 4041/ 0 RN/L = 2.37 GRADIENT INTERVAL = -5.00/ 5.00

| Y | X | Z | ALPHA | BETA | PHI | CN | CLM | CY | CYN | CBL | CA |
|---|---|---|---|---|---|---|---|---|---|---|---|
| -200.240 | -.316 | 99.98300 | 10.06500 | .01303 | .02508 | .19097 | -.03731 | -.03139 | .01364 | -.00125 | .16617 |
| -200.560 | 99.665 | 100.05000 | 10.06200 | .01019 | .01573 | .19780 | -.04262 | -.03145 | .01424 | -.00330 | .16666 |
| -200.850 | 199.710 | 100.33000 | 10.06400 | .01087 | .02281 | .19383 | -.03933 | -.03296 | .01533 | -.00220 | .16696 |
| | GRADIENT | .00000 | .00000 | .00000 | .00000 | .00000 | .00000 | .00000 | .00000 | .00000 | .00000 |

IA143, AEDC V41A-P8A, O/ET W/R.H. SRB SEPARATING (OVX375) ( 23 MAY 77 )

REFERENCE DATA

SREF = 2690.0000 SQ.FT. XMRP = 1097.0000 IN. XT
LREF = 1290.3000 INCHES YMRP = .0000 IN. YT
BREF = 1290.3000 INCHES ZMRP = 450.0000 IN. ZT
SCALE = .0100

PARAMETRIC DATA

ALPHA = 10.000 BETA = .000
DALPHA = -8.000 DBETA = -4.000
Z = 150.000 MACH = 4.500
JET PC = .000

RUN NO. 4036/ 0 RN/L = 2.37 GRADIENT INTERVAL = -5.00/ 5.00

| Y | X | Z | ALPHA | BETA | PHI | CN | CLM | CY | CYN | CBL | CA |
|---|---|---|---|---|---|---|---|---|---|---|---|
| -120.440 | 199.700 | 150.20000 | 10.07000 | .02525 | .02378 | .20142 | -.04091 | -.03347 | .00908 | -.00112 | .16511 |
| -121.040 | 99.616 | 150.04000 | 10.07100 | .02839 | .01832 | .20247 | -.04074 | -.03283 | .00684 | -.00181 | .16530 |
| -120.480 | -.194 | 149.93000 | 10.07300 | .03151 | .01925 | .19876 | -.03739 | -.03198 | .00499 | -.00121 | .16488 |
| | GRADIENT | .00000 | .00000 | .00000 | .00000 | .00000 | .00000 | .00000 | .00000 | .00000 | .00000 |

RUN NO. 4039/ 0 RN/L = 2.37 GRADIENT INTERVAL = -5.00/ 5.00

| Y | X | Z | ALPHA | BETA | PHI | CN | CLM | CY | CYN | CBL | CA |
|---|---|---|---|---|---|---|---|---|---|---|---|
| -150.930 | -.221 | 149.85000 | 10.06800 | .02288 | .02144 | .19805 | -.04019 | -.03050 | .00832 | -.00106 | .16461 |
| -150.650 | 99.704 | 150.27000 | 10.06800 | .02358 | .02411 | .19875 | -.04008 | -.03196 | .00903 | -.00082 | .16536 |
| -150.490 | 199.690 | 150.15000 | 10.06700 | .02023 | .02572 | .20040 | -.04149 | -.03283 | .01119 | -.00095 | .16590 |
| | GRADIENT | .00000 | .00000 | .00000 | .00000 | .00000 | .00000 | .00000 | .00000 | .00000 | .00000 |

IA143, AEDC V41A-P8A, O/ET W/R.H. SRB SEPARATING (OVX375) ( 23 MAY 77 )

REFERENCE DATA

SREF = 2690.0000 SQ.FT. XMRP = 1097.0000 IN. XT
LREF = 1290.3000 INCHES YMRP = .0000 IN. YT
BREF = 1290.3000 INCHES ZMRP = 450.0000 IN. ZT
SCALE = .0100

PARAMETRIC DATA

ALPHA = 10.000 BETA = .000
DALPHA = -8.000 DBETA = -4.000
Z = 150.000 MACH = 4.500
JET PC = .000

RUN NO. 4042/ 0 RN/L = 2.37 GRADIENT INTERVAL = -5.00/ 5.00

| Y | X | Z | ALPHA | BETA | PHI | CN | CLM | CY | CYN | CBL | CA |
|---|---|---|---|---|---|---|---|---|---|---|---|
| -200.360 | 199.570 | 150.07000 | 10.06400 | .00833 | .02348 | .19550 | -.03978 | -.03026 | .01504 | -.00164 | .16783 |
| -200.460 | 99.517 | 149.89000 | 10.06400 | .00857 | .02133 | .19486 | -.03963 | -.02942 | .01429 | -.00185 | .16749 |
| -200.290 | -.364 | 149.95000 | 10.06400 | .01008 | .01782 | .19836 | -.04228 | -.02987 | .01356 | -.00253 | .16646 |
| | GRADIENT | .00000 | .00000 | .00000 | .00000 | .00000 | .00000 | .00000 | .00000 | .00000 | .00000 |

IA143, AEDC V41A-P8A, O/ET W/R.H. SRB SEPARATING (OVX376) ( 23 MAY 77 )

REFERENCE DATA

SREF = 2690.0000 SQ.FT. XMRP = 1097.0000 IN. XT
LREF = 1290.3000 INCHES YMRP = .0000 IN. YT
BREF = 1290.3000 INCHES ZMRP = 450.0000 IN. ZT
SCALE = .0100

PARAMETRIC DATA

ALPHA = 10.000 BETA = .000
DALPHA = -8.000 DBETA = -4.000
Z = 200.000 MACH = 4.500
JET PC = .000

RUN NO. 4037/ 0 RN/L = 2.37 GRADIENT INTERVAL = -5.00/ 5.00

| Y | X | Z | ALPHA | BETA | PHI | CN | CLM | CY | CYN | CBL | CA |
|---|---|---|---|---|---|---|---|---|---|---|---|
| -119.920 | -.248 | 199.97000 | 10.07200 | .02566 | .02512 | .20056 | -.03892 | -.03050 | .00734 | -.00015 | .16596 |
| -120.590 | 99.656 | 200.22000 | 10.07200 | .02535 | .02605 | .20285 | -.04010 | -.03176 | .00825 | -.00026 | .16716 |
| -120.280 | 199.630 | 200.01000 | 10.07000 | .02113 | .02710 | .20600 | -.04279 | -.03212 | .01048 | -.00045 | .16783 |
| | GRADIENT | .00000 | .00000 | .00000 | .00000 | .00000 | .00000 | .00000 | .00000 | .00000 | .00000 |

RUN NO. 4038/ 0 RN/L = 2.37 GRADIENT INTERVAL = -5.00/ 5.00

| Y | X | Z | ALPHA | BETA | PHI | CN | CLM | CY | CYN | CBL | CA |
|---|---|---|---|---|---|---|---|---|---|---|---|
| -150.530 | 199.600 | 199.82000 | 10.06700 | .01535 | .02590 | .20364 | -.04319 | -.03169 | .01280 | -.00099 | .16829 |
| -150.490 | 99.518 | 199.77000 | 10.06800 | .01713 | .02633 | .20074 | -.04093 | -.03037 | .01129 | -.00049 | .16756 |
| -150.560 | -.328 | 199.86000 | 10.06800 | .01802 | .02401 | .20045 | -.04094 | -.02968 | .01030 | -.00071 | .16669 |
| | GRADIENT | .00000 | .00000 | .00000 | .00000 | .00000 | .00000 | .00000 | .00000 | .00000 | .00000 |

RUN NO. 4043/ 0 RN/L = 2.37 GRADIENT INTERVAL = -5.00/ 5.00

| Y | X | Z | ALPHA | BETA | PHI | CN | CLM | CY | CYN | CBL | CA |
|---|---|---|---|---|---|---|---|---|---|---|---|
| -200.370 | -.222 | 200.05000 | 10.06500 | .00919 | .02168 | .19768 | -.04094 | -.02822 | .01336 | -.00147 | .16658 |
| -200.640 | 99.638 | 200.01000 | 10.06400 | .00702 | .01981 | .19848 | -.04161 | -.02734 | .01371 | -.00178 | .16747 |
| -200.550 | 199.550 | 200.17000 | 10.06400 | .00521 | .01748 | .19913 | -.04239 | -.02630 | .01377 | -.00212 | .16725 |
| | GRADIENT | .00000 | .00000 | .00000 | .00000 | .00000 | .00000 | .00000 | .00000 | .00000 | .00000 |

IA143, AEDC V41A-P8A, O/ET W/R.H. SRB SEPARATING (OVX377) ( 23 MAY 77 )

REFERENCE DATA

SREF = 2690.0000 SQ.FT. XMRP = 1097.0000 IN. XT
LREF = 1290.3000 INCHES YMRP = .0000 IN. YT
BREF = 1290.3000 INCHES ZMRP = 450.0000 IN. ZT
SCALE = .0100

PARAMETRIC DATA

ALPHA = 10.000 BETA = .000
DALPHA = -8.000 DBETA = -2.000
Z = 100.000 MACH = 4.500
JET PC = .000

RUN NO. 4044/ 0 RN/L = 2.37 GRADIENT INTERVAL = -5.00/ 5.00

| Y | X | Z | ALPHA | BETA | PHI | CN | CLM | CY | CYN | CBL | CA |
|---|---|---|---|---|---|---|---|---|---|---|---|
| -74.430 | -1.106 | 103.09000 | 10.07500 | .03569 | .01311 | .19408 | -.03335 | -.02514 | -.00125 | -.00054 | .16545 |
| -70.019 | 99.547 | 100.02000 | 10.07100 | .03148 | .01022 | .19684 | -.03769 | -.02469 | .00020 | -.00130 | .16327 |
| -69.904 | 199.610 | 99.91400 | 10.07300 | .02651 | .02312 | .18444 | -.02946 | -.02503 | .00371 | .00079 | .16326 |
| | GRADIENT | .00000 | .00000 | .00000 | .00000 | .00000 | .00000 | .00000 | .00000 | .00000 | .00000 |

RUN NO. 4049/ 0 RN/L = 2.36 GRADIENT INTERVAL = -5.00/ 5.00

| Y | X | Z | ALPHA | BETA | PHI | CN | CLM | CY | CYN | CBL | CA |
|---|---|---|---|---|---|---|---|---|---|---|---|
| -100.530 | 199.650 | 99.92900 | 10.07000 | .02417 | .01935 | .18997 | -.03457 | -.02620 | .00514 | -.00038 | .16264 |
| -101.900 | 99.617 | 100.26000 | 10.06900 | .02827 | .00666 | .19999 | -.04102 | -.02725 | .00283 | -.00281 | .16219 |
| -101.800 | -.284 | 100.09000 | 10.07500 | .03344 | .01823 | .19108 | -.03207 | -.02588 | .00061 | .00013 | .16362 |
| | GRADIENT | .00000 | .00000 | .00000 | .00000 | .00000 | .00000 | .00000 | .00000 | .00000 | .00000 |

RUN NO. 4050/ 0 RN/L = 2.36 GRADIENT INTERVAL = -5.00/ 5.00

| Y | X | Z | ALPHA | BETA | PHI | CN | CLM | CY | CYN | CBL | CA |
|---|---|---|---|---|---|---|---|---|---|---|---|
| -150.590 | -.267 | 99.86700 | 10.06700 | .02165 | .01455 | .19295 | -.03758 | -.02484 | .00516 | -.00119 | .16440 |
| -151.000 | 99.682 | 100.26000 | 10.06600 | .02098 | .01169 | .19758 | -.04120 | -.02714 | .00654 | -.00233 | .16406 |
| -150.840 | 199.740 | 100.13000 | 10.06700 | .01965 | .02105 | .19326 | -.03785 | -.02754 | .00811 | -.00068 | .16465 |
| | GRADIENT | .00000 | .00000 | .00000 | .00000 | .00000 | .00000 | .00000 | .00000 | .00000 | .00000 |

IA143, AEDC V41A-P8A, O/ET W/R.H. SRB SEPARATING (OVX378) ( 23 MAY 77 )

REFERENCE DATA

SREF = 2690.0000 SQ.FT. XMRP = 1097.0000 IN. XT
LREF = 1290.3000 INCHES YMRP = .0000 IN. YT
BREF = 1290.3000 INCHES ZMRP = 450.0000 IN. ZT
SCALE = .0100

PARAMETRIC DATA

ALPHA = 10.000 BETA = .000
DALPHA = -8.000 DBETA = -2.000
Z = 150.000 MACH = 4.500
JET PC = .000

RUN NO. 4045/ 0 RN/L = 2.37 GRADIENT INTERVAL = -5.00/ 5.00

| Y | X | Z | ALPHA | BETA | PHI | CN | CLM | CY | CYN | CBL | CA |
|---|---|---|---|---|---|---|---|---|---|---|---|
| -71.198 | 199.650 | 150.23000 | 10.07200 | .02562 | .01712 | .19875 | -.03798 | -.02454 | .00337 | -.00033 | .16532 |
| -71.626 | 99.599 | 150.18000 | 10.07700 | .03167 | .01648 | .19554 | -.03331 | -.02304 | -.00031 | .00032 | .16550 |
| -71.333 | -.309 | 150.05000 | 10.07900 | .03376 | .01358 | .19330 | -.03050 | -.02140 | -.00243 | .00028 | .16479 |
| | GRADIENT | .00000 | .00000 | .00000 | .00000 | .00000 | .00000 | .00000 | .00000 | .00000 | .00000 |

IA143, AEDC V41A-P8A, O/ET W/R.H. SRB SEPARATING (OVX378) ( 23 MAY 77 )

REFERENCE DATA

SREF = 2690.0000 SQ.FT. XMRP = 1097.0000 IN. XT
LREF = 1290.3000 INCHES YMRP = .0000 IN. YT
BREF = 1290.3000 INCHES ZMRP = 450.0000 IN. ZT
SCALE = .0100

PARAMETRIC DATA

ALPHA = 10.000 BETA = .000
DALPHA = -8.000 DBETA = -2.000
Z = 150.000 MACH = 4.500
JET PC = .000

RUN NO. 4048/ 0 RN/L = 2.36 GRADIENT INTERVAL = -5.00/ 5.00

| Y | X | Z | ALPHA | BETA | PHI | CN | CLM | CY | CYN | CBL | CA |
|---|---|---|---|---|---|---|---|---|---|---|---|
| -101.160 | -.328 | 149.99000 | 10.07500 | .03050 | .01152 | .19590 | -.03499 | -.02265 | -.00039 | -.00064 | .16397 |
| -100.890 | 99.636 | 150.04000 | 10.07300 | .02741 | .01392 | .19813 | -.03731 | -.02445 | .00224 | -.00081 | .16466 |
| -100.510 | 199.580 | 150.01000 | 10.07000 | .02357 | .01625 | .20028 | -.04034 | -.02555 | .00480 | -.00088 | .16445 |
| | GRADIENT | .00000 | .00000 | .00000 | .00000 | .00000 | .00000 | .00000 | .00000 | .00000 | .00000 |

RUN NO. 4051/ 0 RN/L = 2.36 GRADIENT INTERVAL = -5.00/ 5.00

| Y | X | Z | ALPHA | BETA | PHI | CN | CLM | CY | CYN | CBL | CA |
|---|---|---|---|---|---|---|---|---|---|---|---|
| -150.820 | 199.530 | 150.18000 | 10.06700 | .01766 | .02253 | .19708 | -.03966 | -.02724 | .00898 | -.00046 | .16601 |
| -150.830 | 99.637 | 149.92000 | 10.06800 | .01993 | .02081 | .19496 | -.03809 | -.02509 | .00659 | -.00015 | .16532 |
| -150.720 | -.295 | 149.83000 | 10.06700 | .01837 | .01619 | .19496 | -.03893 | -.02313 | .00584 | -.00071 | .16407 |
| | GRADIENT | .00000 | .00000 | .00000 | .00000 | .00000 | .00000 | .00000 | .00000 | .00000 | .00000 |

IA143, AEDC V41A-P8A, O/ET W/R.H. SRB SEPARATING (OVX379) ( 23 MAY 77 )

REFERENCE DATA

SREF = 2690.0000 SQ.FT. XMRP = 1097.0000 IN. XT
LREF = 1290.3000 INCHES YMRP = .0000 IN. YT
BREF = 1290.3000 INCHES ZMRP = 450.0000 IN. ZT
SCALE = .0100

PARAMETRIC DATA

ALPHA = 10.000 BETA = .000
DALPHA = -8.000 DBETA = -2.000
Z = 200.000 MACH = 4.500
JET PC = .000

RUN NO. 4046/ 0 RN/L = 2.36 GRADIENT INTERVAL = -5.00/ 5.00

| Y | X | Z | ALPHA | BETA | PHI | CN | CLM | CY | CYN | CBL | CA |
|---|---|---|---|---|---|---|---|---|---|---|---|
| -70.641 | -.183 | 200.24000 | 10.08000 | .03147 | .01554 | .19680 | -.03237 | -.02057 | -.00169 | .00069 | .16531 |
| -70.712 | 99.575 | 199.87000 | 10.07700 | .02880 | .01771 | .19978 | -.03534 | -.02093 | -.00008 | .00084 | .16620 |
| -70.282 | 199.500 | 199.89000 | 10.07400 | .02460 | .02090 | .20211 | -.03837 | -.02316 | .00335 | .00066 | .16693 |
| | GRADIENT | .00000 | .00000 | .00000 | .00000 | .00000 | .00000 | .00000 | .00000 | .00000 | .00000 |

RUN NO. 4047/ 0 RN/L = 2.36 GRADIENT INTERVAL = -5.00/ 5.00

| Y | X | Z | ALPHA | BETA | PHI | CN | CLM | CY | CYN | CBL | CA |
|---|---|---|---|---|---|---|---|---|---|---|---|
| -101.400 | 199.640 | 199.93000 | 10.07100 | .02145 | .02168 | .20132 | -.03952 | -.02471 | .00573 | .00022 | .16675 |
| -101.100 | 99.500 | 200.08000 | 10.07300 | .02485 | .01962 | .19876 | -.03718 | -.02339 | .00327 | .00036 | .16615 |
| -100.960 | -.340 | 199.81000 | 10.07400 | .02566 | .01766 | .19667 | -.03570 | -.02171 | .00180 | .00042 | .16537 |
| | GRADIENT | .00000 | .00000 | .00000 | .00000 | .00000 | .00000 | .00000 | .00000 | .00000 | .00000 |

IA143, AEDC V41A-P8A, O/ET W/R.H. SRB SEPARATING (OVX379) ( 23 MAY 77 )

REFERENCE DATA

SREF = 2690.0000 SQ.FT. XMRP = 1097.0000 IN. XT
LREF = 1290.3000 INCHES YMRP = .0000 IN. YT
BREF = 1290.3000 INCHES ZMRP = 450.0000 IN. ZT
SCALE = .0100

PARAMETRIC DATA

ALPHA = 10.000 BETA = .000
DALPHA = -8.000 DBETA = -2.000
Z = 200.000 MACH = 4.500
JET PC = .000

RUN NO. 4052/ 0 RN/L = 2.36 GRADIENT INTERVAL = -5.00/ 5.00

| Y | X | Z | ALPHA | BETA | PHI | CN | CLM | CY | CYN | CBL | CA |
|---|---|---|---|---|---|---|---|---|---|---|---|
| -150.750 | -.285 | 200.07000 | 10.06800 | .01447 | .02040 | .19573 | -.03844 | -.02277 | .00776 | -.00008 | .16575 |
| -150.700 | 99.729 | 200.10000 | 10.06700 | .01373 | .02190 | .19728 | -.03930 | -.02370 | .00875 | -.00006 | .16696 |
| -150.950 | 199.690 | 200.19000 | 10.06700 | .01270 | .02220 | .20042 | -.04145 | -.02556 | .01029 | -.00050 | .16764 |
| | GRADIENT | .00000 | .00000 | .00000 | .00000 | .00000 | .00000 | .00000 | .00000 | .00000 | .00000 |

IA143, AEDC V41A-P8A, O/ET W/R.H. SRB SEPARATING (OVX380) ( 23 MAY 77 )

REFERENCE DATA

SREF = 2690.0000 SQ.FT. XMRP = 1097.0000 IN. XT
LREF = 1290.3000 INCHES YMRP = .0000 IN. YT
BREF = 1290.3000 INCHES ZMRP = 450.0000 IN. ZT
SCALE = .0100

PARAMETRIC DATA

ALPHA = 10.000 BETA = .000
DALPHA = -8.000 DBETA = .000
Z = 100.000 MACH = 4.500
JET PC = .000

RUN NO. 4053/ 0 RN/L = 2.36 GRADIENT INTERVAL = -5.00/ 5.00

| Y | X | Z | ALPHA | BETA | PHI | CN | CLM | CY | CYN | CBL | CA |
|---|---|---|---|---|---|---|---|---|---|---|---|
| -53.504 | -1.202 | 103.04000 | 10.07700 | .03381 | .00260 | .18916 | -.03042 | -.01434 | -.00729 | -.00025 | .16192 |
| -49.763 | 99.535 | 99.98200 | 10.07300 | .02729 | .00590 | .19186 | -.03410 | -.01484 | -.00375 | -.00018 | .16131 |
| -50.185 | 199.550 | 99.97200 | 10.07400 | .02463 | .01918 | .18039 | -.02709 | -.01741 | -.00001 | .00163 | .16147 |
| | GRADIENT | .00000 | .00000 | .00000 | .00000 | .00000 | .00000 | .00000 | .00000 | .00000 | .00000 |

RUN NO. 4058/ 0 RN/L = 2.37 GRADIENT INTERVAL = -5.00/ 5.00

| Y | X | Z | ALPHA | BETA | PHI | CN | CLM | CY | CYN | CBL | CA |
|---|---|---|---|---|---|---|---|---|---|---|---|
| -100.580 | 199.660 | 99.92100 | 10.06900 | .02252 | .01582 | .18807 | -.03385 | -.01966 | .00194 | .00032 | .16219 |
| -101.700 | 99.623 | 100.19000 | 10.07100 | .02691 | .00821 | .19148 | -.03526 | -.02048 | -.00022 | -.00105 | .16174 |
| -101.240 | -.270 | 100.15000 | 10.07400 | .03024 | .01109 | .18788 | -.03109 | -.01865 | -.00254 | .00017 | .16239 |
| | GRADIENT | .00000 | .00000 | .00000 | .00000 | .00000 | .00000 | .00000 | .00000 | .00000 | .00000 |

RUN NO. 4059/ 0 RN/L = 2.37 GRADIENT INTERVAL = -5.00/ 5.00

| Y | X | Z | ALPHA | BETA | PHI | CN | CLM | CY | CYN | CBL | CA |
|---|---|---|---|---|---|---|---|---|---|---|---|
| -150.380 | -.213 | 99.85100 | 10.06800 | .01956 | .01683 | .18672 | -.03341 | -.01979 | .00346 | .00027 | .16406 |
| -150.990 | 99.650 | 100.36000 | 10.06700 | .01921 | .01553 | .19189 | -.03687 | -.02281 | .00522 | -.00071 | .16430 |
| -150.620 | 199.530 | 100.09000 | 10.06700 | .01818 | .01864 | .19151 | -.03695 | -.02334 | .00623 | -.00029 | .16400 |
| | GRADIENT | .00000 | .00000 | .00000 | .00000 | .00000 | .00000 | .00000 | .00000 | .00000 | .00000 |

IA143, AEDC V41A-P8A, O/ET W/R.H. SRB SEPARATING (OVX381) ( 23 MAY 77 )

REFERENCE DATA

SREF = 2690.0000 SQ.FT. XMRP = 1097.0000 IN. XT
LREF = 1290.3000 INCHES YMRP = .0000 IN. YT
BREF = 1290.3000 INCHES ZMRP = 450.0000 IN. ZT
SCALE = .0100

PARAMETRIC DATA

ALPHA = 10.000 BETA = .000
DALPHA = -8.000 DBETA = .000
Z = 150.000 MACH = 4.500
JET PC = .000

RUN NO. 4054/ 0 RN/L = 2.36 GRADIENT INTERVAL = -5.00/ 5.00

| Y | X | Z | ALPHA | BETA | PHI | CN | CLM | CY | CYN | CBL | CA |
|---|---|---|---|---|---|---|---|---|---|---|---|
| -51.070 | 199.610 | 150.18000 | 10.07300 | .02388 | .01476 | .19268 | -.03402 | -.01675 | -.00040 | .00087 | .16388 |
| -51.419 | 99.607 | 150.32000 | 10.07700 | .02905 | .01118 | .19289 | -.03168 | -.01610 | -.00343 | .00069 | .16449 |
| -51.679 | -.319 | 150.20000 | 10.08100 | .03311 | .00834 | .18702 | -.02617 | -.01207 | -.00780 | .00136 | .16308 |
| | GRADIENT | .00000 | .00000 | .00000 | .00000 | .00000 | .00000 | .00000 | .00000 | .00000 | .00000 |

RUN NO. 4057/ 0 RN/L = 2.37 GRADIENT INTERVAL = -5.00/ 5.00

| Y | X | Z | ALPHA | BETA | PHI | CN | CLM | CY | CYN | CBL | CA |
|---|---|---|---|---|---|---|---|---|---|---|---|
| -101.300 | -.193 | 149.97000 | 10.07400 | .02752 | .01019 | .19056 | -.03246 | -.01639 | -.00264 | .00031 | .16282 |
| -100.850 | 99.668 | 150.03000 | 10.07300 | .02576 | .01399 | .19166 | -.03334 | -.01840 | -.00040 | .00048 | .16347 |
| -100.490 | 199.630 | 149.98000 | 10.07100 | .02276 | .01771 | .19289 | -.03525 | -.01977 | .00205 | .00068 | .16326 |
| | GRADIENT | .00000 | .00000 | .00000 | .00000 | .00000 | .00000 | .00000 | .00000 | .00000 | .00000 |

RUN NO. 4060/ 0 RN/L = 2.38 GRADIENT INTERVAL = -5.00/ 5.00

| Y | X | Z | ALPHA | BETA | PHI | CN | CLM | CY | CYN | CBL | CA |
|---|---|---|---|---|---|---|---|---|---|---|---|
| -151.130 | 199.570 | 150.16000 | 10.06700 | .01602 | .02118 | .19388 | -.03770 | -.02318 | .00734 | .00009 | .16542 |
| -150.610 | 99.695 | 149.98000 | 10.06800 | .01770 | .01808 | .19225 | -.03681 | -.02111 | .00516 | .00008 | .16451 |
| -150.270 | -.225 | 149.84000 | 10.06700 | .01558 | .01508 | .19043 | -.03622 | -.01882 | .00461 | -.00014 | .16404 |
| | GRADIENT | .00000 | .00000 | .00000 | .00000 | .00000 | .00000 | .00000 | .00000 | .00000 | .00000 |

IA143, AEDC V41A-P8A, O/ET W/R.H. SRB SEPARATING (OVX382) ( 23 MAY 77 )

REFERENCE DATA

SREF = 2690.0000 SQ.FT. XMRP = 1097.0000 IN. XT
LREF = 1290.3000 INCHES YMRP = .0000 IN. YT
BREF = 1290.3000 INCHES ZMRP = 450.0000 IN. ZT
SCALE = .0100

PARAMETRIC DATA

ALPHA = 10.000 BETA = .000
DALPHA = -8.000 DBETA = .000
Z = 200.000 MACH = 4.500
JET PC = .000

RUN NO. 4055/ 0 RN/L = 2.36 GRADIENT INTERVAL = -5.00/ 5.00

| Y | X | Z | ALPHA | BETA | PHI | CN | CLM | CY | CYN | CBL | CA |
|---|---|---|---|---|---|---|---|---|---|---|---|
| -51.617 | -.212 | 200.28000 | 10.08200 | .02886 | .00903 | .19140 | -.02820 | -.01070 | -.00654 | .00149 | .16390 |
| -50.658 | 99.584 | 199.86000 | 10.07900 | .02820 | .01391 | .19487 | -.03155 | -.01336 | -.00436 | .00179 | .16566 |
| -50.174 | 199.520 | 199.82000 | 10.07500 | .02370 | .01661 | .19706 | -.03486 | -.01652 | -.00031 | .00128 | .16586 |
| | GRADIENT | .00000 | .00000 | .00000 | .00000 | .00000 | .00000 | .00000 | .00000 | .00000 | .00000 |

IA143, AEDC V41A-P8A, O/ET W/R.H. SRB SEPARATING (OVX382) ( 23 MAY 77 )

REFERENCE DATA

SREF = 2690.0000 SQ.FT. XMRP = 1097.0000 IN. XT
LREF = 1290.3000 INCHES YMRP = .0000 IN. YT
BREF = 1290.3000 INCHES ZMRP = 450.0000 IN. ZT
SCALE = .0100

PARAMETRIC DATA

ALPHA = 10.000 BETA = .000
DALPHA = -8.000 DBETA = .000
Z = 200.000 MACH = 4.500
JET PC = .000

RUN NO. 4056/ 0 RN/L = 2.36 GRADIENT INTERVAL = -5.00/ 5.00

| Y | X | Z | ALPHA | BETA | PHI | CN | CLM | CY | CYN | CBL | CA |
|---|---|---|---|---|---|---|---|---|---|---|---|
| -101.600 | 199.560 | 200.02000 | 10.07100 | .01919 | .01843 | .19930 | -.03847 | -.01980 | .00377 | .00056 | .16660 |
| -100.940 | 99.654 | 199.98000 | 10.07300 | .02239 | .01604 | .19530 | -.03556 | -.01786 | .00101 | .00076 | .16520 |
| -100.680 | -.294 | 199.85000 | 10.07300 | .02250 | .01401 | .19299 | -.03435 | -.01547 | -.00054 | .00092 | .16391 |
| | GRADIENT | .00000 | .00000 | .00000 | .00000 | .00000 | .00000 | .00000 | .00000 | .00000 | .00000 |

RUN NO. 4061/ 0 RN/L = 2.38 GRADIENT INTERVAL = -5.00/ 5.00

| Y | X | Z | ALPHA | BETA | PHI | CN | CLM | CY | CYN | CBL | CA |
|---|---|---|---|---|---|---|---|---|---|---|---|
| -150.720 | -.246 | 200.13000 | 10.06600 | .01073 | .01232 | .19570 | -.03943 | -.01847 | .00642 | -.00094 | .16508 |
| -151.280 | 99.657 | 200.06000 | 10.06700 | .01111 | .01831 | .19422 | -.03781 | -.01888 | .00696 | .00016 | .16567 |
| -151.220 | 199.600 | 200.24000 | 10.06700 | .01128 | .01928 | .19752 | -.03992 | -.02124 | .00828 | -.00018 | .16619 |
| | GRADIENT | .00000 | .00000 | .00000 | .00000 | .00000 | .00000 | .00000 | .00000 | .00000 | .00000 |

IA143, AEDC V41A-P8A, O/ET W/R.H. SRB SEPARATING (OVX383) ( 23 MAY 77 )

REFERENCE DATA

SREF = 2690.0000 SQ.FT. XMRP = 1097.0000 IN. XT
LREF = 1290.3000 INCHES YMRP = .0000 IN. YT
BREF = 1290.3000 INCHES ZMRP = 450.0000 IN. ZT
SCALE = .0100

PARAMETRIC DATA

ALPHA = 10.000 BETA = .000
DALPHA = -8.000 DBETA = 2.000
Z = 100.000 MACH = 4.500
JET PC = .000

RUN NO. 4062/ 0 RN/L = 2.37 GRADIENT INTERVAL = -5.00/ 5.00

| Y | X | Z | ALPHA | BETA | PHI | CN | CLM | CY | CYN | CBL | CA |
|---|---|---|---|---|---|---|---|---|---|---|---|
| -52.463 | -1.250 | 103.04000 | 10.07700 | .03056 | .00144 | .18357 | -.02708 | -.00820 | -.00935 | .00071 | .16101 |
| -50.002 | 99.659 | 99.97900 | 10.07400 | .02666 | .00759 | .18334 | -.02866 | -.01241 | -.00469 | .00067 | .16070 |
| -50.264 | 199.530 | 100.02000 | 10.07200 | .02211 | .01383 | .18059 | -.02804 | -.01207 | -.00229 | .00163 | .16102 |
| | GRADIENT | .00000 | .00000 | .00000 | .00000 | .00000 | .00000 | .00000 | .00000 | .00000 | .00000 |

RUN NO. 4067/ 0 RN/L = 2.37 GRADIENT INTERVAL = -5.00/ 5.00

| Y | X | Z | ALPHA | BETA | PHI | CN | CLM | CY | CYN | CBL | CA |
|---|---|---|---|---|---|---|---|---|---|---|---|
| -100.160 | 199.570 | 99.93700 | 10.07000 | .02141 | .01585 | .18484 | -.03183 | -.01558 | .00017 | .00117 | .16181 |
| -101.270 | 99.591 | 100.19000 | 10.07100 | .02536 | .00984 | .18625 | -.03215 | -.01601 | -.00189 | .00019 | .16089 |
| -101.100 | -.396 | 100.13000 | 10.07200 | .02651 | .00531 | .18633 | -.03175 | -.01416 | -.00381 | -.00020 | .16085 |
| | GRADIENT | .00000 | .00000 | .00000 | .00000 | .00000 | .00000 | .00000 | .00000 | .00000 | .00000 |

IA143, AEDC V41A-P8A, O/ET W/R.H. SRB SEPARATING (OVX383) ( 23 MAY 77 )

REFERENCE DATA

SREF = 2690.0000 SQ.FT. XMRP = 1097.0000 IN. XT
LREF = 1290.3000 INCHES YMRP = .0000 IN. YT
BREF = 1290.3000 INCHES ZMRP = 450.0000 IN. ZT
SCALE = .0100

PARAMETRIC DATA

ALPHA = 10.000 BETA = .000
DALPHA = -8.000 DBETA = 2.000
Z = 100.000 MACH = 4.500
JET PC = .000

RUN NO. 4068/ 0 RN/L = 2.37 GRADIENT INTERVAL = -5.00/ 5.00

| Y | X | Z | ALPHA | BETA | PHI | CN | CLM | CY | CYN | CBL | CA |
|---|---|---|---|---|---|---|---|---|---|---|---|
| -150.230 | -.230 | 99.90100 | 10.06600 | .01595 | .01114 | .18717 | -.03499 | -.01590 | .00248 | -.00021 | .16264 |
| -151.020 | 99.645 | 100.31000 | 10.06600 | .01669 | .01280 | .18983 | -.03648 | -.01879 | .00390 | -.00049 | .16299 |
| -150.670 | 199.700 | 100.09000 | 10.06700 | .01630 | .01935 | .18844 | -.03518 | -.02029 | .00545 | .00041 | .16345 |
| | GRADIENT | .00000 | .00000 | .00000 | .00000 | .00000 | .00000 | .00000 | .00000 | .00000 | .00000 |

IA143, AEDC V41A-P8A, O/ET W/R.H. SRB SEPARATING (OVX384) ( 23 MAY 77 )

REFERENCE DATA

SREF = 2690.0000 SQ.FT. XMRP = 1097.0000 IN. XT
LREF = 1290.3000 INCHES YMRP = .0000 IN. YT
BREF = 1290.3000 INCHES ZMRP = 450.0000 IN. ZT
SCALE = .0100

PARAMETRIC DATA

ALPHA = 10.000 BETA = .000
DALPHA = -8.000 DBETA = 2.000
Z = 150.000 MACH = 4.500
JET PC = .000

RUN NO. 4063/ 0 RN/L = 2.37 GRADIENT INTERVAL = -5.00/ 5.00

| Y | X | Z | ALPHA | BETA | PHI | CN | CLM | CY | CYN | CBL | CA |
|---|---|---|---|---|---|---|---|---|---|---|---|
| -50.810 | 199.500 | 150.22000 | 10.07300 | .02193 | .01243 | .18820 | -.03169 | -.01192 | -.00240 | .00138 | .16293 |
| -51.538 | 99.582 | 150.31000 | 10.07600 | .02646 | .00737 | .18930 | -.03046 | -.01133 | -.00523 | .00086 | .16297 |
| -51.481 | -.190 | 150.23000 | 10.08000 | .02977 | .00575 | .18452 | -.02558 | -.00700 | -.00930 | .00178 | .16266 |
| | GRADIENT | .00000 | .00000 | .00000 | .00000 | .00000 | .00000 | .00000 | .00000 | .00000 | .00000 |

RUN NO. 4066/ 0 RN/L = 2.37 GRADIENT INTERVAL = -5.00/ 5.00

| Y | X | Z | ALPHA | BETA | PHI | CN | CLM | CY | CYN | CBL | CA |
|---|---|---|---|---|---|---|---|---|---|---|---|
| -100.860 | -.372 | 149.92000 | 10.07300 | .02449 | .00981 | .18697 | -.03084 | -.01255 | -.00344 | .00091 | .16223 |
| -100.660 | 99.718 | 150.02000 | 10.07300 | .02393 | .01233 | .18943 | -.03247 | -.01456 | -.00184 | .00091 | .16279 |
| -100.190 | 199.640 | 149.96000 | 10.07100 | .02115 | .01675 | .19106 | -.03453 | -.01660 | .00093 | .00110 | .16313 |
| | GRADIENT | .00000 | .00000 | .00000 | .00000 | .00000 | .00000 | .00000 | .00000 | .00000 | .00000 |

RUN NO. 4069/ 0 RN/L = 2.37 GRADIENT INTERVAL = -5.00/ 5.00

| Y | X | Z | ALPHA | BETA | PHI | CN | CLM | CY | CYN | CBL | CA |
|---|---|---|---|---|---|---|---|---|---|---|---|
| -150.860 | 199.550 | 150.22000 | 10.06700 | .01322 | .01957 | .19177 | -.03667 | -.01960 | .00649 | .00039 | .16476 |
| -150.510 | 99.679 | 149.96000 | 10.06800 | .01504 | .01761 | .18856 | -.03480 | -.01772 | .00444 | .00057 | .16355 |
| -150.120 | -.261 | 149.84000 | 10.06700 | .01219 | .01396 | .18778 | -.03453 | -.01474 | .00379 | .00034 | .16389 |
| | GRADIENT | .00000 | .00000 | .00000 | .00000 | .00000 | .00000 | .00000 | .00000 | .00000 | .00000 |

IA143, AEDC V41A-P8A, O/ET W/R.H. SRB SEPARATING (OVX385) ( 23 MAY 77 )

REFERENCE DATA

SREF = 2690.0000 SQ.FT. XMRP = 1097.0000 IN. XT
LREF = 1290.3000 INCHES YMRP = .0000 IN. YT
BREF = 1290.3000 INCHES ZMRP = 450.0000 IN. ZT
SCALE = .0100

PARAMETRIC DATA

ALPHA = 10.000 BETA = .000
DALPHA = -8.000 DBETA = 2.000
Z = 200.000 MACH = 4.500
JET PC = .000

RUN NO. 4064/ 0 RN/L = 2.37 GRADIENT INTERVAL = -5.00/ 5.00

| Y | X | Z | ALPHA | BETA | PHI | CN | CLM | CY | CYN | CBL | CA |
|---|---|---|---|---|---|---|---|---|---|---|---|
| -50.725 | -.216 | 200.22000 | 10.08000 | .02650 | .00727 | .18731 | -.02711 | -.00736 | -.00748 | .00176 | .16315 |
| -50.722 | 99.588 | 199.86000 | 10.07800 | .02514 | .01039 | .19218 | -.03091 | -.00960 | -.00535 | .00175 | .16471 |
| -50.204 | 199.600 | 199.82000 | 10.07400 | .02149 | .01330 | .19431 | -.03402 | -.01255 | -.00178 | .00139 | .16475 |
| | GRADIENT | .00000 | .00000 | .00000 | .00000 | .00000 | .00000 | .00000 | .00000 | .00000 | .00000 |

RUN NO. 4065/ 0 RN/L = 2.38 GRADIENT INTERVAL = -5.00/ 5.00

| Y | X | Z | ALPHA | BETA | PHI | CN | CLM | CY | CYN | CBL | CA |
|---|---|---|---|---|---|---|---|---|---|---|---|
| -101.290 | 199.550 | 200.16000 | 10.07000 | .01725 | .01721 | .19683 | -.03761 | -.01706 | .00302 | .00081 | .16569 |
| -100.780 | 99.695 | 199.98000 | 10.07200 | .01995 | .01475 | .19265 | -.03468 | -.01499 | .00042 | .00100 | .16471 |
| -100.640 | -.344 | 199.72000 | 10.07100 | .01912 | .01259 | .18981 | -.03338 | -.01247 | -.00078 | .00109 | .16365 |
| | GRADIENT | .00000 | .00000 | .00000 | .00000 | .00000 | .00000 | .00000 | .00000 | .00000 | .00000 |

RUN NO. 4070/ 0 RN/L = 2.37 GRADIENT INTERVAL = -5.00/ 5.00

| Y | X | Z | ALPHA | BETA | PHI | CN | CLM | CY | CYN | CBL | CA |
|---|---|---|---|---|---|---|---|---|---|---|---|
| -150.350 | -.314 | 200.15000 | 10.06800 | .00978 | .01423 | .18928 | -.03504 | -.01406 | .00454 | .00038 | .16412 |
| -150.870 | 99.711 | 200.06000 | 10.06700 | .00930 | .01547 | .19139 | -.03649 | -.01544 | .00563 | .00027 | .16423 |
| -150.900 | 199.590 | 200.20000 | 10.06700 | .00952 | .01686 | .19475 | -.03854 | -.01770 | .00691 | .00004 | .16477 |
| | GRADIENT | .00000 | .00000 | .00000 | .00000 | .00000 | .00000 | .00000 | .00000 | .00000 | .00000 |

IA143, AEDC V41A-P8A, O/ET W/R.H. SRB SEPARATING (OVX386) ( 23 MAY 77 )

REFERENCE DATA

SREF = 2690.0000 SQ.FT. XMRP = 1097.0000 IN. XT
LREF = 1290.3000 INCHES YMRP = .0000 IN. YT
BREF = 1290.3000 INCHES ZMRP = 450.0000 IN. ZT
SCALE = .0100

PARAMETRIC DATA

ALPHA = .000 BETA = .000
DALPHA = .000 DBETA = .000
X = .000 MACH = 4.500
JET PC = .000

RUN NO. 2323/ 0 RN/L = 2.40 GRADIENT INTERVAL = -5.00/ 5.00

| Y | Z | X | ALPHA | BETA | PHI | CN | CLM | CY | CYN | CBL | CA |
|---|---|---|---|---|---|---|---|---|---|---|---|
| -11.891 | -1.595 | -.40016 | -.08089 | .02217 | .00720 | -.05671 | .02921 | -.01650 | -.00071 | -.00065 | .19133 |
| -11.240 | 25.020 | -.33839 | -.07912 | .02214 | .00904 | -.05685 | .03035 | -.01622 | -.00085 | -.00021 | .19143 |
| -10.840 | 99.978 | -.40365 | -.07559 | .01997 | .00748 | -.04992 | .02846 | -.01436 | -.00093 | -.00025 | .19222 |
| -11.650 | 150.160 | -.37131 | -.07363 | .01840 | .00424 | -.04503 | .02687 | -.01256 | -.00123 | -.00062 | .19291 |
| -11.109 | 250.470 | -.37163 | -.07305 | .00948 | -.00050 | -.03533 | .02145 | -.01063 | .00170 | -.00177 | .19237 |
| -10.085 | 349.640 | -.30062 | -.07599 | -.00095 | .00974 | -.04414 | .02428 | -.00413 | .00275 | .00111 | .18960 |
| -10.518 | 474.440 | -.40175 | -.07937 | -.00466 | .00200 | -.04925 | .02522 | .00349 | .00014 | .00101 | .18908 |
| -10.858 | 499.820 | -.28904 | -.07960 | -.00465 | .00113 | -.05009 | .02556 | .00409 | -.00020 | .00097 | .18911 |
| -11.067 | 599.760 | -.38990 | -.08004 | -.00438 | -.00119 | -.05450 | .02796 | .00580 | -.00129 | .00089 | .18919 |
| | GRADIENT | .00000 | .00000 | .00000 | .00000 | .00000 | .00000 | .00000 | .00000 | .00000 | .00000 |

RUN NO. 2324/ 0 RN/L = 2.40 GRADIENT INTERVAL = -5.00/ 5.00

| Y | Z | X | ALPHA | BETA | PHI | CN | CLM | CY | CYN | CBL | CA |
|---|---|---|---|---|---|---|---|---|---|---|---|
| -101.280 | 599.520 | -.39888 | -.07994 | -.00435 | -.00133 | -.05509 | .02837 | .00588 | -.00134 | .00089 | .18943 |
| -101.560 | 499.790 | -.45922 | -.08013 | -.00466 | -.00002 | -.05269 | .02683 | .00504 | -.00073 | .00094 | .18921 |
| -100.880 | 474.740 | -.31819 | -.07997 | -.00489 | .00086 | -.05170 | .02633 | .00475 | -.00046 | .00104 | .18913 |
| -101.410 | 350.020 | -.36896 | -.07867 | -.00420 | .00710 | -.04821 | .02500 | -.00059 | .00222 | .00116 | .18894 |
| -101.330 | 249.990 | -.38016 | -.07910 | .00080 | .00624 | -.03915 | .01961 | -.00943 | .00494 | -.00071 | .18975 |
| -101.960 | 149.920 | -.45880 | -.07774 | .01177 | .01025 | -.04057 | .02208 | -.01705 | .00428 | -.00087 | .19367 |
| -101.460 | 99.818 | -.39579 | -.07828 | .01564 | .01191 | -.04560 | .02465 | -.01928 | .00378 | -.00077 | .19344 |
| -101.410 | 24.690 | -.39534 | -.08010 | .01953 | .01111 | -.05252 | .02751 | -.02198 | .00356 | -.00128 | .19267 |
| -101.200 | -.000 | -.47347 | -.08076 | .02037 | .01015 | -.05367 | .02775 | -.02296 | .00373 | -.00165 | .19244 |
| | GRADIENT | .00000 | .00000 | .00000 | .00000 | .00000 | .00000 | .00000 | .00000 | .00000 | .00000 |

IA143, AEDC V41A-P8A, O/ET W/R.H. SRB SEPARATING (OVX387) ( 23 MAY 77 )

REFERENCE DATA

SREF = 2690.0000 SQ.FT. XMRP = 1097.0000 IN. XT
LREF = 1290.3000 INCHES YMRP = .0000 IN. YT
BREF = 1290.3000 INCHES ZMRP = 450.0000 IN. ZT
SCALE = .0100

PARAMETRIC DATA

ALPHA = .000 BETA = .000
DALPHA = -5.000 DBETA = .000
X = .000 MACH = 4.500
JET PC = .000

RUN NO. 2337/ 0 RN/L = 2.40 GRADIENT INTERVAL = -5.00/ 5.00

| Y | Z | X | ALPHA | BETA | PHI | CN | CLM | CY | CYN | CBL | CA |
|---|---|---|---|---|---|---|---|---|---|---|---|
| -12.177 | 25.018 | -.57932 | -.08707 | .02273 | -.00573 | -.03887 | .01569 | -.02572 | .00421 | -.00540 | .19342 |
| -10.825 | 100.110 | -.41956 | -.07813 | .02458 | .01075 | -.05106 | .02779 | -.02460 | .00275 | -.00161 | .19279 |
| -11.141 | 150.370 | -.47834 | -.07496 | .02335 | .01125 | -.04478 | .02615 | -.02489 | .00346 | -.00165 | .19381 |
| -10.356 | 250.660 | -.50533 | -.07218 | .01458 | .00605 | -.03274 | .02052 | -.01925 | .00424 | -.00205 | .19295 |
| -12.429 | 350.020 | -.35027 | -.07385 | .00316 | .01344 | -.03898 | .02233 | -.01118 | .00486 | .00054 | .18903 |
| -10.056 | 474.470 | -.45287 | -.07914 | -.00458 | .00629 | -.04550 | .02300 | -.00059 | .00240 | .00096 | .18843 |
| -10.416 | 499.940 | -.38615 | -.07944 | -.00460 | .00365 | -.04770 | .02419 | .00145 | .00126 | .00088 | .18881 |
| -13.250 | 599.650 | -.33545 | -.08011 | -.00414 | -.00066 | -.05311 | .02700 | .00451 | -.00066 | .00072 | .18909 |
| | GRADIENT | .00000 | .00000 | .00000 | .00000 | .00000 | .00000 | .00000 | .00000 | .00000 | .00000 |

RUN NO. 2338/ 0 RN/L = 2.40 GRADIENT INTERVAL = -5.00/ 5.00

| Y | Z | X | ALPHA | BETA | PHI | CN | CLM | CY | CYN | CBL | CA |
|---|---|---|---|---|---|---|---|---|---|---|---|
| -100.750 | 599.860 | -.37323 | -.08010 | -.00404 | -.00130 | -.05519 | .02835 | .00507 | -.00103 | .00073 | .18956 |
| -101.260 | 499.960 | -.39393 | -.08001 | -.00456 | .00155 | -.05126 | .02601 | .00309 | .00032 | .00082 | .18907 |
| -100.870 | 474.970 | -.40009 | -.07980 | -.00461 | .00266 | -.05033 | .02552 | .00228 | .00080 | .00086 | .18883 |
| -101.470 | 350.290 | -.39370 | -.07817 | -.00340 | .01490 | -.04536 | .02357 | -.00759 | .00580 | .00120 | .18883 |
| -101.360 | 250.200 | -.32005 | -.07983 | .00360 | .00458 | -.03053 | .01447 | -.01780 | .00838 | -.00278 | .19129 |
| -102.350 | 150.050 | -.46190 | -.07897 | .01428 | .01272 | -.03851 | .02030 | -.02448 | .00732 | -.00189 | .19421 |
| -100.890 | 100.010 | -.44733 | -.07983 | .01766 | .01257 | -.04538 | .02378 | -.02671 | .00705 | -.00220 | .19408 |
| -102.870 | 25.028 | -.39613 | -.08659 | .01942 | -.00861 | -.03698 | .01477 | -.02992 | .00805 | -.00719 | .19326 |
| | GRADIENT | .00000 | .00000 | .00000 | .00000 | .00000 | .00000 | .00000 | .00000 | .00000 | .00000 |

IA143, AEDC V41A-P8A, O/ET W/R.H. SRB SEPARATING (OVX388) ( 23 MAY 77 )

REFERENCE DATA

SREF = 2690.0000 SQ.FT. XMRP = 1097.0000 IN. XT
LREF = 1290.3000 INCHES YMRP = .0000 IN. YT
BREF = 1290.3000 INCHES ZMRP = 450.0000 IN. ZT
SCALE = .0100

PARAMETRIC DATA

ALPHA = .000 BETA = .000
DALPHA = .000 DBETA = -4.000
X = .000 MACH = 4.500
JET PC = .000

RUN NO. 2326/ 0 RN/L = 2.40 GRADIENT INTERVAL = -5.00/ 5.00

| Y | Z | X | ALPHA | BETA | PHI | CN | CLM | CY | CYN | CBL | CA |
|---|---|---|---|---|---|---|---|---|---|---|---|
| -13.297 | 249.260 | -.22741 | -.07038 | .01224 | .00167 | -.03171 | .02086 | -.01282 | .00169 | -.00164 | .19253 |
| -10.145 | 349.720 | -.33039 | -.07421 | .00063 | .00993 | -.04111 | .02352 | -.00536 | .00273 | .00098 | .18969 |
| -10.396 | 474.380 | -.31938 | -.07910 | -.00439 | .00237 | -.04841 | .02479 | .00278 | .00042 | .00093 | .18890 |
| -10.619 | 499.720 | -.38143 | -.07950 | -.00451 | .00149 | -.04934 | .02514 | .00352 | .00006 | .00091 | .18898 |
| -10.518 | 599.480 | -.33598 | -.08009 | -.00413 | -.00104 | -.05414 | .02769 | .00526 | -.00109 | .00082 | .18930 |
| | GRADIENT | .00000 | .00000 | .00000 | .00000 | .00000 | .00000 | .00000 | .00000 | .00000 | .00000 |

IA143, AEDC V41A-P8A, O/ET W/R.H. SRB SEPARATING (OVX389) ( 23 MAY 77 )

REFERENCE DATA

SREF = 2690.0000 SQ.FT. XMRP = 1097.0000 IN. XT
LREF = 1290.3000 INCHES YMRP = .0000 IN. YT
BREF = 1290.3000 INCHES ZMRP = 450.0000 IN. ZT
SCALE = .0100

PARAMETRIC DATA

ALPHA = .000 BETA = .000
DALPHA = -5.000 DBETA = -4.000
X = .000 MACH = 4.500
JET PC = .000

RUN NO. 2336/ 0 RN/L = 2.40 GRADIENT INTERVAL = -5.00/ 5.00

| Y | Z | X | ALPHA | BETA | PHI | CN | CLM | CY | CYN | CBL | CA |
|---|---|---|---|---|---|---|---|---|---|---|---|
| -12.333 | 474.930 | -.45538 | -.07875 | -.00460 | .00843 | -.04128 | .02067 | -.00230 | .00337 | .00100 | .18816 |
| -10.518 | 500.050 | -.47516 | -.07938 | -.00475 | .00545 | -.04413 | .02199 | .00007 | .00211 | .00092 | .18830 |
| -10.840 | 599.570 | -.49623 | -.08011 | -.00424 | -.00051 | -.05247 | .02665 | .00457 | -.00065 | .00076 | .18900 |
| | GRADIENT | .00000 | .00000 | .00000 | .00000 | .00000 | .00000 | .00000 | .00000 | .00000 | .00000 |

IA143, AEDC V41A-P8A, O/ET W/R.H. SRB SEPARATING (OVX390) ( 23 MAY 77 )

REFERENCE DATA

SREF = 2690.0000 SQ.FT. XMRP = 1097.0000 IN. XT
LREF = 1290.3000 INCHES YMRP = .0000 IN. YT
BREF = 1290.3000 INCHES ZMRP = 450.0000 IN. ZT
SCALE = .0100

PARAMETRIC DATA

ALPHA = .000 BETA = .000
DALPHA = .000 DBETA = -4.000
X = .000 MACH = 4.500
JET PC = .000

RUN NO. 2325/ 0 RN/L = 2.40 GRADIENT INTERVAL = -5.00/ 5.00

| Y | Z | X | ALPHA | BETA | PHI | CN | CLM | CY | CYN | CBL | CA |
|---|---|---|---|---|---|---|---|---|---|---|---|
| -100.520 | -.143 | -.42716 | -.08064 | .02786 | .02085 | -.05229 | .02700 | -.03655 | .00798 | -.00205 | .19255 |
| -100.610 | 25.400 | -.41899 | -.07947 | .02674 | .02098 | -.05076 | .02676 | -.03454 | .00736 | -.00163 | .19240 |
| -100.300 | 100.030 | -.40203 | -.07629 | .02196 | .01888 | -.04311 | .02425 | -.02829 | .00600 | -.00096 | .19312 |
| -100.270 | 150.210 | -.30258 | -.07598 | .01692 | .01540 | -.03624 | .02054 | -.02437 | .00607 | -.00113 | .19365 |
| -99.569 | 249.950 | -.49681 | -.07776 | .00435 | .00611 | -.03305 | .01681 | -.01380 | .00579 | -.00150 | .18987 |
| -100.070 | 349.800 | -.34642 | -.07832 | -.00348 | .01130 | -.04481 | .02313 | -.00430 | .00399 | .00121 | .18880 |
| -99.948 | 474.650 | -.40797 | -.07979 | -.00459 | .00165 | -.05066 | .02575 | .00351 | .00010 | .00094 | .18901 |
| -100.410 | 499.670 | -.32687 | -.07991 | -.00444 | .00068 | -.05173 | .02630 | .00421 | -.00036 | .00091 | .18905 |
| -100.650 | 599.700 | -.37436 | -.08001 | -.00407 | -.00124 | -.05520 | .02839 | .00544 | -.00122 | .00082 | .18940 |
| | GRADIENT | .00000 | .00000 | .00000 | .00000 | .00000 | .00000 | .00000 | .00000 | .00000 | .00000 |

IA143, AEDC V41A-P8A, O/ET W/R.H. SRB SEPARATING (OVX391) ( 23 MAY 77 )

REFERENCE DATA

SREF = 2690.0000 SQ.FT. XMRP = 1097.0000 IN. XT
LREF = 1290.3000 INCHES YMRP = .0000 IN. YT
BREF = 1290.3000 INCHES ZMRP = 450.0000 IN. ZT
SCALE = .0100

PARAMETRIC DATA

ALPHA = .000 BETA = .000
DALPHA = -5.000 DBETA = -4.000
X = .000 MACH = 4.500
JET PC = .000

RUN NO. 2335/ 0 RN/L = 2.40 GRADIENT INTERVAL = -5.00/ 5.00

| Y | Z | X | ALPHA | BETA | PHI | CN | CLM | CY | CYN | CBL | CA |
|---|---|---|---|---|---|---|---|---|---|---|---|
| -100.270 | 25.151 | -.49480 | -.08817 | .02615 | .00190 | -.02825 | .00878 | -.04515 | .01357 | -.00805 | .19332 |
| -99.598 | 100.270 | -.46583 | -.07963 | .02415 | .02257 | -.04132 | .02138 | -.04091 | .01211 | -.00295 | .19345 |
| -100.480 | 150.220 | -.39586 | -.07716 | .02027 | .02454 | -.03597 | .01981 | -.03784 | .01213 | -.00210 | .19401 |
| -99.570 | 250.260 | -.51689 | -.07760 | .00770 | .01109 | -.02434 | .01220 | -.02514 | .01065 | -.00284 | .19167 |
| -99.325 | 349.720 | -.53676 | -.07671 | -.00136 | .01974 | -.04075 | .02160 | -.01253 | .00766 | .00121 | .18839 |
| -99.972 | 474.690 | -.44847 | -.07980 | - 00490 | .00460 | -.04797 | .02407 | .00087 | .00172 | .00092 | .18840 |
| -100.520 | 499.910 | -.46565 | -.07989 | -.00458 | .00226 | -.05007 | .02527 | .00251 | .00066 | .00083 | .18861 |
| -100.240 | 599.640 | -.41045 | -.08019 | -.00405 | -.00112 | -.05470 | .02793 | .00491 | -.00093 | .00073 | .18921 |
| | GRADIENT | .00000 | .00000 | .00000 | .00000 | .00000 | .00000 | .00000 | .00000 | .00000 | .00000 |

IA143, AEDC V41A-P8A, O/ET W/R.H. SRB SEPARATING (OVX392) ( 23 MAY 77 )

REFERENCE DATA

SREF = 2690.0000 SQ.FT. XMRP = 1097.0000 IN. XT
LREF = 1290.3000 INCHES YMRP = .0000 IN. YT
BREF = 1290.3000 INCHES ZMRP = 450.0000 IN. ZT
SCALE = .0100

PARAMETRIC DATA

ALPHA = .000 BETA = .000
DALPHA = .000 DBETA = .000
X = 300.000 MACH = 4.500
JET PC = .000

RUN NO. 2327/ 0 RN/L = 2.40 GRADIENT INTERVAL = -5.00/ 5.00

| Y | Z | X | ALPHA | BETA | PHI | CN | CLM | CY | CYN | CBL | CA |
|---|---|---|---|---|---|---|---|---|---|---|---|
| -11.450 | 98.440 | 299.44000 | -.07982 | .00517 | .00628 | -.04434 | .02286 | -.01108 | .00390 | -.00078 | .19271 |
| -10.259 | 249.750 | 299.56000 | -.07616 | .00093 | .00867 | -.04592 | .02522 | -.00511 | .00245 | .00079 | .18979 |
| -11.457 | 300.210 | 299.51000 | -.07587 | -.00071 | .01040 | -.04498 | .02485 | -.00485 | .00305 | .00109 | .18969 |
| -11.603 | 400.170 | 299.42000 | -.07875 | -.00457 | .00743 | -.04448 | .02269 | -.00118 | .00273 | .00106 | .18887 |
| -11.078 | 424.810 | 299.45000 | -.07933 | -.00492 | .00531 | -.04607 | .02327 | .00065 | .00185 | .00102 | .18884 |
| -10.399 | 499.400 | 299.49000 | -.08019 | -.00417 | -.00101 | -.05446 | .02780 | .00513 | -.00100 | .00080 | .18929 |
| -10.587 | 599.650 | 299.50000 | -.07998 | -.00401 | -.00129 | -.05535 | .02853 | .00523 | -.00113 | .00077 | .18958 |
| | GRADIENT | .00000 | .00000 | .00000 | .00000 | .00000 | .00000 | .00000 | .00000 | .00000 | .00000 |

RUN NO. 2328/ 0 RN/L = 2.40 GRADIENT INTERVAL = -5.00/ 5.00

| Y | Z | X | ALPHA | BETA | PHI | CN | CLM | CY | CYN | CBL | CA |
|---|---|---|---|---|---|---|---|---|---|---|---|
| -201.110 | 599.610 | 299.65000 | -.07998 | -.00404 | -.00133 | -.05534 | .02856 | .00524 | -.00112 | .00076 | .18982 |
| -200.890 | 499.840 | 299.55000 | -.07993 | -.00399 | -.00131 | -.05529 | .02852 | .00520 | -.00112 | .00076 | .18969 |
| -201.100 | 424.690 | 299.62000 | -.07993 | -.00402 | -.00130 | -.05536 | .02853 | .00525 | -.00113 | .00077 | .18964 |
| -200.600 | 399.930 | 299.57000 | -.07999 | -.00400 | -.00132 | -.05536 | .02851 | .00511 | -.00107 | .00074 | .18957 |
| -200.810 | 299.980 | 299.51000 | -.08022 | -.00473 | .00155 | -.05308 | .02691 | .00351 | .00016 | .00091 | .18893 |
| -200.920 | 250.000 | 299.57000 | -.07978 | -.00536 | .00669 | -.05106 | .02588 | -.00039 | .00264 | .00103 | .18852 |
| -201.400 | 99.772 | 299.64000 | -.08265 | -.00571 | .00582 | -.03767 | .01692 | -.01289 | .00982 | -.00205 | .19094 |
| | GRADIENT | .00000 | .00000 | .00000 | .00000 | .00000 | .00000 | .00000 | .00000 | .00000 | .00000 |

IA143, AEDC V41A-P8A, O/ET W/R.H. SRB SEPARATING (OVX393) ( 23 MAY 77 )

REFERENCE DATA

SREF = 2690.0000 SQ.FT. XMRP = 1097.0000 IN. XT
LREF = 1290.3000 INCHES YMRP = .0000 IN. YT
BREF = 1290.3000 INCHES ZMRP = 450.0000 IN. ZT
SCALE = .0100

PARAMETRIC DATA

ALPHA = .000 BETA = .000
DALPHA = -10.000 DBETA = .000
X = 300.000 MACH = 4.500
JET PC = .000

RUN NO. 2360/ 0 RN/L = 2.38 GRADIENT INTERVAL = -5.00/ 5.00

| Y | Z | X | ALPHA | BETA | PHI | CN | CLM | CY | CYN | CBL | CA |
|---|---|---|---|---|---|---|---|---|---|---|---|
| -12.002 | 101.780 | 299.34000 | -.08896 | .00949 | -.00349 | -.02330 | .00553 | -.02721 | .01101 | -.00620 | .19372 |
| -10.461 | 250.110 | 299.52000 | -.07767 | .00501 | .01394 | -.03379 | .01714 | -.02104 | .00956 | -.00149 | .18927 |
| -11.130 | 300.300 | 299.46000 | -.07538 | .00287 | .01976 | -.03605 | .01971 | -.01783 | .00872 | .00029 | .18886 |
| -11.009 | 400.950 | 299.46000 | -.07588 | -.00250 | .01873 | -.03642 | .01951 | -.01054 | .00705 | .00138 | .18824 |
| -11.102 | 425.310 | 299.51000 | -.07713 | -.00400 | .01694 | -.03686 | .01908 | -.00856 | .00662 | .00137 | .18851 |
| -10.193 | 499.920 | 299.53000 | -.08006 | -.00525 | .00551 | -.04508 | .02210 | .00077 | .00194 | .00106 | .18791 |
| -10.760 | 599.820 | 299.45000 | -.08006 | -.00391 | -.00132 | -.05492 | .02808 | .00555 | -.00135 | .00085 | .18883 |
| | GRADIENT | .00000 | .00000 | .00000 | .00000 | .00000 | .00000 | .00000 | .00000 | .00000 | .00000 |

IA143, AEDC V41A-P8A, O/ET W/R.H. SRB SEPARATING (OVX394) ( 23 MAY 77 )

REFERENCE DATA

SREF = 2690.0000 SQ.FT. XMRP = 1097.0000 IN. XT
LREF = 1290.3000 INCHES YMRP = .0000 IN. YT
BREF = 1290.3000 INCHES ZMRP = 450.0000 IN. ZT
SCALE = .0100

PARAMETRIC DATA

ALPHA = .000 BETA = .000
DALPHA = -10.000 DBETA = .000
X = 300.000 MACH = 4.500
JET PC = .000

RUN NO. 2358/ 0 RN/L = 2.38 GRADIENT INTERVAL = -5.00/ 5.00

| Y | Z | X | ALPHA | BETA | PHI | CN | CLM | CY | CYN | CBL | CA |
|---|---|---|---|---|---|---|---|---|---|---|---|
| -202.690 | 102.190 | 299.22000 | -.08411 | -.00613 | .00701 | -.03255 | .01350 | -.01910 | .01349 | -.00326 | .19274 |
| -199.980 | 150.300 | 299.43000 | -.08414 | -.00638 | .00410 | -.03043 | .01192 | -.01790 | .01293 | -.00360 | .19125 |
| -200.690 | 200.400 | 299.46000 | -.08400 | -.00643 | .00293 | -.03300 | .01309 | -.01434 | .01096 | -.00302 | .18945 |
| -200.680 | 250.400 | 299.43000 | -.08073 | -.00586 | .01197 | -.04532 | .02181 | -.00853 | .00744 | .00021 | .18781 |
| -200.460 | 299.960 | 299.34000 | -.07969 | -.00584 | .01023 | -.04942 | .02482 | -.00282 | .00422 | .00117 | .18787 |
| -199.050 | 400.130 | 299.48000 | -.08013 | -.00428 | -.00039 | -.05391 | .02739 | .00502 | -.00089 | .00089 | .18868 |
| -200.510 | 425.070 | 299.47000 | -.08018 | -.00404 | -.00129 | -.05476 | .02796 | .00559 | -.00132 | .00085 | .18911 |
| -200.470 | 499.920 | 299.44000 | -.07998 | -.00402 | -.00142 | -.05517 | .02840 | .00548 | -.00126 | .00080 | .18941 |
| -200.030 | 600.000 | 299.36000 | -.07997 | -.00403 | -.00139 | -.05518 | .02847 | .00554 | -.00129 | .00082 | .18981 |
| | GRADIENT | .00000 | .00000 | .00000 | .00000 | .00000 | .00000 | .00000 | .00000 | .00000 | .00000 |

IA143, AEDC V41A-P8A, O/ET W/R.H. SRB SEPARATING (OVX395) ( 23 MAY 77 )

REFERENCE DATA

SREF = 2690.0000 SQ.FT. XMRP = 1097.0000 IN. XT
LREF = 1290.3000 INCHES YMRP = .0000 IN. YT
BREF = 1290.3000 INCHES ZMRP = 450.0000 IN. ZT
SCALE = .0100

PARAMETRIC DATA

ALPHA = .000 BETA = .000
DALPHA = .000 DBETA = -8.000
X = 300.000 MACH = 4.500
JET PC = .000

RUN NO. 2330/ 0 RN/L = 2.41 GRADIENT INTERVAL = -5.00/ 5.00

| Y | Z | X | ALPHA | BETA | PHI | CN | CLM | CY | CYN | CBL | CA |
|---|---|---|---|---|---|---|---|---|---|---|---|
| -13.490 | 248.290 | 299.84000 | -.07423 | .00353 | .01077 | -.03677 | .02097 | -.00888 | .00340 | .00054 | .18955 |
| -11.397 | 300.060 | 299.51000 | -.07373 | .00149 | .01149 | -.03853 | .02219 | -.00740 | .00349 | .00090 | .18924 |
| -11.979 | 400.400 | 299.47000 | -.07730 | -.00361 | .00987 | -.03891 | .02023 | -.00374 | .00373 | .00104 | .18861 |
| -10.933 | 424.910 | 299.41000 | -.07854 | -.00448 | .00793 | -.04095 | .02066 | -.00191 | .00309 | .00100 | .18841 |
| -10.495 | 499.360 | 299.42000 | -.08018 | -.00427 | -.00041 | -.05210 | .02631 | .00456 | -.00063 | .00078 | .18870 |
| -10.599 | 599.510 | 299.48000 | -.08000 | -.00396 | -.00133 | -.05535 | .02853 | .00500 | -.00102 | .00071 | .18964 |
| | GRADIENT | .00000 | .00000 | .00000 | .00000 | .00000 | .00000 | .00000 | .00000 | .00000 | .00000 |

IA143, AEDC V41A-P8A, O/ET W/R.H. SRB SEPARATING (OVX396) ( 23 MAY 77 )

REFERENCE DATA

SREF = 2690.0000 SQ.FT. XMRP = 1097.0000 IN. XT
LREF = 1290.3000 INCHES YMRP = .0000 IN. YT
BREF = 1290.3000 INCHES ZMRP = 450.0000 IN. ZT
SCALE = .0100

PARAMETRIC DATA

ALPHA = .000 BETA = .000
DALPHA = -10.000 DBETA = -8.000
X = 300.000 MACH = 4.500
JET PC = .000

RUN NO. 2364/ 0 RN/L = 2.39 GRADIENT INTERVAL = -5.00/ 5.00

| Y | Z | X | ALPHA | BETA | PHI | CN | CLM | CY | CYN | CBL | CA |
|---|---|---|---|---|---|---|---|---|---|---|---|
| -10.363 | 425.120 | 299.50000 | -.07576 | -.00299 | .02207 | -.02454 | .01227 | -.01307 | .00870 | .00145 | .18655 |
| -10.295 | 500.150 | 299.50000 | -.07958 | -.00561 | .00981 | -.03655 | .01701 | -.00249 | .00393 | .00117 | .18622 |
| -10.674 | 599.720 | 299.34000 | -.08041 | -.00407 | -.00096 | -.05279 | .02646 | .00529 | -.00114 | .00085 | .18817 |
| | GRADIENT | .00000 | .00000 | .00000 | .00000 | .00000 | .00000 | .00000 | .00000 | .00000 | .00000 |

IA143, AEDC V41A-P8A, O/ET W/R.H. SRB SEPARATING (OVX397) ( 23 MAY 77 )

REFERENCE DATA

SREF = 2690.0000 SQ.FT. XMRP = 1097.0000 IN. XT
LREF = 1290.3000 INCHES YMRP = .0000 IN. YT
BREF = 1290.3000 INCHES ZMRP = 450.0000 IN. ZT
SCALE = .0100

PARAMETRIC DATA

ALPHA = .000 BETA = .000
DALPHA = .000 DBETA = -8.000
X = 300.000 MACH = 4.500
JET PC = .000

RUN NO. 2329/ 0 RN/L = 2.42 GRADIENT INTERVAL = -5.00/ 5.00

| Y | Z | X | ALPHA | BETA | PHI | CN | CLM | CY | CYN | CBL | CA |
|---|---|---|---|---|---|---|---|---|---|---|---|
| -200.820 | 99.947 | 299.44000 | -.08274 | -.00301 | .01701 | -.02847 | .01165 | -.02579 | .01585 | -.00252 | .19139 |
| -200.770 | 250.220 | 299.47000 | -.07917 | -.00551 | .01852 | -.04596 | .02314 | -.00984 | .00802 | .00129 | .18812 |
| -200.530 | 299.810 | 299.47000 | -.07986 | -.00564 | .00973 | -.04803 | .02395 | -.00305 | .00426 | .00103 | .18798 |
| -199.940 | 399.800 | 299.46000 | -.08013 | -.00405 | -.00084 | -.05456 | .02781 | .00468 | -.00081 | .00074 | .18886 |
| -200.600 | 424.830 | 299.57000 | -.08009 | -.00393 | -.00125 | -.05498 | .02819 | .00503 | -.00105 | .00074 | .18924 |
| -200.210 | 499.530 | 299.50000 | -.08001 | -.00404 | -.00131 | -.05537 | .02854 | .00503 | -.00101 | .00072 | .18976 |
| -200.150 | 599.720 | 299.53000 | -.08001 | -.00403 | -.00131 | -.05540 | .02858 | .00507 | -.00103 | .00073 | .18986 |
| | GRADIENT | .00000 | .00000 | .00000 | .00000 | .00000 | .00000 | .00000 | .00000 | .00000 | .00000 |

IA143, AEDC V41A-P8A, O/ET W/R.H. SRB SEPARATING (OVX398) ( 23 MAY 77 )

REFERENCE DATA

SREF = 2690.0000 SQ.FT. XMRP = 1097.0000 IN. XT
LREF = 1290.3000 INCHES YMRP = .0000 IN. YT
BREF = 1290.3000 INCHES ZMRP = 450.0000 IN. ZT
SCALE = .0100

PARAMETRIC DATA

ALPHA = .000 BETA = .000
DALPHA = -10.000 DBETA = -8.000
X = 300.000 MACH = 4.500
JET PC = .000

RUN NO. 2363/ 0 RN/L = 2.38 GRADIENT INTERVAL = -5.00/ 5.00

| Y | Z | X | ALPHA | BETA | PHI | CN | CLM | CY | CYN | CBL | CA |
|---|---|---|---|---|---|---|---|---|---|---|---|
| -200.140 | 100.280 | 299.50000 | -.08975 | -.00391 | .00675 | -.00780 | -.00451 | -.03792 | .02306 | -.00748 | .19122 |
| -200.120 | 250.170 | 299.37000 | -.08303 | -.00501 | .01716 | -.02685 | .00935 | -.02397 | .01573 | -.00221 | .18617 |
| -200.100 | 300.060 | 299.30000 | -.07918 | -.00614 | .02673 | -.04184 | .02036 | -.01635 | .01196 | .00144 | .18634 |
| -199.840 | 400.060 | 299.38000 | -.08022 | -.00603 | .00860 | -.04743 | .02317 | -.00139 | .00350 | .00115 | .18697 |
| -200.350 | 425.120 | 299.45000 | -.08024 | -.00537 | .00508 | -.04893 | .02405 | .00113 | .00179 | .00105 | .18711 |
| -199.590 | 500.010 | 299.34000 | -.08025 | -.00402 | -.00127 | -.05440 | .02756 | .00570 | -.00139 | .00088 | .18853 |
| -199.930 | 600.150 | 299.48000 | -.07993 | -.00400 | -.00133 | -.05525 | .02848 | .00559 | -.00134 | .00084 | .18958 |
| | GRADIENT | .00000 | .00000 | .00000 | .00000 | .00000 | .00000 | .00000 | .00000 | .00000 | .00000 |

IA143, AEDC V41A-P8A, O/ET W/R.H. SRB SEPARATING (OVX399) ( 23 MAY 77 )

REFERENCE DATA

SREF = 2690.0000 SQ.FT. XMRP = 1097.0000 IN. XT
LREF = 1290.3000 INCHES YMRP = .0000 IN. YT
BREF = 1290.3000 INCHES ZMRP = 450.0000 IN. ZT
SCALE = .0100

PARAMETRIC DATA

ALPHA = .000 BETA = .000
DALPHA = -5.000 DBETA = .000
X = 300.000 MACH = 4.500
JET PC = .000

RUN NO. 2339/ 0 RN/L = 2.40 GRADIENT INTERVAL = -5.00/ 5.00

| Y | Z | X | ALPHA | BETA | PHI | CN | CLM | CY | CYN | CBL | CA |
|---|---|---|---|---|---|---|---|---|---|---|---|
| -101.780 | 99.723 | 299.22000 | -.08138 | .00180 | .00853 | -.03858 | .01876 | -.01631 | .00835 | -.00175 | .19329 |
| -100.480 | 150.510 | 299.45000 | -.08145 | .00104 | .00364 | -.03315 | .01529 | -.01635 | .00872 | -.00282 | .19229 |
| -100.440 | 199.800 | 299.43000 | -.08127 | .00061 | .00297 | -.03193 | .01419 | -.01528 | .00831 | -.00275 | .19013 |
| | GRADIENT | .00000 | .00000 | .00000 | .00000 | .00000 | .00000 | .00000 | .00000 | .00000 | .00000 |

RUN NO. 2340/ 0 RN/L = 2.39 GRADIENT INTERVAL = -5.00/ 5.00

| Y | Z | X | ALPHA | BETA | PHI | CN | CLM | CY | CYN | CBL | CA |
|---|---|---|---|---|---|---|---|---|---|---|---|
| -203.290 | 200.210 | 299.41000 | -.08206 | -.00548 | .00604 | -.04207 | .01933 | -.00896 | .00751 | -.00108 | .18861 |
| -200.820 | 149.990 | 299.48000 | -.08339 | -.00604 | .00361 | -.03590 | .01540 | -.01344 | .01027 | -.00265 | .19037 |
| -200.560 | 100.140 | 299.46000 | -.08285 | -.00565 | .00760 | -.03692 | .01659 | -.01549 | .01125 | -.00227 | .19177 |
| | GRADIENT | .00000 | .00000 | .00000 | .00000 | .00000 | .00000 | .00000 | .00000 | .00000 | .00000 |

IA143, AEDC V41A-P8A, O/ET W/R.H. SRB SEPARATING (OVX400) ( 23 MAY 77 )

REFERENCE DATA

SREF = 2690.0000 SQ.FT. XMRP = 1097.0000 IN. XT
LREF = 1290.3000 INCHES YMRP = .0000 IN. YT
BREF = 1290.3000 INCHES ZMRP = 450.0000 IN. ZT
SCALE = .0100

PARAMETRIC DATA

ALPHA = .000 BETA = .000
DALPHA = -10.000 DBETA = .000
X = 300.000 MACH = 4.500
JET PC = .000

RUN NO. 2359/ 0 RN/L = 2.38 GRADIENT INTERVAL = -5.00/ 5.00

| Y | Z | X | ALPHA | BETA | PHI | CN | CLM | CY | CYN | CBL | CA |
|---|---|---|---|---|---|---|---|---|---|---|---|
| -101.510 | 101.670 | 299.27000 | -.08510 | .00196 | .00099 | -.02864 | .01089 | -.02250 | .01175 | -.00472 | .19388 |
| -100.530 | 150.390 | 299.50000 | -.08233 | .00230 | .00567 | -.03029 | .01334 | -.02113 | .01083 | -.00341 | .19330 |
| -100.820 | 200.620 | 299.51000 | -.08209 | .00142 | .00295 | -.02598 | .01056 | -.02062 | .01095 | -.00392 | .19149 |
| | GRADIENT | .00000 | .00000 | .00000 | .00000 | .00000 | .00000 | .00000 | .00000 | .00000 | .00000 |

IA143, AEDC V41A-P8A, O/ET W/R.H. SRB SEPARATING (OVX401) ( 23 MAY 77 )

REFERENCE DATA

SREF = 2690.0000 SQ.FT. XMRP = 1097.0000 IN. XT
LREF = 1290.3000 INCHES YMRP = .0000 IN. YT
BREF = 1290.3000 INCHES ZMRP = 450.0000 IN. ZT
SCALE = .0100

PARAMETRIC DATA

ALPHA = .000 BETA = .000
DALPHA = -5.000 DBETA = -4.000
X = 300.000 MACH = 4.500
JET PC = .000

RUN NO. 2342/ 0 RN/L = 2.39 GRADIENT INTERVAL = -5.00/ 5.00

| Y | Z | X | ALPHA | BETA | PHI | CN | CLM | CY | CYN | CBL | CA |
|---|---|---|---|---|---|---|---|---|---|---|---|
| -102.110 | 99.771 | 299.32000 | -.08131 | .00353 | .01951 | -.03630 | .01736 | -.02690 | .01352 | -.00180 | .19294 |
| -100.770 | 150.030 | 299.44000 | -.08090 | .00244 | .01292 | -.02976 | .01362 | -.02457 | .01271 | -.00270 | .19224 |
| -100.740 | 200.190 | 299.47000 | -.08089 | .00211 | .00734 | -.02688 | .01143 | -.02129 | .01101 | -.00312 | .18994 |
| -101.350 | 300.340 | 299.52000 | -.07715 | -.00162 | .02056 | -.04030 | .02114 | -.01383 | .00851 | .00106 | .18868 |
| | GRADIENT | .00000 | .00000 | .00000 | .00000 | .00000 | .00000 | .00000 | .00000 | .00000 | .00000 |

IA143, AEDC V41A-P8A, O/ET W/R.H. SRB SEPARATING (OVX402) ( 23 MAY 77 )

REFERENCE DATA

SREF = 2690.0000 SQ.FT. XMRP = 1097.0000 IN. XT
LREF = 1290.3000 INCHES YMRP = .0000 IN. YT
BREF = 1290.3000 INCHES ZMRP = 450.0000 IN. ZT
SCALE = .0100

PARAMETRIC DATA

ALPHA = .000 BETA = .000
DALPHA = -10.000 DBETA = -4.000
X = 300.000 MACH = 4.500
JET PC = .000

RUN NO. 2361/ 0 RN/L = 2.38 GRADIENT INTERVAL = -5.00/ 5.00

| Y | Z | X | ALPHA | BETA | PHI | CN | CLM | CY | CYN | CBL | CA |
|---|---|---|---|---|---|---|---|---|---|---|---|
| -103.030 | 102.000 | 299.42000 | -.08756 | .00357 | .00699 | -.01755 | .00276 | -.03530 | .01822 | -.00631 | .19276 |
| -100.850 | 150.150 | 299.36000 | -.08368 | .00352 | .01448 | -.02297 | .00808 | -.03297 | .01694 | -.00424 | .19208 |
| -100.390 | 200.440 | 299.54000 | -.08155 | .00232 | .01367 | -.02125 | .00790 | -.03097 | .01635 | -.00402 | .19071 |
| | GRADIENT | .00000 | .00000 | .00000 | .00000 | .00000 | .00000 | .00000 | .00000 | .00000 | .00000 |

RUN NO. 2362/ 0 RN/L = 2.38 GRADIENT INTERVAL = -5.00/ 5.00

| Y | Z | X | ALPHA | BETA | PHI | CN | CLM | CY | CYN | CBL | CA |
|---|---|---|---|---|---|---|---|---|---|---|---|
| -201.860 | 200.710 | 299.57000 | -.08450 | -.00602 | .00640 | -.02651 | .00904 | -.02089 | .01445 | -.00379 | .18953 |
| -201.080 | 150.070 | 299.43000 | -.08478 | -.00542 | .00822 | -.02468 | .00830 | -.02455 | .01623 | -.00421 | .19172 |
| -201.100 | 100.360 | 299.52000 | -.08533 | -.00497 | .00910 | -.02565 | .00881 | -.02631 | .01702 | -.00440 | .19304 |
| | GRADIENT | .00000 | .00000 | .00000 | .00000 | .00000 | .00000 | .00000 | .00000 | .00000 | .00000 |

IA143, AEDC V41A-P8A, O/ET W/R.H. SRB SEPARATING (OVX403) ( 23 MAY 77 )

REFERENCE DATA

SREF = 2690.0000 SQ.FT. XMRP = 1097.0000 IN. XT
LREF = 1290.3000 INCHES YMRP = .0000 IN. YT
BREF = 1290.3000 INCHES ZMRP = 450.0000 IN. ZT
SCALE = .0100

PARAMETRIC DATA

ALPHA = .000 BETA = .000
DALPHA = -5.000 DBETA = -4.000
X = 300.000 MACH = 4.500
JET PC = .000

RUN NO. 2341/ 0 RN/L = 2.39 GRADIENT INTERVAL = -5.00/ 5.00

| Y | Z | X | ALPHA | BETA | PHI | CN | CLM | CY | CYN | CBL | CA |
|---|---|---|---|---|---|---|---|---|---|---|---|
| -203.610 | 100.290 | 299.49000 | -.08332 | -.00465 | .01233 | -.03251 | .01386 | -.02139 | .01412 | -.00259 | .19232 |
| -200.620 | 149.990 | 299.45000 | -.08348 | -.00552 | .00807 | -.03113 | .01260 | -.01922 | .01329 | -.00303 | .19077 |
| -200.330 | 200.110 | 299.48000 | -.08294 | -.00542 | .00812 | -.03552 | .01508 | -.01489 | .01081 | -.00201 | .18895 |
| | GRADIENT | .00000 | .00000 | .00000 | .00000 | .00000 | .00000 | .00000 | .00000 | .00000 | .00000 |

IA143, AEDC V41A-P8A, O/ET W/R.H. SRB SEPARATING (OVX404) ( 23 MAY 77 )

REFERENCE DATA

SREF = 2690.0000 SQ.FT. XMRP = 1097.0000 IN. XT
LREF = 1290.3000 INCHES YMRP = .0000 IN. YT
BREF = 1290.3000 INCHES ZMRP = 450.0000 IN. ZT
SCALE = .0100

PARAMETRIC DATA

ALPHA = .000 BETA = .000
DALPHA = -6.000 DBETA = -2.000
X = 300.000 MACH = 4.500
JET PC = .000

RUN NO. 2356/ 0 RN/L = 2.38 GRADIENT INTERVAL = -5.00/ 5.00

| Y | Z | X | ALPHA | BETA | PHI | CN | CLM | CY | CYN | CBL | CA |
|---|---|---|---|---|---|---|---|---|---|---|---|
| -102.710 | 100.300 | 299.32000 | -.08160 | .00224 | .01329 | -.03649 | .01739 | -.02137 | .01100 | -.00190 | .19324 |
| -100.780 | 200.060 | 299.50000 | -.08116 | .00163 | .00440 | -.02862 | .01236 | -.01841 | .00961 | -.00310 | .19007 |
| -101.220 | 300.450 | 299.53000 | -.07744 | -.00185 | .01990 | -.04124 | .02159 | -.01287 | .00807 | .00113 | .18871 |
| | GRADIENT | .00000 | .00000 | .00000 | .00000 | .00000 | .00000 | .00000 | .00000 | .00000 | .00000 |

IA143, AEDC V41A-P8A, O/ET W/R.H. SRB SEPARATING (OVX405) ( 23 MAY 77 )

REFERENCE DATA

SREF = 2690.0000 SQ.FT. XMRP = 1097.0000 IN. XT
LREF = 1290.3000 INCHES YMRP = .0000 IN. YT
BREF = 1290.3000 INCHES ZMRP = 450.0000 IN. ZT
SCALE = .0100

PARAMETRIC DATA

ALPHA = .000 BETA = .000
DALPHA = -6.000 DBETA = -2.000
X = 300.000 MACH = 4.500
JET PC = .000

RUN NO. 2385/ 0 RN/L = 2.41 GRADIENT INTERVAL = -5.00/ 5.00

| Y | Z | X | ALPHA | BETA | PHI | CN | CLM | CY | CYN | CBL | CA |
|---|---|---|---|---|---|---|---|---|---|---|---|
| -102.310 | 100.260 | 299.25000 | -.08150 | .00243 | .01321 | -.03659 | .01742 | -.02177 | .01114 | -.00200 | .19297 |
| -101.140 | 200.160 | 299.42000 | -.08106 | .00160 | .00434 | -.02847 | .01223 | -.01874 | .00980 | -.00318 | .18977 |
| -101.330 | 300.400 | 299.49000 | -.07739 | -.00191 | .01993 | -.04144 | .02163 | -.01299 | .00816 | .00111 | .18848 |
| | GRADIENT | .00000 | .00000 | .00000 | .00000 | .00000 | .00000 | .00000 | .00000 | .00000 | .00000 |

IA143, AEDC V41A-P8A, O/ET W/R.H. SRB SEPARATING (OVX406) ( 23 MAY 77 )

REFERENCE DATA

SREF = 2690.0000 SQ.FT. XMRP = 1097.0000 IN. XT
LREF = 1290.3000 INCHES YMRP = .0000 IN. YT
BREF = 1290.3000 INCHES ZMRP = 450.0000 IN. ZT
SCALE = .0100

PARAMETRIC DATA

ALPHA = .000 BETA = .000
DALPHA = .000 DBETA = -4.000
X = 600.000 MACH = 4.500
JET PC = .000

RUN NO. 2333/ 0 RN/L = 2.41 GRADIENT INTERVAL = -5.00/ 5.00

| Y | Z | X | ALPHA | BETA | PHI | CN | CLM | CY | CYN | CBL | CA |
|---|---|---|---|---|---|---|---|---|---|---|---|
| -102.170 | 198.070 | 599.55000 | -.07951 | -.00496 | .01031 | -.04926 | .02509 | -.00391 | .00444 | .00099 | .18894 |
| -101.210 | 249.880 | 599.40000 | -.07976 | -.00535 | .00794 | -.04917 | .02477 | -.00180 | .00342 | .00096 | .18851 |
| -101.030 | 400.120 | 599.47000 | -.08039 | -.00416 | -.00058 | -.05357 | .02712 | .00453 | -.00067 | .00074 | .18892 |
| -100.890 | 450.030 | 599.29000 | -.08000 | -.00398 | -.00134 | -.05528 | .02834 | .00499 | -.00101 | .00071 | .18911 |
| -100.480 | 499.720 | 599.36000 | -.08003 | -.00404 | -.00135 | -.05539 | .02853 | .00517 | -.00108 | .00074 | .18972 |
| -100.080 | 599.490 | 599.43000 | -.08007 | -.00407 | -.00134 | -.05543 | .02856 | .00508 | -.00102 | .00072 | .18983 |
| | GRADIENT | .00000 | .00000 | .00000 | .00000 | .00000 | .00000 | .00000 | .00000 | .00000 | .00000 |

RUN NO. 2334/ 0 RN/L = 2.41 GRADIENT INTERVAL = -5.00/ 5.00

| Y | Z | X | ALPHA | BETA | PHI | CN | CLM | CY | CYN | CBL | CA |
|---|---|---|---|---|---|---|---|---|---|---|---|
| -301.190 | 599.550 | 599.40000 | -.08003 | -.00398 | -.00136 | -.05539 | .02855 | .00494 | -.00098 | .00069 | .18991 |
| -300.860 | 499.810 | 599.47000 | -.08009 | -.00399 | -.00136 | -.05538 | .02856 | .00499 | -.00101 | .00070 | .18970 |
| -301.490 | 449.610 | 599.28000 | -.08005 | -.00398 | -.00136 | -.05540 | .02856 | .00496 | -.00099 | .00069 | .18979 |
| -300.640 | 399.950 | 599.41000 | -.08001 | -.00395 | -.00139 | -.05540 | .02857 | .00485 | -.00094 | .00066 | .18981 |
| -301.540 | 249.780 | 599.38000 | -.08002 | -.00396 | -.00138 | -.05538 | .02855 | .00497 | -.00101 | .00069 | .18977 |
| -301.380 | 200.000 | 599.45000 | -.07998 | -.00397 | -.00135 | -.05534 | .02846 | .00501 | -.00102 | .00071 | .18934 |
| | GRADIENT | .00000 | .00000 | .00000 | .00000 | .00000 | .00000 | .00000 | .00000 | .00000 | .00000 |

IA143, AEDC V41A-P8A, O/ET W/R.H. SRB SEPARATING (OVX407) ( 23 MAY 77 )

REFERENCE DATA

SREF = 2690.0000 SQ.FT. XMRP = 1097.0000 IN. XT
LREF = 1290.3000 INCHES YMRP = .0000 IN. YT
BREF = 1290.3000 INCHES ZMRP = 450.0000 IN. ZT
SCALE = .0100

PARAMETRIC DATA

ALPHA = .000 BETA = .000
DALPHA = .000 DBETA = 4.000
X = 600.000 MACH = 4.500
JET PC = .000

RUN NO. 3302/ 0 RN/L = 2.37 GRADIENT INTERVAL = -5.00/ 5.00

| Y | Z | X | ALPHA | BETA | PHI | CN | CLM | CY | CYN | CBL | CA |
|---|---|---|---|---|---|---|---|---|---|---|---|
| -99.870 | 197.930 | 599.37000 | -.08193 | -.00160 | .00806 | -.06101 | .03158 | -.01013 | .00642 | -.00065 | .19519 |
| -100.550 | 249.880 | 599.46000 | -.08225 | -.00131 | .00593 | -.06104 | .03141 | -.00862 | .00544 | -.00072 | .19509 |
| -100.690 | 400.290 | 599.41000 | -.08209 | -.00033 | .00077 | -.06438 | .03358 | -.00473 | .00281 | -.00083 | .19574 |
| -100.730 | 450.100 | 599.46000 | -.08204 | -.00036 | .00078 | -.06457 | .03381 | -.00474 | .00283 | -.00084 | .19601 |
| -100.620 | 499.780 | 599.44000 | -.08203 | -.00039 | .00078 | -.06456 | .03388 | -.00465 | .00279 | -.00082 | .19649 |
| -100.100 | 599.540 | 599.47000 | -.08199 | -.00039 | .00074 | -.06451 | .03388 | -.00462 | .00277 | -.00082 | .19646 |
| | GRADIENT | .00000 | .00000 | .00000 | .00000 | .00000 | .00000 | .00000 | .00000 | .00000 | .00000 |

IA143, AEDC V41A-P8A, O/ET W/R.H. SRB SEPARATING (OVX408) ( 23 MAY 77 )

REFERENCE DATA

SREF = 2690.0000 SQ.FT. XMRP = 1097.0000 IN. XT
LREF = 1290.3000 INCHES YMRP = .0000 IN. YT
BREF = 1290.3000 INCHES ZMRP = 450.0000 IN. ZT
SCALE = .0100

PARAMETRIC DATA

ALPHA = .000 BETA = .000
DALPHA = .000 DBETA = 4.000
X = 600.000 MACH = 4.500
JET PC = .000

RUN NO. 4501/ 0 RN/L = 2.37 GRADIENT INTERVAL = -5.00/ 5.00

| Y | Z | X | ALPHA | BETA | PHI | CN | CLM | CY | CYN | CBL | CA |
|---|---|---|---|---|---|---|---|---|---|---|---|
| -99.762 | 198.130 | 599.70000 | -.07839 | -.00549 | .00468 | -.05162 | .02679 | -.00004 | .00251 | .00069 | .18827 |
| -101.100 | 249.970 | 599.69000 | -.07867 | -.00538 | .00269 | -.05163 | .02665 | .00163 | .00152 | .00067 | .18829 |
| -101.200 | 400.300 | 599.62000 | -.07855 | -.00439 | -.00224 | -.05496 | .02881 | .00519 | -.00093 | .00053 | .18891 |
| -100.930 | 450.030 | 599.60000 | -.07842 | -.00434 | -.00226 | -.05509 | .02903 | .00503 | -.00086 | .00050 | .18933 |
| -101.180 | 499.810 | 599.66000 | -.07846 | -.00432 | -.00229 | -.05512 | .02905 | .00486 | -.00077 | .00045 | .18939 |
| -100.750 | 599.610 | 599.70000 | -.07845 | -.00434 | -.00226 | -.05514 | .02904 | .00497 | -.00083 | .00048 | .18939 |
| | GRADIENT | .00000 | .00000 | .00000 | .00000 | .00000 | .00000 | .00000 | .00000 | .00000 | .00000 |

RUN NO. 4502/ 0 RN/L = 2.38 GRADIENT INTERVAL = -5.00/ 5.00

| Y | Z | X | ALPHA | BETA | PHI | CN | CLM | CY | CYN | CBL | CA |
|---|---|---|---|---|---|---|---|---|---|---|---|
| -300.940 | 599.500 | 599.64000 | -.07848 | -.00432 | -.00229 | -.05522 | .02908 | .00492 | -.00081 | .00047 | .18947 |
| -300.750 | 499.860 | 599.77000 | -.07845 | -.00433 | -.00225 | -.05517 | .02908 | .00489 | -.00079 | .00047 | .18950 |
| -301.080 | 449.780 | 599.69000 | -.07853 | -.00431 | -.00227 | -.05521 | .02910 | .00483 | -.00076 | .00046 | .18958 |
| -300.740 | 399.890 | 599.76000 | -.07847 | -.00431 | -.00228 | -.05512 | .02908 | .00491 | -.00080 | .00047 | .18957 |
| -301.170 | 249.870 | 599.63000 | -.07853 | -.00436 | -.00227 | -.05526 | .02912 | .00503 | -.00085 | .00049 | .18965 |
| -301.120 | 199.940 | 599.62000 | -.07856 | -.00432 | -.00228 | -.05522 | .02907 | .00490 | -.00080 | .00047 | .18948 |
| | GRADIENT | .00000 | .00000 | .00000 | .00000 | .00000 | .00000 | .00000 | .00000 | .00000 | .00000 |

IA143, AEDC V41A-P8A, O/ET W/R.H. SRB SEPARATING (OVX409) ( 23 MAY 77 )

REFERENCE DATA

SREF = 2690.0000 SQ.FT. XMRP = 1097.0000 IN. XT
LREF = 1290.3000 INCHES YMRP = .0000 IN. YT
BREF = 1290.3000 INCHES ZMRP = 450.0000 IN. ZT
SCALE = .0100

PARAMETRIC DATA

ALPHA = .000 BETA = .000
DALPHA = -15.000 DBETA = 4.000
X = 600.000 MACH = 4.500
JET PC = .000

RUN NO. 2386/ 0 RN/L = 2.41 GRADIENT INTERVAL = -5.00/ 5.00

| Y | Z | X | ALPHA | BETA | PHI | CN | CLM | CY | CYN | CBL | CA |
|---|---|---|---|---|---|---|---|---|---|---|---|
| -99.796 | 203.200 | 599.39000 | -.08021 | -.00525 | .01218 | -.04833 | .02391 | -.00779 | .00674 | .00047 | .18785 |
| -100.290 | 250.470 | 599.29000 | -.07929 | -.00565 | .01389 | -.04974 | .02527 | -.00611 | .00598 | .00118 | .18789 |
| -100.640 | 401.150 | 599.59000 | -.08030 | -.00503 | .00349 | -.05028 | .02490 | .00183 | .00124 | .00090 | .18728 |
| -101.180 | 450.550 | 599.46000 | -.08034 | -.00417 | -.00030 | -.05328 | .02679 | .00452 | -.00066 | .00080 | .18797 |
| -100.730 | 500.600 | 599.33000 | -.07990 | -.00382 | -.00133 | -.05511 | .02820 | .00494 | -.00105 | .00070 | .18856 |
| -100.110 | 599.930 | 599.27000 | -.07991 | -.00391 | -.00133 | -.05535 | .02852 | .00506 | -.00108 | .00073 | .18948 |
| | GRADIENT | .00000 | .00000 | .00000 | .00000 | .00000 | .00000 | .00000 | .00000 | .00000 | .00000 |

RUN NO. 2387/ 0 RN/L = 2.41 GRADIENT INTERVAL = -5.00/ 5.00

| Y | Z | X | ALPHA | BETA | PHI | CN | CLM | CY | CYN | CBL | CA |
|---|---|---|---|---|---|---|---|---|---|---|---|
| -300.890 | 599.870 | 599.25000 | -.07992 | -.00381 | -.00137 | -.05531 | .02851 | .00487 | -.00102 | .00069 | .18944 |
| -300.900 | 500.530 | 599.31000 | -.07992 | -.00390 | -.00137 | -.05533 | .02847 | .00501 | -.00105 | .00071 | .18925 |
| -300.680 | 450.450 | 599.41000 | -.07992 | -.00386 | -.00138 | -.05532 | .02850 | .00489 | -.00100 | .00068 | .18939 |
| -300.730 | 400.460 | 599.31000 | -.07994 | -.00382 | -.00136 | -.05532 | .02851 | .00484 | -.00099 | .00068 | .18950 |
| -301.210 | 250.530 | 599.27000 | -.07988 | -.00387 | -.00139 | -.05531 | .02847 | .00487 | -.00099 | .00067 | .18919 |
| -301.290 | 200.500 | 599.24000 | -.07989 | -.00389 | -.00138 | -.05530 | .02841 | .00494 | -.00102 | .00069 | .18904 |
| | GRADIENT | .00000 | .00000 | .00000 | .00000 | .00000 | .00000 | .00000 | .00000 | .00000 | .00000 |

IA143, AEDC V41A-P8A, O/ET W/R.H. SRB SEPARATING (OVX410) ( 23 MAY 77 )

REFERENCE DATA

SREF = 2690.0000 SQ.FT. XMRP = 1097.0000 IN. XT
LREF = 1290.3000 INCHES YMRP = .0000 IN. YT
BREF = 1290.3000 INCHES ZMRP = 450.0000 IN. ZT
SCALE = .0100

PARAMETRIC DATA

ALPHA = .000 BETA = .000
DALPHA = -15.000 DBETA = 4.000
X = 600.000 MACH = 4.500
JET PC = .000

RUN NO. 2424/ 0 RN/L = 2.39 GRADIENT INTERVAL = -5.00/ 5.00

| Y | Z | X | ALPHA | BETA | PHI | CN | CLM | CY | CYN | CBL | CA |
|---|---|---|---|---|---|---|---|---|---|---|---|
| -99.631 | 203.090 | 599.50000 | -.07944 | -.00527 | .01279 | -.04885 | .02458 | -.00747 | .00657 | .00067 | .18743 |
| -100.140 | 250.430 | 599.38000 | -.07899 | -.00570 | .01306 | -.04915 | .02504 | -.00554 | .00568 | .00114 | .18766 |
| -101.630 | 401.250 | 599.59000 | -.07985 | -.00489 | .00274 | -.04997 | .02491 | .00229 | .00092 | .00087 | .18715 |
| -101.130 | 450.600 | 599.39000 | -.07981 | -.00401 | -.00090 | -.05292 | .02676 | .00473 | -.00085 | .00073 | .18765 |
| -101.600 | 500.540 | 599.35000 | -.07940 | -.00380 | -.00165 | -.05454 | .02805 | .00514 | -.00117 | .00069 | .18814 |
| -99.979 | 600.030 | 599.35000 | -.07953 | -.00383 | -.00168 | -.05475 | .02832 | .00510 | -.00113 | .00067 | .18914 |
| | GRADIENT | .00000 | .00000 | .00000 | .00000 | .00000 | .00000 | .00000 | .00000 | .00000 | .00000 |

IA143, AEDC V41A-P8A, O/ET W/R.H. SRB SEPARATING (OVX411) ( 23 MAY 77 )

REFERENCE DATA

SREF = 2690.0000 SQ.FT. XMRP = 1097.0000 IN. XT
LREF = 1290.3000 INCHES YMRP = .0000 IN. YT
BREF = 1290.3000 INCHES ZMRP = 450.0000 IN. ZT
SCALE = .0100

PARAMETRIC DATA

ALPHA = .000 BETA = .000
DALPHA = .000 DBETA = -12.000
X = 600.000 MACH = 4.500
JET PC = .000

RUN NO. 2331/ 0 RN/L = 2.41 GRADIENT INTERVAL = -5.00/ 5.00

| Y | Z | X | ALPHA | BETA | PHI | CN | CLM | CY | CYN | CBL | CA |
|---|---|---|---|---|---|---|---|---|---|---|---|
| -104.010 | 247.960 | 600.04000 | -.07936 | -.00554 | .01506 | -.04365 | .02171 | -.00725 | .00657 | .00117 | .18804 |
| -102.590 | 400.300 | 599.81000 | -.08029 | -.00472 | .00184 | -.05008 | .02493 | .00289 | .00050 | .00083 | .18796 |
| -100.550 | 449.970 | 599.41000 | -.08038 | -.00411 | -.00081 | -.05364 | .02708 | .00466 | -.00077 | .00073 | .18866 |
| -101.200 | 499.890 | 599.48000 | -.08001 | -.00408 | -.00130 | -.05540 | .02842 | .00509 | -.00102 | .00073 | .18908 |
| -100.400 | 599.500 | 599.29000 | -.08017 | -.00397 | -.00131 | -.05555 | .02865 | .00493 | -.00098 | .00071 | .19009 |
| | GRADIENT | .00000 | .00000 | .00000 | .00000 | .00000 | .00000 | .00000 | .00000 | .00000 | .00000 |

IA143, AEDC V41A-P8A, O/ET W/R.H. SRB SEPARATING (OVX412) ( 23 MAY 77 )

REFERENCE DATA

SREF = 2690.0000 SQ.FT. XMRP = 1097.0000 IN. XT
LREF = 1290.3000 INCHES YMRP = .0000 IN. YT
BREF = 1290.3000 INCHES ZMRP = 450.0000 IN. ZT
SCALE = .0100

PARAMETRIC DATA

ALPHA = .000 BETA = .000
DALPHA = -15.000 DBETA = -12.000
X = 600.000 MACH = 4.500
JET PC = .000

RUN NO. 2392/ 0 RN/L = 2.41 GRADIENT INTERVAL = -5.00/ 5.00

| Y | Z | X | ALPHA | BETA | PHI | CN | CLM | CY | CYN | CBL | CA |
|---|---|---|---|---|---|---|---|---|---|---|---|
| -100.750 | 450.420 | 599.26000 | -.08047 | -.00621 | .00899 | -.04259 | .01970 | -.00219 | .00403 | .00103 | .18474 |
| -99.244 | 500.550 | 599.45000 | -.08035 | -.00468 | .00164 | -.04912 | .02387 | .00307 | .00039 | .00083 | .18589 |
| -100.800 | 600.440 | 599.36000 | -.07979 | -.00388 | -.00136 | -.05526 | .02818 | .00479 | -.00094 | .00066 | .18781 |
| | GRADIENT | .00000 | .00000 | .00000 | .00000 | .00000 | .00000 | .00000 | .00000 | .00000 | .00000 |

IA143, AEDC V41A-P8A, O/ET W/R.H. SRB SEPARATING (OVX413) ( 23 MAY 77 )

REFERENCE DATA

SREF = 2690.0000 SQ.FT. XMRP = 1097.0000 IN. XT
LREF = 1290.3000 INCHES YMRP = .0000 IN. YT
BREF = 1290.3000 INCHES ZMRP = 450.0000 IN. ZT
SCALE = .0100

PARAMETRIC DATA

ALPHA = .000 BETA = .000
DALPHA = .000 DBETA = -12.000
X = 600.000 MACH = 4.500
JET PC = .000

RUN NO. 2332/ 0 RN/L = 2.41 GRADIENT INTERVAL = -5.00/ 5.00

| Y | Z | X | ALPHA | BETA | PHI | CN | CLM | CY | CYN | CBL | CA |
|---|---|---|---|---|---|---|---|---|---|---|---|
| -300.270 | 199.840 | 599.39000 | -.08018 | -.00410 | -.00111 | -.05463 | .02771 | .00497 | -.00094 | .00074 | .18837 |
| -301.100 | 250.040 | 599.39000 | -.07998 | -.00405 | -.00133 | -.05528 | .02832 | .00511 | -.00104 | .00073 | .18884 |
| -300.610 | 400.080 | 599.29000 | -.07999 | -.00406 | -.00136 | -.05538 | .02854 | .00508 | -.00103 | .00072 | .18971 |
| -300.450 | 449.760 | 599.35000 | -.08008 | -.00400 | -.00133 | -.05543 | .02855 | .00491 | -.00096 | .00069 | .18973 |
| -300.550 | 499.720 | 599.40000 | -.08006 | -.00408 | -.00134 | -.05543 | .02859 | .00503 | -.00098 | .00071 | .18992 |
| -301.390 | 599.840 | 599.28000 | -.08002 | -.00401 | -.00136 | -.05538 | .02854 | .00494 | -.00097 | .00069 | .18963 |
| | GRADIENT | .00000 | .00000 | .00000 | .00000 | .00000 | .00000 | .00000 | .00000 | .00000 | .00000 |

IA143, AEDC V41A-P8A, O/ET W/R.H. SRB SEPARATING (OVX414) ( 23 MAY 77 )

REFERENCE DATA

SREF = 2690.0000 SQ.FT. XMRP = 1097.0000 IN. XT
LREF = 1290.3000 INCHES YMRP = .0000 IN. YT
BREF = 1290.3000 INCHES ZMRP = 450.0000 IN. ZT
SCALE = .0100

PARAMETRIC DATA

ALPHA = .000 BETA = .000
DALPHA = .000 DBETA = -12.000
X = 600.000 MACH = 4.500
JET PC = .000

RUN NO. 2355/ 0 RN/L = 2.38 GRADIENT INTERVAL = -5.00/ 5.00

| Y | Z | X | ALPHA | BETA | PHI | CN | CLM | CY | CYN | CBL | CA |
|---|---|---|---|---|---|---|---|---|---|---|---|
| -300.730 | 200.060 | 599.51000 | -.08017 | -.00420 | -.00077 | -.05410 | .02737 | .00501 | -.00092 | .00081 | .18826 |
| -300.710 | 249.770 | 599.35000 | -.07996 | -.00407 | -.00147 | -.05484 | .02805 | .00550 | -.00125 | .00079 | .18875 |
| -300.830 | 399.890 | 599.35000 | -.07996 | -.00404 | -.00147 | -.05512 | .02845 | .00545 | -.00124 | .00078 | .18988 |
| -300.450 | 449.710 | 599.41000 | -.07997 | -.00403 | -.00145 | -.05516 | .02847 | .00551 | -.00127 | .00080 | .18998 |
| -300.500 | 499.790 | 599.38000 | -.07997 | -.00405 | -.00145 | -.05510 | .02842 | .00552 | -.00127 | .00080 | .18978 |
| -300.570 | 599.670 | 599.27000 | -.07996 | -.00401 | -.00147 | -.05510 | .02843 | .00539 | -.00122 | .00077 | .18984 |
| | GRADIENT | .00000 | .00000 | .00000 | .00000 | .00000 | .00000 | .00000 | .00000 | .00000 | .00000 |

IA143, AEDC V41A-P8A, O/ET W/R.H. SRB SEPARATING (OVX415) ( 23 MAY 77 )

REFERENCE DATA

SREF = 2690.0000 SQ.FT. XMRP = 1097.0000 IN. XT
LREF = 1290.3000 INCHES YMRP = .0000 IN. YT
BREF = 1290.3000 INCHES ZMRP = 450.0000 IN. ZT
SCALE = .0100

PARAMETRIC DATA

ALPHA = .000 BETA = .000
DALPHA = -15.000 DBETA = -12.000
X = 600.000 MACH = 4.500
JET PC = .000

RUN NO. 2393/ 0 RN/L = 2.41 GRADIENT INTERVAL = -5.00/ 5.00

| Y | Z | X | ALPHA | BETA | PHI | CN | CLM | CY | CYN | CBL | CA |
|---|---|---|---|---|---|---|---|---|---|---|---|
| -300.740 | 200.300 | 599.21000 | -.08114 | -.00568 | .00133 | -.04973 | .02311 | -.00025 | .00270 | -.00006 | .18299 |
| -301.550 | 250.460 | 599.34000 | -.07999 | -.00475 | .00210 | -.05290 | .02573 | .00278 | .00058 | .00085 | .18354 |
| -300.580 | 400.210 | 599.22000 | -.07972 | -.00390 | -.00137 | -.05504 | .02780 | .00495 | -.00102 | .00069 | .18650 |
| -300.130 | 450.240 | 599.19000 | -.07992 | -.00398 | -.00139 | -.05532 | .02825 | .00506 | -.00105 | .00071 | .18831 |
| -300.600 | 500.340 | 599.17000 | -.07992 | -.00389 | -.00141 | -.05532 | .02840 | .00479 | -.00094 | .00066 | .18899 |
| -300.390 | 600.310 | 599.26000 | -.07990 | -.00390 | -.00141 | -.05535 | .02848 | .00487 | -.00098 | .00067 | .18921 |
| | GRADIENT | .00000 | .00000 | .00000 | .00000 | .00000 | .00000 | .00000 | .00000 | .00000 | .00000 |

IA143, AEDC V41A-P8A, O/ET W/R.H. SRB SEPARATING (OVX416) ( 23 MAY 77 )

REFERENCE DATA

SREF = 2690.0000 SQ.FT. XMRP = 1097.0000 IN. XT
LREF = 1290.3000 INCHES YMRP = .0000 IN. YT
BREF = 1290.3000 INCHES ZMRP = 450.0000 IN. ZT
SCALE = .0100

PARAMETRIC DATA

ALPHA = .000 BETA = .000
DALPHA = -7.000 DBETA = -4.000
X = 600.000 MACH = 4.500
JET PC = .000

RUN NO. 2357/ 0 RN/L = 2.38 GRADIENT INTERVAL = -5.00/ 5.00

| Y | Z | X | ALPHA | BETA | PHI | CN | CLM | CY | CYN | CBL | CA |
|---|---|---|---|---|---|---|---|---|---|---|---|
| -202.490 | 200.260 | 599.20000 | -.08010 | -.00606 | .00865 | -.05093 | .02546 | -.00145 | .00355 | .00114 | .18781 |
| -201.280 | 300.260 | 599.41000 | -.08036 | -.00484 | .00194 | -.05232 | .02616 | .00337 | .00029 | .00095 | .18805 |
| -200.890 | 400.450 | 599.32000 | -.07999 | -.00400 | -.00137 | -.05512 | .02832 | .00550 | -.00129 | .00082 | .18925 |
| | GRADIENT | .00000 | .00000 | .00000 | .00000 | .00000 | .00000 | .00000 | .00000 | .00000 | .00000 |

IA143, AEDC V41A-P8A, O/ET W/R.H. SRB SEPARATING (OVX417) ( 23 MAY 77 )

REFERENCE DATA

SREF = 2690.0000 SQ.FT. XMRP = 1097.0000 IN. XT
LREF = 1290.3000 INCHES YMRP = .0000 IN. YT
BREF = 1290.3000 INCHES ZMRP = 450.0000 IN. ZT
SCALE = .0100

PARAMETRIC DATA

ALPHA = .000 BETA = .000
DALPHA = -5.000 DBETA = .000
X = 600.000 MACH = 4.500
JET PC = .000

RUN NO. 2343/ 0 RN/L = 2.39 GRADIENT INTERVAL = -5.00/ 5.00

| Y | Z | X | ALPHA | BETA | PHI | CN | CLM | CY | CYN | CBL | CA |
|---|---|---|---|---|---|---|---|---|---|---|---|
| -101.170 | 199.430 | 599.09000 | -.07952 | -.00509 | .01044 | -.05029 | .02570 | -.00383 | .00444 | .00104 | .18895 |
| -101.190 | 300.090 | 599.41000 | -.07999 | -.00534 | .00581 | -.04984 | .02503 | .00004 | .00238 | .00095 | .18854 |
| -103.350 | 400.500 | 599.42000 | -.08039 | -.00434 | -.00008 | -.05310 | .02678 | .00443 | -.00053 | .00081 | .18870 |
| | GRADIENT | .00000 | .00000 | .00000 | .00000 | .00000 | .00000 | .00000 | .00000 | .00000 | .00000 |

RUN NO. 2344/ 0 RN/L = 2.39 GRADIENT INTERVAL = -5.00/ 5.00

| Y | Z | X | ALPHA | BETA | PHI | CN | CLM | CY | CYN | CBL | CA |
|---|---|---|---|---|---|---|---|---|---|---|---|
| -300.740 | 399.840 | 599.45000 | -.07999 | -.00396 | -.00137 | -.05532 | .02853 | .00496 | -.00100 | .00069 | .18978 |
| -301.060 | 300.080 | 599.32000 | -.08000 | -.00400 | -.00139 | -.05533 | .02855 | .00493 | -.00097 | .00068 | .18986 |
| -302.890 | 199.870 | 599.36000 | -.08006 | -.00407 | -.00137 | -.05537 | .02852 | .00514 | -.00105 | .00073 | .18977 |
| | GRADIENT | .00000 | .00000 | .00000 | .00000 | .00000 | .00000 | .00000 | .00000 | .00000 | .00000 |

IA143, AEDC V41A-P8A, O/ET W/R.H. SRB SEPARATING (OVX418) ( 23 MAY 77 )

REFERENCE DATA

SREF = 2690.0000 SQ.FT. XMRP = 1097.0000 IN. XT
LREF = 1290.3000 INCHES YMRP = .0000 IN. YT
BREF = 1290.3000 INCHES ZMRP = 450.0000 IN. ZT
SCALE = .0100

PARAMETRIC DATA

ALPHA = .000 BETA = .000
DALPHA = -10.000 DBETA = .000
X = 600.000 MACH = 4.500
JET PC = .000

RUN NO. 2370/ 0 RN/L = 2.41 GRADIENT INTERVAL = -5.00/ 5.00

| Y | Z | X | ALPHA | BETA | PHI | CN | CLM | CY | CYN | CBL | CA |
|---|---|---|---|---|---|---|---|---|---|---|---|
| -101.290 | 201.340 | 599.08000 | -.07901 | -.00510 | .01439 | -.05026 | .02585 | -.00650 | .00595 | .00123 | .18844 |
| -101.110 | 300.410 | 599.34000 | -.07969 | -.00576 | .00928 | -.04852 | .02434 | -.00212 | .00379 | .00114 | .18804 |
| -101.180 | 400.510 | 599.38000 | -.08026 | -.00482 | .00202 | -.05091 | .02537 | .00333 | .00030 | .00096 | .18790 |
| | GRADIENT | .00000 | .00000 | .00000 | .00000 | .00000 | .00000 | .00000 | .00000 | .00000 | .00000 |

RUN NO. 2371/ 0 RN/L = 2.41 GRADIENT INTERVAL = -5.00/ 5.00

| Y | Z | X | ALPHA | BETA | PHI | CN | CLM | CY | CYN | CBL | CA |
|---|---|---|---|---|---|---|---|---|---|---|---|
| -301.540 | 400.260 | 599.40000 | -.07989 | -.00400 | -.00136 | -.05521 | .02849 | .00547 | -.00127 | .00081 | .18962 |
| -301.180 | 300.450 | 599.37000 | -.07994 | -.00401 | -.00135 | -.05529 | .02850 | .00547 | -.00126 | .00081 | .18962 |
| -301.100 | 200.320 | 599.31000 | -.07979 | -.00395 | -.00137 | -.05510 | .02836 | .00538 | -.00124 | .00079 | .18902 |
| | GRADIENT | .00000 | .00000 | .00000 | .00000 | .00000 | .00000 | .00000 | .00000 | .00000 | .00000 |

IA143, AEDC V41A-P8A, O/ET W/R.H. SRB SEPARATING (OVX419) ( 23 MAY 77 )

REFERENCE DATA

SREF = 2690.0000 SQ.FT. XMRP = 1097.0000 IN. XT
LREF = 1290.3000 INCHES YMRP = .0000 IN. YT
BREF = 1290.3000 INCHES ZMRP = 450.0000 IN. ZT
SCALE = .0100

PARAMETRIC DATA

ALPHA = .000 BETA = .000
DALPHA = -5.000 DBETA = -8.000
X = 600.000 MACH = 4.500
JET PC = .000

RUN NO. 2346/ 0 RN/L = 2.39 GRADIENT INTERVAL = -5.00/ 5.00

| Y | Z | X | ALPHA | BETA | PHI | CN | CLM | CY | CYN | CBL | CA |
|---|---|---|---|---|---|---|---|---|---|---|---|
| -99.984 | 399.770 | 599.34000 | -.08021 | -.00487 | .00257 | -.04952 | .02464 | .00222 | .00095 | .00081 | .18802 |
| -100.240 | 299.570 | 599.02000 | -.07983 | -.00578 | .01092 | -.04598 | .02280 | -.00396 | .00483 | .00105 | .18801 |
| -99.650 | 199.980 | 599.26000 | -.07902 | -.00533 | .02055 | -.04517 | .02271 | -.01197 | .00913 | .00123 | .18772 |
| | GRADIENT | .00000 | .00000 | .00000 | .00000 | .00000 | .00000 | .00000 | .00000 | .00000 | .00000 |

RUN NO. 2345/ 0 RN/L = 2.39 GRADIENT INTERVAL = -5.00/ 5.00

| Y | Z | X | ALPHA | BETA | PHI | CN | CLM | CY | CYN | CBL | CA |
|---|---|---|---|---|---|---|---|---|---|---|---|
| -303.570 | 200.230 | 599.87000 | -.07996 | -.00404 | -.00141 | -.05504 | .02818 | .00512 | -.00105 | .00072 | .18872 |
| -300.260 | 300.080 | 599.27000 | -.07994 | -.00399 | -.00142 | -.05521 | .02844 | .00499 | -.00100 | .00069 | .18946 |
| -300.160 | 399.960 | 599.39000 | -.07999 | -.00396 | -.00142 | -.05530 | .02854 | .00499 | -.00102 | .00070 | .18985 |
| | GRADIENT | .00000 | .00000 | .00000 | .00000 | .00000 | .00000 | .00000 | .00000 | .00000 | .00000 |

IA143, AEDC V41A-P8A, O/ET W/R.H. SRB SEPARATING (OVX420) ( 23 MAY 77 )

REFERENCE DATA

SREF = 2690.0000 SQ.FT. XMRP = 1097.0000 IN. XT
LREF = 1290.3000 INCHES YMRP = .0000 IN. YT
BREF = 1290.3000 INCHES ZMRP = 450.0000 IN. ZT
SCALE = .0100

PARAMETRIC DATA

ALPHA = .000 BETA = .000
DALPHA = -10.000 DBETA = -8.000
X = 600.000 MACH = 4.500
JET PC = .000

RUN NO. 2365/ 0 RN/L = 2.39 GRADIENT INTERVAL = -5.00/ 5.00

| Y | Z | X | ALPHA | BETA | PHI | CN | CLM | CY | CYN | CBL | CA |
|---|---|---|---|---|---|---|---|---|---|---|---|
| -103.180 | 201.080 | 599.30000 | -.07953 | -.00658 | .02933 | -.04218 | .02042 | -.01956 | .01396 | .00121 | .18667 |
| -100.570 | 300.090 | 599.31000 | -.07969 | -.00651 | .01711 | -.04327 | .02102 | -.00808 | .00747 | .00133 | .18690 |
| -101.600 | 350.270 | 599.35000 | -.08005 | -.00629 | .01136 | -.04478 | .02170 | -.00342 | .00476 | .00124 | .18700 |
| -100.640 | 400.480 | 599.41000 | -.08025 | -.00546 | .00572 | -.04742 | .02322 | .00062 | .00212 | .00105 | .18735 |
| | GRADIENT | .00000 | .00000 | .00000 | .00000 | .00000 | .00000 | .00000 | .00000 | .00000 | .00000 |

IA143, AEDC V41A-P8A, O/ET W/R.H. SRB SEPARATING (OVX421) ( 23 MAY 77 )

REFERENCE DATA

SREF = 2690.0000 SQ.FT. XMRP = 1097.0000 IN. XT
LREF = 1290.3000 INCHES YMRP = .0000 IN. YT
BREF = 1290.3000 INCHES ZMRP = 450.0000 IN. ZT
SCALE = .0100

PARAMETRIC DATA

ALPHA = .000 BETA = .000
DALPHA = -10.000 DBETA = -8.000
X = 600.000 MACH = 4.500
JET PC = .000

RUN NO. 2367/ 0 RN/L = 2.39 GRADIENT INTERVAL = -5.00/ 5.00

| Y | Z | X | ALPHA | BETA | PHI | CN | CLM | CY | CYN | CBL | CA |
|---|---|---|---|---|---|---|---|---|---|---|---|
| -301.650 | 200.470 | 599.44000 | -.08005 | -.00405 | -.00096 | -.05439 | .02752 | .00529 | -.00115 | .00085 | .18769 |
| -300.810 | 300.260 | 599.28000 | -.07985 | -.00398 | -.00134 | -.05515 | .02830 | .00541 | -.00124 | .00081 | .18873 |
| -300.740 | 400.290 | 599.34000 | -.07984 | -.00395 | -.00138 | -.05511 | .02844 | .00543 | -.00127 | .00081 | .18953 |
| | GRADIENT | .00000 | .00000 | .00000 | .00000 | .00000 | .00000 | .00000 | .00000 | .00000 | .00000 |

IA143, AEDC V41A-P8A, O/ET W/R.H. SRB SEPARATING (OVX422) ( 23 MAY 77 )

REFERENCE DATA

SREF = 2690.0000 SQ.FT. XMRP = 1097.0000 IN. XT
LREF = 1290.3000 INCHES YMRP = .0000 IN. YT
BREF = 1290.3000 INCHES ZMRP = 450.0000 IN. ZT
SCALE = .0100

PARAMETRIC DATA

ALPHA = .000 BETA = .000
DALPHA = -10.000 DBETA = -4.000
X = 600.000 MACH = 4.500
JET PC = .000

RUN NO. 2369/ 0 RN/L = 2.40 GRADIENT INTERVAL = -5.00/ 5.00

| Y | Z | X | ALPHA | BETA | PHI | CN | CLM | CY | CYN | CBL | CA |
|---|---|---|---|---|---|---|---|---|---|---|---|
| -101.540 | 300.970 | 599.13000 | -.07956 | -.00602 | .01250 | -.04633 | .02302 | -.00460 | .00530 | .00122 | .18761 |
| -100.950 | 350.350 | 599.41000 | -.08006 | -.00581 | .00807 | -.04747 | .02340 | -.00119 | .00329 | .00110 | .18756 |
| -101.150 | 400.440 | 599.43000 | -.08021 | -.00515 | .00351 | -.04933 | .02446 | .00233 | .00101 | .00101 | .18759 |
| | GRADIENT | .00000 | .00000 | .00000 | .00000 | .00000 | .00000 | .00000 | .00000 | .00000 | .00000 |

IA143, AEDC V41A-P8A, O/ET W/R.H. SRB SEPARATING (OVX423) ( 23 MAY 77 )

REFERENCE DATA

SREF = 2690.0000 SQ.FT. XMRP = 1097.0000 IN. XT
LREF = 1290.3000 INCHES YMRP = .0000 IN. YT
BREF = 1290.3000 INCHES ZMRP = 450.0000 IN. ZT
SCALE = .0100

PARAMETRIC DATA

ALPHA = .000 BETA = .000
DALPHA = -15.000 DBETA = -4.000
X = 600.000 MACH = 4.500
JET PC = .000

RUN NO. 2388/ 0 RN/L = 2.41 GRADIENT INTERVAL = -5.00/ 5.00

| Y | Z | X | ALPHA | BETA | PHI | CN | CLM | CY | CYN | CBL | CA |
|---|---|---|---|---|---|---|---|---|---|---|---|
| -101.940 | 302.990 | 599.40000 | -.07958 | -.00655 | .01846 | -.04457 | .02177 | -.00981 | .00846 | .00122 | .18651 |
| -100.820 | 350.470 | 599.40000 | -.07998 | -.00655 | .01345 | -.04512 | .02183 | -.00556 | .00608 | .00115 | .18646 |
| -100.540 | 400.710 | 599.34000 | -.08023 | -.00583 | .00769 | -.04701 | .02286 | -.00130 | .00336 | .00099 | .18664 |
| | GRADIENT | .00000 | .00000 | .00000 | .00000 | .00000 | .00000 | .00000 | .00000 | .00000 | .00000 |

RUN NO. 2389/ 0 RN/L = 2.41 GRADIENT INTERVAL = -5.00/ 5.00

| Y | Z | X | ALPHA | BETA | PHI | CN | CLM | CY | CYN | CBL | CA |
|---|---|---|---|---|---|---|---|---|---|---|---|
| -201.780 | 400.950 | 599.48000 | -.08010 | -.00389 | -.00133 | -.05453 | .02764 | .00504 | -.00108 | .00073 | .18817 |
| -200.920 | 350.270 | 599.24000 | -.08024 | -.00460 | .00134 | -.05256 | .02624 | .00335 | .00020 | .00084 | .18733 |
| -199.890 | 300.190 | 599.19000 | -.08025 | -.00558 | .00578 | -.05077 | .02502 | .00017 | .00242 | .00096 | .18660 |
| | GRADIENT | .00000 | .00000 | .00000 | .00000 | .00000 | .00000 | .00000 | .00000 | .00000 | .00000 |

IA143, AEDC V41A-P8A, O/ET W/R.H. SRB SEPARATING (OVX424) ( 23 MAY 77 )

REFERENCE DATA

SREF = 2690.0000 SQ.FT. XMRP = 1097.0000 IN. XT
LREF = 1290.3000 INCHES YMRP = .0000 IN. YT
BREF = 1290.3000 INCHES ZMRP = 450.0000 IN. ZT
SCALE = .0100

PARAMETRIC DATA

ALPHA = .000 BETA = .000
DALPHA = -10.000 DBETA = -4.000
X = 600.000 MACH = 4.500
JET PC = .000

RUN NO. 2368/ 0 RN/L = 2.39 GRADIENT INTERVAL = -5.00/ 5.00

| Y | Z | X | ALPHA | BETA | PHI | CN | CLM | CY | CYN | CBL | CA |
|---|---|---|---|---|---|---|---|---|---|---|---|
| -203.550 | 201.650 | 599.25000 | -.07995 | -.00621 | .00977 | -.05121 | .02561 | -.00214 | .00401 | .00120 | .18730 |
| -201.490 | 300.260 | 599.37000 | -.08038 | -.00513 | .00323 | -.05172 | .02573 | .00252 | .00090 | .00100 | .18759 |
| -200.420 | 350.190 | 599.36000 | -.08013 | -.00426 | -.00042 | -.05381 | .02722 | .00509 | -.00094 | .00090 | .18818 |
| -201.090 | 400.360 | 599.40000 | -.07993 | -.00407 | -.00135 | -.05501 | .02820 | .00568 | -.00135 | .00085 | .18883 |
| | GRADIENT | .00000 | .00000 | .00000 | .00000 | .00000 | .00000 | .00000 | .00000 | .00000 | .00000 |

IA143, AEDC V41A-P8A, O/ET W/R.H. SRB SEPARATING (OVX425) ( 23 MAY 77 )

REFERENCE DATA

SREF = 2690.0000 SQ.FT. XMRP = 1097.0000 IN. XT
LREF = 1290.3000 INCHES YMRP = .0000 IN. YT
BREF = 1290.3000 INCHES ZMRP = 450.0000 IN. ZT
SCALE = .0100

PARAMETRIC DATA

ALPHA = .000 BETA = .000
DALPHA = -15.000 DBETA = -8.000
X = 600.000 MACH = 4.500
JET PC = .000

RUN NO. 2391/ 0 RN/L = 2.41 GRADIENT INTERVAL = -5.00/ 5.00

| Y | Z | X | ALPHA | BETA | PHI | CN | CLM | CY | CYN | CBL | CA |
|---|---|---|---|---|---|---|---|---|---|---|---|
| -99.522 | 399.640 | 599.05000 | -.08031 | -.00668 | .01241 | -.04296 | .02022 | -.00471 | .00566 | .00112 | .18574 |
| -100.130 | 350.230 | 599.21000 | -.07997 | -.00757 | .02112 | -.03987 | .01863 | -.01139 | .00981 | .00132 | .18576 |
| -100.240 | 300.150 | 599.15000 | -.07954 | -.00803 | .03028 | -.03877 | .01821 | -.01883 | .01420 | .00148 | .18569 |
| | GRADIENT | .00000 | .00000 | .00000 | .00000 | .00000 | .00000 | .00000 | .00000 | .00000 | .00000 |

RUN NO. 2390/ 0 RN/L = 2.41 GRADIENT INTERVAL = -5.00/ 5.00

| Y | Z | X | ALPHA | BETA | PHI | CN | CLM | CY | CYN | CBL | CA |
|---|---|---|---|---|---|---|---|---|---|---|---|
| -202.310 | 300.420 | 599.64000 | -.08016 | -.00640 | .00989 | -.04885 | .02360 | -.00283 | .00448 | .00106 | .18513 |
| -200.600 | 350.300 | 599.21000 | -.08038 | -.00547 | .00548 | -.04993 | .02424 | .00023 | .00233 | .00091 | .18534 |
| -200.630 | 400.620 | 599.33000 | -.08027 | -.00438 | .00047 | -.05274 | .02613 | .00395 | -.00024 | .00081 | .18647 |
| | GRADIENT | .00000 | .00000 | .00000 | .00000 | .00000 | .00000 | .00000 | .00000 | .00000 | .00000 |

IA143, AEDC V41A-P8A, O/ET W/R.H. SRB SEPARATING (OVX426) ( 23 MAY 77 )

REFERENCE DATA

SREF = 2690.0000 SQ.FT. XMRP = 1097.0000 IN. XT
LREF = 1290.3000 INCHES YMRP = .0000 IN. YT
BREF = 1290.3000 INCHES ZMRP = 450.0000 IN. ZT
SCALE = .0100

PARAMETRIC DATA

ALPHA = .000 BETA = .000
DALPHA = -10.000 DBETA = -8.000
X = 600.000 MACH = 4.500
JET PC = .000

RUN NO. 2366/ 0 RN/L = 2.39 GRADIENT INTERVAL = -5.00/ 5.00

| Y | Z | X | ALPHA | BETA | PHI | CN | CLM | CY | CYN | CBL | CA |
|---|---|---|---|---|---|---|---|---|---|---|---|
| -200.350 | 300.130 | 599.29000 | -.08026 | -.00571 | .00626 | -.04995 | .02462 | .00034 | .00239 | .00108 | .18702 |
| -200.680 | 350.140 | 599.36000 | -.08035 | -.00476 | .00171 | -.05195 | .02588 | .00356 | .00015 | .00095 | .18769 |
| -200.630 | 400.300 | 599.48000 | -.08019 | -.00397 | -.00128 | -.05439 | .02761 | .00550 | -.00130 | .00084 | .18851 |
| | GRADIENT | .00000 | .00000 | .00000 | .00000 | .00000 | .00000 | .00000 | .00000 | .00000 | .00000 |

IA143, AEDC V41A-P8A, O/ET W/R.H. SRB SEPARATING (OVX427) ( 23 MAY 77 )

REFERENCE DATA

SREF = 2690.0000 SQ.FT. XMRP = 1097.0000 IN. XT
LREF = 1290.3000 INCHES YMRP = .0000 IN. YT
BREF = 1290.3000 INCHES ZMRP = 450.0000 IN. ZT
SCALE = .0100

PARAMETRIC DATA

ALPHA = .000 BETA = .000
DALPHA = -5.000 DBETA = 4.000
X = 900.000 MACH = 4.500
JET PC = .000

RUN NO. 2349/ 0 RN/L = 2.39 GRADIENT INTERVAL = -5.00/ 5.00

| Y | Z | X | ALPHA | BETA | PHI | CN | CLM | CY | CYN | CBL | CA |
|---|---|---|---|---|---|---|---|---|---|---|---|
| -100.450 | 199.440 | 899.02000 | -.08003 | -.00398 | -.00147 | -.05499 | .02814 | .00523 | -.00114 | .00073 | .18906 |
| -100.150 | 275.060 | 899.26000 | -.07989 | -.00404 | -.00143 | -.05516 | .02840 | .00520 | -.00110 | .00073 | .18933 |
| -100.980 | 425.090 | 899.33000 | -.08004 | -.00414 | -.00142 | -.05530 | .02853 | .00531 | -.00112 | .00075 | .18988 |
| -100.660 | 500.310 | 899.40000 | -.07998 | -.00402 | -.00147 | -.05523 | .02851 | .00519 | -.00110 | .00072 | .18987 |
| -101.020 | 600.280 | 899.41000 | -.07997 | -.00402 | -.00144 | -.05523 | .02851 | .00523 | -.00112 | .00074 | .18993 |
| | GRADIENT | .00000 | .00000 | .00000 | .00000 | .00000 | .00000 | .00000 | .00000 | .00000 | .00000 |

RUN NO. 2350/ 0 RN/L = 2.39 GRADIENT INTERVAL = -5.00/ 5.00

| Y | Z | X | ALPHA | BETA | PHI | CN | CLM | CY | CYN | CBL | CA |
|---|---|---|---|---|---|---|---|---|---|---|---|
| -400.910 | 599.160 | 899.19000 | -.07993 | -.00400 | -.00144 | -.05522 | .02852 | .00523 | -.00113 | .00074 | .18995 |
| -400.980 | 500.020 | 899.29000 | -.08005 | -.00399 | -.00144 | -.05529 | .02855 | .00524 | -.00115 | .00074 | .18993 |
| -400.620 | 425.120 | 899.30000 | -.07999 | -.00404 | -.00144 | -.05520 | .02850 | .00528 | -.00114 | .00075 | .18991 |
| -401.270 | 275.000 | 899.26000 | -.07998 | -.00403 | -.00145 | -.05526 | .02852 | .00522 | -.00111 | .00073 | .18990 |
| -401.510 | 200.120 | 899.31000 | -.08003 | -.00401 | -.00144 | -.05522 | .02848 | .00522 | -.00112 | .00073 | .18980 |
| | GRADIENT | .00000 | .00000 | .00000 | .00000 | .00000 | .00000 | .00000 | .00000 | .00000 | .00000 |

IA143, AEDC V41A-P8A, O/ET W/R.H. SRB SEPARATING (OVX428) ( 23 MAY 77 )

REFERENCE DATA

SREF = 2690.0000 SQ.FT. XMRP = 1097.0000 IN. XT
LREF = 1290.3000 INCHES YMRP = .0000 IN. YT
BREF = 1290.3000 INCHES ZMRP = 450.0000 IN. ZT
SCALE = .0100

PARAMETRIC DATA

ALPHA = .000 BETA = .000
DALPHA = -20.000 DBETA = 4.000
X = 900.000 MACH = 4.500
JET PC = .000

RUN NO. 2416/ 0 RN/L = 2.40 GRADIENT INTERVAL = -5.00/ 5.00

| Y | Z | X | ALPHA | BETA | PHI | CN | CLM | CY | CYN | CBL | CA |
|---|---|---|---|---|---|---|---|---|---|---|---|
| -100.190 | 200.470 | 899.16000 | -.08024 | -.00528 | .00462 | -.05263 | .02609 | .00040 | .00216 | .00079 | .18652 |
| -101.850 | 275.830 | 899.26000 | -.08022 | -.00408 | -.00034 | -.05395 | .02710 | .00398 | -.00039 | .00067 | .18745 |
| -100.540 | 426.030 | 899.37000 | -.07992 | -.00374 | -.00160 | -.05536 | .02842 | .00451 | -.00085 | .00056 | .18888 |
| -100.460 | 500.940 | 899.39000 | -.07997 | -.00377 | -.00162 | -.05542 | .02852 | .00455 | -.00085 | .00056 | .18934 |
| -101.250 | 601.190 | 899.50000 | -.07995 | -.00372 | -.00161 | -.05542 | .02854 | .00456 | -.00088 | .00057 | .18939 |
| | GRADIENT | .00000 | .00000 | .00000 | .00000 | .00000 | .00000 | .00000 | .00000 | .00000 | .00000 |

IA143, AEDC V41A-P8A, O/ET W/R.H. SRB SEPARATING (OVX428) ( 23 MAY 77 )

REFERENCE DATA

SREF = 2690.0000 SQ.FT. XMRP = 1097.0000 IN. XT
LREF = 1290.3000 INCHES YMRP = .0000 IN. YT
BREF = 1290.3000 INCHES ZMRP = 450.0000 IN. ZT
SCALE = .0100

PARAMETRIC DATA

ALPHA = .000 BETA = .000
DALPHA = -20.000 DBETA = 4.000
X = 900.000 MACH = 4.500
JET PC = .000

RUN NO. 2417/ 0 RN/L = 2.40 GRADIENT INTERVAL = -5.00/ 5.00

| Y | Z | X | ALPHA | BETA | PHI | CN | CLM | CY | CYN | CBL | CA |
|---|---|---|---|---|---|---|---|---|---|---|---|
| -400.420 | 599.860 | 898.98000 | -.07995 | -.00371 | -.00162 | -.05550 | .02854 | .00456 | -.00089 | .00057 | .18928 |
| -400.880 | 500.960 | 899.36000 | -.07997 | -.00377 | -.00162 | -.05541 | .02850 | .00460 | -.00088 | .00057 | .18923 |
| -400.210 | 425.770 | 899.21000 | -.07998 | -.00378 | -.00162 | -.05544 | .02851 | .00462 | -.00089 | .00058 | .18927 |
| -401.260 | 275.890 | 899.22000 | -.07994 | -.00376 | -.00164 | -.05542 | .02852 | .00464 | -.00091 | .00058 | .18930 |
| -400.730 | 200.550 | 899.20000 | -.07999 | -.00380 | -.00163 | -.05541 | .02850 | .00458 | -.00086 | .00056 | .18923 |
| | GRADIENT | .00000 | .00000 | .00000 | .00000 | .00000 | .00000 | .00000 | .00000 | .00000 | .00000 |

IA143, AEDC V41A-P8A, O/ET W/R.H. SRB SEPARATING (OVX429) ( 23 MAY 77 )

REFERENCE DATA

SREF = 2690.0000 SQ.FT. XMRP = 1097.0000 IN. XT
LREF = 1290.3000 INCHES YMRP = .0000 IN. YT
BREF = 1290.3000 INCHES ZMRP = 450.0000 IN. ZT
SCALE = .0100

PARAMETRIC DATA

ALPHA = .000 BETA = .000
DALPHA = -5.000 DBETA = -16.000
X = 900.000 MACH = 4.500
JET PC = .000

RUN NO. 2347/ 0 RN/L = 2.38 GRADIENT INTERVAL = -5.00/ 5.00

| Y | Z | X | ALPHA | BETA | PHI | CN | CLM | CY | CYN | CBL | CA |
|---|---|---|---|---|---|---|---|---|---|---|---|
| -100.710 | 274.870 | 899.21000 | -.08052 | -.00537 | .00423 | -.04916 | .02393 | .00140 | .00163 | .00093 | .18658 |
| -101.940 | 425.550 | 899.81000 | -.07993 | -.00406 | -.00138 | -.05510 | .02832 | .00518 | -.00108 | .00073 | .18906 |
| -101.030 | 500.210 | 899.56000 | -.07996 | -.00402 | -.00140 | -.05526 | .02849 | .00513 | -.00107 | .00072 | .18974 |
| -101.800 | 600.520 | 899.79000 | -.08006 | -.00402 | -.00140 | -.05530 | .02853 | .00514 | -.00107 | .00072 | .18977 |
| | GRADIENT | .00000 | .00000 | .00000 | .00000 | .00000 | .00000 | .00000 | .00000 | .00000 | .00000 |

IA143, AEDC V41A-P8A, O/ET W/R.H. SRB SEPARATING (OVX430) ( 23 MAY 77 )

REFERENCE DATA

SREF = 2690.0000 SQ.FT. XMRP = 1097.0000 IN. XT
LREF = 1290.3000 INCHES YMRP = .0000 IN. YT
BREF = 1290.3000 INCHES ZMRP = 450.0000 IN. ZT
SCALE = .0100

PARAMETRIC DATA

ALPHA = .000 BETA = .000
DALPHA = -20.000 DBETA = -16.000
X = 900.000 MACH = 4.500
JET PC = .000

RUN NO. 2418/ 0 RN/L = 2.39 GRADIENT INTERVAL = -5.00/ 5.00

| Y | Z | X | ALPHA | BETA | PHI | CN | CLM | CY | CYN | CBL | CA |
|---|---|---|---|---|---|---|---|---|---|---|---|
| -100.580 | 425.490 | 899.19000 | -.08014 | -.00375 | -.00150 | -.05263 | .02590 | .00486 | -.00104 | .00066 | .18544 |
| -101.490 | 501.240 | 899.81000 | -.07967 | -.00380 | -.00159 | -.05447 | .02727 | .00476 | -.00096 | .00061 | .18562 |
| -101.950 | 601.530 | 900.01000 | -.07988 | -.00380 | -.00164 | -.05521 | .02803 | .00475 | -.00095 | .00060 | .18753 |
| | GRADIENT | .00000 | .00000 | .00000 | .00000 | .00000 | .00000 | .00000 | .00000 | .00000 | .00000 |

IA143, AEDC V41A-P8A, O/ET W/R.H. SRB SEPARATING (OVX431) ( 23 MAY 77 )

REFERENCE DATA

SREF = 2690.0000 SQ.FT. XMRP = 1097.0000 IN. XT
LREF = 1290.3000 INCHES YMRP = .0000 IN. YT
BREF = 1290.3000 INCHES ZMRP = 450.0000 IN. ZT
SCALE = .0100

PARAMETRIC DATA

ALPHA = .000 BETA = .000
DALPHA = -5.000 DBETA = -16.000
X = 900.000 MACH = 4.500
JET PC = .000

RUN NO. 2348/ 0 RN/L = 2.39 GRADIENT INTERVAL = -5.00/ 5.00

| Y | Z | X | ALPHA | BETA | PHI | CN | CLM | CY | CYN | CBL | CA |
|---|---|---|---|---|---|---|---|---|---|---|---|
| -400.590 | 200.180 | 899.15000 | -.08001 | -.00399 | -.00143 | -.05530 | .02854 | .00509 | -.00106 | .00071 | .18987 |
| -400.510 | 275.130 | 899.36000 | -.07997 | -.00403 | -.00141 | -.05530 | .02851 | .00506 | -.00103 | .00070 | .18979 |
| -401.100 | 425.100 | 899.36000 | -.08002 | -.00403 | -.00143 | -.05523 | .02851 | .00520 | -.00110 | .00073 | .18993 |
| -401.340 | 499.930 | 899.24000 | -.08009 | -.00404 | -.00143 | -.05532 | .02851 | .00521 | -.00111 | .00073 | .18979 |
| -400.620 | 599.780 | 899.29000 | -.08001 | -.00402 | -.00144 | -.05523 | .02847 | .00514 | -.00107 | .00072 | .18979 |
| | GRADIENT | .00000 | .00000 | .00000 | .00000 | .00000 | .00000 | .00000 | .00000 | .00000 | .00000 |

IA143, AEDC V41A-P8A, O/ET W/R.H. SRB SEPARATING (OVX432) ( 23 MAY 77 )

REFERENCE DATA

SREF = 2690.0000 SQ.FT. XMRP = 1097.0000 IN. XT
LREF = 1290.3000 INCHES YMRP = .0000 IN. YT
BREF = 1290.3000 INCHES ZMRP = 450.0000 IN. ZT
SCALE = .0100

PARAMETRIC DATA

ALPHA = .000 BETA = .000
DALPHA = -20.000 DBETA = -16.000
X = 900.000 MACH = 4.500
JET PC = .000

RUN NO. 2419/ 0 RN/L = 2.39 GRADIENT INTERVAL = -5.00/ 5.00

| Y | Z | X | ALPHA | BETA | PHI | CN | CLM | CY | CYN | CBL | CA |
|---|---|---|---|---|---|---|---|---|---|---|---|
| -400.800 | 200.490 | 898.96000 | -.07985 | -.00372 | -.00165 | -.05496 | .02764 | .00454 | -.00088 | .00056 | .18619 |
| -398.480 | 275.560 | 899.21000 | -.07984 | -.00380 | -.00160 | -.05495 | .02769 | .00460 | -.00087 | .00058 | .18651 |
| -400.580 | 425.570 | 899.17000 | -.07982 | -.00384 | -.00163 | -.05521 | .02830 | .00473 | -.00092 | .00059 | .18871 |
| -400.570 | 500.390 | 899.15000 | -.07991 | -.00376 | -.00166 | -.05536 | .02849 | .00476 | -.00098 | .00060 | .18931 |
| -400.240 | 600.460 | 899.24000 | -.07994 | -.00378 | -.00164 | -.05534 | .02849 | .00469 | -.00093 | .00059 | .18933 |
| | GRADIENT | .00000 | .00000 | .00000 | .00000 | .00000 | .00000 | .00000 | .00000 | .00000 | .00000 |

IA143, AEDC V41A-P8A, O/ET W/R.H. SRB SEPARATING (OVX433) ( 23 MAY 77 )

REFERENCE DATA

SREF = 2690.0000 SQ.FT. XMRP = 1097.0000 IN. XT
LREF = 1290.3000 INCHES YMRP = .0000 IN. YT
BREF = 1290.3000 INCHES ZMRP = 450.0000 IN. ZT
SCALE = .0100

PARAMETRIC DATA

ALPHA = .000 BETA = .000
DALPHA = -10.000 DBETA = .000
X = 900.000 MACH = 4.500
JET PC = .000

RUN NO. 2372/ 0 RN/L = 2.41 GRADIENT INTERVAL = -5.00/ 5.00

| Y | Z | X | ALPHA | BETA | PHI | CN | CLM | CY | CYN | CBL | CA |
|---|---|---|---|---|---|---|---|---|---|---|---|
| -100.690 | 300.890 | 899.02000 | -.07994 | -.00396 | -.00141 | -.05484 | .02805 | .00553 | -.00132 | .00082 | .18865 |
| -101.470 | 400.270 | 899.22000 | -.07986 | -.00404 | -.00136 | -.05514 | .02838 | .00550 | -.00127 | .00082 | .18920 |
| -101.150 | 500.520 | 899.29000 | -.07987 | -.00394 | -.00137 | -.05517 | .02844 | .00536 | -.00124 | .00079 | .18944 |
| | GRADIENT | .00000 | .00000 | .00000 | .00000 | .00000 | .00000 | .00000 | .00000 | .00000 | .00000 |

RUN NO. 2373/ 0 RN/L = 2.41 GRADIENT INTERVAL = -5.00/ 5.00

| Y | Z | X | ALPHA | BETA | PHI | CN | CLM | CY | CYN | CBL | CA |
|---|---|---|---|---|---|---|---|---|---|---|---|
| -301.720 | 500.460 | 899.34000 | -.08001 | -.00401 | -.00137 | -.05525 | .02848 | .00546 | -.00126 | .00080 | .18948 |
| -300.970 | 400.310 | 899.28000 | -.07987 | -.00403 | -.00137 | -.05518 | .02846 | .00548 | -.00126 | .00081 | .18956 |
| -300.530 | 300.000 | 899.11000 | -.07993 | -.00400 | -.00138 | -.05531 | .02849 | .00543 | -.00125 | .00080 | .18950 |
| | GRADIENT | .00000 | .00000 | .00000 | .00000 | .00000 | .00000 | .00000 | .00000 | .00000 | .00000 |

IA143, AEDC V41A-P8A, O/ET W/R.H. SRB SEPARATING (OVX434) ( 23 MAY 77 )

REFERENCE DATA

SREF = 2690.0000 SQ.FT. XMRP = 1097.0000 IN. XT
LREF = 1290.3000 INCHES YMRP = .0000 IN. YT
BREF = 1290.3000 INCHES ZMRP = 450.0000 IN. ZT
SCALE = .0100

PARAMETRIC DATA

ALPHA = .000 BETA = .000
DALPHA = -15.000 DBETA = .000
X = 900.000 MACH = 4.500
JET PC = .000

RUN NO. 2401/ 0 RN/L = 2.42 GRADIENT INTERVAL = -5.00/ 5.00

| Y | Z | X | ALPHA | BETA | PHI | CN | CLM | CY | CYN | CBL | CA |
|---|---|---|---|---|---|---|---|---|---|---|---|
| -100.570 | 302.730 | 899.16000 | -.08023 | -.00375 | -.00149 | -.05454 | .02765 | .00456 | -.00087 | .00060 | .18834 |
| -101.030 | 400.410 | 899.14000 | -.07989 | -.00378 | -.00157 | -.05539 | .02842 | .00452 | -.00084 | .00056 | .18879 |
| -101.090 | 500.880 | 899.26000 | -.07990 | -.00381 | -.00159 | -.05540 | .02854 | .00460 | -.00087 | .00057 | .18938 |
| | GRADIENT | .00000 | .00000 | .00000 | .00000 | .00000 | .00000 | .00000 | .00000 | .00000 | .00000 |

RUN NO. 2402/ 0 RN/L = 2.42 GRADIENT INTERVAL = -5.00/ 5.00

| Y | Z | X | ALPHA | BETA | PHI | CN | CLM | CY | CYN | CBL | CA |
|---|---|---|---|---|---|---|---|---|---|---|---|
| -301.720 | 501.190 | 899.40000 | -.07999 | -.00380 | -.00156 | -.05546 | .02854 | .00468 | -.00092 | .00060 | .18931 |
| -301.050 | 400.330 | 899.20000 | -.07992 | -.00381 | -.00159 | -.05545 | .02852 | .00466 | -.00090 | .00059 | .18923 |
| -300.510 | 300.200 | 899.10000 | -.07991 | -.00377 | -.00160 | -.05541 | .02854 | .00454 | -.00085 | .00056 | .18938 |
| | GRADIENT | .00000 | .00000 | .00000 | .00000 | .00000 | .00000 | .00000 | .00000 | .00000 | .00000 |

IA143, AEDC V41A-P8A, O/ET W/R.H. SRB SEPARATING (OVX435) ( 23 MAY 77 )

REFERENCE DATA

SREF = 2690.0000 SQ.FT. XMRP = 1097.0000 IN. XT
LREF = 1290.3000 INCHES YMRP = .0000 IN. YT
BREF = 1290.3000 INCHES ZMRP = 450.0000 IN. ZT
SCALE = .0100

PARAMETRIC DATA

ALPHA = .000 BETA = .000
DALPHA = -10.000 DBETA = -12.000
X = 900.000 MACH = 4.500
JET PC = .000

RUN NO. 2378/ 0 RN/L = 2.41 GRADIENT INTERVAL = -5.00/ 5.00

| Y | Z | X | ALPHA | BETA | PHI | CN | CLM | CY | CYN | CBL | CA |
|---|---|---|---|---|---|---|---|---|---|---|---|
| -103.790 | 300.320 | 899.55000 | -.08028 | -.00458 | .00118 | -.05192 | .02577 | .00366 | .00001 | .00088 | .18711 |
| -101.240 | 400.380 | 899.34000 | -.07978 | -.00396 | -.00135 | -.05502 | .02812 | .00529 | -.00118 | .00077 | .18825 |
| -101.880 | 500.720 | 899.58000 | -.07998 | -.00396 | -.00137 | -.05525 | .02843 | .00530 | -.00119 | .00078 | .18935 |
| | GRADIENT | .00000 | .00000 | .00000 | .00000 | .00000 | .00000 | .00000 | .00000 | .00000 | .00000 |

RUN NO. 2379/ 0 RN/L = 2.41 GRADIENT INTERVAL = -5.00/ 5.00

| Y | Z | X | ALPHA | BETA | PHI | CN | CLM | CY | CYN | CBL | CA |
|---|---|---|---|---|---|---|---|---|---|---|---|
| -301.540 | 500.760 | 899.61000 | -.07994 | -.00395 | -.00136 | -.05530 | .02851 | .00522 | -.00115 | .00076 | .18959 |
| -300.520 | 399.930 | 899.20000 | -.07995 | -.00393 | -.00137 | -.05536 | .02851 | .00522 | -.00116 | .00075 | .18955 |
| -299.780 | 300.040 | 899.24000 | -.07988 | -.00398 | -.00136 | -.05525 | .02846 | .00530 | -.00118 | .00077 | .18941 |
| | GRADIENT | .00000 | .00000 | .00000 | .00000 | .00000 | .00000 | .00000 | .00000 | .00000 | .00000 |

IA143, AEDC V41A-P8A, O/ET W/R.H. SRB SEPARATING (OVX436) ( 23 MAY 77 )

REFERENCE DATA

SREF = 2690.0000 SQ.FT. XMRP = 1097.0000 IN. XT
LREF = 1290.3000 INCHES YMRP = .0000 IN. YT
BREF = 1290.3000 INCHES ZMRP = 450.0000 IN. ZT
SCALE = .0100

PARAMETRIC DATA

ALPHA = .000 BETA = .000
DALPHA = -15.000 DBETA = -12.000
X = 900.000 MACH = 4.500
JET PC = .000

RUN NO. 2394/ 0 RN/L = 2.41 GRADIENT INTERVAL = -5.00/ 5.00

| Y | Z | X | ALPHA | BETA | PHI | CN | CLM | CY | CYN | CBL | CA |
|---|---|---|---|---|---|---|---|---|---|---|---|
| -103.400 | 301.910 | 899.62000 | -.08034 | -.00529 | .00396 | -.04961 | .02403 | .00139 | .00160 | .00088 | .18532 |
| -101.560 | 400.290 | 899.31000 | -.08009 | -.00384 | -.00143 | -.05455 | .02751 | .00496 | -.00105 | .00069 | .18736 |
| -101.830 | 501.060 | 899.67000 | -.07994 | -.00386 | -.00141 | -.05534 | .02835 | .00477 | -.00094 | .00065 | .18875 |
| | GRADIENT | .00000 | .00000 | .00000 | .00000 | .00000 | .00000 | .00000 | .00000 | .00000 | .00000 |

RUN NO. 2395/ 0 RN/L = 2.42 GRADIENT INTERVAL = -5.00/ 5.00

| Y | Z | X | ALPHA | BETA | PHI | CN | CLM | CY | CYN | CBL | CA |
|---|---|---|---|---|---|---|---|---|---|---|---|
| -301.690 | 501.460 | 899.65000 | -.07992 | -.00382 | -.00144 | -.05539 | .02851 | .00483 | -.00099 | .00067 | .18940 |
| -301.200 | 400.040 | 899.15000 | -.07990 | -.00387 | -.00142 | -.05531 | .02848 | .00489 | -.00100 | .00067 | .18929 |
| -300.470 | 300.380 | 899.32000 | -.07988 | -.00390 | -.00140 | -.05533 | .02844 | .00494 | -.00101 | .00068 | .18909 |
| -299.540 | 500.390 | 899.17000 | -.07992 | -.00375 | -.00158 | -.05534 | .02852 | .00461 | -.00090 | .00058 | .18944 |
| -300.650 | 400.030 | 899.21000 | -.07999 | -.00379 | -.00157 | -.05547 | .02855 | .00466 | -.00091 | .00059 | .18938 |
| -300.730 | 300.200 | 899.18000 | -.07991 | -.00381 | -.00155 | -.05533 | .02840 | .00461 | -.00087 | .00059 | .18891 |
| | GRADIENT | .00000 | .00000 | .00000 | .00000 | .00000 | .00000 | .00000 | .00000 | .00000 | .00000 |

IA143, AEDC V41A-P8A, O/ET W/R.H. SRB SEPARATING (OVX437) ( 23 MAY 77 )

REFERENCE DATA

SREF = 2690.0000 SQ.FT. XMRP = 1097.0000 IN. XT
LREF = 1290.3000 INCHES YMRP = .0000 IN. YT
BREF = 1290.3000 INCHES ZMRP = 450.0000 IN. ZT
SCALE = .0100

PARAMETRIC DATA

ALPHA = .000 BETA = .000
DALPHA = -12.000 DBETA = -6.000
X = 900.000 MACH = 4.500
JET PC = .000

RUN NO. 2384/ 0 RN/L = 2.41 GRADIENT INTERVAL = -5.00/ 5.00

| Y | Z | X | ALPHA | BETA | PHI | CN | CLM | CY | CYN | CBL | CA |
|---|---|---|---|---|---|---|---|---|---|---|---|
| -202.190 | 301.860 | 899.21000 | -.07993 | -.00395 | -.00135 | -.05531 | .02838 | .00521 | -.00114 | .00075 | .18899 |
| -200.530 | 400.460 | 899.31000 | -.07995 | -.00393 | -.00137 | -.05529 | .02847 | .00521 | -.00115 | .00075 | .18942 |
| -201.070 | 500.700 | 899.34000 | -.07986 | -.00396 | -.00138 | -.05528 | .02850 | .00521 | -.00114 | .00075 | .18948 |
| | GRADIENT | .00000 | .00000 | .00000 | .00000 | .00000 | .00000 | .00000 | .00000 | .00000 | .00000 |

IA143, AEDC V41A-P8A, O/ET W/R.H. SRB SEPARATING (OVX438) ( 23 MAY 77 )

REFERENCE DATA

SREF = 2690.0000 SQ.FT. XMRP = 1097.0000 IN. XT
LREF = 1290.3000 INCHES YMRP = .0000 IN. YT
BREF = 1290.3000 INCHES ZMRP = 450.0000 IN. ZT
SCALE = .0100

PARAMETRIC DATA

ALPHA = .000 BETA = .000
DALPHA = -15.000 DBETA = -6.000
X = 900.000 MACH = 4.500
JET PC = .000

RUN NO. 2398/ 0 RN/L = 2.42 GRADIENT INTERVAL = -5.00/ 5.00

| Y | Z | X | ALPHA | BETA | PHI | CN | CLM | CY | CYN | CBL | CA |
|---|---|---|---|---|---|---|---|---|---|---|---|
| -202.090 | 403.080 | 899.47000 | -.07992 | -.00375 | -.00157 | -.05539 | .02852 | .00444 | -.00080 | .00055 | .18930 |
| -201.000 | 600.890 | 899.41000 | -.07995 | -.00370 | -.00158 | -.05537 | .02852 | .00443 | -.00082 | .00055 | .18933 |
| -200.000 | 799.850 | 899.07000 | -.07998 | -.00375 | -.00158 | -.05544 | .02855 | .00450 | -.00083 | .00056 | .18946 |
| -200.420 | 999.780 | 899.24000 | -.07992 | -.00373 | -.00159 | -.05541 | .02852 | .00443 | -.00081 | .00055 | .18930 |
| | GRADIENT | .00000 | .00000 | .00000 | .00000 | .00000 | .00000 | .00000 | .00000 | .00000 | .00000 |

IA143, AEDC V41A-P8A, O/ET W/R.H. SRB SEPARATING (OVX439) ( 23 MAY 77 )

REFERENCE DATA

SREF = 2690.0000 SQ.FT. XMRP = 1097.0000 IN. XT
LREF = 1290.3000 INCHES YMRP = .0000 IN. YT
BREF = 1290.3000 INCHES ZMRP = 450.0000 IN. ZT
SCALE = .0100

PARAMETRIC DATA

ALPHA = .000 BETA = .000
DALPHA = -10.000 DBETA = -4.000
X = 900.000 MACH = 4.500
JET PC = .000

RUN NO. 2374/ 0 RN/L = 2.41 GRADIENT INTERVAL = -5.00/ 5.00

| Y | Z | X | ALPHA | BETA | PHI | CN | CLM | CY | CYN | CBL | CA |
|---|---|---|---|---|---|---|---|---|---|---|---|
| -201.560 | 301.070 | 899.02000 | -.07995 | -.00395 | -.00137 | -.05523 | .02841 | .00529 | -.00119 | .00077 | .18925 |
| -201.380 | 350.320 | 899.25000 | -.07984 | -.00396 | -.00136 | -.05515 | .02842 | .00537 | -.00123 | .00079 | .18935 |
| -201.150 | 400.280 | 899.20000 | -.07996 | -.00399 | -.00135 | -.05528 | .02849 | .00527 | -.00116 | .00077 | .18955 |
| | GRADIENT | .00000 | .00000 | .00000 | .00000 | .00000 | .00000 | .00000 | .00000 | .00000 | .00000 |

RUN NO. 2375/ 0 RN/L = 2.41 GRADIENT INTERVAL = -5.00/ 5.00

| Y | Z | X | ALPHA | BETA | PHI | CN | CLM | CY | CYN | CBL | CA |
|---|---|---|---|---|---|---|---|---|---|---|---|
| -301.580 | 400.490 | 899.26000 | -.07996 | -.00393 | -.00135 | -.05528 | .02850 | .00521 | -.00115 | .00075 | .18965 |
| -300.850 | 350.210 | 899.21000 | -.07992 | -.00399 | -.00136 | -.05528 | .02848 | .00526 | -.00115 | .00076 | .18947 |
| -300.910 | 300.060 | 899.17000 | -.07995 | -.00395 | -.00136 | -.05531 | .02849 | .00527 | -.00118 | .00077 | .18944 |
| | GRADIENT | .00000 | .00000 | .00000 | .00000 | .00000 | .00000 | .00000 | .00000 | .00000 | .00000 |

IA143, AEDC V41A-P8A, O/ET W/R.H. SRB SEPARATING (OVX440) ( 23 MAY 77 )

REFERENCE DATA

SREF = 2690.0000 SQ.FT. XMRP = 1097.0000 IN. XT
LREF = 1290.3000 INCHES YMRP = .0000 IN. YT
BREF = 1290.3000 INCHES ZMRP = 450.0000 IN. ZT
SCALE = .0100

PARAMETRIC DATA

ALPHA = .000 BETA = .000
DALPHA = -15.000 DBETA = -4.000
X = 900.000 MACH = 4.500
JET PC = .000

RUN NO. 2399/ 0 RN/L = 2.42 GRADIENT INTERVAL = -5.00/ 5.00

| Y | Z | X | ALPHA | BETA | PHI | CN | CLM | CY | CYN | CBL | CA |
|---|---|---|---|---|---|---|---|---|---|---|---|
| -202.460 | 302.940 | 899.43000 | -.07988 | -.00387 | -.00156 | -.05533 | .02844 | .00462 | -.00085 | .00058 | .18892 |
| -200.270 | 350.630 | 899.31000 | -.07989 | -.00374 | -.00158 | -.05531 | .02847 | .00450 | -.00084 | .00056 | .18915 |
| -200.510 | 400.400 | 899.18000 | -.07997 | -.00381 | -.00155 | -.05540 | .02850 | .00456 | -.00084 | .00057 | .18930 |
| | GRADIENT | .00000 | .00000 | .00000 | .00000 | .00000 | .00000 | .00000 | .00000 | .00000 | .00000 |

RUN NO. 2400/ 0 RN/L = 2.42 GRADIENT INTERVAL = -5.00/ 5.00

| Y | Z | X | ALPHA | BETA | PHI | CN | CLM | CY | CYN | CBL | CA |
|---|---|---|---|---|---|---|---|---|---|---|---|
| -301.970 | 400.930 | 899.34000 | -.07996 | -.00377 | -.00158 | -.05541 | .02853 | .00457 | -.00087 | .00057 | .18939 |
| -300.660 | 350.250 | 899.10000 | -.07989 | -.00381 | -.00158 | -.05537 | .02849 | .00466 | -.00090 | .00059 | .18922 |
| -300.940 | 300.330 | 899.10000 | -.07994 | -.00377 | -.00157 | -.05541 | .02855 | .00461 | -.00089 | .00058 | .18944 |
| | GRADIENT | .00000 | .00000 | .00000 | .00000 | .00000 | .00000 | .00000 | .00000 | .00000 | .00000 |

IA143, AEDC V41A-P8A, O/ET W/R.H. SRB SEPARATING (OVX441) ( 23 MAY 77 )

REFERENCE DATA

SREF = 2690.0000 SQ.FT. XMRP = 1097.0000 IN. XT
LREF = 1290.3000 INCHES YMRP = .0000 IN. YT
BREF = 1290.3000 INCHES ZMRP = 450.0000 IN. ZT
SCALE = .0100

PARAMETRIC DATA

ALPHA = .000 BETA = .000
DALPHA = -10.000 DBETA = -8.000
X = 900.000 MACH = 4.500
JET PC = .000

RUN NO. 2377/ 0 RN/L = 2.41 GRADIENT INTERVAL = -5.00/ 5.00

| Y | Z | X | ALPHA | BETA | PHI | CN | CLM | CY | CYN | CBL | CA |
|---|---|---|---|---|---|---|---|---|---|---|---|
| -199.480 | 399.520 | 898.98000 | -.07996 | -.00392 | -.00137 | -.05529 | .02846 | .00518 | -.00114 | .00075 | .18940 |
| -200.300 | 350.190 | 899.16000 | -.07993 | -.00397 | -.00135 | -.05525 | .02844 | .00526 | -.00116 | .00076 | .18935 |
| -200.610 | 299.850 | 899.09000 | -.07984 | -.00400 | -.00135 | -.05522 | .02836 | .00537 | -.00121 | .00079 | .18897 |
| | GRADIENT | .00000 | .00000 | .00000 | .00000 | .00000 | .00000 | .00000 | .00000 | .00000 | .00000 |

RUN NO. 2376/ 0 RN/L = 2.41 GRADIENT INTERVAL = -5.00/ 5.00

| Y | Z | X | ALPHA | BETA | PHI | CN | CLM | CY | CYN | CBL | CA |
|---|---|---|---|---|---|---|---|---|---|---|---|
| -301.570 | 300.180 | 899.53000 | -.07994 | -.00401 | -.00134 | -.05532 | .02854 | .00540 | -.00122 | .00080 | .18972 |
| -301.130 | 350.020 | 899.15000 | -.07985 | -.00394 | -.00137 | -.05520 | .02848 | .00537 | -.00124 | .00079 | .18954 |
| -300.990 | 400.310 | 899.35000 | -.07997 | -.00394 | -.00140 | -.05524 | .02847 | .00534 | -.00122 | .00078 | .18954 |
| | GRADIENT | .00000 | .00000 | .00000 | .00000 | .00000 | .00000 | .00000 | .00000 | .00000 | .00000 |

IA143, AEDC V41A-P8A, O/ET W/R.H. SRB SEPARATING (OVX442) ( 23 MAY 77 )

REFERENCE DATA

SREF = 2690.0000 SQ.FT. XMRP = 1097.0000 IN. XT
LREF = 1290.3000 INCHES YMRP = .0000 IN. YT
BREF = 1290.3000 INCHES ZMRP = 450.0000 IN. ZT
SCALE = .0100

PARAMETRIC DATA

ALPHA = .000 BETA = .000
DALPHA = -15.000 DBETA = -8.000
X = 900.000 MACH = 4.500
JET PC = .000

RUN NO. 2396/ 0 RN/L = 2.42 GRADIENT INTERVAL = -5.00/ 5.00

| Y | Z | X | ALPHA | BETA | PHI | CN | CLM | CY | CYN | CBL | CA |
|---|---|---|---|---|---|---|---|---|---|---|---|
| -203.240 | 302.840 | 899.62000 | -.07978 | -.00379 | -.00156 | -.05525 | .02834 | .00466 | -.00091 | .00060 | .18854 |
| -201.140 | 350.420 | 899.16000 | -.07988 | -.00379 | -.00158 | -.05531 | .02842 | .00454 | -.00084 | .00056 | .18891 |
| -200.790 | 400.500 | 899.32000 | -.07992 | -.00383 | -.00156 | -.05536 | .02845 | .00461 | -.00086 | .00058 | .18901 |
| | GRADIENT | .00000 | .00000 | .00000 | .00000 | .00000 | .00000 | .00000 | .00000 | .00000 | .00000 |

RUN NO. 2397/ 0 RN/L = 2.42 GRADIENT INTERVAL = -5.00/ 5.00

| Y | Z | X | ALPHA | BETA | PHI | CN | CLM | CY | CYN | CBL | CA |
|---|---|---|---|---|---|---|---|---|---|---|---|
| -301.990 | 401.010 | 899.45000 | -.07990 | -.00386 | -.00155 | -.05540 | .02852 | .00470 | -.00090 | .00060 | .18935 |
| -300.700 | 350.230 | 899.10000 | -.07998 | -.00380 | -.00156 | -.05536 | .02856 | .00458 | -.00086 | .00058 | .18949 |
| -300.340 | 300.390 | 899.13000 | -.07997 | -.00380 | -.00157 | -.05551 | .02855 | .00462 | -.00088 | .00059 | .18933 |
| | GRADIENT | .00000 | .00000 | .00000 | .00000 | .00000 | .00000 | .00000 | .00000 | .00000 | .00000 |

IA143, AEDC V41A-P8A, O/ET W/R.H. SRB SEPARATING (OVX443) ( 23 MAY 77 )

REFERENCE DATA

SREF = 2690.0000 SQ.FT. XMRP = 1097.0000 IN. XT
LREF = 1290.3000 INCHES YMRP = .0000 IN. YT
BREF = 1290.3000 INCHES ZMRP = 450.0000 IN. ZT
SCALE = .0100

PARAMETRIC DATA

ALPHA = .000 BETA = .000
DALPHA = -5.000 DBETA = 4.000
X = 1200.000 MACH = 4.500
JET PC = .000

RUN NO. 2351/ 0 RN/L = 2.39 GRADIENT INTERVAL = -5.00/ 5.00

| Y | Z | X | ALPHA | BETA | PHI | CN | CLM | CY | CYN | CBL | CA |
|---|---|---|---|---|---|---|---|---|---|---|---|
| -99.593 | 199.600 | 1199.00000 | -.07994 | -.00403 | -.00144 | -.05524 | .02849 | .00531 | -.00116 | .00075 | .18980 |
| -100.720 | 299.780 | 1199.20000 | -.07990 | -.00403 | -.00145 | -.05517 | .02844 | .00528 | -.00114 | .00074 | .18959 |
| -100.840 | 400.040 | 1199.10001 | -.08001 | -.00404 | -.00143 | -.05521 | .02849 | .00530 | -.00116 | .00075 | .18988 |
| -101.060 | 500.120 | 1199.30000 | -.07996 | -.00398 | -.00147 | -.05518 | .02848 | .00524 | -.00115 | .00074 | .18987 |
| -100.910 | 600.150 | 1199.20000 | -.07997 | -.00407 | -.00144 | -.05525 | .02853 | .00536 | -.00117 | .00076 | .18993 |
| | GRADIENT | .00000 | .00000 | .00000 | .00000 | .00000 | .00000 | .00000 | .00000 | .00000 | .00000 |

IA143, AEDC V41A-P8A, O/ET W/R.H. SRB SEPARATING (OVX443) ( 23 MAY 77 )

REFERENCE DATA

SREF = 2690.0000 SQ.FT. XMRP = 1097.0000 IN. XT
LREF = 1290.3000 INCHES YMRP = .0000 IN. YT
BREF = 1290.3000 INCHES ZMRP = 450.0000 IN. ZT
SCALE = .0100

PARAMETRIC DATA

ALPHA = .000 BETA = .000
DALPHA = -5.000 DBETA = 4.000
X = 1200.000 MACH = 4.500
JET PC = .000

RUN NO. 2352/ 0 RN/L = 2.39 GRADIENT INTERVAL = -5.00/ 5.00

| Y | Z | X | ALPHA | BETA | PHI | CN | CLM | CY | CYN | CBL | CA |
|---|---|---|---|---|---|---|---|---|---|---|---|
| -601.340 | 599.500 | 1199.10001 | -.08006 | -.00403 | -.00143 | -.05524 | .02853 | .00529 | -.00115 | .00075 | .19006 |
| -600.030 | 500.020 | 1199.10001 | -.08004 | -.00398 | -.00144 | -.05523 | .02851 | .00520 | -.00113 | .00074 | .18993 |
| -600.450 | 399.990 | 1199.20000 | -.08002 | -.00413 | -.00141 | -.05522 | .02850 | .00537 | -.00115 | .00077 | .18998 |
| -600.780 | 300.040 | 1199.20000 | -.08010 | -.00402 | -.00144 | -.05527 | .02851 | .00531 | -.00117 | .00076 | .18989 |
| -600.630 | 200.030 | 1199.10001 | -.08000 | -.00404 | -.00147 | -.05525 | .02848 | .00529 | -.00115 | .00074 | .18979 |
| | GRADIENT | .00000 | .00000 | .00000 | .00000 | .00000 | .00000 | .00000 | .00000 | .00000 | .00000 |

IA143, AEDC V41A-P8A, O/ET W/R.H. SRB SEPARATING (OVX444) ( 23 MAY 77 )

REFERENCE DATA

SREF = 2690.0000 SQ.FT. XMRP = 1097.0000 IN. XT
LREF = 1290.3000 INCHES YMRP = .0000 IN. YT
BREF = 1290.3000 INCHES ZMRP = 450.0000 IN. ZT
SCALE = .0100

PARAMETRIC DATA

ALPHA = .000 BETA = .000
DALPHA = -25.000 DBETA = 4.000
X = 1200.000 MACH = 4.500
JET PC = .000

RUN NO. 2422/ 0 RN/L = 2.39 GRADIENT INTERVAL = -5.00/ 5.00

| Y | Z | X | ALPHA | BETA | PHI | CN | CLM | CY | CYN | CBL | CA |
|---|---|---|---|---|---|---|---|---|---|---|---|
| -100.570 | 200.770 | 1199.10001 | -.07929 | -.00392 | -.00164 | -.05453 | .02792 | .00507 | -.00108 | .00066 | .18727 |
| -100.620 | 300.850 | 1199.10001 | -.07940 | -.00398 | -.00164 | -.05459 | .02819 | .00518 | -.00112 | .00069 | .18858 |
| -100.590 | 400.980 | 1199.10001 | -.07942 | -.00396 | -.00163 | -.05467 | .02830 | .00527 | -.00118 | .00071 | .18893 |
| -100.660 | 501.080 | 1199.30000 | -.07943 | -.00397 | -.00167 | -.05472 | .02834 | .00527 | -.00117 | .00070 | .18917 |
| -100.700 | 601.210 | 1199.30000 | -.07942 | -.00388 | -.00167 | -.05467 | .02832 | .00511 | -.00113 | .00068 | .18907 |
| | GRADIENT | .00000 | .00000 | .00000 | .00000 | .00000 | .00000 | .00000 | .00000 | .00000 | .00000 |

RUN NO. 2423/ 0 RN/L = 2.39 GRADIENT INTERVAL = -5.00/ 5.00

| Y | Z | X | ALPHA | BETA | PHI | CN | CLM | CY | CYN | CBL | CA |
|---|---|---|---|---|---|---|---|---|---|---|---|
| -601.180 | 600.730 | 1199.10001 | -.07947 | -.00393 | -.00166 | -.05475 | .02832 | .00523 | -.00117 | .00070 | .18908 |
| -600.770 | 500.850 | 1199.10001 | -.07956 | -.00389 | -.00168 | -.05477 | .02830 | .00514 | -.00113 | .00068 | .18904 |
| -601.130 | 400.730 | 1199.10001 | -.07957 | -.00398 | -.00166 | -.05477 | .02829 | .00524 | -.00115 | .00070 | .18889 |
| -600.280 | 300.480 | 1199.10001 | -.07945 | -.00393 | -.00167 | -.05465 | .02828 | .00522 | -.00116 | .00069 | .18900 |
| -600.660 | 200.990 | 1199.20000 | -.07953 | -.00392 | -.00168 | -.05469 | .02830 | .00518 | -.00114 | .00068 | .18902 |
| | GRADIENT | .00000 | .00000 | .00000 | .00000 | .00000 | .00000 | .00000 | .00000 | .00000 | .00000 |

IA143, AEDC V41A-P8A, O/ET W/R.H. SRB SEPARATING (OVX445) ( 23 MAY 77 )

REFERENCE DATA

SREF = 2690.0000 SQ.FT. XMRP = 1097.0000 IN. XT
LREF = 1290.3000 INCHES YMRP = .0000 IN. YT
BREF = 1290.3000 INCHES ZMRP = 450.0000 IN. ZT
SCALE = .0100

PARAMETRIC DATA

ALPHA = .000 BETA = .000
DALPHA = -5.000 DBETA = -20.000
X = 1200.000 MACH = 4.500
JET PC = .000

RUN NO. 2354/ 0 RN/L = 2.39 GRADIENT INTERVAL = -5.00/ 5.00

| Y | Z | X | ALPHA | BETA | PHI | CN | CLM | CY | CYN | CBL | CA |
|---|---|---|---|---|---|---|---|---|---|---|---|
| -100.130 | 599.630 | 1199.30000 | -.08000 | -.00407 | -.00145 | -.05518 | .02848 | .00534 | -.00117 | .00076 | .18982 |
| -99.882 | 499.470 | 1199.10001 | -.07999 | -.00399 | -.00147 | -.05527 | .02846 | .00526 | -.00115 | .00074 | .18968 |
| -99.982 | 399.430 | 1199.20000 | -.08003 | -.00406 | -.00143 | -.05522 | .02848 | .00538 | -.00119 | .00077 | .18985 |
| -100.370 | 299.640 | 1199.10001 | -.07983 | -.00403 | -.00143 | -.05507 | .02821 | .00524 | -.00112 | .00075 | .18857 |
| -100.230 | 199.810 | 1199.10001 | -.08018 | -.00399 | -.00147 | -.05353 | .02678 | .00552 | -.00130 | .00080 | .18692 |
| | GRADIENT | .00000 | .00000 | .00000 | .00000 | .00000 | .00000 | .00000 | .00000 | .00000 | .00000 |

RUN NO. 2353/ 0 RN/L = 2.39 GRADIENT INTERVAL = -5.00/ 5.00

| Y | Z | X | ALPHA | BETA | PHI | CN | CLM | CY | CYN | CBL | CA |
|---|---|---|---|---|---|---|---|---|---|---|---|
| -600.650 | 200.010 | 1199.20000 | -.08005 | -.00414 | -.00142 | -.05525 | .02846 | .00544 | -.00119 | .00078 | .18975 |
| -600.530 | 300.180 | 1199.39999 | -.07999 | -.00405 | -.00144 | -.05518 | .02849 | .00532 | -.00116 | .00075 | .18994 |
| -600.340 | 399.920 | 1199.30000 | -.07995 | -.00407 | -.00143 | -.05515 | .02848 | .00538 | -.00119 | .00077 | .18993 |
| -600.310 | 499.970 | 1199.30000 | -.08000 | -.00404 | -.00143 | -.05521 | .02847 | .00527 | -.00114 | .00074 | .18974 |
| -600.000 | 599.690 | 1199.10001 | -.08002 | -.00410 | -.00144 | -.05523 | .02849 | .00535 | -.00116 | .00076 | .18993 |
| | GRADIENT | .00000 | .00000 | .00000 | .00000 | .00000 | .00000 | .00000 | .00000 | .00000 | .00000 |

IA143, AEDC V41A-P8A, O/ET W/R.H. SRB SEPARATING (OVX446) ( 23 MAY 77 )

REFERENCE DATA

SREF = 2690.0000 SQ.FT. XMRP = 1097.0000 IN. XT
LREF = 1290.3000 INCHES YMRP = .0000 IN. YT
BREF = 1290.3000 INCHES ZMRP = 450.0000 IN. ZT
SCALE = .0100

PARAMETRIC DATA

ALPHA = .000 BETA = .000
DALPHA = -25.000 DBETA = -20.000
X = 1200.000 MACH = 4.500
JET PC = .000

RUN NO. 2420/ 0 RN/L = 2.40 GRADIENT INTERVAL = -5.00/ 5.00

| Y | Z | X | ALPHA | BETA | PHI | CN | CLM | CY | CYN | CBL | CA |
|---|---|---|---|---|---|---|---|---|---|---|---|
| -104.310 | 304.370 | 1201.30000 | -.07982 | -.00376 | -.00157 | -.05229 | .02527 | .00503 | -.00113 | .00068 | .18235 |
| -101.460 | 400.480 | 1199.30000 | -.07940 | -.00381 | -.00158 | -.05411 | .02679 | .00476 | -.00095 | .00061 | .18359 |
| -101.800 | 501.080 | 1199.80000 | -.07969 | -.00384 | -.00165 | -.05499 | .02775 | .00478 | -.00095 | .00061 | .18633 |
| -102.090 | 601.920 | 1200.39999 | -.07990 | -.00386 | -.00162 | -.05519 | .02821 | .00484 | -.00098 | .00062 | .18826 |
| | GRADIENT | .00000 | .00000 | .00000 | .00000 | .00000 | .00000 | .00000 | .00000 | .00000 | .00000 |

IA143, AEDC V41A-P8A, O/ET W/R.H. SRB SEPARATING (OVX446) ( 23 MAY 77 )

REFERENCE DATA

SREF = 2690.0000 SQ.FT. XMRP = 1097.0000 IN. XT
LREF = 1290.3000 INCHES YMRP = .0000 IN. YT
BREF = 1290.3000 INCHES ZMRP = 450.0000 IN. ZT
SCALE = .0100

PARAMETRIC DATA

ALPHA = .000 BETA = .000
DALPHA = -25.000 DBETA = -20.000
X = 1200.000 MACH = 4.500
JET PC = .000

RUN NO. 2421/ 0 RN/L = 2.40 GRADIENT INTERVAL = -5.00/ 5.00

| Y | Z | X | ALPHA | BETA | PHI | CN | CLM | CY | CYN | CBL | CA |
|---|---|---|---|---|---|---|---|---|---|---|---|
| -602.410 | 602.980 | 1201.00000 | -.07989 | -.00377 | -.00165 | -.05530 | .02851 | .00470 | -.00094 | .00059 | .18944 |
| -601.040 | 500.530 | 1199.30000 | -.07992 | -.00378 | -.00165 | -.05537 | .02851 | .00469 | -.00093 | .00059 | .18935 |
| -600.470 | 400.700 | 1199.20000 | -.07994 | -.00394 | -.00161 | -.05539 | .02850 | .00477 | -.00095 | .00061 | .18930 |
| -599.770 | 300.710 | 1199.30000 | -.07932 | -.00397 | -.00172 | -.05455 | .02826 | .00503 | -.00104 | .00064 | .18882 |
| | GRADIENT | .00000 | .00000 | .00000 | .00000 | .00000 | .00000 | .00000 | .00000 | .00000 | .00000 |

IA143, AEDC V41A-P8A, O/ET W/R.H. SRB SEPARATING (OVX447) ( 23 MAY 77 )

REFERENCE DATA

SREF = 2690.0000 SQ.FT. XMRP = 1097.0000 IN. XT
LREF = 1290.3000 INCHES YMRP = .0000 IN. YT
BREF = 1290.3000 INCHES ZMRP = 450.0000 IN. ZT
SCALE = .0100

PARAMETRIC DATA

ALPHA = .000 BETA = .000
DALPHA = -10.000 DBETA = .000
X = 1200.000 MACH = 4.500
JET PC = .000

RUN NO. 2382/ 0 RN/L = 2.41 GRADIENT INTERVAL = -5.00/ 5.00

| Y | Z | X | ALPHA | BETA | PHI | CN | CLM | CY | CYN | CBL | CA |
|---|---|---|---|---|---|---|---|---|---|---|---|
| -200.210 | 300.980 | 1198.70000 | -.07992 | -.00395 | -.00135 | -.05532 | .02848 | .00525 | -.00117 | .00077 | .18946 |
| -200.900 | 400.410 | 1199.10001 | -.07989 | -.00401 | -.00136 | -.05518 | .02847 | .00533 | -.00119 | .00078 | .18956 |
| -200.730 | 500.330 | 1199.10001 | -.07990 | -.00392 | -.00138 | -.05528 | .02848 | .00524 | -.00118 | .00076 | .18935 |
| | GRADIENT | .00000 | .00000 | .00000 | .00000 | .00000 | .00000 | .00000 | .00000 | .00000 | .00000 |

RUN NO. 2383/ 0 RN/L = 2.41 GRADIENT INTERVAL = -5.00/ 5.00

| Y | Z | X | ALPHA | BETA | PHI | CN | CLM | CY | CYN | CBL | CA |
|---|---|---|---|---|---|---|---|---|---|---|---|
| -401.420 | 500.580 | 1199.10001 | -.07985 | -.00387 | -.00139 | -.05522 | .02848 | .00510 | -.00112 | .00073 | .18948 |
| -401.170 | 400.190 | 1199.10001 | -.07985 | -.00395 | -.00135 | -.05517 | .02848 | .00528 | -.00119 | .00077 | .18957 |
| -400.910 | 299.990 | 1199.00000 | -.07989 | -.00396 | -.00137 | -.05523 | .02846 | .00528 | -.00118 | .00077 | .18947 |
| | GRADIENT | .00000 | .00000 | .00000 | .00000 | .00000 | .00000 | .00000 | .00000 | .00000 | .00000 |

IA143, AEDC V41A-P8A, O/ET W/R.H. SRB SEPARATING (OVX448) ( 23 MAY 77 )

REFERENCE DATA

SREF = 2690.0000 SQ.FT. XMRP = 1097.0000 IN. XT
LREF = 1290.3000 INCHES YMRP = .0000 IN. YT
BREF = 1290.3000 INCHES ZMRP = 450.0000 IN. ZT
SCALE = .0100

PARAMETRIC DATA

ALPHA = .000 BETA = .000
DALPHA = -20.000 DBETA = .000
X = 1200.000 MACH = 4.500
JET PC = .000

RUN NO. 2414/ 0 RN/L = 2.40 GRADIENT INTERVAL = -5.00/ 5.00

| Y | Z | X | ALPHA | BETA | PHI | CN | CLM | CY | CYN | CBL | CA |
|---|---|---|---|---|---|---|---|---|---|---|---|
| -200.540 | 300.520 | 1199.10001 | -.07997 | -.00382 | -.00159 | -.05538 | .02850 | .00477 | -.00096 | .00061 | .18933 |
| -200.860 | 400.810 | 1199.20000 | -.07985 | -.00380 | -.00160 | -.05528 | .02844 | .00468 | -.00092 | .00060 | .18913 |
| -201.860 | 500.870 | 1199.20000 | -.07997 | -.00378 | -.00162 | -.05547 | .02854 | .00467 | -.00092 | .00059 | .18929 |
| | GRADIENT | .00000 | .00000 | .00000 | .00000 | .00000 | .00000 | .00000 | .00000 | .00000 | .00000 |

RUN NO. 2415/ 0 RN/L = 2.40 GRADIENT INTERVAL = -5.00/ 5.00

| Y | Z | X | ALPHA | BETA | PHI | CN | CLM | CY | CYN | CBL | CA |
|---|---|---|---|---|---|---|---|---|---|---|---|
| -401.680 | 501.460 | 1199.30000 | -.07996 | -.00385 | -.00159 | -.05547 | .02854 | .00482 | -.00097 | .00062 | .18933 |
| -401.210 | 400.470 | 1199.00000 | -.07999 | -.00385 | -.00161 | -.05541 | .02854 | .00477 | -.00094 | .00061 | .18950 |
| -400.800 | 300.480 | 1199.00000 | -.07991 | -.00379 | -.00160 | -.05541 | .02853 | .00464 | -.00090 | .00059 | .18934 |
| | GRADIENT | .00000 | .00000 | .00000 | .00000 | .00000 | .00000 | .00000 | .00000 | .00000 | .00000 |

IA143, AEDC V41A-P8A, O/ET W/R.H. SRB SEPARATING (OVX449) ( 23 MAY 77 )

REFERENCE DATA

SREF = 2690.0000 SQ.FT. XMRP = 1097.0000 IN. XT
LREF = 1290.3000 INCHES YMRP = .0000 IN. YT
BREF = 1290.3000 INCHES ZMRP = 450.0000 IN. ZT
SCALE = .0100

PARAMETRIC DATA

ALPHA = .000 BETA = .000
DALPHA = -10.000 DBETA = -12.000
X = 1200.000 MACH = 4.500
JET PC = .000

RUN NO. 2380/ 0 RN/L = 2.41 GRADIENT INTERVAL = -5.00/ 5.00

| Y | Z | X | ALPHA | BETA | PHI | CN | CLM | CY | CYN | CBL | CA |
|---|---|---|---|---|---|---|---|---|---|---|---|
| -204.200 | 300.690 | 1199.60001 | -.07987 | -.00388 | -.00140 | -.05517 | .02844 | .00517 | -.00115 | .00074 | .18934 |
| -201.000 | 400.350 | 1199.30000 | -.07984 | -.00397 | -.00137 | -.05522 | .02848 | .00519 | -.00112 | .00074 | .18951 |
| -201.390 | 500.360 | 1199.30000 | -.07987 | -.00396 | -.00137 | -.05521 | .02848 | .00528 | -.00118 | .00077 | .18948 |
| | GRADIENT | .00000 | .00000 | .00000 | .00000 | .00000 | .00000 | .00000 | .00000 | .00000 | .00000 |

RUN NO. 2381/ 0 RN/L = 2.41 GRADIENT INTERVAL = -5.00/ 5.00

| Y | Z | X | ALPHA | BETA | PHI | CN | CLM | CY | CYN | CBL | CA |
|---|---|---|---|---|---|---|---|---|---|---|---|
| -401.810 | 500.730 | 1199.39999 | -.08000 | -.00387 | -.00139 | -.05531 | .02848 | .00505 | -.00109 | .00072 | .18935 |
| -400.580 | 400.050 | 1199.20000 | -.07983 | -.00387 | -.00139 | -.05518 | .02842 | .00507 | -.00110 | .00072 | .18926 |
| -400.550 | 300.060 | 1199.10001 | -.07992 | -.00390 | -.00138 | -.05525 | .02846 | .00511 | -.00111 | .00073 | .18935 |
| | GRADIENT | .00000 | .00000 | .00000 | .00000 | .00000 | .00000 | .00000 | .00000 | .00000 | .00000 |

IA143, AEDC V41A-P8A, O/ET W/R.H. SRB SEPARATING (OVX450) ( 23 MAY 77 )

REFERENCE DATA

SREF = 2690.0000 SQ.FT. XMRP = 1097.0000 IN. XT
LREF = 1290.3000 INCHES YMRP = .0000 IN. YT
BREF = 1290.3000 INCHES ZMRP = 450.0000 IN. ZT
SCALE = .0100

PARAMETRIC DATA

ALPHA = .000 BETA = .000
DALPHA = -20.000 DBETA = -12.000
X = 1200.000 MACH = 4.500
JET PC = .000

RUN NO. 2408/ 0 RN/L = 2.41 GRADIENT INTERVAL = -5.00/ 5.00

| Y | Z | X | ALPHA | BETA | PHI | CN | CLM | CY | CYN | CBL | CA |
|---|---|---|---|---|---|---|---|---|---|---|---|
| -203.140 | 304.340 | 1200.20000 | -.07993 | -.00379 | -.00161 | -.05531 | .02836 | .00466 | -.00091 | .00059 | .18881 |
| -201.320 | 400.520 | 1199.10001 | -.07997 | -.00381 | -.00160 | -.05538 | .02853 | .00467 | -.00091 | .00059 | .18937 |
| -201.380 | 500.820 | 1199.30000 | -.07989 | -.00375 | -.00161 | -.05536 | .02852 | .00459 | -.00089 | .00057 | .18940 |
| | GRADIENT | .00000 | .00000 | .00000 | .00000 | .00000 | .00000 | .00000 | .00000 | .00000 | .00000 |

RUN NO. 2409/ 0 RN/L = 2.41 GRADIENT INTERVAL = -5.00/ 5.00

| Y | Z | X | ALPHA | BETA | PHI | CN | CLM | CY | CYN | CBL | CA |
|---|---|---|---|---|---|---|---|---|---|---|---|
| -402.520 | 502.030 | 1200.00000 | -.07994 | -.00387 | -.00159 | -.05540 | .02853 | .00473 | -.00091 | .00060 | .18936 |
| -400.720 | 400.360 | 1199.00000 | -.07994 | -.00377 | -.00161 | -.05550 | .02857 | .00466 | -.00092 | .00059 | .18946 |
| -400.390 | 300.470 | 1199.00000 | -.07989 | -.00381 | -.00158 | -.05532 | .02850 | .00462 | -.00088 | .00058 | .18933 |
| | GRADIENT | .00000 | .00000 | .00000 | .00000 | .00000 | .00000 | .00000 | .00000 | .00000 | .00000 |

IA143, AEDC V41A-P8A, O/ET W/R.H. SRB SEPARATING (OVX451) ( 23 MAY 77 )

REFERENCE DATA

SREF = 2690.0000 SQ.FT. XMRP = 1097.0000 IN. XT
LREF = 1290.3000 INCHES YMRP = .0000 IN. YT
BREF = 1290.3000 INCHES ZMRP = 450.0000 IN. ZT
SCALE = .0100

PARAMETRIC DATA

ALPHA = .000 BETA = .000
DALPHA = -15.000 DBETA = -4.000
X = 1200.000 MACH = 4.500
JET PC = .000

RUN NO. 2403/ 0 RN/L = 2.41 GRADIENT INTERVAL = -5.00/ 5.00

| Y | Z | X | ALPHA | BETA | PHI | CN | CLM | CY | CYN | CBL | CA |
|---|---|---|---|---|---|---|---|---|---|---|---|
| -201.470 | 402.820 | 1199.20000 | -.07996 | -.00380 | -.00160 | -.05541 | .02852 | .00455 | -.00084 | .00056 | .18943 |
| -201.450 | 450.430 | 1199.20000 | -.07994 | -.00385 | -.00158 | -.05530 | .02850 | .00478 | -.00095 | .00062 | .18941 |
| -200.630 | 500.410 | 1199.10001 | -.07990 | -.00384 | -.00159 | -.05542 | .02852 | .00472 | -.00092 | .00060 | .18931 |
| | GRADIENT | .00000 | .00000 | .00000 | .00000 | .00000 | .00000 | .00000 | .00000 | .00000 | .00000 |

RUN NO. 2404/ 0 RN/L = 2.41 GRADIENT INTERVAL = -5.00/ 5.00

| Y | Z | X | ALPHA | BETA | PHI | CN | CLM | CY | CYN | CBL | CA |
|---|---|---|---|---|---|---|---|---|---|---|---|
| -301.900 | 501.070 | 1199.50000 | -.07993 | -.00381 | -.00160 | -.05542 | .02854 | .00466 | -.00090 | .00059 | .18935 |
| -300.840 | 450.170 | 1199.00000 | -.07998 | -.00375 | -.00160 | -.05548 | .02856 | .00455 | -.00087 | .00057 | .18937 |
| -299.980 | 400.180 | 1198.89999 | -.07997 | -.00389 | -.00156 | -.05547 | .02856 | .00480 | -.00094 | .00062 | .18946 |
| | GRADIENT | .00000 | .00000 | .00000 | .00000 | .00000 | .00000 | .00000 | .00000 | .00000 | .00000 |

IA143, AEDC V41A-P8A, O/ET W/R.H. SRB SEPARATING (OVX452) ( 23 MAY 77 )

REFERENCE DATA

SREF = 2690.0000 SQ.FT. XMRP = 1097.0000 IN. XT
LREF = 1290.3000 INCHES YMRP = .0000 IN. YT
BREF = 1290.3000 INCHES ZMRP = 450.0000 IN. ZT
SCALE = .0100

PARAMETRIC DATA

ALPHA = .000 BETA = .000
DALPHA = -20.000 DBETA = -4.000
X = 1200.000 MACH = 4.500
JET PC = .000

RUN NO. 2410/ 0 RN/L = 2.41 GRADIENT INTERVAL = -5.00/ 5.00

| Y | Z | X | ALPHA | BETA | PHI | CN | CLM | CY | CYN | CBL | CA |
|---|---|---|---|---|---|---|---|---|---|---|---|
| -200.790 | 400.490 | 1198.89999 | -.07992 | -.00380 | -.00161 | -.05537 | .02851 | .00457 | -.00085 | .00057 | .18928 |
| -201.140 | 450.710 | 1199.10001 | -.07992 | -.00377 | -.00163 | -.05535 | .02854 | .00464 | -.00090 | .00058 | .18949 |
| -200.540 | 500.540 | 1199.00000 | -.07992 | -.00384 | -.00162 | -.05537 | .02851 | .00476 | -.00094 | .00060 | .18937 |
| | GRADIENT | .00000 | .00000 | .00000 | .00000 | .00000 | .00000 | .00000 | .00000 | .00000 | .00000 |

RUN NO. 2411/ 0 RN/L = 2.41 GRADIENT INTERVAL = -5.00/ 5.00

| Y | Z | X | ALPHA | BETA | PHI | CN | CLM | CY | CYN | CBL | CA |
|---|---|---|---|---|---|---|---|---|---|---|---|
| -301.500 | 501.470 | 1199.39999 | -.08001 | -.00380 | -.00160 | -.05547 | .02850 | .00475 | -.00095 | .00061 | .18926 |
| -300.580 | 450.380 | 1199.00000 | -.07999 | -.00379 | -.00162 | -.05545 | .02854 | .00472 | -.00094 | .00060 | .18944 |
| -300.590 | 400.260 | 1198.89999 | -.07991 | -.00383 | -.00158 | -.05538 | .02850 | .00475 | -.00094 | .00061 | .18929 |
| | GRADIENT | .00000 | .00000 | .00000 | .00000 | .00000 | .00000 | .00000 | .00000 | .00000 | .00000 |

IA143, AEDC V41A-P8A, O/ET W/R.H. SRB SEPARATING (OVX453) ( 23 MAY 77 )

REFERENCE DATA

SREF = 2690.0000 SQ.FT. XMRP = 1097.0000 IN. XT
LREF = 1290.3000 INCHES YMRP = .0000 IN. YT
BREF = 1290.3000 INCHES ZMRP = 450.0000 IN. ZT
SCALE = .0100

PARAMETRIC DATA

ALPHA = .000 BETA = .000
DALPHA = -15.000 DBETA = -8.000
X = 1200.000 MACH = 4.500
JET PC = .000

RUN NO. 2406/ 0 RN/L = 2.41 GRADIENT INTERVAL = -5.00/ 5.00

| Y | Z | X | ALPHA | BETA | PHI | CN | CLM | CY | CYN | CBL | CA |
|---|---|---|---|---|---|---|---|---|---|---|---|
| -204.150 | 402.510 | 1199.30000 | -.07997 | -.00375 | -.00159 | -.05547 | .02857 | .00457 | -.00088 | .00057 | .18950 |
| -200.730 | 450.470 | 1199.10001 | -.08003 | -.00374 | -.00161 | -.05542 | .02854 | .00457 | -.00088 | .00057 | .18931 |
| -200.240 | 500.590 | 1199.10001 | -.08010 | -.00378 | -.00162 | -.05554 | .02854 | .00467 | -.00092 | .00059 | .18925 |
| | GRADIENT | .00000 | .00000 | .00000 | .00000 | .00000 | .00000 | .00000 | .00000 | .00000 | .00000 |

IA143, AEDC V41A-P8A, O/ET W/R.H. SRB SEPARATING (OVX454) ( 23 MAY 77 )

REFERENCE DATA

SREF = 2690.0000 SQ.FT. XMRP = 1097.0000 IN. XT
LREF = 1290.3000 INCHES YMRP = .0000 IN. YT
BREF = 1290.3000 INCHES ZMRP = 450.0000 IN. ZT
SCALE = .0100

PARAMETRIC DATA

ALPHA = .000 BETA = .000
DALPHA = -20.000 DBETA = -8.000
X = 1200.000 MACH = 4.500
JET PC = .000

RUN NO. 2413/ 0 RN/L = 2.40 GRADIENT INTERVAL = -5.00/ 5.00

| Y | Z | X | ALPHA | BETA | PHI | CN | CLM | CY | CYN | CBL | CA |
|---|---|---|---|---|---|---|---|---|---|---|---|
| -200.490 | 499.720 | 1198.70000 | -.08003 | -.00387 | -.00161 | -.05543 | .02856 | .00472 | -.00091 | .00059 | .18956 |
| -200.310 | 450.220 | 1198.80000 | -.07989 | -.00375 | -.00161 | -.05540 | .02853 | .00463 | -.00091 | .00058 | .18934 |
| -200.250 | 400.400 | 1198.89999 | -.07989 | -.00375 | -.00162 | -.05528 | .02850 | .00458 | -.00088 | .00057 | .18939 |
| | GRADIENT | .00000 | .00000 | .00000 | .00000 | .00000 | .00000 | .00000 | .00000 | .00000 | .00000 |

RUN NO. 2412/ 0 RN/L = 2.40 GRADIENT INTERVAL = -5.00/ 5.00

| Y | Z | X | ALPHA | BETA | PHI | CN | CLM | CY | CYN | CBL | CA |
|---|---|---|---|---|---|---|---|---|---|---|---|
| -301.810 | 400.480 | 1199.39999 | -.07996 | -.00376 | -.00161 | -.05546 | .02854 | .00455 | -.00086 | .00056 | .18939 |
| -301.290 | 450.830 | 1199.20000 | -.07996 | -.00382 | -.00162 | -.05542 | .02851 | .00474 | -.00093 | .00060 | .18935 |
| -300.320 | 500.650 | 1199.10001 | -.07993 | -.00379 | -.00163 | -.05546 | .02854 | .00459 | -.00087 | .00056 | .18927 |
| | GRADIENT | .00000 | .00000 | .00000 | .00000 | .00000 | .00000 | .00000 | .00000 | .00000 | .00000 |

IA143, AEDC V41A-P8A, O/ET W/R.H. SRB SEPARATING (OVX455) ( 23 MAY 77 )

REFERENCE DATA

SREF = 2690.0000 SQ.FT. XMRP = 1097.0000 IN. XT
LREF = 1290.3000 INCHES YMRP = .0000 IN. YT
BREF = 1290.3000 INCHES ZMRP = 450.0000 IN. ZT
SCALE = .0100

PARAMETRIC DATA

ALPHA = .000 BETA = .000
DALPHA = -15.000 DBETA = -8.000
X = 1200.000 MACH = 4.500
JET PC = .000

RUN NO. 2405/ 0 RN/L = 2.41 GRADIENT INTERVAL = -5.00/ 5.00

| Y | Z | X | ALPHA | BETA | PHI | CN | CLM | CY | CYN | CBL | CA |
|---|---|---|---|---|---|---|---|---|---|---|---|
| -303.840 | 303.010 | 1199.60001 | -.07998 | -.00379 | -.00159 | -.05547 | .02855 | .00465 | -.00090 | .00059 | .18942 |
| -300.090 | 400.540 | 1199.20000 | -.08000 | -.00384 | -.00160 | -.05548 | .02858 | .00470 | -.00091 | .00059 | .18952 |
| -301.590 | 450.410 | 1199.20000 | -.08002 | -.00381 | -.00157 | -.05547 | .02855 | .00473 | -.00094 | .00061 | .18940 |
| -300.250 | 500.580 | 1199.10001 | -.07995 | -.00377 | -.00161 | -.05545 | .02854 | .00464 | -.00090 | .00058 | .18933 |
| | GRADIENT | .00000 | .00000 | .00000 | .00000 | .00000 | .00000 | .00000 | .00000 | .00000 | .00000 |

IA143, AEDC V41A-P8A, O/ET W/R.H. SRB SEPARATING (OVX456) ( 23 MAY 77 )

REFERENCE DATA

SREF = 2690.0000 SQ.FT. XMRP = 1097.0000 IN. XT
LREF = 1290.3000 INCHES YMRP = .0000 IN. YT
BREF = 1290.3000 INCHES ZMRP = 450.0000 IN. ZT
SCALE = .0100

PARAMETRIC DATA

ALPHA = .000 BETA = .000
DALPHA = -18.000 DBETA = -8.000
X = 1200.000 MACH = 4.500
JET PC = .000

RUN NO. 2407/ 0 RN/L = 2.41 GRADIENT INTERVAL = -5.00/ 5.00

| Y | Z | X | ALPHA | BETA | PHI | CN | CLM | CY | CYN | CBL | CA |
|---|---|---|---|---|---|---|---|---|---|---|---|
| -303.670 | 404.420 | 1200.10001 | -.07999 | -.00376 | -.00162 | -.05551 | .02857 | .00465 | -.00091 | .00058 | .18945 |
| -301.310 | 601.040 | 1199.30000 | -.07994 | -.00383 | -.00161 | -.05530 | .02844 | .00472 | -.00093 | .00060 | .18917 |
| -300.030 | 800.050 | 1199.00000 | -.07995 | -.00385 | -.00158 | -.05544 | .02852 | .00470 | -.00091 | .00060 | .18935 |
| -301.390 | 999.950 | 1199.00000 | -.08000 | -.00378 | -.00162 | -.05541 | .02855 | .00447 | -.00081 | .00054 | .18950 |
| | GRADIENT | .00000 | .00000 | .00000 | .00000 | .00000 | .00000 | .00000 | .00000 | .00000 | .00000 |

IA143, AEDC V41A-P8A, O/ET W/R.H. SRB SEPARATING (OVX457) ( 23 MAY 77 )

REFERENCE DATA

SREF = 2690.0000 SQ.FT. XMRP = 1097.0000 IN. XT
LREF = 1290.3000 INCHES YMRP = .0000 IN. YT
BREF = 1290.3000 INCHES ZMRP = 450.0000 IN. ZT
SCALE = .0100

PARAMETRIC DATA

ALPHA = -15.000 BETA = 15.000
DALPHA = .000 DBETA = .000
X = .000 MACH = 4.500
JET PC = .000

RUN NO. 3094/ 0 RN/L = 2.38 GRADIENT INTERVAL = -5.00/ 5.00

| Y | Z | X | ALPHA | BETA | PHI | CN | CLM | CY | CYN | CBL | CA |
|---|---|---|---|---|---|---|---|---|---|---|---|
| -11.416 | .357 | -.02566 | -15.47600 | 15.30900 | .25797 | -.47501 | .12633 | -.72028 | .22783 | -.08460 | .30121 |
| -11.155 | 25.380 | .03992 | -15.47800 | 15.30600 | .28134 | -.48285 | .13350 | -.73256 | .23345 | -.08235 | .30065 |
| -9.590 | 100.880 | -.04863 | -15.47600 | 15.29000 | .34169 | -.48670 | .14581 | -.75238 | .24461 | -.07433 | .30085 |
| -9.829 | 150.120 | -.15747 | -15.46700 | 15.27900 | .35389 | -.47460 | .14579 | -.74151 | .24244 | -.06995 | .30221 |
| -8.428 | 249.700 | -.44258 | -15.44300 | 15.25600 | .32323 | -.48102 | .15628 | -.67821 | .22132 | -.06399 | .29610 |
| -9.313 | 348.840 | -.26050 | -15.43700 | 15.24900 | .26560 | -.49449 | .15833 | -.62691 | .20282 | -.06578 | .29688 |
| -10.566 | 473.530 | -.06746 | -15.44300 | 15.25200 | .26157 | -.51013 | .16332 | -.62576 | .20134 | -.06621 | .29710 |
| -10.857 | 499.630 | .03210 | -15.44300 | 15.25200 | .26211 | -.51035 | .16355 | -.62622 | .20159 | -.06620 | .29696 |
| -10.749 | 599.070 | -.08227 | -15.44300 | 15.25100 | .26305 | -.51100 | .16398 | -.62688 | .20200 | -.06619 | .29719 |
| | GRADIENT | .00000 | .00000 | .00000 | .00000 | .00000 | .00000 | .00000 | .00000 | .00000 | .00000 |

IA143, AEDC V41A-P8A, O/ET W/R.H. SRB SEPARATING (OVX457) ( 23 MAY 77 )

REFERENCE DATA

SREF = 2690.0000 SQ.FT. XMRP = 1097.0000 IN. XT
LREF = 1290.3000 INCHES YMRP = .0000 IN. YT
BREF = 1290.3000 INCHES ZMRP = 450.0000 IN. ZT
SCALE = .0100

PARAMETRIC DATA

ALPHA = -15.000 BETA = 15.000
DALPHA = .000 DBETA = .000
X = .000 MACH = 4.500
JET PC = .000

RUN NO. 3095/ 0 RN/L = 2.38 GRADIENT INTERVAL = -5.00/ 5.00

| Y | Z | X | ALPHA | BETA | PHI | CN | CLM | CY | CYN | CBL | CA |
|---|---|---|---|---|---|---|---|---|---|---|---|
| -100.820 | 598.890 | -.13550 | -15.44300 | 15.25100 | .26311 | -.51115 | .16404 | -.62702 | .20207 | -.06619 | .29732 |
| -101.180 | 500.100 | .00275 | -15.44300 | 15.25100 | .26291 | -.51109 | .16400 | -.62719 | .20209 | -.06623 | .29717 |
| -100.810 | 474.960 | -.18000 | -15.44300 | 15.25200 | .26261 | -.51067 | .16377 | -.62673 | .20185 | -.06622 | .29708 |
| -100.790 | 350.350 | -.20561 | -15.44200 | 15.25200 | .26115 | -.50693 | .16192 | -.62520 | .20119 | -.06622 | .29734 |
| -101.520 | 250.370 | -.01185 | -15.44500 | 15.24600 | .29110 | -.49514 | .15780 | -.64860 | .21332 | -.06522 | .29691 |
| -101.960 | 149.920 | -.00230 | -15.45700 | 15.25600 | .30694 | -.48572 | .14863 | -.68234 | .22569 | -.06863 | .29817 |
| -101.060 | 99.598 | -.16993 | -15.46100 | 15.26000 | .30316 | -.48595 | .14667 | -.69349 | .23056 | -.07177 | .30238 |
| -101.040 | 23.931 | -.20541 | -15.46000 | 15.26600 | .27754 | -.49141 | .14661 | -.68946 | .22830 | -.07618 | .30237 |
| -100.590 | -.334 | -.22820 | -15.45800 | 15.27000 | .25932 | -.48688 | .14241 | -.68431 | .22579 | -.07885 | .30216 |
| | GRADIENT | .00000 | .00000 | .00000 | .00000 | .00000 | .00000 | .00000 | .00000 | .00000 | .00000 |

IA143, AEDC V41A-P8A, O/ET W/R.H. SRB SEPARATING (OVX458) ( 23 MAY 77 )

REFERENCE DATA

SREF = 2690.0000 SQ.FT. XMRP = 1097.0000 IN. XT
LREF = 1290.3000 INCHES YMRP = .0000 IN. YT
BREF = 1290.3000 INCHES ZMRP = 450.0000 IN. ZT
SCALE = .0100

PARAMETRIC DATA

ALPHA = -15.000 BETA = 15.000
DALPHA = -5.000 DBETA = .000
X = .000 MACH = 4.500
JET PC = .000

RUN NO. 3108/ 0 RN/L = 2.37 GRADIENT INTERVAL = -5.00/ 5.00

| Y | Z | X | ALPHA | BETA | PHI | CN | CLM | CY | CYN | CBL | CA |
|---|---|---|---|---|---|---|---|---|---|---|---|
| -11.641 | 25.382 | -.07149 | -15.48000 | 15.33500 | .19402 | -.41382 | .08130 | -.75210 | .24164 | -.10458 | .30995 |
| -10.434 | 101.160 | -.05427 | -15.49000 | 15.31400 | .30344 | -.44167 | .10640 | -.79357 | .26118 | -.09075 | .30072 |
| -9.308 | 150.560 | -.31281 | -15.48500 | 15.29200 | .36962 | -.45568 | .12693 | -.80002 | .26729 | -.07888 | .30167 |
| -7.379 | 250.440 | -.56418 | -15.45900 | 15.25400 | .39342 | -.46045 | .14584 | -.74563 | .25151 | -.06373 | .29498 |
| -8.569 | 349.000 | -.46538 | -15.44200 | 15.24100 | .30537 | -.47095 | .14719 | -.65782 | .21888 | -.06438 | .29545 |
| -9.338 | 473.340 | -.32741 | -15.44200 | 15.25200 | .25902 | -.50347 | .15958 | -.62352 | .20016 | -.06621 | .29687 |
| -10.892 | 499.590 | -.24636 | -15.44200 | 15.25200 | .25971 | -.50570 | .16075 | -.62441 | .20063 | -.06628 | .29642 |
| -10.522 | 599.140 | -.23014 | -15.44300 | 15.25200 | .26294 | -.51083 | .16389 | -.62747 | .20213 | -.06627 | .29685 |
| | GRADIENT | .00000 | .00000 | .00000 | .00000 | .00000 | .00000 | .00000 | .00000 | .00000 | .00000 |

IA143, AEDC V41A-P8A, O/ET W/R.H. SRB SEPARATING (OVX458) ( 23 MAY 77 )

REFERENCE DATA

SREF = 2690.0000 SQ.FT. XMRP = 1097.0000 IN. XT
LREF = 1290.3000 INCHES YMRP = .0000 IN. YT
BREF = 1290.3000 INCHES ZMRP = 450.0000 IN. ZT
SCALE = .0100

PARAMETRIC DATA

ALPHA = -15.000 BETA = 15.000
DALPHA = -5.000 DBETA = .000
X = .000 MACH = 4.500
JET PC = .000

RUN NO. 3109/ 0 RN/L = 2.36 GRADIENT INTERVAL = -5.00/ 5.00

| Y | Z | X | ALPHA | BETA | PHI | CN | CLM | CY | CYN | CBL | CA |
|---|---|---|---|---|---|---|---|---|---|---|---|
| -101.330 | 598.740 | -.12937 | -15.44300 | 15.25200 | .26303 | -.51098 | .16396 | -.62730 | .20208 | -.06623 | .29724 |
| -101.030 | 500.290 | -.20231 | -15.44300 | 15.25200 | .26248 | -.51037 | .16346 | -.62694 | .20177 | -.06626 | .29700 |
| -100.720 | 474.960 | -.20484 | -15.44300 | 15.25200 | .26179 | -.50943 | .16289 | -.62651 | .20158 | -.06628 | .29696 |
| -101.520 | 350.820 | -.26015 | -15.44300 | 15.24700 | .27297 | -.49517 | .15580 | -.63367 | .20660 | -.06577 | .29662 |
| -101.660 | 250.150 | -.14302 | -15.45000 | 15.24200 | .32549 | -.48943 | .15642 | -.67769 | .22732 | -.06438 | .29601 |
| -102.220 | 149.660 | -.12356 | -15.46500 | 15.26000 | .31171 | -.46444 | .13331 | -.71608 | .24223 | -.07501 | .30259 |
| -101.340 | 99.456 | -.24846 | -15.46900 | 15.26900 | .28399 | -.45665 | .12273 | -.72358 | .24532 | -.08234 | .30332 |
| -100.590 | 24.098 | -.36780 | -15.46000 | 15.28900 | .18729 | -.41538 | .08936 | -.71319 | .24225 | -.10051 | .30555 |
| | GRADIENT | .00000 | .00000 | .00000 | .00000 | .00000 | .00000 | .00000 | .00000 | .00000 | .00000 |

IA143, AEDC V41A-P8A, O/ET W/R.H. SRB SEPARATING (OVX459) ( 23 MAY 77 )

REFERENCE DATA

SREF = 2690.0000 SQ.FT. XMRP = 1097.0000 IN. XT
LREF = 1290.3000 INCHES YMRP = .0000 IN. YT
BREF = 1290.3000 INCHES ZMRP = 450.0000 IN. ZT
SCALE = .0100

PARAMETRIC DATA

ALPHA = -15.000 BETA = 15.000
DALPHA = .000 DBETA = -4.000
X = .000 MACH = 4.500
JET PC = .000

RUN NO. 3097/ 0 RN/L = 2.38 GRADIENT INTERVAL = -5.00/ 5.00

| Y | Z | X | ALPHA | BETA | PHI | CN | CLM | CY | CYN | CBL | CA |
|---|---|---|---|---|---|---|---|---|---|---|---|
| -11.312 | 249.980 | .01704 | -15.44500 | 15.25400 | .33779 | -.46818 | .14973 | -.69000 | .22708 | -.06356 | .29578 |
| -9.581 | 348.750 | -.28495 | -15.43600 | 15.24900 | .26706 | -.49232 | .15751 | -.62793 | .20336 | -.06571 | .29617 |
| -10.895 | 473.590 | -.04540 | -15.44300 | 15.25200 | .26095 | -.50908 | .16275 | -.62503 | .20103 | -.06620 | .29704 |
| -11.286 | 499.570 | .03038 | -15.44300 | 15.25200 | .26183 | -.50991 | .16329 | -.62597 | .20141 | -.06622 | .29714 |
| -10.892 | 599.170 | -.15284 | -15.44300 | 15.25100 | .26307 | -.51132 | .16412 | -.62741 | .20217 | -.06623 | .29736 |
| | GRADIENT | .00000 | .00000 | .00000 | .00000 | .00000 | .00000 | .00000 | .00000 | .00000 | .00000 |

IA143, AEDC V41A-P8A, O/ET W/R.H. SRB SEPARATING (OVX460) ( 23 MAY 77 )

REFERENCE DATA

SREF = 2690.0000 SQ.FT. XMRP = 1097.0000 IN. XT
LREF = 1290.3000 INCHES YMRP = .0000 IN. YT
BREF = 1290.3000 INCHES ZMRP = 450.0000 IN. ZT
SCALE = .0100

PARAMETRIC DATA

ALPHA = -15.000 BETA = 15.000
DALPHA = -5.000 DBETA = -4.000
X = .000 MACH = 4.500
JET PC = .000

RUN NO. 3107/ 0 RN/L = 2.37 GRADIENT INTERVAL = -5.00/ 5.00

| Y | Z | X | ALPHA | BETA | PHI | CN | CLM | CY | CYN | CBL | CA |
|---|---|---|---|---|---|---|---|---|---|---|---|
| -11.008 | 474.860 | -.14356 | -15.44100 | 15.25200 | .25820 | -.50113 | .15832 | -.62185 | .19940 | -.06606 | .29616 |
| -11.092 | 499.750 | -.24198 | -15.44100 | 15.25200 | .25864 | -.50327 | .15933 | -.62285 | .19988 | -.06616 | .29588 |
| -10.852 | 599.150 | -.22149 | -15.44300 | 15.25200 | .26287 | -.51072 | .16377 | -.62695 | .20194 | -.06620 | .29653 |
| | GRADIENT | .00000 | .00000 | .00000 | .00000 | .00000 | .00000 | .00000 | .00000 | .00000 | .00000 |

IA143, AEDC V41A-P8A, O/ET W/R.H. SRB SEPARATING (OVX461) ( 23 MAY 77 )

REFERENCE DATA

SREF = 2690.0000 SQ.FT. XMRP = 1097.0000 IN. XT
LREF = 1290.3000 INCHES YMRP = .0000 IN. YT
BREF = 1290.3000 INCHES ZMRP = 450.0000 IN. ZT
SCALE = .0100

PARAMETRIC DATA

ALPHA = -15.000 BETA = 15.000
DALPHA = .000 DBETA = -4.000
X = .000 MACH = 4.500
JET PC = .000

RUN NO. 3096/ 0 RN/L = 2.38 GRADIENT INTERVAL = -5.00/ 5.00

| Y | Z | X | ALPHA | BETA | PHI | CN | CLM | CY | CYN | CBL | CA |
|---|---|---|---|---|---|---|---|---|---|---|---|
| -101.200 | .188 | -.10759 | -15.47200 | 15.26300 | .29445 | -.47331 | .13130 | -.72574 | .24802 | -.08088 | .30042 |
| -100.730 | 25.293 | -.04057 | -15.47300 | 15.26000 | .31241 | -.47816 | .13635 | -.73000 | .24989 | -.07803 | .30096 |
| -100.060 | 100.710 | -.13706 | -15.47000 | 15.25200 | .34089 | -.47758 | .14207 | -.72554 | .24749 | -.07112 | .30121 |
| -100.250 | 150.190 | -.10223 | -15.46100 | 15.25100 | .33160 | -.47712 | .14442 | -.70292 | .23607 | -.06795 | .29758 |
| -99.223 | 249.560 | -.41104 | -15.44500 | 15.24500 | .29707 | -.48958 | .15523 | -.65346 | .21584 | -.06501 | .29660 |
| -100.550 | 349.030 | -.02931 | -15.44200 | 15.25100 | .26060 | -.50562 | .16110 | -.62484 | .20103 | -.06621 | .29741 |
| -101.150 | 474.250 | .07018 | -15.44300 | 15.25200 | .26255 | -.51079 | .16382 | -.62694 | .20193 | -.06626 | .29711 |
| -100.970 | 499.610 | -.08620 | -15.44300 | 15.25100 | .26293 | -.51123 | .16408 | -.62726 | .20211 | -.06624 | .29732 |
| -100.480 | 599.310 | -.27372 | -15.44300 | 15.25100 | .26314 | -.51128 | .16406 | -.62713 | .20211 | -.06620 | .29721 |
| | GRADIENT | .00000 | .00000 | .00000 | .00000 | .00000 | .00000 | .00000 | .00000 | .00000 | .00000 |

IA143, AEDC V41A-P8A, O/ET W/R.H. SRB SEPARATING (OVX462) ( 23 MAY 77 )

REFERENCE DATA

SREF = 2690.0000 SQ.FT. XMRP = 1097.0000 IN. XT
LREF = 1290.3000 INCHES YMRP = .0000 IN. YT
BREF = 1290.3000 INCHES ZMRP = 450.0000 IN. ZT
SCALE = .0100

PARAMETRIC DATA

ALPHA = -15.000 BETA = 15.000
DALPHA = -5.000 DBETA = -4.000
X = .000 MACH = 4.500
JET PC = .000

RUN NO. 3106/ 0 RN/L = 2.37 GRADIENT INTERVAL = -5.00/ 5.00

| Y | Z | X | ALPHA | BETA | PHI | CN | CLM | CY | CYN | CBL | CA |
|---|---|---|---|---|---|---|---|---|---|---|---|
| -101.600 | 25.315 | -.08976 | -15.47500 | 15.28700 | .21467 | -.38642 | .06830 | -.75576 | .26373 | -.10422 | .30523 |
| -100.500 | 100.920 | -.16446 | -15.48500 | 15.26300 | .31468 | -.42618 | .09952 | -.77520 | .27324 | -.08765 | .30162 |
| -100.260 | 150.510 | -.25669 | -15.47800 | 15.25000 | .35579 | -.44995 | .12303 | -.76111 | .26685 | -.07608 | .29993 |
| -98.726 | 250.200 | -.45661 | -15.45700 | 15.23400 | .35932 | -.47751 | .15028 | -.70416 | .24202 | -.06342 | .29370 |
| -99.393 | 349.330 | -.39429 | -15.44300 | 15.24400 | .28390 | -.48275 | .15019 | -.64182 | .21125 | -.06540 | .29597 |
| -100.040 | 473.810 | -.24649 | -15.44200 | 15.25200 | .26113 | -.50729 | .16163 | -.62549 | .20110 | -.06621 | .29632 |
| -101.040 | 499.720 | -.15591 | -15.44300 | 15.25200 | .26196 | -.50902 | .16264 | -.62622 | .20146 | -.06622 | .29626 |
| -100.720 | 599.470 | -.19044 | -15.44300 | 15.25200 | .26305 | -.51096 | .16398 | -.62712 | .20204 | -.06622 | .29710 |
| | GRADIENT | .00000 | .00000 | .00000 | .00000 | .00000 | .00000 | .00000 | .00000 | .00000 | .00000 |

IA143, AEDC V41A-P8A, O/ET W/R.H. SRB SEPARATING (OVX463) ( 23 MAY 77 )

REFERENCE DATA

SREF = 2690.0000 SQ.FT. XMRP = 1097.0000 IN. XT
LREF = 1290.3000 INCHES YMRP = .0000 IN. YT
BREF = 1290.3000 INCHES ZMRP = 450.0000 IN. ZT
SCALE = .0100

PARAMETRIC DATA

ALPHA = -15.000 BETA = 15.000
DALPHA = .000 DBETA = .000
X = 300.000 MACH = 4.500
JET PC = .000

RUN NO. 3098/ 0 RN/L = 2.38 GRADIENT INTERVAL = -5.00/ 5.00

| Y | Z | X | ALPHA | BETA | PHI | CN | CLM | CY | CYN | CBL | CA |
|---|---|---|---|---|---|---|---|---|---|---|---|
| -10.846 | 100.060 | 299.88000 | -15.46900 | 15.25700 | .33397 | -.47608 | .14123 | -.72186 | .24388 | -.07146 | .30164 |
| -7.063 | 249.480 | 299.63000 | -15.44400 | 15.24600 | .30150 | -.48537 | .15451 | -.65726 | .21683 | -.06480 | .29696 |
| -10.348 | 299.660 | 299.69000 | -15.44000 | 15.24700 | .27884 | -.49070 | .15614 | -.63844 | .20840 | -.06553 | .29740 |
| -11.007 | 399.460 | 299.91000 | -15.44200 | 15.25200 | .25971 | -.50606 | .16125 | -.62395 | .20053 | -.06619 | .29721 |
| -11.020 | 424.650 | 299.99000 | -15.44200 | 15.25200 | .26067 | -.50773 | .16203 | -.62499 | .20101 | -.06623 | .29714 |
| -11.177 | 499.440 | 299.88000 | -15.44300 | 15.25100 | .26290 | -.51099 | .16396 | -.62725 | .20208 | -.06624 | .29703 |
| -10.507 | 598.770 | 299.85000 | -15.44300 | 15.25100 | .26316 | -.51122 | .16407 | -.62713 | .20209 | -.06619 | .29739 |
| | GRADIENT | .00000 | .00000 | .00000 | .00000 | .00000 | .00000 | .00000 | .00000 | .00000 | .00000 |

IA143, AEDC V41A-P8A, O/ET W/R.H. SRB SEPARATING (OVX463) ( 23 MAY 77 )

REFERENCE DATA

SREF = 2690.0000 SQ.FT. XMRP = 1097.0000 IN. XT
LREF = 1290.3000 INCHES YMRP = .0000 IN. YT
BREF = 1290.3000 INCHES ZMRP = 450.0000 IN. ZT
SCALE = .0100

PARAMETRIC DATA

ALPHA = -15.000 BETA = 15.000
DALPHA = .000 DBETA = .000
X = 300.000 MACH = 4.500
JET PC = .000

RUN NO. 3099/ 0 RN/L = 2.38 GRADIENT INTERVAL = -5.00/ 5.00

| Y | Z | X | ALPHA | BETA | PHI | CN | CLM | CY | CYN | CBL | CA |
|---|---|---|---|---|---|---|---|---|---|---|---|
| -200.630 | 597.290 | 299.90000 | -15.44300 | 15.25100 | .26307 | -.51118 | .16404 | -.62722 | .20214 | -.06622 | .29726 |
| -200.890 | 500.000 | 299.85000 | -15.44300 | 15.25100 | .26309 | -.51107 | .16401 | -.62698 | .20206 | -.06618 | .29728 |
| -200.820 | 424.950 | 299.71000 | -15.44300 | 15.25100 | .26307 | -.51092 | .16400 | -.62701 | .20206 | -.06619 | .29727 |
| -200.740 | 399.810 | 299.67000 | -15.44300 | 15.25200 | .26324 | -.51128 | .16406 | -.62728 | .20211 | -.06622 | .29718 |
| -200.740 | 299.930 | 299.72000 | -15.44300 | 15.25100 | .26300 | -.50984 | .16317 | -.62726 | .20210 | -.06622 | .29703 |
| -201.020 | 249.860 | 299.78000 | -15.44400 | 15.25000 | .26571 | -.50773 | .16178 | -.62910 | .20336 | -.06616 | .29711 |
| -200.940 | 99.634 | 299.75000 | -15.45000 | 15.24500 | .28296 | -.50134 | .15693 | -.64916 | .21503 | -.06722 | .29636 |
| | GRADIENT | .00000 | .00000 | .00000 | .00000 | .00000 | .00000 | .00000 | .00000 | .00000 | .00000 |

IA143, AEDC V41A-P8A, O/ET W/R.H. SRB SEPARATING (OVX464) ( 23 MAY 77 )

REFERENCE DATA

SREF = 2690.0000 SQ.FT. XMRP = 1097.0000 IN. XT
LREF = 1290.3000 INCHES YMRP = .0000 IN. YT
BREF = 1290.3000 INCHES ZMRP = 450.0000 IN. ZT
SCALE = .0100

PARAMETRIC DATA

ALPHA = -15.000 BETA = 15.000
DALPHA = -10.000 DBETA = .000
X = 300.000 MACH = 4.500
JET PC = .000

RUN NO. 3130/ 0 RN/L = 2.38 GRADIENT INTERVAL = -5.00/ 5.00

| Y | Z | X | ALPHA | BETA | PHI | CN | CLM | CY | CYN | CBL | CA |
|---|---|---|---|---|---|---|---|---|---|---|---|
| -11.413 | 100.490 | 299.64000 | -15.48700 | 15.28200 | .27602 | -.37181 | .06253 | -.79727 | .28177 | -.10017 | .30750 |
| -10.769 | 250.190 | 299.44000 | -15.46800 | 15.23000 | .39919 | -.46869 | .14465 | -.74614 | .26222 | -.06421 | .29355 |
| -9.870 | 300.250 | 299.57000 | -15.45700 | 15.22400 | .37311 | -.46766 | .14617 | -.71079 | .24856 | -.06251 | .29439 |
| -9.436 | 399.400 | 299.33000 | -15.44300 | 15.24100 | .28624 | -.47660 | .14652 | -.64235 | .21271 | -.06517 | .29531 |
| -10.744 | 424.890 | 299.62000 | -15.44100 | 15.24600 | .27409 | -.48239 | .14945 | -.63359 | .20692 | -.06558 | .29555 |
| -10.734 | 499.440 | 299.47000 | -15.44200 | 15.25200 | .25977 | -.50210 | .15837 | -.62443 | .20052 | -.06625 | .29604 |
| -9.947 | 599.060 | 299.57000 | -15.44300 | 15.25200 | .26308 | -.51070 | .16378 | -.62778 | .20214 | -.06632 | .29629 |
| | GRADIENT | .00000 | .00000 | .00000 | .00000 | .00000 | .00000 | .00000 | .00000 | .00000 | .00000 |

IA143, AEDC V41A-P8A, O/ET W/R.H. SRB SEPARATING (OVX465) ( 23 MAY 77 )

REFERENCE DATA

SREF = 2690.0000 SQ.FT. XMRP = 1097.0000 IN. XT
LREF = 1290.3000 INCHES YMRP = .0000 IN. YT
BREF = 1290.3000 INCHES ZMRP = 450.0000 IN. ZT
SCALE = .0100

PARAMETRIC DATA

ALPHA = -15.000 BETA = 15.000
DALPHA = -10.000 DBETA = .000
X = 300.000 MACH = 4.500
JET PC = .000

RUN NO. 3128/ 0 RN/L = 2.36 GRADIENT INTERVAL = -5.00/ 5.00

| Y | Z | X | ALPHA | BETA | PHI | CN | CLM | CY | CYN | CBL | CA |
|---|---|---|---|---|---|---|---|---|---|---|---|
| -201.150 | 100.470 | 299.81000 | -15.45600 | 15.25000 | .25171 | -.45323 | .12155 | -.57822 | .23275 | -.08062 | .29978 |
| -200.660 | 150.420 | 299.61000 | -15.45400 | 15.24600 | .27063 | -.47394 | .13650 | -.66758 | .22623 | -.07415 | .29575 |
| -200.850 | 200.580 | 299.61000 | -15.45100 | 15.24100 | .29204 | -.49900 | .15627 | -.65342 | .21821 | -.06644 | .29609 |
| -201.330 | 250.510 | 299.80000 | -15.44800 | 15.24400 | .28206 | -.50160 | .15823 | -.64091 | .21109 | -.06560 | .29664 |
| -200.820 | 300.460 | 299.74000 | -15.44500 | 15.24900 | .26880 | -.50434 | .15963 | -.63136 | .20486 | -.06603 | .29659 |
| -201.000 | 400.220 | 299.74000 | -15.44300 | 15.25200 | .26327 | -.51066 | .16365 | -.62753 | .20212 | -.06624 | .29661 |
| -200.710 | 424.960 | 299.67000 | -15.44300 | 15.25200 | .26335 | -.51084 | .16382 | -.62763 | .20219 | -.06625 | .29656 |
| -200.500 | 499.960 | 299.65000 | -15.44300 | 15.25200 | .26327 | -.51114 | .16396 | -.62781 | .20223 | -.06628 | .29712 |
| -200.740 | 599.770 | 299.64000 | -15.44300 | 15.25200 | .26337 | -.51115 | .16396 | -.62770 | .20221 | -.06623 | .29727 |
| | GRADIENT | .00000 | .00000 | .00000 | .00000 | .00000 | .00000 | .00000 | .00000 | .00000 | .00000 |

IA143, AEDC V41A-P8A, O/ET W/R.H. SRB SEPARATING (OVX466) ( 23 MAY 77 )

REFERENCE DATA

SREF = 2690.0000 SQ.FT. XMRP = 1097.0000 IN. XT
LREF = 1290.3000 INCHES YMRP = .0000 IN. YT
BREF = 1290.3000 INCHES ZMRP = 450.0000 IN. ZT
SCALE = .0100

PARAMETRIC DATA

ALPHA = -15.000 BETA = 15.000
DALPHA = .000 DBETA = -8.000
X = 300.000 MACH = 4.500
JET PC = .000

RUN NO. 3101/ 0 RN/L = 2.37 GRADIENT INTERVAL = -5.00/ 5.00

| Y | Z | X | ALPHA | BETA | PHI | CN | CLM | CY | CYN | CBL | CA |
|---|---|---|---|---|---|---|---|---|---|---|---|
| -11.181 | 249.910 | 299.81000 | -15.44600 | 15.24200 | .31772 | -.46953 | .14583 | -.66898 | .22341 | -.06413 | .29611 |
| -10.965 | 299.390 | 299.74000 | -15.44000 | 15.24700 | .28097 | -.48441 | .15296 | -.63945 | .20899 | -.06534 | .29660 |
| -11.168 | 399.520 | 299.76000 | -15.44100 | 15.25200 | .25903 | -.50497 | .16083 | -.62255 | .19985 | -.06609 | .29704 |
| -11.456 | 424.780 | 299.91000 | -15.44200 | 15.25200 | .25983 | -.50664 | .16146 | -.62389 | .20046 | -.06618 | .29695 |
| -11.074 | 499.880 | 299.89000 | -15.44300 | 15.25200 | .26231 | -.51048 | .16353 | -.62658 | .20164 | -.06620 | .29706 |
| -10.649 | 599.260 | 299.66000 | -15.44300 | 15.25200 | .26327 | -.51133 | .16412 | -.62756 | .20220 | -.06624 | .29764 |
| | GRADIENT | .00000 | .00000 | .00000 | .00000 | .00000 | .00000 | .00000 | .00000 | .00000 | .00000 |

IA143, AEDC V41A-P8A, O/ET W/R.H. SRB SEPARATING (OVX467) ( 23 MAY 77 )

REFERENCE DATA

SREF = 2690.0000 SQ.FT. XMRP = 1097.0000 IN. XT
LREF = 1290.3000 INCHES YMRP = .0000 IN. YT
BREF = 1290.3000 INCHES ZMRP = 450.0000 IN. ZT
SCALE = .0100

PARAMETRIC DATA

ALPHA = -15.000 BETA = 15.000
DALPHA = -10.000 DBETA = -8.000
X = 300.000 MACH = 4.500
JET PC = .000

RUN NO. 3134/ 0 RN/L = 2.38 GRADIENT INTERVAL = -5.00/ 5.00

| Y | Z | X | ALPHA | BETA | PHI | CN | CLM | CY | CYN | CBL | CA |
|---|---|---|---|---|---|---|---|---|---|---|---|
| -10.913 | 425.030 | 299.58000 | -15.44700 | 15.23500 | .29653 | -.46016 | .13566 | -.64801 | .21731 | -.06461 | .29344 |
| -10.795 | 499.530 | 299.53000 | -15.44200 | 15.25200 | .25967 | -.49310 | .15288 | -.62225 | .19977 | -.06592 | .29359 |
| -10.972 | 599.650 | 299.54000 | -15.44200 | 15.25300 | .26145 | -.50832 | .16201 | -.62631 | .20117 | -.06629 | .29468 |
| | GRADIENT | .00000 | .00000 | .00000 | .00000 | .00000 | .00000 | .00000 | .00000 | .00000 | .00000 |

IA143, AEDC V41A-P8A, O/ET W/R.H. SRB SEPARATING (OVX468) ( 23 MAY 77 )

REFERENCE DATA

SREF = 2690.0000 SQ.FT. XMRP = 1097.0000 IN. XT
LREF = 1290.3000 INCHES YMRP = .0000 IN. YT
BREF = 1290.3000 INCHES ZMRP = 450.0000 IN. ZT
SCALE = .0100

PARAMETRIC DATA

ALPHA = -15.000 BETA = 15.000
DALPHA = .000 DBETA = -8.000
X = 300.000 MACH = 4.500
JET PC = .000

RUN NO. 3100/ 0 RN/L = 2.38 GRADIENT INTERVAL = -5.00/ 5.00

| Y | Z | X | ALPHA | BETA | PHI | CN | CLM | CY | CYN | CBL | CA |
|---|---|---|---|---|---|---|---|---|---|---|---|
| -201.490 | 100.090 | 299.84000 | -15.45300 | 15.24100 | .29423 | -.49816 | .15498 | -.65744 | .22009 | -.06687 | .29517 |
| -199.990 | 250.050 | 299.61000 | -15.44400 | 15.25000 | .26590 | -.50703 | .16135 | -.62923 | .20345 | -.06615 | .29709 |
| -200.880 | 299.890 | 299.69000 | -15.44300 | 15.25200 | .26311 | -.50956 | .16300 | -.62721 | .20209 | -.06622 | .29698 |
| -201.070 | 399.460 | 299.87000 | -15.44300 | 15.25200 | .26334 | -.51144 | .16413 | -.62737 | .20214 | -.06620 | .29735 |
| -201.140 | 424.790 | 299.83000 | -15.44300 | 15.25100 | .26308 | -.51090 | .16395 | -.62698 | .20201 | -.06618 | .29721 |
| -201.270 | 499.560 | 299.80000 | -15.44300 | 15.25100 | .26320 | -.51113 | .16405 | -.62709 | .20206 | -.06617 | .29742 |
| -201.110 | 599.420 | 299.85000 | -15.44300 | 15.25100 | .26304 | -.51102 | .16404 | -.62720 | .20210 | -.06621 | .29748 |
| | GRADIENT | .00000 | .00000 | .00000 | .00000 | .00000 | .00000 | .00000 | .00000 | .00000 | .00000 |

IA143, AEDC V41A-P8A, O/ET W/R.H. SRB SEPARATING (OVX469) ( 23 MAY 77 )

REFERENCE DATA

SREF = 2690.0000 SQ.FT. XMRP = 1097.0000 IN. XT
LREF = 1290.3000 INCHES YMRP = .0000 IN. YT
BREF = 1290.3000 INCHES ZMRP = 450.0000 IN. ZT
SCALE = .0100

PARAMETRIC DATA

ALPHA = -15.000 BETA = 15.000
DALPHA = -10.000 DBETA = -8.000
X = 300.000 MACH = 4.500
JET PC = .000

RUN NO. 3133/ 0 RN/L = 2.38 GRADIENT INTERVAL = -5.00/ 5.00

| Y | Z | X | ALPHA | BETA | PHI | CN | CLM | CY | CYN | CBL | CA |
|---|---|---|---|---|---|---|---|---|---|---|---|
| -201.780 | 100.590 | 299.73000 | -15.47000 | 15.24800 | .23027 | -.38672 | .07022 | -.71494 | .25684 | -.09405 | .29695 |
| -199.360 | 250.530 | 299.42000 | -15.45500 | 15.23100 | .31234 | -.49272 | .15227 | -.66357 | .22631 | -.06492 | .29354 |
| -200.700 | 300.420 | 299.60000 | -15.45000 | 15.24100 | .28634 | -.49546 | .15360 | -.64373 | .21337 | -.06553 | .29434 |
| -200.230 | 400.150 | 299.64000 | -15.44300 | 15.25200 | .26335 | -.50739 | .16146 | -.62745 | .20200 | -.06620 | .29568 |
| -200.900 | 424.930 | 299.79000 | -15.44300 | 15.25200 | .26307 | -.50923 | .16268 | -.62738 | .20198 | -.06624 | .29574 |
| -200.470 | 499.720 | 299.56000 | -15.44200 | 15.25200 | .26266 | -.51061 | .16370 | -.62719 | .20188 | -.06627 | .29573 |
| -200.400 | 599.490 | 299.59000 | -15.44300 | 15.25200 | .26340 | -.51065 | .16383 | -.62734 | .20208 | -.06623 | .29684 |
| | GRADIENT | .00000 | .00000 | .00000 | .00000 | .00000 | .00000 | .00000 | .00000 | .00000 | .00000 |

IA143, AEDC V41A-P8A, O/ET W/R.H. SRB SEPARATING (OVX470) ( 23 MAY 77 )

REFERENCE DATA

SREF = 2690.0000 SQ.FT. XMRP = 1097.0000 IN. XT
LREF = 1290.3000 INCHES YMRP = .0000 IN. YT
BREF = 1290.3000 INCHES ZMRP = 450.0000 IN. ZT
SCALE = .0100

PARAMETRIC DATA

ALPHA = -15.000 BETA = 15.000
DALPHA = -5.000 DBETA = .000
X = 300.000 MACH = 4.500
JET PC = .000

RUN NO. 3110/ 0 RN/L = 2.36 GRADIENT INTERVAL = -5.00/ 5.00

| Y | Z | X | ALPHA | BETA | PHI | CN | CLM | CY | CYN | CBL | CA |
|---|---|---|---|---|---|---|---|---|---|---|---|
| -101.420 | 100.260 | 299.65000 | -15.46200 | 15.24800 | .29769 | -.46495 | .13181 | -.70033 | .24045 | -.07537 | .30085 |
| -100.520 | 150.600 | 299.79000 | -15.46000 | 15.24600 | .30789 | -.47671 | .14109 | -.68848 | .23340 | -.07052 | .29614 |
| -100.280 | 200.320 | 299.66000 | -15.45400 | 15.24000 | .31729 | -.49413 | .15562 | -.67244 | .22640 | -.06517 | .29577 |
| | GRADIENT | .00000 | .00000 | .00000 | .00000 | .00000 | .00000 | .00000 | .00000 | .00000 | .00000 |

RUN NO. 3111/ 0 RN/L = 2.36 GRADIENT INTERVAL = -5.00/ 5.00

| Y | Z | X | ALPHA | BETA | PHI | CN | CLM | CY | CYN | CBL | CA |
|---|---|---|---|---|---|---|---|---|---|---|---|
| -198.790 | 197.340 | 299.54000 | -15.44800 | 15.24300 | .28391 | -.50360 | .15966 | -.64231 | .21175 | -.06553 | .29676 |
| -201.080 | 149.700 | 299.78000 | -15.45000 | 15.24200 | .29034 | -.50249 | .15836 | -.65173 | .21677 | -.06631 | .29613 |
| -200.840 | 99.714 | 299.66000 | -15.45200 | 15.24700 | .27414 | -.48434 | .14432 | -.66069 | .22154 | -.07169 | .29645 |
| | GRADIENT | .00000 | .00000 | .00000 | .00000 | .00000 | .00000 | .00000 | .00000 | .00000 | .00000 |

IA143, AEDC V41A-P8A, O/ET W/R.H. SRB SEPARATING (OVX471) ( 23 MAY 77 )

REFERENCE DATA

SREF = 2690.0000 SQ.FT. XMRP = 1097.0000 IN. XT
LREF = 1290.3000 INCHES YMRP = .0000 IN. YT
BREF = 1290.3000 INCHES ZMRP = 450.0000 IN. ZT
SCALE = .0100

PARAMETRIC DATA

ALPHA = -15.000 BETA = 15.000
DALPHA = -10.000 DBETA = .000
X = 300.000 MACH = 4.500
JET PC = .000

RUN NO. 3129/ 0 RN/L = 2.37 GRADIENT INTERVAL = -5.00/ 5.00

| Y | Z | X | ALPHA | BETA | PHI | CN | CLM | CY | CYN | CBL | CA |
|---|---|---|---|---|---|---|---|---|---|---|---|
| -101.120 | 100.430 | 299.73000 | -15.47100 | 15.25600 | .25692 | -.40670 | .08806 | -.73609 | .26175 | -.09232 | .30509 |
| -100.450 | 150.520 | 299.59000 | -15.46800 | 15.24900 | .29328 | -.43462 | .10994 | -.72110 | .25222 | -.08113 | .29847 |
| -100.500 | 200.510 | 299.60000 | -15.46300 | 15.24000 | .32227 | -.46828 | .13582 | -.70212 | .24237 | -.07087 | .29404 |
| | GRADIENT | .00000 | .00000 | .00000 | .00000 | .00000 | .00000 | .00000 | .00000 | .00000 | .00000 |

IA143, AEDC V41A-P8A, O/ET W/R.H. SRB SEPARATING (OVX472) ( 23 MAY 77 )

REFERENCE DATA

SREF = 2690.0000 SQ.FT. XMRP = 1097.0000 IN. XT
LREF = 1290.3000 INCHES YMRP = .0000 IN. YT
BREF = 1290.3000 INCHES ZMRP = 450.0000 IN. ZT
SCALE = .0100

PARAMETRIC DATA

ALPHA = -15.000 BETA = 15.000
DALPHA = -5.000 DBETA = -4.000
X = 300.000 MACH = 4.500
JET PC = .000

RUN NO. 3113/ 0 RN/L = 2.38 GRADIENT INTERVAL = -5.00/ 5.00

| Y | Z | X | ALPHA | BETA | PHI | CN | CLM | CY | CYN | CBL | CA |
|---|---|---|---|---|---|---|---|---|---|---|---|
| -101.530 | 100.330 | 299.84000 | -15.47200 | 15.24200 | .32177 | -.45308 | .12311 | -.72826 | .25607 | -.07681 | .30001 |
| -100.040 | 150.330 | 299.59000 | -15.46600 | 15.23800 | .33570 | -.47177 | .13844 | -.71033 | .24622 | -.06984 | .29490 |
| -99.851 | 200.370 | 299.64000 | -15.45800 | 15.23300 | .33836 | -.48810 | .15237 | -.68822 | .23590 | -.06455 | .29491 |
| -99.174 | 299.930 | 299.48000 | -15.44700 | 15.24400 | .28197 | -.49163 | .15287 | -.64019 | .21062 | -.06549 | .29629 |
| | GRADIENT | .00000 | .00000 | .00000 | .00000 | .00000 | .00000 | .00000 | .00000 | .00000 | .00000 |

IA143, AEDC V41A-P8A, O/ET W/R.H. SRB SEPARATING (OVX473) ( 23 MAY 77 )

REFERENCE DATA

SREF = 2690.0000 SQ.FT. XMRP = 1097.0000 IN. XT
LREF = 1290.3000 INCHES YMRP = .0000 IN. YT
BREF = 1290.3000 INCHES ZMRP = 450.0000 IN. ZT
SCALE = .0100

PARAMETRIC DATA

ALPHA = -15.000 BETA = 15.000
DALPHA = -10.000 DBETA = -4.000
X = 300.000 MACH = 4.500
JET PC = .000

RUN NO. 3131/ 0 RN/L = 2.38 GRADIENT INTERVAL = -5.00/ 5.00

| Y | Z | X | ALPHA | BETA | PHI | CN | CLM | CY | CYN | CBL | CA |
|---|---|---|---|---|---|---|---|---|---|---|---|
| -101.660 | 100.540 | 299.69000 | -15.48200 | 15.25100 | .27572 | -.38077 | .06971 | -.77100 | .28127 | -.09558 | .30495 |
| -100.500 | 150.590 | 299.51000 | -15.48000 | 15.24400 | .31449 | -.40926 | .09109 | -.75463 | .27068 | -.08437 | .29692 |
| -99.372 | 200.280 | 299.32000 | -15.47400 | 15.23100 | .35492 | -.45397 | .12545 | -.73545 | .26115 | -.07173 | .29173 |
| | GRADIENT | .00000 | .00000 | .00000 | .00000 | .00000 | .00000 | .00000 | .00000 | .00000 | .00000 |

RUN NO. 3132/ 0 RN/L = 2.38 GRADIENT INTERVAL = -5.00/ 5.00

| Y | Z | X | ALPHA | BETA | PHI | CN | CLM | CY | CYN | CBL | CA |
|---|---|---|---|---|---|---|---|---|---|---|---|
| -196.720 | 197.170 | 298.77000 | -15.45300 | 15.23900 | .29791 | -.49663 | .15450 | -.65955 | .22181 | -.06666 | .29503 |
| -201.290 | 150.040 | 299.62000 | -15.45600 | 15.24700 | .26793 | -.46604 | .13027 | -.67254 | .22905 | -.07588 | .29395 |
| -201.510 | 100.360 | 299.74000 | -15.45900 | 15.25800 | .22137 | -.42092 | .09598 | -.68692 | .23780 | -.08898 | .29849 |
| | GRADIENT | .00000 | .00000 | .00000 | .00000 | .00000 | .00000 | .00000 | .00000 | .00000 | .00000 |

IA143, AEDC V41A-P8A, O/ET W/R.H. SRB SEPARATING (OVX474) ( 23 MAY 77 )

REFERENCE DATA

SREF = 2690.0000 SQ.FT. XMRP = 1097.0000 IN. XT
LREF = 1290.3000 INCHES YMRP = .0000 IN. YT
BREF = 1290.3000 INCHES ZMRP = 450.0000 IN. ZT
SCALE = .0100

PARAMETRIC DATA

ALPHA = -15.000 BETA = 15.000
DALPHA = -5.000 DBETA = -4.000
X = 300.000 MACH = 4.500
JET PC = .000

RUN NO. 3112/ 0 RN/L = 2.37 GRADIENT INTERVAL = -5.00/ 5.00

| Y | Z | X | ALPHA | BETA | PHI | CN | CLM | CY | CYN | CBL | CA |
|---|---|---|---|---|---|---|---|---|---|---|---|
| -201.040 | 100.200 | 299.64000 | -15.45300 | 15.24600 | .27804 | -.48455 | .14435 | -.66299 | .22272 | -.07140 | .29610 |
| -200.880 | 150.250 | 299.78000 | -15.45100 | 15.24100 | .29371 | -.50248 | .15851 | -.65335 | .21778 | -.06604 | .29613 |
| -200.700 | 200.430 | 299.74000 | -15.44800 | 15.24300 | .28492 | -.50288 | .15913 | -.64313 | .21226 | -.06551 | .29661 |
| | GRADIENT | .00000 | .00000 | .00000 | .00000 | .00000 | .00000 | .00000 | .00000 | .00000 | .00000 |

IA143, AEDC V41A-P8A, O/ET W/R.H. SRB SEPARATING (OVX475) ( 23 MAY 77 )

REFERENCE DATA

SREF = 2690.0000 SQ.FT. XMRP = 1097.0000 IN. XT
LREF = 1290.3000 INCHES YMRP = .0000 IN. YT
BREF = 1290.3000 INCHES ZMRP = 450.0000 IN. ZT
SCALE = .0100

PARAMETRIC DATA

ALPHA = -15.000 BETA = 15.000
DALPHA = -6.000 DBETA = -2.000
X = 300.000 MACH = 4.500
JET PC = .000

RUN NO. 3126/ 0 RN/L = 2.36 GRADIENT INTERVAL = -5.00/ 5.00

| Y | Z | X | ALPHA | BETA | PHI | CN | CLM | CY | CYN | CBL | CA |
|---|---|---|---|---|---|---|---|---|---|---|---|
| -101.590 | 100.560 | 299.67000 | -15.46900 | 15.24600 | .30645 | -.45149 | .12163 | -.72139 | .25241 | -.07845 | .30104 |
| -99.428 | 200.770 | 299.61000 | -15.45800 | 15.23600 | .33172 | -.48876 | .15204 | -.68600 | .23383 | -.06527 | .29497 |
| -99.630 | 300.250 | 299.76000 | -15.44700 | 15.24400 | .28398 | -.49211 | .15320 | -.64204 | .21158 | -.06547 | .29639 |
| | GRADIENT | .00000 | .00000 | .00000 | .00000 | .00000 | .00000 | .00000 | .00000 | .00000 | .00000 |

IA143, AEDC V41A-P8A, O/ET W/R.H. SRB SEPARATING (OVX476) ( 23 MAY 77 )

REFERENCE DATA

SREF = 2690.0000 SQ.FT. XMRP = 1097.0000 IN. XT
LREF = 1290.3000 INCHES YMRP = .0000 IN. YT
BREF = 1290.3000 INCHES ZMRP = 450.0000 IN. ZT
SCALE = .0100

PARAMETRIC DATA

ALPHA = -15.000 BETA = 15.000
DALPHA = -6.000 DBETA = -2.000
X = 300.000 MACH = 4.500
JET PC = .000

RUN NO. 3155/ 0 RN/L = 2.38 GRADIENT INTERVAL = -5.00/ 5.00

| Y | Z | X | ALPHA | BETA | PHI | CN | CLM | CY | CYN | CBL | CA |
|---|---|---|---|---|---|---|---|---|---|---|---|
| -101.290 | 100.470 | 299.62000 | -15.46900 | 15.24600 | .30635 | -.45164 | .12175 | -.72044 | .25198 | -.07830 | .30076 |
| -99.549 | 200.680 | 299.65000 | -15.45800 | 15.23700 | .33056 | -.48949 | .15237 | -.68495 | .23333 | -.06529 | .29495 |
| -99.469 | 300.260 | 299.66000 | -15.44700 | 15.24400 | .28290 | -.49243 | .15336 | -.64105 | .21106 | -.06550 | .29627 |
| | GRADIENT | .00000 | .00000 | .00000 | .00000 | .00000 | .00000 | .00000 | .00000 | .00000 | .00000 |

IA143, AEDC V41A-P8A, O/ET W/R.H. SRB SEPARATING (OVX477) ( 23 MAY 77 )

REFERENCE DATA

SREF = 2690.0000 SQ.FT. XMRP = 1097.0000 IN. XT
LREF = 1290.3000 INCHES YMRP = .0000 IN. YT
BREF = 1290.3000 INCHES ZMRP = 450.0000 IN. ZT
SCALE = .0100

PARAMETRIC DATA

ALPHA = -15.000 BETA = 15.000
DALPHA = .000 DBETA = 4.000
X = 600.000 MACH = 4.500
JET PC = .000

RUN NO. 3104/ 0 RN/L = 2.37 GRADIENT INTERVAL = -5.00/ 5.00

| Y | Z | X | ALPHA | BETA | PHI | CN | CLM | CY | CYN | CBL | CA |
|---|---|---|---|---|---|---|---|---|---|---|---|
| -100.870 | 200.180 | 599.78000 | -15.44700 | 15.24500 | .27747 | -.50268 | .15852 | -.63751 | .20901 | -.06574 | .29680 |
| -101.350 | 250.000 | 599.99000 | -15.44400 | 15.25000 | .26691 | -.50563 | .16035 | -.62983 | .20393 | -.06606 | .29690 |
| -100.170 | 399.700 | 599.82000 | -15.44300 | 15.25100 | .26307 | -.51108 | .16402 | -.62710 | .20201 | -.06619 | .29729 |
| -100.810 | 449.470 | 599.83000 | -15.44300 | 15.25100 | .26307 | -.51087 | .16390 | -.62692 | .20199 | -.06617 | .29706 |
| -100.680 | 499.490 | 599.79000 | -15.44300 | 15.25200 | .26317 | -.51140 | .16407 | -.62744 | .20215 | -.06623 | .29744 |
| -100.670 | 599.090 | 599.86000 | -15.44300 | 15.25200 | .26332 | -.51129 | .16408 | -.62742 | .20211 | -.06620 | .29755 |
| | GRADIENT | .00000 | .00000 | .00000 | .00000 | .00000 | .00000 | .00000 | .00000 | .00000 | .00000 |

RUN NO. 3105/ 0 RN/L = 2.37 GRADIENT INTERVAL = -5.00/ 5.00

| Y | Z | X | ALPHA | BETA | PHI | CN | CLM | CY | CYN | CBL | CA |
|---|---|---|---|---|---|---|---|---|---|---|---|
| -300.170 | 597.910 | 599.94000 | -15.44300 | 15.25200 | .26317 | -.51122 | .16401 | -.62754 | .20219 | -.06626 | .29731 |
| -300.680 | 499.740 | 599.75000 | -15.44300 | 15.25100 | .26311 | -.51117 | .16402 | -.62712 | .20203 | -.06618 | .29737 |
| -300.580 | 449.750 | 599.71000 | -15.44300 | 15.25100 | .26329 | -.51121 | .16403 | -.62719 | .20206 | -.06618 | .29741 |
| -300.800 | 399.840 | 599.77000 | -15.44300 | 15.25100 | .26307 | -.51103 | .16400 | -.62711 | .20203 | -.06619 | .29741 |
| -301.020 | 249.770 | 599.79000 | -15.44300 | 15.25200 | .26331 | -.51131 | .16409 | -.62759 | .20218 | -.06624 | .29769 |
| -300.580 | 199.840 | 599.61000 | -15.44300 | 15.25100 | .26325 | -.51107 | .16397 | -.62715 | .20206 | -.06618 | .29726 |
| | GRADIENT | .00000 | .00000 | .00000 | .00000 | .00000 | .00000 | .00000 | .00000 | .00000 | .00000 |

IA143, AEDC V41A-P8A, O/ET W/R.H. SRB SEPARATING (OVX478) ( 23 MAY 77 )

REFERENCE DATA

SREF = 2690.0000 SQ.FT. XMRP = 1097.0000 IN. XT
LREF = 1290.3000 INCHES YMRP = .0000 IN. YT
BREF = 1290.3000 INCHES ZMRP = 450.0000 IN. ZT
SCALE = .0100

PARAMETRIC DATA

ALPHA = -15.000 BETA = 15.000
DALPHA = -15.000 DBETA = 4.000
X = 600.000 MACH = 4.500
JET PC = .000

RUN NO. 3156/ 0 RN/L = 2.38 GRADIENT INTERVAL = -5.00/ 5.00

| Y | Z | X | ALPHA | BETA | PHI | CN | CLM | CY | CYN | CBL | CA |
|---|---|---|---|---|---|---|---|---|---|---|---|
| -100.670 | 200.470 | 599.48000 | -15.45700 | 15.23400 | .30709 | -.48556 | .14646 | -.67295 | .23046 | -.06800 | .29311 |
| -100.430 | 251.150 | 599.73000 | -15.45300 | 15.23600 | .30129 | -.49192 | .15198 | -.65657 | .22114 | -.06541 | .29554 |
| -100.160 | 401.000 | 599.81000 | -15.44300 | 15.25200 | .26291 | -.50795 | .16185 | -.62727 | .20194 | -.06625 | .29643 |
| -101.090 | 450.150 | 599.76000 | -15.44300 | 15.25200 | .26315 | -.51062 | .16363 | -.62729 | .20204 | -.06621 | .29595 |
| -99.884 | 499.840 | 599.26000 | -15.44300 | 15.25200 | .26309 | -.51077 | .16383 | -.62716 | .20197 | -.06622 | .29637 |
| -99.892 | 599.510 | 599.39000 | -15.44300 | 15.25200 | .26346 | -.51117 | .16396 | -.62796 | .20227 | -.06630 | .29711 |
| | GRADIENT | .00000 | .00000 | .00000 | .00000 | .00000 | .00000 | .00000 | .00000 | .00000 | .00000 |

IA143, AEDC V41A-P8A, O/ET W/R.H. SRB SEPARATING (OVX478) ( 23 MAY 77 )

REFERENCE DATA

SREF = 2690.0000 SQ.FT. XMRP = 1097.0000 IN. XT
LREF = 1290.3000 INCHES YMRP = .0000 IN. YT
BREF = 1290.3000 INCHES ZMRP = 450.0000 IN. ZT
SCALE = .0100

PARAMETRIC DATA

ALPHA = -15.000 BETA = 15.000
DALPHA = -15.000 DBETA = 4.000
X = 600.000 MACH = 4.500
JET PC = .000

RUN NO. 3157/ 0 RN/L = 2.38 GRADIENT INTERVAL = -5.00/ 5.00

| Y | Z | X | ALPHA | BETA | PHI | CN | CLM | CY | CYN | CBL | CA |
|---|---|---|---|---|---|---|---|---|---|---|---|
| -300.290 | 600.410 | 599.59000 | -15.44300 | 15.25200 | .26329 | -.51098 | .16393 | -.62764 | .20218 | -.06626 | .29707 |
| -300.380 | 500.280 | 599.45000 | -15.44300 | 15.25200 | .26329 | -.51117 | .16396 | -.62784 | .20224 | -.06627 | .29715 |
| -300.380 | 450.200 | 599.50000 | -15.44300 | 15.25200 | .26341 | -.51087 | .16387 | -.62734 | .20208 | -.06623 | .29696 |
| -300.620 | 400.410 | 599.64000 | -15.44300 | 15.25200 | .26338 | -.51115 | .16395 | -.62757 | .20216 | -.06624 | .29714 |
| -300.280 | 250.130 | 599.36000 | -15.44300 | 15.25200 | .26321 | -.51090 | .16384 | -.62730 | .20204 | -.06620 | .29666 |
| -300.210 | 200.290 | 599.47000 | -15.44300 | 15.25200 | .26269 | -.51052 | .16340 | -.62765 | .20221 | -.06638 | .29678 |
| | GRADIENT | .00000 | .00000 | .00000 | .00000 | .00000 | .00000 | .00000 | .00000 | .00000 | .00000 |

IA143, AEDC V41A-P8A, O/ET W/R.H. SRB SEPARATING (OVX479) ( 23 MAY 77 )

REFERENCE DATA

SREF = 2690.0000 SQ.FT. XMRP = 1097.0000 IN. XT
LREF = 1290.3000 INCHES YMRP = .0000 IN. YT
BREF = 1290.3000 INCHES ZMRP = 450.0000 IN. ZT
SCALE = .0100

PARAMETRIC DATA

ALPHA = -15.000 BETA = 15.000
DALPHA = .000 DBETA = -12.000
X = 600.000 MACH = 4.500
JET PC = .000

RUN NO. 3102/ 0 RN/L = 2.37 GRADIENT INTERVAL = -5.00/ 5.00

| Y | Z | X | ALPHA | BETA | PHI | CN | CLM | CY | CYN | CBL | CA |
|---|---|---|---|---|---|---|---|---|---|---|---|
| -101.180 | 249.900 | 599.54000 | -15.44700 | 15.24600 | .27567 | -.49615 | .15462 | -.63564 | .20792 | -.06575 | .29650 |
| -100.350 | 399.550 | 599.55000 | -15.44300 | 15.25100 | .26308 | -.51109 | .16395 | -.62739 | .20214 | -.06622 | .29689 |
| -101.170 | 449.810 | 599.77000 | -15.44300 | 15.25100 | .26306 | -.51118 | .16402 | -.62727 | .20206 | -.06621 | .29716 |
| -101.330 | 499.590 | 599.65000 | -15.44300 | 15.25200 | .26325 | -.51122 | .16403 | -.62728 | .20210 | -.06621 | .29733 |
| -100.840 | 599.340 | 599.71000 | -15.44300 | 15.25200 | .26325 | -.51121 | .16407 | -.62740 | .20214 | -.06621 | .29760 |
| | GRADIENT | .00000 | .00000 | .00000 | .00000 | .00000 | .00000 | .00000 | .00000 | .00000 | .00000 |

IA143, AEDC V41A-P8A, O/ET W/R.H. SRB SEPARATING (OVX480) ( 23 MAY 77 )

REFERENCE DATA

SREF = 2690.0000 SQ.FT. XMRP = 1097.0000 IN. XT
LREF = 1290.3000 INCHES YMRP = .0000 IN. YT
BREF = 1290.3000 INCHES ZMRP = 450.0000 IN. ZT
SCALE = .0100

PARAMETRIC DATA

ALPHA = -15.000 BETA = 15.000
DALPHA = -15.000 DBETA = -12.000
X = 600.000 MACH = 4.500
JET PC = .000

RUN NO. 3162/ 0 RN/L = 2.37 GRADIENT INTERVAL = -5.00/ 5.00

| Y | Z | X | ALPHA | BETA | PHI | CN | CLM | CY | CYN | CBL | CA |
|---|---|---|---|---|---|---|---|---|---|---|---|
| -101.250 | 450.180 | 599.53000 | -15.44400 | 15.25000 | .26603 | -.49533 | .15324 | -.62822 | .20311 | -.06593 | .29173 |
| -100.770 | 499.930 | 599.36000 | -15.44300 | 15.25200 | .26221 | -.50555 | .15998 | -.62606 | .20109 | -.06609 | .29318 |
| -100.520 | 599.770 | 599.25000 | -15.44200 | 15.25200 | .26139 | -.50954 | .16281 | -.62592 | .20111 | -.06622 | .29374 |
| | GRADIENT | .00000 | .00000 | .00000 | .00000 | .00000 | .00000 | .00000 | .00000 | .00000 | .00000 |

IA143, AEDC V41A-P8A, O/ET W/R.H. SRB SEPARATING (OVX481) ( 23 MAY 77 )

REFERENCE DATA

SREF = 2690.0000 SQ.FT. XMRP = 1097.0000 IN. XT
LREF = 1290.3000 INCHES YMRP = .0000 IN. YT
BREF = 1290.3000 INCHES ZMRP = 450.0000 IN. ZT
SCALE = .0100

PARAMETRIC DATA

ALPHA = -15.000 BETA = 15.000
DALPHA = .000 DBETA = -12.000
X = 600.000 MACH = 4.500
JET PC = .000

RUN NO. 3103/ 0 RN/L = 2.37 GRADIENT INTERVAL = -5.00/ 5.00

| Y | Z | X | ALPHA | BETA | PHI | CN | CLM | CY | CYN | CBL | CA |
|---|---|---|---|---|---|---|---|---|---|---|---|
| -301.160 | 199.960 | 599.69000 | -15.44300 | 15.25200 | .26325 | -.51100 | .16399 | -.62705 | .20200 | -.06618 | .29717 |
| -301.000 | 249.870 | 599.69000 | -15.44300 | 15.25200 | .26321 | -.51117 | .16402 | -.62727 | .20208 | -.06621 | .29731 |
| -300.620 | 399.630 | 599.52000 | -15.44300 | 15.25200 | .26320 | -.51118 | .16407 | -.62738 | .20213 | -.06622 | .29757 |
| -300.800 | 449.570 | 599.56000 | -15.44300 | 15.25100 | .26318 | -.51104 | .16399 | -.62714 | .20207 | -.06619 | .29727 |
| -300.850 | 499.550 | 599.66000 | -15.44300 | 15.25200 | .26331 | -.51103 | .16400 | -.62697 | .20199 | -.06616 | .29734 |
| -300.820 | 599.390 | 599.59000 | -15.44300 | 15.25100 | .26321 | -.51125 | .16407 | -.62723 | .20210 | -.06619 | .29740 |
| | GRADIENT | .00000 | .00000 | .00000 | .00000 | .00000 | .00000 | .00000 | .00000 | .00000 | .00000 |

IA143, AEDC V41A-P8A, O/ET W/R.H. SRB SEPARATING (OVX482) ( 23 MAY 77 )

REFERENCE DATA

SREF = 2690.0000 SQ.FT. XMRP = 1097.0000 IN. XT
LREF = 1290.3000 INCHES YMRP = .0000 IN. YT
BREF = 1290.3000 INCHES ZMRP = 450.0000 IN. ZT
SCALE = .0100

PARAMETRIC DATA

ALPHA = -15.000 BETA = 15.000
DALPHA = .000 DBETA = -12.000
X = 600.000 MACH = 4.500
JET PC = .000

RUN NO. 3125/ 0 RN/L = 2.37 GRADIENT INTERVAL = -5.00/ 5.00

| Y | Z | X | ALPHA | BETA | PHI | CN | CLM | CY | CYN | CBL | CA |
|---|---|---|---|---|---|---|---|---|---|---|---|
| -301.000 | 199.960 | 599.74000 | -15.44300 | 15.25200 | .26325 | -.51100 | .16397 | -.62783 | .20227 | -.06628 | .29715 |
| -301.020 | 249.730 | 599.54000 | -15.44300 | 15.25200 | .26329 | -.51105 | .16397 | -.62767 | .20222 | -.06626 | .29725 |
| -300.390 | 399.540 | 599.46000 | -15.44300 | 15.25200 | .26342 | -.51088 | .16394 | -.62746 | .20217 | -.06622 | .29727 |
| -301.250 | 449.630 | 599.60000 | -15.44300 | 15.25100 | .26321 | -.51097 | .16396 | -.62745 | .20218 | -.06622 | .29729 |
| -300.970 | 499.610 | 599.65000 | -15.44300 | 15.25200 | .26340 | -.51094 | .16392 | -.62754 | .20216 | -.06623 | .29715 |
| -301.300 | 599.430 | 599.71000 | -15.44300 | 15.25200 | .26328 | -.51082 | .16391 | -.62761 | .20215 | -.06626 | .29726 |
| | GRADIENT | .00000 | .00000 | .00000 | .00000 | .00000 | .00000 | .00000 | .00000 | .00000 | .00000 |

IA143, AEDC V41A-P8A, O/ET W/R.H. SRB SEPARATING (OVX483) ( 23 MAY 77 )

REFERENCE DATA

SREF = 2690.0000 SQ.FT. XMRP = 1097.0000 IN. XT
LREF = 1290.3000 INCHES YMRP = .0000 IN. YT
BREF = 1290.3000 INCHES ZMRP = 450.0000 IN. ZT
SCALE = .0100

PARAMETRIC DATA

ALPHA = -15.000 BETA = 15.000
DALPHA = -15.000 DBETA = -12.000
X = 600.000 MACH = 4.500
JET PC = .000

RUN NO. 3163/ 0 RN/L = 2.37 GRADIENT INTERVAL = -5.00/ 5.00

| Y | Z | X | ALPHA | BETA | PHI | CN | CLM | CY | CYN | CBL | CA |
|---|---|---|---|---|---|---|---|---|---|---|---|
| -301.160 | 200.520 | 599.56000 | -15.44300 | 15.25300 | .25718 | -.50263 | .15744 | -.62920 | .20311 | -.06791 | .29356 |
| -299.860 | 250.570 | 599.24000 | -15.44200 | 15.25300 | .25985 | -.50813 | .16160 | -.62714 | .20176 | -.06684 | .29456 |
| -300.300 | 401.000 | 599.51000 | -15.44200 | 15.25200 | .26263 | -.51077 | .16369 | -.62739 | .20186 | -.06631 | .29543 |
| -300.970 | 450.280 | 599.48000 | -15.44200 | 15.25200 | .26279 | -.51070 | .16377 | -.62726 | .20193 | -.06626 | .29582 |
| -300.830 | 500.250 | 599.61000 | -15.44300 | 15.25200 | .26320 | -.51095 | .16387 | -.62755 | .20210 | -.06627 | .29650 |
| -300.870 | 599.990 | 599.41000 | -15.44300 | 15.25200 | .26341 | -.51101 | .16395 | -.62756 | .20214 | -.06623 | .29724 |
| | GRADIENT | .00000 | .00000 | .00000 | .00000 | .00000 | .00000 | .00000 | .00000 | .00000 | .00000 |

IA143, AEDC V41A-P8A, O/ET W/R.H. SRB SEPARATING (OVX484) ( 23 MAY 77 )

REFERENCE DATA

SREF = 2690.0000 SQ.FT. XMRP = 1097.0000 IN. XT
LREF = 1290.3000 INCHES YMRP = .0000 IN. YT
BREF = 1290.3000 INCHES ZMRP = 450.0000 IN. ZT
SCALE = .0100

PARAMETRIC DATA

ALPHA = -15.000 BETA = 15.000
DALPHA = -7.000 DBETA = -4.000
X = 600.000 MACH = 4.500
JET PC = .000

RUN NO. 3127/ 0 RN/L = 2.36 GRADIENT INTERVAL = -5.00/ 5.00

| Y | Z | X | ALPHA | BETA | PHI | CN | CLM | CY | CYN | CBL | CA |
|---|---|---|---|---|---|---|---|---|---|---|---|
| -201.250 | 200.450 | 599.68000 | -15.44400 | 15.25000 | .26685 | -.50826 | .16196 | -.63007 | .20391 | -.06615 | .29643 |
| -200.490 | 300.400 | 599.66000 | -15.44300 | 15.25200 | .26344 | -.51118 | .16396 | -.62788 | .20226 | -.06627 | .29692 |
| -200.440 | 399.940 | 599.48000 | -15.44300 | 15.25200 | .26331 | -.51133 | .16405 | -.62795 | .20231 | -.06629 | .29739 |
| | GRADIENT | .00000 | .00000 | .00000 | .00000 | .00000 | .00000 | .00000 | .00000 | .00000 | .00000 |

IA143, AEDC V41A-P8A, O/ET W/R.H. SRB SEPARATING (OVX485) ( 23 MAY 77 )

REFERENCE DATA

SREF = 2690.0000 SQ.FT. XMRP = 1097.0000 IN. XT
LREF = 1290.3000 INCHES YMRP = .0000 IN. YT
BREF = 1290.3000 INCHES ZMRP = 450.0000 IN. ZT
SCALE = .0100

PARAMETRIC DATA

ALPHA = -15.000 BETA = 15.000
DALPHA = -10.000 DBETA = -4.000
X = 600.000 MACH = 4.500
JET PC = .000

RUN NO. 3138/ 0 RN/L = 2.37 GRADIENT INTERVAL = -5.00/ 5.00

| Y | Z | X | ALPHA | BETA | PHI | CN | CLM | CY | CYN | CBL | CA |
|---|---|---|---|---|---|---|---|---|---|---|---|
| -201.210 | 200.500 | 599.64000 | -15.44500 | 15.24900 | .27015 | -.50711 | .16114 | -.63275 | .20564 | -.06611 | .29640 |
| -200.330 | 300.850 | 599.45000 | -15.44300 | 15.25200 | .26316 | -.51070 | .16373 | -.62765 | .20220 | -.06626 | .29659 |
| -200.650 | 350.210 | 599.26000 | -15.44300 | 15.25200 | .26329 | -.51093 | .16383 | -.62774 | .20221 | -.06629 | .29650 |
| -200.680 | 400.260 | 599.52000 | -15.44300 | 15.25200 | .26346 | -.51125 | .16402 | -.62813 | .20233 | -.06631 | .29725 |
| | GRADIENT | .00000 | .00000 | .00000 | .00000 | .00000 | .00000 | .00000 | .00000 | .00000 | .00000 |

IA143, AEDC V41A-P8A, O/ET W/R.H. SRB SEPARATING (OVX486) ( 23 MAY 77 )

REFERENCE DATA

SREF = 2690.0000 SQ.FT. XMRP = 1097.0000 IN. XT
LREF = 1290.3000 INCHES YMRP = .0000 IN. YT
BREF = 1290.3000 INCHES ZMRP = 450.0000 IN. ZT
SCALE = .0100

PARAMETRIC DATA

ALPHA = -15.000 BETA = 15.000
DALPHA = -5.000 DBETA = .000
X = 600.000 MACH = 4.500
JET PC = .000

RUN NO. 3114/ 0 RN/L = 2.38 GRADIENT INTERVAL = -5.00/ 5.00

| Y | Z | X | ALPHA | BETA | PHI | CN | CLM | CY | CYN | CBL | CA |
|---|---|---|---|---|---|---|---|---|---|---|---|
| -100.940 | 200.270 | 599.79000 | -15.45000 | 15.24100 | .29130 | -.49895 | .15663 | -.64784 | .21535 | -.06535 | .29645 |
| -99.519 | 300.140 | 599.59000 | -15.44400 | 15.25100 | .26488 | -.50532 | .16029 | -.62851 | .20295 | -.06617 | .29681 |
| -100.420 | 399.800 | 599.60000 | -15.44300 | 15.25200 | .26314 | -.51086 | .16387 | -.62766 | .20222 | -.06628 | .29677 |
| | GRADIENT | .00000 | .00000 | .00000 | .00000 | .00000 | .00000 | .00000 | .00000 | .00000 | .00000 |

RUN NO. 3115/ 0 RN/L = 2.38 GRADIENT INTERVAL = -5.00/ 5.00

| Y | Z | X | ALPHA | BETA | PHI | CN | CLM | CY | CYN | CBL | CA |
|---|---|---|---|---|---|---|---|---|---|---|---|
| -300.920 | 400.080 | 599.71000 | -15.44300 | 15.25200 | .26319 | -.51102 | .16395 | -.62775 | .20227 | -.06629 | .29726 |
| -301.150 | 299.900 | 599.62000 | -15.44300 | 15.25200 | .26321 | -.51123 | .16403 | -.62781 | .20225 | -.06628 | .29752 |
| -300.790 | 199.850 | 599.44000 | -15.44300 | 15.25200 | .26313 | -.51099 | .16397 | -.62750 | .20218 | -.06625 | .29721 |
| | GRADIENT | .00000 | .00000 | .00000 | .00000 | .00000 | .00000 | .00000 | .00000 | .00000 | .00000 |

IA143, AEDC V41A-P8A, O/ET W/R.H. SRB SEPARATING (OVX487) ( 23 MAY 77 )

REFERENCE DATA

SREF = 2690.0000 SQ.FT. XMRP = 1097.0000 IN. XT
LREF = 1290.3000 INCHES YMRP = .0000 IN. YT
BREF = 1290.3000 INCHES ZMRP = 450.0000 IN. ZT
SCALE = .0100

PARAMETRIC DATA

ALPHA = -15.000 BETA = 15.000
DALPHA = -10.000 DBETA = .000
X = 600.000 MACH = 4.500
JET PC = .000

RUN NO. 3140/ 0 RN/L = 2.37 GRADIENT INTERVAL = -5.00/ 5.00

| Y | Z | X | ALPHA | BETA | PHI | CN | CLM | CY | CYN | CBL | CA |
|---|---|---|---|---|---|---|---|---|---|---|---|
| -100.810 | 200.550 | 599.60000 | -15.45500 | 15.23400 | .31115 | -.49583 | .15504 | -.66226 | .22443 | -.06473 | .29543 |
| -99.671 | 300.800 | 599.68000 | -15.44700 | 15.24800 | .27243 | -.49934 | .15637 | -.63357 | .20644 | -.06593 | .29604 |
| -100.300 | 400.150 | 599.59000 | -15.44300 | 15.25200 | .26328 | -.50972 | .16308 | -.62736 | .20205 | -.06624 | .29625 |
| | GRADIENT | .00000 | .00000 | .00000 | .00000 | .00000 | .00000 | .00000 | .00000 | .00000 | .00000 |

RUN NO. 3141/ 0 RN/L = 2.37 GRADIENT INTERVAL = -5.00/ 5.00

| Y | Z | X | ALPHA | BETA | PHI | CN | CLM | CY | CYN | CBL | CA |
|---|---|---|---|---|---|---|---|---|---|---|---|
| -300.560 | 400.340 | 599.62000 | -15.44300 | 15.25200 | .26347 | -.51115 | .16394 | -.62784 | .20226 | -.06626 | .29717 |
| -300.900 | 300.010 | 599.39000 | -15.44300 | 15.25200 | .26349 | -.51119 | .16397 | -.62800 | .20228 | -.06628 | .29726 |
| -300.760 | 200.020 | 599.43000 | -15.44300 | 15.25200 | .26326 | -.51081 | .16382 | -.62766 | .20218 | -.06625 | .29675 |
| | GRADIENT | .00000 | .00000 | .00000 | .00000 | .00000 | .00000 | .00000 | .00000 | .00000 | .00000 |

IA143, AEDC V41A-P8A, O/ET W/R.H. SRB SEPARATING (OVX488) ( 23 MAY 77 )

REFERENCE DATA

SREF = 2690.0000 SQ.FT. XMRP = 1097.0000 IN. XT
LREF = 1290.3000 INCHES YMRP = .0000 IN. YT
BREF = 1290.3000 INCHES ZMRP = 450.0000 IN. ZT
SCALE = .0100

PARAMETRIC DATA

ALPHA = -15.000 BETA = 15.000
DALPHA = -5.000 DBETA = -8.000
X = 600.000 MACH = 4.500
JET PC = .000

RUN NO. 3117/ 0 RN/L = 2.38 GRADIENT INTERVAL = -5.00/ 5.00

| Y | Z | X | ALPHA | BETA | PHI | CN | CLM | CY | CYN | CBL | CA |
|---|---|---|---|---|---|---|---|---|---|---|---|
| -101.390 | 402.010 | 599.71000 | -15.44300 | 15.25200 | .26294 | -.51062 | .16360 | -.62784 | .20217 | -.06632 | .29660 |
| -101.570 | 300.170 | 599.72000 | -15.44500 | 15.24900 | .26761 | -.50061 | .15724 | -.63026 | .20430 | -.06605 | .29597 |
| -102.830 | 200.370 | 599.74000 | -15.45600 | 15.23000 | .31609 | -.48962 | .15105 | -.66571 | .22712 | -.06454 | .29538 |
| | GRADIENT | .00000 | .00000 | .00000 | .00000 | .00000 | .00000 | .00000 | .00000 | .00000 | .00000 |

RUN NO. 3116/ 0 RN/L = 2.38 GRADIENT INTERVAL = -5.00/ 5.00

| Y | Z | X | ALPHA | BETA | PHI | CN | CLM | CY | CYN | CBL | CA |
|---|---|---|---|---|---|---|---|---|---|---|---|
| -301.090 | 200.050 | 599.60000 | -15.44300 | 15.25200 | .26302 | -.51091 | .16392 | -.62753 | .20216 | -.06627 | .29710 |
| -300.690 | 300.200 | 599.57000 | -15.44300 | 15.25200 | .26304 | -.51074 | .16390 | -.62738 | .20212 | -.06625 | .29729 |
| -300.380 | 399.940 | 599.50000 | -15.44300 | 15.25200 | .26323 | -.51129 | .16405 | -.62804 | .20232 | -.06632 | .29753 |
| | GRADIENT | .00000 | .00000 | .00000 | .00000 | .00000 | .00000 | .00000 | .00000 | .00000 | .00000 |

IA143, AEDC V41A-P8A, O/ET W/R.H. SRB SEPARATING (OVX489) ( 23 MAY 77 )

REFERENCE DATA

SREF = 2690.0000 SQ.FT. XMRP = 1097.0000 IN. XT
LREF = 1290.3000 INCHES YMRP = .0000 IN. YT
BREF = 1290.3000 INCHES ZMRP = 450.0000 IN. ZT
SCALE = .0100

PARAMETRIC DATA

ALPHA = -15.000 BETA = 15.000
DALPHA = -10.000 DBETA = -8.000
X = 600.000 MACH = 4.500
JET PC = .000

RUN NO. 3135/ 0 RN/L = 2.38 GRADIENT INTERVAL = -5.00/ 5.00

| Y | Z | X | ALPHA | BETA | PHI | CN | CLM | CY | CYN | CBL | CA |
|---|---|---|---|---|---|---|---|---|---|---|---|
| -101.310 | 200.610 | 599.60000 | -15.46500 | 15.21700 | .35524 | -.48845 | .15047 | -.69541 | .24547 | -.06353 | .29313 |
| -98.405 | 299.920 | 599.13000 | -15.45200 | 15.23900 | .29035 | -.48816 | .14892 | -.64613 | .21540 | -.06532 | .29433 |
| -100.420 | 349.940 | 599.31000 | -15.44500 | 15.24900 | .26804 | -.49905 | .15579 | -.63085 | .20450 | -.06607 | .29480 |
| -100.350 | 399.960 | 599.42000 | -15.44300 | 15.25200 | .26266 | -.50642 | .16087 | -.62671 | .20156 | -.06622 | .29558 |
| | GRADIENT | .00000 | .00000 | .00000 | .00000 | .00000 | .00000 | .00000 | .00000 | .00000 | .00000 |

IA143, AEDC V41A-P8A, O/ET W/R.H. SRB SEPARATING (OVX490) ( 23 MAY 77 )

REFERENCE DATA

SREF = 2690.0000 SQ.FT. XMRP = 1097.0000 IN. XT
LREF = 1290.3000 INCHES YMRP = .0000 IN. YT
BREF = 1290.3000 INCHES ZMRP = 450.0000 IN. ZT
SCALE = .0100

PARAMETRIC DATA

ALPHA = -15.000 BETA = 15.000
DALPHA = -10.000 DBETA = -8.000
X = 600.000 MACH = 4.500
JET PC = .000

RUN NO. 3137/ 0 RN/L = 2.38 GRADIENT INTERVAL = -5.00/ 5.00

| Y | Z | X | ALPHA | BETA | PHI | CN | CLM | CY | CYN | CBL | CA |
|---|---|---|---|---|---|---|---|---|---|---|---|
| -300.640 | 200.400 | 599.32000 | -15.44300 | 15.25200 | .26328 | -.51055 | .16376 | -.62738 | .20210 | -.06623 | .29670 |
| -300.720 | 300.740 | 599.54000 | -15.44300 | 15.25200 | .26348 | -.51085 | .16388 | -.62758 | .20217 | -.06625 | .29706 |
| -300.260 | 400.440 | 599.63000 | -15.44300 | 15.25200 | .26343 | -.51113 | .16401 | -.62807 | .20236 | -.06631 | .29743 |
| | GRADIENT | .00000 | .00000 | .00000 | .00000 | .00000 | .00000 | .00000 | .00000 | .00000 | .00000 |

IA143, AEDC V41A-P8A, O/ET W/R.H. SRB SEPARATING (OVX491) ( 23 MAY 77 )

REFERENCE DATA

SREF = 2690.0000 SQ.FT. XMRP = 1097.0000 IN. XT
LREF = 1290.3000 INCHES YMRP = .0000 IN. YT
BREF = 1290.3000 INCHES ZMRP = 450.0000 IN. ZT
SCALE = .0100

PARAMETRIC DATA

ALPHA = -15.000 BETA = 15.000
DALPHA = -10.000 DBETA = -4.000
X = 600.000 MACH = 4.500
JET PC = .000

RUN NO. 3139/ 0 RN/L = 2.37 GRADIENT INTERVAL = -5.00/ 5.00

| Y | Z | X | ALPHA | BETA | PHI | CN | CLM | CY | CYN | CBL | CA |
|---|---|---|---|---|---|---|---|---|---|---|---|
| -100.740 | 300.320 | 599.48000 | -15.44700 | 15.24500 | .27670 | -.49581 | .15403 | -.63676 | .20870 | -.06578 | .29537 |
| -100.320 | 350.160 | 599.50000 | -15.44400 | 15.25100 | .26454 | -.50370 | .15902 | -.62827 | .20271 | -.06616 | .29594 |
| -100.600 | 400.030 | 599.50000 | -15.44300 | 15.25200 | .26304 | -.50891 | .16240 | -.62752 | .20201 | -.06627 | .29602 |
| | GRADIENT | .00000 | .00000 | .00000 | .00000 | .00000 | .00000 | .00000 | .00000 | .00000 | .00000 |

IA143, AEDC V41A-P8A, O/ET W/R.H. SRB SEPARATING (OVX492) ( 23 MAY 77 )

REFERENCE DATA

SREF = 2690.0000 SQ.FT. XMRP = 1097.0000 IN. XT
LREF = 1290.3000 INCHES YMRP = .0000 IN. YT
BREF = 1290.3000 INCHES ZMRP = 450.0000 IN. ZT
SCALE = .0100

PARAMETRIC DATA

ALPHA = -15.000 BETA = 15.000
DALPHA = -15.000 DBETA = -4.000
X = 600.000 MACH = 4.500
JET PC = .000

RUN NO. 3158/ 0 RN/L = 2.37 GRADIENT INTERVAL = -5.00/ 5.00

| Y | Z | X | ALPHA | BETA | PHI | CN | CLM | CY | CYN | CBL | CA |
|---|---|---|---|---|---|---|---|---|---|---|---|
| -102.960 | 300.670 | 599.99000 | -15.45500 | 15.23100 | .30749 | -.48603 | .14767 | -.65865 | .22377 | -.06482 | .29351 |
| -100.130 | 350.330 | 599.47000 | -15.44900 | 15.24400 | .27939 | -.49266 | .15159 | -.63821 | .20999 | -.06564 | .29386 |
| -99.955 | 400.120 | 599.30000 | -15.44400 | 15.25100 | .26456 | -.50250 | .15813 | -.62811 | .20262 | -.06613 | .29484 |
| | GRADIENT | .00000 | .00000 | .00000 | .00000 | .00000 | .00000 | .00000 | .00000 | .00000 | .00000 |

RUN NO. 3159/ 0 RN/L = 2.38 GRADIENT INTERVAL = -5.00/ 5.00

| Y | Z | X | ALPHA | BETA | PHI | CN | CLM | CY | CYN | CBL | CA |
|---|---|---|---|---|---|---|---|---|---|---|---|
| -200.570 | 400.280 | 599.49000 | -15.44300 | 15.25200 | .26318 | -.51074 | .16379 | -.62730 | .20198 | -.06625 | .29620 |
| -200.910 | 350.110 | 599.28000 | -15.44300 | 15.25200 | .26356 | -.51103 | .16383 | -.62785 | .20221 | -.06628 | .29641 |
| -201.280 | 299.970 | 599.34000 | -15.44300 | 15.25200 | .26366 | -.50959 | .16294 | -.62785 | .20232 | -.06623 | .29634 |
| | GRADIENT | .00000 | .00000 | .00000 | .00000 | .00000 | .00000 | .00000 | .00000 | .00000 | .00000 |

IA143, AEDC V41A-P8A, O/ET W/R.H. SRB SEPARATING (OVX493) ( 23 MAY 77 )

REFERENCE DATA

SREF = 2690.0000 SQ.FT. XMRP = 1097.0000 IN. XT
LREF = 1290.3000 INCHES YMRP = .0000 IN. YT
BREF = 1290.3000 INCHES ZMRP = 450.0000 IN. ZT
SCALE = .0100

PARAMETRIC DATA

ALPHA = -15.000 BETA = 15.000
DALPHA = -10.000 DBETA = -4.000
X = 600.000 MACH = 4.500
JET PC = .000

RUN NO. 3138/ 0 RN/L = 2.37 GRADIENT INTERVAL = -5.00/ 5.00

| Y | Z | X | ALPHA | BETA | PHI | CN | CLM | CY | CYN | CBL | CA |
|---|---|---|---|---|---|---|---|---|---|---|---|
| -201.210 | 200.500 | 599.64000 | -15.44500 | 15.24900 | .27015 | -.50711 | .16114 | -.63275 | .20564 | -.06611 | .29640 |
| -200.330 | 300.850 | 599.45000 | -15.44300 | 15.25200 | .26316 | -.51070 | .16373 | -.62765 | .20220 | -.06626 | .29659 |
| -200.650 | 350.210 | 599.26000 | -15.44300 | 15.25200 | .26329 | -.51093 | .16383 | -.62774 | .20221 | -.06629 | .29650 |
| -200.680 | 400.260 | 599.52000 | -15.44300 | 15.25200 | .26346 | -.51125 | .16402 | -.62813 | .20233 | -.06631 | .29725 |
| | GRADIENT | .00000 | .00000 | .00000 | .00000 | .00000 | .00000 | .00000 | .00000 | .00000 | .00000 |

IA143, AEDC V41A-P8A, O/ET W/R.H. SRB SEPARATING (OVX494) ( 23 MAY 77 )

REFERENCE DATA

SREF = 2690.0000 SQ.FT. XMRP = 1097.0000 IN. XT
LREF = 1290.3000 INCHES YMRP = .0000 IN. YT
BREF = 1290.3000 INCHES ZMRP = 450.0000 IN. ZT
SCALE = .0100

PARAMETRIC DATA

ALPHA = -15.000 BETA = 15.000
DALPHA = -15.000 DBETA = -8.000
X = 600.000 MACH = 4.500
JET PC = .000

RUN NO. 3161/ 0 RN/L = 2.38 GRADIENT INTERVAL = -5.00/ 5.00

| Y | Z | X | ALPHA | BETA | PHI | CN | CLM | CY | CYN | CBL | CA |
|---|---|---|---|---|---|---|---|---|---|---|---|
| -98.652 | 401.560 | 599.43000 | -15.44700 | 15.24700 | .27249 | -.49327 | .15179 | -.63312 | .20650 | -.06583 | .29251 |
| -101.910 | 350.540 | 599.54000 | -15.45500 | 15.23300 | .30053 | -.48147 | .14421 | -.65251 | .22032 | -.06490 | .29228 |
| -101.940 | 300.560 | 599.56000 | -15.46300 | 15.21800 | .33893 | -.47790 | .14262 | -.68070 | .23856 | -.06372 | .29188 |
| | GRADIENT | .00000 | .00000 | .00000 | .00000 | .00000 | .00000 | .00000 | .00000 | .00000 | .00000 |

RUN NO. 3160/ 0 RN/L = 2.37 GRADIENT INTERVAL = -5.00/ 5.00

| Y | Z | X | ALPHA | BETA | PHI | CN | CLM | CY | CYN | CBL | CA |
|---|---|---|---|---|---|---|---|---|---|---|---|
| -203.050 | 300.660 | 599.65000 | -15.44400 | 15.25100 | .26531 | -.50780 | .16150 | -.62900 | .20310 | -.06617 | .29531 |
| -200.510 | 350.780 | 599.49000 | -15.44300 | 15.25200 | .26318 | -.50950 | .16274 | -.62750 | .20201 | -.06623 | .29534 |
| -200.660 | 400.310 | 599.52000 | -15.44300 | 15.25200 | .26280 | -.51048 | .16346 | -.62732 | .20186 | -.06625 | .29547 |
| | GRADIENT | .00000 | .00000 | .00000 | .00000 | .00000 | .00000 | .00000 | .00000 | .00000 | .00000 |

IA143, AEDC V41A-P8A, O/ET W/R.H. SRB SEPARATING (OVX495) ( 23 MAY 77 )

REFERENCE DATA

SREF = 2690.0000 SQ.FT. XMRP = 1097.0000 IN. XT
LREF = 1290.3000 INCHES YMRP = .0000 IN. YT
BREF = 1290.3000 INCHES ZMRP = 450.0000 IN. ZT
SCALE = .0100

PARAMETRIC DATA

ALPHA = -15.000 BETA = 15.000
DALPHA = -10.000 DBETA = -8.000
X = 600.000 MACH = 4.500
JET PC = .000

RUN NO. 3136/ 0 RN/L = 2.37 GRADIENT INTERVAL = -5.00/ 5.00

| Y | Z | X | ALPHA | BETA | PHI | CN | CLM | CY | CYN | CBL | CA |
|---|---|---|---|---|---|---|---|---|---|---|---|
| -201.380 | 300.330 | 599.55000 | -15.44300 | 15.25200 | .26337 | -.51012 | .16328 | -.62781 | .20221 | -.06626 | .29660 |
| -200.730 | 350.260 | 599.53000 | -15.44300 | 15.25200 | .26313 | -.51062 | .16375 | -.62732 | .20202 | -.06621 | .29631 |
| -200.440 | 400.230 | 599.45000 | -15.44300 | 15.25200 | .26319 | -.51102 | .16391 | -.62783 | .20218 | -.06631 | .29663 |
| | GRADIENT | .00000 | .00000 | .00000 | .00000 | .00000 | .00000 | .00000 | .00000 | .00000 | .00000 |

IA143, AEDC V41A-P8A, O/ET W/R.H. SRB SEPARATING (OVX496) ( 23 MAY 77 )

REFERENCE DATA

SREF = 2690.0000 SQ.FT. XMRP = 1097.0000 IN. XT
LREF = 1290.3000 INCHES YMRP = .0000 IN. YT
BREF = 1290.3000 INCHES ZMRP = 450.0000 IN. ZT
SCALE = .0100

PARAMETRIC DATA

ALPHA = -15.000 BETA = 15.000
DALPHA = -5.000 DBETA = 4.000
X = 900.000 MACH = 4.500
JET PC = .000

RUN NO. 3120/ 0 RN/L = 2.38 GRADIENT INTERVAL = -5.00/ 5.00

| Y | Z | X | ALPHA | BETA | PHI | CN | CLM | CY | CYN | CBL | CA |
|---|---|---|---|---|---|---|---|---|---|---|---|
| -101.170 | 200.310 | 899.59000 | -15.44300 | 15.25100 | .26384 | -.51009 | .16327 | -.62786 | .20244 | -.06620 | .29685 |
| -100.240 | 275.180 | 899.66000 | -15.44300 | 15.25200 | .26317 | -.51086 | .16390 | -.62750 | .20217 | -.06624 | .29687 |
| -99.858 | 424.790 | 899.60000 | -15.44300 | 15.25200 | .26319 | -.51095 | .16389 | -.62733 | .20209 | -.06621 | .29720 |
| -100.890 | 499.660 | 899.61000 | -15.44300 | 15.25100 | .26305 | -.51095 | .16396 | -.62731 | .20211 | -.06621 | .29742 |
| -101.080 | 599.040 | 899.64000 | -15.44300 | 15.25100 | .26303 | -.51098 | .16393 | -.62744 | .20216 | -.06623 | .29729 |
| | GRADIENT | .00000 | .00000 | .00000 | .00000 | .00000 | .00000 | .00000 | .00000 | .00000 | .00000 |

IA143, AEDC V41A-P8A, O/ET W/R.H. SRB SEPARATING (OVX497) ( 23 MAY 77 )

REFERENCE DATA

SREF = 2690.0000 SQ.FT. XMRP = 1097.0000 IN. XT
LREF = 1290.3000 INCHES YMRP = .0000 IN. YT
BREF = 1290.3000 INCHES ZMRP = 450.0000 IN. ZT
SCALE = .0100

PARAMETRIC DATA

ALPHA = -15.000 BETA = 15.000
DALPHA = -5.000 DBETA = 4.000
X = 900.000 MACH = 4.500
JET PC = .000

RUN NO. 3121/ 0 RN/L = 2.38 GRADIENT INTERVAL = -5.00/ 5.00

| Y | Z | X | ALPHA | BETA | PHI | CN | CLM | CY | CYN | CBL | CA |
|---|---|---|---|---|---|---|---|---|---|---|---|
| -399.640 | 275.060 | 899.34000 | -15.44300 | 15.25100 | .26326 | -.51067 | .16379 | -.62698 | .20199 | -.06616 | .29699 |
| -400.140 | 200.120 | 899.44000 | -15.44300 | 15.25200 | .26309 | -.51110 | .16396 | -.62759 | .20217 | -.06625 | .29731 |
| | GRADIENT | .00000 | .00000 | .00000 | .00000 | .00000 | .00000 | .00000 | .00000 | .00000 | .00000 |

IA143, AEDC V41A-P8A, O/ET W/R.H. SRB SEPARATING (OVX498) ( 23 MAY 77 )

REFERENCE DATA

SREF = 2690.0000 SQ.FT. XMRP = 1097.0000 IN. XT
LREF = 1290.3000 INCHES YMRP = .0000 IN. YT
BREF = 1290.3000 INCHES ZMRP = 450.0000 IN. ZT
SCALE = .0100

PARAMETRIC DATA

ALPHA = -15.000 BETA = 15.000
DALPHA = -5.000 DBETA = 2.000
X = 900.000 MACH = 4.500
JET PC = .000

RUN NO. 3192/ 0 RN/L = 2.36 GRADIENT INTERVAL = -5.00/ 5.00

| Y | Z | X | ALPHA | BETA | PHI | CN | CLM | CY | CYN | CBL | CA |
|---|---|---|---|---|---|---|---|---|---|---|---|
| -100.530 | 200.270 | 899.48000 | -15.44300 | 15.25100 | .26445 | -.50926 | .16272 | -.62840 | .20269 | -.06619 | .29632 |
| -99.821 | 275.150 | 899.56000 | -15.44300 | 15.25200 | .26326 | -.51035 | .16367 | -.62728 | .20202 | -.06621 | .29631 |
| -100.160 | 424.780 | 899.61000 | -15.44300 | 15.25200 | .26343 | -.51086 | .16382 | -.62750 | .20207 | -.06620 | .29690 |
| -101.620 | 499.790 | 899.77000 | -15.44300 | 15.25200 | .26336 | -.51085 | .16383 | -.62758 | .20211 | -.06622 | .29691 |
| -100.880 | 599.340 | 899.52000 | -15.44300 | 15.25200 | .26325 | -.51056 | .16373 | -.62744 | .20204 | -.06620 | .29674 |
| | GRADIENT | .00000 | .00000 | .00000 | .00000 | .00000 | .00000 | .00000 | .00000 | .00000 | .00000 |

RUN NO. 3193/ 0 RN/L = 2.36 GRADIENT INTERVAL = -5.00/ 5.00

| Y | Z | X | ALPHA | BETA | PHI | CN | CLM | CY | CYN | CBL | CA |
|---|---|---|---|---|---|---|---|---|---|---|---|
| -400.510 | 599.950 | 899.65000 | -15.44300 | 15.25200 | .26346 | -.51089 | .16385 | -.62758 | .20210 | -.06620 | .29699 |
| -400.970 | 499.870 | 899.64000 | -15.44300 | 15.25200 | .26333 | -.51084 | .16382 | -.62762 | .20211 | -.06623 | .29690 |
| -400.410 | 424.830 | 899.51000 | -15.44300 | 15.25200 | .26335 | -.51094 | .16384 | -.62790 | .20221 | -.06626 | .29695 |
| -400.820 | 274.810 | 899.59000 | -15.44300 | 15.25200 | .26325 | -.51061 | .16374 | -.62741 | .20204 | -.06621 | .29673 |
| -400.440 | 200.070 | 899.39000 | -15.44300 | 15.25200 | .26321 | -.51074 | .16377 | -.62757 | .20210 | -.06622 | .29677 |
| | GRADIENT | .00000 | .00000 | .00000 | .00000 | .00000 | .00000 | .00000 | .00000 | .00000 | .00000 |

IA143, AEDC V41A-P8A, O/ET W/R.H. SRB SEPARATING (OVX499) ( 23 MAY 77 )

REFERENCE DATA

SREF = 2690.0000 SQ.FT. XMRP = 1097.0000 IN. XT
LREF = 1290.3000 INCHES YMRP = .0000 IN. YT
BREF = 1290.3000 INCHES ZMRP = 450.0000 IN. ZT
SCALE = .0100

PARAMETRIC DATA

ALPHA = -15.000 BETA = 15.000
DALPHA = -20.000 DBETA = 4.000
X = 900.000 MACH = 4.500
JET PC = .000

RUN NO. 3186/ 0 RN/L = 2.38 GRADIENT INTERVAL = -5.00/ 5.00

| Y | Z | X | ALPHA | BETA | PHI | CN | CLM | CY | CYN | CBL | CA |
|---|---|---|---|---|---|---|---|---|---|---|---|
| -98.683 | 200.250 | 898.66000 | -15.45200 | 15.23800 | .28910 | -.49586 | .15283 | -.64960 | .21763 | -.06643 | .29373 |
| -100.190 | 276.310 | 900.06000 | -15.44400 | 15.24900 | .26769 | -.50561 | .16020 | -.63024 | .20423 | -.06605 | .29501 |
| -98.553 | 426.300 | 899.91000 | -15.44200 | 15.25200 | .26274 | -.51064 | .16373 | -.62709 | .20185 | -.06622 | .29584 |
| -100.540 | 500.530 | 899.38000 | -15.44300 | 15.25200 | .26310 | -.51063 | .16378 | -.62697 | .20191 | -.06617 | .29653 |
| -100.780 | 599.730 | 899.09000 | -15.44300 | 15.25200 | .26315 | -.51095 | .16392 | -.62752 | .20215 | -.06624 | .29712 |
| | GRADIENT | .00000 | .00000 | .00000 | .00000 | .00000 | .00000 | .00000 | .00000 | .00000 | .00000 |

IA143, AEDC V41A-P8A, O/ET W/R.H. SRB SEPARATING (OVX499) ( 23 MAY 77 )

REFERENCE DATA

SREF = 2690.0000 SQ.FT. XMRP = 1097.0000 IN. XT
LREF = 1290.3000 INCHES YMRP = .0000 IN. YT
BREF = 1290.3000 INCHES ZMRP = 450.0000 IN. ZT
SCALE = .0100

PARAMETRIC DATA

ALPHA = -15.000 BETA = 15.000
DALPHA = -20.000 DBETA = 4.000
X = 900.000 MACH = 4.500
JET PC = .000

RUN NO. 3187/ 0 RN/L = 2.37 GRADIENT INTERVAL = -5.00/ 5.00

| Y | Z | X | ALPHA | BETA | PHI | CN | CLM | CY | CYN | CBL | CA |
|---|---|---|---|---|---|---|---|---|---|---|---|
| -400.100 | 600.420 | 899.27000 | -15.44300 | 15.25200 | .26342 | -.51118 | .16394 | -.62756 | .20212 | -.06622 | .29706 |
| -399.910 | 500.430 | 899.24000 | -15.44300 | 15.25200 | .26344 | -.51114 | .16394 | -.62772 | .20217 | -.06624 | .29708 |
| -400.810 | 425.490 | 899.40000 | -15.44300 | 15.25200 | .26341 | -.51109 | .16391 | -.62770 | .20218 | -.06625 | .29699 |
| -400.010 | 275.470 | 899.28000 | -15.44300 | 15.25200 | .26350 | -.51102 | .16391 | -.62757 | .20212 | -.06622 | .29703 |
| -400.470 | 200.660 | 899.27000 | -15.44300 | 15.25200 | .26339 | -.51114 | .16395 | -.62773 | .20217 | -.06625 | .29713 |
| | GRADIENT | .00000 | .00000 | .00000 | .00000 | .00000 | .00000 | .00000 | .00000 | .00000 | .00000 |

IA143, AEDC V41A-P8A, O/ET W/R.H. SRB SEPARATING (OVX500) ( 23 MAY 77 )

REFERENCE DATA

SREF = 2690.0000 SQ.FT. XMRP = 1097.0000 IN. XT
LREF = 1290.3000 INCHES YMRP = .0000 IN. YT
BREF = 1290.3000 INCHES ZMRP = 450.0000 IN. ZT
SCALE = .0100

PARAMETRIC DATA

ALPHA = -15.000 BETA = 15.000
DALPHA = -5.000 DBETA = -16.000
X = 900.000 MACH = 4.500
JET PC = .000

RUN NO. 3118/ 0 RN/L = 2.38 GRADIENT INTERVAL = -5.00/ 5.00

| Y | Z | X | ALPHA | BETA | PHI | CN | CLM | CY | CYN | CBL | CA |
|---|---|---|---|---|---|---|---|---|---|---|---|
| -100.330 | 274.570 | 899.06000 | -15.44400 | 15.25100 | .26498 | -.50597 | .16042 | -.62840 | .20293 | -.06611 | .29559 |
| -100.050 | 424.440 | 899.06000 | -15.44300 | 15.25200 | .26300 | -.51107 | .16393 | -.62743 | .20206 | -.06624 | .29686 |
| -101.130 | 499.910 | 899.44000 | -15.44300 | 15.25100 | .26306 | -.51102 | .16397 | -.62740 | .20212 | -.06622 | .29740 |
| -101.000 | 599.910 | 899.42000 | -15.44300 | 15.25200 | .26325 | -.51115 | .16399 | -.62759 | .20216 | -.06624 | .29734 |
| | GRADIENT | .00000 | .00000 | .00000 | .00000 | .00000 | .00000 | .00000 | .00000 | .00000 | .00000 |

IA143, AEDC V41A-P8A, O/ET W/R.H. SRB SEPARATING (OVX501) ( 23 MAY 77 )

REFERENCE DATA

SREF = 2690.0000 SQ.FT. XMRP = 1097.0000 IN. XT
LREF = 1290.3000 INCHES YMRP = .0000 IN. YT
BREF = 1290.3000 INCHES ZMRP = 450.0000 IN. ZT
SCALE = .0100

PARAMETRIC DATA

ALPHA = -15.000 BETA = 15.000
DALPHA = -20.000 DBETA = -16.000
X = 900.000 MACH = 4.500
JET PC = .000

RUN NO. 3188/ 0 RN/L = 2.37 GRADIENT INTERVAL = -5.00/ 5.00

| Y | Z | X | ALPHA | BETA | PHI | CN | CLM | CY | CYN | CBL | CA |
|---|---|---|---|---|---|---|---|---|---|---|---|
| -100.360 | 424.720 | 898.67000 | -15.44300 | 15.25200 | .26267 | -.50555 | .15973 | -.62531 | .20073 | -.06586 | .29234 |
| -100.580 | 500.060 | 899.08000 | -15.44200 | 15.25300 | .26185 | -.50842 | .16155 | -.62551 | .20075 | -.06601 | .29107 |
| -100.840 | 599.960 | 899.15000 | -15.44200 | 15.25300 | .26170 | -.50911 | .16240 | -.62592 | .20104 | -.06619 | .29276 |
| | GRADIENT | .00000 | .00000 | .00000 | .00000 | .00000 | .00000 | .00000 | .00000 | .00000 | .00000 |

IA143, AEDC V41A-P8A, O/ET W/R.H. SRB SEPARATING (OVX502) ( 23 MAY 77 )

REFERENCE DATA

SREF = 2690.0000 SQ.FT. XMRP = 1097.0000 IN. XT
LREF = 1290.3000 INCHES YMRP = .0000 IN. YT
BREF = 1290.3000 INCHES ZMRP = 450.0000 IN. ZT
SCALE = .0100

PARAMETRIC DATA

ALPHA = -15.000 BETA = 15.000
DALPHA = -5.000 DBETA = -16.000
X = 900.000 MACH = 4.500
JET PC = .000

RUN NO. 3119/ 0 RN/L = 2.38 GRADIENT INTERVAL = -5.00/ 5.00

| Y | Z | X | ALPHA | BETA | PHI | CN | CLM | CY | CYN | CBL | CA |
|---|---|---|---|---|---|---|---|---|---|---|---|
| -400.560 | 200.090 | 899.23000 | -15.44300 | 15.25200 | .26314 | -.51087 | .16394 | -.62730 | .20209 | -.06621 | .29736 |
| -400.890 | 275.160 | 899.51000 | -15.44300 | 15.25200 | .26308 | -.51086 | .16392 | -.62754 | .20216 | -.06624 | .29744 |
| -400.330 | 424.880 | 899.28000 | -15.44300 | 15.25100 | .26319 | -.51088 | .16393 | -.62720 | .20206 | -.06619 | .29735 |
| -400.920 | 499.610 | 899.42000 | -15.44300 | 15.25200 | .26318 | -.51106 | .16399 | -.62753 | .20220 | -.06625 | .29745 |
| -400.740 | 599.630 | 899.37000 | -15.44300 | 15.25100 | .26309 | -.51106 | .16398 | -.62762 | .20220 | -.06625 | .29741 |
| | GRADIENT | .00000 | .00000 | .00000 | .00000 | .00000 | .00000 | .00000 | .00000 | .00000 | .00000 |

IA143, AEDC V41A-P8A, O/ET W/R.H. SRB SEPARATING (OVX503) ( 23 MAY 77 )

REFERENCE DATA

SREF = 2690.0000 SQ.FT. XMRP = 1097.0000 IN. XT
LREF = 1290.3000 INCHES YMRP = .0000 IN. YT
BREF = 1290.3000 INCHES ZMRP = 450.0000 IN. ZT
SCALE = .0100

PARAMETRIC DATA

ALPHA = -15.000 BETA = 15.000
DALPHA = -20.000 DBETA = -16.000
X = 900.000 MACH = 4.500
JET PC = .000

RUN NO. 3197/ 0 RN/L = 2.37 GRADIENT INTERVAL = -5.00/ 5.00

| Y | Z | X | ALPHA | BETA | PHI | CN | CLM | CY | CYN | CBL | CA |
|---|---|---|---|---|---|---|---|---|---|---|---|
| -401.020 | 275.630 | 899.40000 | -15.44300 | 15.25200 | .26325 | -.51081 | .16379 | -.62767 | .20209 | -.06623 | .29687 |
| -400.220 | 426.120 | 899.46000 | -15.44300 | 15.25200 | .26323 | -.51073 | .16375 | -.62747 | .20205 | -.06622 | .29681 |
| -400.460 | 500.540 | 899.25000 | -15.44300 | 15.25200 | .26323 | -.51081 | .16378 | -.62740 | .20204 | -.06620 | .29676 |
| -400.190 | 600.420 | 899.18000 | -15.44300 | 15.25200 | .26323 | -.51067 | .16380 | -.62741 | .20204 | -.06621 | .29700 |
| | GRADIENT | .00000 | .00000 | .00000 | .00000 | .00000 | .00000 | .00000 | .00000 | .00000 | .00000 |

IA143, AEDC V41A-P8A, O/ET W/R.H. SRB SEPARATING (OVX504) ( 23 MAY 77 )

REFERENCE DATA

SREF = 2690.0000 SQ.FT. XMRP = 1097.0000 IN. XT
LREF = 1290.3000 INCHES YMRP = .0000 IN. YT
BREF = 1290.3000 INCHES ZMRP = 450.0000 IN. ZT
SCALE = .0100

PARAMETRIC DATA

ALPHA = -15.000 BETA = 15.000
DALPHA = -10.000 DBETA = .000
X = 900.000 MACH = 4.500
JET PC = .000

RUN NO. 3142/ 0 RN/L = 2.37 GRADIENT INTERVAL = -5.00/ 5.00

| Y | Z | X | ALPHA | BETA | PHI | CN | CLM | CY | CYN | CBL | CA |
|---|---|---|---|---|---|---|---|---|---|---|---|
| -100.070 | 300.090 | 899.34000 | -15.44300 | 15.25200 | .26331 | -.51085 | .16379 | -.62766 | .20219 | -.06626 | .29647 |
| -100.160 | 400.130 | 899.48000 | -15.44300 | 15.25200 | .26336 | -.51113 | .16396 | -.62788 | .20224 | -.06628 | .29708 |
| -100.450 | 500.040 | 899.31000 | -15.44300 | 15.25200 | .26352 | -.51090 | .16389 | -.62768 | .20220 | -.06625 | .29715 |
| | GRADIENT | .00000 | .00000 | .00000 | .00000 | .00000 | .00000 | .00000 | .00000 | .00000 | .00000 |

RUN NO. 3143/ 0 RN/L = 2.37 GRADIENT INTERVAL = -5.00/ 5.00

| Y | Z | X | ALPHA | BETA | PHI | CN | CLM | CY | CYN | CBL | CA |
|---|---|---|---|---|---|---|---|---|---|---|---|
| -300.660 | 500.360 | 899.58000 | -15.44300 | 15.25200 | .26349 | -.51115 | .16397 | -.62784 | .20228 | -.06625 | .29729 |
| -300.970 | 400.250 | 899.33000 | -15.44300 | 15.25200 | .26329 | -.51104 | .16391 | -.62766 | .20218 | -.06625 | .29715 |
| -301.150 | 300.070 | 899.39000 | -15.44300 | 15.25200 | .26339 | -.51110 | .16397 | -.62787 | .20226 | -.06627 | .29731 |
| | GRADIENT | .00000 | .00000 | .00000 | .00000 | .00000 | .00000 | .00000 | .00000 | .00000 | .00000 |

IA143, AEDC V41A-P8A, O/ET W/R.H. SRB SEPARATING (OVX505) ( 23 MAY 77 )

REFERENCE DATA

SREF = 2690.0000 SQ.FT. XMRP = 1097.0000 IN. XT
LREF = 1290.3000 INCHES YMRP = .0000 IN. YT
BREF = 1290.3000 INCHES ZMRP = 450.0000 IN. ZT
SCALE = .0100

PARAMETRIC DATA

ALPHA = -15.000 BETA = 15.000
DALPHA = -15.000 DBETA = .000
X = 900.000 MACH = 4.500
JET PC = .000

RUN NO. 3171/ 0 RN/L = 2.37 GRADIENT INTERVAL = -5.00/ 5.00

| Y | Z | X | ALPHA | BETA | PHI | CN | CLM | CY | CYN | CBL | CA |
|---|---|---|---|---|---|---|---|---|---|---|---|
| -100.510 | 300.250 | 899.26000 | -15.44300 | 15.25200 | .26337 | -.51013 | .16319 | -.62784 | .20218 | -.06626 | .29641 |
| -99.779 | 400.480 | 899.48000 | -15.44300 | 15.25200 | .26301 | -.51087 | .16384 | -.62757 | .20207 | -.06627 | .29635 |
| -100.520 | 500.230 | 899.33000 | -15.44300 | 15.25200 | .26324 | -.51099 | .16390 | -.62758 | .20215 | -.06624 | .29700 |
| | GRADIENT | .00000 | .00000 | .00000 | .00000 | .00000 | .00000 | .00000 | .00000 | .00000 | .00000 |

RUN NO. 3172/ 0 RN/L = 2.37 GRADIENT INTERVAL = -5.00/ 5.00

| Y | Z | X | ALPHA | BETA | PHI | CN | CLM | CY | CYN | CBL | CA |
|---|---|---|---|---|---|---|---|---|---|---|---|
| -300.830 | 500.450 | 899.48000 | -15.44300 | 15.25200 | .26316 | -.51081 | .16384 | -.62752 | .20215 | -.06624 | .29694 |
| -301.040 | 400.320 | 899.33000 | -15.44300 | 15.25200 | .26349 | -.51128 | .16400 | -.62776 | .20223 | -.06624 | .29723 |
| -300.940 | 300.200 | 899.31000 | -15.44300 | 15.25200 | .26319 | -.51099 | .16390 | -.62766 | .20218 | -.06625 | .29708 |
| | GRADIENT | .00000 | .00000 | .00000 | .00000 | .00000 | .00000 | .00000 | .00000 | .00000 | .00000 |

IA143, AEDC V41A-P8A, O/ET W/R.H. SRB SEPARATING (OVX506) ( 23 MAY 77 )

REFERENCE DATA

SREF = 2690.0000 SQ.FT. XMRP = 1097.0000 IN. XT
LREF = 1290.3000 INCHES YMRP = .0000 IN. YT
BREF = 1290.3000 INCHES ZMRP = 450.0000 IN. ZT
SCALE = .0100

PARAMETRIC DATA

ALPHA = -15.000 BETA = 15.000
DALPHA = -10.000 DBETA = -12.000
X = 900.000 MACH = 4.500
JET PC = .000

RUN NO. 3148/ 0 RN/L = 2.37 GRADIENT INTERVAL = -5.00/ 5.00

| Y | Z | X | ALPHA | BETA | PHI | CN | CLM | CY | CYN | CBL | CA |
|---|---|---|---|---|---|---|---|---|---|---|---|
| -101.080 | 300.030 | 899.40000 | -15.44300 | 15.25200 | .26375 | -.50822 | .16186 | -.62795 | .20232 | -.06621 | .29592 |
| -100.040 | 399.870 | 899.19000 | -15.44200 | 15.25200 | .26262 | -.51058 | .16370 | -.62727 | .20191 | -.06627 | .29601 |
| -100.980 | 500.030 | 899.29000 | -15.44300 | 15.25200 | .26332 | -.51091 | .16391 | -.62771 | .20221 | -.06626 | .29704 |
| | GRADIENT | .00000 | .00000 | .00000 | .00000 | .00000 | .00000 | .00000 | .00000 | .00000 | .00000 |

RUN NO. 3149/ 0 RN/L = 2.37 GRADIENT INTERVAL = -5.00/ 5.00

| Y | Z | X | ALPHA | BETA | PHI | CN | CLM | CY | CYN | CBL | CA |
|---|---|---|---|---|---|---|---|---|---|---|---|
| -302.040 | 499.730 | 899.42000 | -15.44300 | 15.25200 | .26342 | -.51082 | .16385 | -.62748 | .20214 | -.06623 | .29705 |
| -301.340 | 400.230 | 899.51000 | -15.44300 | 15.25200 | .26347 | -.51086 | .16388 | -.62768 | .20219 | -.06625 | .29708 |
| -301.340 | 300.200 | 899.41000 | -15.44300 | 15.25200 | .26330 | -.51077 | .16385 | -.62748 | .20214 | -.06623 | .29704 |
| | GRADIENT | .00000 | .00000 | .00000 | .00000 | .00000 | .00000 | .00000 | .00000 | .00000 | .00000 |

IA143, AEDC V41A-P8A, O/ET W/R.H. SRB SEPARATING (OVX507) ( 23 MAY 77 )

REFERENCE DATA

SREF = 2690.0000 SQ.FT. XMRP = 1097.0000 IN. XT
LREF = 1290.3000 INCHES YMRP = .0000 IN. YT
BREF = 1290.3000 INCHES ZMRP = 450.0000 IN. ZT
SCALE = .0100

PARAMETRIC DATA

ALPHA = -15.000 BETA = 15.000
DALPHA = -15.000 DBETA = -12.000
X = 900.000 MACH = 4.500
JET PC = .000

RUN NO. 3164/ 0 RN/L = 2.37 GRADIENT INTERVAL = -5.00/ 5.00

| Y | Z | X | ALPHA | BETA | PHI | CN | CLM | CY | CYN | CBL | CA |
|---|---|---|---|---|---|---|---|---|---|---|---|
| -100.460 | 300.040 | 899.07000 | -15.44500 | 15.24900 | .26983 | -.50216 | .15759 | -.63184 | .20526 | -.06597 | .29349 |
| -99.488 | 399.680 | 898.84000 | -15.44200 | 15.25200 | .26275 | -.50979 | .16294 | -.62674 | .20159 | -.06614 | .29433 |
| -100.740 | 500.090 | 899.27000 | -15.44200 | 15.25200 | .26243 | -.51053 | .16356 | -.62722 | .20177 | -.06630 | .29509 |
| | GRADIENT | .00000 | .00000 | .00000 | .00000 | .00000 | .00000 | .00000 | .00000 | .00000 | .00000 |

RUN NO. 3165/ 0 RN/L = 2.37 GRADIENT INTERVAL = -5.00/ 5.00

| Y | Z | X | ALPHA | BETA | PHI | CN | CLM | CY | CYN | CBL | CA |
|---|---|---|---|---|---|---|---|---|---|---|---|
| -302.440 | 499.610 | 899.49000 | -15.44300 | 15.25200 | .26348 | -.51132 | .16403 | -.62821 | .20235 | -.06632 | .29739 |
| -301.920 | 400.360 | 899.48000 | -15.44300 | 15.25200 | .26350 | -.51091 | .16389 | -.62758 | .20215 | -.06624 | .29708 |
| -301.920 | 300.150 | 899.37000 | -15.44300 | 15.25200 | .26332 | -.51096 | .16391 | -.62787 | .20227 | -.06630 | .29714 |
| | GRADIENT | .00000 | .00000 | .00000 | .00000 | .00000 | .00000 | .00000 | .00000 | .00000 | .00000 |

IA143, AEDC V41A-P8A, O/ET W/R.H. SRB SEPARATING (OVX508) ( 23 MAY 77 )

REFERENCE DATA

SREF = 2690.0000 SQ.FT. XMRP = 1097.0000 IN. XT
LREF = 1290.3000 INCHES YMRP = .0000 IN. YT
BREF = 1290.3000 INCHES ZMRP = 450.0000 IN. ZT
SCALE = .0100

PARAMETRIC DATA

ALPHA = -15.000 BETA = 15.000
DALPHA = -12.000 DBETA = -6.000
X = 900.000 MACH = 4.500
JET PC = .000

RUN NO. 3154/ 0 RN/L = 2.36 GRADIENT INTERVAL = -5.00/ 5.00

| Y | Z | X | ALPHA | BETA | PHI | CN | CLM | CY | CYN | CBL | CA |
|---|---|---|---|---|---|---|---|---|---|---|---|
| -201.950 | 300.370 | 899.50000 | -15.44300 | 15.25200 | .26320 | -.51099 | .16391 | -.62755 | .20212 | -.06622 | .29711 |
| -199.850 | 400.380 | 899.31000 | -15.44300 | 15.25200 | .26344 | -.51104 | .16389 | -.62779 | .20223 | -.06626 | .29711 |
| -200.090 | 500.110 | 899.36000 | -15.44300 | 15.25200 | .26351 | -.51113 | .16399 | -.62789 | .20224 | -.06627 | .29737 |
| | GRADIENT | .00000 | .00000 | .00000 | .00000 | .00000 | .00000 | .00000 | .00000 | .00000 | .00000 |

IA143, AEDC V41A-P8A, O/ET W/R.H. SRB SEPARATING (OVX509) ( 23 MAY 77 )

REFERENCE DATA

SREF = 2690.0000 SQ.FT. XMRP = 1097.0000 IN. XT
LREF = 1290.3000 INCHES YMRP = .0000 IN. YT
BREF = 1290.3000 INCHES ZMRP = 450.0000 IN. ZT
SCALE = .0100

PARAMETRIC DATA

ALPHA = -15.000 BETA = 15.000
DALPHA = -15.000 DBETA = -6.000
X = 900.000 MACH = 4.500
JET PC = .000

RUN NO. 3168/ 0 RN/L = 2.37 GRADIENT INTERVAL = -5.00/ 5.00

| Y | Z | X | ALPHA | BETA | PHI | CN | CLM | CY | CYN | CBL | CA |
|---|---|---|---|---|---|---|---|---|---|---|---|
| -201.050 | 400.390 | 899.26000 | -15.44300 | 15.25200 | .26353 | -.51095 | .16388 | -.62763 | .20216 | -.06625 | .29698 |
| -199.190 | 599.850 | 899.00000 | -15.44300 | 15.25200 | .26338 | -.51133 | .16402 | -.62810 | .20229 | -.06629 | .29730 |
| -200.490 | 799.220 | 899.15000 | -15.44300 | 15.25200 | .26329 | -.51108 | .16391 | -.62783 | .20221 | -.06627 | .29703 |
| -200.330 | 998.730 | 899.09000 | -15.44300 | 15.25200 | .26341 | -.51110 | .16395 | -.62781 | .20221 | -.06627 | .29713 |
| | GRADIENT | .00000 | .00000 | .00000 | .00000 | .00000 | .00000 | .00000 | .00000 | .00000 | .00000 |

IA143, AEDC V41A-P8A, O/ET W/R.H. SRB SEPARATING (OVX510) ( 23 MAY 77 )

REFERENCE DATA

SREF = 2690.0000 SQ.FT. XMRP = 1097.0000 IN. XT
LREF = 1290.3000 INCHES YMRP = .0000 IN. YT
BREF = 1290.3000 INCHES ZMRP = 450.0000 IN. ZT
SCALE = .0100

PARAMETRIC DATA

ALPHA = -15.000 BETA = 15.000
DALPHA = -10.000 DBETA = -4.000
X = 900.000 MACH = 4.500
JET PC = .000

RUN NO. 3144/ 0 RN/L = 2.37 GRADIENT INTERVAL = -5.00/ 5.00

| Y | Z | X | ALPHA | BETA | PHI | CN | CLM | CY | CYN | CBL | CA |
|---|---|---|---|---|---|---|---|---|---|---|---|
| -201.020 | 300.470 | 899.48000 | -15.44300 | 15.25200 | .26340 | -.51115 | .16398 | -.62812 | .20236 | -.06632 | .29734 |
| -200.760 | 350.270 | 899.35000 | -15.44300 | 15.25200 | .26332 | -.51113 | .16395 | -.62811 | .20233 | -.06632 | .29718 |
| -200.420 | 400.100 | 899.22000 | -15.44300 | 15.25200 | .26345 | -.51108 | .16394 | -.62792 | .20229 | -.06629 | .29719 |
| | GRADIENT | .00000 | .00000 | .00000 | .00000 | .00000 | .00000 | .00000 | .00000 | .00000 | .00000 |

RUN NO. 3145/ 0 RN/L = 2.37 GRADIENT INTERVAL = -5.00/ 5.00

| Y | Z | X | ALPHA | BETA | PHI | CN | CLM | CY | CYN | CBL | CA |
|---|---|---|---|---|---|---|---|---|---|---|---|
| -299.320 | 398.330 | 898.89000 | -15.44300 | 15.25200 | .26332 | -.51087 | .16388 | -.62768 | .20219 | -.06626 | .29717 |
| -301.090 | 350.280 | 899.29000 | -15.44300 | 15.25200 | .26340 | -.51111 | .16394 | -.62781 | .20224 | -.06627 | .29715 |
| -300.930 | 300.130 | 899.39000 | -15.44300 | 15.25200 | .26347 | -.51120 | .16402 | -.62807 | .20234 | -.06630 | .29735 |
| | GRADIENT | .00000 | .00000 | .00000 | .00000 | .00000 | .00000 | .00000 | .00000 | .00000 | .00000 |

IA143, AEDC V41A-P8A, O/ET W/R.H. SRB SEPARATING (OVX511) ( 23 MAY 77 )

REFERENCE DATA

SREF = 2690.0000 SQ.FT. XMRP = 1097.0000 IN. XT
LREF = 1290.3000 INCHES YMRP = .0000 IN. YT
BREF = 1290.3000 INCHES ZMRP = 450.0000 IN. ZT
SCALE = .0100

PARAMETRIC DATA

ALPHA = -15.000 BETA = 15.000
DALPHA = -15.000 DBETA = -4.000
X = 900.000 MACH = 4.500
JET PC = .000

RUN NO. 3169/ 0 RN/L = 2.37 GRADIENT INTERVAL = -5.00/ 5.00

| Y | Z | X | ALPHA | BETA | PHI | CN | CLM | CY | CYN | CBL | CA |
|---|---|---|---|---|---|---|---|---|---|---|---|
| -200.650 | 300.490 | 899.34000 | -15.44300 | 15.25200 | .26332 | -.51094 | .16387 | -.62755 | .20211 | -.06624 | .29681 |
| -200.320 | 350.600 | 899.31000 | -15.44300 | 15.25200 | .26318 | -.51076 | .16383 | -.62749 | .20212 | -.06625 | .29684 |
| -200.450 | 400.430 | 899.31000 | -15.44300 | 15.25200 | .26320 | -.51091 | .16389 | -.62759 | .20217 | -.06626 | .29698 |
| | GRADIENT | .00000 | .00000 | .00000 | .00000 | .00000 | .00000 | .00000 | .00000 | .00000 | .00000 |

RUN NO. 3170/ 0 RN/L = 2.37 GRADIENT INTERVAL = -5.00/ 5.00

| Y | Z | X | ALPHA | BETA | PHI | CN | CLM | CY | CYN | CBL | CA |
|---|---|---|---|---|---|---|---|---|---|---|---|
| -299.920 | 398.230 | 898.79000 | -15.44300 | 15.25200 | .26348 | -.51124 | .16399 | -.62791 | .20227 | -.06628 | .29722 |
| -300.910 | 350.410 | 899.35000 | -15.44300 | 15.25200 | .26331 | -.51103 | .16390 | -.62762 | .20218 | -.06625 | .29705 |
| -300.880 | 300.180 | 899.35000 | -15.44300 | 15.25200 | .26349 | -.51120 | .16398 | -.62801 | .20229 | -.06630 | .29728 |
| | GRADIENT | .00000 | .00000 | .00000 | .00000 | .00000 | .00000 | .00000 | .00000 | .00000 | .00000 |

IA143, AEDC V41A-P8A, O/ET W/R.H. SRB SEPARATING (OVX512) ( 23 MAY 77 )

REFERENCE DATA

SREF = 2690.0000 SQ.FT. XMRP = 1097.0000 IN. XT
LREF = 1290.3000 INCHES YMRP = .0000 IN. YT
BREF = 1290.3000 INCHES ZMRP = 450.0000 IN. ZT
SCALE = .0100

PARAMETRIC DATA

ALPHA = -15.000 BETA = 15.000
DALPHA = -10.000 DBETA = -8.000
X = 900.000 MACH = 4.500
JET PC = .000

RUN NO. 3147/ 0 RN/L = 2.37 GRADIENT INTERVAL = -5.00/ 5.00

| Y | Z | X | ALPHA | BETA | PHI | CN | CLM | CY | CYN | CBL | CA |
|---|---|---|---|---|---|---|---|---|---|---|---|
| -201.380 | 401.600 | 899.61000 | -15.44300 | 15.25200 | .26335 | -.51111 | .16397 | -.62790 | .20228 | -.06628 | .29734 |
| -201.190 | 350.110 | 899.33000 | -15.44300 | 15.25200 | .26356 | -.51081 | .16303 | -.62739 | .20207 | -.06620 | .29692 |
| -201.590 | 300.220 | 899.65000 | -15.44300 | 15.25200 | .26336 | -.51115 | .16397 | -.62781 | .20221 | -.06627 | .29725 |
| | GRADIENT | .00000 | .00000 | .00000 | .00000 | .00000 | .00000 | .00000 | .00000 | .00000 | .00000 |

RUN NO. 3146/ 0 RN/L = 2.37 GRADIENT INTERVAL = -5.00/ 5.00

| Y | Z | X | ALPHA | BETA | PHI | CN | CLM | CY | CYN | CBL | CA |
|---|---|---|---|---|---|---|---|---|---|---|---|
| -302.820 | 300.490 | 899.52000 | -15.44300 | 15.25200 | .26333 | -.51075 | .16386 | -.62763 | .20219 | -.06627 | .29708 |
| -300.860 | 350.360 | 899.38000 | -15.44300 | 15.25200 | .26346 | -.51112 | .16396 | -.62791 | .20228 | -.06627 | .29732 |
| -300.890 | 400.260 | 899.42000 | -15.44300 | 15.25200 | .26353 | -.51127 | .16402 | -.62807 | .20233 | -.06629 | .29737 |
| | GRADIENT | .00000 | .00000 | .00000 | .00000 | .00000 | .00000 | .00000 | .00000 | .00000 | .00000 |

IA143, AEDC V41A-P8A, O/ET W/R.H. SRB SEPARATING (OVX513) ( 23 MAY 77 )

REFERENCE DATA

SREF = 2690.0000 SQ.FT. XMRP = 1097.0000 IN. XT
LREF = 1290.3000 INCHES YMRP = .0000 IN. YT
BREF = 1290.3000 INCHES ZMRP = 450.0000 IN. ZT
SCALE = .0100

PARAMETRIC DATA

ALPHA = -15.000 BETA = 15.000
DALPHA = -15.000 DBETA = -8.000
X = 900.000 MACH = 4.500
JET PC = .000

RUN NO. 3166/ 0 RN/L = 2.37 GRADIENT INTERVAL = -5.00/ 5.00

| Y | Z | X | ALPHA | BETA | PHI | CN | CLM | CY | CYN | CBL | CA |
|---|---|---|---|---|---|---|---|---|---|---|---|
| -200.960 | 300.470 | 899.32000 | -15.44300 | 15.25200 | .26299 | -.51066 | .16376 | -.62746 | .20201 | -.06629 | .29602 |
| -200.300 | 350.440 | 899.26000 | -15.44300 | 15.25200 | .26329 | -.51099 | .16387 | -.62771 | .20214 | -.06627 | .29656 |
| -200.280 | 400.510 | 899.17000 | -15.44300 | 15.25200 | .26338 | -.51080 | .16386 | -.62759 | .20215 | -.06624 | .29701 |
| | GRADIENT | .00000 | .00000 | .00000 | .00000 | .00000 | .00000 | .00000 | .00000 | .00000 | .00000 |

RUN NO. 3167/ 0 RN/L = 2.37 GRADIENT INTERVAL = -5.00/ 5.00

| Y | Z | X | ALPHA | BETA | PHI | CN | CLM | CY | CYN | CBL | CA |
|---|---|---|---|---|---|---|---|---|---|---|---|
| -299.630 | 398.640 | 898.69000 | -15.44300 | 15.25200 | .26337 | -.51095 | .16389 | -.62789 | .20224 | -.06628 | .29712 |
| -301.170 | 350.270 | 899.24000 | -15.44300 | 15.25200 | .26336 | -.51092 | .16390 | -.62760 | .20218 | -.06624 | .29708 |
| -301.320 | 300.080 | 899.28000 | -15.44300 | 15.25200 | .26320 | -.51093 | .16388 | -.62786 | .20226 | -.06628 | .29708 |
| | GRADIENT | .00000 | .00000 | .00000 | .00000 | .00000 | .00000 | .00000 | .00000 | .00000 | .00000 |

IA143, AEDC V41A-P8A, O/ET W/R.H. SRB SEPARATING (OVX514) ( 23 MAY 77 )

REFERENCE DATA

SREF = 2690.0000 SQ.FT. XMRP = 1097.0000 IN. XT
LREF = 1290.3000 INCHES YMRP = .0000 IN. YT
BREF = 1290.3000 INCHES ZMRP = 450.0000 IN. ZT
SCALE = .0100

PARAMETRIC DATA

ALPHA = -15.000 BETA = 15.000
DALPHA = -5.000 DBETA = 4.000
X = 1200.000 MACH = 4.500
JET PC = .000

RUN NO. 3122/ 0 RN/L = 2.37 GRADIENT INTERVAL = -5.00/ 5.00

| Y | Z | X | ALPHA | BETA | PHI | CN | CLM | CY | CYN | CBL | CA |
|---|---|---|---|---|---|---|---|---|---|---|---|
| -100.310 | .174 | 1199.20000 | -15.44300 | 15.25200 | .25962 | -.50824 | .16171 | -.62733 | .20210 | -.06695 | .29625 |
| -99.886 | 102.070 | 1199.70000 | -15.44300 | 15.25200 | .26313 | -.51100 | .16396 | -.62741 | .20207 | -.06626 | .29703 |
| -99.558 | 201.830 | 1199.50000 | -15.44300 | 15.25200 | .26309 | -.51076 | .16386 | -.62715 | .20202 | -.06620 | .29708 |
| | GRADIENT | .00000 | .00000 | .00000 | .00000 | .00000 | .00000 | .00000 | .00000 | .00000 | .00000 |

IA143, AEDC V41A-P8A, O/ET W/R.H. SRB SEPARATING (OVX515) ( 23 MAY 77 )

REFERENCE DATA

SREF = 2690.0000 SQ.FT. XMRP = 1097.0000 IN. XT
LREF = 1290.3000 INCHES YMRP = .0000 IN. YT
BREF = 1290.3000 INCHES ZMRP = 450.0000 IN. ZT
SCALE = .0100

PARAMETRIC DATA

ALPHA = -15.000 BETA = 15.000
DALPHA = -5.000 DBETA = 2.000
X = 1200.000 MACH = 4.500
JET PC = .000

RUN NO. 3194/ 0 RN/L = 2.36 GRADIENT INTERVAL = -5.00/ 5.00

| Y | Z | X | ALPHA | BETA | PHI | CN | CLM | CY | CYN | CBL | CA |
|---|---|---|---|---|---|---|---|---|---|---|---|
| -101.040 | .103 | 1199.39999 | -15.44300 | 15.25300 | .25984 | -.50819 | .16168 | -.62773 | .20214 | -.06696 | .29593 |
| -99.713 | 101.720 | 1199.60001 | -15.44300 | 15.25200 | .26295 | -.51067 | .16377 | -.62763 | .20206 | -.06626 | .29649 |
| -99.637 | 201.730 | 1199.50000 | -15.44300 | 15.25200 | .26333 | -.51059 | .16372 | -.62722 | .20199 | -.06619 | .29657 |
| | GRADIENT | .00000 | .00000 | .00000 | .00000 | .00000 | .00000 | .00000 | .00000 | .00000 | .00000 |

IA143, AEDC V41A-P8A, O/ET W/R.H. SRB SEPARATING (OVX516) ( 23 MAY 77 )

REFERENCE DATA

SREF = 2690.0000 SQ.FT. XMRP = 1097.0000 IN. XT
LREF = 1290.3000 INCHES YMRP = .0000 IN. YT
BREF = 1290.3000 INCHES ZMRP = 450.0000 IN. ZT
SCALE = .0100

PARAMETRIC DATA

ALPHA = -15.000 BETA = 15.000
DALPHA = -15.000 DBETA = -2.000
X = 1200.000 MACH = 4.500
JET PC = .000

RUN NO. 4499/ 0 RN/L = 2.36 GRADIENT INTERVAL = -5.00/ 5.00

| Y | Z | X | ALPHA | BETA | PHI | CN | CLM | CY | CYN | CBL | CA |
|---|---|---|---|---|---|---|---|---|---|---|---|
| -600.710 | 100.570 | 1199.39999 | -15.44400 | 15.25200 | .26710 | -.51330 | .16578 | -.63101 | .20365 | -.06615 | .29828 |
| -600.450 | 200.490 | 1199.39999 | -15.44300 | 15.25100 | .26695 | -.51338 | .16584 | -.63082 | .20362 | -.06612 | .29840 |
| -600.380 | 300.680 | 1199.39999 | -15.44400 | 15.25200 | .26714 | -.51313 | .16571 | -.63073 | .20357 | -.06611 | .29816 |
| -600.260 | 400.540 | 1199.39999 | -15.44400 | 15.25200 | .26726 | -.51360 | .16587 | -.63109 | .20368 | -.06616 | .29839 |
| | GRADIENT | .00000 | .00000 | .00000 | .00000 | .00000 | .00000 | .00000 | .00000 | .00000 | .00000 |

IA143, AEDC V41A-P8A, O/ET W/R.H. SRB SEPARATING (OVX517) ( 23 MAY 77 )

REFERENCE DATA

SREF = 2690.0000 SQ.FT. XMRP = 1097.0000 IN. XT
LREF = 1290.3000 INCHES YMRP = .0000 IN. YT
BREF = 1290.3000 INCHES ZMRP = 450.0000 IN. ZT
SCALE = .0100

PARAMETRIC DATA

ALPHA = -15.000 BETA = 15.000
DALPHA = -25.000 DBETA = 4.000
X = 1200.000 MACH = 4.500
JET PC = .000

RUN NO. 3191/ 0 RN/L = 2.37 GRADIENT INTERVAL = -5.00/ 5.00

| Y | Z | X | ALPHA | BETA | PHI | CN | CLM | CY | CYN | CBL | CA |
|---|---|---|---|---|---|---|---|---|---|---|---|
| -100.730 | 300.210 | 1198.80000 | -15.44300 | 15.25200 | .26290 | -.51053 | .16362 | -.62693 | .20171 | -.06620 | .29561 |
| -98.340 | 401.180 | 1199.39999 | -15.44300 | 15.25200 | .26318 | -.51047 | .16370 | -.62702 | .20188 | -.06618 | .29639 |
| -100.590 | 500.800 | 1199.60001 | -15.44300 | 15.25200 | .26326 | -.51069 | .16372 | -.62710 | .20194 | -.06618 | .29659 |
| -100.250 | 600.660 | 1199.20000 | -15.44300 | 15.25200 | .26326 | -.51095 | .16384 | -.62748 | .20206 | -.06621 | .29703 |
| | GRADIENT | .00000 | .00000 | .00000 | .00000 | .00000 | .00000 | .00000 | .00000 | .00000 | .00000 |

IA143, AEDC V41A-P8A, O/ET W/R.H. SRB SEPARATING (OVX518) ( 23 MAY 77 )

REFERENCE DATA

SREF = 2690.0000 SQ.FT. XMRP = 1097.0000 IN. XT
LREF = 1290.3000 INCHES YMRP = .0000 IN. YT
BREF = 1290.3000 INCHES ZMRP = 450.0000 IN. ZT
SCALE = .0100

PARAMETRIC DATA

ALPHA = -15.000 BETA = 15.000
DALPHA = -25.000 DBETA = 2.000
X = 1200.000 MACH = 4.500
JET PC = .000

RUN NO. 3200/ 0 RN/L = 2.37 GRADIENT INTERVAL = -5.00/ 5.00

| Y | Z | X | ALPHA | BETA | PHI | CN | CLM | CY | CYN | CBL | CA |
|---|---|---|---|---|---|---|---|---|---|---|---|
| -101.060 | 300.450 | 1198.80000 | -15.44200 | 15.25200 | .26259 | -.51066 | .16361 | -.62719 | .20182 | -.06627 | .29543 |
| -99.549 | 400.810 | 1199.39999 | -15.44300 | 15.25200 | .26295 | -.51067 | .16377 | -.62726 | .20193 | -.06622 | .29638 |
| -99.336 | 500.770 | 1199.20000 | -15.44300 | 15.25200 | .26318 | -.51102 | .16389 | -.62761 | .20210 | -.06624 | .29702 |
| -102.040 | 600.790 | 1199.80000 | -15.44300 | 15.25200 | .26343 | -.51116 | .16395 | -.62771 | .20215 | -.06624 | .29709 |
| | GRADIENT | .00000 | .00000 | .00000 | .00000 | .00000 | .00000 | .00000 | .00000 | .00000 | .00000 |

IA143, AEDC V41A-P8A, O/ET W/R.H. SRB SEPARATING (OVX519) ( 23 MAY 77 )

REFERENCE DATA

SREF = 2690.0000 SQ.FT. XMRP = 1097.0000 IN. XT
LREF = 1290.3000 INCHES YMRP = .0000 IN. YT
BREF = 1290.3000 INCHES ZMRP = 450.0000 IN. ZT
SCALE = .0100

PARAMETRIC DATA

ALPHA = -15.000 BETA = 15.000
DALPHA = -25.000 DBETA = -2.000
X = 1200.000 MACH = 4.500
JET PC = .000

RUN NO. 4500/ 0 RN/L = 2.36 GRADIENT INTERVAL = -5.00/ 5.00

| Y | Z | X | ALPHA | BETA | PHI | CN | CLM | CY | CYN | CBL | CA |
|---|---|---|---|---|---|---|---|---|---|---|---|
| -600.690 | 300.830 | 1199.30000 | -15.44300 | 15.25100 | .26686 | -.51324 | .16578 | -.63063 | .20353 | -.06608 | .29830 |
| -600.850 | 400.780 | 1199.50000 | -15.44300 | 15.25200 | .26697 | -.51330 | .16578 | -.63097 | .20361 | -.06615 | .29826 |
| -600.440 | 500.800 | 1199.30000 | -15.44300 | 15.25100 | .26699 | -.51352 | .16586 | -.63100 | .20366 | -.06615 | .29834 |
| -600.450 | 600.660 | 1199.30000 | -15.44200 | 15.25100 | .26629 | -.51389 | .16598 | -.63135 | .20378 | -.06617 | .29859 |
| | GRADIENT | .00000 | .00000 | .00000 | .00000 | .00000 | .00000 | .00000 | .00000 | .00000 | .00000 |

IA143, AEDC V41A-P8A, O/ET W/R.H. SRB SEPARATING (OVX520) ( 23 MAY 77 )

REFERENCE DATA

SREF = 2690.0000 SQ.FT. XMRP = 1097.0000 IN. XT
LREF = 1290.3000 INCHES YMRP = .0000 IN. YT
BREF = 1290.3000 INCHES ZMRP = 450.0000 IN. ZT
SCALE = .0100

PARAMETRIC DATA

ALPHA = -15.000 BETA = 15.000
DALPHA = -5.000 DBETA = -20.000
X = 1200.000 MACH = 4.500
JET PC = .000

RUN NO. 3124/ 0 RN/L = 2.37 GRADIENT INTERVAL = -5.00/ 5.00

| Y | Z | X | ALPHA | BETA | PHI | CN | CLM | CY | CYN | CBL | CA |
|---|---|---|---|---|---|---|---|---|---|---|---|
| -100.840 | 200.420 | 1199.30000 | -15.44300 | 15.25200 | .26277 | -.51067 | .16368 | -.62699 | .20185 | -.06622 | .29607 |
| -102.270 | 99.440 | 1199.60001 | -15.44300 | 15.25200 | .26351 | -.51049 | .16345 | -.62771 | .20223 | -.06625 | .29617 |
| -102.080 | -.921 | 1199.50000 | -15.44300 | 15.25300 | .25880 | -.50551 | .15913 | -.62821 | .20254 | -.06731 | .29271 |
| | GRADIENT | .00000 | .00000 | .00000 | .00000 | .00000 | .00000 | .00000 | .00000 | .00000 | .00000 |

RUN NO. 3201/ 0 RN/L = 2.37 GRADIENT INTERVAL = -5.00/ 5.00

| Y | Z | X | ALPHA | BETA | PHI | CN | CLM | CY | CYN | CBL | CA |
|---|---|---|---|---|---|---|---|---|---|---|---|
| -401.220 | 200.180 | 1199.30000 | -15.44300 | 15.25200 | .26330 | -.51091 | .16382 | -.62779 | .20216 | -.06625 | .29679 |
| -400.860 | 99.496 | 1199.30000 | -15.44300 | 15.25200 | .26327 | -.51085 | .16384 | -.62777 | .20216 | -.06626 | .29685 |
| -400.450 | -.355 | 1199.10001 | -15.44300 | 15.25200 | .26328 | -.51088 | .16383 | -.62764 | .20210 | -.06623 | .29686 |
| | GRADIENT | .00000 | .00000 | .00000 | .00000 | .00000 | .00000 | .00000 | .00000 | .00000 | .00000 |

RUN NO. 3123/ 0 RN/L = 2.37 GRADIENT INTERVAL = -5.00/ 5.00

| Y | Z | X | ALPHA | BETA | PHI | CN | CLM | CY | CYN | CBL | CA |
|---|---|---|---|---|---|---|---|---|---|---|---|
| -600.420 | .272 | 1199.20000 | -15.44300 | 15.25100 | .26314 | -.51091 | .16395 | -.62721 | .20204 | -.06619 | .29738 |
| -600.360 | 100.450 | 1199.20000 | -15.44300 | 15.25100 | .26312 | -.51083 | .16392 | -.62720 | .20207 | -.06620 | .29733 |
| -600.970 | 200.180 | 1199.30000 | -15.44300 | 15.25200 | .26339 | -.51098 | .16395 | -.62731 | .20209 | -.06621 | .29732 |
| | GRADIENT | .00000 | .00000 | .00000 | .00000 | .00000 | .00000 | .00000 | .00000 | .00000 | .00000 |

IA143, AEDC V41A-P8A, O/ET W/R.H. SRB SEPARATING (OVX521) ( 23 MAY 77 )

REFERENCE DATA

SREF = 2690.0000 SQ.FT. XMRP = 1097.0000 IN. XT
LREF = 1290.3000 INCHES YMRP = .0000 IN. YT
BREF = 1290.3000 INCHES ZMRP = 450.0000 IN. ZT
SCALE = .0100

PARAMETRIC DATA

ALPHA = -15.000 BETA = 15.000
DALPHA = -5.000 DBETA = -20.000
X = 1200.000 MACH = 4.500
JET PC = .000

RUN NO. 3196/ 0 RN/L = 2.36 GRADIENT INTERVAL = -5.00/ 5.00

| Y | Z | X | ALPHA | BETA | PHI | CN | CLM | CY | CYN | CBL | CA |
|---|---|---|---|---|---|---|---|---|---|---|---|
| -100.510 | 200.420 | 1199.20000 | -15.44200 | 15.25200 | .26284 | -.51039 | .16355 | -.62720 | .20187 | -.06622 | .29562 |
| -101.870 | 99.563 | 1199.60001 | -15.44300 | 15.25200 | .26333 | -.50997 | .16321 | -.62742 | .20202 | -.06621 | .29558 |
| -101.760 | -.934 | 1199.39999 | -15.44300 | 15.25300 | .25858 | -.50548 | .15911 | -.62869 | .20258 | -.06740 | .29267 |
| | GRADIENT | .00000 | .00000 | .00000 | .00000 | .00000 | .00000 | .00000 | .00000 | .00000 | .00000 |

RUN NO. 3195/ 0 RN/L = 2.36 GRADIENT INTERVAL = -5.00/ 5.00

| Y | Z | X | ALPHA | BETA | PHI | CN | CLM | CY | CYN | CBL | CA |
|---|---|---|---|---|---|---|---|---|---|---|---|
| -600.270 | .212 | 1199.20000 | -15.44300 | 15.25200 | .26333 | -.51070 | .16378 | -.62759 | .20210 | -.06624 | .29684 |
| -600.500 | 100.470 | 1199.30000 | -15.44300 | 15.25200 | .26318 | -.51077 | .16378 | -.62754 | .20208 | -.06622 | .29676 |
| -600.780 | 200.380 | 1199.30000 | -15.44300 | 15.25200 | .26356 | -.51104 | .16387 | -.62787 | .20219 | -.06625 | .29699 |
| | GRADIENT | .00000 | .00000 | .00000 | .00000 | .00000 | .00000 | .00000 | .00000 | .00000 | .00000 |

IA143, AEDC V41A-P8A, O/ET W/R.H. SRB SEPARATING (OVX522) ( 23 MAY 77 )

REFERENCE DATA

SREF = 2690.0000 SQ.FT. XMRP = 1097.0000 IN. XT
LREF = 1290.3000 INCHES YMRP = .0000 IN. YT
BREF = 1290.3000 INCHES ZMRP = 450.0000 IN. ZT
SCALE = .0100

PARAMETRIC DATA

ALPHA = -15.000 BETA = 15.000
DALPHA = -25.000 DBETA = -20.000
X = 1200.000 MACH = 4.500
JET PC = .000

RUN NO. 3189/ 0 RN/L = 2.38 GRADIENT INTERVAL = -5.00/ 5.00

| Y | Z | X | ALPHA | BETA | PHI | CN | CLM | CY | CYN | CBL | CA |
|---|---|---|---|---|---|---|---|---|---|---|---|
| -100.630 | 300.230 | 1198.70000 | -15.44200 | 15.25300 | .26100 | -.50827 | .16164 | -.62449 | .20028 | -.06598 | .29206 |
| -99.600 | 400.160 | 1198.70000 | -15.44200 | 15.25300 | .26147 | -.50870 | .16195 | -.62538 | .20072 | -.06609 | .29185 |
| -99.857 | 500.130 | 1198.70000 | -15.44100 | 15.25300 | .26126 | -.50863 | .16222 | -.62549 | .20085 | -.06616 | .29242 |
| -101.070 | 600.360 | 1199.20000 | -15.44200 | 15.25200 | .26249 | -.50958 | .16293 | -.62654 | .20145 | -.06619 | .29447 |
| | GRADIENT | .00000 | .00000 | .00000 | .00000 | .00000 | .00000 | .00000 | .00000 | .00000 | .00000 |

IA143, AEDC V41A-P8A, O/ET W/R.H. SRB SEPARATING (OVX523) ( 23 MAY 77 )

REFERENCE DATA

SREF = 2690.0000 SQ.FT. XMRP = 1097.0000 IN. XT
LREF = 1290.3000 INCHES YMRP = .0000 IN. YT
BREF = 1290.3000 INCHES ZMRP = 450.0000 IN. ZT
SCALE = .0100

PARAMETRIC DATA

ALPHA = -15.000 BETA = 15.000
DALPHA = -25.000 DBETA = -20.000
X = 1200.000 MACH = 4.500
JET PC = .000

RUN NO. 3198/ 0 RN/L = 2.37 GRADIENT INTERVAL = -5.00/ 5.00

| Y | Z | X | ALPHA | BETA | PHI | CN | CLM | CY | CYN | CBL | CA |
|---|---|---|---|---|---|---|---|---|---|---|---|
| -100.490 | 300.220 | 1198.60001 | -15.44200 | 15.25300 | .26090 | -.50827 | .16166 | -.62454 | .20030 | -.06600 | .29201 |
| -100.840 | 400.250 | 1199.00000 | -15.44100 | 15.25200 | .26118 | -.50853 | .16189 | -.62503 | .20060 | -.06605 | .29164 |
| -99.949 | 500.040 | 1198.70000 | -15.44100 | 15.25200 | .26105 | -.50885 | .16227 | -.62560 | .20090 | -.06617 | .29233 |
| -100.460 | 600.480 | 1199.10001 | -15.44200 | 15.25200 | .26240 | -.50926 | .16281 | -.62611 | .20132 | -.06614 | .29405 |
| | GRADIENT | .00000 | .00000 | .00000 | .00000 | .00000 | .00000 | .00000 | .00000 | .00000 | .00000 |

IA143, AEDC V41A-P8A, O/ET W/R.H. SRB SEPARATING (OVX524) ( 23 MAY 77 )

REFERENCE DATA

SREF = 2690.0000 SQ.FT. XMRP = 1097.0000 IN. XT
LREF = 1290.3000 INCHES YMRP = .0000 IN. YT
BREF = 1290.3000 INCHES ZMRP = 450.0000 IN. ZT
SCALE = .0100

PARAMETRIC DATA

ALPHA = -15.000 BETA = 15.000
DALPHA = -25.000 DBETA = -20.000
X = 1200.000 MACH = 4.500
JET PC = .000

RUN NO. 3190/ 0 RN/L = 2.37 GRADIENT INTERVAL = -5.00/ 5.00

| Y | Z | X | ALPHA | BETA | PHI | CN | CLM | CY | CYN | CBL | CA |
|---|---|---|---|---|---|---|---|---|---|---|---|
| -600.360 | 400.680 | 1199.00000 | -15.44300 | 15.25200 | .26339 | -.51090 | .16383 | -.62773 | .20214 | -.06623 | .29697 |
| -600.110 | 501.120 | 1199.10001 | -15.44300 | 15.25200 | .26320 | -.51066 | .16372 | -.62740 | .20203 | -.06622 | .29672 |
| -599.940 | 600.820 | 1199.10001 | -15.44300 | 15.25200 | .26330 | -.51079 | .16382 | -.62773 | .20213 | -.06626 | .29706 |
| | GRADIENT | .00000 | .00000 | .00000 | .00000 | .00000 | .00000 | .00000 | .00000 | .00000 | .00000 |

IA143, AEDC V41A-P8A, O/ET W/R.H. SRB SEPARATING (OVX525) ( 23 MAY 77 )

REFERENCE DATA

SREF = 2690.0000 SQ.FT. XMRP = 1097.0000 IN. XT
LREF = 1290.3000 INCHES YMRP = .0000 IN. YT
BREF = 1290.3000 INCHES ZMRP = 450.0000 IN. ZT
SCALE = .0100

PARAMETRIC DATA

ALPHA = -15.000 BETA = 15.000
DALPHA = -25.000 DBETA = -20.000
X = 1200.000 MACH = 4.500
JET PC = .000

RUN NO. 3199/ 0 RN/L = 2.37 GRADIENT INTERVAL = -5.00/ 5.00

| Y | Z | X | ALPHA | BETA | PHI | CN | CLM | CY | CYN | CBL | CA |
|---|---|---|---|---|---|---|---|---|---|---|---|
| -600.410 | 400.660 | 1199.00000 | -15.44300 | 15.25200 | .26314 | -.51072 | .16376 | -.62755 | .20207 | -.06624 | .29684 |
| -600.410 | 501.110 | 1199.20000 | -15.44300 | 15.25200 | .26316 | -.51088 | .16384 | -.62766 | .20212 | -.06624 | .29698 |
| -599.460 | 600.790 | 1199.00000 | -15.44300 | 15.25200 | .26319 | -.51081 | .16380 | -.62750 | .20206 | -.06622 | .29689 |
| | GRADIENT | .00000 | .00000 | .00000 | .00000 | .00000 | .00000 | .00000 | .00000 | .00000 | .00000 |

IA143, AEDC V41A-P8A, O/ET W/R.H. SRB SEPARATING (OVX526) ( 23 MAY 77 )

REFERENCE DATA

SREF = 2690.0000 SQ.FT. XMRP = 1097.0000 IN. XT
LREF = 1290.3000 INCHES YMRP = .0000 IN. YT
BREF = 1290.3000 INCHES ZMRP = 450.0000 IN. ZT
SCALE = .0100

PARAMETRIC DATA

ALPHA = -15.000 BETA = 15.000
DALPHA = -10.000 DBETA = .000
X = 1200.000 MACH = 4.500
JET PC = .000

RUN NO. 3152/ 0 RN/L = 2.37 GRADIENT INTERVAL = -5.00/ 5.00

| Y | Z | X | ALPHA | BETA | PHI | CN | CLM | CY | CYN | CBL | CA |
|---|---|---|---|---|---|---|---|---|---|---|---|
| -201.130 | 200.520 | 1199.50000 | -15.44300 | 15.25200 | .26324 | -.51091 | .16389 | -.62770 | .20219 | -.06626 | .29716 |
| -199.040 | 300.860 | 1199.30000 | -15.44300 | 15.25200 | .26335 | -.51078 | .16385 | -.62759 | .20219 | -.06623 | .29704 |
| -199.830 | 400.050 | 1199.20000 | -15.44300 | 15.25200 | .26340 | -.51081 | .16384 | -.62756 | .20218 | -.06626 | .29697 |
| | GRADIENT | .00000 | .00000 | .00000 | .00000 | .00000 | .00000 | .00000 | .00000 | .00000 | .00000 |

RUN NO. 3153/ 0 RN/L = 2.37 GRADIENT INTERVAL = -5.00/ 5.00

| Y | Z | X | ALPHA | BETA | PHI | CN | CLM | CY | CYN | CBL | CA |
|---|---|---|---|---|---|---|---|---|---|---|---|
| -400.210 | 400.200 | 1199.20000 | -15.44300 | 15.25200 | .26338 | -.51109 | .16396 | -.62768 | .20217 | -.06624 | .29729 |
| -400.530 | 299.970 | 1199.20000 | -15.44300 | 15.25200 | .26339 | -.51101 | .16394 | -.62787 | .20225 | -.06629 | .29721 |
| -400.380 | 199.900 | 1199.20000 | -15.44300 | 15.25200 | .26322 | -.51083 | .16386 | -.62758 | .20215 | -.06625 | .29705 |
| | GRADIENT | .00000 | .00000 | .00000 | .00000 | .00000 | .00000 | .00000 | .00000 | .00000 | .00000 |

IA143, AEDC V41A-P8A, O/ET W/R.H. SRB SEPARATING (OVX527) ( 23 MAY 77 )

REFERENCE DATA

SREF = 2690.0000 SQ.FT. XMRP = 1097.0000 IN. XT
LREF = 1290.3000 INCHES YMRP = .0000 IN. YT
BREF = 1290.3000 INCHES ZMRP = 450.0000 IN. ZT
SCALE = .0100

PARAMETRIC DATA

ALPHA = -15.000 BETA = 15.000
DALPHA = -20.000 DBETA = .000
X = 1200.000 MACH = 4.500
JET PC = .000

RUN NO. 3184/ 0 RN/L = 2.38 GRADIENT INTERVAL = -5.00/ 5.00

| Y | Z | X | ALPHA | BETA | PHI | CN | CLM | CY | CYN | CBL | CA |
|---|---|---|---|---|---|---|---|---|---|---|---|
| -200.670 | 300.500 | 1199.10001 | -15.44300 | 15.25200 | .26339 | -.51101 | .16389 | -.62771 | .20217 | -.06625 | .29699 |
| -199.540 | 400.600 | 1199.10001 | -15.44300 | 15.25200 | .26343 | -.51108 | .16392 | -.62780 | .20222 | -.06626 | .29710 |
| -200.230 | 500.050 | 1199.20000 | -15.44300 | 15.25200 | .26327 | -.51091 | .16387 | -.62767 | .20215 | -.06625 | .29698 |
| | GRADIENT | .00000 | .00000 | .00000 | .00000 | .00000 | .00000 | .00000 | .00000 | .00000 | .00000 |

RUN NO. 3185/ 0 RN/L = 2.38 GRADIENT INTERVAL = -5.00/ 5.00

| Y | Z | X | ALPHA | BETA | PHI | CN | CLM | CY | CYN | CBL | CA |
|---|---|---|---|---|---|---|---|---|---|---|---|
| -400.120 | 500.640 | 1199.20000 | -15.44300 | 15.25200 | .26341 | -.51117 | .16395 | -.62763 | .20215 | -.06624 | .29708 |
| -400.380 | 400.210 | 1199.10001 | -15.44300 | 15.25200 | .26303 | -.51069 | .16378 | -.62752 | .20212 | -.06626 | .29680 |
| -400.310 | 300.180 | 1199.20000 | -15.44300 | 15.25200 | .26347 | -.51109 | .16393 | -.62751 | .20211 | -.06622 | .29706 |
| | GRADIENT | .00000 | .00000 | .00000 | .00000 | .00000 | .00000 | .00000 | .00000 | .00000 | .00000 |

IA143, AEDC V41A-P8A, O/ET W/R.H. SRB SEPARATING (OVX528) ( 23 MAY 77 )

REFERENCE DATA

SREF = 2690.0000 SQ.FT. XMRP = 1097.0000 IN. XT
LREF = 1290.3000 INCHES YMRP = .0000 IN. YT
BREF = 1290.3000 INCHES ZMRP = 450.0000 IN. ZT
SCALE = .0100

PARAMETRIC DATA

ALPHA = -15.000 BETA = 15.000
DALPHA = -10.000 DBETA = -12.000
X = 1200.000 MACH = 4.500
JET PC = .000

RUN NO. 3150/ 0 RN/L = 2.37 GRADIENT INTERVAL = -5.00/ 5.00

| Y | Z | X | ALPHA | BETA | PHI | CN | CLM | CY | CYN | CBL | CA |
|---|---|---|---|---|---|---|---|---|---|---|---|
| -201.140 | 200.250 | 1199.30000 | -15.44300 | 15.25200 | .26336 | -.51101 | .16389 | -.62767 | .20217 | -.06624 | .29706 |
| -200.260 | 300.760 | 1199.30000 | -15.44300 | 15.25200 | .26341 | -.51087 | .16388 | -.62767 | .20218 | -.06625 | .29711 |
| -200.090 | 400.250 | 1199.10001 | -15.44300 | 15.25200 | .26338 | -.51095 | .16392 | -.62776 | .20221 | -.06626 | .29722 |
| | GRADIENT | .00000 | .00000 | .00000 | .00000 | .00000 | .00000 | .00000 | .00000 | .00000 | .00000 |

RUN NO. 3151/ 0 RN/L = 2.37 GRADIENT INTERVAL = -5.00/ 5.00

| Y | Z | X | ALPHA | BETA | PHI | CN | CLM | CY | CYN | CBL | CA |
|---|---|---|---|---|---|---|---|---|---|---|---|
| -400.050 | 398.430 | 1198.80000 | -15.44300 | 15.25200 | .26332 | -.51078 | .16383 | -.62758 | .20219 | -.06625 | .29700 |
| -400.400 | 300.020 | 1199.10001 | -15.44300 | 15.25200 | .26326 | -.51071 | .16383 | -.62763 | .20218 | -.06627 | .29706 |
| -401.090 | 199.960 | 1199.10001 | -15.44300 | 15.25200 | .26318 | -.51080 | .16383 | -.62766 | .20221 | -.06626 | .29701 |
| | GRADIENT | .00000 | .00000 | .00000 | .00000 | .00000 | .00000 | .00000 | .00000 | .00000 | .00000 |

IA143, AEDC V41A-P8A, O/ET W/R.H. SRB SEPARATING (OVX529) ( 23 MAY 77 )

REFERENCE DATA

SREF = 2690.0000 SQ.FT. XMRP = 1097.0000 IN. XT
LREF = 1290.3000 INCHES YMRP = .0000 IN. YT
BREF = 1290.3000 INCHES ZMRP = 450.0000 IN. ZT
SCALE = .0100

PARAMETRIC DATA

ALPHA = -15.000 BETA = 15.000
DALPHA = -20.000 DBETA = -12.000
X = 1200.000 MACH = 4.500
JET PC = .000

RUN NO. 3178/ 0 RN/L = 2.36 GRADIENT INTERVAL = -5.00/ 5.00

| Y | Z | X | ALPHA | BETA | PHI | CN | CLM | CY | CYN | CBL | CA |
|---|---|---|---|---|---|---|---|---|---|---|---|
| -201.000 | 300.480 | 1199.00000 | -15.44300 | 15.25200 | .26315 | -.51080 | .16384 | -.62768 | .20216 | -.06627 | .29672 |
| -199.570 | 400.540 | 1198.89999 | -15.44300 | 15.25200 | .26353 | -.51110 | .16393 | -.62801 | .20227 | -.06630 | .29708 |
| -200.100 | 499.960 | 1198.89999 | -15.44300 | 15.25200 | .26333 | -.51092 | .16385 | -.62771 | .20219 | -.06626 | .29693 |
| | GRADIENT | .00000 | .00000 | .00000 | .00000 | .00000 | .00000 | .00000 | .00000 | .00000 | .00000 |

RUN NO. 3179/ 0 RN/L = 2.36 GRADIENT INTERVAL = -5.00/ 5.00

| Y | Z | X | ALPHA | BETA | PHI | CN | CLM | CY | CYN | CBL | CA |
|---|---|---|---|---|---|---|---|---|---|---|---|
| -400.570 | 500.400 | 1199.10001 | -15.44400 | 15.25200 | .26360 | -.51106 | .16394 | -.62790 | .20224 | -.06628 | .29718 |
| -401.070 | 400.530 | 1199.20000 | -15.44300 | 15.25200 | .26334 | -.51076 | .16388 | -.62731 | .20209 | -.06620 | .29705 |
| -401.990 | 300.240 | 1199.20000 | -15.44300 | 15.25200 | .26349 | -.51096 | .16391 | -.62774 | .20221 | -.06626 | .29717 |
| | GRADIENT | .00000 | .00000 | .00000 | .00000 | .00000 | .00000 | .00000 | .00000 | .00000 | .00000 |

IA143, AEDC V41A-P8A, O/ET W/R.H. SRB SEPARATING (OVX530) ( 23 MAY 77 )

REFERENCE DATA

SREF = 2690.0000 SQ.FT. XMRP = 1097.0000 IN. XT
LREF = 1290.3000 INCHES YMRP = .0000 IN. YT
BREF = 1290.3000 INCHES ZMRP = 450.0000 IN. ZT
SCALE = .0100

PARAMETRIC DATA

ALPHA = -15.000 BETA = 15.000
DALPHA = -15.000 DBETA = -4.000
X = 1200.000 MACH = 4.500
JET PC = .000

RUN NO. 3173/ 0 RN/L = 2.37 GRADIENT INTERVAL = -5.00/ 5.00

| Y | Z | X | ALPHA | BETA | PHI | CN | CLM | CY | CYN | CBL | CA |
|---|---|---|---|---|---|---|---|---|---|---|---|
| -201.090 | 400.480 | 1199.30000 | -15.44300 | 15.25200 | .26354 | -.51112 | .16397 | -.62769 | .20221 | -.06624 | .29729 |
| -200.520 | 450.250 | 1199.30000 | -15.44300 | 15.25200 | .26315 | -.51085 | .16388 | -.62774 | .20232 | -.06627 | .29712 |
| -200.640 | 500.170 | 1199.10001 | -15.44300 | 15.25200 | .26318 | -.51083 | .16385 | -.62755 | .20213 | -.06626 | .29696 |
| | GRADIENT | .00000 | .00000 | .00000 | .00000 | .00000 | .00000 | .00000 | .00000 | .00000 | .00000 |

RUN NO. 3174/ 0 RN/L = 2.37 GRADIENT INTERVAL = -5.00/ 5.00

| Y | Z | X | ALPHA | BETA | PHI | CN | CLM | CY | CYN | CBL | CA |
|---|---|---|---|---|---|---|---|---|---|---|---|
| -300.510 | 498.600 | 1198.80000 | -15.44300 | 15.25200 | .26330 | -.51091 | .16389 | -.62755 | .20213 | -.06625 | .29703 |
| -300.980 | 450.610 | 1199.30000 | -15.44300 | 15.25200 | .26350 | -.51107 | .16393 | -.62783 | .20226 | -.06628 | .29698 |
| -300.840 | 400.450 | 1199.20000 | -15.44300 | 15.25200 | .26336 | -.51086 | .16388 | -.62766 | .20215 | -.06627 | .29703 |
| | GRADIENT | .00000 | .00000 | .00000 | .00000 | .00000 | .00000 | .00000 | .00000 | .00000 | .00000 |

IA143, AEDC V41A-P8A, O/ET W/R.H. SRB SEPARATING (OVX531) ( 23 MAY 77 )

REFERENCE DATA

SREF = 2690.0000 SQ.FT. XMRP = 1097.0000 IN. XT
LREF = 1290.3000 INCHES YMRP = .0000 IN. YT
BREF = 1290.3000 INCHES ZMRP = 450.0000 IN. ZT
SCALE = .0100

PARAMETRIC DATA

ALPHA = -15.000 BETA = 15.000
DALPHA = -20.000 DBETA = -4.000
X = 1200.000 MACH = 4.500
JET PC = .000

RUN NO. 3180/ 0 RN/L = 2.36 GRADIENT INTERVAL = -5.00/ 5.00

| Y | Z | X | ALPHA | BETA | PHI | CN | CLM | CY | CYN | CBL | CA |
|---|---|---|---|---|---|---|---|---|---|---|---|
| -200.640 | 400.610 | 1199.10001 | -15.44300 | 15.25200 | .26325 | -.51086 | .16387 | -.62759 | .20215 | -.06624 | .29703 |
| -200.300 | 450.350 | 1199.10001 | -15.44300 | 15.25200 | .26336 | -.51084 | .16389 | -.62751 | .20213 | -.06623 | .29707 |
| -200.430 | 500.300 | 1199.20000 | -15.44300 | 15.25200 | .26356 | -.51105 | .16391 | -.62778 | .20221 | -.06626 | .29700 |
| | GRADIENT | .00000 | .00000 | .00000 | .00000 | .00000 | .00000 | .00000 | .00000 | .00000 | .00000 |

RUN NO. 3181/ 0 RN/L = 2.37 GRADIENT INTERVAL = -5.00/ 5.00

| Y | Z | X | ALPHA | BETA | PHI | CN | CLM | CY | CYN | CBL | CA |
|---|---|---|---|---|---|---|---|---|---|---|---|
| -300.550 | 500.550 | 1199.10001 | -15.44300 | 15.25200 | .26321 | -.51081 | .16385 | -.62757 | .20216 | -.06626 | .29695 |
| -300.960 | 450.570 | 1199.20000 | -15.44300 | 15.25200 | .26340 | -.51112 | .16396 | -.62796 | .20228 | -.06629 | .29716 |
| -301.260 | 400.560 | 1199.30000 | -15.44300 | 15.25200 | .26318 | -.51073 | .16385 | -.62749 | .20210 | -.06625 | .29702 |
| | GRADIENT | .00000 | .00000 | .00000 | .00000 | .00000 | .00000 | .00000 | .00000 | .00000 | .00000 |

IA143, AEDC V41A-P8A, O/ET W/R.H. SRB SEPARATING (OVX532) ( 23 MAY 77 )

REFERENCE DATA

SREF = 2690.0000 SQ.FT. XMRP = 1097.0000 IN. XT
LREF = 1290.3000 INCHES YMRP = .0000 IN. YT
BREF = 1290.3000 INCHES ZMRP = 450.0000 IN. ZT
SCALE = .0100

PARAMETRIC DATA

ALPHA = -15.000 BETA = 15.000
DALPHA = -15.000 DBETA = -8.000
X = 1200.000 MACH = 4.500
JET PC = .000

RUN NO. 3176/ 0 RN/L = 2.37 GRADIENT INTERVAL = -5.00/ 5.00

| Y | Z | X | ALPHA | BETA | PHI | CN | CLM | CY | CYN | CBL | CA |
|---|---|---|---|---|---|---|---|---|---|---|---|
| -200.750 | 400.300 | 1199.10001 | -15.44300 | 15.25200 | .26346 | -.51093 | .16385 | -.62752 | .20214 | -.06624 | .29677 |
| -200.750 | 450.170 | 1199.20000 | -15.44300 | 15.25200 | .26328 | -.51096 | .16390 | -.62761 | .20215 | -.06624 | .29703 |
| -200.500 | 500.090 | 1199.10001 | -15.44300 | 15.25200 | .26337 | -.51111 | .16396 | -.62770 | .20219 | -.06626 | .29716 |
| | GRADIENT | .00000 | .00000 | .00000 | .00000 | .00000 | .00000 | .00000 | .00000 | .00000 | .00000 |

IA143, AEDC V41A-P8A, O/ET W/R.H. SRB SEPARATING (OVX533) ( 23 MAY 77 )

REFERENCE DATA

SREF = 2690.0000 SQ.FT. XMRP = 1097.0000 IN. XT
LREF = 1290.3000 INCHES YMRP = .0000 IN. YT
BREF = 1290.3000 INCHES ZMRP = 450.0000 IN. ZT
SCALE = .0100

PARAMETRIC DATA

ALPHA = -15.000 BETA = 15.000
DALPHA = -20.000 DBETA = -8.000
X = 1200.000 MACH = 4.500
JET PC = .000

RUN NO. 3183/ 0 RN/L = 2.38 GRADIENT INTERVAL = -5.00/ 5.00

| Y | Z | X | ALPHA | BETA | PHI | CN | CLM | CY | CYN | CBL | CA |
|---|---|---|---|---|---|---|---|---|---|---|---|
| -200.920 | 501.850 | 1199.70000 | -15.44300 | 15.25200 | .26334 | -.51082 | .16386 | -.62766 | .20218 | -.06626 | .29704 |
| -201.590 | 450.420 | 1199.30000 | -15.44300 | 15.25200 | .26327 | -.51078 | .16386 | -.62758 | .20213 | -.06624 | .29705 |
| -200.880 | 400.510 | 1199.10001 | -15.44300 | 15.25200 | .26342 | -.51109 | .16391 | -.62793 | .20225 | -.06629 | .29709 |
| | GRADIENT | .00000 | .00000 | .00000 | .00000 | .00000 | .00000 | .00000 | .00000 | .00000 | .00000 |

RUN NO. 3182/ 0 RN/L = 2.38 GRADIENT INTERVAL = -5.00/ 5.00

| Y | Z | X | ALPHA | BETA | PHI | CN | CLM | CY | CYN | CBL | CA |
|---|---|---|---|---|---|---|---|---|---|---|---|
| -302.070 | 399.880 | 1198.89999 | -15.44300 | 15.25200 | .26333 | -.51106 | .16392 | -.62763 | .20216 | -.06625 | .29703 |
| -300.560 | 450.590 | 1199.30000 | -15.44300 | 15.25200 | .26324 | -.51091 | .16387 | -.62753 | .20216 | -.06624 | .29693 |
| -298.860 | 500.170 | 1198.70000 | -15.44300 | 15.25200 | .26338 | -.51093 | .16388 | -.62766 | .20219 | -.06625 | .29659 |
| | GRADIENT | .00000 | .00000 | .00000 | .00000 | .00000 | .00000 | .00000 | .00000 | .00000 | .00000 |

IA143, AEDC V41A-P8A, O/ET W/R.H. SRB SEPARATING (OVX534) ( 23 MAY 77 )

REFERENCE DATA

SREF = 2690.0000 SQ.FT. XMRP = 1097.0000 IN. XT
LREF = 1290.3000 INCHES YMRP = .0000 IN. YT
BREF = 1290.3000 INCHES ZMRP = 450.0000 IN. ZT
SCALE = .0100

PARAMETRIC DATA

ALPHA = -15.000 BETA = 15.000
DALPHA = -15.000 DBETA = -8.000
X = 1200.000 MACH = 4.500
JET PC = .000

RUN NO. 3175/ 0 RN/L = 2.36 GRADIENT INTERVAL = -5.00/ 5.00

| Y | Z | X | ALPHA | BETA | PHI | CN | CLM | CY | CYN | CBL | CA |
|---|---|---|---|---|---|---|---|---|---|---|---|
| -301.590 | 300.510 | 1199.30000 | -15.44300 | 15.25200 | .26319 | -.51097 | .16391 | -.62792 | .20225 | -.06630 | .29710 |
| -300.370 | 400.490 | 1199.30000 | -15.44300 | 15.25200 | .26348 | -.51117 | .16394 | -.62783 | .20225 | -.06627 | .29713 |
| -300.270 | 450.280 | 1199.10001 | -15.44300 | 15.25200 | .26342 | -.51133 | .16399 | -.62807 | .20231 | -.06630 | .29709 |
| -300.420 | 500.060 | 1199.00000 | -15.44300 | 15.25200 | .26344 | -.51090 | .16390 | -.62755 | .20218 | -.06624 | .29703 |
| | GRADIENT | .00000 | .00000 | .00000 | .00000 | .00000 | .00000 | .00000 | .00000 | .00000 | .00000 |

IA143, AEDC V41A-P8A, O/ET W/R.H. SRB SEPARATING (OVX535) ( 23 MAY 77 )

REFERENCE DATA

SREF = 2690.0000 SQ.FT. XMRP = 1097.0000 IN. XT
LREF = 1290.3000 INCHES YMRP = .0000 IN. YT
BREF = 1290.3000 INCHES ZMRP = 450.0000 IN. ZT
SCALE = .0100

PARAMETRIC DATA

ALPHA = -15.000 BETA = 15.000
DALPHA = -18.000 DBETA = -8.000
X = 1200.000 MACH = 4.500
JET PC = .000

RUN NO. 3177/ 0 RN/L = 2.36 GRADIENT INTERVAL = -5.00/ 5.00

| Y | Z | X | ALPHA | BETA | PHI | CN | CLM | CY | CYN | CBL | CA |
|---|---|---|---|---|---|---|---|---|---|---|---|
| -300.460 | 400.340 | 1199.10001 | -15.44300 | 15.25200 | .26352 | -.51107 | .16394 | -.62790 | .20228 | -.06627 | .29714 |
| -299.740 | 600.010 | 1199.00000 | -15.44300 | 15.25200 | .26311 | -.51064 | .16378 | -.62749 | .20214 | -.06624 | .29685 |
| -300.000 | 799.330 | 1198.89999 | -15.44300 | 15.25200 | .26339 | -.51081 | .16383 | -.62756 | .20212 | -.06624 | .29684 |
| -300.070 | 998.990 | 1198.70000 | -15.44300 | 15.25200 | .26330 | -.51077 | .16387 | -.62754 | .20210 | -.06624 | .29711 |
| | GRADIENT | .00000 | .00000 | .00000 | .00000 | .00000 | .00000 | .00000 | .00000 | .00000 | .00000 |

IA143, AEDC V41A-P8A, O/ET W/R.H. SRB SEPARATING (OVX536) ( 23 MAY 77 )

REFERENCE DATA

SREF = 2690.0000 SQ.FT. XMRP = 1097.0000 IN. XT
LREF = 1290.3000 INCHES YMRP = .0000 IN. YT
BREF = 1290.3000 INCHES ZMRP = 450.0000 IN. ZT
SCALE = .0100

PARAMETRIC DATA

ALPHA = -15.000 BETA = -15.000
DALPHA = .000 DBETA = .000
X = .000 MACH = 4.500
JET PC = .000

RUN NO. 3464/ 0 RN/L = 2.36 GRADIENT INTERVAL = -5.00/ 5.00

| Y | Z | X | ALPHA | BETA | PHI | CN | CLM | CY | CYN | CBL | CA |
|---|---|---|---|---|---|---|---|---|---|---|---|
| -50.108 | -.139 | -.66932 | -15.44900 | -15.2.900 | -.23818 | -.50904 | .15359 | .57656 | -.19170 | .06269 | .29562 |
| -49.496 | 24.697 | -.62980 | -15.44500 | -15.22100 | -.24140 | -.50780 | .15596 | .58481 | -.19536 | .06385 | .29433 |
| -48.924 | 99.254 | -.57632 | -15.43500 | -15.23100 | -.24976 | -.50166 | .15976 | .60525 | -.20108 | .06586 | .29396 |
| -50.026 | 149.540 | -.58176 | -15.43200 | -15.23300 | -.25597 | -.49311 | .15747 | .61372 | -.20411 | .06629 | .29351 |
| -51.307 | 249.720 | -.65427 | -15.43200 | -15.23600 | -.26047 | -.48521 | .15354 | .61777 | -.20458 | .06603 | .29334 |
| -51.847 | 350.150 | -.51291 | -15.44000 | -15.24300 | -.25963 | -.49160 | .15268 | .61736 | -.20120 | .06556 | .29306 |
| -51.712 | 475.650 | -.61560 | -15.44700 | -15.24700 | -.26731 | -.50347 | .15668 | .62819 | -.20414 | .06598 | .29291 |
| -50.503 | 499.720 | -.62447 | -15.44800 | -15.24800 | -.26889 | -.50559 | .15773 | .62992 | -.20494 | .06608 | .29261 |
| -50.368 | 600.110 | -.44772 | -15.45000 | -15.24600 | -.27492 | -.51032 | .16054 | .63544 | -.20803 | .06605 | .29328 |
| | GRADIENT | .00000 | .00000 | .00000 | .00000 | .00000 | .00000 | .00000 | .00000 | .00000 | .00000 |

IA143, AEDC V41A-P8A, O/ET W/R.H. SRB SEPARATING (OVX536) ( 23 MAY 77 )

REFERENCE DATA

SREF = 2690.0000 SQ.FT. XMRP = 1097.0000 IN. XT
LREF = 1290.3000 INCHES YMRP = .0000 IN. YT
BREF = 1290.3000 INCHES ZMRP = 450.0000 IN. ZT
SCALE = .0100

PARAMETRIC DATA

ALPHA = -15.000 BETA = -15.000
DALPHA = .000 DBETA = .000
X = .000 MACH = 4.500
JET PC = .000

RUN NO. 3465/ 0 RN/L = 2.38 GRADIENT INTERVAL = -5.00/ 5.00

| Y | Z | X | ALPHA | BETA | PHI | CN | CLM | CY | CYN | CBL | CA |
|---|---|---|---|---|---|---|---|---|---|---|---|
| -150.120 | 599.740 | -.57184 | -15.45000 | -15.24600 | -.27535 | -.51083 | .16078 | .63588 | -.20820 | .06606 | .29390 |
| -149.810 | 499.310 | -.63575 | -15.45000 | -15.24600 | -.27355 | -.50894 | .15963 | .63400 | -.20716 | .06603 | .29287 |
| -150.230 | 474.650 | -.58206 | -15.44900 | -15.24700 | -.27195 | -.50762 | .15871 | .63342 | -.20661 | .06613 | .29308 |
| -149.050 | 349.250 | -.51042 | -15.44600 | -15.24600 | -.26832 | -.49651 | .15379 | .62943 | -.20516 | .06612 | .29288 |
| -149.110 | 249.630 | -.63698 | -15.44000 | -15.24300 | -.26796 | -.48768 | .15185 | .62812 | -.20599 | .06614 | .29280 |
| -149.750 | 150.090 | -.58033 | -15.43500 | -15.24100 | -.26439 | -.48708 | .15307 | .62375 | -.20483 | .06606 | .29150 |
| -150.550 | 100.130 | -.68142 | -15.43500 | -15.24100 | -.25915 | -.48965 | .15442 | .61761 | -.20205 | .06588 | .29241 |
| -151.800 | 25.405 | -.68281 | -15.43700 | -15.23800 | -.25480 | -.48833 | .15135 | .60507 | -.19709 | .06416 | .29257 |
| -151.170 | .026 | -.75552 | -15.44000 | -15.23700 | -.25651 | -.48443 | .14801 | .59924 | -.19437 | .06262 | .29305 |
| | GRADIENT | .00000 | .00000 | .00000 | .00000 | .00000 | .00000 | .00000 | .00000 | .00000 | .00000 |

IA143, AEDC V41A-P8A, O/ET W/R.H. SRB SEPARATING (OVX537) ( 23 MAY 77 )

REFERENCE DATA

SREF = 2690.0000 SQ.FT. XMRP = 1097.0000 IN. XT
LREF = 1290.3000 INCHES YMRP = .0000 IN. YT
BREF = 1290.3000 INCHES ZMRP = 450.0000 IN. ZT
SCALE = .0100

PARAMETRIC DATA

ALPHA = -15.000 BETA = -15.000
DALPHA = -5.000 DBETA = .000
X = .000 MACH = 4.500
JET PC = .000

RUN NO. 3478/ 0 RN/L = 2.36 GRADIENT INTERVAL = -5.00/ 5.00

| Y | Z | X | ALPHA | BETA | PHI | CN | CLM | CY | CYN | CBL | CA |
|---|---|---|---|---|---|---|---|---|---|---|---|
| -50.089 | 25.088 | -.54738 | -15.46000 | -15.21400 | -.25383 | -.48822 | .13746 | .56294 | -.18469 | .05647 | .29363 |
| -48.292 | 98.945 | -.65459 | -15.44000 | -15.22400 | -.24602 | -.50090 | .15547 | .58735 | -.19484 | .06314 | .29402 |
| -49.409 | 149.710 | -.50342 | -15.43200 | -15.22900 | -.24613 | -.49703 | .15796 | .59707 | -.19790 | .06499 | .29370 |
| -50.622 | 249.770 | -.66832 | -15.42700 | -15.23100 | -.25355 | -.48428 | .15468 | .60910 | -.20263 | .06591 | .29279 |
| -51.810 | 350.480 | -.36852 | -15.43500 | -15.23900 | -.25543 | -.48354 | .15000 | .61050 | -.19941 | .06521 | .29285 |
| -52.170 | 476.010 | -.40944 | -15.44400 | -15.24800 | -.26041 | -.49564 | .15249 | .62018 | -.20033 | .06569 | .29165 |
| -49.912 | 500.070 | -.44605 | -15.44600 | -15.24800 | -.26337 | -.49856 | .15371 | .62353 | -.20178 | .06577 | .29146 |
| -50.808 | 600.430 | -.39307 | -15.44900 | -15.24700 | -.27073 | -.50744 | .15859 | .63217 | -.20596 | .06611 | .29212 |
| | GRADIENT | .00000 | .00000 | .00000 | .00000 | .00000 | .00000 | .00000 | .00000 | .00000 | .00000 |

IA143, AEDC V41A-P8A, O/ET W/R.H. SRB SEPARATING (OVX537) ( 23 MAY 77 )

REFERENCE DATA

SREF = 2690.0000 SQ.FT. XMRP = 1097.0000 IN. XT
LREF = 1290.3000 INCHES YMRP = .0000 IN. YT
BREF = 1290.3000 INCHES ZMRP = 450.0000 IN. ZT
SCALE = .0100

PARAMETRIC DATA

ALPHA = -15.000 BETA = -15.000
DALPHA = -5.000 DBETA = .000
X = .000 MACH = 4.500
JET PC = .000

RUN NO. 3479/ 0 RN/L = 2.36 GRADIENT INTERVAL = -5.00/ 5.00

| Y | Z | X | ALPHA | BETA | PHI | CN | CLM | CY | CYN | CBL | CA |
|---|---|---|---|---|---|---|---|---|---|---|---|
| -149.950 | 600.070 | -.50790 | -15.45000 | -15.24600 | -.27462 | -.50965 | .16010 | .63555 | -.20798 | .06612 | .29250 |
| -149.820 | 499.350 | -.64880 | -15.44800 | -15.24800 | -.26819 | -.50321 | .15605 | .62998 | -.20465 | .06614 | .29149 |
| -150.200 | 474.640 | -.60892 | -15.44800 | -15.24800 | -.26685 | -.50123 | .15490 | .62862 | -.20398 | .06610 | .29149 |
| -149.300 | 349.590 | -.80188 | -15.44100 | -15.24700 | -.26282 | -.48587 | .14907 | .62288 | -.20205 | .06583 | .29135 |
| -149.860 | 250.060 | -.61718 | -15.43500 | -15.24200 | -.25934 | -.48096 | .14915 | .61756 | -.20150 | .06571 | .29166 |
| -150.500 | 150.470 | -.53055 | -15.43300 | -15.24100 | -.25374 | -.48315 | .15061 | .60837 | -.19756 | .06496 | .29197 |
| -150.820 | 100.340 | -.63554 | -15.43800 | -15.23900 | -.25750 | -.48016 | .14624 | .59835 | -.19260 | .06195 | .29252 |
| -152.770 | 25.857 | -.79860 | -15.44800 | -15.23500 | -.26717 | -.46523 | .13400 | .58483 | -.18567 | .05694 | .29438 |
| | GRADIENT | .00000 | .00000 | .00000 | .00000 | .00000 | .00000 | .00000 | .00000 | .00000 | .00000 |

IA143, AEDC V41A-P8A, O/ET W/R.H. SRB SEPARATING (OVX538) ( 23 MAY 77 )

REFERENCE DATA

SREF = 2690.0000 SQ.FT. XMRP = 1097.0000 IN. XT
LREF = 1290.3000 INCHES YMRP = .0000 IN. YT
BREF = 1290.3000 INCHES ZMRP = 450.0000 IN. ZT
SCALE = .0100

PARAMETRIC DATA

ALPHA = -15.000 BETA = -15.000
DALPHA = .000 DBETA = -4.000
X = .000 MACH = 4.500
JET PC = .000

RUN NO. 3467/ 0 RN/L = 2.38 GRADIENT INTERVAL = -5.00/ 5.00

| Y | Z | X | ALPHA | BETA | PHI | CN | CLM | CY | CYN | CBL | CA |
|---|---|---|---|---|---|---|---|---|---|---|---|
| -50.481 | 249.980 | -.42101 | -15.42700 | -15.23200 | -.25936 | -.48067 | .15332 | .61546 | -.20533 | .06604 | .29337 |
| -52.147 | 350.190 | -.22744 | -15.43700 | -15.24100 | -.25638 | -.48572 | .15055 | .61297 | -.19993 | .06545 | .29315 |
| -51.730 | 476.000 | -.23606 | -15.44600 | -15.24700 | -.26417 | -.50120 | .15552 | .62407 | -.20231 | .06580 | .29253 |
| -50.384 | 499.790 | -.55240 | -15.44700 | -15.24700 | -.26667 | -.50328 | .15648 | .62705 | -.20355 | .06586 | .29258 |
| -50.620 | 600.180 | -.42232 | -15.45000 | -15.24600 | -.27369 | -.50927 | .15986 | .63412 | -.20723 | .06603 | .29307 |
| | GRADIENT | .00000 | .00000 | .00000 | .00000 | .00000 | .00000 | .00000 | .00000 | .00000 | .00000 |

IA143, AEDC V41A-P8A, O/ET W/R.H. SRB SEPARATING (OVX539) ( 23 MAY 77 )

REFERENCE DATA

SREF = 2690.0000 SQ.FT. XMRP = 1097.0000 IN. XT
LREF = 1290.3000 INCHES YMRP = .0000 IN. YT
BREF = 1290.3000 INCHES ZMRP = 450.0000 IN. ZT
SCALE = .0100

PARAMETRIC DATA

ALPHA = -15.000 BETA = -15.000
DALPHA = -5.000 DBETA = -4.000
X = .000 MACH = 4.500
JET PC = .000

RUN NO. 3477/ 0 RN/L = 2.36 GRADIENT INTERVAL = -5.00/ 5.00

| Y | Z | X | ALPHA | BETA | PHI | CN | CLM | CY | CYN | CBL | CA |
|---|---|---|---|---|---|---|---|---|---|---|---|
| -50.251 | 474.820 | -.47756 | -15.44200 | -15.24800 | -.25760 | -.48886 | .14934 | .61569 | -.19820 | .06532 | .29158 |
| -50.827 | 500.120 | -.52180 | -15.44500 | -15.24800 | -.25989 | -.49337 | .15082 | .61829 | -.19924 | .06539 | .29085 |
| -51.079 | 600.690 | -.32760 | -15.44900 | -15.24800 | -.26874 | -.50584 | .15756 | .62969 | -.20463 | .06603 | .29137 |
| | GRADIENT | .00000 | .00000 | .00000 | .00000 | .00000 | .00000 | .00000 | .00000 | .00000 | .00000 |

IA143, AEDC V41A-P8A, O/ET W/R.H. SRB SEPARATING (OVX540) ( 23 MAY 77 )

REFERENCE DATA

SREF = 2690.0000 SQ.FT. XMRP = 1097.0000 IN. XT
LREF = 1290.3000 INCHES YMRP = .0000 IN. YT
BREF = 1290.3000 INCHES ZMRP = 450.0000 IN. ZT
SCALE = .0100

PARAMETRIC DATA

ALPHA = -15.000 BETA = -15.000
DALPHA = .000 DBETA = -4.000
X = .000 MACH = 4.500
JET PC = .000

RUN NO. 3466/ 0 RN/L = 2.38 GRADIENT INTERVAL = -5.00/ 5.00

| Y | Z | X | ALPHA | BETA | PHI | CN | CLM | CY | CYN | CBL | CA |
|---|---|---|---|---|---|---|---|---|---|---|---|
| -150.680 | -.012 | -.73969 | -15.43600 | -15.23400 | -.23842 | -.48581 | .14805 | .57608 | -.18473 | .06152 | .29514 |
| -149.240 | 24.736 | -.51989 | -15.43500 | -15.23400 | -.24119 | -.48717 | .15029 | .58331 | -.18821 | .06255 | .29472 |
| -148.700 | 99.073 | -.48878 | -15.43000 | -15.23900 | -.24860 | -.48776 | .15426 | .60496 | -.19729 | .06550 | .29350 |
| -149.640 | 149.370 | -.38920 | -15.43100 | -15.23900 | -.26035 | -.48138 | .15156 | .61724 | -.20290 | .06568 | .29288 |
| -150.900 | 249.420 | -.38701 | -15.43600 | -15.24100 | -.26367 | -.48140 | .14982 | .62292 | -.20450 | .06606 | .29262 |
| -151.540 | 349.730 | -.40853 | -15.44300 | -15.24600 | -.26481 | -.48957 | .15082 | .62526 | -.20333 | .06596 | .29235 |
| -152.280 | 475.160 | -.70318 | -15.44800 | -15.24800 | -.26854 | -.50455 | .15707 | .63007 | -.20487 | .06612 | .29249 |
| -149.890 | 499.740 | -.46193 | -15.45000 | -15.24800 | -.27068 | -.50683 | .15818 | .63224 | -.20585 | .06617 | .29285 |
| -150.710 | 599.970 | -.40567 | -15.45000 | -15.24600 | -.27518 | -.51061 | .16067 | .63588 | -.20820 | .06606 | .29358 |
| | GRADIENT | .00000 | .00000 | .00000 | .00000 | .00000 | .00000 | .00000 | .00000 | .00000 | .00000 |

IA143, AEDC V41A-P8A, O/ET W/R.H. SRB SEPARATING (OVX541) ( 23 MAY 77 )

REFERENCE DATA

SREF = 2690.0000 SQ.FT. XMRP = 1097.0000 IN. XT
LREF = 1290.3000 INCHES YMRP = .0000 IN. YT
BREF = 1290.3000 INCHES ZMRP = 450.0000 IN. ZT
SCALE = .0100

PARAMETRIC DATA

ALPHA = -15.000 BETA = -15.000
DALPHA = -5.000 DBETA = -4.000
X = .000 MACH = 4.500
JET PC = .000

RUN NO. 3476/ 0 RN/L = 2.36 GRADIENT INTERVAL = -5.00/ 5.00

| Y | Z | X | ALPHA | BETA | PHI | CN | CLM | CY | CYN | CBL | CA |
|---|---|---|---|---|---|---|---|---|---|---|---|
| -150.480 | 25.207 | -.48189 | -15.44400 | -15.22900 | -.24639 | -.46806 | .13416 | .55660 | -.17501 | .05560 | .29363 |
| -147.580 | 99.021 | -.59271 | -15.43400 | -15.23500 | -.24468 | -.47979 | .14704 | .58177 | -.18647 | .06133 | .29446 |
| -149.180 | 149.480 | -.56105 | -15.42900 | -15.23700 | -.24759 | -.47880 | .14948 | .59686 | -.19362 | .06400 | .29308 |
| -149.950 | 249.460 | -.39812 | -15.43000 | -15.24000 | -.25350 | -.47614 | .14830 | .61027 | -.19926 | .06558 | .29283 |
| -151.380 | 349.930 | -.45302 | -15.43800 | -15.24500 | -.25831 | -.48037 | .14703 | .61770 | -.20013 | .06571 | .29176 |
| -151.910 | 475.190 | -.42004 | -15.44600 | -15.24900 | -.26286 | -.49535 | .15147 | .62381 | -.20149 | .06588 | .29091 |
| -150.450 | 499.980 | -.54110 | -15.44700 | -15.24900 | -.26455 | -.49860 | .15321 | .62577 | -.20241 | .06597 | .29091 |
| -150.370 | 600.320 | -.31849 | -15.44900 | -15.24700 | -.27237 | -.50806 | .15888 | .63356 | -.20667 | .06609 | .29147 |
| | GRADIENT | .00000 | .00000 | .00000 | .00000 | .00000 | .00000 | .00000 | .00000 | .00000 | .00000 |

IA143, AEDC V41A-P8A, O/ET W/R.H. SRB SEPARATING (OVX542) ( 23 MAY 77 )

REFERENCE DATA

SREF = 2690.0000 SQ.FT. XMRP = 1097.0000 IN. XT
LREF = 1290.3000 INCHES YMRP = .0000 IN. YT
BREF = 1290.3000 INCHES ZMRP = 450.0000 IN. ZT
SCALE = .0100

PARAMETRIC DATA

ALPHA = -15.000 BETA = -15.000
DALPHA = .000 DBETA = .000
X = 300.000 MACH = 4.500
JET PC = .000

RUN NO. 3468/ 0 RN/L = 2.37 GRADIENT INTERVAL = -5.00/ 5.00

| Y | Z | X | ALPHA | BETA | PHI | CN | CLM | CY | CYN | CBL | CA |
|---|---|---|---|---|---|---|---|---|---|---|---|
| -49.763 | 100.000 | 299.43000 | -15.44100 | -15.24100 | -.26088 | -.50228 | .15842 | .61852 | -.20276 | .06576 | .29313 |
| -50.792 | 249.260 | 299.31000 | -15.43900 | -15.24200 | -.26735 | -.49141 | .15453 | .62688 | -.20595 | .06610 | .29326 |
| -50.707 | 299.910 | 299.28000 | -15.44100 | -15.24400 | -.26660 | -.49151 | .15332 | .62638 | -.20457 | .06596 | .29315 |
| -51.396 | 399.960 | 299.42000 | -15.44800 | -15.24700 | -.26736 | -.50325 | .15648 | .62787 | -.20402 | .06596 | .29295 |
| -50.362 | 424.810 | 299.33000 | -15.44800 | -15.24800 | -.26869 | -.50514 | .15746 | .62981 | -.20488 | .06608 | .29275 |
| -50.692 | 500.260 | 299.42000 | -15.44900 | -15.24700 | -.27226 | -.50818 | .15926 | .63306 | -.20665 | .06608 | .29292 |
| -51.232 | 600.540 | 299.53000 | -15.45000 | -15.24600 | -.27517 | -.51050 | .16063 | .63588 | -.20823 | .06608 | .29343 |
| | GRADIENT | .00000 | .00000 | .00000 | .00000 | .00000 | .00000 | .00000 | .00000 | .00000 | .00000 |

IA143, AEDC V41A-P8A, O/ET W/R.H. SRB SEPARATING (OVX542) ( 23 MAY 77 )

REFERENCE DATA

SREF = 2690.0000 SQ.FT. XMRP = 1097.0000 IN. XT
LREF = 1290.3000 INCHES YMRP = .0000 IN. YT
BREF = 1290.3000 INCHES ZMRP = 450.0000 IN. ZT
SCALE = .0100

PARAMETRIC DATA

ALPHA = -15.000 BETA = -15.000
DALPHA = .000 DBETA = .000
X = 300.000 MACH = 4.500
JET PC = .000

RUN NO. 3469/ 0 RN/L = 2.37 GRADIENT INTERVAL = -5.00/ 5.00

| Y | Z | X | ALPHA | BETA | PHI | CN | CLM | CY | CYN | CBL | CA |
|---|---|---|---|---|---|---|---|---|---|---|---|
| -199.560 | 600.290 | 299.57000 | -15.45000 | -15.24600 | -.27520 | -.51028 | .16056 | .63554 | -.20814 | .06604 | .29351 |
| -199.460 | 499.030 | 299.41000 | -15.45000 | -15.24600 | -.27515 | -.51052 | .16059 | .63579 | -.20822 | .06606 | .29334 |
| -199.840 | 424.200 | 299.17000 | -15.45000 | -15.24600 | -.27393 | -.50907 | .15971 | .63451 | -.20743 | .06605 | .29276 |
| -200.250 | 399.510 | 299.15000 | -15.45000 | -15.24700 | -.27336 | -.50837 | .15921 | .63436 | -.20721 | .06612 | .29293 |
| -199.120 | 299.450 | 299.25000 | -15.44900 | -15.24700 | -.27160 | -.50356 | .15647 | .63279 | -.20651 | .06613 | .29299 |
| -199.820 | 249.900 | 299.35000 | -15.44900 | -15.24600 | -.27283 | -.50130 | .15554 | .63327 | -.20715 | .06605 | .29302 |
| -199.720 | 100.840 | 299.45000 | -15.44500 | -15.24600 | -.27173 | -.49855 | .15538 | .63157 | -.20617 | .06585 | .29204 |
| | GRADIENT | .00000 | .00000 | .00000 | .00000 | .00000 | .00000 | .00000 | .00000 | .00000 | .00000 |

IA143, AEDC V41A-P8A, O/ET W/R.H. SRB SEPARATING (OVX543) ( 23 MAY 77 )

REFERENCE DATA

SREF = 2690.0000 SQ.FT. XMRP = 1097.0000 IN. XT
LREF = 1290.3000 INCHES YMRP = .0000 IN. YT
BREF = 1290.3000 INCHES ZMRP = 450.0000 IN. ZT
SCALE = .0100

PARAMETRIC DATA

ALPHA = -15.000 BETA = -15.000
DALPHA = -10.000 DBETA = .000
X = 300.000 MACH = 4.500
JET PC = .000

RUN NO. 3502/ 0 RN/L = 2.36 GRADIENT INTERVAL = -5.00/ 5.00

| Y | Z | X | ALPHA | BETA | PHI | CN | CLM | CY | CYN | CBL | CA |
|---|---|---|---|---|---|---|---|---|---|---|---|
| -50.058 | 100.480 | 299.33000 | -15.44900 | -15.23500 | -.26600 | -.48816 | .14599 | .59801 | -.19298 | .06019 | .29261 |
| -49.425 | 248.670 | 298.92000 | -15.43400 | -15.23900 | -.25906 | -.49243 | .15619 | .61583 | -.20218 | .06562 | .29205 |
| -50.425 | 300.350 | 299.39000 | -15.43500 | -15.24100 | -.25970 | -.48760 | .15328 | .61618 | -.20136 | .06543 | .29217 |
| -50.804 | 400.430 | 299.43000 | -15.44200 | -15.24700 | -.25928 | -.48903 | .15018 | .61857 | -.19996 | .06567 | .29230 |
| -50.349 | 425.140 | 299.39000 | -15.44400 | -15.24800 | -.25952 | -.49067 | .14987 | .61850 | -.19949 | .06549 | .29186 |
| -50.340 | 500.500 | 299.67000 | -15.44700 | -15.24900 | -.26318 | -.49825 | .15287 | .62377 | -.20148 | .06578 | .29093 |
| -51.327 | 601.330 | 299.81000 | -15.44900 | -15.24800 | -.27011 | -.50652 | .15787 | .63193 | -.20567 | .06617 | .29122 |
| | GRADIENT | .00000 | .00000 | .00000 | .00000 | .00000 | .00000 | .00000 | .00000 | .00000 | .00000 |

IA143, AEDC V41A-P8A, O/ET W/R.H. SRB SEPARATING (OVX544) ( 23 MAY 77 )

REFERENCE DATA

SREF = 2690.0000 SQ.FT. XMRP = 1097.0000 IN. XT
LREF = 1290.3000 INCHES YMRP = .0000 IN. YT
BREF = 1290.3000 INCHES ZMRP = 450.0000 IN. ZT
SCALE = .0100

PARAMETRIC DATA

ALPHA = -15.000 BETA = -15.000
DALPHA = -10.000 DBETA = .000
X = 300.000 MACH = 4.500
JET PC = .000

RUN NO. 3500/ 0 RN/L = 2.36 GRADIENT INTERVAL = -5.00/ 5.00

| Y | Z | X | ALPHA | BETA | PHI | CN | CLM | CY | CYN | CBL | CA |
|---|---|---|---|---|---|---|---|---|---|---|---|
| -200.040 | 100.240 | 299.35000 | -15.45300 | -15.24200 | -.28184 | -.47594 | .13935 | .61597 | -.19770 | .06018 | .29162 |
| -198.830 | 149.570 | 299.34000 | -15.44600 | -15.24400 | -.26992 | -.48666 | .14777 | .62076 | -.20093 | .06387 | .29098 |
| -199.840 | 199.800 | 299.18000 | -15.44400 | -15.24500 | -.26840 | -.48882 | .14982 | .62395 | -.20267 | .06492 | .29069 |
| -199.750 | 249.900 | 299.28000 | -15.44400 | -15.24500 | -.26906 | -.48986 | .15048 | .62627 | -.20374 | .06524 | .29045 |
| -200.450 | 299.890 | 299.12000 | -15.44400 | -15.24600 | -.26744 | -.49233 | .15151 | .62662 | -.20381 | .06563 | .29024 |
| -200.390 | 400.090 | 299.35000 | -15.44700 | -15.24800 | -.26669 | -.49921 | .15355 | .62784 | -.20377 | .06597 | .29032 |
| -200.320 | 425.160 | 299.39000 | -15.44800 | -15.24800 | -.26736 | -.50058 | .15433 | .62852 | -.20408 | .06601 | .29015 |
| -200.520 | 500.440 | 299.42000 | -15.44800 | -15.24700 | -.26994 | -.50567 | .15737 | .63144 | -.20553 | .06609 | .29033 |
| -201.110 | 600.840 | 299.49000 | -15.44900 | -15.24600 | -.27496 | -.50977 | .16010 | .63600 | -.20826 | .06612 | .29173 |
| | GRADIENT | .00000 | .00000 | .00000 | .00000 | .00000 | .00000 | .00000 | .00000 | .00000 | .00000 |

IA143, AEDC V41A-P8A, O/ET W/R.H. SRB SEPARATING (OVX545) ( 23 MAY 77 )

REFERENCE DATA

SREF = 2690.0000 SQ.FT. XMRP = 1097.0000 IN. XT
LREF = 1290.3000 INCHES YMRP = .0000 IN. YT
BREF = 1290.3000 INCHES ZMRP = 450.0000 IN. ZT
SCALE = .0100

PARAMETRIC DATA

ALPHA = -15.000 BETA = -15.000
DALPHA = .000 DBETA = -8.000
X = 300.000 MACH = 4.500
JET PC = .000

RUN NO. 3471/ 0 RN/L = 2.37 GRADIENT INTERVAL = -5.00/ 5.00

| Y | Z | X | ALPHA | BETA | PHI | CN | CLM | CY | CYN | CBL | CA |
|---|---|---|---|---|---|---|---|---|---|---|---|
| -50.232 | 250.010 | 299.47000 | -15.43600 | -15.24000 | -.26761 | -.48884 | .15457 | .62663 | -.20687 | .06614 | .29305 |
| -51.393 | 300.030 | 299.74000 | -15.43700 | -15.24200 | -.26381 | -.48468 | .15113 | .62217 | -.20379 | .06584 | .29351 |
| -52.771 | 400.580 | 299.95000 | -15.44600 | -15.24700 | -.26248 | -.49794 | .15374 | .62164 | -.20114 | .06559 | .29267 |
| -50.407 | 424.780 | 299.49000 | -15.44700 | -15.24700 | -.26500 | -.50134 | .15541 | .62475 | -.20254 | .06577 | .29255 |
| -51.066 | 500.140 | 299.67000 | -15.44800 | -15.24800 | -.26933 | -.50700 | .15849 | .63110 | -.20542 | .06618 | .29282 |
| -51.924 | 600.790 | 299.87000 | -15.45000 | -15.24600 | -.27436 | -.50961 | .16003 | .63500 | -.20769 | .06608 | .29295 |
| | GRADIENT | .00000 | .00000 | .00000 | .00000 | .00000 | .00000 | .00000 | .00000 | .00000 | .00000 |

IA143, AEDC V41A-P8A, O/ET W/R.H. SRB SEPARATING (OVX546) ( 23 MAY 77 )

REFERENCE DATA

SREF = 2690.0000 SQ.FT. XMRP = 1097.0000 IN. XT
LREF = 1290.3000 INCHES YMRP = .0000 IN. YT
BREF = 1290.3000 INCHES ZMRP = 450.0000 IN. ZT
SCALE = .0100

PARAMETRIC DATA

ALPHA = -15.000 BETA = -15.000
DALPHA = -10.000 DBETA = -8.000
X = 300.000 MACH = 4.500
JET PC = .000

RUN NO. 3573/ 0 RN/L = 2.37 GRADIENT INTERVAL = -5.00/ 5.00

| Y | Z | X | ALPHA | BETA | PHI | CN | CLM | CY | CYN | CBL | CA |
|---|---|---|---|---|---|---|---|---|---|---|---|
| -50.529 | 425.060 | 299.39000 | -15.43600 | -15.24700 | -.25495 | -.47943 | .14737 | .61748 | -.19927 | .06618 | .29578 |
| -51.566 | 500.560 | 299.96000 | -15.44100 | -15.25000 | -.25674 | -.48431 | .14763 | .61989 | -.19919 | .06614 | .29488 |
| -53.108 | 602.060 | 300.12000 | -15.44600 | -15.25000 | -.26319 | -.50109 | .15562 | .62933 | -.20368 | .06690 | .29324 |
| | GRADIENT | .00000 | .00000 | .00000 | .00000 | .00000 | .00000 | .00000 | .00000 | .00000 | .00000 |

IA143, AEDC V41A-P8A, O/ET W/R.H. SRB SEPARATING (OVX547) ( 23 MAY 77 )

REFERENCE DATA

SREF = 2690.0000 SQ.FT. XMRP = 1097.0000 IN. XT
LREF = 1290.3000 INCHES YMRP = .0000 IN. YT
BREF = 1290.3000 INCHES ZMRP = 450.0000 IN. ZT
SCALE = .0100

PARAMETRIC DATA

ALPHA = -15.000 BETA = -15.000
DALPHA = .000 DBETA = -8.000
X = 300.000 MACH = 4.500
JET PC = .000

RUN NO. 3470/ 0 RN/L = 2.37 GRADIENT INTERVAL = -5.00/ 5.00

| Y | Z | X | ALPHA | BETA | PHI | CN | CLM | CY | CYN | CBL | CA |
|---|---|---|---|---|---|---|---|---|---|---|---|
| -200.640 | 99.936 | 299.27000 | -15.44100 | -15.24600 | -.26194 | -.49040 | .15205 | .61907 | -.20038 | .06522 | .29246 |
| -200.100 | 248.760 | 299.46000 | -15.44300 | -15.24400 | -.27315 | -.48850 | .15101 | .63269 | -.20764 | .06595 | .29290 |
| -201.030 | 299.680 | 299.54000 | -15.44500 | -15.24600 | -.27115 | -.48990 | .15055 | .63121 | -.20624 | .06596 | .29251 |
| -202.110 | 399.940 | 299.68000 | -15.44800 | -15.24800 | -.26747 | -.50118 | .15473 | .62942 | -.20433 | .06615 | .29190 |
| -200.680 | 424.880 | 299.53000 | -15.44900 | -15.24800 | -.26905 | -.50326 | .15602 | .63015 | -.20481 | .06610 | .29176 |
| -201.180 | 500.440 | 299.52000 | -15.45000 | -15.24600 | -.27372 | -.50927 | .15977 | .63485 | -.20750 | .06612 | .29262 |
| -201.400 | 600.200 | 299.65000 | -15.45100 | -15.24600 | -.27546 | -.51039 | .16061 | .63566 | -.20815 | .06605 | .29355 |
| | GRADIENT | .00000 | .00000 | .00000 | .00000 | .00000 | .00000 | .00000 | .00000 | .00000 | .00000 |

IA143, AEDC V41A-P8A, O/ET W/R.H. SRB SEPARATING (OVX548) ( 23 MAY 77 )

REFERENCE DATA

SREF = 2690.0000 SQ.FT. XMRP = 1097.0000 IN. XT
LREF = 1290.3000 INCHES YMRP = .0000 IN. YT
BREF = 1290.3000 INCHES ZMRP = 450.0000 IN. ZT
SCALE = .0100

PARAMETRIC DATA

ALPHA = -15.000 BETA = -15.000
DALPHA = -10.000 DBETA = -8.000
X = 300.000 MACH = 4.500
JET PC = .000

RUN NO. 3572/ 0 RN/L = 2.37 GRADIENT INTERVAL = -5.00/ 5.00

| Y | Z | X | ALPHA | BETA | PHI | CN | CLM | CY | CYN | CBL | CA |
|---|---|---|---|---|---|---|---|---|---|---|---|
| -200.170 | 100.380 | 299.53000 | -15.44500 | -15.24400 | -.25952 | -.46395 | .13360 | .58896 | -.18461 | .05890 | .29520 |
| -198.340 | 248.270 | 298.98000 | -15.43500 | -15.24600 | -.25698 | -.48098 | .14903 | .61781 | -.20014 | .06595 | .29513 |
| -200.300 | 299.940 | 299.49000 | -15.43600 | -15.24600 | -.25972 | -.47962 | .14811 | .62163 | -.20189 | .06621 | .29523 |
| -201.060 | 400.350 | 299.55000 | -15.43900 | -15.24900 | -.25862 | -.48086 | .14717 | .62335 | -.20173 | .06667 | .29473 |
| -200.550 | 425.040 | 299.50000 | -15.44000 | -15.25000 | -.25850 | -.48232 | .14734 | .62351 | -.20136 | .06666 | .29415 |
| -201.570 | 500.460 | 299.72000 | -15.44500 | -15.25100 | -.25890 | -.49339 | .15099 | .62530 | -.20146 | .06684 | .29329 |
| -201.910 | 600.950 | 299.93000 | -15.44600 | -15.25000 | -.26653 | -.50382 | .15750 | .63322 | -.20569 | .06707 | .29335 |
| | GRADIENT | .00000 | .00000 | .00000 | .00000 | .00000 | .00000 | .00000 | .00000 | .00000 | .00000 |

IA143, AEDC V41A-P8A, O/ET W/R.H. SRB SEPARATING (OVX549) ( 23 MAY 77 )

REFERENCE DATA

SREF = 2690.0000 SQ.FT. XMRP = 1097.0000 IN. XT
LREF = 1290.3000 INCHES YMRP = .0000 IN. YT
BREF = 1290.3000 INCHES ZMRP = 450.0000 IN. ZT
SCALE = .0100

PARAMETRIC DATA

ALPHA = -15.000 BETA = -15.000
DALPHA = -5.000 DBETA = .000
X = 300.000 MACH = 4.500
JET PC = .000

RUN NO. 3480/ 0 RN/L = 2.36 GRADIENT INTERVAL = -5.00/ 5.00

| Y | Z | X | ALPHA | BETA | PHI | CN | CLM | CY | CYN | CBL | CA |
|---|---|---|---|---|---|---|---|---|---|---|---|
| -100.280 | 100.070 | 299.28000 | -15.44000 | -15.24300 | -.25854 | -.49452 | .15429 | .61206 | -.19811 | .06457 | .29312 |
| -99.595 | 149.540 | 299.35000 | -15.43900 | -15.24300 | -.26107 | -.49277 | .15410 | .61757 | -.20102 | .06529 | .29259 |
| -99.899 | 199.690 | 299.24000 | -15.43700 | -15.24200 | -.26355 | -.48905 | .15337 | .62078 | -.20317 | .06559 | .29193 |
| | GRADIENT | .00000 | .00000 | .00000 | .00000 | .00000 | .00000 | .00000 | .00000 | .00000 | .00000 |

RUN NO. 3481/ 0 RN/L = 2.35 GRADIENT INTERVAL = -5.00/ 5.00

| Y | Z | X | ALPHA | BETA | PHI | CN | CLM | CY | CYN | CBL | CA |
|---|---|---|---|---|---|---|---|---|---|---|---|
| -201.520 | 201.070 | 299.38000 | -15.44500 | -15.24600 | -.27221 | -.49573 | .15380 | .63181 | -.20636 | .06583 | .29126 |
| -200.660 | 150.190 | 299.38000 | -15.44500 | -15.24600 | -.27127 | -.49495 | .15346 | .62978 | -.20540 | .06563 | .29149 |
| -201.170 | 100.330 | 299.17000 | -15.44500 | -15.24600 | -.26911 | -.49377 | .15240 | .62595 | -.20349 | .06522 | .29164 |
| | GRADIENT | .00000 | .00000 | .00000 | .00000 | .00000 | .00000 | .00000 | .00000 | .00000 | .00000 |

IA143, AEDC V41A-P8A, O/ET W/R.H. SRB SEPARATING (OVX550) ( 23 MAY 77 )

REFERENCE DATA

SREF = 2690.0000 SQ.FT. XMRP = 1097.0000 IN. XT
LREF = 1290.3000 INCHES YMRP = .0000 IN. YT
BREF = 1290.3000 INCHES ZMRP = 450.0000 IN. ZT
SCALE = .0100

PARAMETRIC DATA

ALPHA = -15.000 BETA = -15.000
DALPHA = -10.000 DBETA = .000
X = 300.000 MACH = 4.500
JET PC = .000

RUN NO. 3501/ 0 RN/L = 2.36 GRADIENT INTERVAL = -5.00/ 5.00

| Y | Z | X | ALPHA | BETA | PHI | CN | CLM | CY | CYN | CBL | CA |
|---|---|---|---|---|---|---|---|---|---|---|---|
| -150.160 | 100.310 | 299.32000 | -15.45000 | -15.24300 | -.27389 | -.47308 | .13793 | .60303 | -.19128 | .05901 | .29274 |
| -149.550 | 149.500 | 299.12000 | -15.44400 | -15.24400 | -.26448 | -.48447 | .14691 | .61159 | -.19643 | .06299 | .29175 |
| -149.820 | 199.730 | 299.21000 | -15.44100 | -15.24500 | -.26315 | -.48733 | .14991 | .61793 | -.20004 | .06476 | .29131 |
| | GRADIENT | .00000 | .00000 | .00000 | .00000 | .00000 | .00000 | .00000 | .00000 | .00000 | .00000 |

IA143, AEDC V41A-P8A, O/ET W/R.H. SRB SEPARATING (OVX551) ( 23 MAY 77 )

REFERENCE DATA

SREF = 2690.0000 SQ.FT. XMRP = 1097.0000 IN. XT
LREF = 1290.3000 INCHES YMRP = .0000 IN. YT
BREF = 1290.3000 INCHES ZMRP = 450.0000 IN. ZT
SCALE = .0100

PARAMETRIC DATA

ALPHA = -15.000 BETA = -15.000
DALPHA = -5.000 DBETA = -4.000
X = 300.000 MACH = 4.500
JET PC = .000

RUN NO. 3483/ 0 RN/L = 2.35 GRADIENT INTERVAL -5.00/ 5.00

| Y | Z | X | ALPHA | BETA | PHI | CN | CLM | CY | CYN | CBL | CA |
|---|---|---|---|---|---|---|---|---|---|---|---|
| -100.120 | 100.140 | 299.57000 | -15.43800 | -15.24200 | -.25419 | -.49638 | .15557 | .60614 | -.19594 | .06429 | .29339 |
| -99.870 | 149.450 | 299.34000 | -15.43600 | -15.24000 | -.25707 | -.49362 | .15575 | .61249 | -.20000 | .06524 | .29283 |
| -99.872 | 199.570 | 299.42000 | -15.43600 | -15.24100 | -.26307 | -.49013 | .15483 | .62104 | -.20385 | .06583 | .29267 |
| -100.850 | 299.750 | 299.60000 | -15.43800 | -15.24400 | -.26465 | -.48515 | .15066 | .62421 | -.20368 | .06590 | .29249 |
| | GRADIENT | .00000 | .00000 | .00000 | .00000 | .00000 | .00000 | .00000 | .00000 | .00000 | .00000 |

IA143, AEDC V41A-P8A, O/ET W/R.H. SRB SEPARATING (OVX552) ( 23 MAY 77 )

REFERENCE DATA

SREF = 2690.0000 SQ.FT. XMRP = 1097.0000 IN. XT
LREF = 1290.3000 INCHES YMRP = .0000 IN. YT
BREF = 1290.3000 INCHES ZMRP = 450.0000 IN. ZT
SCALE = .0100

PARAMETRIC DATA

ALPHA = -15.000 BETA = -15.000
DALPHA = -10.000 DBETA = -4.000
X = 300.000 MACH = 4.500
JET PC = .000

RUN NO. 3570/ 0 RN/L = 2.37 GRADIENT INTERVAL = -5.00/ 5.00

| Y | Z | X | ALPHA | BETA | PHI | CN | CLM | CY | CYN | CBL | CA |
|---|---|---|---|---|---|---|---|---|---|---|---|
| -100.190 | 100.330 | 299.47000 | -15.44200 | -15.23900 | -.25524 | -.47950 | .14384 | .59133 | -.18843 | .06073 | .29609 |
| -99.473 | 149.640 | 299.32000 | -15.43600 | -15.24100 | -.24998 | -.48691 | .15146 | .59982 | -.19302 | .06377 | .29676 |
| -99.566 | 199.710 | 299.28000 | -15.43300 | -15.24300 | -.25260 | -.48863 | .15474 | .61136 | -.19852 | .06574 | .29661 |
| | GRADIENT | .00000 | .00000 | .00000 | .00000 | .00000 | .00000 | .00000 | .00000 | .00000 | .00000 |

RUN NO. 3571/ 0 RN/L = 2.37 GRADIENT INTERVAL = -5.00/ 5.00

| Y | Z | X | ALPHA | BETA | PHI | CN | CLM | CY | CYN | CBL | CA |
|---|---|---|---|---|---|---|---|---|---|---|---|
| -201.790 | 202.200 | 299.87000 | -15.43900 | -15.24800 | -.25652 | -.48353 | .14844 | .61661 | -.19829 | .06563 | .29443 |
| -200.760 | 150.680 | 299.49000 | -15.44200 | -15.24800 | -.25976 | -.47870 | .14414 | .61037 | -.19455 | .06348 | .29499 |
| -201.560 | 100.990 | 299.36000 | -15.45000 | -15.24600 | -.27027 | -.46481 | .13366 | .60126 | -.18910 | .05917 | .29561 |
| | GRADIENT | .00000 | .00000 | .00000 | .00000 | .00000 | .00000 | .00000 | .00000 | .00000 | .00000 |

IA143, AEDC V41A-P8A, O/ET W/R.H. SRB SEPARATING (OVX553) ( 23 MAY 77 )

REFERENCE DATA

SREF = 2690.0000 SQ.FT. XMRP = 1097.0000 IN. XT
LREF = 1290.3000 INCHES YMRP = .0000 IN. YT
BREF = 1290.3000 INCHES ZMRP = 450.0000 IN. ZT
SCALE = .0100

PARAMETRIC DATA

ALPHA = -15.000 BETA = -15.000
DALPHA = -5.000 DBETA = -4.000
X = 300.000 MACH = 4.500
JET PC = .000

RUN NO. 3482/ 0 RN/L = 2.36 GRADIENT INTERVAL = -5.00/ 5.00

| Y | Z | X | ALPHA | BETA | PHI | CN | CLM | CY | CYN | CBL | CA |
|---|---|---|---|---|---|---|---|---|---|---|---|
| -200.390 | 100.100 | 299.40000 | -15.44300 | -15.24700 | -.26108 | -.48845 | .14952 | .61462 | -.19776 | .06440 | .29114 |
| -198.840 | 149.460 | 299.46000 | -15.44200 | -15.24600 | -.26398 | -.48973 | .15097 | .62091 | -.20105 | .06519 | .29140 |
| -199.780 | 199.650 | 299.38000 | -15.44300 | -15.24500 | -.26878 | -.49011 | .15136 | .62614 | -.20392 | .06537 | .29121 |
| | GRADIENT | .00000 | .00000 | .00000 | .00000 | .00000 | .00000 | .00000 | .00000 | .00000 | .00000 |

IA143, AEDC V41A-P8A, O/ET W/R.H. SRB SEPARATING (OVX554) ( 23 MAY 77 )

REFERENCE DATA

SREF = 2690.0000 SQ.FT. XMRP = 1097.0000 IN. XT
LREF = 1290.3000 INCHES YMRP = .0000 IN. YT
BREF = 1290.3000 INCHES ZMRP = 450.0000 IN. ZT
SCALE = .0100

PARAMETRIC DATA

ALPHA = -15.000 BETA = -15.000
DALPHA = -6.000 DBETA = -2.000
X = 300.000 MACH = 4.500
JET PC = .000

RUN NO. 3498/ 0 RN/L = 2.37 GRADIENT INTERVAL = -5.00/ 5.00

| Y | Z | X | ALPHA | BETA | PHI | CN | CLM | CY | CYN | CBL | CA |
|---|---|---|---|---|---|---|---|---|---|---|---|
| -101.120 | 100.110 | 299.20000 | -15.44000 | -15.24200 | -.25702 | -.49379 | .15351 | .60632 | -.19568 | .06365 | .29289 |
| -99.302 | 199.130 | 299.23000 | -15.43500 | -15.24100 | -.26163 | -.48947 | .15407 | .61834 | -.20245 | .06548 | .29211 |
| -100.930 | 299.690 | 299.32000 | -15.43800 | -15.24400 | -.26440 | -.48560 | .15072 | .62403 | -.20352 | .06589 | .29194 |
| | GRADIENT | .00000 | .00000 | .00000 | .00000 | .00000 | .00000 | .00000 | .00000 | .00000 | .00000 |

IA143, AEDC V41A-P8A, O/ET W/R.H. SRB SEPARATING (OVX555) ( 23 MAY 77 )

REFERENCE DATA

SREF = 2690.0000 SQ.FT. XMRP = 1097.0000 IN. XT
LREF = 1290.3000 INCHES YMRP = .0000 IN. YT
BREF = 1290.3000 INCHES ZMRP = 450.0000 IN. ZT
SCALE = .0100

PARAMETRIC DATA

ALPHA = -15.000 BETA = -15.000
DALPHA = -6.000 DBETA = -2.000
X = 300.000 MACH = 4.500
JET PC = .000

RUN NO. 3594/ 0 RN/L = 2.37 GRADIENT INTERVAL = -5.00/ 5.00

| Y | Z | X | ALPHA | BETA | PHI | CN | CLM | CY | CYN | CBL | CA |
|---|---|---|---|---|---|---|---|---|---|---|---|
| -100.130 | 100.220 | 299.33000 | -15.43800 | -15.24400 | -.25341 | -.49159 | .15309 | .60830 | -.19610 | .06473 | .29514 |
| -99.224 | 198.970 | 299.42000 | -15.43300 | -15.24300 | -.25742 | -.48804 | .15410 | .62098 | -.20313 | .06674 | .29449 |
| -101.350 | 299.640 | 299.34000 | -15.43600 | -15.24600 | -.26051 | -.48340 | .15063 | .62615 | -.20418 | .06708 | .29415 |
| | GRADIENT | .00000 | .00000 | .00000 | .00000 | .00000 | .00000 | .00000 | .00000 | .00000 | .00000 |

IA143, AEDC V41A-P8A, O/ET W/R.H. SRB SEPARATING (OVX556) ( 23 MAY 77 )

REFERENCE DATA

SREF = 2690.0000 SQ.FT. XMRP = 1097.0000 IN. XT
LREF = 1290.3000 INCHES YMRP = .0000 IN. YT
BREF = 1290.3000 INCHES ZMRP = 450.0000 IN. ZT
SCALE = .0100

PARAMETRIC DATA

ALPHA = -15.000 BETA = -15.000
DALPHA = .000 DBETA = 4.000
X = 600.000 MACH = 4.500
JET PC = .000

RUN NO. 3474/ 0 RN/L = 2.36 GRADIENT INTERVAL = -5.00/ 5.00

| Y | Z | X | ALPHA | BETA | PHI | CN | CLM | CY | CYN | CBL | CA |
|---|---|---|---|---|---|---|---|---|---|---|---|
| -99.911 | 199.930 | 599.18000 | -15.44600 | -15.24500 | -.27450 | -.49949 | .15598 | .63426 | -.20789 | .06593 | .29306 |
| -99.618 | 249.620 | 599.36000 | -15.44700 | -15.24500 | -.27471 | -.49857 | .15525 | .63449 | -.20813 | .06599 | .29314 |
| -102.240 | 400.130 | 599.03000 | -15.44900 | -15.24700 | -.27128 | -.50626 | .15795 | .63257 | -.20621 | .06614 | .29258 |
| -100.150 | 449.750 | 599.24000 | -15.45000 | -15.24700 | -.27408 | -.50951 | .15984 | .63508 | -.20758 | .06614 | .29296 |
| -100.370 | 499.610 | 599.26000 | -15.45000 | -15.24600 | -.27523 | -.51032 | .16051 | .63586 | -.20823 | .06608 | .29316 |
| -100.250 | 599.950 | 599.19000 | -15.45000 | -15.24600 | -.27524 | -.51036 | .16052 | .63570 | -.20820 | .06604 | .29339 |
| | GRADIENT | .00000 | .00000 | .00000 | .00000 | .00000 | .00000 | .00000 | .00000 | .00000 | .00000 |

RUN NO. 3475/ 0 RN/L = 2.36 GRADIENT INTERVAL = -5.00/ 5.00

| Y | Z | X | ALPHA | BETA | PHI | CN | CLM | CY | CYN | CBL | CA |
|---|---|---|---|---|---|---|---|---|---|---|---|
| -300.730 | 600.520 | 599.04000 | -15.45000 | -15.24600 | -.27540 | -.51036 | .16055 | .63572 | -.20822 | .06604 | .29351 |
| -299.340 | 499.350 | 599.17000 | -15.45000 | -15.24600 | -.27518 | -.51014 | .16046 | .63562 | -.20817 | .06605 | .29337 |
| -299.800 | 449.590 | 599.35000 | -15.45000 | -15.24600 | -.27533 | -.51024 | .16050 | .63572 | -.20821 | .06606 | .29333 |
| -299.690 | 399.650 | 599.25000 | -15.45000 | -15.24600 | -.27527 | -.51029 | .16056 | .63584 | -.20821 | .06606 | .29360 |
| -299.390 | 249.930 | 599.25000 | -15.45000 | -15.24600 | -.27542 | -.51038 | .16049 | .63608 | -.20828 | .06610 | .29314 |
| -300.400 | 200.010 | 599.10000 | -15.45000 | -15.24600 | -.27504 | -.50998 | .16034 | .63562 | -.20811 | .06607 | .29281 |
| | GRADIENT | .00000 | .00000 | .00000 | .00000 | .00000 | .00000 | .00000 | .00000 | .00000 | .00000 |

IA143, AEDC V41A-P8A, O/ET W/R.H. SRB SEPARATING (OVX557) ( 23 MAY 77 )

REFERENCE DATA

SREF = 2690.0000 SQ.FT. XMRP = 1097.0000 IN. XT
LREF = 1290.3000 INCHES YMRP = .0000 IN. YT
BREF = 1290.3000 INCHES ZMRP = 450.0000 IN. ZT
SCALE = .0100

PARAMETRIC DATA

ALPHA = -15.000 BETA = -15.000
DALPHA = -15.000 DBETA = 4.000
X = 600.000 MACH = 4.500
JET PC = .000

RUN NO. 3595/ 0 RN/L = 2.36 GRADIENT INTERVAL = -5.00/ 5.00

| Y | Z | X | ALPHA | BETA | PHI | CN | CLM | CY | CYN | CBL | CA |
|---|---|---|---|---|---|---|---|---|---|---|---|
| -100.210 | 200.630 | 599.18000 | -15.44000 | -15.24600 | -.26077 | -.48908 | .15137 | .62153 | -.20136 | .06585 | .29429 |
| -99.492 | 250.060 | 599.22000 | -15.44000 | -15.24600 | -.26304 | -.48818 | .15138 | .62507 | -.20332 | .06622 | .29392 |
| -100.820 | 400.260 | 599.08000 | -15.44200 | -15.24900 | -.26154 | -.48814 | .14972 | .62760 | -.20336 | .06690 | .29287 |
| -100.260 | 450.220 | 599.18000 | -15.44500 | -15.25100 | -.25950 | -.49599 | .15238 | .62688 | -.20252 | .06707 | .29268 |
| -100.050 | 500.430 | 599.50000 | -15.44500 | -15.25000 | -.26282 | -.50064 | .15505 | .63019 | -.20433 | .06712 | .29238 |
| -100.600 | 600.810 | 599.40000 | -15.44700 | -15.24800 | -.26999 | -.50658 | .15910 | .63711 | -.20816 | .06722 | .29313 |
| | GRADIENT | .00000 | .00000 | .00000 | .00000 | .00000 | .00000 | .00000 | .00000 | .00000 | .00000 |

IA143, AEDC V41A-P8A, O/ET W/R.H. SRB SEPARATING (OVX557) ( 23 MAY 77 )

REFERENCE DATA

SREF = 2690.0000 SQ.FT. XMRP = 1097.0000 IN. XT
LREF = 1290.3000 INCHES YMRP = .0000 IN. YT
BREF = 1290.3000 INCHES ZMRP = 450.0000 IN. ZT
SCALE = .0100

PARAMETRIC DATA

ALPHA = -15.000 BETA = -15.000
DALPHA = -15.000 DBETA = 4.000
X = 600.000 MACH = 4.500
JET PC = .000

RUN NO. 3596/ 0 RN/L = 2.36 GRADIENT INTERVAL = -5.00/ 5.00

| Y | Z | X | ALPHA | BETA | PHI | CN | CLM | CY | CYN | CBL | CA |
|---|---|---|---|---|---|---|---|---|---|---|---|
| -300.900 | 602.700 | 599.83000 | -15.44700 | -15.24800 | -.27096 | -.50738 | .15978 | .63806 | -.20879 | .06727 | .29431 |
| -299.000 | 499.690 | 599.16000 | -15.44700 | -15.24800 | -.27069 | -.50717 | .15968 | .63783 | -.20869 | .06725 | .29384 |
| -299.930 | 450.150 | 599.21000 | -15.44700 | -15.24800 | -.27079 | -.50706 | .15955 | .63788 | -.20870 | .06723 | .29338 |
| -299.430 | 400.270 | 599.27000 | -15.44600 | -15.24800 | -.27059 | -.50667 | .15932 | .63782 | -.20858 | .06726 | .29293 |
| -300.270 | 250.970 | 599.30000 | -15.44600 | -15.24900 | -.26866 | -.50572 | .15862 | .63645 | -.20764 | .06731 | .29358 |
| -299.790 | 200.830 | 599.46000 | -15.44600 | -15.24900 | -.26829 | -.50546 | .15839 | .63597 | -.20744 | .06729 | .29354 |
| | GRADIENT | .00000 | .00000 | .00000 | .00000 | .00000 | .00000 | .00000 | .00000 | .00000 | .00000 |

IA143, AEDC V41A-P8A, O/ET W/R.H. SRB SEPARATING (OVX558) ( 23 MAY 77 )

REFERENCE DATA

SREF = 2690.0000 SQ.FT. XMRP = 1097.0000 IN. XT
LREF = 1290.3000 INCHES YMRP = .0000 IN. YT
BREF = 1290.3000 INCHES ZMRP = 450.0000 IN. ZT
SCALE = .0100

PARAMETRIC DATA

ALPHA = -15.000 BETA = -15.000
DALPHA = .000 DBETA = -12.000
X = 600.000 MACH = 4.500
JET PC = .000

RUN NO. 3472/ 0 RN/L = 2.37 GRADIENT INTERVAL = -5.00/ 5.00

| Y | Z | X | ALPHA | BETA | PHI | CN | CLM | CY | CYN | CBL | CA |
|---|---|---|---|---|---|---|---|---|---|---|---|
| -100.430 | 249.830 | 599.43000 | -15.44300 | -15.24300 | -.27242 | -.49272 | .15392 | .63101 | -.20723 | .06583 | .29299 |
| -100.210 | 399.810 | 599.38000 | -15.44700 | -15.24800 | -.26462 | -.49781 | .15304 | .62492 | -.20224 | .06581 | .29151 |
| -100.660 | 450.340 | 599.47000 | -15.44800 | -15.24800 | -.26843 | -.50553 | .15734 | .62995 | -.20471 | .06608 | .29213 |
| -100.440 | 499.720 | 599.59000 | -15.45000 | -15.24700 | -.27270 | -.50859 | .15927 | .63367 | -.20677 | .06608 | .29275 |
| -100.850 | 599.890 | 599.84000 | -15.45000 | -15.24600 | -.27520 | -.51032 | .16053 | .63552 | -.20812 | .06602 | .29325 |
| | GRADIENT | .00000 | .00000 | .00000 | .00000 | .00000 | .00000 | .00000 | .00000 | .00000 | .00000 |

IA143, AEDC V41A-P8A, O/ET W/R.H. SRB SEPARATING (OVX559) ( 23 MAY 77 )

REFERENCE DATA

SREF = 2690.0000 SQ.FT. XMRP = 1097.0000 IN. XT
LREF = 1290.3000 INCHES YMRP = .0000 IN. YT
BREF = 1290.3000 INCHES ZMRP = 450.0000 IN. ZT
SCALE = .0100

PARAMETRIC DATA

ALPHA = -15.000 BETA = -15.000
DALPHA = -15.000 DBETA = -12.000
X = 600.000 MACH = 4.500
JET PC = .000

RUN NO. 3601/ 0 RN/L = 2.37 GRADIENT INTERVAL = -5.00/ 5.00

| Y | Z | X | ALPHA | BETA | PHI | CN | CLM | CY | CYN | CBL | CA |
|---|---|---|---|---|---|---|---|---|---|---|---|
| -100.650 | 450.370 | 599.39000 | -15.44000 | -15.24900 | -.25862 | -.48360 | .14784 | .62304 | -.20142 | .06663 | .29299 |
| -101.940 | 500.480 | 599.48000 | -15.44300 | -15.25100 | -.25810 | -.48670 | .14792 | .62357 | -.20095 | .06675 | .29254 |
| -102.840 | 601.420 | 599.97000 | -15.44600 | -15.25000 | -.26391 | -.49901 | .15378 | .62928 | -.20386 | .06682 | .29044 |
| | GRADIENT | .00000 | .00000 | .00000 | .00000 | .00000 | .00000 | .00000 | .00000 | .00000 | .00000 |

IA143, AEDC V41A-P8A, O/ET W/R.H. SRB SEPARATING (OVX560) ( 23 MAY 77 )

REFERENCE DATA

SREF = 2690.0000 SQ.FT. XMRP = 1097.0000 IN. XT
LREF = 1290.3000 INCHES YMRP = .0000 IN. YT
BREF = 1290.3000 INCHES ZMRP = 450.0000 IN. ZT
SCALE = .0100

PARAMETRIC DATA

ALPHA = -15.000 BETA = -15.000
DALPHA = .000 DBETA = -12.000
X = 600.000 MACH = 4.500
JET PC = .000

RUN NO. 3473/ 0 RN/L = 2.36 GRADIENT INTERVAL = -5.00/ 5.00

| Y | Z | X | ALPHA | BETA | PHI | CN | CLM | CY | CYN | CBL | CA |
|---|---|---|---|---|---|---|---|---|---|---|---|
| -300.330 | 199.950 | 599.36000 | -15.44800 | -15.24700 | -.26893 | -.50304 | .15586 | .62938 | -.20490 | .06596 | .29136 |
| -300.380 | 249.370 | 599.45000 | -15.44900 | -15.24700 | -.26991 | -.50385 | .15632 | .63117 | -.20563 | .06609 | .29152 |
| -303.150 | 399.610 | 600.04000 | -15.44900 | -15.24700 | -.27380 | -.50905 | .15965 | .63487 | -.20746 | .06613 | .29184 |
| -301.290 | 450.160 | 599.66000 | -15.45000 | -15.24600 | -.27522 | -.51011 | .16039 | .63588 | -.20821 | .06610 | .29258 |
| -300.510 | 500.090 | 599.66000 | -15.45000 | -15.24600 | -.27511 | -.51012 | .16047 | .63560 | -.20814 | .06606 | .29312 |
| -301.160 | 600.170 | 599.65000 | -15.45000 | -15.24600 | -.27534 | -.51051 | .16059 | .63600 | -.20826 | .06611 | .29358 |
| | GRADIENT | .00000 | .00000 | .00000 | .00000 | .00000 | .00000 | .00000 | .00000 | .00000 | .00000 |

IA143, AEDC V41A-P8A, O/ET W/R.H. SRB SEPARATING (OVX561) ( 23 MAY 77 )

REFERENCE DATA

SREF = 2690.0000 SQ.FT. XMRP = 1097.0000 IN. XT
LREF = 1290.3000 INCHES YMRP = .0000 IN. YT
BREF = 1290.3000 INCHES ZMRP = 450.0000 IN. ZT
SCALE = .0100

PARAMETRIC DATA

ALPHA = -15.000 BETA = -15.000
DALPHA = .000 DBETA = -12.000
X = 600.000 MACH = 4.500
JET PC = .000

RUN NO. 3497/ 0 RN/L = 2.35 GRADIENT INTERVAL = -5.00/ 5.00

| Y | Z | X | ALPHA | BETA | PHI | CN | CLM | CY | CYN | CBL | CA |
|---|---|---|---|---|---|---|---|---|---|---|---|
| -300.380 | 199.890 | 599.43000 | -15.44800 | -15.24700 | -.26857 | -.50271 | .15560 | .62959 | -.20500 | .06599 | .29098 |
| -300.440 | 249.300 | 599.38000 | -15.44900 | -15.24700 | -.27006 | -.50354 | .15612 | .63131 | -.20567 | .06610 | .29122 |
| -302.940 | 399.590 | 600.14000 | -15.44900 | -15.24600 | -.27365 | -.50880 | .15939 | .63470 | -.20742 | .06610 | .29130 |
| -301.530 | 450.160 | 599.72000 | -15.44900 | -15.24600 | -.27503 | -.50996 | .16020 | .63592 | -.20825 | .06609 | .29200 |
| -300.790 | 500.040 | 599.56000 | -15.44900 | -15.24500 | -.27502 | -.50980 | .16023 | .63575 | -.20824 | .06606 | .29258 |
| -301.240 | 600.150 | 599.54000 | -15.45000 | -15.24500 | -.27514 | -.51016 | .16031 | .63584 | -.20826 | .06607 | .29294 |
| | GRADIENT | .00000 | .00000 | .00000 | .00000 | .00000 | .00000 | .00000 | .00000 | .00000 | .00000 |

IA143, AEDC V41A-P8A, O/ET W/R.H. SRB SEPARATING (OVX562) ( 23 MAY 77 )

REFERENCE DATA

SREF = 2690.0000 SQ.FT. XMRP = 1097.0000 IN. XT
LREF = 1290.3000 INCHES YMRP = .0000 IN. YT
BREF = 1290.3000 INCHES ZMRP = 450.0000 IN. ZT
SCALE = .0100

PARAMETRIC DATA

ALPHA = -15.000 BETA = -15.000
DALPHA = -15.000 DBETA = -12.000
X = 600.000 MACH = 4.500
JET PC = .000

RUN NO. 3602/ 0 RN/L = 2.38 GRADIENT INTERVAL = -5.00/ 5.00

| Y | Z | X | ALPHA | BETA | PHI | CN | CLM | CY | CYN | CBL | CA |
|---|---|---|---|---|---|---|---|---|---|---|---|
| -300.430 | 200.330 | 599.28000 | -15.44600 | -15.25000 | -.25551 | -.48741 | .14589 | .61310 | -.19583 | .06500 | .29093 |
| -300.060 | 249.650 | 598.89000 | -15.44400 | -15.25000 | -.25428 | -.49017 | .14832 | .61580 | -.19743 | .06586 | .29114 |
| -300.500 | 399.450 | 599.16000 | -15.44500 | -15.25100 | -.25849 | -.49430 | .15089 | .62316 | -.20071 | .06657 | .29061 |
| -300.920 | 450.440 | 599.42000 | -15.44500 | -15.25100 | -.25979 | -.49747 | .15277 | .62586 | -.20208 | .06687 | .29030 |
| -300.800 | 500.400 | 599.40000 | -15.44600 | -15.25000 | -.26367 | -.50104 | .15500 | .62987 | -.20416 | .06699 | .29014 |
| -302.940 | 601.000 | 599.67000 | -15.44700 | -15.24900 | -.26991 | -.50526 | .15826 | .63598 | -.20755 | .06710 | .29081 |
| | GRADIENT | .00000 | .00000 | .00000 | .00000 | .00000 | .00000 | .00000 | .00000 | .00000 | .00000 |

IA143, AEDC V41A-P8A, O/ET W/R.H. SRB SEPARATING (OVX563) ( 23 MAY 77 )

REFERENCE DATA

SREF = 2690.0000 SQ.FT. XMRP = 1097.0000 IN. XT
LREF = 1290.3000 INCHES YMRP = .0000 IN. YT
BREF = 1290.3000 INCHES ZMRP = 450.0000 IN. ZT
SCALE = .0100

PARAMETRIC DATA

ALPHA = -15.000 BETA = -15.000
DALPHA = -7.000 DBETA = -4.000
X = 600.000 MACH = 4.500
JET PC = .000

RUN NO. 3499/ 0 RN/L = 2.36 GRADIENT INTERVAL = -5.00/ 5.00

| Y | Z | X | ALPHA | BETA | PHI | CN | CLM | CY | CYN | CBL | CA |
|---|---|---|---|---|---|---|---|---|---|---|---|
| -199.650 | 200.230 | 599.35000 | -15.44500 | -15.24600 | -.26692 | -.49636 | .15324 | .62552 | -.20305 | .06546 | .29102 |
| -200.450 | 299.370 | 599.24000 | -15.44700 | -15.24700 | -.26892 | -.49950 | .15406 | .62971 | -.20493 | .06594 | .29103 |
| -201.370 | 400.080 | 599.28000 | -15.44800 | -15.24700 | -.26946 | -.50410 | .15647 | .63085 | -.20529 | .06609 | .29095 |
| | GRADIENT | .00000 | .00000 | .00000 | .00000 | .00000 | .00000 | .00000 | .00000 | .00000 | .00000 |

IA143, AEDC V41A-P8A, O/ET W/R.H. SRB SEPARATING (OVX564) ( 23 MAY 77 )

REFERENCE DATA

SREF = 2690.0000 SQ.FT. XMRP = 1097.0000 IN. XT
LREF = 1290.3000 INCHES YMRP = .0000 IN. YT
BREF = 1290.3000 INCHES ZMRP = 450.0000 IN. ZT
SCALE = .0100

PARAMETRIC DATA

ALPHA = -15.000 BETA = -15.000
DALPHA = -5.000 DBETA = .000
X = 600.000 MACH = 4.500
JET PC = .000

RUN NO. 3484/ 0 RN/L = 2.35 GRADIENT INTERVAL = -5.00/ 5.00

| Y | Z | X | ALPHA | BETA | PHI | CN | CLM | CY | CYN | CBL | CA |
|---|---|---|---|---|---|---|---|---|---|---|---|
| -99.688 | 200.110 | 599.37000 | -15.44400 | -15.24500 | -.27070 | -.49574 | .15454 | .62969 | -.20581 | .06574 | .29209 |
| -100.370 | 299.610 | 599.28000 | -15.44400 | -15.24500 | -.27081 | -.49303 | .15306 | .63106 | -.20646 | .06600 | .29253 |
| -101.530 | 400.180 | 599.30000 | -15.44800 | -15.24800 | -.2673[illegible] | -.50156 | .15503 | .62929 | -.20430 | .06617 | .29206 |
| | GRADIENT | .00000 | .00000 | .00000 | .00000 | .00000 | .00000 | .00000 | .00000 | .00000 | .00000 |

RUN NO. 3485/ 0 RN/L = 2.36 GRADIENT INTERVAL = -5.00/ 5.00

| Y | Z | X | ALPHA | BETA | PHI | CN | CLM | CY | CYN | CBL | CA |
|---|---|---|---|---|---|---|---|---|---|---|---|
| -301.350 | 401.480 | 599.25000 | -15.45000 | -15.24600 | -.27497 | -.51004 | .16037 | .63603 | -.20827 | .06614 | .29279 |
| -299.710 | 300.030 | 599.21000 | -15.44900 | -15.24600 | -.27442 | -.50937 | .15995 | .63527 | -.20786 | .06611 | .29212 |
| -300.290 | 200.390 | 599.20000 | -15.44900 | -15.24700 | -.27317 | -.50855 | .15933 | .63453 | -.20732 | .06616 | .29212 |
| | GRADIENT | .00000 | .00000 | .00000 | .00000 | .00000 | .00000 | .00000 | .00000 | .00000 | .00000 |

IA143, AEDC V41A-P8A, O/ET W/R.H. SRB SEPARATING (OVX565) ( 23 MAY 77 )

REFERENCE DATA

SREF = 2690.0000 SQ.FT. XMRP = 1097.0000 IN. XT
LREF = 1290.3000 INCHES YMRP = .0000 IN. YT
BREF = 1290.3000 INCHES ZMRP = 450.0000 IN. ZT
SCALE = .0100

PARAMETRIC DATA

ALPHA = -15.000 BETA = -15.000
DALPHA = -10.000 DBETA = .000
X = 600.000 MACH = 4.500
JET PC = .000

RUN NO. 3579/ 0 RN/L = 2.38 GRADIENT INTERVAL = -5.00/ 5.00

| Y | Z | X | ALPHA | BETA | PHI | CN | CLM | CY | CYN | CBL | CA |
|---|---|---|---|---|---|---|---|---|---|---|---|
| -100.090 | 200.390 | 599.20000 | -15.44000 | -15.24600 | -.26410 | -.49120 | .15316 | .62661 | -.20381 | .06629 | .29511 |
| -100.040 | 299.800 | 599.22000 | -15.43900 | -15.24700 | -.26382 | -.48877 | .15219 | .62932 | -.20529 | .06698 | .29419 |
| -101.200 | 400.280 | 599.29000 | -15.44500 | -15.25000 | -.26148 | -.49487 | .15234 | .62873 | -.20348 | .06711 | .29430 |
| | GRADIENT | .00000 | .00000 | .00000 | .00000 | .00000 | .00000 | .00000 | .00000 | .00000 | .00000 |

RUN NO. 3580/ 0 RN/L = 2.37 GRADIENT INTERVAL = -5.00/ 5.00

| Y | Z | X | ALPHA | BETA | PHI | CN | CLM | CY | CYN | CBL | CA |
|---|---|---|---|---|---|---|---|---|---|---|---|
| -301.280 | 402.510 | 599.60000 | -15.44600 | -15.24800 | -.27049 | -.50734 | .15992 | .63792 | -.20859 | .06726 | .29440 |
| -299.390 | 300.200 | 599.23000 | -15.44700 | -15.24900 | -.26895 | -.50615 | .15910 | .63637 | -.20760 | .06729 | .29409 |
| -300.490 | 200.720 | 599.21000 | -15.44700 | -15.24900 | -.26801 | -.50543 | .15851 | .63567 | -.20713 | .06730 | .29440 |
| | GRADIENT | .00000 | .00000 | .00000 | .00000 | .00000 | .00000 | .00000 | .00000 | .00000 | .00000 |

IA143, AEDC V41A-P8A, O/ET W/R.H. SRB SEPARATING (OVX566) ( 23 MAY 77 )

REFERENCE DATA

SREF = 2690.0000 SQ.FT. XMRP = 1097.0000 IN. XT
LREF = 1290.3000 INCHES YMRP = .0000 IN. YT
BREF = 1290.3000 INCHES ZMRP = 450.0000 IN. ZT
SCALE = .0100

PARAMETRIC DATA

ALPHA = -15.000 BETA = -15.000
DALPHA = -5.000 DBETA = -8.000
X = 600.000 MACH = 4.500
JET PC = .000

RUN NO. 3487/ 0 RN/L = 2.37 GRADIENT INTERVAL = -5.00/ 5.00

| Y | Z | X | ALPHA | BETA | PHI | CN | CLM | CY | CYN | CBL | CA |
|---|---|---|---|---|---|---|---|---|---|---|---|
| -99.621 | 398.240 | 599.20000 | -15.44700 | -15.24800 | -.26469 | -.49539 | .15174 | .62539 | -.20247 | .06586 | .29169 |
| -98.018 | 299.440 | 598.85000 | -15.44200 | -15.24400 | -.26987 | -.49061 | .15266 | .62972 | -.20639 | .06603 | .29236 |
| -98.188 | 200.330 | 599.63000 | -15.44200 | -15.24400 | -.26885 | -.49520 | .15477 | .62833 | -.20547 | .06588 | .29232 |
| | GRADIENT | .00000 | .00000 | .00000 | .00000 | .00000 | .00000 | .00000 | .00000 | .00000 | .00000 |

RUN NO. 3486/ 0 RN/L = 2.37 GRADIENT INTERVAL = -5.00/ 5.00

| Y | Z | X | ALPHA | BETA | PHI | CN | CLM | CY | CYN | CBL | CA |
|---|---|---|---|---|---|---|---|---|---|---|---|
| -300.570 | 199.690 | 599.85000 | -15.44800 | -15.24700 | -.26804 | -.50412 | .15634 | .62872 | -.20443 | .06596 | .29048 |
| -299.700 | 299.450 | 599.39000 | -15.44900 | -15.24700 | -.27020 | -.50589 | .15756 | .63174 | -.20574 | .06614 | .29114 |
| -301.210 | 399.830 | 599.45000 | -15.44900 | -15.24700 | -.27360 | -.50868 | .15946 | .63452 | -.20736 | .06610 | .29128 |
| | GRADIENT | .00000 | .00000 | .00000 | .00000 | .00000 | .00000 | .00000 | .00000 | .00000 | .00000 |

IA143, AEDC V41A-P8A, O/ET W/R.H. SRB SEPARATING (OVX567) ( 23 MAY 77 )

REFERENCE DATA

SREF = 2690.0000 SQ.FT. XMRP = 1097.0000 IN. XT
LREF = 1290.3000 INCHES YMRP = .0000 IN. YT
BREF = 1290.3000 INCHES ZMRP = 450.0000 IN. ZT
SCALE = .0100

PARAMETRIC DATA

ALPHA = -15.000 BETA = -15.000
DALPHA = -10.000 DBETA = -8.000
X = 600.000 MACH = 4.500
JET PC = .000

RUN NO. 3574/ 0 RN/L = 2.36 GRADIENT INTERVAL = -5.00/ 5.00

| Y | Z | X | ALPHA | BETA | PHI | CN | CLM | CY | CYN | CBL | CA |
|---|---|---|---|---|---|---|---|---|---|---|---|
| -100.440 | 300.340 | 599.34000 | -15.43800 | -15.24600 | -.26306 | -.48853 | .15286 | .62901 | -.20554 | .06712 | .29500 |
| -100.990 | 350.360 | 599.43000 | -15.43900 | -15.24700 | -.26493 | -.48479 | .15031 | .63037 | -.20576 | .06698 | .29490 |
| -100.900 | 400.510 | 599.69000 | -15.44000 | -15.24800 | -.26094 | -.48620 | .14994 | .62697 | -.20341 | .06693 | .29465 |
| | GRADIENT | .00000 | .00000 | .00000 | .00000 | .00000 | .00000 | .00000 | .00000 | .00000 | .00000 |

IA143, AEDC V41A-P8A, O/ET W/R.H. SRB SEPARATING (OVX568) ( 23 MAY 77 )

REFERENCE DATA

SREF = 2690.0000 SQ.FT. XMRP = 1097.0000 IN. XT
LREF = 1290.3000 INCHES YMRP = .0000 IN. YT
BREF = 1290.3000 INCHES ZMRP = 450.0000 IN. ZT
SCALE = .0100

PARAMETRIC DATA

ALPHA = -15.000 BETA = -15.000
DALPHA = -10.000 DBETA = -8.000
X = 600.000 MACH = 4.500
JET PC = .000

RUN NO. 3576/ 0 RN/L = 2.36 GRADIENT INTERVAL = -5.00/ 5.00

| Y | Z | X | ALPHA | BETA | PHI | CN | CLM | CY | CYN | CBL | CA |
|---|---|---|---|---|---|---|---|---|---|---|---|
| -300.290 | 200.240 | 599.15000 | -15.44500 | -15.25000 | -.26058 | -.49833 | .15361 | .62564 | -.20199 | .06658 | .29226 |
| -300.040 | 299.380 | 599.07000 | -15.44500 | -15.25000 | -.26288 | -.50086 | 15538 | .62983 | -.20427 | .06706 | .29254 |
| -301.020 | 400.040 | 599.34000 | -15.44600 | -15.25000 | -.26598 | -.50426 | .15766 | .63363 | -.20592 | .05726 | .29313 |
| | GRADIENT | .00000 | .00000 | .00000 | .00000 | .00000 | .00000 | .00000 | .00000 | .00000 | .00000 |

IA143, AEDC V41A-P8A, O/ET W/R.H. SRB SEPARATING (OVX569) ( 23 MAY 77 )

REFERENCE DATA

SREF = 2690.0000 SQ.FT. XMRP = 1097.0000 IN. XT
LREF = 1290.3000 INCHES YMRP = .0000 IN. YT
BREF = 1290.3000 INCHES ZMRP = 450.0000 IN. ZT
SCALE = .0100

PARAMETRIC DATA

ALPHA = -15.000 BETA = -15.000
DALPHA = -10.000 DBETA = -4.000
X = 600.000 MACH = 4.500
JET PC = .000

RUN NO. 3578/ 0 RN/L = 2.38 GRADIENT INTERVAL = -5.00/ 5.00

| Y | Z | X | ALPHA | BETA | PHI | CN | CLM | CY | CYN | CBL | CA |
|---|---|---|---|---|---|---|---|---|---|---|---|
| -100.100 | 300.290 | 599.32000 | -15.43800 | -15.24600 | -.26288 | -.48846 | .15245 | .62879 | -.20532 | .06708 | .29469 |
| -100.670 | 350.250 | 599.20000 | -15.44000 | -15.24700 | -.26432 | -.48629 | .15079 | .63007 | -.20549 | .06701 | .29486 |
| -101.400 | 400.500 | 599.37000 | -15.44400 | -15.25000 | -.26171 | -.49108 | .15060 | .62829 | -.20342 | .06696 | .29433 |
| | GRADIENT | .00000 | .00000 | .00000 | .00000 | .00000 | .00000 | .00000 | .00000 | .00000 | .00000 |

IA143, AEDC V41A-P8A, O/ET W/R.H. SRB SEPARATING (OVX570) ( 23 MAY 77 )

REFERENCE DATA

SREF = 2690.0000 SQ.FT. XMRP = 1097.0000 IN. XT
LREF = 1290.3000 INCHES YMRP = .0000 IN. YT
BREF = 1290.3000 INCHES ZMRP = 450.0000 IN. ZT
SCALE = .0100

PARAMETRIC DATA

ALPHA = -15.000 BETA = -15.000
DALPHA = -15.000 DBETA = -4.000
X = 600.000 MACH = 4.500
JET PC = .000

RUN NO. 3597/ 0 RN/L = 2.36 GRADIENT INTERVAL = -5.00/ 5.00

| Y | Z | X | ALPHA | BETA | PHI | CN | CLM | CY | CYN | CBL | CA |
|---|---|---|---|---|---|---|---|---|---|---|---|
| -99.766 | 300.650 | 599.25000 | -15.43700 | -15.24500 | -.26101 | -.48739 | .15185 | .62463 | -.20363 | .06660 | .29352 |
| -100.300 | 350.340 | 599.17000 | -15.43800 | -15.24600 | -.26174 | -.48416 | .15001 | .62638 | -.20406 | .06681 | .29363 |
| -100.700 | 400.520 | 599.38000 | -15.43900 | -15.24700 | -.26146 | -.48463 | .14925 | .62697 | -.20383 | .06683 | .29336 |
| | GRADIENT | .00000 | .00000 | .00000 | .00000 | .00000 | .00000 | .00000 | .00000 | .00000 | .00000 |

RUN NO. 3598/ 0 RN/L = 2.36 GRADIENT INTERVAL = -5.00/ 5.00

| Y | Z | X | ALPHA | BETA | PHI | CN | CLM | CY | CYN | CBL | CA |
|---|---|---|---|---|---|---|---|---|---|---|---|
| -201.070 | 402.150 | 599.84000 | -15.44500 | -15.25000 | -.25932 | -.49488 | .15153 | .62595 | -.20215 | .06692 | .29159 |
| -199.280 | 350.320 | 599.28000 | -15.44400 | -15.25000 | -.25951 | -.49194 | .15036 | .62512 | -.20177 | .06668 | .29222 |
| -199.960 | 300.610 | 599.18000 | -15.44200 | -15.24900 | -.26107 | -.48815 | .14959 | .62470 | -.20207 | .06640 | .29242 |
| | GRADIENT | .00000 | .00000 | .00000 | .00000 | .00000 | .00000 | .00000 | .00000 | .00000 | .00000 |

IA143, AEDC V41A-P8A, O/ET W/R.H. SRB SEPARATING (OVX571) ( 23 MAY 77 )

REFERENCE DATA

SREF = 2690.0000 SQ.FT. XMRP = 1097.0000 IN. XT
LREF = 1290.3000 INCHES YMRP = .0000 IN. YT
BREF = 1290.3000 INCHES ZMRP = 450.0000 IN. ZT
SCALE = .0100

PARAMETRIC DATA

ALPHA = -15.000 BETA = -15.000
DALPHA = -10.000 DBETA = -4.000
X = 600.000 MACH = 4.500
JET PC = .000

RUN NO. 3577/ 0 RN/L = 2.38 GRADIENT INTERVAL = -5.00/ 5.00

| Y | Z | X | ALPHA | BETA | PHI | CN | CLM | CY | CYN | CBL | CA |
|---|---|---|---|---|---|---|---|---|---|---|---|
| -199.830 | 200.360 | 599.30000 | -15.44300 | -15.24900 | -.26021 | -.49211 | .15176 | .62385 | -.20151 | .06637 | .29385 |
| -200.240 | 299.500 | 599.10000 | -15.44400 | -15.24900 | -.26268 | -.49491 | .15271 | .62899 | -.20391 | .06694 | .29378 |
| -200.500 | 350.080 | 599.36000 | -15.44500 | -15.25000 | -.26253 | -.49690 | .15346 | .63006 | -.20429 | .06716 | .29328 |
| -200.300 | 400.340 | 599.39000 | -15.44500 | -15.25000 | -.26358 | -.49977 | .15488 | .63129 | -.20481 | .06721 | .29319 |
| | GRADIENT | .00000 | .00000 | .00000 | .00000 | .00000 | .00000 | .00000 | .00000 | .00000 | .00000 |

IA143, AEDC V41A-P8A, O/ET W/R.H. SRB SEPARATING (OVX572) ( 23 MAY 77 )

REFERENCE DATA

SREF = 2690.0000 SQ.FT. XMRP = 1097.0000 IN. XT
LREF = 1290.3000 INCHES YMRP = .0000 IN. YT
BREF = 1290.3000 INCHES ZMRP = 450.0000 IN. ZT
SCALE = .0100

PARAMETRIC DATA

ALPHA = -15.000 BETA = -15.000
DALPHA = -15.000 DBETA = -8.000
X = 600.000 MACH = 4.500
JET PC = .000

RUN NO. 3600/ 0 RN/L = 2.36 GRADIENT INTERVAL = -5.00/ 5.00

| Y | Z | X | ALPHA | BETA | PHI | CN | CLM | CY | CYN | CBL | CA |
|---|---|---|---|---|---|---|---|---|---|---|---|
| -99.734 | 398.730 | 598.59000 | -15.43900 | -15.24700 | -.26181 | -.48270 | .14867 | .62634 | -.20380 | .06680 | .29340 |
| -99.885 | 350.110 | 599.02000 | -15.43800 | -15.24600 | -.26307 | -.48395 | .15015 | .62766 | -.20475 | .06686 | .29357 |
| -99.596 | 300.330 | 599.23000 | -15.43800 | -15.24600 | -.26092 | -.48795 | .15225 | .62452 | -.20355 | .06670 | .29350 |
| | GRADIENT | .00000 | .00000 | .00000 | .00000 | .00000 | .00000 | .00000 | .00000 | .00000 | .00000 |

RUN NO. 3599/ 0 RN/L = 2.36 GRADIENT INTERVAL = -5.00/ 5.00

| Y | Z | X | ALPHA | BETA | PHI | CN | CLM | CY | CYN | CBL | CA |
|---|---|---|---|---|---|---|---|---|---|---|---|
| -200.480 | 299.790 | 599.22000 | -15.43900 | -15.24600 | -.26113 | -.48456 | .14874 | .62378 | -.20255 | .06626 | .29240 |
| -200.680 | 350.190 | 599.30000 | -15.44000 | -15.24800 | -.26121 | -.48466 | .14826 | .62482 | -.20255 | .06642 | .29238 |
| -200.690 | 400.280 | 599.19000 | -15.44400 | -15.25100 | -.25927 | -.48933 | .14893 | .62365 | -.20105 | .06656 | .29175 |
| | GRADIENT | .00000 | .00000 | .00000 | .00000 | .00000 | .00000 | .00000 | .00000 | .00000 | .00000 |

IA143, AEDC V41A-P8A, O/ET W/R.H. SRB SEPARATING (OVX573) ( 23 MAY 77 )

REFERENCE DATA

SREF = 2690.0000 SQ.FT. XMRP = 1097.0000 IN. XT
LREF = 1290.3000 INCHES YMRP = .0000 IN. YT
BREF = 1290.3000 INCHES ZMRP = 450.0000 IN. ZT
SCALE = .0100

PARAMETRIC DATA

ALPHA = -15.000 BETA = -15.000
DALPHA = -10.000 DBETA = -8.000
X = 600.000 MACH = 4.500
JET PC = .000

RUN NO. 3575/ 0 RN/L = 2.36 GRADIENT INTERVAL = -5.00/ 5.00

| Y | Z | X | ALPHA | BETA | PHI | CN | CLM | CY | CYN | CBL | CA |
|---|---|---|---|---|---|---|---|---|---|---|---|
| -200.130 | 300.360 | 599.46000 | -15.44200 | -15.24800 | -.26476 | -.48853 | .15085 | .62880 | -.20446 | .06660 | .29379 |
| -200.530 | 350.180 | 599.40000 | -15.44200 | -15.24900 | -.26268 | -.49071 | .15125 | .62909 | -.20415 | .06698 | .29390 |
| -200.710 | 400.220 | 599.46000 | -15.44500 | -15.25000 | -.26111 | -.49592 | .15270 | .62846 | -.20335 | .06712 | .29325 |
| | GRADIENT | .00000 | .00000 | .00000 | .00000 | .00000 | .00000 | .00000 | .00000 | .00000 | .00000 |

IA143, AEDC V41A-P8A, O/ET W/R.H. SRB SEPARATING (OVX574) ( 23 MAY 77 )

REFERENCE DATA

SREF = 2690.0000 SQ.FT. XMRP = 1097.0000 IN. XT
LREF = 1290.3000 INCHES YMRP = .0000 IN. YT
BREF = 1290.3000 INCHES ZMRP = 450.0000 IN. ZT
SCALE = .0100

PARAMETRIC DATA

ALPHA = -15.000 BETA = -15.000
DALPHA = -5.000 DBETA = 4.000
X = 900.000 MACH = 4.500
JET PC = .000

RUN NO. 3489/ 0 RN/L = 2.37 GRADIENT INTERVAL = -5.00/ 5.00

| Y | Z | X | ALPHA | BETA | PHI | CN | CLM | CY | CYN | CBL | CA |
|---|---|---|---|---|---|---|---|---|---|---|---|
| -99.379 | 200.200 | 899.26000 | -15.44900 | -15.24700 | -.27035 | -.50746 | .15848 | .63144 | -.20578 | .06607 | .29259 |
| -99.791 | 274.680 | 899.11000 | -15.44900 | -15.24700 | -.27122 | -.50615 | .15782 | .63243 | -.20637 | .06614 | .29233 |
| -101.770 | 425.660 | 899.18000 | -15.44900 | -15.24600 | -.27313 | -.50833 | .15921 | .63437 | -.20728 | .06613 | .29203 |
| -100.930 | 500.350 | 899.22000 | -15.45000 | -15.24600 | -.27519 | -.51006 | .16031 | .63586 | -.20824 | .06607 | .29278 |
| -100.880 | 600.410 | 899.16000 | -15.45000 | -15.24600 | -.27512 | -.51005 | .16034 | .63579 | -.20825 | .06607 | .29313 |
| | GRADIENT | .00000 | .00000 | .00000 | .00000 | .00000 | .00000 | .00000 | .00000 | .00000 | .00000 |

RUN NO. 3490/ 0 RN/L = 2.37 GRADIENT INTERVAL = -5.00/ 5.00

| Y | Z | X | ALPHA | BETA | PHI | CN | CLM | CY | CYN | CBL | CA |
|---|---|---|---|---|---|---|---|---|---|---|---|
| -400.000 | 601.310 | 899.11000 | -15.45000 | -15.24600 | -.27528 | -.51008 | .16041 | .63581 | -.20827 | .06607 | .29319 |
| -399.210 | 499.580 | 899.13000 | -15.45000 | -15.24600 | -.27551 | -.51026 | .16043 | .63617 | -.20838 | .06611 | .29325 |
| -399.680 | 424.800 | 899.13000 | -15.45000 | -15.24600 | -.27535 | -.51015 | .16042 | .63591 | -.20829 | .06608 | .29325 |
| -400.270 | 275.220 | 898.97000 | -15.45000 | -15.24600 | -.27516 | -.51022 | .16044 | .63609 | -.20834 | .06611 | .29332 |
| -400.010 | 200.470 | 899.24000 | -15.45000 | -15.24600 | -.27517 | -.50998 | .16033 | .63586 | -.20827 | .06609 | .29311 |
| | GRADIENT | .00000 | .00000 | .00000 | .00000 | .00000 | .00000 | .00000 | .00000 | .00000 | .00000 |

IA143, AEDC V41A-P8A, O/ET W/R.H. SRB SEPARATING (OVX575) ( 23 MAY 77 )

REFERENCE DATA

SREF = 2690.0000 SQ.FT. XMRP = 1097.0000 IN. XT
LREF = 1290.3000 INCHES YMRP = .0000 IN. YT
BREF = 1290.3000 INCHES ZMRP = 450.0000 IN. ZT
SCALE = .0100

PARAMETRIC DATA

ALPHA = -15.000 BETA = -15.000
DALPHA = -20.000 DBETA = 4.000
X = 900.000 MACH = 4.500
JET PC = .000

RUN NO. 3625/ 0 RN/L = 2.37 GRADIENT INTERVAL = -5.00/ 5.00

| Y | Z | X | ALPHA | BETA | PHI | CN | CLM | CY | CYN | CBL | CA |
|---|---|---|---|---|---|---|---|---|---|---|---|
| -99.742 | 200.940 | 899.22000 | -15.44700 | -15.24800 | -.26425 | -.50060 | .15482 | .62655 | -.20315 | .06623 | .29327 |
| -98.906 | 274.730 | 898.94000 | -15.44600 | -15.24900 | -.26340 | -.50130 | .15575 | .62850 | -.20394 | .06681 | .29314 |
| -100.080 | 425.410 | 899.06000 | -15.44600 | -15.24900 | -.26447 | -.50089 | .15519 | .63073 | -.20494 | .06705 | .29213 |
| -100.550 | 500.980 | 899.18000 | -15.44700 | -15.24900 | -.26757 | -.50436 | .15740 | .63468 | -.20671 | .06725 | .29204 |
| -100.380 | 601.220 | 899.54000 | -15.44800 | -15.24800 | -.27180 | -.50739 | .15954 | .63831 | -.20892 | .06724 | .29323 |
| | GRADIENT | .00000 | .00000 | .00000 | .00000 | .00000 | .00000 | .00000 | .00000 | .00000 | .00000 |

RUN NO. 3626/ 0 RN/L = 2.37 GRADIENT INTERVAL = -5.00/ 5.00

| Y | Z | X | ALPHA | BETA | PHI | CN | CLM | CY | CYN | CBL | CA |
|---|---|---|---|---|---|---|---|---|---|---|---|
| -400.130 | 600.250 | 899.09000 | -15.44800 | -15.24800 | -.27176 | -.50748 | .15976 | .63802 | -.20888 | .06722 | .29447 |
| -399.790 | 500.290 | 899.07000 | -15.44800 | -15.24800 | -.27165 | -.50733 | .15969 | .63799 | -.20887 | .06722 | .29423 |
| -399.770 | 425.610 | 899.09000 | -15.44800 | -15.24800 | -.27154 | -.50718 | .15963 | .63788 | -.20885 | .06721 | .29410 |
| -400.380 | 276.470 | 899.32000 | -15.44800 | -15.24800 | -.27180 | -.50768 | .15979 | .63814 | -.20889 | .06721 | .29431 |
| -400.620 | 201.320 | 899.29000 | -15.44800 | -15.24800 | -.27148 | -.50719 | .15967 | .63771 | -.20878 | .06718 | .29422 |
| | GRADIENT | .00000 | .00000 | .00000 | .00000 | .00000 | .00000 | .00000 | .00000 | .00000 | .00000 |

IA143, AEDC V41A-P8A, O/ET W/R.H. SRB SEPARATING (OVX576) ( 23 MAY 77 )

REFERENCE DATA

SREF = 2690.0000 SQ.FT. XMRP = 1097.0000 IN. XT
LREF = 1290.3000 INCHES YMRP = .0000 IN. YT
BREF = 1290.3000 INCHES ZMRP = 450.0000 IN. ZT
SCALE = .0100

PARAMETRIC DATA

ALPHA = -15.000 BETA = -15.000
DALPHA = -5.000 DBETA = -12.000
X = 900.000 MACH = 4.500
JET PC = .000

RUN NO. 3488/ 0 RN/L = 2.37 GRADIENT INTERVAL = -5.00/ 5.00

| Y | Z | X | ALPHA | BETA | PHI | CN | CLM | CY | CYN | CBL | CA |
|---|---|---|---|---|---|---|---|---|---|---|---|
| -100.280 | 200.140 | 899.39000 | -15.44900 | -15.24700 | -.26997 | -.50634 | .15795 | .63048 | -.20547 | .06598 | .29251 |
| -101.740 | 274.790 | 899.11000 | -15.44900 | -15.24600 | -.27037 | -.50349 | .15645 | .63093 | -.20577 | .06602 | .29228 |
| | GRADIENT | .00000 | .00000 | .00000 | .00000 | .00000 | .00000 | .00000 | .00000 | .00000 | .00000 |

IA143, AEDC V41A-P8A, O/ET W/R.H. SRB SEPARATING (OVX577) ( 23 MAY 77 )

REFERENCE DATA

SREF = 2690.0000 SQ.FT. XMRP = 1097.0000 IN. XT
LREF = 1290.3000 INCHES YMRP = .0000 IN. YT
BREF = 1290.3000 INCHES ZMRP = 450.0000 IN. ZT
SCALE = .0100

PARAMETRIC DATA

ALPHA = -15.000 BETA = -15.000
DALPHA = -5.000 DBETA = -8.000
X = 900.000 MACH = 4.500
JET PC = .000

RUN NO. 3495/ 0 RN/L = 2.35 GRADIENT INTERVAL = -5.00/ 5.00

| Y | Z | X | ALPHA | BETA | PHI | CN | CLM | CY | CYN | CBL | CA |
|---|---|---|---|---|---|---|---|---|---|---|---|
| -100.010 | 200.100 | 899.29000 | -15.44900 | -15.24700 | -.26979 | -.50660 | .15804 | .63063 | -.20544 | .06599 | .29251 |
| -100.050 | 2.4.740 | 899.28000 | -15.44800 | -15.24600 | -.27045 | -.50424 | .15684 | .63138 | -.20598 | .06604 | .29224 |
| -103.580 | 425.600 | 899.81000 | -15.44800 | -15.24700 | -.27053 | -.50571 | .15753 | .63187 | -.20587 | .06609 | .29129 |
| -102.410 | 501.080 | 899.47000 | -15.44900 | -15.24600 | -.27464 | -.50942 | .15995 | .63544 | -.20801 | .06607 | .29192 |
| -100.060 | 600.780 | 899.53000 | -15.45000 | -15.24500 | -.27511 | -.51011 | .16035 | .63588 | -.20827 | .06606 | .29291 |
| | GRADIENT | .00000 | .00000 | .00000 | .00000 | .00000 | .00000 | .00000 | .00000 | .00000 | .00000 |

IA143, AEDC V41A-P8A, O/ET W/R.H. SRB SEPARATING (OVX578) ( 23 MAY 77 )

REFERENCE DATA

SREF = 2690.0000 SQ.FT. XMRP = 1097.0000 IN. XT
LREF = 1290.3000 INCHES YMRP = .0000 IN. YT
BREF = 1290.3000 INCHES ZMRP = 450.0000 IN. ZT
SCALE = .0100

PARAMETRIC DATA

ALPHA = -15.000 BETA = -15.000
DALPHA = -20.000 DBETA = -8.000
X = 900.000 MACH = 4.500
JET PC = .000

RUN NO. 3627/ 0 RN/L = 2.37 GRADIENT INTERVAL = -5.00/ 5.00

| Y | Z | X | ALPHA | BETA | PHI | CN | CLM | CY | CYN | CBL | CA |
|---|---|---|---|---|---|---|---|---|---|---|---|
| -100.050 | 200.620 | 899.21000 | -15.44700 | -15.24800 | -.26471 | -.50106 | .15496 | .62653 | -.20331 | .06615 | .29281 |
| -99.992 | 274.970 | 898.96000 | -15.44600 | -15.24900 | -.26441 | -.50145 | .15588 | .62964 | -.20459 | .06686 | .29348 |
| -101.510 | 425.850 | 899.50000 | -15.44600 | -15.24800 | -.26622 | -.49662 | .15320 | .63197 | -.20586 | .06701 | .29218 |
| -101.510 | 501.210 | 899.61000 | -15.44700 | -15.25000 | -.26536 | -.50009 | .15471 | .63184 | -.20531 | .06710 | .29154 |
| -101.340 | 601.420 | 899.76000 | -15.44700 | -15.24800 | -.27051 | -.50554 | .15839 | .63667 | -.20798 | .06709 | .29154 |
| | GRADIENT | .00000 | .00000 | .00000 | .00000 | .00000 | .00000 | .00000 | .00000 | .00000 | .00000 |

IA143, AEDC V41A-P8A, O/ET W/R.H. SRB SEPARATING (OVX579) ( 23 MAY 77 )

REFERENCE DATA

SREF = 2690.0000 SQ.FT. XMRP = 1097.0000 IN. XT
LREF = 1290.3000 INCHES YMRP = .0000 IN. YT
BREF = 1290.3000 INCHES ZMRP = 450.0000 IN. ZT
SCALE = .0100

PARAMETRIC DATA

ALPHA = -15.000 BETA = -15.000
DALPHA = -5.000 DBETA = -12.000
X = 900.000 MACH = 4.500
JET PC = .000

RUN NO. 3496/ 0 RN/L = 2.35 GRADIENT INTERVAL = -5.00/ 5.00

| Y | Z | X | ALPHA | BETA | PHI | CN | CLM | CY | CYN | CBL | CA |
|---|---|---|---|---|---|---|---|---|---|---|---|
| -400.350 | 200.170 | 899.23000 | -15.44900 | -15.24600 | -.27502 | -.50918 | .15986 | .63528 | -.20802 | .06600 | .29142 |
| -399.990 | 274.480 | 899.27000 | -15.44900 | -15.24600 | -.27509 | -.50991 | .16014 | .63584 | -.20818 | .06606 | .29181 |
| -401.430 | 424.800 | 899.57000 | -15.45000 | -15.24600 | -.27508 | -.51013 | .16034 | .63571 | -.20818 | .06604 | .29289 |
| -400.870 | 500.020 | 899.55000 | -15.45000 | -15.24500 | -.27507 | -.51009 | .16033 | .63578 | -.20823 | .06605 | .29295 |
| -401.500 | 600.370 | 899.59000 | -15.45000 | -15.24500 | -.27510 | -.50996 | .16031 | .63571 | -.20823 | .06605 | .29299 |
| | GRADIENT | .00000 | .00000 | .00000 | .00000 | .00000 | .00000 | .00000 | .00000 | .00000 | .00000 |

IA143, AEDC V41A-P8A, O/ET W/R.H. SRB SEPARATING (OVX580) ( 23 MAY 77 )

REFERENCE DATA

SREF = 2690.0000 SQ.FT. XMRP = 1097.0000 IN. XT
LREF = 1290.3000 INCHES YMRP = .0000 IN. YT
BREF = 1290.3000 INCHES ZMRP = 450.0000 IN. ZT
SCALE = .0100

PARAMETRIC DATA

ALPHA = -15.000 BETA = -15.000
DALPHA = -20.000 DBETA = -12.000
X = 900.000 MACH = 4.500
JET PC = .000

RUN NO. 3628/ 0 RN/L = 2.37 GRADIENT INTERVAL = -5.00/ 5.00

| Y | Z | X | ALPHA | BETA | PHI | CN | CLM | CY | CYN | CBL | CA |
|---|---|---|---|---|---|---|---|---|---|---|---|
| -400.270 | 275.630 | 899.22000 | -15.44700 | -15.24800 | -.27081 | -.50473 | .15796 | .63637 | -.20792 | .06704 | .29064 |
| -400.110 | 424.390 | 898.81000 | -15.44700 | -15.24800 | -.27155 | -.50499 | .15806 | .63753 | -.20855 | .06713 | .29076 |
| -400.530 | 500.450 | 899.37000 | -15.44700 | -15.24800 | -.27150 | -.50518 | .15827 | .63750 | -.20855 | .06714 | .29122 |
| -400.700 | 600.740 | 899.51000 | -15.44700 | -15.24800 | -.27085 | -.50665 | .15922 | .63718 | -.20838 | .06719 | .29214 |
| | GRADIENT | .00000 | .00000 | .00000 | .00000 | .00000 | .00000 | .00000 | .00000 | .00000 | .00000 |

IA143, AEDC V41A-P8A, O/ET W/R.H. SRB SEPARATING (OVX581) ( 23 MAY 77 )

REFERENCE DATA

SREF = 2690.0000 SQ.FT. XMRP = 1097.0000 IN. XT
LREF = 1290.3000 INCHES YMRP = .0000 IN. YT
BREF = 1290.3000 INCHES ZMRP = 450.0000 IN. ZT
SCALE = .0100

PARAMETRIC DATA

ALPHA = -15.000 BETA = -15.000
DALPHA = -10.000 DBETA = .000
X = 900.000 MACH = 4.500
JET PC = .000

RUN NO. 3581/ 0 RN/L = 2.37 GRADIENT INTERVAL = -5.00/ 5.00

| Y | Z | X | ALPHA | BETA | PHI | CN | CLM | CY | CYN | CBL | CA |
|---|---|---|---|---|---|---|---|---|---|---|---|
| -100.150 | 300.270 | 899.18000 | -15.44600 | -15.24900 | -.26542 | -.50272 | .15694 | .63313 | -.20606 | .06729 | .29476 |
| -101.380 | 400.480 | 899.05000 | -15.44600 | -15.24900 | -.26639 | -.50327 | .15720 | .63375 | -.20626 | .06727 | .29408 |
| -101.370 | 501.150 | 899.39000 | -15.44700 | -15.24800 | -.27062 | -.50741 | .15990 | .63788 | -.20858 | .06727 | .29466 |
| | GRADIENT | .00000 | .00000 | .00000 | .00000 | .00000 | .00000 | .00000 | .00000 | .00000 | .00000 |

RUN NO. 3582/ 0 RN/L = 2.38 GRADIENT INTERVAL = -5.00/ 5.00

| Y | Z | X | ALPHA | BETA | PHI | CN | CLM | CY | CYN | CBL | CA |
|---|---|---|---|---|---|---|---|---|---|---|---|
| -300.790 | 502.240 | 899.28000 | -15.44800 | -15.24800 | -.27137 | -.50829 | .16034 | .63860 | -.20891 | .06729 | .29589 |
| -299.820 | 399.810 | 898.90000 | -15.44700 | -15.24800 | -.27085 | -.50762 | .16012 | .63777 | -.20862 | .06723 | .29517 |
| -299.880 | 300.030 | 898.88000 | -15.44700 | -15.24800 | -.27082 | -.50777 | .16008 | .63831 | -.20881 | .06729 | .29478 |
| | GRADIENT | .00000 | .00000 | .00000 | .00000 | .00000 | .00000 | .00000 | .00000 | .00000 | .00000 |

IA143, AEDC V41A-P8A, O/ET W/R.H. SRB SEPARATING (OVX582) ( 23 MAY 77 )

REFERENCE DATA

SREF = 2690.0000 SQ.FT. XMRP = 1097.0000 IN. XT
LREF = 1290.3000 INCHES YMRP = .0000 IN. YT
BREF = 1290.3000 INCHES ZMRP = 450.0000 IN. ZT
SCALE = .0100

PARAMETRIC DATA

ALPHA = -15.000 BETA = -15.000
DALPHA = -15.000 DBETA = .000
X = 900.000 MACH = 4.500
JET PC = .000

RUN NO. 3610/ 0 RN/L = 2.38 GRADIENT INTERVAL = -5.00/ 5.00

| Y | Z | X | ALPHA | BETA | PHI | CN | CLM | CY | CYN | CBL | CA |
|---|---|---|---|---|---|---|---|---|---|---|---|
| -99.924 | 300.410 | 899.19000 | -15.44600 | -15.24900 | -.26494 | -.50203 | .15629 | .63143 | -.20538 | .06712 | .29350 |
| -100.930 | 400.510 | 899.19000 | -15.44700 | -15.24900 | -.26537 | -.50117 | .15554 | .63198 | -.20558 | .06715 | .29284 |
| -100.990 | 501.170 | 899.52000 | -15.44700 | -15.24900 | -.26965 | -.50558 | .15843 | .63649 | -.20775 | .06727 | .29280 |
| | GRADIENT | .00000 | .00000 | .00000 | .00000 | .00000 | .00000 | .00000 | .00000 | .00000 | .00000 |

RUN NO. 3611/ 0 RN/L = 2.38 GRADIENT INTERVAL = -5.00/ 5.00

| Y | Z | X | ALPHA | BETA | PHI | CN | CLM | CY | CYN | CBL | CA |
|---|---|---|---|---|---|---|---|---|---|---|---|
| -301.240 | 503.150 | 899.74000 | -15.44800 | -15.24800 | -.27158 | -.50761 | .15983 | .63818 | -.20887 | .06724 | .29444 |
| -299.380 | 400.010 | 899.01000 | -15.44700 | -15.24800 | -.27131 | -.50675 | .15944 | .63756 | -.20867 | .06718 | .29323 |
| -299.290 | 300.330 | 899.04000 | -15.44700 | -15.24800 | -.27128 | -.50659 | .15927 | .63741 | -.20855 | .06720 | .29280 |
| | GRADIENT | .00000 | .00000 | .00000 | .00000 | .00000 | .00000 | .00000 | .00000 | .00000 | .00000 |

IA143, AEDC V41A-P8A, O/ET W/R.H. SRB SEPARATING (OVX583) ( 23 MAY 77 )

REFERENCE DATA

SREF = 2690.0000 SQ.FT. XMRP = 1097.0000 IN. XT
LREF = 1290.3000 INCHES YMRP = .0000 IN. YT
BREF = 1290.3000 INCHES ZMRP = 450.0000 IN. ZT
SCALE = .0100

PARAMETRIC DATA

ALPHA = -15.000 BETA = -15.000
DALPHA = -10.000 DBETA = -12.000
X = 900.000 MACH = 4.500
JET PC = .000

RUN NO. 3587/ 0 RN/L = 2.37 GRADIENT INTERVAL = -5.00/ 5.00

| Y | Z | X | ALPHA | BETA | PHI | CN | CLM | CY | CYN | CBL | CA |
|---|---|---|---|---|---|---|---|---|---|---|---|
| -100.390 | 300.200 | 899.23000 | -15.44600 | -15.24900 | -.26490 | -.50082 | .15578 | .63201 | -.20551 | .06717 | .29457 |
| -101.920 | 400.460 | 899.74000 | -15.44600 | -15.24900 | -.26561 | -.49836 | .15429 | .63294 | -.20600 | .06719 | .29355 |
| -103.440 | 501.690 | 900.28000 | -15.44700 | -15.24900 | -.26850 | -.50550 | .15835 | .63615 | -.20734 | .06728 | .29313 |
| | GRADIENT | .00000 | .00000 | .00000 | .00000 | .00000 | .00000 | .00000 | .00000 | .00000 | .00000 |

RUN NO. 3588/ 0 RN/L = 2.37 GRADIENT INTERVAL = -5.00/ 5.00

| Y | Z | X | ALPHA | BETA | PHI | CN | CLM | CY | CYN | CBL | CA |
|---|---|---|---|---|---|---|---|---|---|---|---|
| -298.780 | 501.390 | 899.41000 | -15.44700 | -15.24800 | -.27077 | -.50771 | .15998 | .63829 | -.20878 | .06731 | .29450 |
| -298.690 | 399.690 | 898.79000 | -15.44600 | -15.24800 | -.27035 | -.50675 | .15939 | .63761 | -.20842 | .06726 | .29315 |
| -299.660 | 300.240 | 899.05000 | -15.44600 | -15.24900 | -.26725 | -.50521 | .15826 | .63503 | -.20678 | .06732 | .29291 |
| | GRADIENT | .00000 | .00000 | .00000 | .00000 | .00000 | .00000 | .00000 | .00000 | .00000 | .00000 |

IA143, AEDC V41A-P8A, O/ET W/R.H. SRB SEPARATING (OVX584) ( 23 MAY 77 )

REFERENCE DATA

SREF = 2690.0000 SQ.FT. XMRP = 1097.0000 IN. XT
LREF = 1290.3000 INCHES YMRP = .0000 IN. YT
BREF = 1290.3000 INCHES ZMRP = 450.0000 IN. ZT
SCALE = .0100

PARAMETRIC DATA

ALPHA = -15.000 BETA = -15.000
DALPHA = -15.000 DBETA = -12.000
X = 900.000 MACH = 4.500
JET PC = .000

RUN NO. 3603/ 0 RN/L = 2.38 GRADIENT INTERVAL = -5.00/ 5.00

| Y | Z | X | ALPHA | BETA | PHI | CN | CLM | CY | CYN | CBL | CA |
|---|---|---|---|---|---|---|---|---|---|---|---|
| -100.220 | 300.380 | 899.21000 | -15.44600 | -15.24900 | -.26472 | -.49979 | .15515 | .63033 | -.20489 | .06698 | .29338 |
| -101.540 | 400.810 | 899.55000 | -15.44700 | -15.24800 | -.26689 | -.49743 | .15363 | .63278 | -.20620 | .06705 | .29294 |
| -102.530 | 501.230 | 899.96000 | -15.44700 | -15.25000 | -.26643 | -.50201 | .15595 | .63304 | -.20577 | .06712 | .29142 |
| | GRADIENT | .00000 | .00000 | .00000 | .00000 | .00000 | .00000 | .00000 | .00000 | .00000 | .00000 |

RUN NO. 3604/ 0 RN/L = 2.38 GRADIENT INTERVAL = -5.00/ 5.00

| Y | Z | X | ALPHA | BETA | PHI | CN | CLM | CY | CYN | CBL | CA |
|---|---|---|---|---|---|---|---|---|---|---|---|
| -299.660 | 502.260 | 899.85000 | -15.44700 | -15.24800 | -.27126 | -.50666 | .15916 | .63771 | -.20861 | .06719 | .29242 |
| -299.130 | 400.170 | 898.91000 | -15.44700 | -15.24900 | -.26855 | -.50510 | .15810 | .63547 | -.20714 | .06724 | .29119 |
| -300.200 | 300.260 | 898.87000 | -15.44600 | -15.24900 | -.26528 | -.50278 | .15648 | .63176 | -.20538 | .06711 | .29114 |
| | GRADIENT | .00000 | .00000 | .00000 | .00000 | .00000 | .00000 | .00000 | .00000 | .00000 | .00000 |

IA143, AEDC V41A-P8A, O/ET W/R.H. SRB SEPARATING (OVX585) ( 23 MAY 77 )

REFERENCE DATA

SREF = 2690.0000 SQ.FT. XMRP = 1097.0000 IN. XT
LREF = 1290.3000 INCHES YMRP = .0000 IN. YT
BREF = 1290.3000 INCHES ZMRP = 450.0000 IN. ZT
SCALE = .0100

PARAMETRIC DATA

ALPHA = -15.000 BETA = -15.000
DALPHA = -12.000 DBETA = -6.000
X = 900.000 MACH = 4.500
JET PC = .000

RUN NO. 3593/ 0 RN/L = 2.37 GRADIENT INTERVAL = -5.00/ 5.00

| Y | Z | X | ALPHA | BETA | PHI | CN | CLM | CY | CYN | CBL | CA |
|---|---|---|---|---|---|---|---|---|---|---|---|
| -199.320 | 300.370 | 899.43000 | -15.44600 | -15.24900 | -.26425 | -.50116 | .15570 | .63163 | -.20525 | .06720 | .29307 |
| -200.670 | 400.290 | 899.35000 | -15.44600 | -15.24900 | -.26705 | -.50472 | .15799 | .63469 | -.20667 | .06728 | .29280 |
| -201.690 | 500.830 | 899.45000 | -15.44700 | -15.24800 | -.27099 | -.50726 | .15973 | .63807 | -.20876 | .06726 | .29388 |
| | GRADIENT | .00000 | .00000 | .00000 | .00000 | .00000 | .00000 | .00000 | .00000 | .00000 | .00000 |

IA143, AEDC V41A-P8A, O/ET W/R.H. SRB SEPARATING (OVX586) ( 23 MAY 77 )

REFERENCE DATA

SREF = 2690.0000 SQ.FT. XMRP = 1097.0000 IN. XT
LREF = 1290.3000 INCHES YMRP = .0000 IN. YT
BREF = 1290.3000 INCHES ZMRP = 450.0000 IN. ZT
SCALE = .0100

PARAMETRIC DATA

ALPHA = -15.000 BETA = -15.000
DALPHA = -15.000 DBETA = -6.000
X = 900.000 MACH = 4.500
JET PC = .000

RUN NO. 3607/ 0 RN/L = 2.38 GRADIENT INTERVAL = -5.00/ 5.00

| Y | Z | X | ALPHA | BETA | PHI | CN | CLM | CY | CYN | CBL | CA |
|---|---|---|---|---|---|---|---|---|---|---|---|
| -200.240 | 400.390 | 899.23000 | -15.44700 | -15.25000 | -.26602 | -.50353 | .15692 | .63320 | -.20589 | .06724 | .29200 |
| -202.900 | 601.330 | 899.80000 | -15.44800 | -15.24800 | -.27170 | -.50746 | .15973 | .63804 | -.20880 | .06724 | .29388 |
| -202.330 | 802.140 | 900.04000 | -15.44800 | -15.24800 | -.27139 | -.50746 | .15980 | .63792 | -.20882 | .06722 | .29462 |
| -201.390 | 1002.300 | 900.15000 | -15.44800 | -15.24800 | -.27167 | -.50739 | .15975 | .63805 | -.20886 | .06724 | .29451 |
| | GRADIENT | .00000 | .00000 | .00000 | .00000 | .00000 | .00000 | .00000 | .00000 | .00000 | .00000 |

IA143, AEDC V41A-P8A, O/ET W/R.H. SRB SEPARATING (OVX587) ( 23 MAY 77 )

REFERENCE DATA

SREF = 2690.0000 SQ.FT. XMRP = 1097.0000 IN. XT
LREF = 1290.3000 INCHES YMRP = .0000 IN. YT
BREF = 1290.3000 INCHES ZMRP = 450.0000 IN. ZT
SCALE = .0100

PARAMETRIC DATA

ALPHA = -15.000 BETA = -15.000
DALPHA = -10.000 DBETA = -4.000
X = 900.000 MACH = 4.500
JET PC = .000

RUN NO. 3583/ 0 RN/L = 2.37 GRADIENT INTERVAL = -5.00/ 5.00

| Y | Z | X | ALPHA | BETA | PHI | CN | CLM | CY | CYN | CBL | CA |
|---|---|---|---|---|---|---|---|---|---|---|---|
| -200.530 | 300.450 | 899.06000 | -15.44600 | -15.24900 | -.26534 | -.50286 | .15681 | .63321 | -.20592 | .06727 | .29371 |
| -200.680 | 350.080 | 898.99000 | -15.44600 | -15.25000 | -.26606 | -.50422 | .15772 | .63410 | -.20628 | .06733 | .29363 |
| -200.530 | 400.270 | 899.13000 | -15.44600 | -15.24900 | -.26870 | -.50588 | .15888 | .63623 | -.20751 | .06729 | .29378 |
| | GRADIENT | .00000 | .00000 | .00000 | .00000 | .00000 | .00000 | .00000 | .00000 | .00000 | .00000 |

RUN NO. 3584/ 0 RN/L = 2.37 GRADIENT INTERVAL = -5.00/ 5.00

| Y | Z | X | ALPHA | BETA | PHI | CN | CLM | CY | CYN | CBL | CA |
|---|---|---|---|---|---|---|---|---|---|---|---|
| -300.880 | 401.430 | 899.55000 | -15.44700 | -15.24800 | -.27087 | -.50766 | .16005 | .63798 | -.20869 | .06724 | .29481 |
| -299.950 | 350.060 | 899.08000 | -15.44700 | -15.24800 | -.27072 | -.50739 | .15988 | .63799 | -.20868 | .06728 | .29420 |
| -299.290 | 300.140 | 899.15000 | -15.44700 | -15.24800 | -.27073 | -.50726 | .15978 | .63784 | -.20861 | .06725 | .29407 |
| | GRADIENT | .00000 | .00000 | .00000 | .00000 | .00000 | .00000 | .00000 | .00000 | .00000 | .00000 |

IA143, AEDC V41A-P8A, O/ET W/R.H. SRB SEPARATING (OVX588) ( 23 MAY 77 )

REFERENCE DATA

SREF = 2690.0000 SQ.FT. XMRP = 1097.0000 IN. XT
LREF = 1290.3000 INCHES YMRP = .0000 IN. YT
BREF = 1290.3000 INCHES ZMRP = 450.0000 IN. ZT
SCALE = .0100

PARAMETRIC DATA

ALPHA = -15.000 BETA = -15.000
DALPHA = -15.000 DBETA = -4.000
X = 900.000 MACH = 4.500
JET PC = .000

RUN NO. 3608/ 0 RN/L = 2.[illegible] GRADIENT INTERVAL = -5.00/ 5.00

| Y | Z | X | ALPHA | BETA | PHI | CN | CLM | CY | CYN | CBL | CA |
|---|---|---|---|---|---|---|---|---|---|---|---|
| -200.070 | 300.480 | 899.09000 | -15.44600 | -15.25000 | -.26427 | -.50078 | .15525 | .63080 | -.20495 | .06713 | .29229 |
| -200.330 | 350.170 | 899.11000 | -15.44600 | -15.25000 | -.26424 | -.50136 | .15563 | .63128 | -.20499 | .06719 | .29203 |
| -200.180 | 400.370 | 899.30000 | -15.44600 | -15.25000 | -.26645 | -.50379 | .15721 | .63342 | -.20608 | .06722 | .29190 |
| | GRADIENT | .00000 | .00000 | .00000 | .00000 | .00000 | .00000 | .00000 | .00000 | .00000 | .00000 |

RUN NO. 3609/ 0 RN/L = 2.38 GRADIENT INTERVAL = -5.00/ 5.00

| Y | Z | X | ALPHA | BETA | PHI | CN | CLM | CY | CYN | CBL | CA |
|---|---|---|---|---|---|---|---|---|---|---|---|
| -301.960 | 401.840 | 899.49000 | -15.44700 | -15.24800 | -.27154 | -.50642 | .15916 | .63766 | -.20867 | .06720 | .29259 |
| -299.900 | 350.110 | 899.16000 | -15.44700 | -15.24800 | -.27076 | -.50648 | .15901 | .63762 | -.20849 | .06724 | .29218 |
| -299.830 | 300.180 | 899.07000 | -15.44700 | -15.24900 | -.27026 | -.50622 | .15889 | .63682 | -.20806 | .06722 | .29233 |
| | GRADIENT | .00000 | .00000 | .00000 | .00000 | .00000 | .00000 | .00000 | .00000 | .00000 | .00000 |

IA143, AEDC V41A-P8A, O/ET W/R.H. SRB SEPARATING (OVX589) ( 23 MAY 77 )

REFERENCE DATA

SREF = 2690.0000 SQ.FT. XMRP = 1097.0000 IN. XT
LREF = 1290.3000 INCHES YMRP = .0000 IN. YT
BREF = 1290.3000 INCHES ZMRP = 450.0000 IN. ZT
SCALE = .0100

PARAMETRIC DATA

ALPHA = -15.000 BETA = -15.000
DALPHA = -10.000 DBETA = -8.000
X = 900.000 MACH = 4.500
JET PC = .000

RUN NO. 3586/ 0 RN/L = 2.37 GRADIENT INTERVAL = -5.00/ 5.00

| Y | Z | X | ALPHA | BETA | PHI | CN | CLM | CY | CYN | CBL | CA |
|---|---|---|---|---|---|---|---|---|---|---|---|
| -199.310 | 398.520 | 898.67000 | -15.44600 | -15.24900 | -.26736 | -.50530 | .15825 | .63531 | -.20689 | .06733 | .29332 |
| -200.040 | 349.960 | 898.93000 | -15.44600 | -15.25000 | -.26488 | -.50293 | .15680 | .63267 | -.20558 | .06725 | .29334 |
| -199.890 | 300.150 | 899.06000 | -15.44600 | -15.25000 | -.26441 | -.50176 | .15597 | .63218 | -.20537 | .06724 | .29360 |
| | GRADIENT | .00000 | .00000 | .00000 | .00000 | .00000 | .00000 | .00000 | .00000 | .00000 | .00000 |

RUN NO. 3585/ 0 RN/L = 2.37 GRADIENT INTERVAL = -5.00/ 5.00

| Y | Z | X | ALPHA | BETA | PHI | CN | CLM | CY | CYN | CBL | CA |
|---|---|---|---|---|---|---|---|---|---|---|---|
| -300.390 | 299.870 | 899.33000 | -15.44700 | -15.24900 | -.26979 | -.50685 | .15935 | .63729 | -.20806 | .06732 | .29345 |
| -300.290 | 350.160 | 899.20000 | -15.44600 | -15.24800 | -.27024 | -.50691 | .15951 | .63756 | -.20836 | .06725 | .29347 |
| -299.990 | 400.100 | 899.39000 | -15.44700 | -15.24800 | -.27089 | -.50727 | .15977 | .63781 | -.20860 | .06722 | .29390 |
| | GRADIENT | .00000 | .00000 | .00000 | .00000 | .00000 | .00000 | .00000 | .00000 | .00000 | .00000 |

IA143, AEDC V41A-P8A, O/ET W/R.H. SRB SEPARATING (OVX590) ( 23 MAY 77 )

REFERENCE DATA

SREF = 2690.0000 SQ.FT. XMRP = 1097.0000 IN. XT
LREF = 1290.3000 INCHES YMRP = .0000 IN. YT
BREF = 1290.3000 INCHES ZMRP = 450.0000 IN. ZT
SCALE = .0100

PARAMETRIC DATA

ALPHA = -15.000 BETA = -15.000
DALPHA = -15.000 DBETA = -8.000
X = 900.000 MACH = 4.500
JET PC = .000

RUN NO. 3605/ 0 RN/L = 2.38 GRADIENT INTERVAL = -5.00/ 5.00

| Y | Z | X | ALPHA | BETA | PHI | CN | CLM | CY | CYN | CBL | CA |
|---|---|---|---|---|---|---|---|---|---|---|---|
| -200.880 | 300.400 | 899.02000 | -15.44600 | -15.24900 | -.26320 | -.50002 | .15472 | .62985 | -.20446 | .06711 | .29217 |
| -200.400 | 350.310 | 899.22000 | -15.44600 | -15.25000 | -.26339 | -.50038 | .15503 | .62988 | -.20434 | .06708 | .29217 |
| -200.960 | 400.360 | 899.15000 | -15.44700 | -15.25000 | -.26560 | -.50303 | .15655 | .63259 | -.20559 | .06720 | .29186 |
| | GRADIENT | .00000 | .00000 | .00000 | .00000 | .00000 | .00000 | .00000 | .00000 | .00000 | .00000 |

RUN NO. 3606/ 0 RN/L = 2.38 GRADIENT INTERVAL = -5.00/ 5.00

| Y | Z | X | ALPHA | BETA | PHI | CN | CLM | CY | CYN | CBL | CA |
|---|---|---|---|---|---|---|---|---|---|---|---|
| -301.220 | 402.180 | 899.83000 | -15.44700 | -15.24900 | -.27067 | -.50593 | .15869 | .63725 | -.20821 | .06724 | .29169 |
| -299.230 | 350.250 | 899.22000 | -15.44700 | -15.24900 | -.26884 | -.50547 | .15837 | .63571 | -.20734 | .06724 | .29157 |
| -299.220 | 300.260 | 899.36000 | -15.44600 | -15.24900 | -.26751 | -.50471 | .15786 | .63498 | -.20685 | .06731 | .29171 |
| | GRADIENT | .00000 | .00000 | .00000 | .00000 | .00000 | .00000 | .00000 | .00000 | .00000 | .00000 |

IA143, AEDC V41A-P8A, O/ET W/R.H. SRB SEPARATING (OVX591) ( 23 MAY 77 )

REFERENCE DATA

SREF = 2690.0000 SQ.FT. XMRP = 1097.0000 IN. XT
LREF = 1290.3000 INCHES YMRP = .0000 IN. YT
BREF = 1290.3000 INCHES ZMRP = 450.0000 IN. ZT
SCALE = .0100

PARAMETRIC DATA

ALPHA = -15.000 BETA = -15.000
DALPHA = -15.000 DBETA = 4.000
X = 1200.000 MACH = 4.500
JET PC = .000

RUN NO. 3491/ 0 RN/L = 2.36 GRADIENT INTERVAL = -5.00/ 5.00

| Y | Z | X | ALPHA | BETA | PHI | CN | CLM | CY | CYN | CBL | CA |
|---|---|---|---|---|---|---|---|---|---|---|---|
| -100.160 | .571 | 1199.00000 | -15.45300 | -15.24500 | -.27767 | -.50296 | .15473 | .63147 | -.20564 | .06454 | .29159 |
| -99.313 | 99.112 | 1198.60001 | -15.44900 | -15.24700 | -.27194 | -.50861 | .15920 | .63272 | -.20650 | .06606 | .29244 |
| -99.285 | 199.220 | 1198.70000 | -15.44900 | -15.24700 | -.27288 | -.50893 | .15964 | .63355 | -.20693 | .06609 | .29229 |
| | GRADIENT | .00000 | .00000 | .00000 | .00000 | .00000 | .00000 | .00000 | .00000 | .00000 | .00000 |

RUN NO. 3492/ 0 RN/L = 2.36 GRADIENT INTERVAL = -5.00/ 5.00

| Y | Z | X | ALPHA | BETA | PHI | CN | CLM | CY | CYN | CBL | CA |
|---|---|---|---|---|---|---|---|---|---|---|---|
| -599.310 | 200.370 | 1199.10001 | -15.45000 | -15.24600 | -.27544 | -.51038 | .16045 | .63606 | -.20837 | .06608 | .29322 |
| -600.690 | 101.230 | 1199.10001 | -15.45000 | -15.24600 | -.27526 | -.50995 | .16034 | .63561 | -.20819 | .06604 | .29309 |
| -601.220 | 1.382 | 1199.10001 | -15.45000 | -15.24600 | -.27542 | -.51029 | .16040 | .63605 | -.20833 | .06609 | .29315 |
| | GRADIENT | .00000 | .00000 | .00000 | .00000 | .00000 | .00000 | .00000 | .00000 | .00000 | .00000 |

IA143, AEDC V41A-P8A, O/ET W/R.H. SRB SEPARATING (OVX592) ( 23 MAY 77 )

REFERENCE DATA

SREF = 2690.0000 SQ.FT. XMRP = 1097.0000 IN. XT
LREF = 1290.3000 INCHES YMRP = .0000 IN. YT
BREF = 1290.3000 INCHES ZMRP = 450.0000 IN. ZT
SCALE = .0100

PARAMETRIC DATA

ALPHA = -15.000 BETA = -15.000
DALPHA = -25.000 DBETA = 4.000
X = 1200.000 MACH = 4.500
JET PC = .000

RUN NO. 3631/ 0 RN/L = 2.38 GRADIENT INTERVAL = -5.00/ 5.00

| Y | Z | X | ALPHA | BETA | PHI | CN | CLM | CY | CYN | CBL | CA |
|---|---|---|---|---|---|---|---|---|---|---|---|
| -99.444 | 400.920 | 1199.10001 | -15.44700 | -15.24800 | -.27036 | -.50643 | .15906 | .63682 | -.20816 | .06719 | .29272 |
| -100.400 | 500.810 | 1199.10001 | -15.44700 | -15.24800 | -.27156 | -.50672 | .15935 | .63776 | -.20875 | .06719 | .29293 |
| -100.570 | 601.410 | 1199.39999 | -15.44700 | -15.24800 | -.27138 | -.50727 | .15963 | .63791 | -.20880 | .06723 | .29351 |
| | GRADIENT | .00000 | .00000 | .00000 | .00000 | .00000 | .00000 | .00000 | .00000 | .00000 | .00000 |

RUN NO. 3632/ 0 RN/L = 2.38 GRADIENT INTERVAL = -5.00/ 5.00

| Y | Z | X | ALPHA | BETA | PHI | CN | CLM | CY | CYN | CBL | CA |
|---|---|---|---|---|---|---|---|---|---|---|---|
| -599.570 | 600.460 | 1198.80000 | -15.44800 | -15.24700 | -.27144 | -.50707 | .15961 | .63750 | -.20875 | .06716 | .29406 |
| -599.480 | 500.790 | 1199.10001 | -15.44800 | -15.24800 | -.27163 | -.50728 | .15971 | .63795 | -.20888 | .06721 | .29441 |
| -599.730 | 401.300 | 1199.30000 | -15.44800 | -15.24800 | -.27161 | -.50749 | .15976 | .63810 | -.20892 | .06722 | .29435 |
| | GRADIENT | .00000 | .00000 | .00000 | .00000 | .00000 | .00000 | .00000 | .00000 | .00000 | .00000 |

IA143, AEDC V41A-P8A, O/ET W/R.H. SRB SEPARATING (OVX593) ( 23 MAY 77 )

REFERENCE DATA

SREF = 2690.0000 SQ.FT. XMRP = 1097.0000 IN. XT
LREF = 1290.3000 INCHES YMRP = .0000 IN. YT
BREF = 1290.3000 INCHES ZMRP = 450.0000 IN. ZT
SCALE = .0100

PARAMETRIC DATA

ALPHA = -15.000 BETA = -15.000
DALPHA = -15.000 DBETA = -8.000
X = 1200.000 MACH = 4.500
JET PC = .000

RUN NO. 3494/ 0 RN/L = 2.36 GRADIENT INTERVAL = -5.00/ 5.00

| Y | Z | X | ALPHA | BETA | PHI | CN | CLM | CY | CYN | CBL | CA |
|---|---|---|---|---|---|---|---|---|---|---|---|
| -99.930 | 200.370 | 1199.10001 | -15.44900 | -15.24600 | -.27266 | -.50942 | .15986 | .63375 | -.20701 | .06612 | .29278 |
| -100.160 | 101.260 | 1199.10001 | -15.44900 | -15.24600 | -.27171 | -.50903 | .15954 | .63289 | -.20660 | .06610 | .29258 |
| -101.030 | 1.829 | 1199.50000 | -15.45200 | -15.24600 | -.27560 | -.50209 | .15396 | .62942 | -.20466 | .06452 | .29112 |
| | GRADIENT | .00000 | .00000 | .00000 | .00000 | .00000 | .00000 | .00000 | .00000 | .00000 | .00000 |

RUN NO. 3493/ 0 RN/L = 2.36 GRADIENT INTERVAL = -5.00/ 5.00

| Y | Z | X | ALPHA | BETA | PHI | CN | CLM | CY | CYN | CBL | CA |
|---|---|---|---|---|---|---|---|---|---|---|---|
| -603.180 | -.017 | 1200.60001 | -15.45000 | -15.24500 | -.27510 | -.50985 | .16032 | .63569 | -.20822 | .06605 | .29312 |
| -598.270 | 98.917 | 1198.10001 | -15.45000 | -15.24600 | -.27532 | -.51011 | .16037 | .63580 | -.20826 | .06605 | .29313 |
| -598.700 | 199.380 | 1198.39999 | -15.45000 | -15.24600 | -.27517 | -.51002 | .16038 | .63567 | -.20823 | .06605 | .29314 |
| | GRADIENT | .00000 | .00000 | .00000 | .00000 | .00000 | .00000 | .00000 | .00000 | .00000 | .00000 |

IA143, AEDC V41A-P8A, O/ET W/R.H. SRB SEPARATING (OVX594) ( 23 MAY 77 )

REFERENCE DATA

SREF = 2690.0000 SQ.FT. XMRP = 1097.0000 IN. XT
LREF = 1290.3000 INCHES YMRP = .0000 IN. YT
BREF = 1290.3000 INCHES ZMRP = 450.0000 IN. ZT
SCALE = .0100

PARAMETRIC DATA

ALPHA = -15.000 BETA = -15.000
DALPHA = -25.000 DBETA = -8.000
X = 1200.000 MACH = 4.500
JET PC = .000

RUN NO. 3630/ 0 RN/L = 2.38 GRADIENT INTERVAL = -5.00/ 5.00

| Y | Z | X | ALPHA | BETA | PHI | CN | CLM | CY | CYN | CBL | CA |
|---|---|---|---|---|---|---|---|---|---|---|---|
| -100.320 | 400.600 | 1199.10001 | -15.44700 | -15.24800 | -.27027 | -.50611 | .15885 | .63679 | -.20808 | .06720 | .29270 |
| -101.590 | 501.410 | 1199.50000 | -15.44700 | -15.24800 | -.27164 | -.50650 | .15914 | .63771 | -.20873 | .06718 | .29235 |
| -101.820 | 601.570 | 1199.70000 | -15.44700 | -15.24800 | -.27116 | -.50684 | .15940 | .63748 | -.20858 | .06719 | .29287 |
| | GRADIENT | .00000 | .00000 | .00000 | .00000 | .00000 | .00000 | .00000 | .00000 | .00000 | .00000 |

IA143, AEDC V41A-P8A, O/ET W/R.H. SRB SEPARATING (OVX595) ( 23 MAY 77 )

REFERENCE DATA

SREF = 2690.0000 SQ.FT. XMRP = 1097.0000 IN. XT
LREF = 1290.3000 INCHES YMRP = .0000 IN. YT
BREF = 1290.3000 INCHES ZMRP = 450.0000 IN. ZT
SCALE = .0100

PARAMETRIC DATA

ALPHA = -15.000 BETA = -15.000
DALPHA = -25.000 DBETA = -12.000
X = 1200.000 MACH = 4.500
JET PC = .000

RUN NO. 3629/ 0 RN/L = 2.37 GRADIENT INTERVAL = -5.00/ 5.00

| Y | Z | X | ALPHA | BETA | PHI | CN | CLM | CY | CYN | CBL | CA |
|---|---|---|---|---|---|---|---|---|---|---|---|
| -600.400 | 400.570 | 1199.00000 | -15.44800 | -15.24800 | -.27144 | .50726 | .15968 | .63796 | -.20882 | .06724 | .29409 |
| -599.400 | 499.840 | 1198.60001 | -15.44800 | -15.24800 | -.27153 | -.50730 | .15964 | .63785 | -.20880 | .06720 | .29390 |
| -C00.500 | 600.120 | 1198.89999 | -15.44800 | -15.24800 | -.27148 | -.50728 | .15966 | .63786 | -.20883 | .06722 | .29401 |
| | GRADIENT | .00000 | .00000 | .00000 | .00000 | .00000 | .00000 | .00000 | .00000 | .00000 | .00000 |

IA143, AEDC V41A-P8A, O/ET W/R.H. SRB SEPARATING (OVX596) ( 23 MAY 77 )

REFERENCE DATA

SREF = 2690.0000 SQ.FT. XMRP = 1097.0000 IN. XT
LREF = 1290.3000 INCHES YMRP = .0000 IN. YT
BREF = 1290.3000 INCHES ZMRP = 450.0000 IN. ZT
SCALE = .0100

PARAMETRIC DATA

ALPHA = -15.000 BETA = -15.000
DALPHA = -10.000 DBETA = .000
X = 1200.000 MACH = 4.500
JET PC = .000

RUN NO. 3591/ 0 RN/L = 2.37 GRADIENT INTERVAL = -5.00/ 5.00

| Y | Z | X | ALPHA | BETA | PHI | CN | CLM | CY | CYN | CBL | CA |
|---|---|---|---|---|---|---|---|---|---|---|---|
| -200.380 | -49.660 | 1198.89999 | -15.45100 | -15.24600 | -.27771 | -.50193 | .15527 | .63702 | -.20802 | .06558 | .29396 |
| -200.150 | -.390 | 1198.60001 | -15.44800 | -15.24700 | -.27232 | -.50580 | .15851 | .63776 | -.20855 | .06689 | .29402 |
| -199.590 | 99.475 | 1198.80000 | -15.44700 | -15.24800 | -.27011 | -.50695 | .15957 | .63740 | -.20330 | .06729 | .29410 |
| -200.170 | 150.130 | 1198.80000 | -15.44700 | -15.24800 | -.27024 | -.50713 | .15971 | .63757 | -.20842 | .06729 | .29424 |
| | GRADIENT | .00000 | .00000 | .00000 | .00000 | .00000 | .00000 | .00000 | .00000 | .00000 | .00000 |

RUN NO. 3592/ 0 RN/L = 2.37 GRADIENT INTERVAL = -5.00/ 5.00

| Y | Z | X | ALPHA | BETA | PHI | CN | CLM | CY | CYN | CBL | CA |
|---|---|---|---|---|---|---|---|---|---|---|---|
| -401.380 | 152.400 | 1199.39999 | -15.44700 | -15.24800 | -.27113 | -.50759 | .16003 | .63825 | -.20885 | .06727 | .29533 |
| -400.380 | 100.460 | 1199.00000 | -15.44700 | -15.24800 | -.27112 | -.50767 | .16003 | .63810 | -.20881 | .06725 | .29518 |
| -400.780 | 1.017 | 1199.00000 | -15.44700 | -15.24800 | -.27110 | -.50761 | .16000 | .63817 | -.20886 | .06726 | .29521 |
| -400.730 | -49.279 | 1198.89999 | -15.44800 | -15.24800 | -.27129 | -.50786 | .16006 | .63850 | -.20895 | .06729 | .29532 |
| | GRADIENT | .00000 | .00000 | .00000 | .00000 | .00000 | .00000 | .00000 | .00000 | .00000 | .00000 |

IA143, AEDC V41A-P8A, O/ET W/R.H. SRB SEPARATING (OVX597) ( 23 MAY 77 )

REFERENCE DATA

SREF = 2690.0000 SQ.FT. XMRP = 1097.0000 IN. XT
LREF = 1290.3000 INCHES YMRP = .0000 IN. YT
BREF = 1290.3000 INCHES ZMRP = 450.0000 IN. ZT
SCALE = .0100

PARAMETRIC DATA

ALPHA = -15.000 BETA = -15.000
DALPHA = -20.000 DBETA = .000
X = 1200.000 MACH = 4.500
JET PC = .000

RUN NO. 3623/ 0 RN/L = 2.37 GRADIENT INTERVAL = -5.00/ 5.00

| Y | Z | X | ALPHA | BETA | PHI | CN | CLM | CY | CYN | CBL | CA |
|---|---|---|---|---|---|---|---|---|---|---|---|
| -200.600 | 300.570 | 1198.80000 | -15.44700 | -15.24800 | -.27083 | -.50644 | .15913 | .63725 | -.20841 | .06721 | .29235 |
| -200.710 | 400.180 | 1198.60001 | -15.44700 | -15.24800 | -.27139 | -.50678 | .15936 | .63784 | -.20878 | .06721 | .29283 |
| -199.960 | 500.450 | 1199.10001 | -15.44800 | -15.24800 | -.27177 | -.50752 | .15972 | .63809 | -.20886 | .06722 | .29398 |
| | GRADIENT | .00000 | .00000 | .00000 | .00000 | .00000 | .00000 | .00000 | .00000 | .00000 | .00000 |

RUN NO. 3624/ 0 RN/L = 2.37 GRADIENT INTERVAL = -5.00/ 5.00

| Y | Z | X | ALPHA | BETA | PHI | CN | CLM | CY | CYN | CBL | CA |
|---|---|---|---|---|---|---|---|---|---|---|---|
| -400.540 | 503.460 | 1200.30000 | -15.44800 | -15.24800 | -.27169 | -.50739 | .15974 | .63809 | -.20891 | .06722 | .29453 |
| -399.200 | 400.380 | 1198.89999 | -15.44800 | -15.24800 | -.27152 | -.50733 | .15973 | .63780 | -.20882 | .06719 | .29449 |
| -399.580 | 300.820 | 1199.10001 | -15.44800 | -15.24800 | -.27173 | -.50710 | .15964 | .63768 | -.20877 | .06718 | .29433 |
| | GRADIENT | .00000 | .00000 | .00000 | .00000 | .00000 | .00000 | .00000 | .00000 | .00000 | .00000 |

IA143, AEDC V41A-P8A, O/ET W/R.H. SRB SEPARATING (OVX598) ( 23 MAY 77 )

REFERENCE DATA

SREF = 2690.0000 SQ.FT. XMRP = 1097.0000 IN. XT
LREF = 1290.3000 INCHES YMRP = .0000 IN. YT
BREF = 1290.3000 INCHES ZMRP = 450.0000 IN. ZT
SCALE = .0100

PARAMETRIC DATA

ALPHA = -15.000 BETA = -15.000
DALPHA = -10.000 DBETA = -8.000
X = 1200.000 MACH = 4.500
JET PC = .000

RUN NO. 3589/ 0 RN/L = 2.37 GRADIENT INTERVAL = -5.00/ 5.00

| Y | Z | X | ALPHA | BETA | PHI | CN | CLM | CY | CYN | CBL | CA |
|---|---|---|---|---|---|---|---|---|---|---|---|
| -199.590 | -49.437 | 1199.30000 | -15.45100 | -15.24600 | -.27744 | -.50113 | .15478 | .63667 | -.20779 | .06555 | .29363 |
| -199.790 | -.330 | 1198.89999 | -15.44900 | -15.24800 | -.27301 | -.50390 | .15692 | .63654 | -.20773 | .06647 | .29367 |
| -199.700 | 99.840 | 1198.89999 | -15.44700 | -15.24900 | -.26878 | -.50636 | .15904 | .63618 | -.20754 | .06726 | .29411 |
| -200.370 | 149.850 | 1198.80000 | -15.44700 | -15.24900 | -.26897 | -.50702 | .15940 | .63674 | -.20779 | .06733 | .29421 |
| | GRADIENT | .00000 | .00000 | .00000 | .00000 | .00000 | .00000 | .00000 | .00000 | .00000 | .00000 |

RUN NO. 3590/ 0 RN/L = 2.37 GRADIENT INTERVAL = -5.00/ 5.00

| Y | Z | X | ALPHA | BETA | PHI | CN | CLM | CY | CYN | CBL | CA |
|---|---|---|---|---|---|---|---|---|---|---|---|
| -402.110 | 152.590 | 1199.60001 | -15.44700 | -15.24700 | -.27080 | -.50762 | .16001 | .63790 | -.20873 | .06724 | .29504 |
| -400.630 | 100.410 | 1199.10001 | -15.44700 | -15.24800 | -.27091 | -.50784 | .16011 | .63816 | -.20882 | .06728 | .29519 |
| -401.470 | 1.155 | 1199.20000 | -15.44800 | -15.24800 | -.27121 | -.50785 | .16007 | .63827 | -.20883 | .06728 | .29512 |
| -400.810 | -49.360 | 1199.10001 | -15.44700 | -15.24800 | -.27091 | -.50766 | .15999 | .63820 | -.20880 | .06726 | .29517 |
| | GRADIENT | .00000 | .00000 | .00000 | .00000 | .00000 | .00000 | .00000 | .00000 | .00000 | .00000 |

IA143, AEDC V41A-P8A, O/ET W/R.H. SRB SEPARATING (OVX599) ( 23 MAY 77 )

REFERENCE DATA

SREF = 2690.0000 SQ.FT. XMRP = 1097.0000 IN. XT
LREF = 1290.3000 INCHES YMRP = .0000 IN. YT
BREF = 1290.3000 INCHES ZMRP = 450.0000 IN. ZT
SCALE = .0100

PARAMETRIC DATA

ALPHA = -15.000 BETA = -15.000
DALPHA = -20.000 DBETA = -12.000
X = 1200.000 MACH = 4.500
JET PC = .000

RUN NO. 3617/ 0 RN/L = 2.37 GRADIENT INTERVAL = -5.00/ 5.00

| Y | Z | X | ALPHA | BETA | PHI | CN | CLM | CY | CYN | CBL | CA |
|---|---|---|---|---|---|---|---|---|---|---|---|
| -200.260 | 300.620 | 1199.20000 | -15.44700 | -15.24900 | -.26912 | -.50604 | .15879 | .63615 | -.20761 | .06727 | .29229 |
| -201.160 | 400.210 | 1199.10001 | -15.44700 | -15.24800 | -.27125 | -.50651 | .15911 | .63738 | -.20847 | .06719 | .29220 |
| -202.050 | 500.510 | 1199.50000 | -15.44800 | -15.24800 | -.27165 | -.50729 | .15960 | .63780 | -.20875 | .06720 | .29356 |
| | GRADIENT | .00000 | .00000 | .00000 | .00000 | .00000 | .00000 | .00000 | .00000 | .00000 | .00000 |

RUN NO. 3618/ 0 RN/L = 2.37 GRADIENT INTERVAL = -5.00/ 5.00

| Y | Z | X | ALPHA | BETA | PHI | CN | CLM | CY | CYN | CBL | CA |
|---|---|---|---|---|---|---|---|---|---|---|---|
| -401.750 | 503.690 | 1200.60001 | -15.44800 | -15.24800 | -.27136 | -.50739 | .15967 | .63783 | -.20875 | .06723 | .29374 |
| -399.690 | 400.250 | 1198.70000 | -15.44800 | -15.24800 | -.27131 | -.50733 | .15966 | .63780 | -.20873 | .06723 | .29363 |
| -399.390 | 300.660 | 1199.20000 | -15.44800 | -15.24800 | -.27138 | -.50724 | .15963 | .63779 | -.20872 | .06722 | .29360 |
| | GRADIENT | .00000 | .00000 | .00000 | .00000 | .00000 | .00000 | .00000 | .00000 | .00000 | .00000 |

IA143, AEDC V41A-P8A, O/ET W/R.H. SRB SEPARATING (OVX600) ( 23 MAY 77 )

REFERENCE DATA

SREF = 2690.0000 SQ.FT. XMRP = 1097.0000 IN. XT
LREF = 1290.3000 INCHES YMRP = .0000 IN. YT
BREF = 1290.3000 INCHES ZMRP = 450.0000 IN. ZT
SCALE = .0100

PARAMETRIC DATA

ALPHA = -15.000 BETA = -15.000
DALPHA = -15.000 DBETA = -4.000
X = 1200.000 MACH = 4.500
JET PC = .000

RUN NO. 3612/ 0 RN/L = 2.38 GRADIENT INTERVAL = -5.00/ 5.00

| Y | Z | X | ALPHA | BETA | PHI | CN | CLM | CY | CYN | CBL | CA |
|---|---|---|---|---|---|---|---|---|---|---|---|
| -200.450 | 400.420 | 1199.00000 | -15.44700 | -15.24800 | -.27142 | -.50707 | .15956 | .63787 | -.20877 | .06722 | .29351 |
| -200.100 | 450.060 | 1198.89999 | -15.44800 | -15.24800 | -.27167 | -.50727 | .15968 | .63783 | -.20878 | .06722 | .29396 |
| -200.960 | 500.300 | 1199.10001 | -15.44800 | -15.24800 | -.27150 | -.50740 | .15974 | .63793 | -.20880 | .06723 | .29428 |
| | GRADIENT | .00000 | .00000 | .00000 | .00000 | .00000 | .00000 | .00000 | .00000 | .00000 | .00000 |

RUN NO. 3613/ 0 RN/L = 2.38 GRADIENT INTERVAL = -5.00/ 5.00

| Y | Z | X | ALPHA | BETA | PHI | CN | CLM | CY | CYN | CBL | CA |
|---|---|---|---|---|---|---|---|---|---|---|---|
| -300.780 | 501.880 | 1199.50000 | -15.44800 | -15.24800 | -.27172 | -.50761 | .15983 | .63825 | -.20895 | .06724 | .29465 |
| -299.970 | 449.950 | 1198.89999 | -15.44800 | -15.24800 | -.27167 | -.50753 | .15976 | .63820 | -.20890 | .06726 | .29430 |
| -300.190 | 400.120 | 1198.80000 | -15.44800 | -15.24800 | -.27156 | -.50746 | .15973 | .63814 | -.20889 | .06725 | .29419 |
| | GRADIENT | .00000 | .00000 | .00000 | .00000 | .00000 | .00000 | .00000 | .00000 | .00000 | .00000 |

IA143, AEDC V41A-P8A, O/ET W/R.H. SRB SEPARATING (OVX601) ( 23 MAY 77 )

REFERENCE DATA

SREF = 2690.0000 SQ.FT. XMRP = 1097.0000 IN. XT
LREF = 1290.3000 INCHES YMRP = .0000 IN. YT
BREF = 1290.3000 INCHES ZMRP = 450.0000 IN. ZT
SCALE = .0100

PARAMETRIC DATA

ALPHA = -15.000 BETA = -15.000
DALPHA = -20.000 DBETA = -4.000
X = 1200.000 MACH = 4.500
JET PC = .000

RUN NO. 3619/ 0 RN/L = 2.37 GRADIENT INTERVAL = -5.00/ 5.00

| Y | Z | X | ALPHA | BETA | PHI | CN | CLM | CY | CYN | CBL | CA |
|---|---|---|---|---|---|---|---|---|---|---|---|
| -199.400 | 400.700 | 1199.30000 | -15.44700 | -15.24800 | -.27154 | -.50674 | .15928 | .63770 | -.20872 | .06719 | .29264 |
| -200.440 | 450.210 | 1198.89999 | -15.44800 | -15.24800 | -.27151 | -.50720 | .15961 | .63797 | -.20882 | .06723 | .29354 |
| -199.480 | 500.440 | 1199.20000 | -15.44800 | -15.24800 | -.27150 | -.50729 | .15965 | .63777 | -.20877 | .06719 | .29384 |
| | GRADIENT | .00000 | .00000 | .00000 | .00000 | .00000 | .00000 | .00000 | .00000 | .00000 | .00000 |

RUN NO. 3620/ 0 RN/L = 2.37 GRADIENT INTERVAL = -5.00/ 5.00

| Y | Z | X | ALPHA | BETA | PHI | CN | CLM | CY | CYN | CBL | CA |
|---|---|---|---|---|---|---|---|---|---|---|---|
| -300.510 | 502.260 | 1199.80000 | -15.44800 | -15.24800 | -.27160 | -.50744 | .15973 | .63791 | -.20882 | .06722 | .29399 |
| -300.030 | 450.140 | 1198.70000 | -15.44800 | -15.24800 | -.27152 | -.50727 | .15966 | .63777 | -.20873 | .06720 | .29382 |
| -299.900 | 400.320 | 1199.00000 | -15.44800 | -15.24800 | -.27154 | -.50727 | .15964 | .63777 | -.20874 | .06721 | .29361 |
| | GRADIENT | .00000 | .00000 | .00000 | .00000 | .00000 | .00000 | .00000 | .00000 | .00000 | .00000 |

IA143, AEDC V41A-P8A, O/ET W/R.H. SRB SEPARATING (OVX602) ( 23 MAY 77 )

REFERENCE DATA

SREF = 2690.0000 SQ.FT. XMRP = 1097.0000 IN. XT
LREF = 1290.3000 INCHES YMRP = .0000 IN. YT
BREF = 1290.3000 INCHES ZMRP = 450.0000 IN. ZT
SCALE = .0100

PARAMETRIC DATA

ALPHA = -15.000 BETA = -15.000
DALPHA = -15.000 DBETA = -8.000
X = 1200.000 MACH = 4.500
JET PC = .000

RUN NO. 3615/ 0 RN/L = 2.37 GRADIENT INTERVAL = -5.00/ 5.00

| Y | Z | X | ALPHA | BETA | PHI | CN | CLM | CY | CYN | CBL | CA |
|---|---|---|---|---|---|---|---|---|---|---|---|
| -200.440 | 400.410 | 1199.00000 | -15.44700 | -15.24800 | -.27150 | -.50712 | .15954 | .63810 | -.20889 | .06724 | .29339 |
| -200.890 | 450.360 | 1199.30000 | -15.44800 | -15.24800 | -.27156 | -.50740 | .15970 | .63820 | -.20890 | .06725 | .29394 |
| -200.810 | 500.520 | 1199.20000 | -15.44800 | -15.24800 | -.27152 | -.50716 | .15966 | .63764 | -.20871 | .06719 | .29403 |
| | GRADIENT | .00000 | .00000 | .00000 | .00000 | .00000 | .00000 | .00000 | .00000 | .00000 | .00000 |

IA143, AEDC V41A-P8A, O/ET W/R.H. SRB SEPARATING (OVX603) ( 23 MAY 77 )

REFERENCE DATA

SREF = 2690.0000 SQ.FT. XMRP = 1097.0000 IN. XT
LREF = 1290.3000 INCHES YMRP = .0000 IN. YT
BREF = 1290.3000 INCHES ZMRP = 450.0000 IN. ZT
SCALE = .0100

PARAMETRIC DATA

ALPHA = -15.000 BETA = -15.000
DALPHA = -20.000 DBETA = -8.000
X = 1200.000 MACH = 4.500
JET PC = .000

RUN NO. 3622/ 0 RN/L = 2.37 GRADIENT INTERVAL = -5.00/ 5.00

| Y | Z | X | ALPHA | BETA | PHI | CN | CLM | CY | CYN | CBL | CA |
|---|---|---|---|---|---|---|---|---|---|---|---|
| -199.310 | 498.300 | 1198.30000 | -15.44800 | -15.24800 | -.27150 | -.50723 | .15963 | .63790 | -.20879 | .06724 | .29369 |
| -199.150 | 450.360 | 1199.00000 | -15.44700 | -15.24800 | -.27139 | -.50695 | .15949 | .63776 | -.20876 | .06721 | .29333 |
| -200.150 | 400.600 | 1198.89999 | -15.44800 | -15.24800 | -.27149 | -.50667 | .15923 | .63773 | -.20866 | .06721 | .29249 |
| | GRADIENT | .00000 | .00000 | .00000 | .00000 | .00000 | .00000 | .00000 | .00000 | .00000 | .00000 |

RUN NO. 3621/ 0 RN/L = 2.37 GRADIENT INTERVAL = -5.00/ 5.00

| Y | Z | X | ALPHA | BETA | PHI | CN | CLM | CY | CYN | CBL | CA |
|---|---|---|---|---|---|---|---|---|---|---|---|
| -300.160 | 400.050 | 1199.10001 | -15.44700 | -15.24800 | -.27122 | -.50702 | .15949 | .63761 | -.20865 | .06718 | .29315 |
| -300.830 | 450.440 | 1199.00000 | -15.44800 | -15.24800 | -.27137 | -.50726 | .15963 | .63787 | -.20875 | .06723 | .29360 |
| -300.520 | 500.470 | 1199.00000 | -15.44800 | -15.24800 | -.27137 | -.50729 | .15969 | .63774 | -.20873 | .06721 | .29378 |
| | GRADIENT | .00000 | .00000 | .00000 | .00000 | .00000 | .00000 | .00000 | .00000 | .00000 | .00000 |

IA143, AEDC V41A-P8A, O/ET W/R.H. SRB SEPARATING (OVX604) ( 23 MAY 77 )

REFERENCE DATA

SREF = 2690.0000 SQ.FT. XMRP = 1097.0000 IN. XT
LREF = 1290.3000 INCHES YMRP = .0000 IN. YT
BREF = 1290.3000 INCHES ZMRP = 450.0000 IN. ZT
SCALE = .0100

PARAMETRIC DATA

ALPHA = -15.000 BETA = -15.000
DALPHA = -15.000 DBETA = -8.000
X = 1200.000 MACH = 4.500
JET PC = .000

RUN NO. 3614/ 0 RN/L = 2.38 GRADIENT INTERVAL = -5.00/ 5.00

| Y | Z | X | ALPHA | BETA | PHI | CN | CLM | CY | CYN | CBL | CA |
|---|---|---|---|---|---|---|---|---|---|---|---|
| -300.320 | 300.450 | 1199.00000 | -15.44700 | -15.24800 | -.27142 | -.50705 | .15953 | .63789 | -.20876 | .06722 | .29341 |
| -300.450 | 400.280 | 1199.00000 | -15.44800 | -15.24800 | -.27151 | -.50729 | .15968 | .63785 | -.20876 | .06720 | .29395 |
| -300.250 | 450.320 | 1199.30000 | -15.44800 | -15.24800 | -.27141 | -.50743 | .15972 | .63790 | -.20880 | .06722 | .29415 |
| -300.580 | 500.460 | 1199.10001 | -15.44800 | -15.24800 | -.27174 | -.50762 | .15979 | .63841 | -.20897 | .06727 | .29442 |
| | GRADIENT | .00000 | .00000 | .00000 | .00000 | .00000 | .00000 | .00000 | .00000 | .00000 | .00000 |

IA143, AEDC V41A-P8A, O/ET W/R.H. SRB SEPARATING (OVX605) ( 23 MAY 77 )

REFERENCE DATA

SREF = 2690.0000 SQ.FT. XMRP = 1097.0000 IN. XT
LREF = 1290.3000 INCHES YMRP = .0000 IN. YT
BREF = 1290.3000 INCHES ZMRP = 450.0000 IN. ZT
SCALE = .0100

PARAMETRIC DATA

ALPHA = -15.000 BETA = -15.000
DALPHA = -18.000 DBETA = -8.000
X = 1200.000 MACH = 4.500
JET PC = .000

RUN NO. 3616/ 0 RN/L = 2.38 GRADIENT INTERVAL = -5.00/ 5.00

| Y | Z | X | ALPHA | BETA | PHI | CN | CLM | CY | CYN | CBL | CA |
|---|---|---|---|---|---|---|---|---|---|---|---|
| -300.600 | 400.430 | 1199.00000 | -15.44800 | -15.24800 | -.27136 | -.50703 | .15957 | .63761 | -.20869 | .06721 | .29350 |
| -301.500 | 601.000 | 1199.50000 | -15.44800 | -15.24800 | -.27140 | -.50735 | .15970 | .63790 | -.20883 | .06721 | .29428 |
| -302.930 | 801.620 | 1199.80000 | -15.44800 | -15.24800 | -.27160 | -.50717 | .15966 | .63770 | -.20876 | .06719 | .29428 |
| -302.290 | 1002.200 | 1200.00000 | -15.44800 | -15.24800 | -.27179 | -.50740 | .15973 | .63783 | -.20882 | .06718 | .29438 |
| | GRADIENT | .00000 | .00000 | .00000 | .00000 | .00000 | .00000 | .00000 | .00000 | .00000 | .00000 |

IA143, AEDC V41A-P8A, O/ET W/R.H. SRB SEPARATING (OVX606) ( 23 MAY 77 )

REFERENCE DATA

SREF = 2690.0000 SQ.FT. XMRP = 1097.0000 IN. XT
LREF = 1290.3000 INCHES YMRP = .0000 IN. YT
BREF = 1290.3000 INCHES ZMRP = 450.0000 IN. ZT
SCALE = .0100

PARAMETRIC DATA

ALPHA = -10.000 BETA = -10.000
DALPHA = .000 DBETA = .000
X = .000 MACH = 4.500
JET PC = .000

RUN NO. 2542/ 0 RN/L = 2.38 GRADIENT INTERVAL = -5.00/ 5.00

| Y | Z | X | ALPHA | BETA | PHI | CN | CLM | CY | CYN | CBL | CA |
|---|---|---|---|---|---|---|---|---|---|---|---|
| -9.500 | .030 | -.49095 | -10.30900 | -10.15500 | -.12307 | -.32836 | .08924 | .32209 | -.10020 | .03626 | .26238 |
| -9.806 | 24.883 | -.60724 | -10.30500 | -10.15700 | -.12273 | -.32709 | .09110 | .32746 | -.10207 | .03738 | .26212 |
| -8.817 | 99.755 | -.41355 | -10.29300 | -10.16600 | -.13283 | -.31902 | .09418 | .34885 | -.10948 | .03950 | .26090 |
| -9.858 | 149.790 | -.41914 | -10.28700 | -10.17000 | -.13931 | -.31146 | .09350 | .35857 | -.11257 | .04004 | .26077 |
| -10.651 | 250.220 | -.52595 | -10.28600 | -10.17600 | -.14409 | -.30312 | .08981 | .36456 | -.11254 | .03991 | .26035 |
| -11.056 | 350.410 | -.58650 | -10.29500 | -10.18400 | -.14761 | -.31049 | .08975 | .36813 | -.11082 | .03940 | .26032 |
| -10.097 | 475.010 | -.59501 | -10.30400 | -10.18900 | -.15933 | -.32267 | .09273 | .38076 | -.11451 | .03939 | .26032 |
| -10.637 | 499.750 | -.59642 | -10.30400 | -10.18900 | -.16072 | -.32488 | .09396 | .38248 | -.11542 | .03945 | .26028 |
| -10.144 | 599.730 | -.61523 | -10.30500 | -10.18800 | -.16335 | -.32822 | .09617 | .38484 | -.11690 | .03947 | .26110 |
| | GRADIENT | .00000 | .00000 | .00000 | .00000 | .00000 | .00000 | .00000 | .00000 | .00000 | .00000 |

IA143, AEDC V41A-P8A, O/ET W/R.H. SRB SEPARATING (OVX606) ( 23 MAY 77 )

REFERENCE DATA

SREF = 2690.0000 SQ.FT. XMRP = 1097.0000 IN. XT
LREF = 1290.3000 INCHES YMRP = .0000 IN. YT
BREF = 1290.3000 INCHES ZMRP = 450.0000 IN. ZT
SCALE = .0100

PARAMETRIC DATA

ALPHA = -10.000 BETA = -10.000
DALPHA = .000 DBETA = .000
X = .000 MACH = 4.500
JET PC = .000

RUN NO. 2543/ 0 RN/L = 2.38 GRADIENT INTERVAL = -5.00/ 5.00

| Y | Z | X | ALPHA | BETA | PHI | CN | CLM | CY | CYN | CBL | CA |
|---|---|---|---|---|---|---|---|---|---|---|---|
| -99.840 | 599.480 | -.47216 | -10.30500 | -10.18800 | -.16350 | -.32813 | .09614 | .38469 | -.11685 | .03945 | .26107 |
| -100.110 | 499.720 | -.55576 | -10.30500 | -10.18800 | -.16340 | -.32794 | .09598 | .38469 | -.11683 | .03945 | .26037 |
| -100.400 | 474.670 | -.54857 | -10.30500 | -10.18900 | -.16262 | -.32703 | .09532 | .38415 | -.11641 | .03945 | .26037 |
| -101.020 | 349.890 | -.80099 | -10.30100 | -10.18800 | -.15447 | -.31606 | .09032 | .37645 | -.11288 | .03949 | .26029 |
| -100.980 | 249.690 | -.87163 | -10.29300 | -10.18300 | -.14962 | -.30817 | .08927 | .37090 | -.11277 | .03969 | .26018 |
| -100.290 | 150.020 | -.58275 | -10.28900 | -10.17600 | -.14410 | -.30628 | .08978 | .36462 | -.11258 | .03990 | .25975 |
| -101.110 | 99.938 | -.78079 | -10.29100 | -10.17400 | -.14090 | -.30842 | .08989 | .35863 | -.11074 | .03942 | .25974 |
| -101.300 | 25.196 | -.65565 | -10.29600 | -10.17100 | -.13239 | -.31511 | .09040 | .34494 | -.10466 | .03828 | .26193 |
| -100.890 | .043 | -.72252 | -10.29800 | -10.17100 | -.13327 | -.31470 | .08872 | .34157 | -.10290 | .03734 | .26203 |
| | GRADIENT | .00000 | .00000 | .00000 | .00000 | .00000 | .00000 | .00000 | .00000 | .00000 | .00000 |

IA143, AEDC V41A-P8A, O/ET W/R.H. SRB SEPARATING (OVX607) ( 23 MAY 77 )

REFERENCE DATA

SREF = 2690.0000 SQ.FT. XMRP = 1097.0000 IN. XT
LREF = 1290.3000 INCHES YMRP = .0000 IN. YT
BREF = 1290.3000 INCHES ZMRP = 450.0000 IN. ZT
SCALE = .0100

PARAMETRIC DATA

ALPHA = -10.000 BETA = -10.000
DALPHA = -5.000 DBETA = .000
X = .000 MACH = 4.500
JET PC = .000

RUN NO. 2556/ 0 RN/L = 2.39 GRADIENT INTERVAL = -5.00/ 5.00

| Y | Z | X | ALPHA | BETA | PHI | CN | CLM | CY | CYN | CBL | CA |
|---|---|---|---|---|---|---|---|---|---|---|---|
| -9.878 | 25.173 | -.63203 | -10.31800 | -10.14800 | -.13166 | -.30817 | .07351 | .30491 | -.09292 | .03089 | .26522 |
| -8.023 | 99.557 | -.48039 | -10.30100 | -10.15700 | -.12610 | -.31307 | .08524 | .32130 | -.09857 | .03524 | .26331 |
| -9.160 | 149.930 | -.57772 | -10.29000 | -10.16300 | -.12654 | -.31128 | .09027 | .33415 | -.10293 | .03767 | .26162 |
| -9.677 | 250.440 | -.33314 | -10.28200 | -10.17200 | -.13393 | -.29987 | .08927 | .35243 | -.10846 | .03960 | .26087 |
| -11.070 | 350.520 | -.46706 | -10.29000 | -10.18100 | -.14017 | -.30025 | .08580 | .35951 | -.10783 | .03928 | .26008 |
| -10.377 | 475.310 | -.45072 | -10.30100 | -10.18900 | -.15261 | -.31602 | .08965 | .37452 | -.11150 | .03937 | .25983 |
| -9.777 | 499.910 | -.54093 | -10.30300 | -10.18900 | -.15595 | -.31900 | .09077 | .37747 | -.11286 | .03934 | .25944 |
| -9.968 | 600.060 | -.54163 | -10.30500 | -10.18800 | -.16319 | -.32738 | .09551 | .38430 | -.11660 | .03939 | .26030 |
| | GRADIENT | .00000 | .00000 | .00000 | .00000 | .00000 | .00000 | .00000 | .00000 | .00000 | .00000 |

IA143, AEDC V41A-P8A, O/ET W/R.H. SRB SEPARATING (OVX607) ( 23 MAY 77 )

REFERENCE DATA

SREF = 2690.0000 SQ.FT. XMRP = 1097.0000 IN. XT
LREF = 1290.3000 INCHES YMRP = .0000 IN. YT
BREF = 1290.3000 INCHES ZMRP = 450.0000 IN. ZT
SCALE = .0100

PARAMETRIC DATA

ALPHA = -10.000 BETA = -10.000
DALPHA = -5.000 DBETA = .000
X = .000 MACH = 4.500
JET PC = .000

RUN NO. 2557/ 0 RN/L = 2.39 GRADIENT INTERVAL = -5.00/ 5.00

| Y | Z | X | ALPHA | BETA | PHI | CN | CLM | CY | CYN | CBL | CA |
|---|---|---|---|---|---|---|---|---|---|---|---|
| -100.150 | 599.770 | -.60821 | -10.30500 | -10.18800 | -.16344 | -.32804 | .09614 | .38457 | -.11683 | .03940 | .26108 |
| -99.890 | 499.750 | -.60704 | -10.30400 | -10.18900 | -.16032 | -.32403 | .09331 | .38196 | -.11511 | .03940 | .25990 |
| -100.400 | 474.710 | -.66162 | -10.30400 | -10.18900 | -.15907 | -.32235 | .09223 | .38067 | -.11434 | .03936 | .26011 |
| -100.220 | 350.110 | -.78549 | -10.29700 | -10.18700 | -.14859 | -.30917 | .08753 | .36996 | -.11032 | .03937 | .25931 |
| -100.260 | 249.950 | -.69440 | -10.28800 | -10.18000 | -.13997 | -.30139 | .08690 | .36069 | -.10911 | .03962 | .25966 |
| -100.310 | 150.210 | -.71112 | -10.28800 | -10.17200 | -.13539 | -.30306 | .08727 | .34883 | -.10623 | .03847 | .25952 |
| -100.960 | 100.230 | -.76707 | -10.29600 | -10.16900 | -.14139 | -.29732 | .08025 | .33931 | -.10171 | .03515 | .26042 |
| -101.850 | 25.569 | -.68109 | -10.30900 | -10.16900 | -.14804 | -.28886 | .06952 | .32263 | -.09197 | .02988 | .26420 |
| | GRADIENT | .00000 | .00000 | .00000 | .00000 | .00000 | .00000 | .00000 | .00000 | .00000 | .00000 |

IA143, AEDC V41A-P8A, O/ET W/R.H. SRB SEPARATING (OVX608) ( 23 MAY 77 )

REFERENCE DATA

SREF = 2690.0000 SQ.FT. XMRP = 1097.0000 IN. XT
LREF = 1290.3000 INCHES YMRP = .0000 IN. YT
BREF = 1290.3000 INCHES ZMRP = 450.0000 IN. ZT
SCALE = .0100

PARAMETRIC DATA

ALPHA = -10.000 BETA = -10.000
DALPHA = .000 DBETA = -4.000
X = .000 MACH = 4.500
JET PC = .000

RUN NO. 2545/ 0 RN/L = 2.38 GRADIENT INTERVAL = -5.00/ 5.00

| Y | Z | X | ALPHA | BETA | PHI | CN | CLM | CY | CYN | CBL | CA |
|---|---|---|---|---|---|---|---|---|---|---|---|
| -10.740 | 250.030 | -.61565 | -10.28100 | -10.17300 | -.14226 | -.29530 | .08786 | .36205 | -.11274 | .03995 | .26075 |
| -12.872 | 350.300 | -.63735 | -10.29100 | -10.18200 | -.14418 | -.30420 | .08757 | .36396 | -.10986 | .03938 | .25985 |
| -10.684 | 475.260 | -.54988 | -10.30300 | -10.18900 | -.15658 | -.32015 | .09153 | .37861 | -.11340 | .03944 | .26018 |
| -10.001 | 499.720 | -.44135 | -10.30400 | -10.18900 | -.15873 | -.32239 | .09250 | .38057 | -.11434 | .03942 | .26026 |
| -10.152 | 599.850 | -.43267 | -10.30500 | -10.18800 | -.16336 | -.32794 | .09606 | .38474 | -.11687 | .03947 | .26080 |
| | GRADIENT | .00000 | .00000 | .00000 | .00000 | .00000 | .00000 | .00000 | .00000 | .00000 | .00000 |

IA143, AEDC V41A-P8A, O/ET W/R.H. SRB SEPARATING (OVX609) ( 23 MAY 77 )

REFERENCE DATA

SREF = 2690.0000 SQ.FT. XMRP = 1097.0000 IN. XT
LREF = 1290.3000 INCHES YMRP = .0000 IN. YT
BREF = 1290.3000 INCHES ZMRP = 450.0000 IN. ZT
SCALE = .0100

PARAMETRIC DATA

ALPHA = -10.000 BETA = -10.000
DALPHA = -5.000 DBETA = -4.000
X = .000 MACH = 4.500
JET PC = .000

RUN NO. 2555/ 0 RN/L = 2.39 GRADIENT INTERVAL = -5.00/ 5.00

| Y | Z | X | ALPHA | BETA | PHI | CN | CLM | CY | CYN | CBL | CA |
|---|---|---|---|---|---|---|---|---|---|---|---|
| -10.294 | 474.870 | -.58249 | -10.29900 | -10.18900 | -.14821 | -.30965 | .08670 | .36980 | -.10923 | .03926 | .25903 |
| -10.283 | 499.940 | -.55406 | -10.30100 | -10.19000 | -.15206 | -.31424 | .08846 | .37402 | -.11106 | .03936 | .25918 |
| -11.124 | 600.220 | -.61239 | -10.30400 | -10.18900 | -.16125 | -.32509 | .09395 | .38273 | -.11552 | .03940 | .25972 |
| | GRADIENT | .00000 | .00000 | .00000 | .00000 | .00000 | .00000 | .00000 | .00000 | .00000 | .00000 |

IA143, AEDC V41A-P8A, O/ET W/R.H. SRB SEPARATING (OVX610) ( 23 MAY 77 )

REFERENCE DATA

SREF = 2690.0000 SQ.FT. XMRP = 1097.0000 IN. XT
LREF = 1290.3000 INCHES YMRP = .0000 IN. YT
BREF = 1290.3000 INCHES ZMRP = 450.0000 IN. ZT
SCALE = .0100

PARAMETRIC DATA

ALPHA = -10.000 BETA = -10.000
DALPHA = .000 DBETA = -4.000
X = .000 MACH = 4.500
JET PC = .000

RUN NO. 2544/ 0 RN/L = 2.38 GRADIENT INTERVAL = -5.00/ 5.00

| Y | Z | X | ALPHA | BETA | PHI | CN | CLM | CY | CYN | CBL | CA |
|---|---|---|---|---|---|---|---|---|---|---|---|
| -100.380 | -.030 | -.51960 | -10.30100 | -10.16500 | -.11457 | -.30726 | .08154 | .31119 | -.09030 | .03493 | .26518 |
| -99.642 | 24.887 | -.67049 | -10.29600 | -10.16500 | -.11554 | -.30993 | .08541 | .31897 | -.09431 | .03643 | .26268 |
| -98.993 | 99.836 | -.43785 | -10.28800 | -10.16800 | -.12984 | -.30392 | .08779 | .34376 | -.10573 | .03882 | .26033 |
| -99.987 | 149.640 | -.52201 | -10.28500 | -10.17200 | -.13555 | -.30125 | .08839 | .35508 | -.10988 | .03988 | .26016 |
| -100.910 | 249.720 | -.40940 | -10.28900 | -10.18000 | -.14329 | -.30020 | .08649 | .36416 | -.11087 | .03973 | .25988 |
| -100.580 | 349.970 | -.45502 | -10.29800 | -10.18700 | -.15016 | -.31030 | .08819 | .37155 | -.11110 | .03942 | .26014 |
| -100.570 | 474.760 | -.55032 | -10.30400 | -10.18900 | -.16024 | -.32418 | .09342 | .38229 | -.11519 | .03949 | .26015 |
| -100.440 | 499.850 | -.53317 | -10.30500 | -10.18900 | -.16189 | -.32601 | .09462 | .38349 | -.11600 | .03945 | .26011 |
| -100.300 | 599.800 | -.59716 | -10.30500 | -10.18800 | -.16338 | -.32829 | .09623 | .38493 | -.11693 | .03948 | .26142 |
| | GRADIENT | .00000 | .00000 | .00000 | .00000 | .00000 | .00000 | .00000 | .00000 | .00000 | .00000 |

IA143, AEDC V41A-P8A, O/ET W/R.H. SRB SEPARATING (OVX611) ( 23 MAY 77 )

REFERENCE DATA

SREF = 2690.0000 SQ.FT. XMRP = 1097.0000 IN. XT
LREF = 1290.3000 INCHES YMRP = .0000 IN. YT
BREF = 1290.3000 INCHES ZMRP = 450.0000 IN. ZT
SCALE = .0100

PARAMETRIC DATA

ALPHA = -10.000 BETA = -10.000
DALPHA = -5.000 DBETA = -4.000
X = .000 MACH = 4.500
JET PC = .000

RUN NO. 2554/ 0 RN/L = 2.39 GRADIENT INTERVAL = -5.00/ 5.00

| Y | Z | X | ALPHA | BETA | PHI | CN | CLM | CY | CYN | CBL | CA |
|---|---|---|---|---|---|---|---|---|---|---|---|
| -100.500 | 25.217 | -.72644 | -10.30800 | -10.16100 | -.12543 | -.28568 | .06592 | .29471 | -.08174 | .02899 | .26618 |
| -98.512 | 99.711 | -.76708 | -10.29600 | -10.16400 | -.12437 | -.28776 | .07358 | .31119 | -.08977 | .03279 | .26299 |
| -99.445 | 149.770 | -.55698 | -10.28700 | -10.16700 | -.12351 | -.29496 | .08247 | .32874 | -.09819 | .03680 | .26055 |
| -100.040 | 249.970 | -.55011 | -10.28400 | -10.17700 | -.13132 | -.29347 | .08392 | .35029 | -.10534 | .03938 | .26004 |
| -100.700 | 350.070 | -.44922 | -10.29300 | -10.18500 | -.14168 | -.30080 | .08412 | .36248 | -.10747 | .03929 | .25908 |
| -100.850 | 475.010 | -.50219 | -10.30300 | -10.19000 | -.15466 | -.31724 | .08949 | .37676 | -.11231 | .03940 | .25939 |
| -100.280 | 499.840 | -.58415 | -10.30400 | -10.19000 | -.15723 | -.31954 | .09054 | .37802 | -.11318 | .03928 | .25912 |
| -100.580 | 600.160 | -.50686 | -10.30500 | -10.18800 | -.16360 | -.32778 | .09588 | .38456 | -.11680 | .03939 | .26023 |
| | GRADIENT | .00000 | .00000 | .00000 | .00000 | .00000 | .00000 | .00000 | .00000 | .00000 | .00000 |

IA143, AEDC V41A-P8A, O/ET W/R.H. SRB SEPARATING (OVX612) ( 23 MAY 77 )

REFERENCE DATA

SREF = 2690.0000 SQ.FT. XMRP = 1097.0000 IN. XT
LREF = 1290.3000 INCHES YMRP = .0000 IN. YT
BREF = 1290.3000 INCHES ZMRP = 450.0000 IN. ZT
SCALE = .0100

PARAMETRIC DATA

ALPHA = -10.000 BETA = -10.000
DALPHA = .000 DBETA = .000
X = 300.000 MACH = 4.500
JET PC = .000

RUN NO. 2546/ 0 RN/L = 2.38 GRADIENT INTERVAL = -5.00/ 5.00

| Y | Z | X | ALPHA | BETA | PHI | CN | CLM | CY | CYN | CBL | CA |
|---|---|---|---|---|---|---|---|---|---|---|---|
| -10.223 | 99.931 | 299.28000 | -10.29700 | -10.18000 | -.14463 | -.32142 | .09475 | .36461 | -.11076 | .03952 | .26073 |
| -10.602 | 249.520 | 299.25000 | -10.29700 | -10.18500 | -.15271 | -.31299 | .09058 | .37434 | -.11316 | .03959 | .26060 |
| -9.061 | 299.920 | 299.59000 | -10.30000 | -10.18700 | -.15506 | -.31658 | .09128 | .37646 | -.11334 | .03944 | .26034 |
| -11.023 | 399.960 | 299.36000 | -10.30300 | -10.18900 | -.15836 | -.32187 | .09276 | .37990 | -.11430 | .03940 | .26041 |
| -10.449 | 424.940 | 299.48000 | -10.30400 | -10.18900 | -.15912 | -.32276 | .09302 | .38067 | -.11459 | .03940 | .26072 |
| -10.243 | 500.580 | 299.43000 | -10.30500 | -10.18900 | -.16158 | -.32583 | .09455 | .38299 | -.11575 | .03941 | .26050 |
| -10.648 | 600.450 | 299.31000 | -10.30500 | -10.18800 | -.16330 | -.32830 | .09620 | .38473 | -.11687 | .03945 | .26114 |
| | GRADIENT | .00000 | .00000 | .00000 | .00000 | .00000 | .00000 | .00000 | .00000 | .00000 | .00000 |

IA143, AEDC V41A-P8A, O/ET W/R.H. SRB SEPARATING (OVX612) ( 23 MAY 77 )

REFERENCE DATA

SREF = 2690.0000 SQ.FT. XMRP = 1097.0000 IN. XT
LREF = 1290.3000 INCHES YMRP = .0000 IN. YT
BREF = 1290.3000 INCHES ZMRP = 450.0000 IN. ZT
SCALE = .0100

PARAMETRIC DATA

ALPHA = -10.000 BETA = -10.000
DALPHA = .000 DBETA = .000
X = 300.000 MACH = 4.500
JET PC = .000

RUN NO. 2547/ 0 RN/L = 2.38 GRADIENT INTERVAL = -5.00/ 5.00

| Y | Z | X | ALPHA | BETA | PHI | CN | CLM | CY | CYN | CBL | CA |
|---|---|---|---|---|---|---|---|---|---|---|---|
| -200.210 | 599.470 | 299.27000 | -10.30500 | -10.18800 | -.16338 | -.32824 | .09625 | .38500 | -.11698 | .03949 | .26145 |
| -199.180 | 499.900 | 299.38000 | -10.30500 | -10.18800 | -.16348 | -.32825 | .09619 | .38489 | -.11695 | .03948 | .26121 |
| -199.870 | 424.490 | 299.23000 | -10.30400 | -10.18800 | -.16333 | -.32804 | .09608 | .38484 | -.11690 | .03947 | .26074 |
| -200.470 | 399.520 | 299.23000 | -10.30400 | -10.18800 | -.16324 | -.32782 | .09595 | .38463 | -.11678 | .03946 | .26056 |
| -199.080 | 299.650 | 299.29000 | -10.30400 | -10.18900 | -.16103 | -.32442 | .09370 | .38277 | -.11564 | .03946 | .26055 |
| -200.150 | 249.760 | 299.23000 | -10.30400 | -10.18900 | -.16082 | -.32333 | .09326 | .38233 | -.11553 | .03943 | .26076 |
| -200.240 | 100.250 | 299.19000 | -10.30300 | -10.18800 | -.16097 | -.32101 | .09234 | .38175 | -.11558 | .03931 | .26043 |
| | GRADIENT | .00000 | .00000 | .00000 | .00000 | .00000 | .00000 | .00000 | .00000 | .00000 | .00000 |

IA143, AEDC V41A-P8A, O/ET W/R.H. SRB SEPARATING (OVX613) ( 23 MAY 77 )

REFERENCE DATA

SREF = 2690.0000 SQ.FT. XMRP = 1097.0000 IN. XT
LREF = 1290.3000 INCHES YMRP = .0000 IN. YT
BREF = 1290.3000 INCHES ZMRP = 450.0000 IN. ZT
SCALE = .0100

PARAMETRIC DATA

ALPHA = -10.000 BETA = -10.000
DALPHA = -10.000 DBETA = .000
X = 300.000 MACH = 4.500
JET PC = .000

RUN NO. 2575/ 0 RN/L = 2.39 GRADIENT INTERVAL = -5.00/ 5.00

| Y | Z | X | ALPHA | BETA | PHI | CN | CLM | CY | CYN | CBL | CA |
|---|---|---|---|---|---|---|---|---|---|---|---|
| -9.841 | 100.430 | 299.28000 | -10.30600 | -10.17300 | -.14737 | -.30196 | .07826 | .33426 | -.09678 | .03242 | .26142 |
| -9.023 | 249.350 | 298.98000 | -10.29000 | -10.17900 | -.14094 | -.30879 | .09085 | .35767 | -.10752 | .03877 | .26049 |
| -10.419 | 300.100 | 299.25000 | -10.29300 | -10.18400 | -.14136 | -.30570 | .08751 | .36014 | -.10654 | .03889 | .26101 |
| -10.162 | 400.460 | 299.37000 | -10.29900 | -10.19000 | -.14493 | -.30988 | .08677 | .36639 | -.10738 | .03917 | .25965 |
| -10.548 | 425.440 | 299.40000 | -10.30000 | -10.19000 | -.14753 | -.31176 | .08736 | .36898 | -.10850 | .03917 | .25932 |
| -11.344 | 501.040 | 299.44000 | -10.30300 | -10.18900 | -.15626 | -.31901 | .09060 | .37700 | -.11249 | .03914 | .25879 |
| -11.036 | 601.350 | 299.41000 | -10.30400 | -10.18900 | -.16268 | -.32623 | .09506 | .38278 | -.11584 | .03920 | .25942 |
| | GRADIENT | .00000 | .00000 | .00000 | .00000 | .00000 | .00000 | .00000 | .00000 | .00000 | .00000 |

IA143, AEDC V41A-P8A, O/ET W/R.H. SRB SEPARATING (OVX614) ( 23 MAY 77 )

REFERENCE DATA

SREF = 2690.0000 SQ.FT. XMRP = 1097.0000 IN. XT
LREF = 1290.3000 INCHES YMRP = .0000 IN. YT
BREF = 1290.3000 INCHES ZMRP = 450.0000 IN. ZT
SCALE = .0100

PARAMETRIC DATA

ALPHA = -10.000 BETA = -10.000
DALPHA = -10.000 DBETA = .000
X = 300.000 MACH = 4.500
JET PC = .000

RUN NO. 2573/ 0 RN/L = 2.39 GRADIENT INTERVAL = -5.00/ 5.00

| Y | Z | X | ALPHA | BETA | PHI | CN | CLM | CY | CYN | CBL | CA |
|---|---|---|---|---|---|---|---|---|---|---|---|
| -199.660 | 100.370 | 299.31000 | -10.30900 | -10.18600 | -.17227 | -.30337 | .07941 | .36954 | -.10857 | .03415 | .25924 |
| -200.250 | 149.810 | 299.08000 | -10.30300 | -10.18800 | -.15744 | -.31457 | .08799 | .37266 | -.11059 | .03797 | .25876 |
| -199.330 | 200.060 | 299.24000 | -10.30200 | -10.18900 | -.15474 | -.31687 | .08986 | .37420 | -.11129 | .03886 | .25895 |
| -199.470 | 250.170 | 299.26000 | -10.30200 | -10.18900 | -.15550 | -.31857 | .09060 | .37602 | -.11209 | .03907 | .25902 |
| -199.410 | 300.220 | 299.26000 | -10.30300 | -10.19000 | -.15716 | -.31988 | .09114 | .37809 | -.11303 | .03919 | .25865 |
| -200.560 | 400.430 | 299.20000 | -10.30500 | -10.18900 | -.16069 | -.32371 | .09304 | .38167 | -.11481 | .03926 | .25952 |
| -200.520 | 425.260 | 299.35000 | -10.30500 | -10.18900 | -.16168 | -.32513 | .09405 | .38245 | -.11529 | .03924 | .25996 |
| -200.290 | 500.210 | 299.34000 | -10.30400 | -10.18800 | -.16404 | -.32811 | .09617 | .38488 | -.11681 | .03931 | .26077 |
| -199.950 | 600.260 | 299.33000 | -10.30500 | -10.18800 | -.16405 | -.32832 | .09638 | .38480 | -.11688 | .03932 | .26160 |
| | GRADIENT | .00000 | .00000 | .00000 | .00000 | .00000 | .00000 | .00000 | .00000 | .00000 | .00000 |

IA143, AEDC V41A-P8A, O/ET W/R.H. SRB SEPARATING (OVX615) ( 23 MAY 77 )

REFERENCE DATA

SREF = 2690.0000 SQ.FT. XMRP = 1097.0000 IN. XT
LREF = 1290.3000 INCHES YMRP = .0000 IN. YT
BREF = 1290.3000 INCHES ZMRP = 450.0000 IN. ZT
SCALE = .0100

PARAMETRIC DATA

ALPHA = -10.000 BETA = -10.000
DALPHA = .000 DBETA = -8.000
X = 300.000 MACH = 4.500
JET PC = .000

RUN NO. 2549/ 0 RN/L = 2.38 GRADIENT INTERVAL = -5.00/ 5.00

| Y | Z | X | ALPHA | BETA | PHI | CN | CLM | CY | CYN | CBL | CA |
|---|---|---|---|---|---|---|---|---|---|---|---|
| -10.334 | 249.860 | 299.27000 | -10.29000 | -10.17900 | -.15004 | -.30131 | .08757 | .37005 | -.11382 | .03964 | .26090 |
| -11.780 | 299.700 | 299.26000 | -10.29500 | -10.18400 | -.15085 | -.30417 | .08632 | .37145 | -.11238 | .03944 | .26037 |
| -11.851 | 400.360 | 299.64000 | -10.30100 | -10.18900 | -.15304 | -.31556 | .08954 | .37479 | -.11169 | .03936 | .26007 |
| -10.753 | 424.950 | 299.29000 | -10.30200 | -10.18900 | -.15460 | -.31798 | .09056 | .37676 | -.11256 | .03945 | .26003 |
| -11.394 | 500.560 | 299.47000 | -10.30400 | -10.18900 | -.15941 | -.32337 | .09298 | .38133 | -.11469 | .03944 | .26061 |
| -10.973 | 600.650 | 299.41000 | -10.30500 | -10.18800 | -.16348 | -.32808 | .09608 | .38470 | -.11687 | .03944 | .26074 |
| | GRADIENT | .00000 | .00000 | .00000 | .00000 | .00000 | .00000 | .00000 | .00000 | .00000 | .00000 |

IA143, AEDC V41A-P8A, O/ET W/R.H. SRB SEPARATING (OVX616) ( 23 MAY 77 )

REFERENCE DATA

SREF = 2690.0000 SQ.FT. XMRP = 1097.0000 IN. XT
LREF = 1290.3000 INCHES YMRP = .0000 IN. YT
BREF = 1290.3000 INCHES ZMRP = 450.0000 IN. ZT
SCALE = .0100

PARAMETRIC DATA

ALPHA = -10.000 BETA = -10.000
DALPHA = -10.000 DBETA = -8.000
X = 300.000 MACH = 4.500
JET PC = .000

RUN NO. 2579/ 0 RN/L = 2.40 GRADIENT INTERVAL = -5.00/ 5.00

| Y | Z | X | ALPHA | BETA | PHI | CN | CLM | CY | CYN | CBL | CA |
|---|---|---|---|---|---|---|---|---|---|---|---|
| -10.850 | 425.220 | 299.20000 | -10.29500 | -10.18700 | -.14223 | -.29436 | .07905 | .36268 | -.10650 | .03906 | .25898 |
| -11.475 | 500.970 | 299.61000 | -10.30000 | -10.19000 | -.14855 | -.30389 | .08262 | .37014 | -.10893 | .03920 | .25791 |
| -11.884 | 601.820 | 299.85000 | -10.30400 | -10.18900 | -.15966 | -.32243 | .09219 | .37972 | -.11385 | .03903 | .25760 |
| | GRADIENT | .00000 | .00000 | .00000 | .00000 | .00000 | .00000 | .00000 | .00000 | .00000 | .00000 |

IA143, AEDC V41A-P8A, O/ET W/R.H. SRB SEPARATING (OVX617) ( 23 MAY 77 )

REFERENCE DATA

SREF = 2690.0000 SQ.FT. XMRP = 1097.0000 IN. XT
LREF = 1290.3000 INCHES YMRP = .0000 IN. YT
BREF = 1290.3000 INCHES ZMRP = 450.0000 IN. ZT
SCALE = .0100

PARAMETRIC DATA

ALPHA = -10.000 BETA = -10.000
DALPHA = .000 DBETA = -8.000
X = 300.000 MACH = 4.500
JET PC = .000

RUN NO. 2548/ 0 RN/L = 2.38 GRADIENT INTERVAL = -5.00/ 5.00

| Y | Z | X | ALPHA | BETA | PHI | CN | CLM | CY | CYN | CBL | CA |
|---|---|---|---|---|---|---|---|---|---|---|---|
| -200.430 | 99.908 | 299.27000 | -10.29900 | -10.18900 | -.14907 | -.31179 | .08791 | .36905 | -.10899 | .03896 | .25968 |
| -200.530 | 249.240 | 299.41000 | -10.30200 | -10.18900 | -.15628 | -.31578 | .08920 | .37801 | -.11321 | .03939 | .25982 |
| -200.910 | 299.890 | 299.34000 | -10.30300 | -10.18900 | -.15782 | -.31913 | .09073 | .37942 | -.11389 | .03938 | .25951 |
| -201.520 | 400.110 | 299.57000 | -10.30500 | -10.18900 | -.16060 | -.32431 | .09347 | .38238 | -.11527 | .03944 | .26011 |
| -200.840 | 424.930 | 299.41000 | -10.30400 | -10.18900 | -.16169 | -.32602 | .09458 | .38353 | -.11596 | .03947 | .26018 |
| -200.930 | 500.090 | 299.52000 | -10.30400 | -10.18800 | -.16330 | -.32802 | .09606 | .38470 | -.11685 | .03944 | .26071 |
| -200.430 | 599.890 | 299.35000 | -10.30500 | -10.18800 | -.16344 | -.32824 | .09617 | .38503 | -.11700 | .03950 | .26118 |
| | GRADIENT | .00000 | .00000 | .00000 | .00000 | .00000 | .00000 | .00000 | .00000 | .00000 | .00000 |

IA143, AEDC V41A-P8A, O/ET W/R.H. SRB SEPARATING (OVX618) ( 23 MAY 77 )

REFERENCE DATA

SREF = 2690.0000 SQ.FT. XMRP = 1097.0000 IN. XT
LREF = 1290.3000 INCHES YMRP = .0000 IN. YT
BREF = 1290.3000 INCHES ZMRP = 450.0000 IN. ZT
SCALE = .0100

PARAMETRIC DATA

ALPHA = -10.000 BETA = -10.000
DALPHA = -10.000 DBETA = -8.000
X = 300.000 MACH = 4.500
JET PC = .000

RUN NO. 2578/ 0 RN/L = 2.38 GRADIENT INTERVAL = -5.00/ 5.00

| Y | Z | X | ALPHA | BETA | PHI | CN | CLM | CY | CYN | CBL | CA |
|---|---|---|---|---|---|---|---|---|---|---|---|
| -195.940 | 99.274 | 301.83000 | -10.30600 | -10.18500 | -.15389 | -.28153 | .06677 | .33404 | -.09053 | .03007 | .26037 |
| -199.340 | 249.010 | 298.88000 | -10.29800 | -10.19000 | -.13925 | -.30432 | .08313 | .35606 | -.10169 | .03800 | .25915 |
| -199.720 | 300.050 | 299.26000 | -10.30000 | -10.19100 | -.14070 | -.30596 | .08325 | .35963 | -.10313 | .03844 | .25824 |
| -201.440 | 400.600 | 299.57000 | -10.30200 | -10.19100 | -.15100 | -.31487 | .08751 | .37134 | -.10918 | .03891 | .25676 |
| -200.540 | 425.430 | 299.29000 | -10.30300 | -10.19000 | -.15382 | -.31697 | .08866 | .37424 | -.11074 | .03899 | .25670 |
| -200.830 | 500.390 | 299.54000 | -10.30400 | -10.18900 | -.16040 | -.32359 | .09299 | .38053 | -.11437 | .03908 | .25752 |
| -200.530 | 600.540 | 299.53000 | -10.30400 | -10.18800 | -.16356 | -.32793 | .09608 | .38355 | -.11639 | .03915 | .25896 |
| | GRADIENT | .00000 | .00000 | .00000 | .00000 | .00000 | .00000 | .00000 | .00000 | .00000 | .00000 |

IA143, AEDC V41A-P8A, O/ET W/R.H. SRB SEPARATING (OVX619) ( 23 MAY 77 )

REFERENCE DATA

SREF = 2690.0000 SQ.FT. XMRP = 1097.0000 IN. XT
LREF = 1290.3000 INCHES YMRP = .0000 IN. YT
BREF = 1290.3000 INCHES ZMRP = 450.0000 IN. ZT
SCALE = .0100

PARAMETRIC DATA

ALPHA = -10.000 BETA = -10.000
DALPHA = -5.000 DBETA = .000
X = 300.000 MACH = 4.500
JET PC = .000

RUN NO. 2558/ 0 RN/L = 2.39 GRADIENT INTERVAL = -5.00/ 5.00

| Y | Z | X | ALPHA | BETA | PHI | CN | CLM | CY | CYN | CBL | CA |
|---|---|---|---|---|---|---|---|---|---|---|---|
| -99.867 | 100.210 | 299.34000 | -10.29800 | -10.18500 | -.14961 | -.31320 | .08943 | .36449 | -.10807 | .03804 | .26004 |
| -99.384 | 149.790 | 299.19000 | -10.29700 | -10.18600 | -.14941 | -.31388 | .09028 | .36919 | -.11017 | .03907 | .25998 |
| -99.749 | 199.760 | 299.33000 | -10.29800 | -10.18700 | -.15062 | -.31369 | .08962 | .37166 | -.11094 | .03928 | .25998 |
| | GRADIENT | .00000 | .00000 | .00000 | .00000 | .00000 | .00000 | .00000 | .00000 | .00000 | .00000 |

RUN NO. 2559/ 0 RN/L = 2.39 GRADIENT INTERVAL = -5.00/ 5.00

| Y | Z | X | ALPHA | BETA | PHI | CN | CLM | CY | CYN | CBL | CA |
|---|---|---|---|---|---|---|---|---|---|---|---|
| -201.490 | 200.960 | 299.30000 | -10.30300 | -10.18800 | -.15920 | -.32072 | .09198 | .38022 | -.11454 | .03930 | .25994 |
| -199.980 | 150.220 | 299.21000 | -10.30300 | -10.18800 | -.15844 | -.31981 | .09159 | .37900 | -.11405 | .03922 | .25995 |
| -200.320 | 100.340 | 299.15000 | -10.30300 | -10.18800 | -.15868 | -.31955 | .09136 | .37826 | -.11372 | .03901 | .25992 |
| | GRADIENT | .00000 | .00000 | .00000 | .00000 | .00000 | .00000 | .00000 | .00000 | .00000 | .00000 |

IA143, AEDC V41A-P8A, O/ET W/R.H. SRB SEPARATING (OVX620) ( 23 MAY 77 )

REFERENCE DATA

SREF = 2690.0000 SQ.FT. XMRP = 1097.0000 IN. XT
LREF = 1290.3000 INCHES YMRP = .0000 IN. YT
BREF = 1290.3000 INCHES ZMRP = 450.0000 IN. ZT
SCALE = .0100

PARAMETRIC DATA

ALPHA = -10.000 BETA = -10.000
DALPHA = -10.000 DBETA = .000
X = 300.000 MACH = 4.500
JET PC = .000

RUN NO. 2574/ 0 RN/L = 2.39 GRADIENT INTERVAL = -5.00/ 5.00

| Y | Z | X | ALPHA | BETA | PHI | CN | CLM | CY | CYN | CBL | CA |
|---|---|---|---|---|---|---|---|---|---|---|---|
| -100.010 | 100.220 | 299.19000 | -10.30500 | -10.18200 | -.15980 | -.29185 | .07416 | .34524 | -.09788 | .03160 | .26158 |
| -98.904 | 149.710 | 299.20000 | -10.29900 | -10.18400 | -.14804 | -.30357 | .08337 | .35241 | -.10194 | .03570 | .26005 |
| -100.020 | 200.090 | 299.16000 | -10.29600 | -10.18600 | -.14287 | -.30902 | .08729 | .35875 | -.10467 | .03808 | .25991 |
| | GRADIENT | .00000 | .00000 | .00000 | .00000 | .00000 | .00000 | .00000 | .00000 | .00000 | .00000 |

IA143, AEDC V41A-P8A, O/ET W/R.H. SRB SEPARATING (OVX621) ( 23 MAY 77 )

REFERENCE DATA

SREF = 2690.0000 SQ.FT. XMRP = 1097.0000 IN. XT
LREF = 1290.3000 INCHES YMRP = .0000 IN. YT
BREF = 1290.3000 INCHES ZMRP = 450.0000 IN. ZT
SCALE = .0100

PARAMETRIC DATA

ALPHA = -10.000 BETA = -10.000
DALPHA = -5.000 DBETA = -4.000
X = 300.000 MACH = 4.500
JET PC = .000

RUN NO. 2561/ 0 RN/L = 2.39 GRADIENT INTERVAL = -5.00/ 5.00

| Y | Z | X | ALPHA | BETA | PHI | CN | CLM | CY | CYN | CBL | CA |
|---|---|---|---|---|---|---|---|---|---|---|---|
| -99.998 | 100.130 | 299.22000 | -10.29600 | -10.18300 | -.14268 | -.30967 | .08811 | .35351 | -.10356 | .03720 | .26071 |
| -99.571 | 149.870 | 299.30000 | -10.29500 | -10.18500 | -.14454 | -.31047 | .08918 | .36214 | -.10731 | .03864 | .26045 |
| -100.290 | 199.740 | 299.29000 | -10.29600 | -10.18700 | -.14516 | -.30950 | .08807 | .36559 | -.10833 | .03916 | .26006 |
| -100.820 | 299.770 | 299.41000 | -10.30000 | -10.18900 | -.14921 | -.31072 | .08701 | .37129 | -.10991 | .03936 | .25948 |
| | GRADIENT | .00000 | .00000 | .00000 | .00000 | .00000 | .00000 | .00000 | .00000 | .00000 | .00000 |

IA143, AEDC V41A-P8A, O/ET W/R.H. SRB SEPARATING (OVX622) ( 23 MAY 77 )

REFERENCE DATA

SREF = 2690.0000 SQ.FT. XMRP = 1097.0000 IN. XT
LREF = 1290.3000 INCHES YMRP = .0000 IN. YT
BREF = 1290.3000 INCHES ZMRP = 450.0000 IN. ZT
SCALE = .0100

PARAMETRIC DATA

ALPHA = -10.000 BETA = -10.000
DALPHA = -10.000 DBETA = -4.000
X = 300.000 MACH = 4.500
JET PC = .000

RUN NO. 2576/ 0 RN/L = 2.39 GRADIENT INTERVAL = -5.00/ 5.00

| Y | Z | X | ALPHA | BETA | PHI | CN | CLM | CY | CYN | CBL | CA |
|---|---|---|---|---|---|---|---|---|---|---|---|
| -100.390 | 100.240 | 299.03000 | -10.30200 | -10.17900 | -.14757 | -.28834 | .07327 | .33329 | -.09369 | .03178 | .26422 |
| -99.120 | 149.690 | 299.02000 | -10.29700 | -10.18100 | -.14422 | -.29788 | .08095 | .34390 | -.09884 | .03479 | .26111 |
| -99.436 | 199.710 | 299.11000 | -10.29400 | -10.18400 | -.14007 | -.30556 | .08626 | .35273 | -.10265 | .03751 | .26032 |
| | GRADIENT | .00000 | .00000 | .00000 | .00000 | .00000 | .00000 | .00000 | .00000 | .00000 | .00000 |

RUN NO. 2577/ 0 RN/L = 2.38 GRADIENT INTERVAL = -5.00/ 5.00

| Y | Z | X | ALPHA | BETA | PHI | CN | CLM | CY | CYN | CBL | CA |
|---|---|---|---|---|---|---|---|---|---|---|---|
| -201.160 | 201.850 | 299.73000 | -10.30000 | -10.18900 | -.14571 | -.31110 | .08640 | .36222 | -.10511 | .03805 | .25824 |
| -200.670 | 150.730 | 299.26000 | -10.30400 | -10.18800 | -.15463 | -.30437 | .08120 | .36006 | -.10394 | .03572 | .25788 |
| -201.370 | 100.700 | 299.20000 | -10.31100 | -10.18600 | -.17182 | -.28860 | .06955 | .35469 | -.10021 | .03082 | .25897 |
| | GRADIENT | .00000 | .00000 | .00000 | .00000 | .00000 | .00000 | .00000 | .00000 | .00000 | .00000 |

IA143, AEDC V41A-P8A, O/ET W/R.H. SRB SEPARATING (OVX623) ( 23 MAY 77 )

REFERENCE DATA

SREF = 2690.0000 SQ.FT. XMRP = 1097.0000 IN. XT
LREF = 1290.3000 INCHES YMRP = .0000 IN. YT
BREF = 1290.3000 INCHES ZMRP = 450.0000 IN. ZT
SCALE = .0100

PARAMETRIC DATA

ALPHA = -10.000 BETA = -10.000
DALPHA = -5.000 DBETA = -4.000
X = 300.000 MACH = 4.500
JET PC = .000

RUN NO. 2560/ 0 RN/L = 2.39 GRADIENT INTERVAL = -5.00/ 5.00

| Y | Z | X | ALPHA | BETA | PHI | CN | CLM | CY | CYN | CBL | CA |
|---|---|---|---|---|---|---|---|---|---|---|---|
| -200.000 | 100.240 | 299.16000 | -10.30200 | -10.18800 | -.15236 | -.31378 | .08770 | .36845 | -.10851 | .03811 | .25884 |
| -199.710 | 149.910 | 299.26000 | -10.30100 | -10.18900 | -.15174 | -.31516 | .08901 | .37142 | -.11000 | .03889 | .25897 |
| -199.650 | 199.800 | 299.27000 | -10.30100 | -10.18900 | -.15316 | -.31589 | .08936 | .37406 | -.11123 | .03914 | .25890 |
| | GRADIENT | .00000 | .00000 | .00000 | .00000 | .00000 | .00000 | .00000 | .00000 | .00000 | .00000 |

IA143, AEDC V41A-P8A, O/ET W/R.H. SRB SEPARATING (OVX624) ( 23 MAY 77 )

REFERENCE DATA

SREF = 2690.0000 SQ.FT. XMRP = 1097.0000 IN. XT
LREF = 1290.3000 INCHES YMRP = .0000 IN. YT
BREF = 1290.3000 INCHES ZMRP = 450.0000 IN. ZT
SCALE = .0100

PARAMETRIC DATA

ALPHA = -10.000 BETA = -10.000
DALPHA = -6.000 DBETA = -2.000
X = 300.000 MACH = 4.500
JET PC = .000

RUN NO. 2571/ 0 RN/L = 2.39 GRADIENT INTERVAL = -5.00/ 5.00

| Y | Z | X | ALPHA | BETA | PHI | CN | CLM | CY | CYN | CBL | CA |
|---|---|---|---|---|---|---|---|---|---|---|---|
| -100.180 | 100.220 | 299.17000 | -10.29800 | -10.18400 | -.14769 | -.30761 | .08606 | .35546 | -.10377 | .03647 | .26053 |
| -99.726 | 199.350 | 299.18000 | -10.29700 | -10.18700 | -.14630 | -.31114 | .08856 | .36589 | -.10823 | .03894 | .26021 |
| -99.577 | 299.850 | 299.47000 | -10.30000 | -10.19000 | -.15025 | -.31237 | .08789 | .37175 | -.11005 | .03927 | .25947 |
| | GRADIENT | .00000 | .00000 | .00000 | .00000 | .00000 | .00000 | .00000 | .00000 | .00000 | .00000 |

IA143, AEDC V41A-P8A, O/ET W/R.H. SRB SEPARATING (OVX625) ( 23 MAY 77 )

REFERENCE DATA

SREF = 2690.0000 SQ.FT. XMRP = 1097.0000 IN. XT
LREF = 1290.3000 INCHES YMRP = .0000 IN. YT
BREF = 1290.3000 INCHES ZMRP = 450.0000 IN. ZT
SCALE = .0100

PARAMETRIC DATA

ALPHA = -10.000 BETA = -10.000
DALPHA = -6.000 DBETA = -2.000
X = 300.000 MACH = 4.500
JET PC = .000

RUN NO. 2600/ 0 RN/L = 2.39 GRADIENT INTERVAL = -5.00/ 5.00

| Y | Z | X | ALPHA | BETA | PHI | CN | CLM | CY | CYN | CBL | CA |
|---|---|---|---|---|---|---|---|---|---|---|---|
| -100.050 | 100.210 | 299.19000 | -10.29800 | -10.18300 | -.14780 | -.30798 | .08646 | .35514 | -.10374 | .03638 | .26069 |
| -99.388 | 199.400 | 299.21000 | -10.29600 | -10.18600 | -.14599 | -.31134 | .08901 | .36544 | -.10820 | .03892 | .25988 |
| -100.570 | 299.810 | 299.24000 | -10.30000 | -10.18900 | -.15022 | -.31280 | .08829 | .37164 | -.11012 | .03925 | .25917 |
| | GRADIENT | .00000 | .00000 | .00000 | .00000 | .00000 | .00000 | .00000 | .00000 | .00000 | .00000 |

IA143, AEDC V41A-P8A, O/ET W/R.H. SRB SEPARATING (OVX626) ( 23 MAY 77 )

REFERENCE DATA

SREF = 2690.0000 SQ.FT. XMRP = 1097.0000 IN. XT
LREF = 1290.3000 INCHES YMRP = .0000 IN. YT
BREF = 1290.3000 INCHES ZMRP = 450.0000 IN. ZT
SCALE = .0100

PARAMETRIC DATA

ALPHA = -10.000 BETA = -10.000
DALPHA = .000 DBETA = -4.000
X = 600.000 MACH = 4.500
JET PC = .000

RUN NO. 2552/ 0 RN/L = 2.39 GRADIENT INTERVAL = -5.00/ 5.00

| Y | Z | X | ALPHA | BETA | PHI | CN | CLM | CY | CYN | CBL | CA |
|---|---|---|---|---|---|---|---|---|---|---|---|
| -100.310 | 199.810 | 599.18000 | -10.30200 | -10.18800 | -.15739 | -.31577 | .08981 | .37812 | -.11374 | .03925 | .26072 |
| -100.800 | 249.750 | 599.37000 | -10.30300 | -10.18800 | -.15782 | -.31796 | .09040 | .37903 | -.11398 | .03932 | .26029 |
| -101.400 | 399.840 | 599.29000 | -10.30500 | -10.18800 | -.16286 | -.32733 | .09551 | .38421 | -.11650 | .03941 | .26059 |
| -100.610 | 449.730 | 599.23000 | -10.30500 | -10.18800 | -.16342 | -.32806 | .09608 | .38451 | -.11681 | .03939 | .26078 |
| -100.460 | 499.910 | 599.26000 | -10.30500 | -10.18800 | -.16347 | -.32826 | .09619 | .38484 | -.11696 | .03946 | .26111 |
| -101.100 | 600.160 | 599.39000 | -10.30500 | -10.18800 | -.16348 | -.32823 | .09622 | .38480 | -.11695 | .03946 | .26132 |
| | GRADIENT | .00000 | .00000 | .00000 | .00000 | .00000 | .00000 | .00000 | .00000 | .00000 | .00000 |

RUN NO. 2553/ 0 RN/L = 2.39 GRADIENT INTERVAL = -5.00/ 5.00

| Y | Z | X | ALPHA | BETA | PHI | CN | CLM | CY | CYN | CBL | CA |
|---|---|---|---|---|---|---|---|---|---|---|---|
| -300.720 | 600.500 | 599.14000 | -10.30500 | -10.18800 | -.16353 | -.32839 | .09627 | .38498 | -.11699 | .03947 | .26149 |
| -299.470 | 499.380 | 599.06000 | -10.30500 | -10.18800 | -.16337 | -.32821 | .09623 | .38479 | -.11694 | .03945 | .26147 |
| -300.250 | 449.480 | 599.09000 | -10.30500 | -10.18800 | -.16340 | -.32814 | .09620 | .38469 | -.11692 | .03944 | .26131 |
| -300.430 | 399.630 | 599.11000 | -10.30500 | -10.18800 | -.16354 | -.32830 | .09626 | .38469 | -.11689 | .03942 | .26152 |
| -299.860 | 249.680 | 599.03000 | -10.30500 | -10.18800 | -.16351 | -.32827 | .09619 | .38470 | -.11686 | .03941 | .26119 |
| -299.860 | 200.000 | 599.12000 | -10.30400 | -10.18800 | -.16342 | -.32807 | .09611 | .38472 | -.11686 | .03943 | .26085 |
| | GRADIENT | .00000 | .00000 | .00000 | .00000 | .00000 | .00000 | .00000 | .00000 | .00000 | .00000 |

IA143, AEDC V41A-P8A, O/ET W/R.H. SRB SEPARATING (OVX627) ( 23 MAY 77 )

REFERENCE DATA

SREF = 2690.0000 SQ.FT. XMRP = 1097.0000 IN. XT
LREF = 1290.3000 INCHES YMRP = .0000 IN. YT
BREF = 1290.3000 INCHES ZMRP = 450.0000 IN. ZT
SCALE = .0100

PARAMETRIC DATA

ALPHA = -10.000 BETA = -10.000
DALPHA = .000 DBETA = 4.000
X = 600.000 MACH = 4.500
JET PC = .000

RUN NO. 3642/ 0 RN/L = 2.38 GRADIENT INTERVAL = -5.00/ 5.00

| Y | Z | X | ALPHA | BETA | PHI | CN | CLM | CY | CYN | CBL | CA |
|---|---|---|---|---|---|---|---|---|---|---|---|
| -100.220 | 199.890 | 599.32000 | -10.30600 | -10.18900 | -.15826 | -.32498 | .09321 | .38107 | -.11448 | .03944 | .26529 |
| -100.290 | 249.750 | 599.36000 | -10.30600 | -10.18900 | -.15798 | -.32598 | .09351 | .38128 | -.11434 | .03951 | .26554 |
| -100.700 | 399.730 | 599.31000 | -10.30700 | -10.18900 | -.16054 | -.33064 | .09632 | .38362 | -.11566 | .03953 | .26536 |
| -100.470 | 449.740 | 599.46000 | -10.30700 | -10.18900 | -.16046 | -.33070 | .09640 | .38383 | -.11576 | .03958 | .26566 |
| -100.400 | 499.820 | 599.48000 | -10.30700 | -10.18900 | -.16051 | -.33085 | .09651 | .38377 | -.11571 | .03955 | .26617 |
| | GRADIENT | .00000 | .00000 | .00000 | .00000 | .00000 | .00000 | .00000 | .00000 | .00000 | .00000 |

IA143, AEDC V41A-P8A, O/ET W/R.H. SRB SEPARATING (OVX627) ( 23 MAY 77 )

REFERENCE DATA

SREF = 2690.0000 SQ.FT. XMRP = 1097.0000 IN. XT
LREF = 1290.3000 INCHES YMRP = .0000 IN. YT
BREF = 1290.3000 INCHES ZMRP = 450.0000 IN. ZT
SCALE = .0100

PARAMETRIC DATA

ALPHA = -10.000 BETA = -10.000
DALPHA = .000 DBETA = 4.000
X = 600.000 MACH = 4.500
JET PC = .000

RUN NO. 3643/ 0 RN/L = 2.38 GRADIENT INTERVAL = -5.00/ 5.00

| Y | Z | X | ALPHA | BETA | PHI | CN | CLM | CY | CYN | CBL | CA |
|---|---|---|---|---|---|---|---|---|---|---|---|
| -300.320 | 499.190 | 599.34000 | -10.30700 | -10.18900 | -.16051 | -.33089 | .09651 | .38418 | -.11587 | .03963 | .26624 |
| -300.410 | 449.610 | 599.31000 | -10.30700 | -10.18900 | -.16056 | -.33091 | .09652 | .38411 | -.11587 | .03962 | .26628 |
| -300.550 | 399.720 | 599.39000 | -10.30700 | -10.18900 | -.16046 | -.33098 | .09654 | .38436 | -.11596 | .03968 | .26622 |
| -300.200 | 249.900 | 599.37000 | -10.30700 | -10.18900 | -.16045 | -.33087 | .09651 | .38427 | -.11594 | .03966 | .26620 |
| -300.360 | 199.950 | 599.39000 | -10.30700 | -10.18900 | -.16043 | -.33080 | .09646 | .38433 | -.11593 | .03969 | .26607 |
| | GRADIENT | .00000 | .00000 | .00000 | .00000 | .00000 | .00000 | .00000 | .00000 | .00000 | .00000 |

IA143, AEDC V41A-P8A, O/ET W/R.H. SRB SEPARATING (OVX628) ( 24 MAY 77 )

REFERENCE DATA

SREF = 2690.0000 SQ.FT. XMRP = 1097.0000 IN. XT
LREF = 1290.3000 INCHES YMRP = .0000 IN. YT
BREF = 1290.3000 INCHES ZMRP = 450.0000 IN. ZT
SCALE = .0100

PARAMETRIC DATA

ALPHA = -10.000 BETA = -10.000
DALPHA = -15.000 DBETA = 4.000
X = 600.000 MACH = 4.500
JET PC = .000

RUN NO. 2601/ 0 RN/L = 2.39 GRADIENT INTERVAL = -5.00/ 5.00

| Y | Z | X | ALPHA | BETA | PHI | CN | CLM | CY | CYN | CBL | CA |
|---|---|---|---|---|---|---|---|---|---|---|---|
| -99.198 | 200.480 | 599.18000 | -10.30100 | -10.18800 | -.14814 | -.31475 | .08859 | .36443 | -.10663 | .03812 | .25938 |
| -100.120 | 250.170 | 598.95000 | -10.30100 | -10.18900 | -.14951 | -.31467 | .08850 | .36763 | -.10796 | .03848 | .25915 |
| -100.160 | 400.280 | 599.12000 | -10.30400 | -10.18900 | -.15888 | -.32320 | .09260 | .37883 | -.11346 | .03902 | .25776 |
| -99.991 | 450.320 | 598.96000 | -10.30400 | -10.18800 | -.16238 | -.32675 | .09511 | .38251 | -.11565 | .03913 | .25838 |
| -100.100 | 500.620 | 599.20000 | -10.30400 | -10.18800 | -.16367 | -.32798 | .09618 | .38363 | -.11648 | .03917 | .25920 |
| -100.130 | 601.040 | 599.36000 | -10.30400 | -10.18800 | -.16368 | -.32843 | .09658 | .38376 | -.11661 | .03921 | .26068 |
| | GRADIENT | .00000 | .00000 | .00000 | .00000 | .00000 | .00000 | .00000 | .00000 | .00000 | .00000 |

RUN NO. 2602/ 0 RN/L = 2.40 GRADIENT INTERVAL = -5.00/ 5.00

| Y | Z | X | ALPHA | BETA | PHI | CN | CLM | CY | CYN | CBL | CA |
|---|---|---|---|---|---|---|---|---|---|---|---|
| -301.400 | 602.180 | 599.53000 | -10.30400 | -10.18700 | -.16369 | -.32876 | .09675 | .38401 | -.11673 | .03924 | .26117 |
| -299.750 | 499.840 | 599.06000 | -10.30400 | -10.18800 | -.16378 | -.32871 | .09674 | .38395 | -.11672 | .03924 | .26118 |
| -300.340 | 450.030 | 599.03000 | -10.30400 | -10.18800 | -.16384 | -.32868 | .09674 | .38403 | -.11674 | .03925 | .26123 |
| -300.610 | 400.290 | 599.02000 | -10.30400 | -10.18700 | -.16359 | -.32876 | .09675 | .38407 | -.11675 | .03926 | .26110 |
| -300.420 | 250.740 | 599.03000 | -10.30400 | -10.18800 | -.16376 | -.32848 | .09661 | .38385 | -.11664 | .03922 | .26070 |
| -300.460 | 200.640 | 598.97000 | -10.30400 | -10.18800 | -.16372 | -.32843 | .09655 | .38361 | -.11656 | .03918 | .26039 |
| | GRADIENT | .00000 | .00000 | .00000 | .00000 | .00000 | .00000 | .00000 | .00000 | .00000 | .00000 |

IA143, AEDC V41A-P8A, O/ET W/R.H. SRB SEPARATING (OVX629) ( 24 MAY 77 )

REFERENCE DATA

SREF = 2690.0000 SQ.FT. XMRP = 1097.0000 IN. XT
LREF = 1290.3000 INCHES YMRP = .0000 IN. YT
BREF = 1290.3000 INCHES ZMRP = 450.0000 IN. ZT
SCALE = .0100

PARAMETRIC DATA

ALPHA = -10.000 BETA = -10.000
DALPHA = .000 DBETA = -12.000
X = 600.000 MACH = 4.500
JET PC = .000

RUN NO. 2550/ 0 RN/L = 2.38 GRADIENT INTERVAL = -5.00/ 5.00

| Y | Z | X | ALPHA | BETA | PHI | CN | CLM | CY | CYN | CBL | CA |
|---|---|---|---|---|---|---|---|---|---|---|---|
| -101.250 | 249.870 | 599.19000 | -10.29900 | -10.18700 | -.15469 | -.30683 | .08572 | .37540 | -.11282 | .03927 | .26039 |
| -102.800 | 400.130 | 599.90000 | -10.30400 | -10.18900 | -.16026 | -.32335 | .09282 | .38186 | -.11498 | .03938 | .25940 |
| -101.350 | 450.070 | 599.37000 | -10.30500 | -10.18900 | -.16290 | -.32696 | .09522 | .38430 | -.11653 | .03944 | .25993 |
| -100.420 | 499.690 | 599.38000 | -10.30400 | -10.18800 | -.16344 | -.32817 | .09611 | .38483 | -.11691 | .03944 | .26075 |
| -101.620 | 600.340 | 599.56000 | -10.30500 | -10.18800 | -.16353 | -.32824 | .09619 | .38496 | -.11698 | .03947 | .26133 |
| | GRADIENT | .00000 | .00000 | .00000 | .00000 | .00000 | .00000 | .00000 | .00000 | .00000 | .00000 |

IA143, AEDC V41A-P8A, O/ET W/R.H. SRB SEPARATING (OVX630) ( 24 MAY 77 )

REFERENCE DATA

SREF = 2690.0000 SQ.FT. XMRP = 1097.0000 IN. XT
LREF = 1290.3000 INCHES YMRP = .0000 IN. YT
BREF = 1290.3000 INCHES ZMRP = 450.0000 IN. ZT
SCALE = .0100

PARAMETRIC DATA

ALPHA = -10.000 BETA = -10.000
DALPHA = -15.000 DBETA = -12.000
X = 600.000 MACH = 4.500
JET PC = .000

RUN NO. 2607/ 0 RN/L = 2.40 GRADIENT INTERVAL = -5.00/ 5.00

| Y | Z | X | ALPHA | BETA | PHI | CN | CLM | CY | CYN | CBL | CA |
|---|---|---|---|---|---|---|---|---|---|---|---|
| -99.315 | 450.300 | 599.27000 | -10.30300 | -10.19100 | -.14996 | -.30821 | .08319 | .37011 | -.10846 | .03883 | .25687 |
| -100.970 | 500.550 | 599.36000 | -10.30400 | -10.19000 | -.15534 | -.31435 | .08673 | .37514 | -.11114 | .03885 | .25671 |
| -101.980 | 601.140 | 599.90000 | -10.30400 | -10.18800 | -.16394 | -.32684 | .09498 | .38308 | -.11616 | .03898 | .25656 |
| | GRADIENT | .00000 | .00000 | .00000 | .00000 | .00000 | .00000 | .00000 | .00000 | .00000 | .00000 |

IA143, AEDC V41A-P8A, O/ET W/R.H. SRB SEPARATING (OVX631) ( 24 MAY 77 )

REFERENCE DATA

SREF = 2690.0000 SQ.FT. XMRP = 1097.0000 IN. XT
LREF = 1290.3000 INCHES YMRP = .0000 IN. YT
BREF = 1290.3000 INCHES ZMRP = 450.0000 IN. ZT
SCALE = .0100

PARAMETRIC DATA

ALPHA = -10.000 BETA = -10.000
DALPHA = .000 DBETA = -12.000
X = 600.000 MACH = 4.500
JET PC = .000

RUN NO. 2551/ 0 RN/L = 2.39 GRADIENT INTERVAL = -5.00/ 5.00

| Y | Z | X | ALPHA | BETA | PHI | CN | CLM | CY | CYN | CBL | CA |
|---|---|---|---|---|---|---|---|---|---|---|---|
| -300.670 | 199.810 | 599.31000 | -10.30400 | -10.18900 | -.16124 | -.32625 | .09458 | .38256 | -.11542 | .03935 | .25922 |
| -300.270 | 249.550 | 599.42000 | -10.30400 | -10.18800 | -.16325 | -.32751 | .09560 | .38445 | -.11663 | .03939 | .25961 |
| -302.960 | 399.900 | 599.55000 | -10.30500 | -10.18800 | -.16344 | -.32796 | .09610 | .38449 | -.11684 | .03942 | .26093 |
| -301.310 | 449.820 | 599.37000 | -10.30500 | -10.18800 | -.16346 | -.32823 | .09620 | .38466 | -.11689 | .03942 | .26126 |
| -300.460 | 499.900 | 599.38000 | -10.30500 | -10.18800 | -.16355 | -.32807 | .09617 | .38459 | -.11688 | .03943 | .26125 |
| -300.720 | 600.300 | 599.66000 | -10.30500 | -10.18800 | -.16336 | -.32822 | .09620 | .38479 | -.11695 | .03946 | .26131 |
| | GRADIENT | .00000 | .00000 | .00000 | .00000 | .00000 | .00000 | .00000 | .00000 | .00000 | .00000 |

IA143, AEDC V41A-P8A, O/ET W/R.H. SRB SEPARATING (OVX632) ( 24 MAY 77 )

REFERENCE DATA

SREF = 2690.0000 SQ.FT. XMRP = 1097.0000 IN. XT
LREF = 1290.3000 INCHES YMRP = .0000 IN. YT
BREF = 1290.3000 INCHES ZMRP = 450.0000 IN. ZT
SCALE = .0100

PARAMETRIC DATA

ALPHA = -10.000 BETA = -10.000
DALPHA = .000 DBETA = -12.000
X = 600.000 MACH = 4.500
JET PC = .000

RUN NO. 2640/ 0 RN/L = 2.39 GRADIENT INTERVAL = -5.00/ 5.00

| Y | Z | X | ALPHA | BETA | PHI | CN | CLM | CY | CYN | CBL | CA |
|---|---|---|---|---|---|---|---|---|---|---|---|
| -299.960 | 199.910 | 599.29000 | -10.30400 | -10.18900 | -.16117 | -.32602 | .09477 | .38139 | -.11507 | .03916 | .25837 |
| -300.580 | 249.580 | 599.55000 | -10.30300 | -10.18800 | -.16326 | -.32732 | .09584 | .38332 | -.11634 | .03918 | .25877 |
| -301.730 | 400.040 | 599.71000 | -10.30400 | -10.18700 | -.16363 | -.32829 | .09656 | .38382 | -.11673 | .03924 | .26043 |
| -300.240 | 449.790 | 599.40000 | -10.30400 | -10.18800 | -.16386 | -.32857 | .09665 | .38405 | -.11679 | .03926 | .26076 |
| -300.830 | 499.950 | 599.53000 | -10.30400 | -10.18700 | -.16371 | -.32851 | .09666 | .38392 | -.11677 | .03925 | .26080 |
| | GRADIENT | .00000 | .00000 | .00000 | .00000 | .00000 | .00000 | .00000 | .00000 | .00000 | .00000 |

IA143, AEDC V41A-P8A, O/ET W/R.H. SRB SEPARATING (OVX633) ( 24 MAY 77 )

REFERENCE DATA

SREF = 2690.0000 SQ.FT. XMRP = 1097.0000 IN. XT
LREF = 1290.3000 INCHES YMRP = .0000 IN. YT
BREF = 1290.3000 INCHES ZMRP = 450.0000 IN. ZT
SCALE = .0100

PARAMETRIC DATA

ALPHA = -10.000 BETA = -10.000
DALPHA = -15.000 DBETA = -12.000
X = 600.000 MACH = 4.500
JET PC = .000

RUN NO. 2608/ 0 RN/L = 2.40 GRADIENT INTERVAL = -5.00/ 5.00

| Y | Z | X | ALPHA | BETA | PHI | CN | CLM | CY | CYN | CBL | CA |
|---|---|---|---|---|---|---|---|---|---|---|---|
| -296.380 | 200.040 | 602.54000 | -10.30300 | -10.19000 | -.14567 | -.31673 | .08744 | .36093 | -.10408 | .03774 | .25461 |
| -300.490 | 250.270 | 598.97000 | -10.30200 | -10.19000 | -.14683 | -.31916 | .08948 | .36457 | -.10608 | .03830 | .25489 |
| -300.110 | 400.040 | 599.10000 | -10.30300 | -10.18900 | -.16148 | -.32526 | .09381 | .38033 | -.11443 | .03885 | .25557 |
| -301.280 | 450.340 | 599.22000 | -10.30400 | -10.18800 | -.16406 | -.32725 | .09525 | .38321 | -.11616 | .03896 | .25675 |
| -301.100 | 500.460 | 599.28000 | -10.30300 | -10.18700 | -.16388 | -.32755 | .09566 | .38301 | -.11615 | .03896 | .25752 |
| -301.060 | 600.980 | 599.72000 | -10.30400 | -10.18800 | -.16351 | -.32809 | .09610 | .38321 | -.11623 | .03909 | .25874 |
| | GRADIENT | .00000 | .00000 | .00000 | .00000 | .00000 | .00000 | .00000 | .00000 | .00000 | .00000 |

IA143, AEDC V41A-P8A, O/ET W/R.H. SRB SEPARATING (OVX634) ( 24 MAY 77 )

REFERENCE DATA

SREF = 2690.0000 SQ.FT. XMRP = 1097.0000 IN. XT
LREF = 1290.3000 INCHES YMRP = .0000 IN. YT
BREF = 1290.3000 INCHES ZMRP = 450.0000 IN. ZT
SCALE = .0100

PARAMETRIC DATA

ALPHA = -10.000 BETA = -10.000
DALPHA = -7.000 DBETA = -4.000
X = 600.000 MACH = 4.500
JET PC = .000

RUN NO. 2572/ 0 RN/L = 2.39 GRADIENT INTERVAL = -5.00/ 5.00

| Y | Z | X | ALPHA | BETA | PHI | CN | CLM | CY | CYN | CBL | CA |
|---|---|---|---|---|---|---|---|---|---|---|---|
| -200.220 | 200.360 | 599.15000 | -10.30300 | -10.18900 | -.15680 | -.32337 | .09288 | .37739 | -.11272 | .03911 | .25873 |
| -200.170 | 299.810 | 599.16000 | -10.30400 | -10.18900 | -.16141 | -.32571 | .09447 | .38203 | -.11525 | .03920 | .25921 |
| -201.160 | 399.860 | 599.11000 | -10.30400 | -10.18800 | -.16374 | -.32795 | .09617 | .38402 | -.11660 | .03924 | .26038 |
| | GRADIENT | .00000 | .00000 | .00000 | .00000 | .00000 | .00000 | .00000 | .00000 | .00000 | .00000 |

IA143, AEDC V41A-P8A, O/ET W/R.H. SRB SEPARATING (OVX635) ( 24 MAY 77 )

REFERENCE DATA

SREF = 2690.0000 SQ.FT. XMRP = 1097.0000 IN. XT
LREF = 1290.3000 INCHES YMRP = .0000 IN. YT
BREF = 1290.3000 INCHES ZMRP = 450.0000 IN. ZT
SCALE = .0100

PARAMETRIC DATA

ALPHA = -10.000 BETA = -10.000
DALPHA = -5.000 DBETA = .000
X = 600.000 MACH = 4.500
JET PC = .000

RUN NO. 2562/ 0 RN/L = 2.39 GRADIENT INTERVAL = -5.00/ 5.00

| Y | Z | X | ALPHA | BETA | PHI | CN | CLM | CY | CYN | CBL | CA |
|---|---|---|---|---|---|---|---|---|---|---|---|
| -99.790 | 200.110 | 599.09000 | -10.30200 | -10.18900 | -.15609 | -.31822 | .09070 | .37688 | -.11283 | .03921 | .26031 |
| -101.420 | 299.890 | 599.07000 | -10.30400 | -10.18900 | -.15870 | -.32154 | .09187 | .380.2 | -.11422 | .03933 | .25987 |
| -100.540 | 400.040 | 599.11000 | -10.30500 | -10.18800 | -.16284 | -.32715 | .09537 | .38404 | -.11643 | .03940 | .26038 |
| | GRADIENT | .00000 | .00000 | .00000 | .00000 | .00000 | .00000 | .00000 | .00000 | .00000 | .00000 |

RUN NO. 2563/ 0 RN/L = 2.39 GRADIENT INTERVAL = -5.00/ 5.00

| Y | Z | X | ALPHA | BETA | PHI | CN | CLM | CY | CYN | CBL | CA |
|---|---|---|---|---|---|---|---|---|---|---|---|
| -301.310 | 401.200 | 599.16000 | -10.30500 | -10.18800 | -.16355 | -.32830 | .09627 | .38474 | -.11693 | .03943 | .26152 |
| -299.850 | 299.940 | 599.10000 | -10.30500 | -10.18800 | -.16346 | -.32818 | .09617 | .38446 | -.11683 | .03939 | .26113 |
| -300.240 | 200.230 | 599.10000 | -10.30500 | -10.18800 | -.16360 | -.32816 | .09617 | .38453 | -.11683 | .03939 | .26100 |
| | GRADIENT | .00000 | .00000 | .00000 | .00000 | .00000 | .00000 | .00000 | .00000 | .00000 | .00000 |

IA143, AEDC V41A-P8A, O/ET W/R.H. SRB SEPARATING (OVX636) ( 24 MAY 77 )

REFERENCE DATA

SREF = 2690.0000 SQ.FT. XMRP = 1097.0000 IN. XT
LREF = 1290.3000 INCHES YMRP = .0000 IN. YT
BREF = 1290.3000 INCHES ZMRP = 450.0000 IN. ZT
SCALE = .0100

PARAMETRIC DATA

ALPHA = -10.000 BETA = -10.000
DALPHA = -10.000 DBETA = .000
X = 600.000 MACH = 4.500
JET PC = .000

RUN NO. 2585/ 0 RN/L = 2.40 GRADIENT INTERVAL = -5.00/ 5.00

| Y | Z | X | ALPHA | BETA | PHI | CN | CLM | CY | CYN | CBL | CA |
|---|---|---|---|---|---|---|---|---|---|---|---|
| -99.515 | 200.260 | 599.14000 | -10.30000 | -10.18800 | -.15017 | -.31557 | .08952 | .36852 | -.10871 | .03858 | .26004 |
| -100.320 | 300.020 | 599.19000 | -10.30300 | -10.18900 | -.15429 | -.31840 | .09024 | .37463 | -.11135 | .03903 | .25868 |
| -100.180 | 400.220 | 599.19000 | -10.30400 | -10.18900 | -.16053 | -.32447 | .09368 | .38084 | -.11459 | .03915 | .25888 |
| | GRADIENT | .00000 | .00000 | .00000 | .00000 | .00000 | .00000 | .00000 | .00000 | .00000 | .00000 |

RUN NO. 2586/ 0 RN/L = 2.40 GRADIENT INTERVAL = -5.00/ 5.00

| Y | Z | X | ALPHA | BETA | PHI | CN | CLM | CY | CYN | CBL | CA |
|---|---|---|---|---|---|---|---|---|---|---|---|
| -301.630 | 402.080 | 599.38000 | -10.30400 | -10.18800 | -.16361 | -.32862 | .09670 | .38398 | -.11670 | .03926 | .26105 |
| -300.110 | 300.240 | 599.06000 | -10.30400 | -10.18700 | -.16360 | -.32852 | .09662 | .38360 | -.11654 | .03919 | .26073 |
| -299.850 | 200.450 | 599.05000 | -10.30400 | -10.18800 | -.16372 | -.32849 | .09659 | .38391 | -.11665 | .03922 | .26052 |
| | GRADIENT | .00000 | .00000 | .00000 | .00000 | .00000 | .00000 | .00000 | .00000 | .00000 | .00000 |

IA143, AEDC V41A-P8A, O/ET W/R.H. SRB SEPARATING (OVX637) ( 24 MAY 77 )

REFERENCE DATA

SREF = 2690.0000 SQ.FT. XMRP = 1097.0000 IN. XT
LREF = 1290.3000 INCHES YMRP = .0000 IN. YT
BREF = 1290.3000 INCHES ZMRP = 450.0000 IN. ZT
SCALE = .0100

PARAMETRIC DATA

ALPHA = -10.000 BETA = -10.000
DALPHA = -5.000 DBETA = -8.000
X = 600.000 MACH = 4.500
JET PC = .000

RUN NO. 2565/ 0 RN/L = 2.39 GRADIENT INTERVAL = -5.00/ 5.00

| Y | Z | X | ALPHA | BETA | PHI | CN | CLM | CY | CYN | CBL | CA |
|---|---|---|---|---|---|---|---|---|---|---|---|
| -98.960 | 398.400 | 599.08000 | -10.30400 | -10.19000 | -.15917 | -.32222 | .09198 | .38072 | -.11427 | .03932 | .25905 |
| -98.927 | 300.050 | 599.14000 | -10.30200 | -10.19000 | -.15289 | -.31328 | .08747 | .37455 | -.11131 | .03929 | .25965 |
| -98.841 | 200.030 | 599.02000 | -10.29800 | -10.18700 | -.15093 | -.31091 | .08823 | .37133 | -.11082 | .03917 | .26010 |
| | GRADIENT | .00000 | .00000 | .00000 | .00000 | .00000 | .00000 | .00000 | .00000 | .00000 | .00000 |

RUN NO. 2564/ 0 RN/L = 2.39 GRADIENT INTERVAL = -5.00/ 5.00

| Y | Z | X | ALPHA | BETA | PHI | CN | CLM | CY | CYN | CBL | CA |
|---|---|---|---|---|---|---|---|---|---|---|---|
| -301.450 | 199.730 | 599.58000 | -10.30400 | -10.18800 | -.16226 | -.32685 | .09514 | .38299 | -.11586 | .03928 | .25909 |
| -300.720 | 299.870 | 599.36000 | -10.30500 | -10.18800 | -.16361 | -.32792 | .09597 | .38449 | -.11676 | .03936 | .26031 |
| -301.090 | 399.980 | 599.29000 | -10.30500 | -10.18800 | -.16346 | -.32812 | .09614 | .38459 | -.11686 | .03940 | .26105 |
| | GRADIENT | .00000 | .00000 | .00000 | .00000 | .00000 | .00000 | .00000 | .00000 | .00000 | .00000 |

IA143, AEDC V41A-P8A, O/ET W/R.H. SRB SEPARATING (OVX638) ( 24 MAY 77 )

REFERENCE DATA

SREF = 2690.0000 SQ.FT. XMRP = 1097.0000 IN. XT
LREF = 1290.3000 INCHES YMRP = .0000 IN. YT
BREF = 1290.3000 INCHES ZMRP = 450.0000 IN. ZT
SCALE = .0100

PARAMETRIC DATA

ALPHA = -10.000 BETA = -10.000
DALPHA = -10.000 DBETA = -8.000
X = 600.000 MACH = 4.500
JET PC = .000

RUN NO. 2580/ 0 RN/L = 2.40 GRADIENT INTERVAL = -5.00/ 5.00

| Y | Z | X | ALPHA | BETA | PHI | CN | CLM | CY | CYN | CBL | CA |
|---|---|---|---|---|---|---|---|---|---|---|---|
| -100.090 | 200.330 | 599.16000 | -10.29700 | -10.18700 | -.14721 | -.30943 | .08764 | .36380 | -.10711 | .03832 | .25986 |
| -102.230 | 300.040 | 598.99000 | -10.30000 | -10.18900 | -.14856 | -.30920 | .08580 | .36879 | -.10855 | .03893 | .25892 |
| -100.730 | 350.100 | 599.05000 | -10.30200 | -10.19100 | -.15003 | -.31301 | .08685 | .37111 | -.10923 | .03909 | .25869 |
| -100.410 | 400.430 | 599.11000 | -10.30400 | -10.19000 | -.15494 | -.31753 | .08906 | .37567 | -.11150 | .03906 | .25828 |
| | GRADIENT | .00000 | .00000 | .00000 | .00000 | .00000 | .00000 | .00000 | .00000 | .00000 | .00000 |

IA143, AEDC V41A-P8A, O/ET W/R.H. SRB SEPARATING (OVX639) ( 24 MAY 77 )

REFERENCE DATA

SREF = 2690.0000 SQ.FT. XMRP = 1097.0000 IN. XT
LREF = 1290.3000 INCHES YMRP = .0000 IN. YT
BREF = 1290.3000 INCHES ZMRP = 450.0000 IN. ZT
SCALE = .0100

PARAMETRIC DATA

ALPHA = -10.000 BETA = -10.000
DALPHA = -10.000 DBETA = -8.000
X = 600.000 MACH = 4.500
JET PC = .000

RUN NO. 2582/ 0 RN/L = 2.40 GRADIENT INTERVAL = -5.00/ 5.00

| Y | Z | X | ALPHA | BETA | PHI | CN | CLM | CY | CYN | CBL | CA |
|---|---|---|---|---|---|---|---|---|---|---|---|
| -299.140 | 200.340 | 599.25000 | -10.30300 | -10.18900 | -.15931 | -.32554 | .09412 | .37901 | -.11367 | .03896 | .25748 |
| -299.760 | 299.760 | 599.09000 | -10.30400 | -10.18800 | -.16344 | -.32771 | .09591 | .38339 | -.11627 | .03914 | .25875 |
| -300.660 | 400.240 | 599.14000 | -10.30400 | -10.18800 | -.16360 | -.32830 | .09637 | .38363 | -.11646 | .03919 | .25991 |
| | GRADIENT | .00000 | .00000 | .00000 | .00000 | .00000 | .00000 | .00000 | .00000 | .00000 | .00000 |

IA143, AEDC V41A-P8A, O/ET W/R.H. SRB SEPARATING (OVX640) ( 24 MAY 77 )

REFERENCE DATA

SREF = 2690.0000 SQ.FT. XMRP = 1097.0000 IN. XT
LREF = 1290.3000 INCHES YMRP = .0000 IN. YT
BREF = 1290.3000 INCHES ZMRP = 450.0000 IN. ZT
SCALE = .0100

PARAMETRIC DATA

ALPHA = -10.000 BETA = -10.000
DALPHA = -10.000 DBETA = -4.000
X = 600.000 MACH = 4.500
JET PC = .000

RUN NO. 2584/ 0 RN/L = 2.40 GRADIENT INTERVAL = -5.00/ 5.00

| Y | Z | X | ALPHA | BETA | PHI | CN | CLM | CY | CYN | CBL | CA |
|---|---|---|---|---|---|---|---|---|---|---|---|
| -100.020 | 300.240 | 599.24000 | -10.30100 | -10.19000 | -.15117 | -.31331 | .08776 | .37133 | -.10972 | .03895 | .25894 |
| -101.550 | 350.170 | 599.02000 | -10.30300 | -10.19000 | -.15391 | -.31771 | .08946 | .37440 | -.11102 | .03905 | .25839 |
| -100.050 | 400.430 | 599.23000 | -10.30400 | -10.19000 | -.15777 | -.32123 | .09142 | .37820 | -.11296 | .03906 | .25838 |
| | GRADIENT | .00000 | .00000 | .00000 | .00000 | .00000 | .00000 | .00000 | .00000 | .00000 | .00000 |

IA143, AEDC V41A-P8A, O/ET W/R.H. SRB SEPARATING (OVX641) ( 24 MAY 77 )

REFERENCE DATA

SREF = 2690.0000 SQ.FT. XMRP = 1097.0000 IN. XT
LREF = 1290.3000 INCHES YMRP = .0000 IN. YT
BREF = 1290.3000 INCHES ZMRP = 450.0000 IN. ZT
SCALE = .0100

PARAMETRIC DATA

ALPHA = -10.000 BETA = -10.000
DALPHA = -15.000 DBETA = -4.000
X = 600.000 MACH = 4.500
JET PC = .000

RUN NO. 2603/ 0 RN/L = 2.40 GRADIENT INTERVAL = -5.00/ 5.00

| Y | Z | X | ALPHA | BETA | PHI | CN | CLM | CY | CYN | CBL | CA |
|---|---|---|---|---|---|---|---|---|---|---|---|
| -99.949 | 300.470 | 599.03000 | -10.30000 | -10.18900 | -.14604 | -.30831 | .08514 | .36338 | -.10579 | .03827 | .25913 |
| -100.350 | 350.220 | 599.08000 | -10.30200 | -10.19100 | -.14702 | -.31182 | .08583 | .36611 | -.10664 | .03860 | .25798 |
| -100.410 | 400.490 | 599.14000 | -10.30300 | -10.19100 | -.15082 | -.31634 | .08812 | .37058 | -.10888 | .03881 | .25727 |
| | GRADIENT | .00000 | .00000 | .00000 | .00000 | .00000 | .00000 | .00000 | .00000 | .00000 | .00000 |

RUN NO. 2604/ 0 RN/L = 2.40 GRADIENT INTERVAL = -5.00/ 5.00

| Y | Z | X | ALPHA | BETA | PHI | CN | CLM | CY | CYN | CBL | CA |
|---|---|---|---|---|---|---|---|---|---|---|---|
| -201.000 | 401.600 | 599.51000 | -10.30300 | -10.18800 | -.16185 | -.32603 | .09456 | .38149 | -.11505 | .03902 | .25707 |
| -199.990 | 350.420 | 598.94000 | -10.30300 | -10.18900 | -.15721 | -.32369 | .09278 | .37673 | -.11246 | .03890 | .25639 |
| -200.990 | 300.240 | 598.92000 | -10.30300 | -10.19000 | -.15251 | -.32182 | .09154 | .37212 | -.10996 | .03882 | .25673 |
| | GRADIENT | .00000 | .00000 | .00000 | .00000 | .00000 | .00000 | .00000 | .00000 | .00000 | .00000 |

IA143, AEDC V41A-P8A, O/ET W/R.H. SRB SEPARATING (OVX642) ( 24 MAY 77 )

REFERENCE DATA

SREF = 2690.0000 SQ.FT. XMRP = 1097.0000 IN. XT
LREF = 1290.3000 INCHES YMRP = .0000 IN. YT
BREF = 1290.3000 INCHES ZMRP = 450.0000 IN. ZT
SCALE = .0100

PARAMETRIC DATA

ALPHA = -10.000 BETA = -10.000
DALPHA = -10.000 DBETA = -4.000
X = 600.000 MACH = 4.500
JET PC = .000

RUN NO. 2583/ 0 RN/L = 2.40 GRADIENT INTERVAL = -5.00/ 5.00

| Y | Z | X | ALPHA | BETA | PHI | CN | CLM | CY | CYN | CBL | CA |
|---|---|---|---|---|---|---|---|---|---|---|---|
| -199.780 | 200.230 | 598.99000 | -10.30300 | -10.19000 | -.15219 | -.32189 | .09191 | .37203 | -.10999 | .03887 | .25832 |
| -200.670 | 299.920 | 599.01000 | -10.30300 | -10.18900 | -.15929 | -.32445 | .09356 | .37934 | -.11388 | .03906 | .25798 |
| -200.410 | 350.190 | 599.11000 | -10.30400 | -10.18900 | -.16224 | -.32667 | .09509 | .38216 | -.11549 | .03916 | .25870 |
| -200.180 | 400.390 | 599.08000 | -10.30400 | -10.18800 | -.16372 | -.32825 | .09629 | .38380 | -.11654 | .03918 | .25946 |
| | GRADIENT | .00000 | .00000 | .00000 | .00000 | .00000 | .00000 | .00000 | .00000 | .00000 | .00000 |

IA143, AEDC V41A-P8A, O/ET W/R.H. SRB SEPARATING (OVX643) ( 24 MAY 77 )

REFERENCE DATA

SREF = 2690.0000 SQ.FT. XMRP = 1097.0000 IN. XT
LREF = 1290.3000 INCHES YMRP = .0000 IN. YT
BREF = 1290.3000 INCHES ZMRP = 450.0000 IN. ZT
SCALE = .0100

PARAMETRIC DATA

ALPHA = -10.000 BETA = -10.000
DALPHA = -15.000 DBETA = -8.000
X = 600.000 MACH = 4.500
JET PC = .000

RUN NO. 2606/ 0 RN/L = 2.40 GRADIENT INTERVAL = -5.00/ 5.00

| Y | Z | X | ALPHA | BETA | PHI | CN | CLM | CY | CYN | CBL | CA |
|---|---|---|---|---|---|---|---|---|---|---|---|
| -101.020 | 399.140 | 598.44000 | -10.30200 | -10.19100 | -.14707 | -.31076 | .08486 | .36727 | -.10698 | .03879 | .25765 |
| -100.150 | 350.270 | 599.01000 | -10.30000 | -10.19000 | -.14527 | -.30647 | .08356 | .36427 | -.10598 | .03858 | .25833 |
| -100.870 | 300.150 | 598.79000 | -10.29700 | -10.18700 | -.14545 | -.30469 | .08423 | .36243 | -.10614 | .03831 | .25859 |
| | GRADIENT | .00000 | .00000 | .00000 | .00000 | .00000 | .00000 | .00000 | .00000 | .00000 | .00000 |

RUN NO. 2605/ 0 RN/L = 2.40 GRADIENT INTERVAL = -5.00/ 5.00

| Y | Z | X | ALPHA | BETA | PHI | CN | CLM | CY | CYN | CBL | CA |
|---|---|---|---|---|---|---|---|---|---|---|---|
| -200.860 | 299.960 | 599.14000 | -10.30200 | -10.19100 | -.14454 | -.31603 | .08781 | .36340 | -.10504 | .03844 | .25709 |
| -200.700 | 350.190 | 599.06000 | -10.30200 | -10.19000 | -.14930 | -.31878 | .08935 | .36840 | -.10778 | .03861 | .25606 |
| -200.600 | 400.440 | 599.32000 | -10.30300 | -10.18900 | -.15609 | -.32204 | .09151 | .37526 | -.11157 | .03879 | .25575 |
| | GRADIENT | .00000 | .00000 | .00000 | .00000 | .00000 | .00000 | .00000 | .00000 | .00000 | .00000 |

IA143, AEDC V41A-P8A, O/ET W/R.H. SRB SEPARATING (OVX644) ( 24 MAY 77 )

REFERENCE DATA

SREF = 2690.0000 SQ.FT. XMRP = 1097.0000 IN. XT
LREF = 1290.3000 INCHES YMRP = .0000 IN. YT
BREF = 1290.3000 INCHES ZMRP = 450.0000 IN. ZT
SCALE = .0100

PARAMETRIC DATA

ALPHA = -10.000 BETA = -10.000
DALPHA = -10.000 DBETA = -8.000
X = 600.000 MACH = 4.500
JET PC = .000

RUN NO. 2581/ 0 RN/L = 2.40 GRADIENT INTERVAL = -5.00/ 5.00

| Y | Z | X | ALPHA | BETA | PHI | CN | CLM | CY | CYN | CBL | CA |
|---|---|---|---|---|---|---|---|---|---|---|---|
| -200.120 | 300.240 | 599.24000 | -10.30300 | -10.19000 | -.15399 | -.32108 | .09113 | .37397 | -.11081 | .03892 | .25761 |
| -200.290 | 350.170 | 599.32000 | -10.30400 | -10.18900 | -.15874 | -.32345 | .09276 | .37870 | -.11342 | .03901 | .25745 |
| -200.950 | 400.390 | 599.00000 | -10.30400 | -10.18800 | -.16241 | -.32656 | .09502 | .38230 | -.11553 | .03911 | .25804 |
| | GRADIENT | .00000 | .00000 | .00000 | .00000 | .00000 | .00000 | .00000 | .00000 | .00000 | .00000 |

IA143, AEDC V41A-P8A, O/ET W/R.H. SRB SEPARATING (OVX645) ( 24 MAY 77 )

REFERENCE DATA

SREF = 2690.0000 SQ.FT. XMRP = 1097.0000 IN. XT
LREF = 1290.3000 INCHES YMRP = .0000 IN. YT
BREF = 1290.3000 INCHES ZMRP = 450.0000 IN. ZT
SCALE = .0100

PARAMETRIC DATA

ALPHA = -10.000 BETA = -10.000
DALPHA = -5.000 DBETA = 4.000
X = 900.000 MACH = 4.500
JET PC = .000

RUN NO. 2567/ 0 RN/L = 2.39 GRADIENT INTERVAL = -5.00/ 5.00

| Y | Z | X | ALPHA | BETA | PHI | CN | CLM | CY | CYN | CBL | CA |
|---|---|---|---|---|---|---|---|---|---|---|---|
| -99.580 | 200.120 | 898.96000 | -10.30400 | -10.18900 | -.15854 | -.32456 | .09350 | .37952 | -.11397 | .03925 | .25988 |
| -99.932 | 275.130 | 899.00000 | -10.30400 | -10.18900 | -.16088 | -.32549 | .09421 | .38220 | -.11530 | .03935 | .26019 |
| -100.990 | 425.170 | 898.89000 | -10.30500 | -10.18800 | -.16348 | -.32829 | .09624 | .38449 | -.11682 | .03937 | .26122 |
| -100.060 | 499.850 | 899.03000 | -10.30500 | -10.18800 | -.16352 | -.32838 | .09627 | .38458 | -.11687 | .03938 | .26144 |
| -100.030 | 600.140 | 899.02000 | -10.30500 | -10.18800 | -.16355 | -.32832 | .09625 | .38457 | -.11687 | .03938 | .26140 |
| | GRADIENT | .00000 | .00000 | .00000 | .00000 | .00000 | .00000 | .00000 | .00000 | .00000 | .00000 |

RUN NO. 2568/ 0 RN/L = 2.39 GRADIENT INTERVAL = -5.00/ 5.00

| Y | Z | X | ALPHA | BETA | PHI | CN | CLM | CY | CYN | CBL | CA |
|---|---|---|---|---|---|---|---|---|---|---|---|
| -400.680 | 600.980 | 898.98000 | -10.30500 | -10.18800 | -.16370 | -.32848 | .09629 | .38472 | -.11692 | .03940 | .26147 |
| -399.910 | 499.710 | 898.94000 | -10.30500 | -10.18800 | -.16357 | -.32823 | .09622 | .38447 | -.11682 | .03937 | .26135 |
| -400.740 | 424.910 | 898.81000 | -10.30500 | -10.18800 | -.16351 | -.32830 | .09624 | .38450 | -.11684 | .03938 | .26133 |
| -400.730 | 275.000 | 898.81000 | -10.30500 | -10.18800 | -.16350 | -.32828 | .09629 | .38445 | -.11683 | .03936 | .26151 |
| -400.430 | 200.240 | 898.89000 | -10.30500 | -10.18800 | -.16356 | -.32834 | .09625 | .38457 | -.11686 | .03938 | .26139 |
| | GRADIENT | .00000 | .00000 | .00000 | .00000 | .00000 | .00000 | .00000 | .00000 | .00000 | .00000 |

IA143, AEDC V41A-P8A, O/ET W/R.H. SRB SEPARATING (OVX646) ( 24 MAY 77 )

REFERENCE DATA

SREF = 2690.0000 SQ.FT. XMRP = 1097.0000 IN. XT
LREF = 1290.3000 INCHES YMRP = .0000 IN. YT
BREF = 1290.3000 INCHES ZMRP = 450.0000 IN. ZT
SCALE = .0100

PARAMETRIC DATA

ALPHA = -10.000 BETA = -10.000
DALPHA = -20.000 DBETA = 4.000
X = 900.000 MACH = 4.500
JET PC = .000

RUN NO. 2631/ 0 RN/L = 2.38 GRADIENT INTERVAL = -5.00/ 5.00

| Y | Z | X | ALPHA | BETA | PHI | CN | CLM | CY | CYN | CBL | CA |
|---|---|---|---|---|---|---|---|---|---|---|---|
| -100.440 | 201.040 | 899.12000 | -10.30200 | -10.19000 | -.14653 | -.31979 | .09047 | .36497 | -.10644 | .03849 | .25890 |
| -100.320 | 275.380 | 898.83000 | -10.30300 | -10.19000 | -.14935 | -.31962 | .09017 | .36870 | -.10816 | .03871 | .25759 |
| -100.130 | 425.760 | 899.13000 | -10.30400 | -10.18800 | -.16370 | -.32750 | .09563 | .38304 | -.11618 | .03904 | .25765 |
| -100.590 | 500.670 | 898.88000 | -10.30400 | -10.18800 | -.16357 | -.32808 | .09612 | .38335 | -.11632 | .03911 | .25884 |
| -100.400 | 600.780 | 899.17000 | -10.30400 | -10.18700 | -.16362 | -.32859 | .09660 | .38368 | -.11660 | .03920 | .26044 |
| | GRADIENT | .00000 | .00000 | .00000 | .00000 | .00000 | .00000 | .00000 | .00000 | .00000 | .00000 |

IA143, AEDC V41A-P8A, O/ET W/R.H. SRB SEPARATING (OVX646) ( 24 MAY 77 )

REFERENCE DATA

SREF = 2690.0000 SQ.FT. XMRP = 1097.0000 IN. XT
LREF = 1290.3000 INCHES YMRP = .0000 IN. YT
BREF = 1290.3000 INCHES ZMRP = 450.0000 IN. ZT
SCALE = .0100

PARAMETRIC DATA

ALPHA = -10.000 BETA = -10.000
DALPHA = -20.000 DBETA = 4.000
X = 900.000 MACH = 4.500
JET PC = .000

RUN NO. 2632/ 0 RN/L = 2.39 GRADIENT INTERVAL = -5.00/ 5.00

| Y | Z | X | ALPHA | BETA | PHI | CN | CLM | CY | CYN | CBL | CA |
|---|---|---|---|---|---|---|---|---|---|---|---|
| -400.950 | 603.600 | 899.98000 | -10.30400 | -10.18700 | -.16379 | -.32895 | .09678 | .38394 | -.11673 | .03923 | .26105 |
| -400.040 | 500.170 | 898.77000 | -10.30400 | -10.18800 | -.16381 | -.32898 | .09681 | .38403 | -.11678 | .03925 | .26108 |
| -399.830 | 425.490 | 898.89000 | -10.30400 | -10.18700 | -.16361 | -.32866 | .09672 | .38376 | -.11668 | .03924 | .26095 |
| -400.590 | 276.130 | 898.99000 | -10.30400 | -10.18700 | -.16370 | -.32889 | .09679 | .38393 | -.11672 | .03924 | .26121 |
| -400.500 | 201.170 | 898.98000 | -10.30400 | -10.18800 | -.16372 | -.32872 | .09673 | .38366 | -.11665 | .03922 | .26091 |
| | GRADIENT | .00000 | .00000 | .00000 | .00000 | .00000 | .00000 | .00000 | .00000 | .00000 | .00000 |

IA143, AEDC V41A-P8A, O/ET W/R.H. SRB SEPARATING (OVX647) ( 24 MAY 77 )

REFERENCE DATA

SREF = 2690.0000 SQ.FT. XMRP = 1097.0000 IN. XT
LREF = 1290.3000 INCHES YMRP = .0000 IN. YT
BREF = 1290.3000 INCHES ZMRP = 450.0000 IN. ZT
SCALE = .0100

PARAMETRIC DATA

ALPHA = -10.000 BETA = -10.000
DALPHA = -5.000 DBETA = -12.000
X = 900.000 MACH = 4.500
JET PC = .000

RUN NO. 2635/ 0 RN/L = 2.38 GRADIENT INTERVAL = -5.00/ 5.00

| Y | Z | X | ALPHA | BETA | PHI | CN | CLM | CY | CYN | CBL | CA |
|---|---|---|---|---|---|---|---|---|---|---|---|
| -100.170 | 274.920 | 899.35000 | -10.30300 | -10.18900 | -.15543 | -.31813 | .08985 | .37540 | -.11194 | .03901 | .25855 |
| -102.880 | 425.710 | 900.02000 | -10.30400 | -10.18800 | -.16392 | -.32774 | .09609 | .38365 | -.11660 | .03916 | .25880 |
| -100.980 | 500.630 | 899.65000 | -10.30400 | -10.18800 | -.16371 | -.32827 | .09652 | .38389 | -.11670 | .03925 | .26027 |
| -100.660 | 600.330 | 899.40000 | -10.30400 | -10.18800 | -.16378 | -.32826 | .09657 | .38372 | -.11667 | .03923 | .26053 |
| | GRADIENT | .00000 | .00000 | .00000 | .00000 | .00000 | .00000 | .00000 | .00000 | .00000 | .00000 |

IA143, AEDC V41A-P8A, O/ET W/R.H. SRB SEPARATING (OVX648) ( 24 MAY 77 )

REFERENCE DATA

SREF = 2690.0000 SQ.FT. XMRP = 1097.0000 IN. XT
LREF = 1290.3000 INCHES YMRP = .0000 IN. YT
BREF = 1290.3000 INCHES ZMRP = 450.0000 IN. ZT
SCALE = .0100

PARAMETRIC DATA

ALPHA = -10.000 BETA = -10.000
DALPHA = -20.000 DBETA = -16.000
X = 900.000 MACH = 4.500
JET PC = .000

RUN NO. 2633/ 0 RN/L = 2.40 GRADIENT INTERVAL = -5.00/ 5.00

| Y | Z | X | ALPHA | BETA | PHI | CN | CLM | CY | CYN | CBL | CA |
|---|---|---|---|---|---|---|---|---|---|---|---|
| -100.930 | 425.000 | 898.74000 | -10.30400 | -10.19000 | -.15557 | -.31591 | .08760 | .37454 | -.11111 | .03874 | .25563 |
| -100.870 | 500.620 | 899.26000 | -10.30400 | -10.18800 | -.16300 | -.32368 | .09267 | .38163 | -.11523 | .03883 | .25499 |
| -101.830 | 601.740 | 899.99000 | -10.30400 | -10.18700 | -.16411 | -.32729 | .09527 | .38310 | -.11622 | .03897 | .25639 |
| | GRADIENT | .00000 | .00000 | .00000 | .00000 | .00000 | .00000 | .00000 | .00000 | .00000 | .00000 |

IA143, AEDC V41A-P8A, O/ET W/R.H. SRB SEPARATING (OVX649) ( 24 MAY 77 )

REFERENCE DATA

SREF = 2690.0000 SQ.FT. XMRP = 1097.0000 IN. XT
LREF = 1290.3000 INCHES YMRP = .0000 IN. YT
BREF = 1290.3000 INCHES ZMRP = 450.0000 IN. ZT
SCALE = .0100

PARAMETRIC DATA

ALPHA = -10.000 BETA = -10.000
DALPHA = -5.000 DBETA = -16.000
X = 900.000 MACH = 4.500
JET PC = .000

RUN NO. 2566/ 0 RN/L = 2.39 GRADIENT INTERVAL = -5.00/ 5.00

| Y | Z | X | ALPHA | BETA | PHI | CN | CLM | CY | CYN | CBL | CA |
|---|---|---|---|---|---|---|---|---|---|---|---|
| -399.910 | 200.210 | 899.23000 | -10.30400 | -10.18800 | -.16335 | -.32771 | .09583 | .38413 | -.11658 | .03932 | .25989 |
| -399.890 | 274.740 | 899.21000 | -10.30400 | -10.18800 | -.16326 | -.32812 | .09611 | .38430 | -.11671 | .03936 | .26072 |
| -401.350 | 424.930 | 899.73000 | -10.30500 | -10.18800 | -.16362 | -.32845 | .09628 | .38470 | -.11692 | .03940 | .26135 |
| -401.540 | 500.220 | 899.62000 | -10.30500 | -10.18800 | -.16352 | -.32840 | .09629 | .38477 | -.11695 | .03943 | .26142 |
| -400.660 | 600.360 | 899.52000 | -10.30500 | -10.18800 | -.16352 | -.32842 | .09627 | .38459 | -.11689 | .03940 | .26127 |
| | GRADIENT | .00000 | .00000 | .00000 | .00000 | .00000 | .00000 | .00000 | .00000 | .00000 | .00000 |

IA143, AEDC V41A-P8A, O/ET W/R.H. SRB SEPARATING (OVX650) ( 24 MAY 77 )

REFERENCE DATA

SREF = 2690.0000 SQ.FT. XMRP = 1097.0000 IN. XT
LREF = 1290.3000 INCHES YMRP = .0000 IN. YT
BREF = 1290.3000 INCHES ZMRP = 450.0000 IN. ZT
SCALE = .0100

PARAMETRIC DATA

ALPHA = -10.000 BETA = -10.000
DALPHA = -20.000 DBETA = -16.000
X = 900.000 MACH = 4.500
JET PC = .000

RUN NO. 2634/ 0 RN/L = 2.40 GRADIENT INTERVAL = -5.00/ 5.00

| Y | Z | X | ALPHA | BETA | PHI | CN | CLM | CY | CYN | CBL | CA |
|---|---|---|---|---|---|---|---|---|---|---|---|
| -397.150 | 203.070 | 904.74000 | -10.30400 | -10.18700 | -.16577 | -.32411 | .09289 | .38239 | -.11581 | .03846 | .25517 |
| -399.860 | 274.650 | 898.57000 | -10.30400 | -10.18800 | -.16481 | -.32563 | .09412 | .38257 | -.11584 | .03868 | .25592 |
| -400.290 | 424.500 | 898.74000 | -10.30300 | -10.18800 | -.16360 | -.32756 | .09567 | .38273 | -.11601 | .03898 | .25744 |
| -400.490 | 501.100 | 899.50000 | -10.30400 | -10.18800 | -.16356 | -.32794 | .09603 | .38306 | -.11622 | .03908 | .25835 |
| -401.490 | 600.700 | 899.53000 | -10.30400 | -10.18700 | -.16345 | -.32821 | .09632 | .38324 | -.11637 | .03914 | .25929 |
| | GRADIENT | .00000 | .00000 | .00000 | .00000 | .00000 | .00000 | .00000 | .00000 | .00000 | .00000 |

IA143, AEDC V41A-P8A, O/ET W/R.H. SRB SEPARATING (OVX651) ( 24 MAY 77 )

REFERENCE DATA

SREF = 2690.0000 SQ.FT. XMRP = 1097.0000 IN. XT
LREF = 1290.3000 INCHES YMRP = .0000 IN. YT
BREF = 1290.3000 INCHES ZMRP = 450.0000 IN. ZT
SCALE = .0100

PARAMETRIC DATA

ALPHA = -10.000 BETA = -10.000
DALPHA = -10.000 DBETA = .000
X = 900.000 MACH = 4.500
JET PC = .000

RUN NO. 2587/ 0 RN/L = 2.40 GRADIENT INTERVAL = -5.00/ 5.00

| Y | Z | X | ALPHA | BETA | PHI | CN | CLM | CY | CYN | CBL | CA |
|---|---|---|---|---|---|---|---|---|---|---|---|
| -100.160 | 300.390 | 898.89000 | -10.30400 | -10.18900 | -.15941 | -.32336 | .09295 | .37961 | -.11395 | .03910 | .25875 |
| -100.770 | 400.410 | 898.87000 | -10.30400 | -10.18800 | -.16383 | -.32816 | .09632 | .38385 | -.11660 | .03920 | .25967 |
| -100.780 | 500.350 | 899.01000 | -10.30400 | -10.18800 | -.16362 | -.32859 | .09669 | .38413 | -.11677 | .03929 | .26111 |
| | GRADIENT | .00000 | .00000 | .00000 | .00000 | .00000 | .00000 | .00000 | .00000 | .00000 | .00000 |

RUN NO. 2588/ 0 RN/L = 2.40 GRADIENT INTERVAL = -5.00/ 5.00

| Y | Z | X | ALPHA | BETA | PHI | CN | CLM | CY | CYN | CBL | CA |
|---|---|---|---|---|---|---|---|---|---|---|---|
| -300.730 | 501.470 | 899.00000 | -10.30400 | -10.18800 | -.16369 | -.32880 | .09676 | .38393 | -.11667 | .03923 | .26121 |
| -299.690 | 399.990 | 898.85000 | -10.30400 | -10.18800 | -.16377 | -.32871 | .09674 | .38422 | -.11680 | .03929 | .26127 |
| -300.000 | 300.290 | 898.93000 | -10.30400 | -10.18800 | -.16367 | -.32865 | .09673 | .38401 | -.11672 | .03925 | .26121 |
| | GRADIENT | .00000 | .00000 | .00000 | .00000 | .00000 | .00000 | .00000 | .00000 | .00000 | .00000 |

IA143, AEDC V41A-P8A, O/ET W/R.H. SRB SEPARATING (OVX652) ( 24 MAY 77 )

REFERENCE DATA

SREF = 2690.0000 SQ.FT. XMRP = 1097.0000 IN. XT
LREF = 1290.3000 INCHES YMRP = .0000 IN. YT
BREF = 1290.3000 INCHES ZMRP = 450.0000 IN. ZT
SCALE = .0100

PARAMETRIC DATA

ALPHA = -10.000 BETA = -10.000
DALPHA = -15.000 DBETA = .000
X = 900.000 MACH = 4.500
JET PC = .000

RUN NO. 2616/ 0 RN/L = 2.39 GRADIENT INTERVAL = -5.00/ 5.00

| Y | Z | X | ALPHA | BETA | PHI | CN | CLM | CY | CYN | CBL | CA |
|---|---|---|---|---|---|---|---|---|---|---|---|
| -99.687 | 300.770 | 898.97000 | -10.30300 | -10.18900 | -.15594 | -.32157 | .09158 | .37555 | -.11181 | .03889 | .25776 |
| -101.340 | 400.420 | 898.91000 | -10.30400 | -10.18800 | -.16335 | -.32738 | .09562 | .38321 | -.11615 | .03912 | .25820 |
| -100.530 | 500.490 | 899.05000 | -10.30400 | -10.18800 | -.16367 | -.32829 | .09638 | .38356 | -.11647 | .03917 | .25991 |
| | GRADIENT | .00000 | .00000 | .00000 | .00000 | .00000 | .00000 | .00000 | .00000 | .00000 | .00000 |

RUN NO. 2617/ 0 RN/L = 2.39 GRADIENT INTERVAL = -5.00/ 5.00

| Y | Z | X | ALPHA | BETA | PHI | CN | CLM | CY | CYN | CBL | CA |
|---|---|---|---|---|---|---|---|---|---|---|---|
| -301.010 | 502.070 | 899.35000 | -10.30400 | -10.18700 | -.16362 | -.32874 | .09675 | .38391 | -.11668 | .03923 | .26113 |
| -300.990 | 400.130 | 898.67000 | -10.30400 | -10.18800 | -.16370 | -.32869 | .09673 | .38391 | -.11670 | .03924 | .26109 |
| -299.790 | 300.510 | 898.88000 | -10.30400 | -10.18700 | -.16373 | -.32883 | .09677 | .38375 | -.11663 | .03920 | .26106 |
| | GRADIENT | .00000 | .00000 | .00000 | .00000 | .00000 | .00000 | .00000 | .00000 | .00000 | .00000 |

IA143, AEDC V41A-P8A, O/ET W/R.H. SRB SEPARATING (OVX653) ( 24 MAY 77 )

REFERENCE DATA

SREF = 2690.0000 SQ.FT. XMRP = 1097.0000 IN. XT
LREF = 1290.3000 INCHES YMRP = .0000 IN. YT
BREF = 1290.3000 INCHES ZMRP = 450.0000 IN. ZT
SCALE = .0100

PARAMETRIC DATA

ALPHA = -10.000 BETA = -10.000
DALPHA = -10.000 DBETA = -12.000
X = 900.000 MACH = 4.500
JET PC = .000

RUN NO. 2593/ 0 RN/L = 2.39 GRADIENT INTERVAL = -5.00/ 5.00

| Y | Z | X | ALPHA | BETA | PHI | CN | CLM | CY | CYN | CBL | CA |
|---|---|---|---|---|---|---|---|---|---|---|---|
| -100.590 | 300.350 | 899.01000 | -10.30300 | -10.18900 | -.15350 | -.31665 | .08886 | .37358 | -.11083 | .03894 | .25850 |
| -101.400 | 400.720 | 899.50000 | -10.30400 | -10.18900 | -.16131 | -.32440 | .09354 | .38152 | -.11497 | .03911 | .25778 |
| -102.460 | 500.630 | 899.61000 | -10.30400 | -10.18800 | -.16366 | -.32813 | .09627 | .38379 | -.11653 | .03918 | .25960 |
| | GRADIENT | .00000 | .00000 | .00000 | .00000 | .00000 | .00000 | .00000 | .00000 | .00000 | .00000 |

RUN NO. 2594/ 0 RN/L = 2.39 GRADIENT INTERVAL = -5.00/ 5.00

| Y | Z | X | ALPHA | BETA | PHI | CN | CLM | CY | CYN | CBL | CA |
|---|---|---|---|---|---|---|---|---|---|---|---|
| -299.590 | 501.460 | 899.22000 | -10.30400 | -10.18700 | -.16365 | -.32869 | .09674 | .38409 | -.11677 | .03927 | .26121 |
| -299.230 | 399.840 | 898.70000 | -10.30400 | -10.18800 | -.16359 | -.32850 | .09658 | .38386 | -.11663 | .03923 | .26057 |
| -299.380 | 300.240 | 898.94000 | -10.30400 | -10.18800 | -.16350 | -.32812 | .09629 | .38358 | -.11646 | .03917 | .25950 |
| | GRADIENT | .00000 | .00000 | .00000 | .00000 | .00000 | .00000 | .00000 | .00000 | .00000 | .00000 |

IA143, AEDC V41A-P8A, O/ET W/R.H. SRB SEPARATING (OVX654) ( 24 MAY 77 )

REFERENCE DATA

SREF = 2690.0000 SQ.FT. XMRP = 1097.0000 IN. XT
LREF = 1290.3000 INCHES YMRP = .0000 IN. YT
BREF = 1290.3000 INCHES ZMRP = 450.0000 IN. ZT
SCALE = .0100

PARAMETRIC DATA

ALPHA = -10.000 BETA = -10.000
DALPHA = -15.000 DBETA = -12.000
X = 900.000 MACH = 4.500
JET PC = .000

RUN NO. 2609/ 0 RN/L = 2.40 GRADIENT INTERVAL = -5.00/ 5.00

| Y | Z | X | ALPHA | BETA | PHI | CN | CLM | CY | CYN | CBL | CA |
|---|---|---|---|---|---|---|---|---|---|---|---|
| -100.450 | 300.280 | 899.03000 | -10.30200 | -10.19000 | -.15062 | -.31513 | .08776 | .36999 | -.10895 | .03874 | .25804 |
| -100.990 | 400.920 | 899.37000 | -10.30400 | -10.19000 | -.15898 | -.32140 | .09121 | .37856 | -.11318 | .03891 | .25660 |
| -101.780 | 500.550 | 899.40000 | -10.30400 | -10.18800 | -.16406 | -.32773 | .09580 | .38333 | -.11633 | .03903 | .25790 |
| | GRADIENT | .00000 | .00000 | .00000 | .00000 | .00000 | .00000 | .00000 | .00000 | .00000 | .00000 |

RUN NO. 2610/ 0 RN/L = 2.40 GRADIENT INTERVAL = -5.00/ 5.00

| Y | Z | X | ALPHA | BETA | PHI | CN | CLM | CY | CYN | CBL | CA |
|---|---|---|---|---|---|---|---|---|---|---|---|
| -300.520 | 502.070 | 899.82000 | -10.30400 | -10.18800 | -.16355 | -.32847 | .09654 | .38359 | -.11648 | .03917 | .26038 |
| -299.260 | 400.070 | 898.60000 | -10.30400 | -10.18800 | -.16356 | -.32812 | .09618 | .38334 | -.11630 | .03912 | .25923 |
| -300.090 | 300.430 | 899.09000 | -10.30300 | -10.18700 | -.16386 | -.32768 | .09582 | .38310 | -.11620 | .03900 | .25812 |
| | GRADIENT | .00000 | .00000 | .00000 | .00000 | .00000 | .00000 | .00000 | .00000 | .00000 | .00000 |

IA143, AEDC V41A-P8A, O/ET W/R.H. SRB SEPARATING (OVX655) ( 24 MAY 77 )

REFERENCE DATA

SREF = 2690.0000 SQ.FT. XMRP = 1097.0000 IN. XT
LREF = 1290.3000 INCHES YMRP = .0000 IN. YT
BREF = 1290.3000 INCHES ZMRP = 450.0000 IN. ZT
SCALE = .0100

PARAMETRIC DATA

ALPHA = -10.000 BETA = -10.000
DALPHA = -12.000 DBETA = -6.000
X = 900.000 MACH = 4.500
JET PC = .000

RUN NO. 2599/ 0 RN/L = 2.39 GRADIENT INTERVAL = -5.00/ 5.00

| Y | Z | X | ALPHA | BETA | PHI | CN | CLM | CY | CYN | CBL | CA |
|---|---|---|---|---|---|---|---|---|---|---|---|
| -200.800 | 300.440 | 898.83000 | -10.30400 | -10.18800 | -.16323 | -.32744 | .09567 | .38300 | -.11605 | .03913 | .25833 |
| -200.640 | 400.200 | 898.99000 | -10.30400 | -10.18800 | -.16363 | -.32855 | .09644 | .38376 | -.11651 | .03919 | .25994 |
| -201.120 | 500.430 | 899.23000 | -10.30400 | -10.18800 | -.16370 | -.32867 | .09673 | .38389 | -.11666 | .03923 | .26107 |
| | GRADIENT | .00000 | .00000 | .00000 | .00000 | .00000 | .00000 | .00000 | .00000 | .00000 | .00000 |

IA143, AEDC V41A-P8A, O/ET W/R.H. SRB SEPARATING (OVX656) ( 24 MAY 77 )

REFERENCE DATA

SREF = 2690.0000 SQ.FT. XMRP = 1097.0000 IN. XT
LREF = 1290.3000 INCHES YMRP = .0000 IN. YT
BREF = 1290.3000 INCHES ZMRP = 450.0000 IN. ZT
SCALE = .0100

PARAMETRIC DATA

ALPHA = -10.000 BETA = -10.000
DALPHA = -15.000 DBETA = -6.000
X = 900.000 MACH = 4.500
JET PC = .000

RUN NO. 2613/ 0 RN/L = 2.39 GRADIENT INTERVAL = -5.00/ 5.00

| Y | Z | X | ALPHA | BETA | PHI | CN | CLM | CY | CYN | CBL | CA |
|---|---|---|---|---|---|---|---|---|---|---|---|
| -200.370 | 400.440 | 898.99000 | -10.30400 | -10.18800 | -.16377 | -.32816 | .09617 | .38383 | -.11653 | .03917 | .25904 |
| -201.030 | 600.980 | 899.23000 | -10.30400 | -10.18700 | -.16377 | -.32884 | .09678 | .38388 | -.11671 | .03922 | .26115 |
| -202.420 | 801.880 | 899.60000 | -10.30400 | -10.18700 | -.16376 | -.32881 | .09676 | .38381 | -.11667 | .03921 | .26111 |
| -200.940 | 1001.600 | 899.55000 | -10.30400 | -10.18700 | -.16372 | -.32868 | .09672 | .38376 | -.11667 | .03921 | .26097 |
| | GRADIENT | .00000 | .00000 | .00000 | .00000 | .00000 | .00000 | .00000 | .00000 | .00000 | .00000 |

IA143, AEDC V41A-P8A, O/ET W/R.H. SRB SEPARATING (OVX657) ( 24 MAY 77 )

REFERENCE DATA

SREF = 2690.0000 SQ.FT. XMRP = 1097.0000 IN. XT
LREF = 1290.3000 INCHES YMRP = .0000 IN. YT
BREF = 1290.3000 INCHES ZMRP = 450.0000 IN. ZT
SCALE = .0100

PARAMETRIC DATA

ALPHA = -10.000 BETA = -10.000
DALPHA = -10.000 DBETA = -4.000
X = 900.000 MACH = 4.500
JET PC = .000

RUN NO. 2589/ 0 RN/L = 2.39 GRADIENT INTERVAL = -5.00/ 5.00

| Y | Z | X | ALPHA | BETA | PHI | CN | CLM | CY | CYN | CBL | CA |
|---|---|---|---|---|---|---|---|---|---|---|---|
| -200.170 | 300.220 | 899.02000 | -10.30400 | -10.18800 | -.16379 | -.32810 | .09629 | .38384 | -.11660 | .03918 | .25959 |
| -200.280 | 350.320 | 899.16000 | -10.30400 | -10.18800 | -.16368 | -.32824 | .09643 | .38368 | -.11651 | .03918 | .26018 |
| -199.880 | 400.160 | 899.06000 | -10.30400 | -10.18800 | -.16354 | -.32834 | .09655 | .38376 | -.11656 | .03922 | .26071 |
| | GRADIENT | .00000 | .00000 | .00000 | .00000 | .00000 | .00000 | .00000 | .00000 | .00000 | .00000 |

RUN NO. 2590/ 0 RN/L = 2.40 GRADIENT INTERVAL = -5.00/ 5.00

| Y | Z | X | ALPHA | BETA | PHI | CN | CLM | CY | CYN | CBL | CA |
|---|---|---|---|---|---|---|---|---|---|---|---|
| -300.510 | 400.850 | 899.14000 | -10.30400 | -10.18800 | -.16378 | -.32878 | .09677 | .38408 | -.11674 | .03926 | .26131 |
| -300.110 | 350.290 | 898.99000 | -10.30400 | -10.18700 | -.16363 | -.32876 | .09677 | .38379 | -.11661 | .03920 | .26129 |
| -299.840 | 300.330 | 898.96000 | -10.30400 | -10.18800 | -.16374 | -.32860 | .09670 | .38365 | -.11658 | .03919 | .26103 |
| | GRADIENT | .00000 | .00000 | .00000 | .00000 | .00000 | .00000 | .00000 | .00000 | .00000 | .00000 |

IA143, AEDC V41A-P8A, O/ET W/R.H. SRB SEPARATING (OVX658) ( 24 MAY 77 )

REFERENCE DATA

SREF = 2690.0000 SQ.FT. XMRP = 1097.0000 IN. XT
LREF = 1290.3000 INCHES YMRP = .0000 IN. YT
BREF = 1290.3000 INCHES ZMRP = 450.0000 IN. ZT
SCALE = .0100

PARAMETRIC DATA

ALPHA = -10.000 BETA = -10.000
DALPHA = -15.000 DBETA = -4.000
X = 900.000 MACH = 4.500
JET PC = .000

RUN NO. 2614/ 0 RN/L = 2.39 GRADIENT INTERVAL = -5.00/ 5.00

| Y | Z | X | ALPHA | BETA | PHI | CN | CLM | CY | CYN | CBL | CA |
|---|---|---|---|---|---|---|---|---|---|---|---|
| -199.680 | 300.460 | 899.03000 | -10.30400 | -10.18800 | -.16316 | -.32740 | .09567 | .38293 | -.11602 | .03910 | .25833 |
| -200.470 | 350.270 | 898.96000 | -10.30400 | -10.18800 | -.16381 | -.32807 | .09618 | .38364 | -.11650 | .03914 | .25899 |
| -200.050 | 400.540 | 898.97000 | -10.30400 | -10.18800 | -.16356 | -.32803 | .09624 | .38336 | -.11637 | .03913 | .25940 |
| | GRADIENT | .00000 | .00000 | .00000 | .00000 | .00000 | .00000 | .00000 | .00000 | .00000 | .00000 |

RUN NO. 2615/ 0 RN/L = 2.39 GRADIENT INTERVAL = -5.00/ 5.00

| Y | Z | X | ALPHA | BETA | PHI | CN | CLM | CY | CYN | CBL | CA |
|---|---|---|---|---|---|---|---|---|---|---|---|
| -300.120 | 401.140 | 899.23000 | -10.30400 | -10.18800 | -.16369 | -.32867 | .09673 | .38408 | -.11676 | .03926 | .26117 |
| -300.190 | 350.500 | 898.99000 | -10.30400 | -10.18800 | -.16359 | -.32854 | .09661 | .38376 | -.11661 | .03922 | .26072 |
| -300.060 | 300.460 | 898.86000 | -10.30400 | -10.18700 | -.16353 | -.32846 | .09653 | .38366 | -.11655 | .03920 | .26030 |
| | GRADIENT | .00000 | .00000 | .00000 | .00000 | .00000 | .00000 | .00000 | .00000 | .00000 | .00000 |

IA143, AEDC V41A-P8A, O/ET W/R.H. SRB SEPARATING (OVX659) ( 24 MAY 77 )

REFERENCE DATA

SREF = 2690.0000 SQ.FT. XMRP = 1097.0000 IN. XT
LREF = 1290.3000 INCHES YMRP = .0000 IN. YT
BREF = 1290.3000 INCHES ZMRP = 450.0000 IN. ZT
SCALE = .0100

PARAMETRIC DATA

ALPHA = -10.000 BETA = -10.000
DALPHA = -10.000 DBETA = -8.000
X = 900.000 MACH = 4.500
JET PC = .000

RUN NO. 2592/ 0 RN/L = 2.39 GRADIENT INTERVAL = -5.00/ 5.00

| Y | Z | X | ALPHA | BETA | PHI | CN | CLM | CY | CYN | CBL | CA |
|---|---|---|---|---|---|---|---|---|---|---|---|
| -199.630 | 399.500 | 898.82000 | -10.30400 | -10.18800 | -.16353 | -.32817 | .09635 | .38343 | -.11641 | .03916 | .25978 |
| -200.100 | 350.100 | 899.00000 | -10.30400 | -10.18800 | -.16377 | -.32810 | .09622 | .38377 | -.11655 | .03916 | .25931 |
| -199.780 | 300.170 | 898.81000 | -10.30400 | -10.18800 | -.16312 | -.32752 | .09573 | .38322 | -.11614 | .03915 | .25858 |
| | GRADIENT | .00000 | .00000 | .00000 | .00000 | .00000 | .00000 | .00000 | .00000 | .00000 | .00000 |

RUN NO. 2591/ 0 RN/L = 2.40 GRADIENT INTERVAL = -5.00/ 5.00

| Y | Z | X | ALPHA | BETA | PHI | CN | CLM | CY | CYN | CBL | CA |
|---|---|---|---|---|---|---|---|---|---|---|---|
| -301.650 | 299.850 | 899.16000 | -10.30400 | -10.18800 | -.16360 | -.32834 | .09651 | .38368 | -.11655 | .03920 | .26042 |
| -299.810 | 350.190 | 898.92000 | -10.30400 | -10.18800 | -.16367 | -.32865 | .09665 | .38384 | -.11663 | .03922 | .26080 |
| -299.850 | 400.110 | 899.07000 | -10.30400 | -10.18700 | -.16363 | -.32872 | .09677 | .38395 | -.11670 | .03924 | .26127 |
| | GRADIENT | .00000 | .00000 | .00000 | .00000 | .00000 | .00000 | .00000 | .00000 | .00000 | .00000 |

IA143, AEDC V41A-P8A, O/ET W/R.H. SRB SEPARATING (OVX660) ( 24 MAY 77 )

REFERENCE DATA

SREF = 2690.0000 SQ.FT. XMRP = 1097.0000 IN. XT
LREF = 1290.3000 INCHES YMRP = .0000 IN. YT
BREF = 1290.3000 INCHES ZMRP = 450.0000 IN. ZT
SCALE = .0100

PARAMETRIC DATA

ALPHA = -10.000 BETA = -10.000
DALPHA = -15.000 DBETA = -8.000
X = 900.000 MACH = 4.500
JET PC = .000

RUN NO. 2611/ 0 RN/L = 2.40 GRADIENT INTERVAL = -5.00/ 5.00

| Y | Z | X | ALPHA | BETA | PHI | CN | CLM | CY | CYN | CBL | CA |
|---|---|---|---|---|---|---|---|---|---|---|---|
| -200.050 | 300.370 | 898.95000 | -10.30400 | -10.18900 | -.16098 | -.32565 | .09416 | .38042 | -.11445 | .03895 | .25713 |
| -200.630 | 350.270 | 898.91000 | -10.30300 | -10.18800 | -.16349 | -.32743 | .09559 | .38321 | -.11615 | .03907 | .25774 |
| -201.070 | 400.320 | 899.00000 | -10.30300 | -10.18800 | -.16375 | -.32788 | .09600 | .38360 | -.11643 | .03911 | .25860 |
| | GRADIENT | .00000 | .00000 | .00000 | .00000 | .00000 | .00000 | .00000 | .00000 | .00000 | .00000 |

RUN NO. 2612/ 0 RN/L = 2.39 GRADIENT INTERVAL = -5.00/ 5.00

| Y | Z | X | ALPHA | BETA | PHI | CN | CLM | CY | CYN | CBL | CA |
|---|---|---|---|---|---|---|---|---|---|---|---|
| -300.360 | 401.520 | 899.42000 | -10.30400 | -10.18700 | -.16347 | -.32825 | .09645 | .38347 | -.11646 | .03917 | .26007 |
| -299.890 | 350.340 | 898.90000 | -10.30400 | -10.18800 | -.16360 | -.32828 | .09637 | .38367 | -.11648 | .03919 | .25975 |
| -300.240 | 300.480 | 898.96000 | -10.30400 | -10.18800 | -.16355 | -.32813 | .09621 | .38361 | -.11642 | .03916 | .25930 |
| | GRADIENT | .00000 | .00000 | .00000 | .00000 | .00000 | .00000 | .00000 | .00000 | .00000 | .00000 |

IA143, AEDC V41A-P8A, O/ET W/R.H. SRB SEPARATING (OVX661) ( 24 MAY 77 )

REFERENCE DATA

SREF = 2690.0000 SQ.FT. XMRP = 1097.0000 IN. XT
LREF = 1290.3000 INCHES YMRP = .0000 IN. YT
BREF = 1290.3000 INCHES ZMRP = 450.0000 IN. ZT
SCALE = .0100

PARAMETRIC DATA

ALPHA = -10.000 BETA = -10.000
DALPHA = -5.000 DBETA = 4.000
X = 1200.000 MACH = 4.500
JET PC = .000

RUN NO. 2569/ 0 RN/L = 2.38 GRADIENT INTERVAL = -5.00/ 5.00

| Y | Z | X | ALPHA | BETA | PHI | CN | CLM | CY | CYN | CBL | CA |
|---|---|---|---|---|---|---|---|---|---|---|---|
| -100.330 | 200.140 | 1198.70000 | -10.30400 | -10.18800 | -.16368 | -.32797 | .09597 | .38444 | -.11676 | .03932 | .26015 |
| -99.987 | 300.040 | 1198.70000 | -10.30500 | -10.18800 | -.16351 | -.32813 | .09609 | .38452 | -.11678 | .03938 | .26079 |
| -100.870 | 400.420 | 1198.70000 | -10.30400 | -10.18800 | -.16343 | -.32817 | .09621 | .38448 | -.11684 | .03937 | .26134 |
| | GRADIENT | .00000 | .00000 | .00000 | .00000 | .00000 | .00000 | .00000 | .00000 | .00000 | .00000 |

IA143, AEDC V41A-P8A, O/ET W/R.H. SRB SEPARATING (OVX662) ( 24 MAY 77 )

REFERENCE DATA

SREF = 2690.0000 SQ.FT. XMRP = 1097.0000 IN. XT
LREF = 1290.3000 INCHES YMRP = .0000 IN. YT
BREF = 1290.3000 INCHES ZMRP = 450.0000 IN. ZT
SCALE = .0100

PARAMETRIC DATA

ALPHA = -10.000 BETA = -10.000
DALPHA = -5.000 DBETA = 4.000
X = 1200.000 MACH = 4.500
JET PC = .000

RUN NO. 2636/ 0 RN/L = 2.38 GRADIENT INTERVAL = -5.00/ 5.00

| Y | Z | X | ALPHA | BETA | PHI | CN | CLM | CY | CYN | CBL | CA |
|---|---|---|---|---|---|---|---|---|---|---|---|
| -99.984 | .338 | 1198.89999 | -10.30400 | -10.18800 | -.16342 | -.32663 | .09518 | .38233 | -.11580 | .03893 | .25899 |
| -99.935 | 100.100 | 1198.80000 | -10.30300 | -10.18800 | -.16247 | -.32758 | .09603 | .38252 | -.11589 | .03918 | .25917 |
| -99.428 | 150.150 | 1198.89999 | -10.30400 | -10.18800 | -.16351 | -.32797 | .09621 | .38367 | -.11652 | .03922 | .25936 |
| -99.874 | 200.060 | 1198.80000 | -10.30400 | -10.18700 | -.16384 | -.32807 | .09632 | .38366 | -.11659 | .03916 | .25943 |
| | GRADIENT | .00000 | .00000 | .00000 | .00000 | .00000 | .00000 | .00000 | .00000 | .00000 | .00000 |

RUN NO. 2637/ 0 RN/L = 2.38 GRADIENT INTERVAL = -5.00/ 5.00

| Y | Z | X | ALPHA | BETA | PHI | CN | CLM | CY | CYN | CBL | CA |
|---|---|---|---|---|---|---|---|---|---|---|---|
| -602.290 | 203.080 | 1199.00000 | -10.30400 | -10.18700 | -.16370 | -.32835 | .09661 | .38390 | -.11676 | .03926 | .26066 |
| -600.390 | 150.150 | 1198.80000 | -10.30400 | -10.18800 | -.16376 | -.32842 | .09661 | .38395 | -.11677 | .03926 | .26060 |
| -600.630 | 100.260 | 1198.70000 | -10.30400 | -10.18800 | -.16399 | -.32853 | .09664 | .38403 | -.11680 | .03925 | .26070 |
| -600.790 | .271 | 1198.70000 | -10.30400 | -10.18700 | -.16382 | -.32845 | .09663 | .38383 | -.11673 | .03923 | .26062 |
| | GRADIENT | .00000 | .00000 | .00000 | .00000 | .00000 | .00000 | .00000 | .00000 | .00000 | .00000 |

IA143, AEDC V41A-P8A, O/ET W/R.H. SRB SEPARATING (OVX663) ( 24 MAY 77 )

REFERENCE DATA

SREF = 2690.0000 SQ.FT. XMRP = 1097.0000 IN. XT
LREF = 1290.3000 INCHES YMRP = .0000 IN. YT
BREF = 1290.3000 INCHES ZMRP = 450.0000 IN. ZT
SCALE = .0100

PARAMETRIC DATA

ALPHA = -10.000 BETA = -10.000
DALPHA = -25.000 DBETA = 4.000
X = 1200.000 MACH = 4.500
JET PC = .000

RUN NO. 2643/ 0 RN/L = 2.39 GRADIENT INTERVAL = -5.00/ 5.00

| Y | Z | X | ALPHA | BETA | PHI | CN | CLM | CY | CYN | CBL | CA |
|---|---|---|---|---|---|---|---|---|---|---|---|
| -99.659 | 200.900 | 1198.80000 | -10.30300 | -10.18800 | -.15944 | -.32623 | .09476 | .37907 | -.11403 | .03903 | .25750 |
| -99.342 | 300.780 | 1198.80000 | -10.30300 | -10.18800 | -.16381 | -.32715 | .09549 | .38307 | -.11628 | .03906 | .25708 |
| -100.430 | 401.220 | 1199.00000 | -10.30300 | -10.18800 | -.16359 | -.32743 | .09575 | .38302 | -.11627 | .03910 | .25755 |
| -99.938 | 501.190 | 1199.20000 | -10.30400 | -10.18800 | -.16355 | -.32759 | .09606 | .38287 | -.11629 | .03912 | .25851 |
| -100.170 | 601.010 | 1198.89999 | -10.30400 | -10.18700 | -.16355 | -.32821 | .09655 | .38337 | -.11661 | .03921 | .26035 |
| | GRADIENT | .00000 | .00000 | .00000 | .00000 | .00000 | .00000 | .00000 | .00000 | .00000 | .00000 |

IA143, AEDC V41A-P8A, O/ET W/R.H. SRB SEPARATING (OVX663) ( 24 MAY 77 )

REFERENCE DATA

SREF = 2690.0000 SQ.FT. XMRP = 1097.0000 IN. XT
LREF = 1290.3000 INCHES YMRP = .0000 IN. YT
BREF = 1290.3000 INCHES ZMRP = 450.0000 IN. ZT
SCALE = .0100

PARAMETRIC DATA

ALPHA = -10.000 BETA = -10.000
DALPHA = -25.000 DBETA = 4.000
X = 1200.000 MACH = 4.500
JET PC = .000

RUN NO. 2644/ 0 RN/L = 2.39 GRADIENT INTERVAL = -5.00/ 5.00

| Y | Z | X | ALPHA | BETA | PHI | CN | CLM | CY | CYN | CBL | CA |
|---|---|---|---|---|---|---|---|---|---|---|---|
| -599.600 | 600.440 | 1198.60001 | -10.30400 | -10.18800 | -.16384 | -.32854 | .09657 | .38376 | -.11675 | .03925 | .26025 |
| -600.120 | 500.720 | 1198.60001 | -10.30400 | -10.18700 | -.16370 | -.32846 | .09658 | .38374 | -.11674 | .03926 | .26033 |
| -600.170 | 400.850 | 1198.80000 | -10.30400 | -10.18700 | -.16375 | -.32836 | .09656 | .38347 | -.11667 | .03923 | .26026 |
| -600.450 | 301.410 | 1199.00000 | -10.30400 | -10.18700 | -.16363 | -.32846 | .09659 | .38350 | -.11667 | .03923 | .26035 |
| -600.810 | 201.140 | 1198.89999 | -10.30400 | -10.18700 | -.16359 | -.32844 | .09660 | .38359 | -.11670 | .03925 | .26041 |
| | GRADIENT | .00000 | .00000 | .00000 | .00000 | .00000 | .00000 | .00000 | .00000 | .00000 | .00000 |

IA143, AEDC V41A-P8A, O/ET W/R.H. SRB SEPARATING (OVX664) ( 24 MAY 77 )

REFERENCE DATA

SREF = 2690.0000 SQ.FT. XMRP = 1097.0000 IN. XT
LREF = 1290.3000 INCHES YMRP = .0000 IN. YT
BREF = 1290.3000 INCHES ZMRP = 450.0000 IN. ZT
SCALE = .0100

PARAMETRIC DATA

ALPHA = -10.000 BETA = -10.000
DALPHA = -5.000 DBETA = -12.000
X = 1200.000 MACH = 4.500
JET PC = .000

RUN NO. 2639/ 0 RN/L = 2.38 GRADIENT INTERVAL = -5.00/ 5.00

| Y | Z | X | ALPHA | BETA | PHI | CN | CLM | CY | CYN | CBL | CA |
|---|---|---|---|---|---|---|---|---|---|---|---|
| -100.100 | 200.120 | 1199.10001 | -10.30400 | -10.18800 | -.16302 | -.32772 | .09586 | .38324 | -.11616 | .03919 | .25894 |
| -101.760 | 300.140 | 1199.39999 | -10.30300 | -10.18700 | -.16392 | -.32775 | .09609 | .38377 | -.11663 | .03916 | .25869 |
| -102.820 | 400.400 | 1199.70000 | -10.30400 | -10.18800 | -.16371 | -.32832 | .09645 | .38387 | -.11667 | .03924 | .25996 |
| -101.840 | 501.100 | 1199.70000 | -10.30400 | -10.18700 | -.16366 | -.32840 | .09662 | .38390 | -.11675 | .03925 | .26070 |
| -99.590 | 600.650 | 1199.50000 | -10.30400 | -10.18700 | -.16366 | -.32833 | .09660 | .38382 | -.11673 | .03923 | .26065 |
| | GRADIENT | .00000 | .00000 | .00000 | .00000 | .00000 | .00000 | .00000 | .00000 | .00000 | .00000 |

IA143, AEDC V41A-P8A, O/ET W/R.H. SRB SEPARATING (OVX665) ( 24 MAY 77 )

REFERENCE DATA

SREF = 2690.0000 SQ.FT. XMRP = 1097.0000 IN. XT
LREF = 1290.3000 INCHES YMRP = .0000 IN. YT
BREF = 1290.3000 INCHES ZMRP = 450.0000 IN. ZT
SCALE = .0100

PARAMETRIC DATA

ALPHA = -10.000 BETA = -10.000
DALPHA = -5.000 DBETA = -16.000
X = 1200.000 MACH = 4.500
JET PC = .000

RUN NO. 2638/ 0 RN/L = 2.38 GRADIENT INTERVAL = -5.00/ 5.00

| Y | Z | X | ALPHA | BETA | PHI | CN | CLM | CY | CYN | CBL | CA |
|---|---|---|---|---|---|---|---|---|---|---|---|
| -599.790 | 199.960 | 1199.00000 | -10.30400 | -10.18800 | -.16391 | -.32833 | .09658 | .38379 | -.11670 | .03922 | .26059 |
| -600.150 | 299.690 | 1199.10001 | -10.30400 | -10.18700 | -.16364 | -.32844 | .09661 | .38385 | -.11672 | .03924 | .26059 |
| -600.650 | 399.790 | 1199.10001 | -10.30400 | -10.18800 | -.16386 | -.32839 | .09662 | .38389 | -.11675 | .03924 | .26071 |
| -601.020 | 499.920 | 1199.20000 | -10.30400 | -10.18700 | -.16387 | -.32860 | .09667 | .38381 | -.11670 | .03920 | .26072 |
| -600.860 | 600.060 | 1199.30000 | -10.30400 | -10.18800 | -.16382 | -.32855 | .09667 | .38407 | -.11679 | .03927 | .26085 |
| | GRADIENT | .00000 | .00000 | .00000 | .00000 | .00000 | .00000 | .00000 | .00000 | .00000 | .00000 |

IA143, AEDC V41A-P8A, O/ET W/R.H. SRB SEPARATING (OVX666) ( 24 MAY 77 )

REFERENCE DATA

SREF = 2690.0000 SQ.FT. XMRP = 1097.0000 IN. XT
LREF = 1290.3000 INCHES YMRP = .0000 IN. YT
BREF = 1290.3000 INCHES ZMRP = 450.0000 IN. ZT
SCALE = .0100

PARAMETRIC DATA

ALPHA = -10.000 BETA = -10.000
DALPHA = -25.000 DBETA = -16.000
X = 1200.000 MACH = 4.500
JET PC = .000

RUN NO. 2641/ 0 RN/L = 2.39 GRADIENT INTERVAL = -5.00/ 5.00

| Y | Z | X | ALPHA | BETA | PHI | CN | CLM | CY | CYN | CBL | CA |
|---|---|---|---|---|---|---|---|---|---|---|---|
| -101.930 | 301.180 | 1199.30000 | -10.30300 | -10.18900 | -.16091 | -.32515 | .09397 | .37998 | -.11435 | .03893 | .25580 |
| -102.090 | 401.140 | 1199.70000 | -10.30300 | -10.18800 | -.16423 | -.32670 | .09501 | .38321 | -.11627 | .03896 | .25580 |
| -100.940 | 501.850 | 1199.50000 | -10.30300 | -10.18800 | -.16373 | -.32692 | .09536 | .38290 | -.11612 | .03901 | .25659 |
| -103.460 | 601.050 | 1199.89999 | -10.30300 | -10.18800 | -.16361 | -.32758 | .09590 | .38330 | -.11635 | .03913 | .25803 |
| | GRADIENT | .00000 | .00000 | .00000 | .00000 | .00000 | .00000 | .00000 | .00000 | .00000 | .00000 |

IA143, AEDC V41A-P8A, O/ET W/R.H. SRB SEPARATING (OVX667) ( 24 MAY 77 )

REFERENCE DATA

SREF = 2690.0000 SQ.FT. XMRP = 1097.0000 IN. XT
LREF = 1290.3000 INCHES YMRP = .0000 IN. YT
BREF = 1290.3000 INCHES ZMRP = 450.0000 IN. ZT
SCALE = .0100

PARAMETRIC DATA

ALPHA = -10.000 BETA = -10.000
DALPHA = -25.000 DBETA = -20.000
X = 1200.000 MACH = 4.500
JET PC = .000

RUN NO. 2642/ 0 RN/L = 2.39 GRADIENT INTERVAL = -5.00/ 5.00

| Y | Z | X | ALPHA | BETA | PHI | CN | CLM | CY | CYN | CBL | CA |
|---|---|---|---|---|---|---|---|---|---|---|---|
| -600.720 | 400.960 | 1199.30000 | -10.30400 | -10.18700 | -.16357 | -.32828 | .09655 | .38365 | -.11666 | .03925 | .26037 |
| -600.080 | 500.260 | 1198.70000 | -10.30400 | -10.18700 | -.16347 | -.32830 | .09654 | .38364 | -.11665 | .03924 | .26032 |
| -600.240 | 600.470 | 1198.89999 | -10.30400 | -10.18800 | -.16362 | -.32829 | .09657 | .38373 | -.11669 | .03925 | .26046 |
| | GRADIENT | .00000 | .00000 | .00000 | .00000 | .00000 | .00000 | .00000 | .00000 | .00000 | .00000 |

IA143, AEDC V41A-P8A, O/ET W/R.H. SRB SEPARATING (OVX668) ( 24 MAY 77 )

REFERENCE DATA

SREF = 2690.0000 SQ.FT. XMRP = 1097.0000 IN. XT
LREF = 1290.3000 INCHES YMRP = .0000 IN. YT
BREF = 1290.3000 INCHES ZMRP = 450.0000 IN. ZT
SCALE = .0100

PARAMETRIC DATA

ALPHA = -10.000 BETA = -10.000
DALPHA = -10.000 DBETA = .000
X = 1200.000 MACH = 4.500
JET PC = .000

RUN NO. 2597/ 0 RN/L = 2.39 GRADIENT INTERVAL = -5.00/ 5.00

| Y | Z | X | ALPHA | BETA | PHI | CN | CLM | CY | CYN | CBL | CA |
|---|---|---|---|---|---|---|---|---|---|---|---|
| -199.280 | 300.420 | 1198.89999 | -10.30400 | -10.18700 | -.16356 | -.32870 | .09668 | .38391 | -.11667 | .03923 | .26090 |
| -200.030 | 400.520 | 1199.00000 | -10.30400 | -10.18800 | -.16377 | -.32883 | .09679 | .38392 | -.11669 | .03923 | .26128 |
| -200.360 | 500.280 | 1198.80000 | -10.30400 | -10.18700 | -.16370 | -.32875 | .09678 | .38398 | -.11673 | .03924 | .26135 |
| | GRADIENT | .00000 | .00000 | .00000 | .00000 | .00000 | .00000 | .00000 | .00000 | .00000 | .00000 |

RUN NO. 2598/ 0 RN/L = 2.39 GRADIENT INTERVAL = -5.00/ 5.00

| Y | Z | X | ALPHA | BETA | PHI | CN | CLM | CY | CYN | CBL | CA |
|---|---|---|---|---|---|---|---|---|---|---|---|
| -400.490 | 501.130 | 1198.89999 | -10.30400 | -10.18700 | -.16371 | -.32877 | .09677 | .38391 | -.11672 | .03923 | .26131 |
| -399.970 | 400.240 | 1198.80000 | -10.30400 | -10.18700 | -.16371 | -.32877 | .09677 | .38391 | -.11671 | .03922 | .26120 |
| -400.180 | 300.430 | 1198.80000 | -10.30400 | -10.18800 | -.16374 | -.32873 | .09675 | .38399 | -.11673 | .03925 | .26124 |
| | GRADIENT | .00000 | .00000 | .00000 | .00000 | .00000 | .00000 | .00000 | .00000 | .00000 | .00000 |

IA143, AEDC V41A-P8A, O/ET W/R.H. SRB SEPARATING (OVX669) ( 24 MAY 77 )

REFERENCE DATA

SREF = 2690.0000 SQ.FT. XMRP = 1097.0000 IN. XT
LREF = 1290.3000 INCHES YMRP = .0000 IN. YT
BREF = 1290.3000 INCHES ZMRP = 450.0000 IN. ZT
SCALE = .0100

PARAMETRIC DATA

ALPHA = -10.000 BETA = -10.000
DALPHA = -20.000 DBETA = .000
X = 1200.000 MACH = 4.500
JET PC = .000

RUN NO. 2629/ 0 RN/L = 2.38 GRADIENT INTERVAL = -5.00/ 5.00

| Y | Z | X | ALPHA | BETA | PHI | CN | CLM | CY | CYN | CBL | CA |
|---|---|---|---|---|---|---|---|---|---|---|---|
| -200.140 | 300.630 | 1198.70000 | -10.30400 | -10.18800 | -.16353 | -.32820 | .09640 | .38350 | -.11646 | .03918 | .25992 |
| -200.280 | 400.720 | 1198.80000 | -10.30400 | -10.18800 | -.16365 | -.32872 | .09666 | .38391 | -.11667 | .03924 | .26063 |
| -200.360 | 500.860 | 1199.00000 | -10.30400 | -10.18800 | -.16380 | -.32895 | .09684 | .38395 | -.11673 | .03923 | .26124 |
| | GRADIENT | .00000 | .00000 | .00000 | .00000 | .00000 | .00000 | .00000 | .00000 | .00000 | .00000 |

RUN NO. 2630/ 0 RN/L = 2.38 GRADIENT INTERVAL = -5.00/ 5.00

| Y | Z | X | ALPHA | BETA | PHI | CN | CLM | CY | CYN | CBL | CA |
|---|---|---|---|---|---|---|---|---|---|---|---|
| -401.030 | 502.500 | 1199.50000 | -10.30400 | -10.18800 | -.16371 | -.32878 | .09676 | .38393 | -.11671 | .03925 | .26116 |
| -399.230 | 400.850 | 1199.00000 | -10.30400 | -10.18700 | -.16382 | -.32881 | .09677 | .38362 | -.11663 | .03918 | .26110 |
| -400.250 | 300.460 | 1198.70000 | -10.30400 | -10.18700 | -.16363 | -.32878 | .09676 | .38386 | -.11670 | .03924 | .26109 |
| | GRADIENT | .00000 | .00000 | .00000 | .00000 | .00000 | .00000 | .00000 | .00000 | .00000 | .00000 |

IA143, AEDC V41A-P8A, O/ET W/R.H. SRB SEPARATING (OVX670) ( 24 MAY 77 )

REFERENCE DATA

SREF = 2690.0000 SQ.FT. XMRP = 1097.0000 IN. XT
LREF = 1290.3000 INCHES YMRP = .0000 IN. YT
BREF = 1290.3000 INCHES ZMRP = 450.0000 IN. ZT
SCALE = .0100

PARAMETRIC DATA

ALPHA = -10.000 BETA = -10.000
DALPHA = -10.000 DBETA = -12.000
X = 1200.000 MACH = 4.500
JET PC = .000

RUN NO. 2595/ 0 RN/L = 2.39 GRADIENT INTERVAL = -5.00/ 5.00

| Y | Z | X | ALPHA | BETA | PHI | CN | CLM | CY | CYN | CBL | CA |
|---|---|---|---|---|---|---|---|---|---|---|---|
| -200.510 | 300.160 | 1199.00000 | -10.30400 | -10.18800 | -.16356 | -.32833 | .09640 | .38358 | -.11645 | .03918 | .25996 |
| -201.700 | 400.540 | 1199.20000 | -10.30400 | -10.18800 | -.16365 | -.32851 | .09665 | .38389 | -.11667 | .03924 | .26083 |
| -202.740 | 500.560 | 1199.39999 | -10.30500 | -10.18800 | -.16392 | -.32889 | .09681 | .38442 | -.11687 | .03930 | .26148 |
| | GRADIENT | .00000 | .00000 | .00000 | .00000 | .00000 | .00000 | .00000 | .00000 | .00000 | .00000 |

RUN NO. 2596/ 0 RN/L = 2.39 GRADIENT INTERVAL = -5.00/ 5.00

| Y | Z | X | ALPHA | BETA | PHI | CN | CLM | CY | CYN | CBL | CA |
|---|---|---|---|---|---|---|---|---|---|---|---|
| -400.350 | 501.240 | 1199.10001 | -10.30400 | -10.18700 | -.16370 | -.32870 | .09673 | .38378 | -.11667 | .03921 | .26109 |
| -398.240 | 400.050 | 1198.70000 | -10.30400 | -10.18800 | -.16379 | -.32895 | .09683 | .38413 | -.11677 | .03926 | .26143 |
| -399.780 | 300.420 | 1199.10001 | -10.30400 | -10.18800 | -.16368 | -.32867 | .09673 | .38399 | -.11674 | .03926 | .26113 |
| | GRADIENT | .00000 | .00000 | .00000 | .00000 | .00000 | .00000 | .00000 | .00000 | .00000 | .00000 |

IA143, AEDC V41A-P8A, O/ET W/R.H. SRB SEPARATING (OVX671) ( 24 MAY 77 )

REFERENCE DATA

SREF = 2690.0000 SQ.FT. XMRP = 1097.0000 IN. XT
LREF = 1290.3000 INCHES YMRP = .0000 IN. YT
BREF = 1290.3000 INCHES ZMRP = 450.0000 IN. ZT
SCALE = .0100

PARAMETRIC DATA

ALPHA = -10.000 BETA = -10.000
DALPHA = -20.000 DBETA = -12.000
X = 1200.000 MACH = 4.500
JET PC = .000

RUN NO. 2623/ 0 RN/L = 2.39 GRADIENT INTERVAL = -5.00/ 5.00

| Y | Z | X | ALPHA | BETA | PHI | CN | CLM | CY | CYN | CBL | CA |
|---|---|---|---|---|---|---|---|---|---|---|---|
| -199.420 | 300.460 | 1198.89999 | -10.30400 | -10.18800 | -.16367 | -.32795 | .09600 | .38335 | -.11632 | .03906 | .25842 |
| -201.410 | 400.850 | 1199.39999 | -10.30400 | -10.18800 | -.16356 | -.32788 | .09608 | .38311 | -.11624 | .03909 | .25878 |
| -201.080 | 500.700 | 1199.10001 | -10.30400 | -10.18700 | -.16345 | -.32837 | .09647 | .38351 | -.11647 | .03918 | .25999 |
| | GRADIENT | | .00000 | .00000 | .00000 | .00000 | .00000 | .00000 | .00000 | .00000 | .00000 |

RUN NO. 2624/ 0 RN/L = 2.39 GRADIENT INTERVAL = -5.00/ 5.00

| Y | Z | X | ALPHA | BETA | PHI | CN | CLM | CY | CYN | CBL | CA |
|---|---|---|---|---|---|---|---|---|---|---|---|
| -400.390 | 502.770 | 1200.10001 | -10.30400 | -10.18700 | -.16366 | -.32884 | .09679 | .38387 | -.11669 | .03922 | .26125 |
| -399.760 | 400.720 | 1199.00000 | -10.30400 | -10.18700 | -.16362 | -.32886 | .09681 | .38387 | -.11668 | .03923 | .26126 |
| -400.310 | 300.670 | 1199.00000 | -10.30400 | -10.18700 | -.16364 | -.32869 | .09670 | .38373 | -.11662 | .03921 | .26080 |
| | GRADIENT | | .00000 | .00000 | .00000 | .00000 | .00000 | .00000 | .00000 | .00000 | .00000 |

IA143, AEDC V41A-P8A, O/ET W/R.H. SRB SEPARATING (OVX672) ( 24 MAY 77 )

REFERENCE DATA

SREF = 2690.0000 SQ.FT. XMRP = 1097.0000 IN. XT
LREF = 1290.3000 INCHES YMRP = .0000 IN. YT
BREF = 1290.3000 INCHES ZMRP = 450.0000 IN. ZT
SCALE = .0100

PARAMETRIC DATA

ALPHA = -10.000 BETA = -10.000
DALPHA = -15.000 DBETA = -4.000
X = 1200.000 MACH = 4.500
JET PC = .000

RUN NO. 2618/ 0 RN/L = 2.39 GRADIENT INTERVAL = -5.00/ 5.00

| Y | Z | X | ALPHA | BETA | PHI | CN | CLM | CY | CYN | CBL | CA |
|---|---|---|---|---|---|---|---|---|---|---|---|
| -199.900 | 400.450 | 1198.80000 | -10.30400 | -10.18700 | -.16364 | -.32871 | .09672 | .38365 | -.11661 | .03919 | .26099 |
| -201.600 | 450.620 | 1198.80000 | -10.30400 | -10.18700 | -.16369 | -.32877 | .09676 | .38375 | -.11664 | .03920 | .26118 |
| -200.260 | 500.350 | 1198.70000 | -10.30400 | -10.18800 | -.16381 | -.32893 | .09680 | .38404 | -.11677 | .03925 | .26115 |
| | GRADIENT | | .00000 | .00000 | .00000 | .00000 | .00000 | .00000 | .00000 | .00000 | .00000 |

RUN NO. 2619/ 0 RN/L = 2.39 GRADIENT INTERVAL = -5.00/ 5.00

| Y | Z | X | ALPHA | BETA | PHI | CN | CLM | CY | CYN | CBL | CA |
|---|---|---|---|---|---|---|---|---|---|---|---|
| -300.820 | 501.210 | 1199.10001 | -10.30400 | -10.18700 | -.16368 | -.32865 | .09672 | .38377 | -.11668 | .03922 | .26100 |
| -300.190 | 450.250 | 1198.70000 | -10.30400 | -10.18800 | -.16365 | -.32885 | .09677 | .38411 | -.11677 | .03927 | .26113 |
| -300.350 | 400.170 | 1198.80000 | -10.30400 | -10.18800 | -.16376 | -.32855 | .09667 | .38368 | -.11665 | .03921 | .26088 |
| | GRADIENT | | .00000 | .00000 | .00000 | .00000 | .00000 | .00000 | .00000 | .00000 | .00000 |

IA143, AEDC V41A-P8A, O/ET W/R.H. SRB SEPARATING (OVXS73) ( 24 MAY 77 )

REFERENCE DATA

SREF = 2690.0000 SQ.FT. XMRP = 1097.0000 IN. XT
LREF = 1290.3000 INCHES YMRP = .0000 IN. YT
BREF = 1290.3000 INCHES ZMRP = 450.0000 IN. ZT
SCALE = .0100

PARAMETRIC DATA

ALPHA = -10.000 BETA = -10.000
DALPHA = -20.000 DBETA = -4.000
X = 1200.000 MACH = 4.500
JET PC = .000

RUN NO. 2625/ 0 RN/L = 2.38 GRADIENT INTERVAL = -5.00/ 5.00

| Y | Z | X | ALPHA | BETA | PHI | CN | CLM | CY | CYN | CBL | CA |
|---|---|---|---|---|---|---|---|---|---|---|---|
| -200.210 | 400.480 | 1198.70000 | -10.30400 | -10.18700 | -.16350 | -.32844 | .09648 | .38368 | -.11656 | .03920 | .26008 |
| -200.200 | 450.560 | 1198.80000 | -10.30400 | -10.18800 | -.16364 | -.32882 | .09671 | .38403 | -.11671 | .03925 | .26087 |
| -200.380 | 500.430 | 1198.89999 | -10.30400 | -10.18700 | -.16370 | -.32881 | .09676 | .38397 | -.11672 | .03924 | .26117 |
| | GRADIENT | .00000 | .00000 | .00000 | .00000 | .00000 | .00000 | .00000 | .00000 | .00000 | .00000 |

RUN NO. 2626/ 0 RN/L = 2.39 GRADIENT INTERVAL = -5.00/ 5.00

| Y | Z | X | ALPHA | BETA | PHI | CN | CLM | CY | CYN | CBL | CA |
|---|---|---|---|---|---|---|---|---|---|---|---|
| -300.270 | 501.530 | 1199.20000 | -10.30400 | -10.18800 | -.16366 | -.32877 | .09671 | .38385 | -.11670 | .03925 | .26082 |
| -300.520 | 450.160 | 1198.60001 | -10.30400 | -10.18700 | -.16363 | -.32884 | .09678 | .38380 | -.11667 | .03922 | .26105 |
| -300.610 | 400.560 | 1198.60001 | -10.30400 | -10.18700 | -.16371 | -.32890 | .09678 | .38389 | -.11670 | .03924 | .26114 |
| | GRADIENT | .00000 | .00000 | .00000 | .00000 | .00000 | .00000 | .00000 | .00000 | .00000 | .00000 |

IA143, AEDC V41A-P8A, O/ET W/R.H. SRB SEPARATING (OVX674) ( 24 MAY 77 )

REFERENCE DATA

SREF = 2690.0000 SQ.FT. XMRP = 1097.0000 IN. XT
LREF = 1290.3000 INCHES YMRP = .0000 IN. YT
BREF = 1290.3000 INCHES ZMRP = 450.0000 IN. ZT
SCALE = .0100

PARAMETRIC DATA

ALPHA = -10.000 BETA = -10.000
DALPHA = -15.000 DBETA = -8.000
X = 1200.000 MACH = 4.500
JET PC = .000

RUN NO. 2621/ 0 RN/L = 2.39 GRADIENT INTERVAL = -5.00/ 5.00

| Y | Z | X | ALPHA | BETA | PHI | CN | CLM | CY | CYN | CBL | CA |
|---|---|---|---|---|---|---|---|---|---|---|---|
| -199.720 | 400.400 | 1199.00000 | -10.30400 | -10.18800 | -.16357 | -.32846 | .09656 | .38372 | -.11659 | .03921 | .26047 |
| -200.620 | 450.580 | 1199.00000 | -10.30400 | -10.18700 | -.16367 | -.32883 | .09675 | .38409 | -.11677 | .03926 | .26109 |
| -200.620 | 500.500 | 1198.80000 | -10.30400 | -10.18700 | -.16361 | -.32886 | .09681 | .38403 | -.11675 | .03926 | .26115 |
| | GRADIENT | .00000 | .00000 | .00000 | .00000 | .00000 | .00000 | .00000 | .00000 | .00000 | .00000 |

IA143, AEDC V41A-P8A, O/ET W/R.H. SRB SEPARATING (OVX675) ( 24 MAY 77 )

REFERENCE DATA

SREF = 2690.0000 SQ.FT. XMRP = 1097.0000 IN. XT
LREF = 1290.3000 INCHES YMRP = .0000 IN. YT
BREF = 1290.3000 INCHES ZMRP = 450.0000 IN. ZT
SCALE = .0100

PARAMETRIC DATA

ALPHA = -10.000 BETA = -10.000
DALPHA = -20.000 DBETA = -8.000
X = 1200.000 MACH = 4.500
JET PC = .000

RUN NO. 2628/ 0 RN/L = 2.39 GRADIENT INTERVAL = -5.00/ 5.00

| Y | Z | X | ALPHA | BETA | PHI | CN | CLM | CY | CYN | CBL | CA |
|---|---|---|---|---|---|---|---|---|---|---|---|
| -199.400 | 499.220 | 1198.50000 | -10.30400 | -10.18800 | -.16377 | -.32874 | .09670 | .38382 | -.11665 | .03922 | .26080 |
| -200.540 | 450.120 | 1198.60001 | -10.30400 | -10.18800 | -.16353 | -.32837 | .09641 | .38350 | -.11650 | .03919 | .25969 |
| -199.610 | 400.380 | 1198.70000 | -10.30400 | -10.18800 | -.16359 | -.32825 | .09632 | .38354 | -.11642 | .03916 | .25953 |
| | GRADIENT | .00000 | .00000 | .00000 | .00000 | .00000 | .00000 | .00000 | .00000 | .00000 | .00000 |

RUN NO. 2627/ 0 RN/L = 2.38 GRADIENT INTERVAL = -5.00/ 5.00

| Y | Z | X | ALPHA | BETA | PHI | CN | CLM | CY | CYN | CBL | CA |
|---|---|---|---|---|---|---|---|---|---|---|---|
| -300.670 | 400.120 | 1199.00000 | -10.30400 | -10.18700 | -.16365 | -.32883 | .09675 | .38390 | -.11670 | .03924 | .26097 |
| -299.860 | 450.320 | 1198.80000 | -10.30400 | -10.18700 | -.16366 | -.32883 | .09674 | .38386 | -.11670 | .03923 | .26099 |
| -299.530 | 500.470 | 1199.00000 | -10.30400 | -10.18700 | -.16363 | -.32879 | .09675 | .38396 | -.11672 | .03924 | .26117 |
| | GRADIENT | .00000 | .00000 | .00000 | .00000 | .00000 | .00000 | .00000 | .00000 | .00000 | .00000 |

IA143, AEDC V41A-P8A, O/ET W/R.H. SRB SEPARATING (OVX676) ( 24 MAY 77 )

REFERENCE DATA

SREF = 2690.0000 SQ.FT. XMRP = 1097.0000 IN. XT
LREF = 1290.3000 INCHES YMRP = .0000 IN. YT
BREF = 1290.3000 INCHES ZMRP = 450.0000 IN. ZT
SCALE = .0100

PARAMETRIC DATA

ALPHA = -10.000 BETA = -10.000
DALPHA = -15.000 DBETA = -8.000
X = 1200.000 MACH = 4.500
JET PC = .000

RUN NO. 2620/ 0 RN/L = 2.39 GRADIENT INTERVAL = -5.00/ 5.00

| Y | Z | X | ALPHA | BETA | PHI | CN | CLM | CY | CYN | CBL | CA |
|---|---|---|---|---|---|---|---|---|---|---|---|
| -299.370 | 300.560 | 1199.00000 | -10.30400 | -10.18800 | -.16373 | -.32874 | .09675 | .38372 | -.11665 | .03922 | .26100 |
| -302.830 | 400.280 | 1198.60001 | -10.30400 | -10.18700 | -.16369 | -.32874 | .09676 | .38379 | -.11668 | .03922 | .26106 |
| -300.440 | 450.440 | 1198.89999 | -10.30400 | -10.18700 | -.16356 | -.32879 | .09682 | .38397 | -.11672 | .03925 | .26136 |
| -300.370 | 500.350 | 1198.80000 | -10.30400 | -10.18700 | -.16370 | -.32882 | .09680 | .38393 | -.11674 | .03926 | .26116 |
| | GRADIENT | .00000 | .00000 | .00000 | .00000 | .00000 | .00000 | .00000 | .00000 | .00000 | .00000 |

IA143, AEDC V41A-P8A, O/ET W/R.H. SRB SEPARATING (OVX677) ( 24 MAY 77 )

REFERENCE DATA

SREF = 2690.0000 SQ.FT. XMRP = 1097.0000 IN. XT
LREF = 1290.3000 INCHES YMRP = .0000 IN. YT
BREF = 1290.3000 INCHES ZMRP = 450.0000 IN. ZT
SCALE = .0100

PARAMETRIC DATA

ALPHA = -10.000 BETA = -10.000
DALPHA = -18.000 DBETA = -8.000
X = 1200.000 MACH = 4.500
JET PC = .000

RUN NO. 2622/ 0 RN/L = 2.39 GRADIENT INTERVAL = -5.00/ 5.00

| Y | Z | X | ALPHA | BETA | PHI | CN | CLM | CY | CYN | CBL | CA |
|---|---|---|---|---|---|---|---|---|---|---|---|
| -301.220 | 400.480 | 1198.80000 | -10.30400 | -10.18700 | -.16358 | -.32851 | .09669 | .38363 | -.11663 | .03921 | .26089 |
| -301.650 | 600.760 | 1199.00000 | -10.30400 | -10.18700 | -.16359 | -.32862 | .09674 | .38382 | -.11671 | .03924 | .26112 |
| -302.030 | 801.000 | 1199.30000 | -10.30400 | -10.18800 | -.16389 | -.32902 | .09685 | .38433 | -.11683 | .03928 | .26137 |
| -301.770 | 1002.200 | 1199.70000 | -10.30400 | -10.18700 | -.16370 | -.32879 | .09678 | .38392 | -.11673 | .03922 | .26120 |
| | GRADIENT | .00000 | .00000 | .00000 | .00000 | .00000 | .00000 | .00000 | .00000 | .00000 | .00000 |

IA143, AEDC V41A-P8A, O/ET W/R.H. SRB SEPARATING (OVX678) ( 24 MAY 77 )

REFERENCE DATA

SREF = 2690.0000 SQ.FT. XMRP = 1097.0000 IN. XT
LREF = 1290.3000 INCHES YMRP = .0000 IN. YT
BREF = 1290.3000 INCHES ZMRP = 450.0000 IN. ZT
SCALE = .0100

PARAMETRIC DATA

ALPHA = -10.000 BETA = -5.000
DALPHA = .000 DBETA = .000
X = .000 MACH = 4.500
JET PC = .000

RUN NO. 2650/ 0 RN/L = 2.35 GRADIENT INTERVAL = -5.00/ 5.00

| Y | Z | X | ALPHA | BETA | PHI | CN | CLM | CY | CYN | CBL | CA |
|---|---|---|---|---|---|---|---|---|---|---|---|
| -10.615 | -.089 | -.54239 | -10.27700 | -5.05670 | -.03225 | -.31986 | .08517 | .12081 | -.03906 | .01671 | .25504 |
| -9.622 | 24.827 | -.34608 | -10.27300 | -5.05920 | -.02971 | -.31991 | .08784 | .12529 | -.04067 | .01813 | .25464 |
| -8.786 | 99.732 | -.33600 | -10.25900 | -5.06880 | -.03578 | -.31168 | .09094 | .14428 | -.04642 | .02048 | .25192 |
| -9.688 | 149.710 | -.25995 | -10.25300 | -5.07410 | -.04420 | -.30706 | .09214 | .15803 | -.05100 | .02140 | .25108 |
| -10.465 | 250.140 | -.25962 | -10.24900 | -5.08180 | -.05939 | -.29708 | .08916 | .17417 | -.05532 | .02120 | .25096 |
| -10.517 | 350.120 | -.24105 | -10.25600 | -5.08930 | -.06477 | -.30004 | .08724 | .18063 | -.05504 | .02097 | .25100 |
| -9.822 | 474.450 | -.28054 | -10.26600 | -5.09320 | -.07177 | -.31732 | .09191 | .18782 | -.05671 | .02079 | .25034 |
| -10.500 | 499.670 | -.37017 | -10.26600 | -5.09300 | -.07281 | -.31957 | .09326 | .18852 | -.05715 | .02076 | .25037 |
| -10.119 | 599.570 | -.35347 | -10.26600 | -5.09250 | -.07366 | -.32207 | .09497 | .18924 | -.05766 | .02074 | .25152 |
| | GRADIENT | .00000 | .00000 | .00000 | .00000 | .00000 | .00000 | .00000 | .00000 | .00000 | .00000 |

IA143, AEDC V41A-P8A, O/ET W/R.H. SRB SEPARATING (OVX678) ( 24 MAY 77 )

REFERENCE DATA

SREF = 2690.0000 SQ.FT. XMRP = 1097.0000 IN. XT
LREF = 1290.3000 INCHES YMRP = .0000 IN. YT
BREF = 1290.3000 INCHES ZMRP = 450.0000 IN. ZT
SCALE = .0100

PARAMETRIC DATA

ALPHA = -10.000 BETA = -5.000
DALPHA = .000 DBETA = .000
X = .000 MACH = 4.500
JET PC = .000

RUN NO. 2651/ 0 RN/L = 2.36 GRADIENT INTERVAL = -5.00/ 5.00

| Y | Z | X | ALPHA | BETA | PHI | CN | CLM | CY | CYN | CBL | CA |
|---|---|---|---|---|---|---|---|---|---|---|---|
| -100.440 | 599.600 | -.30443 | -10.26600 | -5.09260 | -.07365 | -.32192 | .09493 | .18917 | -.05761 | .02073 | .25130 |
| -100.490 | 499.640 | -.38408 | -10.26600 | -5.09270 | -.07367 | -.32169 | .09480 | .18915 | -.05758 | .02073 | .25091 |
| -100.110 | 474.730 | -.37233 | -10.26600 | -5.09270 | -.07364 | -.32166 | .09474 | .18914 | -.05756 | .02073 | .25086 |
| -100.470 | 349.970 | -.40682 | -10.26400 | -5.09290 | -.07003 | -.31124 | .08928 | .18610 | -.05605 | .02081 | .25041 |
| -101.280 | 250.040 | -.42595 | -10.25600 | -5.08800 | -.06608 | -.30144 | .08805 | .18150 | -.05601 | .02096 | .25078 |
| -100.660 | 149.870 | -.44238 | -10.25400 | -5.08070 | -.05385 | -.30363 | .08984 | .16794 | -.05274 | .02106 | .25031 |
| -100.790 | 99.885 | -.37100 | -10.25700 | -5.07750 | -.05017 | -.30343 | .08784 | .15837 | -.04914 | .01991 | .25099 |
| -101.080 | 24.819 | -.33596 | -10.26200 | -5.07500 | -.03976 | -.31062 | .08919 | .14555 | -.04394 | .01944 | .25368 |
| -100.850 | -.264 | -.35773 | -10.26500 | -5.07270 | -.04080 | -.31122 | .08764 | .14080 | -.04225 | .01829 | .25386 |
| | GRADIENT | .00000 | .00000 | .00000 | .00000 | .00000 | .00000 | .00000 | .00000 | .00000 | .00000 |

IA143, AEDC V41A-P8A, O/ET W/R.H. SRB SEPARATING (OVX679) ( 24 MAY 77 )

REFERENCE DATA

SREF = 2690.0000 SQ.FT. XMRP = 1097.0000 IN. XT
LREF = 1290.3000 INCHES YMRP = .0000 IN. YT
BREF = 1290.3000 INCHES ZMRP = 450.0000 IN. ZT
SCALE = .0100

PARAMETRIC DATA

ALPHA = -10.000 BETA = -5.000
DALPHA = -5.000 DBETA = .000
X = .000 MACH = 4.500
JET PC = .000

RUN NO. 2664/ 0 RN/L = 2.38 GRADIENT INTERVAL = -5.00/ 5.00

| Y | Z | X | ALPHA | BETA | PHI | CN | CLM | CY | CYN | CBL | CA |
|---|---|---|---|---|---|---|---|---|---|---|---|
| -10.570 | 25.165 | -.50908 | -10.29000 | -5.05270 | -.04990 | -.28696 | .06051 | .09935 | -.02757 | .00822 | .25599 |
| -8.687 | 99.638 | -.41858 | -10.27000 | -5.05990 | -.03022 | -.30294 | .07999 | .11614 | -.03523 | .01589 | .25437 |
| -9.539 | 149.890 | -.53466 | -10.25700 | -5.06700 | -.02704 | -.30095 | .08537 | .12844 | -.03914 | .01893 | .25152 |
| -9.427 | 250.320 | -.28497 | -10.24500 | -5.07890 | -.04121 | -.29241 | .08770 | .15499 | -.04743 | .02105 | .24963 |
| -10.399 | 350.300 | -.22650 | -10.25100 | -5.08710 | -.05643 | -.29029 | .08407 | .17161 | -.05180 | .02096 | .24954 |
| -10.164 | 474.550 | -.47116 | -10.26500 | -5.09370 | -.06854 | -.30924 | .08776 | .18360 | -.05452 | .02057 | .24909 |
| -10.063 | 499.790 | -.47992 | -10.26600 | -5.09380 | -.06966 | -.31249 | .08919 | .18486 | -.05506 | .02060 | .24936 |
| -10.336 | 599.820 | -.44590 | -10.26600 | -5.09250 | -.07407 | -.32130 | .09459 | .18816 | -.05722 | .02050 | .25020 |
| | GRADIENT | .00000 | .00000 | .00000 | .00000 | .00000 | .00000 | .00000 | .00000 | .00000 | .00000 |

IA143, AEDC V41A-P8A, O/ET W/R.H. SRB SEPARATING (OVX679) ( 24 MAY 77 )

REFERENCE DATA

SREF = 2690.0000 SQ.FT. XMRP = 1097.0000 IN. XT
LREF = 1290.3000 INCHES YMRP = .0000 IN. YT
BREF = 1290.3000 INCHES ZMRP = 450.0000 IN. ZT
SCALE = .0100

PARAMETRIC DATA

ALPHA = -10.000 BETA = -5.000
DALPHA = -5.000 DBETA = .000
X = .000 MACH = 4.500
JET PC = .000

RUN NO. 2665/ 0 RN/L = 2.38 GRADIENT INTERVAL = -5.00/ 5.00

| Y | Z | X | ALPHA | BETA | PHI | CN | CLM | CY | CYN | CBL | CA |
|---|---|---|---|---|---|---|---|---|---|---|---|
| -100.410 | 599.900 | -.43588 | -10.26600 | -5.09240 | -.07395 | -.32150 | .09470 | .18815 | -.05722 | .02051 | .25068 |
| -100.260 | 499.900 | -.39751 | -10.26600 | -5.09300 | -.07281 | -.31924 | .09308 | .18726 | -.05658 | .02053 | .24983 |
| -100.220 | 474.860 | -.40047 | -10.26700 | -5.09330 | -.07192 | -.31729 | .09178 | .18672 | -.05619 | .02057 | .24966 |
| -100.570 | 350.380 | -.37542 | -10.26100 | -5.09190 | -.06641 | -.30321 | .08612 | .18166 | -.05444 | .02072 | .24887 |
| -99.901 | 250.360 | -.30238 | -10.25300 | -5.08580 | -.05639 | -.29704 | .08656 | .17120 | -.05213 | .02094 | .24888 |
| -101.150 | 149.970 | -.49590 | -10.25500 | -5.07800 | -.04357 | -.29884 | .08592 | .15114 | -.04549 | .01972 | .24895 |
| -100.910 | 99.999 | -.57945 | -10.26100 | -5.07470 | -.04390 | -.29495 | .08060 | .13967 | -.04055 | .01724 | .25128 |
| -101.120 | 25.268 | -.42915 | -10.27800 | -5.06950 | -.06469 | -.27787 | .06272 | .12209 | -.03139 | .00898 | .25598 |
| | GRADIENT | .00000 | .00000 | .00000 | .00000 | .00000 | .00000 | .00000 | .00000 | .00000 | .00000 |

IA143, AEDC V41A-P8A, O/ET W/R.H. SRB SEPARATING (OVX680) ( 24 MAY 77 )

REFERENCE DATA

SREF = 2690.0000 SQ.FT. XMRP = 1097.0000 IN. XT
LREF = 1290.3000 INCHES YMRP = .0000 IN. YT
BREF = 1290.3000 INCHES ZMRP = 450.0000 IN. ZT
SCALE = .0100

PARAMETRIC DATA

ALPHA = -10.000 BETA = -5.000
DALPHA = .000 DBETA = -4.000
X = .000 MACH = 4.500
JET PC = .000

RUN NO. 2653/ 0 RN/L = 2.39 GRADIENT INTERVAL = -5.00/ 5.00

| Y | Z | X | ALPHA | BETA | PHI | CN | CLM | CY | CYN | CBL | CA |
|---|---|---|---|---|---|---|---|---|---|---|---|
| -10.475 | 249.950 | -.30966 | -10.24600 | -5.08060 | -.05542 | -.29007 | .08689 | .16988 | -.05388 | .02123 | .25065 |
| -11.118 | 350.230 | -.07496 | -10.25300 | -5.08850 | -.06236 | -.29425 | .08543 | .17782 | -.05415 | .02097 | .25031 |
| -9.969 | 474.440 | -.25459 | -10.26600 | -5.09390 | -.07083 | -.31461 | .09052 | .18660 | -.05591 | .02074 | .25022 |
| -10.367 | 499.720 | -.25584 | -10.26600 | -5.09360 | -.07220 | -.31721 | .09189 | .18762 | -.05653 | .02069 | .25012 |
| -10.476 | 599.580 | -.25614 | -10.26600 | -5.09280 | -.07394 | -.32180 | .09491 | .18906 | -.05752 | .02069 | .25113 |
| | GRADIENT | .00000 | .00000 | .00000 | .00000 | .00000 | .00000 | .00000 | .00000 | .00000 | .00000 |

IA143, AEDC V41A-P8A, O/ET W/R.H. SRB SEPARATING (OVX681) ( 24 MAY 77 )

REFERENCE DATA

SREF = 2690.0000 SQ.FT. XMRP = 1097.0000 IN. XT
LREF = 1290.3000 INCHES YMRP = .0000 IN. YT
BREF = 1290.3000 INCHES ZMRP = 450.0000 IN. ZT
SCALE = .0100

PARAMETRIC DATA

ALPHA = -10.000 BETA = -5.000
DALPHA = -5.000 DBETA = -4.000
X = .000 MACH = 4.500
JET PC = .000

RUN NO. 2663/ 0 RN/L = 2.38 GRADIENT INTERVAL = -5.00/ 5.00

| Y | Z | X | ALPHA | BETA | PHI | CN | CLM | CY | CYN | CBL | CA |
|---|---|---|---|---|---|---|---|---|---|---|---|
| -10.445 | 474.900 | -.40407 | -10.26300 | -5.09380 | -.06681 | -.30398 | .08522 | .18216 | -.05376 | .02060 | .24836 |
| -10.468 | 499.840 | -.16373 | -10.26500 | -5.09420 | -.06841 | -.30813 | .08690 | .18373 | -.05438 | .02059 | .24841 |
| -10.619 | 599.890 | -.38779 | -10.26600 | -5.09280 | -.07386 | -.32086 | .09416 | .18830 | -.05713 | .02053 | .24971 |
| | GRADIENT | .00000 | .00000 | .00000 | .00000 | .00000 | .00000 | .00000 | .00000 | .00000 | .00000 |

IA143, AEDC V41A-P8A, O/ET W/R.H. SRB SEPARATING (OVX682) ( 24 MAY 77 )

REFERENCE DATA

SREF = 2690.0000 SQ.FT. XMRP = 1097.0000 IN. XT
LREF = 1290.3000 INCHES YMRP = .0000 IN. YT
BREF = 1290.3000 INCHES ZMRP = 450.0000 IN. ZT
SCALE = .0100

PARAMETRIC DATA

ALPHA = -10.000 BETA = -5.000
DALPHA = .000 DBETA = -4.000
X = .000 MACH = 4.500
JET PC = .000

RUN NO. 2652/ 0 RN/L = 2.39 GRADIENT INTERVAL = -5.00/ 5.00

| Y | Z | X | ALPHA | BETA | PHI | CN | CLM | CY | CYN | CBL | CA |
|---|---|---|---|---|---|---|---|---|---|---|---|
| -100.890 | -.036 | -.44150 | -10.26900 | -5.06690 | -.02345 | -.30476 | .08145 | .11329 | -.03094 | .01623 | .25449 |
| -99.186 | 24.933 | -.30858 | -10.26600 | -5.06840 | -.02307 | -.30450 | .08355 | .11937 | -.03385 | .01765 | .25399 |
| -99.395 | 99.989 | -.46667 | -10.25500 | -5.07390 | -.03116 | -.29847 | .08573 | .13880 | -.04148 | .01991 | .25093 |
| -99.761 | 149.710 | -.32256 | -10.25100 | -5.07740 | -.04113 | -.29739 | .08753 | .15466 | -.04795 | .02111 | .24980 |
| -100.270 | 249.700 | -.42763 | -10.25300 | -5.08530 | -.06006 | -.29546 | .08642 | .17506 | -.05425 | .02107 | .25005 |
| -101.110 | 349.660 | -.41521 | -10.26200 | -5.09220 | -.06794 | -.30470 | .08696 | .18382 | -.05537 | .02086 | .25028 |
| -100.430 | 474.510 | -.39831 | -10.26600 | -5.09320 | -.07296 | -.31973 | .09339 | .18825 | -.05698 | .02069 | .25038 |
| -100.410 | 499.710 | -.30913 | -10.26600 | -5.09290 | -.07376 | -.32125 | .09453 | .18879 | -.05738 | .02066 | .25033 |
| -100.420 | 599.550 | -.37120 | -10.26600 | -5.09290 | -.07387 | -.32178 | .09488 | .18908 | -.05753 | .02071 | .25099 |
| | GRADIENT | .00000 | .00000 | .00000 | .00000 | .00000 | .00000 | .00000 | .00000 | .00000 | .00000 |

IA143, AEDC V41A-P8A, O/ET W/R.H. SRB SEPARATING (OVX683) ( 24 MAY 77 )

REFERENCE DATA

SREF = 2690.0000 SQ.FT. XMRP = 1097.0000 IN. XT
LREF = 1290.3000 INCHES YMRP = .0000 IN. YT
BREF = 1290.3000 INCHES ZMRP = 450.0000 IN. ZT
SCALE = .0100

PARAMETRIC DATA

ALPHA = -10.000 BETA = -5.000
DALPHA = -5.000 DBETA = -4.000
X = .000 MACH = 4.500
JET PC = .000

RUN NO. 2662/ 0 RN/L = 2.39 GRADIENT INTERVAL = -5.00/ 5.00

| Y | Z | X | ALPHA | BETA | PHI | CN | CLM | CY | CYN | CBL | CA |
|---|---|---|---|---|---|---|---|---|---|---|---|
| -100.820 | 25.201 | -.48329 | -10.28100 | -5.06700 | -.03845 | -.26519 | .05259 | .08544 | -.01409 | .00653 | .25660 |
| -98.706 | 99.893 | -.47097 | -10.26400 | -5.06890 | -.02739 | -.28203 | .07099 | .11061 | -.02821 | .01461 | .25337 |
| -99.641 | 149.950 | -.40365 | -10.25500 | -5.07370 | -.02729 | -.28535 | .07759 | .12600 | -.03469 | .01784 | .25032 |
| -99.646 | 249.840 | -.42898 | -10.24900 | -5.08450 | -.04030 | -.28865 | .08332 | .15586 | -.04543 | .02107 | .24822 |
| -99.624 | 349.590 | -.27661 | -10.25800 | -5.09160 | -.06051 | -.29466 | .08285 | .17648 | -.05212 | .02085 | .24838 |
| -100.440 | 474.590 | -.29923 | -10.26600 | -5.09420 | -.06971 | -.31292 | .08915 | .18520 | -.05508 | .02064 | .24889 |
| -100.890 | 499.850 | -.40808 | -10.26600 | -5.09370 | -.07116 | -.31538 | .09056 | .18616 | -.05574 | .02057 | .24886 |
| -100.740 | 599.890 | -.31989 | -10.26600 | -5.09280 | -.07402 | -.32161 | .09474 | .18853 | -.05726 | .02056 | .25029 |
| | GRADIENT | .00000 | .00000 | .00000 | .00000 | .00000 | .00000 | .00000 | .00000 | .00000 | .00000 |

IA143, AEDC V41A-P8A, O/ET W/R.H. SRB SEPARATING (OVX684) ( 24 MAY 77 )

REFERENCE DATA

SREF = 2690.0000 SQ.FT. XMRP = 1097.0000 IN. XT
LREF = 1290.3000 INCHES YMRP = .0000 IN. YT
BREF = 1290.3000 INCHES ZMRP = 450.0000 IN. ZT
SCALE = .0100

PARAMETRIC DATA

ALPHA = -10.000 BETA = -5.000
DALPHA = .000 DBETA = .000
X = 300.000 MACH = 4.500
JET PC = .000

RUN NO. 2655/ 0 RN/L = 2.39 GRADIENT INTERVAL = -5.00/ 5.00

| Y | Z | X | ALPHA | BETA | PHI | CN | CLM | CY | CYN | CBL | CA |
|---|---|---|---|---|---|---|---|---|---|---|---|
| -200.360 | 599.510 | 299.46000 | -10.26600 | -5.09290 | -.07401 | -.32183 | .09492 | .18895 | -.05746 | .02066 | .25110 |
| -200.230 | 499.840 | 299.64000 | -10.26600 | -5.09290 | -.07397 | -.32174 | .09494 | .18893 | -.05745 | .02065 | .25122 |
| -200.270 | 424.750 | 299.43000 | -10.26600 | -5.09290 | -.07397 | -.32176 | .09490 | .18896 | -.05745 | .02066 | .25085 |
| -200.130 | 399.660 | 299.57000 | -10.26600 | -5.09290 | -.07402 | -.32170 | .09482 | .18898 | -.05746 | .02065 | .25073 |
| -199.860 | 299.620 | 299.56000 | -10.26700 | -5.09340 | -.07260 | -.31883 | .09292 | .18788 | -.05674 | .02068 | .25069 |
| -200.160 | 249.720 | 299.59000 | -10.26600 | -5.09320 | -.07205 | -.31772 | .09241 | .18740 | -.05657 | .02069 | .25078 |
| -200.450 | 100.160 | 299.54000 | -10.26500 | -5.09270 | -.06933 | -.31528 | .09161 | .18467 | -.05551 | .02071 | .25050 |
| | GRADIENT | .00000 | .00000 | .00000 | .00000 | .00000 | .00000 | .00000 | .00000 | .00000 | .00000 |

IA143, AEDC V41A-P8A, O/ET W/R.H. SRB SEPARATING (OVX685) ( 24 MAY 77 )

REFERENCE DATA

SREF = 2690.0000 SQ.FT. XMRP = 1097.0000 IN. XT
LREF = 1290.3000 INCHES YMRP = .0000 IN. YT
BREF = 1290.3000 INCHES ZMRP = 450.0000 IN. ZT
SCALE = .0100

PARAMETRIC DATA

ALPHA = -10.000 BETA = -5.000
DALPHA = -10.000 DBETA = .000
X = 300.000 MACH = 4.500
JET PC = .000

RUN NO. 2686/ 0 RN/L = 2.37 GRADIENT INTERVAL = -5.00/ 5.00

| Y | Z | X | ALPHA | BETA | PHI | CN | CLM | CY | CYN | CBL | CA |
|---|---|---|---|---|---|---|---|---|---|---|---|
| -10.159 | 100.310 | 299.38000 | -10.27600 | -5.07350 | -.06464 | -.26959 | .05839 | .12638 | -.03197 | .00970 | .25354 |
| -7.952 | 248.960 | 299.09000 | -10.25400 | -5.08850 | -.04513 | -.29766 | .08630 | .15759 | -.04419 | .02012 | .24923 |
| -9.442 | 300.150 | 299.53000 | -10.25500 | -5.09210 | -.04984 | -.29659 | .08480 | .16618 | -.04697 | .02080 | .24905 |
| -10.671 | 400.350 | 299.55000 | -10.26200 | -5.09490 | -.05992 | -.29960 | .08298 | .17659 | -.05068 | .02076 | .24773 |
| -11.154 | 425.380 | 299.39000 | -10.26300 | -5.09510 | -.06306 | -.30250 | .08392 | .17958 | -.05203 | .02074 | .24754 |
| -10.827 | 500.740 | 299.65000 | -10.26600 | -5.09420 | -.06918 | -.31098 | .08805 | .18457 | -.05478 | .02062 | .24787 |
| -10.964 | 600.700 | 299.57000 | -10.26600 | -5.09240 | -.07401 | -.32082 | .09424 | .18817 | -.05722 | .02050 | .24903 |
| | GRADIENT | .00000 | .00000 | .00000 | .00000 | .00000 | .00000 | .00000 | .00000 | .00000 | .00000 |

IA143, AEDC V41A-P8A, O/ET W/R.H. SRB SEPARATING (OVX686) ( 24 MAY 77 )

REFERENCE DATA

SREF = 2690.0000 SQ.FT. XMRP = 1097.0000 IN. XT
LREF = 1290.3000 INCHES YMRP = .0000 IN. YT
BREF = 1290.3000 INCHES ZMRP = 450.0000 IN. ZT
SCALE = .0100

PARAMETRIC DATA

ALPHA = -10.000 BETA = -5.000
DALPHA = -10.000 DBETA = .000
X = 300.000 MACH = 4.500
JET PC = .000

RUN NO. 2684/ 0 RN/L = 2.37 GRADIENT INTERVAL = -5.00/ 5.00

| Y | Z | X | ALPHA | BETA | PHI | CN | CLM | CY | CYN | CBL | CA |
|---|---|---|---|---|---|---|---|---|---|---|---|
| -198.640 | 100.570 | 300.52000 | -10.27000 | -5.09060 | -.08195 | -.29692 | .07812 | .17466 | -.04984 | .01577 | .24816 |
| -199.580 | 149.980 | 299.38000 | -10.26400 | -5.09220 | -.06771 | -.30985 | .08823 | .18013 | -.05333 | .02007 | .24792 |
| -199.780 | 200.160 | 299.47000 | -10.26400 | -5.09250 | -.06799 | -.31134 | .08908 | .18212 | -.05420 | .02039 | .24807 |
| -199.860 | 250.100 | 299.46000 | -10.26400 | -5.09300 | -.06844 | -.31258 | .08957 | .18342 | -.05467 | .02056 | .24808 |
| -199.890 | 300.140 | 299.39000 | -10.26500 | -5.09330 | -.06971 | -.31419 | .09028 | .18449 | -.05513 | .02055 | .24865 |
| -200.070 | 400.120 | 299.51000 | -10.26600 | -5.09330 | -.07198 | -.31832 | .09243 | .18685 | -.05622 | .02056 | .24946 |
| -199.780 | 425.190 | 299.38000 | -10.26600 | -5.09320 | -.07277 | -.31948 | .09323 | .18737 | -.05655 | .02054 | .24944 |
| -199.700 | 499.900 | 299.41000 | -10.26600 | -5.09260 | -.07417 | -.32126 | .09459 | .18834 | -.05725 | .02050 | .24995 |
| -199.930 | 599.840 | 299.44000 | -10.26600 | -5.09270 | -.07418 | -.32152 | .09483 | .18858 | -.05735 | .02055 | .25093 |
| | GRADIENT | .00000 | .00000 | .00000 | .00000 | .00000 | .00000 | .00000 | .00000 | .00000 | .00000 |

IA143, AEDC V41A-P8A, O/ET W/R.H. SRB SEPARATING (OVX687) ( 24 MAY 77 )

REFERENCE DATA

SREF = 2690.0000 SQ.FT. XMRP = 1097.0000 IN. XT
LREF = 1290.3000 INCHES YMRP = .0000 IN. YT
BREF = 1290.3000 INCHES ZMRP = 450.0000 IN. ZT
SCALE = .0100

PARAMETRIC DATA

ALPHA = -10.000 BETA = -5.000
DALPHA = .000 DBETA = -8.000
X = 300.000 MACH = 4.500
JET PC = .000

RUN NO. 2657/ 0 RN/L = 2.39 GRADIENT INTERVAL = -5.00/ 5.00

| Y | Z | X | ALPHA | BETA | PHI | CN | CLM | CY | CYN | CBL | CA |
|---|---|---|---|---|---|---|---|---|---|---|---|
| -10.893 | 249.780 | 299.46000 | -10.25500 | -5.08860 | -.06483 | -.29525 | .08547 | .17998 | -.05513 | .02092 | .25044 |
| -11.059 | 299.660 | 299.69000 | -10.25900 | -5.09090 | -.06797 | -.30017 | .08582 | .18315 | -.05557 | .02077 | .25006 |
| -11.481 | 400.090 | 299.83000 | -10.26400 | -5.09340 | -.06953 | -.30914 | .08821 | .18494 | -.05531 | .02067 | .25003 |
| -11.120 | 424.970 | 299.58000 | -10.26500 | -5.09370 | -.07001 | -.31137 | .08912 | .18538 | -.05540 | .02066 | .25016 |
| -11.233 | 500.420 | 299.72000 | -10.26600 | -5.09360 | -.07242 | -.31728 | .09191 | .18768 | -.05655 | .02066 | .24989 |
| -11.012 | 600.250 | 299.81000 | -10.26600 | -5.09290 | -.07406 | -.32149 | .09479 | .18875 | -.05736 | .02060 | .25073 |
| | GRADIENT | .00000 | .00000 | .00000 | .00000 | .00000 | .00000 | .00000 | .00000 | .00000 | .00000 |

IA143, AEDC V41A-P8A, O/ET W/R.H. SRB SEPARATING (OVX688) ( 24 MAY 77 )

REFERENCE DATA

SREF = 2690.0000 SQ.FT. XMRP = 1097.0000 IN. XT
LREF = 1290.3000 INCHES YMRP = .0000 IN. YT
BREF = 1290.3000 INCHES ZMRP = 450.0000 IN. ZT
SCALE = .0100

PARAMETRIC DATA

ALPHA = -10.000 BETA = -5.000
DALPHA = -10.000 DBETA = -8.000
X = 300.000 MACH = 4.500
JET PC = .000

RUN NO. 2690/ 0 RN/L = 2.37 GRADIENT INTERVAL = -5.00/ 5.00

| Y | Z | X | ALPHA | BETA | PHI | CN | CLM | CY | CYN | CBL | CA |
|---|---|---|---|---|---|---|---|---|---|---|---|
| -10.978 | 425.180 | 299.50000 | -10.26100 | -5.09490 | -.05731 | -.28729 | .07638 | .17428 | -.04962 | .02081 | .24706 |
| -11.437 | 500.720 | 299.68000 | -10.26500 | -5.09510 | -.06555 | -.30086 | .08183 | .18134 | -.05281 | .02059 | .24624 |
| -11.220 | 601.040 | 299.87000 | -10.26600 | -5.09310 | -.07295 | -.31718 | .09138 | .18715 | -.05643 | .02046 | .24724 |
| | GRADIENT | .00000 | .00000 | .00000 | .00000 | .00000 | .00000 | .00000 | .00000 | .00000 | .00000 |

IA143, AEDC V41A-P8A, O/ET W/R.H. SRB SEPARATING (OVX689) ( 24 MAY 77 )

REFERENCE DATA

SREF = 2690.0000 SQ.FT. XMRP = 1097.0000 IN. XT
LREF = 1290.3000 INCHES YMRP = .0000 IN. YT
BREF = 1290.3000 INCHES ZMRP = 450.0000 IN. ZT
SCALE = .0100

PARAMETRIC DATA

ALPHA = -10.000 BETA = -5.000
DALPHA = .000 DBETA = -8.000
X = 300.000 MACH = 4.500
JET PC = .000

RUN NO. 2656/ 0 RN/L = 2.39 GRADIENT INTERVAL = -5.00/ 5.00

| Y | Z | X | ALPHA | BETA | PHI | CN | CLM | CY | CYN | CBL | CA |
|---|---|---|---|---|---|---|---|---|---|---|---|
| -200.240 | 99.986 | 299.58000 | -10.26200 | -5.09320 | -.06104 | -.30832 | .08860 | .17650 | -.05136 | .02063 | .2[illegible]302 |
| -200.580 | 249.350 | 299.48000 | -10.26500 | -5.09320 | -.06975 | -.31238 | .08965 | .18492 | -.05542 | .02065 | .24965 |
| -200.950 | 299.740 | 299.60000 | -10.26600 | -5.09380 | -.07057 | -.31467 | .09053 | .18620 | -.05577 | .02071 | .25018 |
| -201.930 | 399.920 | 299.61000 | -10.26600 | -5.09340 | -.07287 | -.31980 | .09345 | .18805 | -.05680 | .02066 | .25035 |
| -200.200 | 424.860 | 299.55000 | -10.26600 | -5.09310 | -.07369 | -.32120 | .09442 | .18859 | -.05720 | .02062 | .25050 |
| -200.490 | 499.790 | 299.58000 | -10.26600 | -5.09290 | -.07396 | -.32173 | .09491 | .18891 | -.05743 | .02064 | .25093 |
| -200.470 | 599.720 | 299.58000 | -10.26700 | -5.09290 | -.07409 | -.32183 | .09493 | .18892 | -.05743 | .02063 | .25109 |
| | GRADIENT | .00000 | .00000 | .00000 | .00000 | .00000 | .00000 | .00000 | .00000 | .00000 | .00000 |

IA143, AEDC V41A-P8A, O/ET W/R.H. SRB SEPARATING (OVX690) ( 24 MAY 77 )

REFERENCE DATA

SREF = 2690.0000 SQ.FT. XMRP = 1097.0000 IN. XT
LREF = 1290.3000 INCHES YMRP = .0000 IN. YT
BREF = 1290.3000 INCHES ZMRP = 450.0000 IN. ZT
SCALE = .0100

PARAMETRIC DATA

ALPHA = -10.000 BETA = -5.000
DALPHA = -10.000 DBETA = -8.000
X = 300.000 MACH = 4.500
JET PC = .000

RUN NO. 2689/ 0 RN/L = 2.37 GRADIENT INTERVAL = -5.00/ 5.00

| Y | Z | X | ALPHA | BETA | PHI | CN | CLM | CY | CYN | CBL | CA |
|---|---|---|---|---|---|---|---|---|---|---|---|
| -201.370 | 100.780 | 301.07000 | -10.27800 | -5.09010 | -.08733 | -.25249 | .04830 | .13723 | -.02862 | .00602 | .25083 |
| -199.220 | 249.010 | 299.15000 | -10.26200 | -5.09660 | -.05191 | -.30076 | .08283 | .16688 | -.04516 | .02020 | .24655 |
| -200.170 | 300.160 | 299.52000 | -10.26300 | -5.09650 | -.05690 | -.30385 | .08424 | .17342 | -.04841 | .02058 | .24599 |
| -200.430 | 400.130 | 299.46000 | -10.26500 | -5.09460 | -.06750 | -.31130 | .08774 | .18290 | -.05379 | .02057 | .24544 |
| -200.680 | 425.090 | 299.32000 | -10.26600 | -5.09410 | -.06928 | -.31345 | .08903 | .18425 | -.05466 | .02053 | .24590 |
| -200.720 | 499.990 | 299.45000 | -10.26600 | -5.09290 | -.07304 | -.31953 | .09310 | .18740 | -.05664 | .02049 | .24756 |
| -200.510 | 600.240 | 299.56000 | -10.26600 | -5.09250 | -.07408 | -.32076 | .09421 | .18813 | -.05717 | .02048 | .24892 |
| | GRADIENT | .00000 | .00000 | .00000 | .00000 | .00000 | .00000 | .00000 | .00000 | .00000 | .00000 |

IA143, AEDC V41A-P8A, O/ET W/R.H. SRB SEPARATING (OVX691) ( 24 MAY 77 )

REFERENCE DATA

SREF = 2690.0000 SQ.FT. XMRP = 1097.0000 IN. XT
LREF = 1290.3000 INCHES YMRP = .0000 IN. YT
BREF = 1290.3000 INCHES ZMRP = 450.0000 IN. ZT
SCALE = .0100

PARAMETRIC DATA

ALPHA = -10.000 BETA = -5.000
DALPHA = -5.000 DBETA = .000
X = 300.000 MACH = 4.500
JET PC = .000

RUN NO. 2666/ 0 RN/L = 2.38 GRADIENT INTERVAL = -5.00/ 5.00

| Y | Z | X | ALPHA | BETA | PHI | CN | CLM | CY | CYN | CBL | CA |
|---|---|---|---|---|---|---|---|---|---|---|---|
| -100.300 | 100.150 | 299.35000 | -10.26200 | -5.08980 | -.06089 | -.30976 | .08950 | .17143 | -.05009 | .01973 | .24922 |
| -99.883 | 149.810 | 299.44000 | -10.26000 | -5.09110 | -.06199 | -.31020 | .09068 | .17668 | -.05234 | .02060 | .24948 |
| -99.813 | 199.800 | 299.55000 | -10.26100 | -5.09150 | -.06707 | -.30868 | .08959 | .18196 | -.05476 | .02068 | .24906 |
| | GRADIENT | .00000 | .00000 | .00000 | .00000 | .00000 | .00000 | .00000 | .00000 | .00000 | .00000 |

RUN NO. 2667/ 0 RN/L = 2.38 GRADIENT INTERVAL = -5.00/ 5.00

| Y | Z | X | ALPHA | BETA | PHI | CN | CLM | CY | CYN | CBL | CA |
|---|---|---|---|---|---|---|---|---|---|---|---|
| -201.450 | 200.890 | 299.59000 | -10.26500 | -5.09260 | -.06975 | -.31456 | .09088 | .18446 | -.05536 | .02055 | .24970 |
| -200.270 | 149.940 | 299.48000 | -10.26500 | -5.09250 | -.06871 | -.31401 | .09074 | .18349 | -.05499 | .02058 | .24962 |
| -200.560 | 100.170 | 299.49000 | -10.26500 | -5.09230 | -.06763 | -.31315 | .09028 | .18169 | -.05418 | .02044 | .24943 |
| | GRADIENT | .00000 | .00000 | .00000 | .00000 | .00000 | .00000 | .00000 | .00000 | .00000 | .00000 |

IA143, AEDC V41A-P8A, O/ET W/R.H. SRB SEPARATING (OVX692) ( 24 MAY 77 )

REFERENCE DATA

SREF = 2690.0000 SQ.FT. XMRP = 1097.0000 IN. XT
LREF = 1290.3000 INCHES YMRP = .0000 IN. YT
BREF = 1290.3000 INCHES ZMRP = 450.0000 IN. ZT
SCALE = .0100

PARAMETRIC DATA

ALPHA = -10.000 BETA = -5.000
DALPHA = -10.000 DBETA = .000
X = 300.000 MACH = 4.500
JET PC = .000

RUN NO. 2685/ 0 RN/L = 2.37 GRADIENT INTERVAL = -5.00/ 5.00

| Y | Z | X | ALPHA | BETA | PHI | CN | CLM | CY | CYN | CBL | CA |
|---|---|---|---|---|---|---|---|---|---|---|---|
| -97.692 | 99.661 | 300.31000 | -10.27300 | -5.08630 | -.08520 | -.27493 | .06391 | .15432 | -.04013 | .01068 | .25076 |
| -99.357 | 149.800 | 299.21000 | -10.26400 | -5.09000 | -.06294 | -.29738 | .08092 | .16300 | -.04508 | .01732 | .24841 |
| -99.565 | 199.980 | 299.18000 | -10.25900 | -5.09230 | -.05631 | -.30434 | .08716 | .16892 | -.04789 | .01999 | .24825 |
| | GRADIENT | .00000 | .00000 | .00000 | .00000 | .00000 | .00000 | .00000 | .00000 | .00000 | .00000 |

IA143, AEDC V41A-P8A, O/ET W/R.H. SRB SEPARATING (OVX693) ( 24 MAY 77 )

REFERENCE DATA

SREF = 2690.0000 SQ.FT. XMRP = 1097.0000 IN. XT
LREF = 1290.3000 INCHES YMRP = .0000 IN. YT
BREF = 1290.3000 INCHES ZMRP = 450.0000 IN. ZT
SCALE = .0100

PARAMETRIC DATA

ALPHA = -10.000 BETA = -5.000
DALPHA = -5.000 DBETA = -4.000
X = 300.000 MACH = 4.500
JET PC = .000

RUN NO. 2669/ 0 RN/L = 2.38 GRADIENT INTERVAL = -5.00/ 5.00

| Y | Z | X | ALPHA | BETA | PHI | CN | CLM | CY | CYN | CBL | CA |
|---|---|---|---|---|---|---|---|---|---|---|---|
| -100.620 | 100.140 | 299.42000 | -10.26200 | -5.08890 | -.05393 | -.30173 | .08413 | .15800 | -.04354 | .01825 | .24949 |
| -99.883 | 149.650 | 299.33000 | -10.25900 | -5.09140 | -.05183 | -.30580 | .08836 | .16535 | -.04667 | .02022 | .24901 |
| -99.885 | 199.810 | 299.44000 | -10.25900 | -5.09240 | -.05678 | -.30414 | .08763 | .17257 | -.04984 | .02071 | .24893 |
| -100.410 | 299.870 | 299.57000 | -10.26300 | -5.09290 | -.06550 | -.30451 | .08602 | .18108 | -.05370 | .02071 | .24887 |
| | GRADIENT | .00000 | .00000 | .00000 | .00000 | .00000 | .00000 | .00000 | .00000 | .00000 | .00000 |

IA143, AEDC V41A-P8A, O/ET W/R.H. SRB SEPARATING (OVX694) ( 24 MAY 77 )

REFERENCE DATA

SREF = 2690.0000 SQ.FT. XMRP = 1097.0000 IN. XT
LREF = 1290.3000 INCHES YMRP = .0000 IN. YT
BREF = 1290.3000 INCHES ZMRP = 450.0000 IN. ZT
SCALE = .0100

PARAMETRIC DATA

ALPHA = -10.000 BETA = -5.000
DALPHA = -10.000 DBETA = -4.000
X = 300.000 MACH = 4.500
JET PC = .000

RUN NO. 2687/ 0 RN/L = 2.37 GRADIENT INTERVAL = -5.00/ 5.00

| Y | Z | X | ALPHA | BETA | PHI | CN | CLM | CY | CYN | CBL | CA |
|---|---|---|---|---|---|---|---|---|---|---|---|
| -99.155 | 99.403 | 300.31000 | -10.27400 | -5.08500 | -.07636 | -.25973 | .05443 | .13465 | -.03041 | .00822 | .25250 |
| -99.602 | 149.680 | 299.18000 | -10.26600 | -5.08830 | -.05734 | -.28385 | .07196 | .14649 | -.03705 | .01498 | .25006 |
| -99.726 | 199.870 | 299.36000 | -10.25900 | -5.09260 | -.04634 | -.29642 | .08231 | .15542 | -.04100 | .01907 | .24867 |
| | GRADIENT | .00000 | .00000 | .00000 | .00000 | .00000 | .00000 | .00000 | .00000 | .00000 | .00000 |

RUN NO. 2688/ 0 RN/L = 2.37 GRADIENT INTERVAL = -5.00/ 5.00

| Y | Z | X | ALPHA | BETA | PHI | CN | CLM | CY | CYN | CBL | CA |
|---|---|---|---|---|---|---|---|---|---|---|---|
| -201.650 | 201.890 | 299.84000 | -10.26300 | -5.09370 | -.06254 | -.30678 | .08648 | .17568 | -.05055 | .02007 | .24684 |
| -200.550 | 150.390 | 299.47000 | -10.26500 | -5.09260 | -.06561 | -.30171 | .08255 | .17173 | -.04857 | .01855 | .24677 |
| -199.630 | 100.620 | 299.62000 | -10.27500 | -5.09030 | -.08982 | -.27778 | .06449 | .16282 | -.04269 | .01134 | .24792 |
| | GRADIENT | .00000 | .00000 | .00000 | .00000 | .00000 | .00000 | .00000 | .00000 | .00000 | .00000 |

IA143, AEDC V41A-P8A, O/ET W/R.H. SRB SEPARATING (OVX695) ( 24 MAY 77 )

REFERENCE DATA

SREF = 2690.0000 SQ.FT. XMRP = 1097.0000 IN. XT
LREF = 1290.3000 INCHES YMRP = .0000 IN. YT
BREF = 1290.3000 INCHES ZMRP = 450.0000 IN. ZT
SCALE = .0100

PARAMETRIC DATA

ALPHA = -10.000 BETA = -5.000
DALPHA = -5.000 DBETA = -4.000
X = 300.000 MACH = 4.500
JET PC = .000

RUN NO. 2668/ 0 RN/L = 2.38 GRADIENT INTERVAL = -5.00/ 5.00

| Y | Z | X | ALPHA | BETA | PHI | CN | CLM | CY | CYN | CBL | CA |
|---|---|---|---|---|---|---|---|---|---|---|---|
| -200.350 | 100.220 | 299.40000 | -10.26400 | -5.09240 | -.06438 | -.30850 | .08768 | .17632 | -.05139 | .01991 | .24811 |
| -199.960 | 149.850 | 299.33000 | -10.26300 | -5.09260 | -.06551 | -.31088 | .08924 | .18042 | -.05345 | .02057 | .24842 |
| -199.920 | 199.860 | 299.51000 | -10.26400 | -5.09270 | -.06802 | -.31118 | .08913 | .18284 | -.05460 | .02057 | .24833 |
| | GRADIENT | .00000 | .00000 | .00000 | .00000 | .00000 | .00000 | .00000 | .00000 | .00000 | .00000 |

IA143, AEDC V41A-P8A, O/ET W/R.H. SRB SEPARATING (OVX696) ( 24 MAY 77 )

REFERENCE DATA

SREF = 2690.0000 SQ.FT. XMRP = 1097.0000 IN. XT
LREF = 1290.3000 INCHES YMRP = .0000 IN. YT
BREF = 1290.3000 INCHES ZMRP = 450.0000 IN. ZT
SCALE = .0100

PARAMETRIC DATA

ALPHA = -10.000 BETA = -5.000
DALPHA = -6.000 DBETA = -2.000
X = 300.000 MACH = 4.500
JET PC = .000

RUN NO. 2682/ 0 RN/L = 2.37 GRADIENT INTERVAL = -5.00/ 5.00

| Y | Z | X | ALPHA | BETA | PHI | CN | CLM | CY | CYN | CBL | CA |
|---|---|---|---|---|---|---|---|---|---|---|---|
| -99.855 | 100.200 | 299.43000 | -10.26300 | -5.08890 | -.05901 | -.30176 | .08373 | .16154 | -.04505 | .01792 | .24964 |
| -99.006 | 199.520 | 299.38000 | -10.25900 | -5.09220 | -.05914 | -.30570 | .08839 | .17473 | -.05098 | .02070 | .24879 |
| -99.762 | 299.870 | 299.58000 | -10.26300 | -5.09270 | -.06671 | -.30601 | .08683 | .18211 | -.05428 | .02070 | .24867 |
| | GRADIENT | .00000 | .00000 | .00000 | .00000 | .00000 | .00000 | .00000 | .00000 | .00000 | .00000 |

IA143, AEDC V41A-P8A, O/ET W/R.H. SRB SEPARATING (OVX697) ( 24 MAY 77 )

REFERENCE DATA

SREF = 2690.0000 SQ.FT. XMRP = 1097.0000 IN. XT
LREF = 1290.3000 INCHES YMRP = .0000 IN. YT
BREF = 1290.3000 INCHES ZMRP = 450.0000 IN. ZT
SCALE = .0100

PARAMETRIC DATA

ALPHA = -10.000 BETA = -5.000
DALPHA = -6.000 DBETA = -2.000
X = 300.000 MACH = 4.500
JET PC = .000

RUN NO. 2711/ 0 RN/L = 2.39 GRADIENT INTERVAL = -5.00/ 5.00

| Y | Z | X | ALPHA | BETA | PHI | CN | CLM | CY | CYN | CBL | CA |
|---|---|---|---|---|---|---|---|---|---|---|---|
| -100.050 | 100.130 | 299.40000 | -10.26300 | -5.08890 | -.05925 | -.30110 | .08337 | .16117 | -.04485 | .01779 | .24891 |
| -99.056 | 199.520 | 299.48000 | -10.25900 | -5.09220 | -.05916 | -.30560 | .08830 | .17430 | -.05078 | .02062 | .24831 |
| -100.040 | 299.870 | 299.57000 | -10.26300 | -5.09260 | -.06677 | -.30580 | .08675 | .18198 | -.05422 | .02066 | .24829 |
| | GRADIENT | .00000 | .00000 | .00000 | .00000 | .00000 | .00000 | .00000 | .00000 | .00000 | .00000 |

IA143, AEDC V41A-P8A, O/ET W/R.H. SRB SEPARATING (OVX698) ( 24 MAY 77 )

REFERENCE DATA

SREF = 2690.0000 SQ.FT. XMRP = 1097.0000 IN. XT
LREF = 1290.3000 INCHES YMRP = .0000 IN. YT
BREF = 1290.3000 INCHES ZMRP = 450.0000 IN. ZT
SCALE = .0100

PARAMETRIC DATA

ALPHA = -10.000 BETA = -5.000
DALPHA = .000 DBETA = 4.000
X = 600.000 MACH = 4.500
JET PC = .000

RUN NO. 2660/ 0 RN/L = 2.39 GRADIENT INTERVAL = -5.00/ 5.00

| Y | Z | X | ALPHA | BETA | PHI | CN | CLM | CY | CYN | CBL | CA |
|---|---|---|---|---|---|---|---|---|---|---|---|
| -100.440 | 199.950 | 599.34000 | -10.26600 | -5.09300 | -.07212 | -.31905 | .09327 | .18710 | -.05649 | .02062 | .25059 |
| -100.600 | 249.600 | 599.27000 | -10.26700 | -5.09320 | -.07275 | -.31940 | .09338 | .18758 | -.05669 | .02061 | .25056 |
| -100.510 | 399.480 | 599.42000 | -10.26600 | -5.09270 | -.07399 | -.32166 | .09485 | .18853 | -.05731 | .02057 | .25057 |
| -100.520 | 449.760 | 599.48000 | -10.26600 | -5.09280 | -.07408 | -.32174 | .09491 | .18876 | -.05738 | .02059 | .25104 |
| -100.470 | 499.790 | 599.43000 | -10.26600 | -5.09270 | -.07401 | -.32164 | .09488 | .18849 | -.05729 | .02056 | .25094 |
| -100.890 | 600.300 | 599.37000 | -10.26600 | -5.09270 | -.07408 | -.32185 | .09492 | .18858 | -.05730 | .02055 | .25104 |
| | GRADIENT | .00000 | .00000 | .00000 | .00000 | .00000 | .00000 | .00000 | .00000 | .00000 | .00000 |

RUN NO. 2661/ 0 RN/L = 2.39 GRADIENT INTERVAL = -5.00/ 5.00

| Y | Z | X | ALPHA | BETA | PHI | CN | CLM | CY | CYN | CBL | CA |
|---|---|---|---|---|---|---|---|---|---|---|---|
| -300.980 | 600.200 | 599.26000 | -10.26600 | -5.09280 | -.07409 | -.32169 | .09488 | .18859 | -.05732 | .02057 | .25096 |
| -300.650 | 499.730 | 599.40000 | -10.26600 | -5.09270 | -.07408 | -.32181 | .09493 | .18854 | -.05732 | .02055 | .25102 |
| -300.620 | 449.710 | 599.39000 | -10.26600 | -5.09260 | -.07405 | -.32176 | .09489 | .18845 | -.05728 | .02054 | .25088 |
| -300.350 | 399.690 | 599.40000 | -10.26600 | -5.09270 | -.07408 | -.32168 | .09490 | .18850 | -.05729 | .02055 | .25102 |
| -300.110 | 249.730 | 599.45000 | -10.26600 | -5.09280 | -.07406 | -.32174 | .09492 | .18863 | -.05733 | .02058 | .25104 |
| -300.540 | 199.870 | 599.34000 | -10.26600 | -5.09270 | -.07407 | -.32184 | .09493 | .18861 | -.05734 | .02057 | .25101 |
| | GRADIENT | .00000 | .00000 | .00000 | .00000 | .00000 | .00000 | .00000 | .00000 | .00000 | .00000 |

IA143, AEDC V41A-P8A, O/ET W/R.H. SRB SEPARATING (OVX699) ( 24 MAY 77 )

REFERENCE DATA

SREF = 2690.0000 SQ.FT. XMRP = 1097.0000 IN. XT
LREF = 1290.3000 INCHES YMRP = .0000 IN. YT
BREF = 1290.3000 INCHES ZMRP = 450.0000 IN. ZT
SCALE = .0100

PARAMETRIC DATA

ALPHA = -10.000 BETA = -5.000
DALPHA = -15.000 DBETA = 4.000
X = 600.000 MACH = 4.500
JET PC = .000

RUN NO. 2712/ 0 RN/L = 2.39 GRADIENT INTERVAL = -5.00/ 5.00

| Y | Z | X | ALPHA | BETA | PHI | CN | CLM | CY | CYN | CBL | CA |
|---|---|---|---|---|---|---|---|---|---|---|---|
| -100.110 | 200.390 | 599.18000 | -10.26500 | -5.09420 | -.06399 | -.31025 | .08779 | .17648 | -.05064 | .01990 | .24765 |
| -100.000 | 250.150 | 599.17000 | -10.26500 | -5.09450 | -.06507 | -.31296 | .08959 | .18026 | -.05256 | .02051 | .24787 |
| -99.898 | 400.020 | 599.22000 | -10.26600 | -5.09330 | -.07205 | -.31803 | .09231 | .18636 | -.05601 | .02048 | .24815 |
| -100.050 | 450.370 | 599.41000 | -10.26600 | -5.09270 | -.07368 | -.32031 | .09383 | .18791 | -.05694 | .02048 | .24853 |
| -100.410 | 500.510 | 599.27000 | -10.26600 | -5.09250 | -.07413 | -.32083 | .09427 | .18816 | -.05718 | .02047 | .24902 |
| -100.480 | 601.010 | 599.56000 | -10.26600 | -5.09250 | -.07407 | -.32124 | .09457 | .18838 | -.05729 | .02052 | .25001 |
| | GRADIENT | .00000 | .00000 | .00000 | .00000 | .00000 | .00000 | .00000 | .00000 | .00000 | .00000 |

RUN NO. 2713/ 0 RN/L = 2.39 GRADIENT INTERVAL = -5.00/ 5.00

| Y | Z | X | ALPHA | BETA | PHI | CN | CLM | CY | CYN | CBL | CA |
|---|---|---|---|---|---|---|---|---|---|---|---|
| -301.430 | 602.030 | 599.74000 | -10.26600 | -5.09250 | -.07410 | -.32120 | .09462 | .18829 | -.05728 | .02052 | .25036 |
| -300.430 | 500.290 | 599.41000 | -10.26600 | -5.09230 | -.07407 | -.32131 | .09465 | .18821 | -.05725 | .02049 | .25033 |
| -300.150 | 450.350 | 599.26000 | -10.26600 | -5.09250 | -.07414 | -.32114 | .09459 | .18822 | -.05724 | .02049 | .25019 |
| -300.460 | 400.340 | 599.36000 | -10.26600 | -5.09240 | -.07403 | -.32118 | .09459 | .18819 | -.05722 | .02050 | .25021 |
| -300.900 | 250.450 | 599.21000 | -10.26600 | -5.09250 | -.07412 | -.32121 | .09455 | .18822 | -.05722 | .02048 | .25000 |
| -300.840 | 200.650 | 599.24000 | -10.26600 | -5.09240 | -.07405 | -.32117 | .09450 | .18798 | -.05714 | .02045 | .24970 |
| | GRADIENT | .00000 | .00000 | .00000 | .00000 | .00000 | .00000 | .00000 | .00000 | .00000 | .00000 |

IA143, AEDC V41A-P8A, O/ET W/R.H. SRB SEPARATING (OVX700) ( 24 MAY 77 )

REFERENCE DATA

SREF = 2690.0000 SQ.FT. XMRP = 1097.0000 IN. XT
LREF = 1290.3000 INCHES YMRP = .0000 IN. YT
BREF = 1290.3000 INCHES ZMRP = 450.0000 IN. ZT
SCALE = .0100

PARAMETRIC DATA

ALPHA = -10.000 BETA = -5.000
DALPHA = -15.000 DBETA = 4.000
X = 600.000 MACH = 4.500
JET PC = .000

RUN NO. 2749/ 0 RN/L = 2.37 GRADIENT INTERVAL = -5.00/ 5.00

| Y | Z | X | ALPHA | BETA | PHI | CN | CLM | CY | CYN | CBL | CA |
|---|---|---|---|---|---|---|---|---|---|---|---|
| -100.410 | 200.480 | 599.18000 | -10.26600 | -5.09470 | -.06472 | -.31110 | .08798 | .17823 | -.05148 | .02015 | .24747 |
| -100.170 | 249.840 | 598.86000 | -10.26500 | -5.09480 | -.06567 | -.31349 | .08965 | .18165 | -.05325 | .02071 | .24730 |
| -100.010 | 399.980 | 599.08000 | -10.26700 | -5.09360 | -.07238 | -.31857 | .09239 | .18773 | -.05668 | .02072 | .24795 |
| -100.050 | 450.420 | 599.27000 | -10.26600 | -5.09300 | -.07399 | -.32063 | .09384 | .18910 | -.05759 | .02072 | .24825 |
| -99.740 | 500.520 | 599.41000 | -10.26700 | -5.09290 | -.07442 | -.32107 | .09421 | .18922 | -.05771 | .02068 | .24865 |
| -100.570 | 601.020 | 599.51000 | -10.26700 | -5.09280 | -.07426 | -.32143 | .09451 | .18932 | -.05778 | .02073 | .24973 |
| | GRADIENT | .00000 | .00000 | .00000 | .00000 | .00000 | .00000 | .00000 | .00000 | .00000 | .00000 |

IA143, AEDC V41A-P8A, O/ET W/R.H. SRB SEPARATING (OVX701) ( 24 MAY 77 )

REFERENCE DATA

SREF = 2690.0000 SQ.FT. XMRP = 1097.0000 IN. XT
LREF = 1290.3000 INCHES YMRP = .0000 IN. YT
BREF = 1290.3000 INCHES ZMRP = 450.0000 IN. ZT
SCALE = .0100

PARAMETRIC DATA

ALPHA = -10.000 BETA = -5.000
DALPHA = .000 DBETA = -12.000
X = 600.000 MACH = 4.500
JET PC = .000

RUN NO. 2658/ 0 RN/L = 2.39 GRADIENT INTERVAL = -5.00/ 5.00

| Y | Z | X | ALPHA | BETA | PHI | CN | CLM | CY | CYN | CBL | CA |
|---|---|---|---|---|---|---|---|---|---|---|---|
| -100.490 | 249.740 | 599.48000 | -10.26500 | -5.09420 | -.06651 | -.30904 | .08758 | .18257 | -.05386 | .02074 | .24976 |
| -101.700 | 399.940 | 599.89000 | -10.26600 | -5.09310 | -.07301 | -.31959 | .09337 | .18780 | -.05678 | .02059 | .24988 |
| -101.130 | 449.880 | 599.59000 | -10.26600 | -5.09290 | -.07414 | -.32153 | .09470 | .18879 | -.05736 | .02059 | .25046 |
| -100.630 | 499.910 | 599.58000 | -10.26600 | -5.09280 | -.07400 | -.32162 | .09481 | .18868 | -.05734 | .02059 | .25064 |
| -100.590 | 600.250 | 599.78000 | -10.26600 | -5.09290 | -.07410 | -.32174 | .09492 | .18879 | -.05740 | .02061 | .25111 |
| | GRADIENT | .00000 | .00000 | .00000 | .00000 | .00000 | .00000 | .00000 | .00000 | .00000 | .00000 |

IA143, AEDC V41A-P8A, O/ET W/R.H. SRB SEPARATING (OVX702) ( 24 MAY 77 )

REFERENCE DATA

SREF = 2690.0000 SQ.FT. XMRP = 1097.0000 IN. XT
LREF = 1290.3000 INCHES YMRP = .0000 IN. YT
BREF = 1290.3000 INCHES ZMRP = 450.0000 IN. ZT
SCALE = .0100

PARAMETRIC DATA

ALPHA = -10.000 BETA = -5.000
DALPHA = -15.000 DBETA = -12.000
X = 600.000 MACH = 4.500
JET PC = .000

RUN NO. 2718/ 0 RN/L = 2.38 GRADIENT INTERVAL = -5.00/ 5.00

| Y | Z | X | ALPHA | BETA | PHI | CN | CLM | CY | CYN | CBL | CA |
|---|---|---|---|---|---|---|---|---|---|---|---|
| -100.540 | 450.340 | 599.37000 | -10.26600 | -5.09670 | -.06166 | -.30590 | .08379 | .17777 | -.05045 | .02054 | .24451 |
| -100.990 | 500.640 | 599.49000 | -10.26600 | -5.09450 | -.06898 | -.31392 | .08892 | .18382 | -.05424 | .02047 | .24453 |
| -101.860 | 601.480 | 599.96000 | -10.26500 | -5.09240 | -.07432 | -.32054 | .09362 | .18784 | -.05702 | .02036 | .24611 |
| | GRADIENT | .00000 | .00000 | .00000 | .00000 | .00000 | .00000 | .00000 | .00000 | .00000 | .00000 |

IA143, AEDC V41A-P8A, O/ET W/R.H. SRB SEPARATING (OVX703) ( 24 MAY 77 )

REFERENCE DATA

SREF = 2690.0000 SQ.FT. XMRP = 1097.0000 IN. XT
LREF = 1290.3000 INCHES YMRP = .0000 IN. YT
BREF = 1290.3000 INCHES ZMRP = 450.0000 IN. ZT
SCALE = .0100

PARAMETRIC DATA

ALPHA = -10.000 BETA = -5.000
DALPHA = .000 DBETA = -12.000
X = 600.000 MACH = 4.500
JET PC = .000

RUN NO. 2659/ 0 RN/L = 2.39 GRADIENT INTERVAL = -5.00/ 5.00

| Y | Z | X | ALPHA | BETA | PHI | CN | CLM | CY | CYN | CBL | CA |
|---|---|---|---|---|---|---|---|---|---|---|---|
| -300.370 | 199.850 | 599.39000 | -10.26600 | -5.09290 | -.07368 | -.32102 | .09434 | .18822 | -.05708 | .02056 | .24946 |
| -302.330 | 249.620 | 599.33000 | -10.26600 | -5.09280 | -.07406 | -.32158 | .09468 | .18879 | -.05736 | .02059 | .25019 |
| -301.900 | 399.790 | 599.57000 | -10.26600 | -5.09280 | -.07403 | -.32171 | .09489 | .18877 | -.05739 | .02061 | .25097 |
| -301.210 | 449.740 | 599.52000 | -10.26600 | -5.09290 | -.07405 | -.32182 | .09494 | .18878 | -.05735 | .02060 | .25122 |
| -300.780 | 499.780 | 599.57000 | -10.26600 | -5.09280 | -.07401 | -.32184 | .09496 | .18889 | -.05742 | .02062 | .25123 |
| -300.680 | 599.920 | 599.62000 | -10.26600 | -5.09280 | -.07407 | -.32185 | .09494 | .18870 | -.05737 | .02059 | .25114 |
| | GRADIENT | .00000 | .00000 | .00000 | .00000 | .00000 | .00000 | .00000 | .00000 | .00000 | .00000 |

IA143, AEDC V41A-P8A, O/ET W/R.H. SRB SEPARATING (OVX704) ( 24 MAY 77 )

REFERENCE DATA

SREF = 2690.0000 SQ.FT. XMRP = 1097.0000 IN. XT
LREF = 1290.3000 INCHES YMRP = .0000 IN. YT
BREF = 1290.3000 INCHES ZMRP = 450.0000 IN. ZT
SCALE = .0100

PARAMETRIC DATA

ALPHA = -10.000 BETA = -5.000
DALPHA = .000 DBETA = -12.000
X = 600.000 MACH = 4.500
JET PC = .000

RUN NO. 2681/ 0 RN/L = 2.38 GRADIENT INTERVAL = -5.00/ 5.00

| Y | Z | X | ALPHA | BETA | PHI | CN | CLM | CY | CYN | CBL | CA |
|---|---|---|---|---|---|---|---|---|---|---|---|
| -300.560 | 199.820 | 599.38000 | -10.26600 | -5.09270 | -.07357 | -.32052 | .09406 | .18772 | -.05692 | .02050 | .24909 |
| -302.140 | 249.670 | 599.23000 | -10.26600 | -5.09250 | -.07410 | -.32129 | .09442 | .18837 | -.05731 | .02053 | .24967 |
| -301.360 | 399.810 | 599.61000 | -10.26600 | -5.09240 | -.07405 | -.32148 | .09475 | .18830 | -.05731 | .02053 | .25072 |
| -300.790 | 449.770 | 599.58000 | -10.26600 | -5.09240 | -.07403 | -.32146 | .09473 | .18841 | -.05736 | .02056 | .25077 |
| -300.820 | 499.770 | 599.45000 | -10.26600 | -5.09240 | -.07404 | -.32137 | .09468 | .18824 | -.05729 | .02052 | .25059 |
| -300.700 | 599.910 | 599.56000 | -10.26600 | -5.09250 | -.07410 | -.32151 | .09475 | .18844 | -.05737 | .02055 | .25089 |
| | GRADIENT | .00000 | .00000 | .00000 | .00000 | .00000 | .00000 | .00000 | .00000 | .00000 | .00000 |

IA143, AEDC V41A-P8A, O/ET W/R.H. SRB SEPARATING (OVX705) ( 24 MAY 77 )

REFERENCE DATA

SREF = 2690.0000 SQ.FT. XMRP = 1097.0000 IN. XT
LREF = 1290.3000 INCHES YMRP = .0000 IN. YT
BREF = 1290.3000 INCHES ZMRP = 450.0000 IN. ZT
SCALE = .0100

PARAMETRIC DATA

ALPHA = -10.000 BETA = -5.000
DALPHA = .000 DBETA = -12.000
X = 600.000 MACH = 4.500
JET PC = .000

RUN NO. 2753/ 0 RN/L = 2.38 GRADIENT INTERVAL = -5.00/ 5.00

| Y | Z | X | ALPHA | BETA | PHI | CN | CLM | CY | CYN | CBL | CA |
|---|---|---|---|---|---|---|---|---|---|---|---|
| -300.270 | 199.850 | 599.42000 | -10.26600 | -5.09310 | -.07381 | -.32051 | .09375 | .18874 | -.05737 | .02068 | .24793 |
| -300.540 | 249.580 | 599.45000 | -10.26700 | -5.09280 | -.07437 | -.32091 | .09410 | .18911 | -.05766 | .02066 | .24852 |
| -301.220 | 399.890 | 599.67000 | -10.26700 | -5.09280 | -.07431 | -.32119 | .09437 | .18929 | -.05773 | .02070 | .24936 |
| -301.040 | 449.770 | 599.30000 | -10.26600 | -5.09280 | -.07426 | -.32119 | .09438 | .18921 | -.05771 | .02070 | .24938 |
| -300.630 | 499.830 | 599.46000 | -10.26700 | -5.09280 | -.07434 | -.32107 | .09439 | .18913 | -.05768 | .02067 | .24956 |
| -300.800 | 599.970 | 599.52000 | -10.26700 | -5.09280 | -.07434 | -.32125 | .09442 | .18914 | -.05769 | .02068 | .24959 |
| | GRADIENT | .00000 | .00000 | .00000 | .00000 | .00000 | .00000 | .00000 | .00000 | .00000 | .00000 |

IA143, AEDC V41A-P8A, O/ET W/R.H. SRB SEPARATING (OVX706) ( 24 MAY 77 )

REFERENCE DATA

SREF = 2690.0000 SQ.FT. XMRP = 1097.0000 IN. XT
LREF = 1290.3000 INCHES YMRP = .0000 IN. YT
BREF = 1290.3000 INCHES ZMRP = 450.0000 IN. ZT
SCALE = .0100

PARAMETRIC DATA

ALPHA = -10.000 BETA = -5.000
DALPHA = -15.000 DBETA = -12.000
X = 600.000 MACH = 4.500
JET PC = .000

RUN NO. 2719/ 0 RN/L = 2.38 GRADIENT INTERVAL = -5.00/ 5.00

| Y | Z | X | ALPHA | BETA | PHI | CN | CLM | CY | CYN | CBL | CA |
|---|---|---|---|---|---|---|---|---|---|---|---|
| -301.880 | 201.950 | 602.21000 | -10.26600 | -5.09430 | -.07022 | -.31097 | .08637 | .18084 | -.05251 | .01940 | .24103 |
| -300.120 | 250.090 | 599.10000 | -10.26500 | -5.09420 | -.07018 | -.31465 | .08914 | .18315 | -.05391 | .02007 | .24162 |
| -300.640 | 400.020 | 599.23000 | -10.26500 | -5.09260 | -.07419 | -.31871 | .09196 | .18722 | -.05659 | .02023 | .24284 |
| -299.770 | 450.300 | 599.32000 | -10.26500 | -5.09270 | -.07428 | -.31941 | .09259 | .18749 | -.05674 | .02028 | .24363 |
| -299.480 | 500.400 | 599.56000 | -10.26500 | -5.09250 | -.07432 | -.31969 | .09306 | .18777 | -.05693 | .02034 | .24527 |
| -300.720 | 600.480 | 599.50000 | -10.26500 | -5.09240 | -.07422 | -.32018 | .09370 | .18802 | -.05711 | .02041 | .24690 |
| | GRADIENT | .00000 | .00000 | .00000 | .00000 | .00000 | .00000 | .00000 | .00000 | .00000 | .00000 |

IA143, AEDC V41A-P8A, O/ET W/R.H. SRB SEPARATING (OVX707) ( 24 MAY 77 )

REFERENCE DATA

SREF = 2690.0000 SQ.FT. XMRP = 1097.0000 IN. XT
LREF = 1290.3000 INCHES YMRP = .0000 IN. YT
BREF = 1290.3000 INCHES ZMRP = 450.0000 IN. ZT
SCALE = .0100

PARAMETRIC DATA

ALPHA = -10.000 BETA = -5.000
DALPHA = -7.000 DBETA = -4.000
X = 600.000 MACH = 4.500
JET PC = .000

RUN NO. 2683/ 0 RN/L = 2.37 GRADIENT INTERVAL = -5.00/ 5.00

| Y | Z | X | ALPHA | BETA | PHI | CN | CLM | CY | CYN | CBL | CA |
|---|---|---|---|---|---|---|---|---|---|---|---|
| -202.070 | 200.210 | 599.31000 | -10.26600 | -5.09350 | -.07084 | -.31825 | .09243 | .18572 | -.05564 | .02057 | .24840 |
| -200.010 | 299.790 | 599.28000 | -10.26600 | -5.09280 | -.07318 | -.32037 | .09386 | .18752 | -.05680 | .02053 | .24946 |
| -200.320 | 399.910 | 599.29000 | -10.26600 | -5.09260 | -.07413 | -.32179 | .09474 | .18859 | -.05738 | .02057 | .25051 |
| | GRADIENT | .00000 | .00000 | .00000 | .00000 | .00000 | .00000 | .00000 | .00000 | .00000 | .00000 |

IA143, AEDC V41A-P8A, O/ET W/R.H. SRB SEPARATING (OVX708) ( 24 MAY 77 )

REFERENCE DATA

SREF = 2690.0000 SQ.FT. XMRP = 1097.0000 IN. XT
LREF = 1290.3000 INCHES YMRP = .0000 IN. YT
BREF = 1290.3000 INCHES ZMRP = 450.0000 IN. ZT
SCALE = .0100

PARAMETRIC DATA

ALPHA = -10.000 BETA = -5.000
DALPHA = -5.000 DBETA = .000
X = 600.000 MACH = 4.500
JET PC = .000

RUN NO. 2670/ 0 RN/L = 2.37 GRADIENT INTERVAL = -5.00/ 5.00

| Y | Z | X | ALPHA | BETA | PHI | CN | CLM | CY | CYN | CBL | CA |
|---|---|---|---|---|---|---|---|---|---|---|---|
| -99.843 | 200.030 | 599.31000 | -10.26500 | -5.09340 | -.06876 | -.31542 | .09112 | .18370 | -.05472 | .02057 | .24953 |
| -99.657 | 299.810 | 599.34000 | -10.26600 | -5.09300 | -.07199 | -.31801 | .09240 | .18643 | -.05617 | .02051 | .24993 |
| -100.130 | 399.740 | 599.44000 | -10.26600 | -5.09260 | -.07379 | -.32119 | .09438 | .18808 | -.05711 | .02051 | .25029 |
| | GRADIENT | .00000 | .00000 | .00000 | .00000 | .00000 | .00000 | .00000 | .00000 | .00000 | .00000 |

RUN NO. 2671/ 0 RN/L = 2.37 GRADIENT INTERVAL = -5.00/ 5.00

| Y | Z | X | ALPHA | BETA | PHI | CN | CLM | CY | CYN | CBL | CA |
|---|---|---|---|---|---|---|---|---|---|---|---|
| -302.190 | 401.550 | 599.51000 | -10.26600 | -5.09250 | -.07402 | -.32158 | .09470 | .18814 | -.05719 | .02049 | .25086 |
| -300.670 | 299.870 | 599.27000 | -10.26600 | -5.09240 | -.07396 | -.32159 | .09473 | .18812 | -.05721 | .02051 | .25077 |
| -301.360 | 199.980 | 599.23000 | -10.26600 | -5.09250 | -.07394 | -.32151 | .09471 | .18815 | -.05719 | .02050 | .25069 |
| | GRADIENT | .00000 | .00000 | .00000 | .00000 | .00000 | .00000 | .00000 | .00000 | .00000 | .00000 |

IA143, AEDC V41A-P8A, O/ET W/R.H. SRB SEPARATING (OVX709) ( 24 MAY 77 )

REFERENCE DATA

SREF = 2690.0000 SQ.FT. XMRP = 1097.0000 IN. XT
LREF = 1290.3000 INCHES YMRP = .0000 IN. YT
BREF = 1290.3000 INCHES ZMRP = 450.0000 IN. ZT
SCALE = .0100

PARAMETRIC DATA

ALPHA = -10.000 BETA = -5.000
DALPHA = -10.000 DBETA = .000
X = 600.000 MACH = 4.500
JET PC = .000

RUN NO. 2696/ 0 RN/L = 2.37 GRADIENT INTERVAL = -5.00/ 5.00

| Y | Z | X | ALPHA | BETA | PHI | CN | CLM | CY | CYN | CBL | CA |
|---|---|---|---|---|---|---|---|---|---|---|---|
| -99.927 | 200.230 | 599.24000 | -10.26400 | -5.09430 | -.06346 | -.31256 | .08962 | .17901 | -.05205 | .02059 | .24828 |
| -99.374 | 299.860 | 599.27000 | -10.26600 | -5.09370 | -.06980 | -.31516 | .09066 | .18478 | -.05507 | .02057 | .24827 |
| -100.030 | 400.180 | 599.41000 | -10.26600 | -5.09300 | -.07293 | -.31943 | .09325 | .18745 | -.05665 | .02054 | .24929 |
| | GRADIENT | .00000 | .00000 | .00000 | .00000 | .00000 | .00000 | .00000 | .00000 | .00000 | .00000 |

RUN NO. 2697/ 0 RN/L = 2.37 GRADIENT INTERVAL = -5.00/ 5.00

| Y | Z | X | ALPHA | BETA | PHI | CN | CLM | CY | CYN | CBL | CA |
|---|---|---|---|---|---|---|---|---|---|---|---|
| -302.460 | 402.580 | 599.72000 | -10.26600 | -5.09240 | -.07407 | -.32115 | .09465 | .18811 | -.05722 | .02048 | .25046 |
| -300.640 | 300.010 | 599.19000 | -10.26600 | -5.09240 | -.07405 | -.32126 | .09462 | .18829 | -.05728 | .02052 | .25021 |
| -300.570 | 200.340 | 599.22000 | -10.26600 | -5.09240 | -.07410 | -.32120 | .09457 | .18823 | -.05724 | .02049 | .25001 |
| | GRADIENT | .00000 | .00000 | .00000 | .00000 | .00000 | .00000 | .00000 | .00000 | .00000 | .00000 |

IA143, AEDC V41A-P8A, O/ET W/R.H. SRB SEPARATING (OVX710) ( 24 MAY 77 )

REFERENCE DATA

SREF = 2690.0000 SQ.FT. XMRP = 1097.0000 IN. XT
LREF = 1290.3000 INCHES YMRP = .0000 IN. YT
BREF = 1290.3000 INCHES ZMRP = 450.0000 IN. ZT
SCALE = .0100

PARAMETRIC DATA

ALPHA = -10.000 BETA = -5.000
DALPHA = -5.000 DBETA = -8.000
X = 600.000 MACH = 4.500
JET PC = .000

RUN NO. 2673/ 0 RN/L = 2.37 GRADIENT INTERVAL = -5.00/ 5.00

| Y | Z | X | ALPHA | BETA | PHI | CN | CLM | CY | CYN | CBL | CA |
|---|---|---|---|---|---|---|---|---|---|---|---|
| -98.336 | 397.980 | 598.96000 | -10.26600 | -5.09300 | -.07263 | -.31899 | .09284 | .18712 | -.05648 | .02052 | .24932 |
| -99.465 | 299.850 | 599.23000 | -10.26600 | -5.09440 | -.06753 | -.31206 | .08870 | .18313 | -.05400 | .02062 | .24902 |
| -100.500 | 200.510 | 599.39000 | -10.26300 | -5.09480 | -.05946 | -.30800 | .08735 | .17552 | -.05020 | .02063 | .24879 |
| | GRADIENT | .00000 | .00000 | .00000 | .00000 | .00000 | .00000 | .00000 | .00000 | .00000 | .00000 |

RUN NO. 2672/ 0 RN/L = 2.37 GRADIENT INTERVAL = -5.00/ 5.00

| Y | Z | X | ALPHA | BETA | PHI | CN | CLM | CY | CYN | CBL | CA |
|---|---|---|---|---|---|---|---|---|---|---|---|
| -302.420 | 199.750 | 599.84000 | -10.26600 | -5.09250 | -.07401 | -.32104 | .09423 | .18799 | -.05712 | .02046 | .24916 |
| -300.340 | 299.920 | 599.28000 | -10.26600 | -5.09240 | -.07395 | -.32134 | .09459 | .18796 | -.05711 | .02047 | .25028 |
| -300.280 | 399.920 | 599.43000 | -10.26600 | -5.09240 | -.07392 | -.32142 | .09471 | .18806 | -.05718 | .02050 | .25066 |
| | GRADIENT | .00000 | .00000 | .00000 | .00000 | .00000 | .00000 | .00000 | .00000 | .00000 | .00000 |

IA143, AEDC V41A-P8A, O/ET W/R.H. SRB SEPARATING (OVX711) ( 24 MAY 77 )

REFERENCE DATA

SREF = 2690.0000 SQ.FT. XMRP = 1097.0000 IN. XT
LREF = 1290.3000 INCHES YMRP = .0000 IN. YT
BREF = 1290.3000 INCHES ZMRP = 450.0000 IN. ZT
SCALE = .0100

PARAMETRIC DATA

ALPHA = -10.000 BETA = -5.000
DALPHA = -10.000 DBETA = -8.000
X = 600.000 MACH = 4.500
JET PC = .000

RUN NO. 2691/ 0 RN/L = 2.37 GRADIENT INTERVAL = -5.00/ 5.00

| Y | Z | X | ALPHA | BETA | PHI | CN | CLM | CY | CYN | CBL | CA |
|---|---|---|---|---|---|---|---|---|---|---|---|
| -99.960 | 200.230 | 599.39000 | -10.26300 | -5.09590 | -.05140 | -.30381 | .08475 | .16575 | -.04485 | .02008 | .24844 |
| -100.000 | 299.840 | 599.11000 | -10.26500 | -5.09620 | -.05964 | -.30692 | .08562 | .17632 | -.04996 | .02068 | .24751 |
| -100.390 | 350.040 | 599.25000 | -10.26600 | -5.09540 | -.06522 | -.31057 | .08745 | .18125 | -.05269 | .02064 | .24717 |
| -100.130 | 400.290 | 599.30000 | -10.26600 | -5.09410 | -.06966 | -.31538 | .09036 | .18500 | -.05500 | .02060 | .24765 |
| | GRADIENT | .00000 | .00000 | .00000 | .00000 | .00000 | .00000 | .00000 | .00000 | .00000 | .00000 |

IA143, AEDC V41A-P8A, O/ET W/R.H. SRB SEPARATING (OVX712) ( 24 MAY 77 )

REFERENCE DATA

SREF = 2690.0000 SQ.FT. XMRP = 1097.0000 IN. XT
LREF = 1290.3000 INCHES YMRP = .0000 IN. YT
BREF = 1290.3000 INCHES ZMRP = 450.0000 IN. ZT
SCALE = .0100

PARAMETRIC DATA

ALPHA = -10.000 BETA = -5.000
DALPHA = -10.000 DBETA = -8.000
X = 600.000 MACH = 4.500
JET PC = .000

RUN NO. 2693/ 0 RN/L = 2.37 GRADIENT INTERVAL = -5.00/ 5.00

| Y | Z | X | ALPHA | BETA | PHI | CN | CLM | CY | CYN | CBL | CA |
|---|---|---|---|---|---|---|---|---|---|---|---|
| -299.680 | 199.780 | 600.97000 | -10.26500 | -5.09270 | -.07392 | -.31999 | .09342 | .18783 | -.05694 | .02043 | .24685 |
| -300.490 | 300.160 | 599.25000 | -10.26600 | -5.09250 | -.07420 | -.32046 | .09392 | .18805 | -.05710 | .02043 | .24826 |
| -300.360 | 400.170 | 599.34000 | -10.26600 | -5.09250 | -.07410 | -.32083 | .09422 | .18811 | -.05715 | .02046 | .24888 |
| | GRADIENT | .00000 | .00000 | .00000 | .00000 | .00000 | .00000 | .00000 | .00000 | .00000 | .00000 |

IA143, AEDC V41A-P8A, O/ET W/R.H. SRB SEPARATING (OVX713) ( 24 MAY 77 )

REFERENCE DATA

SREF = 2690.0000 SQ.FT. XMRP = 1097.0000 IN. XT
LREF = 1290.3000 INCHES YMRP = .0000 IN. YT
BREF = 1290.3000 INCHES ZMRP = 450.0000 IN. ZT
SCALE = .0100

PARAMETRIC DATA

ALPHA = -10.000 BETA = -5.000
DALPHA = -10.000 DBETA = -4.000
X = 600.000 MACH = 4.500
JET PC = .000

RUN NO. 2695/ 0 RN/L = 2.37 GRADIENT INTERVAL = -5.00/ 5.00

| Y | Z | X | ALPHA | BETA | PHI | CN | CLM | CY | CYN | CBL | CA |
|---|---|---|---|---|---|---|---|---|---|---|---|
| -100.150 | 300.240 | 599.30000 | -10.26500 | -5.09480 | -.06620 | -.31189 | .08861 | .18183 | -.05322 | .02060 | .24729 |
| -100.210 | 350.020 | 599.30000 | -10.26600 | -5.09400 | -.06940 | -.31474 | .09014 | .18456 | -.05486 | .02057 | .24755 |
| -100.210 | 400.240 | 599.23000 | -10.26600 | -5.09330 | -.07190 | -.31782 | .09208 | .18649 | -.05607 | .02053 | .24817 |
| | GRADIENT | .00000 | .00000 | .00000 | .00000 | .00000 | .00000 | .00000 | .00000 | .00000 | .00000 |

IA143, AEDC V41A-P8A, O/ET W/R.H. SRB SEPARATING (OVX714) ( 24 MAY 77 )

REFERENCE DATA

SREF = 2690.0000 SQ.FT. XMRP = 1097.0000 IN. XT
LREF = 1290.3000 INCHES YMRP = .0000 IN. YT
BREF = 1290.3000 INCHES ZMRP = 450.0000 IN. ZT
SCALE = .0100

PARAMETRIC DATA

ALPHA = -10.000 BETA = -5.000
DALPHA = -15.000 DBETA = -4.000
X = 600.000 MACH = 4.500
JET PC = .000

RUN NO. 2714/ 0 RN/L = 2.38 GRADIENT INTERVAL = -5.00/ 5.00

| Y | Z | X | ALPHA | BETA | PHI | CN | CLM | CY | CYN | CBL | CA |
|---|---|---|---|---|---|---|---|---|---|---|---|
| -97.017 | 299.090 | 600.35000 | -10.26400 | -5.09690 | -.05556 | -.30571 | .08479 | .17124 | -.04713 | .02036 | .24671 |
| -100.520 | 350.350 | 599.24000 | -10.26500 | -5.09610 | -.06211 | -.30958 | .08665 | .17801 | -.05078 | .02053 | .24522 |
| -99.609 | 400.340 | 599.36000 | -10.26500 | -5.09480 | -.06696 | -.31314 | .08879 | .18202 | -.05325 | .02047 | .24523 |
| | GRADIENT | .00000 | .00000 | .00000 | .00000 | .00000 | .00000 | .00000 | .00000 | .00000 | .00000 |

RUN NO. 2715/ 0 RN/L = 2.38 GRADIENT INTERVAL = -5.00/ 5.00

| Y | Z | X | ALPHA | BETA | PHI | CN | CLM | CY | CYN | CBL | CA |
|---|---|---|---|---|---|---|---|---|---|---|---|
| -201.420 | 401.740 | 599.68000 | -10.26500 | -5.09250 | -.07407 | -.32018 | .09345 | .18763 | -.05687 | .02036 | .24649 |
| -200.350 | 350.330 | 599.30000 | -10.26500 | -5.09310 | -.07257 | -.31890 | .09251 | .18664 | -.05614 | .02041 | .24601 |
| -197.920 | 300.390 | 599.46000 | -10.26600 | -5.09390 | -.07028 | -.31721 | .09138 | .18479 | -.05497 | .02045 | .24542 |
| | GRADIENT | .00000 | .00000 | .00000 | .00000 | .00000 | .00000 | .00000 | .00000 | .00000 | .00000 |

IA143, AEDC V41A-P8A, O/ET W/R.H. SRB SEPARATING (OVX715) ( 24 MAY 77 )

REFERENCE DATA

SREF = 2690.0000 SQ.FT. XMRP = 1097.0000 IN. XT
LREF = 1290.3000 INCHES YMRP = .0000 IN. YT
BREF = 1290.3000 INCHES ZMRP = 450.0000 IN. ZT
SCALE = .0100

PARAMETRIC DATA

ALPHA = -10.000 BETA = -5.000
DALPHA = -10.000 DBETA = -4.000
X = 600.000 MACH = 4.500
JET PC = .000

RUN NO. 2694/ 0 RN/L = 2.37 GRADIENT INTERVAL = -5.00/ 5.00

| Y | Z | X | ALPHA | BETA | PHI | CN | CLM | CY | CYN | CBL | CA |
|---|---|---|---|---|---|---|---|---|---|---|---|
| -198.720 | 198.790 | 600.12000 | -10.26500 | -5.09410 | -.06922 | -.31707 | .09159 | .18418 | -.05464 | .02053 | .24699 |
| -199.780 | 299.910 | 599.23000 | -10.26600 | -5.09300 | -.07261 | -.31941 | .09317 | .18700 | -.05639 | .02048 | .24823 |
| -200.180 | 350.040 | 599.29000 | -10.26600 | -5.09270 | -.07374 | -.32052 | .09398 | .18795 | -.05701 | .02050 | .24890 |
| -200.330 | 400.260 | 599.33000 | -10.26600 | -5.09240 | -.07409 | -.32098 | .09436 | .18821 | -.05722 | .02048 | .24930 |
| | GRADIENT | .00000 | .00000 | .00000 | .00000 | .00000 | .00000 | .00000 | .00000 | .00000 | .00000 |

IA143, AEDC V41A-P8A, O/ET W/R.H. SRB SEPARATING (OVX716) ( 24 MAY 77 )

REFERENCE DATA

SREF = 2690.0000 SQ.FT. XMRP = 1097.0000 IN. XT
LREF = 1290.3000 INCHES YMRP = .0000 IN. YT
BREF = 1290.3000 INCHES ZMRP = 450.0000 IN. ZT
SCALE = .0100

PARAMETRIC DATA

ALPHA = -10.000 BETA = -5.000
DALPHA = -15.000 DBETA = -8.000
X = 600.000 MACH = 4.500
JET PC = .000

RUN NO. 2717/ 0 RN/L = 2.38 GRADIENT INTERVAL = -5.00/ 5.00

| Y | Z | X | ALPHA | BETA | PHI | CN | CLM | CY | CYN | CBL | CA |
|---|---|---|---|---|---|---|---|---|---|---|---|
| -98.959 | 398.750 | 598.58000 | -10.26600 | -5.09670 | -.06048 | -.30710 | .08462 | .17681 | -.04990 | .02054 | .24500 |
| -100.070 | 350.220 | 599.23000 | -10.26500 | -5.09780 | -.05412 | -.30272 | .08245 | .17067 | -.04647 | .02046 | .24602 |
| -100.520 | 300.340 | 599.30000 | -10.26400 | -5.09790 | -.04995 | -.30009 | .08126 | .16503 | -.04362 | .02009 | .24702 |
| | GRADIENT | .00000 | .00000 | .00000 | .00000 | .00000 | .00000 | .00000 | .00000 | .00000 | .00000 |

RUN NO. 2716/ 0 RN/L = 2.38 GRADIENT INTERVAL = -5.00/ 5.00

| Y | Z | X | ALPHA | BETA | PHI | CN | CLM | CY | CYN | CBL | CA |
|---|---|---|---|---|---|---|---|---|---|---|---|
| -201.140 | 300.010 | 599.43000 | -10.26500 | -5.09550 | -.06497 | -.31366 | .08889 | .18042 | -.05221 | .02050 | .24392 |
| -200.320 | 350.220 | 599.13000 | -10.26500 | -5.09430 | -.06880 | -.31605 | .09041 | .18343 | -.05410 | .02041 | .24421 |
| -200.560 | 400.310 | 599.29000 | -10.26500 | -5.09340 | -.07228 | -.31864 | .09210 | .18632 | -.05589 | .02038 | .24504 |
| | GRADIENT | .00000 | .00000 | .00000 | .00000 | .00000 | .00000 | .00000 | .00000 | .00000 | .00000 |

IA143, AEDC V41A-P8A, O/ET W/R.H. SRB SEPARATING (OVX717) ( 24 MAY 77 )

REFERENCE DATA

SREF = 2690.0000 SQ.FT. XMRP = 1097.0000 IN. XT
LREF = 1290.3000 INCHES YMRP = .0000 IN. YT
BREF = 1290.3000 INCHES ZMRP = 450.0000 IN. ZT
SCALE = .0100

PARAMETRIC DATA

ALPHA = -10.000 BETA = -5.000
DALPHA = -10.000 DBETA = -8.000
X = 600.000 MACH = 4.500
JET PC = .000

RUN NO. 2692/ 0 RN/L = 2.37 GRADIENT INTERVAL = -5.00/ 5.00

| Y | Z | X | ALPHA | BETA | PHI | CN | CLM | CY | CYN | CBL | CA |
|---|---|---|---|---|---|---|---|---|---|---|---|
| -200.590 | 300.140 | 599.43000 | -10.26600 | -5.09370 | -.07069 | -.31779 | .09190 | .18554 | -.05541 | .02053 | .24684 |
| -200.300 | 350.090 | 599.30000 | -10.26500 | -5.09300 | -.07286 | -.31958 | .09316 | .18725 | -.05651 | .02049 | .24753 |
| -200.310 | 400.250 | 599.35000 | -10.26600 | -5.09250 | -.07415 | -.32074 | .09394 | .18814 | -.05715 | .02045 | .24793 |
| | GRADIENT | .00000 | .00000 | .00000 | .00000 | .00000 | .00000 | .00000 | .00000 | .00000 | .00000 |

IA143, AEDC V41A-P8A, O/ET W/R.H. SRB SEPARATING (OVX718) ( 24 MAY 77 )

REFERENCE DATA

SREF = 2690.0000 SQ.FT. XMRP = 1097.0000 IN. XT
LREF = 1290.3000 INCHES YMRP = .0000 IN. YT
BREF = 1290.3000 INCHES ZMRP = 450.0000 IN. ZT
SCALE = .0100

PARAMETRIC DATA

ALPHA = -10.000 BETA = -5.000
DALPHA = -5.000 DBETA = 4.000
X = 900.000 MACH = 4.500
JET PC = .000

RUN NO. 2676/ 0 RN/L = 2.39 GRADIENT INTERVAL = -5.00/ 5.00

| Y | Z | X | ALPHA | BETA | PHI | CN | CLM | CY | CYN | CBL | CA |
|---|---|---|---|---|---|---|---|---|---|---|---|
| -99.781 | 200.170 | 899.29000 | -10.26600 | -5.09350 | -.07083 | -.31939 | .09327 | .18586 | -.05569 | .02059 | .24983 |
| -99.859 | 274.830 | 899.28000 | -10.26600 | -5.09260 | -.07356 | -.32113 | .09439 | .18793 | -.05702 | .02053 | .25024 |
| -100.350 | 424.630 | 899.15000 | -10.26600 | -5.09240 | -.07403 | -.32165 | .09480 | .18822 | -.05726 | .02051 | .25093 |
| -100.500 | 499.760 | 899.26000 | -10.26600 | -5.09240 | -.07402 | -.32162 | .09476 | .18825 | -.05728 | .02052 | .25084 |
| -100.250 | 600.000 | 899.28000 | -10.26600 | -5.09240 | -.07404 | -.32165 | .09480 | .18825 | -.05727 | .02052 | .25101 |
| | GRADIENT | .00000 | .00000 | .00000 | .00000 | .00000 | .00000 | .00000 | .00000 | .00000 | .00000 |

RUN NO. 2677/ 0 RN/L = 2.39 GRADIENT INTERVAL = -5.00/ 5.00

| Y | Z | X | ALPHA | BETA | PHI | CN | CLM | CY | CYN | CBL | CA |
|---|---|---|---|---|---|---|---|---|---|---|---|
| -401.710 | 601.430 | 899.24000 | -10.26600 | -5.09250 | -.07405 | -.32165 | .09475 | .18839 | -.05735 | .02055 | .25080 |
| -400.160 | 499.720 | 899.25000 | -10.26600 | -5.09240 | -.07399 | -.32143 | .09472 | .18820 | -.05727 | .02052 | .25079 |
| -400.550 | 424.860 | 899.17000 | -10.26600 | -5.09250 | -.07401 | -.32154 | .09477 | .18827 | -.05725 | .02052 | .25090 |
| -400.710 | 275.110 | 899.16000 | -10.26600 | -5.09250 | -.07406 | -.32171 | .09480 | .18828 | -.05726 | .02051 | .25099 |
| -401.140 | 200.200 | 899.17000 | -10.26600 | -5.09230 | -.07403 | -.32164 | .09479 | .18813 | -.05723 | .02049 | .25093 |
| | GRADIENT | .00000 | .00000 | .00000 | .00000 | .00000 | .00000 | .00000 | .00000 | .00000 | .00000 |

IA143, AEDC V41A-P8A, O/ET W/R.H. SRB SEPARATING (OVX719) ( 24 MAY 77 )

REFERENCE DATA

SREF = 2690.0000 SQ.FT. XMRP = 1097.0000 IN. XT
LREF = 1290.3000 INCHES YMRP = .0000 IN. YT
BREF = 1290.3000 INCHES ZMRP = 450.0000 IN. ZT
SCALE = .0100

PARAMETRIC DATA

ALPHA = -10.000 BETA = -5.000
DALPHA = -20.000 DBETA = 4.000
X = 900.000 MACH = 4.500
JET PC = .000

RUN NO. 2742/ 0 RN/L = 2.37 GRADIENT INTERVAL = -5.00/ 5.00

| Y | Z | X | ALPHA | BETA | PHI | CN | CLM | CY | CYN | CBL | CA |
|---|---|---|---|---|---|---|---|---|---|---|---|
| -100.010 | 200.630 | 899.09000 | -10.26500 | -5.09510 | -.06534 | -.31306 | .08873 | .17993 | -.05203 | .02032 | .24577 |
| -100.250 | 275.310 | 898.96000 | -10.26500 | -5.09430 | -.06836 | -.31647 | .09099 | .18361 | -.05425 | .02056 | .24633 |
| -100.320 | 425.330 | 898.98000 | -10.26600 | -5.09250 | -.07425 | -.32068 | .09395 | .18831 | -.05725 | .02047 | .24784 |
| -99.961 | 500.550 | 899.17000 | -10.26600 | -5.09230 | -.07413 | -.32083 | .09417 | .18809 | -.05720 | .02046 | .24850 |
| -100.350 | 600.690 | 899.16000 | -10.26600 | -5.09250 | -.07413 | -.32120 | .09451 | .18839 | -.05734 | .02053 | .24948 |
| | GRADIENT | .00000 | .00000 | .00000 | .00000 | .00000 | .00000 | .00000 | .00000 | .00000 | .00000 |

RUN NO. 2743/ 0 RN/L = 2.38 GRADIENT INTERVAL = -5.00/ 5.00

| Y | Z | X | ALPHA | BETA | PHI | CN | CLM | CY | CYN | CBL | CA |
|---|---|---|---|---|---|---|---|---|---|---|---|
| -400.480 | 600.310 | 899.04000 | -10.26600 | -5.09240 | -.07414 | -.32116 | .09456 | .18843 | -.05738 | .02054 | .25010 |
| -400.250 | 500.510 | 899.01000 | -10.26600 | -5.09230 | -.07410 | -.32129 | .09461 | .18825 | -.05732 | .02051 | .25018 |
| -400.470 | 425.410 | 899.08000 | -10.26600 | -5.09230 | -.07410 | -.32125 | .09455 | .18833 | -.05737 | .02053 | .24993 |
| -400.770 | 276.110 | 899.23000 | -10.26600 | -5.09240 | -.07405 | -.32113 | .09456 | .18853 | -.05742 | .02057 | .25015 |
| -400.550 | 201.060 | 899.26000 | -10.26600 | -5.09230 | -.07400 | -.32116 | .09458 | .18847 | -.05742 | .02056 | .25024 |
| | GRADIENT | .00000 | .00000 | .00000 | .00000 | .00000 | .00000 | .00000 | .00000 | .00000 | .00000 |

IA143, AEDC V41A-P8A, O/ET W/R.H. SRB SEPARATING (OVX720) ( 24 MAY 77 )

REFERENCE DATA

SREF = 2690.0000 SQ.FT. XMRP = 1097.0000 IN. XT
LREF = 1290.3000 INCHES YMRP = .0000 IN. YT
BREF = 1290.3000 INCHES ZMRP = 450.0000 IN. ZT
SCALE = .0100

PARAMETRIC DATA

ALPHA = -10.000 BETA = -5.000
DALPHA = -5.000 DBETA = -16.000
X = 900.000 MACH = 4.500
JET PC = .000

RUN NO. 2674/ 0 RN/L = 2.37 GRADIENT INTERVAL = -5.00/ 5.00

| Y | Z | X | ALPHA | BETA | PHI | CN | CLM | CY | CYN | CBL | CA |
|---|---|---|---|---|---|---|---|---|---|---|---|
| -100.160 | 275.020 | 899.50000 | -10.26600 | -5.09490 | -.06572 | -.31198 | .08822 | .18145 | -.05294 | .02060 | .24810 |
| -102.670 | 425.200 | 900.08000 | -10.26600 | -5.09240 | -.07408 | -.32124 | .09437 | .18801 | -.05713 | .02045 | .24936 |
| -101.280 | 500.550 | 899.70000 | -10.26600 | -5.09250 | -.07396 | -.32148 | .09462 | .18818 | -.05721 | .02051 | .25039 |
| -100.970 | 600.260 | 899.70000 | -10.26600 | -5.09240 | -.07397 | -.32168 | .09480 | .18833 | -.05729 | .02053 | .25098 |
| | GRADIENT | .00000 | .00000 | .00000 | .00000 | .00000 | .00000 | .00000 | .00000 | .00000 | .00000 |

IA143, AEDC V41A-P8A, O/ET W/R.H. SRB SEPARATING (OVX721) ( 24 MAY 77 )

REFERENCE DATA

SREF = 2690.0000 SQ.FT. XMRP = 1097.0000 IN. XT
LREF = 1290.3000 INCHES YMRP = .0000 IN. YT
BREF = 1290.3000 INCHES ZMRP = 450.0000 IN. ZT
SCALE = .0100

PARAMETRIC DATA

ALPHA = -10.000 BETA = -5.000
DALPHA = -20.000 DBETA = -16.000
X = 900.000 MACH = 4.500
JET PC = .000

RUN NO. 2744/ 0 RN/L = 2.37 GRADIENT INTERVAL = -5.00/ 5.00

| Y | Z | X | ALPHA | BETA | PHI | CN | CLM | CY | CYN | CBL | CA |
|---|---|---|---|---|---|---|---|---|---|---|---|
| -100.800 | 425.530 | 899.28000 | -10.26500 | -5.09520 | -.06633 | -.31291 | .08818 | .18181 | -.05300 | .02053 | .24352 |
| -101.220 | 500.830 | 899.54000 | -10.26500 | -5.09240 | -.07401 | -.31926 | .09249 | .18784 | -.05702 | .02041 | .24437 |
| -101.710 | 601.300 | 899.88000 | -10.26500 | -5.09250 | -.07435 | -.31978 | .09307 | .18809 | -.05717 | .02043 | .24505 |
| | GRADIENT | .00000 | .00000 | .00000 | .00000 | .00000 | .00000 | .00000 | .00000 | .00000 | .00000 |

IA143, AEDC V41A-P8A, O/ET W/R.H. SRB SEPARATING (OVX722) ( 24 MAY 77 )

REFERENCE DATA

SREF = 2690.0000 SQ.FT. XMRP = 1097.0000 IN. XT
LREF = 1290.3000 INCHES YMRP = .0000 IN. YT
BREF = 1290.3000 INCHES ZMRP = 450.0000 IN. ZT
SCALE = .0100

PARAMETRIC DATA

ALPHA = -10.000 BETA = -5.000
DALPHA = -5.000 DBETA = -16.000
X = 900.000 MACH = 4.500
JET PC = .000

RUN NO. 2675/ 0 RN/L = 2.38 GRADIENT INTERVAL = -5.00/ 5.00

| Y | Z | X | ALPHA | BETA | PHI | CN | CLM | CY | CYN | CBL | CA |
|---|---|---|---|---|---|---|---|---|---|---|---|
| -400.810 | 200.240 | 899.34000 | -10.26600 | -5.09250 | -.07402 | -.32108 | .09426 | .18805 | -.05710 | .02046 | .24904 |
| -400.050 | 274.740 | 899.29000 | -10.26600 | -5.09250 | -.07400 | -.32131 | .09450 | .18808 | -.05715 | .02047 | .24973 |
| -400.990 | 424.700 | 899.45000 | -10.26600 | -5.09240 | -.07402 | -.32140 | .09470 | .18817 | -.05727 | .02051 | .25074 |
| -400.880 | 499.990 | 899.42000 | -10.26600 | -5.09230 | -.07400 | -.32160 | .09479 | .18821 | -.05727 | .02051 | .25091 |
| -401.940 | 600.170 | 899.46000 | -10.26600 | -5.09250 | -.07403 | -.32171 | .09478 | .18830 | -.05727 | .02052 | .25088 |
| | GRADIENT | .00000 | .00000 | .00000 | .00000 | .00000 | .00000 | .00000 | .00000 | .00000 | .00000 |

IA143, AEDC V41A-P8A, O/ET W/R.H. SRB SEPARATING (OVX723) ( 24 MAY 77 )

REFERENCE DATA

SREF = 2690.0000 SQ.FT. XMRP = 1097.0000 IN. XT
LREF = 1290.3000 INCHES YMRP = .0000 IN. YT
BREF = 1290.3000 INCHES ZMRP = 450.0000 IN. ZT
SCALE = .0100

PARAMETRIC DATA

ALPHA = -10.000 BETA = -5.000
DALPHA = -20.000 DBETA = -16.000
X = 900.000 MACH = 4.500
JET PC = .000

RUN NO. 2745/ 0 RN/L = 2.37 GRADIENT INTERVAL = -5.00/ 5.00

| Y | Z | X | ALPHA | BETA | PHI | CN | CLM | CY | CYN | CBL | CA |
|---|---|---|---|---|---|---|---|---|---|---|---|
| -399.830 | 200.420 | 899.08000 | -10.26600 | -5.09200 | -.07604 | -.31779 | .09158 | .18786 | -.05709 | .02001 | .24422 |
| -399.940 | 275.060 | 898.73000 | -10.26500 | -5.09250 | -.07432 | -.31933 | .09275 | .18808 | -.05715 | .02043 | .24427 |
| -399.810 | 425.020 | 898.85000 | -10.26500 | -5.09240 | -.07423 | -.31943 | .09292 | .18788 | -.05710 | .02041 | .24449 |
| -400.160 | 500.480 | 899.24000 | -10.26500 | -5.09230 | -.07418 | -.31957 | .09300 | .18805 | -.05717 | .02042 | .24477 |
| -399.840 | 600.650 | 899.48000 | -10.26500 | -5.09230 | -.07425 | -.31991 | .09335 | .18797 | -.05714 | .02041 | .24585 |
| | GRADIENT | .00000 | .00000 | .00000 | .00000 | .00000 | .00000 | .00000 | .00000 | .00000 | .00000 |

IA143, AEDC V41A-P8A, O/ET W/R.H. SRB SEPARATING (OVX724) ( 24 MAY 77 )

REFERENCE DATA

SREF = 2690.0000 SQ.FT. XMRP = 1097.0000 IN. XT
LREF = 1290.3000 INCHES YMRP = .0000 IN. YT
BREF = 1290.3000 INCHES ZMRP = 450.0000 IN. ZT
SCALE = .0100

PARAMETRIC DATA

ALPHA = -10.000 BETA = -5.000
DALPHA = -10.000 DBETA = .000
X = 900.000 MACH = 4.500
JET PC = .000

RUN NO. 2698/ 0 RN/L = 2.37 GRADIENT INTERVAL = -5.00/ 5.00

| Y | Z | X | ALPHA | BETA | PHI | CN | CLM | CY | CYN | CBL | CA |
|---|---|---|---|---|---|---|---|---|---|---|---|
| -101.770 | 300.300 | 899.05000 | -10.26600 | -5.09300 | -.07269 | -.31993 | .09360 | .18704 | -.05647 | .02051 | .24897 |
| -100.370 | 400.190 | 899.13000 | -10.26600 | -5.09240 | -.07403 | -.32088 | .09444 | .18806 | -.05718 | .02049 | .24961 |
| -100.300 | 500.190 | 899.17000 | -10.26600 | -5.09240 | -.07403 | -.32142 | .09469 | .18829 | -.05728 | .02052 | .25052 |
| | GRADIENT | .00000 | .00000 | .00000 | .00000 | .00000 | .00000 | .00000 | .00000 | .00000 | .00000 |

RUN NO. 2699/ 0 RN/L = 2.38 GRADIENT INTERVAL = -5.00/ 5.00

| Y | Z | X | ALPHA | BETA | PHI | CN | CLM | CY | CYN | CBL | CA |
|---|---|---|---|---|---|---|---|---|---|---|---|
| -301.770 | 501.570 | 899.37000 | -10.26600 | -5.09240 | -.07404 | -.32137 | .09466 | .18828 | -.05727 | .02051 | .25041 |
| -300.800 | 400.080 | 899.11000 | -10.26600 | -5.09230 | -.07410 | -.32117 | .09468 | .18812 | -.05724 | .02047 | .25056 |
| -300.840 | 300.360 | 899.12000 | -10.26600 | -5.09230 | -.07401 | -.32117 | .09462 | .18821 | -.05727 | .02050 | .25029 |
| | GRADIENT | .00000 | .00000 | .00000 | .00000 | .00000 | .00000 | .00000 | .00000 | .00000 | .00000 |

IA143, AEDC V41A-P8A, O/ET W/R.H. SRB SEPARATING (OVX725) ( 24 MAY 77 )

REFERENCE DATA

SREF = 2690.0000 SQ.FT. XMRP = 1097.0000 IN. XT
LREF = 1290.3000 INCHES YMRP = .0000 IN. YT
BREF = 1290.3000 INCHES ZMRP = 450.0000 IN. ZT
SCALE = .0100

PARAMETRIC DATA

ALPHA = -10.000 BETA = -5.000
DALPHA = -15.000 DBETA = .000
X = 900.000 MACH = 4.500
JET PC = .000

RUN NO. 2727/ 0 RN/L = 2.37 GRADIENT INTERVAL = -5.00/ 5.00

| Y | Z | X | ALPHA | BETA | PHI | CN | CLM | CY | CYN | CBL | CA |
|---|---|---|---|---|---|---|---|---|---|---|---|
| -100.420 | 300.400 | 899.24000 | -10.26600 | -5.09390 | -.07095 | -.31819 | .09223 | .18589 | -.05555 | .02056 | .24726 |
| -99.888 | 400.350 | 899.11000 | -10.26600 | -5.09260 | -.07440 | -.32092 | .09421 | .18822 | -.05718 | .02044 | .24842 |
| -100.210 | 500.410 | 899.23000 | -10.26600 | -5.09250 | -.07414 | -.32129 | .09458 | .18834 | -.05726 | .02050 | .24966 |
| | GRADIENT | .00000 | .00000 | .00000 | .00000 | .00000 | .00000 | .00000 | .00000 | .00000 | .00000 |

RUN NO. 2728/ 0 RN/L = 2.37 GRADIENT INTERVAL = -5.00/ 5.00

| Y | Z | X | ALPHA | BETA | PHI | CN | CLM | CY | CYN | CBL | CA |
|---|---|---|---|---|---|---|---|---|---|---|---|
| -301.500 | 502.330 | 899.74000 | -10.26600 | -5.09240 | -.07423 | -.32154 | .09473 | .18826 | -.05725 | .02047 | .25027 |
| -300.350 | 400.190 | 899.20000 | -10.26600 | -5.09260 | -.07422 | -.32153 | .09476 | .18836 | -.05727 | .02049 | .25042 |
| -301.050 | 300.550 | 899.21000 | -10.26600 | -5.09250 | -.07422 | -.32165 | .09475 | .18840 | -.05728 | .02049 | .25037 |
| | GRADIENT | .00000 | .00000 | .00000 | .00000 | .00000 | .00000 | .00000 | .00000 | .00000 | .00000 |

IA143, AEDC V41A-P8A, O/ET W/R.H. SRB SEPARATING (OVX726) ( 24 MAY 77 )

REFERENCE DATA

SREF = 2690.0000 SQ.FT. XMRP = 1097.0000 IN. XT
LREF = 1290.3000 INCHES YMRP = .0000 IN. YT
BREF = 1290.3000 INCHES ZMRP = 450.0000 IN. ZT
SCALE = .0100

PARAMETRIC DATA

ALPHA = -10.000 BETA = -5.000
DALPHA = -10.000 DBETA = -12.000
X = 900.000 MACH = 4.500
JET PC = .000

RUN NO. 2704/ 0 RN/L = 2.39 GRADIENT INTERVAL = -5.00/ 5.00

| Y | Z | X | ALPHA | BETA | PHI | CN | CLM | CY | CYN | CBL | CA |
|---|---|---|---|---|---|---|---|---|---|---|---|
| -100.730 | 300.250 | 899.30000 | -10.26600 | -5.09470 | -.06718 | -.31390 | .08940 | .18289 | -.05373 | .02062 | .24700 |
| -101.160 | 400.300 | 899.42000 | -10.26600 | -5.09240 | -.07418 | -.32066 | .09403 | .18806 | -.05720 | .02046 | .24797 |
| -101.680 | 500.560 | 899.49000 | -10.26600 | -5.09260 | -.07408 | -.32088 | .09433 | .18823 | -.05720 | .02050 | .24912 |
| | GRADIENT | .00000 | .00000 | .00000 | .00000 | .00000 | .00000 | .00000 | .00000 | .00000 | .00000 |

RUN NO. 2705/ 0 RN/L = 2.39 GRADIENT INTERVAL = -5.00/ 5.00

| Y | Z | X | ALPHA | BETA | PHI | CN | CLM | CY | CYN | CBL | CA |
|---|---|---|---|---|---|---|---|---|---|---|---|
| -300.110 | 501.830 | 899.68000 | -10.26600 | -5.09240 | -.07407 | -.32134 | .09467 | .18823 | -.05728 | .02051 | .25045 |
| -299.580 | 400.220 | 899.10000 | -10.26600 | -5.09250 | -.07400 | -.32089 | .09437 | .18813 | -.05718 | .02048 | .24923 |
| -299.700 | 300.330 | 899.27000 | -10.26600 | -5.09250 | -.07415 | -.32069 | .09407 | .18820 | -.05717 | .02046 | .24834 |
| | GRADIENT | .00000 | .00000 | .00000 | .00000 | .00000 | .00000 | .00000 | .00000 | .00000 | .00000 |

IA143, AEDC V41A-P8A, O/ET W/R.H. SRB SEPARATING (OVX727) ( 24 MAY 77 )

REFERENCE DATA

SREF = 2690.0000 SQ.FT. XMRP = 1097.0000 IN. XT
LREF = 1290.3000 INCHES YMRP = .0000 IN. YT
BREF = 1290.3000 INCHES ZMRP = 450.0000 IN. ZT
SCALE = .0100

PARAMETRIC DATA

ALPHA = -10.000 BETA = -5.000
DALPHA = -15.000 DBETA = -12.000
X = 900.000 MACH = 4.500
JET PC = .000

RUN NO. 2720/ 0 RN/L = 2.38 GRADIENT INTERVAL = -5.00/ 5.00

| Y | Z | X | ALPHA | BETA | PHI | CN | CLM | CY | CYN | CBL | CA |
|---|---|---|---|---|---|---|---|---|---|---|---|
| -100.760 | 300.360 | 899.21000 | -10.26500 | -5.09610 | -.06212 | -.30983 | .08666 | .17822 | -.05092 | .02058 | .24536 |
| -100.850 | 400.500 | 899.54000 | -10.26500 | -5.09310 | -.07204 | -.31882 | .09256 | .18629 | -.05598 | .02045 | .24611 |
| -101.110 | 500.780 | 899.70000 | -10.26500 | -5.09240 | -.07422 | -.32040 | .09383 | .18794 | -.05708 | .02039 | .24750 |
| | GRADIENT | .00000 | .00000 | .00000 | .00000 | .00000 | .00000 | .00000 | .00000 | .00000 | .00000 |

RUN NO. 2721/ 0 RN/L = 2.38 GRADIENT INTERVAL = -5.00/ 5.00

| Y | Z | X | ALPHA | BETA | PHI | CN | CLM | CY | CYN | CBL | CA |
|---|---|---|---|---|---|---|---|---|---|---|---|
| -301.780 | 502.540 | 900.06000 | -10.26500 | -5.09240 | -.07414 | -.32038 | .09394 | .18781 | -.05703 | .02040 | .24786 |
| -299.870 | 400.210 | 899.11000 | -10.26500 | -5.09240 | -.07415 | -.32019 | .09375 | .18802 | -.05710 | .02042 | .24690 |
| -300.080 | 300.470 | 899.34000 | -10.26500 | -5.09240 | -.07435 | -.32013 | .09354 | .18792 | -.05708 | .02038 | .24632 |
| | GRADIENT | .00000 | .00000 | .00000 | .00000 | .00000 | .00000 | .00000 | .00000 | .00000 | .00000 |

IA143, AEDC V41A-P8A, O/ET W/R.H. SRB SEPARATING (OVX728) ( 24 MAY 77 )

REFERENCE DATA

SREF = 2690.0000 SQ.FT. XMRP = 1097.0000 IN. XT
LREF = 1290.3000 INCHES YMRP = .0000 IN. YT
BREF = 1290.3000 INCHES ZMRP = 450.0000 IN. ZT
SCALE = .0100

PARAMETRIC DATA

ALPHA = -10.000 BETA = -5.000
DALPHA = -12.000 DBETA = -6.000
X = 900.000 MACH = 4.500
JET PC = .000

RUN NO. 2710/ 0 RN/L = 2.39 GRADIENT INTERVAL = -5.00/ 5.00

| Y | Z | X | ALPHA | BETA | PHI | CN | CLM | CY | CYN | CBL | CA |
|---|---|---|---|---|---|---|---|---|---|---|---|
| -197.510 | 298.610 | 900.25000 | -10.26600 | -5.09240 | -.07415 | -.32062 | .09405 | .18791 | -.05706 | .02041 | .24837 |
| -200.560 | 400.160 | 899.15000 | -10.26600 | -5.09250 | -.07406 | -.32101 | .09441 | .18801 | -.05711 | .02045 | .24938 |
| -200.700 | 500.230 | 899.09000 | -10.26600 | -5.09250 | -.07410 | -.32122 | .09459 | .18810 | -.05717 | .02046 | .25027 |
| | GRADIENT | .00000 | .00000 | .00000 | .00000 | .00000 | .00000 | .00000 | .00000 | .00000 | .00000 |

IA143, AEDC V41A-P8A, O/ET W/R.H. SRB SEPARATING (OVX729) ( 24 MAY 77 )

REFERENCE DATA

SREF = 2690.0000 SQ.FT. XMRP = 1097.0000 IN. XT
LREF = 1290.3000 INCHES YMRP = .0000 IN. YT
BREF = 1290.3000 INCHES ZMRP = 450.0000 IN. ZT
SCALE = .0100

PARAMETRIC DATA

ALPHA = -10.000 BETA = -5.000
DALPHA = -15.000 DBETA = -6.000
X = 900.000 MACH = 4.500
JET PC = .000

RUN NO. 2724/ 0 RN/L = 2.37 GRADIENT INTERVAL = -5.00/ 5.00

| Y | Z | X | ALPHA | BETA | PHI | CN | CLM | CY | CYN | CBL | CA |
|---|---|---|---|---|---|---|---|---|---|---|---|
| -197.870 | 399.600 | 900.54000 | -10.26500 | -5.09250 | -.07421 | -.32054 | .09408 | .18793 | -.05704 | .02040 | .24830 |
| -201.210 | 600.670 | 899.38000 | -10.26600 | -5.09240 | -.07413 | -.32117 | .09461 | .18826 | -.05726 | .02049 | .25012 |
| -201.660 | 801.740 | 899.83000 | -10.26600 | -5.09250 | -.07423 | -.32138 | .09468 | .18842 | -.05732 | .02051 | .25033 |
| -200.770 | 1000.500 | 899.56000 | -10.26600 | -5.09250 | -.07420 | -.32140 | .09469 | .18834 | -.05728 | .02049 | .25024 |
| | GRADIENT | .00000 | .00000 | .00000 | .00000 | .00000 | .00000 | .00000 | .00000 | .00000 | .00000 |

IA143, AEDC V41A-P8A, O/ET W/R.H. SRB SEPARATING (OVX730) ( 24 MAY 77 )

REFERENCE DATA

SREF = 2690.0000 SQ.FT. XMRP = 1097.0000 IN. XT
LREF = 1290.3000 INCHES YMRP = .0000 IN. YT
BREF = 1290.3000 INCHES ZMRP = 450.0000 IN. ZT
SCALE = .0100

PARAMETRIC DATA

ALPHA = -10.000 BETA = -5.000
DALPHA = -10.000 DBETA = -4.000
X = 900.000 MACH = 4.500
JET PC = .000

RUN NO. 2700/ 0 RN/L = 2.38 GRADIENT INTERVAL = -5.00/ 5.00

| Y | Z | X | ALPHA | BETA | PHI | CN | CLM | CY | CYN | CBL | CA |
|---|---|---|---|---|---|---|---|---|---|---|---|
| -200.490 | 300.160 | 899.20000 | -10.26600 | -5.09240 | -.07403 | -.32112 | .09449 | .18818 | -.05723 | .02049 | .24963 |
| -199.880 | 350.100 | 899.24000 | -10.26600 | -5.09230 | -.07398 | -.32128 | .09457 | .18823 | -.05727 | .02050 | .24993 |
| -200.530 | 400.110 | 899.17000 | -10.26600 | -5.09240 | -.07401 | -.32100 | .09457 | .18815 | -.05724 | .02050 | .25010 |
| | GRADIENT | .00000 | .00000 | .00000 | .00000 | .00000 | .00000 | .00000 | .00000 | .00000 | .00000 |

RUN NO. 2701/ 0 RN/L = 2.39 GRADIENT INTERVAL = -5.00/ 5.00

| Y | Z | X | ALPHA | BETA | PHI | CN | CLM | CY | CYN | CBL | CA |
|---|---|---|---|---|---|---|---|---|---|---|---|
| -300.880 | 400.980 | 899.36000 | -10.26600 | -5.09240 | -.07408 | -.32127 | .09465 | .18826 | -.05728 | .02050 | .25040 |
| -300.830 | 350.230 | 899.12000 | -10.26600 | -5.09250 | -.07405 | -.32143 | .09472 | .18842 | -.05732 | .02053 | .25058 |
| -300.400 | 300.310 | 899.21000 | -10.26600 | -5.09250 | -.07404 | -.32120 | .09464 | .18836 | -.05730 | .02053 | .25030 |
| | GRADIENT | .00000 | .00000 | .00000 | .00000 | .00000 | .00000 | .00000 | .00000 | .00000 | .00000 |

IA143, AEDC V41A-P8A, O/ET W/R.H. SRB SEPARATING (OVX731) ( 24 MAY 77 )

REFERENCE DATA

SREF = 2690.0000 SQ.FT. XMRP = 1097.0000 IN. XT
LREF = 1290.3000 INCHES YMRP = .0000 IN. YT
BREF = 1290.3000 INCHES ZMRP = 450.0000 IN. ZT
SCALE = .0100

PARAMETRIC DATA

ALPHA = -10.000 BETA = -5.000
DALPHA = -15.000 DBETA = -4.000
X = 900.000 MACH = 4.500
JET PC = .000

RUN NO. 2725/ 0 RN/L = 2.37 GRADIENT INTERVAL = -5.00/ 5.00

| Y | Z | X | ALPHA | BETA | PHI | CN | CLM | CY | CYN | CBL | CA |
|---|---|---|---|---|---|---|---|---|---|---|---|
| -196.920 | 299.900 | 900.50000 | -10.26600 | -5.09260 | -.07430 | -.32071 | .09401 | .18824 | -.05715 | .02044 | .24803 |
| -200.210 | 350.290 | 899.25000 | -10.26600 | -5.09250 | -.07430 | -.32082 | .09416 | .18813 | -.05715 | .02043 | .24837 |
| -200.540 | 400.200 | 899.09000 | -10.26600 | -5.09250 | -.07419 | -.32129 | .09438 | .18828 | -.05720 | .02046 | .24885 |
| | GRADIENT | .00000 | .00000 | .00000 | .00000 | .00000 | .00000 | .00000 | .00000 | .00000 | .00000 |

RUN NO. 2726/ 0 RN/L = 2.37 GRADIENT INTERVAL = -5.00/ 5.00

| Y | Z | X | ALPHA | BETA | PHI | CN | CLM | CY | CYN | CBL | CA |
|---|---|---|---|---|---|---|---|---|---|---|---|
| -300.800 | 401.470 | 899.53000 | -10.26600 | -5.09250 | -.07423 | -.32151 | .09470 | .18846 | -.05733 | .02051 | .25004 |
| -299.440 | 350.430 | 899.30000 | -10.26600 | -5.09250 | -.07417 | -.32146 | .09463 | .18833 | -.05724 | .02048 | .24978 |
| -300.370 | 300.470 | 899.23000 | -10.26600 | -5.09260 | -.07421 | -.32135 | .09453 | .18835 | -.05725 | .02049 | .24939 |
| | GRADIENT | .00000 | .00000 | .00000 | .00000 | .00000 | .00000 | .00000 | .00000 | .00000 | .00000 |

IA143, AEDC V41A-P8A, O/ET W/R.H. SRB SEPARATING (OVX732) ( 24 MAY 77 )

REFERENCE DATA

SREF = 2690.0000 SQ.FT. XMRP = 1097.0000 IN. XT
LREF = 1290.3000 INCHES YMRP = .0000 IN. YT
BREF = 1290.3000 INCHES ZMRP = 450.0000 IN. ZT
SCALE = .0100

PARAMETRIC DATA

ALPHA = -10.000 BETA = -5.000
DALPHA = -10.000 DBETA = -8.000
X = 900.000 MACH = 4.500
JET PC = .000

RUN NO. 2703/ 0 RN/L = 2.39 GRADIENT INTERVAL = -5.00/ 5.00

| Y | Z | X | ALPHA | BETA | PHI | CN | CLM | CY | CYN | CBL | CA |
|---|---|---|---|---|---|---|---|---|---|---|---|
| -199.110 | 399.140 | 898.88000 | -10.26600 | -5.09240 | -.07408 | -.32104 | .09450 | .18803 | -.05717 | .02046 | .24972 |
| -200.550 | 350.270 | 899.25000 | -10.26600 | -5.09250 | -.07412 | -.32091 | .09430 | .18814 | -.05717 | .02047 | .24907 |
| -200.570 | 300.350 | 899.34000 | -10.26600 | -5.09250 | -.07411 | -.32079 | .09414 | .18821 | -.05720 | .02047 | .24855 |
| | GRADIENT | .00000 | .00000 | .00000 | .00000 | .00000 | .00000 | .00000 | .00000 | .00000 | .00000 |

RUN NO. 2702/ 0 RN/L = 2.39 GRADIENT INTERVAL = -5.00/ 5.00

| Y | Z | X | ALPHA | BETA | PHI | CN | CLM | CY | CYN | CBL | CA |
|---|---|---|---|---|---|---|---|---|---|---|---|
| -301.460 | 300.160 | 899.41000 | -10.26600 | -5.09250 | -.07407 | -.32113 | .09448 | .18826 | -.05724 | .02050 | .24960 |
| -300.480 | 350.070 | 899.13000 | -10.26600 | -5.09250 | -.07409 | -.32112 | .09454 | .18822 | -.05724 | .02050 | .24997 |
| -300.460 | 400.100 | 899.26000 | -10.26600 | -5.09240 | -.07414 | -.32125 | .09461 | .18820 | -.05726 | .02050 | .25030 |
| | GRADIENT | .00000 | .00000 | .00000 | .00000 | .00000 | .00000 | .00000 | .00000 | .00000 | .00000 |

IA143, AEDC V41A-P8A, O/ET W/R.H. SRB SEPARATING (OVX733) ( 24 MAY 77 )

REFERENCE DATA

SREF = 2690.0000 SQ.FT. XMRP = 1097.0000 IN. XT
LREF = 1290.3000 INCHES YMRP = .0000 IN. YT
BREF = 1290.3000 INCHES ZMRP = 450.0000 IN. ZT
SCALE = .0100

PARAMETRIC DATA

ALPHA = -10.000 BETA = -5.000
DALPHA = -15.000 DBETA = -8.000
X = 1200.000 MACH = 4.500
JET PC = .000

RUN NO. 2722/ 0 RN/L = 2.38 GRADIENT INTERVAL = -5.00/ 5.00

| Y | Z | X | ALPHA | BETA | PHI | CN | CLM | CY | CYN | CBL | CA |
|---|---|---|---|---|---|---|---|---|---|---|---|
| -198.840 | 299.520 | 900.51000 | -10.26600 | -5.09260 | -.07449 | -.32017 | .09343 | .18803 | -.05708 | .02037 | .24599 |
| -200.050 | 350.170 | 899.19000 | -10.26600 | -5.09250 | -.07433 | -.32021 | .09364 | .18801 | -.05707 | .02039 | .24707 |
| -200.230 | 400.370 | 899.15000 | -10.26500 | -5.09260 | -.07422 | -.32018 | .09382 | .18805 | -.05707 | .02042 | .24769 |
| | GRADIENT | .00000 | .00000 | .00000 | .00000 | .00000 | .00000 | .00000 | .00000 | .00000 | .00000 |

RUN NO. 2723/ 0 RN/L = 2.37 GRADIENT INTERVAL = -5.00/ 5.00

| Y | Z | X | ALPHA | BETA | PHI | CN | CLM | CY | CYN | CBL | CA |
|---|---|---|---|---|---|---|---|---|---|---|---|
| -301.420 | 401.530 | 899.44000 | -10.26600 | -5.09250 | -.07416 | -.32077 | .09421 | .18800 | -.05708 | .02042 | .24868 |
| -300.790 | 350.300 | 899.18000 | -10.26500 | -5.09260 | -.07418 | -.32061 | .09412 | .18827 | -.05718 | .02047 | .24833 |
| -300.820 | 300.370 | 899.10000 | -10.26500 | -5.09260 | -.07420 | -.32057 | .09407 | .18822 | -.05716 | .02045 | .24824 |
| | GRADIENT | .00000 | .00000 | .00000 | .00000 | .00000 | .00000 | .00000 | .00000 | .00000 | .00000 |

IA143, AEDC V41A-P8A, O/ET W/R.H. SRB SEPARATING (OVX734) ( 24 MAY 77 )

REFERENCE DATA

SREF = 2690.0000 SQ.FT. XMRP = 1097.0000 IN. XT
LREF = 1290.3000 INCHES YMRP = .0000 IN. YT
BREF = 1290.3000 INCHES ZMRP = 450.0000 IN. ZT
SCALE = .0100

PARAMETRIC DATA

ALPHA = -10.000 BETA = -5.000
DALPHA = -5.000 DBETA = 4.000
X = 1200.000 MACH = 4.500
JET PC = .000

RUN NO. 2678/ 0 RN/L = 2.38 GRADIENT INTERVAL = -5.00/ 5.00

| Y | Z | X | ALPHA | BETA | PHI | CN | CLM | CY | CYN | CBL | CA |
|---|---|---|---|---|---|---|---|---|---|---|---|
| -100.690 | 200.230 | 1199.00000 | -10.26600 | -5.09240 | -.07399 | -.32146 | .09461 | .18823 | -.05724 | .02051 | .25011 |
| -100.360 | 299.930 | 1199.00000 | -10.26600 | -5.09230 | -.07400 | -.32159 | .09475 | .18804 | -.05721 | .02048 | .25065 |
| -100.540 | 400.080 | 1199.10001 | -10.26600 | -5.09240 | -.07406 | -.32153 | .09478 | .18818 | -.05725 | .02049 | .25099 |
| -100.250 | 499.990 | 1199.20000 | -10.26600 | -5.09240 | -.07404 | -.32157 | .09474 | .18825 | -.05726 | .02050 | .25089 |
| -100.720 | 599.870 | 1199.20000 | -10.26600 | -5.09240 | -.07397 | -.32173 | .09480 | .18821 | -.05725 | .02051 | .25081 |
| | GRADIENT | .00000 | .00000 | .00000 | .00000 | .00000 | .00000 | .00000 | .00000 | .00000 | .00000 |

IA143, AEDC V41A-P8A, O/ET W/R.H. SRB SEPARATING (OVX734) ( 24 MAY 77 )

REFERENCE DATA

SREF = 2690.0000 SQ.FT. XMRP = 1097.0000 IN. XT
LREF = 1290.3000 INCHES YMRP = .0000 IN. YT
BREF = 1290.3000 INCHES ZMRP = 450.0000 IN. ZT
SCALE = .0100

PARAMETRIC DATA

ALPHA = -10.000 BETA = -5.000
DALPHA = -5.000 DBETA = 4.000
X = 1200.000 MACH = 4.500
JET PC = .000

RUN NO. 2679/ 0 RN/L = 2.38 GRADIENT INTERVAL = -5.00/ 5.00

| Y | Z | X | ALPHA | BETA | PHI | CN | CLM | CY | CYN | CBL | CA |
|---|---|---|---|---|---|---|---|---|---|---|---|
| -601.770 | 601.680 | 1199.20000 | -10.26600 | -5.09250 | -.07407 | -.32171 | .09482 | .18846 | -.05734 | .02055 | .25107 |
| -600.580 | 499.860 | 1199.10001 | -10.26600 | -5.09230 | -.07401 | -.32151 | .09474 | .18820 | -.05727 | .02051 | .25084 |
| -600.030 | 399.950 | 1199.10001 | -10.26600 | -5.09240 | -.07408 | -.32175 | .09485 | .18824 | -.05727 | .02050 | .25115 |
| -599.900 | 299.970 | 1199.10001 | -10.26600 | -5.09240 | -.07404 | -.32146 | .09473 | .18816 | -.05725 | .02050 | .25079 |
| -600.560 | 200.120 | 1199.00000 | -10.26600 | -5.09250 | -.07407 | -.32164 | .09479 | .18844 | -.05737 | .02055 | .25091 |
| | GRADIENT | .00000 | .00000 | .00000 | .00000 | .00000 | .00000 | .00000 | .00000 | .00000 | .00000 |

IA143, AEDC V41A-P8A, O/ET W/R.H. SRB SEPARATING (OVX735) ( 24 MAY 77 )

REFERENCE DATA

SREF = 2690.0000 SQ.FT. XMRP = 1097.0000 IN. XT
LREF = 1290.3000 INCHES YMRP = .0000 IN. YT
BREF = 1290.3000 INCHES ZMRP = 450.0000 IN. ZT
SCALE = .0100

PARAMETRIC DATA

ALPHA = -10.000 BETA = -5.000
DALPHA = -25.000 DBETA = 4.000
X = 1200.000 MACH = 4.500
JET PC = .000

RUN NO. 2747/ 0 RN/L = 2.37 GRADIENT INTERVAL = -5.00/ 5.00

| Y | Z | X | ALPHA | BETA | PHI | CN | CLM | CY | CYN | CBL | CA |
|---|---|---|---|---|---|---|---|---|---|---|---|
| -99.974 | 200.690 | 1199.10001 | -10.26600 | -5.09270 | -.07471 | -.32016 | .09332 | .18913 | -.05767 | .02059 | .24579 |
| -99.717 | 300.620 | 1198.89999 | -10.26600 | -5.09280 | -.07450 | -.32041 | .09348 | .18904 | -.05760 | .02060 | .24628 |
| -100.320 | 400.920 | 1199.10001 | -10.26600 | -5.09270 | -.07439 | -.32036 | .09364 | .18879 | -.05751 | .02058 | [illegible]4707 |
| -100.300 | 500.960 | 1199.10001 | -10.26600 | -5.09290 | -.07433 | -.32078 | .09400 | .18912 | -.05762 | .02066 | [illegible]05 |
| -100.620 | 600.800 | 1199.10001 | -10.26600 | -5.09280 | -.07421 | -.32132 | .09435 | .18916 | -.05765 | .02069 | [illegible] |
| | GRADIENT | .00000 | .00000 | .00000 | .00000 | .00000 | .00000 | .00000 | .00000 | .00000 | .00 |

RUN NO. 2748/ 0 RN/L = 2.37 GRADIENT INTERVAL = -5.00/ 5.00

| Y | Z | X | ALPHA | BETA | PHI | CN | CLM | CY | CYN | CBL | CA |
|---|---|---|---|---|---|---|---|---|---|---|---|
| -600.110 | 600.530 | 1199.00000 | -10.26700 | -5.09280 | -.07428 | -.32148 | .09455 | .18926 | -.05775 | .02071 | .24993 |
| -601.280 | 501.080 | 1199.10001 | -10.26700 | -5.09270 | -.07425 | -.32134 | .09455 | .18921 | -.05776 | .02071 | .25001 |
| -600.600 | 401.060 | 1199.20000 | -10.26700 | -5.09260 | -.07425 | -.32138 | .09451 | .18902 | -.05769 | .02067 | .24982 |
| -600.500 | 301.190 | 1199.20000 | -10.26700 | -5.09270 | -.07424 | -.32136 | .09451 | .18916 | -.05774 | .02070 | .24981 |
| -601.380 | 200.710 | 1198.89999 | -10.26700 | -5.09280 | -.07437 | -.32130 | .09449 | .18915 | -.05775 | .02069 | .24983 |
| | GRADIENT | .00000 | .00000 | .00000 | .00000 | .00000 | .00000 | .00000 | .00000 | .00000 | .00000 |

IA143, AEDC V41A-P8A, O/ET W/R.H. SRB SEPARATING (OVX736) ( 24 MAY 77 )

REFERENCE DATA

SREF = 2690.0000 SQ.FT. XMRP = 1097.0000 IN. XT
LREF = 1290.3000 INCHES YMRP = .0000 IN. YT
BREF = 1290.3000 INCHES ZMRP = 450.0000 IN. ZT
SCALE = .0100

PARAMETRIC DATA

ALPHA = -10.000 BETA = -5.000
DALPHA = -5.000 DBETA = -16.000
X = 1200.000 MACH = 4.500
JET PC = .000

RUN NO. 2751/ 0 RN/L = 2.38 GRADIENT INTERVAL = -5.00/ 5.00

| Y | Z | X | ALPHA | BETA | PHI | CN | CLM | CY | CYN | CBL | CA |
|---|---|---|---|---|---|---|---|---|---|---|---|
| -100.490 | 200.100 | 1199.20000 | -10.26600 | -5.09310 | -.07342 | -.31999 | .09339 | .18822 | -.05709 | .02064 | .24649 |
| -101.220 | 300.000 | 1199.60001 | -10.26600 | -5.09270 | -.07452 | -.32080 | .09401 | .18898 | -.05762 | .02061 | .24767 |
| -102.180 | 400.190 | 1199.80000 | -10.26700 | -5.09280 | -.07436 | -.32103 | .09425 | .18900 | -.05760 | .02064 | .24878 |
| -102.210 | 500.860 | 1199.89999 | -10.26700 | -5.09280 | -.07430 | -.32102 | .09438 | .18911 | -.05769 | .02069 | .24941 |
| -101.030 | 600.420 | 1199.30000 | -10.26700 | -5.09290 | -.07440 | -.32127 | .09443 | .18918 | -.05769 | .02068 | .24957 |
| | GRADIENT | .00000 | .00000 | .00000 | .00000 | .00000 | .00000 | .00000 | .00000 | .00000 | .00000 |

IA143, AEDC V41A-P8A, O/ET W/R.H. SRB SEPARATING (OVX737) ( 24 MAY 77 )

REFERENCE DATA

SREF = 2690.0000 SQ.FT. XMRP = 1097.0000 IN. XT
LREF = 1290.3000 INCHES YMRP = .0000 IN. YT
BREF = 1290.3000 INCHES ZMRP = 450.0000 IN. ZT
SCALE = .0100

PARAMETRIC DATA

ALPHA = -10.000 BETA = -5.000
DALPHA = -25.000 DBETA = -20.000
X = 1200.000 MACH = 4.500
JET PC = .000

RUN NO. 2746/ 0 RN/L = 2.37 GRADIENT INTERVAL = -5.00/ 5.00

| Y | Z | X | ALPHA | BETA | PHI | CN | CLM | CY | CYN | CBL | CA |
|---|---|---|---|---|---|---|---|---|---|---|---|
| -100.210 | 300.610 | 1199.20000 | -10.26500 | -5.09350 | -.07162 | -.31691 | .09054 | .18564 | -.05550 | .02036 | .24230 |
| -100.780 | 400.890 | 1199.50000 | -10.26500 | -5.09240 | -.07445 | -.31944 | .09252 | .18810 | -.05719 | .02041 | .24395 |
| -102.070 | 501.260 | 1199.89999 | -10.26500 | -5.09230 | -.07427 | -.31973 | .09309 | .18770 | -.05704 | .02036 | .24525 |
| -102.160 | 601.630 | 1200.10001 | -10.26500 | -5.09230 | -.07411 | -.31965 | .09308 | .18793 | -.05712 | .02042 | .24494 |
| | GRADIENT | .00000 | .00000 | .00000 | .00000 | .00000 | .00000 | .00000 | .00000 | .00000 | .00000 |

IA143, AEDC V41A-P8A, O/ET W/R.H. SRB SEPARATING (OVX738) ( 24 MAY 77 )

REFERENCE DATA

SREF = 2690.0000 SQ.FT. XMRP = 1097.0000 IN. XT
LREF = 1290.3000 INCHES YMRP = .0000 IN. YT
BREF = 1290.3000 INCHES ZMRP = 450.0000 IN. ZT
SCALE = .0100

PARAMETRIC DATA

ALPHA = -10.000 BETA = -5.000
DALPHA = -25.000 DBETA = -20.000
X = 1200.000 MACH = 4.500
JET PC = .000

RUN NO. 2754/ 0 RN/L = 2.37 GRADIENT INTERVAL = -5.00/ 5.00

| Y | Z | X | ALPHA | BETA | PHI | CN | CLM | CY | CYN | CBL | CA |
|---|---|---|---|---|---|---|---|---|---|---|---|
| -100.390 | 400.640 | 1199.20000 | -10.26600 | -5.09270 | -.07472 | -.31960 | .09238 | .18870 | -.05742 | .02049 | .24335 |
| -101.360 | 501.160 | 1199.80000 | -10.26600 | -5.09280 | -.07458 | -.31990 | .09302 | .18860 | -.05738 | .02051 | .24496 |
| -101.460 | 601.580 | 1200.20000 | -10.26500 | -5.09280 | -.07442 | -.31953 | .09288 | .18862 | -.05737 | .02053 | .24434 |
| | GRADIENT | .00000 | .00000 | .00000 | .00000 | .00000 | .00000 | .00000 | .00000 | .00000 | .00000 |

RUN NO. 2755/ 0 RN/L = 2.37 GRADIENT INTERVAL = -5.00/ 5.00

| Y | Z | X | ALPHA | BETA | PHI | CN | CLM | CY | CYN | CBL | CA |
|---|---|---|---|---|---|---|---|---|---|---|---|
| -599.750 | 600.420 | 1198.89999 | -10.26700 | -5.09270 | -.07432 | -.32111 | .09431 | .18899 | -.05764 | .02065 | .24936 |
| -600.280 | 500.850 | 1199.20000 | -10.26700 | -5.09270 | -.07430 | -.32101 | .09432 | .18894 | -.05762 | .02065 | .24957 |
| -600.580 | 400.950 | 1199.30000 | -10.26700 | -5.09270 | -.07430 | -.32092 | .09420 | .18880 | -.05755 | .02062 | .24886 |
| | GRADIENT | .00000 | .00000 | .00000 | .00000 | .00000 | .00000 | .00000 | .00000 | .00000 | .00000 |

IA143, AEDC V41A-P8A, O/ET W/R.H. SRB SEPARATING (OVX739) ( 24 MAY 77 )

REFERENCE DATA

SREF = 2690.0000 SQ.FT. XMRP = 1097.0000 IN. XT
LREF = 1290.3000 INCHES YMRP = .0000 IN. YT
BREF = 1290.3000 INCHES ZMRP = 450.0000 IN. ZT
SCALE = .0100

PARAMETRIC DATA

ALPHA = -10.000 BETA = -5.000
DALPHA = -5.000 DBETA = -20.000
X = 1200.000 MACH = 4.500
JET PC = .000

RUN NO. 2680/ 0 RN/L = 2.38 GRADIENT INTERVAL = -5.00/ 5.00

| Y | Z | X | ALPHA | BETA | PHI | CN | CLM | CY | CYN | CBL | CA |
|---|---|---|---|---|---|---|---|---|---|---|---|
| -599.800 | 200.200 | 1199.20000 | -10.26600 | -5.09240 | -.07406 | -.32160 | .09478 | .18825 | -.05728 | .02051 | .25092 |
| -599.790 | 299.700 | 1199.10001 | -10.26600 | -5.09240 | -.07406 | -.32161 | .09477 | .18819 | -.05726 | .02050 | .25092 |
| -600.450 | 399.860 | 1199.20000 | -10.26600 | -5.09230 | -.07408 | -.32146 | .09474 | .18811 | -.05726 | .02050 | .25080 |
| -601.160 | 499.860 | 1199.39999 | -10.26600 | -5.09250 | -.07404 | -.32149 | .09472 | .18832 | -.05728 | .02052 | .25078 |
| -600.810 | 599.980 | 1199.60001 | -10.26600 | -5.09230 | -.07408 | -.32167 | .09477 | .18830 | -.05732 | .02051 | .25085 |
| | GRADIENT | .00000 | .00000 | .00000 | .00000 | .00000 | .00000 | .00000 | .00000 | .00000 | .00000 |

IA143, AEDC V41A-P8A, O/ET W/R.H. SRB SEPARATING (OVX740) ( 24 MAY 77 )

REFERENCE DATA

SREF = 2690.0000 SQ.FT. XMRP = 1097.0000 IN. XT
LREF = 1290.3000 INCHES YMRP = .0000 IN. YT
BREF = 1290.3000 INCHES ZMRP = 450.0000 IN. ZT
SCALE = .0100

PARAMETRIC DATA

ALPHA = -10.000 BETA = -5.000
DALPHA = -5.000 DBETA = -20.000
X = 1200.000 MACH = 4.500
JET PC = .000

RUN NO. 2752/ 0 RN/L = 2.38 GRADIENT INTERVAL = -5.00/ 5.00

| Y | Z | X | ALPHA | BETA | PHI | CN | CLM | CY | CYN | CBL | CA |
|---|---|---|---|---|---|---|---|---|---|---|---|
| -600.560 | 200.160 | 1199.10001 | -10.26700 | -5.09280 | -.07435 | -.32121 | .09437 | .18910 | -.05767 | .02067 | .24935 |
| -599.660 | 299.750 | 1199.10001 | -10.26700 | -5.09280 | -.07434 | -.32109 | .09438 | .18921 | -.05772 | .02069 | .24952 |
| -600.210 | 399.840 | 1199.20000 | -10.26700 | -5.09290 | -.07437 | -.32129 | .09441 | .18925 | -.05773 | .02070 | .24947 |
| -600.920 | 499.880 | 1199.30000 | -10.26700 | -5.09280 | -.07430 | -.32134 | .09447 | .18926 | -.05773 | .02070 | .24967 |
| -600.760 | 599.990 | 1199.39999 | -10.26600 | -5.09280 | -.07425 | -.32117 | .09438 | .18924 | -.05771 | .02070 | .24946 |
| | GRADIENT | .00000 | .00000 | .00000 | .00000 | .00000 | .00000 | .00000 | .00000 | .00000 | .00000 |

IA143, AEDC V41A-P8A, O/ET W/R.H. SRB SEPARATING (OVX741) ( 24 MAY 77 )

REFERENCE DATA

SREF = 2690.0000 SQ.FT. XMRP = 1097.0000 IN. XT
LREF = 1290.3000 INCHES YMRP = .0000 IN. YT
BREF = 1290.3000 INCHES ZMRP = 450.0000 IN. ZT
SCALE = .0100

PARAMETRIC DATA

ALPHA = -10.000 BETA = -5.000
DALPHA = -10.000 DBETA = .000
X = 1200.000 MACH = 4.500
JET PC = .000

RUN NO. 2708/ 0 RN/L = 2.39 GRADIENT INTERVAL = -5.00/ 5.00

| Y | Z | X | ALPHA | BETA | PHI | CN | CLM | CY | CYN | CBL | CA |
|---|---|---|---|---|---|---|---|---|---|---|---|
| -199.940 | 300.180 | 1199.10001 | -10.26600 | -5.09250 | -.07414 | -.32136 | .09462 | .18824 | -.05725 | .02050 | .25028 |
| -200.040 | 400.120 | 1199.00000 | -10.26600 | -5.09240 | -.07407 | -.32127 | .09466 | .18823 | -.05725 | .02050 | .25044 |
| -200.480 | 500.170 | 1199.00000 | -10.26600 | -5.09230 | -.07406 | -.32135 | .09467 | .18802 | -.05716 | .02045 | .25043 |
| | GRADIENT | .00000 | .00000 | .00000 | .00000 | .00000 | .00000 | .00000 | .00000 | .00000 | .00000 |

RUN NO. 2709/ 0 RN/L = 2.39 GRADIENT INTERVAL = -5.00/ 5.00

| Y | Z | X | ALPHA | BETA | PHI | CN | CLM | CY | CYN | CBL | CA |
|---|---|---|---|---|---|---|---|---|---|---|---|
| -401.540 | 501.200 | 1199.20000 | -10.26600 | -5.09230 | -.07410 | -.32134 | .09463 | .18816 | -.05724 | .02048 | .25025 |
| -400.450 | 400.190 | 1199.20000 | -10.26600 | -5.09250 | -.07406 | -.32109 | .09457 | .18824 | -.05724 | .02050 | .25019 |
| -401.060 | 300.470 | 1199.00000 | -10.26600 | -5.09240 | -.07408 | -.32132 | .09465 | .18821 | -.05725 | .02048 | .25047 |
| | GRADIENT | .00000 | .00000 | .00000 | .00000 | .00000 | .00000 | .00000 | .00000 | .00000 | .00000 |

IA143, AEDC V41A-P8A, O/ET W/R.H. SRB SEPARATING (OVX742) ( 24 MAY 77 )

REFERENCE DATA

SREF = 2690.0000 SQ.FT. XMRP = 1097.0000 IN. XT
LREF = 1290.3000 INCHES YMRP = .0000 IN. YT
BREF = 1290.3000 INCHES ZMRP = 450.0000 IN. ZT
SCALE = .0100

PARAMETRIC DATA

ALPHA = -10.000 BETA = -5.000
DALPHA = -20.000 DBETA = .000
X = 1200.000 MACH = 4.500
JET PC = .000

RUN NO. 2740/ 0 RN/L = 2.38 GRADIENT INTERVAL = -5.00/ 5.00

| Y | Z | X | ALPHA | BETA | PHI | CN | CLM | CY | CYN | CBL | CA |
|---|---|---|---|---|---|---|---|---|---|---|---|
| -196.220 | 301.700 | 1201.20000 | -10.26600 | -5.09250 | -.07413 | -.32093 | .09432 | .18821 | -.05722 | .02048 | .24881 |
| -200.300 | 400.550 | 1198.89999 | -10.26600 | -5.09250 | -.07413 | -.32123 | .09458 | .18835 | -.05728 | .02051 | .24972 |
| -200.110 | 500.460 | 1198.89999 | -10.26600 | -5.09240 | -.07416 | -.32151 | .09469 | .18847 | -.05736 | .02053 | .25022 |
| | GRADIENT | .00000 | .00000 | .00000 | .00000 | .00000 | .00000 | .00000 | .00000 | .00000 | .00000 |

RUN NO. 2741/ 0 RN/L = 2.38 GRADIENT INTERVAL = -5.00/ 5.00

| Y | Z | X | ALPHA | BETA | PHI | CN | CLM | CY | CYN | CBL | CA |
|---|---|---|---|---|---|---|---|---|---|---|---|
| -401.800 | 502.400 | 1199.60001 | -10.26600 | -5.09250 | -.07418 | -.32146 | .09470 | .18846 | -.05734 | .02052 | .25032 |
| -400.530 | 400.750 | 1199.10001 | -10.26600 | -5.09260 | -.07415 | -.32140 | .09466 | .18858 | -.05740 | .02056 | .25019 |
| -400.440 | 300.970 | 1199.20000 | -10.26600 | -5.09240 | -.07419 | -.32147 | .09468 | .18857 | -.05743 | .02056 | .25026 |
| | GRADIENT | .00000 | .00000 | .00000 | .00000 | .00000 | .00000 | .00000 | .00000 | .00000 | .00000 |

IA143, AEDC V41A-P8A, O/ET W/R.H. SRB SEPARATING (OVX743) ( 24 MAY 77 )

REFERENCE DATA

SREF = 2690.0000 SQ.FT. XMRP = 1097.0000 IN. XT
LREF = 1290.3000 INCHES YMRP = .0000 IN. YT
BREF = 1290.3000 INCHES ZMRP = 450.0000 IN. ZT
SCALE = .0100

PARAMETRIC DATA

ALPHA = -10.000 BETA = -5.000
DALPHA = -10.000 DBETA = -12.000
X = 1200.000 MACH = 4.500
JET PC = .000

RUN NO. 2706/ 0 RN/L = 2.39 GRADIENT INTERVAL = -5.00/ 5.00

| Y | Z | X | ALPHA | BETA | PHI | CN | CLM | CY | CYN | CBL | CA |
|---|---|---|---|---|---|---|---|---|---|---|---|
| -200.400 | 300.250 | 1199.10001 | -10.26600 | -5.09240 | -.07405 | -.32079 | .09432 | .18802 | -.05715 | .02046 | .24914 |
| -200.620 | 400.130 | 1199.20000 | -10.26600 | -5.09250 | -.07412 | -.32144 | .09466 | .18827 | -.05726 | .02050 | .25031 |
| -201.470 | 500.340 | 1199.39999 | -10.26600 | -5.09230 | -.07405 | -.32121 | .09460 | .18815 | -.05725 | .02049 | .25020 |
| | GRADIENT | .00000 | .00000 | .00000 | .00000 | .00000 | .00000 | .00000 | .00000 | .00000 | .00000 |

RUN NO. 2707/ 0 RN/L = 2.39 GRADIENT INTERVAL = -5.00/ 5.00

| Y | Z | X | ALPHA | BETA | PHI | CN | CLM | CY | CYN | CBL | CA |
|---|---|---|---|---|---|---|---|---|---|---|---|
| -401.800 | 501.460 | 1199.50000 | -10.26600 | -5.09240 | -.07407 | -.32137 | .09468 | .18838 | -.05731 | .02052 | .25039 |
| -400.490 | 400.120 | 1198.89999 | -10.26600 | -5.09240 | -.07405 | -.32123 | .09463 | .18822 | -.05724 | .02049 | .25039 |
| -400.250 | 300.390 | 1199.20000 | -10.26600 | -5.09240 | -.07408 | -.32139 | .09469 | .18827 | -.05727 | .02049 | .25056 |
| | GRADIENT | .00000 | .00000 | .00000 | .00000 | .00000 | .00000 | .00000 | .00000 | .00000 | .00000 |

IA143, AEDC V41A-P8A, O/ET W/R.H. SRB SEPARATING (OVX744) ( 24 MAY 77 )

REFERENCE DATA

SREF = 2690.0000 SQ.FT. XMRP = 1097.0000 IN. XT
LREF = 1290.3000 INCHES YMRP = .0000 IN. YT
BREF = 1290.3000 INCHES ZMRP = 450.0000 IN. ZT
SCALE = .0100

PARAMETRIC DATA

ALPHA = -10.000 BETA = -5.000
DALPHA = -20.000 DBETA = -12.000
X = 1200.000 MACH = 4.500
JET PC = .000

RUN NO. 2734/ 0 RN/L = 2.38 GRADIENT INTERVAL = -5.00/ 5.00

| Y | Z | X | ALPHA | BETA | PHI | CN | CLM | CY | CYN | CBL | CA |
|---|---|---|---|---|---|---|---|---|---|---|---|
| -198.010 | 300.480 | 1201.30000 | -10.26500 | -5.09250 | -.07431 | -.32018 | .09349 | .18809 | -.05709 | .02040 | .24593 |
| -199.230 | 400.370 | 1199.20000 | -10.26500 | -5.09260 | -.07428 | -.32019 | .09367 | .18804 | -.05709 | .02041 | .24659 |
| -201.630 | 500.480 | 1199.10001 | -10.26500 | -5.09260 | -.07425 | -.32056 | .09406 | .18818 | -.05714 | .02044 | .24814 |
| | GRADIENT | .00000 | .00000 | .00000 | .00000 | .00000 | .00000 | .00000 | .00000 | .00000 | .00000 |

RUN NO. 2735/ 0 RN/L = 2.38 GRADIENT INTERVAL = -5.00/ 5.00

| Y | Z | X | ALPHA | BETA | PHI | CN | CLM | CY | CYN | CBL | CA |
|---|---|---|---|---|---|---|---|---|---|---|---|
| -402.280 | 502.790 | 1200.30000 | -10.26600 | -5.09250 | -.07421 | -.32158 | .09470 | .18849 | -.05735 | .02052 | .25014 |
| -400.390 | 400.550 | 1199.10001 | -10.26600 | -5.09250 | -.07420 | -.32142 | .09469 | .18843 | -.05734 | .02052 | .25013 |
| -400.280 | 300.810 | 1199.10001 | -10.26600 | -5.09250 | -.07415 | -.32112 | .09448 | .18819 | -.05720 | .02047 | .24942 |
| | GRADIENT | .00000 | .00000 | .00000 | .00000 | .00000 | .00000 | .00000 | .00000 | .00000 | .00000 |

IA143, AEDC V41A-P8A, O/ET W/R.H. SRB SEPARATING (OVX745) ( 24 MAY 77 )

REFERENCE DATA

SREF = 2690.0000 SQ.FT. XMRP = 1097.0000 IN. XT
LREF = 1290.3000 INCHES YMRP = .0000 IN. YT
BREF = 1290.3000 INCHES ZMRP = 450.0000 IN. ZT
SCALE = .0100

PARAMETRIC DATA

ALPHA = -10.000 BETA = -5.000
DALPHA = -15.000 DBETA = -4.000
X = 1200.000 MACH = 4.500
JET PC = .000

RUN NO. 2729/ 0 RN/L = 2.37 GRADIENT INTERVAL = -5.00/ 5.00

| Y | Z | X | ALPHA | BETA | PHI | CN | CLM | CY | CYN | CBL | CA |
|---|---|---|---|---|---|---|---|---|---|---|---|
| -197.000 | 399.470 | 1200.30000 | -10.26600 | -5.09260 | -.07428 | -.32150 | .09474 | .18841 | -.05733 | .02051 | .25028 |
| -200.740 | 450.440 | 1199.10001 | -10.26600 | -5.09250 | -.07423 | -.32142 | .09472 | .18840 | -.05732 | .02051 | .25032 |
| -200.160 | 500.360 | 1199.10001 | -10.26600 | -5.09270 | -.07421 | -.32151 | .09470 | .18859 | -.05736 | .02055 | .25019 |
| | GRADIENT | .00000 | .00000 | .00000 | .00000 | .00000 | .00000 | .00000 | .00000 | .00000 | .00000 |

RUN NO. 2730/ 0 RN/L = 2.38 GRADIENT INTERVAL = -5.00/ 5.00

| Y | Z | X | ALPHA | BETA | PHI | CN | CLM | CY | CYN | CBL | CA |
|---|---|---|---|---|---|---|---|---|---|---|---|
| -300.590 | 500.960 | 1199.20000 | -10.26600 | -5.09260 | -.07420 | -.32150 | .09470 | .18842 | -.05730 | .02051 | .25021 |
| -300.420 | 450.230 | 1199.10001 | -10.26600 | -5.09250 | -.07421 | -.32143 | .09470 | .18838 | -.05732 | .02050 | .25021 |
| -300.500 | 400.260 | 1199.10001 | -10.26600 | -5.09250 | -.07421 | -.32133 | .09470 | .18838 | -.05731 | .02051 | .25030 |
| | GRADIENT | .00000 | .00000 | .00000 | .00000 | .00000 | .00000 | .00000 | .00000 | .00000 | .00000 |

IA143, AEDC V41A-P8A, O/ET W/R.H. SRB SEPARATING (OVX746) ( 24 MAY 77 )

REFERENCE DATA

SREF = 2690.0000 SQ.FT. XMRP = 1097.0000 IN. XT
LREF = 1290.3000 INCHES YMRP = .0000 IN. YT
BREF = 1290.3000 INCHES ZMRP = 450.0000 IN. ZT
SCALE = .0100

PARAMETRIC DATA

ALPHA = -10.000 BETA = -5.000
DALPHA = -20.000 DBETA = -4.000
X = 1200.000 MACH = 4.500
JET PC = .000

RUN NO. 2736/ 0 RN/L = 2.38 GRADIENT INTERVAL = -5.00/ 5.00

| Y | Z | X | ALPHA | BETA | PHI | CN | CLM | CY | CYN | CBL | CA |
|---|---|---|---|---|---|---|---|---|---|---|---|
| -197.360 | 401.310 | 1201.10001 | -10.26600 | -5.09240 | -.07413 | -.32101 | .09431 | .18818 | -.05719 | .02046 | .24876 |
| -200.230 | 450.550 | 1199.10001 | -10.26600 | -5.09250 | -.07416 | -.32104 | .09443 | .18803 | -.05714 | .02044 | .24913 |
| -199.720 | 500.560 | 1199.10001 | -10.26600 | -5.09240 | -.07408 | -.32132 | .09461 | .18833 | -.05729 | .02051 | .24976 |
| | GRADIENT | .00000 | .00000 | .00000 | .00000 | .00000 | .00000 | .00000 | .00000 | .00000 | .00000 |

RUN NO. 2737/ 0 RN/L = 2.38 GRADIENT INTERVAL = -5.00/ 5.00

| Y | Z | X | ALPHA | BETA | PHI | CN | CLM | CY | CYN | CBL | CA |
|---|---|---|---|---|---|---|---|---|---|---|---|
| -300.180 | 501.260 | 1199.39999 | -10.26600 | -5.09250 | -.07420 | -.32143 | .09469 | .18849 | -.05738 | .02054 | .25030 |
| -299.930 | 450.500 | 1199.10001 | -10.26600 | -5.09250 | -.07419 | -.32131 | .09468 | .18858 | -.05740 | .02055 | .25026 |
| -300.010 | 400.520 | 1199.10001 | -10.26600 | -5.09260 | -.07417 | -.32142 | .09467 | .18843 | -.05731 | .02052 | .25016 |
| | GRADIENT | .00000 | .00000 | .00000 | .00000 | .00000 | .00000 | .00000 | .00000 | .00000 | .00000 |

IA143, AEDC V41A-P8A, O/ET W/R.H. SRB SEPARATING (OVX747) ( 24 MAY 77 )

REFERENCE DATA

SREF = 2690.0000 SQ.FT. XMRP = 1097.0000 IN. XT
LREF = 1290.3000 INCHES YMRP = .0000 IN. YT
BREF = 1290.3000 INCHES ZMRP = 450.0000 IN. ZT
SCALE = .0100

PARAMETRIC DATA

ALPHA = -10.000 BETA = -5.000
DALPHA = -15.000 DBETA = -8.000
X = 1200.000 MACH = 4.500
JET PC = .000

RUN NO. 2732/ 0 RN/L = 2.38 GRADIENT INTERVAL = -5.00/ 5.00

| Y | Z | X | ALPHA | BETA | PHI | CN | CLM | CY | CYN | CBL | CA |
|---|---|---|---|---|---|---|---|---|---|---|---|
| -197.850 | 399.110 | 1200.39999 | -10.26600 | -5.09250 | -.07413 | -.32121 | .09452 | .18830 | -.05723 | .02049 | .24944 |
| -200.480 | 450.280 | 1199.00000 | -10.26600 | -5.09240 | -.07417 | -.32145 | .09465 | .18826 | -.05725 | .02048 | .24992 |
| -200.270 | 500.300 | 1199.00000 | -10.26600 | -5.09250 | -.07418 | -.32129 | .09464 | .18825 | -.05727 | .02049 | .25011 |
| | GRADIENT | .00000 | .00000 | .00000 | .00000 | .00000 | .00000 | .00000 | .00000 | .00000 | .00000 |

IA143, AEDC V41A-P8A, O/ET W/R.H. SRB SEPARATING (OVX748) ( 24 MAY 77 )

REFERENCE DATA

SREF = 2690.0000 SQ.FT. XMRP = 1097.0000 IN. XT
LREF = 1290.3000 INCHES YMRP = .0000 IN. YT
BREF = 1290.3000 INCHES ZMRP = 450.0000 IN. ZT
SCALE = .0100

PARAMETRIC DATA

ALPHA = -10.000 BETA = -5.000
DALPHA = -20.000 DBETA = -8.000
X = 1200.000 MACH = 4.500
JET PC = .000

RUN NO. 2739/ 0 RN/L = 2.38 GRADIENT INTERVAL = -5.00/ 5.00

| Y | Z | X | ALPHA | BETA | PHI | CN | CLM | CY | CYN | CBL | CA |
|---|---|---|---|---|---|---|---|---|---|---|---|
| -200.050 | 499.300 | 1198.50000 | -10.26500 | -5.09260 | -.07412 | -.32080 | .09418 | .18809 | -.05711 | .02045 | .24840 |
| -199.560 | 450.410 | 1199.10001 | -10.26600 | -5.09260 | -.07425 | -.32073 | .09407 | .18826 | -.05719 | .02046 | .24801 |
| -200.710 | 400.490 | 1199.00000 | -10.26500 | -5.09250 | -.07426 | -.32055 | .09396 | .18815 | -.05715 | .02044 | .24773 |
| | GRADIENT | .00000 | .00000 | .00000 | .00000 | .00000 | .00000 | .00000 | .00000 | .00000 | .00000 |

RUN NO. 2738/ 0 RN/L = 2.38 GRADIENT INTERVAL = -5.00/ 5.00

| Y | Z | X | ALPHA | BETA | PHI | CN | CLM | CY | CYN | CBL | CA |
|---|---|---|---|---|---|---|---|---|---|---|---|
| -301.200 | 400.110 | 1199.10001 | -10.26600 | -5.09260 | -.07409 | -.32111 | .09447 | .18844 | -.05729 | .02053 | .24928 |
| -300.290 | 450.430 | 1198.89999 | -10.26600 | -5.09250 | -.07408 | -.32131 | .09462 | .18843 | -.05732 | .02053 | .24985 |
| -300.120 | 500.260 | 1199.10001 | -10.26600 | -5.09260 | -.07421 | -.32154 | .09473 | .18842 | -.05730 | .02052 | .25025 |
| | GRADIENT | .00000 | .00000 | .00000 | .00000 | .00000 | .00000 | .00000 | .00000 | .00000 | .00000 |

IA143, AEDC V41A-P8A, O/ET W/R.H. SRB SEPARATING (OVX749) ( 24 MAY 77 )

REFERENCE DATA

SREF = 2690.0000 SQ.FT. XMRP = 1097.0000 IN. XT
LREF = 1290.3000 INCHES YMRP = .0000 IN. YT
BREF = 1290.3000 INCHES ZMRP = 450.0000 IN. ZT
SCALE = .0100

PARAMETRIC DATA

ALPHA = -10.000 BETA = -5.000
DALPHA = -15.000 DBETA = -8.000
X = 1200.000 MACH = 4.500
JET PC = .000

RUN NO. 2731/ 0 RN/L = 2.38 GRADIENT INTERVAL = -5.00/ 5.00

| Y | Z | X | ALPHA | BETA | PHI | CN | CLM | CY | CYN | CBL | CA |
|---|---|---|---|---|---|---|---|---|---|---|---|
| -298.670 | 300.310 | 1200.80000 | -10.26600 | -5.09250 | -.07423 | -.32130 | .09462 | .18829 | -.05727 | .02049 | .24993 |
| -300.430 | 400.110 | 1198.89999 | -10.26600 | -5.09250 | -.07423 | -.32137 | .09467 | .18838 | -.05730 | .02050 | .25011 |
| -299.840 | 450.350 | 1199.00000 | -10.26600 | -5.09250 | -.07420 | -.32138 | .09466 | .18852 | -.05737 | .02054 | .25016 |
| -300.200 | 500.240 | 1199.10001 | -10.26600 | -5.09260 | -.07418 | -.32151 | .09471 | .18856 | -.05736 | .02053 | .25030 |
| | GRADIENT | .00000 | .00000 | .00000 | .00000 | .00000 | .00000 | .00000 | .00000 | .00000 | .00000 |

IA143, AEDC V41A-P8A, O/ET W/R.H. SRB SEPARATING (OVX750) ( 24 MAY 77 )

REFERENCE DATA

SREF = 2690.0000 SQ.FT. XMRP = 1097.0000 IN. XT
LREF = 1290.3000 INCHES YMRP = .0000 IN. YT
BREF = 1290.3000 INCHES ZMRP = 450.0000 IN. ZT
SCALE = .0100

PARAMETRIC DATA

ALPHA = -10.000 BETA = -5.000
DALPHA = -18.000 DBETA = -8.000
X = 1200.000 MACH = 4.500
JET PC = .000

RUN NO. 2733/ 0 RN/L = 2.38 GRADIENT INTERVAL = -5.00/ 5.00

| Y | Z | X | ALPHA | BETA | PHI | CN | CLM | CY | CYN | CBL | CA |
|---|---|---|---|---|---|---|---|---|---|---|---|
| -298.830 | 401.180 | 1201.20000 | -10.26600 | -5.09250 | -.07423 | -.32135 | .09465 | .18841 | -.05732 | .02051 | .25000 |
| -300.690 | 600.340 | 1199.00000 | -10.26600 | -5.09240 | -.07418 | -.32146 | .09473 | .18843 | -.05733 | .02052 | .25036 |
| -301.540 | 801.190 | 1199.60001 | -10.26600 | -5.09250 | -.07423 | -.32156 | .09473 | .18856 | -.05737 | .02053 | .25042 |
| -301.040 | 1001.300 | 1199.70000 | -10.26600 | -5.09260 | -.07417 | -.32125 | .09465 | .18843 | -.05730 | .02052 | .25024 |
| | GRADIENT | .00000 | .00000 | .00000 | .00000 | .00000 | .00000 | .00000 | .00000 | .00000 | .00000 |

IA143, AEDC V41A-P8A, O/ET W/R.H. SRB SEPARATING (OVX751) ( 24 MAY 77 )

REFERENCE DATA

SREF = 2690.0000 SQ.FT. XMRP = 1097.0000 IN. XT
LREF = 1290.3000 INCHES YMRP = .0000 IN. YT
BREF = 1290.3000 INCHES ZMRP = 450.0000 IN. ZT
SCALE = .0100

PARAMETRIC DATA

ALPHA = -10.000 BETA = 5.000
DALPHA = .000 DBETA = .000
X = .000 MACH = 4.500
JET PC = .000

RUN NO. 2757/ 0 RN/L = 2.39 GRADIENT INTERVAL = -5.00/ 5.00

| Y | Z | X | ALPHA | BETA | PHI | CN | CLM | CY | CYN | CBL | CA |
|---|---|---|---|---|---|---|---|---|---|---|---|
| -11.147 | .053 | -.34393 | -10.28500 | 5.12610 | .09932 | -.32756 | .09018 | -.24376 | .07094 | -.02512 | .25665 |
| -11.033 | 25.099 | -.36398 | -10.28300 | 5.12390 | .10748 | -.32810 | .09221 | -.24572 | .07242 | -.02393 | .25714 |
| -9.805 | 100.210 | -.39407 | -10.27300 | 5.11700 | .11646 | -.31573 | .09092 | -.23688 | .06994 | -.02043 | .25629 |
| -10.053 | 150.010 | -.29562 | -10.26600 | 5.11250 | .11144 | -.30583 | .08903 | -.22733 | .06706 | -.01966 | .25498 |
| -9.736 | 250.110 | -.35142 | -10.25400 | 5.09790 | .09433 | -.30413 | .09301 | -.19656 | .05782 | -.01738 | .25082 |
| -9.848 | 349.740 | -.23999 | -10.25700 | 5.08670 | .07092 | -.30839 | .09203 | -.17379 | .05205 | -.01808 | .25089 |
| -10.316 | 474.050 | -.31612 | -10.26500 | 5.08710 | .07123 | -.31697 | .09275 | -.17436 | .05221 | -.01814 | .25078 |
| -10.237 | 499.820 | -.31306 | -10.26500 | 5.08700 | .07120 | -.31865 | .09375 | -.17433 | .05221 | -.01814 | .25081 |
| -10.612 | 599.350 | -.16821 | -10.26500 | 5.08680 | .07143 | -.32038 | .09500 | -.17462 | .05243 | -.01817 | .25136 |
| | GRADIENT | .00000 | .00000 | .00000 | .00000 | .00000 | .00000 | .00000 | .00000 | .00000 | .00000 |

IA143, AEDC V41A-P8A, O/ET W/R.H. SRB SEPARATING (OVX751) ( 24 MAY 77 )

REFERENCE DATA

SREF = 2690.0000 SQ.FT. XMRP = 1097.0000 IN. XT
LREF = 1290.3000 INCHES YMRP = .0000 IN. YT
BREF = 1290.3000 INCHES ZMRP = 450.0000 IN. ZT
SCALE = .0100

PARAMETRIC DATA

ALPHA = -10.000 BETA = 5.000
DALPHA = .000 DBETA = .000
X = .000 MACH = 4.500
JET PC = .000

RUN NO. 2758/ 0 RN/L = 2.39 GRADIENT INTERVAL = -5.00/ 5.00

| Y | Z | X | ALPHA | BETA | PHI | CN | CLM | CY | CYN | CBL | CA |
|---|---|---|---|---|---|---|---|---|---|---|---|
| -100.920 | 599.510 | -.23741 | -10.26500 | 5.08700 | .07144 | -.32040 | .09500 | -.17467 | .05242 | -.01818 | .25139 |
| -100.870 | 499.970 | -.30544 | -10.26500 | 5.08690 | .07149 | -.32031 | .09489 | -.17459 | .05239 | -.01815 | .25116 |
| -101.030 | 474.890 | -.35858 | -10.26500 | 5.08680 | .07151 | -.31973 | .09456 | -.17462 | .05243 | -.01815 | .25127 |
| -100.870 | 350.280 | -.20987 | -10.26400 | 5.08700 | .07207 | -.31255 | .09069 | -.17532 | .05268 | -.01817 | .25082 |
| -101.550 | 250.370 | -.29871 | -10.26000 | 5.08660 | .08309 | -.30809 | .09119 | -.18384 | .05682 | -.01776 | .25079 |
| -102.210 | 149.940 | -.35455 | -10.26400 | 5.09880 | .09021 | -.30394 | .08711 | -.20532 | .06268 | -.02024 | .25156 |
| -101.380 | 99.659 | -.38828 | -10.26800 | 5.10040 | .09789 | -.30798 | .08843 | -.21424 | .06635 | -.02050 | .25630 |
| -100.890 | 24.367 | -.47224 | -10.27200 | 5.10210 | .09948 | -.31916 | .09266 | -.22326 | .07047 | -.02208 | .25726 |
| -101.540 | -.259 | -.34301 | -10.27300 | 5.10280 | .09564 | -.32117 | .09313 | -.22447 | .07113 | -.02315 | .25717 |
| | GRADIENT | .00000 | .00000 | .00000 | .00000 | .00000 | .00000 | .00000 | .00000 | .00000 | .00000 |

IA143, AEDC V41A-P8A, O/ET W/R.H. SRB SEPARATING (OVX752) ( 24 MAY 77 )

REFERENCE DATA

SREF = 2690.0000 SQ.FT. XMRP = 1097.0000 IN. XT
LREF = 1290.3000 INCHES YMRP = .0000 IN. YT
BREF = 1290.3000 INCHES ZMRP = 450.0000 IN. ZT
SCALE = .0100

PARAMETRIC DATA

ALPHA = -10.000 BETA = 5.000
DALPHA = .000 DBETA = .000
X = .000 MACH = 4.500
JET PC = .000

RUN NO. 2759/ 0 RN/L = 2.39 GRADIENT INTERVAL = -5.00/ 5.00

| Y | Z | X | ALPHA | BETA | PHI | CN | CLM | CY | CYN | CBL | CA |
|---|---|---|---|---|---|---|---|---|---|---|---|
| -10.999 | .007 | -.39313 | -10.28500 | 5.12630 | .09938 | -.32744 | .09015 | -.24400 | .07099 | -.02515 | .25671 |
| -10.849 | 25.102 | -.33264 | -10.28300 | 5.12370 | .10739 | -.32796 | .09219 | -.24561 | .07243 | -.02394 | .25702 |
| -10.026 | 100.340 | -.30957 | -10.27300 | 5.11700 | .11640 | -.31565 | .09092 | -.23703 | .06999 | -.02046 | .25620 |
| -9.977 | 150.030 | -.33834 | -10.26500 | 5.11240 | .11140 | -.30549 | .08892 | -.22727 | .06705 | -.01965 | .25481 |
| -9.842 | 250.180 | -.42174 | -10.25300 | 5.09800 | .09437 | -.30393 | .09296 | -.19677 | .05787 | -.01740 | .25082 |
| -9.854 | 349.690 | -.43252 | -10.25700 | 5.08690 | .07100 | -.30841 | .09205 | -.17401 | .05212 | -.01812 | .25091 |
| -10.599 | 474.050 | -.34136 | -10.26500 | 5.08700 | .07117 | -.31677 | .09269 | -.17446 | .05227 | -.01817 | .25068 |
| -10.756 | 499.810 | -.28146 | -10.26500 | 5.08710 | .07121 | -.31846 | .09372 | -.17459 | .05233 | -.01820 | .25079 |
| -10.810 | 599.350 | -.18791 | -10.26500 | 5.08690 | .07145 | -.32012 | .09493 | -.17465 | .05245 | -.01818 | .25126 |
| | GRADIENT | .00000 | .00000 | .00000 | .00000 | .00000 | .00000 | .00000 | .00000 | .00000 | .00000 |

IA143, AEDC V41A-P8A, O/ET W/R.H. SRB SEPARATING (OVX752) ( 24 MAY 77 )

REFERENCE DATA

SREF = 2690.0000 SQ.FT. XMRP = 1097.0000 IN. XT
LREF = 1290.3000 INCHES YMRP = .0000 IN. YT
BREF = 1290.3000 INCHES ZMRP = 450.0000 IN. ZT
SCALE = .0100

PARAMETRIC DATA

ALPHA = -10.000 BETA = 5.000
DALPHA = .000 DBETA = .000
X = .000 MACH = 4.500
JET PC = .000

RUN NO. 2760/ 0 RN/L = 2.39 GRADIENT INTERVAL = -5.00/ 5.00

| Y | Z | X | ALPHA | BETA | PHI | CN | CLM | CY | CYN | CBL | CA |
|---|---|---|---|---|---|---|---|---|---|---|---|
| -101.410 | 599.520 | -.19021 | -10.26400 | 5.08690 | .07144 | -.32022 | .09500 | -.17474 | .05247 | -.01818 | .25150 |
| -100.930 | 499.980 | -.32986 | -10.26500 | 5.08690 | .07146 | -.32006 | .09489 | -.17476 | .05248 | -.01819 | .25122 |
| -100.990 | 474.890 | -.34269 | -10.26500 | 5.08700 | .07145 | -.31962 | .09448 | -.17490 | .05252 | -.01822 | .25108 |
| -100.900 | 350.220 | -.32940 | -10.26400 | 5.08700 | .07213 | -.31232 | .09064 | -.17528 | .05266 | -.01815 | .25085 |
| -101.400 | 250.350 | -.32755 | -10.26000 | 5.08680 | .08332 | -.30839 | .09134 | -.18425 | .05694 | -.01779 | .25107 |
| -102.160 | 149.920 | -.35128 | -10.26300 | 5.09880 | .09012 | -.30374 | .08710 | -.20537 | .06267 | -.02026 | .25170 |
| -101.210 | 99.730 | -.39855 | -10.26800 | 5.10080 | .09803 | -.30816 | .08852 | -.21470 | .06647 | -.02057 | .25641 |
| -101.480 | 24.453 | -.41534 | -10.27300 | 5.10230 | .09952 | -.31930 | .09270 | -.22357 | .07056 | -.02213 | .25736 |
| -101.330 | -.261 | -.37099 | -10.27300 | 5.10300 | .09563 | -.32130 | .09322 | -.22467 | .07119 | -.02320 | .25757 |
| | GRADIENT | .00000 | .00000 | .00000 | .00000 | .00000 | .00000 | .00000 | .00000 | .00000 | .00000 |

IA143, AEDC V41A-P8A, O/ET W/R.H. SRB SEPARATING (OVX753) ( 24 MAY 77 )

REFERENCE DATA

SREF = 2690.0000 SQ.FT. XMRP = 1097.0000 IN. XT
LREF = 1290.3000 INCHES YMRP = .0000 IN. YT
BREF = 1290.3000 INCHES ZMRP = 450.0000 IN. ZT
SCALE = .0100

PARAMETRIC DATA

ALPHA = -10.000 BETA = 5.000
DALPHA = -5.000 DBETA = .000
X = .000 MACH = 4.500
JET PC = .000

RUN NO. 2773/ 0 RN/L = 2.38 GRADIENT INTERVAL = -5.00/ 5.00

| Y | Z | X | ALPHA | BETA | PHI | CN | CLM | CY | CYN | CBL | CA |
|---|---|---|---|---|---|---|---|---|---|---|---|
| -11.294 | 25.263 | -.44280 | -10.29600 | 5.13430 | .06806 | -.28285 | .05708 | -.26574 | .08205 | -.03649 | .26064 |
| -9.799 | 100.490 | -.21616 | -10.28500 | 5.12520 | .11829 | -.30117 | .07652 | -.26871 | .08395 | -.02680 | .25752 |
| -9.743 | 150.150 | -.39557 | -10.27300 | 5.11870 | .13353 | -.30102 | .08306 | -.26223 | .08200 | -.02237 | .25592 |
| -9.080 | 250.380 | -.40807 | -10.25400 | 5.10010 | .12955 | -.29749 | .09053 | -.22839 | .07188 | -.01678 | .25060 |
| -9.181 | 349.880 | -.38313 | -10.25400 | 5.08720 | .08793 | -.29946 | .08907 | -.18807 | .05848 | -.01760 | .24955 |
| -10.221 | 474.040 | -.41036 | -10.26300 | 5.08740 | .07116 | -.30896 | .08897 | -.17477 | .05231 | -.01823 | .25050 |
| -10.827 | 499.790 | -.43605 | -10.26400 | 5.08710 | .07177 | -.31170 | .08992 | -.17543 | .05272 | -.01826 | .25013 |
| -10.912 | 599.570 | -.31827 | -10.26400 | 5.08700 | .07134 | -.31956 | .09469 | -.17493 | .05256 | -.01825 | .25065 |
| | GRADIENT | .00000 | .00000 | .00000 | .00000 | .00000 | .00000 | .00000 | .00000 | .00000 | .00000 |

IA143, AEDC V41A-P8A, O/ET W/R.H. SRB SEPARATING (OVX753) ( 24 MAY 77 )

REFERENCE DATA

SREF = 2690.0000 SQ.FT. XMRP = 1097.0000 IN. XT
LREF = 1290.3000 INCHES YMRP = .0000 IN. YT
BREF = 1290.3000 INCHES ZMRP = 450.0000 IN. ZT
SCALE = .0100

PARAMETRIC DATA

ALPHA = -10.000 BETA = 5.000
DALPHA = -5.000 DBETA = .000
X = .000 MACH = 4.500
JET PC = .000

RUN NO. 2774/ 0 RN/L = 2.38 GRADIENT INTERVAL = -5.00/ 5.00

| Y | Z | X | ALPHA | BETA | PHI | CN | CLM | CY | CYN | CBL | CA |
|---|---|---|---|---|---|---|---|---|---|---|---|
| -100.980 | 599.750 | -.37086 | -10.26400 | 5.08710 | .07131 | -.32020 | .09503 | -.17524 | .05266 | -.01831 | .25147 |
| -100.880 | 500.120 | -.29327 | -10.26500 | 5.08690 | .07166 | -.31845 | .09376 | -.17525 | .05271 | -.01825 | .25060 |
| -100.790 | 474.910 | -.30271 | -10.26500 | 5.08680 | .07211 | -.31645 | .09241 | -.17561 | .05294 | -.01824 | .25031 |
| -100.360 | 350.550 | -.34975 | -10.26200 | 5.08510 | .07855 | -.30422 | .08757 | -.18022 | .05582 | -.01802 | .25067 |
| -101.800 | 250.420 | -.27914 | -10.25900 | 5.08780 | .10022 | -.30729 | .09156 | -.19877 | .06328 | -.01732 | .25009 |
| -102.330 | 150.050 | -.36662 | -10.26700 | 5.09960 | .10366 | -.29787 | .08282 | -.22431 | .07191 | -.02160 | .25469 |
| -101.420 | 99.697 | -.40386 | -10.27200 | 5.09990 | .10915 | -.30610 | .08593 | -.23425 | .07691 | -.02264 | .25721 |
| -100.920 | 24.810 | -.44226 | -10.28400 | 5.10640 | .05716 | -.27689 | .05996 | -.24606 | .08468 | -.03634 | .26008 |
| | GRADIENT | .00000 | .00000 | .00000 | .00000 | .00000 | .00000 | .00000 | .00000 | .00000 | .00000 |

IA143, AEDC V41A-P8A, O/ET W/R.H. SRB SEPARATING (OVX754) ( 24 MAY 77 )

REFERENCE DATA

SREF = 2690.0000 SQ.FT. XMRP = 1097.0000 IN. XT
LREF = 1290.3000 INCHES YMRP = .0000 IN. YT
BREF = 1290.3000 INCHES ZMRP = 450.0000 IN. ZT
SCALE = .0100

PARAMETRIC DATA

ALPHA = -10.000 BETA = 5.000
DALPHA = .000 DBETA = -4.000
X = .000 MACH = 4.500
JET PC = .000

RUN NO. 2762/ 0 RN/L = 2.39 GRADIENT INTERVAL = -5.00/ 5.00

| Y | Z | X | ALPHA | BETA | PHI | CN | CLM | CY | CYN | CBL | CA |
|---|---|---|---|---|---|---|---|---|---|---|---|
| -11.137 | 249.980 | -.34234 | -10.25200 | 5.09840 | .10316 | -.29532 | .08926 | -.20430 | .06128 | -.01720 | .25083 |
| -10.058 | 349.730 | -.30062 | -10.25600 | 5.08720 | .07170 | -.30632 | .09182 | -.17473 | .05232 | -.01812 | .25054 |
| -10.449 | 474.070 | -.27096 | -10.26500 | 5.08730 | .07094 | -.31537 | .09195 | -.17467 | .05230 | -.01825 | .25065 |
| -10.574 | 499.740 | -.35848 | -10.26500 | 5.08720 | .07111 | -.31750 | .09304 | -.17480 | .05239 | -.01824 | .25049 |
| -11.013 | 599.420 | -.30080 | -10.26500 | 5.08700 | .07140 | -.32023 | .09498 | -.17507 | .05260 | -.01827 | .25133 |
| | GRADIENT | .00000 | .00000 | .00000 | .00000 | .00000 | .00000 | .00000 | .00000 | .00000 | .00000 |

IA143, AEDC V41A-P8A, O/ET W/R.H. SRB SEPARATING (OVX755) ( 24 MAY 77 )

REFERENCE DATA

SREF = 2690.0000 SQ.FT. XMRP = 1097.0000 IN. XT
LREF = 1290.3000 INCHES YMRP = .0000 IN. YT
BREF = 1290.3000 INCHES ZMRP = 450.0000 IN. ZT
SCALE = .0100

PARAMETRIC DATA

ALPHA = -10.000 BETA = 5.000
DALPHA = -5.000 DBETA = -4.000
X = .000 MACH = 4.500
JET PC = .000

RUN NO. 2772/ 0 RN/L = 2.38 GRADIENT INTERVAL = -5.00/ 5.00

| Y | Z | X | ALPHA | BETA | PHI | CN | CLM | CY | CYN | CBL | CA |
|---|---|---|---|---|---|---|---|---|---|---|---|
| -10.769 | 474.890 | -.29427 | -10.26200 | 5.08790 | .06916 | -.30670 | .08810 | -.17359 | .05156 | -.01835 | .24974 |
| -11.109 | 499.750 | -.23386 | -10.26400 | 5.08750 | .07070 | -.30974 | .08902 | -.17463 | .05222 | -.01830 | .24978 |
| -10.753 | 599.640 | -.23111 | -10.26400 | 5.08710 | .07124 | -.31912 | .09423 | -.17510 | .05259 | -.01830 | .25020 |
| | GRADIENT | .00000 | .00000 | .00000 | .00000 | .00000 | .00000 | .00000 | .00000 | .00000 | .00000 |

IA143, AEDC V41A-P8A, O/ET W/R.H. SRB SEPARATING (OVX756) ( 24 MAY 77 )

REFERENCE DATA

SREF = 2690.0000 SQ.FT. XMRP = 1097.0000 IN. XT
LREF = 1290.3000 INCHES YMRP = .0000 IN. YT
BREF = 1290.3000 INCHES ZMRP = 450.0000 IN. ZT
SCALE = .0100

PARAMETRIC DATA

ALPHA = -10.000 BETA = 5.000
DALPHA = .000 DBETA = -4.000
X = .000 MACH = 4.500
JET PC = .000

RUN NO. 2761/ 0 RN/L = 2.39 GRADIENT INTERVAL = -5.00/ 5.00

| Y | Z | X | ALPHA | BETA | PHI | CN | CLM | CY | CYN | CBL | CA |
|---|---|---|---|---|---|---|---|---|---|---|---|
| -101.320 | .111 | -.29813 | -10.28000 | 5.10880 | .11749 | -.31973 | .08970 | -.25679 | .08479 | -.02536 | .25665 |
| -100.890 | 25.202 | -.19768 | -10.27800 | 5.10720 | .12435 | -.31901 | .09047 | -.25495 | .08394 | -.02354 | .25636 |
| -99.822 | 100.470 | -.28460 | -10.27000 | 5.10280 | .12426 | -.30772 | .08845 | -.23855 | .07675 | -.02009 | .25605 |
| -100.170 | 150.100 | -.31874 | -10.26400 | 5.10230 | .10327 | -.29759 | .08389 | -.21984 | .06817 | -.02046 | .25233 |
| -99.286 | 249.830 | -.50645 | -10.25800 | 5.08940 | .08772 | -.30770 | .09200 | -.18863 | .05781 | -.01762 | .25021 |
| -100.160 | 349.210 | -.39056 | -10.26200 | 5.08720 | .07106 | -.30880 | .08954 | -.17462 | .05225 | -.01820 | .25102 |
| -100.570 | 474.370 | -.22168 | -10.26500 | 5.08700 | .07157 | -.31928 | .09419 | -.17473 | .05243 | -.01817 | .25101 |
| -100.680 | 499.810 | -.26077 | -10.26500 | 5.08690 | .07140 | -.31979 | .09463 | -.17469 | .05243 | -.01819 | .25083 |
| -100.800 | 599.610 | -.27448 | -10.26400 | 5.08700 | .07139 | -.32004 | .09496 | -.17481 | .05247 | -.01821 | .25143 |
| | GRADIENT | .00000 | .00000 | .00000 | .00000 | .00000 | .00000 | .00000 | .00000 | .00000 | .00000 |

IA143, AEDC V41A-P8A, O/ET W/R.H. SRB SEPARATING (OVX757) ( 24 MAY 77 )

REFERENCE DATA

SREF = 2690.0000 SQ.FT. XMRP = 1097.0000 IN. XT
LREF = 1290.3000 INCHES YMRP = .0000 IN. YT
BREF = 1290.3000 INCHES ZMRP = 450.0000 IN. ZT
SCALE = .0100

PARAMETRIC DATA

ALPHA = -10.000 BETA = 5.000
DALPHA = -5.000 DBETA = -4.000
X = .000 MACH = 4.500
JET PC = .000

RUN NO. 2771/ 0 RN/L = 2.37 GRADIENT INTERVAL = -5.00/ 5.00

| Y | Z | X | ALPHA | BETA | PHI | CN | CLM | CY | CYN | CBL | CA |
|---|---|---|---|---|---|---|---|---|---|---|---|
| -101.230 | 25.400 | -.39718 | -10.29200 | 5.11140 | .08288 | -.26592 | .05033 | -.27914 | .09895 | -.03795 | .26109 |
| -100.190 | 100.480 | -.35971 | -10.28100 | 5.10360 | .13099 | -.29135 | .07324 | -.27190 | .09467 | -.02628 | .25638 |
| -99.531 | 150.330 | -.30017 | -10.27200 | 5.09980 | .13821 | -.29478 | .08040 | -.25761 | .08778 | -.02166 | .25491 |
| -98.527 | 249.920 | -.53471 | -10.25900 | 5.08740 | .12027 | -.30259 | .08983 | -.21532 | .07114 | -.01674 | .24905 |
| -99.324 | 349.270 | -.42833 | -10.25900 | 5.08410 | .08255 | -.30217 | .08742 | -.18330 | .05766 | -.01790 | .24890 |
| -100.230 | 474.270 | -.41903 | -10.26500 | 5.08680 | .07275 | -.31288 | .09027 | -.17641 | .05330 | -.01827 | .25011 |
| -100.370 | 499.880 | -.34879 | -10.26500 | 5.08690 | .07231 | -.31535 | .09175 | -.17589 | .05308 | -.01828 | .24985 |
| -100.770 | 599.680 | -.31346 | -10.26400 | 5.08710 | .07129 | -.31998 | .09490 | -.17517 | .05263 | -.01831 | .25111 |
| | GRADIENT | .00000 | .00000 | .00000 | .00000 | .00000 | .00000 | .00000 | .00000 | .00000 | .00000 |

IA143, AEDC V41A-P8A, O/ET W/R.H. SRB SEPARATING (OVX758) ( 24 MAY 77 )

REFERENCE DATA

SREF = 2690.0000 SQ.FT. XMRP = 1097.0000 IN. XT
LREF = 1290.3000 INCHES YMRP = .0000 IN. YT
BREF = 1290.3000 INCHES ZMRP = 450.0000 IN. ZT
SCALE = .0100

PARAMETRIC DATA

ALPHA = -10.000 BETA = 5.000
DALPHA = .000 DBETA = .000
X = 300.000 MACH = 4.500
JET PC = .000

RUN NO. 2763/ 0 RN/L = 2.39 GRADIENT INTERVAL = -5.00/ 5.00

| Y | Z | X | ALPHA | BETA | PHI | CN | CLM | CY | CYN | CBL | CA |
|---|---|---|---|---|---|---|---|---|---|---|---|
| -10.971 | 99.991 | 299.47000 | -10.26800 | 5.09530 | .10858 | -.31080 | .08940 | -.21619 | .06889 | -.01894 | .25100 |
| -9.223 | 249.220 | 299.52000 | -10.26000 | 5.08760 | .08071 | -.30964 | .09205 | -.18247 | .05576 | -.01789 | .25084 |
| -10.775 | 299.900 | 299.61000 | -10.25900 | 5.08650 | .07380 | -.30904 | .09155 | -.17642 | .05342 | -.01809 | .25098 |
| -10.909 | 400.190 | 299.54000 | -10.26300 | 5.08760 | .07044 | -.31113 | .09040 | -.17428 | .05195 | -.01824 | .25094 |
| -10.988 | 425.020 | 299.56000 | -10.26400 | 5.08720 | .07137 | -.31306 | .09095 | -.17471 | .05231 | -.01818 | .25074 |
| -10.938 | 499.960 | 299.62000 | -10.26400 | 5.08690 | .07138 | -.31850 | .09381 | -.17481 | .05249 | -.01821 | .25055 |
| -10.973 | 599.320 | 299.61000 | -10.26400 | 5.08700 | .07141 | -.32021 | .09500 | -.17490 | .05251 | -.01822 | .25133 |
| | GRADIENT | .00000 | .00000 | .00000 | .00000 | .00000 | .00000 | .00000 | .00000 | .00000 | .00000 |

IA143, AEDC V41A-P8A, O/ET W/R.H. SRB SEPARATING (OVX758) ( 24 MAY 77 )

REFERENCE DATA

SREF = 2690.0000 SQ.FT. XMRP = 1097.0000 IN. XT
LREF = 1290.3000 INCHES YMRP = .0000 IN. YT
BREF = 1290.3000 INCHES ZMRP = 450.0000 IN. ZT
SCALE = .0100

PARAMETRIC DATA

ALPHA = -10.000 BETA = 5.000
DALPHA = .000 DBETA = .000
X = 300.000 MACH = 4.500
JET PC = .000

RUN NO. 2764/ 0 RN/L = 2.39 GRADIENT INTERVAL = -5.00/ 5.00

| Y | Z | X | ALPHA | BETA | PHI | CN | CLM | CY | CYN | CBL | CA |
|---|---|---|---|---|---|---|---|---|---|---|---|
| -200.970 | 599.320 | 299.64000 | -10.26400 | 5.08700 | .07134 | -.32006 | .09502 | -.17494 | .05254 | -.01825 | .25145 |
| -200.900 | 500.030 | 299.55000 | -10.26400 | 5.08690 | .07136 | -.32015 | .09501 | -.17486 | .05250 | -.01821 | .25140 |
| -200.790 | 424.990 | 299.54000 | -10.26400 | 5.08710 | .07136 | -.32025 | .09506 | -.17503 | .05255 | -.01825 | .25147 |
| -200.820 | 399.910 | 299.67000 | -10.26400 | 5.08710 | .07139 | -.32000 | .09493 | -.17505 | .05257 | -.01826 | .25129 |
| -201.150 | 300.120 | 299.65000 | -10.26500 | 5.08660 | .07223 | -.31825 | .09373 | -.17539 | .05290 | -.01819 | .25065 |
| -200.820 | 249.980 | 299.59000 | -10.26500 | 5.08630 | .07363 | -.31566 | .09211 | -.17654 | .05357 | -.01817 | .25073 |
| -201.330 | 99.850 | 299.46000 | -10.26600 | 5.08460 | .08136 | -.31046 | .08898 | -.18783 | .06010 | -.01918 | .25063 |
| | GRADIENT | .00000 | .00000 | .00000 | .00000 | .00000 | .00000 | .00000 | .00000 | .00000 | .00000 |

IA143, AEDC V41A-P8A, O/ET W/R.H. SRB SEPARATING (OVX759) ( 24 MAY 77 )

REFERENCE DATA

SREF = 2690.0000 SQ.FT. XMRP = 1097.0000 IN. XT
LREF = 1290.3000 INCHES YMRP = .0000 IN. YT
BREF = 1290.3000 INCHES ZMRP = 450.0000 IN. ZT
SCALE = .0100

PARAMETRIC DATA

ALPHA = -10.000 BETA = 5.000
DALPHA = -10.000 DBETA = .000
X = 300.000 MACH = 4.500
JET PC = .000

RUN NO. 2797/ 0 RN/L = 2.38 GRADIENT INTERVAL = -5.00/ 5.00

| Y | Z | X | ALPHA | BETA | PHI | CN | CLM | CY | CYN | CBL | CA |
|---|---|---|---|---|---|---|---|---|---|---|---|
| -11.449 | 100.310 | 299.47000 | -10.28900 | 5.10490 | .08170 | -.24612 | .04040 | -.26077 | .09175 | -.03445 | .25946 |
| -7.924 | 249.210 | 299.13000 | -10.26100 | 5.08430 | .12875 | -.30516 | .09076 | -.22334 | .07641 | -.01695 | .24930 |
| -9.565 | 300.050 | 299.32000 | -10.25900 | 5.08120 | .11359 | -.30025 | .08821 | -.20788 | .07039 | -.01696 | .24931 |
| -10.321 | 400.610 | 299.55000 | -10.25900 | 5.08370 | .07928 | -.29961 | .08589 | -.18034 | .05649 | -.01800 | .24841 |
| -10.999 | 425.370 | 299.59000 | -10.26000 | 5.08540 | .07421 | -.30052 | .08579 | -.17683 | .05419 | -.01820 | .24873 |
| -11.312 | 500.210 | 299.59000 | -10.26400 | 5.08740 | .07254 | -.30806 | .08785 | -.17619 | .05301 | -.01826 | .24919 |
| -10.629 | 599.750 | 299.48000 | -10.26400 | 5.08740 | .07139 | -.31878 | .09418 | -.17533 | .05260 | -.01831 | .24959 |
| | GRADIENT | .00000 | .00000 | .00000 | .00000 | .00000 | .00000 | .00000 | .00000 | .00000 | .00000 |

IA143, AEDC V41A-P8A, O/ET W/R.H. SRB SEPARATING (OVX760) ( 24 MAY 77 )

REFERENCE DATA

SREF = 2690.0000 SQ.FT. XMRP = 1097.0000 IN. XT
LREF = 1290.3000 INCHES YMRP = .0000 IN. YT
BREF = 1290.3000 INCHES ZMRP = 450.0000 IN. ZT
SCALE = .0100

PARAMETRIC DATA

ALPHA = -10.000 BETA = 5.000
DALPHA = -10.000 DBETA = .000
X = 300.000 MACH = 4.500
JET PC = .000

RUN NO. 2795/ 0 RN/L = 2.38 GRADIENT INTERVAL = -5.00/ 5.00

| Y | Z | X | ALPHA | BETA | PHI | CN | CLM | CY | CYN | CBL | CA |
|---|---|---|---|---|---|---|---|---|---|---|---|
| -200.830 | 100.330 | 299.32000 | -10.27000 | 5.08050 | .07900 | -.29339 | .07702 | -.20531 | .07204 | -.02403 | .25296 |
| -200.820 | 150.500 | 299.38000 | -10.26700 | 5.08240 | .08330 | -.30203 | .08326 | -.19645 | .06582 | -.02092 | .24997 |
| -200.510 | 200.490 | 299.59000 | -10.26500 | 5.08290 | .08896 | -.30954 | .08909 | -.18881 | .06085 | -.01788 | .24946 |
| -200.390 | 250.230 | 299.38000 | -10.26500 | 5.08420 | .08218 | -.30980 | .08888 | -.18296 | .05751 | -.01793 | .24973 |
| -200.330 | 300.150 | 299.60000 | -10.26500 | 5.08580 | .07639 | -.31204 | .08998 | -.17876 | .05487 | -.01811 | .24983 |
| -199.900 | 399.940 | 299.39000 | -10.26400 | 5.08710 | .07207 | -.31817 | .09381 | -.17573 | .05289 | -.01827 | .24994 |
| -200.630 | 425.050 | 299.37000 | -10.26400 | 5.08740 | .07158 | -.31901 | .09437 | -.17544 | .05266 | -.01830 | .25017 |
| -200.480 | 499.660 | 299.36000 | -10.26400 | 5.08740 | .07149 | -.31954 | .09478 | -.17535 | .05262 | -.01830 | .25098 |
| -200.550 | 599.670 | 299.43000 | -10.26400 | 5.08740 | .07149 | -.31931 | .09473 | -.17546 | .05269 | -.01833 | .25091 |
| | GRADIENT | .00000 | .00000 | .00000 | .00000 | .00000 | .00000 | .00000 | .00000 | .00000 | .00000 |

IA143, AEDC V41A-P8A, O/ET W/R.H. SRB SEPARATING (OVX761) ( 24 MAY 77 )

REFERENCE DATA

SREF = 2690.0000 SQ.FT. XMRP = 1097.0000 IN. XT
LREF = 1290.3000 INCHES YMRP = .0000 IN. YT
BREF = 1290.3000 INCHES ZMRP = 450.0000 IN. ZT
SCALE = .0100

PARAMETRIC DATA

ALPHA = -10.000 BETA = 5.000
DALPHA = .000 DBETA = -8.000
X = 300.000 MACH = 4.500
JET PC = .000

RUN NO. 2766/ 0 RN/L = 2.39 GRADIENT INTERVAL = -5.00/ 5.00

| Y | Z | X | ALPHA | BETA | PHI | CN | CLM | CY | CYN | CBL | CA |
|---|---|---|---|---|---|---|---|---|---|---|---|
| -10.716 | 249.780 | 299.64000 | -10.25800 | 5.08720 | .08531 | -.30371 | .08946 | -.18596 | .05754 | -.01770 | .25022 |
| -10.735 | 299.710 | 299.64000 | -10.25800 | 5.08660 | .07308 | -.30781 | .09154 | -.17585 | .05310 | -.01810 | .25047 |
| -11.665 | 400.170 | 299.58000 | -10.26200 | 5.08810 | .06805 | -.30950 | .09010 | -.17244 | .05093 | -.01833 | .25108 |
| -11.388 | 424.990 | 299.63000 | -10.26300 | 5.08760 | .07014 | -.31107 | .09026 | -.17394 | .05182 | -.01824 | .25040 |
| -11.259 | 500.060 | 299.70000 | -10.26500 | 5.08720 | .07112 | -.31720 | .09292 | -.17481 | .05239 | -.01825 | .25026 |
| -10.796 | 599.490 | 299.58000 | -10.26400 | 5.08700 | .07132 | -.32005 | .09495 | -.17505 | .05257 | -.01827 | .25136 |
| | GRADIENT | .00000 | .00000 | .00000 | .00000 | .00000 | .00000 | .00000 | .00000 | .00000 | .00000 |

IA143, AEDC V41A-P8A, O/ET W/R.H. SRB SEPARATING (OVX762) ( 24 MAY 77 )

REFERENCE DATA

SREF = 2690.0000 SQ.FT. XMRP = 1097.0000 IN. XT
LREF = 1290.3000 INCHES YMRP = .0000 IN. YT
BREF = 1290.3000 INCHES ZMRP = 450.0000 IN. ZT
SCALE = .0100

PARAMETRIC DATA

ALPHA = -10.000 BETA = 5.000
DALPHA = -10.000 DBETA = -8.000
X = 300.000 MACH = 4.500
JET PC = .000

RUN NO. 2801/ 0 RN/L = 2.38 GRADIENT INTERVAL = -5.00/ 5.00

| Y | Z | X | ALPHA | BETA | PHI | CN | CLM | CY | CYN | CBL | CA |
|---|---|---|---|---|---|---|---|---|---|---|---|
| -10.703 | 425.180 | 299.42000 | -10.26000 | 5.09170 | .08162 | -.29152 | .08046 | -.18172 | .05797 | -.01792 | .24676 |
| -10.629 | 500.150 | 299.59000 | -10.26300 | 5.08760 | .07172 | -.30396 | .08550 | -.17554 | .05258 | -.01827 | .24676 |
| -10.834 | 600.060 | 299.46000 | -10.26400 | 5.08740 | .07141 | -.31657 | .09242 | -.17546 | .05260 | -.01831 | .24812 |
| | GRADIENT | .00000 | .00000 | .00000 | .00000 | .00000 | .00000 | .00000 | .00000 | .00000 | .00000 |

IA143, AEDC V41A-P8A, O/ET W/R.H. SRB SEPARATING (OVX763) ( 24 MAY 77 )

REFERENCE DATA

SREF = 2690.0000 SQ.FT. XMRP = 1097.0000 IN. XT
LREF = 1290.3000 INCHES YMRP = .0000 IN. YT
BREF = 1290.3000 INCHES ZMRP = 450.0000 IN. ZT
SCALE = .0100

PARAMETRIC DATA

ALPHA = -10.000 BETA = 5.000
DALPHA = .000 DBETA = -8.000
X = 300.000 MACH = 4.500
JET PC = .000

RUN NO. 2765/ 0 RN/L = 2.39 GRADIENT INTERVAL = -5.00/ 5.00

| Y | Z | X | ALPHA | BETA | PHI | CN | CLM | CY | CYN | CBL | CA |
|---|---|---|---|---|---|---|---|---|---|---|---|
| -200.760 | 100.100 | 299.58000 | -10.26600 | 5.08380 | .09507 | -.30205 | .08422 | -.20312 | .06796 | -.01974 | .24990 |
| -199.430 | 249.860 | 299.46000 | -10.26400 | 5.08560 | .07745 | -.30958 | .08903 | -.17938 | .05520 | -.01802 | .25065 |
| -200.090 | 299.650 | 299.53000 | -10.26500 | 5.08640 | .07400 | -.31331 | .09069 | -.17690 | .05369 | -.01815 | .25059 |
| -200.160 | 399.550 | 299.49000 | -10.26400 | 5.08700 | .07137 | -.31986 | .09479 | -.17474 | .05244 | -.01820 | .25092 |
| -200.240 | 424.750 | 299.62000 | -10.26500 | 5.08710 | .07137 | -.31994 | .09484 | -.17486 | .05248 | -.01824 | .25092 |
| -200.280 | 499.610 | 299.56000 | -10.26400 | 5.08700 | .07132 | -.31994 | .09494 | -.17490 | .05250 | -.01824 | .25133 |
| -200.670 | 599.570 | 299.64000 | -10.26400 | 5.08700 | .07135 | -.32008 | .09500 | -.17488 | .05251 | -.01824 | .25140 |
| | GRADIENT | .00000 | .00000 | .00000 | .00000 | .00000 | .00000 | .00000 | .00000 | .00000 | .00000 |

IA143, AEDC V41A-P8A, O/ET W/R.H. SRB SEPARATING (OVX764) ( 24 MAY 77 )

REFERENCE DATA

SREF = 2690.0000 SQ.FT. XMRP = 097.0000 IN. XT
LREF = 1290.3000 INCHES YMRP = .0000 IN. YT
BREF = 1290.3000 INCHES ZMRP = 450.0000 IN. ZT
SCALE = .0100

PARAMETRIC DATA

ALPHA = -10.000 BETA = 5.000
DALPHA = -10.000 DBETA = -8.000
X = 300.000 MACH = 4.500
JET PC = .000

RUN NO. 2800/ 0 RN/L = 2.38 GRADIENT INTERVAL = -5.00/ 5.00

| Y | Z | X | ALPHA | BETA | PHI | CN | CLM | CY | CYN | CBL | CA |
|---|---|---|---|---|---|---|---|---|---|---|---|
| -200.490 | 100.280 | 299.32000 | -10.28300 | 5.07990 | .07181 | -.23977 | .03705 | -.24468 | .09494 | -.03469 | .25034 |
| -198.440 | 250.010 | 299.06000 | -10.26400 | 5.07690 | .11025 | -.30011 | .08423 | -.20429 | .07055 | -.01714 | .24670 |
| -199.430 | 300.080 | 299.23000 | -10.26400 | 5.08060 | .09388 | -.30098 | .08375 | -.19169 | .06309 | -.01759 | .24634 |
| -199.110 | 399.620 | 299.29000 | -10.26500 | 5.08600 | .07598 | -.31006 | .08836 | -.17887 | .05479 | -.01818 | .24835 |
| -200.250 | 425.050 | 299.35000 | -10.26500 | 5.08640 | .07479 | -.31256 | .08990 | -.17783 | .05416 | -.01819 | .24853 |
| -199.900 | 499.660 | 299.39000 | -10.26400 | 5.08740 | .07137 | -.31854 | .09392 | -.17552 | .05268 | -.01834 | .24877 |
| -200.310 | 599.730 | 299.38000 | -10.26400 | 5.08720 | .07134 | -.31908 | .09449 | -.17535 | .05265 | -.01832 | .25010 |
| | GRADIENT | .00000 | .00000 | .00000 | .00000 | .00000 | .00000 | .00000 | .00000 | .00000 | .00000 |

IA143, AEDC V41A-P8A, O/ET W/R.H. SRB SEPARATING (OVX765) ( 24 MAY 77 )

REFERENCE DATA

SREF = 2690.0000 SQ.FT. XMRP = 1097.0000 IN. XT
LREF = 1290.3000 INCHES YMRP = .0000 IN. YT
BREF = 1290.3000 INCHES ZMRP = 450.0000 IN. ZT
SCALE = .0100

PARAMETRIC DATA

ALPHA = -10.000 BETA = 5.000
DALPHA = -5.000 DBETA = .000
X = 300.000 MACH = 4.500
JET PC = .000

RUN NO. 2775/ 0 RN/L = 2.38 GRADIENT INTERVAL = -5.00/ 5.00

| Y | Z | X | ALPHA | BETA | PHI | CN | CLM | CY | CYN | CBL | CA |
|---|---|---|---|---|---|---|---|---|---|---|---|
| -101.050 | 100.290 | 299.41000 | -10.26000 | 5.08990 | .09295 | -.29900 | .08174 | -.21249 | .07060 | -.02193 | .25253 |
| -100.120 | 150.160 | 299.49000 | -10.26400 | 5.08850 | .10072 | -.30956 | .09033 | -.20361 | .06559 | -.01827 | .25000 |
| -100.310 | 200.040 | 299.42000 | -10.26100 | 5.08600 | .09754 | -.30913 | .09144 | -.19621 | .06286 | -.01744 | .25032 |
| | GRADIENT | .00000 | .00000 | .00000 | .00000 | .00000 | .00000 | .00000 | .00000 | .00000 | .00000 |

RUN NO. 2776/ 0 RN/L = 2.38 GRADIENT INTERVAL = -5.00/ 5.00

| Y | Z | X | ALPHA | BETA | PHI | CN | CLM | CY | CYN | CBL | CA |
|---|---|---|---|---|---|---|---|---|---|---|---|
| -201.770 | 199.890 | 299.44000 | -10.26500 | 5.08450 | .08064 | -.31216 | .09034 | -.18183 | .05684 | -.01797 | .25064 |
| -201.660 | 149.980 | 299.64000 | -10.26500 | 5.08390 | .08400 | -.31131 | .08975 | -.18695 | .05971 | -.01845 | .25036 |
| -201.140 | 100.120 | 299.42000 | -10.26700 | 5.08270 | .08151 | -.30574 | .08567 | -.19352 | .06414 | -.02059 | .25140 |
| | GRADIENT | .00000 | .00000 | .00000 | .00000 | .00000 | .00000 | .00000 | .00000 | .00000 | .00000 |

IA143, AEDC V41A-P8A, O/ET W/R.H. SRB SEPARATING (OVX766) ( 24 MAY 77 )

REFERENCE DATA

SREF = 2690.0000 SQ.FT. XMRP = 1097.0000 IN. XT
LREF = 1290.3000 INCHES YMRP = .0000 IN. YT
BREF = 1290.3000 INCHES ZMRP = 450.0000 IN. ZT
SCALE = .0100

PARAMETRIC DATA

ALPHA = -10.000 BETA = 5.000
DALPHA = -10.000 DBETA = .000
X = 300.000 MACH = 4.500
JET PC = .000

RUN NO. 2796/ 0 RN/L = 2.38 GRADIENT INTERVAL = -5.00/ 5.00

| Y | Z | X | ALPHA | BETA | PHI | CN | CLM | CY | CYN | CBL | CA |
|---|---|---|---|---|---|---|---|---|---|---|---|
| -100.420 | 100.270 | 299.34000 | -10.27800 | 5.09250 | .06935 | -.26192 | .05372 | -.23255 | .08258 | -.03156 | .25384 |
| -100.500 | 150.090 | 299.39000 | -10.26900 | 5.08970 | .09538 | -.28881 | .07468 | -.22227 | .07600 | -.02367 | .24872 |
| -100.310 | 200.300 | 299.43000 | -10.26200 | 5.08550 | .11162 | -.30696 | .09002 | -.21052 | .07003 | -.01769 | .24865 |
| | GRADIENT | .00000 | .00000 | .00000 | .00000 | .00000 | .00000 | .00000 | .00000 | .00000 | .00000 |

IA143, AEDC V41A-P8A, O/ET W/R.H. SRB SEPARATING (OVX767) ( 24 MAY 77 )

REFERENCE DATA

SREF = 2690.0000 SQ.FT. XMRP = 1097.0000 IN. XT
LREF = 1290.3000 INCHES YMRP = .0000 IN. YT
BREF = 1290.3000 INCHES ZMRP = 450.0000 IN. ZT
SCALE = .0100

PARAMETRIC DATA

ALPHA = -10.000 BETA = 5.000
DALPHA = -5.000 DBETA = -4.000
X = 300.000 MACH = 4.500
JET PC = .000

RUN NO. 2778/ 0 RN/L = 2.38 GRADIENT INTERVAL = -5.00/ 5.00

| Y | Z | X | ALPHA | BETA | PHI | CN | CLM | CY | CYN | CBL | CA |
|---|---|---|---|---|---|---|---|---|---|---|---|
| -100.980 | 100.190 | 299.52000 | -10.27000 | 5.08800 | .11037 | -.29428 | .07839 | -.23005 | .07993 | -.02226 | .25146 |
| -99.413 | 149.920 | 299.48000 | -10.26500 | 5.08600 | .11795 | -.30546 | .08798 | -.21853 | .07377 | -.01810 | .24950 |
| -100.280 | 199.980 | 299.54000 | -10.26200 | 5.08430 | .10905 | -.30648 | .09026 | -.20524 | .06782 | -.01714 | .24978 |
| -100.110 | 299.840 | 299.50000 | -10.26000 | 5.08420 | .08310 | -.30355 | .08788 | -.18348 | .05765 | -.01781 | .25023 |
| | GRADIENT | .00000 | .00000 | .00000 | .00000 | .00000 | .00000 | .00000 | .00000 | .00000 | .00000 |

IA143, AEDC V41A-P8A, O/ET W/R.H. SRB SEPARATING (OVX768) ( 24 MAY 77 )

REFERENCE DATA

SREF = 2690.0000 SQ.FT. XMRP = 1097.0000 IN. XT
LREF = 1290.3000 INCHES YMRP = .0000 IN. YT
BREF = 1290.3000 INCHES ZMRP = 450.0000 IN. ZT
SCALE = .0100

PARAMETRIC DATA

ALPHA = -10.000 BETA = 5.000
DALPHA = -10.000 DBETA = -4.000
X = 300.000 MACH = 4.500
JET PC = .000

RUN NO. 2798/ 0 RN/L = 2.38 GRADIENT INTERVAL = -5.00/ 5.00

| Y | Z | X | ALPHA | BETA | PHI | CN | CLM | CY | CYN | CBL | CA |
|---|---|---|---|---|---|---|---|---|---|---|---|
| -100.840 | 100.270 | 299.37000 | -10.28400 | 5.09280 | .07667 | -.23943 | .03748 | -.25406 | .09385 | -.03484 | .25491 |
| -100.200 | 149.910 | 299.38000 | -10.27400 | 5.08960 | .10663 | -.27315 | .06290 | -.24312 | .08686 | -.02598 | .24807 |
| -100.120 | 200.190 | 299.28000 | -10.26500 | 5.08300 | .12863 | -.30074 | .08545 | -.22869 | .08002 | -.01830 | .24741 |
| | GRADIENT | .00000 | .00000 | .00000 | .00000 | .00000 | .00000 | .00000 | .00000 | .00000 | .00000 |

RUN NO. 2799/ 0 RN/L = 2.38 GRADIENT INTERVAL = -5.00/ 5.00

| Y | Z | X | ALPHA | BETA | PHI | CN | CLM | CY | CYN | CBL | CA |
|---|---|---|---|---|---|---|---|---|---|---|---|
| -201.670 | 200.530 | 299.51000 | -10.26500 | 5.08100 | .09976 | -.30620 | .08764 | -.19736 | .06569 | -.01760 | .24831 |
| -201.380 | 150.140 | 299.48000 | -10.26800 | 5.08180 | .09168 | -.29632 | .07945 | -.20797 | .07193 | -.02176 | .24816 |
| -201.120 | 100.260 | 299.30000 | -10.27400 | 5.08220 | .07141 | -.27298 | .06165 | -.21910 | .07955 | -.02872 | .25114 |
| | GRADIENT | .00000 | .00000 | .00000 | .00000 | .00000 | .00000 | .00000 | .00000 | .00000 | .00000 |

IA143, AEDC V41A-P8A, O/ET W/R.H. SRB SEPARATING (OVX769) ( 24 MAY 77 )

REFERENCE DATA

SREF = 2690.0000 SQ.FT. XMRP = 1097.0000 IN. XT
LREF = 1290.3000 INCHES YMRP = .0000 IN. YT
BREF = 1290.3000 INCHES ZMRP = 450.0000 IN. ZT
SCALE = .0100

PARAMETRIC DATA

ALPHA = -10.000 BETA = 5.000
DALPHA = -5.000 DBETA = -4.000
X = 300.000 MACH = 4.500
JET PC = .000

RUN NO. 2777/ 0 RN/L = 2.38 GRADIENT INTERVAL = -5.00/ 5.00

| Y | Z | X | ALPHA | BETA | PHI | CN | CLM | CY | CYN | CBL | CA |
|---|---|---|---|---|---|---|---|---|---|---|---|
| -200.630 | 100.190 | 299.51000 | -10.26700 | 5.08220 | .08829 | -.30152 | .08324 | -.20132 | .06822 | -.0[illegible] | .25094 |
| -200.560 | 150.200 | 299.62000 | -10.26500 | 5.08280 | .09170 | -.30840 | .08854 | -.19316 | .06308 | -.01[illegible] | .24987 |
| -200.310 | 200.070 | 299.52000 | -10.26500 | 5.08330 | .08658 | -.30954 | .08923 | -.18636 | .05943 | -.01778 | .25039 |
| | GRADIENT | .00000 | .00000 | .00000 | .00000 | .00000 | .00000 | .00000 | .00000 | .00000 | .00000 |

IA143, AEDC V41A-P8A, O/ET W/R.H. SRB SEPARATING (OVX770) ( 24 MAY 77 )

REFERENCE DATA

SREF = 2690.0000 SQ.FT. XMRP = 1097.0000 IN. XT
LREF = 1290.3000 INCHES YMRP = .0000 IN. YT
BREF = 1290.3000 INCHES ZMRP = 450.0000 IN. ZT
SCALE = .0100

PARAMETRIC DATA

ALPHA = -10.000 BETA = 5.000
DALPHA = -6.000 DBETA = -2.000
X = 300.000 MACH = 4.500
JET PC = .000

RUN NO. 2792/ 0 RN/L = 2.36 GRADIENT INTERVAL = -5.00/ 5.00

| Y | Z | X | ALPHA | BETA | PHI | CN | CLM | CY | CYN | CBL | CA |
|---|---|---|---|---|---|---|---|---|---|---|---|
| -100.760 | 100.220 | 299.41000 | -10.27100 | 5.08950 | .10171 | -.29416 | .07816 | -.22441 | .07686 | -.02282 | .25189 |
| -99.851 | 200.090 | 299.52000 | -10.26200 | 5.08550 | .10632 | -.30749 | .09086 | -.20325 | .06649 | -.01726 | .24960 |
| -100.170 | 299.970 | 299.47000 | -10.26100 | 5.08460 | .08432 | -.30329 | .08778 | -.18462 | .05816 | -.01785 | .25012 |
| | GRADIENT | .00000 | .00000 | .00000 | .00000 | .00000 | .00000 | .00000 | .00000 | .00000 | .00000 |

IA143, AEDC V41A-P8A, O/ET W/R.H. SRB SEPARATING (OVX771) ( 24 MAY 77 )

REFERENCE DATA

SREF = 2690.0000 SQ.FT. XMRP = 1097.0000 IN. XT
LREF = 1290.3000 INCHES YMRP = .0000 IN. YT
BREF = 1290.3000 INCHES ZMRP = 450.0000 IN. ZT
SCALE = .0100

PARAMETRIC DATA

ALPHA = -10.000 BETA = 5.000
DALPHA = -6.000 DBETA = -2.000
X = 300.000 MACH = 4.500
JET PC = .000

RUN NO. 2793/ 0 RN/L = 2.38 GRADIENT INTERVAL = -5.00/ 5.00

| Y | Z | X | ALPHA | BETA | PHI | CN | CLM | CY | CYN | CBL | CA |
|---|---|---|---|---|---|---|---|---|---|---|---|
| -100.930 | 100.180 | 299.46000 | -10.27000 | 5.08940 | .10154 | -.29420 | .07816 | -.22412 | .07670 | -.02276 | .25157 |
| -99.964 | 200.100 | 299.55000 | -10.26100 | 5.08540 | .10593 | -.30744 | .09087 | -.20320 | .06643 | -.01727 | .24974 |
| -100.340 | 299.980 | 299.49000 | -10.26100 | 5.08460 | .08404 | -.30312 | .08763 | -.18458 | .05810 | -.01786 | .24981 |
| | GRADIENT | .00000 | .00000 | .00000 | .00000 | .00000 | .00000 | .00000 | .00000 | .00000 | .00000 |

IA143, AEDC V41A-P8A, O/ET W/R.H. SRB SEPARATING (OVX772) ( 24 MAY 77 )

REFERENCE DATA

SREF = 2690.0000 SQ.FT. XMRP = 1097.0000 IN. XT
LREF = 1290.3000 INCHES YMRP = .0000 IN. YT
BREF = 1290.3000 INCHES ZMRP = 450.0000 IN. ZT
SCALE = .0100

PARAMETRIC DATA

ALPHA = -10.000 BETA = 5.000
DALPHA = -6.000 DBETA = -2.000
X = 300.000 MACH = 4.500
JET PC = .000

RUN NO. 2822/ 0 RN/L = 2.39 GRADIENT INTERVAL = -5.00/ 5.00

| Y | Z | X | ALPHA | BETA | PHI | CN | CLM | CY | CYN | CBL | CA |
|---|---|---|---|---|---|---|---|---|---|---|---|
| -101.330 | 100.270 | 299.58000 | -10.27000 | 5.08940 | .10111 | -.29395 | .07789 | -.22500 | .07717 | -.02303 | .25140 |
| -100.100 | 200.110 | 299.64000 | -10.26100 | 5.08550 | .10596 | -.30772 | .09085 | -.20408 | .06684 | -.01743 | .24922 |
| -99.962 | 300.010 | 299.56000 | -10.26000 | 5.08470 | .08407 | -.30324 | .08766 | -.18565 | .05859 | -.01806 | .24932 |
| | GRADIENT | .00000 | .00000 | .00000 | .00000 | .00000 | .00000 | .00000 | .00000 | .00000 | .00000 |

IA143, AEDC V41A-P8A, O/ET W/R.H. SRB SEPARATING (OVX773) ( 24 MAY 77 )

REFERENCE DATA

SREF = 2690.0000 SQ.FT. XMRP = 1097.0000 IN. XT
LREF = 1290.3000 INCHES YMRP = .0000 IN. YT
BREF = 1290.3000 INCHES ZMRP = 450.0000 IN. ZT
SCALE = .0100

PARAMETRIC DATA

ALPHA = -10.000 BETA = 5.000
DALPHA = .000 DBETA = 4.000
X = 600.000 MACH = 4.500
JET PC = .000

RUN NO. 2769/ 0 RN/L = 2.38 GRADIENT INTERVAL = -5.00/ 5.00

| Y | Z | X | ALPHA | BETA | PHI | CN | CLM | CY | CYN | CBL | CA |
|---|---|---|---|---|---|---|---|---|---|---|---|
| -100.890 | 199.980 | 599.57000 | -10.26500 | 5.08590 | .07566 | -.31514 | .09183 | -.17818 | .05456 | -.01813 | .25100 |
| -100.590 | 249.750 | 599.48000 | -10.26500 | 5.08640 | .07367 | -.31635 | .09244 | -.17676 | .05366 | -.01819 | .25110 |
| -100.870 | 399.790 | 599.51000 | -10.26400 | 5.08700 | .07129 | -.31991 | .09489 | -.17504 | .05258 | -.01828 | .25115 |
| -100.670 | 450.130 | 599.65000 | -10.26500 | 5.08710 | .07137 | -.32028 | .09500 | -.17502 | .05256 | -.01826 | .25144 |
| -100.960 | 499.850 | 599.51000 | -10.26500 | 5.08710 | .07134 | -.32021 | .09500 | -.17509 | .05259 | -.01828 | .25138 |
| -101.270 | 599.880 | 599.76000 | -10.26400 | 5.08700 | .07133 | -.31998 | .09496 | -.17494 | .05255 | -.01827 | .25137 |
| | GRADIENT | .00000 | .00000 | .00000 | .00000 | .00000 | .00000 | .00000 | .00000 | .00000 | .00000 |

RUN NO. 2770/ 0 RN/L = 2.38 GRADIENT INTERVAL = -5.00/ 5.00

| Y | Z | X | ALPHA | BETA | PHI | CN | CLM | CY | CYN | CBL | CA |
|---|---|---|---|---|---|---|---|---|---|---|---|
| -300.890 | 598.660 | 599.59000 | -10.26500 | 5.08710 | .07134 | -.32024 | .09502 | -.17516 | .05261 | -.01829 | .25153 |
| -301.140 | 499.910 | 599.56000 | -10.26400 | 5.08700 | .07134 | -.32005 | .09493 | -.17493 | .05254 | -.01825 | .25126 |
| -300.850 | 449.840 | 599.50000 | -10.26400 | 5.08710 | .07133 | -.31992 | .09491 | -.17493 | .05254 | -.01826 | .25127 |
| -300.680 | 399.930 | 599.53000 | -10.26500 | 5.08740 | .07140 | -.32019 | .09499 | -.17536 | .05268 | -.01834 | .25135 |
| -301.380 | 249.830 | 599.52000 | -10.26500 | 5.08700 | .07133 | -.31999 | .09493 | -.17486 | .05252 | -.01825 | .25128 |
| -300.870 | 199.900 | 599.62000 | -10.26400 | 5.08690 | .07130 | -.32015 | .09497 | -.17498 | .05258 | -.01827 | .25133 |
| | GRADIENT | .00000 | .00000 | .00000 | .00000 | .00000 | .00000 | .00000 | .00000 | .00000 | .00000 |

IA143, AEDC V41A-P8A, O/ET W/R.H. SRB SEPARATING (OVX774) ( 24 MAY 77 )

REFERENCE DATA

SREF = 2690.0000 SQ.FT. XMRP = 1097.0000 IN. XT
LREF = 1290.3000 INCHES YMRP = .0000 IN. YT
BREF = 1290.3000 INCHES ZMRP = 450.0000 IN. ZT
SCALE = .0100

PARAMETRIC DATA

ALPHA = -10.000 BETA = 5.000
DALPHA = -15.000 DBETA = 4.000
X = 600.000 MACH = 4.500
JET PC = .000

RUN NO. 2823/ 0 RN/L = 2.39 GRADIENT INTERVAL = -5.00/ 5.00

| Y | Z | X | ALPHA | BETA | PHI | CN | CLM | CY | CYN | CBL | CA |
|---|---|---|---|---|---|---|---|---|---|---|---|
| -101.500 | 204.540 | 602.01000 | -10.26500 | 5.08140 | .09376 | -.30971 | .08896 | -.19310 | .06352 | -.01788 | .24858 |
| -100.280 | 250.330 | 599.50000 | -10.26500 | 5.08270 | .08776 | -.30856 | .08815 | -.18815 | .06061 | -.01796 | .24921 |
| -99.831 | 400.480 | 599.36000 | -10.26500 | 5.08660 | .07397 | -.31448 | .09113 | -.17785 | .05412 | -.01836 | .24921 |
| -100.520 | 450.520 | 599.43000 | -10.26400 | 5.08720 | .07213 | -.31776 | .09326 | -.17653 | .05328 | -.01842 | .24916 |
| -101.050 | 500.650 | 599.44000 | -10.26400 | 5.08760 | .07140 | -.31940 | .09442 | -.17600 | .05289 | -.01845 | .24979 |
| -100.750 | 600.280 | 599.40000 | -10.26400 | 5.08740 | .07136 | -.31963 | .09473 | -.17598 | .05294 | -.01845 | .25055 |
| | GRADIENT | .00000 | .00000 | .00000 | .00000 | .00000 | .00000 | .00000 | .00000 | .00000 | .00000 |

RUN NO. 2824/ 0 RN/L = 2.39 GRADIENT INTERVAL = -5.00/ 5.00

| Y | Z | X | ALPHA | BETA | PHI | CN | CLM | CY | CYN | CBL | CA |
|---|---|---|---|---|---|---|---|---|---|---|---|
| -301.550 | 599.270 | 599.03000 | -10.26400 | 5.08730 | .07137 | -.31966 | .09476 | -.17594 | .05294 | -.01845 | .25057 |
| -300.990 | 500.580 | 599.51000 | -10.26400 | 5.08740 | .07137 | -.31975 | .09477 | -.17604 | .05296 | -.01847 | .25064 |
| -301.130 | 450.430 | 599.40000 | -10.26400 | 5.08740 | .07133 | -.31976 | .09476 | -.17614 | .05299 | -.01848 | .25056 |
| -300.650 | 400.450 | 599.44000 | -10.26400 | 5.08740 | .07133 | -.31982 | .09476 | -.17598 | .05291 | -.01845 | .25058 |
| -300.810 | 250.210 | 599.38000 | -10.26400 | 5.08740 | .07130 | -.31972 | .09476 | -.17609 | .05296 | -.01848 | .25064 |
| -300.640 | 200.340 | 599.33000 | -10.26400 | 5.08740 | .07128 | -.31962 | .09467 | -.17601 | .05295 | -.01847 | .25029 |
| | GRADIENT | .00000 | .00000 | .00000 | .00000 | .00000 | .00000 | .00000 | .00000 | .00000 | .00000 |

IA143, AEDC V41A-P8A, O/ET W/R.H. SRB SEPARATING (OVX775) ( 24 MAY 77 )

REFERENCE DATA

SREF = 2690.0000 SQ.FT. XMRP = 1097.0000 IN. XT
LREF = 1290.3000 INCHES YMRP = .0000 IN. YT
BREF = 1290.3000 INCHES ZMRP = 450.0000 IN. ZT
SCALE = .0100

PARAMETRIC DATA

ALPHA = -10.000 BETA = 5.000
DALPHA = -15.000 DBETA = 4.000
X = 600.000 MACH = 4.500
JET PC = .000

RUN NO. 2861/ 0 RN/L = 2.36 GRADIENT INTERVAL = -5.00/ 5.00

| Y | Z | X | ALPHA | BETA | PHI | CN | CLM | CY | CYN | CBL | CA |
|---|---|---|---|---|---|---|---|---|---|---|---|
| -101.840 | 204.600 | 602.14000 | -10.26500 | 5.08140 | .09343 | -.30934 | .08877 | -.19223 | .06307 | -.01777 | .24829 |
| -100.400 | 250.360 | 599.32000 | -10.26500 | 5.08260 | .08743 | -.30825 | .08793 | -.18717 | .06013 | -.01763 | .24868 |
| -99.778 | 400.460 | 599.41000 | -10.26500 | 5.08680 | .07398 | -.31446 | .09108 | -.17737 | .05384 | -.01826 | .24899 |
| -100.400 | 450.590 | 599.38000 | -10.26400 | 5.08710 | .07212 | -.31752 | .09316 | -.17593 | .05298 | -.01830 | .24890 |
| -100.730 | 500.550 | 599.33000 | -10.26400 | 5.08740 | .07133 | -.31896 | .09419 | -.17534 | .05262 | -.01833 | .24926 |
| -100.860 | 600.260 | 599.35000 | -10.26400 | 5.08730 | .07130 | -.31940 | .09458 | -.17548 | .05266 | -.01834 | .25026 |
| | GRADIENT | .00000 | .00000 | .00000 | .00000 | .00000 | .00000 | .00000 | .00000 | .00000 | .00000 |

IA143, AEDC V41A-P8A, O/ET W/R.H. SRB SEPARATING (OVX776) ( 24 MAY 77 )

REFERENCE DATA

SREF = 2690.0000 SQ.FT. XMRP = 1097.0000 IN. XT
LREF = 1290.3000 INCHES YMRP = .0000 IN. YT
BREF = 1290.3000 INCHES ZMRP = 450.0000 IN. ZT
SCALE = .0100

PARAMETRIC DATA

ALPHA = -10.000 BETA = 5.000
DALPHA = .000 DBETA = -12.000
X = 600.000 MACH = 4.500
JET PC = .000

RUN NO. 2767/ 0 RN/L = 2.39 GRADIENT INTERVAL = -5.00/ 5.00

| Y | Z | X | ALPHA | BETA | PHI | CN | CLM | CY | CYN | CBL | CA |
|---|---|---|---|---|---|---|---|---|---|---|---|
| -100.630 | 249.750 | 599.42000 | -10.26500 | 5.08560 | .07759 | -.30906 | .08842 | -.17960 | .05532 | -.01805 | .25027 |
| -101.050 | 399.730 | 599.53000 | -10.26500 | 5.08690 | .07191 | -.31847 | .09375 | -.17525 | .05275 | -.01822 | .25049 |
| -101.270 | 449.990 | 599.64000 | -10.26400 | 5.08690 | .07134 | -.32002 | .09482 | -.17487 | .05251 | -.01823 | .25095 |
| -101.100 | 500.000 | 599.62000 | -10.26400 | 5.08700 | .07131 | -.32007 | .09494 | -.17513 | .05263 | -.01829 | .25119 |
| -100.910 | 600.060 | 599.62000 | -10.26400 | 5.08700 | .07132 | -.32004 | .09498 | -.17490 | .05254 | -.01825 | .25134 |
| | GRADIENT | .00000 | .00000 | .00000 | .00000 | .00000 | .00000 | .00000 | .00000 | .00000 | .00000 |

IA143, AEDC V41A-P8A, O/ET W/R.H. SRB SEPARATING (OVX777) ( 24 MAY 77 )

REFERENCE DATA

SREF = 2690.0000 SQ.FT. XMRP = 1097.0000 IN. XT
LREF = 1290.3000 INCHES YMRP = .0000 IN. YT
BREF = 1290.3000 INCHES ZMRP = 450.0000 IN. ZT
SCALE = .0100

PARAMETRIC DATA

ALPHA = -10.000 BETA = 5.000
DALPHA = -15.000 DBETA = -12.000
X = 600.000 MACH = 4.500
JET PC = .000

RUN NO. 2829/ 0 RN/L = 2.38 GRADIENT INTERVAL = -5.00/ 5.00

| Y | Z | X | ALPHA | BETA | PHI | CN | CLM | CY | CYN | CBL | CA |
|---|---|---|---|---|---|---|---|---|---|---|---|
| -101.270 | 450.030 | 599.33000 | -10.26500 | 5.08560 | .07803 | -.30571 | .08525 | -.18084 | .05593 | -.01822 | .24595 |
| -101.080 | 500.450 | 599.45000 | -10.26400 | 5.08680 | .07383 | -.31364 | .09011 | -.17764 | .05394 | -.01833 | .24593 |
| -101.140 | 600.750 | 599.49000 | -10.26300 | 5.08780 | .07096 | -.31850 | .09362 | -.17576 | .05267 | -.01846 | .24688 |
| | GRADIENT | .00000 | .00000 | .00000 | .00000 | .00000 | .00000 | .00000 | .00000 | .00000 | .00000 |

IA143, AEDC V41A-P8A, O/ET W/R.H. SRB SEPARATING (OVX778) ( 24 MAY 77 )

REFERENCE DATA

SREF = 2690.0000 SQ.FT. XMRP = 1097.0000 IN. XT
LREF = 1290.3000 INCHES YMRP = .0000 IN. YT
BREF = 1290.3000 INCHES ZMRP = 450.0000 IN. ZT
SCALE = .0100

PARAMETRIC DATA

ALPHA = -10.000 BETA = 5.000
DALPHA = .000 DBETA = -12.000
X = 600.000 MACH = 4.500
JET PC = .000

RUN NO. 2768/ 0 RN/L = 2.38 GRADIENT INTERVAL = -5.00/ 5.00

| Y | Z | X | ALPHA | BETA | PHI | CN | CLM | CY | CYN | CBL | CA |
|---|---|---|---|---|---|---|---|---|---|---|---|
| -300.930 | 199.980 | 599.52000 | -10.26400 | 5.08690 | .07140 | -.31980 | .09472 | -.17491 | .05254 | -.01823 | .25111 |
| -300.470 | 249.800 | 599.38000 | -10.26400 | 5.08700 | .07132 | -.31994 | .09485 | -.17493 | .05253 | -.01824 | .25106 |
| -299.680 | 399.630 | 599.34000 | -10.26400 | 5.08710 | .07131 | -.32003 | .09497 | -.17493 | .05251 | -.01825 | .25144 |
| -300.610 | 449.630 | 599.48000 | -10.26400 | 5.08700 | .07132 | -.32001 | .09496 | -.17490 | .05253 | -.01825 | .25136 |
| -300.710 | 499.690 | 599.52000 | -10.26500 | 5.08710 | .07133 | -.32001 | .09491 | -.17497 | .05256 | -.01826 | .25115 |
| -300.820 | 599.590 | 599.45000 | -10.26400 | 5.08700 | .07135 | -.32008 | .09498 | -.17514 | .05263 | -.01829 | .25144 |
| | GRADIENT | .00000 | .00000 | .00000 | .00000 | .00000 | .00000 | .00000 | .00000 | .00000 | .00000 |

IA143, AEDC V41A-P8A, O/ET W/R.H. SRB SEPARATING (OVX779) ( 24 MAY 77 )

REFERENCE DATA

SREF = 2690.0000 SQ.FT. XMRP = 1097.0000 IN. XT
LREF = 1290.3000 INCHES YMRP = .0000 IN. YT
BREF = 1290.3000 INCHES ZMRP = 450.0000 IN. ZT
SCALE = .0100

PARAMETRIC DATA

ALPHA = -10.000 BETA = 5.000
DALPHA = .000 DBETA = -12.000
X = 600.000 MACH = 4.500
JET PC = .000

RUN NO. 2791/ 0 RN/L = 2.36 GRADIENT INTERVAL = -5.00/ 5.00

| Y | Z | X | ALPHA | BETA | PHI | CN | CLM | CY | CYN | CBL | CA |
|---|---|---|---|---|---|---|---|---|---|---|---|
| -300.870 | 199.940 | 599.50000 | -10.26500 | 5.08760 | .07174 | -.31952 | .09459 | -.17549 | .05269 | -.01831 | .25071 |
| -300.610 | 249.730 | 599.36000 | -10.26500 | 5.08750 | .07169 | -.31946 | .09473 | -.17519 | .05259 | -.01827 | .25086 |
| -300.650 | 399.560 | 599.42000 | -10.26500 | 5.08750 | .07169 | -.31970 | .09485 | -.17533 | .05264 | -.01829 | .25107 |
| -300.410 | 449.650 | 599.51000 | -10.26500 | 5.08750 | .07170 | -.31965 | .09483 | -.17536 | .05267 | -.01830 | .25104 |
| -300.580 | 499.630 | 599.50000 | -10.26500 | 5.08760 | .07168 | -.31972 | .09486 | -.17544 | .05267 | -.01831 | .25112 |
| -300.590 | 599.650 | 599.53000 | -10.26500 | 5.08740 | .07168 | -.31974 | .09491 | -.17522 | .05260 | -.01826 | .25137 |
| | GRADIENT | .00000 | .00000 | .00000 | .00000 | .00000 | .00000 | .00000 | .00000 | .00000 | .00000 |

IA143, AEDC V41A-P8A, O/ET W/R.H. SRB SEPARATING (OVX780) ( 24 MAY 77 )

REFERENCE DATA

SREF = 2690.0000 SQ.FT. XMRP = 1097.0000 IN. XT
LREF = 1290.3000 INCHES YMRP = .0000 IN. YT
BREF = 1290.3000 INCHES ZMRP = 450.0000 IN. ZT
SCALE = .0100

PARAMETRIC DATA

ALPHA = -10.000 BETA = 5.000
DALPHA = -15.000 DBETA = -12.000
X = 600.000 MACH = 4.500
JET PC = .000

RUN NO. 2830/ 0 RN/L = 2.38 GRADIENT INTERVAL = -5.00/ 5.00

| Y | Z | X | ALPHA | BETA | PHI | CN | CLM | CY | CYN | CBL | CA |
|---|---|---|---|---|---|---|---|---|---|---|---|
| -300.330 | 200.500 | 599.20000 | -10.26400 | 5.08690 | .07230 | -.31527 | .09088 | -.17809 | .05425 | -.01876 | .24565 |
| -300.490 | 250.380 | 599.33000 | -10.26400 | 5.08730 | .07211 | -.31752 | .09279 | -.17641 | .05315 | -.01839 | .24687 |
| -299.210 | 400.130 | 598.98000 | -10.26400 | 5.08760 | .07117 | -.31897 | .09396 | -.17591 | .05281 | -.01846 | .24826 |
| -299.830 | 450.200 | 599.25000 | -10.26400 | 5.08750 | .07107 | -.31895 | .09411 | -.17567 | .05271 | -.01843 | .24844 |
| -300.530 | 500.150 | 599.32000 | -10.26300 | 5.08750 | .07105 | -.31905 | .09426 | -.17578 | .05277 | -.01845 | .24897 |
| -300.190 | 599.800 | 599.15000 | -10.26400 | 5.08750 | .07124 | -.31968 | .09470 | -.17617 | .05298 | -.01849 | .25033 |
| | GRADIENT | .00000 | .00000 | .00000 | .00000 | .00000 | .00000 | .00000 | .00000 | .00000 | .00000 |

IA143, AEDC V41A-P8A, O/ET W/R.H. SRB SEPARATING (OVX781) ( 24 MAY 77 )

REFERENCE DATA

SREF = 2690.0000 SQ.FT. XMRP = 1097.0000 IN. XT
LREF = 1290.3000 INCHES YMRP = .0000 IN. YT
BREF = 1290.3000 INCHES ZMRP = 450.0000 IN. ZT
SCALE = .0100

PARAMETRIC DATA

ALPHA = -10.000 BETA = 5.000
DALPHA = -7.000 DBETA = -4.000
X = 600.000 MACH = 4.500
JET PC = .000

RUN NO. 2794/ 0 RN/L = 2.38 GRADIENT INTERVAL = -5.00/ 5.00

| Y | Z | X | ALPHA | BETA | PHI | CN | CLM | CY | CYN | CBL | CA |
|---|---|---|---|---|---|---|---|---|---|---|---|
| -199.880 | 200.220 | 599.28000 | -10.26500 | 5.08580 | .07616 | -.31458 | .09144 | -.17876 | .05488 | -.01817 | .25007 |
| -200.660 | 299.990 | 599.36000 | -10.26400 | 5.08700 | .07247 | -.31799 | .09366 | -.17588 | .05303 | -.01824 | .25000 |
| -200.820 | 399.960 | 599.41000 | -10.26400 | 5.08740 | .07149 | -.31943 | .09468 | -.17542 | .05265 | -.01831 | .25072 |
| | GRADIENT | .00000 | .00000 | .00000 | .00000 | .00000 | .00000 | .00000 | .00000 | .00000 | .00000 |

IA143, AEDC V41A-P8A, O/ET W/R.H. SRB SEPARATING (OVX782) ( 24 MAY 77 )

REFERENCE DATA

SREF = 2690.0000 SQ.FT. XMRP = 1097.0000 IN. XT
LREF = 1290.3000 INCHES YMRP = .0000 IN. YT
BREF = 1290.3000 INCHES ZMRP = 450.0000 IN. ZT
SCALE = .0100

PARAMETRIC DATA

ALPHA = -10.000 BETA = 5.000
DALPHA = -5.000 DBETA = .000
X = 600.000 MACH = 4.500
JET PC = .000

RUN NO. 2779/ 0 RN/L = 2.37 GRADIENT INTERVAL = -5.00/ 5.00

| Y | Z | X | ALPHA | BETA | PHI | CN | CLM | CY | CYN | CBL | CA |
|---|---|---|---|---|---|---|---|---|---|---|---|
| -104.060 | 198.650 | 600.26000 | -10.26500 | 5.08440 | .08113 | -.31200 | .09029 | -.18228 | .05707 | -.01797 | .25056 |
| -100.430 | 299.830 | 599.41000 | -10.26500 | 5.08630 | .07404 | -.31491 | .09160 | -.17694 | .05377 | -.01817 | .25098 |
| -100.730 | 399.950 | 599.49000 | -10.26400 | 5.08700 | .07156 | -.31910 | .09439 | -.17519 | .05269 | -.01827 | .25054 |
| | GRADIENT | .00000 | .00000 | .00000 | .00000 | .00000 | .00000 | .00000 | .00000 | .00000 | .00000 |

RUN NO. 2780/ 0 RN/L = 2.37 GRADIENT INTERVAL = -5.00/ 5.00

| Y | Z | X | ALPHA | BETA | PHI | CN | CLM | CY | CYN | CBL | CA |
|---|---|---|---|---|---|---|---|---|---|---|---|
| -302.060 | 400.170 | 599.40000 | -10.26400 | 5.08710 | .07132 | -.32006 | .09503 | -.17493 | .05252 | -.01825 | .25148 |
| -300.830 | 300.190 | 599.44000 | -10.26400 | 5.08710 | .07132 | -.32001 | .09501 | -.17498 | .05254 | -.01827 | .25150 |
| -301.340 | 199.890 | 599.35000 | -10.26400 | 5.08700 | .07134 | -.32000 | .09501 | -.17484 | .05251 | -.01824 | .25137 |
| | GRADIENT | .00000 | .00000 | .00000 | .00000 | .00000 | .00000 | .00000 | .00000 | .00000 | .00000 |

IA143, AEDC V41A-P8A, O/ET W/R.H. SRB SEPARATING (OVX783) ( 24 MAY 77 )

REFERENCE DATA

SREF = 2690.0000 SQ.FT. XMRP = 1097.0000 IN. XT
LREF = 1290.3000 INCHES YMRP = .0000 IN. YT
BREF = 1290.3000 INCHES ZMRP = 450.0000 IN. ZT
SCALE = .0100

PARAMETRIC DATA

ALPHA = -10.000 BETA = 5.000
DALPHA = -10.000 DBETA = .000
X = 600.000 MACH = 4.500
JET PC = .000

RUN NO. 2807/ 0 RN/L = 2.38 GRADIENT INTERVAL = -5.00/ 5.00

| Y | Z | X | ALPHA | BETA | PHI | CN | CLM | CY | CYN | CBL | CA |
|---|---|---|---|---|---|---|---|---|---|---|---|
| -103.610 | 201.160 | 600.54000 | -10.26400 | 5.08250 | .08853 | -.30988 | .08916 | -.18837 | .06073 | -.01784 | .24889 |
| -99.782 | 300.010 | 599.19000 | -10.26400 | 5.08600 | .07632 | -.31106 | .08939 | -.17948 | .05513 | -.01824 | .24956 |
| -100.340 | 400.280 | 599.31000 | -10.26400 | 5.08690 | .07260 | -.31652 | .09261 | -.17663 | .05340 | -.01834 | .24925 |
| | GRADIENT | .00000 | .00000 | .00000 | .00000 | .00000 | .00000 | .00000 | .00000 | .00000 | .00000 |

RUN NO. 2808/ 0 RN/L = 2.38 GRADIENT INTERVAL = -5.00/ 5.00

| Y | Z | X | ALPHA | BETA | PHI | CN | CLM | CY | CYN | CBL | CA |
|---|---|---|---|---|---|---|---|---|---|---|---|
| -302.570 | 400.820 | 599.39000 | -10.26300 | 5.08730 | .07125 | -.31937 | .09468 | -.17581 | .05283 | -.01842 | .25049 |
| -301.100 | 300.170 | 599.33000 | -10.26400 | 5.08740 | .07136 | -.31957 | .09474 | -.17590 | .05287 | -.01842 | .25066 |
| -300.560 | 200.090 | 599.20000 | -10.26300 | 5.08720 | .07126 | -.31943 | .09469 | -.17572 | .05281 | -.01840 | .25046 |
| | GRADIENT | .00000 | .00000 | .00000 | .00000 | .00000 | .00000 | .00000 | .00000 | .00000 | .00000 |

IA143, AEDC V41A-P8A, O/ET W/R.H. SRB SEPARATING (OVX784) ( 24 MAY 77 )

REFERENCE DATA

SREF = 2690.0000 SQ.FT. XMRP = 1097.0000 IN. XT
LREF = 1290.3000 INCHES YMRP = .0000 IN. YT
BREF = 1290.3000 INCHES ZMRP = 450.0000 IN. ZT
SCALE = .0100

PARAMETRIC DATA

ALPHA = -10.000 BETA = 5.000
DALPHA = -5.000 DBETA = -8.000
X = 600.000 MACH = 4.500
JET PC = .000

RUN NO. 2782/ 0 RN/L = 2.37 GRADIENT INTERVAL = -5.00/ 5.00

| Y | Z | X | ALPHA | BETA | PHI | CN | CLM | CY | CYN | CBL | CA |
|---|---|---|---|---|---|---|---|---|---|---|---|
| -98.681 | 398.620 | 599.00000 | -10.26500 | 5.08680 | .07234 | -.31725 | .09303 | -.17564 | .05301 | -.01824 | .25030 |
| -100.560 | 300.140 | 599.41000 | -10.26500 | 5.08610 | .07551 | -.31085 | .08927 | -.17797 | .05436 | -.01812 | .25014 |
| -101.230 | 200.390 | 599.42000 | -10.26500 | 5.08060 | .09491 | -.30669 | .08747 | -.19234 | .06342 | -.01753 | .24970 |
| | GRADIENT | .00000 | .00000 | .00000 | .00000 | .00000 | .00000 | .00000 | .00000 | .00000 | .00000 |

RUN NO. 2781/ 0 RN/L = 2.37 GRADIENT INTERVAL = -5.00/ 5.00

| Y | Z | X | ALPHA | BETA | PHI | CN | CLM | CY | CYN | CBL | CA |
|---|---|---|---|---|---|---|---|---|---|---|---|
| -300.650 | 199.950 | 599.33000 | -10.26400 | 5.08720 | .07135 | -.31987 | .09487 | -.17512 | .05257 | -.01827 | .25120 |
| -300.330 | 300.060 | 599.30000 | -10.26500 | 5.08710 | .07137 | -.31994 | .09500 | -.17506 | .05261 | -.01828 | .25136 |
| -300.190 | 399.780 | 599.38000 | -10.26400 | 5.08710 | .07134 | -.31990 | .09496 | -.17507 | .05259 | -.01828 | .25133 |
| | GRADIENT | .00000 | .00000 | .00000 | .00000 | .00000 | .00000 | .00000 | .00000 | .00000 | .00000 |

IA143, AEDC V41A-P8A, O/ET W/R.H. SRB SEPARATING (OVX785) ( 24 MAY 77 )

REFERENCE DATA

SREF = 2690.0000 SQ.FT. XMRP = 1097.0000 IN. XT
LREF = 1290.3000 INCHES YMRP = .0000 IN. YT
BREF = 1290.3000 INCHES ZMRP = 450.0000 IN. ZT
SCALE = .0100

PARAMETRIC DATA

ALPHA = -10.000 BETA = 5.000
DALPHA = -10.000 DBETA = -8.000
X = 600.000 MACH = 4.500
JET PC = .000

RUN NO. 2802/ 0 RN/L = 2.38 GRADIENT INTERVAL = -5.00/ 5.00

| Y | Z | X | ALPHA | BETA | PHI | CN | CLM | CY | CYN | CBL | CA |
|---|---|---|---|---|---|---|---|---|---|---|---|
| -101.060 | 200.250 | 599.34000 | -10.26600 | 5.07480 | .11593 | -.30442 | .08633 | -.20858 | .07344 | -.01701 | .24737 |
| -99.427 | 299.620 | 599.08000 | -10.26500 | 5.08270 | .08529 | -.30378 | .08491 | -.18538 | .05925 | -.01788 | .24783 |
| -100.600 | 350.050 | 599.31000 | -10.26500 | 5.08600 | .07644 | -.30894 | .08780 | -.17925 | .05499 | -.01817 | .24846 |
| -100.950 | 400.270 | 599.32000 | -10.26400 | 5.08670 | .07391 | -.31324 | .09039 | -.17755 | .05393 | -.01829 | .24853 |
| | GRADIENT | .00000 | .00000 | .00000 | .00000 | .00000 | .00000 | .00000 | .00000 | .00000 | .00000 |

IA143, AEDC V41A-P8A, O/ET W/R.H. SRB SEPARATING (OVX786) ( 24 MAY 77 )

REFERENCE DATA

SREF = 2690.0000 SQ.FT. XMRP = 1097.0000 IN. XT
LREF = 1290.3000 INCHES YMRP = .0000 IN. YT
BREF = 1290.3000 INCHES ZMRP = 450.0000 IN. ZT
SCALE = .0100

PARAMETRIC DATA

ALPHA = -10.000 BETA = 5.000
DALPHA = -10.000 DBETA = -8.000
X = 600.000 MACH = 4.500
JET PC = .000

RUN NO. 2804/ 0 RN/L = 2.38 GRADIENT INTERVAL = -5.00/ 5.00

| Y | Z | X | ALPHA | BETA | PHI | CN | CLM | CY | CYN | CBL | CA |
|---|---|---|---|---|---|---|---|---|---|---|---|
| -300.310 | 200.300 | 599.19000 | -10.26400 | 5.08720 | .07138 | -.31923 | .09439 | -.17560 | .05273 | -.01834 | .25007 |
| -299.560 | 300.390 | 599.34000 | -10.26400 | 5.08720 | .07132 | -.31936 | .09464 | -.17555 | .05274 | -.01835 | .25040 |
| -299.900 | 400.140 | 599.22000 | -10.26400 | 5.08730 | .07129 | -.31939 | .09467 | -.17564 | .05277 | -.01839 | .25042 |
| | GRADIENT | .00000 | .00000 | .00000 | .00000 | .00000 | .00000 | .00000 | .00000 | .00000 | .00000 |

IA143, AEDC V41A-P8A, O/ET W/R.H. SRB SEPARATING (OVX787) ( 24 MAY 77 )

REFERENCE DATA

SREF = 2690.0000 SQ.FT. XMRP = 1097.0000 IN. XT
LREF = 1290.3000 INCHES YMRP = .0000 IN. YT
BREF = 1290.3000 INCHES ZMRP = 450.0000 IN. ZT
SCALE = .0100

PARAMETRIC DATA

ALPHA = -10.000 BETA = 5.000
DALPHA = -10.000 DBETA = -4.000
X = 600.000 MACH = 4.500
JET PC = .000

RUN NO. 2806/ 0 RN/L = 2.38 GRADIENT INTERVAL = -5.00/ 5.00

| Y | Z | X | ALPHA | BETA | PHI | CN | CLM | CY | CYN | CBL | CA |
|---|---|---|---|---|---|---|---|---|---|---|---|
| -100.870 | 300.160 | 599.35000 | -10.26400 | 5.08530 | .07827 | -.30869 | .08788 | -.18067 | .05595 | -.01814 | .24861 |
| -100.610 | 350.060 | 599.40000 | -10.26500 | 5.08640 | .07476 | -.31208 | .08978 | -.17826 | .05435 | -.01827 | .24915 |
| -100.910 | 400.220 | 599.40000 | -10.26400 | 5.08690 | .07301 | -.31559 | .09188 | -.17698 | .05358 | -.01834 | .24898 |
| | GRADIENT | .00000 | .00000 | .00000 | .00000 | .00000 | .00000 | .00000 | .00000 | .00000 | .00000 |

IA143, AEDC V41A-P8A, O/ET W/R.H. SRB SEPARATING (OVX788) ( 24 MAY 77 )

REFERENCE DATA

SREF = 2690.0000 SQ.FT. XMRP = 1097.0000 IN. XT
LREF = 1290.3000 INCHES YMRP = .0000 IN. YT
BREF = 1290.3000 INCHES ZMRP = 450.0000 IN. ZT
SCALE = .0100

PARAMETRIC DATA

ALPHA = -10.000 BETA = 5.000
DALPHA = -15.000 DBETA = -4.000
X = 600.000 MACH = 4.500
JET PC = .000

RUN NO. 2825/ 0 RN/L = 2.39 GRADIENT INTERVAL = -5.00/ 5.00

| Y | Z | X | ALPHA | BETA | PHI | CN | CLM | CY | CYN | CBL | CA |
|---|---|---|---|---|---|---|---|---|---|---|---|
| -100.920 | 300.310 | 599.38000 | -10.26600 | 5.08040 | .09266 | -.30337 | .08456 | -.19140 | .06312 | -.01781 | .24754 |
| -100.560 | 350.320 | 599.23000 | -10.26500 | 5.08440 | .08080 | -.30636 | .08607 | -.18282 | .05738 | -.01815 | .24761 |
| -100.760 | 400.360 | 599.26000 | -10.26500 | 5.08630 | .07562 | -.31097 | .08886 | -.17918 | .05490 | -.01832 | .24831 |
| | GRADIENT | .00000 | .00000 | .00000 | .00000 | .00000 | .00000 | .00000 | .00000 | .00000 | .00000 |

RUN NO. 2826/ 0 RN/L = 2.39 GRADIENT INTERVAL = -5.00/ 5.00

| Y | Z | X | ALPHA | BETA | PHI | CN | CLM | CY | CYN | CBL | CA |
|---|---|---|---|---|---|---|---|---|---|---|---|
| -202.670 | 402.070 | 599.92000 | -10.26400 | 5.08740 | .07134 | -.31905 | .09417 | -.17594 | .05288 | -.01844 | .24938 |
| -201.050 | 350.500 | 599.42000 | -10.26500 | 5.08700 | .07300 | -.31714 | .09281 | -.17716 | .05367 | -.01840 | .24916 |
| -200.870 | 300.570 | 599.31000 | -10.26500 | 5.08630 | .07490 | -.31420 | .09099 | -.17854 | .05458 | -.01833 | .24900 |
| | GRADIENT | .00000 | .00000 | .00000 | .00000 | .00000 | .00000 | .00000 | .00000 | .00000 | .00000 |

IA143, AEDC V41A-P8A, O/ET W/R.H. SRB SEPARATING (OVX789) ( 24 MAY 77 )

REFERENCE DATA

SREF = 2690.0000 SQ.FT. XMRP = 1097.0000 IN. XT
LREF = 1290.3000 INCHES YMRP = .0000 IN. YT
BREF = 1290.3000 INCHES ZMRP = 450.0000 IN. ZT
SCALE = .0100

PARAMETRIC DATA

ALPHA = -10.000 BETA = 5.000
DALPHA = -10.000 DBETA = -4.000
X = 600.000 MACH = 4.500
JET PC = .000

RUN NO. 2805/ 0 RN/L = 2.38 GRADIENT INTERVAL = -5.00/ 5.00

| Y | Z | X | ALPHA | BETA | PHI | CN | CLM | CY | CYN | CBL | CA |
|---|---|---|---|---|---|---|---|---|---|---|---|
| -200.790 | 200.220 | 599.28000 | -10.26500 | 5.08470 | .07857 | -.31327 | .09048 | -.18103 | .05636 | -.01818 | .24938 |
| -200.590 | 300.230 | 599.32000 | -10.26400 | 5.08670 | .07313 | -.31677 | .09272 | -.17708 | .05370 | -.01834 | .24950 |
| -200.780 | 350.170 | 599.34000 | -10.26400 | 5.08720 | .07160 | -.31856 | .09405 | -.17569 | .05284 | -.01834 | .24954 |
| -201.120 | 400.170 | 599.40000 | -10.26400 | 5.08740 | .07138 | -.31931 | .09451 | -.17570 | .05279 | -.01838 | .25011 |
| | GRADIENT | .00000 | .00000 | .00000 | .00000 | .00000 | .00000 | .00000 | .00000 | .00000 | .00000 |

IA143, AEDC V41A-P8A, O/ET W/R.H. SRB SEPARATING (OVX790) ( 24 MAY 77 )

REFERENCE DATA

SREF = 2690.0000 SQ.FT. XMRP = 1097.0000 IN. XT
LREF = 1290.3000 INCHES YMRP = .0000 IN. YT
BREF = 1290.3000 INCHES ZMRP = 450.0000 IN. ZT
SCALE = .0100

PARAMETRIC DATA

ALPHA = -10.000 BETA = 5.000
DALPHA = -15.000 DBETA = -8.000
X = 600.000 MACH = 4.500
JET PC = .000

RUN NO. 2828/ 0 RN/L = 2.39 GRADIENT INTERVAL = -5.00/ 5.00

| Y | Z | X | ALPHA | BETA | PHI | CN | CLM | CY | CYN | CBL | CA |
|---|---|---|---|---|---|---|---|---|---|---|---|
| -98.779 | 398.120 | 598.50000 | -10.26500 | 5.08480 | .07995 | -.30492 | .08505 | -.18214 | .05691 | -.01816 | .24672 |
| -100.470 | 350.380 | 599.29000 | -10.26600 | 5.07990 | .09257 | -.29883 | .08151 | -.19100 | .06310 | -.01775 | .24658 |
| -101.250 | 300.670 | 599.44000 | -10.26600 | 5.07460 | .10980 | -.29798 | .08162 | -.20403 | .07150 | -.01734 | .24632 |
| | GRADIENT | .00000 | .00000 | .00000 | .00000 | .00000 | .00000 | .00000 | .00000 | .00000 | .00000 |

RUN NO. 2827/ 0 RN/L = 2.39 GRADIENT INTERVAL = -5.00/ 5.00

| Y | Z | X | ALPHA | BETA | PHI | CN | CLM | CY | CYN | CBL | CA |
|---|---|---|---|---|---|---|---|---|---|---|---|
| -201.660 | 299.860 | 599.42000 | -10.26500 | 5.08520 | .07813 | -.31136 | .08886 | -.18077 | .05607 | -.01821 | .24786 |
| -200.280 | 350.240 | 599.25000 | -10.26500 | 5.08650 | .07459 | -.31425 | .09085 | -.17834 | .05440 | -.01834 | .24815 |
| -200.260 | 400.200 | 599.16000 | -10.26400 | 5.08710 | .07222 | -.31742 | .09291 | -.17650 | .05327 | -.01840 | .24775 |
| | GRADIENT | .00000 | .00000 | .00000 | .00000 | .00000 | .00000 | .00000 | .00000 | .00000 | .00000 |

IA143, AEDC V41A-P8A, O/ET W/R.H. SRB SEPARATING (OVX791) ( 24 MAY 77 )

REFERENCE DATA

SREF = 2690.0000 SQ.FT. XMRP = 1097.0000 IN. XT
LREF = 1290.3000 INCHES YMRP = .0000 IN. YT
BREF = 1290.3000 INCHES ZMRP = 450.0000 IN. ZT
SCALE = .0100

PARAMETRIC DATA

ALPHA = -10.000 BETA = 5.000
DALPHA = -10.000 DBETA = -9.000
X = 600.000 MACH = 4.500
JET PC = .000

RUN NO. 2803/ 0 RN/L = 2.38 GRADIENT INTERVAL = -5.00/ 5.00

| Y | Z | X | ALPHA | BETA | PHI | CN | CLM | CY | CYN | CBL | CA |
|---|---|---|---|---|---|---|---|---|---|---|---|
| -200.330 | 300.140 | 599.30000 | -10.26400 | 5.08640 | .07429 | -.31446 | .09129 | -.17767 | .05410 | -.01826 | .24913 |
| -200.120 | 350.200 | 599.21000 | -10.26400 | 5.08710 | .07246 | -.31741 | .09315 | -.17652 | .05330 | -.01835 | .24911 |
| -200.390 | 400.160 | 599.38000 | -10.26300 | 5.08730 | .07132 | -.31889 | .09424 | -.17551 | .05268 | -.01834 | .24953 |
| | GRADIENT | .00000 | .00000 | .00000 | .00000 | .00000 | .00000 | .00000 | .00000 | .00000 | .00000 |

IA143, AEDC V41A-P8A, O/ET W/R.H. SRB SEPARATING (OVX792) ( 24 MAY 77 )

REFERENCE DATA

SREF = 2690.0000 SQ.FT. XMRP = 1097.0000 IN. XT
LREF = 1290.3000 INCHES YMRP = .0000 IN. YT
BREF = 1290.3000 INCHES ZMRP = 450.0000 IN. ZT
SCALE = .0100

PARAMETRIC DATA

ALPHA = -10.000 BETA = 5.000
DALPHA = -5.000 DBETA = 4.000
X = 900.000 MACH = 4.500
JET PC = .000

RUN NO. 2785/ 0 RN/L = 2.37 GRADIENT INTERVAL = -5.00/ 5.00

| Y | Z | X | ALPHA | BETA | PHI | CN | CLM | CY | CYN | CBL | CA |
|---|---|---|---|---|---|---|---|---|---|---|---|
| -102.630 | 199.110 | 900.26000 | -10.26500 | 5.08700 | .07187 | -.31937 | .09446 | -.17514 | .05270 | -.01821 | .25082 |
| -100.590 | 274.760 | 899.34000 | -10.26500 | 5.08720 | .07152 | -.31985 | .09486 | -.17479 | .05245 | -.01821 | .25115 |
| -100.680 | 424.600 | 899.28000 | -10.26500 | 5.08730 | .07151 | -.32010 | .09504 | -.17488 | .05248 | -.01823 | .25158 |
| -100.840 | 499.830 | 899.40000 | -10.26500 | 5.08730 | .07151 | -.32001 | .09496 | -.17471 | .05239 | -.01820 | .25129 |
| -100.830 | 600.180 | 899.32000 | -10.26500 | 5.08720 | .07141 | -.31983 | .09494 | -.17470 | .05242 | -.01822 | .25126 |
| | GRADIENT | .00000 | .00000 | .00000 | .00000 | .00000 | .00000 | .00000 | .00000 | .00000 | .00000 |

RUN NO. 2786/ 0 RN/L = 2.37 GRADIENT INTERVAL = -5.00/ 5.00

| Y | Z | X | ALPHA | BETA | PHI | CN | CLM | CY | CYN | CBL | CA |
|---|---|---|---|---|---|---|---|---|---|---|---|
| -401.420 | 599.240 | 899.31000 | -10.26500 | 5.08720 | .07149 | -.32001 | .09502 | -.17471 | .05242 | -.01821 | .25149 |
| -400.870 | 500.080 | 899.45000 | -10.26500 | 5.08720 | .07145 | -.31986 | .09499 | -.17488 | .05247 | -.01823 | .25157 |
| -400.540 | 425.010 | 899.40000 | -10.26500 | 5.08720 | .07147 | -.31984 | .09496 | -.17468 | .05243 | -.01821 | .25127 |
| -400.700 | 275.090 | 899.34000 | -10.26500 | 5.08730 | .07144 | -.31995 | .09497 | -.17471 | .05240 | -.01821 | .25130 |
| -400.230 | 200.110 | 899.26000 | -10.26500 | 5.08720 | .07146 | -.31987 | .09493 | -.17462 | .05238 | -.01820 | .25109 |
| | GRADIENT | .00000 | .00000 | .00000 | .00000 | .00000 | .00000 | .00000 | .00000 | .00000 | .00000 |

IA143, AEDC V41A-P8A, O/ET W/R.H. SRB SEPARATING (OVX793) ( 24 MAY 77 )

REFERENCE DATA

SREF = 2690.0000 SQ.FT. XMRP = 1097.0000 IN. XT
LREF = 1290.3000 INCHES YMRP = .0000 IN. YT
BREF = 1290.3000 INCHES ZMRP = 450.0000 IN. ZT
SCALE = .0100

PARAMETRIC DATA

ALPHA = -10.000 BETA = 5.000
DALPHA = -20.000 DBETA = 4.000
X = 900.000 MACH = 4.500
JET PC = .000

RUN NO. 2853/ 0 RN/L = 2.38 GRADIENT INTERVAL = -5.00/ 5.00

| Y | Z | X | ALPHA | BETA | PHI | CN | CLM | CY | CYN | CBL | CA |
|---|---|---|---|---|---|---|---|---|---|---|---|
| -100.540 | 200.480 | 899.09000 | -10.26600 | 5.08310 | .08266 | -.31306 | .08999 | -.18368 | .05836 | -.01805 | .24837 |
| -100.100 | 275.410 | 899.13000 | -10.26500 | 5.08670 | .07361 | -.31685 | .09262 | -.17727 | .05384 | -.01832 | .24922 |
| -100.250 | 425.210 | 899.18000 | -10.26400 | 5.08740 | .07129 | -.31948 | .09453 | -.17576 | .05280 | -.01842 | .24995 |
| -100.230 | 500.490 | 899.24000 | -10.26400 | 5.08740 | .07129 | -.31971 | .09473 | -.17578 | .05284 | -.01843 | .25054 |
| -100.640 | 600.730 | 899.40000 | -10.26400 | 5.08730 | .07129 | -.31991 | .09483 | -.17575 | .05284 | -.01842 | .25072 |
| | GRADIENT | .00000 | .00000 | .00000 | .00000 | .00000 | .00000 | .00000 | .00000 | .00000 | .00000 |

IA143, AEDC V41A-P8A, O/ET W/R.H. SRB SEPARATING (OVX793) ( 24 MAY 77 )

REFERENCE DATA

SREF = 2690.0000 SQ.FT. XMRP = 1097.0000 IN. XT
LREF = 1290.3000 INCHES YMRP = .0000 IN. YT
BREF = 1290.3000 INCHES ZMRP = 450.0000 IN. ZT
SCALE = .0100

PARAMETRIC DATA

ALPHA = -10.000 BETA = 5.000
DALPHA = -20.000 DBETA = 4.000
X = 900.000 MACH = 4.500
JET PC = .000

RUN NO. 2854/ 0 RN/L = 2.37 GRADIENT INTERVAL = -5.00/ 5.00

| Y | Z | X | ALPHA | BETA | PHI | CN | CLM | CY | CYN | CBL | CA |
|---|---|---|---|---|---|---|---|---|---|---|---|
| -402.920 | 600.260 | 899.10000 | -10.26400 | 5.08740 | .07127 | -.31989 | .09479 | -.17578 | .05281 | -.01842 | .25064 |
| -401.010 | 500.550 | 899.32000 | -10.26400 | 5.08740 | .07125 | -.31984 | .09478 | -.17587 | .05286 | -.01844 | .25063 |
| -400.540 | 425.420 | 899.24000 | -10.26400 | 5.08740 | .07129 | -.31977 | .09480 | -.17578 | .05283 | -.01842 | .25075 |
| -400.570 | 275.200 | 899.08000 | -10.26400 | 5.08740 | .07123 | -.31973 | .09475 | -.17576 | .05280 | -.01842 | .25063 |
| -400.470 | 200.170 | 899.08000 | -10.26400 | 5.08740 | .07133 | -.31994 | .09483 | -.17574 | .05281 | -.01840 | .25068 |
| | GRADIENT | .00000 | .00000 | .00000 | .00000 | .00000 | .00000 | .00000 | .00000 | .00000 | .00000 |

IA143, AEDC V41A-P8A, O/ET W/R.H. SRB SEPARATING (OVX794) ( 24 MAY 77 )

REFERENCE DATA

SREF = 2690.0000 SQ.FT. XMRP = 1097.0000 IN. XT
LREF = 1290.3000 INCHES YMRP = .0000 IN. YT
BREF = 1290.3000 INCHES ZMRP = 450.0000 IN. ZT
SCALE = .0100

PARAMETRIC DATA

ALPHA = -10.000 BETA = 5.000
DALPHA = -5.000 DBETA = -16.000
X = 900.000 MACH = 4.500
JET PC = .000

RUN NO. 2783/ 0 RN/L = 2.37 GRADIENT INTERVAL = -5.00/ 5.00

| Y | Z | X | ALPHA | BETA | PHI | CN | CLM | CY | CYN | CBL | CA |
|---|---|---|---|---|---|---|---|---|---|---|---|
| -100.780 | 274.950 | 899.31000 | -10.26600 | 5.08620 | .07447 | -.31561 | .09183 | -.17683 | .05381 | -.01810 | .24996 |
| -101.050 | 424.650 | 899.25000 | -10.26500 | 5.08720 | .07145 | -.31983 | .09485 | -.17487 | .05247 | -.01823 | .25099 |
| -101.120 | 499.990 | 899.48000 | -10.26500 | 5.08720 | .07146 | -.31991 | .09496 | -.17483 | .05249 | -.01823 | .25135 |
| -101.420 | 600.270 | 899.56000 | -10.26500 | 5.08710 | .07141 | -.31979 | .09494 | -.17472 | .05244 | -.01822 | .25129 |
| | GRADIENT | .00000 | .00000 | .00000 | .00000 | .00000 | .00000 | .00000 | .00000 | .00000 | .00000 |

IA143, AEDC V41A-P8A, O/ET W/R.H. SRB SEPARATING (OVX795) ( 24 MAY 77 )

REFERENCE DATA

SREF = 2690.0000 SQ.FT. XMRP = 1097.0000 IN. XT
LREF = 1290.3000 INCHES YMRP = .0000 IN. YT
BREF = 1290.3000 INCHES ZMRP = 450.0000 IN. ZT
SCALE = .0100

PARAMETRIC DATA

ALPHA = -10.000 BETA = 5.000
DALPHA = -20.000 DBETA = -16.000
X = 900.000 MACH = 4.500
JET PC = .000

RUN NO. 2855/ 0 RN/L = 2.37 GRADIENT INTERVAL = -5.00/ 5.00

| Y | Z | X | ALPHA | BETA | PHI | CN | CLM | CY | CYN | CBL | CA |
|---|---|---|---|---|---|---|---|---|---|---|---|
| -100.480 | 425.450 | 899.23000 | -10.26400 | 5.08700 | .07291 | -.31637 | .09190 | -.17624 | .05316 | -.01821 | .24677 |
| -101.110 | 500.500 | 899.36000 | -10.26300 | 5.08760 | .07111 | -.31837 | .09312 | -.17505 | .05233 | -.01828 | .24454 |
| -100.990 | 601.040 | 899.63000 | -10.26300 | 5.08780 | .07076 | -.31849 | .09350 | -.17498 | .05223 | -.01833 | .24592 |
| | GRADIENT | .00000 | .00000 | .00000 | .00000 | .00000 | .00000 | .00000 | .00000 | .00000 | .00000 |

IA143, AEDC V41A-P8A, O/ET W/R.H. SRB SEPARATING (OVX796) ( 24 MAY 77 )

REFERENCE DATA

SREF = 2690.0000 SQ.FT. XMRP = 1097.0000 IN. XT
LREF = 1290.3000 INCHES YMRP = .0000 IN. YT
BREF = 1290.3000 INCHES ZMRP = 450.0000 IN. ZT
SCALE = .0100

PARAMETRIC DATA

ALPHA = -10.000 BETA = 5.000
DALPHA = -5.000 DBETA = -16.000
X = 900.000 MACH = 4.500
JET PC = .000

RUN NO. 2784/ 0 RN/L = 2.37 GRADIENT INTERVAL = -5.00/ 5.00

| Y | Z | X | ALPHA | BETA | PHI | CN | CLM | CY | CYN | CBL | CA |
|---|---|---|---|---|---|---|---|---|---|---|---|
| -400.860 | 200.140 | 899.26000 | -10.26500 | 5.08720 | .07148 | -.31998 | .09502 | -.17475 | .05245 | -.01821 | .25147 |
| -399.900 | 274.940 | 899.13000 | -10.26500 | 5.08720 | .07150 | -.32003 | .09501 | -.17481 | .05247 | -.01822 | .25135 |
| -399.480 | 424.700 | 899.06000 | -10.26500 | 5.08710 | .07141 | -.31989 | .09499 | -.17462 | .05240 | -.01820 | .25132 |
| -400.290 | 499.750 | 899.23000 | -10.26500 | 5.08720 | .07151 | -.31994 | .09500 | -.17476 | .05247 | -.01822 | .25140 |
| -400.430 | 599.670 | 899.26000 | -10.26500 | 5.08730 | .07146 | -.32009 | .09502 | -.17490 | .05248 | -.01824 | .25151 |
| | GRADIENT | .00000 | .00000 | .00000 | .00000 | .00000 | .00000 | .00000 | .00000 | .00000 | .00000 |

IA143, AEDC V41A-P8A, O/ET W/R.H. SRB SEPARATING (OVX797) ( 24 MAY 77 )

REFERENCE DATA

SREF = 2690.0000 SQ.FT. XMRP = 1097.0000 IN. XT
LREF = 1290.3000 INCHES YMRP = .0000 IN. YT
BREF = 1290.3000 INCHES ZMRP = 450.0000 IN. ZT
SCALE = .0100

PARAMETRIC DATA

ALPHA = -10.000 BETA = 5.000
DALPHA = -20.000 DBETA = -16.000
X = 900.000 MACH = 4.500
JET PC = .000

RUN NO. 2856/ 0 RN/L = 2.37 GRADIENT INTERVAL = -5.00/ 5.00

| Y | Z | X | ALPHA | BETA | PHI | CN | CLM | CY | CYN | CBL | CA |
|---|---|---|---|---|---|---|---|---|---|---|---|
| -400.600 | 200.580 | 899.06000 | -10.26400 | 5.08750 | .07123 | -.31924 | .09425 | -.17556 | .05269 | -.01838 | .24940 |
| -400.110 | 275.760 | 899.12000 | -10.26400 | 5.08730 | .07128 | -.31918 | .09441 | -.17546 | .05270 | -.01837 | .24971 |
| -399.710 | 425.330 | 898.88000 | -10.26400 | 5.08740 | .07127 | -.31949 | .09464 | -.17558 | .05274 | -.01839 | .25014 |
| -399.970 | 500.230 | 898.93000 | -10.26400 | 5.08740 | .07125 | -.31954 | .09470 | -.17563 | .05276 | -.01840 | .25047 |
| -400.100 | 600.030 | 899.04000 | -10.26400 | 5.08750 | .07130 | -.31966 | .09477 | -.17571 | .05279 | -.01842 | .25061 |
| | GRADIENT | .00000 | .00000 | .00000 | .00000 | .00000 | .00000 | .00000 | .00000 | .00000 | .00000 |

IA143, AEDC V41A-P8A, O/ET W/R.H. SRB SEPARATING (OVX798) ( 24 MAY 77 )

REFERENCE DATA

SREF = 2690.0000 SQ.FT. XMRP = 1097.0000 IN. XT
LREF = 1290.3000 INCHES YMRP = .0000 IN. YT
BREF = 1290.3000 INCHES ZMRP = 450.0000 IN. ZT
SCALE = .0100

PARAMETRIC DATA

ALPHA = -10.000 BETA = 5.000
DALPHA = -10.000 DBETA = .000
X = 900.000 MACH = 4.500
JET PC = .000

RUN NO. 2809/ 0 RN/L = 2.38 GRADIENT INTERVAL = -5.00/ 5.00

| Y | Z | X | ALPHA | BETA | PHI | CN | CLM | CY | CYN | CBL | CA |
|---|---|---|---|---|---|---|---|---|---|---|---|
| -103.070 | 300.650 | 900.46000 | -10.26400 | 5.08730 | .07132 | -.31919 | .09442 | -.17578 | .05283 | -.01840 | .25005 |
| -100.620 | 399.920 | 899.18000 | -10.26400 | 5.08730 | .07133 | -.31935 | .09463 | -.17570 | .05280 | -.01839 | .25034 |
| -100.790 | 500.110 | 899.26000 | -10.26300 | 5.08730 | .07129 | -.31931 | .09466 | -.17577 | .05282 | -.01840 | .25048 |
| | GRADIENT | .00000 | .00000 | .00000 | .00000 | .00000 | .00000 | .00000 | .00000 | .00000 | .00000 |

RUN NO. 2810/ 0 RN/L = 2.38 GRADIENT INTERVAL = -5.00/ 5.00

| Y | Z | X | ALPHA | BETA | PHI | CN | CLM | CY | CYN | CBL | CA |
|---|---|---|---|---|---|---|---|---|---|---|---|
| -302.680 | 501.800 | 899.58000 | -10.26300 | 5.08720 | .07124 | -.31940 | .09470 | -.17583 | .05285 | -.01842 | .25057 |
| -300.790 | 400.230 | 899.26000 | -10.26400 | 5.08730 | .07134 | -.31949 | .09470 | -.17575 | .05281 | -.01839 | .25053 |
| -300.970 | 300.200 | 899.23000 | -10.26400 | 5.08730 | .07131 | -.31932 | .09465 | -.17568 | .05279 | -.01839 | .25044 |
| | GRADIENT | .00000 | .00000 | .00000 | .00000 | .00000 | .00000 | .00000 | .00000 | .00000 | .00000 |

IA143, AEDC V41A-P8A, O/ET W/R.H. SRB SEPARATING (OVX799) ( 24 MAY 77 )

REFERENCE DATA

SREF = 2690.0000 SQ.FT. XMRP = 1097.0000 IN. XT
LREF = 1290.3000 INCHES YMRP = .0000 IN. YT
BREF = 1290.3000 INCHES ZMRP = 450.0000 IN. ZT
SCALE = .0100

PARAMETRIC DATA

ALPHA = -10.000 BETA = 5.000
DALPHA = -15.000 DBETA = .000
X = 900.000 MACH = 4.500
JET PC = .000

RUN NO. 2838/ 0 RN/L = 2.37 GRADIENT INTERVAL = -5.00/ 5.00

| Y | Z | X | ALPHA | BETA | PHI | CN | CLM | CY | CYN | CBL | CA |
|---|---|---|---|---|---|---|---|---|---|---|---|
| -102.840 | 303.070 | 901.24000 | -10.26400 | 5.08730 | .07167 | -.31870 | .09387 | -.17631 | .05311 | -.01845 | .24921 |
| -100.650 | 400.150 | 899.29000 | -10.26400 | 5.08750 | .07124 | -.31954 | .09457 | -.17609 | .05294 | -.01848 | .25016 |
| -101.600 | 500.330 | 899.33000 | -10.26400 | 5.08750 | .07133 | -.31979 | .09477 | -.17607 | .05296 | -.01848 | .25065 |
| | GRADIENT | .00000 | .00000 | .00000 | .00000 | .00000 | .00000 | .00000 | .00000 | .00000 | .00000 |

RUN NO. 2839/ 0 RN/L = 2.37 GRADIENT INTERVAL = -5.00/ 5.00

| Y | Z | X | ALPHA | BETA | PHI | CN | CLM | CY | CYN | CBL | CA |
|---|---|---|---|---|---|---|---|---|---|---|---|
| -302.620 | 502.480 | 899.77000 | -10.26400 | 5.08740 | .07128 | -.31969 | .09474 | -.17605 | .05298 | -.01849 | .25054 |
| -301.270 | 400.510 | 899.27000 | -10.26400 | 5.08740 | .07135 | -.31977 | .09476 | -.17593 | .05291 | -.01845 | .25051 |
| -300.520 | 300.430 | 899.17000 | -10.26400 | 5.08740 | .07126 | -.31975 | .09477 | -.17592 | .05289 | -.01845 | .25060 |
| | GRADIENT | .00000 | .00000 | .00000 | .00000 | .00000 | .00000 | .00000 | .00000 | .00000 | .00000 |

IA143, AEDC V41A-P8A, O/ET W/R.H. SRB SEPARATING (OVX800) ( 24 MAY 77 )

REFERENCE DATA

SREF = 2690.0000 SQ.FT. XMRP = 1097.0000 IN. XT
LREF = 1290.3000 INCHES YMRP = .0000 IN. YT
BREF = 1290.3000 INCHES ZMRP = 450.0000 IN. ZT
SCALE = .0100

PARAMETRIC DATA

ALPHA = -10.000 BETA = 5.000
DALPHA = -10.000 DBETA = -12.000
X = 900.000 MACH = 4.500
JET PC = .000

RUN NO. 2815/ 0 RN/L = 2.40 GRADIENT INTERVAL = -5.00/ 5.00

| Y | Z | X | ALPHA | BETA | PHI | CN | CLM | CY | CYN | CBL | CA |
|---|---|---|---|---|---|---|---|---|---|---|---|
| -100.440 | 300.220 | 899.42000 | -10.26400 | 5.08680 | .07358 | -.31606 | .09222 | -.17763 | .05394 | -.01837 | .24895 |
| -100.960 | 399.960 | 899.12000 | -10.26300 | 5.08750 | .07122 | -.31889 | .09421 | -.17573 | .05274 | -.01841 | .24902 |
| -101.300 | 500.360 | 899.33000 | -10.26400 | 5.08740 | .07135 | -.31948 | .09467 | -.17591 | .05287 | -.01843 | .25044 |
| | GRADIENT | .00000 | .00000 | .00000 | .00000 | .00000 | .00000 | .00000 | .00000 | .00000 | .00000 |

RUN NO. 2816/ 0 RN/L = 2.40 GRADIENT INTERVAL = -5.00/ 5.00

| Y | Z | X | ALPHA | BETA | PHI | CN | CLM | CY | CYN | CBL | CA |
|---|---|---|---|---|---|---|---|---|---|---|---|
| -302.910 | 502.720 | 900.10000 | -10.26400 | 5.08740 | .07139 | -.31944 | .09469 | -.17594 | .05289 | -.01843 | .25051 |
| -301.000 | 400.290 | 899.27000 | -10.26400 | 5.08740 | .07130 | -.31925 | .09465 | -.17577 | .05283 | -.01842 | .25044 |
| -300.830 | 300.440 | 899.40000 | -10.26400 | 5.08740 | .07132 | -.31935 | .09464 | -.17580 | .05285 | -.01843 | .25028 |
| | GRADIENT | .00000 | .00000 | .00000 | .00000 | .00000 | .00000 | .00000 | .00000 | .00000 | .00000 |

IA143, AEDC V41A-P8A, O/ET W/R.H. SRB SEPARATING (OVX801) ( 24 MAY 77 )

REFERENCE DATA

SREF = 2690.0000 SQ.FT. XMRP = 1097.0000 IN. XT
LREF = 1290.3000 INCHES YMRP = .0000 IN. YT
BREF = 1290.3000 INCHES ZMRP = 450.0000 IN. ZT
SCALE = .0100

PARAMETRIC DATA

ALPHA = -10.000 BETA = 5.000
DALPHA = -15.000 DBETA = -12.000
X = 900.000 MACH = 4.500
JET PC = .000

RUN NO. 2831/ 0 RN/L = 2.38 GRADIENT INTERVAL = -5.00/ 5.00

| Y | Z | X | ALPHA | BETA | PHI | CN | CLM | CY | CYN | CBL | CA |
|---|---|---|---|---|---|---|---|---|---|---|---|
| -101.210 | 300.350 | 899.25000 | -10.26500 | 5.08570 | .07645 | -.31254 | .08973 | -.17957 | .05529 | -.01827 | .24752 |
| -100.710 | 399.760 | 899.11000 | -10.26400 | 5.08770 | .07111 | -.31920 | .09392 | -.17587 | .05275 | -.01845 | .24706 |
| -101.230 | 500.400 | 899.20000 | -10.26400 | 5.08760 | .07107 | -.31906 | .09421 | -.17587 | .05279 | -.01847 | .24876 |
| | GRADIENT | .00000 | .00000 | .00000 | .00000 | .00000 | .00000 | .00000 | .00000 | .00000 | .00000 |

RUN NO. 2832/ 0 RN/L = 2.38 GRADIENT INTERVAL = -5.00/ 5.00

| Y | Z | X | ALPHA | BETA | PHI | CN | CLM | CY | CYN | CBL | CA |
|---|---|---|---|---|---|---|---|---|---|---|---|
| -300.820 | 500.260 | 899.29000 | -10.26400 | 5.08740 | .07132 | -.31977 | .09475 | -.17606 | .05297 | -.01848 | .25055 |
| -300.560 | 400.660 | 899.23000 | -10.26400 | 5.08740 | .07132 | -.31981 | .09479 | -.17597 | .05292 | -.01846 | .25071 |
| -300.810 | 300.520 | 899.30000 | -10.26400 | 5.08740 | .07128 | -.31972 | .09472 | -.17607 | .05297 | -.01848 | .25045 |
| | GRADIENT | .00000 | .00000 | .00000 | .00000 | .00000 | .00000 | .00000 | .00000 | .00000 | .00000 |

IA143, AEDC V41A-P8A, O/ET W/R.H. SRB SEPARATING (OVX802) ( 24 MAY 77 )

REFERENCE DATA

SREF = 2690.0000 SQ.FT. XMRP = 1097.0000 IN. XT
LREF = 1290.3000 INCHES YMRP = .0000 IN. YT
BREF = 1290.3000 INCHES ZMRP = 450.0000 IN. ZT
SCALE = .0100

PARAMETRIC DATA

ALPHA = -10.000 BETA = 5.000
DALPHA = -12.000 DBETA = -6.000
X = 900.000 MACH = 4.500
JET PC = .000

RUN NO. 2821/ 0 RN/L = 2.39 GRADIENT INTERVAL = -5.00/ 5.00

| Y | Z | X | ALPHA | BETA | PHI | CN | CLM | CY | CYN | CBL | CA |
|---|---|---|---|---|---|---|---|---|---|---|---|
| -200.360 | 300.290 | 899.21000 | -10.26400 | 5.08740 | .07138 | -.31964 | .09471 | -.17605 | .05296 | -.01846 | .25045 |
| -200.370 | 400.230 | 899.14000 | -10.26400 | 5.08730 | .07131 | -.31971 | .09478 | -.17596 | .05293 | -.01845 | .25066 |
| -200.770 | 500.300 | 899.25000 | -10.26400 | 5.08740 | .07134 | -.31978 | .09462 | -.17614 | .05300 | -.01848 | .25077 |
| | GRADIENT | .00000 | .00000 | .00000 | .00000 | .00000 | .00000 | .00000 | .00000 | .00000 | .00000 |

IA143, AEDC V41A-P8A, O/ET W/R.H. SRB SEPARATING (OVX803) ( 24 MAY 77 )

REFERENCE DATA

SREF = 2690.0000 SQ.FT. XMRP = 1097.0000 IN. XT
LREF = 1290.3000 INCHES YMRP = .0000 IN. YT
BREF = 1290.3000 INCHES ZMRP = 450.0000 IN. ZT
SCALE = .0100

PARAMETRIC DATA

ALPHA = -10.000 BETA = 5.000
DALPHA = -15.000 DBETA = -6.000
X = 900.000 MACH = 4.500
JET PC = .000

RUN NO. 2835/ 0 RN/L = 2.38 GRADIENT INTERVAL = -5.00/ 5.00

| Y | Z | X | ALPHA | BETA | PHI | CN | CLM | CY | CYN | CBL | CA |
|---|---|---|---|---|---|---|---|---|---|---|---|
| -201.030 | 400.340 | 899.22000 | -10.26400 | 5.08740 | .07131 | -.31978 | .09476 | -.17614 | .05300 | -.01849 | .25066 |
| -200.800 | 600.490 | 899.33000 | -10.26400 | 5.08740 | .07124 | -.31968 | .09472 | -.17602 | .05295 | -.01847 | .25044 |
| -200.420 | 799.890 | 899.16000 | -10.26400 | 5.08740 | .07124 | -.31973 | .09477 | -.17594 | .05290 | -.01846 | .25062 |
| -200.570 | 999.520 | 899.16000 | -10.26400 | 5.08740 | .07129 | -.31989 | .09478 | -.17604 | .05296 | -.01848 | .25061 |
| | GRADIENT | .00000 | .00000 | .00000 | .00000 | .00000 | .00000 | .00000 | .00000 | .00000 | .00000 |

IA143, AEDC V41A-P8A, O/ET W/R.H. SRB SEPARATING (OVX804) ( 24 MAY 77 )

REFERENCE DATA

SREF = 2690.0000 SQ.FT. XMRP = 1097.0000 IN. XT
LREF = 1290.3000 INCHES YMRP = .0000 IN. YT
BREF = 1290.3000 INCHES ZMRP = 450.0000 IN. ZT
SCALE = .0100

PARAMETRIC DATA

ALPHA = -10.000 BETA = 5.000
DALPHA = -10.000 DBETA = -4.000
X = 900.000 MACH = 4.500
JET PC = .000

RUN NO. 2811/ 0 RN/L = 2.38 GRADIENT INTERVAL = -5.00/ 5 00

| Y | Z | X | ALPHA | BETA | PHI | CN | CLM | CY | CYN | CBL | CA |
|---|---|---|---|---|---|---|---|---|---|---|---|
| -201.060 | 300.210 | 899.31000 | -10.26400 | 5.08730 | .07134 | -.31932 | .09465 | -.17579 | .05285 | -.01842 | .25041 |
| -201.180 | 350.140 | 899.27000 | -10.26400 | 5.08740 | .07138 | -.31947 | .09471 | -.17590 | .05286 | -.01843 | .25063 |
| -200.720 | 400.170 | 899.27000 | -10.26400 | 5.08740 | .07137 | -.31948 | .09469 | -.17594 | .05289 | -.01844 | .25057 |
| | GRADIENT | .00000 | .00000 | .00000 | .00000 | .00000 | .00000 | .00000 | .00000 | .00000 | .00000 |

RUN NO. 2812/ 0 RN/L = 2.38 GRADIENT INTERVAL = -5.00/ 5.00

| Y | Z | X | ALPHA | BETA | PHI | CN | CLM | CY | CYN | CBL | CA |
|---|---|---|---|---|---|---|---|---|---|---|---|
| -302.590 | 400.990 | 899.59000 | -10.26400 | 5.08740 | .07135 | -.31935 | .09467 | -.17594 | .05291 | -.01845 | .25046 |
| -300.670 | 350.170 | 899.10000 | -10.26400 | 5.08750 | .07136 | -.31955 | .09474 | -.17598 | .05290 | -.01845 | .25059 |
| -300.520 | 300.220 | 899.29000 | -10.26400 | 5.08740 | .07127 | -.31940 | .09467 | -.17584 | .05285 | -.01843 | .25040 |
| | GRADIENT | .00000 | .00000 | .00000 | .00000 | .00000 | .00000 | .00000 | .00000 | .00000 | .00000 |

IA143, AEDC V41A-P8A, O/ET W/R.H. SRB SEPARATING (OVX805) ( 24 MAY 77 )

REFERENCE DATA

SREF = 2690.0000 SQ.FT. XMRP = 1097.0000 IN. XT
LREF = 1290.3000 INCHES YMRP = .0000 IN. YT
BREF = 1290.3000 INCHES ZMRP = 450.0000 IN. ZT
SCALE = .0100

PARAMETRIC DATA

ALPHA = -10.000 BETA = 5.000
DALPHA = -15.000 DBETA = -4.000
X = 900.000 MACH = 4.500
JET PC = .000

RUN NO. 2836/ 0 RN/L = 2.37 GRADIENT INTERVAL = -5.00/ 5.00

| Y | Z | X | ALPHA | BETA | PHI | CN | CLM | CY | CYN | CBL | CA |
|---|---|---|---|---|---|---|---|---|---|---|---|
| -201.180 | 300.300 | 899.26000 | -10.26400 | 5.08730 | .07126 | -.31959 | .09464 | -.17592 | .05293 | -.01846 | .25020 |
| -200.940 | 350.290 | 899.21000 | -10.26400 | 5.08740 | .07129 | -.31971 | .09475 | -.17602 | .05295 | -.01847 | .25057 |
| -200.680 | 400.390 | 899.14000 | -10.26400 | 5.08730 | .07126 | -.31971 | .09472 | -.17580 | .05288 | -.01843 | .25045 |
| | GRADIENT | .00000 | .00000 | .00000 | .00000 | .00000 | .00000 | .00000 | .00000 | .00000 | .00000 |

RUN NO. 2837/ 0 RN/L = 2.37 GRADIENT INTERVAL = -5.00/ 5.00

| Y | Z | X | ALPHA | BETA | PHI | CN | CLM | CY | CYN | CBL | CA |
|---|---|---|---|---|---|---|---|---|---|---|---|
| -302.180 | 401.530 | 899.57000 | -10.26400 | 5.08740 | .07125 | -.31967 | .09476 | -.17599 | .05293 | -.01847 | .25062 |
| -300.930 | 350.470 | 899.32000 | -10.26400 | 5.08740 | .07132 | -.31985 | .09481 | -.17597 | .05292 | -.01846 | .25080 |
| -300.650 | 300.390 | 899.15000 | -10.26400 | 5.08750 | .07130 | -.31977 | .09475 | -.17615 | .05299 | -.01850 | .25059 |
| | GRADIENT | .00000 | .00000 | .00000 | .00000 | .00000 | .00000 | .00000 | .00000 | .00000 | .00000 |

IA143, AEDC V41A-P8A, O/ET W/R.H. SRB SEPARATING (OVX806) ( 24 MAY 77 )

REFERENCE DATA

SREF = 2690.0000 SQ.FT. XMRP = 1097.0000 IN. XT
LREF = 1290.3000 INCHES YMRP = .0000 IN. YT
BREF = 1290.3000 INCHES ZMRP = 450.0000 IN. ZT
SCALE = .0100

PARAMETRIC DATA

ALPHA = -10.000 BETA = 5.000
DALPHA = -10.000 DBETA = -8.000
X = 900.000 MACH = 4.500
JET PC = .000

RUN NO. 2814/ 0 RN/L = 2.39 GRADIENT INTERVAL = -5.00/ 5.00

| Y | Z | X | ALPHA | BETA | PHI | CN | CLM | CY | CYN | CBL | CA |
|---|---|---|---|---|---|---|---|---|---|---|---|
| -199.150 | 399.110 | 898.87000 | -10.26400 | 5.08740 | .07130 | -.31925 | .09463 | -.17582 | .05288 | -.01845 | .25032 |
| -200.140 | 350.230 | 899.24000 | -10.26400 | 5.08740 | .07135 | -.31951 | .09472 | -.17587 | .05287 | -.01843 | .25052 |
| -200.740 | 300.430 | 899.32000 | -10.26400 | 5.08740 | .07135 | -.31936 | .09462 | -.17589 | .05287 | -.01843 | .25029 |
| | GRADIENT | .00000 | .00000 | .00000 | .00000 | .00000 | .00000 | .00000 | .00000 | .00000 | .00000 |

RUN NO. 2813/ 0 RN/L = 2.39 GRADIENT INTERVAL = -5.00/ 5.00

| Y | Z | X | ALPHA | BETA | PHI | CN | CLM | CY | CYN | CBL | CA |
|---|---|---|---|---|---|---|---|---|---|---|---|
| -301.810 | 300.060 | 899.57000 | -10.26400 | 5.08740 | .07133 | -.31919 | .09460 | -.17580 | .05284 | -.01842 | .25032 |
| -300.600 | 350.160 | 899.24000 | -10.26400 | 5.08750 | .07131 | -.31945 | .09472 | -.17591 | .05285 | -.01844 | .25058 |
| -300.390 | 400.100 | 899.29000 | -10.26400 | 5.08740 | .07132 | -.31949 | .09472 | -.17585 | .05285 | -.01842 | .25053 |
| | GRADIENT | .00000 | .00000 | .00000 | .00000 | .00000 | .00000 | .00000 | .00000 | .00000 | .00000 |

IA143, AEDC V41A-P8A, O/ET W/R.H. SRB SEPARATING (OVX807) ( 24 MAY 77 )

REFERENCE DATA

SREF = 2690.0000 SQ.FT. XMRP = 1097.0000 IN. XT
LREF = 1290.3000 INCHES YMRP = .0000 IN. YT
BREF = 1290.3000 INCHES ZMRP = 450.0000 IN. ZT
SCALE = .0100

PARAMETRIC DATA

ALPHA = -10.000 BETA = 5.000
DALPHA = -15.000 DBETA = -8.000
X = 900.000 MACH = 4.500
JET PC = .000

RUN NO. 2833/ 0 RN/L = 2.38 GRADIENT INTERVAL = -5.00/ 5.00

| Y | Z | X | ALPHA | BETA | PHI | CN | CLM | CY | CYN | CBL | CA |
|---|---|---|---|---|---|---|---|---|---|---|---|
| -200.460 | 300.270 | 899.11000 | -10.26400 | 5.08760 | .07127 | -.31924 | .09437 | -.17603 | .05290 | -.01848 | .24965 |
| -200.170 | 350.260 | 899.10000 | -10.26400 | 5.08760 | .07133 | -.31957 | .09457 | -.17603 | .05290 | -.01847 | .25003 |
| -200.130 | 400.210 | 899.03000 | -10.26400 | 5.08730 | .07125 | -.31961 | .09470 | -.17598 | .05294 | -.01846 | .25045 |
| | GRADIENT | .00000 | .00000 | .00000 | .00000 | .00000 | .00000 | .00000 | .00000 | .00000 | .00000 |

RUN NO. 2834/ 0 RN/L = 2.38 GRADIENT INTERVAL = -5.00/ 5.00

| Y | Z | X | ALPHA | BETA | PHI | CN | CLM | CY | CYN | CBL | CA |
|---|---|---|---|---|---|---|---|---|---|---|---|
| -302.150 | 401.790 | 899.71000 | -10.26400 | 5.08740 | .07128 | -.31979 | .09479 | -.17607 | .05298 | -.01848 | .25064 |
| -300.960 | 350.430 | 899.26000 | -10.26400 | 5.08740 | .07126 | -.31962 | .09473 | -.17596 | .05292 | -.01847 | .25060 |
| -300.860 | 300.480 | 899.14000 | -10.26400 | 5.08740 | .07123 | -.31985 | .09484 | -.17617 | .05301 | -.01851 | .25087 |
| | GRADIENT | .00000 | .00000 | .00000 | .00000 | .00000 | .00000 | .00000 | .00000 | .00000 | .00000 |

IA143, AEDC V41A-P8A, O/ET W/R.H. SRB SEPARATING (OVX808) ( 24 MAY 77 )

REFERENCE DATA

SREF = 2690.0000 SQ.FT. XMRP = 1097.0000 IN. XT
LREF = 1290.3000 INCHES YMRP = .0000 IN. YT
BREF = 1290.3000 INCHES ZMRP = 450.0000 IN. ZT
SCALE = .0100

PARAMETRIC DATA

ALPHA = -10.000 BETA = 5.000
DALPHA = -5.000 DBETA = 4.000
X = 1200.000 MACH = 4.500
JET PC = .000

RUN NO. 2787/ 0 RN/L = 2.37 GRADIENT INTERVAL = -5.00/ 5.00

| Y | Z | X | ALPHA | BETA | PHI | CN | CLM | CY | CYN | CBL | CA |
|---|---|---|---|---|---|---|---|---|---|---|---|
| -101.770 | 198.900 | 1200.10001 | -10.26500 | 5.08720 | .07151 | -.32001 | .09503 | -.17475 | .05244 | -.01821 | .25155 |
| -100.890 | 299.860 | 1199.20000 | -10.26500 | 5.08720 | .07152 | -.31989 | .09499 | -.17469 | .05242 | -.01820 | .25144 |
| -100.760 | 399.690 | 1199.20000 | -10.26500 | 5.08710 | .07148 | -.31996 | .09499 | -.17465 | .05242 | -.01819 | .25144 |
| -100.630 | 499.780 | 1199.20000 | -10.26500 | 5.08730 | .07146 | -.31994 | .09498 | -.17480 | .05244 | -.01822 | .25131 |
| -101.740 | 599.850 | 1199.39999 | -10.26500 | 5.08720 | .07143 | -.31989 | .09498 | -.17473 | .05242 | -.01822 | .25141 |
| | GRADIENT | .00000 | .00000 | .00000 | .00000 | .00000 | .00000 | .00000 | .00000 | .00000 | .00000 |

IA143, AEDC V41A-P8A, O/ET W/R.H. SRB SEPARATING (OVX808) ( 24 MAY 77 )

REFERENCE DATA

SREF = 2690.0000 SQ.FT. XMRP = 1097.0000 IN. XT
LREF = 1290.3000 INCHES YMRP = .0000 IN. YT
BREF = 1290.3000 INCHES ZMRP = 450.0000 IN. ZT
SCALE = .0100

PARAMETRIC DATA

ALPHA = -10.000 BETA = 5.000
DALPHA = -5.000 DBETA = 4.000
X = 1200.000 MACH = 4.500
JET PC = .000

RUN NO. 2788/ 0 RN/L = 2.37 GRADIENT INTERVAL = -5.00/ 5.00

| Y | Z | X | ALPHA | BETA | PHI | CN | CLM | CY | CYN | CBL | CA |
|---|---|---|---|---|---|---|---|---|---|---|---|
| -600.690 | 599.180 | 1199.30000 | -10.26500 | 5.08710 | .07143 | -.31994 | .09496 | -.17459 | .05240 | -.01819 | .25126 |
| -600.390 | 500.030 | 1199.30000 | -10.26500 | 5.08720 | .07149 | -.31993 | .09497 | -.17461 | .05239 | -.01819 | .25133 |
| -600.570 | 400.000 | 1199.30000 | -10.26500 | 5.08730 | .07153 | -.32006 | .09501 | -.17470 | .05242 | -.01821 | .25150 |
| -600.730 | 300.010 | 1199.39999 | -10.26500 | 5.08720 | .07147 | -.31998 | .09499 | -.17459 | .05238 | -.01819 | .25134 |
| -600.660 | 200.160 | 1199.30000 | -10.26500 | 5.08720 | .07147 | -.31999 | .09498 | -.17463 | .05239 | -.01820 | .25131 |
| | GRADIENT | .00000 | .00000 | .00000 | .00000 | .00000 | .00000 | .00000 | .00000 | .00000 | .00000 |

IA143, AEDC V41A-P8A, O/ET W/R.H. SRB SEPARATING (OVX809) ( 24 MAY 77 )

REFERENCE DATA

SREF = 2690.0000 SQ.FT. XMRP = 1097.0000 IN. XT
LREF = 1290.3000 INCHES YMRP = .0000 IN. YT
BREF = 1290.3000 INCHES ZMRP = 450.0000 IN. ZT
SCALE = .0100

PARAMETRIC DATA

ALPHA = -10.000 BETA = 5.000
DALPHA = -25.000 DBETA = 4.000
X = 1200.000 MACH = 4.500
JET PC = .000

RUN NO. 2859/ 0 RN/L = 2.37 GRADIENT INTERVAL = -5.00/ 5.00

| Y | Z | X | ALPHA | BETA | PHI | CN | CLM | CY | CYN | CBL | CA |
|---|---|---|---|---|---|---|---|---|---|---|---|
| -100.580 | 200.640 | 1198.89999 | -10.26400 | 5.08740 | .07124 | -.31912 | .09423 | -.17527 | .05258 | -.01833 | .24875 |
| -100.570 | 300.520 | 1199.00000 | -10.26400 | 5.08740 | .07128 | -.31931 | .09441 | -.17548 | .05267 | -.01835 | .24956 |
| -100.230 | 400.470 | 1198.89999 | -10.26400 | 5.08750 | .07128 | -.31967 | .09466 | -.17563 | .05270 | -.01838 | .25031 |
| -100.260 | 500.380 | 1198.89999 | -10.26400 | 5.08740 | .07131 | -.31971 | .09474 | -.17550 | .05268 | -.01836 | .25053 |
| -99.966 | 600.560 | 1199.10001 | -10.26400 | 5.08730 | .07129 | -.31944 | .09466 | -.17540 | .05268 | -.01836 | .25033 |
| | GRADIENT | .00000 | .00000 | .00000 | .00000 | .00000 | .00000 | .00000 | .00000 | .00000 | .00000 |

RUN NO. 2860/ 0 RN/L = 2.37 GRADIENT INTERVAL = -5.00/ 5.00

| Y | Z | X | ALPHA | BETA | PHI | CN | CLM | CY | CYN | CBL | CA |
|---|---|---|---|---|---|---|---|---|---|---|---|
| -601.000 | 599.770 | 1198.70000 | -10.26400 | 5.08740 | .07131 | -.31965 | .09472 | -.17549 | .05269 | -.01836 | .25053 |
| -600.030 | 500.600 | 1199.10001 | -10.26400 | 5.08740 | .07132 | -.31960 | .09469 | -.17553 | .05269 | -.01837 | .25044 |
| -600.940 | 400.620 | 1199.10001 | -10.26400 | 5.08720 | .07130 | -.31958 | .09468 | -.17528 | .05264 | -.01832 | .25041 |
| -599.650 | 300.700 | 1198.89999 | -10.26400 | 5.08730 | .07132 | -.31966 | .09472 | -.17534 | .05263 | -.01833 | .25053 |
| -600.820 | 200.780 | 1199.10001 | -10.26400 | 5.08740 | .07129 | -.31967 | .09468 | -.17551 | .05268 | -.01836 | .25042 |
| | GRADIENT | .00000 | .00000 | .00000 | .00000 | .00000 | .00000 | .00000 | .00000 | .00000 | .00000 |

IA143, AEDC V41A-P8A, O/ET W/R.H. SRB SEPARATING (OVX810) ( 24 MAY 77 )

REFERENCE DATA

SREF = 2690.0000 SQ.FT. XMRP = 1097.0000 IN. XT
LREF = 1290.3000 INCHES YMRP = .0000 IN. YT
BREF = 1290.3000 INCHES ZMRP = 450.0000 IN. ZT
SCALE = .0100

PARAMETRIC DATA

ALPHA = -10.000 BETA = 5.000
DALPHA = -5.000 DBETA = -20.000
X = 1200.000 MACH = 4.500
JET PC = .000

RUN NO. 2790/ 0 RN/L = 2.36 GRADIENT INTERVAL = -5.00/ 5.00

| Y | Z | X | ALPHA | BETA | PHI | CN | CLM | CY | CYN | CBL | CA |
|---|---|---|---|---|---|---|---|---|---|---|---|
| -97.783 | 597.590 | 1198.00000 | -10.26500 | 5.08720 | .07145 | -.31995 | .09500 | -.17472 | .05241 | -.01821 | .25149 |
| -100.130 | 499.560 | 1199.00000 | -10.26500 | 5.08720 | .07151 | -.31996 | .09499 | -.17461 | .05238 | -.01818 | .25139 |
| -100.190 | 399.790 | 1199.00000 | -10.26500 | 5.08720 | .07151 | -.31975 | .09489 | -.17449 | .05234 | -.01816 | .25113 |
| -100.760 | 299.940 | 1199.20000 | -10.26500 | 5.08720 | .07140 | -.31955 | .09461 | -.17452 | .05230 | -.01818 | .25014 |
| -100.950 | 200.270 | 1199.20000 | -10.26500 | 5.08740 | .07148 | -.31946 | .09438 | -.17453 | .05224 | -.01816 | .25011 |
| | GRADIENT | .00000 | .00000 | .00000 | .00000 | .00000 | .00000 | .00000 | .00000 | .00000 | .00000 |

RUN NO. 2789/ 0 RN/L = 2.37 GRADIENT INTERVAL = -5.00/ 5.00

| Y | Z | X | ALPHA | BETA | PHI | CN | CLM | CY | CYN | CBL | CA |
|---|---|---|---|---|---|---|---|---|---|---|---|
| -600.660 | 200.180 | 1199.00000 | -10.26500 | 5.08730 | .07150 | -.32005 | .09502 | -.17485 | .05248 | -.01823 | .25140 |
| -600.560 | 300.010 | 1199.00000 | -10.26500 | 5.08730 | .07152 | -.31992 | .09496 | -.17479 | .05245 | -.01822 | .25133 |
| -600.320 | 399.900 | 1199.10001 | -10.26500 | 5.08730 | .07152 | -.32012 | .09502 | -.17480 | .05243 | -.01821 | .25136 |
| -600.210 | 499.860 | 1199.00000 | -10.26500 | 5.08730 | .07143 | -.31997 | .09498 | -.17478 | .05241 | -.01822 | .25141 |
| -600.160 | 599.770 | 1199.10001 | -10.26500 | 5.08720 | .07148 | -.32002 | .09502 | -.17463 | .05238 | -.01819 | .25138 |
| | GRADIENT | .00000 | .00000 | .00000 | .00000 | .00000 | .00000 | .00000 | .00000 | .00000 | .00000 |

IA143, AEDC V41A-P8A, O/ET W/R.H. SRB SEPARATING (OVX811) ( 24 MAY 77 )

REFERENCE DATA

SREF = 2690.0000 SQ.FT. XMRP = 1097.0000 IN. XT
LREF = 1290.3000 INCHES YMRP = .0000 IN. YT
BREF = 1290.3000 INCHES ZMRP = 450.0000 IN. ZT
SCALE = .0100

PARAMETRIC DATA

ALPHA = -10.000 BETA = 5.000
DALPHA = -25.000 DBETA = -20.000
X = 1200.000 MACH = 4.500
JET PC = .000

RUN NO. 2857/ 0 RN/L = 2.37 GRADIENT INTERVAL = -5.00/ 5.00

| Y | Z | X | ALPHA | BETA | PHI | CN | CLM | CY | CYN | CBL | CA |
|---|---|---|---|---|---|---|---|---|---|---|---|
| -100.710 | 300.520 | 1199.00000 | -10.26400 | 5.08770 | .07121 | -.31740 | .09243 | -.17471 | .05208 | -.01817 | .24492 |
| -99.866 | 400.170 | 1199.00000 | -10.26300 | 5.08800 | .07091 | -.31840 | .09317 | -.17494 | .05213 | -.01827 | .24521 |
| -101.130 | 500.760 | 1199.30000 | -10.26300 | 5.08780 | .07065 | -.31802 | .09312 | -.17463 | .05207 | -.01827 | .24488 |
| -100.970 | 600.810 | 1199.39999 | -10.26300 | 5.08780 | .07072 | -.31827 | .09353 | -.17497 | .05225 | -.01834 | .24596 |
| | GRADIENT | .00000 | .00000 | .00000 | .00000 | .00000 | .00000 | .00000 | .00000 | .00000 | .00000 |

IA143, AEDC V41A-P8A, O/ET W/R.H. SRB SEPARATING (OVX812) ( 24 MAY 77 )

REFERENCE DATA

SREF = 2690.0000 SQ.FT. XMRP = 1097.0000 IN. XT
LREF = 1290.3000 INCHES YMRP = .0000 IN. YT
BREF = 1290.3000 INCHES ZMRP = 450.0000 IN. ZT
SCALE = .0100

PARAMETRIC DATA

ALPHA = -10.000 BETA = 5.000
DALPHA = -25.000 DBETA = -20.000
X = 1200.000 MACH = 4.500
JET PC = .000

RUN NO. 2858/ 0 RN/L = 2.37 GRADIENT INTERVAL = -5.00/ 5.00

| Y | Z | X | ALPHA | BETA | PHI | CN | CLM | CY | CYN | CBL | CA |
|---|---|---|---|---|---|---|---|---|---|---|---|
| -599.880 | 400.480 | 1196.89999 | -10.26400 | 5.08740 | .07129 | -.31989 | .09482 | -.17569 | .05276 | -.01839 | .25068 |
| -600.020 | 500.780 | 1198.80000 | -10.26400 | 5.08740 | .07131 | -.31976 | .09477 | -.17554 | .05271 | -.01837 | .25064 |
| -600.040 | 600.310 | 1198.80000 | -10.26400 | 5.08740 | .07127 | -.31982 | .09477 | -.17552 | .05270 | -.01837 | .25054 |
| | GRADIENT | .00000 | .00000 | .00000 | .00000 | .00000 | .00000 | .00000 | .00000 | .00000 | .00000 |

IA143, AEDC V41A-P8A, O/ET W/R.H. SRB SEPARATING (OVX813) ( 24 MAY 77 )

REFERENCE DATA

SREF = 2690.0000 SQ.FT. XMRP = 1097.0000 IN. XT
LREF = 1290.3000 INCHES YMRP = .0000 IN. YT
BREF = 1290.3000 INCHES ZMRP = 450.0000 IN. ZT
SCALE = .0100

PARAMETRIC DATA

ALPHA = -10.000 BETA = 5.000
DALPHA = -10.000 DBETA = .000
X = 1200.000 MACH = 4.500
JET PC = .000

RUN NO. 2819/ 0 RN/L = 2.40 GRADIENT INTERVAL = -5.00/ 5.00

| Y | Z | X | ALPHA | BETA | PHI | CN | CLM | CY | CYN | CBL | CA |
|---|---|---|---|---|---|---|---|---|---|---|---|
| -203.580 | 301.360 | 1200.30000 | -10.26400 | 5.08740 | .07135 | -.31964 | .09476 | -.17600 | .05294 | -.01845 | .25061 |
| -200.250 | 399.900 | 1199.20000 | -10.26400 | 5.08740 | .07136 | -.31982 | .09481 | -.17604 | .05294 | -.01845 | .25071 |
| -200.390 | 500.070 | 1199.00000 | -10.26400 | 5.08740 | .07131 | -.31960 | .09472 | -.17603 | .05294 | -.01847 | .25051 |
| | GRADIENT | .00000 | .00000 | .00000 | .00000 | .00000 | .00000 | .00000 | .00000 | .00000 | .00000 |

RUN NO. 2820/ 0 RN/L = 2.39 GRADIENT INTERVAL = -5.00/ 5.00

| Y | Z | X | ALPHA | BETA | PHI | CN | CLM | CY | CYN | CBL | CA |
|---|---|---|---|---|---|---|---|---|---|---|---|
| -402.220 | 501.070 | 1199.30000 | -10.26400 | 5.08740 | .07132 | -.31975 | .09478 | -.17620 | .05301 | -.01849 | .25064 |
| -401.210 | 400.280 | 1199.30000 | -10.26400 | 5.08740 | .07136 | -.31976 | .09479 | -.17619 | .05300 | -.01848 | .25078 |
| -400.860 | 300.130 | 1199.20000 | -10.26400 | 5.08740 | .07132 | -.31971 | .09481 | -.17603 | .05293 | -.01846 | .25078 |
| | GRADIENT | .00000 | .00000 | .00000 | .00000 | .00000 | .00000 | .00000 | .00000 | .00000 | .00000 |

IA143, AEDC V41A-P8A, O/ET W/R.H. SRB SEPARATING (OVX814) ( 24 MAY 77 )

REFERENCE DATA

SREF = 2690.0000 SQ.FT. XMRP = 1097.0000 IN. XT
LREF = 1290.3000 INCHES YMRP = .0000 IN. YT
BREF = 1290.3000 INCHES ZMRP = 450.0000 IN. ZT
SCALE = .0100

PARAMETRIC DATA

ALPHA = -10.000 BETA = 5.000
DALPHA = -20.000 DBETA = .000
X = 1200.000 MACH = 4.500
JET PC = .000

RUN NO. 2851/ 0 RN/L = 2.38 GRADIENT INTERVAL = -5.00/ 5.00

| Y | Z | X | ALPHA | BETA | PHI | CN | CLM | CY | CYN | CBL | CA |
|---|---|---|---|---|---|---|---|---|---|---|---|
| -201.010 | 300.380 | 1199.10001 | -10.26400 | 5.08750 | .07131 | -.31977 | .09478 | -.17573 | .05280 | -.01842 | .25069 |
| -200.290 | 400.170 | 1199.00000 | -10.26400 | 5.08740 | .07127 | -.31980 | .09480 | -.17582 | .05284 | -.01844 | .25069 |
| -200.110 | 500.210 | 1199.00000 | -10.26400 | 5.08740 | .07124 | -.31980 | .09478 | -.17581 | .05285 | -.01843 | .25061 |
| | GRADIENT | .00000 | .00000 | .00000 | .00000 | .00000 | .00000 | .00000 | .00000 | .00000 | .00000 |

RUN NO. 2852/ 0 RN/L = 2.38 GRADIENT INTERVAL = -5.00/ 5.00

| Y | Z | X | ALPHA | BETA | PHI | CN | CLM | CY | CYN | CBL | CA |
|---|---|---|---|---|---|---|---|---|---|---|---|
| -402.900 | 501.940 | 1199.60001 | -10.26400 | 5.08740 | .07127 | -.31977 | .09477 | -.17570 | .05281 | -.01842 | .25058 |
| -400.920 | 400.560 | 1199.00000 | -10.26400 | 5.08740 | .07127 | -.31988 | .09482 | -.17569 | .05280 | -.01841 | .25073 |
| -401.430 | 300.490 | 1199.20000 | -10.26400 | 5.08740 | .07133 | -.31980 | .09479 | -.17582 | .05285 | -.01843 | .25068 |
| | GRADIENT | .00000 | .00000 | .00000 | .00000 | .00000 | .00000 | .00000 | .00000 | .00000 | .00000 |

IA143, AEDC V41A-P8A, O/ET W/R.H. SRB SEPARATING (OVX815) ( 24 MAY 77 )

REFERENCE DATA

SREF = 2690.0000 SQ.FT. XMRP = 1097.0000 IN. XT
LREF = 1290.3000 INCHES YMRP = .0000 IN. YT
BREF = 1290.3000 INCHES ZMRP = 450.0000 IN. ZT
SCALE = .0100

PARAMETRIC DATA

ALPHA = -10.000 BETA = 5.000
DALPHA = -10.000 DBETA = -12.000
X = 1200.000 MACH = 4.500
JET PC = .000

RUN NO. 2817/ 0 RN/L = 2.40 GRADIENT INTERVAL = -5.00/ 5.00

| Y | Z | X | ALPHA | BETA | PHI | CN | CLM | CY | CYN | CBL | CA |
|---|---|---|---|---|---|---|---|---|---|---|---|
| -200.880 | 300.260 | 1199.10001 | -10.26400 | 5.08750 | .07138 | -.31933 | .09466 | -.17585 | .05287 | -.01844 | .25035 |
| -200.370 | 399.880 | 1198.89999 | -10.26400 | 5.08730 | .07134 | -.31969 | .09476 | -.17591 | .05291 | -.01843 | .25056 |
| -201.090 | 500.070 | 1199.20000 | -10.26400 | 5.08740 | .07133 | -.31956 | .09473 | -.17593 | .05291 | -.01844 | .25051 |
| | GRADIENT | .00000 | .00000 | .00000 | .00000 | .00000 | .00000 | .00000 | .00000 | .00000 | .00000 |

RUN NO. 2818/ 0 RN/L = 2.39 GRADIENT INTERVAL = -5.00/ 5.00

| Y | Z | X | ALPHA | BETA | PHI | CN | CLM | CY | CYN | CBL | CA |
|---|---|---|---|---|---|---|---|---|---|---|---|
| -403.250 | 502.040 | 1199.89999 | -10.26400 | 5.08740 | .07128 | -.31963 | .09475 | -.17598 | .05290 | -.01845 | .25064 |
| -400.870 | 400.220 | 1199.20000 | -10.26400 | 5.08740 | .07128 | -.31978 | .09478 | -.17598 | .05290 | -.01845 | .25062 |
| -401.240 | 300.330 | 1199.39999 | -10.26400 | 5.08740 | .07130 | -.31965 | .09475 | -.17603 | .05295 | -.01847 | .25058 |
| | GRADIENT | .00000 | .00000 | .00000 | .00000 | .00000 | .00000 | .00000 | .00000 | .00000 | .00000 |

IA143, AEDC V41A-P8A, O/ET W/R.H. SRB SEPARATING (OVX816) ( 24 MAY 77 )

REFERENCE DATA

SREF = 2690.0000 SQ.FT. XMRP = 1097.0000 IN. XT
LREF = 1290.3000 INCHES YMRP = .0000 IN. YT
BREF = 1290.3000 INCHES ZMRP = 450.0000 IN. ZT
SCALE = .0100

PARAMETRIC DATA

ALPHA = -10.000 BETA = 5.000
DALPHA = -20.000 DBETA = -12.000
X = 1200.000 MACH = 4.500
JET PC = .000

RUN NO. 2845/ 0 RN/L = 2.37 GRADIENT INTERVAL = -5.00/ 5.00

| Y | Z | X | ALPHA | BETA | PHI | CN | CLM | CY | CYN | CBL | CA |
|---|---|---|---|---|---|---|---|---|---|---|---|
| -200.880 | 300.420 | 1199.00000 | -10.26400 | 5.08750 | .07126 | -.31972 | .09464 | -.17603 | .05292 | -.01847 | .25034 |
| -199.900 | 400.160 | 1198.70000 | -10.26400 | 5.08740 | .07131 | -.31971 | .09477 | -.17593 | .05290 | -.01846 | .25060 |
| -200.170 | 500.180 | 1198.89999 | -10.26400 | 5.08740 | .07126 | -.31961 | .09472 | -.17583 | .05286 | -.01844 | .25055 |
| | GRADIENT | .00000 | .00000 | .00000 | .00000 | .00000 | .00000 | .00000 | .00000 | .00000 | .00000 |

RUN NO. 2846/ 0 RN/L = 2.38 GRADIENT INTERVAL = -5.00/ 5.00

| Y | Z | X | ALPHA | BETA | PHI | CN | CLM | CY | CYN | CBL | CA |
|---|---|---|---|---|---|---|---|---|---|---|---|
| -400.310 | 500.340 | 1199.00000 | -10.26400 | 5.08740 | .07124 | -.31982 | .09479 | -.17589 | .05286 | -.01845 | .25062 |
| -400.430 | 400.670 | 1199.20000 | -10.26400 | 5.08750 | .07129 | -.31979 | .09477 | -.17595 | .05287 | -.01845 | .25065 |
| -400.360 | 300.700 | 1199.20000 | -10.26400 | 5.08740 | .07124 | -.31973 | .09475 | -.17573 | .05281 | -.01843 | .25050 |
| | GRADIENT | .00000 | .00000 | .00000 | .00000 | .00000 | .00000 | .00000 | .00000 | .00000 | .00000 |

IA143, AEDC V41A-P8A, O/ET W/R.H. SRB SEPARATING (OVX817) ( 24 MAY 77 )

REFERENCE DATA

SREF = 2690.0000 SQ.FT. XMRP = 1097.0000 IN. XT
LREF = 1290.3000 INCHES YMRP = .0000 IN. YT
BREF = 1290.3000 INCHES ZMRP = 450.0000 IN. ZT
SCALE = .0100

PARAMETRIC DATA

ALPHA = -10.000 BETA = 5.000
DALPHA = -15.000 DBETA = -4.000
X = 1200.000 MACH = 4.500
JET PC = .000

RUN NO. 2840/ 0 RN/L = 2.37 GRADIENT INTERVAL = -5.00/ 5.00

| Y | Z | X | ALPHA | BETA | PHI | CN | CLM | CY | CYN | CBL | CA |
|---|---|---|---|---|---|---|---|---|---|---|---|
| -200.970 | 400.300 | 1199.00000 | -10.26400 | 5.08730 | .07123 | -.31975 | .09477 | -.17597 | .05292 | -.01846 | .25061 |
| -200.800 | 450.220 | 1199.00000 | -10.26400 | 5.08740 | .07127 | -.31971 | .09473 | -.17593 | .05290 | -.01846 | .25050 |
| -200.750 | 500.290 | 1199.00000 | -10.26400 | 5.08740 | .07132 | -.31966 | .09475 | -.17594 | .05291 | -.01845 | .25061 |
| | GRADIENT | .00000 | .00000 | .00000 | .00000 | .00000 | .00000 | .00000 | .00000 | .00000 | .00000 |

RUN NO. 2841/ 0 RN/L = 2.37 GRADIENT INTERVAL = -5.00/ 5.00

| Y | Z | X | ALPHA | BETA | PHI | CN | CLM | CY | CYN | CBL | CA |
|---|---|---|---|---|---|---|---|---|---|---|---|
| -301.560 | 501.590 | 1199.50000 | -10.26400 | 5.08740 | .07124 | -.31961 | .09476 | -.17592 | .05290 | -.01846 | .25064 |
| -300.710 | 450.310 | 1198.89999 | -10.26400 | 5.08730 | .07134 | -.31981 | .09481 | -.17604 | .05297 | -.01847 | .25074 |
| -300.870 | 400.350 | 1199.00000 | -10.26400 | 5.08760 | .07128 | -.31978 | .09479 | -.17609 | .05292 | -.01847 | .25074 |
| | GRADIENT | .00000 | .00000 | .00000 | .00000 | .00000 | .00000 | .00000 | .00000 | .00000 | .00000 |

IA143, AEDC V41A-P8A, O/ET W/R.H. SRB SEPARATING (OVX818) ( 24 MAY 77 )

REFERENCE DATA

SREF = 2690.0000 SQ.FT. XMRP = 1097.0000 IN. XT
LREF = 1290.3000 INCHES YMRP = .0000 IN. YT
BREF = 1290.3000 INCHES ZMRP = 450.0000 IN. ZT
SCALE = .0100

PARAMETRIC DATA

ALPHA = -10.000 BETA = 5.000
DALPHA = -20.000 DBETA = -4.000
X = 1200.000 MACH = 4.500
JET PC = .000

RUN NO. 2847/ 0 RN/L = 2.38 GRADIENT INTERVAL = -5.00/ 5.00

| Y | Z | X | ALPHA | BETA | PHI | CN | CLM | CY | CYN | CBL | CA |
|---|---|---|---|---|---|---|---|---|---|---|---|
| -200.630 | 400.410 | 1199.00000 | -10.26400 | 5.08740 | .07120 | -.31960 | .09470 | -.17581 | .05284 | -.01845 | .25037 |
| -200.630 | 450.280 | 1199.00000 | -10.26400 | 5.08750 | .07129 | -.31986 | .09483 | -.17587 | .05284 | -.01844 | .25075 |
| -200.710 | 500.280 | 1199.00000 | -10.26400 | 5.08740 | .07128 | -.31983 | .09479 | -.17579 | .05282 | -.01842 | .25075 |
| | GRADIENT | .00000 | .00000 | .00000 | .00000 | .00000 | .00000 | .00000 | .00000 | .00000 | .00000 |

RUN NO. 2848/ 0 RN/L = 2.38 GRADIENT INTERVAL = -5.00/ 5.00

| Y | Z | X | ALPHA | BETA | PHI | CN | CLM | CY | CYN | CBL | CA |
|---|---|---|---|---|---|---|---|---|---|---|---|
| -301.880 | 502.050 | 1199.80000 | -10.26400 | 5.08750 | .07130 | -.31998 | .09486 | -.17607 | .05293 | -.01847 | .25077 |
| -300.460 | 450.420 | 1199.10001 | -10.26400 | 5.08750 | .07135 | -.31983 | .09478 | -.17576 | .05280 | -.01841 | .25072 |
| -300.390 | 400.490 | 1199.00000 | -10.26400 | 5.08740 | .07127 | -.31964 | .09474 | -.17571 | .05282 | -.01842 | .25057 |
| | GRADIENT | .00000 | .00000 | .00000 | .00000 | .00000 | .00000 | .00000 | .00000 | .00000 | .00000 |

IA143, AEDC V41A-P8A, O/ET W/R.H. SRB SEPARATING (OVX819) ( 24 MAY 77 )

REFERENCE DATA

SREF = 2690.0000 SQ.FT. XMRP = 1097.0000 IN. XT
LREF = 1290.3000 INCHES YMRP = .0000 IN. YT
BREF = 1290.3000 INCHES ZMRP = 450.0000 IN. ZT
SCALE = .0100

PARAMETRIC DATA

ALPHA = -10.000 BETA = 5.000
DALPHA = -15.000 DBETA = -8.000
X = 1200.000 MACH = 4.500
JET PC = .000

RUN NO. 2843/ 0 RN/L = 2.37 GRADIENT INTERVAL = -5.00/ 5.00

| Y | Z | X | ALPHA | BETA | PHI | CN | CLM | CY | CYN | CBL | CA |
|---|---|---|---|---|---|---|---|---|---|---|---|
| -200.440 | 400.220 | 1199.10001 | -10.26400 | 5.08750 | .07128 | -.31971 | .09476 | -.17607 | .05295 | -.01848 | .25056 |
| -199.310 | 450.200 | 1199.00000 | -10.26400 | 5.08740 | .07130 | -.31981 | .09480 | -.17596 | .05291 | -.01846 | .25064 |
| -200.040 | 500.180 | 1199.00000 | -10.26400 | 5.08740 | .07127 | -.31976 | .09479 | -.17602 | .05293 | -.01847 | .25069 |
| | GRADIENT | .00000 | .00000 | .00000 | .00000 | .00000 | .00000 | .00000 | .00000 | .00000 | .00000 |

IA143, AEDC V41A-P8A, O/ET W/R.H. SRB SEPARATING (OVX820) ( 24 MAY 77 )

REFERENCE DATA

SREF = 2690.0000 SQ.FT. XMRP = 1097.0000 IN. XT
LREF = 1290.3000 INCHES YMRP = .0000 IN. YT
BREF = 1290.3000 INCHES ZMRP = 450.0000 IN. ZT
SCALE = .0100

PARAMETRIC DATA

ALPHA = -10.000 BETA = 5.000
DALPHA = -20.000 DBETA = -8.000
X = 1200.000 MACH = 4.500
JET PC = .000

RUN NO. 2850/ 0 RN/L = 2.38 GRADIENT INTERVAL = -5.00/ 5.00

| Y | Z | X | ALPHA | BETA | PHI | CN | CLM | CY | CYN | CBL | CA |
|---|---|---|---|---|---|---|---|---|---|---|---|
| -198.830 | 498.570 | 1198.20000 | -10.26400 | 5.08740 | .07129 | -.31988 | .09479 | -.17571 | .05280 | -.01841 | .25064 |
| -200.100 | 450.450 | 1199.00000 | -10.26400 | 5.08740 | .07126 | -.31970 | .09474 | -.17560 | .05276 | -.01840 | .25054 |
| -199.850 | 400.540 | 1199.00000 | -10.26400 | 5.08740 | .07123 | -.31983 | .09481 | -.17583 | .05286 | -.01844 | .25073 |
| | GRADIENT | .00000 | .00000 | .00000 | .00000 | .00000 | .00000 | .00000 | .00000 | .00000 | .00000 |

RUN NO. 2849/ 0 RN/L = 2.38 GRADIENT INTERVAL = -5.00/ 5.00

| Y | Z | X | ALPHA | BETA | PHI | CN | CLM | CY | CYN | CBL | CA |
|---|---|---|---|---|---|---|---|---|---|---|---|
| -302.510 | 400.020 | 1199.10001 | -10.26400 | 5.08750 | .07128 | -.31974 | .09478 | -.17583 | .05285 | -.01844 | .25055 |
| -300.470 | 450.370 | 1199.00000 | -10.26400 | 5.08740 | .07125 | -.31984 | .09477 | -.17574 | .05281 | -.01842 | .25062 |
| -300.690 | 500.390 | 1199.20000 | -10.26400 | 5.08750 | .07127 | -.31997 | .09483 | -.17590 | .05286 | -.01845 | .25069 |
| | GRADIENT | .00000 | .00000 | .00000 | .00000 | .00000 | .00000 | .00000 | .00000 | .00000 | .00000 |

IA143, AEDC V41A-P8A, O/ET W/R.H. SRB SEPARATING (OVX821) ( 24 MAY 77 )

REFERENCE DATA

SREF = 2690.0000 SQ.FT. XMRP = 1097.0000 IN. XT
LREF = 1290.3000 INCHES YMRP = .0000 IN. YT
BREF = 1290.3000 INCHES ZMRP = 450.0000 IN. ZT
SCALE = .0100

PARAMETRIC DATA

ALPHA = -10.000 BETA = 5.000
DALPHA = -15.000 DBETA = -8.000
X = 1200.000 MACH = 4.500
JET PC = .000

RUN NO. 2842/ 0 RN/L = 2.37 GRADIENT INTERVAL = -5.00/ 5.00

| Y | Z | X | ALPHA | BETA | PHI | CN | CLM | CY | CYN | CBL | CA |
|---|---|---|---|---|---|---|---|---|---|---|---|
| -301.040 | 300.410 | 1199.10001 | -10.26400 | 5.08740 | .07126 | -.31971 | .09477 | -.17592 | .05290 | -.01846 | .25063 |
| -300.390 | 400.200 | 1198.89999 | -10.26400 | 5.08740 | .07127 | -.31970 | .09476 | -.17592 | .05290 | -.01845 | .25061 |
| -300.720 | 450.270 | 1199.10001 | -10.26400 | 5.08740 | .07127 | -.31975 | .09477 | -.17598 | .05292 | -.01847 | .25069 |
| -300.540 | 500.330 | 1199.10001 | -10.26400 | 5.08740 | .07133 | -.31973 | .09476 | -.17589 | .05288 | -.01844 | .25067 |
| | GRADIENT | .00000 | .00000 | .00000 | .00000 | .00000 | .00000 | .00000 | .00000 | .00000 | .00000 |

IA143, AEDC V41A-P8A, O/ET W/R.H. SRB SEPARATING (OVX822) ( 24 MAY 77 )

REFERENCE DATA

SREF = 2690.0000 SQ.FT. XMRP = 1097.0000 IN. XT
LREF = 1290.3000 INCHES YMRP = .0000 IN. YT
BREF = 1290.3000 INCHES ZMRP = 450.0000 IN. ZT
SCALE = .0100

PARAMETRIC DATA

ALPHA = -10.000 BETA = 5.000
DALPHA = -18.000 DBETA = -8.000
X = 1200.000 MACH = 4.500
JET PC = .000

RUN NO. 2844/ 0 RN/L = 2.37 GRADIENT INTERVAL = -5.00/ 5.00

| Y | Z | X | ALPHA | BETA | PHI | CN | CLM | CY | CYN | CBL | CA |
|---|---|---|---|---|---|---|---|---|---|---|---|
| -300.950 | 400.340 | 1199.00000 | -10.26400 | 5.08740 | .07130 | -.31966 | .09476 | -.17594 | .05290 | -.01846 | .25071 |
| -300.620 | 600.290 | 1199.00000 | -10.26400 | 5.08730 | .07125 | -.31960 | .09470 | -.17578 | .05285 | -.01842 | .25046 |
| -301.020 | 799.840 | 1199.10001 | -10.26400 | 5.08750 | .07133 | -.31996 | .09484 | -.17602 | .05291 | -.01846 | .25079 |
| -300.450 | 999.700 | 1198.89999 | -10.26400 | 5.08740 | .07127 | -.31972 | .09476 | -.17578 | .05283 | -.01842 | .25058 |
| | GRADIENT | .00000 | .00000 | .00000 | .00000 | .00000 | .00000 | .00000 | .00000 | .00000 | .00000 |

IA143, AEDC V41A-P8A, O/ET W/R.H. SRB SEPARATING (OVX823) ( 24 MAY 77 )

REFERENCE DATA

SREF = 2690.0000 SQ.FT. XMRP = 1097.0000 IN. XT
LREF = 1290.3000 INCHES YMRP = .0000 IN. YT
BREF = 1290.3000 INCHES ZMRP = 450.0000 IN. ZT
SCALE = .0100

PARAMETRIC DATA

ALPHA = -10.000 BETA = 10.000
DALPHA = .000 DBETA = .000
X = .000 MACH = 4.500
JET PC = .000

RUN NO. 2430/ 0 RN/L = 2.38 GRADIENT INTERVAL = -5.00/ 5.00

| Y | Z | X | ALPHA | BETA | PHI | CN | CLM | CY | CYN | CBL | CA |
|---|---|---|---|---|---|---|---|---|---|---|---|
| -10.849 | .077 | -.33679 | -10.32200 | 10.22700 | .16617 | -.32785 | .08797 | -.43835 | .12915 | -.04832 | .26434 |
| -10.986 | 25.389 | -.32650 | -10.32300 | 10.22800 | .17457 | -.32952 | .08971 | -.44206 | .13044 | -.04733 | .26483 |
| -10.038 | 100.690 | -.22877 | -10.31700 | 10.22200 | .19696 | -.31685 | .08769 | -.44758 | .13420 | -.04402 | .26509 |
| -10.750 | 150.370 | -.17364 | -10.30900 | 10.21300 | .20724 | -.30806 | .08825 | -.44234 | .13461 | -.04120 | .26730 |
| -8.990 | 250.110 | -.47164 | -10.29500 | 10.19600 | .19536 | -.30697 | .09304 | -.40787 | .12402 | -.03711 | .26178 |
| -9.477 | 349.120 | -.45836 | -10.29500 | 10.18200 | .16161 | -.30972 | .09025 | -.37509 | .11459 | -.03792 | .26167 |
| -10.457 | 474.040 | -.26440 | -10.30000 | 10.18400 | .15461 | -.32309 | .09508 | -.37083 | .11170 | -.03831 | .26157 |
| -10.811 | 499.590 | -.23204 | -10.30000 | 10.18400 | .15478 | -.32413 | .09567 | -.37081 | .11177 | -.03828 | .26158 |
| -10.778 | 599.270 | -.39056 | -10.30000 | 10.18400 | .15531 | -.32604 | .09691 | -.37145 | .11212 | -.03828 | .26226 |
| | GRADIENT | .00000 | .00000 | .00000 | .00000 | .00000 | .00000 | .00000 | .00000 | .00000 | .00000 |

IA143, AEDC V41A-P8A, O/ET W/R.H. SRB SEPARATING (OVX823) ( 24 MAY 77 )

REFERENCE DATA

SREF = 2690.0000 SQ.FT. XMRP = 1097.0000 IN. XT
LREF = 1290.3000 INCHES YMRP = .0000 IN. YT
BREF = 1290.3000 INCHES ZMRP = 450.0000 IN. ZT
SCALE = .0100

PARAMETRIC DATA

ALPHA = -10.000 BETA = 10.000
DALPHA = .000 DBETA = .000
X = .000 MACH = 4.500
JET PC = .000

RUN NO. 2431/ 0 RN/L = 2.38 GRADIENT INTERVAL = -5.00/ 5.00

| Y | Z | X | ALPHA | BETA | PHI | CN | CLM | CY | CYN | CBL | CA |
|---|---|---|---|---|---|---|---|---|---|---|---|
| -101.430 | 599.270 | -.26904 | -10.30000 | 10.18400 | .15540 | -.32618 | .09693 | -.37166 | .11219 | -.03832 | .26227 |
| -101.370 | 499.920 | -.37519 | -10.30000 | 10.18400 | .15521 | -.32585 | .09672 | -.37147 | .11210 | -.03829 | .26209 |
| -100.980 | 474.830 | -.35898 | -10.30000 | 10.18400 | .15508 | -.32495 | .09610 | -.37141 | .11203 | -.03829 | .26199 |
| -101.820 | 350.550 | -.34218 | -10.30000 | 10.18300 | .15666 | -.31904 | .09315 | -.37233 | .11265 | -.03822 | .26192 |
| -101.940 | 250.340 | -.29681 | -10.29900 | 10.18200 | .17889 | -.31253 | .09160 | -.38991 | .12157 | -.03750 | .26211 |
| -101.910 | 149.860 | -.32223 | -10.30500 | 10.19300 | .18016 | -.30464 | .08479 | -.41134 | .12843 | -.04136 | .26415 |
| -101.810 | 99.745 | -.27771 | -10.30900 | 10.19600 | .17914 | -.30764 | .08528 | -.41998 | .13189 | -.04335 | .26866 |
| -101.550 | 24.523 | -.35378 | -10.31100 | 10.20000 | .16601 | -.31596 | .08734 | -.42135 | .13195 | -.04626 | .26867 |
| -101.390 | -.238 | -.24768 | -10.31100 | 10.20000 | .15984 | -.31810 | .08778 | -.41907 | .13091 | -.04704 | .26810 |
| | GRADIENT | .00000 | .00000 | .00000 | .00000 | .00000 | .00000 | .00000 | .00000 | .00000 | .00000 |

IA143, AEDC V41A-P8A, O/ET W/R.H. SRB SEPARATING (OVX824) ( 24 MAY 77 )

REFERENCE DATA

SREF = 2690.0000 SQ.FT. XMRP = 1097.0000 IN. XT
LREF = 1290.3000 INCHES YMRP = .0000 IN. YT
BREF = 1290.3000 INCHES ZMRP = 450.0000 IN. ZT
SCALE = .0100

PARAMETRIC DATA

ALPHA = -10.000 BETA = 10.000
DALPHA = -5.000 DBETA = .000
X = .000 MACH = 4.500
JET PC = .000

RUN NO. 2444/ 0 RN/L = 2.38 GRADIENT INTERVAL = -5.00/ 5.00

| Y | Z | X | ALPHA | BETA | PHI | CN | CLM | CY | CYN | CBL | CA |
|---|---|---|---|---|---|---|---|---|---|---|---|
| -11.146 | 25.354 | -.38513 | -10.33100 | 10.23800 | .2140 | -.27494 | .04773 | -.46211 | .14059 | -.06265 | .26856 |
| -10.844 | 101.060 | -.18577 | -10.32800 | 10.23200 | .18811 | -.29512 | .06761 | -.47975 | .14818 | -.05256 | .26452 |
| -10.637 | 150.330 | -.32182 | -10.32000 | 10.22200 | .22342 | -.29765 | .07753 | -.48213 | .15125 | -.04605 | .26747 |
| -8.456 | 250.440 | -.56246 | -10.30100 | 10.19800 | .23333 | -.29566 | .08649 | -.44753 | .14178 | -.03754 | .26095 |
| -8.793 | 349.390 | -.65961 | -10.29400 | 10.18100 | .18711 | -.30016 | .08780 | -.39458 | .12387 | -.03679 | .26130 |
| -9.824 | 473.680 | -.44293 | -10.29800 | 10.18400 | .15335 | -.31540 | .09111 | -.36903 | .11083 | -.03813 | .26143 |
| -10.750 | 499.770 | -.39028 | -10.29900 | 10.18400 | .15377 | -.31793 | .09213 | -.36968 | .11108 | -.03816 | .26110 |
| -10.637 | 599.460 | -.39970 | -10.29900 | 10.18400 | .15508 | -.32562 | .09683 | -.37121 | .11198 | -.03824 | .26208 |
| | GRADIENT | .00000 | .00000 | .00000 | .00000 | .00000 | .00000 | .00000 | .00000 | .00000 | .00000 |

IA143, AEDC V41A-P8A, O/ET W/R.H. SRB SEPARATING (OVX824) ( 24 MAY 77 )

REFERENCE DATA

SREF = 2690.0000 SQ.FT. XMRP = 1097.0000 IN. XT
LREF = 1290.3000 INCHES YMRP = .0000 IN. YT
BREF = 1290.3000 INCHES ZMRP = 450.0000 IN. ZT
SCALE = .0100

PARAMETRIC DATA

ALPHA = -10.000 BETA = 10.000
DALPHA = -5.000 DBETA = .000
X = .000 MACH = 4.500
JET PC = .000

RUN NO. 2445/ 0 RN/L = 2.38 GRADIENT INTERVAL = -5.00/ 5.00

| Y | Z | X | ALPHA | BETA | PHI | CN | CLM | CY | CYN | CBL | CA |
|---|---|---|---|---|---|---|---|---|---|---|---|
| -101.000 | 599.450 | -.53529 | -10.30000 | 10.18300 | .15520 | -.32590 | .09693 | -.37115 | .11198 | -.03821 | .26234 |
| -101.300 | 500.230 | -.27422 | -10.29900 | 10.18400 | .15485 | -.32371 | .09546 | -.37094 | .11179 | -.03822 | .26151 |
| -101.070 | 475.010 | -.38679 | -10.30000 | 10.18400 | .15502 | -.32234 | .09466 | -.37101 | .11183 | -.03821 | .26168 |
| -101.710 | 350.750 | -.29340 | -10.29900 | 10.18000 | .16935 | -.30848 | .08827 | -.38096 | .11816 | -.03767 | .26141 |
| -102.560 | 250.590 | -.31524 | -10.30000 | 10.18200 | .20129 | -.31034 | .09171 | -.40924 | .13017 | -.03691 | .26119 |
| -102.130 | 149.980 | -.38795 | -10.31000 | 10.19500 | .18755 | -.29322 | .07648 | -.43543 | .14008 | -.04505 | .26886 |
| -101.630 | 99.595 | -.42741 | -10.31400 | 10.19800 | .17782 | -.29702 | .07643 | -.44198 | .14330 | -.04852 | .27203 |
| -101.010 | 24.722 | -.45888 | -10.31900 | 10.20600 | .11208 | -.26755 | .04953 | -.44426 | .14596 | -.06285 | .27164 |
| | GRADIENT | .00000 | .00000 | .00000 | .00000 | .00000 | .00000 | .00000 | .00000 | .00000 | .00000 |

IA143, AEDC V41A-P8A, O/ET W/R.H. SRB SEPARATING (OVX825) ( 24 MAY 77 )

REFERENCE DATA

SREF = 2690.0000 SQ.FT. XMRP = 1097.0000 IN. XT
LREF = 1290.3000 INCHES YMRP = .0000 IN. YT
BREF = 1290.3000 INCHES ZMRP = 450.0000 IN. ZT
SCALE = .0100

PARAMETRIC DATA

ALPHA = -10.000 BETA = 10.000
DALPHA = .000 DBETA = -4.000
X = .000 MACH = 4.500
JET PC = .000

RUN NO. 2433/ 0 RN/L = 2.37 GRADIENT INTERVAL = -5.00/ 5.00

| Y | Z | X | ALPHA | BETA | PHI | CN | CLM | CY | CYN | CBL | CA |
|---|---|---|---|---|---|---|---|---|---|---|---|
| -11.659 | 249.960 | -.21296 | -10.29400 | 10.19600 | .20169 | -.29954 | .08948 | -.41347 | .12625 | -.03685 | .26171 |
| -9.302 | 349.250 | -.48288 | -10.29300 | 10.18200 | .16171 | -.30836 | .09082 | -.37467 | .11429 | -.03772 | .26181 |
| -10.706 | 473.870 | -.29140 | -10.30000 | 10.18400 | .15403 | -.32209 | .09440 | -.37054 | .11149 | -.03828 | .26167 |
| -11.315 | 499.750 | -.23285 | -10.30000 | 10.18400 | .15441 | -.32392 | .09551 | -.37080 | .11169 | -.03827 | .26158 |
| -11.147 | 599.310 | -.32135 | -10.30000 | 10.18400 | .15524 | -.32624 | .09698 | -.37153 | .11214 | -.03829 | .26242 |
| | GRADIENT | .00000 | .00000 | .00000 | .00000 | .00000 | .00000 | .00000 | .00000 | .00000 | .00000 |

IA143, AEDC V41A-P8A, O/ET W/R.H. SRB SEPARATING (OVX826) ( 24 MAY 77 )

REFERENCE DATA

SREF = 2690.0000 SQ.FT. XMRP = 1097.0000 IN. XT
LREF = 1290.3000 INCHES YMRP = .0000 IN. YT
BREF = 1290.3000 INCHES ZMRP = 450.0000 IN. ZT
SCALE = .0100

PARAMETRIC DATA

ALPHA = -10.000 BETA = 10.000
DALPHA = -5.000 DBETA = -4.000
X = .000 MACH = 4.500
JET PC = .000

RUN NO. 2443/ 0 RN/L = 2.38 GRADIENT INTERVAL = -5.00/ 5.00

| Y | Z | X | ALPHA | BETA | PHI | CN | CLM | CY | CYN | CBL | CA |
|---|---|---|---|---|---|---|---|---|---|---|---|
| -11.125 | 474.980 | -.31602 | -10.29700 | 10.18300 | .15275 | -.31353 | .09046 | -.36838 | .11061 | -.03810 | .26105 |
| -10.833 | 499.700 | -.43404 | -10.29900 | 10.18400 | .15309 | -.31646 | .09144 | -.36887 | .11070 | -.03813 | .26117 |
| -10.804 | 599.430 | -.44125 | -10.30000 | 10.18400 | .15512 | -.32542 | .09663 | -.37081 | .11180 | -.03818 | .26154 |
| | GRADIENT | .00000 | .00000 | .00000 | .00000 | .00000 | .00000 | .00000 | .00000 | .00000 | .00000 |

IA143, AEDC V41A-P8A, O/ET W/R.H. SRB SEPARATING (OVX827) ( 24 MAY 77 )

REFERENCE DATA

SREF = 2690.0000 SQ.FT. XMRP = 1097.0000 IN. XT
LREF = 1290.3000 INCHES YMRP = .0000 IN. YT
BREF = 1290.3000 INCHES ZMRP = 450.0000 IN. ZT
SCALE = .0100

PARAMETRIC DATA

ALPHA = -10.000 BETA = 10.000
DALPHA = .000 DBETA = -4.000
X = .000 MACH = 4.500
JET PC = .000

RUN NO. 2432/ 0 RN/L = 2.37 GRADIENT INTERVAL = -5.00/ 5.00

| Y | Z | X | ALPHA | BETA | PHI | CN | CLM | CY | CYN | CBL | CA |
|---|---|---|---|---|---|---|---|---|---|---|---|
| -101.690 | -.085 | -.35849 | -10.32100 | 10.20400 | .19121 | -.31660 | .08453 | -.45508 | .14709 | -.04822 | .26653 |
| -100.970 | 25.510 | -.33283 | -10.32000 | 10.20200 | .19907 | -.31522 | .08506 | -.45680 | .14793 | -.04694 | .26701 |
| -100.390 | 100.380 | -.33923 | -10.31300 | 10.19800 | .20890 | -.30478 | .08396 | -.44623 | .14339 | -.04273 | .26805 |
| -100.260 | 150.050 | -.36401 | -10.30700 | 10.19500 | .19749 | -.29630 | .08068 | -.42881 | .13556 | -.04138 | .26502 |
| -98.896 | 249.640 | -.49482 | -10.29800 | 10.18300 | .18450 | -.30922 | .09098 | -.39468 | .12323 | -.03728 | .26161 |
| -100.160 | 349.270 | -.41018 | -10.29900 | 10.18300 | .15667 | -.31612 | .09170 | -.37217 | .11268 | -.03817 | .26167 |
| -100.830 | 474.210 | -.29958 | -10.30000 | 10.18400 | .15487 | -.32467 | .09598 | -.37126 | .11196 | -.03828 | .26195 |
| -100.360 | 499.750 | -.42261 | -10.30000 | 10.18400 | .15511 | -.32566 | .09662 | -.37137 | .11205 | -.03829 | .26207 |
| -101.110 | 599.420 | -.14558 | -10.30000 | 10.18400 | .15525 | -.32614 | .09698 | -.37166 | .11220 | -.03831 | .26249 |
| | GRADIENT | .00000 | .00000 | .00000 | .00000 | .00000 | .00000 | .00000 | .00000 | .00000 | .00000 |

IA143, AEDC V41A-P8A, O/ET W/R.H. SRB SEPARATING (OVX828) ( 24 MAY 77 )

REFERENCE DATA

SREF = 2690.0000 SQ.FT. XMRP = 1097.0000 IN. XT
LREF = 1290.3000 INCHES YMRP = .0000 IN. YT
BREF = 1290.3000 INCHES ZMRP = 450.0000 IN. ZT
SCALE = .0100

PARAMETRIC DATA

ALPHA = -10.000 BETA = 10.000
DALPHA = -5.000 DBETA = -4.000
X = .000 MACH = 4.500
JET PC = .000

RUN NO. 2442/ 0 RN/L = 2.38 GRADIENT INTERVAL = -5.00/ 5.00

| Y | Z | X | ALPHA | BETA | PHI | CN | CLM | CY | CYN | CBL | CA |
|---|---|---|---|---|---|---|---|---|---|---|---|
| -102.810 | 25.449 | -.24547 | -10.33000 | 10.21100 | .14198 | -.25697 | .03971 | -.47894 | .16089 | -.06392 | .26917 |
| -100.850 | 100.680 | -.35791 | -10.32700 | 10.19900 | .21024 | -.28310 | .06357 | -.48650 | .16515 | -.05153 | .26867 |
| -99.696 | 150.320 | -.49696 | -10.31800 | 10.19200 | .23456 | -.29035 | .07479 | -.47679 | .16093 | -.04446 | .26752 |
| -99.368 | 250.060 | -.52061 | -10.30300 | 10.18100 | .22548 | -.30168 | .08744 | -.43003 | .14073 | -.03651 | .26000 |
| -98.890 | 349.450 | -.63484 | -10.29800 | 10.17800 | .17730 | -.30216 | .08556 | -.38691 | .12158 | -.03737 | .26087 |
| -100.360 | 474.080 | -.45857 | -10.30000 | 10.18400 | .15483 | -.31963 | .09292 | -.37088 | .11173 | -.03819 | .26132 |
| -101.310 | 499.680 | -.34535 | -10.30000 | 10.18400 | .15506 | -.32232 | .09449 | -.37117 | .11187 | -.03822 | .26144 |
| -100.300 | 599.570 | -.47381 | -10.29900 | 10.18300 | .15517 | -.32595 | .09694 | -.37134 | .11205 | -.03824 | .26241 |
| | GRADIENT | .00000 | .00000 | .00000 | .00000 | .00000 | .00000 | .00000 | .00000 | .00000 | .00000 |

IA143, AEDC V41A-P8A, O/ET W/R.H. SRB SEPARATING (OVX829) ( 24 MAY 77 )

REFERENCE DATA

SREF = 2690.0000 SQ.FT. XMRP = 1097.0000 IN. XT
LREF = 1290.3000 INCHES YMRP = .0000 IN. YT
BREF = 1290.3000 INCHES ZMRP = 450.0000 IN. ZT
SCALE = .0100

PARAMETRIC DATA

ALPHA = -10.000 BETA = 10.000
DALPHA = .000 DBETA = .000
X = 300.000 MACH = 4.500
JET PC = .000

RUN NO. 2434/ 0 RN/L = 2.37 GRADIENT INTERVAL = -5.00/ 5.00

| Y | Z | X | ALPHA | BETA | PHI | CN | CLM | CY | CYN | CBL | CA |
|---|---|---|---|---|---|---|---|---|---|---|---|
| -11.554 | 100.080 | 299.55000 | -10.31100 | 10.19400 | .19541 | -.30669 | .08407 | -.42709 | .13531 | -.04149 | .26454 |
| -8.974 | 249.320 | 299.50000 | -10.29800 | 10.18300 | .18047 | -.31044 | .09167 | -.39143 | .12157 | -.03738 | .26211 |
| -10.878 | 300.020 | 299.59000 | -10.29600 | 10.18200 | .16786 | -.31007 | .09067 | -.38064 | .11719 | -.03775 | .26190 |
| -11.780 | 399.790 | 299.71000 | -10.29800 | 10.18400 | .15340 | -.31785 | .09269 | -.36964 | .11111 | -.03823 | .26175 |
| -10.870 | 425.060 | 299.60000 | -10.29900 | 10.18400 | .15375 | -.31959 | .09323 | -.37004 | .11127 | -.03823 | .26166 |
| -11.038 | 499.590 | 299.72000 | -10.30000 | 10.18400 | .15500 | -.32545 | .09649 | -.37149 | .11208 | -.03831 | .26188 |
| -10.888 | 599.050 | 299.72000 | -10.30000 | 10.18400 | .15522 | -.32613 | .09701 | -.37159 | .11216 | -.03830 | .26255 |
| | GRADIENT | .00000 | .00000 | .00000 | .00000 | .00000 | .00000 | .00000 | .00000 | .00000 | .00000 |

IA143, AEDC V41A-P8A, O/ET W/R.H. SRB SEPARATING (OVX829) ( 24 MAY 77 )

REFERENCE DATA

SREF = 2690.0000 SQ.FT. XMRP = 1097.0000 IN. XT
LREF = 1290.3000 INCHES YMRP = .0000 IN. YT
BREF = 1290.3000 INCHES ZMRP = 450.0000 IN. ZT
SCALE = .0100

PARAMETRIC DATA

ALPHA = -10.000 BETA = 10.000
DALPHA = .000 DBETA = .000
X = 300.000 MACH = 4.500
JET PC = .000

RUN NO. 2435/ 0 RN/L = 2.37 GRADIENT INTERVAL = -5.00/ 5.00

| Y | Z | X | ALPHA | BETA | PHI | CN | CLM | CY | CYN | CBL | CA |
|---|---|---|---|---|---|---|---|---|---|---|---|
| -200.950 | 598.770 | 299.59000 | -10.30000 | 10.18400 | .15519 | -.32610 | .09700 | -.37145 | .11212 | -.03829 | .26258 |
| -201.000 | 500.030 | 299.53000 | -10.30000 | 10.18400 | .15523 | -.32603 | .09695 | -.37137 | .11210 | -.03827 | .26243 |
| -201.080 | 424.910 | 299.65000 | -10.30000 | 10.18300 | .15519 | -.32624 | .09699 | -.37144 | .11212 | -.03827 | .26245 |
| -200.590 | 399.970 | 299.54000 | -10.30000 | 10.18400 | .15531 | -.32618 | .09699 | -.37154 | .11215 | -.03829 | .26249 |
| -201.080 | 300.070 | 299.51000 | -10.30000 | 10.18400 | .15592 | -.32476 | .09597 | -.37203 | .11241 | -.03829 | .26239 |
| -200.690 | 249.930 | 299.53000 | -10.30000 | 10.18300 | .15716 | -.32287 | .09484 | -.37291 | .11309 | -.03822 | .26216 |
| -201.360 | 99.846 | 299.45000 | -10.30300 | 10.18000 | .16280 | -.31435 | .08873 | -.38663 | .12144 | -.04030 | .26206 |
| | GRADIENT | .00000 | .00000 | .00000 | .00000 | .00000 | .00000 | .00000 | .00000 | .00000 | .00000 |

IA143, AEDC V41A-P8A, O/ET W/R.H. SRB SEPARATING (OVX830) ( 24 MAY 77 )

REFERENCE DATA

SREF = 2690.0000 SQ.FT. XMRP = 1097.0000 IN. XT
LREF = 1290.3000 INCHES YMRP = .0000 IN. YT
BREF = 1290.3000 INCHES ZMRP = 450.0000 IN. ZT
SCALE = .0100

PARAMETRIC DATA

ALPHA = -10.000 BETA = 10.000
DALPHA = -10.000 DBETA = .000
X = 300.000 MACH = 4.500
JET PC = .000

RUN NO. 2466/ 0 RN/L = 2.40 GRADIENT INTERVAL = -5.00/ 5.00

| Y | Z | X | ALPHA | BETA | PHI | CN | CLM | CY | CYN | CBL | CA |
|---|---|---|---|---|---|---|---|---|---|---|---|
| -11.107 | 100.340 | 299.42000 | -10.33100 | 10.20600 | .15772 | -.22718 | .02369 | -.48175 | .16363 | -.06151 | .27142 |
| -7.410 | 249.320 | 299.19000 | -10.30500 | 10.17900 | .24359 | -.30345 | .08901 | -.44633 | .14915 | -.03642 | .25967 |
| -9.858 | 300.380 | 299.29000 | -10.30100 | 10.17400 | .22471 | -.29789 | .08637 | -.42502 | .14112 | -.03603 | .26010 |
| -10.748 | 400.210 | 299.46000 | -10.29700 | 10.17600 | .17440 | -.29817 | .08345 | -.38398 | .12097 | -.03746 | .26003 |
| -11.280 | 425.120 | 299.52000 | -10.29700 | 10.17900 | .16602 | -.30111 | .08437 | -.37776 | .11711 | -.03774 | .26016 |
| -10.719 | 499.750 | 299.41000 | -10.29900 | 10.18400 | .15418 | -.31454 | .09012 | -.37038 | .11152 | -.03826 | .26068 |
| -11.003 | 599.370 | 299.45000 | -10.29900 | 10.18400 | .15501 | -.32514 | .09646 | -.37152 | .11211 | -.03833 | .26118 |
| | GRADIENT | .00000 | .00000 | .00000 | .00000 | .00000 | .00000 | .00000 | .00000 | .00000 | .00000 |

IA143, AEDC V41A-P8A, O/ET W/R.H. SRB SEPARATING (OVX831) ( 24 MAY 77 )

REFERENCE DATA

SREF = 2690.0000 SQ.FT. XMRP = 1097.0000 IN. XT
LREF = 1290.3000 INCHES YMRP = .0000 IN. YT
BREF = 1290.3000 INCHES ZMRP = 450.0000 IN. ZT
SCALE = .0100

PARAMETRIC DATA

ALPHA = -10.000 BETA = 10.000
DALPHA = -10.000 DBETA = .000
X = 300.000 MACH = 4.500
JET PC = .000

RUN NO. 2464/ 0 RN/L = 2.40 GRADIENT INTERVAL = -5.00/ 5.00

| Y | Z | X | ALPHA | BETA | PHI | CN | CLM | CY | CYN | CBL | CA |
|---|---|---|---|---|---|---|---|---|---|---|---|
| -201.220 | 100.360 | 299.54000 | -10.30800 | 10.17900 | .14675 | -.28547 | .06827 | -.40631 | .13463 | -.04849 | .26482 |
| -200.850 | 150.510 | 299.47000 | -10.30600 | 10.17800 | .15856 | -.29726 | .07647 | -.39935 | .12994 | -.04434 | .26196 |
| -200.560 | 200.400 | 299.56000 | -10.30400 | 10.17800 | .17251 | -.31358 | .08864 | -.38990 | .12379 | -.03912 | .26079 |
| -200.830 | 250.430 | 299.43000 | -10.30200 | 10.17800 | .17067 | -.31698 | .09141 | -.38273 | .11957 | -.03785 | .26117 |
| -200.670 | 300.340 | 299.51000 | -10.30100 | 10.18100 | .16176 | -.31848 | .09214 | -.37606 | .11534 | -.03808 | .26108 |
| -200.320 | 400.030 | 299.55000 | -10.30000 | 10.18400 | .15531 | -.32427 | .09589 | -.37160 | .11222 | -.03830 | .26163 |
| -200.460 | 425.270 | 299.55000 | -10.29900 | 10.18400 | .15507 | -.32510 | .09648 | -.37149 | .11214 | -.03832 | .26181 |
| -200.510 | 499.720 | 299.51000 | -10.30000 | 10.18400 | .15520 | -.32533 | .09666 | -.37151 | .11217 | -.03832 | .26206 |
| -200.560 | 599.880 | 299.37000 | -10.30000 | 10.18400 | .15524 | -.32534 | .09667 | -.37144 | .11215 | -.03830 | .26210 |
| | GRADIENT | .00000 | .00000 | .00000 | .00000 | .00000 | .00000 | .00000 | .00000 | .00000 | .00000 |

IA143, AEDC V41A-P8A, O/ET W/R.H. SRB SEPARATING (OVX832) ( 24 MAY 77 )

REFERENCE DATA

SREF = 2690.0000 SQ.FT. XMRP = 1097.0000 IN. XT
LREF = 1290.3000 INCHES YMRP = .0000 IN. YT
BREF = 1290.3000 INCHES ZMRP = 450.0000 IN. ZT
SCALE = .0100

PARAMETRIC DATA

ALPHA = -10.000 BETA = 10.000
DALPHA = .000 DBETA = -8.000
X = 300.000 MACH = 4.500
JET PC = .000

RUN NO. 2437/ 0 RN/L = 2.37 GRADIENT INTERVAL = -5.00/ 5.00

| Y | Z | X | ALPHA | BETA | PHI | CN | CLM | CY | CYN | CBL | CA |
|---|---|---|---|---|---|---|---|---|---|---|---|
| -11.365 | 249.840 | 299.62000 | -10.29700 | 10.18300 | .18797 | -.30071 | .08684 | -.39665 | .12422 | -.03700 | .26155 |
| -11.029 | 299.690 | 299.60000 | -10.29500 | 10.18200 | .16752 | -.30666 | .08949 | -.37984 | .11676 | -.03763 | .26164 |
| -11.594 | 399.920 | 299.72000 | -10.29700 | 10.18400 | .15225 | -.31606 | .09234 | -.36825 | .11055 | -.03819 | .26184 |
| -11.797 | 425.000 | 299.72000 | -10.29800 | 10.18400 | .15277 | -.31823 | .09280 | -.36885 | .11070 | -.03820 | .26156 |
| -11.791 | 499.940 | 299.57000 | -10.29900 | 10.18400 | .15449 | -.32390 | .09546 | -.37078 | .11168 | -.03825 | .26152 |
| -11.361 | 599.340 | 299.70000 | -10.30000 | 10.18400 | .15522 | -.32605 | .09699 | -.37139 | .11208 | -.03825 | .26251 |
| | GRADIENT | .00000 | .00000 | .00000 | .00000 | .00000 | .00000 | .00000 | .00000 | .00000 | .00000 |

IA143, AEDC V41A-P8A, O/ET W/R.H. SRB SEPARATING (OVX833) ( 24 MAY 77 )

REFERENCE DATA

SREF = 2690.0000 SQ.FT. XMRP = 1097.0000 IN. XT
LREF = 1290.3000 INCHES YMRP = .0000 IN. YT
BREF = 1290.3000 INCHES ZMRP = 450.0000 IN. ZT
SCALE = .0100

PARAMETRIC DATA

ALPHA = -10.000 BETA = 10.000
DALPHA = -10.000 DBETA = -8.000
X = 300.000 MACH = 4.500
JET PC = .000

RUN NO. 2470/ 0 RN/L = 2.40 GRADIENT INTERVAL = -5.00/ 5.00

| Y | Z | X | ALPHA | BETA | PHI | CN | CLM | CY | CYN | CBL | CA |
|---|---|---|---|---|---|---|---|---|---|---|---|
| -11.206 | 425.110 | 299.35000 | -10.29800 | 10.17400 | .17577 | -.28830 | .07671 | -.38389 | .12197 | -.03730 | .25856 |
| -11.581 | 499.830 | 299.49000 | -10.29800 | 10.18300 | .15425 | -.30934 | .08737 | -.36987 | .11144 | -.03815 | .25905 |
| -11.086 | 599.870 | 299.58000 | -10.29900 | 10.18400 | .15466 | -.32310 | .09501 | -.37114 | .11188 | -.03831 | .25975 |
| | GRADIENT | .00000 | .00000 | .00000 | .00000 | .00000 | .00000 | .00000 | .00000 | .00000 | .00000 |

IA143, AEDC V41A-P8A, O/ET W/R.H. SRB SEPARATING (OVX834) ( 24 MAY 77 )

REFERENCE DATA

SREF = 2690.0000 SQ.FT. XMRP = 1097.0000 IN. XT
LREF = 1290.3000 INCHES YMRP = .0000 IN. YT
BREF = 1290.3000 INCHES ZMRP = 450.0000 IN. ZT
SCALE = .0100

PARAMETRIC DATA

ALPHA = -10.000 BETA = 10.000
DALPHA = .000 DBETA = -8.000
X = 300.000 MACH = 4.500
JET PC = .000

RUN NO. 2436/ 0 RN/L = 2.36 GRADIENT INTERVAL = -5.00/ 5.00

| Y | Z | X | ALPHA | BETA | PHI | CN | CLM | CY | CYN | CBL | CA |
|---|---|---|---|---|---|---|---|---|---|---|---|
| -202.520 | 100.020 | 299.69000 | -10.30600 | 10.17900 | .17741 | -.30696 | .08409 | -.40186 | .12951 | -.04070 | .26148 |
| -199.800 | 249.800 | 299.44000 | -10.30100 | 10.18100 | .16156 | -.31822 | .09198 | -.37606 | .11515 | -.03805 | .26170 |
| -200.530 | 299.680 | 299.48000 | -10.30000 | 10.18300 | .15631 | -.32215 | .09434 | -.37218 | .11254 | -.03822 | .26201 |
| -201.630 | 399.710 | 299.69000 | -10.30000 | 10.18400 | .15533 | -.32625 | .09699 | -.37154 | .11213 | -.03828 | .26239 |
| -201.430 | 424.770 | 299.62000 | -10.30000 | 10.18400 | .15514 | -.32620 | .09700 | -.37164 | .11217 | -.03831 | .26250 |
| -200.690 | 499.640 | 299.60000 | -10.30000 | 10.18400 | .15516 | -.32621 | .09703 | -.37161 | .11218 | -.03830 | .26264 |
| -200.860 | 599.490 | 299.63000 | -10.30000 | 10.18400 | .15521 | -.32611 | .09702 | -.37152 | .11213 | -.03828 | .26256 |
| | GRADIENT | .00000 | .00000 | .00000 | .00000 | .00000 | .00000 | .00000 | .00000 | .00000 | .00000 |

IA143, AEDC V41A-P8A, O/ET W/R.H. SRB SEPARATING (OVX835) ( 24 MAY 77 )

REFERENCE DATA

SREF = 2690.0000 SQ.FT. XMRP = 1097.0000 IN. XT
LREF = 1290.3000 INCHES YMRP = .0000 IN. YT
BREF = 1290.3000 INCHES ZMRP = 450.0000 IN. ZT
SCALE = .0100

PARAMETRIC DATA

ALPHA = -10.000 BETA = 10.000
DALPHA = -10.000 DBETA = -8.000
X = 300.000 MACH = 4.500
JET PC = .000

RUN NO. 2469/ 0 RN/L = 2.40 GRADIENT INTERVAL = -5.00/ 5.00

| Y | Z | X | ALPHA | BETA | PHI | CN | CLM | CY | CYN | CBL | CA |
|---|---|---|---|---|---|---|---|---|---|---|---|
| -201.780 | 100.450 | 299.53000 | -10.32300 | 10.17700 | .13989 | -.23195 | .02688 | -.44501 | .15784 | -.05904 | .26297 |
| -199.430 | 250.240 | 299.20000 | -10.30600 | 10.17000 | .20286 | -.30948 | .08731 | -.40649 | .13432 | -.03685 | .25900 |
| -200.020 | 300.120 | 299.39000 | -10.30500 | 10.17400 | .18336 | -.30870 | .08614 | -.39165 | .12547 | -.03743 | .25958 |
| -200.150 | 399.900 | 299.38000 | -10.30100 | 10.18300 | .15812 | -.31804 | .09166 | -.37384 | .11366 | -.03825 | .26066 |
| -201.320 | 425.130 | 299.51000 | -10.30000 | 10.18300 | .15607 | -.32083 | .09360 | -.37217 | .11258 | -.03829 | .26074 |
| -200.580 | 499.620 | 299.48000 | -10.29900 | 10.18400 | .15495 | -.32511 | .09648 | -.37154 | .11216 | -.03836 | .26118 |
| -200.570 | 599.600 | 299.43000 | -10.29900 | 10.18400 | .15509 | -.32535 | .09670 | -.37177 | .11229 | -.03838 | .26203 |
| | GRADIENT | .00000 | .00000 | .00000 | .00000 | .00000 | .00000 | .00000 | .00000 | .00000 | .00000 |

IA143, AEDC V41A-P8A, O/ET W/R.H. SRB SEPARATING (OVX836) ( 24 MAY 77 )

REFERENCE DATA

SREF = 2690.0000 SQ.FT. XMRP = 1097.0000 IN. XT
LREF = 1290.3000 INCHES YMRP = .0000 IN. YT
BREF = 1290.3000 INCHES ZMRP = 450.0000 IN. ZT
SCALE = .0100

PARAMETRIC DATA

ALPHA = -10.000 BETA = 10.000
DALPHA = -5.000 DBETA = .000
X = 300.000 MACH = 4.500
JET PC = .000

RUN NO. 2446/ 0 RN/L = 2.38 GRADIENT INTERVAL = -5.00/ 5.00

| Y | Z | X | ALPHA | BETA | PHI | CN | CLM | CY | CYN | CBL | CA |
|---|---|---|---|---|---|---|---|---|---|---|---|
| -101.440 | 100.160 | 299.43000 | -10.30900 | 10.18800 | .17822 | -.29274 | .07554 | -.42257 | .13679 | -.04465 | .26669 |
| -99.988 | 150.400 | 299.32000 | -10.30600 | 10.16700 | .18109 | -.29745 | .07925 | -.41525 | .13296 | -.04241 | .26175 |
| -100.660 | 200.070 | 299.50000 | -10.30200 | 10.18200 | .19525 | -.31222 | .09126 | -.40562 | .12896 | -.03748 | .26067 |
| | GRADIENT | .00000 | .00000 | .00000 | .00000 | .00000 | .00000 | .00000 | .00000 | .00000 | .00000 |

RUN NO. 2447/ 0 RN/L = 2.38 GRADIENT INTERVAL = -5.00/ 5.00

| Y | Z | X | ALPHA | BETA | PHI | CN | CLM | CY | CYN | CBL | CA |
|---|---|---|---|---|---|---|---|---|---|---|---|
| -199.430 | 198.670 | 299.15000 | -10.30100 | 10.17900 | .16866 | -.31890 | .09296 | -.38065 | .11823 | -.03778 | .26136 |
| -201.120 | 150.040 | 299.43000 | -10.30300 | 10.17900 | .16770 | -.31384 | .08898 | -.38758 | .12221 | -.03955 | .26105 |
| -200.330 | 99.873 | 299.34000 | -10.30500 | 10.17900 | .16077 | -.30358 | .08157 | -.39500 | .12699 | -.04280 | .26269 |
| | GRADIENT | .00000 | .00000 | .00000 | .00000 | .00000 | .00000 | .00000 | .00000 | .00000 | .00000 |

IA143, AEDC V41A-P8A, O/ET W/R.H. SRB SEPARATING (OVX837) ( 24 MAY 77 )

REFERENCE DATA

SREF = 2690.0000 SQ.FT. XMRP = 1097.0000 IN. XT
LREF = 1290.3000 INCHES YMRP = .0000 IN. YT
BREF = 1290.3000 INCHES ZMRP = 450.0000 IN. ZT
SCALE = .0100

PARAMETRIC DATA

ALPHA = -10.000 BETA = 10.000
DALPHA = -10.000 DBETA = .000
X = 300.000 MACH = 4.500
JET PC = .000

RUN NO. 2465/ 0 RN/L = 2.40 GRADIENT INTERVAL = -5.00/ 5.00

| Y | Z | X | ALPHA | BETA | PHI | CN | CLM | CY | CYN | CBL | CA |
|---|---|---|---|---|---|---|---|---|---|---|---|
| -101.030 | 100.370 | 299.45000 | -10.31900 | 10.19100 | .14421 | -.24660 | .04039 | -.45054 | .15392 | -.05831 | .27085 |
| -100.930 | 150.500 | 299.49000 | -10.31200 | 10.18900 | .17823 | -.27415 | .06212 | -.43726 | .14492 | -.04800 | .26348 |
| -100.070 | 200.470 | 299.40000 | -10.30700 | 10.18400 | .20034 | -.29766 | .08006 | -.42535 | .13871 | -.04075 | .25933 |
| | GRADIENT | .00000 | .00000 | .00000 | .00000 | .00000 | .00000 | .00000 | .00000 | .00000 | .00000 |

IA143, AEDC V41A-P8A, O/ET W/R.H. SRB SEPARATING (OVX838) ( 24 MAY 77 )

REFERENCE DATA

SREF = 2690.0000 SQ.FT. XMRP = 1097.0000 IN. XT
LREF = 1290.3000 INCHES YMRP = .0000 IN. YT
BREF = 1290.3000 INCHES ZMRP = 450.0000 IN. ZT
SCALE = .0100

PARAMETRIC DATA

ALPHA = -10.000 BETA = 10.000
DALPHA = -5.000 DBETA = -4.000
X = 300.000 MACH = 4.500
JET PC = .000

RUN NO. 2449/ 0 RN/L = 2.38 GRADIENT INTERVAL = -5.00/ 5.00

| Y | Z | X | ALPHA | BETA | PHI | CN | CLM | CY | CYN | CBL | CA |
|---|---|---|---|---|---|---|---|---|---|---|---|
| -101.230 | 100.260 | 299.39000 | -10.31400 | 10.18500 | .20224 | -.28872 | .07280 | -.44481 | .14885 | -.04474 | .26598 |
| -100.510 | 150.180 | 299.39000 | -10.31000 | 10.18400 | .20400 | -.29288 | .07665 | -.43429 | .14354 | -.04202 | .26124 |
| -100.360 | 200.080 | 299.38000 | -10.30400 | 10.18000 | .20993 | -.30732 | .08873 | -.41734 | .13537 | -.03713 | .25988 |
| -99.673 | 299.930 | 299.44000 | -10.29900 | 10.17800 | .17756 | -.30631 | .08771 | -.38698 | .12162 | -.03736 | .26084 |
| | GRADIENT | .00000 | .00000 | .00000 | .00000 | .00000 | .00000 | .00000 | .00000 | .00000 | .00000 |

IA143, AEDC V41A-P8A, O/ET W/R.H. SRB SEPARATING (OVX839) ( 24 MAY 77 )

REFERENCE DATA

SREF = 2690.0000 SQ.FT. XMRP = 1097.0000 IN. XT
LREF = 1290.3000 INCHES YMRP = .0000 IN. YT
BREF = 1290.3000 INCHES ZMRP = 450.0000 IN. ZT
SCALE = .0100

PARAMETRIC DATA

ALPHA = -10.000 BETA = 10.000
DALPHA = -10.000 DBETA = -4.000
X = 300.000 MACH = 4.500
JET PC = .000

RUN NO. 2467/ 0 RN/L = 2.40 GRADIENT INTERVAL = -5.00/ 5.00

| Y | Z | X | ALPHA | BETA | PHI | CN | CLM | CY | CYN | CBL | CA |
|---|---|---|---|---|---|---|---|---|---|---|---|
| -101.480 | 100.430 | 299.47000 | -10.32800 | 10.19000 | .15582 | -.21914 | .02019 | -.47837 | .16901 | -.06223 | .27028 |
| -100.700 | 150.180 | 299.42000 | -10.32100 | 10.18700 | .19279 | -.25359 | .04626 | -.46378 | .15923 | -.05098 | .26204 |
| -100.690 | 200.240 | 299.42000 | -10.31300 | 10.17900 | .22650 | -.28975 | .07452 | -.45089 | .15302 | -.04122 | .25810 |
| | GRADIENT | .00000 | .00000 | .00000 | .00000 | .00000 | .00000 | .00000 | .00000 | .00000 | .00000 |

RUN NO. 2468/ 0 RN/L = 2.40 GRADIENT INTERVAL = -5.00/ 5.00

| Y | Z | X | ALPHA | BETA | PHI | CN | CLM | CY | CYN | CBL | CA |
|---|---|---|---|---|---|---|---|---|---|---|---|
| -199.570 | 198.630 | 298.94000 | -10.30500 | 10.17600 | .18169 | -.31088 | .08704 | -.39840 | .12875 | -.03924 | .26027 |
| -202.260 | 150.250 | 299.58000 | -10.30900 | 10.17700 | .16427 | -.28961 | .07116 | -.41012 | .13598 | -.04562 | .26153 |
| -201.370 | 100.370 | 299.51000 | -10.31300 | 10.18100 | .13473 | -.26259 | .05070 | -.42026 | .14245 | -.05419 | .26440 |
| | GRADIENT | .00000 | .00000 | .00000 | .00000 | .00000 | .00000 | .00000 | .00000 | .00000 | .00000 |

IA143, AEDC V41A-P8A, O/ET W/R.H. SRB SEPARATING (OVX840) ( 24 MAY 77 )

REFERENCE DATA

SREF = 2690.0000 SQ.FT. XMRP = 1097.0000 IN. XT
LREF = 1290.3000 INCHES YMRP = .0000 IN. YT
BREF = 1290.3000 INCHES ZMRP = 450.0000 IN. ZT
SCALE = .0100

PARAMETRIC DATA

ALPHA = -10.000 BETA = 10.000
DALPHA = -5.000 DBETA = -4.000
X = 300.000 MACH = 4.500
JET PC = .000

RUN NO. 2448/ 0 RN/L = 2.38 GRADIENT INTERVAL = -5.00/ 5.00

| Y | Z | X | ALPHA | BETA | PHI | CN | CLM | CY | CYN | CBL | CA |
|---|---|---|---|---|---|---|---|---|---|---|---|
| -201.470 | 100.240 | 299.37000 | -10.30600 | 10.17800 | .16559 | -.30134 | .07998 | -.39991 | .12978 | -.04294 | .26245 |
| -200.900 | 150.340 | 299.54000 | -10.30400 | 10.17800 | .17363 | -.31291 | .08851 | -.39194 | .12472 | -.03935 | .26094 |
| -200.870 | 200.150 | 299.49000 | -10.30200 | 10.17800 | .17319 | -.31701 | .09194 | -.38373 | .12021 | -.03759 | .26125 |
| | GRADIENT | .00000 | .00000 | .00000 | .00000 | .00000 | .00000 | .00000 | .00000 | .00000 | .00000 |

IA143, AEDC V41A-P8A, O/ET W/R.H. SRB SEPARATING (OVX841) ( 24 MAY 77 )

REFERENCE DATA

SREF = 2690.0000 SQ.FT. XMRP = 1097.0000 IN. XT
LREF = 1290.3000 INCHES YMRP = .0000 IN. YT
BREF = 1290.3000 INCHES ZMRP = 450.0000 IN. ZT
SCALE = .0100

PARAMETRIC DATA

ALPHA = -10.000 BETA = 10.000
DALPHA = -6.000 DBETA = -2.000
X = 300.000 MACH = 4.500
JET PC = .000

RUN NO. 2462/ 0 RN/L = 2.40 GRADIENT INTERVAL = -5.00/ 5.00

| Y | Z | X | ALPHA | BETA | PHI | CN | CLM | CY | CYN | CBL | CA |
|---|---|---|---|---|---|---|---|---|---|---|---|
| -101.900 | 100.430 | 299.65000 | -10.31200 | 10.18700 | .18928 | -.28869 | .07250 | -.43693 | .14480 | -.04565 | .26657 |
| -99.791 | 200.530 | 299.41000 | -10.30300 | 10.18100 | .20404 | -.30876 | .08915 | -.41469 | .13345 | -.03764 | .26019 |
| -99.679 | 300.040 | 299.32000 | -10.30000 | 10.17800 | .17877 | -.30699 | .08774 | -.38876 | .12246 | -.03747 | .26116 |
| | GRADIENT | .00000 | .00000 | .00000 | .00000 | .00000 | .00000 | .00000 | .00000 | .00000 | .00000 |

IA143, AEDC V41A-P8A, O/ET W/R.H. SRB SEPARATING (OVX842) ( 24 MAY 77 )

REFERENCE DATA

SREF = 2690.0000 SQ.FT. XMRP = 1097.0000 IN. XT
LREF = 1290.3000 INCHES YMRP = .0000 IN. YT
BREF = 1290.3000 INCHES ZMRP = 450.0000 IN. ZT
SCALE = .0100

PARAMETRIC DATA

ALPHA = -10.000 BETA = 10.000
DALPHA = -6.000 DBETA = -2.000
X = 300.000 MACH = 4.500
JET PC = .000

RUN NO. 2500/ 0 RN/L = 2.39 GRADIENT INTERVAL = -5.00/ 5.00

| Y | Z | X | ALPHA | BETA | PHI | CN | CLM | CY | CYN | CBL | CA |
|---|---|---|---|---|---|---|---|---|---|---|---|
| -101.260 | 100.250 | 299.49000 | -10.31200 | 10.18700 | .18879 | -.28880 | .07257 | -.43770 | .14513 | -.04588 | .26686 |
| -99.980 | 200.710 | 299.49000 | -10.30400 | 10.18200 | .20364 | -.30862 | .08899 | -.41493 | .13353 | -.03779 | .25997 |
| -98.968 | 300.020 | 299.20000 | -10.30000 | 10.17800 | .17903 | -.30711 | .08786 | -.38942 | .12277 | -.03756 | .26076 |
| | GRADIENT | .00000 | .00000 | .00000 | .00000 | .00000 | .00000 | .00000 | .00000 | .00000 | .00000 |

IA143, AEDC V41A-P8A, O/ET W/R.H. SRB SEPARATING (OVX843) ( 24 MAY 77 )

REFERENCE DATA

SREF = 2690.0000 SQ.FT. XMRP = 1097.0000 IN. XT
LREF = 1290.3000 INCHES YMRP = .0000 IN. YT
BREF = 1290.3000 INCHES ZMRP = 450.0000 IN. ZT
SCALE = .0100

PARAMETRIC DATA

ALPHA = -10.000 BETA = 10.000
DALPHA = .000 DBETA = -4.000
X = 600.000 MACH = 4.500
JET PC = .000

RUN NO. 2440/ 0 RN/L = 2.37 GRADIENT INTERVAL = -5.00/ 5.00

| Y | Z | X | ALPHA | BETA | PHI | CN | CLM | CY | CYN | CBL | CA |
|---|---|---|---|---|---|---|---|---|---|---|---|
| -101.140 | 199.850 | 599.42000 | -10.30200 | 10.17900 | .16935 | -.31739 | .09177 | -.38164 | .11858 | -.03779 | .26214 |
| -100.630 | 249.780 | 599.52000 | -10.30100 | 10.18100 | .16101 | -.31868 | .09226 | -.37559 | .11485 | -.03805 | .26197 |
| -101.090 | 399.790 | 599.52000 | -10.30000 | 10.18400 | .15525 | -.32599 | .09689 | -.37138 | .11205 | -.03824 | .26215 |
| -101.350 | 449.800 | 599.64000 | -10.30000 | 10.18400 | .15520 | -.32606 | .09697 | -.37131 | .11205 | -.03824 | .26247 |
| -100.880 | 499.660 | 599.48000 | -10.30000 | 10.18300 | .15518 | -.32608 | .09700 | -.37121 | .11201 | -.03823 | .26256 |
| -101.220 | 599.510 | 599.63000 | -10.30000 | 10.18300 | .15518 | -.32610 | .09699 | -.37131 | .11204 | -.03824 | .26255 |
| | GRADIENT | .00000 | .00000 | .00000 | .00000 | .00000 | .00000 | .00000 | .00000 | .00000 | .00000 |

RUN NO. 2441/ 0 RN/L = 2.38 GRADIENT INTERVAL = -5.00/ 5.00

| Y | Z | X | ALPHA | BETA | PHI | CN | CLM | CY | CYN | CBL | CA |
|---|---|---|---|---|---|---|---|---|---|---|---|
| -300.540 | 598.730 | 599.39000 | -10.29900 | 10.18300 | .15513 | -.32597 | .09698 | -.37122 | .11200 | -.03822 | .26255 |
| -300.930 | 499.940 | 599.44000 | -10.30000 | 10.18300 | .15522 | -.32614 | .09702 | -.37127 | .11203 | -.03823 | .26258 |
| -300.670 | 449.840 | 599.40000 | -10.30000 | 10.18400 | .15528 | -.32618 | .09701 | -.37133 | .11205 | -.03823 | .26252 |
| -300.330 | 399.990 | 599.37000 | -10.30000 | 10.18400 | .15521 | -.32608 | .09699 | -.37132 | .11203 | -.03823 | .26252 |
| -301.380 | 250.150 | 599.39000 | -10.30000 | 10.18400 | .15523 | -.32613 | .09702 | -.37131 | .11204 | -.03823 | .26261 |
| -301.390 | 199.960 | 599.54000 | -10.30000 | 10.18400 | .15524 | -.32612 | .09699 | -.37122 | .11200 | -.03822 | .26251 |
| | GRADIENT | .00000 | .00000 | .00000 | .00000 | .00000 | .00000 | .00000 | .00000 | .00000 | .00000 |

IA143, AEDC V41A-P8A, O/ET W/R.H. SRB SEPARATING (OVX844) ( 24 MAY 77 )

REFERENCE DATA

SREF = 2690.0000 SQ.FT. XMRP = 1097.0000 IN. XT
LREF = 1290.3000 INCHES YMRP = .0000 IN. YT
BREF = 1290.3000 INCHES ZMRP = 450.0000 IN. ZT
SCALE = .0100

PARAMETRIC DATA

ALPHA = -10.000 BETA = 10.000
DALPHA = -15.000 DBETA = 4.000
X = 600.000 MACH = 4.500
JET PC = .000

RUN NO. 2501/ 0 RN/L = 2.39 GRADIENT INTERVAL = -5.00/ 5.00

| Y | Z | X | ALPHA | BETA | PHI | CN | CLM | CY | CYN | CBL | CA |
|---|---|---|---|---|---|---|---|---|---|---|---|
| -100.310 | 200.350 | 599.31000 | -10.30500 | 10.17400 | .19232 | -.31435 | .09030 | -.40104 | .13016 | -.03764 | .26026 |
| -100.360 | 250.780 | 599.43000 | -10.30400 | 10.17500 | .18439 | -.31256 | .08908 | -.39322 | .12604 | -.03749 | .26078 |
| -100.590 | 400.820 | 599.36000 | -10.30000 | 10.18300 | .15601 | -.31942 | .09277 | -.37254 | .11273 | -.03835 | .26066 |
| -100.770 | 450.200 | 599.32000 | -10.29900 | 10.18400 | .15501 | -.32357 | .09542 | -.37174 | .11224 | -.03838 | .26086 |
| -100.550 | 500.020 | 599.41000 | -10.29900 | 10.18400 | .15464 | -.32528 | .09657 | -.37166 | .11217 | -.03841 | .26130 |
| -101.160 | 599.730 | 599.23000 | -10.29900 | 10.18400 | .15487 | -.32547 | .09674 | -.37175 | .11226 | -.03840 | .26196 |
| | GRADIENT | .00000 | .00000 | .00000 | .00000 | .00000 | .00000 | .00000 | .00000 | .00000 | .00000 |

IA143, AEDC V41A-P8A, O/ET W/R.H. SRB SEPARATING (OVX844) ( 24 MAY 77 )

REFERENCE DATA

SREF = 2690.0000 SQ.FT. XMRP = 1097.0000 IN. XT
LREF = 1290.3000 INCHES YMRP = .0000 IN. YT
BREF = 1290.3000 INCHES ZMRP = 450.0000 IN. ZT
SCALE = .0100

PARAMETRIC DATA

ALPHA = -10.000 BETA = 10.000
DALPHA = -15.000 DBETA = 4.000
X = 600.000 MACH = 4.500
JET PC = .000

RUN NO. 2502/ 0 RN/L = 2.38 GRADIENT INTERVAL = -5.00/ 5.00

| Y | Z | X | ALPHA | BETA | PHI | CN | CLM | CY | CYN | CBL | CA |
|---|---|---|---|---|---|---|---|---|---|---|---|
| -300.620 | 600.340 | 599.35000 | -10.29900 | 10.18400 | .15486 | -.32545 | .09674 | -.37171 | .11223 | -.03839 | .26200 |
| -301.700 | 500.460 | 599.46000 | -10.29900 | 10.18400 | .15481 | -.32545 | .09672 | -.37161 | .11219 | -.03838 | .26184 |
| -300.490 | 450.470 | 599.40000 | -10.29900 | 10.18400 | .15495 | -.32554 | .09678 | -.37180 | .11226 | -.03840 | .26205 |
| -300.990 | 400.290 | 599.38000 | -10.29900 | 10.18400 | .15484 | -.32551 | .09679 | -.37182 | .11228 | -.03842 | .26213 |
| -300.800 | 250.210 | 599.29000 | -10.29900 | 10.18400 | .15485 | -.32533 | .09668 | -.37167 | .11224 | -.03842 | .26173 |
| -300.560 | 200.740 | 599.54000 | -10.29900 | 10.18400 | .15475 | -.32535 | .09671 | -.37172 | .11224 | -.03841 | .26185 |
| | GRADIENT | .00000 | .00000 | .00000 | .00000 | .00000 | .00000 | .00000 | .00000 | .00000 | .00000 |

IA143, AEDC V41A-P8A, O/ET W/R.H. SRB SEPARATING (OVX845) ( 24 MAY 77 )

REFERENCE DATA

SREF = 2690.0000 SQ.FT. XMRP = 1097.0000 IN. XT
LREF = 1290.3000 INCHES YMRP = .0000 IN. YT
BREF = 1290.3000 INCHES ZMRP = 450.0000 IN. ZT
SCALE = .0100

PARAMETRIC DATA

ALPHA = -10.000 BETA = 10.000
DALPHA = -15.000 DBETA = 4.000
X = 600.000 MACH = 4.500
JET PC = .000

RUN NO. 2541/ 0 RN/L = 2.37 GRADIENT INTERVAL = -5.00/ 5.00

| Y | Z | X | ALPHA | BETA | PHI | CN | CLM | CY | CYN | CBL | CA |
|---|---|---|---|---|---|---|---|---|---|---|---|
| -101.110 | 200.630 | 599.35000 | -10.30500 | 10.17400 | .19183 | -.31471 | .09029 | -.40018 | .12963 | -.03752 | .26005 |
| -100.380 | 250.690 | 599.30000 | -10.30400 | 10.17500 | .18384 | -.31263 | .08895 | -.39235 | .12545 | -.03742 | .26052 |
| -99.731 | 400.900 | 599.46000 | -10.30000 | 10.18400 | .15611 | -.31982 | .09291 | -.37226 | .11249 | -.03827 | .26031 |
| -100.960 | 450.240 | 599.34000 | -10.29900 | 10.18400 | .15515 | -.32381 | .09549 | -.37146 | .11203 | -.03828 | .26049 |
| -100.780 | 500.030 | 599.32000 | -10.29900 | 10.18400 | .15494 | -.32523 | .09649 | -.37144 | .11199 | -.03831 | .26093 |
| -101.180 | 599.870 | 599.26000 | -10.29900 | 10.18400 | .15523 | -.32541 | .09666 | -.37163 | .11209 | -.03832 | .26156 |
| | GRADIENT | .00000 | .00000 | .00000 | .00000 | .00000 | .00000 | .00000 | .00000 | .00000 | .00000 |

IA143, AEDC V41A-P8A, O/ET W/R.H. SRB SEPARATING (OVX846) ( 24 MAY 77 )

REFERENCE DATA

SREF = 2690.0000 SQ.FT. XMRP = 1097.0000 IN. XT
LREF = 1290.3000 INCHES YMRP = .0000 IN. YT
BREF = 1290.3000 INCHES ZMRP = 450.0000 IN. ZT
SCALE = .0100

PARAMETRIC DATA

ALPHA = -10.000 BETA = 10.000
DALPHA = .000 DBETA = -12.000
X = 600.000 MACH = 4.500
JET PC = .000

RUN NO. 2438/ 0 RN/L = 2.36 GRADIENT INTERVAL = -5.00/ 5.00

| Y | Z | X | ALPHA | BETA | PHI | CN | CLM | CY | CYN | CBL | CA |
|---|---|---|---|---|---|---|---|---|---|---|---|
| -102.480 | 249.940 | 599.72000 | -10.30200 | 10.18000 | .16706 | -.31352 | .08937 | -.37968 | .11743 | -.03781 | .26157 |
| -100.930 | 399.670 | 599.36000 | -10.30000 | 10.18300 | .15529 | -.32487 | .09607 | -.37141 | .11208 | -.03823 | .26180 |
| -101.140 | 449.790 | 599.57000 | -10.30000 | 10.18400 | .15516 | -.32594 | .09689 | -.37111 | .11196 | -.03823 | .26207 |
| -101.220 | 499.740 | 599.51000 | -10.30000 | 10.18400 | .15520 | -.32623 | .09704 | -.37148 | .11208 | -.03826 | .26267 |
| -100.390 | 599.880 | 599.47000 | -10.30000 | 10.18400 | .15518 | -.32613 | .09700 | -.37147 | .11209 | -.03826 | .26256 |
| | GRADIENT | .00000 | .00000 | .00000 | .00000 | .00000 | .00000 | .00000 | .00000 | .00000 | .00000 |

IA143, AEDC V41A-P8A, O/ET W/R.H. SRB SEPARATING (OVX847) ( 24 MAY 77 )

REFERENCE DATA

SREF = 2690.0000 SQ.FT. XMRP = 1097.0000 IN. XT
LREF = 1290.3000 INCHES YMRP = .0000 IN. YT
BREF = 1290.3000 INCHES ZMRP = 450.0000 IN. ZT
SCALE = .0100

PARAMETRIC DATA

ALPHA = -10.000 BETA = 10.000
DALPHA = -15.000 DBETA = -12.000
X = 600.000 MACH = 4.500
JET PC = .000

RUN NO. 2507/ 0 RN/L = 2.38 GRADIENT INTERVAL = -5.00/ 5.00

| Y | Z | X | ALPHA | BETA | PHI | CN | CLM | CY | CYN | CBL | CA |
|---|---|---|---|---|---|---|---|---|---|---|---|
| -100.750 | 450.160 | 599.23000 | -10.30100 | 10.18300 | .15823 | -.31172 | .08748 | -.37347 | .11349 | -.03817 | .25791 |
| -101.220 | 500.310 | 599.35000 | -10.29900 | 10.18400 | .15526 | -.32024 | .09300 | -.37170 | .11208 | -.03829 | .25888 |
| -101.110 | 600.090 | 599.18000 | -10.29800 | 10.18400 | .15410 | -.32467 | .09608 | -.37105 | .11171 | -.03837 | .25933 |
| | GRADIENT | .00000 | .00000 | .00000 | .00000 | .00000 | .00000 | .00000 | .00000 | .00000 | .00000 |

IA143, AEDC V41A-P8A, O/ET W/R.H. SRB SEPARATING (OVX848) ( 24 MAY 77 )

REFERENCE DATA

SREF = 2690.0000 SQ.FT. XMRP = 1097.0000 IN. XT
LREF = 1290.3000 INCHES YMRP = .0000 IN. YT
BREF = 1290.3000 INCHES ZMRP = 450.0000 IN. ZT
SCALE = .0100

PARAMETRIC DATA

ALPHA = -10.000 BETA = 10.000
DALPHA = .000 DBETA = -12.000
X = 600.000 MACH = 4.500
JET PC = .000

RUN NO. 2439/ 0 RN/L = 2.36 GRADIENT INTERVAL = -5.00/ 5.00

| Y | Z | X | ALPHA | BETA | PHI | CN | CLM | CY | CYN | CBL | CA |
|---|---|---|---|---|---|---|---|---|---|---|---|
| -301.120 | 199.990 | 599.49000 | -10.30000 | 10.18300 | .15508 | -.32593 | .09689 | -.37121 | .11201 | -.03824 | .26218 |
| -300.680 | 249.840 | 599.43000 | -10.30000 | 10.18300 | .15520 | -.32617 | .09700 | -.37143 | .11209 | -.03824 | .26250 |
| -300.380 | 399.510 | 599.46000 | -10.30000 | 10.18400 | .15517 | -.32605 | .09696 | -.37131 | .11205 | -.03825 | .26241 |
| -300.600 | 449.680 | 599.54000 | -10.30000 | 10.18300 | .15515 | -.32611 | .09701 | -.37127 | .11203 | -.03823 | .26259 |
| -300.800 | 499.600 | 599.42000 | -10.30000 | 10.18400 | .15521 | -.32621 | .09700 | -.37148 | .11209 | -.03826 | .26263 |
| -300.450 | 599.630 | 599.54000 | -10.30000 | 10.18400 | .15523 | -.32623 | .09705 | -.37147 | .11209 | -.03825 | .26272 |
| | GRADIENT | .00000 | .00000 | .00000 | .00000 | .00000 | .00000 | .00000 | .00000 | .00000 | .00000 |

IA143, AEDC V41A-P8A, O/ET W/R.H. SRB SEPARATING (OVX849) ( 24 MAY 77 )

REFERENCE DATA

SREF = 2690.0000 SQ.FT. XMRP = 1097.0000 IN. XT
LREF = 1290.3000 INCHES YMRP = .0000 IN. YT
BREF = 1290.3000 INCHES ZMRP = 450.0000 IN. ZT
SCALE = .0100

PARAMETRIC DATA

ALPHA = -10.000 BETA = 10.000
DALPHA = .000 DBETA = -12.000
X = 600.000 MACH = 4.500
JET PC = .000

RUN NO. 2461/ 0 RN/L = 2.38 GRADIENT INTERVAL = -5.00/ 5.00

| Y | Z | X | ALPHA | BETA | PHI | CN | CLM | CY | CYN | CBL | CA |
|---|---|---|---|---|---|---|---|---|---|---|---|
| -301.130 | 199.980 | 599.52000 | -10.29900 | 10.18300 | .15499 | -.32511 | .09680 | -.37096 | .11198 | -.03823 | .26187 |
| -301.090 | 249.940 | 599.51000 | -10.29900 | 10.18300 | .15498 | -.32499 | .09675 | -.37085 | .11195 | -.03822 | .26181 |
| -300.100 | 399.540 | 599.43000 | -10.29900 | 10.18300 | .15494 | -.32504 | .09682 | -.37093 | .11198 | -.03823 | .26207 |
| -300.580 | 449.710 | 599.53000 | -10.29900 | 10.18300 | .15500 | -.32511 | .09681 | -.37087 | .11195 | -.03822 | .26194 |
| -301.030 | 499.380 | 599.42000 | -10.29900 | 10.18300 | .15490 | -.32490 | .09674 | -.37082 | .11195 | -.03823 | .26174 |
| -300.500 | 599.650 | 599.49000 | -10.29900 | 10.18300 | .15494 | -.32511 | .09680 | -.37104 | .11200 | -.03824 | .26196 |
| | GRADIENT | .00000 | .00000 | .00000 | .00000 | .00000 | .00000 | .00000 | .00000 | .00000 | .00000 |

IA143, AEDC V41A-P8A, O/ET W/R.H. SRB SEPARATING (OVX850) ( 24 MAY 77 )

REFERENCE DATA

SREF = 2690.0000 SQ.FT. XMRP = 1097.0000 IN. XT
LREF = 1290.3000 INCHES YMRP = .0000 IN. YT
BREF = 1290.3000 INCHES ZMRP = 450.0000 IN. ZT
SCALE = .0100

PARAMETRIC DATA

ALPHA = -10.000 BETA = 10.000
DALPHA = -15.000 DBETA = -12.000
X = 600.000 MACH = 4.500
JET PC = .000

RUN NO. 2508/ 0 RN/L = 2.38 GRADIENT INTERVAL = -5.00/ 5.00

| Y | Z | X | ALPHA | BETA | PHI | CN | CLM | CY | CYN | CBL | CA |
|---|---|---|---|---|---|---|---|---|---|---|---|
| -300.360 | 200.380 | 599.10000 | -10.29900 | 10.18400 | .15344 | -.32235 | .09424 | -.37161 | .11219 | -.03870 | .25936 |
| -301.090 | 250.470 | 599.26000 | -10.29900 | 10.18400 | .15460 | -.32485 | .09615 | -.37130 | .11192 | -.03835 | .26028 |
| -299.450 | 400.640 | 598.98000 | -10.29900 | 10.18400 | .15469 | -.32517 | .09649 | -.37158 | .11210 | -.03839 | .26122 |
| -300.480 | 450.200 | 599.25000 | -10.29900 | 10.18400 | .15493 | -.32523 | .09661 | -.37164 | .11216 | -.03839 | .26172 |
| -299.870 | 500.160 | 599.22000 | -10.29900 | 10.18400 | .15494 | -.32526 | .09665 | -.37157 | .11217 | -.03837 | .26181 |
| -300.420 | 599.800 | 598.87000 | -10.29900 | 10.18400 | .15485 | -.32538 | .09669 | -.37180 | .11224 | -.03841 | .26184 |
| | GRADIENT | .00000 | .00000 | .00000 | .00000 | .00000 | .00000 | .00000 | .00000 | .00000 | .00000 |

IA143, AEDC V41A-P8A, O/ET W/R.H. SRB SEPARATING (OVX851) ( 24 MAY 77 )

REFERENCE DATA

SREF = 2690.0000 SQ.FT. XMRP = 1097.0000 IN. XT
LREF = 1290.3000 INCHES YMRP = .0000 IN. YT
BREF = 1290.3000 INCHES ZMRP = 450.0000 IN. ZT
SCALE = .0100

PARAMETRIC DATA

ALPHA = -10.000 BETA = 10.000
DALPHA = -7.000 DBETA = -4.000
X = 600.000 MACH = 4.500
JET PC = .000

RUN NO. 2463/ 0 RN/L = 2.40 GRADIENT INTERVAL = -5.00/ 5.00

| Y | Z | X | ALPHA | BETA | PHI | CN | CLM | CY | CYN | CBL | CA |
|---|---|---|---|---|---|---|---|---|---|---|---|
| -200.720 | 200.340 | 599.21000 | -10.30100 | 10.18100 | .16265 | -.32007 | .09314 | -.37664 | .11579 | -.03805 | .26140 |
| -200.480 | 300.310 | 599.39000 | -10.30000 | 10.18400 | .15534 | -.32449 | .09597 | -.37209 | .11239 | -.03837 | .26179 |
| -200.200 | 399.820 | 599.26000 | -10.29900 | 10.18400 | .15498 | -.32532 | .09663 | -.37150 | .11216 | -.03833 | .26198 |
| | GRADIENT | .00000 | .00000 | .00000 | .00000 | .00000 | .00000 | .00000 | .00000 | .00000 | .00000 |

IA143, AEDC V41A-P8A, O/ET W/R.H. SRB SEPARATING (OVX852) ( 24 MAY 77 )

REFERENCE DATA

SREF = 2690.0000 SQ.FT. XMRP = 1097.0000 IN. XT
LREF = 1290.3000 INCHES YMRP = .0000 IN. YT
BREF = 1290.3000 INCHES ZMRP = 450.0000 IN. ZT
SCALE = .0100

PARAMETRIC DATA

ALPHA = -10.000 BETA = 10.000
DALPHA = -5.000 DBETA = .000
X = 600.000 MACH = 4.500
JET PC = .000

RUN NO. 2450/ 0 RN/L = 2.37 GRADIENT INTERVAL = -5.00/ 5.00

| Y | Z | X | ALPHA | BETA | PHI | CN | CLM | CY | CYN | CBL | CA |
|---|---|---|---|---|---|---|---|---|---|---|---|
| -101.020 | 200.080 | 599.38000 | -10.30200 | 10.17800 | .17419 | -.31638 | .09158 | -.38473 | .12073 | -.03756 | .26146 |
| -100.490 | 300.130 | 599.41000 | -10.30000 | 10.18200 | .15848 | -.31902 | .09271 | -.37310 | .11341 | -.03806 | .26140 |
| -100.880 | 399.980 | 599.35000 | -10.29900 | 10.18300 | .15508 | -.32453 | .09627 | -.37084 | .11189 | -.03818 | .26154 |
| | GRADIENT | .00000 | .00000 | .00000 | .00000 | .00000 | .00000 | .00000 | .00000 | .00000 | .00000 |

RUN NO. 2451/ 0 RN/L = 2.38 GRADIENT INTERVAL = -5.00/ 5.00

| Y | Z | X | ALPHA | BETA | PHI | CN | CLM | CY | CYN | CBL | CA |
|---|---|---|---|---|---|---|---|---|---|---|---|
| -300.950 | 397.770 | 599.22000 | -10.29900 | 10.18300 | .15502 | -.32523 | .09680 | -.37087 | .11191 | -.03820 | .26203 |
| -301.570 | 300.210 | 599.44000 | -10.29900 | 10.18300 | .15506 | -.32542 | .09687 | -.37088 | .11189 | -.03819 | .26217 |
| -300.620 | 199.940 | 599.39000 | -10.29900 | 10.18300 | .15504 | -.32532 | .09685 | -.37086 | .11187 | -.03819 | .26213 |
| | GRADIENT | .00000 | .00000 | .00000 | .00000 | .00000 | .00000 | .00000 | .00000 | .00000 | .00000 |

IA143, AEDC V41A-P8A, O/ET W/R.H. SRB SEPARATING (OVX853) ( 24 MAY 77 )

REFERENCE DATA

SREF = 2690.0000 SQ.FT. XMRP = 1097.0000 IN. XT
LREF = 1290.3000 INCHES YMRP = .0000 IN. YT
BREF = 1290.3000 INCHES ZMRP = 450.0000 IN. ZT
SCALE = .0100

PARAMETRIC DATA

ALPHA = -10.000 BETA = 10.000
DALPHA = -10.000 DBETA = .000
X = 600.000 MACH = 4.500
JET PC = .000

RUN NO. 2476/ 0 RN/L = 2.40 GRADIENT INTERVAL = -5.00/ 5.00

| Y | Z | X | ALPHA | BETA | PHI | CN | CLM | CY | CYN | CBL | CA |
|---|---|---|---|---|---|---|---|---|---|---|---|
| -101.050 | 200.300 | 599.43000 | -10.30400 | 10.17500 | .18620 | -.31547 | .09112 | -.39522 | .12674 | -.03751 | .26124 |
| -99.842 | 300.370 | 599.36000 | -10.30200 | 10.18000 | .16433 | -.31511 | .09008 | -.37845 | .11680 | -.03811 | .26093 |
| -101.290 | 400.330 | 599.41000 | -10.29900 | 10.18300 | .15534 | -.32233 | .09465 | -.37214 | .11250 | -.03839 | .26118 |
| | GRADIENT | .00000 | .00000 | .00000 | .00000 | .00000 | .00000 | .00000 | .00000 | .00000 | .00000 |

RUN NO. 2477/ 0 RN/L = 2.40 GRADIENT INTERVAL = -5.00/ 5.00

| Y | Z | X | ALPHA | BETA | PHI | CN | CLM | CY | CYN | CBL | CA |
|---|---|---|---|---|---|---|---|---|---|---|---|
| -300.590 | 400.290 | 599.41000 | -10.29900 | 10.18400 | .15502 | -.32544 | .09677 | -.37214 | .11247 | -.03846 | .26221 |
| -301.340 | 300.320 | 599.38000 | -10.29900 | 10.18400 | .15508 | -.32530 | .09671 | -.37178 | .11234 | -.03841 | .26197 |
| -300.580 | 200.210 | 599.32000 | -10.29900 | 10.18400 | .15505 | -.32552 | .09673 | -.37199 | .11238 | -.03843 | .26191 |
| | GRADIENT | .00000 | .00000 | .00000 | .00000 | .00000 | .00000 | .00000 | .00000 | .00000 | .00000 |

IA143, AEDC V41A-P8A, O/ET W/R.H. SRB SEPARATING (OVX854) ( 24 MAY 77 )

REFERENCE DATA

SREF = 2690.0000 SQ.FT. XMRP = 1097.0000 IN. XT
LREF = 1290.3000 INCHES YMRP = .0000 IN. YT
BREF = 1290.3000 INCHES ZMRP = 450.0000 IN. ZT
SCALE = .0100

PARAMETRIC DATA

ALPHA = -10.000 BETA = 10.000
DALPHA = -5.000 DBETA = -8.000
X = 600.000 MACH = 4.500
JET PC = .000

RUN NO. 2453/ 0 RN/L = 2.38 GRADIENT INTERVAL = -5.00/ 5.00

| Y | Z | X | ALPHA | BETA | PHI | CN | CLM | CY | CYN | CBL | CA |
|---|---|---|---|---|---|---|---|---|---|---|---|
| -100.250 | 400.350 | 599.45000 | -10.29900 | 10.18300 | .15530 | -.32284 | .09515 | -.37092 | .11193 | -.03817 | .26111 |
| -100.960 | 300.180 | 599.34000 | -10.30000 | 10.18100 | .16116 | -.31474 | .09010 | -.37512 | .11480 | -.03795 | .26083 |
| -101.950 | 200.400 | 599.58000 | -10.30500 | 10.17300 | .19267 | -.31028 | .08809 | -.39831 | .12910 | -.03700 | .26069 |
| | GRADIENT | .00000 | .00000 | .00000 | .00000 | .00000 | .00000 | .00000 | .00000 | .00000 | .00000 |

RUN NO. 2452/ 0 RN/L = 2.37 GRADIENT INTERVAL = -5.00/ 5.00

| Y | Z | X | ALPHA | BETA | PHI | CN | CLM | CY | CYN | CBL | CA |
|---|---|---|---|---|---|---|---|---|---|---|---|
| -301.490 | 200.150 | 599.46000 | -10.29900 | 10.18300 | .15504 | -.32542 | .09683 | -.37096 | .11190 | -.03821 | .26193 |
| -300.500 | 300.080 | 599.36000 | -10.29900 | 10.18300 | .15505 | -.32532 | .09683 | -.37096 | .11192 | -.03821 | .26215 |
| -300.490 | 399.930 | 599.32000 | -10.29900 | 10.18300 | .15509 | -.32538 | .09686 | -.37092 | .11190 | -.03819 | .26222 |
| | GRADIENT | .00000 | .00000 | .00000 | .00000 | .00000 | .00000 | .00000 | .00000 | .00000 | .00000 |

IA143, AEDC V41A-P8A, O/ET W/R.H. SRB SEPARATING (OVX855) ( 24 MAY 77 )

REFERENCE DATA

SREF = 2690.0000 SQ.FT. XMRP = 1097.0000 IN. XT
LREF = 1290.3000 INCHES YMRP = .0000 IN. YT
BREF = 1290.3000 INCHES ZMRP = 450.0000 IN. ZT
SCALE = .0100

PARAMETRIC DATA

ALPHA = -10.000 BETA = 10.000
DALPHA = -10.000 DBETA = -8.000
X = 600.000 MACH = 4.500
JET PC = .000

RUN NO. 2471/ 0 RN/L = 2.40 GRADIENT INTERVAL = -5.00/ 5.00

| Y | Z | X | ALPHA | BETA | PHI | CN | CLM | CY | CYN | CBL | CA |
|---|---|---|---|---|---|---|---|---|---|---|---|
| -101.340 | 200.330 | 599.31000 | -10.30900 | 10.16500 | .22180 | -.30952 | .08781 | -.42136 | .14321 | -.03642 | .25882 |
| -99.169 | 299.620 | 599.00000 | -10.30400 | 10.17600 | .17758 | -.30676 | .08501 | -.38730 | .12294 | -.03760 | .25984 |
| -100.920 | 350.080 | 599.37000 | -10.30100 | 10.18100 | .16125 | -.31307 | .08862 | -.37609 | .11524 | -.03816 | .26007 |
| -101.300 | 400.190 | 599.44000 | -10.30000 | 10.18400 | .15569 | -.31885 | .09242 | -.37195 | .11238 | -.03832 | .26037 |
| | GRADIENT | .00000 | .00000 | .00000 | .00000 | .00000 | .00000 | .00000 | .00000 | .00000 | .00000 |

IA143, AEDC V41A-P8A, O/ET W/R.H. SRB SEPARATING (OVX856) ( 24 MAY 77 )

REFERENCE DATA

SREF = 2690.0000 SQ.FT. XMRP = 1097.0000 IN. XT
LREF = 1290.3000 INCHES YMRP = .0000 IN. YT
BREF = 1290.3000 INCHES ZMRP = 450.0000 IN. ZT
SCALE = .0100

PARAMETRIC DATA

ALPHA = -10.000 BETA = 10.000
DALPHA = -10.000 DBETA = -8.000
X = 600.000 MACH = 4.500
JET PC = .000

RUN NO. 2473/ 0 RN/L = 2.40 GRADIENT INTERVAL = -5.00/ 5.00

| Y | Z | X | ALPHA | BETA | PHI | CN | CLM | CY | CYN | CBL | CA |
|---|---|---|---|---|---|---|---|---|---|---|---|
| -300.830 | 200.420 | 599.37000 | -10.30000 | 10.18400 | .15522 | -.32561 | .09673 | -.37203 | .11235 | -.03841 | .26212 |
| -300.580 | 300.600 | 599.47000 | -10.29900 | 10.18400 | .15510 | -.32546 | .09674 | -.37182 | .11232 | -.03839 | .26204 |
| -299.970 | 400.250 | 599.22000 | -10.29900 | 10.18400 | .15516 | -.32533 | .09670 | -.37174 | .11230 | -.03839 | .26198 |
| | GRADIENT | .00000 | .00000 | .00000 | .00000 | .00000 | .00000 | .00000 | .00000 | .00000 | .00000 |

IA143, AEDC V41A-P8A, O/ET W/R.H. SRB SEPARATING (OVX857) ( 24 MAY 77 )

REFERENCE DATA

SREF = 2690.0000 SQ.FT. XMRP = 1097.0000 IN. XT
LREF = 1290.3000 INCHES YMRP = .0000 IN. YT
BREF = 1290.3000 INCHES ZMRP = 450.0000 IN. ZT
SCALE = .0100

PARAMETRIC DATA

ALPHA = -10.000 BETA = 10.000
DALPHA = -10.000 DBETA = -4.000
X = 600.000 MACH = 4.500
JET PC = .000

RUN NO. 2475/ 0 RN/L = 2.40 GRADIENT INTERVAL = -5.00/ 5.00

| Y | Z | X | ALPHA | BETA | PHI | CN | CLM | CY | CYN | CBL | CA |
|---|---|---|---|---|---|---|---|---|---|---|---|
| -101.450 | 300.120 | 599.37000 | -10.30200 | 10.17900 | .16749 | -.31268 | .08861 | -.38070 | .11829 | -.03799 | .26087 |
| -100.990 | 350.340 | 599.37000 | -10.30000 | 10.18200 | .15835 | -.31678 | .09100 | -.37424 | .11394 | -.03829 | .26076 |
| -100.790 | 400.290 | 599.33000 | -10.30000 | 10.18300 | .15552 | -.32123 | .09392 | -.37219 | .11252 | -.03837 | .26117 |
| | GRADIENT | .00000 | .00000 | .00000 | .00000 | .00000 | .00000 | .00000 | .00000 | .00000 | .00000 |

IA143, AEDC V41A-P8A, O/ET W/R.H. SRB SEPARATING (OVX858) ( 24 MAY 77 )

REFERENCE DATA

SREF = 2690.0000 SQ.FT. XMRP = 1097.0000 IN. XT
LREF = 1290.3000 INCHES YMRP = .0000 IN. YT
BREF = 1290.3000 INCHES ZMRP = 450.0000 IN. ZT
SCALE = .0100

PARAMETRIC DATA

ALPHA = -10.000 BETA = 10.000
DALPHA = -15.000 DBETA = -4.000
X = 600.000 MACH = 4.500
JET PC = .000

RUN NO. 2503/ 0 RN/L = 2.38 GRADIENT INTERVAL = -5.00/ 5.00

| Y | Z | X | ALPHA | BETA | PHI | CN | CLM | CY | CYN | CBL | CA |
|---|---|---|---|---|---|---|---|---|---|---|---|
| -101.280 | 300.220 | 599.18000 | -10.30500 | 10.17300 | .18629 | -.30678 | .08490 | -.39399 | .12717 | -.03741 | .25934 |
| -101.000 | 350.640 | 599.29000 | -10.30300 | 10.17900 | .16847 | -.31010 | .08660 | -.38115 | .11868 | -.03796 | .25960 |
| -101.070 | 400.170 | 599.23000 | -10.30000 | 10.18300 | .15786 | -.31586 | .09033 | -.37354 | .11353 | -.03824 | .25982 |
| | GRADIENT | .00000 | .00000 | .00000 | .00000 | .00000 | .00000 | .00000 | .00000 | .00000 | .00000 |

RUN NO. 2504/ 0 RN/L = 2.38 GRADIENT INTERVAL = -5.00/ 5.00

| Y | Z | X | ALPHA | BETA | PHI | CN | CLM | CY | CYN | CBL | CA |
|---|---|---|---|---|---|---|---|---|---|---|---|
| -202.680 | 400.450 | 599.37000 | -10.29900 | 10.18400 | .15472 | -.32526 | .09654 | -.37177 | .11218 | -.03842 | .26137 |
| -200.640 | 350.270 | 599.06000 | -10.29900 | 10.18400 | .15517 | -.32395 | .09564 | -.37191 | .11234 | -.03838 | .26126 |
| -200.590 | 300.380 | 599.24000 | -10.30000 | 10.18200 | .15794 | -.32093 | .09363 | -.37373 | .11369 | -.03829 | .26086 |
| | GRADIENT | .00000 | .00000 | .00000 | .00000 | .00000 | .00000 | .00000 | .00000 | .00000 | .00000 |

IA143, AEDC V41A-P8A, O/ET W/R.H. SRB SEPARATING (OVX859) ( 24 MAY 77 )

REFERENCE DATA

SREF = 2690.0000 SQ.FT. XMRP = 1097.0000 IN. XT
LREF = 1290.3000 INCHES YMRP = .0000 IN. YT
BREF = 1290.3000 INCHES ZMRP = 450.0000 IN. ZT
SCALE = .0100

PARAMETRIC DATA

ALPHA = -10.000 BETA = 10.000
DALPHA = -10.000 DBETA = -4.000
X = 600.000 MACH = 4.500
JET PC = .000

RUN NO. 2474/ 0 RN/L = 2.40 GRADIENT INTERVAL = -5.00/ 5.00

| Y | Z | X | ALPHA | BETA | PHI | CN | CLM | CY | CYN | CBL | CA |
|---|---|---|---|---|---|---|---|---|---|---|---|
| -201.220 | 200.360 | 599.38000 | -10.30200 | 10.17900 | .16688 | -.31907 | .09248 | -.38025 | .11812 | -.03806 | .26125 |
| -200.170 | 300.600 | 599.23000 | -10.30000 | 10.18300 | .15584 | -.32310 | .09508 | -.37263 | .11280 | -.03840 | .26160 |
| -200.890 | 350.170 | 599.41000 | -10.29900 | 10.18400 | .15490 | -.32514 | .09648 | -.37184 | .11229 | -.03841 | .26166 |
| -200.520 | 400.060 | 599.37000 | -10.29900 | 10.18400 | .15505 | -.32525 | .09666 | -.37202 | .11238 | -.03844 | .26185 |
| | GRADIENT | .00000 | .00000 | .00000 | .00000 | .00000 | .00000 | .00000 | .00000 | .00000 | .00000 |

IA143, AEDC V41A-P8A, O/ET W/R.H. SRB SEPARATING (OVX860) ( 24 MAY 77 )

REFERENCE DATA

SREF = 2690.0000 SQ.FT. XMRP = 1097.0000 IN. XT
LREF = 1290.3000 INCHES YMRP = .0000 IN. YT
BREF = 1290.3000 INCHES ZMRP = 450.0000 IN. ZT
SCALE = .0100

PARAMETRIC DATA

ALPHA = -10.000 BETA = 10.000
DALPHA = -15.000 DBETA = -8.000
X = 600.000 MACH = 4.500
JET PC = .000

RUN NO. 2506/ 0 RN/L = 2.38 GRADIENT INTERVAL = -5.00/ 5.00

| Y | Z | X | ALPHA | BETA | PHI | CN | CLM | CY | CYN | CBL | CA |
|---|---|---|---|---|---|---|---|---|---|---|---|
| -98.814 | 399.530 | 598.74000 | -10.30200 | 10.18000 | .16379 | -.30953 | .08602 | -.37749 | .11636 | -.03801 | .25852 |
| -101.390 | 350.520 | 599.21000 | -10.30500 | 10.17200 | .18416 | -.30173 | .08132 | -.39188 | .12633 | -.03738 | .25814 |
| -101.620 | 300.600 | 599.43000 | -10.30900 | 10.16500 | .21001 | -.30042 | .08099 | -.41088 | .13834 | -.03663 | .25749 |
| | GRADIENT | .00000 | .00000 | .00000 | .00000 | .00000 | .00000 | .00000 | .00000 | .00000 | .00000 |

RUN NO. 2505/ 0 RN/L = 2.38 GRADIENT INTERVAL = -5.00/ 5.00

| Y | Z | X | ALPHA | BETA | PHI | CN | CLM | CY | CYN | CBL | CA |
|---|---|---|---|---|---|---|---|---|---|---|---|
| -202.490 | 300.480 | 599.61000 | -10.30200 | 10.18000 | .16425 | -.31669 | .09072 | -.37774 | .11657 | -.03803 | .25962 |
| -200.520 | 350.500 | 599.22000 | -10.30000 | 10.18300 | .15680 | -.32128 | .09388 | -.37273 | .11297 | -.03828 | .26061 |
| -200.370 | 400.280 | 599.26000 | -10.29900 | 10.18400 | .15484 | -.32440 | .09588 | -.37155 | .11211 | -.03837 | .26039 |
| | GRADIENT | .00000 | .00000 | .00000 | .00000 | .00000 | .00000 | .00000 | .00000 | .00000 | .00000 |

IA143, AEDC V41A-P8A, O/ET W/R.H. SRB SEPARATING (OVX861) ( 24 MAY 77 )

REFERENCE DATA

SREF = 2690.0000 SQ.FT. XMRP = 1097.0000 IN. XT
LREF = 1290.3000 INCHES YMRP = .0000 IN. YT
BREF = 1290.3000 INCHES ZMRP = 450.0000 IN. ZT
SCALE = .0100

PARAMETRIC DATA

ALPHA = -10.000 BETA = 10.000
DALPHA = -10.000 DBETA = -8.000
X = 600.000 MACH = 4.500
JET PC = .000

RUN NO. 2472/ 0 RN/L = 2.40 GRADIENT INTERVAL = -5.00/ 5.00

| Y | Z | X | ALPHA | BETA | PHI | CN | CLM | CY | CYN | CBL | CA |
|---|---|---|---|---|---|---|---|---|---|---|---|
| -201.090 | 300.270 | 599.30000 | -10.30000 | 10.18300 | .15752 | -.32082 | .09366 | -.37342 | .11346 | -.03829 | .26117 |
| -200.810 | 350.230 | 599.51000 | -10.30000 | 10.18400 | .15545 | -.32410 | .09576 | -.37206 | .11242 | -.03837 | .26131 |
| -200.880 | 400.060 | 599.25000 | -10.29900 | 10.18400 | .15515 | -.32528 | .09663 | -.37194 | .11233 | -.03841 | .26175 |
| | GRADIENT | .00000 | .00000 | .00000 | .00000 | .00000 | .00000 | .00000 | .00000 | .00000 | .00000 |

IA143, AEDC V41A-P8A, O/ET W/R.H. SRB SEPARATING (OVX862) ( 24 MAY 77 )

REFERENCE DATA

SREF = 2690.0000 SQ.FT. XMRP = 1097.0000 IN. XT
LREF = 1290.3000 INCHES YMRP = .0000 IN. YT
BREF = 1290.3000 INCHES ZMRP = 450.0000 IN. ZT
SCALE = .0100

PARAMETRIC DATA

ALPHA = -10.000 BETA = 10.000
DALPHA = -5.000 DBETA = 4.000
X = 900.000 MACH = 4.500
JET PC = .000

RUN NO. 2456/ 0 RN/L = 2.38 GRADIENT INTERVAL = -5.00/ 5.00

| Y | Z | X | ALPHA | BETA | PHI | CN | CLM | CY | CYN | CBL | CA |
|---|---|---|---|---|---|---|---|---|---|---|---|
| -101.460 | 200.250 | 899.50000 | -10.29900 | 10.18300 | .15542 | -.32446 | .09618 | -.37097 | .11203 | -.03814 | .26175 |
| -101.020 | 274.970 | 899.54000 | -10.29900 | 10.18300 | .15494 | -.32509 | .09672 | -.37081 | .11186 | -.03820 | .26188 |
| -100.900 | 424.980 | 899.47000 | -10.29900 | 10.18300 | .15492 | -.32521 | .09683 | -.37081 | .11190 | -.03819 | .26202 |
| -101.080 | 500.280 | 899.53000 | -10.29900 | 10.18300 | .15499 | -.32530 | .09687 | -.37089 | .11194 | -.03821 | .26219 |
| -101.050 | 599.950 | 899.58000 | -10.29900 | 10.18300 | .15501 | -.32513 | .09679 | -.37072 | .11187 | -.03818 | .26190 |
| | GRADIENT | .00000 | .00000 | .00000 | .00000 | .00000 | .00000 | .00000 | .00000 | .00000 | .00000 |

RUN NO. 2457/ 0 RN/L = 2.37 GRADIENT INTERVAL = -5.00/ 5.00

| Y | Z | X | ALPHA | BETA | PHI | CN | CLM | CY | CYN | CBL | CA |
|---|---|---|---|---|---|---|---|---|---|---|---|
| -401.520 | 597.130 | 899.31000 | -10.29900 | 10.18300 | .15484 | -.32502 | .09676 | -.37088 | .11197 | -.03823 | .26184 |
| -400.640 | 499.980 | 899.28000 | -10.29900 | 10.18300 | .15488 | -.32508 | .09679 | -.37073 | .11187 | -.03819 | .26192 |
| -400.590 | 425.060 | 899.34000 | -10.29900 | 10.18300 | .15501 | -.32507 | .09678 | -.37068 | .11187 | -.03818 | .26194 |
| -400.900 | 274.920 | 899.50000 | -10.29900 | 10.18300 | .15494 | -.32524 | .09682 | -.37091 | .11194 | -.03821 | .26205 |
| -400.640 | 200.210 | 899.29000 | -10.29900 | 10.18300 | .15501 | -.32526 | .09686 | -.37082 | .11192 | -.03819 | .26212 |
| | GRADIENT | .00000 | .00000 | .00000 | .00000 | .00000 | .00000 | .00000 | .00000 | .00000 | .00000 |

IA143, AEDC V41A-P8A, O/ET W/R.H. SRB SEPARATING (OVX863) ( 24 MAY 77 )

REFERENCE DATA

SREF = 2690.0000 SQ.FT. XMRP = 1097.0000 IN. XT
LREF = 1290.3000 INCHES YMRP = .0000 IN. YT
BREF = 1290.3000 INCHES ZMRP = 450.0000 IN. ZT
SCALE = .0100

PARAMETRIC DATA

ALPHA = -10.000 BETA = 10.000
DALPHA = -20.000 DBETA = 4.000
X = 900.000 MACH = 4.500
JET PC = .000

RUN NO. 2531/ 0 RN/L = 2.37 GRADIENT INTERVAL = -5.00/ 5.00

| Y | Z | X | ALPHA | BETA | PHI | CN | CLM | CY | CYN | CBL | CA |
|---|---|---|---|---|---|---|---|---|---|---|---|
| -101.810 | 200.240 | 899.14000 | -10.30200 | 10.17800 | .16992 | -.31897 | .09205 | -.38210 | .11963 | -.03790 | .26004 |
| -100.260 | 275.750 | 899.34000 | -10.30000 | 10.18300 | .15788 | -.32184 | .09410 | -.37350 | .11347 | -.03824 | .26103 |
| -100.360 | 425.650 | 899.48000 | -10.29900 | 10.18400 | .15497 | -.32556 | .09664 | -.37167 | .11212 | -.03835 | .26143 |
| -99.799 | 500.490 | 899.33000 | -10.30000 | 10.18400 | .15509 | -.32583 | .09684 | -.37183 | .11222 | -.03837 | .26214 |
| -102.180 | 600.850 | 899.41000 | -10.30000 | 10.18400 | .15511 | -.32562 | .09677 | -.37177 | .11220 | -.03837 | .26205 |
| | GRADIENT | .00000 | .00000 | .00000 | .00000 | .00000 | .00000 | .00000 | .00000 | .00000 | .00000 |

IA143, AEDC V41A-P8A, O/ET W/R.H. SRB SEPARATING (OVX863) ( 24 MAY 77 )

REFERENCE DATA

SREF = 2690.0000 SQ.FT. XMRP = 1097.0000 IN. XT
LREF = 1290.3000 INCHES YMRP = .0000 IN. YT
BREF = 1290.3000 INCHES ZMRP = 450.0000 IN. ZT
SCALE = .0100

PARAMETRIC DATA

ALPHA = -10.000 BETA = 10.000
DALPHA = -20.000 DBETA = 4.000
X = 900.000 MACH = 4.500
JET PC = .000

RUN NO. 2532/ 0 RN/L = 2.37 GRADIENT INTERVAL = -5.00/ 5.00

| Y | Z | X | ALPHA | BETA | PHI | CN | CLM | CY | CYN | CBL | CA |
|---|---|---|---|---|---|---|---|---|---|---|---|
| -400.040 | 600.580 | 899.23000 | -10.29900 | 10.18400 | .15499 | -.32560 | .09674 | -.37155 | .11210 | -.03833 | .26184 |
| -401.740 | 500.300 | 899.15000 | -10.29900 | 10.18400 | .15499 | -.32551 | .09669 | -.37148 | .11210 | -.03833 | .26168 |
| -400.220 | 425.550 | 899.33000 | -10.30000 | 10.18400 | .15506 | -.32567 | .09682 | -.37160 | .11211 | -.03834 | .26208 |
| -400.580 | 275.370 | 899.28000 | -10.29900 | 10.18400 | .15501 | -.32556 | .09673 | -.37153 | .11211 | -.03834 | .26181 |
| -400.740 | 201.310 | 899.36000 | -10.29900 | 10.18400 | .15498 | -.32565 | .09678 | -.37165 | .11214 | -.03834 | .26198 |
| | GRADIENT | .00000 | .00000 | .00000 | .00000 | .00000 | .00000 | .00000 | .00000 | .00000 | .00000 |

IA143, AEDC V41A-P8A, O/ET W/R.H. SRB SEPARATING (OVX864) ( 24 MAY 77 )

REFERENCE DATA

SREF = 2690.0000 SQ.FT. XMRP = 1097.0000 IN. XT
LREF = 1290.3000 INCHES YMRP = .0000 IN. YT
BREF = 1290.3000 INCHES ZMRP = 450.0000 IN. ZT
SCALE = .0100

PARAMETRIC DATA

ALPHA = -10.000 BETA = 10.000
DALPHA = -5.000 DBETA = -16.000
X = 900.000 MACH = 4.500
JET PC = .000

RUN NO. 2454/ 0 RN/L = 2.37 GRADIENT INTERVAL = -5.00/ 5.00

| Y | Z | X | ALPHA | BETA | PHI | CN | CLM | CY | CYN | CBL | CA |
|---|---|---|---|---|---|---|---|---|---|---|---|
| -101.000 | 274.860 | 899.25000 | -10.30000 | 10.18300 | .15724 | -.32064 | .09356 | -.37239 | .11292 | -.03811 | .26092 |
| -100.730 | 424.660 | 899.24000 | -10.29900 | 10.18300 | .15491 | -.32502 | .09670 | -.37071 | .11185 | -.03818 | .26171 |
| -101.310 | 500.120 | 899.35000 | -10.29900 | 10.18300 | .15488 | -.32504 | .09679 | -.37060 | .11183 | -.03817 | .26204 |
| -101.390 | 600.280 | 899.47000 | -10.29900 | 10.18300 | .15495 | -.32525 | .09687 | -.37068 | .11184 | -.03816 | .26213 |
| | GRADIENT | .00000 | .00000 | .00000 | .00000 | .00000 | .00000 | .00000 | .00000 | .00000 | .00000 |

IA143, AEDC V41A-P8A, O/ET W/R.H. SRB SEPARATING (OVX865) ( 24 MAY 77 )

REFERENCE DATA

SREF = 2690.0000 SQ.FT. XMRP = 1097.0000 IN. XT
LREF = 1290.3000 INCHES YMRP = .0000 IN. YT
BREF = 1290.3000 INCHES ZMRP = 450.0000 IN. ZT
SCALE = .0100

PARAMETRIC DATA

ALPHA = -10.000 BETA = 10.000
DALPHA = -20.000 DBETA = -16.000
X = 900.000 MACH = 4.500
JET PC = .000

RUN NO. 2533/ 0 RN/L = 2.37 GRADIENT INTERVAL = -5.00/ 5.00

| Y | Z | X | ALPHA | BETA | PHI | CN | CLM | CY | CYN | CBL | CA |
|---|---|---|---|---|---|---|---|---|---|---|---|
| -100.710 | 425.210 | 899.00000 | -10.30000 | 10.18400 | .15583 | -.32170 | .09385 | -.37154 | .11201 | -.03815 | .25907 |
| -101.200 | 500.250 | 899.11000 | -10.29900 | 10.18400 | .15436 | -.32452 | .09556 | -.37062 | .11138 | -.03822 | .25761 |
| -101.230 | 601.120 | 899.57000 | -10.29800 | 10.18400 | .15396 | -.32495 | .09611 | -.37084 | .11145 | -.03834 | .25878 |
| | GRADIENT | .00000 | .00000 | .00000 | .00000 | .00000 | .00000 | .00000 | .00000 | .00000 | .00000 |

IA143, AEDC V41A-P8A, O/ET W/R.H. SRB SEPARATING (OVX866) ( 24 MAY 77 )

REFERENCE DATA

SREF = 2690.0000 SQ.FT. XMRP = 1097.0000 IN. XT
LREF = 1290.3000 INCHES YMRP = .0000 IN. YT
BREF = 1290.3000 INCHES ZMRP = 450.0000 IN. ZT
SCALE = .0100

PARAMETRIC DATA

ALPHA = -10.000 BETA = 10.000
DALPHA = -5.000 DBETA = -16.000
X = 900.000 MACH = 4.500
JET PC = .000

RUN NO. 2455/ 0 RN/L = 2.38 GRADIENT INTERVAL = -5.00/ 5.00

| Y | Z | X | ALPHA | BETA | PHI | CN | CLM | CY | CYN | CBL | CA |
|---|---|---|---|---|---|---|---|---|---|---|---|
| -400.240 | 200.330 | 898.95000 | -10.29900 | 10.18300 | .15501 | -.32519 | .09680 | -.37074 | .11189 | -.03819 | .26192 |
| -400.850 | 275.000 | 899.21000 | -10.29900 | 10.18300 | .15502 | -.32524 | .09684 | -.37086 | .11190 | -.03819 | .26215 |
| -400.230 | 424.920 | 899.20000 | -10.29900 | 10.18300 | .15489 | -.32511 | .09678 | -.37073 | .11186 | -.03819 | .26189 |
| -400.310 | 499.790 | 899.19000 | -10.29900 | 10.18300 | .15505 | -.32520 | .09678 | -.37083 | .11190 | -.03819 | .26185 |
| -400.260 | 599.690 | 899.14000 | -10.29900 | 10.18300 | .15493 | -.32516 | .09677 | -.37084 | .11190 | -.03820 | .26191 |
| | GRADIENT | .00000 | .00000 | .00000 | .00000 | .00000 | .00000 | .00000 | .00000 | .00000 | .00000 |

IA143, AEDC V41A-P8A, O/ET W/R.H. SRB SEPARATING (OVX867) ( 24 MAY 77 )

REFERENCE DATA

SREF = 2690.0000 SQ.FT. XMRP = 1097.0000 IN. XT
LREF = 1290.3000 INCHES YMRP = .0000 IN. YT
BREF = 1290.3000 INCHES ZMRP = 450.0000 IN. ZT
SCALE = .0100

PARAMETRIC DATA

ALPHA = -10.000 BETA = 10.000
DALPHA = -20.000 DBETA = -16.000
X = 900.000 MACH = 4.500
JET PC = .000

RUN NO. 2534/ 0 RN/L = 2.37 GRADIENT INTERVAL = -5.00/ 5.00

| Y | Z | X | ALPHA | BETA | PHI | CN | CLM | CY | CYN | CBL | CA |
|---|---|---|---|---|---|---|---|---|---|---|---|
| -400.930 | 200.500 | 899.18000 | -10.29900 | 10.18400 | .15508 | -.32534 | .09663 | -.37164 | .11215 | -.03836 | .26166 |
| -400.520 | 276.000 | 899.29000 | -10.29900 | 10.18400 | .15497 | -.32546 | .09671 | -.37157 | .11214 | -.03835 | .26179 |
| -400.200 | 425.940 | 899.31000 | -10.29900 | 10.18400 | .15500 | -.32549 | .09670 | -.37173 | .11218 | -.03837 | .26178 |
| -399.800 | 500.500 | 898.87000 | -10.29900 | 10.18400 | .15503 | -.32537 | .09665 | -.37145 | .11209 | -.03832 | .26161 |
| -399.980 | 600.520 | 899.03000 | -10.29900 | 10.18400 | .15511 | -.32551 | .09675 | -.37170 | .11215 | -.03834 | .26200 |
| | GRADIENT | .00000 | .00000 | .00000 | .00000 | .00000 | .00000 | .00000 | .00000 | .00000 | .00000 |

IA143, AEDC V41A-P8A, O/ET W/R.H. SRB SEPARATING (OVX868) ( 24 MAY 77 )

REFERENCE DATA

SREF = 2690.0000 SQ.FT. XMRP = 1097.0000 IN. XT
LREF = 1290.3000 INCHES YMRP = .0000 IN. YT
BREF = 1290.3000 INCHES ZMRP = 450.0000 IN. ZT
SCALE = .0100

PARAMETRIC DATA

ALPHA = -10.000 BETA = 10.000
DALPHA = -10.000 DBETA = .000
X = 900.000 MACH = 4.500
JET PC = .000

RUN NO. 2487/ 0 RN/L = 2.39 GRADIENT INTERVAL = -5.00/ 5.00

| Y | Z | X | ALPHA | BETA | PHI | CN | CLM | CY | CYN | CBL | CA |
|---|---|---|---|---|---|---|---|---|---|---|---|
| -100.930 | 300.100 | 899.16000 | -10.29900 | 10.18400 | .15477 | -.32520 | .09650 | -.37195 | .11229 | -.03846 | .26158 |
| -100.230 | 400.110 | 899.28000 | -10.29900 | 10.18400 | .15483 | -.32535 | .09671 | -.37195 | .11237 | -.03846 | .26195 |
| -100.790 | 500.350 | 899.37000 | -10.29900 | 10.18400 | .15498 | -.32541 | .09678 | -.37207 | .11242 | -.03847 | .26227 |
| | GRADIENT | .00000 | .00000 | .00000 | .00000 | .00000 | .00000 | .00000 | .00000 | .00000 | .00000 |

RUN NO. 2488/ 0 RN/L = 2.39 GRADIENT INTERVAL = -5.00/ 5.00

| Y | Z | X | ALPHA | BETA | PHI | CN | CLM | CY | CYN | CBL | CA |
|---|---|---|---|---|---|---|---|---|---|---|---|
| -301.780 | 498.880 | 899.12000 | -10.29900 | 10.18400 | .15496 | -.32559 | .09681 | -.37220 | .11246 | -.03849 | .26208 |
| -300.800 | 400.430 | 899.28000 | -10.29900 | 10.18400 | .15496 | -.32562 | .09682 | -.37222 | .11247 | -.03848 | .26220 |
| -301.020 | 300.330 | 899.15000 | -10.29900 | 10.18400 | .15482 | -.32565 | .09682 | -.37214 | .11243 | -.03847 | .26216 |
| | GRADIENT | .00000 | .00000 | .00000 | .00000 | .00000 | .00000 | .00000 | .00000 | .00000 | .00000 |

IA143, AEDC V41A-P8A, O/ET W/R.H. SRB SEPARATING (OVX869) ( 24 MAY 77 )

REFERENCE DATA

SREF = 2690.0000 SQ.FT. XMRP = 1097.0000 IN. XT
LREF = 1290.3000 INCHES YMRP = .0000 IN. YT
BREF = 1290.3000 INCHES ZMRP = 450.0000 IN. ZT
SCALE = .0100

PARAMETRIC DATA

ALPHA = -10.000 BETA = 10.000
DALPHA = -10.000 DBETA = .000
X = 900.000 MACH = 4.500
JET PC = .000

RUN NO. 2478/ 0 RN/L = 2.40 GRADIENT INTERVAL = -5.00/ 5.00

| Y | Z | X | ALPHA | BETA | PHI | CN | CLM | CY | CYN | CBL | CA |
|---|---|---|---|---|---|---|---|---|---|---|---|
| -100.990 | 300.200 | 899.11000 | -10.29900 | 10.18400 | .15493 | -.32525 | .09654 | -.37174 | .11224 | -.03839 | .26175 |
| -100.400 | 400.080 | 899.20000 | -10.29900 | 10.18400 | .15504 | -.32551 | .09675 | -.37191 | .11236 | -.03841 | .26209 |
| | GRADIENT | .00000 | .00000 | .00000 | .00000 | .00000 | .00000 | .00000 | .00000 | .00000 | .00000 |

RUN NO. 2479/ 0 RN/L = 2.40 GRADIENT INTERVAL = -5.00/ 5.00

| Y | Z | X | ALPHA | BETA | PHI | CN | CLM | CY | CYN | CBL | CA |
|---|---|---|---|---|---|---|---|---|---|---|---|
| -301.040 | 401.300 | 899.55000 | -10.29900 | 10.18400 | .15504 | -.32541 | .09676 | -.37179 | .11232 | -.03840 | .26213 |
| -300.670 | 300.340 | 899.32000 | -10.29900 | 10.18400 | .15508 | -.32541 | .09673 | -.37196 | .11238 | -.03842 | .26205 |
| | GRADIENT | .00000 | .00000 | .00000 | .00000 | .00000 | .00000 | .00000 | .00000 | .00000 | .00000 |

IA143, AEDC V41A-P8A, O/ET W/R.H. SRB SEPARATING (OVX870) ( 24 MAY 77 )

REFERENCE DATA

SREF = 2690.0000 SQ.FT. XMRP = 1097.0000 IN. XT
LREF = 1290.3000 INCHES YMRP = .0000 IN. YT
BREF = 1290.3000 INCHES ZMRP = 450.0000 IN. ZT
SCALE = .0100

PARAMETRIC DATA

ALPHA = -10.000 BETA = 10.000
DALPHA = -15.000 DBETA = .000
X = 900.000 MACH = 4.500
JET PC = .000

RUN NO. 2516/ 0 RN/L = 2.39 GRADIENT INTERVAL = -5.00/ 5.00

| Y | Z | X | ALPHA | BETA | PHI | CN | CLM | CY | CYN | CBL | CA |
|---|---|---|---|---|---|---|---|---|---|---|---|
| -101.460 | 300.300 | 899.22000 | -10.29900 | 10.18400 | .15519 | -.32399 | .09566 | -.37156 | .11218 | -.03831 | .26099 |
| -99.259 | 400.160 | 899.07000 | -10.29900 | 10.18400 | .15488 | -.32516 | .09660 | -.37137 | .11206 | -.03834 | .26155 |
| -100.910 | 500.600 | 899.28000 | -10.29900 | 10.18400 | .15488 | -.32547 | .09669 | -.37171 | .11218 | -.03839 | .26176 |
| | GRADIENT | .00000 | .00000 | .00000 | .00000 | .00000 | .00000 | .00000 | .00000 | .00000 | .00000 |

RUN NO. 2517/ 0 RN/L = 2.39 GRADIENT INTERVAL = -5.00/ 5.00

| Y | Z | X | ALPHA | BETA | PHI | CN | CLM | CY | CYN | CBL | CA |
|---|---|---|---|---|---|---|---|---|---|---|---|
| -302.950 | 498.900 | 898.90000 | -10.29900 | 10.18400 | .15487 | -.32528 | .09665 | -.37158 | .11214 | -.03838 | .26168 |
| -301.560 | 400.810 | 899.32000 | -10.29900 | 10.18400 | .15496 | -.32540 | .09673 | -.37158 | .11216 | -.03837 | .26192 |
| -300.700 | 300.400 | 899.20000 | -10.29900 | 10.18400 | .15484 | -.32546 | .09669 | -.37171 | .11222 | -.03840 | .26171 |
| | GRADIENT | .00000 | .00000 | .00000 | .00000 | .00000 | .00000 | .00000 | .00000 | .00000 | .00000 |

IA143, AEDC V41A-P8A, O/ET W/R.H. SRB SEPARATING (OVX871) ( 24 MAY 77 )

REFERENCE DATA

SREF = 2690.0000 SQ.FT. XMRP = 1097.0000 IN. XT
LREF = 1290.3000 INCHES YMRP = .0000 IN. YT
BREF = 1290.3000 INCHES ZMRP = 450.0000 IN. ZT
SCALE = .0100

PARAMETRIC DATA

ALPHA = -10.000 BETA = 10.000
DALPHA = -10.000 DBETA = -12.000
X = 900.000 MACH = 4.500
JET PC = .000

RUN NO. 2493/ 0 RN/L = 2.39 GRADIENT INTERVAL = -5.00/ 5.00

| Y | Z | X | ALPHA | BETA | PHI | CN | CLM | CY | CYN | CBL | CA |
|---|---|---|---|---|---|---|---|---|---|---|---|
| -101.420 | 300.160 | 899.08000 | -10.30000 | 10.18300 | .15587 | -.32256 | .09476 | -.37275 | .11284 | -.03843 | .26115 |
| -100.340 | 399.790 | 899.13000 | -10.29900 | 10.18400 | .15472 | -.32525 | .09658 | -.3721. | .11238 | -.03850 | .26134 |
| -99.464 | 500.300 | 899.00000 | -10.29900 | 10.18400 | .15501 | -.32543 | .09676 | -.37237 | .11252 | -.03853 | .26215 |
| | GRADIENT | .00000 | .00000 | .00000 | .00000 | .00000 | .00000 | .00000 | .00000 | .00000 | .00000 |

RUN NO. 2494/ 0 RN/L = 2.39 GRADIENT INTERVAL = -5.00/ 5.00

| Y | Z | X | ALPHA | BETA | PHI | CN | CLM | CY | CYN | CBL | CA |
|---|---|---|---|---|---|---|---|---|---|---|---|
| -302.700 | 501.690 | 899.85000 | -10.29900 | 10.18400 | .15487 | -.32552 | .09679 | -.37202 | .11238 | -.03845 | .26213 |
| -300.730 | 400.370 | 899.24000 | -10.29900 | 10.18400 | .15493 | -.32552 | .09679 | -.37205 | .11239 | -.03846 | .26213 |
| -301.150 | 300.370 | 899.35000 | -10.29900 | 10.18400 | .15484 | -.32526 | .09669 | -.37189 | .11236 | -.03845 | .26188 |
| | GRADIENT | .00000 | .00000 | .00000 | .00000 | .00000 | .00000 | .00000 | .00000 | .00000 | .00000 |

IA143, AEDC V41A-P8A, O/ET W/R.H. SRB SEPARATING (OVX872) ( 24 MAY 77 )

REFERENCE DATA

SREF = 2690.0000 SQ.FT. XMRP = 1097.0000 IN. XT
LREF = 1290.3000 INCHES YMRP = .0000 IN. YT
BREF = 1290.3000 INCHES ZMRP = 450.0000 IN. ZT
SCALE = .0100

PARAMETRIC DATA

ALPHA = -10.000 BETA = 10.000
DALPHA = -10.000 DBETA = -12.000
X = 900.000 MACH = 4.500
JET PC = .000

RUN NO. 2484/ 0 RN/L = 2.39 GRADIENT INTERVAL = -5.00/ 5.00

| Y | Z | X | ALPHA | BETA | PHI | CN | CLM | CY | CYN | CBL | CA |
|---|---|---|---|---|---|---|---|---|---|---|---|
| -101.150 | 300.130 | 899.06000 | -10.29900 | 10.18300 | .15593 | -.32252 | .09472 | -.37250 | .11275 | -.03836 | .26113 |
| -100.940 | 399.730 | 899.06000 | -10.29900 | 10.18400 | .15484 | -.32502 | .09650 | -.37177 | .11226 | -.03842 | .26121 |
| | GRADIENT | .00000 | .00000 | .00000 | .00000 | .00000 | .00000 | .00000 | .00000 | .00000 | .00000 |

RUN NO. 2485/ 0 RN/L = 2.39 GRADIENT INTERVAL = -5.00/ 5.00

| Y | Z | X | ALPHA | BETA | PHI | CN | CLM | CY | CYN | CBL | CA |
|---|---|---|---|---|---|---|---|---|---|---|---|
| -298.940 | 401.350 | 898.92000 | -10.29900 | 10.18400 | .15500 | -.32535 | .09674 | -.37207 | .11244 | -.03845 | .26210 |
| -301.180 | 300.370 | 899.19000 | -10.29900 | 10.18400 | .15489 | -.32548 | .09678 | -.37215 | .11245 | -.03847 | .26220 |
| | GRADIENT | .00000 | .00000 | .00000 | .00000 | .00000 | .00000 | .00000 | .00000 | .00000 | .00000 |

IA143, AEDC V41A-P8A, O/ET W/R.H. SRB SEPARATING (OVX873) ( 24 MAY 77 )

REFERENCE DATA

SREF = 2690.0000 SQ.FT. XMRP = 1097.0000 IN. XT
LREF = 1290.3000 INCHES YMRP = .0000 IN. YT
BREF = 1290.3000 INCHES ZMRP = 450.0000 IN. ZT
SCALE = .0100

PARAMETRIC DATA

ALPHA = -10.000 BETA = 10.000
DALPHA = -15.000 DBETA = -12.000
X = 900.000 MACH = 4.500
JET PC = .000

RUN NO. 2509/ 0 RN/L = 2.38 GRADIENT INTERVAL = -5.00/ 5.00

| Y | Z | X | ALPHA | BETA | PHI | CN | CLM | CY | CYN | CBL | CA |
|---|---|---|---|---|---|---|---|---|---|---|---|
| -100.910 | 300.240 | 898.97000 | -10.30100 | 10.18200 | .16024 | -.31832 | .09174 | -.37494 | .11456 | -.03815 | .25927 |
| -99.898 | 399.770 | 898.73000 | -10.29900 | 10.18400 | .15451 | -.32489 | .09617 | -.37126 | .11189 | -.03836 | .25979 |
| -100.380 | 500.200 | 898.98000 | -10.29900 | 10.18400 | .15466 | -.32502 | .09644 | -.37129 | .11199 | -.03835 | .26095 |
| | GRADIENT | .00000 | .00000 | .00000 | .00000 | .00000 | .00000 | .00000 | .00000 | .00000 | .00000 |

RUN NO. 2510/ 0 RN/L = 2.39 GRADIENT INTERVAL = -5.00/ 5.00

| Y | Z | X | ALPHA | BETA | PHI | CN | CLM | CY | CYN | CBL | CA |
|---|---|---|---|---|---|---|---|---|---|---|---|
| -300.280 | 500.220 | 899.00000 | -10.29900 | 10.18400 | .15480 | -.32515 | .09662 | -.37149 | .11212 | -.03837 | .26172 |
| -301.330 | 400.530 | 899.18000 | -10.29900 | 10.18400 | .15488 | -.32519 | .09665 | -.37153 | .11215 | -.03837 | .26175 |
| -301.170 | 300.680 | 899.21000 | -10.29900 | 10.18400 | .15477 | -.32527 | .09667 | -.37166 | .11219 | -.03839 | .26181 |
| | GRADIENT | .00000 | .00000 | .00000 | .00000 | .00000 | .00000 | .00000 | .00000 | .00000 | .00000 |

IA143, AEDC V41A-P8A, O/ET W/R.H. SRB SEPARATING (OVX874) ( 24 MAY 77 )

REFERENCE DATA

SREF = 2690.0000 SQ.FT. XMRP = 1097.0000 IN. XT
LREF = 1290.3000 INCHES YMRP = .0000 IN. YT
BREF = 1290.3000 INCHES ZMRP = 450.0000 IN. ZT
SCALE = .0100

PARAMETRIC DATA

ALPHA = -10.000 BETA = 10.000
DALPHA = -12.000 DBETA = -6.000
X = 900.000 MACH = 4.500
JET PC = .000

RUN NO. 2499/ 0 RN/L = 2.39 GRADIENT INTERVAL = -5.00/ 5.00

| Y | Z | X | ALPHA | BETA | PHI | CN | CLM | CY | CYN | CBL | CA |
|---|---|---|---|---|---|---|---|---|---|---|---|
| -200.850 | 300.260 | 899.22000 | -10.29900 | 10.18400 | .15477 | -.32522 | .09667 | -.37166 | .11224 | -.03841 | .26172 |
| -200.820 | 400.230 | 899.18000 | -10.29900 | 10.18400 | .15485 | -.32550 | .09676 | -.37192 | .11233 | -.03844 | .26202 |
| -200.560 | 500.070 | 899.25000 | -10.29900 | 10.18400 | .15502 | -.32554 | .09677 | -.37201 | .11234 | -.03845 | .26205 |
| | GRADIENT | .00000 | .00000 | .00000 | .00000 | .00000 | .00000 | .00000 | .00000 | .00000 | .00000 |

IA143, AEDC V41A-P8A, O/ET W/R.H. SRB SEPARATING (OVX875) ( 24 MAY 77 )

REFERENCE DATA

SREF = 2690.0000 SQ.FT. XMRP = 1097.0000 IN. XT
LREF = 1290.3000 INCHES YMRP = .0000 IN. YT
BREF = 1290.3000 INCHES ZMRP = 450.0000 IN. ZT
SCALE = .0100

PARAMETRIC DATA

ALPHA = -10.000 BETA = 10.000
DALPHA = -15.000 DBETA = -6.000
X = 900.000 MACH = 4.500
JET PC = .000

RUN NO. 2513/ 0 RN/L = 2.39 GRADIENT INTERVAL = -5.00/ 5.00

| Y | Z | X | ALPHA | BETA | PHI | CN | CLM | CY | CYN | CBL | CA |
|---|---|---|---|---|---|---|---|---|---|---|---|
| -201.020 | 400.370 | 899.07000 | -10.29900 | 10.18400 | .15490 | -.32555 | .09677 | -.37165 | .11219 | -.03837 | .26204 |
| -199.990 | 599.790 | 898.86000 | -10.29900 | 10.18400 | .15485 | -.32533 | .09666 | -.37167 | .11218 | -.03839 | .26173 |
| -200.520 | 799.090 | 898.79000 | -10.29900 | 10.18400 | .15488 | -.32541 | .09673 | -.37167 | .11218 | -.03840 | .26189 |
| -200.470 | 999.110 | 898.99000 | -10.29900 | 10.18400 | .15495 | -.32542 | .09672 | -.37165 | .11219 | -.03837 | .26197 |
| | GRADIENT | .00000 | .00000 | .00000 | .00000 | .00000 | .00000 | .00000 | .00000 | .00000 | .00000 |

IA143, AEDC V41A-P8A, O/ET W/R.H. SRB SEPARATING (OVX876) ( 24 MAY 77 )

REFERENCE DATA

SREF = 2690.0000 SQ.FT. XMRP = 1097.0000 IN. XT
LREF = 1290.3000 INCHES YMRP = .0000 IN. YT
BREF = 1290.3000 INCHES ZMRP = 450.0000 IN. ZT
SCALE = .0100

PARAMETRIC DATA

ALPHA = -10.000 BETA = 10.000
DALPHA = -10.000 DBETA = -4.000
X = 900.000 MACH = 4.500
JET PC = .000

RUN NO. 2480/ 0 RN/L = 2.39 GRADIENT INTERVAL = -5.00/ 5.00

| Y | Z | X | ALPHA | BETA | PHI | CN | CLM | CY | CYN | CBL | CA |
|---|---|---|---|---|---|---|---|---|---|---|---|
| -201.410 | 300.210 | 899.31000 | -10.29900 | 10.18400 | .15497 | -.32558 | .09680 | -.37199 | .11240 | -.03842 | .26224 |
| -201.050 | 350.140 | 899.20000 | -10.29900 | 10.18400 | .15500 | -.32542 | .09675 | -.37199 | .11240 | -.03844 | .26215 |
| -201.550 | 400.240 | 899.37000 | -10.30000 | 10.18400 | .15521 | -.32537 | .09677 | -.37196 | .11240 | -.03842 | .26227 |
| | GRADIENT | .00000 | .00000 | .00000 | .00000 | .00000 | .00000 | .00000 | .00000 | .00000 | .00000 |

RUN NO. 2481/ 0 RN/L = 2.39 GRADIENT INTERVAL = -5.00/ 5.00

| Y | Z | X | ALPHA | BETA | PHI | CN | CLM | CY | CYN | CBL | CA |
|---|---|---|---|---|---|---|---|---|---|---|---|
| -300.900 | 399.300 | 899.10000 | -10.29900 | 10.18400 | .15499 | -.32539 | .09677 | -.37180 | .11235 | -.03841 | .26212 |
| -300.930 | 350.230 | 899.13000 | -10.30000 | 10.18400 | .15515 | -.32556 | .09682 | -.37196 | .11240 | -.03843 | .26220 |
| -300.970 | 300.150 | 899.15000 | -10.29900 | 10.18400 | .15501 | -.32546 | .09677 | -.37208 | .11243 | -.03845 | .26214 |
| | GRADIENT | .00000 | .00000 | .00000 | .00000 | .00000 | .00000 | .00000 | .00000 | .00000 | .00000 |

IA143, AEDC V41A-P8A, O/ET W/R.H. SRB SEPARATING (OVX877) ( 24 MAY 77 )

REFERENCE DATA

SREF = 2690.0000 SQ.FT. XMRP = 1097.0000 IN. XT
LREF = 1290.3000 INCHES YMRP = .0000 IN. YT
BREF = 1290.3000 INCHES ZMRP = 450.0000 IN. ZT
SCALE = .0100

PARAMETRIC DATA

ALPHA = -10.000 BETA = 10.000
DALPHA = -10.000 DBETA = -4.000
X = 900.000 MACH = 4.500
JET PC = .000

RUN NO. 2489/ 0 RN/L = 2.39 GRADIENT INTERVAL = -5.00/ 5.00

| Y | Z | X | ALPHA | BETA | PHI | CN | CLM | CY | CYN | CBL | CA |
|---|---|---|---|---|---|---|---|---|---|---|---|
| -201.870 | 300.390 | 899.34000 | -10.29900 | 10.18400 | .15495 | -.32549 | .09680 | -.37211 | .11243 | -.03847 | .26216 |
| -200.710 | 350.120 | 899.15000 | -10.29900 | 10.18400 | .15496 | -.32552 | .09679 | -.37205 | .11241 | -.03845 | .26214 |
| -201.100 | 400.130 | 899.24000 | -10.29900 | 10.18400 | .15480 | -.32548 | .09678 | -.37204 | .11242 | -.03847 | .26205 |
| | GRADIENT | .00000 | .00000 | .00000 | .00000 | .00000 | .00000 | .00000 | .00000 | .00000 | .00000 |

RUN NO. 2490/ 0 RN/L = 2.39 GRADIENT INTERVAL = -5.00/ 5.00

| Y | Z | X | ALPHA | BETA | PHI | CN | CLM | CY | CYN | CBL | CA |
|---|---|---|---|---|---|---|---|---|---|---|---|
| -300.740 | 399.340 | 899.10000 | -10.29900 | 10.18400 | .15481 | -.32537 | .09673 | -.37212 | .11244 | -.03850 | .26190 |
| -300.970 | 350.170 | 899.31000 | -10.29900 | 10.18400 | .15489 | -.32535 | .09672 | -.37201 | .11241 | -.03848 | .26192 |
| -300.920 | 300.200 | 899.18000 | -10.29900 | 10.18400 | .15495 | -.32535 | .09677 | -.37191 | .11236 | -.03846 | .26205 |
| | GRADIENT | .00000 | .00000 | .00000 | .00000 | .00000 | .00000 | .00000 | .00000 | .00000 | .00000 |

IA143, AEDC V41A-P8A, O/ET W/R.H. SRB SEPARATING (OVX878) ( 24 MAY 77 )

REFERENCE DATA

SREF = 2690.0000 SQ.FT. XMRP = 1097.0000 IN. XT
LREF = 1290.3000 INCHES YMRP = .0000 IN. YT
BREF = 1290.3000 INCHES ZMRP = 450.0000 IN. ZT
SCALE = .0100

PARAMETRIC DATA

ALPHA = -10.000 BETA = 10.000
DALPHA = -15.000 DBETA = -4.000
X = 900.000 MACH = 4.500
JET PC = .000

RUN NO. 2514/ 0 RN/L = 2.39 GRADIENT INTERVAL = -5.00/ 5.00

| Y | Z | X | ALPHA | BETA | PHI | CN | CLM | CY | CYN | CBL | CA |
|---|---|---|---|---|---|---|---|---|---|---|---|
| -200.970 | 300.450 | 899.06000 | -10.29900 | 10.18400 | .15495 | -.32529 | .09666 | -.37161 | .11215 | -.03836 | .26180 |
| -200.850 | 350.430 | 899.07000 | -10.29900 | 10.18400 | .15490 | -.32527 | .09665 | -.37160 | .11217 | -.03838 | .26183 |
| -200.230 | 400.310 | 899.07000 | -10.29900 | 10.18400 | .15498 | -.32535 | .09670 | -.37160 | .11215 | -.03836 | .26192 |
| | GRADIENT | .00000 | .00000 | .00000 | .00000 | .00000 | .00000 | .00000 | .00000 | .00000 | .00000 |

RUN NO. 2515/ 0 RN/L = 2.39 GRADIENT INTERVAL = -5.00/ 5.00

| Y | Z | X | ALPHA | BETA | PHI | CN | CLM | CY | CYN | CBL | CA |
|---|---|---|---|---|---|---|---|---|---|---|---|
| -301.400 | 399.230 | 898.81000 | -10.29900 | 10.18400 | .15496 | -.32542 | .09670 | -.37166 | .11217 | -.03837 | .26184 |
| -300.820 | 350.420 | 899.22000 | -10.29900 | 10.18400 | .15489 | -.32537 | .09670 | -.37171 | .11218 | -.03839 | .26196 |
| -300.940 | 300.190 | 899.11000 | -10.29900 | 10.18400 | .15489 | -.32523 | .09665 | -.37159 | .11215 | -.03836 | .26183 |
| | GRADIENT | .00000 | .00000 | .00000 | .00000 | .00000 | .00000 | .00000 | .00000 | .00000 | .00000 |

IA143, AEDC V41A-P8A, O/ET W/R.H. SRB SEPARATING (OVX879) ( 24 MAY 77 )

REFERENCE DATA

SREF = 2690.0000 SQ.FT. XMRP = 1097.0000 IN. XT
LREF = 1290.3000 INCHES YMRP = .0000 IN. YT
BREF = 1290.3000 INCHES ZMRP = 450.0000 IN. ZT
SCALE = .0100

PARAMETRIC DATA

ALPHA = -10.000 BETA = 10.000
DALPHA = -10.000 DBETA = -8.000
X = 900.000 MACH = 4.500
JET PC = .000

RUN NO. 2483/ 0 RN/L = 2.39 GRADIENT INTERVAL = -5.00/ 5.00

| Y | Z | X | ALPHA | BETA | PHI | CN | CLM | CY | CYN | CBL | CA |
|---|---|---|---|---|---|---|---|---|---|---|---|
| -199.140 | 400.400 | 899.00000 | -10.29900 | 10.18400 | .15498 | -.32541 | .09676 | -.37207 | .11241 | -.03845 | .26220 |
| -200.540 | 350.350 | 899.17000 | -10.29900 | 10.18400 | .15504 | -.32532 | .09673 | -.37211 | .11244 | -.03846 | .26212 |
| -201.050 | 300.250 | 899.20000 | -10.29900 | 10.18400 | .15495 | -.32534 | .09673 | -.37197 | .11238 | -.03844 | .26201 |
| | GRADIENT | .00000 | .00000 | .00000 | .00000 | .00000 | .00000 | .00000 | .00000 | .00000 | .00000 |

RUN NO. 2482/ 0 RN/L = 2.39 GRADIENT INTERVAL = -5.00/ 5.00

| Y | Z | X | ALPHA | BETA | PHI | CN | CLM | CY | CYN | CBL | CA |
|---|---|---|---|---|---|---|---|---|---|---|---|
| -302.110 | 300.560 | 899.37000 | -10.29900 | 10.18400 | .15503 | -.32548 | .09679 | -.37198 | .11240 | -.03842 | .26221 |
| -300.800 | 350.210 | 899.26000 | -10.29900 | 10.18400 | .15498 | -.32538 | .09673 | -.37184 | .11233 | -.03841 | .26203 |
| -300.890 | 400.100 | 899.33000 | -10.29900 | 10.18400 | .15513 | -.32546 | .09676 | -.37192 | .11238 | -.03841 | .26215 |
| | GRADIENT | .00000 | .00000 | .00000 | .00000 | .00000 | .00000 | .00000 | .00000 | .00000 | .00000 |

IA143, AEDC V41A-P8A, O/ET W/R.H. SRB SEPARATING (OVX880) ( 24 MAY 77 )

REFERENCE DATA

SREF = 2690.0000 SQ.FT. XMRP = 1097.0000 IN. XT
LREF = 1290.3000 INCHES YMRP = .0000 IN. YT
BREF = 1290.3000 INCHES ZMRP = 450.0000 IN. ZT
SCALE = .0100

PARAMETRIC DATA

ALPHA = -10.000 BETA = 10.000
DALPHA = -10.000 DBETA = -8.000
X = 900.000 MACH = 4.500
JET PC = .000

RUN NO. 2492/ 0 RN/L = 2.39 GRADIENT INTERVAL = -5.00/ 5.00

| Y | Z | X | ALPHA | BETA | PHI | CN | CLM | CY | CYN | CBL | CA |
|---|---|---|---|---|---|---|---|---|---|---|---|
| -200.390 | 400.520 | 899.12000 | -10.29900 | 10.18400 | .15494 | -.32555 | .09681 | -.37210 | .11240 | -.03847 | .26222 |
| -200.760 | 350.370 | 899.14000 | -10.29900 | 10.18400 | .15492 | -.32540 | .09673 | -.37200 | .11239 | -.03846 | .26197 |
| -201.750 | 300.320 | 899.30000 | -10.29900 | 10.18400 | .15485 | -.32538 | .09671 | -.37201 | .11236 | -.03846 | .26188 |
| | GRADIENT | .00000 | .00000 | .00000 | .00000 | .00000 | .00000 | .00000 | .00000 | .00000 | .00000 |

RUN NO. 2491/ 0 RN/L = 2.39 GRADIENT INTERVAL = -5.00/ 5.00

| Y | Z | X | ALPHA | BETA | PHI | CN | CLM | CY | CYN | CBL | CA |
|---|---|---|---|---|---|---|---|---|---|---|---|
| -302.610 | 300.450 | 899.47000 | -10.29900 | 10.18400 | .15491 | -.32549 | .09679 | -.37215 | .11246 | -.03849 | .26217 |
| -300.810 | 350.250 | 899.18000 | -10.29900 | 10.18400 | .15487 | -.32551 | .09681 | -.37217 | .11246 | -.03848 | .26221 |
| -300.580 | 400.190 | 899.25000 | -10.29900 | 10.18400 | .15493 | -.32550 | .09681 | -.37207 | .11243 | -.03847 | .26219 |
| | GRADIENT | .00000 | .00000 | .00000 | .00000 | .00000 | .00000 | .00000 | .00000 | .00000 | .00000 |

IA143, AEDC V41A-P8A, O/ET W/R.H. SRB SEPARATING (OVX881) ( 24 MAY 77 )

REFERENCE DATA

SREF = 2690.0000 SQ.FT. XMRP = 1097.0000 IN. XT
LREF = 1290.3000 INCHES YMRP = .0000 IN. YT
BREF = 1290.3000 INCHES ZMRP = 450.0000 IN. ZT
SCALE = .0100

PARAMETRIC DATA

ALPHA = -10.000 BETA = 10.000
DALPHA = -15.000 DBETA = -8.000
X = 900.000 MACH = 4.500
JET PC = .000

RUN NO. 2511/ 0 RN/L = 2.39 GRADIENT INTERVAL = -5.00/ 5.00

| Y | Z | X | ALPHA | BETA | PHI | CN | CLM | CY | CYN | CBL | CA |
|---|---|---|---|---|---|---|---|---|---|---|---|
| -200.250 | 300.270 | 899.00000 | -10.29900 | 10.18400 | .15486 | -.32517 | .09655 | -.37163 | .11214 | -.03839 | .26141 |
| -201.200 | 350.280 | 899.20000 | -10.29900 | 10.18400 | .15481 | -.32524 | .09664 | -.37175 | .11222 | -.03840 | .26173 |
| -200.820 | 400.290 | 899.18000 | -10.29900 | 10.18400 | .15496 | -.32556 | .09676 | -.37195 | .11228 | -.03841 | .26206 |
| | GRADIENT | .00000 | .00000 | .00000 | .00000 | .00000 | .00000 | .00000 | .00000 | .00000 | .00000 |

RUN NO. 2512/ 0 RN/L = 2.39 GRADIENT INTERVAL = -5.00/ 5.00

| Y | Z | X | ALPHA | BETA | PHI | CN | CLM | CY | CYN | CBL | CA |
|---|---|---|---|---|---|---|---|---|---|---|---|
| -301.910 | 399.960 | 899.12000 | -10.29900 | 10.18400 | .15491 | -.32521 | .09665 | -.37165 | .11219 | -.03839 | .26174 |
| -301.170 | 350.300 | 899.16000 | -10.29900 | 10.18400 | .15487 | -.32529 | .09665 | -.37160 | .11217 | -.03837 | .26181 |
| -301.260 | 300.330 | 899.06000 | -10.29900 | 10.18400 | .15494 | -.32543 | .09672 | -.37180 | .11223 | -.03840 | .26197 |
| | GRADIENT | .00000 | .00000 | .00000 | .00000 | .00000 | .00000 | .00000 | .00000 | .00000 | .00000 |

IA143, AEDC V41A-P8A, O/ET W/R.H. SRB SEPARATING (OVX882) ( 24 MAY 77 )

REFERENCE DATA

SREF = 2690.0000 SQ.FT. XMRP = 1097.0000 IN. XT
LREF = 1290.3000 INCHES YMRP = .0000 IN. YT
BREF = 1290.3000 INCHES ZMRP = 450.0000 IN. ZT
SCALE = .0100

PARAMETRIC DATA

ALPHA = -10.000 BETA = 10.000
DALPHA = -5.000 DBETA = 4.000
X = 1200.000 MACH = 4.500
JET PC = .000

RUN NO. 2458/ 0 RN/L = 2.38 GRADIENT INTERVAL = -5.00/ 5.00

| Y | Z | X | ALPHA | BETA | PHI | CN | CLM | CY | CYN | CBL | CA |
|---|---|---|---|---|---|---|---|---|---|---|---|
| -101.040 | 200.450 | 1199.30000 | -10.29900 | 10.18300 | .15511 | -.32516 | .09678 | -.37078 | .11191 | -.03819 | .26187 |
| -101.400 | 299.890 | 1199.30000 | -10.29900 | 10.18300 | .15495 | -.32523 | .09685 | -.37098 | .11199 | -.03823 | .26213 |
| -101.190 | 399.800 | 1199.30000 | -10.29900 | 10.18300 | .15501 | -.32508 | .09675 | -.37070 | .11189 | -.03820 | .26180 |
| -100.360 | 499.780 | 1199.30000 | -10.29900 | 10.18300 | .15494 | -.32526 | .09682 | -.37081 | .11191 | -.03819 | .26202 |
| -101.180 | 600.090 | 1199.30000 | -10.29900 | 10.18300 | .15497 | -.32515 | .09680 | -.37090 | .11195 | -.03821 | .26195 |
| | GRADIENT | .00000 | .00000 | .00000 | .00000 | .00000 | .00000 | .00000 | .00000 | .00000 | .00000 |

IA143, AEDC V41A-P8A, O/ET W/R.H. SRB SEPARATING (OVX893) ( 24 MAY 77 )

REFERENCE DATA

SREF = 2690.0000 SQ.FT. XMRP = 1097.0000 IN. XT
LREF = 1290.3000 INCHES YMRP = .0000 IN. YT
BREF = 1290.3000 INCHES ZMRP = 450.0000 IN. ZT
SCALE = .0100

PARAMETRIC DATA

ALPHA = -10.000 BETA = 10.000
DALPHA = -25.000 DBETA = 4.000
X = 1200.000 MACH = 4.500
JET PC = .000

RUN NO. 2537/ 0 RN/L = 2.38 GRADIENT INTERVAL = -5.00/ 5.00

| Y | Z | X | ALPHA | BETA | PHI | CN | CLM | CY | CYN | CBL | CA |
|---|---|---|---|---|---|---|---|---|---|---|---|
| -100.430 | 200.730 | 1198.89[illegible]9 | -10.29900 | 10.18400 | .15485 | -.32503 | .09642 | -.37137 | .11193 | -.03832 | .26077 |
| -100.480 | 300.960 | 1199.20000 | -10.29900 | 10.18400 | .15494 | -.32506 | .09646 | -.37126 | .11195 | -.03829 | .26112 |
| -100.410 | 400.760 | 1199.10001 | -10.29900 | 10.18400 | .15503 | -.32546 | .09667 | -.37149 | .11205 | -.03831 | .26166 |
| -100.300 | 500.410 | 1199.20000 | -10.29900 | 10.18400 | .15502 | -.32527 | .09663 | -.37130 | .11200 | -.03828 | .26166 |
| -100.430 | 600.950 | 1199.39999 | -10.29900 | 10.18400 | .15501 | -.32535 | .09665 | -.37141 | .11203 | -.03830 | .26165 |
| | GRADIENT | .00000 | .00000 | .00000 | .00000 | .00000 | .00000 | .00000 | .00000 | .00000 | .00000 |

RUN NO. 2538/ 0 RN/L = 2.37 GRADIENT INTERVAL = -5.00/ 5.00

| Y | Z | X | ALPHA | BETA | PHI | CN | CLM | CY | CYN | CBL | CA |
|---|---|---|---|---|---|---|---|---|---|---|---|
| -602.240 | 599.560 | 1198.70000 | -10.29900 | 10.18400 | .15503 | -.32544 | .09669 | -.37180 | .11215 | -.03835 | .26185 |
| -599.410 | 500.770 | 1199.20000 | -10.29900 | 10.18400 | .15513 | -.32528 | .09663 | -.37152 | .11205 | -.03830 | .26171 |
| -600.730 | 401.100 | 1199.30000 | -10.29900 | 10.18400 | .15499 | -.32530 | .09664 | -.37151 | .11207 | -.03831 | .26169 |
| -600.860 | 300.650 | 1199.20000 | -10.29900 | 10.18400 | .15510 | -.32528 | .09661 | -.37161 | .11210 | -.03834 | .26162 |
| -600.330 | 200.570 | 1199.00000 | -10.29900 | 10.18400 | .15518 | -.32540 | .09665 | -.37159 | .11208 | -.03832 | .26169 |
| | GRADIENT | .00000 | .00000 | .00000 | .00000 | .00000 | .00000 | .00000 | .00000 | .00000 | .00000 |

IA143, AEDC V41A-P8A, O/ET W/R.H. SRB SEPARATING (OVX884) ( 24 MAY 77 )

REFERENCE DATA

SREF = 2690.0000 SQ.FT. XMRP = 1097.0000 IN. XT
LREF = 1290.3000 INCHES YMRP = .0000 IN. YT
BREF = 1290.3000 INCHES ZMRP = 450.0000 IN. ZT
SCALE = .0100

PARAMETRIC DATA

ALPHA = -10.000 BETA = 10.000
DALPHA = -25.000 DBETA = 4.000
X = 1200.000 MACH = 4.500
JET PC = .000

RUN NO. 2539/ 0 RN/L = 2.37 GRADIENT INTERVAL = -5.00/ 5.00

| Y | Z | X | ALPHA | BETA | PHI | CN | CLM | CY | CYN | CBL | CA |
|---|---|---|---|---|---|---|---|---|---|---|---|
| -100.510 | 200.400 | 1198.70000 | -10.29900 | 10.18400 | .15488 | -.32517 | .09644 | -.37140 | .11192 | -.03831 | .26082 |
| -100.460 | 301.280 | 1199.30000 | -10.29900 | 10.18400 | .15504 | -.32520 | .09651 | -.37141 | .11199 | -.03830 | .26125 |
| -100.470 | 400.440 | 1199.00000 | -10.29900 | 10.18400 | .15500 | -.32528 | .09662 | -.37148 | .11205 | -.03831 | .26162 |
| -99.750 | 500.670 | 1199.30000 | -10.29900 | 10.18400 | .15505 | -.32526 | .09662 | -.37144 | .11205 | -.03830 | .26175 |
| -100.620 | 600.690 | 1199.20000 | -10.29900 | 10.18400 | .15504 | -.32544 | .09666 | -.37154 | .11207 | -.03831 | .26178 |
| | GRADIENT | .00000 | .00000 | .00000 | .00000 | .00000 | .00000 | .00000 | .00000 | .00000 | .00000 |

IA143, AEDC V41A-P8A, O/ET W/R.H. SRB SEPARATING (OVX884) ( 24 MAY 77 )

REFERENCE DATA

SREF = 2690.0000 SQ.FT. XMRP = 1097.0000 IN. XT
LREF = 1290.3000 INCHES YMRP = .0000 IN. YT
BREF = 1290.3000 INCHES ZMRP = 450.0000 IN. ZT
SCALE = .0100

PARAMETRIC DATA

ALPHA = -10.000 BETA = 10.000
DALPHA = -25.000 DBETA = 4.000
X = 1200.000 MACH = 4.500
JET PC = .000

RUN NO. 2540/ 0 RN/L = 2.37 GRADIENT INTERVAL = -5.00/ 5.00

| Y | Z | X | ALPHA | BETA | PHI | CN | CLM | CY | CYN | CBL | CA |
|---|---|---|---|---|---|---|---|---|---|---|---|
| -600.860 | 600.870 | 1199.10001 | -10.29900 | 10.18400 | .15506 | -.32547 | .09665 | -.37161 | .11211 | -.03832 | .26163 |
| -600.180 | 501.210 | 1199.39999 | -10.29900 | 10.18400 | .15511 | -.32535 | .09664 | -.37156 | .11205 | -.03831 | .26169 |
| -601.300 | 400.060 | 1198.70000 | -10.29900 | 10.18400 | .15504 | -.32527 | .09659 | -.37155 | .11205 | -.03831 | .26161 |
| -600.990 | 301.260 | 1199.39999 | -10.29900 | 10.18400 | .15512 | -.32541 | .09665 | -.37163 | .11209 | -.03832 | .26175 |
| -601.060 | 201.300 | 1199.20000 | -10.29900 | 10.18400 | .15502 | -.32536 | .09663 | -.37152 | .11206 | -.03832 | .26159 |
| | GRADIENT | .00000 | .00000 | .00000 | .00000 | .00000 | .00000 | .00000 | .00000 | .00000 | .00000 |

IA143, AEDC V41A-P8A, O/ET W/R.H. SRB SEPARATING (OVX885) ( 24 MAY 77 )

REFERENCE DATA

SREF = 2690.0000 SQ.FT. XMRP = 1097.0000 IN. XT
LREF = 1290.3000 INCHES YMRP = .0000 IN. YT
BREF = 1290.3000 INCHES ZMRP = 450.0000 IN. ZT
SCALE = .0100

PARAMETRIC DATA

ALPHA = -10.000 BETA = 10.000
DALPHA = -5.000 DBETA = -20.000
X = 1200.000 MACH = 4.500
JET PC = .000

RUN NO. 2460/ 0 RN/L = 2.38 GRADIENT INTERVAL = -5.00/ 5.00

| Y | Z | X | ALPHA | BETA | PHI | CN | CLM | CY | CYN | CBL | CA |
|---|---|---|---|---|---|---|---|---|---|---|---|
| -99.869 | 598.850 | 1198.50000 | -10.29900 | 10.18300 | .15492 | -.32500 | .09676 | -.37086 | .11196 | -.03823 | .26182 |
| -100.630 | 499.800 | 1199.00000 | -10.29900 | 10.18300 | .15509 | -.32533 | .09687 | -.37118 | .11203 | -.03825 | .26211 |
| -101.000 | 399.910 | 1199.20000 | -10.29900 | 10.18300 | .15488 | -.32510 | .09679 | -.37096 | .11197 | -.03823 | .26188 |
| -101.280 | 300.050 | 1199.20000 | -10.29800 | 10.18300 | .15476 | -.32510 | .09673 | -.37094 | .11190 | -.03823 | .26162 |
| -101.360 | 200.510 | 1199.20000 | -10.29800 | 10.18300 | .15462 | -.32496 | .09662 | -.37053 | .11170 | -.03818 | .26107 |
| | GRADIENT | .00000 | .00000 | .00000 | .00000 | .00000 | .00000 | .00000 | .00000 | .00000 | .00000 |

RUN NO. 2459/ 0 RN/L = 2.38 GRADIENT INTERVAL = -5.00/ 5.00

| Y | Z | X | ALPHA | BETA | PHI | CN | CLM | CY | CYN | CBL | CA |
|---|---|---|---|---|---|---|---|---|---|---|---|
| -600.800 | 200.090 | 1199.10001 | -10.29900 | 10.18300 | .15500 | -.32510 | .09675 | -.37080 | .11191 | -.03821 | .26183 |
| -600.600 | 300.300 | 1199.10001 | -10.29900 | 10.18300 | .15499 | -.32528 | .09686 | -.37104 | .11199 | -.03824 | .26210 |
| -600.060 | 399.990 | 1199.00000 | -10.29900 | 10.18300 | .15504 | -.32524 | .09683 | -.37102 | .11199 | -.03823 | .26209 |
| -600.360 | 499.790 | 1199.00000 | -10.29900 | 10.18300 | .15492 | -.32523 | .09687 | -.37114 | .11204 | -.03826 | .26225 |
| -600.780 | 599.850 | 1199.20000 | -10.29900 | 10.18300 | .15498 | -.32529 | .09683 | -.37107 | .11202 | -.03824 | .26193 |
| | GRADIENT | .00000 | .00000 | .00000 | .00000 | .00000 | .00000 | .00000 | .00000 | .00000 | .00000 |

IA143, AEDC V41A-P8A, O/ET W/R.H. SRB SEPARATING (OVX886) ( 24 MAY 77 )

REFERENCE DATA

SREF = 2690.0000 SQ.FT. XMRP = 1097.0000 IN. XT
LREF = 1290.3000 INCHES YMRP = .0000 IN. YT
BREF = 1290.3000 INCHES ZMRP = 450.0000 IN. ZT
SCALE = .0100

PARAMETRIC DATA

ALPHA = -10.000 BETA = 10.000
DALPHA = -25.000 DBETA = -20.000
X = 1200.000 MACH = 4.500
JET PC = .000

RUN NO. 2535/ 0 RN/L = 2.37 GRADIENT INTERVAL = -5.00/ 5.00

| Y | Z | X | ALPHA | BETA | PHI | CN | CLM | CY | CYN | CBL | CA |
|---|---|---|---|---|---|---|---|---|---|---|---|
| -100.150 | 300.340 | 1198.70000 | -10.29800 | 10.18400 | .15390 | -.32419 | .09531 | -.37023 | .11112 | -.03820 | .25736 |
| -98.031 | 399.740 | 1198.20000 | -10.29800 | 10.18400 | .15432 | -.32410 | .09548 | -.37032 | .11130 | -.03816 | .25816 |
| -100.480 | 500.650 | 1199.00000 | -10.29800 | 10.18400 | .15385 | -.32466 | .09595 | -.37041 | .11128 | -.03829 | .25832 |
| -101.240 | 600.680 | 1199.30000 | -10.29900 | 10.18400 | .15471 | -.32517 | .09643 | -.37136 | .11191 | -.03834 | .26076 |
| | GRADIENT | .00000 | .00000 | .00000 | .00000 | .00000 | .00000 | .00000 | .00000 | .00000 | .00000 |

RUN NO. 2536/ 0 RN/L = 2.38 GRADIENT INTERVAL = -5.00/ 5.00

| Y | Z | X | ALPHA | BETA | PHI | CN | CLM | CY | CYN | CBL | CA |
|---|---|---|---|---|---|---|---|---|---|---|---|
| -602.980 | 603.530 | 1201.50000 | -10.29900 | 10.18400 | .15505 | -.32548 | .09669 | -.37141 | .11205 | -.03830 | .26173 |
| -600.640 | 500.700 | 1199.00000 | -10.29900 | 10.18400 | .15490 | -.32541 | .09668 | -.37141 | .11207 | -.03833 | .26166 |
| -600.730 | 400.710 | 1199.10001 | -10.30000 | 10.18400 | .15519 | -.32543 | .09671 | -.37150 | .11210 | -.03833 | .26191 |
| -599.870 | 300.950 | 1199.00000 | -10.29900 | 10.18400 | .15496 | -.32441 | .09639 | -.37133 | .11203 | -.03831 | .26143 |
| | GRADIENT | .00000 | .00000 | .00000 | .00000 | .00000 | .00000 | .00000 | .00000 | .00000 | .00000 |

IA143, AEDC V41A-P8A, O/ET W/R.H. SRB SEPARATING (OVX887) ( 24 MAY 77 )

REFERENCE DATA

SREF = 2690.0000 SQ.FT. XMRP = 1097.0000 IN. XT
LREF = 1290.3000 INCHES YMRP = .0000 IN. YT
BREF = 1290.3000 INCHES ZMRP = 450.0000 IN. ZT
SCALE = .0100

PARAMETRIC DATA

ALPHA = -10.000 BETA = 10.000
DALPHA = -10.000 DBETA = .000
X = 1200.000 MACH = 4.500
JET PC = .000

RUN NO. 2497/ 0 RN/L = 2.39 GRADIENT INTERVAL = -5.00/ 5.00

| Y | Z | X | ALPHA | BETA | PHI | CN | CLM | CY | CYN | CBL | CA |
|---|---|---|---|---|---|---|---|---|---|---|---|
| -201.220 | 300.370 | 1199.10001 | -10.29900 | 10.18400 | .15478 | -.32523 | .09668 | -.37174 | .11226 | -.03843 | .26186 |
| -199.670 | 399.970 | 1199.00000 | -10.29900 | 10.18400 | .15491 | -.32540 | .09674 | -.37189 | .11232 | -.03843 | .26207 |
| -201.180 | 500.380 | 1199.30000 | -10.29900 | 10.18400 | .15494 | -.32540 | .09676 | -.37176 | .11227 | -.03841 | .26200 |
| | GRADIENT | .00000 | .00000 | .00000 | .00000 | .00000 | .00000 | .00000 | .00000 | .00000 | .00000 |

RUN NO. 2498/ 0 RN/L = 2.39 GRADIENT INTERVAL = -5.00/ 5.00

| Y | Z | X | ALPHA | BETA | PHI | CN | CLM | CY | CYN | CBL | CA |
|---|---|---|---|---|---|---|---|---|---|---|---|
| -400.780 | 497.760 | 1198.80000 | -10.29900 | 10.18400 | .15498 | -.32553 | .09679 | -.37205 | .11236 | -.03845 | .26218 |
| -401.000 | 400.340 | 1199.20000 | -10.29900 | 10.18400 | .15491 | -.32523 | .09667 | -.37165 | .11223 | -.03840 | .26187 |
| -401.340 | 300.300 | 1199.30000 | -10.29900 | 10.18400 | .15488 | -.32530 | .09669 | -.37178 | .11231 | -.03843 | .26186 |
| | GRADIENT | .00000 | .00000 | .00000 | .00000 | .00000 | .00000 | .00000 | .00000 | .00000 | .00000 |

IA143, AEDC V41A-P8A, O/ET W/R.H. SRB SEPARATING (OVX888) ( 24 MAY 77 )

REFERENCE DATA

SREF = 2690.0000 SQ.FT. XMRP = 1097.0000 IN. XT
LREF = 1290.3000 INCHES YMRP = .0000 IN. YT
BREF = 1290.3000 INCHES ZMRP = 450.0000 IN. ZT
SCALE = .0100

PARAMETRIC DATA

ALPHA = -10.000 BETA = 10.000
DALPHA = -20.000 DBETA = .000
X = 1200.000 MACH = 4.500
JET PC = .000

RUN NO. 2529/ 0 RN/L = 2.37 GRADIENT INTERVAL = -5.00/ 5.00

| Y | Z | X | ALPHA | BETA | PHI | CN | CLM | CY | CYN | CBL | CA |
|---|---|---|---|---|---|---|---|---|---|---|---|
| -200.600 | 300.380 | 1198.89999 | -10.29900 | 10.18400 | .15494 | -.32558 | .09671 | -.37182 | .11223 | -.03838 | .26177 |
| -199.880 | 400.540 | 1199.00000 | -10.29900 | 10.18400 | .15496 | -.32562 | .09674 | -.37180 | .11223 | -.03838 | .26187 |
| -201.150 | 500.620 | 1199.30000 | -10.29900 | 10.18400 | .15504 | -.32567 | .09676 | -.37194 | .11225 | -.03839 | .26199 |
| | GRADIENT | .00000 | .00000 | .00000 | .00000 | .00000 | .00000 | .00000 | .00000 | .00000 | .00000 |

RUN NO. 2530/ 0 RN/L = 2.37 GRADIENT INTERVAL = -5.00/ 5.00

| Y | Z | X | ALPHA | BETA | PHI | CN | CLM | CY | CYN | CBL | CA |
|---|---|---|---|---|---|---|---|---|---|---|---|
| -400.600 | 500.690 | 1199.30000 | -10.29900 | 10.18400 | .15503 | -.32575 | .09677 | -.37188 | .11225 | -.03839 | .26195 |
| -401.250 | 400.750 | 1199.10001 | -10.29900 | 10.18400 | .15496 | -.32560 | .09672 | -.37180 | .11222 | -.03839 | .26182 |
| -400.660 | 299.940 | 1198.89999 | -10.29900 | 10.18400 | .15502 | -.32560 | .09675 | -.37189 | .11225 | -.03840 | .26202 |
| | GRADIENT | .00000 | .00000 | .00000 | .00000 | .00000 | .00000 | .00000 | .00000 | .00000 | .00000 |

IA143, AEDC V41A-P8A, O/ET W/R.H. SRB SEPARATING (OVX889) ( 24 MAY 77 )

REFERENCE DATA

SREF = 2690.0000 SQ.FT. XMRP = 1097.0000 IN. XT
LREF = 1290.3000 INCHES YMRP = .0000 IN. YT
BREF = 1290.3000 INCHES ZMRP = 450.0000 IN. ZT
SCALE = .0100

PARAMETRIC DATA

ALPHA = -10.000 BETA = 10.000
DALPHA = -10.000 DBETA = -12.000
X = 1200.000 MACH = 4.500
JET PC = .000

RUN NO. 2495/ 0 RN/L = 2.39 GRADIENT INTERVAL = -5.00/ 5.00

| Y | Z | X | ALPHA | BETA | PHI | CN | CLM | CY | CYN | CBL | CA |
|---|---|---|---|---|---|---|---|---|---|---|---|
| -200.760 | 300.240 | 1198.80000 | -10.29900 | 10.18400 | .15478 | -.32533 | .09670 | -.37188 | .11234 | -.03844 | .26189 |
| -199.990 | 399.880 | 1198.80000 | -10.29900 | 10.18400 | .15492 | -.32521 | .09669 | -.37175 | .11229 | -.03842 | .26193 |
| -201.110 | 500.310 | 1199.20000 | -10.29900 | 10.18400 | .15494 | -.32524 | .09673 | -.37170 | .11228 | -.03841 | .26200 |
| | GRADIENT | .00000 | .00000 | .00000 | .00000 | .00000 | .00000 | .00000 | .00000 | .00000 | .00000 |

RUN NO. 2496/ 0 RN/L = 2.39 GRADIENT INTERVAL = -5.00/ 5.00

| Y | Z | X | ALPHA | BETA | PHI | CN | CLM | CY | CYN | CBL | CA |
|---|---|---|---|---|---|---|---|---|---|---|---|
| -402.220 | 500.030 | 1199.30000 | -10.29900 | 10.18400 | .15488 | -.32539 | .09675 | -.37195 | .11235 | -.03843 | .26197 |
| -401.230 | 400.420 | 1199.30000 | -10.29900 | 10.18400 | .15491 | -.32535 | .09674 | -.37176 | .11228 | -.03841 | .26202 |
| -401.650 | 300.260 | 1199.20000 | -10.29900 | 10.18400 | .15491 | -.32536 | .09673 | -.37199 | .11236 | -.03845 | .26210 |
| | GRADIENT | .00000 | .00000 | .00000 | .00000 | .00000 | .00000 | .00000 | .00000 | .00000 | .00000 |

IA143, AEDC V41A-P8A, O/ET W/R.H. SRB SEPARATING (OVX890) ( 24 MAY 77 )

REFERENCE DATA

SREF = 2690.0000 SQ.FT. XMRP = 1097.0000 IN. XT
LREF = 1290.3000 INCHES YMRP = .0000 IN. YT
BREF = 1290.3000 INCHES ZMRP = 450.0000 IN. ZT
SCALE = .0100

PARAMETRIC DATA

ALPHA = -10.000 BETA = 10.000
DALPHA = -10.000 DBETA = -12.000
X = 1200.000 MACH = 4.500
JET PC = .000

RUN NO. 2486/ 0 RN/L = 2.40 GRADIENT INTERVAL = -5.00/ 5.00

| Y | Z | X | ALPHA | BETA | PHI | CN | CLM | CY | CYN | CBL | CA |
|---|---|---|---|---|---|---|---|---|---|---|---|
| -200.640 | 300.100 | 1198.80000 | -10.29900 | 10.18400 | .15513 | -.32551 | .09681 | -.37219 | .11245 | -.03846 | .26237 |
| -200.490 | 399.970 | 1198.80000 | -10.29900 | 10.18400 | .15488 | -.32537 | .09677 | -.37194 | .11237 | -.03843 | .26221 |
| | GRADIENT | .00000 | .00000 | .00000 | .00000 | .00000 | .00000 | .00000 | .00000 | .00000 | .00000 |

IA143, AEDC V41A-P8A, O/ET W/R.H. SRB SEPARATING (OVX891) ( 24 MAY 77 )

REFERENCE DATA

SREF = 2690.0000 SQ.FT. XMRP = 1097.0000 IN. XT
LREF = 1290.3000 INCHES YMRP = .0000 IN. YT
BREF = 1290.3000 INCHES ZMRP = 450.0000 IN. ZT
SCALE = .0100

PARAMETRIC DATA

ALPHA = -10.000 BETA = 10.000
DALPHA = -20.000 DBETA = -12.000
X = 1200.000 MACH = 4.500
JET PC = .000

RUN NO. 2523/ 0 RN/L = 2.38 GRADIENT INTERVAL = -5.00/ 5.00

| Y | Z | X | ALPHA | BETA | PHI | CN | CLM | CY | CYN | CBL | CA |
|---|---|---|---|---|---|---|---|---|---|---|---|
| -200.300 | 300.480 | 1198.89999 | -10.30000 | 10.18400 | .15524 | -.32560 | .09672 | -.37182 | .11221 | -.03837 | .26190 |
| -200.110 | 400.100 | 1198.80000 | -10.29900 | 10.18400 | .15509 | -.32538 | .09670 | -.37176 | .11220 | -.03839 | .26190 |
| -200.040 | 500.440 | 1198.80000 | -10.29900 | 10.18400 | .15503 | -.32554 | .09671 | -.37183 | .11222 | -.03838 | .26182 |
| | GRADIENT | .00000 | .00000 | .00000 | .00000 | .00000 | .00000 | .00000 | .00000 | .00000 | .00000 |

RUN NO. 2524/ 0 RN/L = 2.38 GRADIENT INTERVAL = -5.00/ 5.00

| Y | Z | X | ALPHA | BETA | PHI | CN | CLM | CY | CYN | CBL | CA |
|---|---|---|---|---|---|---|---|---|---|---|---|
| -403.500 | 500.310 | 1199.50000 | -10.30000 | 10.18400 | .15517 | -.32576 | .09677 | -.37202 | .11228 | -.03840 | .26196 |
| -401.180 | 400.510 | 1199.10001 | -10.29900 | 10.18400 | .15508 | -.32562 | .09674 | -.37179 | .11222 | -.03837 | .26191 |
| -401.160 | 300.280 | 1199.00000 | -10.29900 | 10.18400 | .15498 | -.32555 | .09674 | -.37167 | .11217 | -.03837 | .26189 |
| | GRADIENT | .00000 | .00000 | .00000 | .00000 | .00000 | .00000 | .00000 | .00000 | .00000 | .00000 |

IA143, AEDC V41A-P8A, O/ET W/R.H. SRB SEPARATING (OVX892) ( 24 MAY 77 )

REFERENCE DATA

SREF = 2690.0000 SQ.FT. XMRP = 1097.0000 IN. XT
LREF = 1290.3000 INCHES YMRP = .0000 IN. YT
BREF = 1290.3000 INCHES ZMRP = 450.0000 IN. ZT
SCALE = .0100

PARAMETRIC DATA

ALPHA = -10.000 BETA = 10.000
DALPHA = -15.000 DBETA = -4.000
X = 1200.000 MACH = 4.500
JET PC = .000

RUN NO. 2518/ 0 RN/L = 2.38 GRADIENT INTERVAL = -5.00/ 5.00

| Y | Z | X | ALPHA | BETA | PHI | CN | CLM | CY | CYN | CBL | CA |
|---|---|---|---|---|---|---|---|---|---|---|---|
| -200.510 | 400.190 | 1198.80000 | -10.29900 | 10.18400 | .15486 | -.32532 | .09668 | -.37151 | .11211 | -.03835 | .26189 |
| -200.640 | 450.540 | 1199.10001 | -10.29900 | 10.18400 | .15487 | -.32551 | .09671 | -.37182 | .11225 | -.03841 | .26175 |
| -200.880 | 500.270 | 1199.00000 | -10.29900 | 10.18400 | .15491 | -.32531 | .09665 | -.37152 | .11214 | -.03836 | .26172 |
| | GRADIENT | .00000 | .00000 | .00000 | .00000 | .00000 | .00000 | .00000 | .00000 | .00000 | .00000 |

RUN NO. 2519/ 0 RN/L = 2.38 GRADIENT INTERVAL = -5.00/ 5.00

| Y | Z | X | ALPHA | BETA | PHI | CN | CLM | CY | CYN | CBL | CA |
|---|---|---|---|---|---|---|---|---|---|---|---|
| -302.460 | 499.990 | 1199.10001 | -10.29900 | 10.18400 | .15489 | -.32535 | .09666 | -.37162 | .11218 | -.03838 | .26176 |
| -300.880 | 450.610 | 1199.20000 | -10.29900 | 10.18400 | .15489 | -.32537 | .09666 | -.37162 | .11215 | -.03837 | .26175 |
| -301.460 | 400.200 | 1199.20000 | -10.29900 | 10.18400 | .15491 | -.32561 | .09672 | -.37186 | .11226 | -.03840 | .26190 |
| | GRADIENT | .00000 | .00000 | .00000 | .00000 | .00000 | .00000 | .00000 | .00000 | .00000 | .00000 |

IA143, AEDC V41A-P8A, O/ET W/R.H. SRB SEPARATING (OVX893) ( 24 MAY 77 )

REFERENCE DATA

SREF = 2690.0000 SQ.FT. XMRP = 1097.0000 IN. XT
LREF = 1290.3000 INCHES YMRP = .0000 IN. YT
BREF = 1290.3000 INCHES ZMRP = 450.0000 IN. ZT
SCALE = .0100

PARAMETRIC DATA

ALPHA = -10.000 BETA = 10.000
DALPHA = -20.000 DBETA = -4.000
X = 1200.000 MACH = 4.500
JET PC = .000

RUN NO. 2525/ 0 RN/L = 2.38 GRADIENT INTERVAL = -5.00/ 5.00

| Y | Z | X | ALPHA | BETA | PHI | CN | CLM | CY | CYN | CBL | CA |
|---|---|---|---|---|---|---|---|---|---|---|---|
| -201.250 | 400.340 | 1199.00000 | -10.30000 | 10.18400 | .15513 | -.32576 | .09677 | -.37190 | .11223 | -.03838 | .26193 |
| -200.710 | 450.370 | 1199.10001 | -10.30000 | 10.18400 | .15509 | -.32566 | .09675 | -.37171 | .11218 | -.03836 | .26194 |
| -200.730 | 500.640 | 1199.20000 | -10.29900 | 10.18400 | .15507 | -.32560 | .09676 | -.37170 | .11217 | -.03835 | .26201 |
| | GRADIENT | .00000 | .00000 | .00000 | .00000 | .00000 | .00000 | .00000 | .00000 | .00000 | .00000 |

RUN NO. 2526/ 0 RN/L = 2.38 GRADIENT INTERVAL = -5.00/ 5.00

| Y | Z | X | ALPHA | BETA | PHI | CN | CLM | CY | CYN | CBL | CA |
|---|---|---|---|---|---|---|---|---|---|---|---|
| -302.640 | 500.040 | 1199.30000 | -10.30000 | 10.18400 | .15506 | -.32580 | .09681 | -.37199 | .11224 | -.03841 | .26206 |
| -301.150 | 450.200 | 1199.00000 | -10.30000 | 10.18400 | .15509 | -.32559 | .09675 | -.37187 | .11223 | -.03839 | .26200 |
| -300.800 | 400.830 | 1199.20000 | -10.29900 | 10.18400 | .15496 | -.32546 | .09672 | -.37148 | .11211 | -.03835 | .26182 |
| | GRADIENT | .00000 | .00000 | .00000 | .00000 | .00000 | .00000 | .00000 | .00000 | .00000 | .00000 |

IA143, AEDC V41A-P8A, O/ET W/R.H. SRB SEPARATING (OVX894) ( 24 MAY 77 )

REFERENCE DATA

SREF = 2690.0000 SQ.FT. XMRP = 1097.0000 IN. XT
LREF = 1290.3000 INCHES YMRP = .0000 IN. YT
BREF = 1290.3000 INCHES ZMRP = 450.0000 IN. ZT
SCALE = .0100

PARAMETRIC DATA

ALPHA = -10.000 BETA = 10.000
DALPHA = -15.000 DBETA = -8.000
X = 1200.000 MACH = 4.500
JET PC = .000

RUN NO. 2521/ 0 RN/L = 2.38 GRADIENT INTERVAL = -5.00/ 5.00

| Y | Z | X | ALPHA | BETA | PHI | CN | CLM | CY | CYN | CBL | CA |
|---|---|---|---|---|---|---|---|---|---|---|---|
| -201.180 | 400.330 | 1199.00000 | -10.29900 | 10.18400 | .15504 | -.32550 | .09672 | -.37175 | .11220 | -.03837 | .26188 |
| -200.280 | 450.380 | 1199.10001 | -10.30000 | 10.18400 | .15517 | -.32565 | .09677 | -.37192 | .11224 | -.03839 | .26201 |
| -201.620 | 500.240 | 1199.10001 | -10.30000 | 10.18400 | .15507 | -.32565 | .09674 | -.37187 | .11222 | -.03838 | .26197 |
| | GRADIENT | .00000 | .00000 | .00000 | .00000 | .00000 | .00000 | .00000 | .00000 | .00000 | .00000 |

IA143, AEDC V41A-P8A, O/ET W/R.H. SRB SEPARATING (OVX895) ( 24 MAY 77 )

REFERENCE DATA

SREF = 2690.0000 SQ.FT. XMRP = 1097.0000 IN. XT
LREF = 1290.3000 INCHES YMRP = .0000 IN. YT
BREF = 1290.3000 INCHES ZMRP = 450.0000 IN. ZT
SCALE = .0100

PARAMETRIC DATA

ALPHA = -10.000 BETA = 10.000
DALPHA = -20.000 DBETA = -8.000
X = 1200.000 MACH = 4.500
JET PC = .000

RUN NO. 2528/ 0 RN/L = 2.38 GRADIENT INTERVAL = -5.00/ 5.00

| Y | Z | X | ALPHA | BETA | PHI | CN | CLM | CY | CYN | CBL | CA |
|---|---|---|---|---|---|---|---|---|---|---|---|
| -199.180 | 500.280 | 1198.80000 | -10.30000 | 10.18400 | .15516 | -.32558 | .09670 | -.37173 | .11220 | -.03836 | .26176 |
| -200.780 | 450.310 | 1199.10001 | -10.29900 | 10.18400 | .15504 | -.32562 | .09672 | -.37177 | .11220 | -.03838 | .26178 |
| -200.880 | 400.520 | 1199.10001 | -10.30000 | 10.18400 | .15516 | -.32558 | .09672 | -.37160 | .11214 | -.03835 | .26175 |
| | GRADIENT | .00000 | .00000 | .00000 | .00000 | .00000 | .00000 | .00000 | .00000 | .00000 | .00000 |

RUN NO. 2527/ 0 RN/L = 2.38 GRADIENT INTERVAL = -5.00/ 5.00

| Y | Z | X | ALPHA | BETA | PHI | CN | CLM | CY | CYN | CBL | CA |
|---|---|---|---|---|---|---|---|---|---|---|---|
| -302.620 | 400.530 | 1199.30000 | -10.29900 | 10.18400 | .15501 | -.32561 | .09677 | -.37171 | .11219 | -.03837 | .26197 |
| -300.640 | 450.500 | 1199.10001 | -10.29900 | 10.18400 | .15497 | -.32571 | .09674 | -.37176 | .11219 | -.03838 | .26184 |
| -300.140 | 500.260 | 1199.10001 | -10.29900 | 10.18400 | .15504 | -.32548 | .09671 | -.37157 | .11213 | -.03835 | .26185 |
| | GRADIENT | .00000 | .00000 | .00000 | .00000 | .00000 | .00000 | .00000 | .00000 | .00000 | .00000 |

IA143, AEDC V41A-P8A, O/ET W/R.H. SRB SEPARATING (OVX896) ( 24 MAY 77 )

REFERENCE DATA

SREF = 2690.0000 SQ.FT. XMRP = 1097.0000 IN. XT
LREF = 1290.3000 INCHES YMRP = .0000 IN. YT
BREF = 1290.3000 INCHES ZMRP = 450.0000 IN. ZT
SCALE = .0100

PARAMETRIC DATA

ALPHA = -10.000 BETA = 10.000
DALPHA = -15.000 DBETA = -8.000
X = 1200.000 MACH = 4.500
JET PC = .000

RUN NO. 2520/ 0 RN/L = 2.38 GRADIENT INTERVAL = -5.00/ 5.00

| Y | Z | X | ALPHA | BETA | PHI | CN | CLM | CY | CYN | CBL | CA |
|---|---|---|---|---|---|---|---|---|---|---|---|
| -301.250 | 300.620 | 1199.20000 | -10.30000 | 10.18400 | .15513 | -.32565 | .09676 | -.37190 | .11226 | -.03839 | .26192 |
| -300.410 | 400.370 | 1199.10001 | -10.29900 | 10.18400 | .15506 | -.32553 | .09672 | -.37174 | .11219 | -.03837 | .26188 |
| -300.780 | 450.510 | 1199.10001 | -10.29900 | 10.18400 | .15496 | -.32551 | .09668 | -.37192 | .11228 | -.03841 | .26177 |
| -300.930 | 500.220 | 1199.10001 | -10.29900 | 10.18400 | .15497 | -.32560 | .09673 | -.37198 | .11227 | -.03841 | .26197 |
| | GRADIENT | .00000 | .00000 | .00000 | .00000 | .00000 | .00000 | .00000 | .00000 | .00000 | .00000 |

IA143, AEDC V41A-P8A, O/ET W/R.H. SRB SEPARATING (OVX897) ( 24 MAY 77 )

REFERENCE DATA

SREF = 2690.0000 SQ.FT. XMRP = 1097.0000 IN. XT
LREF = 1290.3000 INCHES YMRP = .0000 IN. YT
BREF = 1290.3000 INCHES ZMRP = 450.0000 IN. ZT
SCALE = .0100

PARAMETRIC DATA

ALPHA = -10.000 BETA = 10.000
DALPHA = -18.000 DBETA = -8.000
X = 1200.000 MACH = 4.500
JET PC = .000

RUN NO. 2522/ 0 RN/L = 2.38 GRADIENT INTERVAL = -5.00/ 5.00

| Y | Z | X | ALPHA | BETA | PHI | CN | CLM | CY | CYN | CBL | CA |
|---|---|---|---|---|---|---|---|---|---|---|---|
| -300.850 | 400.630 | 1199.00000 | -10.29900 | 10.18400 | .15502 | -.32556 | .09671 | -.37190 | .11226 | -.03841 | .26175 |
| -300.100 | 600.030 | 1199.00000 | -10.29900 | 10.18400 | .15508 | -.32549 | .09669 | -.37171 | .11216 | -.03836 | .26179 |
| -299.770 | 799.190 | 1198.60001 | -10.29900 | 10.18400 | .15501 | -.32568 | .09679 | -.37189 | .11225 | -.03839 | .26199 |
| -300.730 | 999.200 | 1198.80000 | -10.30000 | 10.18400 | .15511 | -.32576 | .09682 | -.37215 | .11233 | -.03842 | .26213 |
| | GRADIENT | .00000 | .00000 | .00000 | .00000 | .00000 | .00000 | .00000 | .00000 | .00000 | .00000 |

IA143, AEDC V41A-P8A, O/ET W/R.H. SRB SEPARATING (OVX898) ( 23 MAY 77 )

REFERENCE DATA

SREF = 2690.0000 SQ.FT. XMRP = 1097.0000 IN. XT
LREF = 1290.3000 INCHES YMRP = .0000 IN. YT
BREF = 1290.3000 INCHES ZMRP = 450.0000 IN. ZT
SCALE = .0100

PARAMETRIC DATA

ALPHA = -5.000 BETA = 10.000
DALPHA = .000 DBETA = .000
X = .000 MACH = 4.500
JET PC = .000

RUN NO. 4394/ 0 RN/L = 2.37 GRADIENT INTERVAL = -5.00/ 5.00

| Y | Z | X | ALPHA | BETA | PHI | CN | CLM | CY | CYN | CBL | CA |
|---|---|---|---|---|---|---|---|---|---|---|---|
| -51.502 | .140 | .08301 | -5.21140 | 10.22600 | .13254 | -.19591 | .06200 | -.37333 | .10191 | -.04162 | .23563 |
| -50.763 | 25.332 | -.03515 | -5.21120 | 10.22500 | .13410 | -.19620 | .06275 | -.37591 | .10391 | -.04200 | .23658 |
| -50.430 | 100.540 | .12605 | -5.21110 | 10.22000 | .14912 | -.19084 | .06187 | -.38434 | .11032 | -.04106 | .24009 |
| -50.485 | 150.210 | .02603 | -5.21110 | 10.21400 | .15595 | -.18072 | .05700 | -.38592 | .11367 | -.04039 | .24215 |
| -49.362 | 249.920 | -.03034 | -5.20670 | 10.20100 | .16247 | -.17935 | .05801 | -.37292 | .11190 | -.03689 | .23682 |
| -50.298 | 349.600 | .12823 | -5.20620 | 10.19300 | .15136 | -.18118 | .05826 | -.35693 | .10695 | -.03615 | .23698 |
| -50.635 | 474.160 | .14990 | -5.20660 | 10.19400 | .13887 | -.18614 | .05966 | -.34763 | .10177 | -.03661 | .23689 |
| -51.121 | 499.770 | .17520 | -5.20670 | 10.19400 | .13854 | -.18750 | .06040 | -.34753 | .10160 | -.03664 | .23693 |
| -51.106 | 599.510 | .19085 | -5.20660 | 10.19400 | .13907 | -.19091 | .06255 | -.34777 | .10181 | -.03660 | .23711 |
| | GRADIENT | .00000 | .00000 | .00000 | .00000 | .00000 | .00000 | .00000 | .00000 | .00000 | .00000 |

RUN NO. 4395/ 0 RN/L = 2.37 GRADIENT INTERVAL = -5.00/ 5.00

| Y | Z | X | ALPHA | BETA | PHI | CN | CLM | CY | CYN | CBL | CA |
|---|---|---|---|---|---|---|---|---|---|---|---|
| -151.090 | 599.520 | .08224 | -5.20670 | 10.19400 | .13910 | -.19107 | .06264 | -.34794 | .10186 | -.03662 | .23741 |
| -150.900 | 499.950 | .15209 | -5.20680 | 10.19400 | .13911 | -.18993 | .06184 | -.34785 | .10179 | -.03660 | .23718 |
| -150.750 | 474.800 | .13908 | -5.20690 | 10.19400 | .13922 | -.18869 | .06108 | -.34794 | .10188 | -.03661 | .23709 |
| -150.950 | 350.040 | -.00900 | -5.20730 | 10.19300 | .14789 | -.18466 | .05929 | -.35454 | .10586 | -.03634 | .23718 |
| -151.300 | 250.060 | .01898 | -5.20770 | 10.19500 | .15282 | -.18557 | .06004 | -.36104 | .10837 | -.03667 | .23645 |
| -151.360 | 149.900 | .02782 | -5.21020 | 10.19700 | .14656 | -.17739 | .05404 | -.36831 | .11183 | -.03954 | .24023 |
| -151.250 | 99.890 | .07709 | -5.21050 | 10.19700 | .14670 | -.18071 | .05614 | -.37097 | .11313 | -.04008 | .24197 |
| -151.420 | 24.814 | .05571 | -5.20950 | 10.19900 | .14119 | -.18655 | .05956 | -.36997 | .11181 | -.04089 | .24152 |
| -151.230 | -.004 | .11887 | -5.20890 | 10.20000 | .14092 | -.18955 | .06154 | -.36933 | .11133 | -.04077 | .24113 |
| | GRADIENT | .00000 | .00000 | .00000 | .00000 | .00000 | .00000 | .00000 | .00000 | .00000 | .00000 |

IA143, AEDC V41A-P8A, O/ET W/R.H. SRB SEPARATING (OVX899) ( 23 MAY 77 )

REFERENCE DATA

SREF = 2690.0000 SQ.FT. XMRP = 1097.0000 IN. XT
LREF = 1290.3000 INCHES YMRP = .0000 IN. YT
BREF = 1290.3000 INCHES ZMRP = 450.0000 IN. ZT
SCALE = .0100

PARAMETRIC DATA

ALPHA = -5.000 BETA = 10.000
DALPHA = -5.000 DBETA = .000
X = .000 MACH = 4.500
JET PC = .000

RUN NO. 4408/ 0 RN/L = 2.37 GRADIENT INTERVAL = -5.00/ 5.00

| Y | Z | X | ALPHA | BETA | PHI | CN | CLM | CY | CYN | CBL | CA |
|---|---|---|---|---|---|---|---|---|---|---|---|
| -50.962 | 25.243 | -.06877 | -5.21680 | 10.23000 | .09294 | -.15869 | .03321 | -.38776 | .10963 | -.05308 | .23611 |
| -50.579 | 100.720 | -.03895 | -5.21310 | 10.22500 | .14231 | -.18732 | .05780 | -.39829 | .11595 | -.04533 | .23950 |
| -50.898 | 150.510 | .11286 | -5.21400 | 10.22000 | .15979 | -.17829 | .05423 | -.40267 | .11983 | -.04291 | .24213 |
| -49.669 | 250.180 | -.00657 | -5.20960 | 10.20800 | .16512 | -.16284 | .04727 | -.39135 | .11913 | -.04010 | .23773 |
| -49.395 | 349.390 | -.28083 | -5.20670 | 10.19300 | .16825 | -.17476 | .05583 | -.37003 | .11368 | -.03555 | .23674 |
| -50.339 | 474.130 | -.10509 | -5.20620 | 10.19300 | .14096 | -.18242 | .05783 | -.34860 | .10263 | -.03644 | .23667 |
| -50.882 | 499.890 | -.09665 | -5.20620 | 10.19400 | .13922 | -.18432 | .05878 | -.34740 | .10174 | -.03649 | .23700 |
| -50.627 | 599.540 | -.22178 | -5.20650 | 10.19400 | .13913 | -.19037 | .06228 | -.34753 | .10168 | -.03653 | .23714 |
| | GRADIENT | .00000 | .00000 | .00000 | .00000 | .00000 | .00000 | .00000 | .00000 | .00000 | .00000 |

RUN NO. 4409/ 0 RN/L = 2.37 GRADIENT INTERVAL = -5.00/ 5.00

| Y | Z | X | ALPHA | BETA | PHI | CN | CLM | CY | CYN | CBL | CA |
|---|---|---|---|---|---|---|---|---|---|---|---|
| -150.920 | 599.440 | -.10113 | -5.20640 | 10.19400 | .13906 | -.19085 | .06254 | -.34759 | .10171 | -.03654 | .23721 |
| -151.050 | 500.190 | -.04391 | -5.20680 | 10.19400 | .13948 | -.18752 | .06041 | -.34780 | .10185 | -.03652 | .23702 |
| -150.830 | 475.080 | .01102 | -5.20690 | 10.19400 | .14055 | -.18590 | .05949 | -.34872 | .10245 | -.03651 | .23712 |
| -151.270 | 350.260 | -.04869 | -5.20730 | 10.19200 | .15413 | -.18313 | .05900 | -.35876 | .10815 | -.03602 | .23692 |
| -151.810 | 250.210 | -.04014 | -5.21010 | 10.19500 | .15315 | -.17450 | .05221 | -.37088 | .11358 | -.03879 | .23678 |
| -151.280 | 150.010 | -.05856 | -5.21250 | 10.19600 | .15097 | -.17220 | .05060 | -.38029 | .11855 | -.04137 | .24238 |
| -151.110 | 99.971 | -.00293 | -5.21260 | 10.19800 | .14447 | -.17413 | .05120 | -.38066 | .11820 | -.04274 | .24305 |
| -151.490 | 24.750 | -.05930 | -5.21100 | 10.20000 | .12160 | -.17294 | .04911 | -.37985 | .11800 | -.04730 | .24344 |
| | GRADIENT | .00000 | .00000 | .00000 | .00000 | .00000 | .00000 | .00000 | .00000 | .00000 | .00000 |

IA143, AEDC V41A-P8A, O/ET W/R.H. SRB SEPARATING (OVX900) ( 23 MAY 77 )

REFERENCE DATA

SREF = 2690.0000 SQ.FT. XMRP = 1097.0000 IN. XT
LREF = 1290.3000 INCHES YMRP = .0000 IN. YT
BREF = 1290.3000 INCHES ZMRP = 450.0000 IN. ZT
SCALE = .0100

PARAMETRIC DATA

ALPHA = -5.000 BETA = 10.000
DALPHA = .000 DBETA = -4.000
X = .000 MACH = 4.500
JET PC = .000

RUN NO. 4397/ 0 RN/L = 2.38 GRADIENT INTERVAL = -5.00/ 5.00

| Y | Z | X | ALPHA | BETA | PHI | CN | CLM | CY | CYN | CBL | CA |
|---|---|---|---|---|---|---|---|---|---|---|---|
| -50.988 | 250.020 | .00366 | -5.20560 | 10.20400 | .16586 | -.17456 | .05632 | -.37742 | .11272 | -.03697 | .23701 |
| -50.147 | 349.270 | -.15169 | -5.20590 | 10.19300 | .15218 | -.17836 | .05680 | -.35728 | .10724 | -.03607 | .23681 |
| -50.749 | 474.180 | -.08702 | -5.20640 | 10.19400 | .13863 | -.18613 | .05980 | -.34727 | .10155 | -.03658 | .23722 |
| -51.135 | 499.640 | -.06677 | -5.20660 | 10.19400 | .13843 | -.18752 | .06050 | -.34736 | .10149 | -.03662 | .23727 |
| -51.064 | 599.510 | -.07681 | -5.20650 | 10.19400 | .13907 | -.19093 | .06259 | -.34788 | .10182 | -.03661 | .23731 |
| | GRADIENT | .00000 | .00000 | .00000 | .00000 | .00000 | .00000 | .00000 | .00000 | .00000 | .00000 |

IA143, AEDC V41A-P8A, O/ET W/R.H. SRB SEPARATING (OVX901) ( 23 MAY 77 )

REFERENCE DATA

SREF = 2690.0000 SQ.FT. XMRP = 1097.0000 IN. XT
LREF = 1290.3000 INCHES YMRP = .0000 IN. YT
BREF = 1290.3000 INCHES ZMRP = 450.0000 IN. ZT
SCALE = .0100

PARAMETRIC DATA

ALPHA = -5.000 BETA = 10.000
DALPHA = -5.000 DBETA = -4.000
X = .000 MACH = 4.500
JET PC = .000

RUN NO. 4407/ 0 RN/L = 2.37 GRADIENT INTERVAL = -5.00/ 5.00

| Y | Z | X | ALPHA | BETA | PHI | CN | CLM | CY | CYN | CBL | CA |
|---|---|---|---|---|---|---|---|---|---|---|---|
| -51.348 | 474.960 | -.03501 | -5.20650 | 10.19300 | .14082 | -.18019 | .05634 | -.34825 | .10252 | -.03641 | .23645 |
| -51.105 | 499.800 | -.08905 | -5.20620 | 10.19400 | .13871 | -.18386 | .05841 | -.34708 | .10153 | -.03652 | .23658 |
| -51.292 | 599.560 | .01976 | -5.20650 | 10.19400 | .13911 | -.19051 | .06233 | -.34790 | .10182 | -.03659 | .23728 |
| | GRADIENT | .00000 | .00000 | .00000 | .00000 | .00000 | .00000 | .00000 | .00000 | .00000 | .00000 |

IA143, AEDC V41A-P8A, O/ET W/R.H. SRB SEPARATING (OVX902) ( 23 MAY 77 )

REFERENCE DATA

SREF = 2690.0000 SQ.FT. XMRP = 1097.0000 IN. XT
LREF = 1290.3000 INCHES YMRP = .0000 IN. YT
BREF = 1290.3000 INCHES ZMRP = 450.0000 IN. ZT
SCALE = .0100

PARAMETRIC DATA

ALPHA = -5.000 BETA = 10.000
DALPHA = .000 DBETA = -4.000
X = .000 MACH = 4.500
JET PC = .000

RUN NO. 4396/ 0 RN/L = 2.38 GRADIENT INTERVAL = -5.00/ 5.00

| Y | Z | X | ALPHA | BETA | PHI | CN | CLM | CY | CYN | CBL | CA |
|---|---|---|---|---|---|---|---|---|---|---|---|
| -151.330 | .125 | -.01960 | -5.21170 | 10.20200 | .14950 | -.18543 | .05840 | -.38039 | .11594 | -.04129 | .24087 |
| -151.050 | 25.222 | -.01183 | -5.21180 | 10.20200 | .14977 | -.18271 | .05678 | -.38037 | .11592 | -.04122 | .24105 |
| -150.880 | 100.170 | .02233 | -5.21210 | 10.20000 | .15531 | -.17812 | .05461 | -.37968 | .11657 | -.04010 | .24148 |
| -150.780 | 150.110 | -.05941 | -5.21070 | 10.19800 | .15490 | -.17507 | .05314 | -.37579 | .11510 | -.03936 | .24020 |
| -151.040 | 249.870 | .08617 | -5.20800 | 10.19500 | .15725 | -.18347 | .05904 | -.36409 | .10995 | -.03640 | .23666 |
| -151.130 | 349.670 | .05867 | -5.20710 | 10.19300 | .14761 | -.18433 | .05921 | -.35411 | .10558 | -.03632 | .23697 |
| -150.540 | 474.510 | .00671 | -5.20690 | 10.19400 | .13916 | -.18867 | .06103 | -.34815 | .10191 | -.03664 | .23718 |
| -151.100 | 499.770 | .21058 | -5.20680 | 10.19400 | .13911 | -.18981 | .06184 | -.34784 | .10180 | -.03660 | .23734 |
| -151.080 | 599.560 | .02387 | -5.20650 | 10.19400 | .13906 | -.19096 | .06265 | -.34802 | .10188 | -.03662 | .23757 |
| | GRADIENT | .00000 | .00000 | .00000 | .00000 | .00000 | .00000 | .00000 | .00000 | .00000 | .00000 |

IA143, AEDC V41A-P8A, O/ET W/R.H. SRB SEPARATING (OVX903) ( 23 MAY 77 )

REFERENCE DATA

SREF = 2690.0000 SQ.FT. XMRP = 1097.0000 IN. XT
LREF = 1290.3000 INCHES YMRP = .0000 IN. YT
BREF = 1290.3000 INCHES ZMRP = 450.0000 IN. ZT
SCALE = .0100

PARAMETRIC DATA

ALPHA = -5.000 BETA = 10.000
DALPHA = -5.000 DBETA = -4.000
X = .000 MACH = 4.500
JET PC = .000

RUN NO. 4406/ 0 RN/L = 2.37 GRADIENT INTERVAL = -5.00/ 5.00

| Y | Z | X | ALPHA | BETA | PHI | CN | CLM | CY | CYN | CBL | CA |
|---|---|---|---|---|---|---|---|---|---|---|---|
| -151.200 | 25.282 | -.07090 | -5.21880 | 10.20300 | .10216 | -.13681 | .02149 | -.39779 | .12720 | -.05531 | .24318 |
| -150.090 | 100.250 | -.30866 | -5.21500 | 10.20100 | .15663 | -.17122 | .04926 | -.39395 | .12378 | -.04296 | .24274 |
| -150.420 | 150.170 | -.12058 | -5.21450 | 10.19900 | .15931 | -.16633 | .04672 | -.39168 | .12335 | -.04200 | .24194 |
| -149.880 | 249.960 | -.14682 | -5.21070 | 10.19500 | .16465 | -.17243 | .05169 | -.37884 | .11765 | -.03817 | .23627 |
| -150.390 | 349.740 | -.06866 | -5.20800 | 10.19100 | .15755 | -.17960 | .05675 | -.36130 | .10983 | -.03593 | .23652 |
| -150.450 | 474.570 | -.04959 | -5.20700 | 10.19400 | .14030 | -.18590 | .05947 | -.34853 | .10234 | -.03652 | .23704 |
| -151.020 | 499.910 | -.14900 | -5.20680 | 10.19400 | .13938 | -.18743 | .06040 | -.34785 | .10186 | -.03655 | .23714 |
| -150.920 | 599.700 | -.14280 | -5.20650 | 10.19400 | .13915 | -.19091 | .06260 | -.34800 | .10183 | -.03661 | .23749 |
| | GRADIENT | .00000 | .00000 | .00000 | .00000 | .00000 | .00000 | .00000 | .00000 | .00000 | .00000 |

IA143, AEDC V41A-P8A, O/ET W/R.H. SRB SEPARATING (OVX904) ( 23 MAY 77 )

REFERENCE DATA

SREF = 2690.0000 SQ.FT. XMRP = 1097.0000 IN. XT
LREF = 1290.3000 INCHES YMRP = .0000 IN. YT
BREF = 1290.3000 INCHES ZMRP = 450.0000 IN. ZT
SCALE = .0100

PARAMETRIC DATA

ALPHA = -5.000 BETA = 10.000
DALPHA = .000 DBETA = .000
X = 300.000 MACH = 4.500
JET PC = .000

RUN NO. 4398/ 0 RN/L = 2.38 GRADIENT INTERVAL = -5.00/ 5.00

| Y | Z | X | ALPHA | BETA | PHI | CN | CLM | CY | CYN | CBL | CA |
|---|---|---|---|---|---|---|---|---|---|---|---|
| -51.012 | 99.960 | 299.90000 | -5.21190 | 10.20200 | .14714 | -.16870 | .04879 | -.37996 | .11592 | -.04169 | .24373 |
| -50.674 | 250.200 | 299.91000 | -5.20640 | 10.19600 | .16546 | -.18172 | .05988 | -.36921 | .11208 | -.03576 | .23687 |
| -50.856 | 299.840 | 299.94000 | -5.20690 | 10.19200 | .15911 | -.17942 | .05758 | -.36289 | .11020 | -.03589 | .23686 |
| -50.737 | 399.520 | 300.00000 | -5.20720 | 10.19400 | .14056 | -.18493 | .05882 | -.34863 | .10244 | -.03652 | .23684 |
| -50.651 | 424.670 | 299.87000 | -5.20690 | 10.19400 | .13911 | -.18811 | .06069 | -.34784 | .10178 | -.03658 | .23708 |
| -51.156 | 499.430 | 300.03000 | -5.20650 | 10.19400 | .13904 | -.19082 | .06254 | -.34774 | .10177 | -.03659 | .23722 |
| -50.851 | 599.400 | 299.98000 | -5.20660 | 10.19400 | .13914 | -.19091 | .06259 | -.34785 | .10182 | -.03659 | .23746 |
| | GRADIENT | .00000 | .00000 | .00000 | .00000 | .00000 | .00000 | .00000 | .00000 | .00000 | .00000 |

RUN NO. 4399/ 0 RN/L = 2.38 GRADIENT INTERVAL = -5.00/ 5.00

| Y | Z | X | ALPHA | BETA | PHI | CN | CLM | CY | CYN | CBL | CA |
|---|---|---|---|---|---|---|---|---|---|---|---|
| -201.040 | 599.280 | 299.87000 | -5.20650 | 10.19400 | .13912 | -.19098 | .06264 | -.34800 | .10187 | -.03661 | .23757 |
| -200.880 | 499.910 | 299.85000 | -5.20650 | 10.19400 | .13901 | -.19100 | .06263 | -.34802 | .10188 | -.03663 | .23745 |
| -200.770 | 424.990 | 299.80000 | -5.20650 | 10.19400 | .13911 | -.19091 | .06261 | -.34805 | .10188 | -.03663 | .23743 |
| -200.900 | 399.920 | 299.82000 | -5.20650 | 10.19400 | .13916 | -.19083 | .06259 | -.34776 | .10177 | -.03657 | .23745 |
| -201.460 | 299.990 | 299.99000 | -5.20730 | 10.19300 | .14141 | -.18852 | .06095 | -.34960 | .10300 | -.03654 | .23741 |
| -200.920 | 250.040 | 299.91000 | -5.20790 | 10.19200 | .14500 | -.18724 | .06019 | -.35193 | .10467 | -.03640 | .23713 |
| -201.500 | 99.840 | 299.97000 | -5.21000 | 10.19100 | .14114 | -.17716 | .05299 | -.36198 | .11109 | -.03962 | .23859 |
| | GRADIENT | .00000 | .00000 | .00000 | .00000 | .00000 | .00000 | .00000 | .00000 | .00000 | .00000 |

IA143, AEDC V41A-P8A, O/ET W/R.H. SRB SEPARATING (OVX905) ( 23 MAY 77 )

REFERENCE DATA

SREF = 2690.0000 SQ.FT. XMRP = 1097.0000 IN. XT
LREF = 1290.3000 INCHES YMRP = .0000 IN. YT
BREF = 1290.3000 INCHES ZMRP = 450.0000 IN. ZT
SCALE = .0100

PARAMETRIC DATA

ALPHA = -5.000 BETA = 10.000
DALPHA = -10.000 DBETA = .000
X = 300.000 MACH = 4.500
JET PC = .000

RUN NO. 4432/ 0 RN/L = 2.37 GRADIENT INTERVAL = -5.00/ 5.00

| Y | Z | X | ALPHA | BETA | PHI | CN | CLM | CY | CYN | CBL | CA |
|---|---|---|---|---|---|---|---|---|---|---|---|
| -50.910 | 100.370 | 299.86000 | -5.22140 | 10.20700 | .12551 | -.13282 | .02010 | -.40869 | .13080 | -.05257 | .24363 |
| -49.373 | 250.750 | 299.88000 | -5.21170 | 10.19900 | .18518 | -.16752 | .05009 | -.39695 | .12525 | -.03767 | .23510 |
| -50.138 | 300.440 | 299.69000 | -5.20880 | 10.19400 | .18807 | -.17358 | .05582 | -.38732 | .12209 | -.03525 | .23562 |
| -50.100 | 399.800 | 299.80000 | -5.20870 | 10.18900 | .16099 | -.17154 | .05177 | -.36320 | .11180 | -.03577 | .23588 |
| -50.932 | 424.820 | 299.76000 | -5.20870 | 10.19000 | .15319 | -.17392 | .05238 | -.35753 | .10843 | -.03606 | .23597 |
| -50.781 | 499.390 | 299.73000 | -5.20700 | 10.19400 | .13975 | -.18625 | .05943 | -.34805 | .10207 | -.03652 | .23621 |
| -50.832 | 599.380 | 299.82000 | -5.20610 | 10.19400 | .13901 | -.19102 | .06272 | -.34757 | .10179 | -.03656 | .23679 |
| | GRADIENT | .00000 | .00000 | .00000 | .00000 | .00000 | .00000 | .00000 | .00000 | .00000 | .00000 |

IA143, AEDC V41A-P8A, O/ET W/R.H. SRB SEPARATING (OVX906) ( 23 MAY 77 )

REFERENCE DATA

SREF = 2690.0000 SQ.FT. XMRP = 1097.0000 IN. XT
LREF = 1290.3000 INCHES YMRP = .0000 IN. YT
BREF = 1290.3000 INCHES ZMRP = 450.0000 IN. ZT
SCALE = .0100

PARAMETRIC DATA

ALPHA = -5.000 BETA = 10.000
DALPHA = -10.000 DBETA = .000
X = 300.000 MACH = 4.500
JET PC = .000

RUN NO. 4430/ 0 RN/L = 2.37 GRADIENT INTERVAL = -5.00/ 5.00

| Y | Z | X | ALPHA | BETA | PHI | CN | CLM | CY | CYN | CBL | CA |
|---|---|---|---|---|---|---|---|---|---|---|---|
| -201.060 | 100.540 | 299.94000 | -5.21330 | 10.18800 | .13699 | -.16206 | .04222 | -.37600 | .12033 | -.04391 | .24058 |
| -200.710 | 150.450 | 299.94000 | -5.21290 | 10.18900 | .13763 | -.16325 | .04287 | -.37317 | .11846 | -.04310 | .23871 |
| -200.590 | 200.370 | 299.78000 | -5.21150 | 10.19000 | .14360 | -.17258 | .04919 | -.36705 | .11419 | -.04032 | .23623 |
| -200.550 | 250.270 | 299.79000 | -5.20900 | 10.19000 | .15614 | -.18590 | .05961 | -.36051 | .10996 | -.03611 | .23625 |
| -200.800 | 300.320 | 299.82000 | -5.20850 | 10.19100 | .15007 | -.18563 | .05922 | -.35585 | .10719 | -.03628 | .23662 |
| -200.490 | 399.920 | 299.76000 | -5.20690 | 10.19300 | .14059 | -.18884 | .06107 | -.34915 | .10271 | -.03658 | .23692 |
| -200.660 | 425.020 | 299.80000 | -5.20650 | 10.19400 | .13948 | -.18982 | .06182 | -.34816 | .10209 | -.03658 | .23687 |
| -200.510 | 500.030 | 299.88000 | -5.20610 | 10.19400 | .13908 | -.19107 | .06274 | -.34763 | .10181 | -.03655 | .23684 |
| -200.640 | 599.880 | 299.78000 | -5.20630 | 10.19400 | .13913 | -.19129 | .06285 | -.34805 | .10198 | -.03663 | .23724 |
| | GRADIENT | .00000 | .00000 | .00000 | .00000 | .00000 | .00000 | .00000 | .00000 | .00000 | .00000 |

IA143, AEDC V41A-P8A, O/ET W/R.H. SRB SEPARATING (OVX907) ( 23 MAY 77 )

REFERENCE DATA

SREF = 2690.0000 SQ.FT. XMRP = 1097.0000 IN. XT
LREF = 1290.3000 INCHES YMRP = .0000 IN. YT
BREF = 1290.3000 INCHES ZMRP = 450.0000 IN. ZT
SCALE = .0100

PARAMETRIC DATA

ALPHA = -5.000 BETA = 10.000
DALPHA = .000 DBETA = -8.000
X = 300.000 MACH = 4.500
JET PC = .000

RUN NO. 4401/ 0 RN/L = 2.38 GRADIENT INTERVAL = -5.00/ 5.00

| Y | Z | X | ALPHA | BETA | PHI | CN | CLM | CY | CYN | CBL | CA |
|---|---|---|---|---|---|---|---|---|---|---|---|
| -51.335 | 250.030 | 299.98000 | -5.20560 | 10.19700 | .17123 | -.17506 | .05699 | -.37409 | .11383 | -.03557 | .23649 |
| -51.349 | 299.910 | 299.89000 | -5.20540 | 10.19300 | .16180 | -.17555 | .05643 | -.36446 | .11058 | -.03563 | .23680 |
| -51.183 | 399.730 | 299.81000 | -5.20660 | 10.19300 | .14128 | -.18079 | .05667 | -.34892 | .10283 | -.03645 | .23673 |
| -51.289 | 424.660 | 299.95000 | -5.20670 | 10.19400 | .13891 | -.18487 | .05882 | -.34764 | .10173 | -.03659 | .23693 |
| -51.441 | 499.390 | 300.06000 | -5.20640 | 10.19400 | .13911 | -.19074 | .06254 | -.34773 | .10176 | -.03657 | .23729 |
| -51.388 | 599.510 | 300.01000 | -5.20640 | 10.19400 | .13907 | -.19079 | .06256 | -.34788 | .10182 | -.03660 | .23736 |
| | GRADIENT | .00000 | .00000 | .00000 | .00000 | .00000 | .00000 | .00000 | .00000 | .00000 | .00000 |

IA143, AEDC V41A-P8A, O/ET W/R.H. SRB SEPARATING (OVX908) ( 23 MAY 77 )

REFERENCE DATA

SREF = 2690.0000 SQ.FT. XMRP = 1097.0000 IN. XT
LREF = 1290.3000 INCHES YMRP = .0000 IN. YT
BREF = 1290.3000 INCHES ZMRP = 450.0000 IN. ZT
SCALE = .0100

PARAMETRIC DATA

ALPHA = -5.000 BETA = 10.000
DALPHA = -10.000 DBETA = -8.000
X = 300.000 MACH = 4.500
JET PC = .000

RUN NO. 4436/ 0 RN/L = 2.37 GRADIENT INTERVAL = -5.00/ 5.00

| Y | Z | X | ALPHA | BETA | PHI | CN | CLM | CY | CYN | CBL | CA |
|---|---|---|---|---|---|---|---|---|---|---|---|
| -51.478 | 425.230 | 299.86000 | -5.20910 | 10.18800 | .16098 | -.16486 | .04740 | -.36222 | .11177 | -.03565 | .23461 |
| -51.167 | 499.500 | 299.60000 | -5.20750 | 10.19300 | .14081 | -.18023 | .05547 | -.34878 | .10260 | -.03649 | .23525 |
| -51.062 | 599.640 | 299.77000 | -5.20620 | 10.19400 | .13913 | -.19112 | .06264 | -.34759 | .10175 | -.03655 | .23613 |
| | GRADIENT | .00000 | .00000 | .00000 | .00000 | .00000 | .00000 | .00000 | .00000 | .00000 | .00000 |

IA143, AEDC V41A-P8A, O/ET W/R.H. SRB SEPARATING (OVX909) ( 23 MAY 77 )

REFERENCE DATA

SREF = 2690.0000 SQ.FT. XMRP = 1097.0000 IN. XT
LREF = 1290.3000 INCHES YMRP = .0000 IN. YT
BREF = 1290.3000 INCHES ZMRP = 450.0000 IN. ZT
SCALE = .0100

PARAMETRIC DATA

ALPHA = -5.000 BETA = 10.000
DALPHA = .000 DBETA = -8.000
X = 300.000 MACH = 4.500
JET PC = .000

RUN NO. 4400/ 0 RN/L = 2.38 GRADIENT INTERVAL = -5.00/ 5.00

| Y | Z | X | ALPHA | BETA | PHI | CN | CLM | CY | CYN | CBL | CA |
|---|---|---|---|---|---|---|---|---|---|---|---|
| -201.360 | 100.060 | 299.88000 | -5.21260 | 10.19100 | .15325 | -.17039 | .04866 | -.37544 | .11803 | -.04012 | .23816 |
| -200.470 | 249.830 | 299.74000 | -5.20870 | 10.19200 | .14939 | -.18437 | .05849 | -.35511 | .10665 | -.03626 | .23696 |
| -201.050 | 299.720 | 299.87000 | -5.20780 | 10.19300 | .14323 | -.18632 | .05986 | -.35083 | .10380 | -.03647 | .23719 |
| -201.160 | 399.690 | 299.89000 | -5.20660 | 10.19400 | .13910 | -.19073 | .06244 | -.34796 | .10186 | -.03662 | .23723 |
| -201.020 | 424.790 | 299.77000 | -5.20650 | 10.19400 | .13909 | -.19079 | .06253 | -.34781 | .10180 | -.03660 | .23718 |
| -201.140 | 499.620 | 299.77000 | -5.20640 | 10.19400 | .13904 | -.19086 | .06258 | -.34784 | .10181 | -.03660 | .23746 |
| -201.150 | 599.730 | 299.87000 | -5.20660 | 10.19400 | .13915 | -.19097 | .06263 | -.34793 | .10185 | -.03660 | .23743 |
| | GRADIENT | .00000 | .00000 | .00000 | .00000 | .00000 | .00000 | .00000 | .00000 | .00000 | .00000 |

IA143, AEDC V41A-P8A, O/ET W/R.H. SRB SEPARATING (OVX910) ( 23 MAY 77 )

REFERENCE DATA

SREF = 2690.0000 SQ.FT. XMRP = 1097.0000 IN. XT
LREF = 1290.3000 INCHES YMRP = .0000 IN. YT
BREF = 1290.3000 INCHES ZMRP = 450.0000 IN. ZT
SCALE = .0100

PARAMETRIC DATA

ALPHA = -5.000 BETA = 10.000
DALPHA = -10.000 DBETA = -8.000
X = 300.000 MACH = 4.500
JET PC = .000

RUN NO. 4435/ 0 RN/L = 2.37 GRADIENT INTERVAL = -5.00/ 5.00

| Y | Z | X | ALPHA | BETA | PHI | CN | CLM | CY | CYN | CBL | CA |
|---|---|---|---|---|---|---|---|---|---|---|---|
| -201.590 | 100.410 | 299.86000 | -5.22280 | 10.18900 | .13396 | -.12782 | .01583 | -.40158 | .13437 | -.05036 | .23803 |
| -199.200 | 250.380 | 299.57000 | -5.21210 | 10.18600 | .17984 | -.18061 | .05676 | -.37819 | .12068 | -.03538 | .23476 |
| -200.810 | 300.100 | 299.70000 | -5.21160 | 10.18700 | .16804 | -.17856 | .05487 | -.36879 | .11561 | -.03569 | .23577 |
| -200.470 | 399.760 | 299.68000 | -5.20800 | 10.19200 | .14407 | -.18502 | .05848 | -.35138 | .10435 | -.03644 | .23607 |
| -201.110 | 424.970 | 299.80000 | -5.20690 | 10.19300 | .14079 | -.18767 | .06028 | -.34887 | .10266 | -.03650 | .23614 |
| -201.000 | 499.820 | 299.70000 | -5.20610 | 10.19400 | .13905 | -.19111 | .06268 | -.34780 | .10184 | -.03659 | .23646 |
| -201.210 | 599.730 | 299.82000 | -5.20610 | 10.19400 | .13904 | -.19103 | .06276 | -.34761 | .10181 | -.03656 | .23692 |
| | GRADIENT | .00000 | .00000 | .00000 | .00000 | .00000 | .00000 | .00000 | .00000 | .00000 | .00000 |

IA143, AEDC V41A-P8A, O/ET W/R.H. SRB SEPARATING (OVX911) ( 23 MAY 77 )

REFERENCE DATA

SREF = 2690.0000 SQ.FT. XMRP = 1097.0000 IN. XT
LREF = 1290.3000 INCHES YMRP = .0000 IN. YT
BREF = 1290.3000 INCHES ZMRP = 450.0000 IN. ZT
SCALE = .0100

PARAMETRIC DATA

ALPHA = -5.000 BETA = 10.000
DALPHA = -5.000 DBETA = .000
X = 300.000 MACH = 4.500
JET PC = .000

RUN NO. 4410/ 0 RN/L = 2.36 GRADIENT INTERVAL = -5.00/ 5.00

| Y | Z | X | ALPHA | BETA | PHI | CN | CLM | CY | CYN | CBL | CA |
|---|---|---|---|---|---|---|---|---|---|---|---|
| -101.040 | 100.230 | 299.88000 | -5.21330 | 10.20000 | .15423 | -.16687 | .04772 | -.38857 | .12137 | -.04230 | .24405 |
| -100.710 | 150.410 | 299.82000 | -5.21270 | 10.20000 | .14954 | -.15841 | .04193 | -.38543 | .12004 | -.04262 | .24104 |
| -100.570 | 200.120 | 299.85000 | -5.21180 | 10.19800 | .15588 | -.16577 | .04644 | -.38061 | .11785 | -.04027 | .23667 |
| | GRADIENT | .00000 | .00000 | .00000 | .00000 | .00000 | .00000 | .00000 | .00000 | .00000 | .00000 |

RUN NO. 4411/ 0 RN/L = 2.37 GRADIENT INTERVAL = -5.00/ 5.00

| Y | Z | X | ALPHA | BETA | PHI | CN | CLM | CY | CYN | CBL | CA |
|---|---|---|---|---|---|---|---|---|---|---|---|
| -199.560 | 198.790 | 299.75000 | -5.20920 | 10.19100 | .15033 | -.18435 | .05821 | -.35925 | .10904 | -.03701 | .23675 |
| -200.980 | 150.130 | 299.79000 | -5.21070 | 10.19100 | .14064 | -.17377 | .05038 | -.36403 | .11241 | -.04022 | .23773 |
| -200.980 | 100.040 | 299.84000 | -5.21120 | 10.19000 | .14243 | -.17216 | .04966 | -.36785 | .11479 | -.04078 | .23923 |
| | GRADIENT | .00000 | .00000 | .00000 | .00000 | .00000 | .00000 | .00000 | .00000 | .00000 | .00000 |

IA143, AEDC V41A-P8A, O/ET W/R.H. SRB SEPARATING (OVX912) ( 23 MAY 77 )

REFERENCE DATA

SREF = 2690.0000 SQ.FT. XMRP = 1097.0000 IN. XT
LREF = 1290.3000 INCHES YMRP = .0000 IN. YT
BREF = 1290.3000 INCHES ZMRP = 450.0000 IN. ZT
SCALE = .0100

PARAMETRIC DATA

ALPHA = -5.000 BETA = 10.000
DALPHA = -10.000 DBETA = .000
X = 300.000 MACH = 4.500
JET PC = .000

RUN NO. 4431/ 0 RN/L = 2.37 GRADIENT INTERVAL = -5.00/ 5.00

| Y | Z | X | ALPHA | BETA | PHI | CN | CLM | CY | CYN | CBL | CA |
|---|---|---|---|---|---|---|---|---|---|---|---|
| -151.040 | 100.440 | 299.87000 | -5.21570 | 10.19200 | .14436 | -.15552 | .03834 | -.39197 | .12740 | -.04576 | .24279 |
| -150.770 | 150.610 | 299.87000 | -5.21540 | 10.19300 | .14384 | -.15245 | .03608 | -.38753 | .12459 | -.04480 | .24034 |
| -150.670 | 200.390 | 299.75000 | -5.21390 | 10.19200 | .14706 | -.15981 | .04073 | -.38150 | .12123 | -.04273 | .23672 |
| | GRADIENT | .00000 | .00000 | .00000 | .00000 | .00000 | .00000 | .00000 | .00000 | .00000 | .00000 |

IA143, AEDC V41A-P8A, O/ET W/R.H. SRB SEPARATING (OVX913) ( 23 MAY 77 )

REFERENCE DATA

SREF = 2690.0000 SQ.FT. XMRP = 1097.0000 IN. XT
LREF = 1290.3000 INCHES YMRP = .0000 IN. YT
BREF = 1290.3000 INCHES ZMRP = 450.0000 IN. ZT
SCALE = .0100

PARAMETRIC DATA

ALPHA = -5.000 BETA = 10.000
DALPHA = -5.000 DBETA = -4.000
X = 300.000 MACH = 4.500
JET PC = .000

RUN NO. 4413/ 0 RN/L = 2.38 GRADIENT INTERVAL = -5.00/ 5.00

| Y | Z | X | ALPHA | BETA | PHI | CN | CLM | CY | CYN | CBL | CA |
|---|---|---|---|---|---|---|---|---|---|---|---|
| -101.030 | 100.120 | 299.93000 | -5.21600 | 10.19900 | .17206 | -.16586 | .04732 | -.40355 | .12943 | -.04199 | .24376 |
| -100.850 | 150.470 | 299.74000 | -5.21450 | 10.19900 | .16102 | -.15416 | .03953 | -.39612 | .12566 | -.04263 | .24079 |
| -100.670 | 200.140 | 299.72000 | -5.21250 | 10.19900 | .16456 | -.16310 | .04525 | -.38743 | .12096 | -.03994 | .23620 |
| -100.260 | 299.980 | 299.70000 | -5.20840 | 10.19100 | .16680 | -.17641 | .05560 | -.36836 | .11372 | -.03562 | .23656 |
| | GRADIENT | .00000 | .00000 | .00000 | .00000 | .00000 | .00000 | .00000 | .00000 | .00000 | .00000 |

IA143, AEDC V41A-P8A, O/ET W/R.H. SRB SEPARATING (OVX914) ( 23 MAY 77 )

REFERENCE DATA

SREF = 2690.0000 SQ.FT. XMRP = 1097.0000 IN. XT
LREF = 1290.3000 INCHES YMRP = .0000 IN. YT
BREF = 1290.3000 INCHES ZMRP = 450.0000 IN. ZT
SCALE = .0100

PARAMETRIC DATA

ALPHA = -5.000 BETA = 10.000
DALPHA = -10.000 DBETA = -4.000
X = 300.000 MACH = 4.500
JET PC = .000

RUN NO. 4433/ 0 RN/L = 2.37 GRADIENT INTERVAL = -5.00/ 5.00

| Y | Z | X | ALPHA | BETA | PHI | CN | CLM | CY | CYN | CBL | CA |
|---|---|---|---|---|---|---|---|---|---|---|---|
| -101.140 | 100.350 | 299.78000 | -5.22490 | 10.20200 | .13900 | -.12294 | .01357 | -.42287 | .14041 | -.05332 | .24299 |
| -100.500 | 150.400 | 299.78000 | -5.22050 | 10.19900 | .16466 | -.14000 | .02833 | -.41679 | .13727 | -.04664 | .24151 |
| -100.000 | 200.440 | 299.71000 | -5.21700 | 10.19800 | .17090 | -.14671 | .03385 | -.40912 | .13311 | -.04359 | .23685 |
| | GRADIENT | .00000 | .00000 | .00000 | .00000 | .00000 | .00000 | .00000 | .00000 | .00000 | .00000 |

RUN NO. 4434/ 0 RN/L = 2.37 GRADIENT INTERVAL = -5.00/ 5.00

| Y | Z | X | ALPHA | BETA | PHI | CN | CLM | CY | CYN | CBL | CA |
|---|---|---|---|---|---|---|---|---|---|---|---|
| -199.730 | 198.830 | 299.41000 | -5.21290 | 10.18900 | .15062 | -.17003 | .04744 | -.37376 | .11812 | -.04041 | .23601 |
| -201.070 | 150.220 | 299.68000 | -5.21490 | 10.18800 | .14220 | -.15659 | .03819 | -.38189 | .12337 | -.04414 | .23856 |
| -201.690 | 100.280 | 299.89000 | -5.21600 | 10.18900 | .13666 | -.15160 | .03443 | -.38521 | .12527 | -.04606 | .24009 |
| | GRADIENT | .00000 | .00000 | .00000 | .00000 | .00000 | .00000 | .00000 | .00000 | .00000 | .00000 |

IA143, AEDC V41A-P8A, O/ET W/R.H. SRB SEPARATING (OVX915) ( 23 MAY 77 )

REFERENCE DATA

SREF = 2690.0000 SQ.FT. XMRP = 1097.0000 IN. XT
LREF = 1290.3000 INCHES YMRP = .0000 IN. YT
BREF = 1290.3000 INCHES ZMRP = 450.0000 IN. ZT
SCALE = .0100

PARAMETRIC DATA

ALPHA = -5.000 BETA = 10.000
DALPHA = -5.000 DBETA = -4.000
X = 300.000 MACH = 4.500
JET PC = .000

RUN NO. 4412/ 0 RN/L = 2.38 GRADIENT INTERVAL = -5.00/ 5.00

| Y | Z | X | ALPHA | BETA | PHI | CN | CLM | CY | CYN | CBL | CA |
|---|---|---|---|---|---|---|---|---|---|---|---|
| -201.450 | 100.160 | 299.89000 | -5.21270 | 10.19000 | .14701 | -.16897 | .04740 | -.37368 | .11804 | -.04117 | .23917 |
| -201.010 | 150.140 | 299.90000 | -5.21170 | 10.19000 | .14677 | -.17249 | .04960 | -.36891 | .11515 | -.04008 | .23760 |
| -201.050 | 200.080 | 299.85000 | -5.20980 | 10.19000 | .15580 | -.18340 | .05779 | -.36218 | .11099 | -.03661 | .23639 |
| | GRADIENT | .00000 | .00000 | .00000 | .00000 | .00000 | .00000 | .00000 | .00000 | .00000 | .00000 |

IA143, AEDC V41A-P8A, O/ET W/R.H. SRB SEPARATING (OVX916) ( 23 MAY 77 )

REFERENCE DATA

SREF = 2690.0000 SQ.FT. XMRP = 1097.0000 IN. XT
LREF = 1290.3000 INCHES YMRP = .0000 IN. YT
BREF = 1290.3000 INCHES ZMRP = 450.0000 IN. ZT
SCALE = .0100

PARAMETRIC DATA

ALPHA = -5.000 BETA = 10.000
DALPHA = -6.000 DBETA = -2.000
X = 300.000 MACH = 4.500
JET PC = .000

RUN NO. 4428/ 0 RN/L = 2.38 GRADIENT INTERVAL = -5.00/ 5.00

| Y | Z | X | ALPHA | BETA | PHI | CN | CLM | CY | CYN | CBL | CA |
|---|---|---|---|---|---|---|---|---|---|---|---|
| -100.620 | 100.200 | 299.77000 | -5.21470 | 10.20000 | .16039 | -.16546 | .04662 | -.39706 | .12581 | -.04292 | .24388 |
| -100.480 | 200.550 | 299.88000 | -5.21230 | 10.19900 | .15873 | -.16207 | .04414 | -.38622 | .12051 | -.04088 | .23629 |
| -100.120 | 300.110 | 299.76000 | -5.20860 | 10.19000 | .16751 | -.17772 | .05620 | -.36897 | .11416 | -.03560 | .23619 |
| | GRADIENT | .00000 | .00000 | .00000 | .00000 | .00000 | .00000 | .00000 | .00000 | .00000 | .00000 |

IA143, AEDC V41A-P8A, O/ET W/R.H. SRB SEPARATING (OVX917) ( 23 MAY 77 )

REFERENCE DATA

SREF = 2690.0000 SQ.FT. XMRP = 1097.0000 IN. XT
LREF = 1290.3000 INCHES YMRP = .0000 IN. YT
BREF = 1290.3000 INCHES ZMRP = 450.0000 IN. ZT
SCALE = .0100

PARAMETRIC DATA

ALPHA = -5.000 BETA = 10.000
DALPHA = -6.000 DBETA = -2.000
X = 300.000 MACH = 4.500
JET PC = .000

RUN NO. 4457/ 0 RN/L = 2.36 GRADIENT INTERVAL = -5.00/ 5.00

| Y | Z | X | ALPHA | BETA | PHI | CN | CLM | CY | CYN | CBL | CA |
|---|---|---|---|---|---|---|---|---|---|---|---|
| -100.840 | 100.220 | 299.81000 | -5.21390 | 10.19900 | .15951 | -.16545 | .04656 | -.39696 | .12579 | -.04296 | .24361 |
| -100.460 | 200.510 | 299.90000 | -5.21180 | 10.19800 | .15778 | -.16178 | .04385 | -.38644 | .12063 | -.04103 | .23633 |
| -100.140 | 300.140 | 299.78000 | -5.20830 | 10.19000 | .16723 | -.17790 | .05625 | -.36928 | .11423 | -.03564 | .23616 |
| | GRADIENT | .00000 | .00000 | .00000 | .00000 | .00000 | .00000 | .00000 | .00000 | .00000 | .00000 |

IA143, AEDC V41A-P8A, O/ET W/R.H. SRB SEPARATING (OVX918) ( 23 MAY 77 )

REFERENCE DATA

SREF = 2690.0000 SQ.FT. XMRP = 1097.0000 IN. XT
LREF = 1290.3000 INCHES YMRP = .0000 IN. YT
BREF = 1290.3000 INCHES ZMRP = 450.0000 IN. ZT
SCALE = .0100

PARAMETRIC DATA

ALPHA = -5.000 BETA = 10.000
DALPHA = .000 DBETA = 4.000
X = 600.000 MACH = 4.500
JET PC = .000

RUN NO. 4404/ 0 RN/L = 2.37 GRADIENT INTERVAL = -5.00/ 5.00

| Y | Z | X | ALPHA | BETA | PHI | CN | CLM | CY | CYN | CBL | CA |
|---|---|---|---|---|---|---|---|---|---|---|---|
| -104.220 | 198.010 | 601.36000 | -5.20920 | 10.19100 | .15245 | -.18519 | .05903 | -.35731 | .10814 | -.03617 | .23723 |
| -101.140 | 250.180 | 599.86000 | -5.20860 | 10.19200 | .14729 | -.18538 | .05895 | -.35344 | .10574 | -.03631 | .23720 |
| -101.080 | 399.730 | 599.79000 | -5.20630 | 10.19400 | .13907 | -.19070 | .06248 | -.34779 | .10177 | -.03656 | .23712 |
| -101.030 | 449.620 | 599.77000 | -5.20650 | 10.19400 | .13916 | -.19087 | .06261 | -.34792 | .10185 | -.03659 | .23760 |
| -100.740 | 499.530 | 599.91000 | -5.20640 | 10.19400 | .13904 | -.19076 | .06254 | -.34760 | .10174 | -.03656 | .23730 |
| -100.990 | 599.240 | 599.83000 | -5.20660 | 10.19400 | .13917 | -.19080 | .06254 | -.34778 | .10180 | -.03658 | .23733 |
| | GRADIENT | .00000 | .00000 | .00000 | .00000 | .00000 | .00000 | .00000 | .00000 | .00000 | .00000 |

RUN NO. 4405/ 0 RN/L = 2.37 GRADIENT INTERVAL = -5.00/ 5.00

| Y | Z | X | ALPHA | BETA | PHI | CN | CLM | CY | CYN | CBL | CA |
|---|---|---|---|---|---|---|---|---|---|---|---|
| -300.790 | 599.400 | 599.83000 | -5.20660 | 10.19400 | .13923 | -.19076 | .06255 | -.34761 | .10176 | -.03655 | .23736 |
| -300.910 | 499.800 | 599.83000 | -5.20650 | 10.19400 | .13911 | -.19082 | .06257 | -.34774 | .10182 | -.03657 | .23740 |
| -301.310 | 449.880 | 599.92000 | -5.20650 | 10.19400 | .13916 | -.19070 | .06251 | -.34763 | .10175 | -.03655 | .23727 |
| -300.880 | 399.890 | 599.90000 | -5.20670 | 10.19400 | .13922 | -.19089 | .06260 | -.34782 | .10181 | -.03658 | .23755 |
| -300.950 | 249.940 | 599.84000 | -5.20650 | 10.19400 | .13915 | -.19085 | .06259 | -.34765 | .10174 | -.03656 | .23742 |
| -300.850 | 200.060 | 599.82000 | -5.20640 | 10.19400 | .13907 | -.19080 | .06260 | -.34774 | .10178 | -.03657 | .23753 |
| | GRADIENT | .00000 | .00000 | .00000 | .00000 | .00000 | .00000 | .00000 | .00000 | .00000 | .00000 |

IA143, AEDC V41A-P8A, O/ET W/R.H. SRB SEPARATING (OVX919) ( 23 MAY 77 )

REFERENCE DATA

SREF = 2690.0000 SQ.FT. XMRP = 1097.0000 IN. XT
LREF = 1290.3000 INCHES YMRP = .0000 IN. YT
BREF = 1290.3000 INCHES ZMRP = 450.0000 IN. ZT
SCALE = .0100

PARAMETRIC DATA

ALPHA = -5.000 BETA = 10.000
DALPHA = -15.000 DBETA = 4.000
X = 600.000 MACH = 4.500
JET PC = .000

RUN NO. 4458/ 0 RN/L = 2.36 GRADIENT INTERVAL = -5.00/ 5.00

| Y | Z | X | ALPHA | BETA | PHI | CN | CLM | CY | CYN | CBL | CA |
|---|---|---|---|---|---|---|---|---|---|---|---|
| -101.050 | 200.530 | 599.59000 | -5.21250 | 10.18800 | .16908 | -.17882 | .05398 | -.37756 | .11965 | -.03725 | .23438 |
| -100.750 | 250.760 | 599.68000 | -5.21090 | 10.18600 | .17182 | -.18135 | .05699 | -.37243 | .11742 | -.03559 | .23583 |
| -100.960 | 400.630 | 599.79000 | -5.20710 | 10.19200 | .14291 | -.18525 | .05858 | -.35060 | .10390 | -.03640 | .23611 |
| -100.980 | 450.200 | 599.65000 | -5.20560 | 10.19300 | .13867 | -.19047 | .06202 | -.34788 | .10188 | -.03658 | .23586 |
| -100.880 | 500.040 | 599.71000 | -5.20560 | 10.19300 | .13864 | -.19135 | .06274 | -.34800 | .10191 | -.03662 | .23640 |
| -100.540 | 599.510 | 599.49000 | -5.20560 | 10.19300 | .13867 | -.19130 | .06278 | -.34796 | .10196 | -.03661 | .23674 |
| | GRADIENT | .00000 | .00000 | .00000 | .00000 | .00000 | .00000 | .00000 | .00000 | .00000 | .00000 |

RUN NO. 4459/ 0 RN/L = 2.36 GRADIENT INTERVAL = -5.00/ 5.00

| Y | Z | X | ALPHA | BETA | PHI | CN | CLM | CY | CYN | CBL | CA |
|---|---|---|---|---|---|---|---|---|---|---|---|
| -300.400 | 598.220 | 599.16000 | -5.20580 | 10.19300 | .13881 | -.19150 | .06283 | -.34803 | .10192 | -.03659 | .23692 |
| -300.730 | 500.490 | 599.81000 | -5.20570 | 10.19300 | .13870 | -.19144 | .06279 | -.34807 | .10197 | -.03662 | .23685 |
| -300.250 | 450.410 | 599.62000 | -5.20570 | 10.19300 | .13870 | -.19140 | .06278 | -.34776 | .10186 | -.03656 | .23674 |
| -301.140 | 400.510 | 599.77000 | -5.20570 | 10.19300 | .13868 | -.19141 | .06280 | -.34774 | .10187 | -.03657 | .23680 |
| -300.910 | 250.400 | 599.71000 | -5.20560 | 10.19300 | .13867 | -.19145 | .06280 | -.34796 | .10190 | -.03659 | .23681 |
| -300.820 | 200.560 | 599.75000 | -5.20570 | 10.19300 | .13867 | -.19141 | .06276 | -.34795 | .10190 | -.03661 | .23658 |
| | GRADIENT | .00000 | .00000 | .00000 | .00000 | .00000 | .00000 | .00000 | .00000 | .00000 | .00000 |

IA143, AEDC V41A-P8A, O/ET W/R.H. SRB SEPARATING (OVX920) ( 23 MAY 77 )

REFERENCE DATA

SREF = 2690.0000 SQ.FT. XMRP = 1097.0000 IN. XT
LREF = 1290.3000 INCHES YMRP = .0000 IN. YT
BREF = 1290.3000 INCHES ZMRP = 450.0000 IN. ZT
SCALE = .0100

PARAMETRIC DATA

ALPHA = -5.000 BETA = 10.000
DALPHA = -15.000 DBETA = 4.000
X = 600.000 MACH = 4.500
JET PC = .000

RUN NO. 4496/ 0 RN/L = 2.37 GRADIENT INTERVAL = -5.00/ 5.00

| Y | Z | X | ALPHA | BETA | PHI | CN | CLM | CY | CYN | CBL | CA |
|---|---|---|---|---|---|---|---|---|---|---|---|
| -101.320 | 200.510 | 599.73000 | -5.21230 | 10.18800 | .16850 | -.17892 | .05401 | -.37689 | .11944 | -.03721 | .23426 |
| -100.980 | 250.800 | 599.81000 | -5.21070 | 10.18600 | .17115 | -.18141 | .05693 | -.37213 | .11728 | -.03563 | .23584 |
| -101.360 | 400.600 | 599.68000 | -5.20690 | 10.19200 | .14237 | -.18577 | .05887 | -.35042 | .10374 | -.03644 | .23600 |
| -100.900 | 450.150 | 599.54000 | -5.20550 | 10.19300 | .13849 | -.19089 | .06228 | -.34791 | .10188 | -.03659 | .23616 |
| -100.830 | 500.050 | 599.55000 | -5.20550 | 10.19300 | .13858 | -.19144 | .06276 | -.34795 | .10191 | -.03660 | .23657 |
| -100.340 | 599.610 | 599.41000 | -5.20550 | 10.19300 | .13861 | -.19140 | .06277 | -.34795 | .10193 | -.03658 | .23671 |
| | GRADIENT | .00000 | .00000 | .00000 | .00000 | .00000 | .00000 | .00000 | .00000 | .00000 | .00000 |

IA143, AEDC V41A-P8A, O/ET W/R.H. SRB SEPARATING (OVX921) ( 23 MAY 77 )

REFERENCE DATA

SREF = 2690.0000 SQ.FT. XMRP = 1097.0000 IN. XT
LREF = 1290.3000 INCHES YMRP = .0000 IN. YT
BREF = 1290.3000 INCHES ZMRP = 450.0000 IN. ZT
SCALE = .0100

PARAMETRIC DATA

ALPHA = -5.000 BETA = 10.000
DALPHA = .000 DBETA = -12.000
X = 600.000 MACH = 4.500
JET PC = .000

RUN NO. 4402/ 0 RN/L = 2.37 GRADIENT INTERVAL = -5.00/ 5.00

| Y | Z | X | ALPHA | BETA | PHI | CN | CLM | CY | CYN | CBL | CA |
|---|---|---|---|---|---|---|---|---|---|---|---|
| -101.060 | 249.880 | 599.74000 | -5.20970 | 10.19000 | .15851 | -.17787 | .05490 | -.36172 | .11067 | -.03592 | .23675 |
| -101.330 | 399.870 | 599.81000 | -5.20660 | 10.19400 | .13914 | -.18917 | .06138 | -.34774 | .10180 | -.03656 | .23697 |
| -101.060 | 449.960 | 599.78000 | -5.20650 | 10.19400 | .13919 | -.19076 | .06251 | -.34754 | .10171 | -.03651 | .23713 |
| -100.930 | 499.760 | 599.72000 | -5.20650 | 10.19400 | .13918 | -.19073 | .06254 | -.34761 | .10175 | -.03654 | .23733 |
| -101.170 | 599.360 | 599.74000 | -5.20640 | 10.19400 | .13909 | -.19080 | .06256 | -.34752 | .10170 | -.03653 | .23734 |
| | GRADIENT | .00000 | .00000 | .00000 | .00000 | .00000 | .00000 | .00000 | .00000 | .00000 | .00000 |

IA143, AEDC V41A-P8A, O/ET W/R.H. SRB SEPARATING (OVX922) ( 23 MAY 77 )

REFERENCE DATA

SREF = 2690.0000 SQ.FT. XMRP = 1097.0000 IN. XT
LREF = 1290.3000 INCHES YMRP = .0000 IN. YT
BREF = 1290.3000 INCHES ZMRP = 450.0000 IN. ZT
SCALE = .0100

PARAMETRIC DATA

ALPHA = -5.000 BETA = 10.000
DALPHA = -15.000 DBETA = -12.000
X = 600.000 MACH = 4.500
JET PC = .000

RUN NO. 4464/ 0 RN/L = 2.36 GRADIENT INTERVAL = -5.00/ 5.00

| Y | Z | X | ALPHA | BETA | PHI | CN | CLM | CY | CYN | CBL | CA |
|---|---|---|---|---|---|---|---|---|---|---|---|
| -101.170 | 450.370 | 599.58000 | -5.20790 | 10.19100 | .14443 | -.17969 | .05457 | -.35141 | .10453 | -.03629 | .23412 |
| -101.050 | 500.160 | 599.65000 | -5.20590 | 10.19300 | .13890 | -.18878 | .06073 | -.34789 | .10181 | -.03653 | .23484 |
| -100.990 | 600.180 | 599.54000 | -5.20550 | 10.19300 | .13868 | -.19124 | .06262 | -.34774 | .10176 | -.03654 | .23619 |
| | GRADIENT | .00000 | .00000 | .00000 | .00000 | .00000 | .00000 | .00000 | .00000 | .00000 | .00000 |

IA143, AEDC V41A-P8A, O/ET W/R.H. SRB SEPARATING (OVX923) ( 23 MAY 77 )

REFERENCE DATA

SREF = 2690.0000 SQ.FT. XMRP = 1097.0000 IN. XT
LREF = 1290.3000 INCHES YMRP = .0000 IN. YT
BREF = 1290.3000 INCHES ZMRP = 450.0000 IN. ZT
SCALE = .0100

PARAMETRIC DATA

ALPHA = -5.000 BETA = 10.000
DALPHA = .000 DBETA = -12.000
X = 600.000 MACH = 4.500
JET PC = .000

RUN NO. 4403/ 0 RN/L = 2.38 GRADIENT INTERVAL = -5.00/ 5.00

| Y | Z | X | ALPHA | BETA | PHI | CN | CLM | CY | CYN | CBL | CA |
|---|---|---|---|---|---|---|---|---|---|---|---|
| -301.150 | 199.960 | 599.65000 | -5.20670 | 10.19400 | .13932 | -.19074 | .06251 | -.34788 | .10184 | -.03658 | .23725 |
| -300.700 | 249.910 | 599.73000 | -5.20640 | 10.19400 | .13911 | -.19078 | .06255 | -.34780 | .10180 | -.03657 | .23741 |
| -300.480 | 399.650 | 599.53000 | -5.20650 | 10.19400 | .13915 | -.19076 | .06255 | -.34771 | .10178 | -.03656 | .23737 |
| -300.970 | 449.780 | 599.78000 | -5.20660 | 10.19400 | .13923 | -.19086 | .06258 | -.34781 | .10181 | -.03656 | .23750 |
| -301.030 | 499.800 | 599.70000 | -5.20640 | 10.19400 | .13907 | -.19067 | .06252 | -.34750 | .10171 | -.03654 | .23733 |
| -301.160 | 599.580 | 599.68000 | -5.20650 | 10.19400 | .13915 | -.19077 | .06257 | -.34761 | .10174 | -.03655 | .23744 |
| | GRADIENT | .00000 | .00000 | .00000 | .00000 | .00000 | .00000 | .00000 | .00000 | .00000 | .00000 |

IA143, AEDC V41A-P8A, O/ET W/R.H. SRB SEPARATING (OVX924) ( 23 MAY 77 )

REFERENCE DATA

SREF = 2690.0000 SQ.FT. XMRP = 1097.0000 IN. XT
LREF = 1290.3000 INCHES YMRP = .0000 IN. YT
BREF = 1290.3000 INCHES ZMRP = 450.0000 IN. ZT
SCALE = .0100

PARAMETRIC DATA

ALPHA = -5.000 BETA = 10.000
DALPHA = .000 DBETA = -12.000
X = 600.000 MACH = 4.500
JET PC = .000

RUN NO. 4427/ 0 RN/L = 2.38 GRADIENT INTERVAL = -5.00/ 5.00

| Y | Z | X | ALPHA | BETA | PHI | CN | CLM | CY | CYN | CBL | CA |
|---|---|---|---|---|---|---|---|---|---|---|---|
| -301.530 | 200.010 | 599.87000 | -5.20620 | 10.19400 | .13912 | -.19121 | .06279 | -.34780 | .10185 | -.03657 | .23703 |
| -300.660 | 249.930 | 599.75000 | -5.20650 | 10.19400 | .13926 | -.19123 | .06278 | -.34756 | .10182 | -.03654 | .23690 |
| -300.480 | 399.640 | 599.64000 | -5.20640 | 10.19400 | .13923 | -.19123 | .06281 | -.34754 | .10180 | -.03653 | .23704 |
| -300.810 | 449.900 | 599.71000 | -5.20630 | 10.19400 | .13912 | -.19130 | .06282 | -.34784 | .10188 | -.03658 | .23717 |
| -301.130 | 499.760 | 599.65000 | -5.20620 | 10.19400 | .13905 | -.19124 | .06282 | -.34781 | .10186 | -.03659 | .23708 |
| -300.860 | 599.600 | 599.72000 | -5.20650 | 10.19400 | .13920 | -.19123 | .06282 | -.34791 | .10189 | -.03659 | .23721 |
| | GRADIENT | .00000 | .00000 | .00000 | .00000 | .00000 | .00000 | .00000 | .00000 | .00000 | .00000 |

IA143, AEDC V41A-P8A, O/ET W/R.H. SRB SEPARATING (OVX925) ( 23 MAY 77 )

REFERENCE DATA

SREF = 2690.0000 SQ.FT. XMRP = 1097.0000 IN. XT
LREF = 1290.3000 INCHES YMRP = .0000 IN. YT
BREF = 1290.3000 INCHES ZMRP = 450.0000 IN. ZT
SCALE = .0100

PARAMETRIC DATA

ALPHA = -5.000 BETA = 10.000
DALPHA = -15.000 DBETA = -12.000
X = 600.000 MACH = 4.500
JET PC = .000

RUN NO. 4465/ 0 RN/L = 2.36 GRADIENT INTERVAL = -5.00/ 5.00

| Y | Z | X | ALPHA | BETA | PHI | CN | CLM | CY | CYN | CBL | CA |
|---|---|---|---|---|---|---|---|---|---|---|---|
| -300.840 | 200.620 | 599.60000 | -5.20560 | 10.19300 | .13981 | -.19050 | .06182 | -.34871 | .10242 | -.03654 | .23423 |
| -300.470 | 250.640 | 599.52000 | -5.20540 | 10.19300 | .13847 | -.19115 | .06239 | -.34770 | .10170 | -.03655 | .23544 |
| -299.690 | 400.460 | 599.33000 | -5.20560 | 10.19300 | .13868 | -.19132 | .06272 | -.34793 | .10190 | -.03659 | .23655 |
| -300.400 | 450.240 | 599.45000 | -5.20570 | 10.19300 | .13876 | -.19152 | .06285 | -.34799 | .10191 | -.03658 | .23694 |
| -300.820 | 500.180 | 599.51000 | -5.20550 | 10.19300 | .13860 | -.19118 | .06276 | -.34758 | .10180 | -.03655 | .23675 |
| -300.290 | 600.090 | 599.52000 | -5.20560 | 10.19300 | .13867 | -.19136 | .06278 | -.34813 | .10198 | -.03662 | .23685 |
| | GRADIENT | .00000 | .00000 | .00000 | .00000 | .00000 | .00000 | .00000 | .00000 | .00000 | .00000 |

IA143, AEDC V41A-P8A, O/ET W/R.H. SRB SEPARATING (OVX926) ( 23 MAY 77 )

REFERENCE DATA

SREF = 2690.0000 SQ.FT. XMRP = 1097.0000 IN. XT
LREF = 1290.3000 INCHES YMRP = .0000 IN. YT
BREF = 1290.3000 INCHES ZMRP = 450.0000 IN. ZT
SCALE = .0100

PARAMETRIC DATA

ALPHA = -5.000 BETA = 10.000
DALPHA = -7.000 DBETA = -4.000
X = 600.000 MACH = 4.500
JET PC = .000

RUN NO. 4429/ 0 RN/L = 2.38 GRADIENT INTERVAL = -5.00/ 5.00

| Y | Z | X | ALPHA | BETA | PHI | CN | CLM | CY | CYN | CBL | CA |
|---|---|---|---|---|---|---|---|---|---|---|---|
| -201.230 | 200.190 | 599.80000 | -5.20870 | 10.19100 | .14951 | -.18675 | .05965 | -.35502 | .10697 | -.03625 | .23632 |
| -200.430 | 300.130 | 599.73000 | -5.20640 | 10.19400 | .13928 | -.19101 | .06255 | -.34785 | .10189 | -.03656 | .23686 |
| -200.510 | 399.760 | 599.59000 | -5.20640 | 10.19400 | .13914 | -.19127 | .06281 | -.34784 | .10188 | -.03659 | .23709 |
| | GRADIENT | .00000 | .00000 | .00000 | .00000 | .00000 | .00000 | .00000 | .00000 | .00000 | .00000 |

IA143, AEDC V41A-P8A, O/ET W/R.H. SRB SEPARATING (OVX927) ( 23 MAY 77 )

REFERENCE DATA

SREF = 2690.0000 SQ.FT. XMRP = 1097.0000 IN. XT
LREF = 1290.3000 INCHES YMRP = .0000 IN. YT
BREF = 1290.3000 INCHES ZMRP = 450.0000 IN. ZT
SCALE = .0100

PARAMETRIC DATA

ALPHA = -5.000 BETA = 10.000
DALPHA = -5.000 DBETA = .000
X = 600.000 MACH = 4.500
JET PC = .000

RUN NO. 4414/ 0 RN/L = 2.38 GRADIENT INTERVAL = -5.00/ 5.00

| Y | Z | X | ALPHA | BETA | PHI | CN | CLM | CY | CYN | CBL | CA |
|---|---|---|---|---|---|---|---|---|---|---|---|
| -101.020 | 200.010 | 599.69000 | -5.21010 | 10.18900 | .16185 | -.18372 | .05850 | -.36459 | .11236 | -.03589 | .23705 |
| -100.750 | 300.060 | 599.67000 | -5.20880 | 10.19100 | .14829 | -.18313 | .05746 | -.35412 | .10621 | -.03625 | .23679 |
| -101.080 | 399.830 | 599.81000 | -5.20650 | 10.19400 | .13922 | -.19047 | .06227 | -.34764 | .10171 | -.03552 | .23713 |
| | GRADIENT | .00000 | .00000 | .00000 | .00000 | .00000 | .00000 | .00000 | .00000 | .00000 | .00000 |

RUN NO. 4415/ 0 RN/L = 2.38 GRADIENT INTERVAL = -5.00/ 5.00

| Y | Z | X | ALPHA | BETA | PHI | CN | CLM | CY | CYN | CBL | CA |
|---|---|---|---|---|---|---|---|---|---|---|---|
| -300.330 | 398.070 | 599.61000 | -5.20650 | 10.19400 | .13922 | -.19078 | .06258 | -.34760 | .10173 | -.03653 | .23741 |
| -301.170 | 300.070 | 599.83000 | -5.20630 | 10.19400 | .13909 | -.19072 | .06255 | -.34765 | .10171 | -.03653 | .23740 |
| -301.220 | 200.060 | 599.84000 | -5.20640 | 10.19400 | .13916 | -.19075 | .06251 | -.34759 | .10173 | -.03653 | .23719 |
| | GRADIENT | .00000 | .00000 | .00000 | .00000 | .00000 | .00000 | .00000 | .00000 | .00000 | .00000 |

IA143, AEDC V41A-P8A, O/ET W/R.H. SRB SEPARATING (OVX928) ( 23 MAY 77 )

REFERENCE DATA

SREF = 2690.0000 SQ.FT. XMRP = 1097.0000 IN. XT
LREF = 1290.3000 INCHES YMRP = .0000 IN. YT
BREF = 1290.3000 INCHES ZMRP = 450.0000 IN. ZT
SCALE = .0100

PARAMETRIC DATA

ALPHA = -5.000 BETA = 10.000
DALPHA = -10.000 DBETA = .000
X = 600.000 MACH = 4.500
JET PC = .000

RUN NO. 4442/ 0 RN/L = 2.36 GRADIENT INTERVAL = -5.00/ 5.00

| Y | Z | X | ALPHA | BETA | PHI | CN | CLM | CY | CYN | CBL | CA |
|---|---|---|---|---|---|---|---|---|---|---|---|
| -100.980 | 200.340 | 599.73000 | -5.21090 | 10.18900 | .17036 | -.18403 | .05885 | -.37110 | .11615 | -.03565 | .23611 |
| -101.090 | 300.650 | 599.92000 | -5.21000 | 10.18900 | .15577 | -.18046 | .05582 | -.35977 | .10988 | -.03607 | .23623 |
| -100.530 | 399.920 | 599.65000 | -5.20690 | 10.19400 | .14022 | -.18820 | .06064 | -.34846 | .10236 | -.03654 | .23622 |
| | GRADIENT | .00000 | .00000 | .00000 | .00000 | .00000 | .00000 | .00000 | .00000 | .00000 | .00000 |

RUN NO. 4443/ 0 RN/L = 2.36 GRADIENT INTERVAL = -5.00/ 5.00

| Y | Z | X | ALPHA | BETA | PHI | CN | CLM | CY | CYN | CBL | CA |
|---|---|---|---|---|---|---|---|---|---|---|---|
| -300.540 | 397.720 | 599.47000 | -5.20620 | 10.19400 | .13906 | -.19129 | .06279 | -.34783 | .10186 | -.03658 | .23698 |
| -301.210 | 300.370 | 599.75000 | -5.20630 | 10.19400 | .13911 | -.19116 | .06278 | -.34768 | .10181 | -.03656 | .23703 |
| -300.970 | 200.210 | 599.61000 | -5.20630 | 10.19400 | .13917 | -.19128 | .06280 | -.34801 | .10195 | -.03661 | .23695 |
| | GRADIENT | .00000 | .00000 | .00000 | .00000 | .00000 | .00000 | .00000 | .00000 | .00000 | .00000 |

IA143, AEDC V41A-P8A, O/ET W/R.H. SRB SEPARATING (OVX929) ( 23 MAY 77 )

REFERENCE DATA

SREF = 2690.0000 SQ.FT. XMRP = 1097.0000 IN. XT
LREF = 1290.3000 INCHES YMRP = .0000 IN. YT
BREF = 1290.3000 INCHES ZMRP = 450.0000 IN. ZT
SCALE = .0100

PARAMETRIC DATA

ALPHA = -5.000 BETA = 10.000
DALPHA = -5.000 DBETA = -8.000
X = 600.000 MACH = 4.500
JET PC = .000

RUN NO. 4417/ 0 RN/L = 2.38 GRADIENT INTERVAL = -5.00/ 5.00

| Y | Z | X | ALPHA | BETA | PHI | CN | CLM | CY | CYN | CBL | CA |
|---|---|---|---|---|---|---|---|---|---|---|---|
| -101.490 | 400.830 | 599.90000 | -5.20690 | 10.19400 | .13967 | -.18829 | .06082 | -.34806 | .10195 | -.03653 | .23698 |
| -101.300 | 300.080 | 599.69000 | -5.20960 | 10.19000 | .15309 | -.17871 | .05489 | -.35764 | .10843 | -.03611 | .23665 |
| -101.340 | 200.130 | 599.80000 | -5.21150 | 10.18900 | .17357 | -.17975 | .05653 | -.37333 | .11727 | -.03551 | .23647 |
| | GRADIENT | .00000 | .00000 | .00000 | .00000 | .00000 | .00000 | .00000 | .00000 | .00000 | .00000 |

RUN NO. 4416/ 0 RN/L = 2.38 GRADIENT INTERVAL = -5.00/ 5.00

| Y | Z | X | ALPHA | BETA | PHI | CN | CLM | CY | CYN | CBL | CA |
|---|---|---|---|---|---|---|---|---|---|---|---|
| -304.680 | 201.000 | 599.96000 | -5.20630 | 10.19400 | .13921 | -.19058 | .06247 | -.34766 | .10175 | -.03653 | .23705 |
| -300.620 | 300.000 | 599.69000 | -5.20640 | 10.19400 | .13916 | -.19079 | .06259 | -.34757 | .10171 | -.03651 | .23756 |
| -300.930 | 399.720 | 599.76000 | -5.20650 | 10.19400 | .13923 | -.19080 | .06259 | -.34771 | .10177 | -.03654 | .23745 |
| | GRADIENT | .00000 | .00000 | .00000 | .00000 | .00000 | .00000 | .00000 | .00000 | .00000 | .00000 |

IA143, AEDC V41A-P8A, O/ET W/R.H. SRB SEPARATING (OVX930) ( 23 MAY 77 )

REFERENCE DATA

SREF = 2690.0000 SQ.FT. XMRP = 1097.0000 IN. XT
LREF = 1290.3000 INCHES YMRP = .0000 IN. YT
BREF = 1290.3000 INCHES ZMRP = 450.0000 IN. ZT
SCALE = .0100

PARAMETRIC DATA

ALPHA = -5.000 BETA = 10.000
DALPHA = -10.000 DBETA = -8.000
X = 600.000 MACH = 4.500
JET PC = .000

RUN NO. 4437/ 0 RN/L = 2.37 GRADIENT INTERVAL = -5.00/ 5.00

| Y | Z | X | ALPHA | BETA | PHI | CN | CLM | CY | CYN | CBL | CA |
|---|---|---|---|---|---|---|---|---|---|---|---|
| -101.240 | 200.240 | 599.62000 | -5.21420 | 10.18500 | .19328 | -.17829 | .05549 | -.38930 | .12722 | -.03522 | .23433 |
| -100.370 | 300.270 | 599.47000 | -5.21130 | 10.18800 | .16487 | -.17481 | .05259 | -.36643 | .11405 | -.03579 | .23567 |
| -100.850 | 350.240 | 599.53000 | -5.20960 | 10.19000 | .15192 | -.17790 | .05393 | -.35683 | .10807 | -.03615 | .23554 |
| -101.190 | 400.030 | 599.67000 | -5.20750 | 10.19300 | .14211 | -.18441 | .05812 | -.34970 | .10327 | -.03644 | .23593 |
| | GRADIENT | .00000 | .00000 | .00000 | .00000 | .00000 | .00000 | .00000 | .00000 | .00000 | .00000 |

IA143, AEDC V41A-P8A, O/ET W/R.H. SRB SEPARATING (OVX931) ( 23 MAY 77 )

REFERENCE DATA

SREF = 2690.0000 SQ.FT. XMRP = 1097.0000 IN. XT
LREF = 1290.3000 INCHES YMRP = .0000 IN. YT
BREF = 1290.3000 INCHES ZMRP = 450.0000 IN. ZT
SCALE = .0100

PARAMETRIC DATA

ALPHA = -5.000 BETA = 10.000
DALPHA = -10.000 DBETA = -8.000
X = 600.000 MACH = 4.500
JET PC = .000

RUN NO. 4439/ 0 RN/L = 2.37 GRADIENT INTERVAL = -5.00/ 5.00

| Y | Z | X | ALPHA | BETA | PHI | CN | CLM | CY | CYN | CBL | CA |
|---|---|---|---|---|---|---|---|---|---|---|---|
| -301.250 | 200.380 | 599.77000 | -5.20630 | 10.19400 | .13917 | -.19101 | .06264 | -.34762 | .10181 | -.03656 | .23638 |
| -301.100 | 300.420 | 599.75000 | -5.20630 | 10.19400 | .13914 | -.19124 | .06279 | -.34787 | .10189 | -.03658 | .23701 |
| -300.530 | 399.940 | 599.61000 | -5.20620 | 10.19400 | .13916 | -.19125 | .06283 | -.34783 | .10190 | -.03657 | .23705 |
| | GRADIENT | .00000 | .00000 | .00000 | .00000 | .00000 | .00000 | .00000 | .00000 | .00000 | .00000 |

IA143, AEDC V41A-P8A, O/ET W/R.H. SRB SEPARATING (OVX932) ( 23 MAY 77 )

REFERENCE DATA

SREF = 2690.0000 SQ.FT. XMRP = 1097.0000 IN. XT
LREF = 1290.3000 INCHES YMRP = .0000 IN. YT
BREF = 1290.3000 INCHES ZMRP = 450.0000 IN. ZT
SCALE = .0100

PARAMETRIC DATA

ALPHA = -5.000 BETA = 10.000
DALPHA = -10.000 DBETA = -4.000
X = 600.000 MACH = 4.500
JET PC = .000

RUN NO. 4441/ 0 RN/L = 2.36 GRADIENT INTERVAL = -5.00/ 5.00

| Y | Z | X | ALPHA | BETA | PHI | CN | CLM | CY | CYN | CBL | CA |
|---|---|---|---|---|---|---|---|---|---|---|---|
| -101.290 | 300.400 | 599.72000 | -5.21040 | 10.18900 | .15856 | -.17824 | .05454 | -.36180 | .11113 | -.03598 | .23612 |
| -101.550 | 350.270 | 599.79000 | -5.20900 | 10.19100 | .14805 | -.18163 | .05629 | -.35413 | .10623 | -.03630 | .23611 |
| -101.210 | 400.050 | 599.67000 | -5.20710 | 10.19300 | .14075 | -.18695 | .05981 | -.34886 | .10264 | -.03651 | .23526 |
| | GRADIENT | .00000 | .00000 | .00000 | .00000 | .00000 | .00000 | .00000 | .00000 | .00000 | .00000 |

IA143, AEDC V41A-P8A, O/ET W/R.H. SRB SEPARATING (OVX933) ( 23 MAY 77 )

REFERENCE DATA

SREF = 2690.0000 SQ.FT. XMRP = 1097.0000 IN. XT
LREF = 1290.3000 INCHES YMRP = .0000 IN. YT
BREF = 1290.3000 INCHES ZMRP = 450.0000 IN. ZT
SCALE = .0100

PARAMETRIC DATA

ALPHA = -5.000 BETA = 10.000
DALPHA = -15.000 DBETA = -4.000
X = 600.000 MACH = 4.500
JET PC = .000

RUN NO. 4460/ 0 RN/L = 2.36 GRADIENT INTERVAL = -5.00/ 5.00

| Y | Z | X | ALPHA | BETA | PHI | CN | CLM | CY | CYN | CBL | CA |
|---|---|---|---|---|---|---|---|---|---|---|---|
| -101.400 | 300.510 | 599.70000 | -5.21170 | 10.18500 | .17265 | -.17507 | .05278 | -.37240 | .11801 | -.03550 | .23514 |
| -101.050 | 350.190 | 599.61000 | -5.21050 | 10.18700 | .15930 | -.17569 | .05247 | -.36246 | .11190 | -.03592 | .23505 |
| -101.040 | 400.330 | 599.64000 | -5.20810 | 10.19000 | .14662 | -.18135 | .05588 | -.35323 | .10578 | -.03629 | .23514 |
| | GRADIENT | .00000 | .00000 | .00000 | .00000 | .00000 | .00000 | .00000 | .00000 | .00000 | .00000 |

RUN NO. 4461/ 0 RN/L = 2.36 GRADIENT INTERVAL = -5.00/ 5.00

| Y | Z | X | ALPHA | BETA | PHI | CN | CLM | CY | CYN | CBL | CA |
|---|---|---|---|---|---|---|---|---|---|---|---|
| -201.380 | 399.850 | 599.51000 | -5.20540 | 10.19300 | .13864 | -.19123 | .06270 | -.34763 | .10180 | -.03653 | .23635 |
| -201.270 | 350.520 | 599.83000 | -5.20560 | 10.19300 | .13894 | -.19080 | .06231 | -.34794 | .10197 | -.03655 | .23612 |
| -201.290 | 300.450 | 599.69000 | -5.20710 | 10.19100 | .14401 | -.18751 | .06000 | -.35158 | .10454 | -.03641 | .23582 |
| | GRADIENT | .00000 | .00000 | .00000 | .00000 | .00000 | .00000 | .00000 | .00000 | .00000 | .00000 |

IA143, AEDC V41A-P8A, O/ET W/R.H. SRB SEPARATING (OVX934) ( 23 MAY 77 )

REFERENCE DATA

SREF = 2690.0000 SQ.FT. XMRP = 1097.0000 IN. XT
LREF = 1290.3000 INCHES YMRP = .0000 IN. YT
BREF = 1290.3000 INCHES ZMRP = 450.0000 IN. ZT
SCALE = .0100

PARAMETRIC DATA

ALPHA = -5.000 BETA = 10.000
DALPHA = -10.000 DBETA = -4.000
X = 600.000 MACH = 4.500
JET PC = .000

RUN NO. 4440/ 0 RN/L = 2.36 GRADIENT INTERVAL = -5.00/ 5.00

| Y | Z | X | ALPHA | BETA | PHI | CN | CLM | CY | CYN | CBL | CA |
|---|---|---|---|---|---|---|---|---|---|---|---|
| -201.120 | 200.400 | 599.73000 | -5.20910 | 10.19000 | .15301 | -.18594 | .05924 | -.35776 | .10881 | -.03618 | .23629 |
| -200.750 | 300.410 | 599.79000 | -5.20650 | 10.19300 | .14009 | -.18981 | .06179 | -.34825 | .10228 | -.03651 | .23634 |
| -200.750 | 350.250 | 599.78000 | -5.20620 | 10.19400 | .13904 | -.19113 | .06269 | -.34774 | .10180 | -.03658 | .23657 |
| -200.710 | 399.980 | 599.72000 | -5.20630 | 10.19400 | .13913 | -.19115 | .06275 | -.34774 | .10183 | -.03657 | .23682 |
| | GRADIENT | .00000 | .00000 | .00000 | .00000 | .00000 | .00000 | .00000 | .00000 | .00000 | .00000 |

IA143, AEDC V41A-P8A, O/ET W/R.H. SRB SEPARATING (OVX935) ( 23 MAY 77 )

REFERENCE DATA

SREF = 2690.0000 SQ.FT. XMRP = 1097.0000 IN. XT
LREF = 1290.3000 INCHES YMRP = .0000 IN. YT
BREF = 1290.3000 INCHES ZMRP = 450.0000 IN. ZT
SCALE = .0100

PARAMETRIC DATA

ALPHA = -5.000 BETA = 10.000
DALPHA = -15.000 DBETA = -8.000
X = 600.000 MACH = 4.500
JET PC = .000

RUN NO. 4463/ 0 RN/L = 2.36 GRADIENT INTERVAL = -5.00/ 5.00

| Y | Z | X | ALPHA | BETA | PHI | CN | CLM | CY | CYN | CBL | CA |
|---|---|---|---|---|---|---|---|---|---|---|---|
| -100.100 | 400.350 | 599.44000 | -5.20970 | 10.18900 | .15229 | -.17606 | .05232 | -.35697 | .10840 | -.03605 | .23458 |
| -101.230 | 350.630 | 599.78000 | -5.21210 | 10.18500 | .16898 | -.17027 | .04915 | -.36926 | .11645 | -.03558 | .23438 |
| -101.480 | 300.620 | 599.74000 | -5.21380 | 10.18200 | .18836 | -.16998 | .04978 | -.38396 | .12540 | -.03502 | .23372 |
| | GRADIENT | .00000 | .00000 | .00000 | .00000 | .00000 | .00000 | .00000 | .00000 | .00000 | .00000 |

RUN NO. 4462/ 0 RN/L = 2.36 GRADIENT INTERVAL = -5.00/ 5.00

| Y | Z | X | ALPHA | BETA | PHI | CN | CLM | CY | CYN | CBL | CA |
|---|---|---|---|---|---|---|---|---|---|---|---|
| -202.240 | 300.520 | 599.94000 | -5.20850 | 10.19000 | .14986 | -.18446 | .05775 | -.35571 | .10745 | -.03622 | .23488 |
| -200.810 | 350.360 | 599.68000 | -5.20630 | 10.19200 | .14132 | -.18825 | .06054 | -.34961 | .10317 | -.03647 | .23554 |
| -200.720 | 400.330 | 599.67000 | -5.20540 | 10.19300 | .13858 | -.19118 | .06258 | -.34765 | .10174 | -.03653 | .23603 |
| | GRADIENT | .00000 | .00000 | .00000 | .00000 | .00000 | .00000 | .00000 | .00000 | .00000 | .00000 |

IA143, AEDC V41A-P8A, O/ET W/R.H. SRB SEPARATING (OVX936) ( 23 MAY 77 )

REFERENCE DATA

SREF = 2690.0000 SQ.FT. XMRP = 1097.0000 IN. XT
LREF = 1290.3000 INCHES YMRP = .0000 IN. YT
BREF = 1290.3000 INCHES ZMRP = 450.0000 IN. ZT
SCALE = .0100

PARAMETRIC DATA

ALPHA = -5.000 BETA = 10.000
DALPHA = -10.000 DBETA = -8.000
X = 600.000 MACH = 4.500
JET PC = .000

RUN NO. 4438/ 0 RN/L = 2.37 GRADIENT INTERVAL = -5.00/ 5.00

| Y | Z | X | ALPHA | BETA | PHI | CN | CLM | CY | CYN | CBL | CA |
|---|---|---|---|---|---|---|---|---|---|---|---|
| -201.450 | 300.380 | 599.64000 | -5.20770 | 10.19300 | .14331 | -.18761 | .06013 | -.35072 | .10388 | -.03644 | .23625 |
| -200.970 | 350.220 | 599.68000 | -5.20630 | 10.19400 | .13920 | -.19104 | .06255 | -.34806 | .10194 | -.03659 | .23665 |
| -200.830 | 399.900 | 599.57000 | -5.20620 | 10.19400 | .13914 | -.19115 | .06275 | -.34793 | .10189 | -.03660 | .23677 |
| | GRADIENT | .00000 | .00000 | .00000 | .00000 | .00000 | .00000 | .00000 | .00000 | .00000 | .00000 |

IA143, AEDC V41A-P8A, O/ET W/R.H. SRB SEPARATING (OVX937) ( 23 MAY 77 )

REFERENCE DATA

SREF = 2690.0000 SQ.FT. XMRP = 1097.0000 IN. XT
LREF = 1290.3000 INCHES YMRP = .0000 IN. YT
BREF = 1290.3000 INCHES ZMRP = 450.0000 IN. ZT
SCALE = .0100

PARAMETRIC DATA

ALPHA = -5.000 BETA = 10.000
DALPHA = -5.000 DBETA = 4.000
X = 900.000 MACH = 4.500
JET PC = .000

RUN NO. 4420/ 0 RN/L = 2.37 GRADIENT INTERVAL = -5.00/ 5.00

| Y | Z | X | ALPHA | BETA | PHI | CN | CLM | CY | CYN | CBL | CA |
|---|---|---|---|---|---|---|---|---|---|---|---|
| -103.310 | 200.390 | 901.24000 | -5.20640 | 10.19400 | .13927 | -.19056 | .06238 | -.34781 | .10182 | -.03655 | .23700 |
| -100.730 | 275.050 | 899.64000 | -5.20640 | 10.19400 | .13921 | -.19066 | .06249 | -.34744 | .10164 | -.03650 | .23703 |
| -101.460 | 425.210 | 899.66000 | -5.20640 | 10.19400 | .13917 | -.19073 | .06256 | -.34755 | .10172 | -.03652 | .23739 |
| -101.300 | 499.850 | 899.69000 | -5.20650 | 10.19400 | .13927 | -.19074 | .06255 | -.34770 | .10177 | -.03654 | .23736 |
| -101.080 | 599.380 | 899.68000 | -5.20630 | 10.19400 | .13919 | -.19080 | .06259 | -.34770 | .10177 | -.03653 | .23745 |
| | GRADIENT | .00000 | .00000 | .00000 | .00000 | .00000 | .00000 | .00000 | .00000 | .00000 | .00000 |

RUN NO. 4421/ 0 RN/L = 2.37 GRADIENT INTERVAL = -5.00/ 5.00

| Y | Z | X | ALPHA | BETA | PHI | CN | CLM | CY | CYN | CBL | CA |
|---|---|---|---|---|---|---|---|---|---|---|---|
| -399.650 | 598.440 | 899.53000 | -5.20630 | 10.19400 | .13913 | -.19066 | .06253 | -.34777 | .10179 | -.03657 | .23733 |
| -400.670 | 500.010 | 899.69000 | -5.20640 | 10.19400 | .13922 | -.19076 | .06258 | -.34779 | .10181 | -.03656 | .23746 |
| -400.600 | 424.990 | 899.69000 | -5.20650 | 10.19400 | .13922 | -.19070 | .06253 | -.34763 | .10175 | -.03654 | .23726 |
| -400.580 | 274.990 | 899.63000 | -5.20650 | 10.19400 | .13925 | -.19083 | .06255 | -.34779 | .10178 | -.03655 | .23737 |
| -400.580 | 200.060 | 899.61000 | -5.20640 | 10.19400 | .13917 | -.19084 | .06257 | -.34768 | .10176 | -.03653 | .23738 |
| | GRADIENT | .00000 | .00000 | .00000 | .00000 | .00000 | .00000 | .00000 | .00000 | .00000 | .00000 |

IA143, AEDC V41A-P8A, O/ET W/R.H. SRB SEPARATING (OVX938) ( 23 MAY 77 )

REFERENCE DATA

SREF = 2690.0000 SQ.FT. XMRP = 1097.0000 IN. XT
LREF = 1290.3000 INCHES YMRP = .0000 IN. YT
BREF = 1290.3000 INCHES ZMRP = 450.0000 IN. ZT
SCALE = .0100

PARAMETRIC DATA

ALPHA = -5.000 BETA = 10.000
DALPHA = -20.000 DBETA = 4.000
X = 900.000 MACH = 4.500
JET PC = .000

RUN NO. 4488/ 0 RN/L = 2.36 GRADIENT INTERVAL = -5.00/ 5.00

| Y | Z | X | ALPHA | BETA | PHI | CN | CLM | CY | CYN | CBL | CA |
|---|---|---|---|---|---|---|---|---|---|---|---|
| -101.240 | 200.560 | 899.44000 | -5.20820 | 10.18900 | .15173 | -.18677 | .05949 | -.35680 | .10842 | -.03612 | .23534 |
| -100.420 | 275.880 | 899.66000 | -5.20650 | 10.19200 | .14227 | -.18880 | .06084 | -.35034 | .10365 | -.03644 | .23564 |
| -100.360 | 426.150 | 899.88000 | -5.20540 | 10.19300 | .13853 | -.19145 | .06274 | -.34772 | .10181 | -.03654 | .23635 |
| -101.460 | 500.450 | 899.48000 | -5.20560 | 10.19300 | .13862 | -.19154 | .06284 | -.34783 | .10188 | -.03657 | .23685 |
| -101.220 | 600.040 | 899.41000 | -5.20540 | 10.19300 | .13847 | -.19149 | .06281 | -.34776 | .10187 | -.03656 | .23673 |
| | GRADIENT | .00000 | .00000 | .00000 | .00000 | .00000 | .00000 | .00000 | .00000 | .00000 | .00000 |

IA143, AEDC V41A-P8A, O/ET W/R.H. SRB SEPARATING (OVX938) ( 23 MAY 77 )

REFERENCE DATA

SREF = 2690.0000 SQ.FT. XMRP = 1097.0000 IN. XT
LREF = 1290.3000 INCHES YMRP = .0000 IN. YT
BREF = 1290.3000 INCHES ZMRP = 450.0000 IN. ZT
SCALE = .0100

PARAMETRIC DATA

ALPHA = -5.000 BETA = 10.000
DALPHA = -20.000 DBETA = 4.000
X = 900.000 MACH = 4.500
JET PC = .000

RUN NO. 4489/ 0 RN/L = 2.36 GRADIENT INTERVAL = -5.00/ 5.00

| Y | Z | X | ALPHA | BETA | PHI | CN | CLM | CY | CYN | CBL | CA |
|---|---|---|---|---|---|---|---|---|---|---|---|
| -400.660 | 600.580 | 899.69000 | -5.20550 | 10.19300 | .13852 | -.19138 | .06279 | -.34779 | .10186 | -.03658 | .23683 |
| -400.540 | 500.560 | 899.61000 | -5.20550 | 10.19300 | .13854 | -.19151 | .06285 | -.34802 | .10197 | -.03661 | .23695 |
| -400.060 | 425.500 | 899.42000 | -5.20550 | 10.19300 | .13853 | -.19148 | .06283 | -.34774 | .10185 | -.03656 | .23686 |
| -400.790 | 275.590 | 899.55000 | -5.20560 | 10.19300 | .13862 | -.19145 | .06281 | -.34777 | .10185 | -.03656 | .23686 |
| -400.830 | 200.680 | 899.59000 | -5.20560 | 10.19300 | .13863 | -.19159 | .06288 | -.34790 | .10190 | -.03657 | .23699 |
| | GRADIENT | .00000 | .00000 | .00000 | .00000 | .00000 | .00000 | .00000 | .00000 | .00000 | .00000 |

IA143, AEDC V41A-P8A, O/ET W/R.H. SRB SEPARATING (OVX939) ( 23 MAY 77 )

REFERENCE DATA

SREF = 2690.0000 SQ.FT. XMRP = 1097.0000 IN. XT
LREF = 1290.3000 INCHES YMRP = .0000 IN. YT
BREF = 1290.3000 INCHES ZMRP = 450.0000 IN. ZT
SCALE = .0100

PARAMETRIC DATA

ALPHA = -5.000 BETA = 10.000
DALPHA = -5.000 DBETA = -8.000
X = 900.000 MACH = 4.500
JET PC = .000

RUN NO. 4418/ 0 RN/L = 2.38 GRADIENT INTERVAL = -5.00/ 5.00

| Y | Z | X | ALPHA | BETA | PHI | CN | CLM | CY | CYN | CBL | CA |
|---|---|---|---|---|---|---|---|---|---|---|---|
| -101.430 | 275.010 | 899.53000 | -5.20650 | 10.19400 | .13941 | -.19020 | .06212 | -.34763 | .10177 | -.03650 | .23677 |
| -101.220 | 425.100 | 899.49000 | -5.20640 | 10.19400 | .13922 | -.19076 | .06257 | -.34790 | .10187 | -.03657 | .23746 |
| -101.520 | 499.960 | 899.60000 | -5.20630 | 10.19400 | .13917 | -.19076 | .06259 | -.34760 | .10174 | -.03652 | .23745 |
| -101.330 | 599.950 | 899.63000 | -5.20630 | 10.19400 | .13916 | -.19073 | .06251 | -.34783 | .10182 | -.03656 | .23724 |
| | GRADIENT | .00000 | .0$000 | .00000 | .0$000 | .00000 | .00000 | .00000 | .00000 | .00000 | .00000 |

IA143, AEDC V41A-P8A, O/ET W/R.H. SRB SEPARATING (OVX940) ( 23 MAY 77 )

REFERENCE DATA

SREF = 2690.0000 SQ.FT. XMRP = 1097.0000 IN. XT
LREF = 1290.3000 INCHES YMRP = .0000 IN. YT
BREF = 1290.3000 INCHES ZMRP = 450.0000 IN. ZT
SCALE = .0100

PARAMETRIC DATA

ALPHA = -5.000 BETA = 10.000
DALPHA = -20.000 DBETA = -16.000
X = 900.000 MACH = 4.500
JET PC = .000

RUN NO. 4490/ 0 RN/L = 2.36 GRADIENT INTERVAL = -5.00/ 5.00

| Y | Z | X | ALPHA | BETA | PHI | CN | CLM | CY | CYN | CBL | CA |
|---|---|---|---|---|---|---|---|---|---|---|---|
| -100.920 | 425.230 | 899.36000 | -5.20540 | 10.19300 | .13873 | -.19016 | .06165 | -.34731 | .10148 | -.03641 | .23461 |
| -101.170 | 500.700 | 899.70000 | -5.20480 | 10.19300 | .13818 | -.19082 | .06201 | -.34698 | .10127 | -.03644 | .23317 |
| -101.360 | 600.600 | 899.71000 | -5.20540 | 10.19300 | .13853 | -.19119 | .06251 | -.34762 | .10176 | -.03652 | .23590 |
| | GRADIENT | .00000 | .00000 | .00000 | .00000 | .00000 | .00000 | .00000 | .00000 | .00000 | .00000 |

IA143, AEDC V41A-P8A, O/ET W/R.H. SRB SEPARATING (OVX941) ( 23 MAY 77 )

REFERENCE DATA

SREF = 2690.0000 SQ.FT. XMRP = 1097.0000 IN. XT
LREF = 1290.3000 INCHES YMRP = .0000 IN. YT
BREF = 1290.3000 INCHES ZMRP = 450.0000 IN. ZT
SCALE = .0100

PARAMETRIC DATA

ALPHA = -5.000 BETA = 10.000
DALPHA = -5.000 DBETA = -12.000
X = 900.000 MACH = 4.500
JET PC = .000

RUN NO. 4419/ 0 RN/L = 2.38 GRADIENT INTERVAL = -5.00/ 5.00

| Y | Z | X | ALPHA | BETA | PHI | CN | CLM | CY | CYN | CBL | CA |
|---|---|---|---|---|---|---|---|---|---|---|---|
| -401.300 | 200.160 | 899.49000 | -5.20640 | 10.19400 | .13924 | -.19075 | .06257 | -.34768 | .10177 | -.03653 | .23748 |
| -400.950 | 275.010 | 899.50000 | -5.20630 | 10.19400 | .13916 | -.19063 | .06252 | -.34760 | .10173 | -.03653 | .23736 |
| -400.670 | 424.810 | 899.45000 | -5.20630 | 10.19400 | .13908 | -.19076 | .06258 | -.34775 | .10180 | -.03656 | .23751 |
| -401.200 | 499.780 | 899.58000 | -5.20640 | 10.19400 | .13925 | -.19065 | .06253 | -.34736 | .10170 | -.03648 | .23734 |
| -401.010 | 599.720 | 899.69000 | -5.20630 | 10.19400 | .13916 | -.19070 | .06255 | -.34749 | .10171 | -.03651 | .23738 |
| | GRADIENT | .00000 | .00000 | .00000 | .0000 | .00000 | .00000 | .00000 | .00000 | .00000 | .00000 |

IA143, AEDC V41A-P8A, O/ET W/R.H. SRB SEPARATING (OVX942) ( 23 MAY 77 )

REFERENCE DATA

SREF = 2690.0000 SQ.FT. XMRP = 1097.0000 IN. XT
LREF = 1290.3000 INCHES YMRP = .0000 IN. YT
BREF = 1290.3000 INCHES ZMRP = 450.0000 IN. ZT
SCALE = .0100

PARAMETRIC DATA

ALPHA = -5.000 BETA = 10.000
DALPHA = -20.000 DBETA = -16.000
X = 900.000 MACH = 4.500
JET PC = .000

RUN NO. 4491/ 0 RN/L = 2.36 GRADIENT INTERVAL = -5.00/ 5.00

| Y | Z | X | ALPHA | BETA | PHI | CN | CLM | CY | CYN | CBL | CA |
|---|---|---|---|---|---|---|---|---|---|---|---|
| -401.220 | 200.650 | 899.41000 | -5.20560 | 10.19300 | .13871 | -.19144 | .06278 | -.34796 | .10191 | -.03659 | .23666 |
| -400.610 | 275.940 | 899.52000 | -5.20540 | 10.19300 | .13847 | -.19138 | .06282 | -.34786 | .10187 | -.03658 | .23685 |
| -400.090 | 425.760 | 899.45000 | -5.20550 | 10.19300 | .13857 | -.19139 | .06278 | -.34796 | .10191 | -.03660 | .23678 |
| -400.510 | 500.350 | 899.43000 | -5.20530 | 10.19300 | .13845 | -.19143 | .06282 | -.34801 | .10193 | -.03660 | .23691 |
| -400.630 | 600.280 | 899.36000 | -5.20560 | 10.19300 | .13866 | -.19146 | .06280 | -.34778 | .10187 | -.03656 | .23676 |
| | GRADIENT | .00000 | .00000 | .00000 | .00000 | .00000 | .00000 | .00000 | .00000 | .00000 | .00000 |

IA143, AEDC V41A-P8A, O/ET W/R.H. SRB SEPARATING (OVX943) ( 23 MAY 77 )

REFERENCE DATA

SREF = 2690.0000 SQ.FT. XMRP = 1097.0000 IN. XT
LREF = 1290.3000 INCHES YMRP = .0000 IN. YT
BREF = 1290.3000 INCHES ZMRP = 450.0000 IN. ZT
SCALE = .0100

PARAMETRIC DATA

ALPHA = -5.000 BETA = 10.000
DALPHA = -10.000 DBETA = .000
X = 900.000 MACH = 4.500
JET PC = .000

RUN NO. 4444/ 0 RN/L = 2.36 GRADIENT INTERVAL = -5.00/ 5.00

| Y | Z | X | ALPHA | BETA | PHI | CN | CLM | CY | CYN | CBL | CA |
|---|---|---|---|---|---|---|---|---|---|---|---|
| -104.460 | 302.890 | 901.30000 | -5.20620 | 10.19400 | .13908 | -.19120 | .06270 | -.34785 | .10186 | -.03659 | .23649 |
| -100.800 | 400.200 | 899.69000 | -5.20620 | 10.19400 | .13907 | -.19129 | .06280 | -.34786 | .10189 | -.03658 | .23695 |
| -100.970 | 500.240 | 899.49000 | -5.20620 | 10.19400 | .13905 | -.19130 | .06282 | -.34799 | .10193 | -.03662 | .23700 |
| | GRADIENT | .00000 | .00000 | .00000 | .00000 | .00000 | .00000 | .00000 | .00000 | .00000 | .00000 |

RUN NO. 4445/ 0 RN/L = 2.36 GRADIENT INTERVAL = -5.00/ 5.00

| Y | Z | X | ALPHA | BETA | PHI | CN | CLM | CY | CYN | CBL | CA |
|---|---|---|---|---|---|---|---|---|---|---|---|
| -300.370 | 498.110 | 899.18000 | -5.20630 | 10.19400 | .13914 | -.19138 | .06280 | -.34797 | .10189 | -.03658 | .23701 |
| -300.970 | 400.430 | 899.73000 | -5.20620 | 10.19400 | .13913 | -.19124 | .06279 | -.34781 | .10187 | -.03658 | .23694 |
| -301.060 | 300.430 | 899.71000 | -5.20630 | 10.19400 | .13914 | -.19130 | .06278 | -.34780 | .10187 | -.03656 | .23684 |
| | GRADIENT | .00000 | .00000 | .00000 | .00000 | .00000 | .00000 | .00000 | .00000 | .00000 | .00000 |

IA143, AEDC V41A-P8A, O/ET W/R.H. SRB SEPARATING (OVX944) ( 23 MAY 77 )

REFERENCE DATA

SREF = 2690.0000 SQ.FT. XMRP = 1097.0000 IN. XT
LREF = 1290.3000 INCHES YMRP = .0000 IN. YT
BREF = 1290.3000 INCHES ZMRP = 450.0000 IN. ZT
SCALE = .0100

PARAMETRIC DATA

ALPHA = -5.000 BETA = 10.000
DALPHA = -15.000 DBETA = .000
X = 900.000 MACH = 4.500
JET PC = .000

RUN NO. 4473/ 0 RN/L = 2.37 GRADIENT INTERVAL = -5.00/ 5.00

| Y | Z | X | ALPHA | BETA | PHI | CN | CLM | CY | CYN | CBL | CA |
|---|---|---|---|---|---|---|---|---|---|---|---|
| -100.840 | 300.450 | 899.34000 | -5.20550 | 10.19300 | .13866 | -.19101 | .06250 | -.34790 | .10187 | -.03657 | .23617 |
| -100.390 | 400.650 | 899.67000 | -5.20550 | 10.19300 | .13862 | -.19133 | .06270 | -.34786 | .10186 | -.03658 | .23639 |
| -101.110 | 500.390 | 899.58000 | -5.20550 | 10.19300 | .13866 | -.19126 | .06279 | -.34795 | .10195 | -.03659 | .23693 |
| | GRADIENT | .00000 | .00000 | .00000 | .00000 | .00000 | .00000 | .00000 | .00000 | .00000 | .00000 |

RUN NO. 4474/ 0 RN/L = 2.37 GRADIENT INTERVAL = -5.00/ 5.00

| Y | Z | X | ALPHA | BETA | PHI | CN | CLM | CY | CYN | CBL | CA |
|---|---|---|---|---|---|---|---|---|---|---|---|
| -301.250 | 498.160 | 898.95000 | -5.20560 | 10.19300 | .13867 | -.19145 | .06284 | -.34810 | .10195 | -.03661 | .23705 |
| -301.660 | 400.670 | 899.59000 | -5.20550 | 10.19300 | .13863 | -.19133 | .06280 | -.34781 | .10186 | -.03657 | .23689 |
| -300.980 | 300.610 | 899.47000 | -5.20550 | 10.19300 | .13858 | -.19126 | .06275 | -.34789 | .10190 | -.03660 | .23676 |
| | GRADIENT | .00000 | .00000 | .00000 | .00000 | .00000 | .00000 | .00000 | .00000 | .00000 | .00000 |

IA143, AEDC V41A-P8A, O/ET W/R.H. SRB SEPARATING (OVX945) ( 23 MAY 77 )

REFERENCE DATA

SREF = 2690.0000 SQ.FT. XMRP = 1097.0000 IN. XT
LREF = 1290.3000 INCHES YMRP = .0000 IN. YT
BREF = 1290.3000 INCHES ZMRP = 450.0000 IN. ZT
SCALE = .0100

PARAMETRIC DATA

ALPHA = -5.000 BETA = 10.000
DALPHA = -10.000 DBETA = -12.000
X = 900.000 MACH = 4.500
JET PC = .000

RUN NO. 4450/ 0 RN/L = 2.37 GRADIENT INTERVAL = -5.00/ 5.00

| Y | Z | X | ALPHA | BETA | PHI | CN | CLM | CY | CYN | CBL | CA |
|---|---|---|---|---|---|---|---|---|---|---|---|
| -101.310 | 300.330 | 899.56000 | -5.20630 | 10.19300 | .13982 | -.18963 | .06147 | -.34833 | .10226 | -.03651 | .23587 |
| -101.180 | 400.100 | 899.52000 | -5.20570 | 10.19300 | .13882 | -.19128 | .06269 | -.34788 | .10187 | -.03657 | .23637 |
| -100.980 | 500.280 | 899.57000 | -5.20580 | 10.19300 | .13881 | -.19132 | .06278 | -.34785 | .10186 | -.03657 | .23689 |
| | GRADIENT | .00000 | .00000 | .00000 | .00000 | .00000 | .00000 | .00000 | .00000 | .00000 | .00000 |

RUN NO. 4451/ 0 RN/L = 2.37 GRADIENT INTERVAL = -5.00/ 5.00

| Y | Z | X | ALPHA | BETA | PHI | CN | CLM | CY | CYN | CBL | CA |
|---|---|---|---|---|---|---|---|---|---|---|---|
| -301.460 | 500.160 | 899.58000 | -5.20580 | 10.19300 | .13888 | -.19142 | .06283 | -.34784 | .10187 | -.03655 | .23701 |
| -301.100 | 400.380 | 899.52000 | -5.20590 | 10.19300 | .13883 | -.19136 | .06280 | -.34795 | .10191 | -.03659 | .23695 |
| -301.340 | 300.470 | 899.48000 | -5.20570 | 10.19300 | .13881 | -.19129 | .06279 | -.34801 | .10193 | -.03660 | .23694 |
| | GRADIENT | .00000 | .00000 | .00000 | .00000 | .00000 | .00000 | .00000 | .00000 | .00000 | .00000 |

IA143, AEDC V41A-P8A, O/ET W/R.H. SRB SEPARATING (OVX946) ( 23 MAY 77 )

REFERENCE DATA

SREF = 2690.0000 SQ.FT. XMRP = 1097.0000 IN. XT
LREF = 1290.3000 INCHES YMRP = .0000 IN. YT
BREF = 1290.3000 INCHES ZMRP = 450.0000 IN. ZT
SCALE = .0100

PARAMETRIC DATA

ALPHA = -5.000 BETA = 10.000
DALPHA = -15.000 DBETA = -12.000
X = 900.000 MACH = 4.500
JET PC = .000

RUN NO. 4466/ 0 RN/L = 2.35 GRADIENT INTERVAL = -5.00/ 5.00

| Y | Z | X | ALPHA | BETA | PHI | CN | CLM | CY | CYN | CBL | CA |
|---|---|---|---|---|---|---|---|---|---|---|---|
| -101.080 | 300.310 | 899.34000 | -5.20670 | 10.19200 | .14280 | -.18658 | .05926 | -.35045 | .10377 | -.03638 | .23466 |
| -100.720 | 400.220 | 899.19000 | -5.20530 | 10.19300 | .13853 | -.19120 | .06251 | -.34745 | .10163 | -.03651 | .23530 |
| -101.050 | 500.600 | 899.44000 | -5.20550 | 10.19300 | .13861 | -.19125 | .06274 | -.34780 | .10188 | -.03658 | .23674 |
| | GRADIENT | .00000 | .00000 | .00000 | .00000 | .00000 | .00000 | .00000 | .00000 | .00000 | .00000 |

RUN NO. 4467/ 0 RN/L = 2.35 GRADIENT INTERVAL = -5.00/ 5.00

| Y | Z | X | ALPHA | BETA | PHI | CN | CLM | CY | CYN | CBL | CA |
|---|---|---|---|---|---|---|---|---|---|---|---|
| -301.670 | 500.710 | 899.77000 | -5.20550 | 10.19300 | .13865 | -.19126 | .06279 | -.34808 | .10198 | -.03663 | .23692 |
| -301.070 | 400.580 | 899.61000 | -5.20570 | 10.19300 | .13874 | -.19145 | .06285 | -.34835 | .10205 | -.03666 | .23708 |
| -301.440 | 300.500 | 899.54000 | -5.20560 | 10.19300 | .13863 | -.19135 | .06278 | -.34805 | .10195 | -.03662 | .23684 |
| | GRADIENT | .00000 | .00000 | .00000 | .00000 | .00000 | .00000 | .00000 | .00000 | .00000 | .00000 |

IA143, AEDC V41A-P8A, O/ET W/R.H. SRB SEPARATING (OVX947) ( 23 MAY 77 )

REFERENCE DATA

SREF = 2690.0000 SQ.FT. XMRP = 1097.0000 IN. XT
LREF = 1290.3000 INCHES YMRP = .0000 IN. YT
BREF = 1290.3000 INCHES ZMRP = 450.0000 IN. ZT
SCALE = .0100

PARAMETRIC DATA

ALPHA = -5.000 BETA = 10.000
DALPHA = -12.000 DBETA = -6.000
X = 900.000 MACH = 4.500
JET PC = .000

RUN NO. 4456/ 0 RN/L = 2.37 GRADIENT INTERVAL = -5.00/ 5.00

| Y | Z | X | ALPHA | BETA | PHI | CN | CLM | CY | CYN | CBL | CA |
|---|---|---|---|---|---|---|---|---|---|---|---|
| -201.180 | 300.390 | 899.58000 | -5.20580 | 10.19300 | .13881 | -.19140 | .06282 | -.34822 | .10203 | -.03664 | .23697 |
| -200.710 | 400.250 | 899.49000 | -5.20580 | 10.19300 | .13879 | -.19138 | .06285 | -.34811 | .10200 | -.03663 | .23705 |
| -200.900 | 499.920 | 899.45000 | -5.20580 | 10.19300 | .13878 | -.19142 | .06283 | -.34811 | .10195 | -.03662 | .23697 |
| | GRADIENT | .00000 | .00000 | .00000 | .00000 | .00000 | .00000 | .00000 | .00000 | .00000 | .00000 |

IA143, AEDC V41A-P8A, O/ET W/R.H. SRB SEPARATING (OVX948) ( 23 MAY 77 )

REFERENCE DATA

SREF = 2690.0000 SQ.FT. XMRP = 1097.0000 IN. XT
LREF = 1290.3000 INCHES YMRP = .0000 IN. YT
BREF = 1290.3000 INCHES ZMRP = 450.0000 IN. ZT
SCALE = .0100

PARAMETRIC DATA

ALPHA = -5.000 BETA = 10.000
DALPHA = -15.000 DBETA = -6.000
X = 900.000 MACH = 4.500
JET PC = .000

RUN NO. 4470/ 0 RN/L = 2.35 GRADIENT INTERVAL = -5.00/ 5.00

| Y | Z | X | ALPHA | BETA | PHI | CN | CLM | CY | CYN | CBL | CA |
|---|---|---|---|---|---|---|---|---|---|---|---|
| -200.940 | 400.330 | 899.56000 | -5.20540 | 10.19300 | .13855 | -.19121 | .06276 | -.34770 | .10184 | -.03656 | .23677 |
| -199.840 | 599.440 | 899.28000 | -5.20540 | 10.19300 | .13858 | -.19128 | .06279 | -.34798 | .10190 | -.03659 | .23688 |
| -200.850 | 799.110 | 899.33000 | -5.20560 | 10.19300 | .13869 | -.19126 | .06278 | -.34796 | .10192 | -.03660 | .23690 |
| -200.860 | 999.460 | 899.30000 | -5.20520 | 10.19300 | .13844 | -.19117 | .06274 | -.34776 | .10187 | -.03658 | .23669 |
| | GRADIENT | .00000 | .00000 | .00000 | .00000 | .00000 | .00000 | .00000 | .00000 | .00000 | .00000 |

IA143, AEDC V41A-P8A, O/ET W/R.H. SRB SEPARATING (OVX949) ( 23 MAY 77 )

REFERENCE DATA

SREF = 2690.0000 SQ.FT. XMRP = 1097.0000 IN. XT
LREF = 1290.3000 INCHES YMRP = .0000 IN. YT
BREF = 1290.3000 INCHES ZMRP = 450.0000 IN. ZT
SCALE = .0100

PARAMETRIC DATA

ALPHA = -5.000 BETA = 10.000
DALPHA = -10.000 DBETA = -4.000
X = 900.000 MACH = 4.500
JET PC = .000

RUN NO. 4446/ 0 RN/L = 2.36 GRADIENT INTERVAL = -5.00/ 5.00

| Y | Z | X | ALPHA | BETA | PHI | CN | CLM | CY | CYN | CBL | CA |
|---|---|---|---|---|---|---|---|---|---|---|---|
| -201.000 | 300.400 | 899.57000 | -5.20600 | 10.19400 | .13894 | -.19125 | .06276 | -.34787 | .10188 | -.03658 | .23685 |
| -200.630 | 350.310 | 899.51000 | -5.20620 | 10.19400 | .13904 | -.19126 | .06276 | -.34788 | .10186 | -.03659 | .23674 |
| -200.890 | 400.100 | 899.61000 | -5.20590 | 10.19400 | .13894 | -.19132 | .06282 | -.34803 | .10195 | -.03660 | .23694 |
| | GRADIENT | .00000 | .00000 | .00000 | .00000 | .00000 | .00000 | .00000 | .00000 | .00000 | .00000 |

RUN NO. 4447/ 0 RN/L = 2.37 GRADIENT INTERVAL = -5.00/ 5.00

| Y | Z | X | ALPHA | BETA | PHI | CN | CLM | CY | CYN | CBL | CA |
|---|---|---|---|---|---|---|---|---|---|---|---|
| -300.920 | 399.160 | 899.34000 | -5.20590 | 10.19300 | .13892 | -.19113 | .06274 | -.34772 | .10184 | -.03656 | .23684 |
| -300.990 | 350.330 | 899.53000 | -5.20600 | 10.19400 | .13901 | -.19123 | .06271 | -.34769 | .10183 | -.03655 | .23661 |
| -300.800 | 300.260 | 899.55000 | -5.20590 | 10.19300 | .13890 | -.19116 | .06274 | -.34778 | .10186 | -.03657 | .23685 |
| | GRADIENT | .00000 | .00000 | .00000 | .00000 | .00000 | .00000 | .00000 | .00000 | .00000 | .00000 |

IA143, AEDC V41A-P8A, O/ET W/R.H. SRB SEPARATING (OVX950) ( 23 MAY 77 )

REFERENCE DATA

SREF = 2690.0000 SQ.FT. XMRP = 1097.0000 IN. XT
LREF = 1290.3000 INCHES YMRP = .0000 IN. YT
BREF = 1290.3000 INCHES ZMRP = 450.0000 IN. ZT
SCALE = .0100

PARAMETRIC DATA

ALPHA = -5.000 BETA = 10.000
DALPHA = -15.000 DBETA = -4.000
X = 900.000 MACH = 4.500
JET PC = .000

RUN NO. 4471/ 0 RN/L = 2.37 GRADIENT INTERVAL = -5.00/ 5.00

| Y | Z | X | ALPHA | BETA | PHI | CN | CLM | CY | CYN | CBL | CA |
|---|---|---|---|---|---|---|---|---|---|---|---|
| -201.090 | 300.510 | 899.56000 | -5.20550 | 10.19300 | .13865 | -.19124 | .06273 | -.34769 | .10184 | -.03655 | .23656 |
| -200.870 | 350.540 | 899.53000 | -5.20550 | 10.19300 | .13865 | -.19128 | .06278 | -.34789 | .10191 | -.03658 | .23681 |
| -201.070 | 400.410 | 899.50000 | -5.20550 | 10.19300 | .13856 | -.19124 | .06277 | -.34783 | .10189 | -.03658 | .23678 |
| | GRADIENT | .00000 | .00000 | .00000 | .00000 | .00000 | .00000 | .00000 | .00000 | .00000 | .00000 |

RUN NO. 4472/ 0 RN/L = 2.37 GRADIENT INTERVAL = -5.00/ 5.00

| Y | Z | X | ALPHA | BETA | PHI | CN | CLM | CY | CYN | CBL | CA |
|---|---|---|---|---|---|---|---|---|---|---|---|
| -300.490 | 399.130 | 899.16000 | -5.20560 | 10.19300 | .13862 | -.19138 | .06278 | -.34786 | .10190 | -.03658 | .23680 |
| -300.850 | 350.520 | 899.51000 | -5.20550 | 10.19300 | .13866 | -.19129 | .06277 | -.34767 | .10186 | -.03654 | .23678 |
| -300.970 | 300.470 | 899.55000 | -5.20570 | 10.19300 | .13870 | -.19144 | .06282 | -.34809 | .10199 | -.03661 | .23699 |
| | GRADIENT | .00000 | .00000 | .00000 | .00000 | .00000 | .00000 | .00000 | .00000 | .00000 | .00000 |

IA143, AEDC V41A-P8A, O/ET W/R.H. SRB SEPARATING (OVX951) ( 23 MAY 77 )

REFERENCE DATA

SREF = 2690.0000 SQ.FT. XMRP = 1097.0000 IN. XT
LREF = 1290.3000 INCHES YMRP = .0000 IN. YT
BREF = 1290.3000 INCHES ZMRP = 450.0000 IN. ZT
SCALE = .0100

PARAMETRIC DATA

ALPHA = -5.000 BETA = 10.000
DALPHA = -10.000 DBETA = -8.000
X = 900.000 MACH = 4.500
JET PC = .000

RUN NO. 4449/ 0 RN/L = 2.37 GRADIENT INTERVAL = -5.00/ 5.00

| Y | Z | X | ALPHA | BETA | PHI | CN | CLM | CY | CYN | CBL | CA |
|---|---|---|---|---|---|---|---|---|---|---|---|
| -201.350 | 400.760 | 899.75000 | -5.20590 | 10.19300 | .13885 | -.19137 | .06282 | -.34791 | .10190 | -.03659 | .23692 |
| -201.400 | 350.350 | 899.69000 | -5.20600 | 10.19400 | .13901 | -.19132 | .06277 | -.34799 | .10194 | -.03659 | .23685 |
| -201.270 | 300.310 | 899.63000 | -5.20600 | 10.19400 | .13895 | -.19141 | .06277 | -.34805 | .10192 | -.03659 | .23681 |
| | GRADIENT | .00000 | .00000 | .00000 | .00000 | .00000 | .00000 | .00000 | .00000 | .00000 | .00000 |

RUN NO. 4448/ 0 RN/L = 2.37 GRADIENT INTERVAL = -5.00/ 5.00

| Y | Z | X | ALPHA | BETA | PHI | CN | CLM | CY | CYN | CBL | CA |
|---|---|---|---|---|---|---|---|---|---|---|---|
| -302.670 | 300.470 | 899.60000 | -5.20600 | 10.19400 | .13893 | -.19126 | .06277 | -.34787 | .10188 | -.03659 | .23688 |
| -301.120 | 350.200 | 899.58000 | -5.20580 | 10.19300 | .13890 | -.19125 | .06280 | -.34785 | .10189 | -.03657 | .23699 |
| -300.930 | 400.110 | 899.59000 | -5.20590 | 10.19300 | .13895 | -.19128 | .06281 | -.34777 | .10187 | -.03656 | .23694 |
| | GRADIENT | .00000 | .00000 | .00000 | .00000 | .00000 | .00000 | .00000 | .00000 | .00000 | .00000 |

IA143, AEDC V41A-P8A, O/ET W/R.H. SRB SEPARATING (OVX952) ( 23 MAY 77 )

REFERENCE DATA

SREF = 2690.0000 SQ.FT. XMRP = 1097.0000 IN. XT
LREF = 1290.3000 INCHES YMRP = .0000 IN. YT
BREF = 1290.3000 INCHES ZMRP = 450.0000 IN. ZT
SCALE = .0100

PARAMETRIC DATA

ALPHA = -5.000 BETA = 10.000
DALPHA = -15.000 DBETA = -8.000
X = 900.000 MACH = 4.500
JET PC = .000

RUN NO. 4468/ 0 RN/L = 2.35 GRADIENT INTERVAL = -5.00/ 5.00

| Y | Z | X | ALPHA | BETA | PHI | CN | CLM | CY | CYN | CBL | CA |
|---|---|---|---|---|---|---|---|---|---|---|---|
| -201.040 | 300.350 | 899.41000 | -5.20530 | 10.19300 | .13852 | -.19117 | .06266 | -.34774 | .10184 | -.03658 | .23624 |
| -200.820 | 350.340 | 899.42000 | -5.20550 | 10.19300 | .13863 | -.19122 | .06273 | -.34786 | .10190 | -.03658 | .23666 |
| -201.160 | 400.310 | 899.54000 | -5.20550 | 10.19300 | .13859 | -.19122 | .06273 | -.34785 | .10186 | -.03659 | .23669 |
| | GRADIENT | .00000 | .00000 | .00000 | .00000 | .00000 | .00000 | .00000 | .00000 | .00000 | .00000 |

RUN NO. 4469/ 0 RN/L = 2.35 GRADIENT INTERVAL = -5.00/ 5.00

| Y | Z | X | ALPHA | BETA | PHI | CN | CLM | CY | CYN | CBL | CA |
|---|---|---|---|---|---|---|---|---|---|---|---|
| -300.910 | 399.490 | 899.15000 | -5.20560 | 10.19300 | .13871 | -.19130 | .06280 | -.34775 | .10186 | -.03656 | .23685 |
| -301.010 | 350.480 | 899.47000 | -5.20560 | 10.19300 | .13872 | -.19136 | .06281 | -.34788 | .10191 | -.03657 | .23696 |
| -301.070 | 300.360 | 899.44000 | -5.20550 | 10.19300 | .13863 | -.19138 | .06283 | -.34806 | .10193 | -.03661 | .23699 |
| | GRADIENT | .00000 | .00000 | .00000 | .00000 | .00000 | .00000 | .00000 | .00000 | .00000 | .00000 |

IA143, AEDC V41A-P8A, O/ET W/R.H. SRB SEPARATING (OVX953) ( 23 MAY 77 )

REFERENCE DATA

SREF = 2690.0000 SQ.FT. XMRP = 1097.0000 IN. XT
LREF = 1290.3000 INCHES YMRP = .0000 IN. YT
BREF = 1290.3000 INCHES ZMRP = 450.0000 IN. ZT
SCALE = .0100

PARAMETRIC DATA

ALPHA = -5.000 BETA = 10.000
DALPHA = -5.000 DBETA = 4.000
X = 1200.000 MACH = 4.500
JET PC = .000

RUN NO. 4426/ 0 RN/L = 2.37 GRADIENT INTERVAL = -5.00/ 5.00

| Y | Z | X | ALPHA | BETA | PHI | CN | CLM | CY | CYN | CBL | CA |
|---|---|---|---|---|---|---|---|---|---|---|---|
| -102.730 | 300.240 | 1201.20000 | -5.20640 | 10.19400 | .13912 | -.19145 | .06288 | -.34794 | .10191 | -.03660 | .23718 |
| -100.630 | 400.040 | 1199.50000 | -5.20630 | 10.19400 | .13905 | -.19132 | .06282 | -.34783 | .10186 | -.03659 | .23709 |
| -101.320 | 500.070 | 1199.50000 | -5.20630 | 10.19400 | .13907 | -.19138 | .06283 | -.34786 | .10186 | -.03658 | .23714 |
| -101.840 | 599.890 | 1199.70000 | -5.20630 | 10.19400 | .13898 | -.19136 | .06285 | -.34807 | .10193 | -.03664 | .23716 |
| | GRADIENT | .00000 | .00000 | .00000 | .00000 | .00000 | .00000 | .00000 | .00000 | .00000 | .00000 |

IA143, AEDC V41A-P8A, O/ET W/R.H. SRB SEPARATING (OVX954) ( 23 MAY 77 )

REFERENCE DATA

SREF = 2690.0000 SQ.FT. XMRP = 1097.0000 IN. XT
LREF = 1290.3000 INCHES YMRP = .0000 IN. YT
BREF = 1290.3000 INCHES ZMRP = 450.0000 IN. ZT
SCALE = .0100

PARAMETRIC DATA

ALPHA = -5.000 BETA = 10.000
DALPHA = -15.000 DBETA = 2.000
X = 1200.000 MACH = 4.500
JET PC = .000

RUN NO. 4422/ 0 RN/L = 2.37 GRADIENT INTERVAL = -5.00/ 5.00

| Y | Z | X | ALPHA | BETA | PHI | CN | CLM | CY | CYN | CBL | CA |
|---|---|---|---|---|---|---|---|---|---|---|---|
| -100.990 | .499 | 1199.39999 | -5.20610 | 10.19400 | .14004 | -.19169 | .06304 | -.34794 | .10191 | -.03644 | .23550 |
| -100.630 | 101.160 | 1199.70000 | -5.20640 | 10.19400 | .13913 | -.19079 | .06252 | -.34747 | .10166 | -.03650 | .23707 |
| -100.470 | 200.690 | 1199.50000 | -5.20640 | 10.19400 | .13917 | -.19074 | .06256 | -.34763 | .10174 | -.03652 | .23746 |
| | GRADIENT | .00000 | .00000 | .00000 | .00000 | .00000 | .00000 | .00000 | .00000 | .00000 | .00000 |

RUN NO. 4423/ 0 RN/L = 2.37 GRADIENT INTERVAL = -5.00/ 5.00

| Y | Z | X | ALPHA | BETA | PHI | CN | CLM | CY | CYN | CBL | CA |
|---|---|---|---|---|---|---|---|---|---|---|---|
| -600.860 | 200.600 | 1199.50000 | -5.20640 | 10.19400 | .13918 | -.19072 | .06254 | -.34754 | .10173 | -.03651 | .23732 |
| -601.640 | 100.540 | 1199.60001 | -5.20630 | 10.19400 | .13914 | -.19078 | .06258 | -.34761 | .10176 | -.03652 | .23746 |
| -600.820 | .616 | 1199.39999 | -5.20630 | 10.19400 | .13905 | -.19075 | .06258 | -.34755 | .10172 | -.03653 | .23751 |
| | GRADIENT | .00000 | .00000 | .00000 | .00000 | .00000 | .00000 | .00000 | .00000 | .00000 | .00000 |

IA143, AEDC V41A-P8A, O/ET W/R.H. SRB SEPARATING (OVX955) ( 23 MAY 77 )

REFERENCE DATA

SREF = 2690.0000 SQ.FT. XMRP = 1097.0000 IN. XT
LREF = 1290.3000 INCHES YMRP = .0000 IN. YT
BREF = 1290.3000 INCHES ZMRP = 450.0000 IN. ZT
SCALE = .0100

PARAMETRIC DATA

ALPHA = -5.000 BETA = 10.000
DALPHA = -25.000 DBETA = 4.000
X = 1200.000 MACH = 4.500
JET PC = .000

RUN NO. 4494/ 0 RN/L = 2.37 GRADIENT INTERVAL = -5.00/ 5.00

| Y | Z | X | ALPHA | BETA | PHI | CN | CLM | CY | CYN | CBL | CA |
|---|---|---|---|---|---|---|---|---|---|---|---|
| -101.190 | 400.530 | 1199.30000 | -5.20530 | 10.19300 | .13845 | -.19131 | .06280 | -.34779 | .10189 | -.03658 | .23678 |
| -100.210 | 500.960 | 1199.60001 | -5.20530 | 10.19300 | .13845 | -.19135 | .06280 | -.34783 | .10190 | -.03658 | .23678 |
| -100.840 | 600.900 | 1199.60001 | -5.20540 | 10.19300 | .13853 | -.19133 | .06278 | -.34814 | .10201 | -.03664 | .23688 |
| | GRADIENT | .00000 | .00000 | .00000 | .00000 | .00000 | .00000 | .00000 | .00000 | .00000 | .00000 |

RUN NO. 4495/ 0 RN/L = 2.37 GRADIENT INTERVAL = -5.00/ 5.00

| Y | Z | X | ALPHA | BETA | PHI | CN | CLM | CY | CYN | CBL | CA |
|---|---|---|---|---|---|---|---|---|---|---|---|
| -600.630 | 600.840 | 1199.60001 | -5.20540 | 10.19300 | .13852 | -.19146 | .06282 | -.34802 | .10197 | -.03661 | .23679 |
| -601.010 | 500.850 | 1199.60001 | -5.20560 | 10.19300 | .13864 | -.19147 | .06283 | -.34795 | .10189 | -.03659 | .23690 |
| -601.240 | 400.770 | 1199.70000 | -5.20580 | 10.19300 | .13884 | -.19137 | .06279 | -.34757 | .10181 | -.03652 | .23671 |
| | GRADIENT | .00000 | .00000 | .00000 | .00000 | .00000 | .00000 | .00000 | .00000 | .00000 | .00000 |

IA143, AEDC V41A-P8A, O/ET W/R.H. SRB SEPARATING (OVX956) ( 23 MAY 77 )

REFERENCE DATA

SREF = 2690.0000 SQ.FT. XMRP = 1097.0000 IN. XT
LREF = 1290.3000 INCHES YMRP = .0000 IN. YT
BREF = 1290.3000 INCHES ZMRP = 450.0000 IN. ZT
SCALE = .0100

PARAMETRIC DATA

ALPHA = -5.000 BETA = 10.000
DALPHA = -15.000 DBETA = -8.000
X = 1200.000 MACH = 4.500
JET PC = .000

RUN NO. 4425/ 0 RN/L = 2.37 GRADIENT INTERVAL = -5.00/ 5.00

| Y | Z | X | ALPHA | BETA | PHI | CN | CLM | CY | CYN | CBL | CA |
|---|---|---|---|---|---|---|---|---|---|---|---|
| -102.190 | 202.710 | 1200.00000 | -5.20610 | 10.19400 | .13913 | -.19031 | .06226 | -.34734 | .10159 | -.03649 | .23630 |
| -102.200 | 100.560 | 1199.30000 | -5.20590 | 10.19400 | .13899 | -.19056 | .06234 | -.34739 | .10153 | -.03648 | .23610 |
| -102.010 | .181 | 1199.39999 | -5.20580 | 10.19400 | .13893 | -.19037 | .06194 | -.34799 | .10186 | -.03664 | .23434 |
| | GRADIENT | .00000 | .00000 | .00000 | .00000 | .00000 | .00000 | .00000 | .00000 | .00000 | .00000 |

RUN NO. 4424/ 0 RN/L = 2.37 GRADIENT INTERVAL = -5.00/ 5.00

| Y | Z | X | ALPHA | BETA | PHI | CN | CLM | CY | CYN | CBL | CA |
|---|---|---|---|---|---|---|---|---|---|---|---|
| -599.980 | .596 | 1199.20000 | -5.20630 | 10.19400 | .13916 | -.19052 | .06247 | -.34744 | .10165 | -.03650 | .23716 |
| -600.240 | 100.750 | 1199.30000 | -5.20620 | 10.19400 | .13910 | -.19054 | .06248 | -.34756 | .10172 | -.03652 | .23718 |
| -603.730 | 200.690 | 1199.89999 | -5.20620 | 10.19400 | .13908 | -.19063 | .06249 | -.34761 | .10173 | -.03652 | .23716 |
| | GRADIENT | .00000 | .00000 | .00000 | .00000 | .00000 | .00000 | .00000 | .00000 | .00000 | .00000 |

IA143, AEDC V41A-P8A, O/ET W/R.H. SRB SEPARATING (OVX957) ( 23 MAY 77 )

REFERENCE DATA

SREF = 2690.0000 SQ.FT. XMRP = 1097.0000 IN. XT
LREF = 1290.3000 INCHES YMRP = .0000 IN. YT
BREF = 1290.3000 INCHES ZMRP = 450.0000 IN. ZT
SCALE = .0100

PARAMETRIC DATA

ALPHA = -5.000 BETA = 10.000
DALPHA = -25.000 DBETA = -20.000
X = 1200.000 MACH = 4.500
JET PC = .000

RUN NO. 4492/ 0 RN/L = 2.35 GRADIENT INTERVAL = -5.00/ 5.00

| Y | Z | X | ALPHA | BETA | PHI | CN | CLM | CY | CYN | CBL | CA |
|---|---|---|---|---|---|---|---|---|---|---|---|
| -100.530 | 400.310 | 1199.10001 | -5.20470 | 10.19300 | .13800 | -.19068 | .06191 | -.34688 | .10118 | -.03645 | .23284 |
| -101.110 | 500.830 | 1199.50000 | -5.20520 | 10.19300 | .13836 | -.19088 | .06224 | -.34725 | .10152 | -.03649 | .23490 |
| -101.140 | 601.110 | 1199.70000 | -5.20550 | 10.19300 | .13863 | -.19134 | .06268 | -.34788 | .10186 | -.03657 | .23634 |
| | GRADIENT | .00000 | .00000 | .00000 | .00000 | .00000 | .00000 | .00000 | .00000 | .00000 | .00000 |

RUN NO. 4493/ 0 RN/L = 2.35 GRADIENT INTERVAL = -5.00/ 5.00

| Y | Z | X | ALPHA | BETA | PHI | CN | CLM | CY | CYN | CBL | CA |
|---|---|---|---|---|---|---|---|---|---|---|---|
| -600.230 | 400.720 | 1199.20000 | -5.20540 | 10.19300 | .13853 | -.19132 | .06276 | -.34809 | .10203 | -.03664 | .23668 |
| -600.260 | 500.760 | 1199.30000 | -5.20550 | 10.19300 | .13862 | -.19143 | .06280 | -.34796 | .10197 | -.03660 | .23678 |
| -600.250 | 600.620 | 1199.20000 | -5.20550 | 10.19300 | .13867 | -.19137 | .06277 | -.34774 | .10191 | -.03656 | .23663 |
| | GRADIENT | .00000 | .00000 | .00000 | .00000 | .00000 | .00000 | .00000 | .00000 | .00000 | .00000 |

IA143, AEDC V41A-P8A, O/ET W/R.H. SRB SEPARATING (OVX958) ( 23 MAY 77 )

REFERENCE DATA

SREF = 2690.0000 SQ.FT. XMRP = 1097.0000 IN. XT
LREF = 1290.3000 INCHES YMRP = .0000 IN. YT
BREF = 1290.3000 INCHES ZMRP = 450.0000 IN. ZT
SCALE = .0100

PARAMETRIC DATA

ALPHA = -5.000 BETA = 10.000
DALPHA = -10.000 DBETA = .000
X = 1200.000 MACH = 4.500
JET PC = .000

RUN NO. 4454/ 0 RN/L = 2.37 GRADIENT INTERVAL = -5.00/ 5.00

| Y | Z | X | ALPHA | BETA | PHI | CN | CLM | CY | CYN | CBL | CA |
|---|---|---|---|---|---|---|---|---|---|---|---|
| -200.350 | -49.461 | 1199.39999 | -5.20550 | 10.19300 | .13880 | -.19154 | .06291 | -.34799 | .10188 | -.03657 | .23640 |
| -200.980 | .786 | 1199.50000 | -5.20580 | 10.19300 | .13879 | -.19135 | .06281 | -.34798 | .10191 | -.03660 | .23687 |
| -200.730 | 100.670 | 1199.60001 | -5.20570 | 10.19300 | .13878 | -.19137 | .06280 | -.34780 | .10186 | -.03656 | .23685 |
| -201.320 | 150.530 | 1199.50000 | -5.20580 | 10.19300 | .13886 | -.19132 | .06280 | -.34783 | .10190 | -.03656 | .23697 |
| | GRADIENT | .00000 | .00000 | .00000 | .00000 | .00000 | .00000 | .00000 | .00000 | .00000 | .00000 |

RUN NO. 4455/ 0 RN/L = 2.37 GRADIENT INTERVAL = -5.00/ 5.00

| Y | Z | X | ALPHA | BETA | PHI | CN | CLM | CY | CYN | CBL | CA |
|---|---|---|---|---|---|---|---|---|---|---|---|
| -400.230 | 148.190 | 1199.10001 | -5.20570 | 10.19300 | .13873 | -.19136 | .06280 | -.34825 | .10204 | -.03664 | .23694 |
| -401.090 | 100.400 | 1199.50000 | -5.20580 | 10.19300 | .13876 | -.19149 | .06282 | -.34810 | .10200 | -.03662 | .23686 |
| -401.120 | .348 | 1199.50000 | -5.20570 | 10.19300 | .13870 | -.19143 | .06286 | -.34807 | .10197 | -.03662 | .23707 |
| -400.830 | -49.636 | 1199.30000 | -5.20570 | 10.19300 | .13872 | -.19137 | .06279 | -.34788 | .10192 | -.03660 | .23679 |
| | GRADIENT | .00000 | .00000 | .00000 | .00000 | .00000 | .00000 | .00000 | .00000 | .00000 | .00000 |

IA143, AEDC V41A-P8A, O/ET W/R.H. SRB SEPARATING (OVX959) ( 23 MAY 77 )

REFERENCE DATA

SREF = 2690.0000 SQ.FT. XMRP = 1097.0000 IN. XT
LREF = 1290.3000 INCHES YMRP = .0000 IN. YT
BREF = 1290.3000 INCHES ZMRP = 450.0000 IN. ZT
SCALE = .0100

PARAMETRIC DATA

ALPHA = -5.000 BETA = 10.000
DALPHA = -20.000 DBETA = .000
X = 1200.000 MACH = 4.500
JET PC = .000

RUN NO. 4486/ 0 RN/L = 2.36 GRADIENT INTERVAL = -5.00/ 5.00

| Y | Z | X | ALPHA | BETA | PHI | CN | CLM | CY | CYN | CBL | CA |
|---|---|---|---|---|---|---|---|---|---|---|---|
| -200.260 | 300.440 | 1199.30000 | -5.20570 | 10.19300 | .13870 | -.19147 | .06282 | -.34828 | .10204 | -.03664 | .23688 |
| -201.160 | 400.780 | 1199.60001 | -5.20550 | 10.19300 | .13856 | -.19142 | .06283 | -.34787 | .10188 | -.03658 | .23688 |
| -200.020 | 500.420 | 1199.20000 | -5.20550 | 10.19300 | .13859 | -.19138 | .06280 | -.34789 | .10194 | -.03659 | .23684 |
| | GRADIENT | .00000 | .00000 | .00000 | .00000 | .00000 | .00000 | .00000 | .00000 | .00000 | .00000 |

RUN NO. 4487/ 0 RN/L = 2.36 GRADIENT INTERVAL = -5.00/ 5.00

| Y | Z | X | ALPHA | BETA | PHI | CN | CLM | CY | CYN | CBL | CA |
|---|---|---|---|---|---|---|---|---|---|---|---|
| -400.760 | 500.640 | 1199.39999 | -5.20550 | 10.19300 | .13857 | -.19147 | .06282 | -.34792 | .10192 | -.03659 | .23687 |
| -401.190 | 400.580 | 1199.50000 | -5.20560 | 10.19300 | .13863 | -.19149 | .06280 | -.34805 | .10194 | -.03660 | .23679 |
| -401.160 | 300.690 | 1199.39999 | -5.20560 | 10.19300 | .13863 | -.19157 | .06283 | -.34786 | .10189 | -.03657 | .23680 |
| | GRADIENT | .00000 | .00000 | .00000 | .00000 | .00000 | .00000 | .00000 | .00000 | .00000 | .00000 |

IA143, AEDC V41A-P8A, O/ET W/R.H. SRB SEPARATING (OVX960) ( 23 MAY 77 )

REFERENCE DATA

SREF = 2690.0000 SQ.FT. XMRP = 1097.0000 IN. XT
LREF = 1290.3000 INCHES YMRP = .0000 IN. YT
BREF = 1290.3000 INCHES ZMRP = 450.0000 IN. ZT
SCALE = .0100

PARAMETRIC DATA

ALPHA = -5.000 BETA = 10.000
DALPHA = -10.000 DBETA = -8.000
X = 1200.000 MACH = 4.500
JET PC = .000

RUN NO. 4452/ 0 RN/L = 2.37 GRADIENT INTERVAL = -5.00/ 5.00

| Y | Z | X | ALPHA | BETA | PHI | CN | CLM | CY | CYN | CBL | CA |
|---|---|---|---|---|---|---|---|---|---|---|---|
| -200.940 | -49.357 | 1199.30000 | -5.20580 | 10.19400 | .13795 | -.19120 | .06237 | -.34862 | .10213 | -.03689 | .23584 |
| -200.720 | .662 | 1199.39999 | -5.20570 | 10.19300 | .13873 | -.19135 | .06277 | -.34798 | .10194 | -.03661 | .23672 |
| -201.150 | 100.630 | 1199.39999 | -5.20580 | 10.19300 | .13883 | -.19139 | .06281 | -.34797 | .10195 | -.03659 | .23693 |
| -200.590 | 150.430 | 1199.20000 | -5.20600 | 10.19400 | .13892 | -.19148 | .06286 | -.34809 | .10196 | -.03661 | .23707 |
| | GRADIENT | .00000 | .00000 | .00000 | .00000 | .00000 | .00000 | .00000 | .00000 | .00000 | .00000 |

RUN NO. 4453/ 0 RN/L = 2.37 GRADIENT INTERVAL = -5.00/ 5.00

| Y | Z | X | ALPHA | BETA | PHI | CN | CLM | CY | CYN | CBL | CA |
|---|---|---|---|---|---|---|---|---|---|---|---|
| -400.520 | 149.410 | 1199.20000 | -5.20580 | 10.19300 | .13875 | -.19147 | .06282 | -.34799 | .10194 | -.03660 | .23690 |
| -401.130 | 100.230 | 1199.50000 | -5.20570 | 10.19300 | .13879 | -.19131 | .06279 | -.34799 | .10193 | -.03660 | .23687 |
| -401.440 | .248 | 1199.50000 | -5.20580 | 10.19300 | .13884 | -.19132 | .06282 | -.34800 | .10194 | -.03660 | .23706 |
| -400.930 | -49.654 | 1199.30000 | -5.20570 | 10.19300 | .13873 | -.19136 | .06285 | -.34792 | .10192 | -.03659 | .23711 |
| | GRADIENT | .00000 | .00000 | .00000 | .00000 | .00000 | .00000 | .00000 | .00000 | .00000 | .00000 |

IA143, AEDC V41A-P8A, O/ET W/R.H. SRB SEPARATING (OVX961) ( 23 MAY 77 )

REFERENCE DATA

SREF = 2690.0000 SQ.FT. XMRP = 1097.0000 IN. XT
LREF = 1290.3000 INCHES YMRP = .0000 IN. YT
BREF = 1290.3000 INCHES ZMRP = 450.0000 IN. ZT
SCALE = .0100

PARAMETRIC DATA

ALPHA = -5.000 BETA = 10.000
DALPHA = -20.000 DBETA = -12.000
X = 1200.000 MACH = 4.500
JET PC = .000

RUN NO. 4480/ 0 RN/L = 2.36 GRADIENT INTERVAL = -5.00/ 5.00

| Y | Z | X | ALPHA | BETA | PHI | CN | CLM | CY | CYN | CBL | CA |
|---|---|---|---|---|---|---|---|---|---|---|---|
| -201.350 | 300.530 | 1199.30000 | -5.20550 | 10.19300 | .13857 | -.19133 | .06280 | -.34786 | .10191 | -.03659 | .23682 |
| -200.730 | 400.460 | 1199.30000 | -5.20560 | 10.19300 | .13868 | -.19135 | .06277 | -.34783 | .10188 | -.03657 | .23679 |
| -200.740 | 500.270 | 1199.20000 | -5.20570 | 10.19300 | .13867 | -.19136 | .06277 | -.34810 | .10198 | -.03663 | .23676 |
| | GRADIENT | .00000 | .00000 | .00000 | .00000 | .00000 | .00000 | .00000 | .00000 | .00000 | .00000 |

RUN NO. 4481/ 0 RN/L = 2.36 GRADIENT INTERVAL = -5.00/ 5.00

| Y | Z | X | ALPHA | BETA | PHI | CN | CLM | CY | CYN | CBL | CA |
|---|---|---|---|---|---|---|---|---|---|---|---|
| -401.700 | 499.850 | 1199.39999 | -5.20550 | 10.19300 | .13866 | -.19128 | .06278 | -.34789 | .10191 | -.03658 | .23682 |
| -401.290 | 400.730 | 1199.50000 | -5.20550 | 10.19300 | .13862 | -.19139 | .06277 | -.34769 | .10184 | -.03655 | .23659 |
| -401.160 | 300.490 | 1199.39999 | -5.20540 | 10.19300 | .13852 | -.19134 | .06275 | -.34759 | .10182 | -.03654 | .23659 |
| | GRADIENT | .00000 | .00000 | .00000 | .00000 | .00000 | .00000 | .00000 | .00000 | .00000 | .00000 |

IA143, AEDC V41A-P8A, O/ET W/R.H. SRB SEPARATING (OVX962) ( 23 MAY 77 )

REFERENCE DATA

SREF = 2690.0000 SQ.FT. XMRP = 1097.0000 IN. XT
LREF = 1290.3000 INCHES YMRP = .0000 IN. YT
BREF = 1290.3000 INCHES ZMRP = 450.0000 IN. ZT
SCALE = .0100

PARAMETRIC DATA

ALPHA = -5.000 BETA = 10.000
DALPHA = -15.000 DBETA = -4.000
X = 1200.000 MACH = 4.500
JET PC = .000

RUN NO. 4475/ 0 RN/L = 2.37 GRADIENT INTERVAL = -5.00/ 5.00

| Y | Z | X | ALPHA | BETA | PHI | CN | CLM | CY | CYN | CBL | CA |
|---|---|---|---|---|---|---|---|---|---|---|---|
| -201.420 | 400.360 | 1199.30000 | -5.20550 | 10.19300 | .13858 | -.19144 | .06278 | -.34799 | .10194 | -.03660 | .23672 |
| -201.130 | 450.340 | 1199.50000 | -5.20550 | 10.19300 | .13866 | -.19136 | .06280 | -.34802 | .10192 | -.03659 | .23694 |
| -201.170 | 500.450 | 1199.50000 | -5.20550 | 10.19300 | .13857 | -.19139 | .06280 | -.34773 | .10186 | -.03656 | .23681 |
| | GRADIENT | .00000 | .00000 | .00000 | .00000 | .00000 | .00000 | .00000 | .00000 | .00000 | .00000 |

RUN NO. 4476/ 0 RN/L = 2.37 GRADIENT INTERVAL = -5.00/ 5.00

| Y | Z | X | ALPHA | BETA | PHI | CN | CLM | CY | CYN | CBL | CA |
|---|---|---|---|---|---|---|---|---|---|---|---|
| -300.910 | 499.550 | 1199.20000 | -5.20550 | 10.19300 | .13859 | -.19131 | .06275 | -.34774 | .10187 | -.03656 | .23662 |
| -300.960 | 450.620 | 1199.60001 | -5.20540 | 10.19300 | .13855 | -.19129 | .06278 | -.34786 | .10189 | -.03658 | .23681 |
| -301.320 | 400.460 | 1199.39999 | -5.20550 | 10.19300 | .13858 | -.19136 | .06282 | -.34785 | .10190 | -.03657 | .23702 |
| | GRADIENT | .00000 | .00000 | .00000 | .00000 | .00000 | .00000 | .00000 | .00000 | .00000 | .00000 |

IA143, AEDC V41A-P8A, O/ET W/R.H. SRB SEPARATING (OVX963) ( 23 MAY 77 )

REFERENCE DATA

SREF = 2690.0000 SQ.FT. XMRP = 1097.0000 IN. XT
LREF = 1290.3000 INCHES YMRP = .0000 IN. YT
BREF = 1290.3000 INCHES ZMRP = 450.0000 IN. ZT
SCALE = .0100

PARAMETRIC DATA

ALPHA = -5.000 BETA = 10.000
DALPHA = -20.000 DBETA = -4.000
X = 1200.000 MACH = 4.500
JET PC = .000

RUN NO. 4482/ 0 RN/L = 2.36 GRADIENT INTERVAL = -5.00/ 5.00

| Y | Z | X | ALPHA | BETA | PHI | CN | CLM | CY | CYN | CBL | CA |
|---|---|---|---|---|---|---|---|---|---|---|---|
| -201.010 | 400.620 | 1199.39999 | -5.20550 | 10.19300 | .13864 | -.19142 | .06282 | -.34802 | .10191 | -.03659 | .23687 |
| -200.860 | 450.450 | 1199.39999 | -5.20550 | 10.19300 | .13857 | -.19126 | .06278 | -.34792 | .10190 | -.03661 | .23683 |
| -201.020 | 500.450 | 1199.50000 | -5.20550 | 10.19300 | .13861 | -.19139 | .06281 | -.34793 | .10191 | -.03658 | .23679 |
| | GRADIENT | .00000 | .00000 | .00000 | .00000 | .00000 | .00000 | .00000 | .00000 | .00000 | .00000 |

RUN NO. 4483/ 0 RN/L = 2.36 GRADIENT INTERVAL = -5.00/ 5.00

| Y | Z | X | ALPHA | BETA | PHI | CN | CLM | CY | CYN | CBL | CA |
|---|---|---|---|---|---|---|---|---|---|---|---|
| -301.230 | 499.640 | 1199.10001 | -5.20560 | 10.19300 | .13868 | -.19135 | .06277 | -.34785 | .10189 | -.03657 | .23677 |
| -301.020 | 450.770 | 1199.50000 | -5.20560 | 10.19300 | .13862 | -.19137 | .06277 | -.34814 | .10196 | -.03663 | .23680 |
| -301.190 | 400.670 | 1199.50000 | -5.20550 | 10.19300 | .13854 | -.19131 | .06279 | -.34789 | .10186 | -.03661 | .23681 |
| | GRADIENT | .00000 | .00000 | .00000 | .00000 | .00000 | .00000 | .00000 | .00000 | .00000 | .00000 |

IA143, AEDC V41A-P8A, O/ET W/R.H. SRB SEPARATING (OVX964) ( 23 MAY 77 )

REFERENCE DATA

SREF = 2690.0000 SQ.FT. XMRP = 1097.0000 IN. XT
LREF = 1290.3000 INCHES YMRP = .0000 IN. YT
BREF = 1290.3000 INCHES ZMRP = 450.0000 IN. ZT
SCALE = .0100

PARAMETRIC DATA

ALPHA = -5.000 BETA = 10.000
DALPHA = -15.000 DBETA = -8.000
X = 1200.000 MACH = 4.500
JET PC = .000

RUN NO. 4478/ 0 RN/L = 2.37 GRADIENT INTERVAL = -5.00/ 5.00

| Y | Z | X | ALPHA | BETA | PHI | CN | CLM | CY | CYN | CBL | CA |
|---|---|---|---|---|---|---|---|---|---|---|---|
| -200.800 | 400.410 | 1199.20000 | -5.20550 | 10.19300 | .13869 | -.19122 | .06271 | -.34779 | .10187 | -.03656 | .23658 |
| -201.370 | 450.330 | 1199.39999 | -5.20550 | 10.19300 | .13865 | -.19135 | .06278 | -.34781 | .10188 | -.03656 | .23682 |
| -200.720 | 500.320 | 1199.30000 | -5.20560 | 10.19300 | .13868 | -.19129 | .06275 | -.34777 | .10187 | -.03656 | .23673 |
| | GRADIENT | .00000 | .00000 | .00000 | .00000 | .00000 | .00000 | .00000 | .00000 | .00000 | .00000 |

IA143, AEDC V41A-P8A, O/ET W/R.H. SRB SEPARATING (OVX965) ( 01 SEP 77 )

REFERENCE DATA

SREF = 2690.0000 SQ.FT. XMRP = 1097.0000 IN. XT
LREF = 1290.3000 INCHES YMRP = .0000 IN. YT
BREF = 1290.3000 INCHES ZMRP = 450.0000 IN. ZT
SCALE = .0100

PARAMETRIC DATA

ALPHA = -5.000 BETA = 10.000
DALPHA = -20.000 DBETA = -8.000
X = 1200.000 MACH = 4.500
JET PC = .000

RUN NO. 4485/ 0 RN/L = 2.36 GRADIENT INTERVAL = -5.00/ 5.00

| Y | Z | X | ALPHA | BETA | PHI | CN | CLM | CY | CYN | CBL | CA |
|---|---|---|---|---|---|---|---|---|---|---|---|
| -200.540 | 500.880 | 1199.39999 | -5.20560 | 10.19300 | .13874 | -.19142 | .06283 | -.34802 | .10192 | -.03658 | .23701 |
| -200.950 | 450.720 | 1199.39999 | -5.20570 | 10.19300 | .13874 | -.19131 | .06278 | -.34770 | .10185 | -.03656 | .23671 |
| -201.180 | 400.600 | 1199.30000 | -5.20550 | 10.19300 | .13861 | -.19138 | .06281 | -.34806 | .10196 | -.03661 | .23685 |
| | GRADIENT | .00000 | .00000 | .00000 | .00000 | .00000 | .00000 | .00000 | .00000 | .00000 | .00000 |

RUN NO. 4484/ 0 RN/L = 2.36 GRADIENT INTERVAL = -5.00/ 5.00

| Y | Z | X | ALPHA | BETA | PHI | CN | CLM | CY | CYN | CBL | CA |
|---|---|---|---|---|---|---|---|---|---|---|---|
| -303.370 | 400.710 | 1199.70000 | -5.20550 | 10.19300 | .13858 | -.19139 | .06280 | -.34774 | .10187 | -.03655 | .23678 |
| -301.300 | 450.510 | 1199.50000 | -5.20540 | 10.19300 | .13850 | -.19131 | .06280 | -.34773 | .10184 | -.03656 | .23687 |
| -300.780 | 500.380 | 1199.30000 | -5.20550 | 10.19300 | .13862 | -.19147 | .06281 | -.34798 | .10191 | -.03659 | .23688 |
| | GRADIENT | .00000 | .00000 | .00000 | .00000 | .00000 | .00000 | .00000 | .00000 | .00000 | .00000 |

IA143, AEDC V41A-P8A, O/ET W/R.H. SRB SEPARATING (OVX966) ( 23 MAY 77 )

REFERENCE DATA

SREF = 2690.0000 SQ.FT. XMRP = 1097.0000 IN. XT
LREF = 1290.3000 INCHES YMRP = .0000 IN. YT
BREF = 1290.3000 INCHES ZMRP = 450.0000 IN. ZT
SCALE = .0100

PARAMETRIC DATA

ALPHA = -5.000 BETA = 10.000
DALPHA = -15.000 DBETA = -8.000
X = 1200.000 MACH = 4.500
JET PC = .000

RUN NO. 4477/ 0 RN/L = 2.37 GRADIENT INTERVAL = -5.00/ 5.00

| Y | Z | X | ALPHA | BETA | PHI | CN | CLM | CY | CYN | CBL | CA |
|---|---|---|---|---|---|---|---|---|---|---|---|
| -301.200 | 300.620 | 1199.39999 | -5.20550 | 10.19300 | .13860 | -.19135 | .06279 | -.34782 | .10189 | -.03657 | .23678 |
| -300.630 | 400.350 | 1199.30000 | -5.20550 | 10.19300 | .13853 | -.19144 | .06280 | -.34816 | .10197 | -.03663 | .23686 |
| -300.810 | 450.290 | 1199.30000 | -5.20550 | 10.19300 | .13865 | -.19129 | .06276 | -.34776 | .10185 | -.03655 | .23673 |
| -301.030 | 500.340 | 1199.30000 | -5.20560 | 10.19300 | .13867 | -.19135 | .06277 | -.34789 | .10189 | -.03658 | .23678 |
| | GRADIENT | .00000 | .00000 | .00000 | .00000 | .00000 | .00000 | .00000 | .00000 | .00000 | .00000 |

IA143, AEDC V41A-P8A, O/ET W/R.H. SRB SEPARATING (OVX967) ( 23 MAY 77 )

REFERENCE DATA

SREF = 2690.0000 SQ.FT. XMRP = 1097.0000 IN. XT
LREF = 1290.3000 INCHES YMRP = .0000 IN. YT
BREF = 1290.3000 INCHES ZMRP = 450.0000 IN. ZT
SCALE = .0100

PARAMETRIC DATA

ALPHA = -5.000 BETA = 10.000
DALPHA = -18.000 DBETA = -8.000
X = 1200.000 MACH = 4.500
JET PC = .000

RUN NO. 4479/ 0 RN/L = 2.36 GRADIENT INTERVAL = -5.00/ 5.00

| Y | Z | X | ALPHA | BETA | PHI | CN | CLM | CY | CYN | CBL | CA |
|---|---|---|---|---|---|---|---|---|---|---|---|
| -301.060 | 400.500 | 1199.39999 | -5.20550 | 10.19300 | .13864 | -.19133 | .06280 | -.34799 | .10194 | -.03660 | .23686 |
| -299.790 | 599.770 | 1199.00000 | -5.20540 | 10.19300 | .13855 | -.19123 | .06278 | -.34792 | .10191 | -.03659 | .23689 |
| -300.630 | 799.550 | 1199.10001 | -5.20560 | 10.19300 | .13866 | -.19141 | .06282 | -.34804 | .10194 | -.03660 | .23688 |
| -300.760 | 999.520 | 1199.20000 | -5.20550 | 10.19300 | .13863 | -.19125 | .06275 | -.34795 | .10194 | -.03659 | .23671 |
| | GRADIENT | .00000 | .00000 | .00000 | .00000 | .00000 | .00000 | .00000 | .00000 | .00000 | .00000 |

IA143, AEDC V41A-P8A, O/ET W/R.H. SRB SEPARATING (OVX968) ( 23 MAY 77 )

REFERENCE DATA

SREF = 2690.0000 SQ.FT. XMRP = 1097.0000 IN. XT
LREF = 1290.3000 INCHES YMRP = .0000 IN. YT
BREF = 1290.3000 INCHES ZMRP = 450.0000 IN. ZT
SCALE = .0100

PARAMETRIC DATA

ALPHA = -5.000 BETA = 5.000
DALPHA = .000 DBETA = .000
X = .000 MACH = 4.500
JET PC = .000

RUN NO. 4142/ 0 RN/L = 2.38 GRADIENT INTERVAL = -5.00/ 5.00

| Y | Z | X | ALPHA | BETA | PHI | CN | CLM | CY | CYN | CBL | CA |
|---|---|---|---|---|---|---|---|---|---|---|---|
| -51.305 | .059 | -.34217 | -5.17810 | 5.12740 | .06836 | -.19500 | .06543 | -.19021 | .04624 | -.02008 | .22449 |
| -50.906 | 25.259 | -.18532 | -5.17740 | 5.12600 | .07205 | -.19341 | .06518 | -.19190 | .04766 | -.01977 | .22514 |
| -50.591 | 100.280 | -.30286 | -5.17440 | 5.12120 | .08266 | -.18737 | .06426 | -.19316 | .05018 | -.01814 | .22653 |
| -50.556 | 150.250 | -.26391 | -5.17180 | 5.11620 | .08168 | -.17810 | .06030 | -.18987 | .05064 | -.01796 | .22663 |
| -50.269 | 250.300 | -.37757 | -5.16570 | 5.10460 | .08537 | -.17695 | .06211 | -.17789 | .04900 | -.01520 | .22167 |
| -49.799 | 349.430 | -.30067 | -5.16920 | 5.09350 | .07305 | -.17718 | .05956 | -.16259 | .04591 | -.01509 | .22164 |
| -50.455 | 474.320 | -.29355 | -5.17160 | 5.09480 | .06544 | -.18324 | .06135 | -.15703 | .04256 | -.01537 | .22139 |
| -50.896 | 499.780 | -.23995 | -5.17170 | 5.09480 | .06533 | -.18461 | .06212 | -.15683 | .04244 | -.01535 | .22139 |
| -50.926 | 599.590 | -.18975 | -5.17150 | 5.09480 | .06536 | -.18737 | .06396 | -.15686 | .04248 | -.01536 | .22177 |
| | GRADIENT | .00000 | .00000 | .00000 | .00000 | .00000 | .00000 | .00000 | .00000 | .00000 | .00000 |

RUN NO. 4143/ 0 RN/L = 2.39 GRADIENT INTERVAL = -5.00/ 5.00

| Y | Z | X | ALPHA | BETA | PHI | CN | CLM | CY | CYN | CBL | CA |
|---|---|---|---|---|---|---|---|---|---|---|---|
| -150.740 | 599.550 | -.27724 | -5.17140 | 5.09480 | .06526 | -.18734 | .06396 | -.15678 | .04245 | -.01536 | .22173 |
| -150.820 | 499.880 | -.28173 | -5.17140 | 5.09480 | .06533 | -.18738 | .06386 | -.15687 | .04245 | -.01534 | .22148 |
| -150.810 | 474.770 | -.23901 | -5.17130 | 5.09460 | .06543 | -.18650 | .06330 | -.15694 | .04254 | -.01535 | .22126 |
| -150.990 | 349.950 | -.21189 | -5.17140 | 5.09400 | .06943 | -.18171 | .06088 | -.15986 | .04438 | -.01524 | .22157 |
| -151.190 | 249.940 | -.27232 | -5.17050 | 5.09420 | .07709 | -.18134 | .06142 | -.16595 | .04738 | -.01497 | .22138 |
| -151.220 | 149.950 | -.20584 | -5.17230 | 5.09720 | .07703 | -.17608 | .05761 | -.17579 | .05154 | -.01704 | .22262 |
| -150.890 | 99.864 | -.24521 | -5.17400 | 5.09980 | .07760 | -.17621 | .05724 | -.17902 | .05215 | -.01748 | .22453 |
| -151.230 | 24.812 | -.21247 | -5.17550 | 5.10090 | .07851 | -.18046 | .05935 | -.18384 | .05432 | -.01832 | .22673 |
| -150.920 | -.013 | -.26799 | -5.17570 | 5.10120 | .07699 | -.18153 | .05978 | -.18408 | .05437 | -.01866 | .22703 |
| | GRADIENT | .00000 | .00000 | .00000 | .00000 | .00000 | .00000 | .00000 | .00000 | .00000 | .00000 |

IA143, AEDC V41A-P8A, O/ET W/R.H. SRB SEPARATING (OVX969) ( 23 MAY 77 )

REFERENCE DATA

SREF = 2690.0000 SQ.FT. XMRP = 1097.0000 IN. XT
LREF = 1290.3000 INCHES YMRP = .0000 IN. YT
BREF = 1290.3000 INCHES ZMRP = 450.0000 IN. ZT
SCALE = .0100

PARAMETRIC DATA

ALPHA = -5.000 BETA = 5.000
DALPHA = -5.000 DBETA = .000
X = .000 MACH = 4.500
JET PC = .000

RUN NO. 4156/ 0 RN/L = 2.37 GRADIENT INTERVAL = -5.00/ 5.00

| Y | Z | X | ALPHA | BETA | PHI | CN | CLM | CY | CYN | CBL | CA |
|---|---|---|---|---|---|---|---|---|---|---|---|
| -50.934 | 25.144 | -.29817 | -5.18680 | 5.13110 | .03775 | -.15921 | .03826 | -.20580 | .05451 | -.02994 | .22590 |
| -50.187 | 100.430 | -.24623 | -5.17890 | 5.12640 | .08203 | -.18094 | .05816 | -.20914 | .05679 | -.02159 | .22751 |
| -50.899 | 150.410 | -.12735 | -5.17510 | 5.12120 | .09309 | -.17776 | .05899 | -.20767 | .05790 | -.01926 | .22727 |
| -50.017 | 250.420 | -.24969 | -5.16780 | 5.11060 | .08964 | -.16549 | .05447 | -.19376 | .05506 | -.01754 | .22137 |
| -49.784 | 349.510 | -.25826 | -5.16750 | 5.09500 | .08616 | -.17283 | .05864 | -.17299 | .05062 | -.01459 | .22117 |
| -50.399 | 474.280 | -.35862 | -5.17130 | 5.09410 | .06672 | -.17892 | .05889 | -.15768 | .04317 | -.01529 | .22065 |
| -50.967 | 499.930 | -.29644 | -5.17150 | 5.09460 | .06559 | -.18180 | .06047 | -.15690 | .04255 | -.01532 | .22081 |
| -50.737 | 599.510 | -.32067 | -5.17130 | 5.09480 | .06526 | -.18731 | .06386 | -.15683 | .04246 | -.01537 | .22120 |
| | GRADIENT | .00000 | .00000 | .00000 | .00000 | .00000 | .00000 | .00000 | .00000 | .00000 | .00000 |

RUN NO. 4157/ 0 RN/L = 2.37 GRADIENT INTERVAL = -5.00/ 5.00

| Y | Z | X | ALPHA | BETA | PHI | CN | CLM | CY | CYN | CBL | CA |
|---|---|---|---|---|---|---|---|---|---|---|---|
| -150.580 | 599.640 | -.30906 | -5.17120 | 5.09470 | .06524 | -.18733 | .06392 | -.15683 | .04245 | -.01535 | .22155 |
| -150.800 | 500.080 | -.21672 | -5.17160 | 5.09470 | .06563 | -.18573 | .06276 | -.15702 | .04259 | -.01533 | .22125 |
| -150.840 | 474.940 | -.28222 | -5.17180 | 5.09460 | .06603 | -.18430 | .06186 | -.15729 | .04278 | -.01533 | .22114 |
| -151.390 | 350.330 | -.24591 | -5.17110 | 5.09290 | .07465 | -.17854 | .05931 | -.16354 | .04672 | -.01504 | .22092 |
| -150.960 | 250.250 | -.35158 | -5.17060 | 5.09480 | .08630 | -.17882 | .06028 | -.17520 | .05195 | -.01510 | .22080 |
| -151.200 | 150.010 | -.30266 | -5.17480 | 5.09940 | .07952 | -.16915 | .05264 | -.18578 | .05604 | -.01864 | .22424 |
| -151.180 | 100.060 | -.29993 | -5.17630 | 5.10040 | .08097 | -.17163 | .05390 | -.19063 | .05827 | -.01938 | .22705 |
| -151.410 | 24.897 | -.21933 | -5.18100 | 5.10160 | .05765 | -.16251 | .04517 | -.19558 | .06143 | -.02541 | .22941 |
| | GRADIENT | .00000 | .00000 | .00000 | .00000 | .00000 | .00000 | .00000 | .00000 | .00000 | .00000 |

IA143, AEDC V41A-P8A, O/ET W/R.H. SRB SEPARATING (OVX970) ( 23 MAY 77 )

REFERENCE DATA

SREF = 2690.0000 SQ.FT. XMRP = 1097.0000 IN. XT
LREF = 1290.3000 INCHES YMRP = .0000 IN. YT
BREF = 1290.3000 INCHES ZMRP = 450.0000 IN. ZT
SCALE = .0100

PARAMETRIC DATA

ALPHA = -5.000 BETA = 5.000
DALPHA = .000 DBETA = -4.000
X = .000 MACH = 4.500
JET PC = .000

RUN NO. 4145/ 0 RN/L = 2.38 GRADIENT INTERVAL = -5.00/ 5.00

| Y | Z | X | ALPHA | BETA | PHI | CN | CLM | CY | CYN | CBL | CA |
|---|---|---|---|---|---|---|---|---|---|---|---|
| -51.193 | 250.000 | -.34512 | -5.16450 | 5.10820 | .08712 | -.17184 | .05984 | -.18200 | .04961 | -.01552 | .22131 |
| -50.391 | 349.270 | -.33833 | -5.16810 | 5.09420 | .07481 | -.17499 | .05901 | -.16394 | .04634 | -.01500 | .22149 |
| -50.694 | 474.290 | -.30666 | -5.17150 | 5.09480 | .06521 | -.18283 | .06114 | -.15665 | .04235 | -.01534 | .22129 |
| -51.042 | 499.720 | -.31615 | -5.17170 | 5.09480 | .06522 | -.18421 | .06182 | -.15683 | .04242 | -.01536 | .22124 |
| -51.226 | 599.600 | -.30582 | -5.17130 | 5.09480 | .06525 | -.18742 | .06393 | -.15702 | .04254 | -.01540 | .22167 |
| | GRADIENT | .00000 | .00000 | .00000 | .00000 | .00000 | .00000 | .00000 | .00000 | .00000 | .00000 |

IA143, AEDC V41A-P8A, O/ET W/R.H. SRB SEPARATING (OVX971) ( 23 MAY 77 )

REFERENCE DATA

SREF = 2690.0000 SQ.FT. XMRP = 1097.0000 IN. XT
LREF = 1290.3000 INCHES YMRP = .0000 IN. YT
BREF = 1290.3000 INCHES ZMRP = 450.0000 IN. ZT
SCALE = .0100

PARAMETRIC DATA

ALPHA = -5.000 BETA = 5.000
DALPHA = -5.000 DBETA = -4.000
X = .000 MACH = 4.500
JET PC = .000

RUN NO. 4155/ 0 RN/L = 2.37 GRADIENT INTERVAL = -5.00/ 5.00

| Y | Z | X | ALPHA | BETA | PHI | CN | CLM | CY | CYN | CBL | CA |
|---|---|---|---|---|---|---|---|---|---|---|---|
| -54.210 | 474.060 | .04874 | -5.17130 | 5.09370 | .06743 | -.17595 | .05712 | -.15791 | .04347 | -.01523 | .22034 |
| -51.067 | 499.830 | -.31456 | -5.17170 | 5.09450 | .06583 | -.17918 | .05873 | -.15696 | .04265 | -.01530 | .22054 |
| -51.148 | 599.620 | -.31626 | -5.17130 | 5.09480 | .06529 | -.18723 | .06376 | -.15674 | .04240 | -.01534 | .22112 |
| | GRADIENT | .00000 | .00000 | .00000 | .00000 | .00000 | .00000 | .00000 | .00000 | .00000 | .00000 |

IA143, AEDC V41A-P8A, O/ET W/R.H. SRB SEPARATING (OVX972) ( 23 MAY 77 )

REFERENCE DATA

SREF = 2690.0000 SQ.FT. XMRP = 1097.0000 IN. XT
LREF = 1290.3000 INCHES YMRP = .0000 IN. YT
BREF = 1290.3000 INCHES ZMRP = 450.0000 IN. ZT
SCALE = .0100

PARAMETRIC DATA

ALPHA = -5.000 BETA = 5.000
DALPHA = .000 DBETA = -4.000
X = .000 MACH = 4.500
JET PC = .000

RUN NO. 4144/ 0 RN/L = 2.38 GRADIENT INTERVAL = -5.00/ 5.00

| Y | Z | X | ALPHA | BETA | PHI | CN | CLM | CY | CYN | CBL | CA |
|---|---|---|---|---|---|---|---|---|---|---|---|
| -151.650 | .052 | -.28510 | -5.17710 | 5.10750 | .08904 | -.18298 | .06048 | -.19964 | .05975 | -.01922 | .22700 |
| -151.140 | 25.155 | -.19777 | -5.17710 | 5.10720 | .09103 | -.18043 | .05910 | -.19872 | .05930 | -.01862 | .22697 |
| -150.490 | 100.220 | -.30127 | -5.17450 | 5.10460 | .08639 | -.17382 | .05618 | -.18989 | .05573 | -.01776 | .22567 |
| -150.590 | 150.040 | -.41415 | -5.17250 | 5.10160 | .08094 | -.17095 | .05467 | -.18333 | .05362 | -.01762 | .22244 |
| -150.410 | 249.830 | -.48973 | -5.16990 | 5.09470 | .08263 | -.17845 | .06040 | -.17053 | .04947 | -.01481 | .22154 |
| -150.550 | 349.620 | -.32960 | -5.17080 | 5.09360 | .07003 | -.17990 | .06002 | -.16011 | .04465 | -.01519 | .22109 |
| -150.760 | 474.400 | -.36808 | -5.17170 | 5.09480 | .06555 | -.18585 | .06281 | -.15706 | .04257 | -.01536 | .22131 |
| -151.050 | 499.770 | -.20077 | -5.17140 | 5.09470 | .06535 | -.18689 | .06352 | -.15673 | .04244 | -.01533 | .22123 |
| -151.190 | 599.650 | -.39346 | -5.17130 | 5.09470 | .06524 | -.18733 | .06396 | -.15684 | .04248 | -.01537 | .22182 |
| | GRADIENT | .00000 | .00000 | .00000 | .00000 | .00000 | .00000 | .00000 | .00000 | .00000 | .00000 |

IA143, AEDC V41A-P8A, O/ET W/R.H. SRB SEPARATING (OVX973) ( 23 MAY 77 )

REFERENCE DATA

SREF = 2690.0000 SQ.FT. XMRP = 1097.0000 IN. XT
LREF = 1290.3000 INCHES YMRP = .0000 IN. YT
BREF = 1290.3000 INCHES ZMRP = 450.0000 IN. ZT
SCALE = .0100

PARAMETRIC DATA

ALPHA = -5.000 BETA = 5.000
DALPHA = -5.000 DBETA = -4.000
X = .000 MACH = 4.500
JET PC = .000

RUN NO. 4154/ 0 RN/L = 2.37 GRADIENT INTERVAL = -5.00/ 5.00

| Y | Z | X | ALPHA | BETA | PHI | CN | CLM | CY | CYN | CBL | CA |
|---|---|---|---|---|---|---|---|---|---|---|---|
| -151.280 | 25.125 | -.24294 | -5.18740 | 5.10740 | .05029 | -.13763 | .02643 | -.21550 | .07028 | -.03116 | .22850 |
| -150.290 | 100.250 | -.32307 | -5.17790 | 5.10420 | .09668 | -.17074 | .05327 | -.20771 | .06552 | -.01970 | .22705 |
| -150.280 | 150.210 | -.27819 | -5.17540 | 5.10280 | .09129 | -.16493 | .05054 | -.19906 | .06150 | -.01895 | .22475 |
| -150.090 | 249.900 | -.35804 | -5.16990 | 5.09660 | .09457 | -.17584 | .05907 | -.18263 | .05496 | -.01490 | .21961 |
| -150.070 | 349.680 | -.39734 | -5.17100 | 5.09200 | .08030 | -.17473 | .05731 | -.16792 | .04935 | -.01490 | .22092 |
| -150.710 | 474.450 | -.40396 | -5.17180 | 5.09460 | .06605 | -.18350 | .06133 | -.15730 | .04278 | -.01532 | .22084 |
| -150.970 | 499.990 | -.49420 | -5.17160 | 5.09460 | .06563 | -.18506 | .06227 | -.15705 | .04262 | -.01534 | .22080 |
| -150.670 | 599.660 | -.32811 | -5.17140 | 5.09470 | .06532 | -.18740 | .06394 | -.15686 | .04248 | -.01536 | .22171 |
| | GRADIENT | .00000 | .00000 | .00000 | .00000 | .00000 | .00000 | .00000 | .00000 | .00000 | .00000 |

IA143, AEDC V41A-P8A, O/ET W/R.H. SRB SEPARATING (OVX974) ( 23 MAY 77 )

REFERENCE DATA

SREF = 2690.0000 SQ.FT. XMRP = 1097.0000 IN. XT
LREF = 1290.3000 INCHES YMRP = .0000 IN. YT
BREF = 1290.3000 INCHES ZMRP = 450.0000 IN. ZT
SCALE = .0100

PARAMETRIC DATA

ALPHA = -5.000 BETA = 5.000
DALPHA = .000 DBETA = .000
X = 300.000 MACH = 4.500
JET PC = .000

RUN NO. 4146/ 0 RN/L = 2.38 GRADIENT INTERVAL = -5.00/ 5.00

| Y | Z | X | ALPHA | BETA | PHI | CN | CLM | CY | CYN | CBL | CA |
|---|---|---|---|---|---|---|---|---|---|---|---|
| -51.400 | 100.020 | 299.63000 | -5.17430 | 5.10260 | .07198 | -.17208 | .05418 | -.17986 | .05155 | -.01866 | .22408 |
| -50.971 | 249.900 | 299.69000 | -5.16840 | 5.09650 | .08138 | -.17993 | .06212 | -.17014 | .04851 | -.01487 | .22158 |
| -51.165 | 300.120 | 299.67000 | -5.16890 | 5.09420 | .07827 | -.17726 | .06011 | -.16687 | .04785 | -.01494 | .22151 |
| -51.020 | 400.030 | 299.65000 | -5.17150 | 5.09390 | .06821 | -.17856 | .05873 | -.15898 | .04395 | -.01528 | .22105 |
| -50.188 | 424.790 | 299.45000 | -5.17180 | 5.09440 | .06644 | -.18126 | .05999 | -.15755 | .04299 | -.01531 | .22100 |
| -51.171 | 499.330 | 299.70000 | -5.17140 | 5.09470 | .06524 | -.18742 | .06390 | -.15680 | .04245 | -.01536 | .22144 |
| -50.947 | 599.530 | 299.57000 | -5.17140 | 5.09470 | .06526 | -.18743 | .06397 | -.15691 | .04252 | -.01537 | .22184 |
| | GRADIENT | .00000 | .00000 | .00000 | .00000 | .00000 | .00000 | .00000 | .00000 | .00000 | .00000 |

RUN NO. 4147/ 0 RN/L = 2.38 GRADIENT INTERVAL = -5.00/ 5.00

| Y | Z | X | ALPHA | BETA | PHI | CN | CLM | CY | CYN | CBL | CA |
|---|---|---|---|---|---|---|---|---|---|---|---|
| -201.210 | 599.500 | 299.79000 | -5.17140 | 5.09480 | .06525 | -.18745 | .06399 | -.15694 | .04250 | -.01539 | .22186 |
| -201.030 | 499.880 | 299.65000 | -5.17150 | 5.09480 | .06529 | -.18747 | .06400 | -.15690 | .04250 | -.01537 | .22187 |
| -201.010 | 424.950 | 299.71000 | -5.17140 | 5.09470 | .06532 | -.18735 | .06396 | -.15681 | .04245 | -.01535 | .22185 |
| -201.050 | 399.770 | 299.62000 | -5.17130 | 5.09480 | .06526 | -.18740 | .06394 | -.15687 | .04247 | -.01537 | .22157 |
| -201.000 | 299.910 | 299.65000 | -5.17180 | 5.09440 | .06649 | -.18580 | .06279 | -.15777 | .04309 | -.01534 | .22133 |
| -200.930 | 249.950 | 299.59000 | -5.17220 | 5.09350 | .07063 | -.18290 | .06101 | -.16088 | .04507 | -.01523 | .22121 |
| -202.030 | 99.847 | 299.61000 | -5.17420 | 5.09290 | .07348 | -.17315 | .05453 | -.17440 | .05291 | -.01781 | .22197 |
| | GRADIENT | .00000 | .00000 | .00000 | .00000 | .00000 | .00000 | .00000 | .00000 | .00000 | .00000 |

IA143, AEDC V41A-P8A, O/ET W/R.H. SRB SEPARATING (OVX975) ( 23 MAY 77 )

REFERENCE DATA

SREF = 2690.0000 SQ.FT. XMRP = 1097.0000 IN. XT
LREF = 1290.3000 INCHES YMRP = .0000 IN. YT
BREF = 1290.3000 INCHES ZMRP = 450.0000 IN. ZT
SCALE = .0100

PARAMETRIC DATA

ALPHA = -5.000 BETA = 5.000
DALPHA = -10.000 DBETA = .000
X = 300.000 MACH = 4.500
JET PC = .000

RUN NO. 4077/ 0 RN/L = 2.37 GRADIENT INTERVAL = -5.00/ 5.00

| Y | Z | X | ALPHA | BETA | PHI | CN | CLM | CY | CYN | CBL | CA |
|---|---|---|---|---|---|---|---|---|---|---|---|
| -54.931 | 101.860 | 300.04000 | -5.18600 | 5.10450 | .05868 | -.14186 | .03047 | -.20741 | .06665 | -.02769 | .23050 |
| -48.957 | 250.370 | 299.32000 | -5.16970 | 5.09780 | .10550 | -.17669 | .06074 | -.19377 | .06017 | -.01501 | .22242 |
| -52.591 | 300.590 | 299.62000 | -5.16840 | 5.09540 | .10015 | -.17418 | .05986 | -.18605 | .05720 | -.01457 | .22241 |
| -50.959 | 400.250 | 299.36000 | -5.17050 | 5.09070 | .08274 | -.17064 | .05564 | -.17023 | .05112 | -.01498 | .22250 |
| -50.999 | 425.100 | 299.41000 | -5.17110 | 5.09070 | .07750 | -.17187 | .05569 | -.16616 | .04899 | -.01514 | .22255 |
| -51.099 | 499.750 | 299.34000 | -5.17270 | 5.09390 | .06693 | -.18176 | .06010 | -.15902 | .04399 | -.01556 | .22247 |
| -50.907 | 599.610 | 299.24000 | -5.17160 | 5.09430 | .06509 | -.18861 | .06473 | -.15778 | .04313 | -.01561 | .22325 |
| | GRADIENT | .00000 | .00000 | .00000 | .00000 | .00000 | .00000 | .00000 | .00000 | .00000 | .00000 |

IA143, AEDC V41A-P8A, O/ET W/R.H. SRB SEPARATING (OVX976) ( 23 MAY 77 )

REFERENCE DATA

SREF = 2690.0000 SQ.FT. XMRP = 1097.0000 IN. XT
LREF = 1290.3000 INCHES YMRP = .0000 IN. YT
BREF = 1290.3000 INCHES ZMRP = 450.0000 IN. ZT
SCALE = .0100

PARAMETRIC DATA

ALPHA = -5.000 BETA = 5.000
DALPHA = -10.000 DBETA = .000
X = 300.000 MACH = 4.500
JET PC = .000

RUN NO. 4075/ 0. RN/L = 2.37 GRADIENT INTERVAL = -5.00/ 5.00

| Y | Z | X | ALPHA | BETA | PHI | CN | CLM | CY | CYN | CBL | CA |
|---|---|---|---|---|---|---|---|---|---|---|---|
| -205.000 | 101.800 | 300.10000 | -5.17740 | 5.09010 | .07370 | -.16429 | .04832 | -.18787 | .06167 | -.02102 | .22623 |
| -200.460 | 150.530 | 299.43000 | -5.17670 | 5.09070 | .07318 | -.16560 | .04912 | -.18411 | .05928 | -.02021 | .22462 |
| -200.630 | 200.270 | 299.40000 | -5.17410 | 5.09110 | .08083 | -.17614 | .05669 | -.17777 | .05523 | -.01709 | .22271 |
| -200.490 | 250.370 | 299.37000 | -5.17310 | 5.09080 | .08304 | -.18076 | .06018 | -.17135 | .05166 | -.01515 | .22312 |
| -200.550 | 300.270 | 299.41000 | -5.17310 | 5.09160 | .07574 | -.18149 | .06014 | -.16565 | .04839 | -.01535 | .22270 |
| -200.590 | 399.870 | 299.45000 | -5.17170 | 5.09410 | .06562 | -.18785 | .06409 | -.15834 | .04350 | -.01564 | .22271 |
| -200.520 | 425.050 | 299.38000 | -5.17160 | 5.09430 | .06512 | -.18865 | .06467 | -.15791 | .04322 | -.01564 | .22281 |
| -200.920 | 499.930 | 299.38000 | -5.17180 | 5.09430 | .06509 | -.18887 | .06490 | -.15800 | .04325 | -.01567 | .22383 |
| -200.570 | 599.750 | 299.39000 | -5.17170 | 5.09420 | .06506 | -.18876 | .06488 | -.15788 | .04322 | -.01565 | .22393 |
| | GRADIENT | .00000 | .00000 | .00000 | .00000 | .00000 | .00000 | .00000 | .00000 | .00000 | .00000 |

IA143, AEDC V41A-P8A, O/ET W/R.H. SRB SEPARATING (OVX977) ( 23 MAY 77 )

REFERENCE DATA

SREF = 2690.0000 SQ.FT. XMRP = 1097.0000 IN. XT
LREF = 1290.3000 INCHES YMRP = .0000 IN. YT
BREF = 1290.3000 INCHES ZMRP = 450.0000 IN. ZT
SCALE = .0100

PARAMETRIC DATA

ALPHA = -5.000 BETA = 5.000
DALPHA = .000 DBETA = -8.000
X = 300.000 MACH = 4.500
JET PC = .000

RUN NO. 4149/ 0 RN/L = 2.38 GRADIENT INTERVAL = -5.00/ 5.00

| Y | Z | X | ALPHA | BETA | PHI | CN | CLM | CY | CYN | CBL | CA |
|---|---|---|---|---|---|---|---|---|---|---|---|
| -50.803 | 249.910 | 299.68000 | -5.16680 | 5.09790 | .08662 | -.17339 | .05934 | -.17462 | .05017 | -.01466 | .22111 |
| -51.311 | 300.000 | 299.61000 | -5.16710 | 5.09530 | .08038 | -.17397 | .05927 | -.16840 | .04810 | -.01475 | .22143 |
| -51.353 | 400.110 | 299.51000 | -5.16990 | 5.09290 | .06841 | -.17509 | .05759 | -.15860 | .04415 | -.01522 | .22096 |
| -50.776 | 424.840 | 299.53000 | -5.17120 | 5.09410 | .06676 | -.17711 | .05797 | -.15767 | .04320 | -.01529 | .22082 |
| -50.651 | 499.350 | 299.58000 | -5.17130 | 5.09480 | .06524 | -.18695 | .06353 | -.15690 | .04246 | -.01537 | .22083 |
| -50.693 | 599.430 | 299.61000 | -5.17140 | 5.09480 | .06525 | -.18736 | .06396 | -.15693 | .04250 | -.01539 | .22181 |
| | GRADIENT | .00000 | .00000 | .00000 | .00000 | .00000 | .00000 | .00000 | .00000 | .00000 | .00000 |

IA143, AEDC V41A-P8A, O/ET W/R.H. SRB SEPARATING (OVX978) ( 23 MAY 77 )

REFERENCE DATA

SREF = 2690.0000 SQ.FT. XMRP = 1097.0000 IN. XT
LREF = 1290.3000 INCHES YMRP = .0000 IN. YT
BREF = 1290.3000 INCHES ZMRP = 450.0000 IN. ZT
SCALE = .0100

PARAMETRIC DATA

ALPHA = -5.000 BETA = 5.000
DALPHA = -10.000 DBETA = -8.000
X = 300.000 MACH = 4.500
JET PC = .000

RUN NO. 4081/ 0 RN/L = 2.38 GRADIENT INTERVAL = -5.00/ 5.00

| Y | Z | X | ALPHA | BETA | PHI | CN | CLM | CY | CYN | CBL | CA |
|---|---|---|---|---|---|---|---|---|---|---|---|
| -50.807 | 425.090 | 299.38000 | -5.17040 | 5.08990 | .08443 | -.16308 | .05102 | -.17038 | .05155 | -.01475 | .22028 |
| -50.625 | 499.770 | 299.32000 | -5.17260 | 5.09340 | .06824 | -.17464 | .05585 | -.15932 | .04436 | -.01539 | .22139 |
| -50.414 | 599.760 | 299.26000 | -5.17150 | 5.09440 | .06512 | -.18817 | .06433 | -.15725 | .04284 | -.01550 | .22193 |
| | GRADIENT | .00000 | .00000 | .00000 | .00000 | .00000 | .00000 | .00000 | .00000 | .00000 | .00000 |

IA143, AEDC V41A-P8A, O/ET W/R.H. SRB SEPARATING (OVX979) ( 23 MAY 77 )

REFERENCE DATA

SREF = 2690.0000 SQ.FT. XMRP = 1097.0000 IN. XT
LREF = 1290.3000 INCHES YMRP = .0000 IN. YT
BREF = 1290.3000 INCHES ZMRP = 450.0000 IN. ZT
SCALE = .0100

PARAMETRIC DATA

ALPHA = -5.000 BETA = 5.000
DALPHA = .000 DBETA = -8.000
X = 300.000 MACH = 4.500
JET PC = .000

RUN NO. 4148/ 0 RN/L = 2.38 GRADIENT INTERVAL = -5.00/ 5.00

| Y | Z | X | ALPHA | BETA | PHI | CN | CLM | CY | CYN | CBL | CA |
|---|---|---|---|---|---|---|---|---|---|---|---|
| -200.900 | 99.944 | 299.50000 | -5.17490 | 5.09450 | .08397 | -.16507 | .04998 | -.18834 | .05953 | -.01862 | .22238 |
| -199.940 | 249.820 | 299.48000 | -5.17200 | 5.09200 | .07983 | -.17724 | .05819 | -.16769 | .04921 | -.01492 | .22097 |
| -200.330 | 299.720 | 299.53000 | -5.17230 | 5.09310 | .07146 | -.18021 | .05931 | -.16133 | .04547 | -.01517 | .22086 |
| -200.470 | 399.580 | 299.52000 | -5.17120 | 5.09480 | .06526 | -.18728 | .06381 | -.15685 | .04246 | -.01536 | .22097 |
| -200.320 | 424.810 | 299.49000 | -5.17120 | 5.09480 | .06525 | -.18728 | .06390 | -.15695 | .04250 | -.01539 | .22139 |
| -200.490 | 499.660 | 299.49000 | -5.17140 | 5.09480 | .06530 | -.18742 | .06398 | -.15698 | .04252 | -.01539 | .22192 |
| -200.680 | 599.630 | 299.62000 | -5.17130 | 5.09480 | .06527 | -.18734 | .06400 | -.15691 | .04250 | -.01537 | .22190 |
| | GRADIENT | .00000 | .00000 | .00000 | .00000 | .00000 | .00000 | .00000 | .00000 | .00000 | .00000 |

IA143, AEDC V41A-P8A, O/ET W/R.H. SRB SEPARATING (OVX980) ( 23 MAY 77 )

REFERENCE DATA

SREF = 2690.0000 SQ.FT. XMRP = 1097.0000 IN. XT
LREF = 1290.3000 INCHES YMRP = .0000 IN. YT
BREF = 1290.3000 INCHES ZMRP = 450.0000 IN. ZT
SCALE = .0100

PARAMETRIC DATA

ALPHA = -5.000 BETA = 5.000
DALPHA = -10.000 DBETA = -8.000
X = 300.000 MACH = 4.500
JET PC = .000

RUN NO. 4080/ 0 RN/L = 2.37 GRADIENT INTERVAL = -5.00/ 5.00

| Y | Z | X | ALPHA | BETA | PHI | CN | CLM | CY | CYN | CBL | CA |
|---|---|---|---|---|---|---|---|---|---|---|---|
| -200.860 | 100.410 | 299.30000 | -5.18730 | 5.09270 | .06864 | -.12882 | .02151 | -.21348 | .07510 | -.02782 | .22530 |
| -198.970 | 250.140 | 299.01000 | -5.17270 | 5.08930 | .10454 | -.17518 | .05770 | -.18765 | .06070 | -.01445 | .22026 |
| -200.050 | 300.180 | 299.14000 | -5.17330 | 5.08870 | .09423 | -.17332 | .05592 | -.17888 | .05644 | -.01466 | .22126 |
| -199.970 | 399.660 | 299.14000 | -5.17350 | 5.09220 | .07287 | -.17967 | .05865 | -.16281 | .04670 | -.01530 | .22201 |
| -200.280 | 425.010 | 299.25000 | -5.17290 | 5.09320 | .06922 | -.18257 | .06052 | -.16031 | .04494 | -.01542 | .22215 |
| -200.550 | 499.880 | 299.27000 | -5.17160 | 5.09450 | .06510 | -.18853 | .06456 | -.15724 | .04282 | -.01552 | .22208 |
| -200.500 | 599.840 | 299.22000 | -5.17170 | 5.09440 | .06516 | -.18830 | .06464 | -.15744 | .04297 | -.01555 | .22329 |
| | GRADIENT | .00000 | .00000 | .00000 | .00000 | .00000 | .00000 | .00000 | .00000 | .00000 | .00000 |

IA143, AEDC V41A-P8A, O/ET W/R.H. SRB SEPARATING (OVX981) ( 23 MAY 77 )

REFERENCE DATA

SREF = 2690.0000 SQ.FT. XMRP = 1097.0000 IN. XT
LREF = 1290.3000 INCHES YMRP = .0000 IN. YT
BREF = 1290.3000 INCHES ZMRP = 450.0000 IN. ZT
SCALE = .0100

PARAMETRIC DATA

ALPHA = -5.000 BETA = 5.000
DALPHA = -5.000 DBETA = .000
X = 300.000 MACH = 4.500
JET PC = .000

RUN NO. 4158/ 0 RN/L = 2.37 GRADIENT INTERVAL = -5.00/ 5.00

| Y | Z | X | ALPHA | BETA | PHI | CN | CLM | CY | CYN | CBL | CA |
|---|---|---|---|---|---|---|---|---|---|---|---|
| -104.430 | 99.783 | 300.00000 | -5.17550 | 5.10100 | .07539 | -.16813 | .05168 | -.18556 | .05535 | -.01936 | .22529 |
| -100.910 | 150.180 | 299.72000 | -5.17380 | 5.10060 | .07522 | -.16776 | .05165 | -.18395 | .05465 | -.01906 | .22207 |
| -101.080 | 200.200 | 299.59000 | -5.17090 | 5.09810 | .08836 | -.17658 | .05887 | -.18052 | .05335 | -.01566 | .22048 |
| | GRADIENT | .00000 | .00000 | .00000 | .00000 | .00000 | .00000 | .00000 | .00000 | .00000 | .00000 |

RUN NO. 4159/ 0 RN/L = 2.38 GRADIENT INTERVAL = -5.00/ 5.00

| Y | Z | X | ALPHA | BETA | PHI | CN | CLM | CY | CYN | CBL | CA |
|---|---|---|---|---|---|---|---|---|---|---|---|
| -200.920 | 199.900 | 299.58000 | -5.17210 | 5.09210 | .08174 | -.18063 | .06026 | -.16941 | .05008 | -.01493 | .22101 |
| -200.800 | 150.040 | 299.48000 | -5.17380 | 5.09220 | .07607 | -.17392 | .05509 | -.17491 | .05335 | -.01739 | .22116 |
| -200.760 | 100.100 | 299.58000 | -5.17500 | 5.09200 | .07479 | -.16948 | .05206 | -.17936 | .05596 | -.01868 | .22293 |
| | GRADIENT | .00000 | .00000 | .00000 | .00000 | .00000 | .00000 | .00000 | .00000 | .00000 | .00000 |

IA143, AEDC V41A-P8A, O/ET W/R.H. SRB SEPARATING (OVX982) ( 23 MAY 77 )

REFERENCE DATA

SREF = 2690.0000 SQ.FT. XMRP = 1097.0000 IN. XT
LREF = 1290.3000 INCHES YMRP = .0000 IN. YT
BREF = 1290.3000 INCHES ZMRP = 450.0000 IN. ZT
SCALE = .0100

PARAMETRIC DATA

ALPHA = -5.000 BETA = 5.000
DALPHA = -10.000 DBETA = .000
X = 300.000 MACH = 4.500
JET PC = .000

RUN NO. 4076/ 0 RN/L = 2.37 GRADIENT INTERVAL = -5.00/ 5.00

| Y | Z | X | ALPHA | BETA | PHI | CN | CLM | CY | CYN | CBL | CA |
|---|---|---|---|---|---|---|---|---|---|---|---|
| -151.280 | 100.330 | 299.33000 | -5.17920 | 5.09720 | .07038 | -.15733 | .04361 | -.19581 | .06302 | -.02304 | .22866 |
| -151.020 | 150.500 | 299.44000 | -5.17710 | 5.09640 | .07626 | -.16014 | .04613 | -.19348 | .06182 | -.02130 | .22601 |
| -150.600 | 200.380 | 299.34000 | -5.17490 | 5.09490 | .08200 | -.16687 | .05100 | -.18779 | .05905 | -.01886 | .22316 |
| | GRADIENT | .00000 | .00000 | .00000 | .00000 | .00000 | .00000 | .00000 | .00000 | .00000 | .00000 |

IA143, AEDC V41A-P8A, O/ET W/R.H. SRB SEPARATING (OVX983) ( 23 MAY 77 )

REFERENCE DATA

SREF = 2690.0000 SQ.FT. XMRP = 1097.0000 IN. XT
LREF = 1290.3000 INCHES YMRP = .0000 IN. YT
BREF = 1290.3000 INCHES ZMRP = 450.0000 IN. ZT
SCALE = .0100

PARAMETRIC DATA

ALPHA = -5.000 BETA = 5.000
DALPHA = -5.000 DBETA = -4.000
X = 300.000 MACH = 4.500
JET PC = .000

RUN NO. 4161/ 0 RN/L = 2.39 GRADIENT INTERVAL = -5.00/ 5.00

| Y | Z | X | ALPHA | BETA | PHI | CN | CLM | CY | CYN | CBL | CA |
|---|---|---|---|---|---|---|---|---|---|---|---|
| -101.020 | 100.030 | 299.59000 | -5.17720 | 5.10090 | .09068 | -.16690 | .05087 | -.20058 | .06326 | -.01957 | .22590 |
| -100.760 | 150.140 | 299.51000 | -5.17500 | 5.10060 | .08797 | -.16479 | .04986 | -.19502 | .06039 | -.01890 | .22168 |
| -100.760 | 200.200 | 299.56000 | -5.17100 | 5.09840 | .09606 | -.17310 | .05698 | -.18742 | .05677 | -.01556 | .21994 |
| -100.880 | 300.130 | 299.60000 | -5.16940 | 5.09340 | .08731 | -.17387 | .05816 | -.17369 | .05169 | -.01462 | .22095 |
| | GRADIENT | .00000 | .00000 | .00000 | .00000 | .00000 | .00000 | .00000 | .00000 | .00000 | .00000 |

IA143, AEDC V41A-P8A, O/ET W/R.H. SRB SEPARATING (OVX984) ( 23 MAY 77 )

REFERENCE DATA

SREF = 2690.0000 SQ.FT. XMRP = 1097.0000 IN. XT
LREF = 1290.3000 INCHES YMRP = .0000 IN. YT
BREF = 1290.3000 INCHES ZMRP = 450.0000 IN. ZT
SCALE = .0100

PARAMETRIC DATA

ALPHA = -5.000 BETA = 5.000
DALPHA = -10.000 DBETA = -4.000
X = 300.000 MACH = 4.500
JET PC = .000

RUN NO. 4078/ 0 RN/L = 2.37 GRADIENT INTERVAL = -5.00/ 5.00

| Y | Z | X | ALPHA | BETA | PHI | CN | CLM | CY | CYN | CBL | CA |
|---|---|---|---|---|---|---|---|---|---|---|---|
| -101.010 | 100.270 | 299.34000 | -5.18820 | 5.10110 | .06827 | -.13193 | .02384 | -.21909 | .07443 | -.02859 | .23009 |
| -100.470 | 150.130 | 299.29000 | -5.18200 | 5.10110 | .08303 | -.14734 | .03622 | -.21277 | .07032 | -.02399 | .22567 |
| -100.360 | 200.180 | 299.18000 | -5.17550 | 5.09860 | .10328 | -.16417 | .04998 | -.20744 | .06765 | -.01861 | .22183 |
| | GRADIENT | .00000 | .00000 | .00000 | .00000 | .00000 | .00000 | .00000 | .00000 | .00000 | .00000 |

RUN NO. 4079/ 0 RN/L = 2.38 GRADIENT INTERVAL = -5.00/ 5.00

| Y | Z | X | ALPHA | BETA | PHI | CN | CLM | CY | CYN | CBL | CA |
|---|---|---|---|---|---|---|---|---|---|---|---|
| -201.100 | 200.400 | 299.34000 | -5.17530 | 5.09150 | .08612 | -.17084 | .05318 | -.18507 | .05899 | -.01763 | .22215 |
| -201.430 | 150.200 | 299.44000 | -5.17770 | 5.09150 | .07865 | -.15965 | .04529 | -.19257 | .06347 | -.02094 | .22420 |
| -201.310 | 100.200 | 299.42000 | -5.18030 | 5.09250 | .07167 | -.15265 | .03975 | -.19705 | .06581 | -.02340 | .22589 |
| | GRADIENT | .00000 | .00000 | .00000 | .00000 | .00000 | .00000 | .00000 | .00000 | .00000 | .00000 |

IA143, AEDC V41A-P8A, O/ET W/R.H. SRB SEPARATING (OVX985) ( 23 MAY 77 )

REFERENCE DATA

SREF = 2690.0000 SQ.FT. XMRP = 1097.0000 IN. XT
LREF = 1290.3000 INCHES YMRP = .0000 IN. YT
BREF = 1290.3000 INCHES ZMRP = 450.0000 IN. ZT
SCALE = .0100

PARAMETRIC DATA

ALPHA = -5.000 BETA = 5.000
DALPHA = -5.000 DBETA = -4.000
X = 300.000 MACH = 4.500
JET PC = .000

RUN NO. 4160/ 0 RN/L = 2.39 GRADIENT INTERVAL = -5.00/ 5.00

| Y | Z | X | ALPHA | BETA | PHI | CN | CLM | CY | CYN | CBL | CA |
|---|---|---|---|---|---|---|---|---|---|---|---|
| -200.940 | 100.110 | 299.38000 | -5.17570 | 5.09280 | .08078 | -.16645 | .05033 | -.18630 | .05930 | -.01897 | .22322 |
| -200.900 | 150.140 | 299.56000 | -5.17470 | 5.09270 | .07938 | -.16926 | .05199 | -.18114 | .05647 | -.01808 | .22100 |
| -200.740 | 200.200 | 299.51000 | -5.17190 | 5.09200 | .08808 | -.17914 | .05973 | -.17445 | .05273 | -.01475 | .22057 |
| | GRADIENT | .00000 | .00000 | .00000 | .00000 | .00000 | .00000 | .00000 | .00000 | .00000 | .00000 |

IA143, AEDC V41A-P8A, O/ET W/R.H. SRB SEPARATING (OVX986) ( 23 MAY 77 )

REFERENCE DATA

SREF = 2690.0000 SQ.FT. XMRP = 1097.0000 IN. XT
LREF = 1290.3000 INCHES YMRP = .0000 IN. YT
BREF = 1290.3000 INCHES ZMRP = 450.0000 IN. ZT
SCALE = .0100

PARAMETRIC DATA

ALPHA = -5.000 BETA = 5.000
DALPHA = -6.000 DBETA = -2.000
X = 300.000 MACH = 4.500
JET PC = .000

RUN NO. 4073/ 0 RN/L = 2.36 GRADIENT INTERVAL = -5.00/ 5.00

| Y | Z | X | ALPHA | BETA | PHI | CN | CLM | CY | CYN | CBL | CA |
|---|---|---|---|---|---|---|---|---|---|---|---|
| -101.290 | 100.080 | 299.43000 | -5.17720 | 5.10070 | .08240 | -.16802 | .05156 | -.19569 | .06089 | -.02020 | .22826 |
| -100.750 | 200.210 | 299.32000 | -5.17170 | 5.09890 | .09044 | -.17541 | .05815 | -.18640 | .05613 | -.01646 | .22266 |
| -101.270 | 300.250 | 299.37000 | -5.17020 | 5.09290 | .08732 | -.17600 | .05939 | -.17523 | .05275 | -.01500 | .22325 |
| | GRADIENT | .00000 | .00000 | .00000 | .00000 | .00000 | .00000 | .00000 | .00000 | .00000 | .00000 |

IA143, AEDC V41A-P8A, O/ET W/R.H. SRB SEPARATING (OVX987) ( 23 MAY 77 )

REFERENCE DATA

SREF = 2690.0000 SQ.FT. XMRP = 1097.0000 IN. XT
LREF = 1290.3000 INCHES YMRP = .0000 IN. YT
BREF = 1290.3000 INCHES ZMRP = 450.0000 IN. ZT
SCALE = .0100

PARAMETRIC DATA

ALPHA = -5.000 BETA = 5.000
DALPHA = -6.000 DBETA = -2.000
X = 300.000 MACH = 4.500
JET PC = .000

RUN NO. 4102/ 0 RN/L = 2.38 GRADIENT INTERVAL = -5.00/ 5.00

| Y | Z | X | ALPHA | BETA | PHI | CN | CLM | CY | CYN | CBL | CA |
|---|---|---|---|---|---|---|---|---|---|---|---|
| -101.320 | 100.080 | 299.47000 | -5.17700 | 5.10080 | .08275 | -.16709 | .05098 | -.19494 | .06043 | -.01997 | .22725 |
| -100.530 | 200.200 | 299.31000 | -5.17160 | 5.09900 | .09040 | -.17420 | .05735 | -.18531 | .05553 | -.01624 | .22144 |
| -100.820 | 300.210 | 299.38000 | -5.16990 | 5.09310 | .08772 | -.17505 | .05886 | -.17442 | .05222 | -.01473 | .22229 |
| | GRADIENT | .00000 | .00000 | .00000 | .00000 | .00000 | .00000 | .00000 | .00000 | .00000 | .00000 |

IA143, AEDC V41A-P8A, O/ET W/R.H. SRB SEPARATING (OVX988) ( 23 MAY 77 )

REFERENCE DATA

SREF = 2690.0000 SQ.FT. XMRP = 1097.0000 IN. XT
LREF = 1290.3000 INCHES YMRP = .0000 IN. YT
BREF = 1290.3000 INCHES ZMRP = 450.0000 IN. ZT
SCALE = .0100

PARAMETRIC DATA

ALPHA = -5.000 BETA = 5.000
DALPHA = .000 DBETA = 4.000
X = 600.000 MACH = 4.500
JET PC = .000

RUN NO. 4152/ 0 RN/L = 2.37 GRADIENT INTERVAL = -5.00/ 5.00

| Y | Z | X | ALPHA | BETA | PHI | CN | CLM | CY | CYN | CBL | CA |
|---|---|---|---|---|---|---|---|---|---|---|---|
| -101.220 | 200.030 | 599.70000 | -5.17230 | 5.09250 | .07409 | -.18242 | .06083 | -.16311 | .04664 | -.01507 | .22131 |
| -101.130 | 249.900 | 599.69000 | -5.17240 | 5.09330 | .07054 | -.18287 | .06092 | -.16042 | .04494 | -.01517 | .22115 |
| -101.150 | 400.280 | 599.57000 | -5.17120 | 5.09480 | .06527 | -.18736 | .06388 | -.15682 | .04245 | -.01536 | .22103 |
| -101.050 | 449.930 | 599.60000 | -5.17130 | 5.09480 | .06521 | -.18742 | .06394 | -.15699 | .04251 | -.01540 | .22148 |
| -101.120 | 499.830 | 599.61000 | -5.17140 | 5.09480 | .06527 | -.18736 | .06394 | -.15700 | .04255 | -.01539 | .22172 |
| -100.940 | 599.230 | 599.67000 | -5.17130 | 5.09470 | .06526 | -.18738 | .06397 | -.15682 | .04248 | -.01536 | .22180 |
| | GRADIENT | .00000 | .00000 | .00000 | .00000 | .00000 | .00000 | .00000 | .00000 | .00000 | .00000 |

RUN NO. 4153/ 0 RN/L = 2.37 GRADIENT INTERVAL = -5.00/ 5.00

| Y | Z | X | ALPHA | BETA | PHI | CN | CLM | CY | CYN | CBL | CA |
|---|---|---|---|---|---|---|---|---|---|---|---|
| -301.150 | 599.070 | 599.57000 | -5.17140 | 5.09480 | .06531 | -.18744 | .06403 | -.15693 | .04250 | -.01537 | .22196 |
| -301.490 | 500.080 | 599.73000 | -5.17130 | 5.09470 | .06529 | -.18734 | .06397 | -.15676 | .04246 | -.01534 | .22180 |
| -300.940 | 449.870 | 599.70000 | -5.17140 | 5.09470 | .06536 | -.18750 | .06401 | -.15678 | .04248 | -.01534 | .22180 |
| -301.200 | 399.930 | 599.75000 | -5.17130 | 5.09460 | .06527 | -.18743 | .06399 | -.15679 | .04248 | -.01536 | .22180 |
| -301.340 | 249.970 | 599.58000 | -5.17140 | 5.09460 | .06533 | -.18736 | .06394 | -.15659 | .04242 | -.01531 | .22164 |
| -300.810 | 199.970 | 599.59000 | -5.17130 | 5.09470 | .06526 | -.18728 | .06390 | -.15692 | .04254 | -.01538 | .22162 |
| | GRADIENT | .00000 | .00000 | .00000 | .0$000 | .00000 | .0$000 | .00000 | .00000 | .00000 | .00000 |

IA143, AEDC V41A-P8A, O/ET W/R.H. SRB SEPARATING (OVX989) ( 23 MAY 77 )

REFERENCE DATA

SREF = 2690.0000 SQ.FT. XMRP = 1097.0000 IN. XT
LREF = 1290.3000 INCHES YMRP = .0000 IN. YT
BREF = 1290.3000 INCHES ZMRP = 450.0000 IN. ZT
SCALE = .0100

PARAMETRIC DATA

ALPHA = -5.000 BETA = 5.000
DALPHA = -15.000 DBETA = 4.000
X = 600.000 MACH = 4.500
JET PC = .000

RUN NO. 4103/ 0 RN/L = 2.38 GRADIENT INTERVAL = -5.00/ 5.00

| Y | Z | X | ALPHA | BETA | PHI | CN | CLM | CY | CYN | CBL | CA |
|---|---|---|---|---|---|---|---|---|---|---|---|
| -100.970 | 204.240 | 600.85000 | -5.17260 | 5.09040 | .09112 | -.18145 | .06102 | -.17683 | .05463 | -.01474 | .22152 |
| -100.620 | 250.580 | 599.21000 | -5.17300 | 5.09010 | .08776 | -.17853 | .05900 | -.17358 | .05315 | -.01476 | .22184 |
| -100.600 | 401.120 | 599.51000 | -5.17280 | 5.09330 | .06959 | -.18150 | .05982 | -.16022 | .04486 | -.01532 | .22125 |
| -101.060 | 450.310 | 599.26000 | -5.17200 | 5.09440 | .06617 | -.18578 | .06271 | -.15751 | .04305 | -.01539 | .22116 |
| -100.970 | 500.290 | 599.29000 | -5.17140 | 5.09470 | .06513 | -.18782 | .06408 | -.15700 | .04259 | -.01544 | .22126 |
| -100.670 | 600.140 | 599.16000 | -5.17160 | 5.09460 | .06521 | -.18779 | .06430 | -.15716 | .04273 | -.01547 | .22273 |
| | GRADIENT | .00000 | .00000 | .00000 | .00000 | .00000 | .00000 | .00000 | .00000 | .00000 | .00000 |

RUN NO. 4104/ 0 RN/L = 2.38 GRADIENT INTERVAL = -5.00/ 5.00

| Y | Z | X | ALPHA | BETA | PHI | CN | CLM | CY | CYN | CBL | CA |
|---|---|---|---|---|---|---|---|---|---|---|---|
| -301.420 | 598.990 | 598.91000 | -5.17150 | 5.09440 | .06528 | -.18774 | .06432 | -.15707 | .04274 | -.01543 | .22289 |
| -300.890 | 500.540 | 599.29000 | -5.17170 | 5.09470 | .06527 | -.18792 | .06433 | -.15726 | .04274 | -.01546 | .22293 |
| -301.070 | 450.630 | 599.29000 | -5.17170 | 5.09460 | .06526 | -.18789 | .06434 | -.15727 | .04277 | -.01547 | .22295 |
| -301.210 | 400.530 | 599.19000 | -5.17150 | 5.09460 | .06526 | -.18770 | .06427 | -.15714 | .04272 | -.01545 | .22273 |
| -301.200 | 250.540 | 599.25000 | -5.17160 | 5.09460 | .06533 | -.18771 | .06427 | -.15708 | .04270 | -.01542 | .22266 |
| -301.090 | 200.480 | 599.31000 | -5.17150 | 5.09460 | .06523 | -.18768 | .06419 | -.15709 | .04271 | -.01545 | .22227 |
| | GRADIENT | .00000 | .00000 | .00000 | .00000 | .00000 | .00000 | .00000 | .00000 | .00000 | .00000 |

IA143, AEDC V41A-P8A, O/ET W/R.H. SRB SEPARATING (OVX990) ( 23 MAY 77 )

REFERENCE DATA

SREF = 2690.0000 SQ.FT. XMRP = 1097.0000 IN. XT
LREF = 1290.3000 INCHES YMRP = .0000 IN. YT
BREF = 1290.3000 INCHES ZMRP = 450.0000 IN. ZT
SCALE = .0100

PARAMETRIC DATA

ALPHA = -5.000 BETA = 5.000
DALPHA = -15.000 DBETA = 4.000
X = 600.000 MACH = 4.500
JET PC = .000

RUN NO. 4141/ 0 RN/L = 2.37 GRADIENT INTERVAL = -5.00/ 5.00

| Y | Z | X | ALPHA | BETA | PHI | CN | CLM | CY | CYN | CBL | CA |
|---|---|---|---|---|---|---|---|---|---|---|---|
| -100.990 | 204.290 | 600.96000 | -5.17260 | 5.09070 | .09102 | -.18136 | .06074 | -.17689 | .05456 | -.01475 | .22071 |
| -100.640 | 250.600 | 599.41000 | -5.17300 | 5.09030 | .08727 | -.17849 | .05875 | -.17339 | .05291 | -.01478 | .22107 |
| -100.550 | 401.190 | 599.58000 | -5.17260 | 5.09350 | .06945 | -.18146 | .05968 | -.15992 | .04462 | -.01527 | .22039 |
| -100.960 | 450.330 | 599.39000 | -5.17170 | 5.09460 | .06602 | -.18579 | .06262 | -.15751 | .04288 | -.01537 | .22043 |
| -101.150 | 500.470 | 599.42000 | -5.17130 | 5.09500 | .06511 | -.18752 | .06383 | -.15714 | .04253 | -.01545 | .22065 |
| -100.740 | 599.990 | 599.27000 | -5.17150 | 5.09490 | .06522 | -.18751 | .06399 | -.15736 | .04268 | -.01548 | .22189 |
| | GRADIENT | .00000 | .00000 | .00000 | .00000 | .00000 | .00000 | .00000 | .00000 | .00000 | .00000 |

IA143, AEDC V41A-P8A, O/ET W/R.H. SRB SEPARATING (OVX991) ( 23 MAY 77 )

REFERENCE DATA

SREF = 2690.0000 SQ.FT. XMRP = 1097.0000 IN. XT
LREF = 1290.3000 INCHES YMRP = .0000 IN. YT
BREF = 1290.3000 INCHES ZMRP = 450.0000 IN. ZT
SCALE = .0100

PARAMETRIC DATA

ALPHA = -5.000 BETA = 5.000
DALPHA = .000 DBETA = -12.000
X = 600.000 MACH = 4.500
JET PC = .000

RUN NO. 4150/ 0 RN/L = 2.38 GRADIENT INTERVAL = -5.00/ 5.00

| Y | Z | X | ALPHA | BETA | PHI | CN | CLM | CY | CYN | CBL | CA |
|---|---|---|---|---|---|---|---|---|---|---|---|
| -101.170 | 249.940 | 599.50000 | -5.17210 | 5.09210 | .07904 | -.17579 | .05721 | -.16692 | .04880 | -.01493 | .22053 |
| -101.560 | 399.900 | 599.72000 | -5.17170 | 5.09460 | .06602 | -.18454 | .06188 | -.15724 | .04274 | -.01531 | .22062 |
| -101.350 | 449.960 | 599.61000 | -5.17130 | 5.09490 | .06526 | -.18741 | .06380 | -.15689 | .04242 | -.01536 | .22073 |
| -100.830 | 500.060 | 599.53000 | -5.17130 | 5.09470 | .06530 | -.18735 | .06385 | -.15686 | .04248 | -.01536 | .22127 |
| -100.510 | 599.660 | 599.42000 | -5.17130 | 5.09460 | .06526 | -.18734 | .06393 | -.15670 | .04245 | -.01533 | .22163 |
| | GRADIENT | .00000 | .00000 | .00000 | .00000 | .00000 | .00000 | .00000 | .00000 | .00000 | .00000 |

IA143, AEDC V41A-P8A, O/ET W/R.H. SRB SEPARATING (OVX992) ( 23 MAY 77 )

REFERENCE DATA

SREF = 2690.0000 SQ.FT. XMRP = 1097.0000 IN. XT
LREF = 1290.3000 INCHES YMRP = .0000 IN. YT
BREF = 1290.3000 INCHES ZMRP = 450.0000 IN. ZT
SCALE = .0100

PARAMETRIC DATA

ALPHA = -5.000 BETA = 5.000
DALPHA = -15.000 DBETA = -12.000
X = 600.000 MACH = 4.500
JET PC = .000

RUN NO. 4109/ 0 RN/L = 2.38 GRADIENT INTERVAL = -5.00/ 5.00

| Y | Z | X | ALPHA | BETA | PHI | CN | CLM | CY | CYN | CBL | CA |
|---|---|---|---|---|---|---|---|---|---|---|---|
| -100.950 | 450.340 | 599.08000 | -5.17360 | 5.09280 | .07183 | -.17518 | .05527 | -.16148 | .04573 | -.01518 | .21885 |
| -100.990 | 500.340 | 599.30000 | -5.17210 | 5.09450 | .06633 | -.18336 | .06077 | -.15780 | .04309 | -.01537 | .21953 |
| -100.950 | 600.500 | 599.31000 | -5.17100 | 5.09470 | .06508 | -.18716 | .06357 | -.15677 | .04245 | -.01539 | .21981 |
| | GRADIENT | .00000 | .00000 | .00000 | .00000 | .00000 | .00000 | .00000 | .00000 | .00000 | .00000 |

IA143, AEDC V41A-P8A, O/ET W/R.H. SRB SEPARATING (OVX993) ( 23 MAY 77 )

REFERENCE DATA

SREF = 2690.0000 SQ.FT. XMRP = 1097.0000 IN. XT
LREF = 1290.3000 INCHES YMRP = .0000 IN. YT
BREF = 1290.3000 INCHES ZMRP = 450.0000 IN. ZT
SCALE = .0100

PARAMETRIC DATA

ALPHA = -5.000 BETA = 5.000
DALPHA = .000 DBETA = -12.000
X = 600.000 MACH = 4.500
JET PC = .000

RUN NO. 4151/ 0 RN/L = 2.38 GRADIENT INTERVAL = -5.00/ 5.00

| Y | Z | X | ALPHA | BETA | PHI | CN | CLM | CY | CYN | CBL | CA |
|---|---|---|---|---|---|---|---|---|---|---|---|
| -300.650 | 199.980 | 599.43000 | -5.17110 | 5.09490 | .06526 | -.18705 | .06364 | -.15697 | .04249 | -.01539 | .22034 |
| -300.710 | 249.880 | 599.49000 | -5.17120 | 5.09480 | .06522 | -.18730 | .06380 | -.15691 | .04249 | -.01539 | .22071 |
| -300.010 | 399.750 | 599.32000 | -5.17140 | 5.09460 | .06536 | -.18735 | .06394 | -.15688 | .04254 | -.01536 | .22177 |
| -300.770 | 449.810 | 599.48000 | -5.17140 | 5.09460 | .06528 | -.18736 | .06395 | -.15677 | .04248 | -.01536 | .22168 |
| -300.810 | 499.740 | 599.53000 | -5.17130 | 5.09480 | .06527 | -.18731 | .06398 | -.15683 | .04247 | -.01536 | .22179 |
| -300.580 | 599.490 | 599.46000 | -5.17140 | 5.09470 | .06533 | -.18745 | .06397 | -.15683 | .04250 | -.01535 | .22170 |
| | GRADIENT | .00000 | .00000 | .00000 | .00000 | .00000 | .00000 | .00000 | .00000 | .00000 | .00000 |

IA143, AEDC V41A-P8A, O/ET W/R.H. SRB SEPARATING (OVX994) ( 23 MAY 77 )

REFERENCE DATA

SREF = 2690.0000 SQ.FT. XMRP = 1097.0000 IN. XT
LREF = 1290.3000 INCHES YMRP = .0000 IN. YT
BREF = 1290.3000 INCHES ZMRP = 450.0000 IN. ZT
SCALE = .0100

PARAMETRIC DATA

ALPHA = -5.000 BETA = 5.000
DALPHA = .000 DBETA = -12.000
X = 600.000 MACH = 4.500
JET PC = .000

RUN NO. 4174/ 0 RN/L = 2.39 GRADIENT INTERVAL = -5.00/ 5.00

| Y | Z | X | ALPHA | BETA | PHI | CN | CLM | CY | CYN | CBL | CA |
|---|---|---|---|---|---|---|---|---|---|---|---|
| -300.920 | 199.980 | 599.64000 | -5.17110 | 5.09480 | .06534 | -.18726 | .06371 | -.15683 | .04243 | -.01534 | .22018 |
| -300.760 | 249.890 | 599.64000 | -5.17100 | 5.09490 | .06508 | -.18735 | .06383 | -.15675 | .04236 | -.01537 | .22044 |
| -300.060 | 399.800 | 599.30000 | -5.17120 | 5.09480 | .06515 | -.18746 | .06403 | -.15696 | .04248 | -.01540 | .22158 |
| -300.480 | 449.760 | 599.56000 | -5.17120 | 5.09490 | .06515 | -.18742 | .06397 | -.15711 | .04253 | -.01543 | .22149 |
| -300.880 | 499.720 | 599.51000 | -5.17120 | 5.09490 | .06517 | -.18735 | .06395 | -.15711 | .04254 | -.01543 | .22147 |
| -300.190 | 599.510 | 599.43000 | -5.17140 | 5.09500 | .06526 | -.18758 | .06403 | -.15718 | .04256 | -.01543 | .22162 |
| | GRADIENT | .00000 | .00000 | .00000 | .00000 | .00000 | .00000 | .00000 | .00000 | .00000 | .00000 |

IA143, AEDC V41A-P8A, O/ET W/R.H. SRB SEPARATING (OVX995) ( 23 MAY 77 )

REFERENCE DATA

SREF = 2690.0000 SQ.FT. XMRP = 1097.0000 IN. XT
LREF = 1290.3000 INCHES YMRP = .0000 IN. YT
BREF = 1290.3000 INCHES ZMRP = 450.0000 IN. ZT
SCALE = .0100

PARAMETRIC DATA

ALPHA = -5.000 BETA = 5.000
DALPHA = -15.000 DBETA = -12.000
X = 600.000 MACH = 4.500
JET PC = .000

RUN NO. 4110/ 0 RN/L = 2.38 GRADIENT INTERVAL = -5.00/ 5.00

| Y | Z | X | ALPHA | BETA | PHI | CN | CLM | CY | CYN | CBL | CA |
|---|---|---|---|---|---|---|---|---|---|---|---|
| -300.410 | 200.470 | 598.99000 | -5.17200 | 5.09280 | .07161 | -.18477 | .06156 | -.16126 | .04563 | -.01518 | .21779 |
| -300.400 | 250.520 | 599.13000 | -5.17160 | 5.09400 | .06716 | -.18543 | .06214 | -.15785 | .04327 | -.01523 | .21896 |
| -299.030 | 400.270 | 598.76000 | -5.17110 | 5.09470 | .06511 | -.18736 | .06378 | -.15682 | .04251 | -.01540 | .22034 |
| -300.310 | 450.260 | 599.10000 | -5.17110 | 5.09460 | .06505 | -.18725 | .06376 | -.15680 | .04252 | -.01541 | .22046 |
| -300.290 | 500.090 | 599.08000 | -5.17130 | 5.09470 | .06509 | -.18751 | .06399 | -.15685 | .04253 | -.01542 | .22115 |
| -300.410 | 600.100 | 599.08000 | -5.17120 | 5.09460 | .06504 | -.18739 | .06403 | -.15697 | .04262 | -.01545 | .22167 |
| | GRADIENT | .00000 | .00000 | .00000 | .00000 | .00000 | .00000 | .00000 | .00000 | .00000 | .00000 |

IA143, AEDC V41A-P8A, O/ET W/R.H. SRB SEPARATING (OVX996) ( 23 MAY 77 )

REFERENCE DATA

SREF = 2690.0000 SQ.FT. XMRP = 1097.0000 IN. XT
LREF = 1290.3000 INCHES YMRP = .0000 IN. YT
BREF = 1290.3000 INCHES ZMRP = 450.0000 IN. ZT
SCALE = .0100

PARAMETRIC DATA

ALPHA = -5.000 BETA = 5.000
DALPHA = -7.000 DBETA = -4.000
X = 600.000 MACH = 4.500
JET PC = .000

RUN NO. 4074/ 0 RN/L = 2.36 GRADIENT INTERVAL = -5.00/ 5.00

| Y | Z | X | ALPHA | BETA | PHI | CN | CLM | CY | CYN | CBL | CA |
|---|---|---|---|---|---|---|---|---|---|---|---|
| -201.030 | 200.110 | 599.30000 | -5.17340 | 5.09160 | .07607 | -.18346 | .06122 | -.16612 | .04870 | -.01541 | .22266 |
| -201.020 | 300.230 | 599.19000 | -5.17220 | 5.09400 | .06682 | -.18685 | .06339 | -.15939 | .04415 | -.01565 | .22274 |
| -200.670 | 400.150 | 599.30000 | -5.17180 | 5.09450 | .06507 | -.18876 | .06481 | -.15815 | .04330 | -.01571 | .22324 |
| | GRADIENT | .00000 | .00000 | .00000 | .00000 | .00000 | .00000 | .00000 | .00000 | .00000 | .00000 |

IA143, AEDC V41A-P8A, O/ET W/R.H. SRB SEPARATING (OVX997) ( 23 MAY 77 )

REFERENCE DATA

SREF = 2690.0000 SQ.FT. XMRP = 1097.0000 IN. XT
LREF = 1290.3000 INCHES YMRP = .0000 IN. YT
BREF = 1290.3000 INCHES ZMRP = 450.0000 IN. ZT
SCALE = .0100

PARAMETRIC DATA

ALPHA = -5.000 BETA = 5.000
DALPHA = -5.000 DBETA = .000
X = 600.000 MACH = 4.500
JET PC = .000

RUN NO. 4162/ 0 RN/L = 2.39 GRADIENT INTERVAL = -5.00/ 5.00

| Y | Z | X | ALPHA | BETA | PHI | CN | CLM | CY | CYN | CBL | CA |
|---|---|---|---|---|---|---|---|---|---|---|---|
| -103.500 | 199.320 | 599.86000 | -5.17240 | 5.09200 | .08092 | -.18067 | .06016 | -.16839 | .04963 | -.01489 | .22113 |
| -100.490 | 299.990 | 599.57000 | -5.17240 | 5.09290 | .07149 | -.18095 | .05965 | -.16106 | .04542 | -.01513 | .22089 |
| -100.950 | 400.270 | 599.49000 | -5.17130 | 5.09460 | .06566 | -.18663 | .06325 | -.15703 | .04261 | -.01533 | .22035 |
| | GRADIENT | .00000 | .00000 | .00000 | .00000 | .00000 | .00000 | .00000 | .00000 | .00000 | .00000 |

RUN NO. 4163/ 0 RN/L = 2.38 GRADIENT INTERVAL = -5.00/ 5.00

| Y | Z | X | ALPHA | BETA | PHI | CN | CLM | CY | CYN | CBL | CA |
|---|---|---|---|---|---|---|---|---|---|---|---|
| -300.940 | 399.470 | 599.47000 | -5.17120 | 5.09450 | .06526 | -.18728 | .06394 | -.15655 | .04240 | -.01531 | .22168 |
| -301.180 | 300.140 | 599.51000 | -5.17140 | 5.09480 | .06527 | -.18745 | .06396 | -.15698 | .04252 | -.01539 | .22159 |
| -300.650 | 200.060 | 599.48000 | -5.17130 | 5.09490 | .06528 | -.18724 | .06390 | -.15692 | .04248 | -.01539 | .22137 |
| | GRADIENT | .00000 | .00000 | .00000 | .00000 | .00000 | .00000 | .00000 | .00000 | .00000 | .00000 |

IA143, AEDC V41A-P8A, O/ET W/R.H. SRB SEPARATING (OVX998) ( 23 MAY 77 )

REFERENCE DATA

SREF = 2690.0000 SQ.FT. XMRP = 1097.0000 IN. XT
LREF = 1290.3000 INCHES YMRP = .0000 IN. YT
BREF = 1290.3000 INCHES ZMRP = 450.0000 IN. ZT
SCALE = .0100

PARAMETRIC DATA

ALPHA = -5.000 BETA = 5.000
DALPHA = -10.000 DBETA = .000
X = 600.000 MACH = 4.500
JET PC = .000

RUN NO. 4087/ 0 RN/L = 2.37 GRADIENT INTERVAL = -5.00/ 5.00

| Y | Z | X | ALPHA | BETA | PHI | CN | CLM | CY | CYN | CBL | CA |
|---|---|---|---|---|---|---|---|---|---|---|---|
| -102.990 | 201.470 | 599.91000 | -5.17270 | 5.09080 | .08708 | -.18097 | .06070 | -.17363 | .05284 | -.01484 | .22259 |
| -100.450 | 300.350 | 599.34000 | -5.17330 | 5.09170 | .07668 | -.17916 | .05878 | -.16560 | .04835 | -.01516 | .22245 |
| -100.890 | 400.380 | 599.35000 | -5.17230 | 5.09370 | .06705 | -.18466 | .06193 | -.15834 | .04369 | -.01539 | .22217 |
| | GRADIENT | .00000 | .00000 | .00000 | .00000 | .00000 | .00000 | .00000 | .00000 | .00000 | .00000 |

RUN NO. 4088/ 0 RN/L = 2.37 GRADIENT INTERVAL = -5.00/ 5.00

| Y | Z | X | ALPHA | BETA | PHI | CN | CLM | CY | CYN | CBL | CA |
|---|---|---|---|---|---|---|---|---|---|---|---|
| -301.390 | 399.690 | 599.21000 | -5.17180 | 5.09440 | .06522 | -.18825 | .06467 | -.15725 | .04286 | -.01549 | .22375 |
| -300.870 | 300.400 | 599.22000 | -5.17190 | 5.09450 | .06527 | -.18827 | .06463 | -.15734 | .04290 | -.01551 | .22356 |
| -301.010 | 200.210 | 599.18000 | -5.17180 | 5.09450 | .06530 | -.18802 | .06452 | -.15719 | .04283 | -.01548 | .22318 |
| | GRADIENT | .00000 | .00000 | .00000 | .00000 | .00000 | .00000 | .00000 | .00000 | .00000 | .00000 |

IA143, AEDC V41A-P8A, O/ET W/R.H. SRB SEPARATING (OVX999) ( 23 MAY 77 )

REFERENCE DATA

SREF = 2690.0000 SQ.FT. XMRP = 1097.0000 IN. XT
LREF = 1290.3000 INCHES YMRP = .0000 IN. YT
BREF = 1290.3000 INCHES ZMRP = 450.0000 IN. ZT
SCALE = .0100

PARAMETRIC DATA

ALPHA = -5.000 BETA = 5.000
DALPHA = -5.000 DBETA = -8.000
X = 600.000 MACH = 4.500
JET PC = .000

RUN NO. 4165/ 0 RN/L = 2.38 GRADIENT INTERVAL = -5.00/ 5.00

| Y | Z | X | ALPHA | BETA | PHI | CN | CLM | CY | CYN | CBL | CA |
|---|---|---|---|---|---|---|---|---|---|---|---|
| -99.882 | 399.710 | 599.34000 | -5.17180 | 5.09440 | .06642 | -.18385 | .06134 | -.15755 | .04298 | -.01531 | .22019 |
| -100.470 | 299.750 | 599.49000 | -5.17270 | 5.09230 | .07559 | -.17697 | .05737 | -.16417 | .04730 | -.01503 | .22050 |
| -101.150 | 200.210 | 599.41000 | -5.17220 | 5.09050 | .09193 | -.17628 | .05796 | -.17696 | .05465 | -.01459 | .22014 |
| | GRADIENT | .00000 | .00000 | .00000 | .00000 | .00000 | .00000 | .00000 | .00000 | .00000 | .00000 |

RUN NO. 4164/ 0 RN/L = 2.38 GRADIENT INTERVAL = -5.00/ 5.00

| Y | Z | X | ALPHA | BETA | PHI | CN | CLM | CY | CYN | CBL | CA |
|---|---|---|---|---|---|---|---|---|---|---|---|
| -303.590 | 200.240 | 599.84000 | -5.17120 | 5.09480 | .06521 | -.18747 | .06389 | -.15659 | .04231 | -.01532 | .22057 |
| -300.380 | 299.980 | 599.36000 | -5.17120 | 5.09480 | .06529 | -.18738 | .06394 | -.15697 | .04249 | -.01538 | .22138 |
| -300.400 | 399.880 | 599.48000 | -5.17140 | 5.09470 | .06526 | -.18741 | .06395 | -.15688 | .04250 | -.01537 | .22165 |
| | GRADIENT | .00000 | .00000 | .00000 | .00000 | .00000 | .00000 | .00000 | .00000 | .00000 | .00000 |

IA143, AEDC V41A-P8A, O/ET W/R.H. SRB SEPARATING (OVXA00) ( 23 MAY 77 )

REFERENCE DATA

SREF = 2690.0000 SQ.FT. XMRP = 1097.0000 IN. XT
LREF = 1290.3000 INCHES YMRP = .0000 IN. YT
BREF = 1290.3000 INCHES ZMRP = 450.0000 IN. ZT
SCALE = .0100

PARAMETRIC DATA

ALPHA = -5.000 BETA = 5.000
DALPHA = -10.000 DBETA = -8.000
X = 600.000 MACH = 4.500
JET PC = .000

RUN NO. 4082/ 0 RN/L = 2.37 GRADIENT INTERVAL = -5.00/ 5.00

| Y | Z | X | ALPHA | BETA | PHI | CN | CLM | CY | CYN | CBL | CA |
|---|---|---|---|---|---|---|---|---|---|---|---|
| -100.840 | 200.240 | 599.15000 | -5.17390 | 5.08640 | .11032 | -.17604 | .05803 | -.19136 | .06392 | -.01430 | .22098 |
| -99.781 | 300.110 | 599.10000 | -5.17350 | 5.09000 | .08458 | -.17393 | .05588 | -.17137 | .05205 | -.01492 | .22189 |
| -100.660 | 350.310 | 599.22000 | -5.17350 | 5.09170 | .07559 | -.17633 | .05676 | -.16478 | .04791 | -.01519 | .22169 |
| -100.890 | 400.240 | 599.48000 | -5.17310 | 5.09330 | .06922 | -.18069 | .05932 | -.16012 | .04485 | -.01539 | .22200 |
| | GRADIENT | .00000 | .00000 | .00000 | .00000 | .00000 | .00000 | .00000 | .00000 | .00000 | .00000 |

IA143, AEDC V41A-P8A, O/ET W/R.H. SRB SEPARATING (OVXA01) ( 23 MAY 77 )

REFERENCE DATA

SREF = 2690.0000 SQ.FT. XMRP = 1097.0000 IN. XT
LREF = 1290.3000 INCHES YMRP = .0000 IN. YT
BREF = 1290.3000 INCHES ZMRP = 450.0000 IN. ZT
SCALE = .0100

PARAMETRIC DATA

ALPHA = -5.000 BETA = 5.000
DALPHA = -10.000 DBETA = -8.000
X = 600.000 MACH = 4.500
JET PC = .000

RUN NO. 4084/ 0 RN/L = 2.37 GRADIENT INTERVAL = -5.00/ 5.00

| Y | Z | X | ALPHA | BETA | PHI | CN | CLM | CY | CYN | CBL | CA |
|---|---|---|---|---|---|---|---|---|---|---|---|
| -300.820 | 200.290 | 599.25000 | -5.17180 | 5.09450 | .06532 | -.18829 | .06445 | -.15738 | .04291 | -.01551 | .22245 |
| -300.140 | 300.330 | 599.18000 | -5.17170 | 5.09450 | .06521 | -.18828 | .06455 | -.15745 | .04294 | -.01555 | .22281 |
| -300.460 | 399.870 | 599.08000 | -5.17190 | 5.09440 | .06526 | -.18837 | .06469 | -.15737 | .04295 | -.01552 | .22372 |
| | GRADIENT | .00000 | .00000 | .00000 | .00000 | .00000 | .00000 | .00000 | .00000 | .00000 | .00000 |

IA143, AEDC V41A-P8A, O/ET W/R.H. SRB SEPARATING (OVXA02) ( 23 MAY 77 )

REFERENCE DATA

SREF = 2690.0000 SQ.FT. XMRP = 1097.0000 IN. XT
LREF = 1290.3000 INCHES YMRP = .0000 IN. YT
BREF = 1290.3000 INCHES ZMRP = 450.0000 IN. ZT
SCALE = .0100

PARAMETRIC DATA

ALPHA = -5.000 BETA = 5.000
DALPHA = -10.000 DBETA = -4.000
X = 600.000 MACH = 4.500
JET PC = .000

RUN NO. 4086/ 0 RN/L = 2.37 GRADIENT INTERVAL = -5.00/ 5.00

| Y | Z | X | ALPHA | BETA | PHI | CN | CLM | CY | CYN | CBL | CA |
|---|---|---|---|---|---|---|---|---|---|---|---|
| -103.880 | 301.110 | 599.76000 | -5.17330 | 5.09110 | .07935 | -.17713 | .05760 | -.16773 | .04968 | -.01510 | .22223 |
| -101.110 | 350.220 | 599.26000 | -5.17340 | 5.09240 | .07308 | -.17903 | .05840 | -.16309 | .04676 | -.01530 | .22225 |
| -101.260 | 400.310 | 599.39000 | -5.17290 | 5.09380 | .06805 | -.18275 | .06068 | -.15931 | .04424 | -.01543 | .22205 |
| | GRADIENT | .00000 | .00000 | .00000 | .00000 | .00000 | .00000 | .00000 | .00000 | .00000 | .00000 |

IA143, AEDC V41A-P8A, O/ET W/R.H. SRB SEPARATING (OVXA03) ( 23 MAY 77 )

REFERENCE DATA

SREF = 2690.0000 SQ.FT. XMRP = 1097.0000 IN. XT
LREF = 1290.3000 INCHES YMRP = .0000 IN. YT
BREF = 1290.3000 INCHES ZMRP = 450.0000 IN. ZT
SCALE = .0100

PARAMETRIC DATA

ALPHA = -5.000 BETA = 5.000
DALPHA = -15.000 DBETA = -4.000
X = 600.000 MACH = 4.500
JET PC = .000

RUN NO. 4105/ 0 RN/L = 2.38 GRADIENT INTERVAL = -5.00/ 5.00

| Y | Z | X | ALPHA | BETA | PHI | CN | CLM | CY | CYN | CBL | CA |
|---|---|---|---|---|---|---|---|---|---|---|---|
| -103.930 | 303.500 | 600.52000 | -5.17360 | 5.08880 | .09005 | -.17329 | .05536 | -.17488 | .05432 | -.01463 | .22035 |
| -100.930 | 350.390 | 599.24000 | -5.17360 | 5.09030 | .08093 | -.17411 | .05543 | -.16805 | .05016 | -.01490 | .22053 |
| -101.150 | 400.650 | 599.34000 | -5.17310 | 5.09250 | .07262 | -.17771 | .05735 | -.16230 | .04629 | -.01521 | .22029 |
| | GRADIENT | .00000 | .00000 | .00000 | .00000 | .00000 | .00000 | .00000 | .00000 | .00000 | .00000 |

RUN NO. 4106/ 0 RN/L = 2.38 GRADIENT INTERVAL = -5.00/ 5.00

| Y | Z | X | ALPHA | BETA | PHI | CN | CLM | CY | CYN | CBL | CA |
|---|---|---|---|---|---|---|---|---|---|---|---|
| -202.700 | 401.160 | 599.55000 | -5.17130 | 5.09460 | .06516 | -.18753 | .06385 | -.15688 | .04254 | -.01540 | .22091 |
| -201.470 | 350.350 | 599.28000 | -5.17210 | 5.09390 | .06765 | -.18476 | .06207 | -.15850 | .04377 | -.01533 | .22088 |
| -200.840 | 300.340 | 599.12000 | -5.17300 | 5.09220 | .07335 | -.18173 | .05998 | -.16272 | .04662 | -.01518 | .22093 |
| | GRADIENT | .00000 | .00000 | .00000 | .00000 | .00000 | .00000 | .00000 | .00000 | .00000 | .00000 |

IA143, AEDC V41A-P8A, O/ET W/R.H. SRB SEPARATING (OVXA04) ( 23 MAY 77 )

REFERENCE DATA

SREF = 2690.0000 SQ.FT. XMRP = 1097.0000 IN. XT
LREF = 1290.3000 INCHES YMRP = .0000 IN. YT
BREF = 1290.3000 INCHES ZMRP = 450.0000 IN. ZT
SCALE = .0100

PARAMETRIC DATA

ALPHA = -5.000 BETA = 5.000
DALPHA = -10.000 DBETA = -4.000
X = 600.000 MACH = 4.500
JET PC = .000

RUN NO. 4085/ 0 RN/L = 2.37 GRADIENT INTERVAL = -5.00/ 5.00

| Y | Z | X | ALPHA | BETA | PHI | CN | CLM | CY | CYN | CBL | CA |
|---|---|---|---|---|---|---|---|---|---|---|---|
| -200.970 | 200.320 | 599.09000 | -5.17350 | 5.09050 | .07952 | -.18212 | .06043 | -.16746 | .04979 | -.01506 | .22207 |
| -200.850 | 300.430 | 599.20000 | -5.17250 | 5.09330 | .06886 | -.18478 | .06205 | -.15996 | .04476 | -.01542 | .22216 |
| -200.860 | 350.320 | 599.14000 | -5.17180 | 5.09420 | .06574 | -.18758 | .06393 | -.15760 | .04313 | -.01548 | .22212 |
| -200.680 | 400.070 | 599.17000 | -5.17170 | 5.09440 | .06523 | -.18833 | .06455 | -.15700 | .04275 | -.01545 | .22253 |
| | GRADIENT | .00000 | .00000 | .00000 | .00000 | .00000 | .00000 | .00000 | .00000 | .00000 | .00000 |

IA143, AEDC V41A-P8A, O/ET W/R.H. SRB SEPARATING (OVXA05) ( 25 MAY 77 )

REFERENCE DATA

SREF = 2690.0000 SQ.FT. XMRP = 1097.0000 IN. XT
LREF = 1290.3000 INCHES YMRP = .0000 IN. YT
BREF = 1290.3000 INCHES ZMRP = 450.0000 IN. ZT
SCALE = .0100

PARAMETRIC DATA

ALPHA = -5.000 BETA = 5.000
DALPHA = -15.000 DBETA = -8.000
X = 600.000 MACH = 4.500
JET PC = .000

RUN NO. 4108/ 0 RN/L = 2.38 GRADIENT INTERVAL = -5.00/ 5.00

| Y | Z | X | ALPHA | BETA | PHI | CN | CLM | CY | CYN | CBL | CA |
|---|---|---|---|---|---|---|---|---|---|---|---|
| -99.010 | 399.190 | 598.70000 | -5.17380 | 5.09120 | .07728 | -.17313 | .05435 | -.16538 | .04840 | -.01502 | .21958 |
| -100.430 | 350.280 | 599.07000 | -5.17420 | 5.08820 | .08908 | -.16918 | .05229 | -.17381 | .05403 | -.01464 | .21918 |
| -100.810 | 300.410 | 599.25000 | -5.17420 | 5.08510 | .10507 | -.16861 | .05264 | -.18593 | .06161 | -.01423 | .21889 |
| | GRADIENT | .00000 | .00000 | .00000 | .00000 | .00000 | .00000 | .00000 | .00000 | .00000 | .00000 |

RUN NO. 4107/ 0 RN/L = 2.38 GRADIENT INTERVAL = -5.00/ 5.00

| Y | Z | X | ALPHA | BETA | PHI | CN | CLM | CY | CYN | CBL | CA |
|---|---|---|---|---|---|---|---|---|---|---|---|
| -201.770 | 300.190 | 599.37000 | -5.17360 | 5.09060 | .07957 | -.17818 | .05750 | -.16704 | .04954 | -.01495 | .21956 |
| -200.320 | 350.420 | 599.23000 | -5.17270 | 5.09260 | .07140 | -.18168 | .05983 | -.16118 | .04563 | -.01521 | .22034 |
| -200.130 | 400.280 | 599.06000 | -5.17190 | 5.09440 | .06630 | -.18591 | .06266 | -.15756 | .04303 | -.01534 | .22069 |
| | GRADIENT | .00000 | .00000 | .00000 | .00000 | .00000 | .00000 | .00000 | .00000 | .00000 | .00000 |

IA143, AEDC V41A-P8A, O/ET W/R.H. SRB SEPARATING (OVXA06) ( 23 MAY 77 )

REFERENCE DATA

SREF = 2690.0000 SQ.FT. XMRP = 1097.0000 IN. XT
LREF = 1290.3000 INCHES YMRP = .0000 IN. YT
BREF = 1290.3000 INCHES ZMRP = 450.0000 IN. ZT
SCALE = .0100

PARAMETRIC DATA

ALPHA = -5.000 BETA = 5.000
DALPHA = -10.000 DBETA = -8.000
X = 600.000 MACH = 4.500
JET PC = .000

RUN NO. 4083/ 0 RN/L = 2.37 GRADIENT INTERVAL = -5.00/ 5.00

| Y | Z | X | ALPHA | BETA | PHI | CN | CLM | CY | CYN | CBL | CA |
|---|---|---|---|---|---|---|---|---|---|---|---|
| -200.430 | 300.210 | 599.07000 | -5.17330 | 5.09230 | .07256 | -.18220 | .06027 | -.16269 | .04657 | -.01532 | .22224 |
| -200.560 | 350.250 | 599.20000 | -5.17240 | 5.09400 | .06725 | -.18575 | .06262 | -.15897 | .04394 | -.01549 | .22207 |
| -200.500 | 400.150 | 599.18000 | -5.17160 | 5.09460 | .06512 | -.18834 | .06443 | -.15742 | .04287 | -.01553 | .22214 |
| | GRADIENT | .00000 | .00000 | .00000 | .00000 | .00000 | .00000 | .00000 | .00000 | .00000 | .00000 |

IA143, AEDC V41A-P8A, O/ET W/R.H. SRB SEPARATING (OVXA07) ( 23 MAY 77 )

REFERENCE DATA

SREF = 2690.0000 SQ.FT. XMRP = 1097.0000 IN. XT
LREF = 1290.3000 INCHES YMRP = .0000 IN. YT
BREF = 1290.3000 INCHES ZMRP = 450.0000 IN. ZT
SCALE = .0100

PARAMETRIC DATA

ALPHA = -5.000 BETA = 5.000
DALPHA = -5.000 DBETA = 4.000
X = 900.000 MACH = 4.500
JET PC = .000

RUN NO. 4168/ 0 RN/L = 2.38 GRADIENT INTERVAL = -5.00/ 5.00

| Y | Z | X | ALPHA | BETA | PHI | CN | CLM | CY | CYN | CBL | CA |
|---|---|---|---|---|---|---|---|---|---|---|---|
| -101.890 | 199.440 | 899.94000 | -5.17130 | 5.09490 | .06544 | -.18712 | .06367 | -.15692 | .04249 | -.01535 | .22052 |
| -100.930 | 274.970 | 899.50000 | -5.17130 | 5.09480 | .06529 | -.18744 | .06389 | -.15684 | .04243 | -.01535 | .22095 |
| -100.610 | 424.960 | 899.48000 | -5.17130 | 5.09470 | .06527 | -.18744 | .06399 | -.15688 | .04251 | -.01537 | .22172 |
| -101.270 | 500.170 | 899.57000 | -5.17150 | 5.09480 | .06534 | -.18749 | .06400 | -.15714 | .04261 | -.01542 | .22181 |
| -101.040 | 600.330 | 899.48000 | -5.17140 | 5.09480 | .06532 | -.18738 | .06397 | -.15696 | .04253 | -.01538 | .22168 |
| | GRADIENT | .00000 | .00000 | .00000 | .00000 | .00000 | .00000 | .00000 | .00000 | .00000 | .00000 |

RUN NO. 4169/ 0 RN/L = 2.38 GRADIENT INTERVAL = -5.00/ 5.00

| Y | Z | X | ALPHA | BETA | PHI | CN | CLM | CY | CYN | CBL | CA |
|---|---|---|---|---|---|---|---|---|---|---|---|
| -400.710 | 598.660 | 899.46000 | -5.17140 | 5.09480 | .06524 | -.18752 | .06400 | -.15711 | .04256 | -.01541 | .22180 |
| -400.720 | 500.000 | 899.59000 | -5.17140 | 5.09470 | .06530 | -.18740 | .06398 | -.15682 | .04248 | -.01536 | .22173 |
| -400.960 | 425.070 | 899.47000 | -5.17140 | 5.09480 | .06531 | -.18740 | .06398 | -.15683 | .04245 | -.01535 | .22163 |
| -401.250 | 275.130 | 899.51000 | -5.17130 | 5.09490 | .06526 | -.18744 | .06405 | -.15695 | .04246 | -.01538 | .22195 |
| -400.910 | 200.120 | 899.41000 | -5.17140 | 5.09470 | .06530 | -.18748 | .06402 | -.15682 | .04245 | -.01535 | .22178 |
| | GRADIENT | .00000 | .00000 | .00000 | .00000 | .00000 | .00000 | .00000 | .00000 | .00000 | .00000 |

IA143, AEDC V41A-P8A, O/ET W/R.H. SRB SEPARATING (OVXA08) ( 23 MAY 77 )

REFERENCE DATA

SREF = 2690.0000 SQ.FT. XMRP = 1097.0000 IN. XT
LREF = 1290.3000 INCHES YMRP = .0000 IN. YT
BREF = 1290.3000 INCHES ZMRP = 450.0000 IN. ZT
SCALE = .0100

PARAMETRIC DATA

ALPHA = -5.000 BETA = 5.000
DALPHA = -20.000 DBETA = 4.000
X = 900.000 MACH = 4.500
JET PC = .000

RUN NO. 4133/ 0 RN/L = 2.38 GRADIENT INTERVAL = -5.00/ 5.00

| Y | Z | X | ALPHA | BETA | PHI | CN | CLM | CY | CYN | CBL | CA |
|---|---|---|---|---|---|---|---|---|---|---|---|
| -100.780 | 200.630 | 899.05000 | -5.17290 | 5.09150 | .07579 | -.18308 | .06075 | -.16431 | .04775 | -.01507 | .22007 |
| -100.700 | 275.610 | 899.17000 | -5.17190 | 5.09380 | .06818 | -.18506 | .06212 | -.15916 | .04408 | -.01533 | .22060 |
| -100.420 | 425.730 | 899.22000 | -5.17130 | 5.09470 | .06521 | -.18745 | .06393 | -.15703 | .04257 | -.01542 | .22128 |
| -100.840 | 500.840 | 899.26000 | -5.17160 | 5.09470 | .06532 | -.18774 | .06416 | -.15695 | .04258 | -.01540 | .22217 |
| -100.990 | 601.160 | 899.31000 | -5.17180 | 5.09490 | .06533 | -.18783 | .06422 | -.15738 | .04275 | -.01548 | .22257 |
| | GRADIENT | .00000 | .00000 | .00000 | .00000 | .00000 | .00000 | .00000 | .00000 | .00000 | .00000 |

IA143, AEDC V41A-P8A, O/ET W/R.H. SRB SEPARATING (OVXA08) ( 23 MAY 77 )

REFERENCE DATA

SREF = 2690.0000 SQ.FT. XMRP = 1097.0000 IN. XT
LREF = 1290.3000 INCHES YMRP = .0000 IN. YT
BREF = 1290.3000 INCHES ZMRP = 450.0000 IN. ZT
SCALE = .0100

PARAMETRIC DATA

ALPHA = -5.000 BETA = 5.000
DALPHA = -20.000 DBETA = 4.000
X = 900.000 MACH = 4.500
JET PC = .000

RUN NO. 4134/ 0 RN/L = 2.38 GRADIENT INTERVAL = -5.00/ 5.00

| Y | Z | X | ALPHA | BETA | PHI | CN | CLM | CY | CYN | CBL | CA |
|---|---|---|---|---|---|---|---|---|---|---|---|
| -401.660 | 598.940 | 898.54000 | -5.17150 | 5.09460 | .06526 | -.18752 | .06405 | -.15714 | .04271 | -.01545 | .22219 |
| -400.810 | 500.620 | 899.18000 | -5.17160 | 5.09470 | .06534 | -.18766 | .06414 | -.15725 | .04272 | -.01545 | .22235 |
| -400.730 | 425.710 | 899.19000 | -5.17150 | 5.09470 | .06524 | -.18756 | .06412 | -.15722 | .04272 | -.01546 | .22239 |
| -400.780 | 275.580 | 899.21000 | -5.17160 | 5.09470 | .06530 | -.18744 | .06401 | -.15704 | .04267 | -.01543 | .22201 |
| -400.840 | 200.520 | 899.06000 | -5.17150 | 5.09470 | .06526 | -.18759 | .06410 | -.15716 | .04266 | -.01544 | .22216 |
| | GRADIENT | .00000 | .00000 | .00000 | .00000 | .00000 | .00000 | .00000 | .00000 | .00000 | .00000 |

IA143, AEDC V41A-P8A, O/ET W/R.H. SRB SEPARATING (OVXA09) ( 23 MAY 77 )

REFERENCE DATA

SREF = 2690.0000 SQ.FT. XMRP = 1097.0000 IN. XT
LREF = 1290.3000 INCHES YMRP = .0000 IN. YT
BREF = 1290.3000 INCHES ZMRP = 450.0000 IN. ZT
SCALE = .0100

PARAMETRIC DATA

ALPHA = -5.000 BETA = 5.000
DALPHA = -5.000 DBETA = -8.000
X = 900.000 MACH = 4.500
JET PC = .000

RUN NO. 4166/ 0 RN/L = 2.38 GRADIENT INTERVAL = -5.00/ 5.00

| Y | Z | X | ALPHA | BETA | PHI | CN | CLM | CY | CYN | CBL | CA |
|---|---|---|---|---|---|---|---|---|---|---|---|
| -104.930 | 198.670 | 899.80000 | -5.17240 | 5.09290 | .07115 | -.18349 | .06104 | -.16075 | .04529 | -.01514 | .22005 |
| -100.380 | 274.770 | 899.20000 | -5.17140 | 5.09470 | .06579 | -.18673 | .06327 | -.15717 | .04266 | -.01533 | .22028 |
| -101.510 | 425.010 | 899.40000 | -5.17130 | 5.09480 | .06532 | -.18745 | .06399 | -.15685 | .04245 | -.01535 | .22161 |
| -100.950 | 500.130 | 899.31000 | -5.17130 | 5.09480 | .06527 | -.18738 | .06399 | -.15686 | .04247 | -.01537 | .22176 |
| -101.590 | 600.390 | 899.43000 | -5.17130 | 5.09470 | .06531 | -.18738 | .06401 | -.15678 | .04245 | -.01534 | .22175 |
| | GRADIENT | .00000 | .00000 | .00000 | .00000 | .00000 | .00000 | .00000 | .00000 | .00000 | .00000 |

IA143, AEDC V41A-P8A, O/ET W/R.H. SRB SEPARATING (OVXA10) ( 23 MAY 77 )

REFERENCE DATA

SREF = 2690.0000 SQ.FT. XMRP = 1097.0000 IN. XT
LREF = 1290.3000 INCHES YMRP = .0000 IN. YT
BREF = 1290.3000 INCHES ZMRP = 450.0000 IN. ZT
SCALE = .0100

PARAMETRIC DATA

ALPHA = -5.000 BETA = 5.000
DALPHA = -20.000 DBETA = -16.000
X = 900.000 MACH = 4.500
JET PC = .000

RUN NO. 4135/ 0 RN/L = 2.38 GRADIENT INTERVAL = -5.00/ 5.00

| Y | Z | X | ALPHA | BETA | PHI | CN | CLM | CY | CYN | CBL | CA |
|---|---|---|---|---|---|---|---|---|---|---|---|
| -100.530 | 425.370 | 898.92000 | -5.17190 | 5.09510 | .06530 | -.18493 | .06163 | -.15653 | .04213 | -.01526 | .21890 |
| -101.170 | 500.860 | 899.42000 | -5.17070 | 5.09500 | .06507 | -.18678 | .06301 | -.15665 | .04225 | -.01535 | .21740 |
| -101.880 | 601.360 | 899.78000 | -5.17080 | 5.09490 | .06493 | -.18686 | .06329 | -.15673 | .04233 | -.01539 | .21881 |
| | GRADIENT | .00000 | .00000 | .00000 | .00000 | .00000 | .00000 | .00000 | .00000 | .00000 | .00000 |

IA143, AEDC V41A-P8A, O/ET W/R.H. SRB SEPARATING (OVXA11) ( 23 MAY 77 )

REFERENCE DATA

SREF = 2690.0000 SQ.FT. XMRP = 1097.0000 IN. XT
LREF = 1290.3000 INCHES YMRP = .0000 IN. YT
BREF = 1290.3000 INCHES ZMRP = 450.0000 IN. ZT
SCALE = .0100

PARAMETRIC DATA

ALPHA = -5.000 BETA = 5.000
DALPHA = -5.000 DBETA = -12.000
X = 900.000 MACH = 4.500
JET PC = .000

RUN NO. 4167/ 0 RN/L = 2.38 GRADIENT INTERVAL = -5.00/ 5.00

| Y | Z | X | ALPHA | BETA | PHI | CN | CLM | CY | CYN | CBL | CA |
|---|---|---|---|---|---|---|---|---|---|---|---|
| -401.350 | 200.130 | 899.49000 | -5.17140 | 5.09490 | .06531 | -.18739 | .06396 | -.15703 | .04253 | -.01539 | .22174 |
| -400.590 | 275.110 | 899.39000 | -5.17130 | 5.09470 | .06531 | -.18738 | .06397 | -.15683 | .04249 | -.01536 | .22163 |
| -400.170 | 424.790 | 899.30000 | -5.17130 | 5.09470 | .06530 | -.18738 | .06397 | -.15667 | .04241 | -.01532 | .22162 |
| -400.350 | 499.760 | 899.40000 | -5.17130 | 5.09490 | .06526 | -.18737 | .06399 | -.15692 | .04247 | -.01537 | .22170 |
| -400.510 | 599.810 | 899.35000 | -5.17140 | 5.09480 | .06530 | -.18749 | .06402 | -.15688 | .04247 | -.01536 | .22180 |
| | GRADIENT | .00000 | .00000 | .00000 | .00000 | .00000 | .00000 | .00000 | .00000 | .00000 | .00000 |

IA143, AEDC V41A-P8A, O/ET W/R.H. SRB SEPARATING (OVXA12) ( 23 MAY 77 )

REFERENCE DATA

SREF = 2690.0000 SQ.FT. XMRP = 1097.0000 IN. XT
LREF = 1290.3000 INCHES YMRP = .0000 IN. YT
BREF = 1290.3000 INCHES ZMRP = 450.0000 IN. ZT
SCALE = .0100

PARAMETRIC DATA

ALPHA = -5.000 BETA = 5.000
DALPHA = -20.000 DBETA = -16.000
X = 900.000 MACH = 4.500
JET PC = .000

RUN NO. 4136/ 0 RN/L = 2.38 GRADIENT INTERVAL = -5.00/ 5.00

| Y | Z | X | ALPHA | BETA | PHI | CN | CLM | CY | CYN | CBL | CA |
|---|---|---|---|---|---|---|---|---|---|---|---|
| -400.520 | 200.500 | 898.87000 | -5.17110 | 5.09490 | .06504 | -.18721 | .06363 | -.15705 | .04251 | -.01544 | .21991 |
| -399.920 | 275.680 | 899.00000 | -5.17100 | 5.09490 | .06496 | -.18714 | .06368 | -.15683 | .04244 | -.01543 | .22000 |
| -399.960 | 425.570 | 898.85000 | -5.17100 | 5.09480 | .06509 | -.18723 | .06382 | -.15709 | .04260 | -.01546 | .22072 |
| -400.190 | 500.380 | 899.03000 | -5.17100 | 5.09480 | .06505 | -.18718 | .06386 | -.15718 | .04261 | -.01547 | .22104 |
| -400.360 | 600.270 | 899.20000 | -5.17120 | 5.09470 | .06518 | -.18731 | .06392 | -.15708 | .04262 | -.01543 | .22141 |
| | GRADIENT | .00000 | .00000 | .00000 | .00000 | .00000 | .00000 | .00000 | .00000 | .00000 | .00000 |

IA143, AEDC V41A-P8A, O/ET W/R.H. SRB SEPARATING (OVXA13) ( 23 MAY 77 )

REFERENCE DATA

SREF = 2690.0000 SQ.FT. XMRP = 1097.0000 IN. XT
LREF = 1290.3000 INCHES YMRP = .0000 IN. YT
BREF = 1290.3000 INCHES ZMRP = 450.0000 IN. ZT
SCALE = .0100

PARAMETRIC DATA

ALPHA = -5.000 BETA = 5.000
DALPHA = -10.000 DBETA = .000
X = 900.000 MACH = 4.500
JET PC = .000

RUN NO. 4089/ 0 RN/L = 2.37 GRADIENT INTERVAL = -5.00/ 5.00

| Y | Z | X | ALPHA | BETA | PHI | CN | CLM | CY | CYN | CBL | CA |
|---|---|---|---|---|---|---|---|---|---|---|---|
| -102.160 | 301.040 | 899.67000 | -5.17170 | 5.09450 | .06524 | -.18830 | .06443 | -.15720 | .04278 | -.01546 | .22223 |
| -100.780 | 400.110 | 899.12000 | -5.17170 | 5.09450 | .06524 | -.18813 | .06448 | -.15715 | .04277 | -.01547 | .22304 |
| -101.070 | 500.430 | 899.10000 | -5.17180 | 5.09440 | .06527 | -.18817 | .06455 | -.15723 | .04283 | -.01548 | .22352 |
| | GRADIENT | .00000 | .00000 | .00000 | .00000 | .00000 | .00000 | .00000 | .00000 | .00000 | .00000 |

RUN NO. 4090/ 0 RN/L = 2.37 GRADIENT INTERVAL = -5.00/ 5.00

| Y | Z | X | ALPHA | BETA | PHI | CN | CLM | CY | CYN | CBL | CA |
|---|---|---|---|---|---|---|---|---|---|---|---|
| -301.450 | 500.440 | 898.99000 | -5.17180 | 5.09440 | .06526 | -.18817 | .06457 | -.15736 | .04289 | -.01550 | .22357 |
| -301.100 | 400.380 | 899.21000 | -5.17180 | 5.09450 | .06522 | -.18827 | .06461 | -.15752 | .04295 | -.01554 | .22369 |
| -301.130 | 300.220 | 899.16000 | -5.17180 | 5.09450 | .06526 | -.18812 | .06457 | -.15745 | .04295 | -.01553 | .22350 |
| | GRADIENT | .00000 | .00000 | .00000 | .00000 | .00000 | .00000 | .00000 | .00000 | .00000 | .00000 |

IA143, AEDC V41A-P8A, O/ET W/R.H. SRB SEPARATING (OVXA14) ( 23 MAY 77 )

REFERENCE DATA

SREF = 2690.0000 SQ.FT. XMRP = 1097.0000 IN. XT
LREF = 1290.3000 INCHES YMRP = .0000 IN. YT
BREF = 1290.3000 INCHES ZMRP = 450.0000 IN. ZT
SCALE = .0100

PARAMETRIC DATA

ALPHA = -5.000 BETA = 5.000
DALPHA = -15.000 DBETA = .000
X = 900.000 MACH = 4.500
JET PC = .000

RUN NO. 4118/ 0 RN/L = 2.37 GRADIENT INTERVAL = -5.00/ 5.00

| Y | Z | X | ALPHA | BETA | PHI | CN | CLM | CY | CYN | CBL | CA |
|---|---|---|---|---|---|---|---|---|---|---|---|
| -102.140 | 303.350 | 900.33000 | -5.17150 | 5.09450 | .06552 | -.18708 | .06356 | -.15703 | .04267 | -.01538 | .22094 |
| -100.550 | 400.250 | 899.06000 | -5.17130 | 5.09470 | .06522 | -.18744 | .06394 | -.15708 | .04263 | -.01543 | .22140 |
| -100.750 | 500.570 | 899.17000 | -5.17150 | 5.09460 | .06523 | -.18756 | .06411 | -.15707 | .04266 | -.01543 | .22224 |
| | GRADIENT | .00000 | .00000 | .00000 | .00000 | .00000 | .00000 | .00000 | .00000 | .00000 | .00000 |

RUN NO. 4119/ 0 RN/L = 2.37 GRADIENT INTERVAL = -5.00/ 5.00

| Y | Z | X | ALPHA | BETA | PHI | CN | CLM | CY | CYN | CBL | CA |
|---|---|---|---|---|---|---|---|---|---|---|---|
| -301.990 | 501.110 | 899.33000 | -5.17150 | 5.09470 | .06525 | -.18760 | .06416 | -.15723 | .04272 | -.01546 | .22247 |
| -301.040 | 400.480 | 899.23000 | -5.17160 | 5.09470 | .06527 | -.18752 | .06409 | -.15715 | .04270 | -.01545 | .22234 |
| -300.690 | 300.440 | 899.19000 | -5.17150 | 5.09440 | .06528 | -.18752 | .06413 | -.15686 | .04263 | -.01539 | .22237 |
| | GRADIENT | .00000 | .00000 | .00000 | .00000 | .00000 | .00000 | .00000 | .00000 | .00000 | .00000 |

IA143, AEDC V41A-P8A, O/ET W/R.H. SRB SEPARATING (OVXA15) ( 23 MAY 77 )

REFERENCE DATA

SREF = 2690.0000 SQ.FT. XMRP = 1097.0000 IN. XT
LREF = 1290.3000 INCHES YMRP = .0000 IN. YT
BREF = 1290.3000 INCHES ZMRP = 450.0000 IN. ZT
SCALE = .0100

PARAMETRIC DATA

ALPHA = -5.000 BETA = 5.000
DALPHA = -10.000 DBETA = -12.000
X = 900.000 MACH = 4.500
JET PC = .000

RUN NO. 4095/ 0 RN/L = 2.37 GRADIENT INTERVAL = -5.00/ 5.00

| Y | Z | X | ALPHA | BETA | PHI | CN | CLM | CY | CYN | CBL | CA |
|---|---|---|---|---|---|---|---|---|---|---|---|
| -104.930 | 299.840 | 899.80000 | -5.17200 | 5.09400 | .06669 | -.18579 | .06264 | -.15805 | .04340 | -.01538 | .22143 |
| -100.700 | 400.040 | 899.22000 | -5.17140 | 5.09450 | .06518 | -.18776 | .06412 | -.15706 | .04269 | -.01545 | .22156 |
| -100.950 | 500.440 | 899.26000 | -5.17160 | 5.09440 | .06518 | -.18797 | .06441 | -.15714 | .04278 | -.01546 | .22305 |
| | GRADIENT | .00000 | .00000 | .00000 | .00000 | .00000 | .00000 | .00000 | .00000 | .00000 | .00000 |

RUN NO. 4096/ 0 RN/L = 2.37 GRADIENT INTERVAL = -5.00/ 5.00

| Y | Z | X | ALPHA | BETA | PHI | CN | CLM | CY | CYN | CBL | CA |
|---|---|---|---|---|---|---|---|---|---|---|---|
| -302.050 | 501.400 | 899.55000 | -5.17180 | 5.09450 | .06526 | -.18794 | .06443 | -.15710 | .04277 | -.01546 | .22322 |
| -300.890 | 400.190 | 899.16000 | -5.17180 | 5.09460 | .06524 | -.18811 | .06451 | -.15727 | .04279 | -.01548 | .22328 |
| -300.790 | 300.290 | 899.04000 | -5.17160 | 5.09460 | .06521 | -.18798 | .06443 | -.15724 | .04277 | -.01547 | .22303 |
| | GRADIENT | .00000 | .00000 | .00000 | .00000 | .00000 | .00000 | .00000 | .00000 | .00000 | .00000 |

IA143, AEDC V41A-P8A, O/ET W/R.H. SRB SEPARATING (OVXA16) ( 23 MAY 77 )

REFERENCE DATA

SREF = 2690.0000 SQ.FT. XMRP = 1097.0000 IN. XT
LREF = 1290.3000 INCHES YMRP = .0000 IN. YT
BREF = 1290.3000 INCHES ZMRP = 450.0000 IN. ZT
SCALE = .0100

PARAMETRIC DATA

ALPHA = -5.000 BETA = 5.000
DALPHA = -15.000 DBETA = -12.000
X = 900.000 MACH = 4.500
JET PC = .000

RUN NO. 4111/ 0 RN/L = 2.38 GRADIENT INTERVAL = -5.00/ 5.00

| Y | Z | X | ALPHA | BETA | PHI | CN | CLM | CY | CYN | CBL | CA |
|---|---|---|---|---|---|---|---|---|---|---|---|
| -104.800 | 301.800 | 900.26000 | -5.17260 | 5.09330 | .07014 | -.18245 | .06023 | -.16036 | .04495 | -.01525 | .21992 |
| -100.770 | 400.110 | 899.01000 | -5.17110 | 5.09480 | .06504 | -.18743 | .06372 | -.15670 | .04239 | -.01538 | .21974 |
| -100.870 | 500.660 | 899.09000 | -5.17130 | 5.09470 | .06518 | -.18740 | .06383 | -.15686 | .04255 | -.01541 | .22091 |
| | GRADIENT | .00000 | .00000 | .00000 | .00000 | .00000 | .00000 | .00000 | .00000 | .00000 | .00000 |

RUN NO. 4112/ 0 RN/L = 2.37 GRADIENT INTERVAL = -5.00/ 5.00

| Y | Z | X | ALPHA | BETA | PHI | CN | CLM | CY | CYN | CBL | CA |
|---|---|---|---|---|---|---|---|---|---|---|---|
| -302.620 | 502.130 | 899.93000 | -5.17140 | 5.09440 | .06521 | -.18764 | .06419 | -.15701 | .04267 | -.01542 | .22254 |
| -301.350 | 400.430 | 899.26000 | -5.17150 | 5.09460 | .06524 | -.18753 | .06414 | -.15706 | .04267 | -.01544 | .22228 |
| -300.560 | 300.390 | 899.06000 | -5.17130 | 5.09460 | .06517 | -.18754 | .06411 | -.15695 | .04260 | -.01542 | .22194 |
| | GRADIENT | .00000 | .00000 | .00000 | .00000 | .00000 | .00000 | .00000 | .00000 | .00000 | .00000 |

IA143, AEDC V41A-P8A, O/ET W/R.H. SRB SEPARATING (OVXA17) ( 23 MAY 77 )

REFERENCE DATA

SREF = 2690.0000 SQ.FT. XMRP = 1097.0000 IN. XT
LREF = 1290.3000 INCHES YMRP = .0000 IN. YT
BREF = 1290.3000 INCHES ZMRP = 450.0000 IN. ZT
SCALE = .0100

PARAMETRIC DATA

ALPHA = -5.000 BETA = 5.000
DALPHA = -12.000 DBETA = -6.000
X = 900.000 MACH = 4.500
JET PC = .000

RUN NO. 4101/ 0 RN/L = 2.38 GRADIENT INTERVAL = -5.00/ 5.00

| Y | Z | X | ALPHA | BETA | PHI | CN | CLM | CY | CYN | CBL | CA |
|---|---|---|---|---|---|---|---|---|---|---|---|
| -204.670 | 302.210 | 900.05000 | -5.17150 | 5.09450 | .06525 | -.18783 | .06426 | -.15710 | .04271 | -.01545 | .22228 |
| -200.810 | 400.470 | 899.08000 | -5.17170 | 5.09460 | .06522 | -.18788 | .06438 | -.15714 | .04274 | -.01547 | .22289 |
| -201.020 | 500.420 | 899.22000 | -5.17170 | 5.09470 | .06526 | -.18783 | .06437 | -.15724 | .04277 | -.01548 | .22301 |
| | GRADIENT | .00000 | .00000 | .00000 | .00000 | .00000 | .00000 | .00000 | .00000 | .00000 | .00000 |

IA143, AEDC V41A-P8A, O/ET W/R.H. SRB SEPARATING (OVXA18) ( 23 MAY 77 )

REFERENCE DATA

SREF = 2690.0000 SQ.FT. XMRP = 1097.0000 IN. XT
LREF = 1290.3000 INCHES YMRP = .0000 IN. YT
BREF = 1290.3000 INCHES ZMRP = 450.0000 IN. ZT
SCALE = .0100

PARAMETRIC DATA

ALPHA = -5.000 BETA = 5.000
DALPHA = -15.000 DBETA = -6.000
X = 900.000 MACH = 4.500
JET PC = .000

RUN NO. 4115/ 0 RN/L = 2.37 GRADIENT INTERVAL = -5.00/ 5.00

| Y | Z | X | ALPHA | BETA | PHI | CN | CLM | CY | CYN | CBL | CA |
|---|---|---|---|---|---|---|---|---|---|---|---|
| -204.950 | 403.790 | 900.53000 | -5.17140 | 5.09470 | .06517 | -.18752 | .06408 | -.15718 | .04269 | -.01546 | .22213 |
| -201.240 | 600.400 | 899.09000 | -5.17140 | 5.09450 | .06524 | -.18744 | .06417 | -.15711 | .04271 | -.01545 | .22268 |
| -200.520 | 799.470 | 899.03000 | -5.17160 | 5.09460 | .06523 | -.18748 | .06415 | -.15701 | .04261 | -.01544 | .22249 |
| -200.580 | 999.590 | 898.96000 | -5.17150 | 5.09460 | .06526 | -.18760 | .06417 | -.15704 | .04267 | -.01542 | .22255 |
| | GRADIENT | .00000 | .00000 | .00000 | .00000 | .00000 | .00000 | .00000 | .00000 | .00000 | .00000 |

IA143, AEDC V41A-P8A, O/ET W/R.H. SRB SEPARATING (OVXA19) ( 23 MAY 77 )

REFERENCE DATA

SREF = 2690.0000 SQ.FT. XMRP = 1097.0000 IN. XT
LREF = 1290.3000 INCHES YMRP = .0000 IN. YT
BREF = 1290.3000 INCHES ZMRP = 450.0000 IN. ZT
SCALE = .0100

PARAMETRIC DATA

ALPHA = -5.000 BETA = 5.000
DALPHA = -10.000 DBETA = -4.000
X = 900.000 MACH = 4.500
JET PC = .000

RUN NO. 4091/ 0 RN/L = 2.37 GRADIENT INTERVAL = -5.00/ 5.00

| Y | Z | X | ALPHA | BETA | PHI | CN | CLM | CY | CYN | CBL | CA |
|---|---|---|---|---|---|---|---|---|---|---|---|
| -204.550 | 301.340 | 899.75000 | -5.17170 | 5.09430 | .06527 | -.18805 | .06445 | -.15707 | .04279 | -.01544 | .22300 |
| -201.090 | 350.290 | 899.16000 | -5.17170 | 5.09440 | .06523 | -.18812 | .06448 | -.15728 | .04286 | -.01550 | .22312 |
| -201.060 | 400.210 | 899.15000 | -5.17200 | 5.09460 | .06533 | -.18819 | .06456 | -.15729 | .04285 | -.01549 | .22340 |
| | GRADIENT | .00000 | .00000 | .00000 | .00000 | .00000 | .00000 | .00000 | .00000 | .00000 | .00000 |

RUN NO. 4092/ 0 RN/L = 2.37 GRADIENT INTERVAL = -5.00/ 5.00

| Y | Z | X | ALPHA | BETA | PHI | CN | CLM | CY | CYN | CBL | CA |
|---|---|---|---|---|---|---|---|---|---|---|---|
| -301.460 | 400.420 | 899.26000 | -5.17170 | 5.09440 | .06521 | -.18810 | .06456 | -.15727 | .04285 | -.01550 | .22356 |
| -300.990 | 350.220 | 899.04000 | -5.17170 | 5.09440 | .06522 | -.18818 | .06452 | -.15719 | .04282 | -.01548 | .22331 |
| -301.050 | 300.230 | 899.14000 | -5.17170 | 5.09440 | .06522 | -.18815 | .06455 | -.15721 | .04282 | -.01548 | .22360 |
| | GRADIENT | .00000 | .00000 | .00000 | .00000 | .00000 | .00000 | .00000 | .00000 | .00000 | .00000 |

IA143, AEDC V41A-P8A, O/ET W/R.H. SRB SEPARATING (OVXA20) ( 23 MAY 77 )

REFERENCE DATA

SREF = 2690.0000 SQ.FT. XMRP = 1097.0000 IN. XT
LREF = 1290.3000 INCHES YMRP = .0000 IN. YT
BREF = 1290.3000 INCHES ZMRP = 450.0000 IN. ZT
SCALE = .0100

PARAMETRIC DATA

ALPHA = -5.000 BETA = 5.000
DALPHA = -15.000 DBETA = -4.000
X = 900.000 MACH = 4.500
JET PC = .000

RUN NO. 4116/ 0 RN/L = 2.37 GRADIENT INTERVAL = -5.00/ 5.00

| Y | Z | X | ALPHA | BETA | PHI | CN | CLM | CY | CYN | CBL | CA |
|---|---|---|---|---|---|---|---|---|---|---|---|
| -204.470 | 303.840 | 900.44000 | -5.17140 | 5.09460 | .06526 | -.18739 | .06399 | -.15690 | .04261 | -.01541 | .22165 |
| -200.740 | 350.380 | 899.06000 | -5.17150 | 5.09460 | .06529 | -.18767 | .06415 | -.15719 | .04271 | -.01545 | .22223 |
| -200.690 | 400.490 | 899.04000 | -5.17140 | 5.09450 | .06523 | -.18746 | .06405 | -.15706 | .04271 | -.01544 | .22208 |
| | GRADIENT | .00000 | .00000 | .00000 | .00000 | .00000 | .00000 | .00000 | .00000 | .00000 | .00000 |

RUN NO. 4117/ 0 RN/L = 2.37 GRADIENT INTERVAL = -5.00/ 5.00

| Y | Z | X | ALPHA | BETA | PHI | CN | CLM | CY | CYN | CBL | CA |
|---|---|---|---|---|---|---|---|---|---|---|---|
| -301.640 | 400.820 | 899.23000 | -5.17160 | 5.09470 | .06529 | -.18771 | .06420 | -.15742 | .04282 | -.01550 | .22263 |
| -301.180 | 350.310 | 899.04000 | -5.17150 | 5.09450 | .06530 | -.18748 | .06412 | -.15714 | .04275 | -.01545 | .22251 |
| -300.880 | 300.410 | 899.05000 | -5.17160 | 5.09460 | .06532 | -.18757 | .06416 | -.15727 | .04278 | -.01546 | .22247 |
| | GRADIENT | .00000 | .00000 | .00000 | .00000 | .00000 | .00000 | .00000 | .00000 | .00000 | .00000 |

IA143, AEDC V41A-P8A, O/ET W/R.H. SRB SEPARATING (OVXA21) ( 23 MAY 77 )

REFERENCE DATA

SREF = 2690.0000 SQ.FT. XMRP = 1097.0000 IN. XT
LREF = 1290.3000 INCHES YMRP = .0000 IN. YT
BREF = 1290.3000 INCHES ZMRP = 450.0000 IN. ZT
SCALE = .0100

PARAMETRIC DATA

ALPHA = -5.000 BETA = 5.000
DALPHA = -10.000 DBETA = -8.000
X = 900.000 MACH = 4.500
JET PC = .000

RUN NO. 4094/ 0 RN/L = 2.37 GRADIENT INTERVAL = -5.00/ 5.00

| Y | Z | X | ALPHA | BETA | PHI | CN | CLM | CY | CYN | CBL | CA |
|---|---|---|---|---|---|---|---|---|---|---|---|
| -199.220 | 399.460 | 898.75000 | -5.17180 | 5.09460 | .06530 | -.18817 | .06454 | -.15736 | .04287 | -.01550 | .22327 |
| -200.550 | 350.160 | 899.15000 | -5.17190 | 5.09460 | .06533 | -.18814 | .06451 | -.15723 | .04279 | -.01547 | .22317 |
| -200.130 | 300.230 | 899.08000 | -5.17160 | 5.09470 | .06519 | -.18788 | .06431 | -.15725 | .04278 | -.01550 | .22226 |
| | GRADIENT | .00000 | .00000 | .00000 | .00000 | .00000 | .00000 | .00000 | .00000 | .00000 | .00000 |

RUN NO. 4093/ 0 RN/L = 2.37 GRADIENT INTERVAL = -5.00/ 5.00

| Y | Z | X | ALPHA | BETA | PHI | CN | CLM | CY | CYN | CBL | CA |
|---|---|---|---|---|---|---|---|---|---|---|---|
| -302.310 | 300.190 | 899.47000 | -5.17170 | 5.09450 | .06528 | -.18805 | .06451 | -.15719 | .04281 | -.01547 | .22333 |
| -300.610 | 350.220 | 899.13000 | -5.17180 | 5.09440 | .06525 | -.18816 | .06453 | -.15709 | .04276 | -.01545 | .22337 |
| -300.680 | 400.070 | 899.00000 | -5.17180 | 5.09440 | .06528 | -.18811 | .06452 | -.15723 | .04283 | -.01547 | .22346 |
| | GRADIENT | .00000 | .00000 | .00000 | .00000 | .00000 | .00000 | .00000 | .00000 | .00000 | .00000 |

IA143, AEDC V41A-P8A, O/ET W/R.H. SRB SEPARATING (OVXA22) ( 23 MAY 77 )

REFERENCE DATA

SREF = 2690.0000 SQ.FT. XMRP = 1097.0000 IN. XT
LREF = 1290.3000 INCHES YMRP = .0000 IN. YT
BREF = 1290.3000 INCHES ZMRP = 450.0000 IN. ZT
SCALE = .0100

PARAMETRIC DATA

ALPHA = -5.000 BETA = 5.000
DALPHA = -15.000 DBETA = -8.000
X = 900.000 MACH = 4.500
JET PC = .000

RUN NO. 4113/ 0 RN/L = 2.38 GRADIENT INTERVAL = -5.00/ 5.00

| Y | Z | X | ALPHA | BETA | PHI | CN | CLM | CY | CYN | CBL | CA |
|---|---|---|---|---|---|---|---|---|---|---|---|
| -200.700 | 300.400 | 898.95000 | -5.17120 | 5.09470 | .06520 | -.18729 | .06389 | -.15678 | .04253 | -.01539 | .22093 |
| -200.260 | 350.340 | 898.97000 | -5.17130 | 5.09480 | .06524 | -.18746 | .06398 | -.15708 | .04260 | -.01542 | .22145 |
| -200.460 | 400.480 | 898.87000 | -5.17140 | 5.09470 | .06521 | -.18755 | .06410 | -.15707 | .04263 | -.01543 | .22190 |
| | GRADIENT | .00000 | .00000 | .00000 | .00000 | .00000 | .00000 | .00000 | .00000 | .00000 | .00000 |

RUN NO. 4114/ 0 RN/L = 2.37 GRADIENT INTERVAL = -5.00/ 5.00

| Y | Z | X | ALPHA | BETA | PHI | CN | CLM | CY | CYN | CBL | CA |
|---|---|---|---|---|---|---|---|---|---|---|---|
| -301.790 | 401.030 | 899.35000 | -5.17150 | 5.09460 | .06529 | -.18754 | .06414 | -.15694 | .04264 | -.01541 | .22237 |
| -300.820 | 350.320 | 898.98000 | -5.17150 | 5.09460 | .06523 | -.18747 | .06412 | -.15695 | .04264 | -.01542 | .22238 |
| -300.670 | 300.390 | 899.02000 | -5.17150 | 5.09470 | .06521 | -.18758 | .06417 | -.15717 | .04270 | -.01546 | .22242 |
| | GRADIENT | .00000 | .00000 | .00000 | .00000 | .00000 | .00000 | .00000 | .00000 | .00000 | .00000 |

IA143, AEDC V41A-P8A, O/ET W/R.H. SRB SEPARATING (OVXA23) ( 23 MAY 77 )

REFERENCE DATA

SREF = 2690.0000 SQ.FT. XMRP = 1097.0000 IN. XT
LREF = 1290.3000 INCHES YMRP = .0000 IN. YT
BREF = 1290.3000 INCHES ZMRP = 450.0000 IN. ZT
SCALE = .0100

PARAMETRIC DATA

ALPHA = -5.000 BETA = 5.000
DALPHA = -15.000 DBETA = 4.000
X = 1200.000 MACH = 4.500
JET PC = .000

RUN NO. 4176/ 0 RN/L = 2.37 GRADIENT INTERVAL = -5.00/ 5.00

| Y | Z | X | ALPHA | BETA | PHI | CN | CLM | CY | CYN | CBL | CA |
|---|---|---|---|---|---|---|---|---|---|---|---|
| -101.040 | 3.766 | 1200.70000 | -5.17070 | 5.09480 | .06515 | -.18763 | .06365 | -.15764 | .04285 | -.01555 | .21831 |
| -100.760 | 100.920 | 1199.30000 | -5.17080 | 5.09480 | .06507 | -.18723 | .06367 | -.15667 | .04232 | -.01536 | .21958 |
| -100.560 | 200.560 | 1199.20000 | -5.17100 | 5.09490 | .06518 | -.18747 | .06384 | -.15679 | .04238 | -.01536 | .22029 |
| | GRADIENT | .00000 | .00000 | .00000 | .00000 | .00000 | .00000 | .00000 | .00000 | .00000 | .00000 |

RUN NO. 4177/ 0 RN/L = 2.37 GRADIENT INTERVAL = -5.00/ 5.00

| Y | Z | X | ALPHA | BETA | PHI | CN | CLM | CY | CYN | CBL | CA |
|---|---|---|---|---|---|---|---|---|---|---|---|
| -599.990 | 198.990 | 1199.00000 | -5.17120 | 5.09470 | .06515 | -.18746 | .06397 | -.15683 | .04245 | -.01538 | .22142 |
| -600.160 | 100.500 | 1199.30000 | -5.17130 | 5.09490 | .06517 | -.18755 | .06395 | -.15712 | .04254 | -.01542 | .22134 |
| -600.150 | .609 | 1199.30000 | -5.17120 | 5.09480 | .06513 | -.18749 | .06397 | -.15693 | .04246 | -.01539 | .22134 |
| | GRADIENT | .00000 | .00000 | .00000 | .00000 | .00000 | .00000 | .00000 | .00000 | .00000 | .00000 |

IA143, AEDC V41A-P8A, O/ET W/R.H. SRB SEPARATING (OVXA24) ( 23 MAY 77 )

REFERENCE DATA

SREF = 2690.0000 SQ.FT. XMRP = 1097.0000 IN. XT
LREF = 1290.3000 INCHES YMRP = .0000 IN. YT
BREF = 1290.3000 INCHES ZMRP = 450.0000 IN. ZT
SCALE = .0100

PARAMETRIC DATA

ALPHA = -5.000 BETA = 5.000
DALPHA = -15.000 DBETA = 4.000
X = 1200.000 MACH = 4.500
JET PC = .000

RUN NO. 4179/ 0 RN/L = 2.38 GRADIENT INTERVAL = -5.00/ 5.00

| Y | Z | X | ALPHA | BETA | PHI | CN | CLM | CY | CYN | CBL | CA |
|---|---|---|---|---|---|---|---|---|---|---|---|
| -101.190 | 3.751 | 1200.89999 | -5.17080 | 5.09480 | .06523 | -.18765 | .06366 | -.15741 | .04276 | -.01550 | .21826 |
| -100.760 | 100.810 | 1199.30000 | -5.17100 | 5.09470 | .06521 | -.18745 | .06373 | -.15666 | .04237 | -.01532 | .21969 |
| -100.650 | 200.550 | 1199.30000 | -5.17100 | 5.09480 | .06512 | -.18744 | .06380 | -.15699 | .04248 | -.01541 | .22038 |
| | GRADIENT | .00000 | .00000 | .00000 | .00000 | .00000 | .00000 | .00000 | .00000 | .00000 | .00000 |

RUN NO. 4180/ 0 RN/L = 2.38 GRADIENT INTERVAL = -5.00/ 5.00

| Y | Z | X | ALPHA | BETA | PHI | CN | CLM | CY | CYN | CBL | CA |
|---|---|---|---|---|---|---|---|---|---|---|---|
| -600.030 | 198.990 | 1199.00000 | -5.17130 | 5.09480 | .06522 | -.18766 | .06402 | -.15690 | .04247 | -.01538 | .22137 |
| -600.500 | 100.460 | 1199.30000 | -5.17130 | 5.09470 | .06520 | -.18755 | .06396 | -.15683 | .04247 | -.01538 | .22128 |
| -600.750 | .609 | 1199.30000 | -5.17140 | 5.09480 | .06519 | -.18762 | .06397 | -.15683 | .04244 | -.01537 | .22133 |
| | GRADIENT | .00000 | .00000 | .00000 | .00000 | .00000 | .00000 | .00000 | .00000 | .00000 | .00000 |

IA143, AEDC V41A-P8A, O/ET W/R.H. SRB SEPARATING (OVXA25) ( 23 MAY 77 )

REFERENCE DATA

SREF = 2690.0000 SQ.FT. XMRP = 1097.0000 IN. XT
LREF = 1290.3000 INCHES YMRP = .0000 IN. YT
BREF = 1290.3000 INCHES ZMRP = 450.0000 IN. ZT
SCALE = .0100

PARAMETRIC DATA

ALPHA = -5.000 BETA = 5.000
DALPHA = -25.000 DBETA = 4.000
X = 1200.000 MACH = 4.500
JET PC = .000

RUN NO. 4139/ 0 RN/L = 2.38 GRADIENT INTERVAL = -5.00/ 5.00

| Y | Z | X | ALPHA | BETA | PHI | CN | CLM | CY | CYN | CBL | CA |
|---|---|---|---|---|---|---|---|---|---|---|---|
| -100.860 | 400.660 | 1198.89999 | -5.17130 | 5.09480 | .06518 | -.18733 | .06399 | -.15695 | .04256 | -.01542 | .22147 |
| -100.570 | 500.700 | 1199.10001 | -5.17130 | 5.09470 | .06516 | -.18738 | .06403 | -.15715 | .04266 | -.01546 | .22194 |
| -100.780 | 600.890 | 1199.20000 | -5.17140 | 5.09470 | .06524 | -.18744 | .06408 | -.15720 | .04270 | -.01546 | .22219 |
| | GRADIENT | .00000 | .00000 | .00000 | .00000 | .00000 | .00000 | .00000 | .00000 | .00000 | .00000 |

RUN NO. 4140/ 0 RN/L = 2.37 GRADIENT INTERVAL = -5.00/ 5.00

| Y | Z | X | ALPHA | BETA | PHI | CN | CLM | CY | CYN | CBL | CA |
|---|---|---|---|---|---|---|---|---|---|---|---|
| -601.030 | 599.040 | 1198.39999 | -5.17140 | 5.09460 | .06520 | -.18747 | .06402 | -.15711 | .04265 | -.01544 | .22202 |
| -600.490 | 500.720 | 1199.10001 | -5.17140 | 5.09460 | .06522 | -.18743 | .06404 | -.15709 | .04265 | -.01543 | .22205 |
| -600.020 | 400.780 | 1199.20000 | -5.17140 | 5.09470 | .06523 | -.18752 | .06408 | -.15716 | .04266 | -.01544 | .22215 |
| | GRADIENT | .00000 | .00000 | .00000 | .00000 | .00000 | .00000 | .00000 | .00000 | .00000 | .00000 |

IA143, AEDC V41A-P8A, O/ET W/R.H. SRB SEPARATING (OVXA26) ( 23 MAY 77 )

REFERENCE DATA

SREF = 2690.0000 SQ.FT. XMRP = 1097.0000 IN. XT
LREF = 1290.3000 INCHES YMRP = .0000 IN. YT
BREF = 1290.3000 INCHES ZMRP = 450.0000 IN. ZT
SCALE = .0100

PARAMETRIC DATA

ALPHA = -5.000 BETA = 5.000
DALPHA = -15.000 DBETA = -8.000
X = 1200.000 MACH = 4.500
JET PC = .000

RUN NO. 4182/ 0 RN/L = 2.38 GRADIENT INTERVAL = -5.00/ 5.00

| Y | Z | X | ALPHA | BETA | PHI | CN | CLM | CY | CYN | CBL | CA |
|---|---|---|---|---|---|---|---|---|---|---|---|
| -99.287 | 199.650 | 1198.70000 | -5.17100 | 5.09500 | .06511 | -.18750 | .06368 | -.15670 | .04229 | -.01536 | .21904 |
| -101.030 | 100.550 | 1199.10001 | -5.17080 | 5.09500 | .06479 | -.18695 | .06334 | -.15637 | .04207 | -.01533 | .21898 |
| -101.360 | .495 | 1199.10001 | -5.17080 | 5.09480 | .06440 | -.18644 | .06255 | -.15752 | .04286 | -.01570 | .21673 |
| | GRADIENT | .00000 | .00000 | .00000 | .00000 | .00000 | .00000 | .00000 | .00000 | .00000 | .00000 |

RUN NO. 4181/ 0 RN/L = 2.38 GRADIENT INTERVAL = -5.00/ 5.00

| Y | Z | X | ALPHA | BETA | PHI | CN | CLM | CY | CYN | CBL | CA |
|---|---|---|---|---|---|---|---|---|---|---|---|
| -600.670 | .605 | 1199.20000 | -5.17120 | 5.09470 | .06518 | -.18752 | .06395 | -.15685 | .04249 | -.01537 | .22136 |
| -600.830 | 100.740 | 1199.20000 | -5.17140 | 5.09470 | .06523 | -.18748 | .06395 | -.15674 | .04245 | -.01536 | .22114 |
| -600.770 | 200.510 | 1199.20000 | -5.17130 | 5.09480 | .06522 | -.18767 | .06403 | -.15703 | .04253 | -.01540 | .22136 |
| | GRADIENT | .00000 | .00000 | .00000 | .00000 | .00000 | .00000 | .00000 | .00000 | .00000 | .00000 |

IA143, AEDC V41A-P8A, O/ET W/R.H. SRB SEPARATING (OVXA27) ( 23 MAY 77 )

REFERENCE DATA

SREF = 2690.0000 SQ.FT. XMRP = 1097.0000 IN. XT
LREF = 1290.3000 INCHES YMRP = .0000 IN. YT
BREF = 1290.3000 INCHES ZMRP = 450.0000 IN. ZT
SCALE = .0100

PARAMETRIC DATA

ALPHA = -5.000 BETA = 5.000
DALPHA = -15.000 DBETA = -20.000
X = 1200.000 MACH = 4.500
JET PC = .000

RUN NO. 4178/ 0 RN/L = 2.37 GRADIENT INTERVAL = -5.00/ 5.00

| Y | Z | X | ALPHA | BETA | PHI | CN | CLM | CY | CYN | CBL | CA |
|---|---|---|---|---|---|---|---|---|---|---|---|
| -600.510 | .436 | 1199.10001 | -5.17130 | 5.09480 | .06515 | -.18765 | .06403 | -.15700 | .04249 | -.01541 | .22150 |
| -600.640 | 100.590 | 1199.20000 | -5.17130 | 5.09470 | .06515 | -.18761 | .06403 | -.15689 | .04248 | -.01538 | .22151 |
| -599.770 | 200.450 | 1199.20000 | -5.17140 | 5.09480 | .06515 | -.18763 | .06397 | -.15689 | .04245 | -.01539 | .22136 |
| | GRADIENT | .00000 | .00000 | .00000 | .00000 | .00000 | .00000 | .00000 | .00000 | .00000 | .00000 |

IA143, AEDC V41A-P8A, O/ET W/R.H. SRB SEPARATING (OVXA28) ( 23 MAY 77 )

REFERENCE DATA

SREF = 2690.0000 SQ.FT. XMRP = 1097.0000 IN. XT
LREF = 1290.3000 INCHES YMRP = .0000 IN. YT
BREF = 1290.3000 INCHES ZMRP = 450.0000 IN. ZT
SCALE = .0100

PARAMETRIC DATA

ALPHA = -5.000 BETA = 5.000
DALPHA = -25.000 DBETA = -20.000
X = 1200.000 MACH = 4.500
JET PC = .000

RUN NO. 4137/ 0 RN/L = 2.38 GRADIENT INTERVAL = -5.00/ 5.00

| Y | Z | X | ALPHA | BETA | PHI | CN | CLM | CY | CYN | CBL | CA |
|---|---|---|---|---|---|---|---|---|---|---|---|
| -100.320 | 400.640 | 1199.10001 | -5.17060 | 5.09500 | .06509 | -.18647 | .06285 | -.15647 | .04216 | -.01530 | .21694 |
| -100.680 | 501.010 | 1199.30000 | -5.17060 | 5.09490 | .06497 | -.18665 | .06318 | -.15657 | .04227 | -.01535 | .21826 |
| -101.590 | 601.200 | 1199.80000 | -5.17090 | 5.09490 | .06498 | -.18686 | .06349 | -.15651 | .04227 | -.01537 | .21917 |
| | GRADIENT | .00000 | .00000 | .00000 | .00000 | .00000 | .00000 | .00000 | .00000 | .00000 | .00000 |

RUN NO. 4138/ 0 RN/L = 2.38 GRADIENT INTERVAL = -5.00/ 5.00

| Y | Z | X | ALPHA | BETA | PHI | CN | CLM | CY | CYN | CBL | CA |
|---|---|---|---|---|---|---|---|---|---|---|---|
| -600.170 | 400.580 | 1198.80000 | -5.17130 | 5.09460 | .06525 | -.18734 | .06405 | -.15719 | .04272 | -.01545 | .22225 |
| -599.650 | 500.670 | 1198.80000 | -5.17150 | 5.09470 | .06526 | -.18745 | .06403 | -.15721 | .04271 | -.01545 | .22216 |
| -600.080 | 600.500 | 1198.89999 | -5.17170 | 5.09480 | .06533 | -.18750 | .06406 | -.15718 | .04271 | -.01545 | .22211 |
| | GRADIENT | .00000 | .00000 | .00000 | .00000 | .00000 | .00000 | .00000 | .00000 | .00000 | .00000 |

IA143, AEDC V41A-P8A, O/ET W/R.H. SRB SEPARATING (OVXA29) ( 23 MAY 77 )

REFERENCE DATA

SREF = 2690.0000 SQ.FT. XMRP = 1097.0000 IN. XT
LREF = 1290.3000 INCHES YMRP = .0000 IN. YT
BREF = 1290.3000 INCHES ZMRP = 450.0000 IN. ZT
SCALE = .0100

PARAMETRIC DATA

ALPHA = -5.000 BETA = 5.000
DALPHA = -10.000 DBETA = .000
X = 1200.000 MACH = 4.500
JET PC = .000

RUN NO. 4099/ 0 RN/L = 2.36 GRADIENT INTERVAL = -5.00/ 5.00

| Y | Z | X | ALPHA | BETA | PHI | CN | CLM | CY | CYN | CBL | CA |
|---|---|---|---|---|---|---|---|---|---|---|---|
| -204.340 | -48.244 | 1199.70000 | -5.17170 | 5.09460 | .06438 | -.18730 | .06379 | -.15735 | .04284 | -.01567 | .22225 |
| -200.520 | .479 | 1199.00000 | -5.17160 | 5.09460 | .06522 | -.18793 | .06438 | -.15721 | .04276 | -.01547 | .22293 |
| -200.530 | 100.430 | 1198.89999 | -5.17160 | 5.09450 | .06520 | -.18790 | .06438 | -.15720 | .04277 | -.01547 | .22297 |
| -200.570 | 150.370 | 1198.89999 | -5.17170 | 5.09450 | .06529 | -.18790 | .06436 | -.15708 | .04275 | -.01544 | .22302 |
| | GRADIENT | .00000 | .00000 | .00000 | .00000 | .00000 | .00000 | .00000 | .00000 | .00000 | .00000 |

RUN NO. 4100/ 0 RN/L = 2.37 GRADIENT INTERVAL = -5.00/ 5.00

| Y | Z | X | ALPHA | BETA | PHI | CN | CLM | CY | CYN | CBL | CA |
|---|---|---|---|---|---|---|---|---|---|---|---|
| -401.620 | 150.180 | 1199.10001 | -5.17180 | 5.09460 | .06525 | -.18798 | .06444 | -.15723 | .04278 | -.01548 | .22316 |
| -401.410 | 100.210 | 1199.00000 | -5.17170 | 5.09450 | .06530 | -.18789 | .06438 | -.15724 | .04279 | -.01546 | .22314 |
| -400.590 | .239 | 1199.00000 | -5.17180 | 5.09450 | .06529 | -.18792 | .06439 | -.15731 | .04284 | -.01549 | .22307 |
| -401.040 | -49.602 | 1199.10001 | -5.17170 | 5.09450 | .06523 | -.18790 | .06440 | -.15721 | .04277 | -.01547 | .22321 |
| | GRADIENT | .00000 | .00000 | .00000 | .00000 | .00000 | .00000 | .00000 | .00000 | .00000 | .00000 |

IA143, AEDC V41A-P8A, O/ET W/R.H. SRB SEPARATING (OVXA30) ( 23 MAY 77 )

REFERENCE DATA

SREF = 2690.0000 SQ.FT. XMRP = 1097.0000 IN. XT
LREF = 1290.3000 INCHES YMRP = .0000 IN. YT
BREF = 1290.3000 INCHES ZMRP = 450.0000 IN. ZT
SCALE = .0100

PARAMETRIC DATA

ALPHA = -5.000 BETA = 5.000
DALPHA = -20.000 DBETA = .000
X = 1200.000 MACH = 4.500
JET PC = .000

RUN NO. 4131/ 0 RN/L = 2.38 GRADIENT INTERVAL = -5.00/ 5.00

| Y | Z | X | ALPHA | BETA | PHI | CN | CLM | CY | CYN | CBL | CA |
|---|---|---|---|---|---|---|---|---|---|---|---|
| -200.960 | 300.510 | 1198.80000 | -5.17170 | 5.09480 | .06527 | -.18776 | .06419 | -.15754 | .04281 | -.01551 | .22277 |
| -200.820 | 400.580 | 1198.89999 | -5.17150 | 5.09460 | .06523 | -.18761 | .06417 | -.15727 | .04274 | -.01547 | .22262 |
| -200.930 | 500.690 | 1199.00000 | -5.17170 | 5.09470 | .06527 | -.18781 | .06422 | -.15741 | .04278 | -.01548 | .22281 |
| | GRADIENT | .00000 | .00000 | .00000 | .00000 | .00000 | .00000 | .00000 | .00000 | .00000 | .00000 |

RUN NO. 4132/ 0 RN/L = 2.38 GRADIENT INTERVAL = -5.00/ 5.00

| Y | Z | X | ALPHA | BETA | PHI | CN | CLM | CY | CYN | CBL | CA |
|---|---|---|---|---|---|---|---|---|---|---|---|
| -401.990 | 500.840 | 1199.20000 | -5.17160 | 5.09470 | .06529 | -.18778 | .06423 | -.15726 | .04269 | -.01545 | .22278 |
| -401.460 | 400.760 | 1199.00000 | -5.17160 | 5.09480 | .06528 | -.18771 | .06420 | -.15730 | .04271 | -.01546 | .22268 |
| -401.080 | 300.540 | 1199.00000 | -5.17170 | 5.09480 | .06532 | -.18773 | .06422 | -.15729 | .04271 | -.01546 | .22272 |
| | GRADIENT | .00000 | .00000 | .00000 | .00000 | .00000 | .00000 | .00000 | .00000 | .00000 | .00000 |

IA143, AEDC V41A-P8A, O/ET W/R.H. SRB SEPARATING (OVXA31) ( 23 MAY 77 )

REFERENCE DATA

SREF = 2690.0000 SQ.FT. XMRP = 1097.0000 IN. XT
LREF = 1290.3000 INCHES YMRP = .0000 IN. YT
BREF = 1290.3000 INCHES ZMRP = 450.0000 IN. ZT
SCALE = .0100

PARAMETRIC DATA

ALPHA = -5.000 BETA = 5.000
DALPHA = -10.000 DBETA = -8.000
X = 1200.000 MACH = 4.500
JET PC = .000

RUN NO. 4097/ 0 RN/L = 2.36 GRADIENT INTERVAL = -5.00/ 5.00

| Y | Z | X | ALPHA | BETA | PHI | CN | CLM | CY | CYN | CBL | CA |
|---|---|---|---|---|---|---|---|---|---|---|---|
| -200.380 | -49.569 | 1198.89999 | -5.17170 | 5.09470 | .06299 | -.18640 | .06284 | -.15798 | .04319 | -.01610 | .22073 |
| -200.380 | .366 | 1198.89999 | -5.17160 | 5.09450 | .06517 | -.18782 | .06418 | -.15697 | .04265 | -.01544 | .22210 |
| -200.430 | 100.490 | 1198.80000 | -5.17160 | 5.09460 | .06520 | -.18798 | .06437 | -.15726 | .04276 | -.01548 | .22265 |
| -200.270 | 150.350 | 1198.89999 | -5.17170 | 5.09450 | .06527 | -.18788 | .06435 | -.15704 | .04273 | -.01544 | .22284 |
| | GRADIENT | .00000 | .00000 | .00000 | .00000 | .00000 | .00000 | .00000 | .00000 | .00000 | .00000 |

RUN NO. 4098/ 0 RN/L = 2.37 GRADIENT INTERVAL = -5.00/ 5.00

| Y | Z | X | ALPHA | BETA | PHI | CN | CLM | CY | CYN | CBL | CA |
|---|---|---|---|---|---|---|---|---|---|---|---|
| -402.120 | 150.750 | 1199.10001 | -5.17180 | 5.09450 | .06533 | -.18787 | .06442 | -.15712 | .04278 | -.01545 | .22319 |
| -400.970 | 100.290 | 1198.89999 | -5.17170 | 5.09450 | .06523 | -.18787 | .06440 | -.15721 | .04278 | -.01547 | .22311 |
| -401.250 | .149 | 1198.89999 | -5.17170 | 5.09450 | .06525 | -.18807 | .06443 | -.15740 | .04286 | -.01550 | .22321 |
| -400.770 | -49.676 | 1198.80000 | -5.17160 | 5.09450 | .06526 | -.18785 | .06440 | -.15728 | .04282 | -.01548 | .22327 |
| | GRADIENT | .00000 | .00000 | .00000 | .00000 | .00000 | .00000 | .00000 | .00000 | .00000 | .00000 |

IA143, AEDC V41A-P8A, O/ET W/R.H. SRB SEPARATING (OVXA32) ( 23 MAY 77 )

REFERENCE DATA

SREF = 2690.0000 SQ.FT. XMRP = 1097.0000 IN. XT
LREF = 1290.3000 INCHES YMRP = .0000 IN. YT
BREF = 1290.3000 INCHES ZMRP = 450.0000 IN. ZT
SCALE = .0100

PARAMETRIC DATA

ALPHA = -5.000 BETA = 5.000
DALPHA = -20.000 DBETA = -12.000
X = 1200.000 MACH = 4.500
JET PC = .000

RUN NO. 4125/ 0 RN/L = 2.37 GRADIENT INTERVAL = -5.00/ 5.00

| Y | Z | X | ALPHA | BETA | PHI | CN | CLM | CY | CYN | CBL | CA |
|---|---|---|---|---|---|---|---|---|---|---|---|
| -200.630 | 300.440 | 1199.00000 | -5.17110 | 5.09470 | .06513 | -.18734 | .06399 | -.15666 | .04238 | -.01535 | .22147 |
| -200.240 | 400.360 | 1198.89999 | -5.17140 | 5.09480 | .06524 | -.18758 | .06409 | -.15700 | .04255 | -.01541 | .22181 |
| -200.980 | 500.570 | 1199.00000 | -5.17160 | 5.09470 | .06532 | -.18764 | .06419 | -.15705 | .04261 | -.01541 | .22243 |
| | GRADIENT | .00000 | .00000 | .00000 | .00000 | .00000 | .00000 | .00000 | .00000 | .00000 | .00000 |

RUN NO. 4126/ 0 RN/L = 2.37 GRADIENT INTERVAL = -5.00/ 5.00

| Y | Z | X | ALPHA | BETA | PHI | CN | CLM | CY | CYN | CBL | CA |
|---|---|---|---|---|---|---|---|---|---|---|---|
| -402.600 | 502.060 | 1200.00000 | -5.17160 | 5.09450 | .06531 | -.18763 | .06411 | -.15706 | .04268 | -.01542 | .22258 |
| -400.880 | 400.650 | 1199.00000 | -5.17160 | 5.09470 | .06530 | -.18765 | .06419 | -.15723 | .04272 | -.01545 | .22277 |
| -401.100 | 300.580 | 1199.00000 | -5.17170 | 5.09460 | .06533 | -.18774 | .06419 | -.15728 | .04275 | -.01545 | .22264 |
| | GRADIENT | .00000 | .00000 | .00000 | .00000 | .00000 | .00000 | .00000 | .00000 | .00000 | .00000 |

IA143, AEDC V41A-P8A, O/ET W/R.H. SRB SEPARATING (OVXA33) ( 23 MAY 77 )

REFERENCE DATA

SREF = 2690.0000 SQ.FT. XMRP = 1097.0000 IN. XT
LREF = 1290.3000 INCHES YMRP = .0000 IN. YT
BREF = 1290.3000 INCHES ZMRP = 450.0000 IN. ZT
SCALE = .0100

PARAMETRIC DATA

ALPHA = -5.000 BETA = 5.000
DALPHA = -15.000 DBETA = -4.000
X = 1200.000 MACH = 4.500
JET PC = .000

RUN NO. 4120/ 0 RN/L = 2.37 GRADIENT INTERVAL = -5.00/ 5.00

| Y | Z | X | ALPHA | BETA | PHI | CN | CLM | CY | CYN | CBL | CA |
|---|---|---|---|---|---|---|---|---|---|---|---|
| -203.830 | 403.350 | 1200.20000 | -5.17160 | 5.09460 | .06527 | -.18757 | .06414 | -.15709 | .04267 | -.01544 | .22246 |
| -200.980 | 450.310 | 1198.89999 | -5.17150 | 5.09450 | .06527 | -.18752 | .06410 | -.15696 | .04264 | -.01541 | .22243 |
| -200.980 | 500.470 | 1198.89999 | -5.17150 | 5.09460 | .06523 | -.18752 | .06412 | -.15712 | .04269 | -.01545 | .22253 |
| | GRADIENT | .00000 | .00000 | .00000 | .00000 | .00000 | .00000 | .00000 | .00000 | .00000 | .00000 |

RUN NO. 4121/ 0 RN/L = 2.37 GRADIENT INTERVAL = -5.00/ 5.00

| Y | Z | X | ALPHA | BETA | PHI | CN | CLM | CY | CYN | CBL | CA |
|---|---|---|---|---|---|---|---|---|---|---|---|
| -301.850 | 501.160 | 1199.10001 | -5.17150 | 5.09470 | .06526 | -.18762 | .06416 | -.15731 | .04275 | -.01547 | .22253 |
| -300.970 | 450.270 | 1198.89999 | -5.17160 | 5.09460 | .06531 | -.18766 | .06417 | -.15710 | .04269 | -.01543 | .22255 |
| -300.700 | 400.300 | 1198.89999 | -5.17160 | 5.09460 | .06525 | -.18765 | .06415 | -.15719 | .04272 | -.01546 | .22247 |
| | GRADIENT | .00000 | .00000 | .00000 | .00000 | .00000 | .00000 | .00000 | .00000 | .00000 | .00000 |

IA143, AEDC V41A-P8A, O/ET W/R.H. SRB SEPARATING (OVXA34) ( 23 MAY 77 )

REFERENCE DATA

SREF = 2690.0000 SQ.FT. XMRP = 1097.0000 IN. XT
LREF = 1290.3000 INCHES YMRP = .0000 IN. YT
BREF = 1290.3000 INCHES ZMRP = 450.0000 IN. ZT
SCALE = .0100

PARAMETRIC DATA

ALPHA = -5.000 BETA = 5.000
DALPHA = -20.000 DBETA = -4.000
X = 1200.000 MACH = 4.500
JET PC = .000

RUN NO. 4127/ 0 RN/L = 2.37 GRADIENT INTERVAL = -5.00/ 5.00

| Y | Z | X | ALPHA | BETA | PHI | CN | CLM | CY | CYN | CBL | CA |
|---|---|---|---|---|---|---|---|---|---|---|---|
| -200.750 | 400.460 | 1198.89999 | -5.17150 | 5.09460 | .06527 | -.18767 | .06426 | -.15706 | .04263 | -.01541 | .22287 |
| -200.810 | 450.650 | 1199.00000 | -5.17150 | 5.09460 | .06523 | -.18763 | .06419 | -.15711 | .04265 | -.01544 | .22262 |
| -201.040 | 500.650 | 1198.89999 | -5.17160 | 5.09470 | .06527 | -.18759 | .06416 | -.15705 | .04261 | -.01542 | .22256 |
| | GRADIENT | .00000 | .00000 | .00000 | .00000 | .00000 | .00000 | .00000 | .00000 | .00000 | .00000 |

RUN NO. 4128/ 0 RN/L = 2.38 GRADIENT INTERVAL = -5.00/ 5.00

| Y | Z | X | ALPHA | BETA | PHI | CN | CLM | CY | CYN | CBL | CA |
|---|---|---|---|---|---|---|---|---|---|---|---|
| -302.210 | 501.470 | 1199.39999 | -5.17160 | 5.09480 | .06526 | -.18771 | .06425 | -.15723 | .04265 | -.01544 | .22283 |
| -300.920 | 450.500 | 1198.89999 | -5.17160 | 5.09470 | .06532 | -.18761 | .06417 | -.15722 | .04270 | -.01544 | .22267 |
| -300.660 | 400.600 | 1198.89999 | -5.17160 | 5.09470 | .06527 | -.18760 | .06416 | -.15716 | .04268 | -.01544 | .22255 |
| | GRADIENT | .00000 | .00000 | .00000 | .00000 | .00000 | .00000 | .00000 | .00000 | .00000 | .00000 |

IA143, AEDC V41A-P8A, O/ET W/R.H. SRB SEPARATING (OVXA35) ( 23 MAY 77 )

REFERENCE DATA

SREF = 2690.0000 SQ.FT. XMRP = 1097.0000 IN. XT
LREF = 1290.3000 INCHES YMRP = .0000 IN. YT
BREF = 1290.3000 INCHES ZMRP = 450.0000 IN. ZT
SCALE = .0100

PARAMETRIC DATA

ALPHA = -5.000 BETA = 5.000
DALPHA = -15.000 DBETA = -8.000
X = 1200.000 MACH = 4.500
JET PC = .000

RUN NO. 4123/ 0 RN/L = 2.37 GRADIENT INTERVAL = -5.00/ 5.00

| Y | Z | X | ALPHA | BETA | PHI | CN | CLM | CY | CYN | CBL | CA |
|---|---|---|---|---|---|---|---|---|---|---|---|
| -204.380 | 402.910 | 1200.10001 | -5.17150 | 5.09460 | .06527 | -.18768 | .06419 | -.15716 | .04269 | -.01544 | .22261 |
| -200.510 | 450.520 | 1198.89999 | -5.17160 | 5.09460 | .06522 | -.18760 | .06412 | -.15715 | .04271 | -.01545 | .22238 |
| -200.560 | 500.430 | 1198.89999 | -5.17150 | 5.09470 | .06522 | -.18762 | .06411 | -.15737 | .04279 | -.01550 | .22237 |
| | GRADIENT | .00000 | .00000 | .00000 | .00000 | .00000 | .00000 | .00000 | .00000 | .00000 | .00000 |

IA143, AEDC V41A-P8A, O/ET W/R.H. SRB SEPARATING (OVXA36) ( 23 MAY 77 )

REFERENCE DATA

SREF = 2690.0000 SQ.FT. XMRP = 1097.0000 IN. XT
LREF = 1290.3000 INCHES YMRP = .0000 IN. YT
BREF = 1290.3000 INCHES ZMRP = 450.0000 IN. ZT
SCALE = .0100

PARAMETRIC DATA

ALPHA = -5.000 BETA = 5.000
DALPHA = -20.000 DBETA = -8.000
X = 1200.000 MACH = 4.500
JET PC = .000

RUN NO. 4130/ 0 RN/L = 2.38 GRADIENT INTERVAL = -5.00/ 5.00

| Y | Z | X | ALPHA | BETA | PHI | CN | CLM | CY | CYN | CBL | CA |
|---|---|---|---|---|---|---|---|---|---|---|---|
| -199.750 | 499.310 | 1198.20000 | -5.17160 | 5.09470 | .06525 | -.18759 | .06413 | -.15741 | .04278 | -.01550 | .22261 |
| -200.360 | 450.460 | 1198.80000 | -5.17160 | 5.09480 | .06527 | -.18774 | .06423 | -.15738 | .04275 | -.01548 | .22276 |
| -200.250 | 400.490 | 1198.80000 | -5.17160 | 5.09480 | .06523 | -.18773 | .06417 | -.15747 | .04278 | -.01551 | .22241 |
| | GRADIENT | .00000 | .00000 | .00000 | .00000 | .00000 | .00000 | .00000 | .00000 | .00000 | .00000 |

RUN NO. 4129/ 0 RN/L = 2.38 GRADIENT INTERVAL = -5.00/ 5.00

| Y | Z | X | ALPHA | BETA | PHI | CN | CLM | CY | CYN | CBL | CA |
|---|---|---|---|---|---|---|---|---|---|---|---|
| -302.020 | 400.200 | 1199.00000 | -5.17160 | 5.09470 | .06528 | -.18767 | .06416 | -.15729 | .04272 | -.01546 | .22265 |
| -300.720 | 450.570 | 1198.80000 | -5.17150 | 5.09470 | .06526 | -.18755 | .06413 | -.15730 | .04275 | -.01547 | .22249 |
| -300.590 | 500.480 | 1198.89999 | -5.17150 | 5.09470 | .06526 | -.18769 | .06419 | -.15738 | .04277 | -.01548 | .22264 |
| | GRADIENT | .00000 | .00000 | .00000 | .00000 | .00000 | .00000 | .00000 | .00000 | .00000 | .00000 |

IA143, AEDC V41A-P8A, O/ET W/R.H. SRB SEPARATING (OVXA37) ( 23 MAY 77 )

REFERENCE DATA

SREF = 2690.0000 SQ.FT. XMRP = 1097.0000 IN. XT
LREF = 1290.3000 INCHES YMRP = .0000 IN. YT
BREF = 1290.3000 INCHES ZMRP = 450.0000 IN. ZT
SCALE = .0100

PARAMETRIC DATA

ALPHA = -5.000 BETA = 5.000
DALPHA = -15.000 DBETA = -8.000
X = 1200.000 MACH = 4.500
JET PC = .000

RUN NO. 4122/ 0 RN/L = 2.37 GRADIENT INTERVAL = -5.00/ 5.00

| Y | Z | X | ALPHA | BETA | PHI | CN | CLM | CY | CYN | CBL | CA |
|---|---|---|---|---|---|---|---|---|---|---|---|
| -300.850 | 300.430 | 1198.89999 | -5.17150 | 5.09450 | .06527 | -.18758 | .06415 | -.15694 | .04263 | -.01540 | .22251 |
| -300.750 | 400.460 | 1198.80000 | -5.17140 | 5.09450 | .06528 | -.18755 | .06416 | -.15709 | .04268 | -.01542 | .22254 |
| -300.860 | 450.360 | 1198.80000 | -5.17160 | 5.09460 | .06529 | -.18752 | .06406 | -.15714 | .04270 | -.01544 | .22227 |
| -300.810 | 500.340 | 1198.89999 | -5.17150 | 5.09450 | .06526 | -.18755 | .06411 | -.15703 | .04268 | -.01542 | .22237 |
| | GRADIENT | .00000 | .00000 | .00000 | .00000 | .00000 | .00000 | .00000 | .00000 | .00000 | .00000 |

IA143, AEDC V41A-P8A, O/ET W/R.H. SRB SEPARATING (OVXA38) ( 23 MAY 77 )

REFERENCE DATA

SREF = 2690.0000 SQ.FT. XMRP = 1097.0000 IN. XT
LREF = 1290.3000 INCHES YMRP = .0000 IN. YT
BREF = 1290.3000 INCHES ZMRP = 450.0000 IN. ZT
SCALE = .0100

PARAMETRIC DATA

ALPHA = -5.000 BETA = 5.000
DALPHA = -18.000 DBETA = -8.000
X = 1200.000 MACH = 4.500
JET PC = .000

RUN NO. 4124/ 0 RN/L = 2.37 GRADIENT INTERVAL = -5.00/ 5.00

| Y | Z | X | ALPHA | BETA | PHI | CN | CLM | CY | CYN | CBL | CA |
|---|---|---|---|---|---|---|---|---|---|---|---|
| -300.550 | 400.320 | 1198.89999 | -5.17160 | 5.09450 | .06529 | -.18750 | .06405 | -.15690 | .04262 | -.01539 | .22223 |
| -300.570 | 600.330 | 1198.80000 | -5.17160 | 5.09480 | .06527 | -.18759 | .06416 | -.15721 | .04269 | -.01545 | .22244 |
| -300.280 | 799.740 | 1198.80000 | -5.17150 | 5.09470 | .06528 | -.18762 | .06415 | -.15719 | .04269 | -.01544 | .22245 |
| -300.650 | 999.710 | 1198.70000 | -5.17150 | 5.09460 | .06534 | -.18755 | .06420 | -.15706 | .04263 | -.01540 | .22276 |
| | GRADIENT | .00000 | .00000 | .00000 | .00000 | .00000 | .00000 | .00000 | .00000 | .00000 | .00000 |

IA143, AEDC V41A-P8A, O/ET W/R.H. SRB SEPARATING (OVXA39) ( 23 MAY 77 )

REFERENCE DATA

SREF = 2690.0000 SQ.FT. XMRP = 1097.0000 IN. XT
LREF = 1290.3000 INCHES YMRP = .0000 IN. YT
BREF = 1290.3000 INCHES ZMRP = 450.0000 IN. ZT
SCALE = .0100

PARAMETRIC DATA

ALPHA = -5.000 BETA = -5.000
DALPHA = .000 DBETA = .000
X = .000 MACH = 4.500
JET PC = .000

RUN NO. 4183/ 0 RN/L = 2.38 GRADIENT INTERVAL = -5.00/ 5.00

| Y | Z | X | ALPHA | BETA | PHI | CN | CLM | CY | CYN | CBL | CA |
|---|---|---|---|---|---|---|---|---|---|---|---|
| -50.243 | .062 | -.36562 | -5.17820 | -5.07150 | -.04582 | -.18783 | .06030 | .12645 | -.03671 | .01438 | .22676 |
| -49.921 | 24.987 | -.38074 | -5.17570 | -5.07270 | -.04475 | -.18706 | .06127 | .12848 | -.03735 | .01498 | .22679 |
| -49.991 | 99.923 | -.38657 | -5.16820 | -5.07730 | -.04419 | -.18094 | .06221 | .13553 | -.03927 | .01641 | .22746 |
| -50.234 | 150.120 | -.26221 | -5.16490 | -5.08020 | -.04791 | -.17392 | .06018 | .13907 | -.03976 | .01622 | .22757 |
| -50.478 | 250.190 | -.27968 | -5.16230 | -5.08750 | -.04760 | -.17176 | .06000 | .14619 | -.04046 | .01741 | .22550 |
| -50.251 | 349.880 | -.25435 | -5.16930 | -5.09790 | -.05297 | -.17755 | .05945 | .15502 | -.04051 | .01756 | .22449 |
| -50.115 | 474.320 | -.19249 | -5.17430 | -5.10080 | -.06560 | -.19048 | .06472 | .16718 | -.04549 | .01745 | .22441 |
| -50.392 | 499.710 | -.29454 | -5.17450 | -5.10050 | -.06639 | -.19153 | .06538 | .16747 | -.04577 | .01738 | .22465 |
| -50.336 | 599.610 | -.37411 | -5.17450 | -5.10050 | -.06704 | -.19280 | .06627 | .16814 | -.04617 | .01740 | .22519 |
| | GRADIENT | .00000 | .00000 | .00000 | .00000 | .00000 | .00000 | .00000 | .00000 | .00000 | .00000 |

IA143, AEDC V41A-P8A, O/ET W/R.H. SRB SEPARATING (OVXA39) ( 23 MAY 77 )

REFERENCE DATA

SREF = 2690.0000 SQ.FT. XMRP = 1097.0000 IN. XT
LREF = 1290.3000 INCHES YMRP = .0000 IN. YT
BREF = 1290.3000 INCHES ZMRP = 450.0000 IN. ZT
SCALE = .0100

PARAMETRIC DATA

ALPHA = -5.000 BETA = -5.000
DALPHA = .000 DBETA = .000
X = .000 MACH = 4.500
JET PC = .000

RUN NO. 4184/ 0 RN/L = 2.39 GRADIENT INTERVAL = -5.00/ 5.00

| Y | Z | X | ALPHA | BETA | PHI | CN | CLM | CY | CYN | CBL | CA |
|---|---|---|---|---|---|---|---|---|---|---|---|
| -150.630 | 599.660 | -.29600 | -5.17440 | -5.10030 | -.06701 | -.19281 | .06628 | .16812 | -.04619 | .01740 | .22530 |
| -150.410 | 499.830 | -.25674 | -5.17450 | -5.10040 | -.06704 | -.19279 | .06624 | .16815 | -.04620 | .01741 | .22501 |
| -150.240 | 474.730 | -.32932 | -5.17450 | -5.10050 | -.06707 | -.19284 | .06624 | .16830 | -.04622 | .01742 | .22506 |
| -150.470 | 349.940 | -.32899 | -5.17410 | -5.10130 | -.06309 | -.18772 | .06305 | .16512 | -.04425 | .01749 | .22413 |
| -150.600 | 250.020 | -.33208 | -5.17060 | -5.09900 | -.05430 | -.18075 | .06059 | .15635 | -.04069 | .01751 | .22437 |
| -150.850 | 150.120 | -.30932 | -5.16970 | -5.09140 | -.05256 | -.17261 | .05651 | .14456 | -.03757 | .01570 | .22573 |
| -150.710 | 99.810 | -.40872 | -5.17020 | -5.08910 | -.05014 | -.17325 | .05692 | .14041 | -.03642 | .01544 | .22747 |
| -150.930 | 24.874 | -.42636 | -5.17210 | -5.08630 | -.04662 | -.18016 | .05975 | .13683 | -.03581 | .01555 | .22795 |
| -150.840 | -.054 | -.45914 | -5.17320 | -5.08590 | -.04687 | -.18196 | .06014 | .13598 | -.03550 | .01534 | .22778 |
| | GRADIENT | .00000 | .00000 | .00000 | .00000 | .00000 | .00000 | .00000 | .00000 | .00000 | .00000 |

IA143, AEDC V41A-P8A, O/ET W/R.H. SRB SEPARATING (OVXA40) ( 23 MAY 77 )

REFERENCE DATA

SREF = 2690.0000 SQ.FT. XMRP = 1097.0000 IN. XT
LREF = 1290.3000 INCHES YMRP = .0000 IN. YT
BREF = 1290.3000 INCHES ZMRP = 450.0000 IN. ZT
SCALE = .0100

PARAMETRIC DATA

ALPHA = -5.000 BETA = -5.000
DALPHA = -5.000 DBETA = .000
X = .000 MACH = 4.500
JET PC = .000

RUN NO. 4197/ 0 RN/L = 2.37 GRADIENT INTERVAL = -5.00/ 5.00

| Y | Z | X | ALPHA | BETA | PHI | CN | CLM | CY | CYN | CBL | CA |
|---|---|---|---|---|---|---|---|---|---|---|---|
| -51.209 | 23.711 | -.14370 | -5.18650 | -5.06960 | -.06086 | -.16527 | .04323 | .11371 | -.02984 | .00836 | .22740 |
| -49.650 | 99.855 | -.49499 | -5.17340 | -5.07250 | -.04323 | -.17599 | .05622 | .12086 | -.03325 | .01358 | .22735 |
| -50.256 | 150.200 | -.39772 | -5.16650 | -5.07550 | -.04017 | -.17363 | .05859 | .12597 | -.03487 | .01520 | .22719 |
| -50.506 | 250.300 | -.35940 | -5.16080 | -5.08380 | -.04288 | -.16541 | .05671 | .13681 | -.03711 | .01653 | .22458 |
| -50.031 | 350.190 | -.13092 | -5.16540 | -5.09440 | -.04707 | -.17028 | .05702 | .14781 | -.03826 | .01741 | .22423 |
| -49.838 | 474.570 | -.34985 | -5.17370 | -5.10150 | -.06141 | -.18446 | .06119 | .16335 | -.04321 | .01743 | .22340 |
| -50.303 | 499.900 | -.28614 | -5.17430 | -5.10130 | -.06378 | -.18753 | .06276 | .16551 | -.04439 | .01742 | .22356 |
| -50.014 | 599.780 | -.36891 | -5.17430 | -5.10040 | -.06705 | -.19258 | .06614 | .16790 | -.04603 | .01734 | .22487 |
| | GRADIENT | .00000 | .00000 | .00000 | .00000 | .00000 | .00000 | .00000 | .00000 | .00000 | .00000 |

IA143, AEDC V41A-P8A, O/ET W/R.H. SRB SEPARATING (OVXA40) ( 23 MAY 77 )

REFERENCE DATA

SREF = 2690.0000 SQ.FT. XMRP = 1097.0000 IN. XT
LREF = 1290.3000 INCHES YMRP = .0000 IN. YT
BREF = 1290.3000 INCHES ZMRP = 450.0000 IN. ZT
SCALE = .0100

PARAMETRIC DATA

ALPHA = -5.000 BETA = -5.000
DALPHA = -5.000 DBETA = .000
X = .000 MACH = 4.500
JET PC = .000

RUN NO. 4198/ 0 RN/L = 2.38 GRADIENT INTERVAL = -5.00/ 5.00

| Y | Z | X | ALPHA | BETA | PHI | CN | CLM | CY | CYN | CBL | CA |
|---|---|---|---|---|---|---|---|---|---|---|---|
| -150.420 | 599.800 | -.29797 | -5.17450 | -5.10040 | -.06707 | -.19281 | .06627 | .16795 | -.04608 | .01736 | .22525 |
| -150.500 | 499.980 | -.39683 | -5.17430 | -5.10040 | -.06708 | -.19267 | .06612 | .16800 | -.04606 | .01735 | .22462 |
| -150.480 | 474.910 | -.29917 | -5.17430 | -5.10050 | -.06669 | -.19199 | .06562 | .16757 | -.04583 | .01733 | .22413 |
| -150.380 | 350.160 | -.31554 | -5.17290 | -5.10130 | -.05829 | -.18260 | .06044 | .16036 | -.04175 | .01743 | .22350 |
| -150.760 | 250.270 | -.37168 | -5.16870 | -5.09680 | -.04790 | -.17662 | .05897 | .14891 | -.03776 | .01731 | .22455 |
| -151.270 | 150.110 | -.45389 | -5.17010 | -5.08960 | -.05072 | -.16830 | .05382 | .13772 | -.03466 | .01466 | .22625 |
| -150.660 | 100.020 | -.36449 | -5.17050 | -5.08700 | -.04649 | -.17254 | .05610 | .13398 | -.03386 | .01487 | .22763 |
| -150.880 | 24.995 | -.32839 | -5.18000 | -5.08540 | -.06306 | -.16491 | .04724 | .12818 | -.03072 | .01012 | .22840 |
| | GRADIENT | .00000 | .00000 | .00000 | .00000 | .00000 | .00000 | .00000 | .00000 | .00000 | .00000 |

IA143, AEDC V41A-P8A, O/ET W/R.H. SRB SEPARATING (OVXA41) ( 23 MAY 77 )

REFERENCE DATA

SREF = 2690.0000 SQ.FT. XMRP = 1097.0000 IN. XT
LREF = 1290.3000 INCHES YMRP = .0000 IN. YT
BREF = 1290.3000 INCHES ZMRP = 450.0000 IN. ZT
SCALE = .0100

PARAMETRIC DATA

ALPHA = -5.000 BETA = -5.000
DALPHA = .000 DBETA = -4.000
X = .000 MACH = 4.500
JET PC = .000

RUN NO. 4186/ 0 RN/L = 2.39 GRADIENT INTERVAL = -5.00/ 5.00

| Y | Z | X | ALPHA | BETA | PHI | CN | CLM | CY | CYN | CBL | CA |
|---|---|---|---|---|---|---|---|---|---|---|---|
| -50.872 | 249.920 | -.37412 | -5.15970 | -5.08480 | -.04549 | -.16490 | .05734 | .14255 | -.03976 | .01722 | .22527 |
| -50.555 | 350.090 | -.20706 | -5.16680 | -5.09560 | -.05033 | -.17185 | .05741 | .15161 | -.03970 | .01750 | .22471 |
| -50.210 | 474.310 | -.33027 | -5.17440 | -5.10110 | -.06413 | -.18779 | .06302 | .16588 | -.04470 | .01745 | .22417 |
| -50.379 | 499.740 | -.39288 | -5.17460 | -5.10080 | -.06579 | -.19027 | .06445 | .16704 | -.04545 | .01740 | .22411 |
| -50.720 | 599.650 | -.24207 | -5.17450 | -5.10040 | -.06706 | -.19294 | .06628 | .16811 | -.04617 | .01738 | .22525 |
| | GRADIENT | .00000 | .00000 | .00000 | .00000 | .00000 | .00000 | .00000 | .00000 | .00000 | .00000 |

IA143, AEDC V41A-P8A, O/ET W/R.H. SRB SEPARATING (OVXA42) ( 23 MAY 77 )

REFERENCE DATA

SREF = 2690.0000 SQ.FT. XMRP = 1097.0000 IN. XT
LREF = 1290.3000 INCHES YMRP = .0000 IN. YT
BREF = 1290.3000 INCHES ZMRP = 450.0000 IN. ZT
SCALE = .0100

PARAMETRIC DATA

ALPHA = -5.000 BETA = -5.000
DALPHA = -5.000 DBETA = -4.000
X = .000 MACH = 4.500
JET PC = .000

RUN NO. 4196/ 0 RN/L = 2.38 GRADIENT INTERVAL = -5.00/ 5.00

| Y | Z | X | ALPHA | BETA | PHI | CN | CLM | CY | CYN | CBL | CA |
|---|---|---|---|---|---|---|---|---|---|---|---|
| -50.750 | 473.460 | .16004 | -5.17270 | -5.10120 | -.05806 | -.17960 | .05860 | .15984 | -.04151 | .01736 | .22289 |
| -50.373 | 499.950 | -.30607 | -5.17350 | -5.10160 | -.06077 | -.18278 | .06007 | .16276 | -.04286 | .01741 | .22277 |
| -50.635 | 599.740 | -.29940 | -5.17430 | -5.10050 | -.06711 | -.19275 | .06611 | .16796 | -.04604 | .01734 | .22444 |
| | GRADIENT | .00000 | .00000 | .00000 | .00000 | .00000 | .00000 | .00000 | .00000 | .00000 | .00000 |

IA143, AEDC V41A-P8A, O/ET W/R.H. SRB SEPARATING (OVXA43) ( 23 MAY 77 )

REFERENCE DATA

SREF = 2690.0000 SQ.FT. XMRP = 1097.0000 IN. XT
LREF = 1290.3000 INCHES YMRP = .0000 IN. YT
BREF = 1290.3000 INCHES ZMRP = 450.0000 IN. ZT
SCALE = .0100

PARAMETRIC DATA

ALPHA = -5.000 BETA = -5.000
DALPHA = .000 DBETA = -4.000
X = .000 MACH = 4.500
JET PC = .000

RUN NO. 4185/ 0 RN/L = 2.39 GRADIENT INTERVAL = -5.00/ 5.00

| Y | Z | X | ALPHA | BETA | PHI | CN | CLM | CY | CYN | CBL | CA |
|---|---|---|---|---|---|---|---|---|---|---|---|
| -150.780 | .042 | -.34714 | -5.17450 | -5.08070 | -.03763 | -.17568 | .05499 | .11922 | -.02881 | .01381 | .22682 |
| -150.210 | 25.127 | -.35910 | -5.17200 | -5.08130 | -.03504 | -.17604 | .05668 | .12148 | -.02993 | .01485 | .22705 |
| -149.950 | 100.130 | -.34092 | -5.16810 | -5.08470 | -.03901 | -.16900 | .05500 | .12919 | -.03256 | .01554 | .22738 |
| -150.160 | 150.040 | -.41689 | -5.16770 | -5.08710 | -.04680 | -.16490 | .05295 | .13547 | -.03469 | .01516 | .22602 |
| -149.860 | 249.920 | -.34480 | -5.16770 | -5.09600 | -.04723 | -.17471 | .05837 | .14905 | -.03822 | .01754 | .22446 |
| -150.320 | 349.590 | -.38323 | -5.17300 | -5.10120 | -.05934 | -.18283 | .06049 | .16159 | -.04245 | .01749 | .22356 |
| -150.510 | 474.540 | -.39323 | -5.17440 | -5.10040 | -.06686 | -.19249 | .06597 | .16801 | -.04608 | .01740 | .22468 |
| -150.260 | 499.790 | -.24885 | -5.17430 | -5.10040 | -.06694 | -.19282 | .06623 | .16827 | -.04622 | .01744 | .22504 |
| -150.410 | 599.790 | -.26840 | -5.17450 | -5.10040 | -.06704 | -.19285 | .06631 | .16821 | -.04621 | .01741 | .22549 |
| | GRADIENT | .00000 | .00000 | .00000 | .00000 | .00000 | .00000 | .00000 | .00000 | .00000 | .00000 |

IA143, AEDC V41A-P8A, O/ET W/R.H. SRB SEPARATING (OVXA44) ( 23 MAY 77 )

REFERENCE DATA

SREF = 2690.0000 SQ.FT. XMRP = 1097.0000 IN. XT
LREF = 1290.3000 INCHES YMRP = .0000 IN. YT
BREF = 1290.3000 INCHES ZMRP = 450.0000 IN. ZT
SCALE = .0100

PARAMETRIC DATA

ALPHA = -5.000 BETA = -5.000
DALPHA = -5.000 DBETA = -4.000
X = .000 MACH = 4.500
JET PC = .000

RUN NO. 4195/ 0 RN/L = 2.38 GRADIENT INTERVAL = -5.00/ 5.00

| Y | Z | X | ALPHA | BETA | PHI | CN | CLM | CY | CYN | CBL | CA |
|---|---|---|---|---|---|---|---|---|---|---|---|
| -153.050 | 24.110 | .13636 | -5.18360 | -5.08080 | -.05711 | -.14705 | .03420 | .10637 | -.02079 | .00670 | .22763 |
| -149.810 | 100.180 | -.27494 | -5.17180 | -5.08260 | -.03773 | -.16189 | .04833 | .11580 | -.02600 | .01288 | .22630 |
| -150.350 | 150.200 | -.36578 | -5.16780 | -5.08620 | -.03665 | -.16089 | .05001 | .12176 | -.02779 | .01423 | .22605 |
| -149.610 | 250.000 | -.45654 | -5.16580 | -5.09290 | -.04088 | -.16802 | .05481 | .13940 | -.03448 | .01691 | .22256 |
| -150.170 | 349.660 | -.46334 | -5.17090 | -5.10060 | -.05177 | -.17632 | .05749 | .15408 | -.03881 | .01742 | .22315 |
| -150.360 | 474.750 | -.38918 | -5.17430 | -5.10120 | -.06452 | -.18883 | .06349 | .16579 | -.04459 | .01734 | .22334 |
| -150.320 | 499.950 | -.30055 | -5.17420 | -5.10070 | -.06602 | -.19094 | .06486 | .16716 | -.04549 | .01735 | .22372 |
| -150.550 | 599.820 | -.28044 | -5.17450 | -5.10040 | -.06713 | -.19273 | .06622 | .16784 | -.04603 | .01732 | .22517 |
| | GRADIENT | .00000 | .00000 | .00000 | .00000 | .00000 | .00000 | .00000 | .00000 | .00000 | .00000 |

IA143, AEDC V41A-P8A, O/ET W/R.H. SRB SEPARATING (OVXA45) ( 23 MAY 77 )

REFERENCE DATA

SREF = 2690.0000 SQ.FT. XMRP = 1097.0000 IN. XT
LREF = 1290.3000 INCHES YMRP = .0000 IN. YT
BREF = 1290.3000 INCHES ZMRP = 450.0000 IN. ZT
SCALE = .0100

PARAMETRIC DATA

ALPHA = -5.000 BETA = -5.000
DALPHA = .000 DBETA = .000
X = 300.000 MACH = 4.500
JET PC = .000

RUN NO. 4187/ 0 RN/L = 2.39 GRADIENT INTERVAL = -5.00/ 5.00

| Y | Z | X | ALPHA | BETA | PHI | CN | CLM | CY | CYN | CBL | CA |
|---|---|---|---|---|---|---|---|---|---|---|---|
| -50.218 | 99.962 | 299.54000 | -5.17090 | -5.09300 | -.05369 | -.18195 | .06134 | .14973 | -.03972 | .01655 | .22531 |
| -50.358 | 249.620 | 299.70000 | -5.16970 | -5.09760 | -.05543 | -.18146 | .06173 | .15729 | -.04180 | .01757 | .22497 |
| -50.585 | 299.930 | 299.60000 | -5.17040 | -5.09870 | -.05693 | -.18147 | .06132 | .15878 | -.04207 | .01752 | .22454 |
| -51.016 | 400.480 | 299.54000 | -5.17330 | -5.10110 | -.06100 | -.18419 | .06140 | .16312 | -.04331 | .01749 | .22416 |
| -50.558 | 424.880 | 299.52000 | -5.17400 | -5.10120 | -.06264 | -.18625 | .06227 | .16456 | -.04396 | .01746 | .22418 |
| -50.597 | 500.100 | 299.48000 | -5.17440 | -5.10040 | -.06687 | -.19209 | .06575 | .16789 | -.04605 | .01738 | .22455 |
| -50.325 | 599.510 | 299.51000 | -5.17440 | -5.10030 | -.06702 | -.19280 | .06629 | .16804 | -.04619 | .01740 | .22530 |
| | GRADIENT | .00000 | .00000 | .00000 | .00000 | .00000 | .00000 | .00000 | .00000 | .00000 | .00000 |

IA143, AEDC V41A-P8A, O/ET W/R.H. SRB SEPARATING (OVXA45) ( 23 MAY 77 )

REFERENCE DATA

SREF = 2690.0000 SQ.FT. XMRP = 1097.0000 IN. XT
LREF = 1290.3000 INCHES YMRP = .0000 IN. YT
BREF = 1290.3000 INCHES ZMRP = 450.0000 IN. ZT
SCALE = .0100

PARAMETRIC DATA

ALPHA = -5.000 BETA = -5.000
DALPHA = .000 DBETA = .000
X = 300.000 MACH = 4.500
JET PC = .000

RUN NO. 4188/ 0 RN/L = 2.38 GRADIENT INTERVAL = -5.00/ 5.00

| Y | Z | X | ALPHA | BETA | PHI | CN | CLM | CY | CYN | CBL | CA |
|---|---|---|---|---|---|---|---|---|---|---|---|
| -200.490 | 599.620 | 299.59000 | -5.17450 | -5.10040 | -.06707 | -.19285 | .06633 | .16834 | -.04626 | .01742 | .22562 |
| -200.530 | 499.780 | 299.51000 | -5.17450 | -5.10050 | -.06701 | -.19205 | .06630 | .16832 | -.04625 | .01744 | .22531 |
| -200.770 | 424.920 | 299.53000 | -5.17450 | -5.10040 | -.06706 | -.19283 | .06624 | .16826 | -.04622 | .01741 | .22524 |
| -200.800 | 399.870 | 299.62000 | -5.17430 | -5.10030 | -.06705 | -.19294 | .06627 | .16814 | -.04618 | .01738 | .22506 |
| -200.440 | 299.700 | 299.57000 | -5.17430 | -5.10130 | -.06329 | -.18876 | .06353 | .16512 | -.04422 | .01744 | .22393 |
| -200.200 | 249.780 | 299.46000 | -5.17370 | -5.10140 | -.06076 | -.18629 | .06230 | .16267 | -.04291 | .01741 | .22396 |
| -200.310 | 99.808 | 299.54000 | -5.17380 | -5.09970 | -.06115 | -.18276 | .06023 | .15769 | -.04083 | .01630 | .22444 |
| | GRADIENT | .00000 | .00000 | .00000 | .00000 | .00000 | .00000 | .00000 | .00000 | .00000 | .00000 |

IA143, AEDC V41A-P8A, O/ET W/R.H. SRB SEPARATING (OVXA46) ( 23 MAY 77 )

REFERENCE DATA

SREF = 2690.0000 SQ.FT. XMRP = 1097.0000 IN. XT
LREF = 1290.3000 INCHES YMRP = .0000 IN. YT
BREF = 1290.3000 INCHES ZMRP = 450.0000 IN. ZT
SCALE = .0100

PARAMETRIC DATA

ALPHA = -5.000 BETA = -5.000
DALPHA = -10.000 DBETA = .000
X = 300.000 MACH = 4.500
JET PC = .000

RUN NO. 4222/ 0 RN/L = 2.38 GRADIENT INTERVAL = -5.00/ 5.00

| Y | Z | X | ALPHA | BETA | PHI | CN | CLM | CY | CYN | CBL | CA |
|---|---|---|---|---|---|---|---|---|---|---|---|
| -49.130 | 99.964 | 299.73000 | -5.18220 | -5.09050 | -.06928 | -.15090 | .03791 | .12627 | -.02710 | .00801 | .22747 |
| -49.312 | 249.740 | 299.52000 | -5.16670 | -5.09490 | -.04177 | -.17346 | .05775 | .14156 | -.03473 | .01707 | .22371 |
| -50.181 | 300.460 | 299.51000 | -5.16710 | -5.09680 | -.04451 | -.17268 | .05705 | .14601 | -.03626 | .01738 | .22296 |
| -50.819 | 400.650 | 299.68000 | -5.17060 | -5.10020 | -.05207 | -.17514 | .05689 | .15425 | -.03904 | .01742 | .22274 |
| -50.656 | 425.220 | 299.56000 | -5.17160 | -5.10080 | -.05473 | -.17707 | .05753 | .15680 | -.04011 | .01739 | .22265 |
| -50.941 | 500.550 | 299.61000 | -5.17410 | -5.10150 | -.06207 | -.18494 | .06112 | .16381 | -.04345 | .01739 | .22278 |
| -50.226 | 600.060 | 299.54000 | -5.17430 | -5.10020 | -.06714 | -.19244 | .06602 | .16765 | -.04601 | .01730 | .22413 |
| | GRADIENT | .00000 | .00000 | .00000 | .00000 | .00000 | .00000 | .00000 | .00000 | .00000 | .00000 |

IA143, AEDC V41A-P8A, O/ET W/R.H. SRB SEPARATING (OVXA47) ( 23 MAY 77 )

REFERENCE DATA

SREF = 2690.0000 SQ.FT. XMRP = 1097.0000 IN. XT
LREF = 1290.3000 INCHES YMRP = .0000 IN. YT
BREF = 1290.3000 INCHES ZMRP = 450.0000 IN. ZT
SCALE = .0100

PARAMETRIC DATA

ALPHA = -5.000 BETA = -5.000
DALPHA = -10.000 DBETA = .000
X = 300.000 MACH = 4.500
JET PC = .000

RUN NO. 4220/ 0 RN/L = 2.39 GRADIENT INTERVAL = -5.00/ 5.00

| Y | Z | X | ALPHA | BETA | PHI | CN | CLM | CY | CYN | CBL | CA |
|---|---|---|---|---|---|---|---|---|---|---|---|
| -199.990 | 100.930 | 300.00000 | -5.17790 | -5.09990 | -.07056 | -.16885 | .05040 | .14912 | -.03559 | .01231 | .22503 |
| -199.890 | 150.240 | 299.49000 | -5.17440 | -5.09960 | -.06101 | -.17635 | .05602 | .15199 | -.03769 | .01503 | .22383 |
| -200.080 | 200.200 | 299.47000 | -5.17210 | -5.10030 | -.05453 | -.18126 | .05980 | .15444 | -.03904 | .01693 | .22309 |
| -200.180 | 250.300 | 299.51000 | -5.17240 | -5.10110 | -.05540 | -.18227 | .06029 | .15675 | -.03990 | .01721 | .22349 |
| -200.350 | 300.400 | 299.55000 | -5.17340 | -5.10170 | -.05766 | -.18395 | .06083 | .15948 | -.04110 | .01732 | .22323 |
| -200.200 | 400.240 | 299.49000 | -5.17410 | -5.10130 | -.06447 | -.18979 | .06416 | .16601 | -.04469 | .01740 | .22330 |
| -200.100 | 425.100 | 299.54000 | -5.17410 | -5.10050 | -.06628 | -.19150 | .06529 | .16715 | -.04558 | .01732 | .22360 |
| -199.800 | 500.000 | 299.53000 | -5.17430 | -5.10030 | -.06710 | -.19260 | .06617 | .16800 | -.04613 | .01736 | .22474 |
| -200.100 | 599.920 | 299.43000 | -5.17440 | -5.10030 | -.06710 | -.19270 | .06626 | .16791 | -.04613 | .01736 | .22503 |
| | GRADIENT | .00000 | .00000 | .00000 | .00000 | .00000 | .00000 | .00000 | .00000 | .00000 | .00000 |

IA143, AEDC V41A-P8A, O/ET W/R.H. SRB SEPARATING (OVXA48) ( 23 MAY 77 )

REFERENCE DATA

SREF = 2690.0000 SQ.FT. XMRP = 1097.0000 IN. XT
LREF = 1290.3000 INCHES YMRP = .0000 IN. YT
BREF = 1290.3000 INCHES ZMRP = 450.0000 IN. ZT
SCALE = .0100

PARAMETRIC DATA

ALPHA = -5.000 BETA = -5.000
DALPHA = .000 DBETA = -8.000
X = 300.000 MACH = 4.500
JET PC = .000

RUN NO. 4190/ 0 RN/L = 2.38 GRADIENT INTERVAL = -5.00/ 5.00

| Y | Z | X | ALPHA | BETA | PHI | CN | CLM | CY | CYN | CBL | CA |
|---|---|---|---|---|---|---|---|---|---|---|---|
| -50.459 | 249.820 | 299.65000 | -5.16620 | -5.09450 | -.04845 | -.16934 | .05613 | .14982 | -.03929 | .01757 | .22419 |
| -50.912 | 299.900 | 299.64000 | -5.16780 | -5.09640 | -.05114 | -.17217 | .05699 | .15267 | -.03993 | .01752 | .22409 |
| -51.427 | 400.410 | 299.78000 | -5.17150 | -5.10010 | -.05657 | -.17821 | .05850 | .15848 | -.04125 | .01742 | .22376 |
| -51.228 | 424.990 | 299.64000 | -5.17270 | -5.10080 | -.05884 | -.18060 | .05940 | .16062 | -.04210 | .01740 | .22363 |
| -50.820 | 500.130 | 299.74000 | -5.17440 | -5.10100 | -.06509 | -.18889 | .06362 | .16652 | -.04509 | .01741 | .22377 |
| -50.646 | 599.680 | 299.66000 | -5.17450 | -5.10030 | -.06712 | -.19286 | .06631 | .16801 | -.04615 | .01736 | .22528 |
| | GRADIENT | .00000 | .00000 | .00000 | .00000 | .00000 | .00000 | .00000 | .00000 | .00000 | .00000 |

IA143, AEDC V41A-P8A, O/ET W/R.H. SRB SEPARATING (OVXA49) ( 23 MAY 77 )

REFERENCE DATA

SREF = 2690.0000 SQ.FT. XMRP = 1097.0000 IN. XT
LREF = 1290.3000 INCHES YMRP = .0000 IN. YT
BREF = 1290.3000 INCHES ZMRP = 450.0000 IN. ZT
SCALE = .0100

PARAMETRIC DATA

ALPHA = -5.000 BETA = -5.000
DALPHA = -10.000 DBETA = -8.000
X = 300.000 MACH = 4.500
JET PC = .000

RUN NO. 4226/ 0 RN/L = 2.38 GRADIENT INTERVAL = -5.00/ 5.00

| Y | Z | X | ALPHA | BETA | PHI | CN | CLM | CY | CYN | CBL | CA |
|---|---|---|---|---|---|---|---|---|---|---|---|
| -51.717 | 424.700 | 300.49000 | -5.16900 | -5.09920 | -.04557 | -.16180 | .04922 | .14725 | -.03586 | .01727 | .22061 |
| -51.059 | 500.550 | 299.78000 | -5.17260 | -5.10160 | -.05606 | -.17506 | .05537 | .15776 | -.04026 | .01728 | .22040 |
| -50.510 | 600.260 | 299.77000 | -5.17450 | -5.10070 | -.06669 | -.19073 | .06461 | .16732 | -.04568 | .01730 | .22269 |
| | GRADIENT | .00000 | .00000 | .00000 | .00000 | .00000 | .00000 | .00000 | .00000 | .00000 | .00000 |

IA143, AEDC V41A-P8A, O/ET W/R.H. SRB SEPARATING (OVXA50) ( 23 MAY 77 )

REFERENCE DATA

SREF = 2690.0000 SQ.FT. XMRP = 1097.0000 IN. XT
LREF = 1290.3000 INCHES YMRP = .0000 IN. YT
BREF = 1290.3000 INCHES ZMRP = 450.0000 IN. ZT
SCALE = .0100

PARAMETRIC DATA

ALPHA = -5.000 BETA = -5.000
DALPHA = .000 DBETA = -8.000
X = 300.000 MACH = 4.500
JET PC = .000

RUN NO. 4189/ 0 RN/L = 2.38 GRADIENT INTERVAL = -5.00/ 5.00

| Y | Z | X | ALPHA | BETA | PHI | CN | CLM | CY | CYN | CBL | CA |
|---|---|---|---|---|---|---|---|---|---|---|---|
| -200.710 | 99.936 | 299.52000 | -5.17290 | -5.09910 | -.05408 | -.17207 | .05400 | .14615 | -.03496 | .01522 | .22341 |
| -201.030 | 249.740 | 299.70000 | -5.17210 | -5.10120 | -.05468 | -.18012 | .05914 | .15730 | -.04018 | .01748 | .22361 |
| -201.020 | 299.780 | 299.64000 | -5.17340 | -5.10180 | -.05816 | -.18290 | .06015 | .16057 | -.04165 | .01747 | .22291 |
| -201.230 | 399.980 | 299.69000 | -5.17420 | -5.10090 | -.06560 | -.19074 | .06476 | .16703 | -.04537 | .01741 | .22381 |
| -200.760 | 424.880 | 299.57000 | -5.17430 | -5.10040 | -.06699 | -.19241 | .06593 | .16786 | -.04605 | .01735 | .22425 |
| -200.680 | 499.690 | 299.44000 | -5.17450 | -5.10040 | -.06709 | -.19280 | .06625 | .16818 | -.04622 | .01741 | .22522 |
| -200.380 | 599.650 | 299.46000 | -5.17450 | -5.10040 | -.06709 | -.19278 | .06629 | .16828 | -.04624 | .01742 | .22542 |
| | GRADIENT | .00000 | .00000 | .00000 | .00000 | .00000 | .00000 | .00000 | .00000 | .00000 | .00000 |

IA143, AEDC V41A-P8A, O/ET W/R.H. SRB SEPARATING (OVXA51) ( 23 MAY 77 )

REFERENCE DATA

SREF = 2690.0000 SQ.FT. XMRP = 1097.0000 IN. XT
LREF = 1290.3000 INCHES YMRP = .0000 IN. YT
BREF = 1290.3000 INCHES ZMRP = 450.0000 IN. ZT
SCALE = .0100

PARAMETRIC DATA

ALPHA = -5.000 BETA = -5.000
DALPHA = -10.000 DBETA = -8.000
X = 300.000 MACH = 4.500
JET PC = .000

RUN NO. 4225/ 0 RN/L = 2.38 GRADIENT INTERVAL = -5.00/ 5.00

| Y | Z | X | ALPHA | BETA | PHI | CN | CLM | CY | CYN | CBL | CA |
|---|---|---|---|---|---|---|---|---|---|---|---|
| -202.580 | 101.090 | 300.71000 | -5.18390 | -5.09970 | -.06731 | -.13401 | .02676 | .11556 | -.01695 | .00530 | .22686 |
| -199.590 | 249.750 | 299.43000 | -5.17070 | -5.10200 | -.04062 | -.17041 | .05308 | .14121 | -.03135 | .01674 | .22090 |
| -200.860 | 300.260 | 299.55000 | -5.17130 | -5.10280 | -.04584 | -.17379 | .05480 | .14843 | -.03486 | .01724 | .22028 |
| -201.040 | 400.170 | 299.66000 | -5.17370 | -5.10260 | -.05776 | -.18206 | .05890 | .15981 | -.04087 | .01732 | .22018 |
| -200.570 | 425.030 | 299.58000 | -5.17410 | -5.10220 | -.06056 | -.18487 | .06054 | .16227 | -.04235 | .01732 | .22049 |
| -200.680 | 500.140 | 299.50000 | -5.17410 | -5.10050 | -.06675 | -.19143 | .06502 | .16731 | -.04568 | .01726 | .22223 |
| -200.430 | 600.160 | 299.54000 | -5.17430 | -5.10020 | -.06719 | -.19225 | .06584 | .16760 | -.04597 | .01726 | .22400 |
| | GRADIENT | .00000 | .00000 | .00000 | .00000 | .00000 | .00000 | .00000 | .00000 | .00000 | .00000 |

IA143, AEDC V41A-P8A, O/ET W/R.H. SRB SEPARATING (OVXA52) ( 23 MAY 77 )

REFERENCE DATA

SREF = 2690.0000 SQ.FT. XMRP = 1097.0000 IN. XT
LREF = 1290.3000 INCHES YMRP = .0000 IN. YT
BREF = 1290.3000 INCHES ZMRP = 450.0000 IN. ZT
SCALE = .0100

PARAMETRIC DATA

ALPHA = -5.000 BETA = -5.000
DALPHA = -5.000 DBETA = .000
X = 300.000 MACH = 4.500
JET PC = .000

RUN NO. 4199/ 0 RN/L = 2.39 GRADIENT INTERVAL = -5.00/ 5.00

| Y | Z | X | ALPHA | BETA | PHI | CN | CLM | CY | CYN | CBL | CA |
|---|---|---|---|---|---|---|---|---|---|---|---|
| -98.520 | 98.017 | 299.76000 | -5.17320 | -5.09620 | -.05685 | -.17728 | .05727 | .14757 | -.03695 | .01514 | .22493 |
| -100.250 | 149.980 | 299.46000 | -5.17030 | -5.09620 | -.05229 | -.18059 | .06051 | .15054 | -.03877 | .01679 | .22427 |
| -100.480 | 199.940 | 299.50000 | -5.16940 | -5.09730 | -.05124 | -.18053 | .06100 | .15228 | -.03930 | .01735 | .22427 |
| | GRADIENT | .00000 | .00000 | .00000 | .00000 | .00000 | .00000 | .00000 | .00000 | .00000 | .00000 |

RUN NO. 4200/ 0 RN/L = 2.39 GRADIENT INTERVAL = -5.00/ 5.00

| Y | Z | X | ALPHA | BETA | PHI | CN | CLM | CY | CYN | CBL | CA |
|---|---|---|---|---|---|---|---|---|---|---|---|
| -201.430 | 200.730 | 299.60000 | -5.17270 | -5.10090 | -.05727 | -.18394 | .06137 | .15854 | -.04095 | .01724 | .22404 |
| -200.360 | 150.080 | 299.44000 | -5.17250 | -5.10000 | -.05717 | -.18347 | .06109 | .15675 | -.04034 | .01691 | .22388 |
| -200.650 | 100.020 | 299.44000 | -5.17450 | -5.09990 | -.06245 | -.17901 | .05778 | .15472 | -.03902 | .01532 | .22469 |
| | GRADIENT | .00000 | .00000 | .00000 | .00000 | .00000 | .00000 | .00000 | .00000 | .00000 | .00000 |

IA143, AEDC V41A-P8A, O/ET W/R.H. SRB SEPARATING (OVXA53) ( 23 MAY 77 )

REFERENCE DATA

SREF = 2690.0000 SQ.FT. XMRP = 1097.0000 IN. XT
LREF = 1290.3000 INCHES YMRP = .0000 IN. YT
BREF = 1290.3000 INCHES ZMRP = 450.0000 IN. ZT
SCALE = .0100

PARAMETRIC DATA

ALPHA = -5.000 BETA = -5.000
DALPHA = -10.000 DBETA = .000
X = 300.000 MACH = 4.500
JET PC = .000

RUN NO. 4221/ 0 RN/L = 2.39 GRADIENT INTERVAL = -5.00/ 5.00

| Y | Z | X | ALPHA | BETA | PHI | CN | CLM | CY | CYN | CBL | CA |
|---|---|---|---|---|---|---|---|---|---|---|---|
| -148.800 | 100.490 | 300.02000 | -5.17960 | -5.09770 | -.07357 | -.16092 | .04505 | .14360 | -.03340 | .01057 | .22532 |
| -150.080 | 150.170 | 299.51000 | -5.17380 | -5.09720 | -.05942 | -.17239 | .05390 | .14768 | -.03643 | .01455 | .22332 |
| -150.080 | 200.150 | 299.54000 | -5.17030 | -5.09810 | -.05153 | -.17850 | .05900 | .15084 | -.03809 | .01689 | .22316 |
| | GRADIENT | .00000 | .00000 | .00000 | .00000 | .00000 | .00000 | .00000 | .00000 | .00000 | .00000 |

IA143, AEDC V41A-P8A, O/ET W/R.H. SRB SEPARATING (OVXA54) ( 23 MAY 77 )

REFERENCE DATA

SREF = 2690.0000 SQ.FT. XMRP = 1097.0000 IN. XT
LREF = 1290.3000 INCHES YMRP = .0000 IN. YT
BREF = 1290.3000 INCHES ZMRP = 450.0000 IN. ZT
SCALE = .0100

PARAMETRIC DATA

ALPHA = -5.000 BETA = -5.000
DALPHA = -5.000 DBETA = -4.000
X = 300.000 MACH = 4.500
JET PC = .000

RUN NO. 4202/ 0 RN/L = 2.39 GRADIENT INTERVAL = -5.00/ 5.00

| Y | Z | X | ALPHA | BETA | PHI | CN | CLM | CY | CYN | CBL | CA |
|---|---|---|---|---|---|---|---|---|---|---|---|
| -99.531 | 98.075 | 299.89000 | -5.17330 | -5.09420 | -.05017 | -.16920 | .05223 | .13521 | -.03115 | .01386 | .22493 |
| -100.270 | 149.940 | 299.42000 | -5.16940 | -5.09520 | -.04464 | -.17398 | .05670 | .14070 | -.03404 | .01625 | .22366 |
| -100.700 | 199.980 | 299.55000 | -5.16770 | -5.09660 | -.04379 | -.17545 | .05836 | .14522 | -.03594 | .01736 | .22330 |
| -101.350 | 300.100 | 299.58000 | -5.16930 | -5.09900 | -.05017 | -.17565 | .05796 | .15249 | -.03869 | .01751 | .22355 |
| | GRADIENT | .00000 | .00000 | .00000 | .00000 | .00000 | .00000 | .00000 | .00000 | .00000 | .00000 |

IA143, AEDC V41A-P8A, O/ET W/R.H. SRB SEPARATING (OVXA55) ( 23 MAY 77 )

REFERENCE DATA

SREF = 2690.0000 SQ.FT. XMRP = 1097.0000 IN. XT
LREF = 1290.3000 INCHES YMRP = .0000 IN. YT
BREF = 1290.3000 INCHES ZMRP = 450.0000 IN. ZT
SCALE = .0100

PARAMETRIC DATA

ALPHA = -5.000 BETA = -5.000
DALPHA = -10.000 DBETA = -4.000
X = 300.000 MACH = 4.500
JET PC = .000

RUN NO. 4223/ 0 RN/L = 2.38 GRADIENT INTERVAL = -5.00/ 5.00

| Y | Z | X | ALPHA | BETA | PHI | CN | CLM | CY | CYN | CBL | CA |
|---|---|---|---|---|---|---|---|---|---|---|---|
| -100.580 | 100.130 | 299.98000 | -5.18220 | -5.09410 | -.06447 | -.13967 | .03115 | .11681 | -.02035 | .00660 | .22764 |
| -100.310 | 149.980 | 299.34000 | -5.17650 | -5.09340 | -.05332 | -.15358 | .04126 | .12490 | -.02563 | .01089 | .22398 |
| -99.163 | 200.080 | 299.58000 | -5.16990 | -5.09530 | -.03992 | -.16622 | .05161 | .13237 | -.02947 | .01534 | .22342 |
| | GRADIENT | .00000 | .00000 | .00000 | .00000 | .00000 | .00000 | .00000 | .00000 | .00000 | .00000 |

RUN NO. 4224/ 0 RN/L = 2.38 GRADIENT INTERVAL = -5.00/ 5.00

| Y | Z | X | ALPHA | BETA | PHI | CN | CLM | CY | CYN | CBL | CA |
|---|---|---|---|---|---|---|---|---|---|---|---|
| -201.490 | 201.270 | 299.81000 | -5.17180 | -5.10030 | -.05119 | -.17723 | .05721 | .15013 | -.03676 | .01667 | .22195 |
| -200.570 | 150.390 | 299.52000 | -5.17590 | -5.09940 | -.06137 | -.16761 | .04980 | .14525 | -.03396 | .01341 | .22260 |
| -200.740 | 100.670 | 299.56000 | -5.18140 | -5.10020 | -.07549 | -.15373 | .03980 | .13956 | -.02992 | .00906 | .22474 |
| | GRADIENT | .00000 | .00000 | .00000 | .00000 | .00000 | .00000 | .00000 | .00000 | .00000 | .00000 |

IA143, AEDC V41A-P8A, O/ET W/R.H. SRB SEPARATING (OVXA56) ( 23 MAY 77 )

REFERENCE DATA

SREF = 2690.0000 SQ.FT. XMRP = 1097.0000 IN. XT
LREF = 1290.3000 INCHES YMRP = .0000 IN. YT
BREF = 1290.3000 INCHES ZMRP = 450.0000 IN. ZT
SCALE = .0100

PARAMETRIC DATA

ALPHA = -5.000 BETA = -5.000
DALPHA = -5.000 DBETA = -4.000
X = 300.000 MACH = 4.500
JET PC = .000

RUN NO. 4201/ 0 RN/L = 2.39 GRADIENT INTERVAL = -5.00/ 5.00

| Y | Z | X | ALPHA | BETA | PHI | CN | CLM | CY | CYN | CBL | CA |
|---|---|---|---|---|---|---|---|---|---|---|---|
| -200.760 | 98.568 | 300.00000 | -5.17430 | -5.09960 | -.06043 | -.17441 | .05496 | .14991 | -.03656 | .01468 | .22416 |
| -200.190 | 150.080 | 299.48000 | -5.17250 | -5.09960 | -.05554 | -.17879 | .05818 | .15267 | -.03834 | .01636 | .22308 |
| -200.350 | 199.970 | 299.56000 | -5.17170 | -5.10040 | -.05366 | -.18067 | .05971 | .15473 | -.03915 | .01717 | .22349 |
| | GRADIENT | .00000 | .00000 | .00000 | .00000 | .00000 | .00000 | .00000 | .00000 | .00000 | .00000 |

IA143, AEDC V41A-P8A, O/ET W/R.H. SRB SEPARATING (OVXA57) ( 23 MAY 77 )

REFERENCE DATA

SREF = 2690.0000 SQ.FT. XMRP = 1097.0000 IN. XT
LREF = 1290.3000 INCHES YMRP = .0000 IN. YT
BREF = 1290.3000 INCHES ZMRP = 450.0000 IN. ZT
SCALE = .0100

PARAMETRIC DATA

ALPHA = -5.000 BETA = -5.000
DALPHA = -6.000 DBETA = -2.000
X = 300.000 MACH = 4.500
JET PC = .000

RUN NO. 4218/ 0 RN/L = 2.39 GRADIENT INTERVAL = -5.00/ 5.00

| Y | Z | X | ALPHA | BETA | PHI | CN | CLM | CY | CYN | CBL | CA |
|---|---|---|---|---|---|---|---|---|---|---|---|
| -98.930 | 98.426 | 299.77000 | -5.17430 | -5.09480 | -.05517 | -.17079 | .05287 | .13958 | -.03317 | .01377 | .22505 |
| -99.915 | 199.930 | 299.53000 | -5.16840 | -5.09640 | -.04681 | -.17772 | .05953 | .14757 | -.03724 | .01727 | .22346 |
| -100.550 | 300.180 | 299.63000 | -5.16950 | -5.09890 | -.05139 | -.17712 | .05880 | .15351 | -.03925 | .01748 | .22384 |
| | GRADIENT | .00000 | .00000 | .00000 | .00000 | .00000 | .00000 | .00000 | .00000 | .00000 | .00000 |

IA143, AEDC V41A-P8A, O/ET W/R.H. SRB SEPARATING (OVXA58) ( 23 MAY 77 )

REFERENCE DATA

SREF = 2690.0000 SQ.FT. XMRP = 1097.0000 IN. XT
LREF = 1290.3000 INCHES YMRP = .0000 IN. YT
BREF = 1290.3000 INCHES ZMRP = 450.0000 IN. ZT
SCALE = .0100

PARAMETRIC DATA

ALPHA = -5.000 BETA = -5.000
DALPHA = -6.000 DBETA = -2.000
X = 300.000 MACH = 4.500
JET PC = .000

RUN NO. 4247/ 0 RN/L = 2.38 GRADIENT INTERVAL = -5.00/ 5.00

| Y | Z | X | ALPHA | BETA | PHI | CN | CLM | CY | CYN | CBL | CA |
|---|---|---|---|---|---|---|---|---|---|---|---|
| -98.690 | 98.423 | 299.81000 | -5.17430 | -5.09460 | -.05532 | -.17076 | .05279 | .13931 | -.03308 | .01368 | .22491 |
| -99.868 | 199.940 | 299.54000 | -5.16850 | -5.09640 | -.04697 | -.17779 | .05953 | .14756 | -.03725 | .01724 | .22341 |
| -100.330 | 300.190 | 299.64000 | -5.16970 | -5.09890 | -.05155 | -.17719 | .05878 | .15350 | -.03930 | .01746 | .22354 |
| | GRADIENT | .00000 | .00000 | .00000 | .00000 | .00000 | .00000 | .00000 | .00000 | .00000 | .00000 |

IA143, AEDC V41A-P8A, O/ET W/R.H. SRB SEPARATING (OVXA59) ( 23 MAY 77 )

REFERENCE DATA

SREF = 2690.0000 SQ.FT. XMRP = 1097.0000 IN. XT
LREF = 1290.3000 INCHES YMRP = .0000 IN. YT
BREF = 1290.3000 INCHES ZMRP = 450.0000 IN. ZT
SCALE = .0100

PARAMETRIC DATA

ALPHA = -5.000 BETA = -5.000
DALPHA = .000 DBETA = 4.000
X = 600.000 MACH = 4.500
JET PC = .000

RUN NO. 4193/ 0 RN/L = 2.38 GRADIENT INTERVAL = -5.00/ 5.00

| Y | Z | X | ALPHA | BETA | PHI | CN | CLM | CY | CYN | CBL | CA |
|---|---|---|---|---|---|---|---|---|---|---|---|
| -100.760 | 199.870 | 599.47000 | -5.17400 | -5.10110 | -.06296 | -.18887 | .06380 | .16464 | -.04403 | .01741 | .22452 |
| -100.690 | 249.820 | 599.46000 | -5.17420 | -5.10090 | -.06417 | -.18986 | .06433 | .16563 | -.04460 | .01739 | .22436 |
| -100.980 | 399.850 | 599.50000 | -5.17440 | -5.10040 | -.06709 | -.19273 | .06620 | .16791 | -.04605 | .01734 | .22492 |
| -100.760 | 449.990 | 599.37000 | -5.17430 | -5.10040 | -.06709 | -.19268 | .06624 | .16795 | -.04607 | .01735 | .22524 |
| -100.830 | 500.110 | 599.47000 | -5.17450 | -5.10050 | -.06713 | -.19279 | .06628 | .16801 | -.04607 | .01735 | .22538 |
| -100.790 | 600.130 | 599.45000 | -5.17430 | -5.10040 | -.06704 | -.19275 | .06631 | .16814 | -.04613 | .01738 | .22547 |
| | GRADIENT | .00000 | .00000 | .00000 | .00000 | .00000 | .00000 | .00000 | .00000 | .00000 | .00000 |

RUN NO. 4194/ 0 RN/L = 2.38 GRADIENT INTERVAL = -5.00/ 5.00

| Y | Z | X | ALPHA | BETA | PHI | CN | CLM | CY | CYN | CBL | CA |
|---|---|---|---|---|---|---|---|---|---|---|---|
| -300.580 | 599.490 | 599.48000 | -5.17450 | -5.10040 | -.06711 | -.19282 | .06629 | .16799 | -.04608 | .01735 | .22543 |
| -300.840 | 499.970 | 599.44000 | -5.17450 | -5.10040 | -.06713 | -.19291 | .06631 | .16798 | -.04606 | .01734 | .22541 |
| -301.010 | 449.880 | 599.36000 | -5.17450 | -5.10050 | -.06708 | -.19283 | .06628 | .16808 | -.04608 | .01737 | .22538 |
| -300.590 | 399.710 | 599.42000 | -5.17450 | -5.10030 | -.06710 | -.19271 | .06624 | .16781 | -.04604 | .01733 | .22526 |
| -300.190 | 249.620 | 599.52000 | -5.17450 | -5.10050 | -.06711 | -.19280 | .06623 | .16807 | -.04610 | .01736 | .22517 |
| -300.630 | 199.820 | 599.55000 | -5.17450 | -5.10040 | -.06711 | -.19281 | .06627 | .16796 | -.04606 | .01734 | .22523 |
| | GRADIENT | .00000 | .00000 | .00000 | .00000 | .00000 | .00000 | .00000 | .00000 | .00000 | .00000 |

IA143, AEDC V41A-P8A, O/ET W/R.H. SRB SEPARATING (OVXA60) ( 23 MAY 77 )

REFERENCE DATA

SREF = 2690.0000 SQ.FT. XMRP = 1097.0000 IN. XT
LREF = 1290.3000 INCHES YMRP = .0000 IN. YT
BREF = 1290.3000 INCHES ZMRP = 450.0000 IN. ZT
SCALE = .0100

PARAMETRIC DATA

ALPHA = -5.000 BETA = -5.000
DALPHA = -15.000 DBETA = 4.000
X = 600.000 MACH = 4.500
JET PC = .000

RUN NO. 4248/ 0 RN/L = 2.38 GRADIENT INTERVAL = -5.00/ 5.00

| Y | Z | X | ALPHA | BETA | PHI | CN | CLM | CY | CYN | CBL | CA |
|---|---|---|---|---|---|---|---|---|---|---|---|
| -97.753 | 201.450 | 599.97000 | -5.17320 | -5.10120 | -.05579 | -.18347 | .06046 | .15529 | -.03907 | .01680 | .22272 |
| -100.210 | 250.450 | 599.33000 | -5.17320 | -5.10180 | -.05707 | -.18468 | .06118 | .15871 | -.04064 | .01726 | .22266 |
| -100.370 | 400.420 | 599.29000 | -5.17420 | -5.10100 | -.06473 | -.18962 | .06395 | .16584 | -.04473 | .01734 | .22280 |
| -100.630 | 450.630 | 599.32000 | -5.17420 | -5.10040 | -.06682 | -.19195 | .06550 | .16749 | -.04582 | .01730 | .22345 |
| -100.720 | 500.780 | 599.40000 | -5.17430 | -5.10020 | -.06725 | -.19264 | .06600 | .16779 | -.04607 | .01729 | .22388 |
| -100.620 | 601.110 | 599.58000 | -5.17430 | -5.10020 | -.06715 | -.19270 | .06625 | .16785 | -.04612 | .01733 | .22505 |
| | GRADIENT | .00000 | .00000 | .00000 | .00000 | .00000 | .00000 | .00000 | .00000 | .00000 | .00000 |

IA143, AEDC V41A-P8A, O/ET W/R.H. SRB SEPARATING (OVXA60) ( 23 MAY 77 )

REFERENCE DATA

SREF = 2690.0000 SQ.FT. XMRP = 1097.0000 IN. XT
LREF = 1290.3000 INCHES YMRP = .0000 IN. YT
BREF = 1290.3000 INCHES ZMRP = 450.0000 IN. ZT
SCALE = .0100

PARAMETRIC DATA

ALPHA = -5.000 BETA = -5.000
DALPHA = -15.000 DBETA = 4.000
X = 600.000 MACH = 4.500
JET PC = .000

RUN NO. 4249/ 0 RN/L = 2.38 GRADIENT INTERVAL = -5.00/ 5.00

| Y | Z | X | ALPHA | BETA | PHI | CN | CLM | CY | CYN | CBL | CA |
|---|---|---|---|---|---|---|---|---|---|---|---|
| -301.170 | 600.750 | 599.43000 | -5.17440 | -5.10030 | -.06710 | -.19284 | .06627 | .16809 | -.04619 | .01738 | .22499 |
| -300.830 | 500.630 | 599.30000 | -5.17440 | -5.10020 | -.06715 | -.19279 | .06627 | .16784 | -.04612 | .01733 | .22508 |
| -300.700 | 450.410 | 599.32000 | -5.17440 | -5.10010 | -.06715 | -.19275 | .06628 | .16783 | -.04613 | .01733 | .22509 |
| -300.640 | 400.330 | 599.37000 | -5.17440 | -5.10020 | -.06717 | -.19276 | .06629 | .16791 | -.04615 | .01734 | .22514 |
| -300.580 | 250.350 | 599.22000 | -5.17440 | -5.10020 | -.06716 | -.19274 | .06620 | .16794 | -.04614 | .01735 | .22483 |
| -300.550 | 200.480 | 599.33000 | -5.17430 | -5.10010 | -.06720 | -.19270 | .06613 | .16776 | -.04608 | .01730 | .22446 |
| | GRADIENT | .00000 | .00000 | .00000 | .00000 | .00000 | .00000 | .00000 | .00000 | .00000 | .00000 |

IA143, AEDC V41A-P8A, O/ET W/R.H. SRB SEPARATING (OVXA61) ( 23 MAY 77 )

REFERENCE DATA

SREF = 2690.0000 SQ.FT. XMRP = 1097.0000 IN. XT
LREF = 1290.3000 INCHES YMRP = .0000 IN. YT
BREF = 1290.3000 INCHES ZMRP = 450.0000 IN. ZT
SCALE = .0100

PARAMETRIC DATA

ALPHA = -5.000 BETA = -5.000
DALPHA = -15.000 DBETA = 4.000
X = 600.000 MACH = 4.500
JET PC = .000

RUN NO. 4286/ 0 RN/L = 2.39 GRADIENT INTERVAL = -5.00/ 5.00

| Y | Z | X | ALPHA | BETA | PHI | CN | CLM | CY | CYN | CBL | CA |
|---|---|---|---|---|---|---|---|---|---|---|---|
| -97.300 | 201.450 | 600.04000 | -5.17320 | -5.10120 | -.05592 | -.18378 | .06055 | .15562 | -.03923 | .01684 | .22244 |
| -100.090 | 250.340 | 599.34000 | -5.17330 | -5.10180 | -.05731 | -.18505 | .06131 | .15908 | -.04083 | .01729 | .22233 |
| -100.410 | 400.420 | 599.28000 | -5.17410 | -5.10090 | -.06475 | -.18976 | .06402 | .16590 | -.04482 | .01736 | .22242 |
| -100.830 | 450.590 | 599.34000 | -5.17420 | -5.10040 | -.06686 | -.19206 | .06556 | .16758 | -.04591 | .01732 | .22314 |
| -100.670 | 500.760 | 599.39000 | -5.17430 | -5.10030 | -.06711 | -.19278 | .06607 | .16793 | -.04613 | .01735 | .22383 |
| -100.890 | 601.010 | 599.57000 | -5.17450 | -5.10030 | -.06714 | -.19301 | .06637 | .16798 | -.04618 | .01737 | .22504 |
| | GRADIENT | .00000 | .00000 | .00000 | .00000 | .00000 | .00000 | .00000 | .00000 | .00000 | .00000 |

IA143, AEDC V41A-P8A, O/ET W/R.H. SRB SEPARATING (OVXA62) ( 23 MAY 77 )

REFERENCE DATA

SREF = 2690.0000 SQ.FT. XMRP = 1097.0000 IN. XT
LREF = 1290.3000 INCHES YMRP = .0000 IN. YT
BREF = 1290.3000 INCHES ZMRP = 450.0000 IN. ZT
SCALE = .0100

PARAMETRIC DATA

ALPHA = -5.000 BETA = -5.000
DALPHA = .000 DBETA = -12.000
X = 600.000 MACH = 4.500
JET PC = .000

RUN NO. 4191/ 0 RN/L = 2.38 GRADIENT INTERVAL = -5.00/ 5.00

| Y | Z | X | ALPHA | BETA | PHI | CN | CLM | CY | CYN | CBL | CA |
|---|---|---|---|---|---|---|---|---|---|---|---|
| -100.950 | 249.920 | 599.57000 | -5.17260 | -5.10150 | -.05517 | -.17787 | .05746 | .15770 | -.04027 | .01746 | .22281 |
| -101.700 | 399.900 | 599.81000 | -5.17430 | -5.10090 | -.06521 | -.18953 | .06393 | .16663 | -.04515 | .01740 | .22346 |
| -101.300 | 450.030 | 599.65000 | -5.17440 | -5.10040 | -.06695 | -.19233 | .06581 | .16797 | -.04607 | .01738 | .22419 |
| -101.470 | 500.000 | 599.57000 | -5.17440 | -5.10030 | -.06713 | -.19275 | .06615 | .16799 | -.04613 | .01735 | .22473 |
| -101.580 | 600.440 | 599.73000 | -5.17440 | -5.10040 | -.06707 | -.19276 | .06629 | .16814 | -.04618 | .01739 | .22541 |
| | GRADIENT | .00000 | .00000 | .00000 | .00000 | .00000 | .00000 | .00000 | .00000 | .00000 | .00000 |

IA143, AEDC V41A-P8A, O/ET W/R.H. SRB SEPARATING (OVXA63) ( 23 MAY 77 )

REFERENCE DATA

SREF = 2690.0000 SQ.FT. XMRP = 1097.0000 IN. XT
LREF = 1290.3000 INCHES YMRP = .0000 IN. YT
BREF = 1290.3000 INCHES ZMRP = 450.0000 IN. ZT
SCALE = .0100

PARAMETRIC DATA

ALPHA = -5.000 BETA = -5.000
DALPHA = -15.000 DBETA = -12.000
X = 600.000 MACH = 4.500
JET PC = .000

RUN NO. 4254/ 0 RN/L = 2.38 GRADIENT INTERVAL = -5.00/ 5.00

| Y | Z | X | ALPHA | BETA | PHI | CN | CLM | CY | CYN | CBL | CA |
|---|---|---|---|---|---|---|---|---|---|---|---|
| -101.760 | 450.150 | 600.73000 | -5.17450 | -5.10310 | -.05859 | -.17939 | .05645 | .16057 | -.04106 | .01728 | .21808 |
| -101.580 | 500.630 | 599.60000 | -5.17430 | -5.10130 | -.06469 | -.18674 | .06147 | .16537 | -.04434 | .01722 | .21939 |
| -101.880 | 601.510 | 599.98000 | -5.17410 | -5.10040 | -.06717 | -.19222 | .06536 | .16760 | -.04586 | .01725 | .22176 |
| | GRADIENT | .00000 | .00000 | .00000 | .00000 | .00000 | .00000 | .00000 | .00000 | .00000 | .00000 |

IA143, AEDC V41A-P8A, O/ET W/R.H. SRB SEPARATING (OVXA64) ( 23 MAY 77 )

REFERENCE DATA

SREF = 2690.0000 SQ.FT. XMRP = 1097.0000 IN. XT
LREF = 1290.3000 INCHES YMRP = .0000 IN. YT
BREF = 1290.3000 INCHES ZMRP = 450.0000 IN. ZT
SCALE = .0100

PARAMETRIC DATA

ALPHA = -5.000 BETA = -5.000
DALPHA = .000 DBETA = -12.000
X = 600.000 MACH = 4.500
JET PC = .000

RUN NO. 4192/ 0 RN/L = 2.38 GRADIENT INTERVAL = -5.00/ 5.00

| Y | Z | X | ALPHA | BETA | PHI | CN | CLM | CY | CYN | CBL | CA |
|---|---|---|---|---|---|---|---|---|---|---|---|
| -300.990 | 199.810 | 599.43000 | -5.17420 | -5.10050 | -.06686 | -.19255 | .06594 | .16781 | -.04596 | .01735 | .22383 |
| -300.670 | 249.890 | 599.53000 | -5.17410 | -5.10030 | -.06707 | -.19260 | .06604 | .16811 | -.04617 | .01737 | .22420 |
| -301.690 | 400.130 | 599.78000 | -5.17450 | -5.10040 | -.06709 | -.19280 | .06626 | .16807 | -.04616 | .01738 | .22526 |
| -300.370 | 449.930 | 599.61000 | -5.17450 | -5.10030 | -.06713 | -.19287 | .06628 | .16797 | -.04614 | .01735 | .22527 |
| -300.980 | 499.840 | 599.62000 | -5.17440 | -5.10030 | -.06707 | -.19285 | .06631 | .16819 | -.04623 | .01740 | .22543 |
| -300.710 | 599.660 | 599.53000 | -5.17460 | -5.10040 | -.06709 | -.19285 | .06630 | .16810 | -.04617 | .01739 | .22543 |
| | GRADIENT | .00000 | .00000 | .00000 | .00000 | .00000 | .00000 | .00000 | .00000 | .00000 | .00000 |

IA143, AEDC V41A-P8A, O/ET W/R.H. SRB SEPARATING (OVXA65) ( 23 MAY 77 )

REFERENCE DATA

SREF = 2690.0000 SQ.FT. XMRP = 1097.0000 IN. XT
LREF = 1290.3000 INCHES YMRP = .0000 IN. YT
BREF = 1290.3000 INCHES ZMRP = 450.0000 IN. ZT
SCALE = .0100

PARAMETRIC DATA

ALPHA = -5.000 BETA = -5.000
DALPHA = .000 DBETA = -12.000
X = 600.000 MACH = 4.500
JET PC = .000

RUN NO. 4217/ 0 RN/L = 2.39 GRADIENT INTERVAL = -5.00/ 5.00

| Y | Z | X | ALPHA | BETA | PHI | CN | CLM | CY | CYN | CBL | CA |
|---|---|---|---|---|---|---|---|---|---|---|---|
| -300.680 | 199.980 | 599.56000 | -5.17400 | -5.10050 | -.06673 | -.19222 | .06579 | .16749 | -.04579 | .01731 | .22356 |
| -301.210 | 249.930 | 599.56000 | -5.17400 | -5.10030 | -.06716 | -.19258 | .06606 | .16797 | -.04610 | .01733 | .22396 |
| -302.110 | 400.180 | 599.80000 | -5.17430 | -5.10030 | -.06710 | -.19267 | .06625 | .16784 | -.04606 | .01732 | .22510 |
| -301.010 | 449.970 | 599.59000 | -5.17440 | -5.10020 | -.06715 | -.19276 | .06631 | .16786 | -.04609 | .01732 | .22523 |
| -301.280 | 499.880 | 599.58000 | -5.17430 | -5.10020 | -.06710 | -.19267 | .06626 | .16783 | -.04607 | .01733 | .22520 |
| -300.570 | 599.680 | 599.51000 | -5.17430 | -5.10020 | -.06713 | -.19264 | .06624 | .16789 | -.04612 | .01733 | .22511 |
| | GRADIENT | .00000 | .00000 | .00000 | .00000 | .00000 | .00000 | .00000 | .00000 | .00000 | .00000 |

IA143, AEDC V41A-P8A, O/ET W/R.H. SRB SEPARATING (OVXA66) ( 23 MAY 77 )

REFERENCE DATA

SREF = 2690.0000 SQ.FT. XMRP = 1097.0000 IN. XT
LREF = 1290.3000 INCHES YMRP = .0000 IN. YT
BREF = 1290.3000 INCHES ZMRP = 450.0000 IN. ZT
SCALE = .0100

PARAMETRIC DATA

ALPHA = -5.000 BETA = -5.000
DALPHA = -15.000 DBETA = -12.000
X = 600.000 MACH = 4.500
JET PC = .000

RUN NO. 4255/ 0 RN/L = 2.39 GRADIENT INTERVAL = -5.00/ 5.00

| Y | Z | X | ALPHA | BETA | PHI | CN | CLM | CY | CYN | CBL | CA |
|---|---|---|---|---|---|---|---|---|---|---|---|
| -304.260 | 202.400 | 601.46000 | -5.17380 | -5.10210 | -.06179 | -.18715 | .06128 | .16099 | -.04159 | .01675 | .21699 |
| -300.170 | 250.310 | 599.38000 | -5.17370 | -5.10150 | -.06443 | -.18854 | .06237 | .16436 | -.04366 | .01702 | .21718 |
| -301.420 | 400.460 | 599.55000 | -5.17380 | -5.10060 | -.06723 | -.19104 | .06433 | .16719 | -.04559 | .01714 | .21904 |
| -300.250 | 450.480 | 599.55000 | -5.17370 | -5.10050 | -.06710 | -.19141 | .06466 | .16735 | -.04568 | .01719 | .21974 |
| -300.490 | 500.430 | 599.45000 | -5.17380 | -5.10040 | -.06713 | -.19160 | .06492 | .16735 | -.04574 | .01720 | .22046 |
| -300.980 | 600.410 | 599.62000 | -5.17400 | -5.10040 | -.06714 | -.19209 | .06551 | .16775 | -.04596 | .01729 | .22256 |
| | GRADIENT | .00000 | .00000 | .00000 | .00000 | .00000 | .00000 | .00000 | .00000 | .00000 | .00000 |

IA143, AEDC V41A-P8A, O/ET W/R.H. SRB SEPARATING (OVXA67) ( 23 MAY 77 )

REFERENCE DATA

SREF = 2690.0000 SQ.FT. XMRP = 1097.0000 IN. XT
LREF = 1290.3000 INCHES YMRP = .0000 IN. YT
BREF = 1290.3000 INCHES ZMRP = 450.0000 IN. ZT
SCALE = .0100

PARAMETRIC DATA

ALPHA = -5.000 BETA = -5.000
DALPHA = -7.000 DBETA = -4.000
X = 600.000 MACH = 4.500
JET PC = .000

RUN NO. 4219/ 0 RN/L = 2.39 GRADIENT INTERVAL = -5.00/ 5.00

| Y | Z | X | ALPHA | BETA | PHI | CN | CLM | CY | CYN | CBL | CA |
|---|---|---|---|---|---|---|---|---|---|---|---|
| -199.560 | 198.480 | 599.68000 | -5.17390 | -5.10160 | -.06221 | -.18929 | .06379 | .16388 | -.04343 | .01737 | .22292 |
| -200.470 | 300.060 | 599.45000 | -5.17410 | -5.10050 | -.06593 | -.19145 | .06529 | .16672 | -.04537 | .01731 | .22359 |
| -200.990 | 400.180 | 599.43000 | -5.17420 | -5.10020 | -.06715 | -.19258 | .06611 | .16762 | -.04599 | .01728 | .22449 |
| | GRADIENT | .00000 | .00000 | .00000 | .00000 | .00000 | .00000 | .00000 | .00000 | .00000 | .00000 |

IA143, AEDC V41A-P8A, O/ET W/R.H. SRB SEPARATING (OVXA68) ( 23 MAY 77 )

REFERENCE DATA

SREF = 2690.0000 SQ.FT. XMRP = 1097.0000 IN. XT
LREF = 1290.3000 INCHES YMRP = .0000 IN. YT
BREF = 1290.3000 INCHES ZMRP = 450.0000 IN. ZT
SCALE = .0100

PARAMETRIC DATA

ALPHA = -5.000 BETA = -5.000
DALPHA = -5.000 DBETA = .000
X = 600.000 MACH = 4.500
JET PC = .000

RUN NO. 4203/ 0 RN/L = 2.39 GRADIENT INTERVAL = -5.00/ 5.00

| Y | Z | X | ALPHA | BETA | PHI | CN | CLM | CY | CYN | CBL | CA |
|---|---|---|---|---|---|---|---|---|---|---|---|
| -99.997 | 200.130 | 599.37000 | -5.17320 | -5.10120 | -.05945 | -.18589 | .06228 | .16108 | -.04212 | .01734 | .22393 |
| -100.470 | 299.830 | 599.35000 | -5.17410 | -5.10120 | -.06341 | -.18849 | .06345 | .16496 | -.04415 | .01738 | .22394 |
| -100.630 | 400.030 | 599.48000 | -5.17430 | -5.10050 | -.06675 | -.19206 | .06570 | .16755 | -.04583 | .01733 | .22434 |
| | GRADIENT | .00000 | .00000 | .00000 | .00000 | .00000 | .00000 | .00000 | .00000 | .00000 | .00000 |

RUN NO. 4204/ 0 RN/L = 2.39 GRADIENT INTERVAL = -5.00/ 5.00

| Y | Z | X | ALPHA | BETA | PHI | CN | CLM | CY | CYN | CBL | CA |
|---|---|---|---|---|---|---|---|---|---|---|---|
| -302.130 | 401.060 | 599.50000 | -5.17440 | -5.10030 | -.06707 | -.19273 | .06630 | .16799 | -.04612 | .01737 | .22542 |
| -300.490 | 299.790 | 599.35000 | -5.17420 | -5.10030 | -.06696 | -.19274 | .06627 | .16809 | -.04613 | .01739 | .22524 |
| -300.660 | 199.960 | 599.38000 | -5.17450 | -5.10050 | -.06713 | -.19288 | .06628 | .16817 | -.04617 | .01738 | .22517 |
| | GRADIENT | .00000 | .00000 | .00000 | .00000 | .00000 | .00000 | .00000 | .00000 | .00000 | .00000 |

IA143, AEDC V41A-P8A, O/ET W/R.H. SRB SEPARATING (OVXA69) ( 23 MAY 77 )

REFERENCE DATA

SREF = 2690.0000 SQ.FT. XMRP = 1097.0000 IN. XT
LREF = 1290.3000 INCHES YMRP = .0000 IN. YT
BREF = 1290.3000 INCHES ZMRP = 450.0000 IN. ZT
SCALE = .0100

PARAMETRIC DATA

ALPHA = -5.000 BETA = -5.000
DALPHA = -10.000 DBETA = .000
X = 600.000 MACH = 4.500
JET PC = .000

RUN NO. 4232/ 0 RN/L = 2.38 GRADIENT INTERVAL = -5.00/ 5.00

| Y | Z | X | ALPHA | BETA | PHI | CN | CLM | CY | CYN | CBL | CA |
|---|---|---|---|---|---|---|---|---|---|---|---|
| -98.065 | 199.350 | 599.65000 | -5.17260 | -5.10130 | -.05572 | -.18367 | .06100 | .15690 | -.03993 | .01718 | .22296 |
| -100.030 | 300.120 | 599.39000 | -5.17370 | -5.10150 | -.06109 | -.18625 | .06200 | .16288 | -.04294 | .01739 | .22273 |
| -100.370 | 400.080 | 599.44000 | -5.17420 | -5.10070 | -.06562 | -.19039 | .06458 | .16667 | -.04527 | .01735 | .22353 |
| | GRADIENT | .00000 | .00000 | .00000 | .00000 | .00000 | .00000 | .00000 | .00000 | .00000 | .00000 |

RUN NO. 4233/ 0 RN/L = 2.38 GRADIENT INTERVAL = -5.00/ 5.00

| Y | Z | X | ALPHA | BETA | PHI | CN | CLM | CY | CYN | CBL | CA |
|---|---|---|---|---|---|---|---|---|---|---|---|
| -302.230 | 401.590 | 599.67000 | -5.17440 | -5.10030 | -.06708 | -.19272 | .06626 | .16803 | -.04617 | .01737 | .22509 |
| -300.440 | 300.170 | 599.33000 | -5.17440 | -5.10030 | -.06708 | -.19264 | .06620 | .16785 | -.04609 | .01734 | .22488 |
| -300.480 | 200.210 | 599.22000 | -5.17420 | -5.10020 | -.06707 | -.19259 | .06612 | .16790 | -.04611 | .01735 | .22452 |
| | GRADIENT | .00000 | .00000 | .00000 | .00000 | .00000 | .00000 | .00000 | .00000 | .00000 | .00000 |

IA143, AEDC V41A-P8A, O/ET W/R.H. SRB SEPARATING (OVXA70) ( 23 MAY 77 )

REFERENCE DATA

SREF = 2690.0000 SQ.FT. XMRP = 1097.0000 IN. XT
LREF = 1290.3000 INCHES YMRP = .0000 IN. YT
BREF = 1290.3000 INCHES ZMRP = 450.0000 IN. ZT
SCALE = .0100

PARAMETRIC DATA

ALPHA = -5.000 BETA = -5.000
DALPHA = -5.000 DBETA = -8.000
X = 600.000 MACH = 4.500
JET PC = .000

RUN NO. 4206/ 0 RN/L = 2.39 GRADIENT INTERVAL = -5.00/ 5.00

| Y | Z | X | ALPHA | BETA | PHI | CN | CLM | CY | CYN | CBL | CA |
|---|---|---|---|---|---|---|---|---|---|---|---|
| -99.143 | 398.830 | 599.08000 | -5.17430 | -5.10090 | -.06508 | -.18953 | .06393 | .16627 | -.04495 | .01734 | .22347 |
| -98.931 | 299.870 | 599.48000 | -5.17370 | -5.10200 | -.05934 | -.18357 | .06036 | .16163 | -.04211 | .01744 | .22269 |
| -99.446 | 200.350 | 599.52000 | -5.17110 | -5.10150 | -.04995 | -.17784 | .05794 | .15233 | -.03748 | .01734 | .22242 |
| | GRADIENT | .00000 | .00000 | .00000 | .00000 | .00000 | .00000 | .00000 | .00000 | .00000 | .00000 |

RUN NO. 4205/ 0 RN/L = 2.39 GRADIENT INTERVAL = -5.00/ 5.00

| Y | Z | X | ALPHA | BETA | PHI | CN | CLM | CY | CYN | CBL | CA |
|---|---|---|---|---|---|---|---|---|---|---|---|
| -302.670 | 200.070 | 599.94000 | -5.17410 | -5.10040 | -.06712 | -.19246 | .06595 | .16794 | -.04605 | .01733 | .22391 |
| -300.630 | 300.000 | 599.37000 | -5.17440 | -5.10040 | -.06715 | -.19278 | .06618 | .16797 | -.04610 | .01735 | .22477 |
| -300.740 | 400.060 | 599.56000 | -5.17440 | -5.10040 | -.06708 | -.19282 | .06634 | .16797 | -.04609 | .01736 | .22550 |
| | GRADIENT | .00000 | .00000 | .00000 | .00000 | .00000 | .00000 | .00000 | .00000 | .00000 | .00000 |

IA143, AEDC V41A-P8A, O/ET W/R.H. SRB SEPARATING (OVXA71) ( 23 MAY 77 )

REFERENCE DATA

SREF = 2690.0000 SQ.FT. XMRP = 1097.0000 IN. XT
LREF = 1290.3000 INCHES YMRP = .0000 IN. YT
BREF = 1290.3000 INCHES ZMRP = 450.0000 IN. ZT
SCALE = .0100

PARAMETRIC DATA

ALPHA = -5.000 BETA = -5.000
DALPHA = -10.000 DBETA = -8.000
X = 600.000 MACH = 4.500
JET PC = .000

RUN NO. 4227/ 0 RN/L = 2.38 GRADIENT INTERVAL = -5.00/ 5.00

| Y | Z | X | ALPHA | BETA | PHI | CN | CLM | CY | CYN | CBL | CA |
|---|---|---|---|---|---|---|---|---|---|---|---|
| -99.698 | 198.960 | 599.98000 | -5.17190 | -5.10230 | -.04327 | -.17342 | .05469 | .14320 | -.03230 | .01663 | .22226 |
| -101.120 | 300.090 | 599.37000 | -5.17310 | -5.10320 | -.05269 | -.17825 | .05689 | .15562 | -.03844 | .01739 | .22099 |
| -100.830 | 350.170 | 599.50000 | -5.17390 | -5.10240 | -.05885 | -.18289 | .05947 | .16102 | -.04160 | .01738 | .22090 |
| -101.050 | 400.240 | 599.51000 | -5.17390 | -5.10140 | -.06328 | -.18698 | .06214 | .16469 | -.04393 | .01733 | .22162 |
| | GRADIENT | .00000 | .00000 | .00000 | .00000 | .00000 | .00000 | .00000 | .00000 | .00000 | .00000 |

IA143, AEDC V41A-P8A, O/ET W/R.H. SRB SEPARATING (OVXA72) ( 23 MAY 77 )

REFERENCE DATA

SREF = 2690.0000 SQ.FT. XMRP = 1097.0000 IN. XT
LREF = 1290.3000 INCHES YMRP = .0000 IN. YT
BREF = 1290.3000 INCHES ZMRP = 450.0000 IN. ZT
SCALE = .0100

PARAMETRIC DATA

ALPHA = -5.000 BETA = -5.000
DALPHA = -10.000 DBETA = -8.000
X = 600.000 MACH = 4.500
JET PC = .000

RUN NO. 4229/ 0 RN/L = 2.38 GRADIENT INTERVAL = -5.00/ 5.00

| Y | Z | X | ALPHA | BETA | PHI | CN | CLM | CY | CYN | CBL | CA |
|---|---|---|---|---|---|---|---|---|---|---|---|
| -301.630 | 200.330 | 600.41000 | -5.17390 | -5.10030 | -.06697 | -.19190 | .06537 | .16733 | -.04578 | .01724 | .22213 |
| -300.530 | 300.380 | 599.44000 | -5.17400 | -5.10020 | -.06716 | -.19207 | .06559 | .16751 | -.04592 | .01724 | .22288 |
| -300.620 | 400.170 | 599.47000 | -5.17420 | -5.10020 | -.06715 | -.19232 | .06589 | .16770 | -.04601 | .01729 | .22417 |
| | GRADIENT | .00000 | .00000 | .00000 | .00000 | .00000 | .00000 | .00000 | .00000 | .00000 | .00000 |

IA143, AEDC V41A-P8A, O/ET W/R.H. SRB SEPARATING (OVXA73) ( 23 MAY 77 )

REFERENCE DATA

SREF = 2690.0000 SQ.FT. XMRP = 1097.0000 IN. XT
LREF = 1290.3000 INCHES YMRP = .0000 IN. YT
BREF = 1290.3000 INCHES ZMRP = 450.0000 IN. ZT
SCALE = .0100

PARAMETRIC DATA

ALPHA = -5.000 BETA = -5.000
DALPHA = -10.000 DBETA = -4.000
X = 600.000 MACH = 4.500
JET PC = .000

RUN NO. 4231/ 0 RN/L = 2.38 GRADIENT INTERVAL = -5.00/ 5.00

| Y | Z | X | ALPHA | BETA | PHI | CN | CLM | CY | CYN | CBL | CA |
|---|---|---|---|---|---|---|---|---|---|---|---|
| -98.870 | 298.740 | 599.64000 | -5.17360 | -5.10210 | -.05819 | -.18353 | .06015 | .16019 | -.04131 | .01735 | .22171 |
| -100.570 | 350.350 | 599.34000 | -5.17400 | -5.10170 | -.06170 | -.18612 | .06168 | .16346 | -.04318 | .01738 | .22193 |
| -101.000 | 400.170 | 599.37000 | -5.17410 | -5.10110 | -.06451 | -.18887 | .06349 | .16588 | -.04470 | .01738 | .22281 |
| | GRADIENT | .00000 | .00000 | .00000 | .00000 | .00000 | .00000 | .00000 | .00000 | .00000 | .00000 |

IA143, AEDC V41A-P8A, O/ET W/R.H. SRB SEPARATING (OVXA74) ( 23 MAY 77 )

REFERENCE DATA

SREF = 2690.0000 SQ.FT. XMRP = 1097.0000 IN. XT
LREF = 1290.3000 INCHES YMRP = .0000 IN. YT
BREF = 1290.3000 INCHES ZMRP = 450.0000 IN. ZT
SCALE = .0100

PARAMETRIC DATA

ALPHA = -5.000 BETA = -5.000
DALPHA = -15.000 DBETA = -4.000
X = 600.000 MACH = 4.500
JET PC = .000

RUN NO. 4250/ 0 RN/L = 2.38 GRADIENT INTERVAL = -5.00/ 5.00

| Y | Z | X | ALPHA | BETA | PHI | CN | CLM | CY | CYN | CBL | CA |
|---|---|---|---|---|---|---|---|---|---|---|---|
| -98.633 | 300.370 | 599.86000 | -5.17320 | -5.10350 | -.05082 | -.17792 | .05648 | .15296 | -.03685 | .01715 | .22072 |
| -100.470 | 350.500 | 599.35000 | -5.17380 | -5.10300 | -.05691 | -.18213 | .05875 | .15905 | -.04030 | .01729 | .22005 |
| -100.630 | 400.550 | 599.41000 | -5.17400 | -5.10190 | -.06193 | -.18612 | .06123 | .16337 | -.04303 | .01729 | .22001 |
| | GRADIENT | .00000 | .00000 | .00000 | .00000 | .00000 | .00000 | .00000 | .00000 | .00000 | .00000 |

RUN NO. 4251/ 0 RN/L = 2.38 GRADIENT INTERVAL = -5.00/ 5.00

| Y | Z | X | ALPHA | BETA | PHI | CN | CLM | CY | CYN | CBL | CA |
|---|---|---|---|---|---|---|---|---|---|---|---|
| -201.170 | 401.550 | 599.67000 | -5.17410 | -5.10040 | -.06719 | -.19189 | .06526 | .16753 | -.04583 | .01724 | .22183 |
| -200.190 | 350.210 | 599.30000 | -5.17400 | -5.10090 | -.06562 | -.19081 | .06441 | .16638 | -.04504 | .01728 | .22108 |
| -200.280 | 300.360 | 599.34000 | -5.17370 | -5.10150 | -.06320 | -.18921 | .06335 | .16449 | -.04379 | .01730 | .22053 |
| | GRADIENT | .00000 | .00000 | .00000 | .00000 | .00000 | .00000 | .00000 | .00000 | .00000 | .00000 |

IA143, AEDC V41A-P8A, O/ET W/R.H. SRB SEPARATING (OVXA75) ( 23 MAY 77 )

REFERENCE DATA

SREF = 2690.0000 SQ.FT. XMRP = 1097.0000 IN. XT
LREF = 1290.3000 INCHES YMRP = .0000 IN. YT
BREF = 1290.3000 INCHES ZMRP = 450.0000 IN. ZT
SCALE = .0100

PARAMETRIC DATA

ALPHA = -5.000 BETA = -5.000
DALPHA = -10.000 DBETA = -4.000
X = 600.000 MACH = 4.500
JET PC = .000

RUN NO. 4230/ 0 RN/L = 2.38 GRADIENT INTERVAL = -5.00/ 5.00

| Y | Z | X | ALPHA | BETA | PHI | CN | CLM | CY | CYN | CBL | CA |
|---|---|---|---|---|---|---|---|---|---|---|---|
| -199.390 | 199.630 | 599.87000 | -5.17370 | -5.10170 | -.06111 | -.18853 | .06322 | .16274 | -.04280 | .01734 | .22202 |
| -200.600 | 300.290 | 599.42000 | -5.17410 | -5.10080 | -.06523 | -.19086 | .06480 | .16623 | -.04499 | .01733 | .22299 |
| -200.520 | 350.350 | 599.36000 | -5.17420 | -5.10030 | -.06701 | -.19218 | .06573 | .16753 | -.04591 | .01729 | .22333 |
| -200.940 | 400.250 | 599.42000 | -5.17420 | -5.10020 | -.06716 | -.19252 | .06600 | .16771 | -.04601 | .01729 | .22396 |
| | GRADIENT | .00000 | .00000 | .00000 | .00000 | .00000 | .00000 | .00000 | .00000 | .00000 | .00000 |

IA143, AEDC V41A-P8A, O/ET W/R.H. SRB SEPARATING (OVXA76) ( 23 MAY 77 )

REFERENCE DATA

SREF = 2690.0000 SQ.FT. XMRP = 1097.0000 IN. XT
LREF = 1290.3000 INCHES YMRP = .0000 IN. YT
BREF = 1290.3000 INCHES ZMRP = 450.0000 IN. ZT
SCALE = .0100

PARAMETRIC DATA

ALPHA = -5.000 BETA = -5.000
DALPHA = -15.000 DBETA = -8.000
X = 600.000 MACH = 4.500
JET PC = .000

RUN NO. 4253/ 0 RN/L = 2.38 GRADIENT INTERVAL = -5.00/ 5.00

| Y | Z | X | ALPHA | BETA | PHI | CN | CLM | CY | CYN | CBL | CA |
|---|---|---|---|---|---|---|---|---|---|---|---|
| -99.442 | 399.260 | 598.91000 | -5.17400 | -5.10330 | -.05715 | -.18067 | .05747 | .15943 | -.04036 | .01730 | .21882 |
| -100.450 | 350.260 | 599.39000 | -5.17390 | -5.10470 | -.04909 | -.17410 | .05353 | .15193 | -.03586 | .01721 | .21934 |
| -100.380 | 300.380 | 599.35000 | -5.17330 | -5.10470 | -.04244 | -.16947 | .05104 | .14391 | -.03159 | .01677 | .22060 |
| | GRADIENT | .00000 | .00000 | .00000 | .00000 | .00000 | .00000 | .00000 | .00000 | .00000 | .00000 |

RUN NO. 4252/ 0 RN/L = 2.38 GRADIENT INTERVAL = -5.00/ 5.00

| Y | Z | X | ALPHA | BETA | PHI | CN | CLM | CY | CYN | CBL | CA |
|---|---|---|---|---|---|---|---|---|---|---|---|
| -201.010 | 300.150 | 599.68000 | -5.17370 | -5.10260 | -.05933 | -.18602 | .06100 | .16099 | -.04147 | .01725 | .21913 |
| -200.780 | 350.390 | 599.31000 | -5.17390 | -5.10150 | -.06345 | -.18843 | .06251 | .16448 | -.04375 | .01725 | .21914 |
| -200.870 | 400.580 | 599.48000 | -5.17400 | -5.10100 | -.06624 | -.19070 | .06412 | .16676 | -.04518 | .01722 | .21993 |
| | GRADIENT | .00000 | .00000 | .00000 | .00000 | .00000 | .00000 | .00000 | .00000 | .00000 | .00000 |

IA143, AEDC V41A-P8A, O/ET W/R.H. SRB SEPARATING (OVXA77) ( 23 MAY 77 )

REFERENCE DATA

SREF = 2690.0000 SQ.FT. XMRP = 1097.0000 IN. XT
LREF = 1290.3000 INCHES YMRP = .0000 IN. YT
BREF = 1290.3000 INCHES ZMRP = 450.0000 IN. ZT
SCALE = .0100

PARAMETRIC DATA

ALPHA = -5.000 BETA = -5.000
DALPHA = -10.000 DBETA = -8.000
X = 600.000 MACH = 4.500
JET PC = .000

RUN NO. 4228/ 0 RN/L = 2.38 GRADIENT INTERVAL = -5.00/ 5.00

| Y | Z | X | ALPHA | BETA | PHI | CN | CLM | CY | CYN | CBL | CA |
|---|---|---|---|---|---|---|---|---|---|---|---|
| -200.740 | 299.420 | 600.19000 | -5.17400 | -5.10130 | -.06375 | -.18925 | .06351 | .16468 | -.04400 | .01727 | .22120 |
| -200.790 | 350.250 | 599.48000 | -5.17390 | -5.10070 | -.06587 | -.19101 | .06480 | .16663 | -.04525 | .01728 | .22225 |
| -201.010 | 400.250 | 599.48000 | -5.17430 | -5.10020 | -.06724 | -.19251 | .06576 | .16754 | -.04594 | .01725 | .22298 |
| | GRADIENT | .00000 | .00000 | .00000 | .00000 | .00000 | .00000 | .00000 | .00000 | .00000 | .00000 |

IA143, AEDC V41A-P8A, O/ET W/R.H. SRB SEPARATING (OVXA78) ( 23 MAY 77 )

REFERENCE DATA

SREF = 2690.0000 SQ.FT. XMRP = 1097.0000 IN. XT
LREF = 1290.3000 INCHES YMRP = .0000 IN. YT
BREF = 1290.3000 INCHES ZMRP = 450.0000 IN. ZT
SCALE = .0100

PARAMETRIC DATA

ALPHA = -5.000 BETA = -5.000
DALPHA = -5.000 DBETA = 4.000
X = 900.000 MACH = 4.500
JET PC = .000

RUN NO. 4209/ 0 RN/L = 2.38 GRADIENT INTERVAL = -5.00/ 5.00

| Y | Z | X | ALPHA | BETA | PHI | CN | CLM | CY | CYN | CBL | CA |
|---|---|---|---|---|---|---|---|---|---|---|---|
| -97.544 | 197.860 | 899.49000 | -5.17390 | -5.10100 | -.06483 | -.19140 | .06529 | .16625 | -.04489 | .01739 | .22383 |
| -100.400 | 274.930 | 899.43000 | -5.17410 | -5.10030 | -.06713 | -.19260 | .06613 | .16803 | -.04613 | .01735 | .22447 |
| -101.050 | 424.910 | 899.26000 | -5.17440 | -5.10040 | -.06706 | -.19281 | .06631 | .16808 | -.04614 | .01738 | .22533 |
| -100.590 | 500.000 | 899.34000 | -5.17430 | -5.10020 | -.06706 | -.19280 | .06635 | .16800 | -.04615 | .01737 | .22555 |
| -100.620 | 600.200 | 899.24000 | -5.17440 | -5.10020 | -.06705 | -.19275 | .06628 | .16786 | -.04610 | .01735 | .22520 |
| | GRADIENT | .00000 | .00000 | .00000 | .00000 | .00000 | .00000 | .00000 | .00000 | .00000 | .00000 |

RUN NO. 4210/ 0 RN/L = 2.38 GRADIENT INTERVAL = -5.00/ 5.00

| Y | Z | X | ALPHA | BETA | PHI | CN | CLM | CY | CYN | CBL | CA |
|---|---|---|---|---|---|---|---|---|---|---|---|
| -401.180 | 600.810 | 899.40000 | -5.17440 | -5.10030 | -.06708 | -.19278 | .06632 | .16797 | -.04613 | .01736 | .22536 |
| -401.170 | 499.910 | 899.29000 | -5.17450 | -5.10040 | -.06709 | -.19295 | .06636 | .16815 | -.04617 | .01738 | .22538 |
| -400.660 | 424.870 | 899.19000 | -5.17440 | -5.10030 | -.06712 | -.19285 | .06633 | .16809 | -.04617 | .01738 | .22533 |
| -400.120 | 274.850 | 899.30000 | -5.17440 | -5.10040 | -.06709 | -.19289 | .06635 | .16810 | -.04614 | .01738 | .22538 |
| -400.980 | 200.050 | 899.24000 | -5.17450 | -5.10020 | -.06716 | -.19293 | .06637 | .16786 | -.04611 | .01732 | .22551 |
| | GRADIENT | .00000 | .00000 | .00000 | .00000 | .00000 | .00000 | .00000 | .00000 | .00000 | .00000 |

IA143, AEDC V41A-P8A, O/ET W/R.H. SRB SEPARATING (OVXA79) ( 23 MAY 77 )

REFERENCE DATA

SREF = 2690.0000 SQ.FT. XMRP = 1097.0000 IN. XT
LREF = 1290.3000 INCHES YMRP = .0000 IN. YT
BREF = 1290.3000 INCHES ZMRP = 450.0000 IN. ZT
SCALE = .0100

PARAMETRIC DATA

ALPHA = -5.000 BETA = -5.000
DALPHA = -20.000 DBETA = 4.000
X = 900.000 MACH = 4.500
JET PC = .000

RUN NO. 4278/ 0 RN/L = 2.38 GRADIENT INTERVAL = -5.00/ 5.00

| Y | Z | X | ALPHA | BETA | PHI | CN | CLM | CY | CYN | CBL | CA |
|---|---|---|---|---|---|---|---|---|---|---|---|
| -97.121 | 203.100 | 900.60000 | -5.17410 | -5.10270 | -.05729 | -.18647 | .06133 | .15837 | -.04008 | .01709 | .22058 |
| -99.907 | 275.430 | 899.22000 | -5.17370 | -5.10150 | -.06341 | -.19006 | .06386 | .16490 | -.04400 | .01734 | .22071 |
| -100.360 | 425.380 | 899.14000 | -5.17420 | -5.10030 | -.06711 | -.19234 | .06563 | .16776 | -.04601 | .01731 | .22275 |
| -100.420 | 500.680 | 899.27000 | -5.17420 | -5.10020 | -.06710 | -.19251 | .06592 | .16792 | -.04613 | .01734 | .22398 |
| -100.320 | 601.010 | 899.39000 | -5.17440 | -5.10020 | -.06713 | -.19276 | .06618 | .16798 | -.04618 | .01736 | .22465 |
| | GRADIENT | .00000 | .00000 | .00000 | .00000 | .00000 | .00000 | .00000 | .00000 | .00000 | .00000 |

IA143, AEDC V41A-P8A, O/ET W/R.H. SRB SEPARATING (OVXA79) ( 23 MAY 77 )

REFERENCE DATA

SREF = 2690.0000 SQ.FT. XMRP = 1097.0000 IN. XT
LREF = 1290.3000 INCHES YMRP = .0000 IN. YT
BREF = 1290.3000 INCHES ZMRP = 450.0000 IN. ZT
SCALE = .0100

PARAMETRIC DATA

ALPHA = -5.000 BETA = -5.000
DALPHA = -20.000 DBETA = 4.000
X = 900.000 MACH = 4.500
JET PC = .000

RUN NO. 4279/ 0 RN/L = 2.38 GRADIENT INTERVAL = -5.00/ 5.00

| Y | Z | X | ALPHA | BETA | PHI | CN | CLM | CY | CYN | CBL | CA |
|---|---|---|---|---|---|---|---|---|---|---|---|
| -402.070 | 602.710 | 899.99000 | -5.17440 | -5.10010 | -.06708 | -.19289 | .06626 | .16790 | -.04619 | .01736 | .22478 |
| -401.100 | 500.490 | 899.19000 | -5.17440 | -5.10020 | -.06708 | -.19282 | .06626 | .16784 | -.04613 | .01735 | .22489 |
| -400.190 | 425.440 | 899.28000 | -5.17440 | -5.10010 | -.06715 | -.19291 | .06631 | .16785 | -.04613 | .01733 | .22498 |
| -400.240 | 275.400 | 899.19000 | -5.17440 | -5.10010 | -.06710 | -.19285 | .06628 | .16789 | -.04615 | .01734 | .22505 |
| -400.780 | 200.740 | 899.17000 | -5.17440 | -5.10020 | -.06709 | -.19279 | .06626 | .16799 | -.04620 | .01738 | .22487 |
| | GRADIENT | .00000 | .00000 | .00000 | .00000 | .00000 | .00000 | .00000 | .00000 | .00000 | .00000 |

IA143, AEDC V41A-P8A, O/ET W/R.H. SRB SEPARATING (OVXA80) ( 23 MAY 77 )

REFERENCE DATA

SREF = 2690.0000 SQ.FT. XMRP = 1097.0000 IN. XT
LREF = 1290.3000 INCHES YMRP = .0000 IN. YT
BREF = 1290.3000 INCHES ZMRP = 450.0000 IN. ZT
SCALE = .0100

PARAMETRIC DATA

ALPHA = -5.000 BETA = -5.000
DALPHA = -5.000 DBETA = -8.000
X = 900.000 MACH = 4.500
JET PC = .000

RUN NO. 4207/ 0 RN/L = 2.39 GRADIENT INTERVAL = -5.00/ 5.00

| Y | Z | X | ALPHA | BETA | PHI | CN | CLM | CY | CYN | CBL | CA |
|---|---|---|---|---|---|---|---|---|---|---|---|
| -100.500 | 200.090 | 899.30000 | -5.17390 | -5.10250 | -.05836 | -.18614 | .06152 | .16057 | -.04127 | .01736 | .22195 |
| -101.160 | 274.870 | 899.36000 | -5.17400 | -5.10120 | -.06471 | -.19020 | .06432 | .16606 | -.04474 | .01736 | .22272 |
| -101.540 | 425.090 | 899.49000 | -5.17460 | -5.10050 | -.06716 | -.19269 | .06624 | .16776 | -.04602 | .01732 | .22508 |
| -100.940 | 500.120 | 899.35000 | -5.17430 | -5.10030 | -.06705 | -.19268 | .06629 | .16789 | -.04605 | .01734 | .22534 |
| -101.010 | 600.250 | 899.33000 | -5.17430 | -5.10030 | -.06706 | -.19272 | .06626 | .16798 | -.04610 | .01736 | .22515 |
| | GRADIENT | .00000 | .00000 | .00000 | .00000 | .00000 | .00000 | .00000 | .00000 | .00000 | .00000 |

IA143, AEDC V41A-P8A, O/ET W/R.H. SRB SEPARATING (OVXA81) ( 23 MAY 77 )

REFERENCE DATA

SREF = 2690.0000 SQ.FT. XMRP = 1097.0000 IN. XT
LREF = 1290.3000 INCHES YMRP = .0000 IN. YT
BREF = 1290.3000 INCHES ZMRP = 450.0000 IN. ZT
SCALE = .0100

PARAMETRIC DATA

ALPHA = -5.000 BETA = -5.000
DALPHA = -20.000 DBETA = -16.000
X = 900.000 MACH = 4.500
JET PC = .000

RUN NO. 4280/ 0 RN/L = 2.38 GRADIENT INTERVAL = -5.00/ 5.00

| Y | Z | X | ALPHA | BETA | PHI | CN | CLM | CY | CYN | CBL | CA |
|---|---|---|---|---|---|---|---|---|---|---|---|
| -101.600 | 425.620 | 901.14000 | -5.17420 | -5.10140 | -.06553 | -.18711 | .06127 | .16598 | -.04461 | .01717 | .21717 |
| -101.720 | 500.670 | 899.60000 | -5.17420 | -5.10040 | -.06726 | -.19091 | .06391 | .16743 | -.04576 | .01718 | .21907 |
| -102.400 | 601.620 | 900.19000 | -5.17390 | -5.10040 | -.06711 | -.19203 | .06505 | .16754 | -.04579 | .01723 | .22068 |
| | GRADIENT | .00000 | .00000 | .00000 | .00000 | .00000 | .00000 | .00000 | .00000 | .00000 | .00000 |

IA143, AEDC V41A-P8A, O/ET W/R.H. SRB SEPARATING (OVXA82) ( 23 MAY 77 )

REFERENCE DATA

SREF = 2690.0000 SQ.FT. XMRP = 1097.0000 IN. XT
LREF = 1290.3000 INCHES YMRP = .0000 IN. YT
BREF = 1290.3000 INCHES ZMRP = 450.0000 IN. ZT
SCALE = .0100

PARAMETRIC DATA

ALPHA = -5.000 BETA = -5.000
DALPHA = -5.000 DBETA = -12.000
X = 900.000 MACH = 4.500
JET PC = .000

RUN NO. 4208/ 0 RN/L = 2.39 GRADIENT INTERVAL = -5.00/ 5.00

| Y | Z | X | ALPHA | BETA | PHI | CN | CLM | CY | CYN | CBL | CA |
|---|---|---|---|---|---|---|---|---|---|---|---|
| -402.800 | 198.480 | 900.81000 | -5.17440 | -5.10040 | -.06708 | -.19266 | .06624 | .16805 | -.04612 | .01737 | .22529 |
| -400.710 | 274.990 | 899.42000 | -5.17440 | -5.10030 | -.06708 | -.19279 | .06629 | .16797 | -.04612 | .01736 | .22536 |
| -401.230 | 425.160 | 899.60000 | -5.17450 | -5.10040 | -.06708 | -.19270 | .06629 | .16797 | -.04609 | .01736 | .22550 |
| -400.750 | 500.030 | 899.54000 | -5.17440 | -5.10030 | -.06709 | -.19277 | .06630 | .16793 | -.04609 | .01734 | .22543 |
| -401.030 | 600.080 | 899.48000 | -5.17440 | -5.10040 | -.06708 | -.19269 | .06628 | .16796 | -.04610 | .01736 | .22537 |
| | GRADIENT | .00000 | .00000 | .00000 | .00000 | .00000 | .00000 | .00000 | .00000 | .00000 | .00000 |

IA143, AEDC V41A-P8A, O/ET W/R.H. SRB SEPARATING (OVXA83) ( 23 MAY 77 )

REFERENCE DATA

SREF = 2690.0000 SQ.FT. XMRP = 1097.0000 IN. XT
LREF = 1290.3000 INCHES YMRP = .0000 IN. YT
BREF = 1290.3000 INCHES ZMRP = 450.0000 IN. ZT
SCALE = .0100

PARAMETRIC DATA

ALPHA = -5.000 BETA = -5.000
DALPHA = -20.000 DBETA = -16.000
X = 900.000 MACH = 4.500
JET PC = .000

RUN NO. 4281/ 0 RN/L = 2.37 GRADIENT INTERVAL = -5.00/ 5.00

| Y | Z | X | ALPHA | BETA | PHI | CN | CLM | CY | CYN | CBL | CA |
|---|---|---|---|---|---|---|---|---|---|---|---|
| -404.480 | 204.480 | 903.23000 | -5.17380 | -5.10030 | -.06758 | -.19039 | .06372 | .16712 | -.04560 | .01705 | .21832 |
| -400.330 | 275.350 | 899.16000 | -5.17370 | -5.10050 | -.06729 | -.19066 | .06378 | .16718 | -.04557 | .01712 | .21758 |
| -400.490 | 425.520 | 899.42000 | -5.17370 | -5.10030 | -.06722 | -.19160 | .06480 | .16727 | -.04573 | .01717 | .21967 |
| -400.890 | 500.510 | 899.46000 | -5.17350 | -5.10010 | -.06722 | -.19177 | .06506 | .16727 | -.04576 | .01716 | .22053 |
| -400.580 | 600.760 | 899.58000 | -5.17390 | -5.10030 | -.06716 | -.19222 | .06551 | .16761 | -.04593 | .01726 | .22189 |
| | GRADIENT | .00000 | .00000 | .00000 | .00000 | .00000 | .00000 | .00000 | .00000 | .00000 | .00000 |

IA143, AEDC V41A-P8A, O/ET W/R.H. SRB SEPARATING (OVXA84) ( 23 MAY 77 )

REFERENCE DATA

SREF = 2690.0000 SQ.FT. XMRP = 1097.0000 IN. XT
LREF = 1290.3000 INCHES YMRP = .0000 IN. YT
BREF = 1290.3000 INCHES ZMRP = 450.0000 IN. ZT
SCALE = .0100

PARAMETRIC DATA

ALPHA = -5.000 BETA = -5.000
DALPHA = -10.000 DBETA = .000
X = 900.000 MACH = 4.500
JET PC = .000

RUN NO. 4234/ 0 RN/L = 2.38 GRADIENT INTERVAL = -5.00/ 5.00

| Y | Z | X | ALPHA | BETA | PHI | CN | CLM | CY | CYN | CBL | CA |
|---|---|---|---|---|---|---|---|---|---|---|---|
| -97.709 | 298.970 | 899.53000 | -5.17410 | -5.10030 | -.06710 | -.19239 | .06588 | .16780 | -.04603 | .01732 | .22361 |
| -100.470 | 400.160 | 899.43000 | -5.17440 | -5.10030 | -.06712 | -.19269 | .06622 | .16791 | -.04612 | .01735 | .22496 |
| -100.690 | 500.230 | 899.35000 | -5.17430 | -5.10020 | -.06715 | -.19264 | .06626 | .16787 | -.04612 | .01733 | .22522 |
| | GRADIENT | .00000 | .00000 | .00000 | .00000 | .00000 | .00000 | .00000 | .00000 | .00000 | .00000 |

RUN NO. 4235/ 0 RN/L = 2.37 GRADIENT INTERVAL = -5.00/ 5.00

| Y | Z | X | ALPHA | BETA | PHI | CN | CLM | CY | CYN | CBL | CA |
|---|---|---|---|---|---|---|---|---|---|---|---|
| -301.760 | 501.200 | 899.56000 | -5.17420 | -5.10020 | -.06709 | -.19252 | .06622 | .16790 | -.04615 | .01735 | .22509 |
| -300.410 | 399.890 | 899.27000 | -5.17430 | -5.10020 | -.06712 | -.19267 | .06626 | .16779 | -.04607 | .01732 | .22522 |
| -300.570 | 300.290 | 899.31000 | -5.17430 | -5.10030 | -.06709 | -.19260 | .06623 | .16784 | -.04609 | .01734 | .22502 |
| | GRADIENT | .00000 | .00000 | .00000 | .00000 | .00000 | .00000 | .00000 | .00000 | .00000 | .00000 |

IA143, AEDC V41A-P8A, O/ET W/R.H. SRB SEPARATING (OVXA85) ( 23 MAY 77 )

REFERENCE DATA

SREF = 2690.0000 SQ.FT. XMRP = 1097.0000 IN. XT
LREF = 1290.3000 INCHES YMRP = .0000 IN. YT
BREF = 1290.3000 INCHES ZMRP = 450.0000 IN. ZT
SCALE = .0100

PARAMETRIC DATA

ALPHA = -5.000 BETA = -5.000
DALPHA = -15.000 DBETA = .000
X = 900.000 MACH = 4.500
JET PC = .000

RUN NO. 4263/ 0 RN/L = 2.37 GRADIENT INTERVAL = -5.00/ 5.00

| Y | Z | X | ALPHA | BETA | PHI | CN | CLM | CY | CYN | CBL | CA |
|---|---|---|---|---|---|---|---|---|---|---|---|
| -97.711 | 300.590 | 899.59000 | -5.17390 | -5.10060 | -.06611 | -.19145 | .06505 | .16690 | -.04543 | .01730 | .22200 |
| -100.070 | 400.250 | 899.16000 | -5.17420 | -5.10010 | -.06713 | -.19233 | .06583 | .16755 | -.04599 | .01728 | .22361 |
| -100.400 | 500.440 | 899.35000 | -5.17430 | -5.10020 | -.06710 | -.19265 | .06618 | .16783 | -.04609 | .01733 | .22477 |
| | GRADIENT | .00000 | .00000 | .00000 | .00000 | .00000 | .00000 | .00000 | .00000 | .00000 | .00000 |

RUN NO. 4264/ 0 RN/L = 2.37 GRADIENT INTERVAL = -5.00/ 5.00

| Y | Z | X | ALPHA | BETA | PHI | CN | CLM | CY | CYN | CBL | CA |
|---|---|---|---|---|---|---|---|---|---|---|---|
| -301.510 | 501.990 | 899.67000 | -5.17430 | -5.10010 | -.06710 | -.19272 | .06624 | .16784 | -.04612 | .01733 | .22499 |
| -300.360 | 399.970 | 899.06000 | -5.17450 | -5.10030 | -.06717 | -.19285 | .06631 | .16797 | -.04613 | .01735 | .22518 |
| -300.420 | 300.340 | 899.16000 | -5.17430 | -5.10020 | -.06708 | -.19271 | .06625 | .16786 | -.04611 | .01735 | .22503 |
| | GRADIENT | .00000 | .00000 | .00000 | .00000 | .00000 | .00000 | .00000 | .00000 | .00000 | .00000 |

IA143, AEDC V41A-P8A, O/ET W/R.H. SRB SEPARATING (OVXA86) ( 23 MAY 77 )

REFERENCE DATA

SREF = 2690.0000 SQ.FT. XMRP = 1097.0000 IN. XT
LREF = 1290.3000 INCHES YMRP = .0000 IN. YT
BREF = 1290.3000 INCHES ZMRP = 450.0000 IN. ZT
SCALE = .0100

PARAMETRIC DATA

ALPHA = -5.000 BETA = -5.000
DALPHA = -10.000 DBETA = -12.000
X = 900.000 MACH = 4.500
JET PC = .000

RUN NO. 4240/ 0 RN/L = 2.39 GRADIENT INTERVAL = -5.00/ 5.00

| Y | Z | X | ALPHA | BETA | PHI | CN | CLM | CY | CYN | CBL | CA |
|---|---|---|---|---|---|---|---|---|---|---|---|
| -100.240 | 298.240 | 900.10000 | -5.17400 | -5.10190 | -.06199 | -.18677 | .06174 | .16346 | -.04308 | .01731 | .22044 |
| -101.680 | 400.130 | 899.65000 | -5.17410 | -5.10040 | -.06715 | -.19238 | .06571 | .16784 | -.04602 | .01731 | .22278 |
| -101.450 | 500.600 | 899.74000 | -5.17440 | -5.10030 | -.06710 | -.19268 | .06617 | .16811 | -.04621 | .01740 | .22481 |
| | GRADIENT | .00000 | .00000 | .00000 | .00000 | .00000 | .00000 | .00000 | .00000 | .00000 | .00000 |

RUN NO. 4241/ 0 RN/L = 2.39 GRADIENT INTERVAL = -5.00/ 5.00

| Y | Z | X | ALPHA | BETA | PHI | CN | CLM | CY | CYN | CBL | CA |
|---|---|---|---|---|---|---|---|---|---|---|---|
| -300.860 | 501.140 | 899.72000 | -5.17430 | -5.10020 | -.06710 | -.19273 | .06624 | .16791 | -.04613 | .01734 | .22506 |
| -300.180 | 399.760 | 899.00000 | -5.17430 | -5.10020 | -.06710 | -.19256 | .06610 | .16782 | -.04611 | .01734 | .22463 |
| -300.130 | 300.290 | 899.17000 | -5.17420 | -5.10020 | -.06712 | -.19231 | .06580 | .16770 | -.04601 | .01730 | .22369 |
| | GRADIENT | .00000 | .00000 | .00000 | .00000 | .00000 | .00000 | .00000 | .00000 | .00000 | .00000 |

IA143, AEDC V41A-P8A, O/ET W/R.H. SRB SEPARATING (OVXA87) ( 23 MAY 77 )

REFERENCE DATA

SREF = 2690.0000 SQ.FT. XMRP = 1097.0000 IN. XT
LREF = 1290.3000 INCHES YMRP = .0000 IN. YT
BREF = 1290.3000 INCHES ZMRP = 450.0000 IN. ZT
SCALE = .0100

PARAMETRIC DATA

ALPHA = -5.000 BETA = -5.000
DALPHA = -15.000 DBETA = -12.000
X = 900.000 MACH = 4.500
JET PC = .000

RUN NO. 4256/ 0 RN/L = 2.38 GRADIENT INTERVAL = -5.00/ 5.00

| Y | Z | X | ALPHA | BETA | PHI | CN | CLM | CY | CYN | CBL | CA |
|---|---|---|---|---|---|---|---|---|---|---|---|
| -99.953 | 299.470 | 900.08000 | -5.17420 | -5.10310 | -.05812 | -.18295 | .05876 | .15998 | -.04073 | .01724 | .21866 |
| -101.190 | 400.350 | 899.46000 | -5.17400 | -5.10030 | -.06736 | -.19160 | .06490 | .16752 | -.04588 | .01720 | .22093 |
| -101.930 | 500.820 | 899.65000 | -5.17430 | -5.10040 | -.06717 | -.19220 | .06559 | .16760 | -.04592 | .01727 | .22281 |
| | GRADIENT | .00000 | .00000 | .00000 | .00000 | .00000 | .00000 | .00000 | .00000 | .00000 | .00000 |

RUN NO. 4257/ 0 RN/L = 2.38 GRADIENT INTERVAL = -5.00/ 5.00

| Y | Z | X | ALPHA | BETA | PHI | CN | CLM | CY | CYN | CBL | CA |
|---|---|---|---|---|---|---|---|---|---|---|---|
| -302.200 | 502.060 | 899.95000 | -5.17430 | -5.10020 | -.06718 | -.19239 | .06594 | .16788 | -.04612 | .01732 | .22427 |
| -300.030 | 400.000 | 899.01000 | -5.17390 | -5.10030 | -.06711 | -.19195 | .06549 | .16775 | -.04603 | .01731 | .22251 |
| -298.190 | 300.360 | 899.42000 | -5.17380 | -5.10020 | -.06721 | -.19188 | .06525 | .16733 | -.04579 | .01719 | .22147 |
| | GRADIENT | .00000 | .00000 | .00000 | .00000 | .00000 | .00000 | .00000 | .00000 | .00000 | .00000 |

IA143, AEDC V41A-P8A, O/ET W/R.H. SRB SEPARATING (OVXA88) ( 23 MAY 77 )

REFERENCE DATA

SREF = 2690.0000 SQ.FT. XMRP = 1097.0000 IN. XT
LREF = 1290.3000 INCHES YMRP = .0000 IN. YT
BREF = 1290.3000 INCHES ZMRP = 450.0000 IN. ZT
SCALE = .0100

PARAMETRIC DATA

ALPHA = -5.000 BETA = -5.000
DALPHA = -12.000 DBETA = -6.000
X = 900.000 MACH = 4.500
JET PC = .000

RUN NO. 4246/ 0 RN/L = 2.39 GRADIENT INTERVAL = -5.00/ 5.00

| Y | Z | X | ALPHA | BETA | PHI | CN | CLM | CY | CYN | CBL | CA |
|---|---|---|---|---|---|---|---|---|---|---|---|
| -199.630 | 299.730 | 899.88000 | -5.17420 | -5.10020 | -.06718 | -.19232 | .06576 | .16771 | -.04604 | .01730 | .22338 |
| -200.380 | 400.210 | 899.29000 | -5.17450 | -5.10020 | -.06723 | -.19271 | .06615 | .16783 | -.04612 | .01732 | .22466 |
| -201.000 | 500.600 | 899.47000 | -5.17440 | -5.10010 | -.06714 | -.19276 | .06626 | .16789 | -.04615 | .01734 | .22506 |
| | GRADIENT | .00000 | .00000 | .00000 | .00000 | .00000 | .00000 | .00000 | .00000 | .00000 | .00000 |

IA143, AEDC V41A-P8A, O/ET W/R.H. SRB SEPARATING (OVXA89) ( 23 MAY 77 )

REFERENCE DATA

SREF = 2690.0000 SQ.FT. XMRP = 1097.0000 IN. XT
LREF = 1290.3000 INCHES YMRP = .0000 IN. YT
BREF = 1290.3000 INCHES ZMRP = 450.0000 IN. ZT
SCALE = .0100

PARAMETRIC DATA

ALPHA = -5.000 BETA = -5.000
DALPHA = -15.000 DBETA = -6.000
X = 900.000 MACH = 4.500
JET PC = .000

RUN NO. 4260/ 0 RN/L = 2.38 GRADIENT INTERVAL = -5.00/ 5.00

| Y | Z | X | ALPHA | BETA | PHI | CN | CLM | CY | CYN | CBL | CA |
|---|---|---|---|---|---|---|---|---|---|---|---|
| -199.670 | 400.710 | 900.06000 | -5.17400 | -5.10020 | -.06713 | -.19204 | .06574 | .16758 | -.04598 | .01728 | .22353 |
| -201.850 | 601.050 | 899.49000 | -5.17440 | -5.10030 | -.06713 | -.19271 | .06625 | .16803 | -.04618 | .01737 | .22501 |
| -201.350 | 801.210 | 899.74000 | -5.17430 | -5.10030 | -.06710 | -.19256 | .06622 | .16791 | -.04615 | .01736 | .22492 |
| -200.550 | 1000.100 | 899.28000 | -5.17430 | -5.10010 | -.06708 | -.19267 | .06625 | .16782 | -.04613 | .01734 | .22506 |
| | GRADIENT | .00000 | .00000 | .00000 | .00000 | .00000 | .00000 | .00000 | .00000 | .00000 | .00000 |

IA143, AEDC V41A-P8A, O/ET W/R.H. SRB SEPARATING (OVXA90) ( 23 MAY 77 )

REFERENCE DATA

SREF = 2690.0000 SQ.FT. XMRP = 1097.0000 IN. XT
LREF = 1290.3000 INCHES YMRP = .0000 IN. YT
BREF = 1290.3000 INCHES ZMRP = 450.0000 IN. ZT
SCALE = .0100

PARAMETRIC DATA

ALPHA = -5.000 BETA = -5.000
DALPHA = -10.000 DBETA = -4.000
X = 900.000 MACH = 4.500
JET PC = .000

RUN NO. 4236/ 0 RN/L = 2.38 GRADIENT INTERVAL = -5.00/ 5.00

| Y | Z | X | ALPHA | BETA | PHI | CN | CLM | CY | CYN | CBL | CA |
|---|---|---|---|---|---|---|---|---|---|---|---|
| -199.060 | 299.250 | 899.71000 | -5.17430 | -5.10020 | -.06711 | -.19262 | .06613 | .16784 | -.04611 | .01734 | .22474 |
| -200.250 | 350.330 | 899.32000 | -5.17430 | -5.10020 | -.06708 | -.19263 | .06622 | .16780 | -.04608 | .01732 | .22500 |
| -200.580 | 400.100 | 899.18000 | -5.17440 | -5.10020 | -.06713 | -.19270 | .06627 | .16794 | -.04615 | .01735 | .22519 |
| | GRADIENT | .00000 | .00000 | .00000 | .00000 | .00000 | .00000 | .00000 | .00000 | .00000 | .00000 |

RUN NO. 4237/ 0 RN/L = 2.39 GRADIENT INTERVAL = -5.00/ 5.00

| Y | Z | X | ALPHA | BETA | PHI | CN | CLM | CY | CYN | CBL | CA |
|---|---|---|---|---|---|---|---|---|---|---|---|
| -300.570 | 400.730 | 899.41000 | -5.17440 | -5.10020 | -.06710 | -.19267 | .06627 | .16788 | -.04615 | .01735 | .22514 |
| -299.980 | 350.180 | 899.18000 | -5.17440 | -5.10030 | -.06710 | -.19275 | .06632 | .16796 | -.04612 | .01736 | .22526 |
| -300.310 | 300.270 | 899.25000 | -5.17420 | -5.10020 | -.06706 | -.19264 | .06625 | .16801 | -.04617 | .01737 | .22511 |
| | GRADIENT | .00000 | .00000 | .00000 | .00000 | .00000 | .00000 | .00000 | .00000 | .00000 | .00000 |

IA143, AEDC V41A-P8A, O/ET W/R.H. SRB SEPARATING (OVXA91) ( 23 MAY 77 )

REFERENCE DATA

SREF = 2690.0000 SQ.FT. XMRP = 1097.0000 IN. XT
LREF = 1290.3000 INCHES YMRP = .0000 IN. YT
BREF = 1290.3000 INCHES ZMRP = 450.0000 IN. ZT
SCALE = .0100

PARAMETRIC DATA

ALPHA = -5.000 BETA = -5.000
DALPHA = -15.000 DBETA = -4.000
X = 900.000 MACH = 4.500
JET PC = .000

RUN NO. 4261/ 0 RN/L = 2.37 GRADIENT INTERVAL = -5.00/ 5.00

| Y | Z | X | ALPHA | BETA | PHI | CN | CLM | CY | CYN | CBL | CA |
|---|---|---|---|---|---|---|---|---|---|---|---|
| -198.590 | 300.970 | 899.96000 | -5.17410 | -5.10030 | -.06718 | -.19210 | .06559 | .16755 | -.04592 | .01726 | .22285 |
| -200.410 | 350.340 | 899.27000 | -5.17410 | -5.10020 | -.06713 | -.19222 | .06575 | .16764 | -.04599 | .01727 | .22350 |
| -200.100 | 400.350 | 899.26000 | -5.17430 | -5.10020 | -.06717 | -.19234 | .06591 | .16778 | -.04608 | .01732 | .22405 |
| | GRADIENT | .00000 | .00000 | .00000 | .00000 | .00000 | .00000 | .00000 | .00000 | .00000 | .00000 |

RUN NO. 4262/ 0 RN/L = 2.38 GRADIENT INTERVAL = -5.00/ 5.00

| Y | Z | X | ALPHA | BETA | PHI | CN | CLM | CY | CYN | CBL | CA |
|---|---|---|---|---|---|---|---|---|---|---|---|
| -300.680 | 401.140 | 899.41000 | -5.17440 | -5.10030 | -.06713 | -.19267 | .06624 | .16799 | -.04618 | .01737 | .22499 |
| -300.200 | 350.200 | 899.18000 | -5.17450 | -5.10030 | -.06714 | -.19266 | .06625 | .16790 | -.04615 | .01735 | .22506 |
| -299.940 | 300.440 | 899.34000 | -5.17430 | -5.10020 | -.06708 | -.19256 | .06612 | .16797 | -.04616 | .01736 | .22465 |
| | GRADIENT | .00000 | .00000 | .00000 | .00000 | .00000 | .00000 | .00000 | .00000 | .00000 | .00000 |

IA143, AEDC V41A-P8A, O/ET W/R.H. SRB SEPARATING (OVXA92) ( 23 MAY 77 )

REFERENCE DATA

SREF = 2690.0000 SQ.FT. XMRP = 1097.0000 IN. XT
LREF = 1290.3000 INCHES YMRP = .0000 IN. YT
BREF = 1290.3000 INCHES ZMRP = 450.0000 IN. ZT
SCALE = .0100

PARAMETRIC DATA

ALPHA = -5.000 BETA = -5.000
DALPHA = -10.000 DBETA = -8.000
X = 900.000 MACH = 4.500
JET PC = .000

RUN NO. 4239/ 0 RN/L = 2.39 GRADIENT INTERVAL = -5.00/ 5.00

| Y | Z | X | ALPHA | BETA | PHI | CN | CLM | CY | CYN | CBL | CA |
|---|---|---|---|---|---|---|---|---|---|---|---|
| -200.110 | 399.420 | 899.04000 | -5.17450 | -5.10020 | -.06715 | -.19272 | .06620 | .16778 | -.04609 | .01733 | .22492 |
| -200.610 | 350.280 | 899.19000 | -5.17440 | -5.10030 | -.06718 | -.19248 | .06599 | .16798 | -.04615 | .01735 | .22438 |
| -200.180 | 300.310 | 899.17000 | -5.17440 | -5.10030 | -.06719 | -.19246 | .06584 | .16778 | -.04605 | .01731 | .22368 |
| | GRADIENT | .00000 | .00000 | .00000 | .00000 | .00000 | .00000 | .00000 | .00000 | .00000 | .00000 |

RUN NO. 4238/ 0 RN/L = 2.39 GRADIENT INTERVAL = -5.00/ 5.00

| Y | Z | X | ALPHA | BETA | PHI | CN | CLM | CY | CYN | CBL | CA |
|---|---|---|---|---|---|---|---|---|---|---|---|
| -301.180 | 300.200 | 899.65000 | -5.17430 | -5.10020 | -.06712 | -.19268 | .06616 | .16792 | -.04613 | .01734 | .22472 |
| -300.510 | 350.240 | 899.39000 | -5.17450 | -5.10030 | -.06720 | -.19273 | .06628 | .16803 | -.04616 | .01735 | .22528 |
| -300.780 | 400.240 | 899.29000 | -5.17440 | -5.10030 | -.06711 | -.19278 | .06628 | .16806 | -.04618 | .01738 | .22508 |
| | GRADIENT | .00000 | .00000 | .00000 | .00000 | .00000 | .00000 | .00000 | .00000 | .00000 | .00000 |

IA143, AEDC V41A-P8A, O/ET W/R.H. SRB SEPARATING (OVXA93) ( 23 MAY 77 )

REFERENCE DATA

SREF = 2690.0000 SQ.FT. XMRP = 1097.0000 IN. XT
LREF = 1290.3000 INCHES YMRP = .0000 IN. YT
BREF = 1290.3000 INCHES ZMRP = 450.0000 IN. ZT
SCALE = .0100

PARAMETRIC DATA

ALPHA = -5.000 BETA = -5.000
DALPHA = -15.000 DBETA = -8.000
X = 900.000 MACH = 4.500
JET PC = .000

RUN NO. 4258/ 0 RN/L = 2.38 GRADIENT INTERVAL = -5.00/ 5.00

| Y | Z | X | ALPHA | BETA | PHI | CN | CLM | CY | CYN | CBL | CA |
|---|---|---|---|---|---|---|---|---|---|---|---|
| -200.000 | 300.760 | 900.21000 | -5.17400 | -5.10040 | -.06727 | -.19181 | .06515 | .16756 | -.04585 | .01723 | .22118 |
| -200.370 | 350.310 | 899.28000 | -5.17390 | -5.10030 | -.06718 | -.19185 | .06532 | .16755 | -.04589 | .01725 | .22189 |
| -200.480 | 400.320 | 899.29000 | -5.17410 | -5.10020 | -.06718 | -.19224 | .06563 | .16745 | -.04587 | .01723 | .22290 |
| | GRADIENT | .00000 | .00000 | .00000 | .00000 | .00000 | .00000 | .00000 | .00000 | .00000 | .00000 |

RUN NO. 4259/ 0 RN/L = 2.38 GRADIENT INTERVAL = -5.00/ 5.00

| Y | Z | X | ALPHA | BETA | PHI | CN | CLM | CY | CYN | CBL | CA |
|---|---|---|---|---|---|---|---|---|---|---|---|
| -301.270 | 401.260 | 899.59000 | -5.17430 | -5.10030 | -.06719 | -.19237 | .06593 | .16784 | -.04609 | .01732 | .22425 |
| -300.540 | 350.230 | 899.14000 | -5.17430 | -5.10020 | -.06719 | -.19235 | .06584 | .16763 | -.04600 | .01728 | .22384 |
| -300.450 | 300.370 | 899.18000 | -5.17400 | -5.10030 | -.06711 | -.19208 | .06565 | .16782 | -.04604 | .01732 | .22317 |
| | GRADIENT | .00000 | .00000 | .00000 | .00000 | .00000 | .00000 | .00000 | .00000 | .00000 | .00000 |

IA143, AEDC V41A-P8A, O/ET W/R.H. SRB SEPARATING (OVXA94) ( 23 MAY 77 )

REFERENCE DATA

SREF = 2690.0000 SQ.FT. XMRP = 1097.0000 IN. XT
LREF = 1290.3000 INCHES YMRP = .0000 IN. YT
BREF = 1290.3000 INCHES ZMRP = 450.0000 IN. ZT
SCALE = .0100

PARAMETRIC DATA

ALPHA = -5.000 BETA = -5.000
DALPHA = -15.000 DBETA = 4.000
X = 1200.000 MACH = 4.500
JET PC = .000

RUN NO. 4211/ 0 RN/L = 2.38 GRADIENT INTERVAL = -5.00/ 5.00

| Y | Z | X | ALPHA | BETA | PHI | CN | CLM | CY | CYN | CBL | CA |
|---|---|---|---|---|---|---|---|---|---|---|---|
| -96.852 | .591 | 1199.60001 | -5.17420 | -5.10030 | -.06809 | -.19086 | .06451 | .16714 | -.04561 | .01694 | .22159 |
| -100.450 | 100.480 | 1199.10001 | -5.17400 | -5.10040 | -.06732 | -.19228 | .06572 | .16802 | -.04611 | .01732 | .22283 |
| -100.290 | 200.530 | 1199.10001 | -5.17400 | -5.10040 | -.06717 | -.19237 | .06581 | .16788 | -.04604 | .01732 | .22328 |
| | GRADIENT | .00000 | .00000 | .00000 | .00000 | .00000 | .00000 | .00000 | .00000 | .00000 | .00000 |

RUN NO. 4212/ 0 RN/L = 2.38 GRADIENT INTERVAL = -5.00/ 5.00

| Y | Z | X | ALPHA | BETA | PHI | CN | CLM | CY | CYN | CBL | CA |
|---|---|---|---|---|---|---|---|---|---|---|---|
| -602.310 | 203.240 | 1199.80000 | -5.17450 | -5.10040 | -.06708 | -.19281 | .06633 | .16809 | -.04616 | .01739 | .22535 |
| -600.870 | 100.500 | 1198.89999 | -5.17440 | -5.10040 | -.06705 | -.19286 | .06632 | .16804 | -.04613 | .01738 | .22533 |
| -600.940 | .308 | 1199.00000 | -5.17440 | -5.10040 | -.06710 | -.19284 | .06633 | .16812 | -.04614 | .01737 | .22541 |
| | GRADIENT | .00000 | .00000 | .00000 | .00000 | .00000 | .00000 | .00000 | .00000 | .00000 | .00000 |

IA143, AEDC V41A-P8A, O/ET W/R.H. SRB SEPARATING (OVXA95) ( 23 MAY 77 )

REFERENCE DATA

SREF = 2690.0000 SQ.FT. XMRP = 1097.0000 IN. XT
LREF = 1290.3000 INCHES YMRP = .0000 IN. YT
BREF = 1290.3000 INCHES ZMRP = 450.0000 IN. ZT
SCALE = .0100

PARAMETRIC DATA

ALPHA = -5.000 BETA = -5.000
DALPHA = -25.000 DBETA = 4.000
X = 1200.000 MACH = 4.500
JET PC = .000

RUN NO. 4284/ 0 RN/L = 2.39 GRADIENT INTERVAL = -5.00/ 5.00

| Y | Z | X | ALPHA | BETA | PHI | CN | CLM | CY | CYN | CBL | CA |
|---|---|---|---|---|---|---|---|---|---|---|---|
| -96.541 | 404.230 | 1201.39999 | -5.17400 | -5.10030 | -.06712 | -.19219 | .06550 | .16754 | -.04590 | .01725 | .22215 |
| -100.560 | 500.870 | 1199.20000 | -5.17430 | -5.10010 | -.06712 | -.19252 | .06592 | .16762 | -.04601 | .01729 | .22394 |
| -100.590 | 600.790 | 1199.30000 | -5.17440 | -5.10010 | -.06709 | -.19278 | .06617 | .16767 | -.04607 | .01730 | .22463 |
| | GRADIENT | .00000 | .00000 | .00000 | .00000 | .00000 | .00000 | .00000 | .00000 | .00000 | .00000 |

RUN NO. 4285/ 0 RN/L = 2.39 GRADIENT INTERVAL = -5.00/ 5.00

| Y | Z | X | ALPHA | BETA | PHI | CN | CLM | CY | CYN | CBL | CA |
|---|---|---|---|---|---|---|---|---|---|---|---|
| -601.750 | 604.280 | 1200.70000 | -5.17430 | -5.10000 | -.06712 | -.19304 | .06633 | .16770 | -.04608 | .01730 | .22494 |
| -600.230 | 500.870 | 1199.20000 | -5.17450 | -5.10020 | -.06715 | -.19308 | .06636 | .16779 | -.04610 | .01732 | .22500 |
| -600.240 | 400.940 | 1199.20000 | -5.17440 | -5.10010 | -.06703 | -.19300 | .06630 | .16771 | -.04608 | .01733 | .22476 |
| | GRADIENT | .00000 | .00000 | .00000 | .00000 | .00000 | .00000 | .00000 | .00000 | .00000 | .00000 |

IA143, AEDC V41A-P8A, O/ET W/R.H. SRB SEPARATING (OVXA96) ( 23 MAY 77 )

REFERENCE DATA

SREF = 2690.0000 SQ.FT. XMRP = 1097.0000 IN. XT
LREF = 1290.3000 INCHES YMRP = .0000 IN. YT
BREF = 1290.3000 INCHES ZMRP = 450.0000 IN. ZT
SCALE = .0100

PARAMETRIC DATA

ALPHA = -5.000 BETA = -5.000
DALPHA = -15.000 DBETA = -8.000
X = 1200.000 MACH = 4.500
JET PC = .000

RUN NO. 4214/ 0 RN/L = 2.38 GRADIENT INTERVAL = -5.00/ 5.00

| Y | Z | X | ALPHA | BETA | PHI | CN | CLM | CY | CYN | CBL | CA |
|---|---|---|---|---|---|---|---|---|---|---|---|
| -100.550 | 200.580 | 1199.10001 | -5.17390 | -5.10050 | -.06735 | -.19156 | .06497 | .16784 | -.04596 | .01725 | .22133 |
| -100.840 | 100.530 | 1199.00000 | -5.17330 | -5.10080 | -.06621 | -.19154 | .06520 | .16716 | -.04545 | .01731 | .22113 |
| -100.870 | .903 | 1199.20000 | -5.17500 | -5.10120 | -.06697 | -.18764 | .06187 | .16358 | -.04324 | .01631 | .22044 |
| | GRADIENT | .00000 | .00000 | .00000 | .00000 | .00000 | .00000 | .00000 | .00000 | .00000 | .00000 |

RUN NO. 4213/ 0 RN/L = 2.38 GRADIENT INTERVAL = -5.00/ 5.00

| Y | Z | X | ALPHA | BETA | PHI | CN | CLM | CY | CYN | CBL | CA |
|---|---|---|---|---|---|---|---|---|---|---|---|
| -600.120 | .459 | 1199.00000 | -5.17450 | -5.10040 | -.06711 | -.19289 | .06632 | .16816 | -.04616 | .01739 | .22542 |
| -599.190 | 100.460 | 1199.00000 | -5.17450 | -5.10030 | -.06715 | -.19285 | .06633 | .16777 | -.04603 | .01731 | .22541 |
| -599.680 | 200.270 | 1199.00000 | -5.17440 | -5.10030 | -.06712 | -.19292 | .06635 | .16799 | -.04612 | .01735 | .22542 |
| | GRADIENT | .00000 | .00000 | .00000 | .00000 | .00000 | .00000 | .00000 | .00000 | .00000 | .00000 |

IA143, AEDC V41A-P8A, O/ET W/R.H. SRB SEPARATING (OVXA97) ( 23 MAY 77 )

REFERENCE DATA

SREF = 2690.0000 SQ.FT. XMRP = 1097.0000 IN. XT
LREF = 1290.3000 INCHES YMRP = .0000 IN. YT
BREF = 1290.3000 INCHES ZMRP = 450.0000 IN. ZT
SCALE = .0100

PARAMETRIC DATA

ALPHA = -5.000 BETA = -5.000
DALPHA = -5.000 DBETA = -16.000
X = 1200.000 MACH = 4.500
JET PC = .000

RUN NO. 4215/ 0 RN/L = 2.39 GRADIENT INTERVAL = -5.00/ 5.00

| Y | Z | X | ALPHA | BETA | PHI | CN | CLM | CY | CYN | CBL | CA |
|---|---|---|---|---|---|---|---|---|---|---|---|
| -150.510 | 299.940 | 1199.30000 | -5.17430 | -5.10030 | -.06714 | -.19245 | .06595 | .16783 | -.04605 | .01732 | .22427 |
| -151.320 | 400.660 | 1199.80000 | -5.17440 | -5.10020 | -.06710 | -.19266 | .06625 | .16779 | -.04608 | .01732 | .22514 |
| -150.870 | 500.080 | 1199.50000 | -5.17450 | -5.10030 | -.06717 | -.19280 | .06634 | .16797 | -.04612 | .01735 | .22541 |
| -151.010 | 600.140 | 1199.50000 | -5.17420 | -5.10010 | -.06713 | -.19264 | .06628 | .16771 | -.04607 | .01730 | .22520 |
| | GRADIENT | .00000 | .00000 | .00000 | .00000 | .00000 | .00000 | .00000 | .00000 | .00000 | .00000 |

IA143, AEDC V41A-P8A, O/ET W/R.H. SRB SEPARATING (OVXA98) ( 23 MAY 77 )

REFERENCE DATA

SREF = 2690.0000 SQ.FT. XMRP = 1097.0000 IN. XT
LREF = 1290.3000 INCHES YMRP = .0000 IN. YT
BREF = 1290.3000 INCHES ZMRP = 450.0000 IN. ZT
SCALE = .0100

PARAMETRIC DATA

ALPHA = -5.000 BETA = -5.000
DALPHA = -5.000 DBETA = -20.000
X = 1200.000 MACH = 4.500
JET PC = .000

RUN NO. 4216/ 0 RN/L = 2.39 GRADIENT INTERVAL = -5.00/ 5.00

| Y | Z | X | ALPHA | BETA | PHI | CN | CLM | CY | CYN | CBL | CA |
|---|---|---|---|---|---|---|---|---|---|---|---|
| -600.480 | 200.100 | 1199.30000 | -5.17440 | -5.10020 | -.06713 | -.19283 | .06633 | .16786 | -.04611 | .01733 | .22531 |
| -600.640 | 299.960 | 1199.50000 | -5.17440 | -5.10030 | -.06711 | -.19267 | .06625 | .16785 | -.04609 | .01734 | .22504 |
| -600.810 | 400.000 | 1199.39999 | -5.17450 | -5.10020 | -.06716 | -.19278 | .06631 | .16784 | -.04609 | .01732 | .22540 |
| -600.780 | 499.990 | 1199.50000 | -5.17420 | -5.10010 | -.06707 | -.19257 | .06627 | .16774 | -.04607 | .01732 | .22524 |
| -600.710 | 599.950 | 1199.39999 | -5.17440 | -5.10030 | -.06713 | -.19273 | .06630 | .16796 | -.04614 | .01735 | .22527 |
| | GRADIENT | .00000 | .00000 | .00000 | .00000 | .00000 | .00000 | .00000 | .00000 | .00000 | .00000 |

IA143, AEDC V41A-P8A, O/ET W/R.H. SRB SEPARATING (OVXA99) ( 23 MAY 77 )

REFERENCE DATA

SREF = 2690.0000 SQ.FT. XMRP = 1097.0000 IN. XT
LREF = 1290.3000 INCHES YMRP = .0000 IN. YT
BREF = 1290.3000 INCHES ZMRP = 450.0000 IN. ZT
SCALE = .0100

PARAMETRIC DATA

ALPHA = -5.000 BETA = -5.000
DALPHA = -25.000 DBETA = -16.000
X = 1200.000 MACH = 4.500
JET PC = .000

RUN NO. 4282/ 0 RN/L = 2.37 GRADIENT INTERVAL = -5.00/ 5.00

| Y | Z | X | ALPHA | BETA | PHI | CN | CLM | CY | CYN | CBL | CA |
|---|---|---|---|---|---|---|---|---|---|---|---|
| -100.580 | 401.390 | 1201.10001 | -5.17370 | -5.10050 | -.06718 | -.19071 | .06386 | .16721 | -.04559 | .01714 | .21801 |
| -101.030 | 501.200 | 1199.80000 | -5.17370 | -5.10040 | -.06708 | -.19163 | .06476 | .16719 | -.04563 | .01717 | .21978 |
| -101.640 | 601.260 | 1199.89999 | -5.17410 | -5.10050 | -.06711 | -.19193 | .06529 | .16754 | -.04587 | .01727 | .22172 |
| | GRADIENT | .00000 | .00000 | .00000 | .00000 | .00000 | .00000 | .00000 | .00000 | .00000 | .00000 |

IA143, AEDC V41A-P8A, O/ET W/R.H. SRB SEPARATING (OVXB00) ( 23 MAY 77 )

REFERENCE DATA

SREF = 2690.0000 SQ.FT. XMRP = 1097.0000 IN. XT
LREF = 1290.3000 INCHES YMRP = .0000 IN. YT
BREF = 1290.3000 INCHES ZMRP = 450.0000 IN. ZT
SCALE = .0100

PARAMETRIC DATA

ALPHA = -5.000 BETA = -5.000
DALPHA = -25.000 DBETA = -20.000
X = 1200.000 MACH = 4.500
JET PC = .000

RUN NO. 4283/ 0 RN/L = 2.38 GRADIENT INTERVAL = -5.00/ 5.00

| Y | Z | X | ALPHA | BETA | PHI | CN | CLM | CY | CYN | CBL | CA |
|---|---|---|---|---|---|---|---|---|---|---|---|
| -600.340 | 400.610 | 1199.10001 | -5.17440 | -5.10020 | -.06712 | -.19277 | .06617 | .16787 | -.04610 | .01733 | .22462 |
| -600.850 | 500.650 | 1199.10001 | -5.17430 | -5.10020 | -.06712 | -.19272 | .06618 | .16770 | -.04603 | .01731 | .22461 |
| -600.190 | 600.560 | 1199.20000 | -5.17450 | -5.10030 | -.06717 | -.19285 | .06621 | .16796 | -.04613 | .01734 | .22478 |
| | GRADIENT | .00000 | .00000 | .00000 | .00000 | .00000 | .00000 | .00000 | .00000 | .00000 | .00000 |

IA143, AEDC V41A-P8A, O/ET W/R.H. SRB SEPARATING (OVXB01) ( 23 MAY 77 )

REFERENCE DATA

SREF = 2690.0000 SQ.FT. XMRP = 1097.0000 IN. XT
LREF = 1290.3000 INCHES YMRP = .0000 IN. YT
BREF = 1290.3000 INCHES ZMRP = 450.0000 IN. ZT
SCALE = .0100

PARAMETRIC DATA

ALPHA = -5.000 BETA = -5.000
DALPHA = -10.000 DBETA = .000
X = 1200.000 MACH = 4.500
JET PC = .000

RUN NO. 4244/ 0 RN/L = 2.39 GRADIENT INTERVAL = -5.00/ 5.00

| Y | Z | X | ALPHA | BETA | PHI | CN | CLM | CY | CYN | CBL | CA |
|---|---|---|---|---|---|---|---|---|---|---|---|
| -198.140 | -50.565 | 1199.39999 | -5.17420 | -5.10020 | -.06758 | -.19198 | .06548 | .16742 | -.04590 | .01716 | .22276 |
| -199.800 | .469 | 1199.10001 | -5.17450 | -5.10030 | -.06731 | -.19248 | .06588 | .16779 | -.04605 | .01728 | .22399 |
| -199.540 | 100.380 | 1199.20000 | -5.17440 | -5.10020 | -.06716 | -.19266 | .06618 | .16787 | -.04611 | .01733 | .22489 |
| -200.040 | 150.440 | 1199.20000 | -5.17450 | -5.10030 | -.06723 | -.19278 | .06621 | .16796 | -.04616 | .01735 | .22494 |
| | GRADIENT | .00000 | .00000 | .00000 | .00000 | .00000 | .00000 | .00000 | .00000 | .00000 | .00000 |

RUN NO. 4245/ 0 RN/L = 2.39 GRADIENT INTERVAL = -5.00/ 5.00

| Y | Z | X | ALPHA | BETA | PHI | CN | CLM | CY | CYN | CBL | CA |
|---|---|---|---|---|---|---|---|---|---|---|---|
| -401.360 | 151.040 | 1199.10001 | -5.17440 | -5.10010 | -.06712 | -.19266 | .06627 | .16779 | -.04613 | .01733 | .22514 |
| -400.900 | 100.380 | 1199.30000 | -5.17450 | -5.10020 | -.06718 | -.19289 | .06635 | .16786 | -.04615 | .01734 | .22529 |
| -400.900 | .710 | 1199.20000 | -5.17430 | -5.10000 | -.06712 | -.19286 | .06630 | .16780 | -.04612 | .01732 | .22505 |
| -400.820 | -49.367 | 1199.10001 | -5.17460 | -5.10030 | -.06722 | -.19271 | .06631 | .16793 | -.04619 | .01735 | .22523 |
| | GRADIENT | .00000 | .00000 | .00000 | .00000 | .00000 | .00000 | .00000 | .00000 | .00000 | .00000 |

IA143, AEDC V41A-P8A, O/ET W/R.H. SRB SEPARATING (OVXB02) ( 23 MAY 77 )

REFERENCE DATA

SREF = 2690.0000 SQ.FT. XMRP = 1097.0000 IN. XT
LREF = 1290.3000 INCHES YMRP = .0000 IN. YT
BREF = 1290.3000 INCHES ZMRP = 450.0000 IN. ZT
SCALE = .0100

PARAMETRIC DATA

ALPHA = -5.000 BETA = -5.000
DALPHA = -20.000 DBETA = .000
X = 1200.000 MACH = 4.500
JET PC = .000

RUN NO. 4276/ 0 RN/L = 2.38 GRADIENT INTERVAL = -5.00/ 5.00

| Y | Z | X | ALPHA | BETA | PHI | CN | CLM | CY | CYN | CBL | CA |
|---|---|---|---|---|---|---|---|---|---|---|---|
| -197.700 | 303.050 | 1200.50000 | -5.17460 | -5.10030 | -.06725 | -.19259 | .06598 | .16778 | -.04609 | .01731 | .22419 |
| -199.640 | 400.500 | 1199.00000 | -5.17440 | -5.10020 | -.06712 | -.19274 | .06622 | .16791 | -.04616 | .01735 | .22486 |
| -199.930 | 500.510 | 1199.10001 | -5.17450 | -5.10020 | -.06713 | -.19292 | .06628 | .16790 | -.04615 | .01735 | .22493 |
| | GRADIENT | .00000 | .00000 | .00000 | .00000 | .00000 | .00000 | .00000 | .00000 | .00000 | .00000 |

RUN NO. 4277/ 0 RN/L = 2.38 GRADIENT INTERVAL = -5.00/ 5.00

| Y | Z | X | ALPHA | BETA | PHI | CN | CLM | CY | CYN | CBL | CA |
|---|---|---|---|---|---|---|---|---|---|---|---|
| -401.510 | 502.010 | 1199.50000 | -5.17450 | -5.10030 | -.06709 | -.19286 | .06627 | .16794 | -.04615 | .01736 | .22492 |
| -400.430 | 400.410 | 1199.10001 | -5.17440 | -5.10010 | -.06715 | -.19282 | .06626 | .16779 | -.04612 | .01732 | .22483 |
| -400.500 | 300.580 | 1199.00000 | -5.17460 | -5.10020 | -.06719 | -.19288 | .06629 | .16774 | -.04609 | .01732 | .22490 |
| | GRADIENT | .00000 | .00000 | .00000 | .00000 | .00000 | .00000 | .00000 | .00000 | .00000 | .00000 |

IA143, AEDC V41A-P8A, O/ET W/R.H. SRB SEPARATING (OVXB03) ( 23 MAY 77 )

REFERENCE DATA

SREF = 2690.0000 SQ.FT. XMRP = 1097.0000 IN. XT
LREF = 1290.3000 INCHES YMRP = .0000 IN. YT
BREF = 1290.3000 INCHES ZMRP = 450.0000 IN. ZT
SCALE = .0100

PARAMETRIC DATA

ALPHA = -5.000 BETA = -5.000
DALPHA = -10.000 DBETA = -8.000
X = 1200.000 MACH = 4.500
JET PC = .000

RUN NO. 4242/ 0 RN/L = 2.39 GRADIENT INTERVAL = -5.00/ 5.00

| Y | Z | X | ALPHA | BETA | PHI | CN | CLM | CY | CYN | CBL | CA |
|---|---|---|---|---|---|---|---|---|---|---|---|
| -199.960 | -50.680 | 1199.80000 | -5.17520 | -5.10000 | -.07069 | -.18928 | .06313 | .16703 | -.04560 | .01640 | .22121 |
| -200.090 | .325 | 1199.10001 | -5.17400 | -5.10020 | -.06770 | -.19161 | .06514 | .16759 | -.04592 | .01715 | .22199 |
| -199.910 | 100.240 | 1199.20000 | -5.17410 | -5.10030 | -.06723 | -.19208 | .06563 | .16761 | -.04597 | .01726 | .22294 |
| -200.250 | 150.380 | 1199.10001 | -5.17410 | -5.10030 | -.06716 | -.19225 | .06576 | .16777 | -.04604 | .01730 | .22336 |
| | GRADIENT | .00000 | .00000 | .00000 | .00000 | .00000 | .00000 | .00000 | .00000 | .00000 | .00000 |

RUN NO. 4243/ 0 RN/L = 2.39 GRADIENT INTERVAL = -5.00/ 5.00

| Y | Z | X | ALPHA | BETA | PHI | CN | CLM | CY | CYN | CBL | CA |
|---|---|---|---|---|---|---|---|---|---|---|---|
| -402.090 | 151.240 | 1199.50000 | -5.17450 | -5.10020 | -.06718 | -.19282 | .06630 | .16783 | -.04613 | .01733 | .22512 |
| -400.460 | 100.340 | 1199.10001 | -5.17470 | -5.10030 | -.06723 | -.19298 | .06637 | .16800 | -.04617 | .01735 | .22536 |
| -400.760 | .669 | 1199.20000 | -5.17430 | -5.10020 | -.06715 | -.19258 | .06623 | .16785 | -.04615 | .01734 | .22496 |
| -401.100 | -49.442 | 1199.10001 | -5.17440 | -5.10020 | -.06711 | -.19277 | .06626 | .16788 | -.04613 | .01735 | .22488 |
| | GRADIENT | .00000 | .00000 | .00000 | .00000 | .00000 | .00000 | .00000 | .00000 | .00000 | .00000 |

IA143, AEDC V41A-P8A, O/ET W/R.H. SRB SEPARATING (OVXB04) ( 23 MAY 77 )

REFERENCE DATA

SREF = 2690.0000 SQ.FT. XMRP = 1097.0000 IN. XT
LREF = 1290.3000 INCHES YMRP = .0000 IN. YT
BREF = 1290.3000 INCHES ZMRP = 450.0000 IN. ZT
SCALE = .0100

PARAMETRIC DATA

ALPHA = -5.000 BETA = -5.000
DALPHA = -20.000 DBETA = -12.000
X = 1200.000 MACH = 4.500
JET PC = .000

RUN NO. 4270/ 0 RN/L = 2.38 GRADIENT INTERVAL = -5.00/ 5.00

| Y | Z | X | ALPHA | BETA | PHI | CN | CLM | CY | CYN | CBL | CA |
|---|---|---|---|---|---|---|---|---|---|---|---|
| -200.420 | 301.860 | 1200.80000 | -5.17370 | -5.10040 | -.06718 | -.19167 | .06503 | .16753 | -.04581 | .01722 | .22086 |
| -200.790 | 400.420 | 1199.10001 | -5.17400 | -5.10040 | -.06720 | -.19201 | .06542 | .16761 | -.04591 | .01726 | .22207 |
| -201.030 | 500.610 | 1199.30000 | -5.17420 | -5.10020 | -.06714 | -.19245 | .06592 | .16772 | -.04604 | .01730 | .22409 |
| | GRADIENT | .00000 | .00000 | .00000 | .00000 | .00000 | .00000 | .00000 | .00000 | .00000 | .00000 |

RUN NO. 4271/ 0 RN/L = 2.38 GRADIENT INTERVAL = -5.00/ 5.00

| Y | Z | X | ALPHA | BETA | PHI | CN | CLM | CY | CYN | CBL | CA |
|---|---|---|---|---|---|---|---|---|---|---|---|
| -402.880 | 502.290 | 1200.00000 | -5.17440 | -5.10020 | -.06714 | -.19277 | .06627 | .16793 | -.04617 | .01735 | .22501 |
| -398.860 | 400.370 | 1199.10001 | -5.17420 | -5.10020 | -.06703 | -.19265 | .06620 | .16796 | -.04617 | .01737 | .22486 |
| -400.160 | 300.470 | 1199.20000 | -5.17440 | -5.10030 | -.06712 | -.19268 | .06619 | .16804 | -.04618 | .01737 | .22475 |
| | GRADIENT | .00000 | .00000 | .00000 | .00000 | .00000 | .00000 | .00000 | .00000 | .00000 | .00000 |

IA143, AEDC V41A-P8A, O/ET W/R.H. SRB SEPARATING (OVXB05) ( 23 MAY 77 )

REFERENCE DATA

SREF = 2690.0000 SQ.FT. XMRP = 1097.0000 IN. XT
LREF = 1290.3000 INCHES YMRP = .0000 IN. YT
BREF = 1290.3000 INCHES ZMRP = 450.0000 IN. ZT
SCALE = .0100

PARAMETRIC DATA

ALPHA = -5.000 BETA = -5.000
DALPHA = -15.000 DBETA = -4.000
X = 1200.000 MACH = 4.500
JET PC = .000

RUN NO. 4265/ 0 RN/L = 2.38 GRADIENT INTERVAL = -5.00/ 5.00

| Y | Z | X | ALPHA | BETA | PHI | CN | CLM | CY | CYN | CBL | CA |
|---|---|---|---|---|---|---|---|---|---|---|---|
| -199.130 | 400.630 | 1199.70000 | -5.17440 | -5.10020 | -.06713 | -.19274 | .06624 | .16797 | -.04619 | .01736 | .22493 |
| -200.770 | 450.380 | 1199.10001 | -5.17440 | -5.10020 | -.06715 | -.19281 | .06629 | .16795 | -.04615 | .01735 | .22516 |
| -200.510 | 500.470 | 1199.00000 | -5.17430 | -5.10010 | -.06710 | -.19274 | .06623 | .16770 | -.04609 | .01731 | .22479 |
| | GRADIENT | .00000 | .00000 | .00000 | .00000 | .00000 | .00000 | .00000 | .00000 | .00000 | .00000 |

RUN NO. 4266/ 0 RN/L = 2.39 GRADIENT INTERVAL = -5.00/ 5.00

| Y | Z | X | ALPHA | BETA | PHI | CN | CLM | CY | CYN | CBL | CA |
|---|---|---|---|---|---|---|---|---|---|---|---|
| -300.350 | 500.980 | 1199.30000 | -5.17430 | -5.10020 | -.06713 | -.19277 | .06626 | .16793 | -.04617 | .01735 | .22495 |
| -300.260 | 450.180 | 1199.00000 | -5.17430 | -5.10010 | -.06714 | -.19276 | .06629 | .16785 | -.04614 | .01733 | .22508 |
| -300.090 | 400.390 | 1199.00000 | -5.17450 | -5.10030 | -.06719 | -.19279 | .06625 | .16799 | -.04618 | .01736 | .22490 |
| | GRADIENT | .00000 | .00000 | .00000 | .00000 | .00000 | .00000 | .00000 | .00000 | .00000 | .00000 |

IA143, AEDC V41A-P8A, O/ET W/R.H. SRB SEPARATING (OVXB06) ( 23 MAY 77 )

REFERENCE DATA

SREF = 2690.0000 SQ.FT. XMRP = 1097.0000 IN. XT
LREF = 1290.3000 INCHES YMRP = .0000 IN. YT
BREF = 1290.3000 INCHES ZMRP = 450.0000 IN. ZT
SCALE = .0100

PARAMETRIC DATA

ALPHA = -5.000 BETA = -5.000
DALPHA = -20.000 DBETA = -4.000
X = 1200.000 MACH = 4.500
JET PC = .000

RUN NO. 4272/ 0 RN/L = 2.38 GRADIENT INTERVAL = -5.00/ 5.00

| Y | Z | X | ALPHA | BETA | PHI | CN | CLM | CY | CYN | CBL | CA |
|---|---|---|---|---|---|---|---|---|---|---|---|
| -199.100 | 402.580 | 1199.39999 | -5.17430 | -5.10010 | -.06714 | -.19256 | .06602 | .16769 | -.04605 | .01730 | .22435 |
| -200.220 | 450.420 | 1199.00000 | -5.17440 | -5.10030 | -.06705 | -.19269 | .06617 | .16802 | -.04615 | .01738 | .22465 |
| -200.240 | 500.500 | 1199.00000 | -5.17440 | -5.10020 | -.06708 | -.19281 | .06623 | .16797 | -.04616 | .01736 | .22482 |
| | GRADIENT | .00000 | .00000 | .00000 | .00000 | .00000 | .00000 | .00000 | .00000 | .00000 | .00000 |

RUN NO. 4273/ 0 RN/L = 2.38 GRADIENT INTERVAL = -5.00/ 5.00

| Y | Z | X | ALPHA | BETA | PHI | CN | CLM | CY | CYN | CBL | CA |
|---|---|---|---|---|---|---|---|---|---|---|---|
| -300.240 | 501.180 | 1199.39999 | -5.17440 | -5.10020 | -.06710 | -.19284 | .06630 | .16804 | -.04620 | .01737 | .22514 |
| -299.870 | 450.420 | 1199.10001 | -5.17450 | -5.10030 | -.06711 | -.19289 | .06628 | .16804 | -.04620 | .01738 | .22492 |
| -300.150 | 400.510 | 1199.00000 | -5.17430 | -5.10010 | -.06709 | -.19276 | .06627 | .16783 | -.04613 | .01734 | .22502 |
| | GRADIENT | .00000 | .00000 | .00000 | .00000 | .00000 | .00000 | .00000 | .00000 | .00000 | .00000 |

IA143, AEDC V41A-P8A, O/ET W/R.H. SRB SEPARATING (OVXB07) ( 23 MAY 77 )

REFERENCE DATA

SREF = 2690.0000 SQ.FT. XMRP = 1097.0000 IN. XT
LREF = 1290.3000 INCHES YMRP = .0000 IN. YT
BREF = 1290.3000 INCHES ZMRP = 450.0000 IN. ZT
SCALE = .0100

PARAMETRIC DATA

ALPHA = -5.000 BETA = -5.000
DALPHA = -15.000 DBETA = -8.000
X = 1200.000 MACH = 4.500
JET PC = .000

RUN NO. 4268/ 0 RN/L = 2.39 GRADIENT INTERVAL = -5.00/ 5.00

| Y | Z | X | ALPHA | BETA | PHI | CN | CLM | CY | CYN | CBL | CA |
|---|---|---|---|---|---|---|---|---|---|---|---|
| -200.040 | 400.320 | 1200.10001 | -5.17440 | -5.10010 | -.06714 | -.19267 | .06616 | .16778 | -.04611 | .01733 | .22468 |
| -200.540 | 450.390 | 1199.20000 | -5.17440 | -5.10020 | -.06714 | -.19278 | .06624 | .16796 | -.04618 | .01736 | .22486 |
| -200.440 | 500.480 | 1199.20000 | -5.17440 | -5.10010 | -.06713 | -.19289 | .06628 | .16791 | -.04617 | .01734 | .22500 |
| | GRADIENT | .00000 | .00000 | .00000 | .00000 | .00000 | .00000 | .00000 | .00000 | .00000 | .00000 |

IA143, AEDC V41A-P8A, O/ET W/R.H. SRB SEPARATING (OVXB08) ( 23 MAY 77 )

REFERENCE DATA

SREF = 2690.0000 SQ.FT. XMRP = 1097.0000 IN. XT
LREF = 1290.3000 INCHES YMRP = .0000 IN. YT
BREF = 1290.3000 INCHES ZMRP = 450.0000 IN. ZT
SCALE = .0100

PARAMETRIC DATA

ALPHA = -5.000 BETA = -5.000
DALPHA = -20.000 DBETA = -8.000
X = 1200.000 MACH = 4.500
JET PC = .000

RUN NO. 4275/ 0 RN/L = 2.38 GRADIENT INTERVAL = -5.00/ 5.00

| Y | Z | X | ALPHA | BETA | PHI | CN | CLM | CY | CYN | CBL | CA |
|---|---|---|---|---|---|---|---|---|---|---|---|
| -199.660 | 499.530 | 1198.80000 | -5.17450 | -5.10030 | -.06717 | -.19274 | .06615 | .16798 | -.04617 | .01736 | .22461 |
| -200.510 | 450.330 | 1199.00000 | -5.17430 | -5.10030 | -.06712 | -.19253 | .06596 | .16796 | -.04611 | .01734 | .22420 |
| -200.040 | 400.490 | 1199.10001 | -5.17420 | -5.10030 | -.06717 | -.19235 | .06574 | .16773 | -.04601 | .01730 | .22326 |
| | GRADIENT | .00000 | .00000 | .00000 | .00000 | .00000 | .00000 | .00000 | .00000 | .00000 | .00000 |

RUN NO. 4274/ 0 RN/L = 2.38 GRADIENT INTERVAL = -5.00/ 5.00

| Y | Z | X | ALPHA | BETA | PHI | CN | CLM | CY | CYN | CBL | CA |
|---|---|---|---|---|---|---|---|---|---|---|---|
| -301.430 | 400.380 | 1199.39999 | -5.17450 | -5.10040 | -.06713 | -.19288 | .06623 | .16810 | -.04618 | .01738 | .22478 |
| -300.430 | 450.500 | 1199.10001 | -5.17440 | -5.10030 | -.06713 | -.19285 | .06625 | .16806 | -.04618 | .01737 | .22488 |
| -300.670 | 500.510 | 1199.20000 | -5.17430 | -5.10020 | -.06707 | -.19280 | .06626 | .16801 | -.04619 | .01737 | .22488 |
| | GRADIENT | .00000 | .00000 | .00000 | .00000 | .00000 | .00000 | .00000 | .00000 | .00000 | .00000 |

IA143, AEDC V41A-P8A, O/ET W/R.H. SRB SEPARATING (OVXB09) ( 23 MAY 77 )

REFERENCE DATA

SREF = 2690.0000 SQ.FT. XMRP = 1097.0000 IN. XT
LREF = 1290.3000 INCHES YMRP = .0000 IN. YT
BREF = 1290.3000 INCHES ZMRP = 450.0000 IN. ZT
SCALE = .0100

PARAMETRIC DATA

ALPHA = -5.000 BETA = -5.000
DALPHA = -15.000 DBETA = -8.000
X = 1200.000 MACH = 4.500
JET PC = .000

RUN NO. 4267/ 0 RN/L = 2.39 GRADIENT INTERVAL = -5.00/ 5.00

| Y | Z | X | ALPHA | BETA | PHI | CN | CLM | CY | CYN | CBL | CA |
|---|---|---|---|---|---|---|---|---|---|---|---|
| -300.420 | 301.180 | 1200.20000 | -5.17440 | -5.10020 | -.06709 | -.19271 | .06623 | .16789 | -.04615 | .01735 | .22496 |
| -300.870 | 400.310 | 1199.00000 | -5.17430 | -5.10020 | -.06709 | -.19270 | .06625 | .16785 | -.04613 | .01734 | .22494 |
| -300.530 | 450.360 | 1199.00000 | -5.17440 | -5.10020 | -.06711 | -.19266 | .06621 | .16783 | -.04613 | .01735 | .22485 |
| -300.360 | 500.490 | 1199.10001 | -5.17450 | -5.10020 | -.06713 | -.19285 | .06629 | .16778 | -.04612 | .01733 | .22496 |
| | GRADIENT | .00000 | .00000 | .00000 | .00000 | .00000 | .00000 | .00000 | .00000 | .00000 | .00000 |

IA143, AEDC V41A-P8A, O/ET W/R.H. SRB SEPARATING (OVXB10) ( 23 MAY 77 )

REFERENCE DATA

SREF = 2690.0000 SQ.FT. XMRP = 1097.0000 IN. XT
LREF = 1290.3000 INCHES YMRP = .0000 IN. YT
BREF = 1290.3000 INCHES ZMRP = 450.0000 IN. ZT
SCALE = .0100

PARAMETRIC DATA

ALPHA = -5.000 BETA = -5.000
DALPHA = -18.000 DBETA = -8.000
X = 1200.000 MACH = 4.500
JET PC = .000

RUN NO. 4269/ 0 RN/L = 2.39 GRADIENT INTERVAL = -5.00/ 5.00

| Y | Z | X | ALPHA | BETA | PHI | CN | CLM | CY | CYN | CBL | CA |
|---|---|---|---|---|---|---|---|---|---|---|---|
| -300.540 | 402.270 | 1200.70000 | -5.17430 | -5.10010 | -.06709 | -.19270 | .06623 | .16791 | -.04616 | .01735 | .22499 |
| -301.330 | 600.720 | 1199.39999 | -5.17430 | -5.10010 | -.06713 | -.19277 | .06627 | .16788 | -.04616 | .01734 | .22502 |
| -301.540 | 801.440 | 1199.70000 | -5.17460 | -5.10020 | -.06718 | -.19289 | .06632 | .16789 | -.04614 | .01734 | .22520 |
| -300.780 | 1000.500 | 1199.20000 | -5.17450 | -5.10030 | -.06712 | -.19288 | .06629 | .16805 | -.04620 | .01738 | .22502 |
| | GRADIENT | .00000 | .00000 | .00000 | .00000 | .00000 | .00000 | .00000 | .00000 | .00000 | .00000 |

IA143, AEDC V41A-P8A, O/ET W/R.H. SRB SEPARATING (OVXB11) ( 23 MAY 77 )

REFERENCE DATA

SREF = 2690.0000 SQ.FT. XMRP = 1097.0000 IN. XT
LREF = 1290.3000 INCHES YMRP = .0000 IN. YT
BREF = 1290.3000 INCHES ZMRP = 450.0000 IN. ZT
SCALE = .0100

PARAMETRIC DATA

ALPHA = -5.000 BETA = -10.000
DALPHA = .000 DBETA = .000
X = .000 MACH = 4.500
JET PC = .000

RUN NO. 4358/ 0 RN/L = 2.38 GRADIENT INTERVAL = -5.00/ 5.00

| Y | Z | X | ALPHA | BETA | PHI | CN | CLM | CY | CYN | CBL | CA |
|---|---|---|---|---|---|---|---|---|---|---|---|
| -49.993 | .002 | -.39439 | -5.21120 | -10.17000 | -.11761 | -.18802 | .05581 | .31604 | -.09544 | .03567 | .23843 |
| -49.392 | 24.811 | -.42274 | -5.20750 | -10.17100 | -.11663 | -.18692 | .05713 | .31930 | -.09711 | .03659 | .23827 |
| -50.013 | 99.716 | -.34128 | -5.19850 | -10.17400 | -.11711 | -.17898 | .05768 | .32715 | -.10005 | .03806 | .23813 |
| -50.282 | 149.990 | -.33993 | -5.19570 | -10.17700 | -.11872 | -.17264 | .05564 | .32941 | -.09972 | .03799 | .23740 |
| -51.196 | 250.140 | -.25842 | -5.19490 | -10.18100 | -.11929 | -.17174 | .05557 | .33175 | -.09905 | .03810 | .23710 |
| -50.555 | 350.180 | -.29514 | -5.20370 | -10.19200 | -.12627 | -.17754 | .05469 | .34014 | -.09854 | .03780 | .23671 |
| -49.729 | 474.570 | -.33922 | -5.21050 | -10.19900 | -.14144 | -.18899 | .05902 | .35784 | -.10505 | .03817 | .23643 |
| -50.107 | 499.710 | -.32754 | -5.21060 | -10.19800 | -.14324 | -.19058 | .06004 | .35931 | -.10603 | .03815 | .23647 |
| -50.035 | 599.670 | -.40721 | -5.21090 | -10.19800 | -.14428 | -.19203 | .06109 | .36016 | -.10663 | .03816 | .23748 |
| | GRADIENT | .00000 | .00000 | .00000 | .00000 | .00000 | .00000 | .00000 | .00000 | .00000 | .00000 |

RUN NO. 4359/ 0 RN/L = 2.38 GRADIENT INTERVAL = -5.00/ 5.00

| Y | Z | X | ALPHA | BETA | PHI | CN | CLM | CY | CYN | CBL | CA |
|---|---|---|---|---|---|---|---|---|---|---|---|
| -149.940 | 599.640 | -.37213 | -5.21080 | -10.19800 | -.14422 | -.19203 | .06108 | .36011 | -.10662 | .03816 | .23745 |
| -150.420 | 499.690 | -.34435 | -5.21080 | -10.19800 | -.14429 | -.19201 | .06104 | .36021 | -.10664 | .03816 | .23735 |
| -150.440 | 474.640 | -.36191 | -5.21070 | -10.19800 | -.14424 | -.19192 | .06101 | .36020 | -.10664 | .03816 | .23717 |
| -150.280 | 349.770 | -.26783 | -5.20920 | -10.19900 | -.13652 | -.18519 | .05701 | .35285 | -.10239 | .03807 | .23631 |
| -151.230 | 249.880 | -.48651 | -5.20390 | -10.19300 | -.12456 | -.17774 | .05449 | .33938 | -.09785 | .03794 | .23639 |
| -150.090 | 149.850 | -.30286 | -5.20090 | -10.18500 | -.12168 | -.17244 | .05282 | .33157 | -.09726 | .03731 | .23710 |
| -150.240 | 99.824 | -.31788 | -5.20010 | -10.18200 | -.11855 | -.17390 | .05394 | .32874 | -.09715 | .03753 | .23794 |
| -150.790 | 25.011 | -.37285 | -5.20230 | -10.18000 | -.11812 | -.17713 | .05452 | .32625 | -.09646 | .03717 | .23785 |
| -150.720 | .007 | -.39377 | -5.20420 | -10.18000 | -.11951 | -.17783 | .05408 | .32487 | -.09565 | .03657 | .23797 |
| | GRADIENT | .00000 | .00000 | .00000 | .00000 | .00000 | .00000 | .00000 | .00000 | .00000 | .00000 |

IA143, AEDC V41A-P8A, O/ET W/R.H. SRB SEPARATING (OVXB12) ( 23 MAY 77 )

REFERENCE DATA

SREF = 2690.0000 SQ.FT. XMRP = 1097.0000 IN. XT
LREF = 1290.3000 INCHES YMRP = .0000 IN. YT
BREF = 1290.3000 INCHES ZMRP = 450.0000 IN. ZT
SCALE = .0100

PARAMETRIC DATA

ALPHA = -5.000 BETA = -10.000
DALPHA = -5.000 DBETA = .000
X = .000 MACH = 4.500
JET PC = .000

RUN NO. 4372/ 0 RN/L = 2.38 GRADIENT INTERVAL = -5.00/ 5.00

| Y | Z | X | ALPHA | BETA | PHI | CN | CLM | CY | CYN | CBL | CA |
|---|---|---|---|---|---|---|---|---|---|---|---|
| -50.112 | 25.089 | -.41334 | -5.21740 | -10.16800 | -.12592 | -.17133 | .04329 | .30237 | -.08839 | .03089 | .23862 |
| -49.111 | 99.744 | -.29682 | -5.20470 | -10.16900 | -.11742 | -.17412 | .05135 | .31200 | -.09349 | .03482 | .23827 |
| -49.814 | 150.020 | -.33031 | -5.19750 | -10.17200 | -.11506 | -.17299 | .05437 | .31847 | -.09603 | .03663 | .23727 |
| -50.981 | 250.470 | -.36055 | -5.19240 | -10.17800 | -.11251 | -.16528 | .05245 | .32218 | -.09548 | .03760 | .23662 |
| -50.799 | 350.470 | -.35889 | -5.20010 | -10.18900 | -.12057 | -.17032 | .05164 | .33231 | -.09603 | .03747 | .23538 |
| -49.582 | 474.780 | -.30396 | -5.20900 | -10.19800 | -.13629 | -.18380 | .05618 | .35243 | -.10224 | .03803 | .23590 |
| -49.736 | 500.090 | -.33966 | -5.20980 | -10.19900 | -.13850 | -.18608 | .05728 | .35489 | -.10341 | .03812 | .23573 |
| -49.820 | 599.950 | -.40806 | -5.21070 | -10.19800 | -.14422 | -.19202 | .06102 | .36011 | -.10661 | .03816 | .23699 |
| | GRADIENT | .00000 | .00000 | .00000 | .00000 | .00000 | .00000 | .00000 | .00000 | .00000 | .00000 |

RUN NO. 4373/ 0 RN/L = 2.38 GRADIENT INTERVAL = -5.00/ 5.00

| Y | Z | X | ALPHA | BETA | PHI | CN | CLM | CY | CYN | CBL | CA |
|---|---|---|---|---|---|---|---|---|---|---|---|
| -150.060 | 599.680 | -.39941 | -5.21080 | -10.19800 | -.14423 | -.19205 | .06109 | .36009 | -.10662 | .03815 | .23738 |
| -149.990 | 499.860 | -.39546 | -5.21070 | -10.19800 | -.14424 | -.19173 | .06073 | .36007 | -.10652 | .03813 | .23650 |
| -150.030 | 474.850 | -.38569 | -5.21060 | -10.19800 | -.14262 | -.19011 | .05963 | .35860 | -.10556 | .03812 | .23592 |
| -150.290 | 349.970 | -.53287 | -5.20770 | -10.19800 | -.13171 | -.18015 | .05438 | .34661 | -.09948 | .03774 | .23596 |
| -150.720 | 250.040 | -.62860 | -5.20150 | -10.19000 | -.11983 | -.17414 | .05299 | .33333 | -.09597 | .03774 | .23561 |
| -150.120 | 150.070 | -.38938 | -5.20030 | -10.18300 | -.11767 | -.16948 | .05097 | .32436 | -.09417 | .03665 | .23667 |
| -150.400 | 100.070 | -.39961 | -5.20230 | -10.18100 | -.11882 | -.16889 | .04960 | .32142 | -.09360 | .03590 | .23683 |
| -150.830 | 25.259 | -.44829 | -5.21150 | -10.18100 | -.13317 | -.16075 | .04125 | .31616 | -.09011 | .03163 | .23805 |
| | GRADIENT | .00000 | .00000 | .00000 | .00000 | .00000 | .00000 | .00000 | .00000 | .00000 | .00000 |

IA143, AEDC V41A-P8A, O/ET W/R.H. SRB SEPARATING (OVXB13) ( 23 MAY 77 )

REFERENCE DATA

SREF = 2690.0000 SQ.FT. XMRP = 1097.0000 IN. XT
LREF = 1290.3000 INCHES YMRP = .0000 IN. YT
BREF = 1290.3000 INCHES ZMRP = 450.0000 IN. ZT
SCALE = .0100

PARAMETRIC DATA

ALPHA = -5.000 BETA = -10.000
DALPHA = .000 DBETA = -4.000
X = .000 MACH = 4.500
JET PC = .000

RUN NO. 4361/ 0 RN/L = 2.37 GRADIENT INTERVAL = -5.00/ 5.00

| Y | Z | X | ALPHA | BETA | PHI | CN | CLM | CY | CYN | CBL | CA |
|---|---|---|---|---|---|---|---|---|---|---|---|
| -50.710 | 249.930 | -.37725 | -5.19130 | -10.17800 | -.11594 | -.16187 | .05149 | .32687 | -.09795 | .03794 | .23674 |
| -51.150 | 350.270 | -.20464 | -5.20120 | -10.19000 | -.12316 | -.17120 | .05203 | .33550 | -.09717 | .03755 | .23658 |
| -50.475 | 474.810 | -.32582 | -5.20950 | -10.19800 | -.13880 | -.18597 | .05735 | .35511 | -.10361 | .03810 | .23592 |
| -50.245 | 499.740 | -.28588 | -5.21060 | -10.19900 | -.14142 | -.18842 | .05867 | .35740 | -.10485 | .03812 | .23607 |
| -50.075 | 599.610 | -.31027 | -5.21080 | -10.19800 | -.14417 | -.19210 | .06109 | .36015 | -.10662 | .03816 | .23747 |
| | GRADIENT | .00000 | .00000 | .00000 | .00000 | .00000 | .00000 | .00000 | .00000 | .00000 | .00000 |

IA143, AEDC V41A-P8A, O/ET W/R.H. SRB SEPARATING (OVXB14) ( 23 MAY 77 )

REFERENCE DATA

SREF = 2690.0000 SQ.FT. XMRP = 1097.0000 IN. XT
LREF = 1290.3000 INCHES YMRP = .0000 IN. YT
BREF = 1290.3000 INCHES ZMRP = 450.0000 IN. ZT
SCALE = .0100

PARAMETRIC DATA

ALPHA = -5.000 BETA = -10.000
DALPHA = -5.000 DBETA = -4.000
X = .000 MACH = 4.500
JET PC = .000

RUN NO. 4371/ 0 RN/L = 2.38 GRADIENT INTERVAL = -5.00/ 5.00

| Y | Z | X | ALPHA | BETA | PHI | CN | CLM | CY | CYN | CBL | CA |
|---|---|---|---|---|---|---|---|---|---|---|---|
| -49.580 | 473.300 | 1.12660 | -5.20720 | -10.19700 | -.13276 | -.17824 | .05334 | .34789 | -.10026 | .03781 | .23487 |
| -50.100 | 499.980 | -.32289 | -5.20870 | -10.19800 | -.13562 | -.18145 | .05482 | .35128 | -.10169 | .03794 | .23509 |
| -50.143 | 599.880 | -.35171 | -5.21060 | -10.19800 | -.14417 | -.19176 | .06077 | .36003 | -.10654 | .03813 | .23648 |
| | GRADIENT | .00000 | .00000 | .00000 | .00000 | .00000 | .00000 | .00000 | .00000 | .00000 | .00000 |

IA143, AEDC V41A-P8A, O/ET W/R.H. SRB SEPARATING (OVXB15) ( 23 MAY 77 )

REFERENCE DATA

SREF = 2690.0000 SQ.FT. XMRP = 1097.0000 IN. XT
LREF = 1290.3000 INCHES YMRP = .0000 IN. YT
BREF = 1290.3000 INCHES ZMRP = 450.0000 IN. ZT
SCALE = .0100

PARAMETRIC DATA

ALPHA = -5.000 BETA = -10.000
DALPHA = .000 DBETA = -4.000
X = .000 MACH = 4.500
JET PC = .000

RUN NO. 4360/ 0 RN/L = 2.38 GRADIENT INTERVAL = -5.00/ 5.00

| Y | Z | X | ALPHA | BETA | PHI | CN | CLM | CY | CYN | CBL | CA |
|---|---|---|---|---|---|---|---|---|---|---|---|
| -150.030 | .018 | -.38659 | -5.20400 | -10.17400 | -.11192 | -.17124 | .04929 | .30752 | -.08916 | .03466 | .23708 |
| -149.950 | 24.963 | -.44992 | -5.20130 | -10.17400 | -.11005 | -.17134 | .05072 | .31078 | -.09109 | .03582 | .23706 |
| -150.000 | 99.767 | -.36081 | -5.19690 | -10.17700 | -.10869 | -.16721 | .05065 | .31682 | -.09317 | .03726 | .23725 |
| -150.400 | 149.900 | -.38055 | -5.19710 | -10.18100 | -.11206 | -.16479 | .04948 | .32053 | -.09335 | .03712 | .23704 |
| -150.460 | 250.030 | -.27173 | -5.20020 | -10.18900 | -.11800 | -.17113 | .05191 | .33155 | -.09556 | .03781 | .23599 |
| -150.370 | 349.690 | -.18451 | -5.20780 | -10.19800 | -.13241 | -.18002 | .05427 | .34781 | -.10002 | .03782 | .23625 |
| -150.240 | 474.760 | -.25898 | -5.21070 | -10.19800 | -.14374 | -.19108 | .06030 | .35970 | -.10624 | .03814 | .23632 |
| -150.020 | 499.680 | -.27147 | -5.21060 | -10.19700 | -.14423 | -.19189 | .06095 | .36001 | -.10658 | .03812 | .23676 |
| -150.180 | 599.700 | -.29520 | -5.21090 | -10.19800 | -.14429 | -.19219 | .06114 | .36022 | -.10666 | .03817 | .23762 |
| | GRADIENT | .00000 | .00000 | .00000 | .00000 | .00000 | .00000 | .00000 | .00000 | .00000 | .00000 |

IA143, AEDC V41A-P8A, O/ET W/R.H. SRB SEPARATING (OVXB16) ( 23 MAY 77 )

REFERENCE DATA

SREF = 2690.0000 SQ.FT. XMRP = 1097.0000 IN. XT
LREF = 1290.3000 INCHES YMRP = .0000 IN. YT
BREF = 1290.3000 INCHES ZMRP = 450.0000 IN. ZT
SCALE = .0100

PARAMETRIC DATA

ALPHA = -5.000 BETA = -10.000
DALPHA = -5.000 DBETA = -4.000
X = .000 MACH = 4.500
JET PC = .000

RUN NO. 4370/ 0 RN/L = 2.37 GRADIENT INTERVAL = -5.00/ 5.00

| Y | Z | X | ALPHA | BETA | PHI | CN | CLM | CY | CYN | CBL | CA |
|---|---|---|---|---|---|---|---|---|---|---|---|
| -149.840 | 23.828 | .94816 | -5.21110 | -10.17500 | -.12125 | -.14880 | .03318 | .29147 | -.07915 | .02885 | .23820 |
| -149.450 | 99.798 | -.34775 | -5.20210 | -10.17500 | -.11165 | -.15754 | .04224 | .30379 | -.08658 | .03378 | .23653 |
| -149.920 | 149.990 | -.33224 | -5.19790 | -10.17800 | -.10802 | -.15969 | .04551 | .30924 | -.08858 | .03563 | .23624 |
| -150.370 | 249.880 | -.38041 | -5.19800 | -10.18700 | -.11047 | -.16519 | .04865 | .32183 | -.09146 | .03735 | .23489 |
| -150.210 | 349.960 | -.31948 | -5.20460 | -10.19600 | -.12433 | -.17433 | .05173 | .33913 | -.09633 | .03770 | .23502 |
| -150.320 | 474.950 | -.39354 | -5.20990 | -10.19900 | -.13841 | -.18650 | .05729 | .35507 | -.10336 | .03813 | .23540 |
| -149.940 | 500.070 | -.38166 | -5.21030 | -10.19900 | -.14099 | -.18848 | .05852 | .35721 | -.10465 | .03811 | .23539 |
| -150.320 | 599.980 | -.31793 | -5.21080 | -10.19800 | -.14422 | -.19217 | .06107 | .36015 | -.10664 | .03817 | .23715 |
| | GRADIENT | .00000 | .00000 | .00000 | .00000 | .00000 | .00000 | .00000 | .00000 | .00000 | .00000 |

IA143, AEDC V41A-P8A, O/ET W/R.H. SRB SEPARATING (OVXB17) ( 23 MAY 77 )

REFERENCE DATA

SREF = 2690.0000 SQ.FT. XMRP = 1097.0000 IN. XT
LREF = 1290.3000 INCHES YMRP = .0000 IN. YT
BREF = 1290.3000 INCHES ZMRP = 450.0000 IN. ZT
SCALE = .0100

PARAMETRIC DATA

ALPHA = -5.000 BETA = -10.000
DALPHA = .000 DBETA = .000
X = 300.000 MACH = 4.500
JET PC = .000

RUN NO. 4362/ 0 RN/L = 2.37 GRADIENT INTERVAL = -5.00/ 5.00

| Y | Z | X | ALPHA | BETA | PHI | CN | CLM | CY | CYN | CBL | CA |
|---|---|---|---|---|---|---|---|---|---|---|---|
| -50.161 | 99.898 | 299.43000 | -5.20260 | -10.18700 | -.12676 | -.18042 | .05702 | .34004 | -.10060 | .03797 | .23732 |
| -50.865 | 249.610 | 299.65000 | -5.20540 | -10.19400 | -.13096 | -.18190 | .05669 | .34645 | -.10092 | .03808 | .23660 |
| -50.155 | 299.780 | 299.55000 | -5.20680 | -10.19600 | -.13352 | -.18316 | .05702 | .34895 | -.10161 | .03806 | .23659 |
| -50.826 | 400.240 | 299.52000 | -5.20900 | -10.19800 | -.13752 | -.18509 | .05715 | .35314 | -.10286 | .03796 | .23653 |
| -50.822 | 425.050 | 299.42000 | -5.20960 | -10.19800 | -.13857 | -.18623 | .05765 | .35462 | -.10346 | .03807 | .23639 |
| -50.446 | 500.210 | 299.60000 | -5.21060 | -10.19800 | -.14332 | -.19072 | .06009 | .35938 | -.10607 | .03815 | .23639 |
| -50.156 | 599.840 | 299.53000 | -5.21090 | -10.19800 | -.14429 | -.19209 | .06111 | .36021 | -.10664 | .03817 | .23756 |
| | GRADIENT | .00000 | .00000 | .00000 | .00000 | .00000 | .00000 | .00000 | .00000 | .00000 | .00000 |

RUN NO. 4363/ 0 RN/L = 2.37 GRADIENT INTERVAL = -5.00/ 5.00

| Y | Z | X | ALPHA | BETA | PHI | CN | CLM | CY | CYN | CBL | CA |
|---|---|---|---|---|---|---|---|---|---|---|---|
| -200.200 | 599.410 | 299.66000 | -5.21080 | -10.19700 | -.14421 | -.19215 | .06112 | .36010 | -.10662 | .03814 | .23755 |
| -200.320 | 499.710 | 299.50000 | -5.21090 | -10.19800 | -.14427 | -.19197 | .06104 | .35997 | -.10659 | .03814 | .23728 |
| -200.010 | 424.610 | 299.59000 | -5.21070 | -10.19800 | -.14434 | -.19200 | .06100 | .36030 | -.10667 | .03816 | .23704 |
| -200.060 | 399.820 | 299.53000 | -5.21050 | -10.19800 | -.14391 | -.19140 | .06061 | .35973 | -.10637 | .03812 | .23658 |
| -199.530 | 299.450 | 299.49000 | -5.20980 | -10.19900 | -.13840 | -.18739 | .05806 | .35469 | -.10335 | .03808 | .23630 |
| -199.710 | 249.720 | 299.57000 | -5.20950 | -10.19800 | -.13690 | -.18568 | .05724 | .35281 | -.10242 | .03799 | .23668 |
| -199.650 | 100.080 | 299.45000 | -5.20820 | -10.19700 | -.13612 | -.18376 | .05668 | .35106 | -.10222 | .03785 | .23667 |
| | GRADIENT | .00000 | .00000 | .00000 | .00000 | .00000 | .00000 | .00000 | .00000 | .00000 | .00000 |

IA143, AEDC V41A-P8A, O/ET W/R.H. SRB SEPARATING (OVXB18) ( 23 MAY 77 )

REFERENCE DATA

SREF = 2690.0000 SQ.FT. XMRP = 1097.0000 IN. XT
LREF = 1290.3000 INCHES YMRP = .0000 IN. YT
BREF = 1290.3000 INCHES ZMRP = 450.0000 IN. ZT
SCALE = .0100

PARAMETRIC DATA

ALPHA = -5.000 BETA = -10.000
DALPHA = -10.000 DBETA = .000
X = 300.000 MACH = 4.500
JET PC = .000

RUN NO. 4292/ 0 RN/L = 2.38 GRADIENT INTERVAL = -5.00/ 5.00

| Y | Z | X | ALPHA | BETA | PHI | CN | CLM | CY | CYN | CBL | CA |
|---|---|---|---|---|---|---|---|---|---|---|---|
| -45.000 | 98.779 | 300.43000 | -5.21240 | -10.18500 | -.13696 | -.16318 | .04260 | .32331 | -.09215 | .03217 | .23837 |
| -49.898 | 249.690 | 299.33000 | -5.20110 | -10.18800 | -.11910 | -.17196 | .05204 | .32943 | -.09461 | .03713 | .23649 |
| -49.744 | 300.230 | 299.50000 | -5.20360 | -10.19400 | -.12132 | -.17369 | .05185 | .33521 | -.09518 | .03759 | .23611 |
| -50.548 | 400.580 | 299.56000 | -5.20680 | -10.19800 | -.12939 | -.17768 | .05310 | .34456 | -.09847 | .03777 | .23557 |
| -50.400 | 425.320 | 299.38000 | -5.20770 | -10.19800 | -.13203 | -.17910 | .05367 | .34732 | -.09967 | .03778 | .23558 |
| -50.619 | 500.750 | 299.64000 | -5.20960 | -10.19900 | -.13738 | -.18535 | .05673 | .35387 | -.10269 | .03807 | .23575 |
| -50.238 | 600.600 | 299.74000 | -5.21090 | -10.19800 | -.14425 | -.19222 | .06109 | .36020 | -.10652 | .03815 | .23714 |
| | GRADIENT | .00000 | .00000 | .00000 | .00000 | .00000 | .00000 | .00000 | .00000 | .00000 | .00000 |

IA143, AEDC V41A-P8A, O/ET W/R.H. SRB SEPARATING (OVXB19) ( 23 MAY 77 )

REFERENCE DATA

SREF = 2690.0000 SQ.FT. XMRP = 1097.0000 IN. XT
LREF = 1290.3000 INCHES YMRP = .0000 IN. YT
BREF = 1290.3000 INCHES ZMRP = 450.0000 IN. ZT
SCALE = .0100

PARAMETRIC DATA

ALPHA = -5.000 BETA = -10.000
DALPHA = -10.000 DBETA = .000
X = 300.000 MACH = 4.500
JET PC = .000

RUN NO. 4290/ 0 RN/L = 2.38 GRADIENT INTERVAL = -5.00/ 5.00

| Y | Z | X | ALPHA | BETA | PHI | CN | CLM | CY | CYN | CBL | CA |
|---|---|---|---|---|---|---|---|---|---|---|---|
| -196.260 | 99.951 | 300.66000 | -5.21490 | -10.19600 | -.14862 | -.16569 | .04335 | .33943 | -.09536 | .03254 | .23590 |
| -199.650 | 150.100 | 299.41000 | -5.21040 | -10.19700 | -.13729 | -.17537 | .05031 | .34262 | -.09751 | .03570 | .23495 |
| -199.370 | 200.120 | 299.53000 | -5.20820 | -10.19800 | -.13200 | -.18072 | .05437 | .34549 | -.09878 | .03741 | .23551 |
| -200.020 | 250.280 | 299.57000 | -5.20820 | -10.19800 | -.13266 | -.18201 | .05514 | .34731 | -.09964 | .03766 | .23542 |
| -200.550 | 300.310 | 299.43000 | -5.20900 | -10.19900 | -.13385 | -.18371 | .05581 | .34928 | -.10034 | .03780 | .23564 |
| -200.540 | 400.340 | 299.56000 | -5.21070 | -10.19900 | -.13950 | -.18865 | .05847 | .35580 | -.10365 | .03809 | .23596 |
| -200.180 | 425.100 | 299.42000 | -5.21060 | -10.19900 | -.14123 | -.18977 | .05925 | .35777 | -.10479 | .03816 | .23597 |
| -199.950 | 500.250 | 299.44000 | -5.21090 | -10.19800 | -.14424 | -.19225 | .06107 | .36042 | -.10660 | .03819 | .23712 |
| -199.870 | 600.120 | 299.62000 | -5.21120 | -10.19800 | -.14429 | -.19244 | .06126 | .36042 | -.10663 | .03820 | .23794 |
| | GRADIENT | .00000 | .00000 | .00000 | .00000 | .00000 | .00000 | .00000 | .00000 | .00000 | .00000 |

IA143, AEDC V41A-P8A, O/ET W/R.H. SRB SEPARATING (OVXB20) ( 23 MAY 77 )

REFERENCE DATA

SREF = 2690.0000 SQ.FT. XMRP = 1097.0000 IN. XT
LREF = 1290.3000 INCHES YMRP = .0000 IN. YT
BREF = 1290.3000 INCHES ZMRP = 450.0000 IN. ZT
SCALE = .0100

PARAMETRIC DATA

ALPHA = -5.000 BETA = -10.000
DALPHA = .000 DBETA = -8.000
X = 300.000 MACH = 4.500
JET PC = .000

RUN NO. 4365/ 0 RN/L = 2.37 GRADIENT INTERVAL = -5.00/ 5.00

| Y | Z | X | ALPHA | BETA | PHI | CN | CLM | CY | CYN | CBL | CA |
|---|---|---|---|---|---|---|---|---|---|---|---|
| -50.134 | 249.810 | 299.58000 | -5.20010 | -10.18800 | -.12474 | -.16652 | .05011 | .33738 | -.09920 | .03782 | .23646 |
| -50.244 | 299.870 | 299.87000 | -5.20360 | -10.19200 | -.12683 | -.17130 | .05103 | .33992 | -.09843 | .03763 | .23602 |
| -50.990 | 400.420 | 299.95000 | -5.20710 | -10.19700 | -.13325 | -.17938 | .05442 | .34832 | -.10078 | .03785 | .23620 |
| -51.164 | 425.020 | 299.58000 | -5.20810 | -10.19800 | -.13521 | -.18069 | .05480 | .35058 | -.10157 | .03788 | .23619 |
| -51.573 | 500.470 | 299.66000 | -5.21000 | -10.19800 | -.14051 | -.18760 | .05814 | .35713 | -.10462 | .03817 | .23593 |
| -50.641 | 600.000 | 299.58000 | -5.21080 | -10.19800 | -.14426 | -.19205 | .06107 | .36008 | -.10662 | .03816 | .23735 |
| | GRADIENT | .00000 | .00000 | .00000 | .00000 | .00000 | .00000 | .00000 | .00000 | .00000 | .00000 |

IA143, AEDC V41A-P8A, O/ET W/R.H. SRB SEPARATING (OVXB21) ( 23 MAY 77 )

REFERENCE DATA

SREF = 2690.0000 SQ.FT. XMRP = 1097.0000 IN. XT
LREF = 1290.3000 INCHES YMRP = .0000 IN. YT
BREF = 1290.3000 INCHES ZMRP = 450.0000 IN. ZT
SCALE = .0100

PARAMETRIC DATA

ALPHA = -5.000 BETA = -10.000
DALPHA = -10.000 DBETA = -8.000
X = 300.000 MACH = 4.500
JET PC = .000

RUN NO. 4296/ 0 RN/L = 2.37 GRADIENT INTERVAL = -5.00/ 5.00

| Y | Z | X | ALPHA | BETA | PHI | CN | CLM | CY | CYN | CBL | CA |
|---|---|---|---|---|---|---|---|---|---|---|---|
| -49.403 | 423.510 | 301.35000 | -5.20360 | -10.19500 | -.12024 | -.16120 | .04392 | .33340 | -.09391 | .03735 | .23398 |
| -51.232 | 500.990 | 300.01000 | -5.20710 | -10.19800 | -.13040 | -.17380 | .05030 | .34547 | -.09888 | .03776 | .23347 |
| -50.323 | 600.890 | 300.02000 | -5.21070 | -10.19900 | -.14245 | -.18940 | .05886 | .35859 | -.10535 | .03811 | .23499 |
| | GRADIENT | .00000 | .00000 | .00000 | .00000 | .00000 | .00000 | .00000 | .00000 | .00000 | .00000 |

IA143, AEDC V41A-P8A, O/ET W/R.H. SRB SEPARATING (OVXB22) ( 23 MAY 77 )

REFERENCE DATA

SREF = 2690.0000 SQ.FT. XMRP = 1097.0000 IN. XT
LREF = 1290.3000 INCHES YMRP = .0000 IN. YT
BREF = 1290.3000 INCHES ZMRP = 450.0000 IN. ZT
SCALE = .0100

PARAMETRIC DATA

ALPHA = -5.000 BETA = -10.000
DALPHA = .000 DBETA = -8.000
X = 300.000 MACH = 4.500
JET PC = .000

RUN NO. 4364/ 0 RN/L = 2.37 GRADIENT INTERVAL = -5.00/ 5.00

| Y | Z | X | ALPHA | BETA | PHI | CN | CLM | CY | CYN | CBL | CA |
|---|---|---|---|---|---|---|---|---|---|---|---|
| -200.350 | 99.914 | 299.67000 | -5.20590 | -10.19600 | -.12500 | -.17183 | .04976 | .33563 | -.09434 | .03677 | .23548 |
| -201.400 | 249.430 | 299.80000 | -5.20690 | -10.19800 | -.12916 | -.17835 | .05333 | .34475 | -.09847 | .03784 | .23533 |
| -201.620 | 299.890 | 299.62000 | -5.20820 | -10.19800 | -.13286 | -.18099 | .05457 | .34818 | -.10011 | .03782 | .23539 |
| -201.900 | 400.320 | 299.67000 | -5.21010 | -10.19900 | -.13962 | -.18772 | .05806 | .35607 | -.10396 | .03812 | .23550 |
| -200.830 | 424.900 | 299.54000 | -5.21050 | -10.19800 | -.14188 | -.18948 | .05918 | .35804 | -.10517 | .03813 | .23573 |
| -200.640 | 500.020 | 299.59000 | -5.21060 | -10.19800 | -.14412 | -.19201 | .06100 | .36011 | -.10658 | .03815 | .23699 |
| -200.200 | 599.890 | 299.69000 | -5.21080 | -10.19800 | -.14423 | -.19212 | .06107 | .36005 | -.10659 | .03814 | .23735 |
| | GRADIENT | .00000 | .00000 | .00000 | .00000 | .00000 | .00000 | .00000 | .00000 | .00000 | .00000 |

IA143, AEDC V41A-P8A, O/ET W/R.H. SRB SEPARATING (OVXB23) ( 23 MAY 77 )

REFERENCE DATA

SREF = 2690.0000 SQ.FT. XMRP = 1097.0000 IN. XT
LREF = 1290.3000 INCHES YMRP = .0000 IN. YT
BREF = 1290.3000 INCHES ZMRP = 450.0000 IN. ZT
SCALE = .0100

PARAMETRIC DATA

ALPHA = -5.000 BETA = -10.000
DALPHA = -10.000 DBETA = -8.000
X = 300.000 MACH = 4.500
JET PC = .000

RUN NO. 4295/ 0 RN/L = 2.38 GRADIENT INTERVAL = -5.00/ 5.00

| Y | Z | X | ALPHA | BETA | PHI | CN | CLM | CY | CYN | CBL | CA |
|---|---|---|---|---|---|---|---|---|---|---|---|
| -198.040 | 99.970 | 301.19000 | -5.21220 | -10.19400 | -.12980 | -.14754 | .03247 | .31006 | -.08075 | .02998 | .23660 |
| -199.850 | 249.490 | 299.62000 | -5.20560 | -10.19900 | -.11681 | -.16669 | .04578 | .32741 | -.08890 | .03644 | .23430 |
| -201.100 | 300.360 | 299.52000 | -5.20610 | -10.19900 | -.11953 | -.16987 | .04750 | .33304 | -.09159 | .03710 | .23374 |
| -200.860 | 400.270 | 299.78000 | -5.20850 | -10.20000 | -.13089 | -.17983 | .05310 | .34678 | -.09867 | .03779 | .23361 |
| -200.440 | 425.160 | 299.53000 | -5.20910 | -10.20000 | -.13362 | -.18263 | .05467 | .35008 | -.10037 | .03796 | .23392 |
| -200.900 | 500.510 | 299.62000 | -5.21050 | -10.19900 | -.14127 | -.18891 | .05846 | .35741 | -.10459 | .03808 | .23428 |
| -200.760 | 600.460 | 299.58000 | -5.21110 | -10.19800 | -.14431 | -.19250 | .06113 | .36044 | -.10655 | .03818 | .23708 |
| | GRADIENT | .00000 | .00000 | .00000 | .00000 | .00000 | .00000 | .00000 | .00000 | .00000 | .00000 |

IA143, AEDC V41A-P8A, O/ET W/R.H. SRB SEPARATING (OVXB24) ( 23 MAY 77 )

REFERENCE DATA

SREF = 2690.0000 SQ.FT. XMRP = 1097.0000 IN. XT
LREF = 1290.3000 INCHES YMRP = .0000 IN. YT
BREF = 1290.3000 INCHES ZMRP = 450.0000 IN. ZT
SCALE = .0100

PARAMETRIC DATA

ALPHA = -5.000 BETA = -10.000
DALPHA = -5.000 DBETA = .000
X = 300.000 MACH = 4.500
JET PC = .000

RUN NO. 4374/ 0 RN/L = 2.38 GRADIENT INTERVAL = -5.00/ 5.00

| Y | Z | X | ALPHA | BETA | PHI | CN | CLM | CY | CYN | CBL | CA |
|---|---|---|---|---|---|---|---|---|---|---|---|
| -99.728 | 100.070 | 299.45000 | -5.20570 | -10.19000 | -.12968 | -.17612 | .05299 | .33615 | -.09707 | .03629 | .23645 |
| -100.130 | 149.800 | 299.41000 | -5.20440 | -10.19300 | -.12608 | -.17926 | .05510 | .33912 | -.09769 | .03754 | .23635 |
| -99.937 | 199.930 | 299.44000 | -5.20500 | -10.19500 | -.12660 | -.17983 | .05523 | .34176 | -.09825 | .03791 | .23617 |
| | GRADIENT | .00000 | .00000 | .00000 | .00000 | .00000 | .00000 | .00000 | .00000 | .00000 | .00000 |

RUN NO. 4375/ 0 RN/L = 2.38 GRADIENT INTERVAL = -5.00/ 5.00

| Y | Z | X | ALPHA | BETA | PHI | CN | CLM | CY | CYN | CBL | CA |
|---|---|---|---|---|---|---|---|---|---|---|---|
| -201.460 | 200.770 | 299.46000 | -5.20830 | -10.19800 | -.13462 | -.18352 | .05632 | .34994 | -.10125 | .03786 | .23640 |
| -199.880 | 150.150 | 299.38000 | -5.20810 | -10.19700 | -.13451 | -.18301 | .05608 | .34912 | -.10105 | .03775 | .23599 |
| -200.130 | 100.230 | 299.45000 | -5.20910 | -10.19700 | -.13667 | -.18070 | .05439 | .34780 | -.10042 | .03702 | .23599 |
| | GRADIENT | .00000 | .00000 | .00000 | .00000 | .00000 | .00000 | .00000 | .00000 | .00000 | .00000 |

IA143, AEDC V41A-P8A, O/ET W/R.H. SRB SEPARATING (OVXB25) ( 23 MAY 77 )

REFERENCE DATA

SREF = 2690.0000 SQ.FT. XMRP = 1097.0000 IN. XT
LREF = 1290.3000 INCHES YMRP = .0000 IN. YT
BREF = 1290.3000 INCHES ZMRP = 450.0000 IN. ZT
SCALE = .0100

PARAMETRIC DATA

ALPHA = -5.000 BETA = -10.000
DALPHA = -10.000 DBETA = .000
X = 300.000 MACH = 4.500
JET PC = .000

RUN NO. 4291/ 0 RN/L = 2.38 GRADIENT INTERVAL = -5.00/ 5.00

| Y | Z | X | ALPHA | BETA | PHI | CN | CLM | CY | CYN | CBL | CA |
|---|---|---|---|---|---|---|---|---|---|---|---|
| -145.580 | 99.588 | 300.58000 | -5.21360 | -10.19500 | -.14186 | -.16179 | .04143 | .33066 | -.09124 | .03205 | .23707 |
| -149.660 | 150.050 | 299.40000 | -5.21010 | -10.19600 | -.13339 | -.16959 | .04689 | .33433 | -.09335 | .03466 | .23589 |
| -149.820 | 199.990 | 299.48000 | -5.20680 | -10.19700 | -.12636 | -.17578 | .05167 | .33758 | -.09494 | .03684 | .23575 |
| | GRADIENT | .00000 | .00000 | .00000 | .00000 | .00000 | .00000 | .00000 | .00000 | .00000 | .00000 |

IA143, AEDC V41A-P8A, O/ET W/R.H. SRB SEPARATING (OVXB26) ( 23 MAY 77 )

REFERENCE DATA

SREF = 2690.0000 SQ.FT. XMRP = 1097.0000 IN. XT
LREF = 1290.3000 INCHES YMRP = .0000 IN. YT
BREF = 1290.3000 INCHES ZMRP = 450.0000 IN. ZT
SCALE = .0100

PARAMETRIC DATA

ALPHA = -5.000 BETA = -10.000
DALPHA = -5.000 DBETA = -4.000
X = 300.000 MACH = 4.500
JET PC = .000

RUN NO. 4378/ 0 RN/L = 2.38 GRADIENT INTERVAL = -5.00/ 5.00

| Y | Z | X | ALPHA | BETA | PHI | CN | CLM | CY | CYN | CBL | CA |
|---|---|---|---|---|---|---|---|---|---|---|---|
| -100.570 | 100.150 | 299.49000 | -5.20550 | -10.18800 | -.12504 | -.17283 | .05089 | .32984 | -.09454 | .03594 | .23756 |
| -100.350 | 149.820 | 299.56000 | -5.20290 | -10.19000 | -.12074 | -.17526 | .05331 | .33295 | -.09598 | .03751 | .23710 |
| -100.940 | 199.840 | 299.47000 | -5.20370 | -10.19300 | -.12042 | -.17621 | .05337 | .33598 | -.09606 | .03803 | .23688 |
| -101.260 | 300.030 | 299.61000 | -5.20630 | -10.19700 | -.12606 | -.17864 | .05387 | .34318 | -.09827 | .03822 | .23674 |
| | GRADIENT | .00000 | .00000 | .00000 | .00000 | .00000 | .00000 | .00000 | .00000 | .00000 | .00000 |

IA143, AEDC V41A-P8A, O/ET W/R.H. SRB SEPARATING (OVXB27) ( 23 MAY 77 )

REFERENCE DATA

SREF = 2690.0000 SQ.FT. XMRP = 1097.0000 IN. XT
LREF = 1290.3000 INCHES YMRP = .0000 IN. YT
BREF = 1290.3000 INCHES ZMRP = 450.0000 IN. ZT
SCALE = .0100

PARAMETRIC DATA

ALPHA = -5.000 BETA = -10.000
DALPHA = -10.000 DBETA = -4.000
X = 300.000 MACH = 4.500
JET PC = .000

RUN NO. 4293/ 0 RN/L = 2.38 GRADIENT INTERVAL = -5.00/ 5.00

| Y | Z | X | ALPHA | BETA | PHI | CN | CLM | CY | CYN | CBL | CA |
|---|---|---|---|---|---|---|---|---|---|---|---|
| -96.368 | 99.220 | 300.67000 | -5.21040 | -10.18600 | -.13177 | -.15354 | .03757 | .31439 | -.08658 | .03111 | .23814 |
| -99.752 | 149.900 | 299.47000 | -5.20550 | -10.18600 | -.12639 | -.16238 | .04471 | .32068 | -.09066 | .03376 | .23669 |
| -100.160 | 199.970 | 299.49000 | -5.20170 | -10.18800 | -.11744 | -.16780 | .04906 | .32356 | -.09173 | .03620 | .23614 |
| | GRADIENT | .00000 | .00000 | .00000 | .00000 | .00000 | .00000 | .00000 | .00000 | .00000 | .00000 |

RUN NO. 4294/ 0 RN/L = 2.38 GRADIENT INTERVAL = -5.00/ 5.00

| Y | Z | X | ALPHA | BETA | PHI | CN | CLM | CY | CYN | CBL | CA |
|---|---|---|---|---|---|---|---|---|---|---|---|
| -201.010 | 201.300 | 299.81000 | -5.20780 | -10.19800 | -.12632 | -.17295 | .04916 | .33494 | -.09313 | .03619 | .23452 |
| -200.020 | 150.440 | 299.50000 | -5.21150 | -10.19700 | -.13388 | -.16437 | .04292 | .33006 | -.09060 | .03354 | .23489 |
| -200.280 | 100.530 | 299.48000 | -5.21500 | -10.19600 | -.14193 | -.15529 | .03658 | .32543 | -.08791 | .03079 | .23569 |
| | GRADIENT | .00000 | .00000 | .00000 | .00000 | .00000 | .00000 | .00000 | .00000 | .00000 | .00000 |

IA143, AEDC V41A-P8A, O/ET W/R.H. SRB SEPARATING (OVX828) ( 23 MAY 77 )

REFERENCE DATA

SREF = 2690.0000 SQ.FT. XMRP = 1097.0000 IN. XT
LREF = 1290.3000 INCHES YMRP = .0000 IN. YT
BREF = 1290.3000 INCHES ZMRP = 450.0000 IN. ZT
SCALE = .0100

PARAMETRIC DATA

ALPHA = -5.000 BETA = -10.000
DALPHA = -5.000 DBETA = -4.000
X = 300.000 MACH = 4.500
JET PC = .000

RUN NO. 4377/ 0 RN/L = 2.38 GRADIENT INTERVAL = -5.00/ 5.00

| Y | Z | X | ALPHA | BETA | PHI | CN | CLM | CY | CYN | CBL | CA |
|---|---|---|---|---|---|---|---|---|---|---|---|
| -200.050 | 100.090 | 299.64000 | -5.21040 | -10.19700 | -.13365 | -.17551 | .05036 | .34035 | -.09634 | .03595 | .23643 |
| -200.260 | 149.870 | 299.47000 | -5.20800 | -10.19700 | -.12904 | -.18062 | .05422 | .34369 | -.09808 | .03764 | .23638 |
| -200.670 | 200.010 | 299.43000 | -5.20820 | -10.19800 | -.13009 | -.18244 | .05537 | .34690 | -.09955 | .03811 | .23666 |
| | GRADIENT | .00000 | .00000 | .00000 | .00000 | .00000 | .00000 | .00000 | .00000 | .00000 | .00000 |

IA143, AEDC V41A-P8A, O/ET W/R.H. SRB SEPARATING (OVX829) ( 23 MAY 77 )

REFERENCE DATA

SREF = 2690.0000 SQ.FT. XMRP = 1097.0000 IN. XT
LREF = 1290.3000 INCHES YMRP = .0000 IN. YT
BREF = 1290.3000 INCHES ZMRP = 450.0000 IN. ZT
SCALE = .0100

PARAMETRIC DATA

ALPHA = -5.000 BETA = -10.000
DALPHA = -6.000 DBETA = -2.000
X = 300.000 MACH = 4.500
JET PC = .000

RUN NO. 4288/ 0 RN/L = 2.38 GRADIENT INTERVAL = -5.00/ 5.00

| Y | Z | X | ALPHA | BETA | PHI | CN | CLM | CY | CYN | CBL | CA |
|---|---|---|---|---|---|---|---|---|---|---|---|
| -100.390 | 100.020 | 299.50000 | -5.20630 | -10.18900 | -.12952 | -.17125 | .04982 | .33062 | -.09458 | .03513 | .23676 |
| -100.280 | 199.680 | 299.49000 | -5.20420 | -10.19400 | -.12327 | -.17680 | .05353 | .33755 | -.09626 | .03768 | .23604 |
| -101.390 | 300.100 | 299.53000 | -5.20600 | -10.19700 | -.12789 | -.17853 | .05391 | .34361 | -.09828 | .03790 | .23586 |
| | GRADIENT | .00000 | .00000 | .00000 | .00000 | .00000 | .00000 | .00000 | .00000 | .00000 | .00000 |

IA143, AEDC V41A-P8A, O/ET W/R.H. SRB SEPARATING (OVXB30) ( 23 MAY 77 )

REFERENCE DATA

SREF = 2690.0000 SQ.FT. XMRP = 1097.0000 IN. XT
LREF = 1290.3000 INCHES YMRP = .0000 IN. YT
BREF = 1290.3000 INCHES ZMRP = 450.0000 IN. ZT
SCALE = .0100

PARAMETRIC DATA

ALPHA = -5.000 BETA = -10.000
DALPHA = -6.000 DBETA = -2.000
X = 300.000 MACH = 4.500
JET PC = .000

RUN NO. 4317/ 0 RN/L = 2.38 GRADIENT INTERVAL = -5.00/ 5.00

| Y | Z | X | ALPHA | BETA | PHI | CN | CLM | CY | CYN | CBL | CA |
|---|---|---|---|---|---|---|---|---|---|---|---|
| -99.906 | 100.050 | 299.53000 | -5.20610 | -10.18800 | -.12935 | -.17166 | .05016 | .33074 | -.09491 | .03524 | .23698 |
| -100.510 | 199.660 | 299.41000 | -5.20340 | -10.19300 | -.12266 | -.17653 | .05379 | .33677 | -.09639 | .03772 | .23642 |
| -101.100 | 300.010 | 299.60000 | -5.20580 | -10.19700 | -.12756 | -.17836 | .05395 | .34320 | -.09819 | .03790 | .23611 |
| | GRADIENT | .00000 | .00000 | .00000 | .00000 | .00 00 | .00000 | .00000 | .00000 | .00000 | .00000 |

IA143, AEDC V41A-P8A, O/ET W/R.H. SRB SEPARATING (OVXB31) ( 23 MAY 77 )

REFERENCE DATA

SREF = 2690.0000 SQ.FT. XMRP = 1097.0000 IN. XT
LREF = 1290.3000 INCHES YMRP = .0000 IN. YT
BREF = 1290.3000 INCHES ZMRP = 450.0000 IN. ZT
SCALE = .0100

PARAMETRIC DATA

ALPHA = -5.000 BETA = -10.000
DALPHA = .000 DBETA = 4.000
X = 600.000 MACH = 4.500
JET PC = .000

RUN NO. 4368/ 0 RN/L = 2.37 GRADIENT INTERVAL = -5.00/ 5.00

| Y | Z | X | ALPHA | BETA | PHI | CN | CLM | CY | CYN | CBL | CA |
|---|---|---|---|---|---|---|---|---|---|---|---|
| -99.901 | 199.840 | 599.58000 | -5.20960 | -10.19800 | -.13851 | -.18641 | .05770 | .35409 | -.10325 | .03795 | .23681 |
| -100.160 | 249.850 | 599.53000 | -5.21030 | -10.19800 | -.13994 | -.18835 | .05864 | .35608 | -.10419 | .03810 | .23660 |
| -100.410 | 399.800 | 599.45000 | -5.21070 | -10.19800 | -.14424 | -.19197 | .06102 | .36027 | -.10666 | .03818 | .23710 |
| -100.360 | 449.980 | 599.41000 | -5.21080 | -10.19800 | -.14423 | -.19202 | .06105 | .35993 | -.10656 | .03814 | .23722 |
| -100.280 | 500.020 | 599.37000 | -5.21070 | -10.19800 | -.14420 | -.19199 | .06108 | .36014 | -.10665 | .03817 | .23747 |
| -100.830 | 600.350 | 599.29000 | -5.21090 | -10.19800 | -.14432 | -.19214 | .06110 | .36004 | -.10661 | .03813 | .23740 |
| | GRADIENT | .00000 | .00000 | .00000 | .00000 | .00000 | .00000 | .00000 | .00000 | .00000 | .00000 |

RUN NO. 4369/ 0 RN/L = 2.37 GRADIENT INTERVAL = -5.00/ 5.00

| Y | Z | X | ALPHA | BETA | PHI | CN | CLM | CY | CYN | CBL | CA |
|---|---|---|---|---|---|---|---|---|---|---|---|
| -301.330 | 599.780 | 599.20000 | -5.21100 | -10.19800 | -.14446 | -.19201 | .06108 | .36009 | -.10661 | .03812 | .23753 |
| -300.180 | 499.590 | 599.42000 | -5.21090 | -10.19800 | -.14426 | -.19202 | .06108 | .36010 | -.10664 | .03816 | .23746 |
| -300.710 | 449.620 | 599.26000 | -5.21080 | -10.19800 | -.14425 | -.19193 | .06103 | .35995 | -.10658 | .03813 | .23732 |
| -300.100 | 399.590 | 599.41000 | -5.21090 | -10.19800 | -.14437 | -.19210 | .06110 | .36029 | -.10668 | .03817 | .23750 |
| -300.170 | 249.650 | 599.32000 | -5.21080 | -10.19700 | -.14425 | -.19215 | .06113 | .36026 | -.10668 | .03816 | .23763 |
| -300.500 | 199.880 | 599.43000 | -5.21070 | -10.19800 | -.14412 | -.19204 | .06106 | .36024 | -.10664 | .03818 | .23735 |
| | GRADIENT | .00000 | .00000 | .00000 | .00000 | .00000 | .00000 | .00000 | .00000 | .00000 | .00000 |

IA143, AEDC V41A-P8A, O/ET W/R.H. SRB SEPARATING (OVXB32) ( 23 MAY 77 )

REFERENCE DATA

SREF = 2690.0000 SQ.FT. XMRP = 1097.0000 IN. XT
LREF = 1290.3000 INCHES YMRP = .0000 IN. YT
BREF = 1290.3000 INCHES ZMRP = 450.0000 IN. ZT
SCALE = .0100

PARAMETRIC DATA

ALPHA = -5.000 BETA = -10.000
DALPHA = -15.000 DBETA = 4.000
X = 600.000 MACH = 4.500
JET PC = .000

RUN NO. 4318/ 0 RN/L = 2.38 GRADIENT INTERVAL = -5.00/ 5.00

| Y | Z | X | ALPHA | BETA | PHI | CN | CLM | CY | CYN | CBL | CA |
|---|---|---|---|---|---|---|---|---|---|---|---|
| -99.890 | 200.560 | 599.36000 | -5.20790 | -10.19600 | -.13032 | -.17621 | .05164 | .33865 | -.09584 | .03632 | .23560 |
| -99.713 | 250.330 | 599.27000 | -5.20820 | -10.19800 | -.13057 | -.17986 | .05356 | .34330 | -.09744 | .03717 | .23520 |
| -100.280 | 400.270 | 599.27000 | -5.21050 | -10.19900 | -.14069 | -.18896 | .05863 | .35719 | -.10443 | .03814 | .23522 |
| -100.000 | 450.630 | 599.37000 | -5.21060 | -10.19800 | -.14353 | -.19136 | .06031 | .35995 | -.10620 | .03819 | .23610 |
| -99.942 | 500.610 | 599.42000 | -5.21080 | -10.19800 | -.14411 | -.19237 | .06111 | .36059 | -.10666 | .03823 | .23703 |
| -100.140 | 601.240 | 599.58000 | -5.21100 | -10.19800 | -.14415 | -.19243 | .06125 | .36032 | -.10662 | .03820 | .23787 |
| | GRADIENT | .00000 | .00000 | .00000 | .00000 | .00000 | .00000 | .00000 | .00000 | .00000 | .00000 |

RUN NO. 4319/ 0 RN/L = 2.37 GRADIENT INTERVAL = -5.00/ 5.00

| Y | Z | X | ALPHA | BETA | PHI | CN | CLM | CY | CYN | CBL | CA |
|---|---|---|---|---|---|---|---|---|---|---|---|
| -300.790 | 601.250 | 599.46000 | -5.21100 | -10.19800 | -.14414 | -.19245 | .06128 | .36043 | -.10668 | .03823 | .23799 |
| -299.740 | 500.070 | 599.16000 | -5.21090 | -10.19800 | -.14414 | -.19239 | .06128 | .36044 | -.10668 | .03822 | .23801 |
| -300.210 | 450.270 | 599.19000 | -5.21090 | -10.19800 | -.14415 | -.19235 | .06126 | .36037 | -.10667 | .03821 | .23793 |
| -300.060 | 400.210 | 599.23000 | -5.21090 | -10.19800 | -.14415 | -.19226 | .06124 | .36029 | -.10663 | .03821 | .23792 |
| -299.510 | 250.230 | 599.26000 | -5.21090 | -10.19800 | -.14418 | -.19218 | .06106 | .36037 | -.10660 | .03821 | .23708 |
| -300.090 | 200.510 | 599.17000 | -5.21080 | -10.19800 | -.14418 | -.19212 | .06104 | .36029 | -.10656 | .03819 | .23702 |
| | GRADIENT | .00000 | .00000 | .00000 | .00000 | .00000 | .00000 | .00000 | .00000 | .00000 | .00000 |

IA143, AEDC V41A-P8A, O/ET W/R.H. SRB SEPARATING (OVXB33) ( 23 MAY 77 )

REFERENCE DATA

SREF = 2690.0000 SQ.FT. XMRP = 1097.0000 IN. XT
LREF = 1290.3000 INCHES YMRP = .0000 IN. YT
BREF = 1290.3000 INCHES ZMRP = 450.0000 IN. ZT
SCALE = .0100

PARAMETRIC DATA

ALPHA = -5.000 BETA = -10.000
DALPHA = -15.000 DBETA = 4.000
X = 600.000 MACH = 4.500
JET PC = .000

RUN NO. 4356/ 0 RN/L = 2.37 GRADIENT INTERVAL = -5.00/ 5.00

| Y | Z | X | ALPHA | BETA | PHI | CN | CLM | CY | CYN | CBL | CA |
|---|---|---|---|---|---|---|---|---|---|---|---|
| -99.754 | 200.680 | 599.35000 | -5.20800 | -10.19600 | -.13046 | -.17635 | .05162 | .33877 | -.09586 | .03630 | .23524 |
| -99.620 | 250.260 | 599.33000 | -5.20830 | -10.19800 | -.13082 | -.18007 | .05362 | .34362 | -.09764 | .03718 | .23516 |
| -100.140 | 400.350 | 599.33000 | -5.21050 | -10.19900 | -.14094 | -.18898 | .05862 | .35703 | -.10446 | .03807 | .23499 |
| -100.180 | 450.620 | 599.40000 | -5.21050 | -10.19800 | -.14365 | -.19115 | .06025 | .35931 | -.10610 | .03808 | .23562 |
| -100.360 | 500.640 | 599.37000 | -5.21080 | -10.19800 | -.14427 | -.19214 | .06095 | .36020 | -.10659 | .03815 | .23651 |
| -101.000 | 601.260 | 599.43000 | -5.21090 | -10.19800 | -.14421 | -.19234 | .06121 | .36017 | -.10662 | .03816 | .23784 |
| | GRADIENT | .00000 | .00000 | .00000 | .00000 | .00000 | .00000 | .00000 | .00000 | .00000 | .00000 |

IA143, AEDC V41A-P8A, O/ET W/R.H. SRB SEPARATING (OVXB34) ( 23 MAY 77 )

REFERENCE DATA

SREF = 2690.0000 SQ.FT. XMRP = 1097.0000 IN. XT
LREF = 1290.3000 INCHES YMRP = .0000 IN. YT
BREF = 1290.3000 INCHES ZMRP = 450.0000 IN. ZT
SCALE = .0100

PARAMETRIC DATA

ALPHA = -5.000 BETA = -10.000
DALPHA = .000 DBETA = -12.000
X = 600.000 MACH = 4.500
JET PC = .000

RUN NO. 4366/ 0 RN/L = 2.37 GRADIENT INTERVAL = -5.00/ 5.00

| Y | Z | X | ALPHA | BETA | PHI | CN | CLM | CY | CYN | CBL | CA |
|---|---|---|---|---|---|---|---|---|---|---|---|
| -100.230 | 249.750 | 599.49000 | -5.20520 | -10.19600 | -.12675 | -.17074 | .04954 | .34193 | -.09789 | .03784 | .23517 |
| -102.410 | 400.320 | 599.94000 | -5.21030 | -10.19900 | -.14094 | -.18801 | .05832 | .35712 | -.10464 | .03812 | .23546 |
| -101.270 | 449.910 | 599.48000 | -5.21060 | -10.19800 | -.14368 | -.19100 | .06027 | .35942 | -.10617 | .03810 | .23617 |
| -101.080 | 499.990 | 599.69000 | -5.21090 | -10.19800 | -.14441 | -.19208 | .06101 | .36014 | -.10663 | .03814 | .23689 |
| -102.080 | 600.500 | 599.72000 | -5.21090 | -10.19800 | -.14422 | -.19210 | .06111 | .35996 | -.10660 | .03815 | .23742 |
| | GRADIENT | .00000 | .00000 | .00000 | .00000 | .00000 | .00000 | .00000 | .00000 | .00000 | .00000 |

IA143, AEDC V41A-P8A, O/ET W/R.H. SRB SEPARATING (OVXB35) ( 23 MAY 77 )

REFERENCE DATA

SREF = 2690.0000 SQ.FT. XMRP = 1097.0000 IN. XT
LREF = 1290.3000 INCHES YMRP = .0000 IN. YT
BREF = 1290.3000 INCHES ZMRP = 450.0000 IN. ZT
SCALE = .0100

PARAMETRIC DATA

ALPHA = -5.000 BETA = -10.000
DALPHA = -15.000 DBETA = -12.000
X = 600.000 MACH = 4.500
JET PC = .000

RUN NO. 4324/ 0 RN/L = 2.37 GRADIENT INTERVAL = -5.00/ 5.00

| Y | Z | X | ALPHA | BETA | PHI | CN | CLM | CY | CYN | CBL | CA |
|---|---|---|---|---|---|---|---|---|---|---|---|
| -99.271 | 449.060 | 601.52000 | -5.20830 | -10.20000 | -.12883 | -.17176 | .04797 | .34511 | -.09777 | .03785 | .23219 |
| -100.960 | 500.630 | 599.67000 | -5.20910 | -10.20000 | -.13743 | -.18102 | .05369 | .35394 | -.10250 | .03804 | .23187 |
| -102.470 | 602.020 | 600.38000 | -5.21060 | -10.19800 | -.14438 | -.19178 | .06039 | .35992 | -.10632 | .03805 | .23432 |
| | GRADIENT | .00000 | .00000 | .00000 | .00000 | .00000 | .00000 | .00000 | .00000 | .00000 | .00000 |

IA143, AEDC V41A-P8A, O/ET W/R.H. SRB SEPARATING (OVXB36) ( 23 MAY 77 )

REFERENCE DATA

SREF = 2690.0000 SQ.FT. XMRP = 1097.0000 IN. XT
LREF = 1290.3000 INCHES YMRP = .0000 IN. YT
BREF = 1290.3000 INCHES ZMRP = 450.0000 IN. ZT
SCALE = .0100

PARAMETRIC DATA

ALPHA = -5.000 BETA = -10.000
DALPHA = .000 DBETA = -12.000
X = 600.000 MACH = 4.500
JET PC = .000

RUN NO. 4367/ 0 RN/L = 2.37 GRADIENT INTERVAL = -5.00/ 5.00

| Y | Z | X | ALPHA | BETA | PHI | CN | CLM | CY | CYN | CBL | CA |
|---|---|---|---|---|---|---|---|---|---|---|---|
| -300.210 | 199.880 | 599.48000 | -5.21010 | -10.19800 | -.14198 | -.19078 | .05999 | .35773 | -.10504 | .03804 | .23485 |
| -300.640 | 249.770 | 599.66000 | -5.21040 | -10.19800 | -.14409 | -.19166 | .06062 | .35995 | -.10642 | .03812 | .23554 |
| -302.070 | 400.150 | 599.98000 | -5.21090 | -10.19800 | -.14433 | -.19216 | .06110 | .36024 | -.10668 | .03816 | .23743 |
| -301.060 | 449.980 | 599.60000 | -5.21080 | -10.19800 | -.14427 | -.19206 | .06111 | .36023 | -.10667 | .03817 | .23755 |
| -301.140 | 500.020 | 599.60000 | -5.21080 | -10.19800 | -.14425 | -.19217 | .06112 | .36042 | -.10676 | .03821 | .23754 |
| -300.740 | 600.140 | 599.67000 | -5.21090 | -10.19800 | -.14426 | -.19217 | .06110 | .36023 | -.10667 | .03817 | .23747 |
| | GRADIENT | .00000 | .00000 | .00000 | .00000 | .00000 | .00000 | .00000 | .00000 | .00000 | .00000 |

IA143, AEDC V41A-P8A, O/ET W/R.H. SRB SEPARATING (OVXB37) ( 23 MAY 77 )

REFERENCE DATA

SREF = 2690.0000 SQ.FT. XMRP = 1097.0000 IN. XT
LREF = 1290.3000 INCHES YMRP = .0000 IN. YT
BREF = 1290.3000 INCHES ZMRP = 450.0000 IN. ZT
SCALE = .0100

PARAMETRIC DATA

ALPHA = -5.000 BETA = -10.000
DALPHA = .000 DBETA = -12.000
X = 600.000 MACH = 4.500
JET PC = .000

RUN NO. 4393/ 0 RN/L = 2.38 GRADIENT INTERVAL = -5.00/ 5.00

| Y | Z | X | ALPHA | BETA | PHI | CN | CLM | CY | CYN | CBL | CA |
|---|---|---|---|---|---|---|---|---|---|---|---|
| -300.630 | 199.920 | 599.48000 | -5.21070 | -10.19800 | -.14200 | -.19186 | .06055 | .35805 | -.10539 | .03819 | .23531 |
| -301.600 | 249.900 | 599.48000 | -5.21090 | -10.19800 | -.14381 | -.19261 | .06111 | .36004 | -.10667 | .03827 | .23606 |
| -301.740 | 400.160 | 600.09000 | -5.21130 | -10.19700 | -.14383 | -.19293 | .06151 | .36000 | -.10677 | .03829 | .23777 |
| -301.120 | 450.140 | 599.75000 | -5.21140 | -10.19800 | -.14387 | -.19297 | .06153 | .36015 | -.10681 | .03832 | .23780 |
| -301.380 | 499.980 | 599.68000 | -5.21130 | -10.19700 | -.14381 | -.19299 | .06152 | .36006 | -.10678 | .03830 | .23779 |
| -301.060 | 600.170 | 599.70000 | -5.21150 | -10.19800 | -.14392 | -.19308 | .06157 | .36010 | -.10683 | .03830 | .23790 |
| | GRADIENT | .00000 | .00000 | .00000 | .00000 | .00000 | .00000 | .00000 | .00000 | .00000 | .00000 |

IA143, AEDC V41A-P8A, O/ET W/R.H. SRB SEPARATING (OVXB38) ( 23 MAY 77 )

REFERENCE DATA

SREF = 2690.0000 SQ.FT. XMRP = 1097.0000 IN. XT
LREF = 1290.3000 INCHES YMRP = .0000 IN. YT
BREF = 1290.3000 INCHES ZMRP = 450.0000 IN. ZT
SCALE = .0100

PARAMETRIC DATA

ALPHA = -5.000 BETA = -10.000
DALPHA = -15.000 DBETA = -12.000
X = 600.000 MACH = 4.500
JET PC = .000

RUN NO. 4325/ 0 RN/L = 2.37 GRADIENT INTERVAL = -5.00/ 5.00

| Y | Z | X | ALPHA | BETA | PHI | CN | CLM | CY | CYN | CBL | CA |
|---|---|---|---|---|---|---|---|---|---|---|---|
| -298.630 | 200.850 | 601.88000 | -5.21160 | -10.19900 | -.13130 | -.17772 | .04964 | .33678 | -.09351 | .03550 | .23138 |
| -300.210 | 250.260 | 599.32000 | -5.21030 | -10.19900 | -.13217 | -.18392 | .05413 | .34336 | -.09703 | .03680 | .23158 |
| -300.910 | 400.510 | 599.60000 | -5.21020 | -10.19800 | -.14468 | -.19078 | .05958 | .35962 | -.10606 | .03789 | .23244 |
| -300.920 | 450.600 | 599.55000 | -5.21040 | -10.19800 | -.14447 | -.19128 | .05996 | .35950 | -.10609 | .03794 | .23311 |
| -300.460 | 500.600 | 599.66000 | -5.21050 | -10.19800 | -.14416 | -.19173 | .06035 | .35969 | -.10618 | .03805 | .23409 |
| -301.320 | 600.760 | 599.73000 | -5.21090 | -10.19800 | -.14410 | -.19251 | .06107 | .36028 | -.10653 | .03818 | .23677 |
| | GRADIENT | .00000 | .00000 | .00000 | .00000 | .00000 | .00000 | .00000 | .00000 | .00000 | .00000 |

IA143, AEDC V41A-P8A, O/ET W/R.H. SRB SEPARATING (OVXB39) ( 23 MAY 77 )

REFERENCE DATA

SREF = 2690.0000 SQ.FT. XMRP = 1097.0000 IN. XT
LREF = 1290.3000 INCHES YMRP = .0000 IN. YT
BREF = 1290.3000 INCHES ZMRP = 450.0000 IN. ZT
SCALE = .0100

PARAMETRIC DATA

ALPHA = -5.000 BETA = -10.000
DALPHA = -7.000 DBETA = -4.000
X = 600.000 MACH = 4.500
JET PC = .000

RUN NO. 4289/ 0 RN/L = 2.38 GRADIENT INTERVAL = -5.00/ 5.00

| Y | Z | X | ALPHA | BETA | PHI | CN | CLM | CY | CYN | CBL | CA |
|---|---|---|---|---|---|---|---|---|---|---|---|
| -200.020 | 200.090 | 599.36000 | -5.21000 | -10.19900 | -.13609 | -.18808 | .05791 | .35190 | -.10157 | .03790 | .23505 |
| -200.650 | 300.000 | 599.40000 | -5.21050 | -10.19800 | -.14207 | -.19062 | .05987 | .35809 | -.10516 | .03809 | .23579 |
| -200.990 | 400.110 | 599.43000 | -5.21100 | -10.19800 | -.14421 | -.19230 | .06109 | .36004 | -.10646 | .03813 | .23708 |
| | GRADIENT | .00000 | .00000 | .00000 | .00000 | .00000 | .00000 | .00000 | .00000 | .00000 | .00000 |

IA143, AEDC V41A-P8A, O/ET W/R.H. SRB SEPARATING (OVXB40) ( 23 MAY 77 )

REFERENCE DATA

SREF = 2690.0000 SQ.FT. XMRP = 1097.0000 IN. XT
LREF = 1290.3000 INCHES YMRP = .0000 IN. YT
BREF = 1290.3000 INCHES ZMRP = 450.0000 IN. ZT
SCALE = .0100

PARAMETRIC DATA

ALPHA = -5.000 BETA = -10.000
DALPHA = -5.000 DBETA = .000
X = 600.000 MACH = 4.500
JET PC = .000

RUN NO. 4379/ 0 RN/L = 2.38 GRADIENT INTERVAL = -5.00/ 5.00

| Y | Z | X | ALPHA | BETA | PHI | CN | CLM | CY | CYN | CBL | CA |
|---|---|---|---|---|---|---|---|---|---|---|---|
| -99.968 | 200.090 | 599.41000 | -5.20890 | -10.19800 | -.13340 | -.18458 | .05673 | .34983 | -.10131 | .03812 | .23741 |
| -100.340 | 299.880 | 599.64000 | -5.21080 | -10.19900 | -.13861 | -.18972 | .05912 | .35676 | -.10440 | .03848 | .23737 |
| -100.470 | 400.090 | 599.51000 | -5.21140 | -10.19800 | -.14309 | -.19340 | .06141 | .36079 | -.10688 | .03852 | .23774 |
| | GRADIENT | .00000 | .00000 | .00000 | .00000 | .00000 | .00000 | .00000 | .00000 | .00000 | .00000 |

RUN NO. 4380/ 0 RN/L = 2.38 GRADIENT INTERVAL = -5.00/ 5.00

| Y | Z | X | ALPHA | BETA | PHI | CN | CLM | CY | CYN | CBL | CA |
|---|---|---|---|---|---|---|---|---|---|---|---|
| -301.130 | 400.960 | 599.58000 | -5.21170 | -10.19800 | -.14380 | -.19443 | .06217 | .36152 | -.10735 | .03855 | .23868 |
| -300.280 | 299.780 | 599.37000 | -5.21170 | -10.19800 | -.14381 | -.19439 | .06216 | .36130 | -.10729 | .03851 | .23867 |
| -300.230 | 200.100 | 599.37000 | -5.21160 | -10.19800 | -.14379 | -.19414 | .06201 | .36125 | -.10724 | .03852 | .23817 |
| | GRADIENT | .00000 | .00000 | .00000 | .00000 | .00000 | .00000 | .00000 | .00000 | .00000 | .00000 |

IA143, AEDC V41A-P8A, O/ET W/R.H. SRB SEPARATING (OVXB41) ( 23 MAY 77 )

REFERENCE DATA

SREF = 2690.0000 SQ.FT. XMRP = 1097.0000 IN. XT
LREF = 1290.3000 INCHES YMRP = .0000 IN. YT
BREF = 1290.3000 INCHES ZMRP = 450.0000 IN. ZT
SCALE = .0100

PARAMETRIC DATA

ALPHA = -5.000 BETA = -10.000
DALPHA = -10.000 DBETA = .000
X = 600.000 MACH = 4.500
JET PC = .000

RUN NO. 4302/ 0 RN/L = 2.37 GRADIENT INTERVAL = -5.00/ 5.00

| Y | Z | X | ALPHA | BETA | PHI | CN | CLM | CY | CYN | CBL | CA |
|---|---|---|---|---|---|---|---|---|---|---|---|
| -94.929 | 198.220 | 600.18000 | -5.20680 | -10.19600 | -.12972 | -.17849 | .05370 | .34284 | -.09797 | .03736 | .23641 |
| -100.130 | 300.050 | 599.30000 | -5.20940 | -10.20000 | -.13474 | -.18457 | .05616 | .35122 | -.10111 | .03800 | .23566 |
| -100.340 | 400.150 | 599.36000 | -5.21070 | -10.19900 | -.14194 | -.19007 | .05951 | .35843 | -.10526 | .03818 | .23635 |
| | GRADIENT | .00000 | .00000 | .00000 | .00000 | .00000 | .00000 | .00000 | .00000 | .00000 | .00000 |

RUN NO. 4303/ 0 RN/L = 2.37 GRADIENT INTERVAL = -5.00/ 5.00

| Y | Z | X | ALPHA | BETA | PHI | CN | CLM | CY | CYN | CBL | CA |
|---|---|---|---|---|---|---|---|---|---|---|---|
| -300.950 | 401.610 | 599.68000 | -5.21100 | -10.19800 | -.14416 | -.19240 | .06126 | .36055 | -.10670 | .03824 | .23796 |
| -299.370 | 300.010 | 599.31000 | -5.21110 | -10.19800 | -.14424 | -.19236 | .06121 | .36040 | -.10663 | .03820 | .23775 |
| -299.740 | 200.310 | 599.44000 | -5.21080 | -10.19800 | -.14412 | -.19219 | .06105 | .36033 | -.10656 | .03820 | .23703 |
| | GRADIENT | .00000 | .00000 | .00000 | .00000 | .00000 | .00000 | .00000 | .00000 | .00000 | .00000 |

IA143, AEDC V41A-P8A, O/ET W/R.H. SRB SEPARATING (OVXB42) ( 23 MAY 77 )

REFERENCE DATA

SREF = 2690.0000 SQ.FT. XMRP = 1097.0000 IN. XT
LREF = 1290.3000 INCHES YMRP = .0000 IN. YT
BREF = 1290.3000 INCHES ZMRP = 450.0000 IN. ZT
SCALE = .0100

PARAMETRIC DATA

ALPHA = -5.000 BETA = -10.000
DALPHA = -5.000 DBETA = -8.000
X = 600.000 MACH = 4.500
JET PC = .000

RUN NO. 4382/ 0 RN/L = 2.37 GRADIENT INTERVAL = -5.00/ 5.00

| Y | Z | X | ALPHA | BETA | PHI | CN | CLM | CY | CYN | CBL | CA |
|---|---|---|---|---|---|---|---|---|---|---|---|
| -99.886 | 398.780 | 599.16000 | -5.21080 | -10.19900 | -.14031 | -.18984 | .05909 | .35788 | -.10505 | .03839 | .23630 |
| -98.953 | 299.790 | 599.33000 | -5.20910 | -10.19900 | -.13113 | -.18041 | .05361 | .34851 | -.09997 | .03818 | .23596 |
| -99.632 | 200.300 | 599.31000 | -5.20470 | -10.19600 | -.12283 | -.17468 | .05200 | .33960 | -.09671 | .03814 | .23628 |
| | GRADIENT | .00000 | .00000 | .00000 | .00000 | .00000 | .00000 | .00000 | .00000 | .00000 | .00000 |

RUN NO. 4381/ 0 RN/L = 2.37 GRADIENT INTERVAL = -5.00/ 5.00

| Y | Z | X | ALPHA | BETA | PHI | CN | CLM | CY | CYN | CBL | CA |
|---|---|---|---|---|---|---|---|---|---|---|---|
| -299.840 | 200.110 | 599.54000 | -5.21100 | -10.19800 | -.14314 | -.19324 | .06132 | .35993 | -.10646 | .03833 | .23636 |
| -300.730 | 299.910 | 599.66000 | -5.21130 | -10.19800 | -.14381 | -.19360 | .06168 | .36096 | -.10706 | .03842 | .23758 |
| -301.130 | 400.250 | 599.63000 | -5.21140 | -10.19700 | -.14374 | -.19377 | .06190 | .36093 | -.10712 | .03843 | .23854 |
| | GRADIENT | .00000 | .00000 | .00000 | .00000 | .00000 | .00000 | .00000 | .00000 | .00000 | .00000 |

IA143, AEDC V41A-P8A, O/ET W/R.H. SRB SEPARATING (OVXB43) ( 23 MAY 77 )

REFERENCE DATA

SREF = 2690.0000 SQ.FT. XMRP = 1097.0000 IN. XT
LREF = 1290.3000 INCHES YMRP = .0000 IN. YT
BREF = 1290.3000 INCHES ZMRP = 450.0000 IN. ZT
SCALE = .0100

PARAMETRIC DATA

ALPHA = -5.000 BETA = -10.000
DALPHA = -10.000 DBETA = -8.000
X = 600.000 MACH = 4.500
JET PC = .000

RUN NO. 4297/ 0 RN/L = 2.38 GRADIENT INTERVAL = -5.00/ 5.00

| Y | Z | X | ALPHA | BETA | PHI | CN | CLM | CY | CYN | CBL | CA |
|---|---|---|---|---|---|---|---|---|---|---|---|
| -100.280 | 200.360 | 599.34000 | -5.20300 | -10.19600 | -.11739 | -.16905 | .04909 | .33040 | -.09189 | .03722 | .23605 |
| -100.910 | 300.200 | 599.56000 | -5.20760 | -10.19900 | -.12761 | -.17314 | .04962 | .34201 | -.09650 | .03746 | .23469 |
| -100.720 | 350.130 | 599.45000 | -5.20870 | -10.20000 | -.13051 | -.17816 | .05210 | .34711 | -.09877 | .03791 | .23456 |
| -100.720 | 400.090 | 599.40000 | -5.20960 | -10.20000 | -.13673 | -.18403 | .05559 | .35373 | -.10229 | .03812 | .23424 |
| | GRADIENT | .00000 | .00000 | .00000 | .00000 | .00000 | .00000 | .00000 | .00000 | .00000 | .00000 |

IA143, AEDC V41A-P8A, O/ET W/R.H. SRB SEPARATING (OVXB44) ( 23 MAY 77 )

REFERENCE DATA

SREF = 2690.0000 SQ.FT. XMRP = 1097.0000 IN. XT
LREF = 1290.3000 INCHES YMRP = .0000 IN. YT
BREF = 1290.3000 INCHES ZMRP = 450.0000 IN. ZT
SCALE = .0100

PARAMETRIC DATA

ALPHA = -5.000 BETA = -10.000
DALPHA = -10.000 DBETA = -8.000
X = 600.000 MACH = 4.500
JET PC = .000

RUN NO. 4299/ 0 RN/L = 2.37 GRADIENT INTERVAL = -5.00/ 5.00

| Y | Z | X | ALPHA | BETA | PHI | CN | CLM | CY | CYN | CBL | CA |
|---|---|---|---|---|---|---|---|---|---|---|---|
| -297.890 | 199.250 | 601.14000 | -5.21010 | -10.19900 | -.14111 | -.19055 | .05955 | .35628 | -.10415 | .03789 | .23401 |
| -300.010 | 300.110 | 599.34000 | -5.21060 | -10.19800 | -.14432 | -.19177 | .06062 | .36005 | -.10638 | .03810 | .23543 |
| -300.900 | 400.260 | 599.51000 | -5.21100 | -10.19800 | -.14418 | -.19239 | .06110 | .36039 | -.10657 | .03820 | .23718 |
| | GRADIENT | .00000 | .00000 | .00000 | .00000 | .00000 | .00000 | .00000 | .00000 | .00000 | .00000 |

IA143, AEDC V41A-P8A, O/ET W/R.H. SRB SEPARATING (OVXB45) ( 23 MAY 77 )

REFERENCE DATA

SREF = 2690.0000 SQ.FT. XMRP = 1097.0000 IN. XT
LREF = 1290.3000 INCHES YMRP = .0000 IN. YT
BREF = 1290.3000 INCHES ZMRP = 450.0000 IN. ZT
SCALE = .0100

PARAMETRIC DATA

ALPHA = -5.000 BETA = -10.000
DALPHA = -10.000 DBETA = -4.000
X = 600.000 MACH = 4.500
JET PC = .000

RUN NO. 4301/ 0 RN/L = 2.37 GRADIENT INTERVAL = -5.00/ 5.00

| Y | Z | X | ALPHA | BETA | PHI | CN | CLM | CY | CYN | CBL | CA |
|---|---|---|---|---|---|---|---|---|---|---|---|
| -100.110 | 300.250 | 599.32000 | -5.20860 | -10.19900 | -.13113 | -.17961 | .05325 | .34689 | -.09893 | .03781 | .23521 |
| -100.520 | 350.160 | 599.44000 | -5.20980 | -10.20000 | -.13560 | -.18433 | .05586 | .35251 | -.10166 | .03811 | .23515 |
| -100.760 | 400.130 | 599.34000 | -5.21030 | -10.19900 | -.14020 | -.18804 | .05819 | .35671 | -.10420 | .03814 | .23510 |
| | GRADIENT | .00000 | .00000 | .00000 | .00000 | .00000 | .00000 | .00000 | .00000 | .00000 | .00000 |

IA143, AEDC V41A-P8A, O/ET W/R.H. SRB SEPARATING (OVXB46) ( 23 MAY 77 )

REFERENCE DATA

SREF = 2690.0000 SQ.FT. XMRP = 1097.0000 IN. XT
LREF = 1290.3000 INCHES YMRP = .0000 IN. YT
BREF = 1290.3000 INCHES ZMRP = 450.0000 IN. ZT
SCALE = .0100

-- PARAMETRIC DATA

ALPHA = -5.000 BETA = -10.000
DALPHA = -15.000 DBETA = -4.000
X = 600.000 MACH = 4.500
JET PC = .000

RUN NO. 4320/ 0 RN/L = 2.37 GRADIENT INTERVAL = -5.00/ 5.00

| Y | Z | X | ALPHA | BETA | PHI | CN | CLM | CY | CYN | CBL | CA |
|---|---|---|---|---|---|---|---|---|---|---|---|
| -95.630 | 298.890 | 600.43000 | -5.20760 | -10.19900 | -.12613 | -.17316 | .04949 | .33860 | -.09478 | .03700 | .23500 |
| -100.780 | 350.310 | 599.24000 | -5.20900 | -10.20000 | -.12965 | -.17804 | .05173 | .34463 | -.09741 | .03754 | .23445 |
| -100.210 | 400.400 | 599.46000 | -5.20970 | -10.20000 | -.13414 | -.18319 | .05473 | .35085 | -.10050 | .03798 | .23372 |
| | GRADIENT | .00000 | .00000 | .00000 | .00000 | .00000 | .00000 | .00000 | .00000 | .00000 | .00000 |

RUN NO. 4321/ 0 RN/L = 2.37 GRADIENT INTERVAL = -5.00/ 5.00

| Y | Z | X | ALPHA | BETA | PHI | CN | CLM | CY | CYN | CBL | CA |
|---|---|---|---|---|---|---|---|---|---|---|---|
| -200.720 | 401.460 | 599.56000 | -5.21050 | -10.19800 | -.14437 | -.19143 | .06022 | .35975 | -.10624 | .03802 | .23432 |
| -199.860 | 350.170 | 599.11000 | -5.21010 | -10.19900 | -.14103 | -.18967 | .05890 | .35662 | -.10418 | .03793 | .23364 |
| -200.190 | 300.270 | 599.13000 | -5.21000 | -10.19900 | -.13594 | -.18775 | .05731 | .35118 | -.10112 | .03775 | .23356 |
| | GRADIENT | .00000 | .00000 | .00000 | .00000 | .00000 | .00000 | .00000 | .00000 | .00000 | .00000 |

IA143, AEDC V41A-P8A, O/ET W/R.H. SRB SEPARATING (OVXB47) ( 23 MAY 77 )

REFERENCE DATA

SREF = 2690.0000 SQ.FT. XMRP = 1097.0000 IN. XT
LREF = 1290.3000 INCHES YMRP = .0000 IN. YT
BREF = 1290.3000 INCHES ZMRP = 450.0000 IN. ZT
SCALE = .0100

PARAMETRIC DATA

ALPHA = -5.000 BETA = -10.000
DALPHA = -10.000 DBETA = -4.000
X = 600.000 MACH = 4.500
JET PC = .000

RUN NO. 4300/ 0 RN/L = 2.37 GRADIENT INTERVAL = -5.00/ 5.00

| Y | Z | X | ALPHA | BETA | PHI | CN | CLM | CY | CYN | CBL | CA |
|---|---|---|---|---|---|---|---|---|---|---|---|
| -196.520 | 198.660 | 600.40000 | -5.20970 | -10.19900 | -.13335 | -.18656 | .05673 | .34850 | -.09967 | .03766 | .23472 |
| -200.360 | 300.090 | 599.38000 | -5.21020 | -10.19900 | -.14056 | -.18983 | .05913 | .35686 | -.10430 | .03807 | .23491 |
| -200.510 | 350.340 | 599.33000 | -5.21070 | -10.19800 | -.14353 | -.19145 | .06034 | .35943 | -.10598 | .03810 | .23573 |
| -200.320 | 400.220 | 599.47000 | -5.21090 | -10.19800 | -.14424 | -.19215 | .06097 | .36038 | -.10657 | .03819 | .23675 |
| | GRADIENT | .00000 | .00000 | .00000 | .00000 | .00000 | .00000 | .00000 | .00000 | .00000 | .00000 |

IA143, AEDC V41A-P8A, O/ET W/R.H. SRB SEPARATING (OVXB48) ( 01 SEP 77 )

REFERENCE DATA

SREF = 2690.0000 SQ.FT. XMRP = 1097.0000 IN. XT
LREF = 1290.3000 INCHES YMRP = .0000 IN. YT
BREF = 1290.3000 INCHES ZMRP = 450.0000 IN. ZT
SCALE = .0100

PARAMETRIC DATA

ALPHA = -5.000 BETA = -10.000
DALPHA = -15.000 DBETA = -8.000
X = 600.000 MACH = 4.500
JET PC = .000

RUN NO. 4323/ 0 RN/L = 2.37 GRADIENT INTERVAL = -5.00/ 5.00

| Y | Z | X | ALPHA | BETA | PHI | CN | CLM | CY | CYN | CBL | CA |
|---|---|---|---|---|---|---|---|---|---|---|---|
| -99.825 | 399.480 | 599.02000 | -5.20880 | -10.20000 | -.12881 | -.17581 | .05026 | .34488 | -.09742 | .03777 | .23309 |
| -99.415 | 350.240 | 599.32000 | -5.20810 | -10.20000 | -.12606 | -.16996 | .04708 | .33903 | -.09460 | .03708 | .23363 |
| -99.801 | 300.370 | 599.29000 | -5.20530 | -10.19800 | -.11881 | -.16615 | .04578 | .33136 | -.09133 | .03695 | .23428 |
| | GRADIENT | .00000 | .00000 | .00000 | .00000 | .00000 | .00000 | .00000 | .00000 | .00000 | .00000 |

RUN NO. 4322/ 0 RN/L = 2.37 GRADIENT INTERVAL = -5.00/ 5.00

| Y | Z | X | ALPHA | BETA | PHI | CN | CLM | CY | CYN | CBL | CA |
|---|---|---|---|---|---|---|---|---|---|---|---|
| -200.540 | 299.990 | 599.40000 | -5.21010 | -10.20000 | -.12993 | -.18136 | .05282 | .34340 | -.09653 | .03719 | .23295 |
| -201.300 | 350.420 | 599.19000 | -5.21000 | -10.20000 | -.13450 | -.18537 | .05562 | .34981 | -.10009 | .03770 | .23259 |
| -200.340 | 400.510 | 599.59000 | -5.21000 | -10.19900 | -.14075 | -.18862 | .05818 | .35634 | -.10393 | .03793 | .23280 |
| | GRADIENT | .00000 | .00000 | .00000 | .00000 | .00000 | .00000 | .00000 | .00000 | .00000 | .00000 |

IA143, AEDC V41A-P8A, O/ET W/R.H. SRB SEPARATING (OVXB49) ( 23 MAY 77 )

REFERENCE DATA

SREF = 2690.0000 SQ.FT. XMRP = 1097.0000 IN. XT
LREF = 1290.3000 INCHES YMRP = .0000 IN. YT
BREF = 1290.3000 INCHES ZMRP = 450.0000 IN. ZT
SCALE = .0100

PARAMETRIC DATA

ALPHA = -5.000 BETA = -10.000
DALPHA = -10.000 DBETA = -8.000
X = 600.000 MACH = 4.500
JET PC = .000

RUN NO. 4298/ 0 RN/L = 2.37 GRADIENT INTERVAL = -5.00/ 5.00

| Y | Z | X | ALPHA | BETA | PHI | CN | CLM | CY | CYN | CBL | CA |
|---|---|---|---|---|---|---|---|---|---|---|---|
| -197.420 | 298.280 | 600.87000 | -5.20990 | -10.20000 | -.13607 | -.18681 | .05695 | .35197 | -.10142 | .03790 | .23389 |
| -200.810 | 350.330 | 599.44000 | -5.21030 | -10.19900 | -.14121 | -.18955 | .05892 | .35728 | -.10451 | .03804 | .23434 |
| -200.820 | 400.110 | 599.44000 | -5.21070 | -10.19800 | -.14423 | -.19176 | .06048 | .36029 | -.10640 | .03815 | .23525 |
| | GRADIENT | .00000 | .00000 | .00000 | .00000 | .00000 | .00000 | .00000 | .00000 | .00000 | .00000 |

IA143, AEDC V41A-P8A, O/ET W/R.H. SRB SEPARATING (OVXB50) ( 23 MAY 77 )

REFERENCE DATA

SREF = 2690.0000 SQ.FT. XMRP = 1097.0000 IN. XT
LREF = 1290.3000 INCHES YMRP = .0000 IN. YT
BREF = 1290.3000 INCHES ZMRP = 450.0000 IN. ZT
SCALE = .0100

PARAMETRIC DATA

ALPHA = -5.000 BETA = -10.000
DALPHA = -5.000 DBETA = 4.000
X = 900.000 MACH = 4.500
JET PC = .000

RUN NO. 4385/ 0 RN/L = 2.36 GRADIENT INTERVAL = -5.00/ 5.00

| Y | Z | X | ALPHA | BETA | PHI | CN | CLM | CY | CYN | CBL | CA |
|---|---|---|---|---|---|---|---|---|---|---|---|
| -99.922 | 200.220 | 899.36000 | -5.21030 | -10.19900 | -.13711 | -.18961 | .05891 | .35422 | -.10303 | .03821 | .23650 |
| -100.760 | 275.160 | 899.24000 | -5.21070 | -10.19800 | -.14305 | -.19220 | .06091 | .35966 | -.10642 | .03829 | .23670 |
| -100.820 | 425.010 | 899.34000 | -5.21100 | -10.19700 | -.14360 | -.19306 | .06162 | .36016 | -.10684 | .03831 | .23813 |
| -100.460 | 499.960 | 899.45000 | -5.21100 | -10.19700 | -.14360 | -.19302 | .06157 | .36021 | -.10685 | .03832 | .23797 |
| -100.290 | 600.260 | 899.43000 | -5.21100 | -10.19700 | -.14354 | -.19303 | .06163 | .36007 | -.10677 | .03830 | .23818 |
| | GRADIENT | .00000 | .00000 | .00000 | .00000 | .00000 | .00000 | .00000 | .00000 | .00000 | .00000 |

RUN NO. 4386/ 0 RN/L = 2.37 GRADIENT INTERVAL = -5.00/ 5.00

| Y | Z | X | ALPHA | BETA | PHI | CN | CLM | CY | CYN | CBL | CA |
|---|---|---|---|---|---|---|---|---|---|---|---|
| -401.080 | 600.810 | 899.40000 | -5.21090 | -10.19700 | -.14357 | -.19299 | .06162 | .36001 | -.10679 | .03829 | .23805 |
| -400.160 | 499.590 | 899.23000 | -5.21100 | -10.19700 | -.14366 | -.19296 | .06161 | .36032 | -.10693 | .03834 | .23819 |
| -400.850 | 424.860 | 899.06000 | -5.21090 | -10.19700 | -.14354 | -.19308 | .06164 | .36030 | -.10688 | .03834 | .23823 |
| -400.120 | 275.000 | 899.36000 | -5.21090 | -10.19700 | -.14353 | -.19308 | .06160 | .36034 | -.10693 | .03835 | .23799 |
| -400.550 | 200.130 | 899.27000 | -5.21100 | -10.19700 | -.14360 | -.19309 | .06161 | .36025 | -.10686 | .03832 | .23812 |
| | GRADIENT | .00000 | .00000 | .00000 | .00000 | .00000 | .00000 | .00000 | .00000 | .00000 | .00000 |

IA143, AEDC V41A-P8A, O/ET W/R.H. SRB SEPARATING (OVXB51) ( 23 MAY 77 )

REFERENCE DATA

SREF = 2690.0000 SQ.FT. XMRP = 1097.0000 IN. XT
LREF = 1290.3000 INCHES YMRP = .0000 IN. YT
BREF = 1290.3000 INCHES ZMRP = 450.0000 IN. ZT
SCALE = .0100

PARAMETRIC DATA

ALPHA = -5.000 BETA = -10.000
DALPHA = -20.000 DBETA = 4.000
X = 900.000 MACH = 4.500
JET PC = .000

RUN NO. 4348/ 0 RN/L = 2.37 GRADIENT INTERVAL = -5.00/ 5.00

| Y | Z | X | ALPHA | BETA | PHI | CN | CLM | CY | CYN | CBL | CA |
|---|---|---|---|---|---|---|---|---|---|---|---|
| -100.140 | 200.700 | 899.12000 | -5.21030 | -10.19900 | -.13089 | -.18157 | .05322 | .34206 | -.09629 | .03675 | .23449 |
| -99.917 | 275.590 | 899.16000 | -5.21020 | -10.19900 | -.13451 | -.18524 | .05558 | .34915 | -.10005 | .03759 | .23353 |
| -100.500 | 425.750 | 899.13000 | -5.21050 | -10.19800 | -.14425 | -.19184 | .06064 | .35993 | -.10637 | .03808 | .23531 |
| -100.460 | 500.680 | 899.11000 | -5.21080 | -10.19800 | -.14409 | -.19236 | .06111 | .35997 | -.10650 | .03813 | .23701 |
| -100.530 | 601.140 | 899.32000 | -5.21100 | -10.19800 | -.14423 | -.19238 | .06121 | .36020 | -.10664 | .03818 | .23762 |
| | GRADIENT | .00000 | .00000 | .00000 | .00000 | .00000 | .00000 | .00000 | .00000 | .00000 | .00000 |

IA143, AEDC V41A-P8A, O/ET W/R.H. SRB SEPARATING (OVXB51) ( 23 MAY 77 )

REFERENCE DATA

SREF = 2690.0000 SQ.FT. XMRP = 1097.0000 IN. XT
LREF = 1290.3000 INCHES YMRP = .0000 IN. YT
BREF = 1290.3000 INCHES ZMRP = 450.0000 IN. ZT
SCALE = .0100

PARAMETRIC DATA

ALPHA = -5.000 BETA = -10.000
DALPHA = -20.000 DBETA = 4.000
X = 900.000 MACH = 4.500
JET PC = .000

RUN NO. 4349/ 0 RN/L = 2.37 GRADIENT INTERVAL = -5.00/ 5.00

| Y | Z | X | ALPHA | BETA | PHI | CN | CLM | CY | CYN | CBL | CA |
|---|---|---|---|---|---|---|---|---|---|---|---|
| -401.590 | 603.160 | 899.93000 | -5.21090 | -10.19800 | -.14420 | -.19238 | .06123 | .36025 | -.10666 | .03817 | .23778 |
| -399.900 | 499.990 | 898.87000 | -5.21100 | -10.19800 | -.14428 | -.19240 | .06125 | .36050 | -.10674 | .03820 | .23791 |
| -399.950 | 425.280 | 899.04000 | -5.21110 | -10.19800 | -.14432 | -.19233 | .06120 | .36032 | -.10668 | .03818 | .23766 |
| -400.160 | 275.580 | 899.09000 | -5.21110 | -10.19800 | -.14435 | -.19237 | .06123 | .36028 | -.10667 | .03817 | .23782 |
| -400.470 | 200.810 | 899.11000 | -5.21090 | -10.19800 | -.14420 | -.19229 | .06123 | .36014 | -.10663 | .03817 | .23776 |
| | GRADIENT | .00000 | .00000 | .00000 | .00000 | .00000 | .00000 | .00000 | .00000 | .00000 | .00000 |

IA143, AEDC V41A-P8A, O/ET W/R.H. SRB SEPARATING (OVXB52) ( 23 MAY 77 )

REFERENCE DATA

SREF = 2690.0000 SQ.FT. XMRP = 1097.0000 IN. XT
LREF = 1290.3000 INCHES YMRP = .0000 IN. YT
BREF = 1290.3000 INCHES ZMRP = 450.0000 IN. ZT
SCALE = .0100

PARAMETRIC DATA

ALPHA = -5.000 BETA = -10.000
DALPHA = -5.000 DBETA = -8.000
X = 900.000 MACH = 4.500
JET PC = .000

RUN NO. 4383/ 0 RN/L = 2.37 GRADIENT INTERVAL = -5.00/ 5.00

| Y | Z | X | ALPHA | BETA | PHI | CN | CLM | CY | CYN | CBL | CA |
|---|---|---|---|---|---|---|---|---|---|---|---|
| -100.630 | 275.050 | 899.29000 | -5.21060 | -10.19900 | -.13693 | -.18716 | .05723 | .35431 | -.10292 | .03827 | .23562 |
| -102.420 | 425.480 | 899.77000 | -5.21140 | -10.19700 | -.14380 | -.19379 | .06183 | .36084 | -.10708 | .03841 | .23815 |
| -100.930 | 500.290 | 899.46000 | -5.21160 | -10.19800 | -.14388 | -.19379 | .06190 | .36091 | -.10712 | .03843 | .23852 |
| -101.540 | 600.320 | 899.51000 | -5.21150 | -10.19700 | -.14383 | -.19380 | .06184 | .36081 | -.10708 | .03840 | .23828 |
| | GRADIENT | .00000 | .00000 | .00000 | .00000 | .00000 | .00000 | .00000 | .00000 | .00000 | .00000 |

IA143, AEDC V41A-P8A, O/ET W/R.H. SRB SEPARATING (OVXB53) ( 23 MAY 77 )

REFERENCE DATA

SREF = 2690.0000 SQ.FT. XMRP = 1097.0000 IN. XT
LREF = 1290.3000 INCHES YMRP = .0000 IN. YT
BREF = 1290.3000 INCHES ZMRP = 450.0000 IN. ZT
SCALE = .0100

PARAMETRIC DATA

ALPHA = -5.000 BETA = -10.000
DALPHA = -20.000 DBETA = -12.000
X = 900.000 MACH = 4.500
JET PC = .000

RUN NO. 4350/ 0 RN/L = 2.37 GRADIENT INTERVAL = -5.00/ 5.00

| Y | Z | X | ALPHA | BETA | PHI | CN | CLM | CY | CYN | CBL | CA |
|---|---|---|---|---|---|---|---|---|---|---|---|
| -97.886 | 424.570 | 901.31000 | -5.21000 | -10.19900 | -.14160 | -.18703 | .05704 | .35723 | -.10446 | .03794 | .23183 |
| -100.880 | 500.790 | 899.68000 | -5.21020 | -10.19800 | -.14443 | -.19147 | .06018 | .35978 | -.10631 | .03801 | .23354 |
| -101.960 | 601.560 | 900.20000 | -5.21060 | -10.19800 | -.14421 | -.19213 | .06081 | .36002 | -.10642 | .03810 | .23586 |
| | GRADIENT | .00000 | .00000 | .00000 | .00000 | .00000 | .00000 | .00000 | .00000 | .00000 | .00000 |

IA143, AEDC V41A-P8A, O/ET W/R.H. SRB SEPARATING (OVXB54) ( 23 MAY 77 )

REFERENCE DATA

SREF = 2690.0000 SQ.FT. XMRP = 1097.0000 IN. XT
LREF = 1290.3000 INCHES YMRP = .0000 IN. YT
BREF = 1290.3000 INCHES ZMRP = 450.0000 IN. ZT
SCALE = .0100

PARAMETRIC DATA

ALPHA = -5.000 BETA = -10.000
DALPHA = -5.000 DBETA = -12.000
X = 900.000 MACH = 4.500
JET PC = .000

RUN NO. 4384/ 0 RN/L = 2.37 GRADIENT INTERVAL = -5.00/ 5.00

| Y | Z | X | ALPHA | BETA | PHI | CN | CLM | CY | CYN | CBL | CA |
|---|---|---|---|---|---|---|---|---|---|---|---|
| -400.550 | 200.140 | 899.37000 | -5.21150 | -10.19700 | -.14379 | -.19380 | .06189 | .36069 | -.10703 | .03840 | .23844 |
| -400.380 | 274.860 | 899.49000 | -5.21150 | -10.19700 | -.14390 | -.19379 | .06188 | .36083 | -.10710 | .03840 | .23852 |
| -401.550 | 425.170 | 899.73000 | -5.21160 | -10.19800 | -.14390 | -.19391 | .06193 | .36096 | -.10713 | .03842 | .23860 |
| -401.100 | 500.090 | 899.49000 | -5.21150 | -10.19700 | -.14379 | -.19384 | .06187 | .36105 | -.10716 | .03845 | .23844 |
| -401.460 | 600.330 | 899.74000 | -5.21150 | -10.19700 | -.14376 | -.19386 | .06193 | .36102 | -.10717 | .03846 | .23866 |
| | GRADIENT | .00000 | .00000 | .00000 | .00000 | .00000 | .00000 | .00000 | .00000 | .00000 | .00000 |

IA143, AEDC V41A-P8A, O/ET W/R.H. SRB SEPARATING (OVXB55) ( 23 MAY 77 )

REFERENCE DATA

SREF = 2690.0000 SQ.FT. XMRP = 1097.0000 IN. XT
LREF = 1290.3000 INCHES YMRP = .0000 IN. YT
BREF = 1290.3000 INCHES ZMRP = 450.0000 IN. ZT
SCALE = .0100

PARAMETRIC DATA

ALPHA = -5.000 BETA = -10.000
DALPHA = -20.000 DBETA = -16.000
X = 900.000 MACH = 4.500
JET PC = .000

RUN NO. 4351/ 0 RN/L = 2.37 GRADIENT INTERVAL = -5.00/ 5.00

| Y | Z | X | ALPHA | BETA | PHI | CN | CLM | CY | CYN | CBL | CA |
|---|---|---|---|---|---|---|---|---|---|---|---|
| -400.200 | 202.940 | 903.46000 | -5.21070 | -10.19800 | -.14540 | -.18902 | .05814 | .35906 | -.10580 | .03763 | .23152 |
| -400.130 | 275.120 | 899.08000 | -5.21060 | -10.19800 | -.14515 | -.19000 | .05903 | .35916 | -.10593 | .03773 | .23256 |
| -400.960 | 425.500 | 899.57000 | -5.21050 | -10.19800 | -.14429 | -.19167 | .06037 | .35973 | -.10623 | .03804 | .23433 |
| -401.080 | 500.750 | 899.67000 | -5.21070 | -10.19800 | -.14407 | -.19205 | .06071 | .35963 | -.10626 | .03805 | .23562 |
| -401.580 | 601.050 | 899.77000 | -5.21090 | -10.19800 | -.14421 | -.19221 | .06105 | .36004 | -.10652 | .03814 | .23708 |
| | GRADIENT | .00000 | .00000 | .00000 | .00000 | .00000 | .00000 | .00000 | .00000 | .00000 | .00000 |

IA143, AEDC V41A-P8A, O/ET W/R.H. SRB SEPARATING (OVXB56) ( 23 MAY 77 )

REFERENCE DATA

SREF = 2690.0000 SQ.FT. XMRP = 1097.0000 IN. XT
LREF = 1290.3000 INCHES YMRP = .0000 IN. YT
BREF = 1290.3000 INCHES ZMRP = 450.0000 IN. ZT
SCALE = .0100

PARAMETRIC DATA

ALPHA = -5.000 BETA = -10.000
DALPHA = -10.000 DBETA = .000
X = 900.000 MACH = 4.500
JET PC = .000

RUN NO. 4304/ 0 RN/L = 2.37 GRADIENT INTERVAL = -5.00/ 5.00

| Y | Z | X | ALPHA | BETA | PHI | CN | CLM | CY | CYN | CBL | CA |
|---|---|---|---|---|---|---|---|---|---|---|---|
| -100.100 | 300.330 | 899.22000 | -5.21050 | -10.19900 | -.14106 | -.18953 | .05900 | .35780 | -.10473 | .03819 | .23544 |
| -100.370 | 400.110 | 899.30000 | -5.21100 | -10.19800 | -.14418 | -.19240 | .06111 | .36067 | -.10669 | .03825 | .23722 |
| -100.600 | 500.300 | 899.27000 | -5.21100 | -10.19800 | -.14421 | -.19234 | .06124 | .36035 | -.10663 | .03819 | .23791 |
| | GRADIENT | .00000 | .00000 | .00000 | .00000 | .00000 | .00000 | .00000 | .00000 | .00000 | .00000 |

RUN NO. 4305/ 0 RN/L = 2.37 GRADIENT INTERVAL = -5.00/ 5.00

| Y | Z | X | ALPHA | BETA | PHI | CN | CLM | CY | CYN | CBL | CA |
|---|---|---|---|---|---|---|---|---|---|---|---|
| -299.910 | 501.030 | 899.36000 | -5.21090 | -10.19800 | -.14403 | -.19239 | .06129 | .36034 | -.10663 | .03822 | .23800 |
| -299.630 | 399.910 | 899.20000 | -5.21100 | -10.19800 | -.14414 | -.19245 | .06126 | .36054 | -.10670 | .03824 | .23788 |
| -299.210 | 300.190 | 899.25000 | -5.21100 | -10.19800 | -.14416 | -.19231 | .06122 | .36042 | -.10666 | .03822 | .23786 |
| | GRADIENT | .0$000 | .00000 | .0$000 | .00000 | .0$000 | .00000 | .0$000 | .00000 | .00000 | .00000 |

IA143, AEDC V41A-P8A, O/ET W/R.H. SRB SEPARATING (OVXB57) ( 23 MAY 77 )

REFERENCE DATA

SREF = 2690.0000 SQ.FT. XMRP = 1097.0000 IN. XT
LREF = 1290.3000 INCHES YMRP = .0000 IN. YT
BREF = 1290.3000 INCHES ZMRP = 450.0000 IN. ZT
SCALE = .0100

PARAMETRIC DATA

ALPHA = -5.000 BETA = -10.000
DALPHA = -15.000 DBETA = .000
X = 900.000 MACH = 4.500
JET PC = .000

RUN NO. 4333/ 0 RN/L = 2.37 GRADIENT INTERVAL = -5.00/ 5.00

| Y | Z | X | ALPHA | BETA | PHI | CN | CLM | CY | CYN | CBL | CA |
|---|---|---|---|---|---|---|---|---|---|---|---|
| -95.053 | 299.100 | 900.11000 | -5.21040 | -10.20000 | -.13809 | -.18709 | .05719 | .35418 | -.10266 | .03798 | .23434 |
| -100.770 | 400.440 | 899.22000 | -5.21060 | -10.19800 | -.14421 | -.19187 | .06081 | .35999 | -.10643 | .03812 | .23593 |
| -100.340 | 500.560 | 899.28000 | -5.21100 | -10.19800 | -.14424 | -.19233 | .06120 | .36022 | -.10660 | .03816 | .23771 |
| | GRADIENT | .00000 | .00000 | .00000 | .00000 | .00000 | .00000 | .00000 | .00000 | .00000 | .00000 |

RUN NO. 4334/ 0 RN/L = 2.37 GRADIENT INTERVAL = -5.00/ 5.00

| Y | Z | X | ALPHA | BETA | PHI | CN | CLM | CY | CYN | CBL | CA |
|---|---|---|---|---|---|---|---|---|---|---|---|
| -300.360 | 501.760 | 899.63000 | -5.21110 | -10.19800 | -.14425 | -.19240 | .06124 | .36047 | -.10669 | .03822 | .23779 |
| -299.580 | 400.070 | 898.99000 | -5.21120 | -10.19800 | -.14438 | -.19242 | .06123 | .36045 | -.10669 | .03821 | .23784 |
| -299.910 | 300.420 | 899.10000 | -5.21100 | -10.19800 | -.14424 | -.19232 | .06120 | .36020 | -.10661 | .03817 | .23767 |
| | GRADIENT | .00000 | .00000 | .00000 | .00000 | .00000 | .00000 | .00000 | .00000 | .00000 | .00000 |

IA143, AEDC V41A-P8A, O/ET W/R.H. SRB SEPARATING (OVXB58) ( 23 MAY 77 )

REFERENCE DATA

SREF = 2690.0000 SQ.FT. XMRP = 1097.0000 IN. XT
LREF = 1290.3000 INCHES YMRP = .0000 IN. YT
BREF = 1290.3000 INCHES ZMRP = 450.0000 IN. ZT
SCALE = .0100

PARAMETRIC DATA

ALPHA = -5.000 BETA = -10.000
DALPHA = -10.000 DBETA = -12.000
X = 900.000 MACH = 4.500
JET PC = .000

RUN NO. 4310/ 0 RN/L = 2.37 GRADIENT INTERVAL = -5.00/ 5.00

| Y | Z | X | ALPHA | BETA | PHI | CN | CLM | CY | CYN | CBL | CA |
|---|---|---|---|---|---|---|---|---|---|---|---|
| -100.380 | 300.290 | 899.12000 | -5.20900 | -10.20000 | -.13358 | -.17992 | .05318 | .35004 | -.10051 | .03799 | .23397 |
| -102.340 | 400.220 | 899.77000 | -5.21050 | -10.19800 | -.14408 | -.19144 | .06030 | .36019 | -.10637 | .03814 | .23493 |
| -101.800 | 501.200 | 899.81000 | -5.21090 | -10.19800 | -.14407 | -.19237 | .06118 | .36045 | -.10662 | .03823 | .23748 |
| | GRADIENT | .00000 | .00000 | .00000 | .00000 | .00000 | .00000 | .00000 | .00000 | .00000 | .00000 |

RUN NO. 4311/ 0 RN/L = 2.36 GRADIENT INTERVAL = -5.00/ 5.00

| Y | Z | X | ALPHA | BETA | PHI | CN | CLM | CY | CYN | CBL | CA |
|---|---|---|---|---|---|---|---|---|---|---|---|
| -299.900 | 500.370 | 899.21000 | -5.21110 | -10.19800 | -.14415 | -.19248 | .06127 | .36056 | -.10671 | .03825 | .23795 |
| -298.850 | 399.670 | 899.09000 | -5.21110 | -10.19800 | -.14417 | -.19242 | .06121 | .36054 | -.10667 | .03824 | .23772 |
| -299.070 | 300.230 | 899.16000 | -5.21080 | -10.19800 | -.14410 | -.19220 | .06096 | .36029 | -.10650 | .03819 | .23539 |
| | GRADIENT | .00000 | .00000 | .00000 | .00000 | .00000 | .00000 | .00000 | .00000 | .00000 | .00000 |

IA143, AEDC V41A-P8A, O/ET W/R.H. SRB SEPARATING (OVXB59) ( 23 MAY 77 )

REFERENCE DATA

SREF = 2690.0000 SQ.FT. XMRP = 1097.0000 IN. XT
LREF = 1290.3000 INCHES YMRP = .0000 IN. YT
BREF = 1290.3000 INCHES ZMRP = 450.0000 IN. ZT
SCALE = .0100

PARAMETRIC DATA

ALPHA = -5.000 BETA = -10.000
DALPHA = -15.000 DBETA = -12.000
X = 900.000 MACH = 4.500
JET PC = .000

RUN NO. 4326/ 0 RN/L = 2.37 GRADIENT INTERVAL = -5.00/ 5.00

| Y | Z | X | ALPHA | BETA | PHI | CN | CLM | CY | CYN | CBL | CA |
|---|---|---|---|---|---|---|---|---|---|---|---|
| -100.130 | 300.430 | 899.31000 | -5.20860 | -10.19900 | -.13131 | -.17791 | .05181 | .34748 | -.09931 | .03779 | .23315 |
| -101.170 | 400.400 | 899.52000 | -5.21040 | -10.19900 | -.14284 | -.18884 | .05837 | .35849 | -.10533 | .03804 | .23288 |
| -102.450 | 500.930 | 899.73000 | -5.21050 | -10.19800 | -.14423 | -.19191 | .06076 | .36000 | -.10645 | .03812 | .23556 |
| | GRADIENT | .00000 | .00000 | .00000 | .00000 | .00000 | .00000 | .00000 | .00000 | .00000 | .00000 |

RUN NO. 4327/ 0 RN/L = 2.37 GRADIENT INTERVAL = -5.00/ 5.00

| Y | Z | X | ALPHA | BETA | PHI | CN | CLM | CY | CYN | CBL | CA |
|---|---|---|---|---|---|---|---|---|---|---|---|
| -299.200 | 501.540 | 899.66000 | -5.21100 | -10.19800 | -.14417 | -.19244 | .06123 | .36020 | -.10662 | .03817 | .23760 |
| -298.850 | 400.010 | 899.01000 | -5.21080 | -10.19800 | -.14413 | -.19214 | .06088 | .35984 | -.10635 | .03811 | .23606 |
| -299.820 | 300.430 | 899.03000 | -5.21040 | -10.19800 | -.14427 | -.19152 | .06030 | .35981 | -.10627 | .03805 | .23425 |
| | GRADIENT | .00000 | .00000 | .00000 | .00000 | .00000 | .00000 | .00000 | .00000 | .00000 | .00000 |

IA143, AEDC V41A-P8A, O/ET W/R.H. SRB SEPARATING (OVXB60) ( 23 MAY 77 )

REFERENCE DATA

SREF = 2690.0000 SQ.FT. XMRP = 1097.0000 IN. XT
LREF = 1290.3000 INCHES YMRP = .0000 IN. YT
BREF = 1290.3000 INCHES ZMRP = 450.0000 IN. ZT
SCALE = .0100

PARAMETRIC DATA

ALPHA = -5.000 BETA = -10.000
DALPHA = -12.000 DBETA = -6.000
X = 900.000 MACH = 4.500
JET PC = .000

RUN NO. 4316/ 0 RN/L = 2.38 GRADIENT INTERVAL = -5.00/ 5.00

| Y | Z | X | ALPHA | BETA | PHI | CN | CLM | CY | CYN | CBL | CA |
|---|---|---|---|---|---|---|---|---|---|---|---|
| -196.790 | 298.730 | 900.49000 | -5.21070 | -10.19800 | -.14441 | -.19189 | .06065 | .36034 | -.10650 | .03814 | .23547 |
| -200.840 | 400.180 | 899.26000 | -5.21100 | -10.19800 | -.14417 | -.19238 | .06116 | .36029 | -.10657 | .03820 | .23740 |
| -200.670 | 500.470 | 899.31000 | -5.21100 | -10.19800 | -.14416 | -.19244 | .06127 | .36042 | -.10668 | .03822 | .23789 |
| | GRADIENT | .00000 | .00000 | .00000 | .00000 | .00000 | .00000 | .00000 | .00000 | .00000 | .00000 |

IA143, AEDC V41A-P8A, O/ET W/R.H. SRB SEPARATING (OVXB61) ( 23 MAY 77 )

REFERENCE DATA

SREF = 2690.0000 SQ.FT. XMRP = 1097.0000 IN. XT
LREF = 1290.3000 INCHES YMRP = .0000 IN. YT
BREF = 1290.3000 INCHES ZMRP = 450.0000 IN. ZT
SCALE = .0100

PARAMETRIC DATA

ALPHA = -5.000 BETA = -10.000
DALPHA = -15.000 DBETA = -6.000
X = 900.000 MACH = 4.500
JET PC = .000

RUN NO. 4330/ 0 RN/L = 2.37 GRADIENT INTERVAL = -5.00/ 5.00

| Y | Z | X | ALPHA | BETA | PHI | CN | CLM | CY | CYN | CBL | CA |
|---|---|---|---|---|---|---|---|---|---|---|---|
| -196.620 | 399.400 | 900.85000 | -5.21060 | -10.19800 | -.14409 | -.19208 | .06091 | .35989 | -.10637 | .03811 | .23633 |
| -201.460 | 601.090 | 899.67000 | -5.21090 | -10.19800 | -.14414 | -.19230 | .06122 | .36029 | -.10662 | .03820 | .23771 |
| -201.910 | 802.030 | 899.93000 | -5.21090 | -10.19800 | -.14415 | -.19233 | .06124 | .36030 | -.10665 | .03820 | .23777 |
| -200.440 | 1000.400 | 899.40000 | -5.21090 | -10.19800 | -.14419 | -.19232 | .06122 | .36049 | -.10669 | .03822 | .23785 |
| | GRADIENT | .00000 | .00000 | .00000 | .00000 | .00000 | .00000 | .00000 | .00000 | .00000 | .00000 |

IA143, AEDC V41A-P8A, O/ET W/R.H. SRB SEPARATING (OVXB62) ( 23 MAY 77 )

REFERENCE DATA

SREF = 2690.0000 SQ.FT. XMRP = 1097.0000 IN. XT
LREF = 1290.3000 INCHES YMRP = .0000 IN. YT
BREF = 1290.3000 INCHES ZMRP = 450.0000 IN. ZT
SCALE = .0100

PARAMETRIC DATA

ALPHA = -5.000 BETA = -10.000
DALPHA = -10.000 DBETA = -4.000
X = 900.000 MACH = 4.500
JET PC = .000

RUN NO. 4306/ 0 RN/L = 2.37 GRADIENT INTERVAL = -5.00/ 5.00

| Y | Z | X | ALPHA | BETA | PHI | CN | CLM | CY | CYN | CBL | CA |
|---|---|---|---|---|---|---|---|---|---|---|---|
| -196.000 | 298.340 | 900.36000 | -5.21070 | -10.19800 | -.14413 | -.19212 | .06098 | .36017 | -.10649 | .03817 | .23659 |
| -200.140 | 350.200 | 899.12000 | -5.21110 | -10.19800 | -.14420 | -.19245 | .06122 | .36055 | -.10665 | .03823 | .23761 |
| -200.280 | 400.090 | 899.28000 | -5.21110 | -10.19800 | -.14422 | -.19247 | .06127 | .36053 | -.10668 | .03824 | .23787 |
| | GRADIENT | .00000 | .00000 | .00000 | .00000 | .00000 | .00000 | .00000 | .00000 | .00000 | .00000 |

RUN NO. 4307/ 0 RN/L = 2.37 GRADIENT INTERVAL = -5.00/ 5.00

| Y | Z | X | ALPHA | BETA | PHI | CN | CLM | CY | CYN | CBL | CA |
|---|---|---|---|---|---|---|---|---|---|---|---|
| -300.880 | 400.660 | 899.37000 | -5.21120 | -10.19800 | -.14424 | -.19243 | .06129 | .36062 | -.10671 | .03826 | .23809 |
| -299.720 | 350.170 | 899.18000 | -5.21100 | -10.19800 | -.14411 | -.19231 | .06122 | .36025 | -.10660 | .03820 | .23778 |
| -300.210 | 300.250 | 899.21000 | -5.21110 | -10.19800 | -.14422 | -.19245 | .06128 | .36061 | -.10672 | .03825 | .23798 |
| | GRADIENT | .00000 | .00000 | .00000 | .00000 | .00000 | .00000 | .00000 | .00000 | .00000 | .00000 |

IA143, AEDC V41A-P8A, O/ET W/R.H. SRB SEPARATING (OVXB63) ( 23 MAY 77 )

REFERENCE DATA

SREF = 2690.0000 SQ.FT. XMRP = 1097.0000 IN. XT
LREF = 1290.3000 INCHES YMRP = .0000 IN. YT
BREF = 1290.3000 INCHES ZMRP = 450.0000 IN. ZT
SCALE = .0100

PARAMETRIC DATA

ALPHA = -5.000 BETA = -10.000
DALPHA = -15.000 DBETA = -4.000
X = 900.000 MACH = 4.500
JET PC = .000

RUN NO. 4331/ 0 RN/L = 2.37 GRADIENT INTERVAL = -5.00/ 5.00

| Y | Z | X | ALPHA | BETA | PHI | CN | CLM | CY | CYN | CBL | CA |
|---|---|---|---|---|---|---|---|---|---|---|---|
| -196.050 | 299.780 | 900.48000 | -5.21040 | -10.19800 | -.14439 | -.19160 | .06048 | .35985 | -.10634 | .03804 | .23486 |
| -200.140 | 350.200 | 899.16000 | -5.21060 | -10.19800 | -.14418 | -.19196 | .06077 | .36006 | -.10642 | .03812 | .23583 |
| -200.340 | 400.250 | 899.24000 | -5.21090 | -10.19800 | -.14415 | -.19227 | .06107 | .36031 | -.10657 | .03819 | .23695 |
| | GRADIENT | .00000 | .00000 | .00000 | .00000 | .00000 | .00000 | .00000 | .00000 | .00000 | .00000 |

RUN NO. 4332/ 0 RN/L = 2.36 GRADIENT INTERVAL = -5.00/ 5.00

| Y | Z | X | ALPHA | BETA | PHI | CN | CLM | CY | CYN | CBL | CA |
|---|---|---|---|---|---|---|---|---|---|---|---|
| -299.870 | 400.930 | 899.60000 | -5.21090 | -10.19800 | -.14416 | -.19239 | .06124 | .36037 | -.10666 | .03820 | .23784 |
| -299.620 | 350.240 | 899.23000 | -5.21090 | -10.19800 | -.14410 | -.19217 | .06114 | .36011 | -.10658 | .03818 | .23749 |
| -299.840 | 300.430 | 899.10000 | -5.21090 | -10.19800 | -.14414 | -.19224 | .06111 | .36049 | -.10665 | .03823 | .23733 |
| | GRADIENT | .00000 | .00000 | .00000 | .00000 | .00000 | .00000 | .00000 | .00000 | .00000 | .00000 |

IA143, AEDC V41A-P8A, O/ET W/R.H. SRB SEPARATING (OVXB64) ( 23 MAY 77 )

REFERENCE DATA

SREF = 2690.0000 SQ.FT. XMRP = 1097.0000 IN. XT
LREF = 1290.3000 INCHES YMRP = .0000 IN. YT
BREF = 1290.3000 INCHES ZMRP = 450.0000 IN. ZT
SCALE = .0100

PARAMETRIC DATA

ALPHA = -5.000 BETA = -10.000
DALPHA = -10.000 DBETA = -8.000
X = 900.000 MACH = 4.500
JET PC = .000

RUN NO. 4309/ 0 RN/L = 2.37 GRADIENT INTERVAL = -5.00/ 5.00

| Y | Z | X | ALPHA | BETA | PHI | CN | CLM | CY | CYN | CBL | CA |
|---|---|---|---|---|---|---|---|---|---|---|---|
| -200.130 | 399.370 | 899.08000 | -5.21110 | -10.19800 | -.14421 | -.19246 | .06117 | .36046 | -.10662 | .03821 | .23745 |
| -199.720 | 350.230 | 899.25000 | -5.21080 | -10.19800 | -.14412 | -.19218 | .06097 | .36028 | -.10651 | .03818 | .23650 |
| -199.970 | 300.270 | 899.14000 | -5.21050 | -10.19800 | -.14426 | -.19177 | .06062 | .36020 | -.10645 | .03812 | .23544 |
| | GRADIENT | .00000 | .00000 | .00000 | .00000 | .00000 | .00000 | .00000 | .00000 | .00000 | .00000 |

RUN NO. 4308/ 0 RN/L = 2.37 GRADIENT INTERVAL = -5.00/ 5.00

| Y | Z | X | ALPHA | BETA | PHI | CN | CLM | CY | CYN | CBL | CA |
|---|---|---|---|---|---|---|---|---|---|---|---|
| -300.800 | 300.140 | 899.75000 | -5.21090 | -10.19800 | -.14417 | -.19229 | .06114 | .36035 | -.10659 | .03820 | .23752 |
| -300.430 | 350.200 | 899.23000 | -5.21100 | -10.19800 | -.14411 | -.19245 | .06122 | .36038 | -.10659 | .03821 | .23779 |
| -300.180 | 400.110 | 899.33000 | -5.21100 | -10.19800 | -.14410 | -.19240 | .06124 | .36063 | -.10671 | .03827 | .23783 |
| | GRADIENT | .00000 | .00000 | .00000 | .00000 | .00000 | .00000 | .00000 | .00000 | .00000 | .00000 |

IA143, AEDC V41A-P8A, O/ET W/R.H. SRB SEPARATING (OVXB65) ( 23 MAY 77 )

REFERENCE DATA

SREF = 2690.0000 SQ.FT. XMRP = 1097.0000 IN. XT
LREF = 1290.3000 INCHES YMRP = .0000 IN. YT
BREF = 1290.3000 INCHES ZMRP = 450.0000 IN. ZT
SCALE = .0100

PARAMETRIC DATA

ALPHA = -5.000 BETA = -10.000
DALPHA = -15.000 DBETA = -8.000
X = 900.000 MACH = 4.500
JET PC = .000

RUN NO. 4328/ 0 RN/L = 2.37 GRADIENT INTERVAL = -5.00/ 5.00

| Y | Z | X | ALPHA | BETA | PHI | CN | CLM | CY | CYN | CBL | CA |
|---|---|---|---|---|---|---|---|---|---|---|---|
| -197.090 | 299.450 | 900.71000 | -5.21040 | -10.19800 | -.14420 | -.19130 | .06004 | .35961 | -.10607 | .03801 | .23371 |
| -200.500 | 350.260 | 899.31000 | -5.21060 | -10.19800 | -.14439 | -.19175 | .06043 | .35964 | -.10623 | .03800 | .23469 |
| -200.480 | 400.320 | 899.29000 | -5.21090 | -10.19800 | -.14430 | -.19202 | .06078 | .35994 | -.10635 | .03812 | .23568 |
| | GRADIENT | .00000 | .00000 | .00000 | .00000 | .00000 | .00000 | .00000 | .00000 | .00000 | .00000 |

RUN NO. 4329/ 0 RN/L = 2.37 GRADIENT INTERVAL = -5.00/ 5.00

| Y | Z | X | ALPHA | BETA | PHI | CN | CLM | CY | CYN | CBL | CA |
|---|---|---|---|---|---|---|---|---|---|---|---|
| -300.440 | 401.140 | 899.54000 | -5.21110 | -10.19800 | -.14421 | -.19246 | .06119 | .36033 | -.10664 | .03820 | .23748 |
| -299.710 | 350.320 | 899.07000 | -5.21080 | -10.19800 | -.14414 | -.19229 | .06106 | .36000 | -.10645 | .03812 | .23688 |
| -299.980 | 300.440 | 899.18000 | -5.21060 | -10.19800 | -.14417 | -.19190 | .06081 | .35982 | -.10634 | .03810 | .23591 |
| | GRADIENT | .00000 | .00000 | .00000 | .00000 | .00000 | .00000 | .00000 | .00000 | .00000 | .00000 |

IA143, AEDC V41A-P8A, O/ET W/R.H. SRB SEPARATING (OVXB66) ( 23 MAY 77 )

REFERENCE DATA

SREF = 2690.0000 SQ.FT. XMRP = 1097.0000 IN. XT
LREF = 1290.3000 INCHES YMRP = .0000 IN. YT
BREF = 1290.3000 INCHES ZMRP = 450.0000 IN. ZT
SCALE = .0100

PARAMETRIC DATA

ALPHA = -5.000 BETA = -10.000
DALPHA = -15.000 DBETA = 4.000
X = 1200.000 MACH = 4.500
JET PC = .000

RUN NO. 4387/ 0 RN/L = 2.38 GRADIENT INTERVAL = -5.00/ 5.00

| Y | Z | X | ALPHA | BETA | PHI | CN | CLM | CY | CYN | CBL | CA |
|---|---|---|---|---|---|---|---|---|---|---|---|
| -100.370 | .712 | 1199.10001 | -5.21180 | -10.19700 | -.14197 | -.18993 | .05879 | .35479 | -.10380 | .03742 | .23650 |
| -99.683 | 100.180 | 1199.00000 | -5.21020 | -10.19800 | -.13998 | -.19194 | .06060 | .35561 | -.10426 | .03803 | .23580 |
| -100.370 | 200.870 | 1199.30000 | -5.21040 | -10.19700 | -.14384 | -.19216 | .06080 | .35968 | -.10656 | .03815 | .23527 |
| | GRADIENT | .00000 | .00000 | .00000 | .00000 | .00000 | .00000 | .00000 | .00000 | .00000 | .00000 |

RUN NO. 4388/ 0 RN/L = 2.38 GRADIENT INTERVAL = -5.00/ 5.00

| Y | Z | X | ALPHA | BETA | PHI | CN | CLM | CY | CYN | CBL | CA |
|---|---|---|---|---|---|---|---|---|---|---|---|
| -600.280 | 200.440 | 1199.10001 | -5.21100 | -10.19700 | -.14356 | -.19306 | .06163 | .36017 | -.10684 | .03832 | .23819 |
| -600.560 | 100.670 | 1199.00000 | -5.21110 | -10.19700 | -.14354 | -.19314 | .06162 | .36016 | -.10682 | .03831 | .23813 |
| -600.780 | .690 | 1199.00000 | -5.21090 | -10.19700 | -.14358 | -.19295 | .06155 | .35990 | -.10675 | .03827 | .23789 |
| | GRADIENT | .00000 | .00000 | .00000 | .00000 | .00000 | .00000 | .00000 | .00000 | .00000 | .00000 |

IA143, AEDC V41A-P8A, O/ET W/R.H. SRB SEPARATING (OVXB67) ( 23 MAY 77 )

REFERENCE DATA

SREF = 2690.0000 SQ.FT. XMRP = 1097.0000 IN. XT
LREF = 1290.3000 INCHES YMRP = .0000 IN. YT
BREF = 1290.3000 INCHES ZMRP = 450.0000 IN. ZT
SCALE = .0100

PARAMETRIC DATA

ALPHA = -5.000 BETA = -10.000
DALPHA = -25.000 DBETA = 4.000
X = 1200.000 MACH = 4.500
JET PC = .000

RUN NO. 4354/ 0 RN/L = 2.37 GRADIENT INTERVAL = -5.00/ 5.00

| Y | Z | X | ALPHA | BETA | PHI | CN | CLM | CY | CYN | CBL | CA |
|---|---|---|---|---|---|---|---|---|---|---|---|
| -99.828 | 400.710 | 1199.20000 | -5.21070 | -10.19800 | -.14419 | -.19195 | .06073 | .35980 | -.10633 | .03808 | .23572 |
| -100.290 | 501.090 | 1199.20000 | -5.21090 | -10.19800 | -.14416 | -.19228 | .06113 | .36031 | -.10662 | .03820 | .23740 |
| -100.420 | 601.020 | 1199.20000 | -5.21100 | -10.19800 | -.14422 | -.19240 | .06122 | .36024 | -.10665 | .03817 | .23783 |
| | GRADIENT | .00000 | .00000 | .00000 | .00000 | .00000 | .00000 | .00000 | .00000 | .00000 | .00000 |

RUN NO. 4355/ 0 RN/L = 2.37 GRADIENT INTERVAL = -5.00/ 5.00

| Y | Z | X | ALPHA | BETA | PHI | CN | CLM | CY | CYN | CBL | CA |
|---|---|---|---|---|---|---|---|---|---|---|---|
| -600.110 | 600.490 | 1199.00000 | -5.21100 | -10.19800 | -.14416 | -.19244 | .06121 | .36042 | -.10670 | .03821 | .23765 |
| -599.900 | 500.490 | 1198.89999 | -5.21100 | -10.19800 | -.14422 | -.19237 | .06123 | .36029 | -.10667 | .03813 | .23775 |
| -600.290 | 400.640 | 1198.89999 | -5.21100 | -10.19800 | -.14424 | -.19227 | .06113 | .36012 | -.10664 | .03817 | .23741 |
| | GRADIENT | .00000 | .00000 | .00000 | .00000 | .00000 | .00000 | .00000 | .00000 | .00000 | .00000 |

IA143, AEDC V41A-P8A, O/ET W/R.H. SRB SEPARATING (OVXB68) ( 23 MAY 77 )

REFERENCE DATA

SREF = 2690.0000 SQ.FT. XMRP = 1097.0000 IN. XT
LREF = 1290.3000 INCHES YMRP = .0000 IN. YT
BREF = 1290.3000 INCHES ZMRP = 450.0000 IN. ZT
SCALE = .0100

PARAMETRIC DATA

ALPHA = -5.000 BETA = -10.000
DALPHA = -5.000 DBETA = -12.000
X = 1200.000 MACH = 4.500
JET PC = .000

RUN NO. 4392/ 0 RN/L = 2.38 GRADIENT INTERVAL = -5.00/ 5.00

| Y | Z | X | ALPHA | BETA | PHI | CN | CLM | CY | CYN | CBL | CA |
|---|---|---|---|---|---|---|---|---|---|---|---|
| -100.400 | 300.040 | 1199.39999 | -5.21100 | -10.19800 | -.14399 | -.19271 | .06122 | .35996 | -.10669 | .03824 | .23621 |
| -102.480 | 401.200 | 1199.80000 | -5.21130 | -10.19800 | -.14384 | -.19295 | .06154 | .36010 | -.10676 | .03829 | .23800 |
| -100.960 | 500.440 | 1199.30000 | -5.21130 | -10.19800 | -.14380 | -.19295 | .06154 | .36026 | -.10684 | .03834 | .23794 |
| -101.200 | 600.040 | 1199.39999 | -5.21120 | -10.19700 | -.14374 | -.19290 | .06154 | .36023 | -.10685 | .03834 | .23796 |
| | GRADIENT | .00000 | .00000 | .00000 | .00000 | .00000 | .00000 | .00000 | .00000 | .00000 | .00000 |

IA143, AEDC V41A-P8A, O/ET W/R.H. SRB SEPARATING (OVXB69) ( 23 MAY 77 )

REFERENCE DATA

SREF = 2690.0000 SQ.FT. XMRP = 1097.0000 IN. XT
LREF = 1290.3000 INCHES YMRP = .0000 IN. YT
BREF = 1290.3000 INCHES ZMRP = 450.0000 IN. ZT
SCALE = .0100

PARAMETRIC DATA

ALPHA = -5.000 BETA = -10.000
DALPHA = -15.000 DBETA = -8.000
X = 1200.000 MACH = 4.500
JET PC = .000

RUN NO. 4390/ 0 RN/L = 2.38 GRADIENT INTERVAL = -5.00/ 5.00

| Y | Z | X | ALPHA | BETA | PHI | CN | CLM | CY | CYN | CBL | CA |
|---|---|---|---|---|---|---|---|---|---|---|---|
| -100.640 | 200.540 | 1199.10001 | -5.21030 | -10.19700 | -.14346 | -.19157 | .06022 | .35913 | -.10608 | .03807 | .23409 |
| -99.969 | 100.270 | 1198.89999 | -5.21000 | -10.19800 | -.13848 | -.19174 | .06030 | .35429 | -.10344 | .03800 | .23575 |
| -100.600 | 1.015 | 1199.20000 | -5.21210 | -10.19800 | -.14120 | -.18915 | .05799 | .35346 | -.10299 | .03727 | .23597 |
| | GRADIENT | .00000 | .00000 | .00000 | .00000 | .00000 | .00000 | .00000 | .00000 | .00000 | .00000 |

RUN NO. 4389/ 0 RN/L = 2.38 GRADIENT INTERVAL = -5.00/ 5.00

| Y | Z | X | ALPHA | BETA | PHI | CN | CLM | CY | CYN | CBL | CA |
|---|---|---|---|---|---|---|---|---|---|---|---|
| -604.400 | .789 | 1200.30000 | -5.21100 | -10.19700 | -.14353 | -.19309 | .06160 | .36025 | -.10687 | .03835 | .23804 |
| -599.350 | 100.220 | 1198.89999 | -5.21120 | -10.19700 | -.14377 | -.19318 | .06163 | .36034 | -.10688 | .03833 | .23824 |
| -599.520 | 200.210 | 1198.89999 | -5.21110 | -10.19700 | -.14366 | -.19312 | .06162 | .36040 | -.10693 | .03835 | .23811 |
| | GRADIENT | .00000 | .00000 | .00000 | .00000 | .00000 | .00000 | .00000 | .00000 | .00000 | .00000 |

IA143, AEDC V41A-P8A, O/ET W/R.H. SRB SEPARATING (OVXB70) ( 23 MAY 77 )

REFERENCE DATA

SREF = 2690.0000 SQ.FT. XMRP = 1097.0000 IN. XT
LREF = 1290.3000 INCHES YMRP = .0000 IN. YT
BREF = 1290.3000 INCHES ZMRP = 450.0000 IN. ZT
SCALE = .0100

PARAMETRIC DATA

ALPHA = -5.000 BETA = -10.000
DALPHA = -25.000 DBETA = -12.000
X = 1200.000 MACH = 4.500
JET PC = .000

RUN NO. 4353/ 0 RN/L = 2.37 GRADIENT INTERVAL = -5.00/ 5.00

| Y | Z | X | ALPHA | BETA | PHI | CN | CLM | CY | CYN | CBL | CA |
|---|---|---|---|---|---|---|---|---|---|---|---|
| -599.780 | 400.630 | 1199.00000 | -5.21110 | -10.19800 | -.14423 | -.19247 | .06123 | .36031 | -.10670 | .03820 | .23767 |
| -600.170 | 500.790 | 1199.20000 | -5.21100 | -10.19800 | -.14418 | -.19241 | .06119 | .36026 | -.10667 | .03820 | .23754 |
| -600.090 | 600.750 | 1199.39999 | -5.21100 | -10.19800 | -.14413 | -.19246 | .06124 | .36025 | -.10665 | .03820 | .23768 |
| | GRADIENT | .00000 | .00000 | .00000 | .00000 | .00000 | .00000 | .00000 | .00000 | .00000 | .00000 |

IA143, AEDC V41A-P8A, O/ET W/R.H. SRB SEPARATING (OVXB71) ( 23 MAY 77 )

REFERENCE DATA

SREF = 2690.0000 SQ.FT. XMRP = 1097.0000 IN. XT
LREF = 1290.3000 INCHES YMRP = .0000 IN. YT
BREF = 1290.3000 INCHES ZMRP = 450.0000 IN. ZT
SCALE = .0100

PARAMETRIC DATA

ALPHA = -5.000 BETA = -10.000
DALPHA = -5.000 DBETA = -16.000
X = 1200.000 MACH = 4.500
JET PC = .000

RUN NO. 4391/ 0 RN/L = 2.38 GRADIENT INTERVAL = -5.00/ 5.00

| Y | Z | X | ALPHA | BETA | PHI | CN | CLM | CY | CYN | CBL | CA |
|---|---|---|---|---|---|---|---|---|---|---|---|
| -601.360 | 198.220 | 1202.60001 | -5.21140 | -10.19700 | -.14390 | -.19307 | .06157 | .36012 | -.10685 | .03831 | .23793 |
| -601.780 | 299.910 | 1199.20000 | -5.21140 | -10.19800 | -.14385 | -.19301 | .06156 | .36019 | -.10683 | .03832 | .23783 |
| -601.010 | 400.070 | 1199.39999 | -5.21140 | -10.19800 | -.14391 | -.19316 | .06165 | .36061 | -.10698 | .03838 | .23824 |
| -601.620 | 500.130 | 1199.50000 | -5.21130 | -10.19700 | -.14382 | -.19298 | .06156 | .36018 | -.10686 | .03832 | .23791 |
| -601.430 | 600.170 | 1199.60001 | -5.21130 | -10.19800 | -.14382 | -.19294 | .06157 | .36027 | -.10686 | .03834 | .23804 |
| | GRADIENT | .00000 | .00000 | .00000 | .00000 | .00000 | .00000 | .00000 | .00000 | .00000 | .00000 |

IA143, AEDC V41A-P8A, O/ET W/R.H. SRB SEPARATING (OVXB72) ( 23 MAY 77 )

REFERENCE DATA

SREF = 2690.0000 SQ.FT. XMRP = 1097.0000 IN. XT
LREF = 1290.3000 INCHES YMRP = .0000 IN. YT
BREF = 1290.3000 INCHES ZMRP = 450.0000 IN. ZT
SCALE = .0100

PARAMETRIC DATA

ALPHA = -5.000 BETA = -10.000
DALPHA = -25.000 DBETA = -16.000
X = 1200.000 MACH = 4.500
JET PC = .000

RUN NO. 4352/ 0 RN/L = 2.37 GRADIENT INTERVAL = -5.00/ 5.00

| Y | Z | X | ALPHA | BETA | PHI | CN | CLM | CY | CYN | CBL | CA |
|---|---|---|---|---|---|---|---|---|---|---|---|
| -98.858 | 400.130 | 1201.80000 | -5.21040 | -10.19800 | -.14453 | -.19149 | .06007 | .35990 | -.10632 | .03801 | .23325 |
| -101.320 | 501.170 | 1199.89999 | -5.21070 | -10.19800 | -.14428 | -.19197 | .06061 | .35987 | -.10636 | .03807 | .23495 |
| -102.560 | 601.530 | 1200.30000 | -5.21090 | -10.19800 | -.14406 | -.19230 | .06095 | .36005 | -.10644 | .03815 | .23647 |
| | GRADIENT | .00000 | .00000 | .00000 | .00000 | .00000 | .00000 | .00000 | .00000 | .00000 | .00000 |

IA143, AEDC V41A-P8A, O/ET W/R.H. SRB SEPARATING (OVXB73) ( 23 MAY 77 )

REFERENCE DATA

SREF = 2690.0000 SQ.FT. XMRP = 1097.0000 IN. XT
LREF = 1290.3000 INCHES YMRP = .0000 IN. YT
BREF = 1290.3000 INCHES ZMRP = 450.0000 IN. ZT
SCALE = .0100

PARAMETRIC DATA

ALPHA = -5.000 BETA = -10.000
DALPHA = -10.000 DBETA = .000
X = 1200.000 MACH = 4.500
JET PC = .000

RUN NO. 4314/ 0 RN/L = 2.38 GRADIENT INTERVAL = -5.00/ 5.00

| Y | Z | X | ALPHA | BETA | PHI | CN | CLM | CY | CYN | CBL | CA |
|---|---|---|---|---|---|---|---|---|---|---|---|
| -199.870 | -49.596 | 1199.00000 | -5.21230 | -10.19700 | -.14756 | -.18876 | .05810 | .35932 | -.10599 | .03723 | .23553 |
| -200.110 | .041 | 1199.00000 | -5.21120 | -10.19800 | -.14500 | -.19106 | .06007 | .36010 | -.10642 | .03797 | .23591 |
| -200.040 | 100.040 | 1199.00000 | -5.21060 | -10.19800 | -.14424 | -.19197 | .06085 | .36035 | -.10655 | .03816 | .23644 |
| -199.720 | 150.320 | 1199.10001 | -5.21070 | -10.19800 | -.14413 | -.19206 | .06098 | .36012 | -.10650 | .03816 | .23683 |
| | GRADIENT | .00000 | .00000 | .00000 | .00000 | .00000 | .00000 | .00000 | .00000 | .00000 | .00000 |

RUN NO. 4315/ 0 RN/L = 2.38 GRADIENT INTERVAL = -5.00/ 5.00

| Y | Z | X | ALPHA | BETA | PHI | CN | CLM | CY | CYN | CBL | CA |
|---|---|---|---|---|---|---|---|---|---|---|---|
| -401.700 | 151.600 | 1199.20000 | -5.21100 | -10.19800 | -.14416 | -.19239 | .06125 | .36042 | -.10667 | .03821 | .23789 |
| -399.910 | 100.290 | 1199.10001 | -5.21090 | -10.19800 | -.14415 | -.19236 | .06123 | .36045 | -.10667 | .03822 | .23786 |
| -400.090 | .596 | 1199.10001 | -5.21120 | -10.19800 | -.14429 | -.19245 | .06126 | .36052 | -.10670 | .03822 | .23790 |
| -400.510 | -49.522 | 1199.00000 | -5.21100 | -10.19800 | -.14407 | -.19247 | .06128 | .36055 | -.10669 | .03825 | .23791 |
| | GRADIENT | .00000 | .00000 | .00000 | .00000 | .00000 | .00000 | .00000 | .00000 | .00000 | .00000 |

IA143, AEDC V41A-P8A, O/ET W/R.H. SRB SEPARATING (OVXB74) ( 23 MAY 77 )

REFERENCE DATA

SREF = 2690.0000 SQ.FT. XMRP = 1097.0000 IN. XT
LREF = 1290.3000 INCHES YMRP = .0000 IN. YT
BREF = 1290.3000 INCHES ZMRP = 450.0000 IN. ZT
SCALE = .0100

PARAMETRIC DATA

ALPHA = -5.000 BETA = -10.000
DALPHA = -20.000 DBETA = .000
X = 1200.000 MACH = 4.500
JET PC = .000

RUN NO. 4346/ 0 RN/L = 2.38 GRADIENT INTERVAL = -5.00/ 5.00

| Y | Z | X | ALPHA | BETA | PHI | CN | CLM | CY | CYN | CBL | CA |
|---|---|---|---|---|---|---|---|---|---|---|---|
| -199.960 | 300.480 | 1199.00000 | -5.21080 | -10.19800 | -.14420 | -.19210 | .06100 | .36006 | -.10651 | .03815 | .23678 |
| -199.640 | 400.720 | 1199.20000 | -5.21090 | -10.19800 | -.14419 | -.19231 | .06120 | .36021 | -.10665 | .03817 | .23768 |
| -200.310 | 500.540 | 1199.20000 | -5.21100 | -10.19800 | -.14423 | -.19239 | .06122 | .36020 | -.10665 | .03816 | .23776 |
| | GRADIENT | .00000 | .00000 | .00000 | .00000 | .00000 | .00000 | .00000 | .00000 | .00000 | .00000 |

RUN NO. 4347/ 0 RN/L = 2.38 GRADIENT INTERVAL = -5.00/ 5.00

| Y | Z | X | ALPHA | BETA | PHI | CN | CLM | CY | CYN | CBL | CA |
|---|---|---|---|---|---|---|---|---|---|---|---|
| -400.300 | 501.970 | 1199.60001 | -5.21100 | -10.19800 | -.14421 | -.19228 | .06119 | .36019 | -.10663 | .03818 | .23761 |
| -399.510 | 400.580 | 1199.00000 | -5.21100 | -10.19800 | -.14423 | -.19226 | .06118 | .36029 | -.10666 | .03820 | .23760 |
| -399.870 | 300.550 | 1199.00000 | -5.21100 | -10.19800 | -.14422 | -.19241 | .06122 | .36038 | -.10667 | .03819 | .23771 |
| | GRADIENT | .00000 | .00000 | .00000 | .00000 | .00000 | .00000 | .00000 | .00000 | .00000 | .00000 |

IA143, AEDC V41A-P8A, O/ET W/R.H. SRB SEPARATING (OVXB75) ( 23 MAY 77 )

REFERENCE DATA

SREF = 2690.0000 SQ.FT. XMRP = 1097.0000 IN. XT
LREF = 1290.3000 INCHES YMRP = .0000 IN. YT
BREF = 1290.3000 INCHES ZMRP = 450.0000 IN. ZT
SCALE = .0100

PARAMETRIC DATA

ALPHA = -5.000 BETA = -10.000
DALPHA = -10.000 DBETA = -8.000
X = 1200.000 MACH = 4.500
JET PC = .000

RUN NO. 4312/ 0 RN/L = 2.37 GRADIENT INTERVAL = -5.00/ 5.00

| Y | Z | X | ALPHA | BETA | PHI | CN | CLM | CY | CYN | CBL | CA |
|---|---|---|---|---|---|---|---|---|---|---|---|
| -195.750 | -51.439 | 1200.30000 | -5.21370 | -10.19800 | -.14885 | -.18567 | .05557 | .35706 | -.10454 | .03644 | .23491 |
| -199.790 | .033 | 1199.00000 | -5.21120 | -10.19800 | -.14335 | -.18988 | .05903 | .35706 | -.10465 | .03760 | .23521 |
| -200.540 | 100.200 | 1199.10001 | -5.21040 | -10.19800 | -.14369 | -.19148 | .06050 | .35951 | -.10603 | .03809 | .23543 |
| -200.440 | 150.220 | 1199.10001 | -5.21040 | -10.19800 | -.14433 | -.19172 | .06064 | .35981 | -.10631 | .03803 | .23539 |
| | GRADIENT | .00000 | .00000 | .00000 | .00000 | .00000 | .00000 | .00000 | .00000 | .00000 | .00000 |

RUN NO. 4313/ 0 RN/L = 2.38 GRADIENT INTERVAL = -5.00/ 5.00

| Y | Z | X | ALPHA | BETA | PHI | CN | CLM | CY | CYN | CBL | CA |
|---|---|---|---|---|---|---|---|---|---|---|---|
| -402.580 | 151.680 | 1199.60001 | -5.21110 | -10.19800 | -.14417 | -.19248 | .06128 | .36056 | -.10668 | .03823 | .23801 |
| -399.020 | 100.360 | 1199.20000 | -5.21110 | -10.19800 | -.14426 | -.19253 | .06129 | .36041 | -.10666 | .03820 | .23788 |
| -399.740 | .595 | 1199.20000 | -5.21110 | -10.19800 | -.14421 | -.19242 | .06127 | .36018 | -.10660 | .03817 | .23792 |
| -400.170 | -49.500 | 1199.00000 | -5.21090 | -10.19800 | -.14417 | -.19225 | .06124 | .36029 | -.10663 | .03819 | .23799 |
| | GRADIENT | .00000 | .00000 | .00000 | .00000 | .00000 | .00000 | .00000 | .00000 | .00000 | .00000 |

IA143, AEDC V41A-P8A, O/ET W/R.H. SRB SEPARATING (OVXB76) ( 23 MAY 77 )

REFERENCE DATA

SREF = 2690.0000 SQ.FT. XMRP = 1097.0000 IN. XT
LREF = 1290.3000 INCHES YMRP = .0000 IN. YT
BREF = 1290.3000 INCHES ZMRP = 450.0000 IN. ZT
SCALE = .0100

PARAMETRIC DATA

ALPHA = -5.000 BETA = -10.000
DALPHA = -20.000 DBETA = -12.000
X = 1200.000 MACH = 4.500
JET PC = .000

RUN NO. 4340/ 0 RN/L = 2.38 GRADIENT INTERVAL = -5.00/ 5.00

| Y | Z | X | ALPHA | BETA | PHI | CN | CLM | CY | CYN | CBL | CA |
|---|---|---|---|---|---|---|---|---|---|---|---|
| -196.840 | 299.930 | 1201.10001 | -5.21040 | -10.19800 | -.14430 | -.19139 | .06023 | .35947 | -.10612 | .03799 | .23402 |
| -201.410 | 400.910 | 1199.50000 | -5.21090 | -10.19800 | -.14425 | -.19224 | .06099 | .36001 | -.10643 | .03812 | .23664 |
| -201.210 | 500.600 | 1199.39999 | -5.21100 | -10.19800 | -.14423 | -.19220 | .06117 | .36005 | -.10657 | .03815 | .23762 |
| | GRADIENT | .00000 | .00000 | .00000 | .00000 | .00000 | .00000 | .00000 | .00000 | .00000 | .00000 |

RUN NO. 4341/ 0 RN/L = 2.38 GRADIENT INTERVAL = -5.00/ 5.00

| Y | Z | X | ALPHA | BETA | PHI | CN | CLM | CY | CYN | CBL | CA |
|---|---|---|---|---|---|---|---|---|---|---|---|
| -400.880 | 502.170 | 1200.00000 | -5.21090 | -10.19800 | -.14412 | -.19245 | .06128 | .36035 | -.10668 | .03820 | .23793 |
| -399.410 | 400.360 | 1198.89999 | -5.21090 | -10.19800 | -.14420 | -.19232 | .06118 | .36022 | -.10663 | .03818 | .23758 |
| -400.170 | 300.550 | 1199.00000 | -5.21090 | -10.19800 | -.14414 | -.19227 | .06112 | .36035 | -.10664 | .03820 | .23739 |
| | GRADIENT | .00000 | .00000 | .00000 | .00000 | .00000 | .00000 | .00000 | .00000 | .00000 | .00000 |

IA143, AEDC V41A-P8A, O/ET W/R.H. SRB SEPARATING (OVXB77) ( 23 MAY 77 )

REFERENCE DATA

SREF = 2690.0000 SQ.FT. XMRP = 1097.0000 IN. XT
LREF = 1290.3000 INCHES YMRP = .0000 IN. YT
BREF = 1290.3000 INCHES ZMRP = 450.0000 IN. ZT
SCALE = .0100

PARAMETRIC DATA

ALPHA = -5.000 BETA = -10.000
DALPHA = -15.000 DBETA = -4.000
X = 1200.000 MACH = 4.500
JET PC = .000

RUN NO. 4335/ 0 RN/L = 2.37 GRADIENT INTERVAL = -5.00/ 5.00

| Y | Z | X | ALPHA | BETA | PHI | CN | CLM | CY | CYN | CBL | CA |
|---|---|---|---|---|---|---|---|---|---|---|---|
| -196.310 | 399.520 | 1200.50000 | -5.21100 | -10.19800 | -.14419 | -.19243 | .06125 | .36046 | -.10670 | .03822 | .23780 |
| -200.550 | 450.370 | 1199.10001 | -5.21100 | -10.19800 | -.14416 | -.19234 | .06120 | .36038 | -.10668 | .03822 | .23771 |
| -200.540 | 500.410 | 1199.00000 | -5.21100 | -10.19800 | -.14424 | -.19244 | .06126 | .36040 | -.10669 | .03820 | .23788 |
| | GRADIENT | .00000 | .00000 | .00000 | .00000 | .00000 | .00000 | .00000 | .00000 | .00000 | .00000 |

RUN NO. 4336/ 0 RN/L = 2.38 GRADIENT INTERVAL = -5.00/ 5.00

| Y | Z | X | ALPHA | BETA | PHI | CN | CLM | CY | CYN | CBL | CA |
|---|---|---|---|---|---|---|---|---|---|---|---|
| -299.960 | 500.960 | 1199.20000 | -5.21110 | -10.19800 | -.14432 | -.19227 | .06120 | .35996 | -.10657 | .03814 | .23766 |
| -300.020 | 450.180 | 1198.89999 | -5.21110 | -10.19800 | -.14433 | -.19231 | .06121 | .36011 | -.10661 | .03815 | .23777 |
| -300.160 | 400.330 | 1199.00000 | -5.21100 | -10.19800 | -.14419 | -.19239 | .06123 | .36021 | -.10664 | .03818 | .23784 |
| | GRADIENT | .00000 | .00000 | .00000 | .00000 | .00000 | .00000 | .00000 | .00000 | .00000 | .00000 |

IA143, AEDC V41A-P8A, O/ET W/R.H. SRB SEPARATING (OVXB78) ( 23 MAY 77 )

REFERENCE DATA

SREF = 2690.0000 SQ.FT. XMRP = 1097.0000 IN. XT
LREF = 1290.3000 INCHES YMRP = .0000 IN. YT
BREF = 1290.3000 INCHES ZMRP = 450.0000 IN. ZT
SCALE = .0100

PARAMETRIC DATA

ALPHA = -5.000 BETA = -10.000
DALPHA = -20.000 DBETA = -4.000
X = 1200.000 MACH = 4.500
JET PC = .000

RUN NO. 4342/ 0 RN/L = 2.38 GRADIENT INTERVAL = -5.00/ 5.00

| Y | Z | X | ALPHA | BETA | PHI | CN | CLM | CY | CYN | CBL | CA |
|---|---|---|---|---|---|---|---|---|---|---|---|
| -196.620 | 401.030 | 1200.80000 | -5.21100 | -10.19800 | -.14419 | -.19242 | .06116 | .36027 | -.10662 | .03819 | .23742 |
| -200.390 | 450.550 | 1199.20000 | -5.21080 | -10.19800 | -.14410 | -.19227 | .06120 | .36015 | -.10661 | .03818 | .23771 |
| -200.310 | 500.530 | 1199.20000 | -5.21120 | -10.19800 | -.14437 | -.19243 | .06123 | .36012 | -.10660 | .03814 | .23775 |
| | GRADIENT | .00000 | .00000 | .00000 | .00000 | .00000 | .00000 | .00000 | .00000 | .00000 | .00000 |

RUN NO. 4343/ 0 RN/L = 2.38 GRADIENT INTERVAL = -5.00/ 5.00

| Y | Z | X | ALPHA | BETA | PHI | CN | CLM | CY | CYN | CBL | CA |
|---|---|---|---|---|---|---|---|---|---|---|---|
| -301.110 | 501.330 | 1199.20000 | -5.21100 | -10.19800 | -.14422 | -.19238 | .06121 | .36035 | -.10668 | .03819 | .23773 |
| -300.040 | 450.440 | 1198.89999 | -5.21110 | -10.19800 | -.14431 | -.19239 | .06123 | .36028 | -.10668 | .03819 | .23777 |
| -299.840 | 400.420 | 1199.00000 | -5.21110 | -10.19800 | -.14430 | -.19244 | .06124 | .36038 | -.10671 | .03820 | .23774 |
| | GRADIENT | .00000 | .00000 | .00000 | .00000 | .00000 | .00000 | .00000 | .00000 | .00000 | .00000 |

IA143, AEDC V41A-P8A, O/ET W/R.H. SRB SEPARATING (OVXB79) ( 23 MAY 77 )

REFERENCE DATA

SREF = 2690.0000 SQ.FT. XMRP = 1097.0000 IN. XT
LREF = 1290.3000 INCHES YMRP = .0000 IN. YT
BREF = 1290.3000 INCHES ZMRP = 450.0000 IN. ZT
SCALE = .0100

PARAMETRIC DATA

ALPHA = -5.000 BETA = -10.000
DALPHA = -15.000 DBETA = -8.000
X = 1200.000 MACH = 4.500
JET PC = .000

RUN NO. 4338/ 0 RN/L = 2.38 GRADIENT INTERVAL = -5.00/ 5.00

| Y | Z | X | ALPHA | BETA | PHI | CN | CLM | CY | CYN | CBL | CA |
|---|---|---|---|---|---|---|---|---|---|---|---|
| -197.720 | 399.190 | 1200.60001 | -5.21090 | -10.19800 | -.14417 | -.19228 | .06117 | .36012 | -.10660 | .03816 | .23759 |
| -200.730 | 450.430 | 1199.20000 | -5.21100 | -10.19800 | -.14422 | -.19234 | .06122 | .36049 | -.10674 | .03824 | .23771 |
| -200.460 | 500.520 | 1199.10001 | -5.21100 | -10.19800 | -.14421 | -.19232 | .06122 | .36034 | -.10665 | .03820 | .23774 |
| | GRADIENT | .00000 | .00000 | .00000 | .00000 | .00000 | .00000 | .00000 | .00000 | .00000 | .00000 |

IA143, AEDC V41A-P8A, O/ET W/R.H. SRB SEPARATING (OVXB80) ( 23 MAY 77 )

REFERENCE DATA

SREF = 2690.0000 SQ.FT. XMRP = 1097.0000 IN. XT
LREF = 1290.3000 INCHES YMRP = .0000 IN. YT
BREF = 1290.3000 INCHES ZMRP = 450.0000 IN. ZT
SCALE = .0100

PARAMETRIC DATA

ALPHA = -5.000 BETA = -10.000
DALPHA = -20.000 DBETA = -8.000
X = 1200.000 MACH = 4.500
JET PC = .000

RUN NO. 4345/ 0 RN/L = 2.38 GRADIENT INTERVAL = -5.00/ 5.00

| Y | Z | X | ALPHA | BETA | PHI | CN | CLM | CY | CYN | CBL | CA |
|---|---|---|---|---|---|---|---|---|---|---|---|
| -200.120 | 499.500 | 1198.80000 | -5.21090 | -10.19800 | -.14416 | -.19228 | .06120 | .36016 | -.10661 | .03817 | .23775 |
| -199.740 | 450.310 | 1199.00000 | -5.21090 | -10.19800 | -.14419 | -.19236 | .06117 | .36025 | -.10663 | .03818 | .23748 |
| -199.670 | 400.380 | 1198.89999 | -5.21090 | -10.19800 | -.14418 | -.19222 | .06104 | .36004 | -.10652 | .03815 | .23698 |
| | GRADIENT | .00000 | .00000 | .00000 | .00000 | .00000 | .00000 | .00000 | .00000 | .00000 | .00000 |

RUN NO. 4344/ 0 RN/L = 2.38 GRADIENT INTERVAL = -5.00/ 5.00

| Y | Z | X | ALPHA | BETA | PHI | CN | CLM | CY | CYN | CBL | CA |
|---|---|---|---|---|---|---|---|---|---|---|---|
| -300.280 | 400.290 | 1199.39999 | -5.21100 | -10.19800 | -.14425 | -.19227 | .06116 | .36018 | -.10663 | .03818 | .23754 |
| -299.680 | 450.460 | 1199.20000 | -5.21090 | -10.19800 | -.14419 | -.19217 | .06113 | .36012 | -.10660 | .03818 | .23743 |
| -299.820 | 500.460 | 1199.30000 | -5.21110 | -10.19800 | -.14433 | -.19233 | .06121 | .36031 | -.10668 | .03820 | .23767 |
| | GRADIENT | .00000 | .00000 | .00000 | .00000 | .00000 | .00000 | .00000 | .00000 | .00000 | .00000 |

IA143, AEDC V41A-P8A, O/ET W/R.H. SRB SEPARATING (OVXB81) ( 23 MAY 77 )

REFERENCE DATA

SREF = 2690.0000 SQ.FT. XMRP = 1097.0000 IN. XT
LREF = 1290.3000 INCHES YMRP = .0000 IN. YT
BREF = 1290.3000 INCHES ZMRP = 450.0000 IN. ZT
SCALE = .0100

PARAMETRIC DATA

ALPHA = -5.000 BETA = -10.000
DALPHA = -15.000 DBETA = -8.000
X = 1200.000 MACH = 4.500
JET PC = .000

RUN NO. 4337/ 0 RN/L = 2.38 GRADIENT INTERVAL = -5.00/ 5.00

| Y | Z | X | ALPHA | BETA | PHI | CN | CLM | CY | CYN | CBL | CA |
|---|---|---|---|---|---|---|---|---|---|---|---|
| -297.680 | 300.010 | 1200.80000 | -5.21100 | -10.19800 | -.14425 | -.19237 | .06121 | .36026 | -.10662 | .03817 | .23779 |
| -300.160 | 400.390 | 1199.10001 | -5.21090 | -10.19800 | -.14416 | -.19231 | .06120 | .35994 | -.10653 | .03814 | .23769 |
| -300.660 | 450.340 | 1199.20000 | -5.21100 | -10.19800 | -.14416 | -.19232 | .06122 | .36026 | -.10663 | .03819 | .23778 |
| -300.530 | 500.470 | 1199.20000 | -5.21090 | -10.19800 | -.14415 | -.19214 | .06117 | .36014 | -.10661 | .03819 | .23766 |
| | GRADIENT | .00000 | .00000 | .00000 | .00000 | .00000 | .00000 | .00000 | .00000 | .00000 | .00000 |

IA143, AEDC V41A-P8A, O/ET W/R.H. SRB SEPARATING (OVXB82) ( 23 MAY 77 )

REFERENCE DATA

SREF = 2690.0000 SQ.FT. XMRP = 1097.0000 IN. XT
LREF = 1290.3000 INCHES YMRP = .0000 IN. YT
BREF = 1290.3000 INCHES ZMRP = 450.0000 IN. ZT
SCALE = .0100

PARAMETRIC DATA

ALPHA = -5.000 BETA = -10.000
DALPHA = -18.000 DBETA = -8.000
X = 1200.000 MACH = 4.500
JET PC = .000

RUN NO. 4339/ 0 RN/L = 2.38 GRADIENT INTERVAL = -5.00/ 5.00

| Y | Z | X | ALPHA | BETA | PHI | CN | CLM | CY | CYN | CBL | CA |
|---|---|---|---|---|---|---|---|---|---|---|---|
| -296.020 | 400.910 | 1201.60001 | -5.21110 | -10.19800 | -.14432 | -.19233 | .06119 | .36038 | -.10669 | .03819 | .23775 |
| -301.480 | 600.720 | 1199.39999 | -5.21110 | -10.19800 | -.14433 | -.19231 | .06118 | .36030 | -.10667 | .03818 | .23764 |
| -301.970 | 801.840 | 1199.89999 | -5.21100 | -10.19800 | -.14419 | -.19233 | .06120 | .36020 | -.10664 | .03818 | .23772 |
| -302.070 | 1001.300 | 1199.50000 | -5.21100 | -10.19800 | -.14426 | -.19236 | .06123 | .36037 | -.10668 | .03820 | .23785 |
| | GRADIENT | .00000 | .00000 | .00000 | .00000 | .00000 | .00000 | .00000 | .00000 | .00000 | .00000 |

IA143, AEDC V41A-P8A, O/ET W/R.H. SRB SEPARATING (OVXB83) ( 23 MAY 77 )

REFERENCE DATA

SREF = 2690.0000 SQ.FT. XMRP = 1097.0000 IN. XT
LREF = 1290.3000 INCHES YMRP = .0000 IN. YT
BREF = 1290.3000 INCHES ZMRP = 450.0000 IN. ZT
SCALE = .0100

PARAMETRIC DATA

ALPHA = .000 BETA = 15.000
DALPHA = .000 DBETA = .000
X = .000 MACH = 4.500
JET PC = .000

RUN NO. 4575/ 0 RN/L = 2.37 GRADIENT INTERVAL = -5.00/ 5.00

| Y | Z | X | ALPHA | BETA | PHI | CN | CLM | CY | CYN | CBL | CA |
|---|---|---|---|---|---|---|---|---|---|---|---|
| -51.154 | .007 | .22151 | -.15003 | 15.33700 | .17840 | -.04628 | .02109 | -.52084 | .14047 | -.05919 | .22342 |
| -51.273 | 25.132 | .32563 | -.14982 | 15.33600 | .17369 | -.04222 | .01825 | -.52151 | .14103 | -.06035 | .22408 |
| -50.311 | 100.140 | .24140 | -.14998 | 15.33100 | .17024 | -.03992 | .01631 | -.52861 | .14728 | -.06303 | .22430 |
| -50.430 | 149.960 | .28264 | -.15182 | 15.32700 | .17606 | -.03792 | .01553 | -.53663 | .15389 | -.06400 | .22676 |
| -49.887 | 249.610 | .14626 | -.15699 | 15.32100 | .18854 | -.02159 | .00533 | -.54474 | .16098 | -.06366 | .22864 |
| -50.722 | 349.440 | .31528 | -.15802 | 15.31900 | .20618 | -.02937 | .01097 | -.53985 | .15880 | -.05896 | .22395 |
| -50.172 | 474.510 | .09347 | -.15720 | 15.31400 | .20339 | -.03088 | .01184 | -.53023 | .15594 | -.05774 | .22368 |
| -50.868 | 499.650 | .15207 | -.15720 | 15.31400 | .20026 | -.03123 | .01158 | -.52790 | .15468 | -.05786 | .22374 |
| -51.051 | 599.890 | .41097 | -.15532 | 15.31500 | .19078 | -.03743 | .01479 | -.52115 | .15036 | -.05818 | .22364 |
| | GRADIENT | .00000 | .00000 | .00000 | .00000 | .00000 | .00000 | .00000 | .00000 | .00000 | .00000 |

RUN NO. 4576/ 0 RN/L = 2.37 GRADIENT INTERVAL = -5.00/ 5.00

| Y | Z | X | ALPHA | BETA | PHI | CN | CLM | CY | CYN | CBL | CA |
|---|---|---|---|---|---|---|---|---|---|---|---|
| -151.420 | 599.760 | .46086 | -.15546 | 15.31500 | .19146 | -.03891 | .01573 | -.52138 | .15053 | -.05814 | .22366 |
| -151.400 | 499.810 | .29735 | -.15755 | 15.31300 | .19956 | -.03318 | .01233 | -.52756 | .15456 | -.05790 | .22361 |
| -151.090 | 474.670 | .35181 | -.15788 | 15.31300 | .20237 | -.03300 | .01253 | -.52950 | .15570 | -.05779 | .22375 |
| -151.540 | 349.760 | .41116 | -.15887 | 15.31700 | .20271 | -.03048 | .01055 | -.53676 | .15802 | -.05914 | .22370 |
| -152.130 | 249.930 | .42161 | -.15584 | 15.31800 | .18139 | -.01906 | .00337 | -.53861 | .15901 | -.06399 | .22827 |
| -151.880 | 149.790 | .30448 | -.15284 | 15.31900 | .17340 | -.03319 | .01221 | -.53095 | .15418 | -.06377 | .22885 |
| -151.270 | 100.100 | .27684 | -.15110 | 15.31900 | .17140 | -.03683 | .01502 | -.52706 | .15185 | -.06326 | .22883 |
| -151.580 | 25.185 | .31387 | -.15021 | 15.32100 | .17647 | -.04842 | .02243 | -.52082 | .14732 | -.06062 | .22586 |
| -151.250 | .041 | .32799 | -.14997 | 15.32200 | .17695 | -.05046 | .02360 | -.51955 | .14612 | -.06017 | .22474 |
| | GRADIENT | .00000 | .00000 | .00000 | .00000 | .00000 | .00000 | .00000 | .00000 | .00000 | .00000 |

IA143, AEDC V41A-P8A, O/ET W/R.H. SRB SEPARATING (OVXB84) ( 23 MAY 77 )

REFERENCE DATA

SREF = 2690.0000 SQ.FT. XMRP = 1097.0000 IN. XT
LREF = 1290.3000 INCHES YMRP = .0000 IN. YT
BREF = 1290.3000 INCHES ZMRP = 450.0000 IN. ZT
SCALE = .0100

PARAMETRIC DATA

ALPHA = .000 BETA = 15.000
DALPHA = -5.000 DBETA = .000
X = .000 MACH = 4.500
JET PC = .000

RUN NO. 4589/ 0 RN/L = 2.37 GRADIENT INTERVAL = -5.00/ 5.00

| Y | Z | X | ALPHA | BETA | PHI | CN | CLM | CY | CYN | CBL | CA |
|---|---|---|---|---|---|---|---|---|---|---|---|
| -51.239 | 25.228 | .18051 | -.14934 | 15.33600 | .13963 | -.01351 | -.00399 | -.52473 | .14260 | -.06806 | .22229 |
| -50.691 | 100.600 | .27477 | -.14819 | 15.33700 | .15764 | -.03227 | .01071 | -.52606 | .14294 | -.06459 | .22340 |
| -50.814 | 150.300 | .23749 | -.14957 | 15.33300 | .16337 | -.02995 | .00979 | -.53843 | .15201 | -.06655 | .22516 |
| -50.080 | 250.220 | .09380 | -.15729 | 15.32400 | .19017 | -.01413 | .00085 | -.55546 | .16523 | -.06547 | .22802 |
| -49.632 | 349.220 | .07375 | -.15893 | 15.32100 | .20847 | -.01719 | .00343 | -.54763 | .16239 | -.06014 | .22288 |
| -50.383 | 474.480 | .03575 | -.15705 | 15.31400 | .21016 | -.02684 | .01034 | -.53351 | .15754 | -.05701 | .22269 |
| -50.923 | 499.760 | .26156 | -.15682 | 15.31300 | .20615 | -.02668 | .00967 | -.53012 | .15604 | -.05711 | .22229 |
| -51.054 | 599.520 | .18944 | -.15518 | 15.31400 | .19236 | -.03245 | .01184 | -.51986 | .15005 | -.05759 | .22221 |
| | GRADIENT | .00000 | .00000 | .00000 | .00000 | .00000 | .00000 | .00000 | .00000 | .00000 | .00000 |

RUN NO. 4590/ 0 RN/L = 2.38 GRADIENT INTERVAL = -5.00/ 5.00

| Y | Z | X | ALPHA | BETA | PHI | CN | CLM | CY | CYN | CBL | CA |
|---|---|---|---|---|---|---|---|---|---|---|---|
| -151.230 | 599.810 | .28900 | -.15538 | 15.31400 | .19293 | -.03408 | .01278 | -.52046 | .15038 | -.05761 | .22222 |
| -151.210 | 499.850 | .26575 | -.15770 | 15.31300 | .20523 | -.02946 | .01066 | -.52953 | .15589 | -.05721 | .22232 |
| -151.390 | 474.980 | .23860 | -.15795 | 15.31300 | .20844 | -.02975 | .01118 | -.53210 | .15716 | -.05712 | .22229 |
| -151.530 | 349.870 | .26663 | -.15877 | 15.31800 | .19733 | -.01803 | .00221 | -.54070 | .15975 | -.06103 | .22268 |
| -151.420 | 249.970 | .22693 | -.15600 | 15.31800 | .18376 | -.01781 | .00289 | -.54375 | .16164 | -.06457 | .22863 |
| -151.600 | 149.930 | .26201 | -.15115 | 15.32000 | .16641 | -.02795 | .00897 | -.53248 | .15444 | -.06548 | .22848 |
| -151.230 | 100.050 | .14119 | -.15022 | 15.32100 | .17174 | -.03902 | .01668 | -.52699 | .15098 | -.06305 | .22795 |
| -151.460 | 25.296 | .24295 | -.14814 | 15.32200 | .16983 | -.04515 | .02057 | -.52169 | .14749 | -.06214 | .22541 |
| | GRADIENT | .00000 | .00000 | .00000 | .00000 | .00000 | .00000 | .00000 | .00000 | .00000 | .00000 |

IA143, AEDC V41A-P8A, O/ET W/R.H. SRB SEPARATING (OVXB85) ( 23 MAY 77 )

REFERENCE DATA

SREF = 2690.0000 SQ.FT. XMRP = 1097.0000 IN. XT
LREF = 1290.3000 INCHES YMRP = .0000 IN. YT
BREF = 1290.3000 INCHES ZMRP = 450.0000 IN. ZT
SCALE = .0100

PARAMETRIC DATA

ALPHA = .000 BETA = 15.000
DALPHA = .000 DBETA = -4.000
X = .000 MACH = 4.500
JET PC = .000

RUN NO. 4578/ 0 RN/L = 2.36 GRADIENT INTERVAL = -5.00/ 5.00

| Y | Z | X | ALPHA | BETA | PHI | CN | CLM | CY | CYN | CBL | CA |
|---|---|---|---|---|---|---|---|---|---|---|---|
| -51.072 | 249.960 | .11803 | -.15664 | 15.32200 | .19430 | -.01807 | .00408 | -.54697 | .16158 | -.06286 | .22745 |
| -50.449 | 349.310 | .13980 | -.15711 | 15.31900 | .20718 | -.03003 | .01199 | -.53729 | .15769 | -.05823 | .22369 |
| -50.444 | 474.200 | .16871 | -.15653 | 15.31400 | .20108 | -.03123 | .01208 | -.52759 | .15449 | -.05760 | .22381 |
| -51.335 | 499.700 | .23618 | -.15627 | 15.31300 | .19793 | -.03160 | .01188 | -.52526 | .15328 | -.05769 | .22365 |
| -51.344 | 599.560 | .32619 | -.15504 | 15.31500 | .19060 | -.03778 | .01511 | -.51982 | .14978 | -.05796 | .22346 |
| | GRADIENT | .00000 | .00000 | .00000 | .00000 | .00000 | .00000 | .00000 | .00000 | .00000 | .00000 |

IA143, AEDC V41A-P8A, O/ET W/R.H. SRB SEPARATING (OVXB86) ( 23 MAY 77 )

REFERENCE DATA

SREF = 2690.0000 SQ.FT. XMRP = 1097.0000 IN. XT
LREF = 1290.3000 INCHES YMRP = .0000 IN. YT
BREF = 1290.3000 INCHES ZMRP = 450.0000 IN. ZT
SCALE = .0100

PARAMETRIC DATA

ALPHA = .000 BETA = 15.000
DALPHA = -5.000 DBETA = -4.000
X = .000 MACH = 4.500
JET PC = .000

RUN NO. 4588/ 0 RN/L = 2.37 GRADIENT INTERVAL = -5.00/ 5.00

| Y | Z | X | ALPHA | BETA | PHI | CN | CLM | CY | CYN | CBL | CA |
|---|---|---|---|---|---|---|---|---|---|---|---|
| -50.967 | 475.040 | .19813 | -.15638 | 15.31400 | .20713 | -.02757 | .01061 | -.53115 | .15629 | -.05709 | .22238 |
| -50.873 | 499.760 | .10019 | -.15645 | 15.31400 | .20370 | -.02768 | .01017 | -.52818 | .15492 | -.05721 | .22248 |
| -50.837 | 599.400 | .07148 | -.15514 | 15.31400 | .19180 | -.03357 | .01257 | -.51924 | .14966 | -.05762 | .22240 |
| | GRADIENT | .00000 | .00000 | .00000 | .00000 | .00000 | .00000 | .00000 | .00000 | .00000 | .00000 |

IA143, AEDC V41A-P8A, O/ET W/R.H. SRB SEPARATING (OVXB87) ( 23 MAY 77 )

REFERENCE DATA

SREF = 2690.0000 SQ.FT. XMRP = 1097.0000 IN. XT
LREF = 1290.3000 INCHES YMRP = .0000 IN. YT
BREF = 1290.3000 INCHES ZMRP = 450.0000 IN. ZT
SCALE = .0100

PARAMETRIC DATA

ALPHA = .000 BETA = 15.000
DALPHA = .000 DBETA = -4.000
X = .000 MACH = 4.500
JET PC = .000

RUN NO. 4577/ 0 RN/L = 2.36 GRADIENT INTERVAL = -5.00/ 5.00

| Y | Z | X | ALPHA | BETA | PHI | CN | CLM | CY | CYN | CBL | CA |
|---|---|---|---|---|---|---|---|---|---|---|---|
| -151.460 | -.056 | .32818 | -.15272 | 15.32400 | .18344 | -.04468 | .01970 | -.52865 | .15044 | -.06078 | .22501 |
| -151.220 | 25.040 | .14896 | -.15314 | 15.32300 | .18173 | -.04134 | .01736 | -.52939 | .15126 | -.06136 | .22565 |
| -150.800 | 99.998 | .14627 | -.15349 | 15.32000 | .18165 | -.03538 | .01419 | -.53436 | .15553 | -.06274 | .22807 |
| -150.990 | 149.900 | .09165 | -.15449 | 15.31900 | .18084 | -.03014 | .01049 | -.53567 | .15652 | -.06326 | .22828 |
| -150.640 | 249.760 | .21335 | -.15508 | 15.31800 | .18316 | -.02005 | .00444 | -.53780 | .15807 | -.06331 | .22762 |
| -150.480 | 349.640 | .17143 | -.15765 | 15.31700 | .20290 | -.03224 | .01221 | -.53446 | .15679 | -.05854 | .22342 |
| -150.310 | 474.640 | .04873 | -.15743 | 15.31400 | .20087 | -.03300 | .01259 | -.52777 | .15470 | -.05770 | .22386 |
| -151.210 | 499.720 | .27219 | -.15703 | 15.31300 | .19809 | -.03333 | .01248 | -.52575 | .15357 | -.05778 | .22368 |
| -151.210 | 599.720 | .30775 | -.15511 | 15.31500 | .19115 | -.03897 | .01593 | -.52034 | .15008 | -.05798 | .22369 |
| | GRADIENT | .00000 | .00000 | .00000 | .00000 | .00000 | .00000 | .00000 | .00000 | .00000 | .00000 |

IA143, AEDC V41A-P8A, O/ET W/R.H. SRB SEPARATING (OVXB88) ( 23 MAY 77 )

REFERENCE DATA

SREF = 2690.0000 SQ.FT. XMRP = 1097.0000 IN. XT
LREF = 1290.3000 INCHES YMRP = .0000 IN. YT
BREF = 1290.3000 INCHES ZMRP = 450.0000 IN. ZT
SCALE = .0100

PARAMETRIC DATA

ALPHA = .000 BETA = 15.000
DALPHA = -5.000 DBETA = -4.000
X = .000 MACH = 4.500
JET PC = .000

RUN NO. 4587/ 0 RN/L = 2.37 GRADIENT INTERVAL = -5.00/ 5.00

| Y | Z | X | ALPHA | BETA | PHI | CN | CLM | CY | CYN | CBL | CA |
|---|---|---|---|---|---|---|---|---|---|---|---|
| -151.550 | 25.128 | .26247 | -.15278 | 15.32300 | .14448 | -.01092 | -.00633 | -.53303 | .15331 | -.06994 | .22389 |
| -150.900 | 100.270 | .21963 | -.15307 | 15.32200 | .17475 | -.03086 | .01059 | -.53706 | .15613 | -.06465 | .22742 |
| -150.760 | 150.200 | .14403 | -.15375 | 15.32000 | .17528 | -.02452 | .00663 | -.54170 | .15941 | -.06567 | .22801 |
| -150.330 | 250.030 | .10642 | -.15752 | 15.31800 | .19137 | -.01814 | .00325 | -.54688 | .16332 | -.06370 | .22801 |
| -150.560 | 349.770 | .18266 | -.15885 | 15.31800 | .20094 | -.02030 | .00410 | -.54010 | .15954 | -.06019 | .22276 |
| -150.330 | 474.750 | .04667 | -.15738 | 15.31300 | .20634 | -.03026 | .01152 | -.53085 | .15636 | -.05722 | .22261 |
| -150.910 | 499.870 | .07370 | -.15724 | 15.31300 | .20337 | -.03014 | .01108 | -.52818 | .15510 | -.05728 | .22249 |
| -151.310 | 599.610 | .35875 | -.15525 | 15.31400 | .19228 | -.03483 | .01327 | -.51999 | .15008 | -.05763 | .22254 |
| | GRADIENT | .00000 | .00000 | .00000 | .00000 | .00000 | .00000 | .00000 | .00000 | .00000 | .00000 |

IA143, AEDC V41A-P8A, O/ET W/R.H. SRB SEPARATING (OVX889) ( 23 MAY 77 )

REFERENCE DATA

SREF = 2690.0000 SQ.FT. XMRP = 1097.0000 IN. XT
LREF = 1290.3000 INCHES YMRP = .0000 IN. YT
BREF = 1290.3000 INCHES ZMRP = 450.0000 IN. ZT
SCALE = .0100

PARAMETRIC DATA

ALPHA = .000 BETA = 15.000
DALPHA = .000 DBETA = .000
X = 300.000 MACH = 4.500
JET PC = .000

RUN NO. 4579/ 0 RN/L = 2.37 GRADIENT INTERVAL = -5.00/ 5.00

| Y | Z | X | ALPHA | BETA | PHI | CN | CLM | CY | CYN | CBL | CA |
|---|---|---|---|---|---|---|---|---|---|---|---|
| -51.207 | 100.020 | 300.14000 | -.15343 | 15.32400 | .18717 | -.02931 | .01219 | -.54632 | .16051 | -.06409 | .23096 |
| -49.965 | 249.670 | 300.08000 | -.15947 | 15.31900 | .20240 | -.02278 | .00566 | -.54176 | .15993 | -.06020 | .22379 |
| -50.682 | 299.660 | 300.11000 | -.15861 | 15.31600 | .21136 | -.03369 | .01391 | -.53658 | .15883 | -.05746 | .22361 |
| -50.458 | 399.130 | 300.14000 | -.15793 | 15.31300 | .20197 | -.03195 | .01182 | -.52833 | .15521 | -.05762 | .22379 |
| -50.929 | 424.630 | 300.10000 | -.15744 | 15.31300 | .19896 | -.03233 | .01181 | -.52583 | .15379 | -.05767 | .22352 |
| -50.848 | 499.510 | 300.16000 | -.15529 | 15.31400 | .19163 | -.03717 | .01472 | -.52032 | .15023 | -.05786 | .22339 |
| -50.944 | 599.770 | 300.15000 | -.15467 | 15.31500 | .19101 | -.03993 | .01667 | -.52016 | .14994 | -.05792 | .22374 |
| | GRADIENT | .00000 | .00000 | .00000 | .00000 | .00000 | .00000 | .00000 | .00000 | .00000 | .00000 |

RUN NO. 4580/ 0 RN/L = 2.38 GRADIENT INTERVAL = -5.00/ 5.00

| Y | Z | X | ALPHA | BETA | PHI | CN | CLM | CY | CYN | CBL | CA |
|---|---|---|---|---|---|---|---|---|---|---|---|
| -201.140 | 599.810 | 300.24000 | -.15472 | 15.31400 | .19102 | -.03987 | .01662 | -.51981 | .14984 | -.05786 | .22376 |
| -201.260 | 499.670 | 300.20000 | -.15478 | 15.31500 | .19122 | -.03988 | .01660 | -.52031 | .15000 | -.05792 | .22362 |
| -201.110 | 424.750 | 300.14000 | -.15582 | 15.31400 | .19374 | -.03737 | .01484 | -.52185 | .15124 | -.05780 | .22329 |
| -201.370 | 399.850 | 300.19000 | -.15668 | 15.31300 | .19620 | -.03614 | .01401 | -.52360 | .15246 | -.05772 | .22332 |
| -201.320 | 299.930 | 300.09000 | -.15855 | 15.31300 | .20489 | -.03583 | .01418 | -.53025 | .15650 | -.05749 | .22377 |
| -201.700 | 249.900 | 300.19000 | -.15917 | 15.31300 | .20062 | -.03199 | .01070 | -.53226 | .15735 | -.05879 | .22285 |
| -202.500 | 100.170 | 300.33000 | -.15682 | 15.31100 | .18814 | -.02561 | .00760 | -.53497 | .15966 | -.06213 | .22825 |
| | GRADIENT | .00000 | .00000 | .00000 | .00000 | .00000 | .00000 | .00000 | .00000 | .00000 | .00000 |

IA143, AEDC V41A-P8A, O/ET W/R.H. SRB SEPARATING (OVXB90) ( 23 MAY 77 )

REFERENCE DATA

SREF = 2690.0000 SQ.FT. XMRP = 1097.0000 IN. XT
LREF = 1290.3000 INCHES YMRP = .0000 IN. YT
BREF = 1290.3000 INCHES ZMRP = 450.0000 IN. ZT
SCALE = .0100

PARAMETRIC DATA

ALPHA = .000 BETA = 15.000
DALPHA = -10.000 DBETA = .000
X = 300.000 MACH = 4.500
JET PC = .000

RUN NO. 4610/ 0 RN/L = 2.41 GRADIENT INTERVAL = -5.00/ 5.00

| Y | Z | X | ALPHA | BETA | PHI | CN | CLM | CY | CYN | CBL | CA |
|---|---|---|---|---|---|---|---|---|---|---|---|
| -50.783 | 100.390 | 299.87000 | -.15168 | 15.33000 | .14224 | .00409 | -.01475 | -.55826 | .16420 | -.07565 | .22446 |
| -49.495 | 250.780 | 300.01000 | -.15990 | 15.32300 | .18021 | .02023 | -.02314 | -.56450 | .17101 | -.06974 | .22405 |
| -50.212 | 299.670 | 299.73000 | -.16516 | 15.32000 | .21679 | -.00650 | -.00561 | -.56024 | .17012 | -.06144 | .22061 |
| -50.134 | 399.270 | 299.91000 | -.16158 | 15.31200 | .22126 | -.02410 | .00731 | -.54132 | .16287 | -.05667 | .22011 |
| -50.720 | 424.930 | 300.03000 | -.16053 | 15.31200 | .21496 | -.02471 | .00731 | -.53679 | .16024 | -.05691 | .22027 |
| -50.578 | 499.360 | 299.80000 | -.15747 | 15.31300 | .19931 | -.02880 | .00904 | -.52484 | .15323 | -.05735 | .22033 |
| -50.894 | 599.450 | 299.86000 | -.15456 | 15.31500 | .19096 | -.03810 | .01494 | -.51872 | .14910 | -.05760 | .22045 |
| | GRADIENT | .00000 | .00000 | .00000 | .00000 | .00000 | .00000 | .00000 | .00000 | .00000 | .00000 |

IA143, AEDC V41A-P8A, O/ET W/R.H. SRB SEPARATING (OVXB91) ( 23 MAY 77 )

REFERENCE DATA

SREF = 2690.0000 SQ.FT. XMRP = 1097.0000 IN. XT
LREF = 1290.3000 INCHES YMRP = .0000 IN. YT
BREF = 1290.3000 INCHES ZMRP = 450.0000 IN. ZT
SCALE = .0100

PARAMETRIC DATA

ALPHA = .000 BETA = 15.000
DALPHA = -10.000 DBETA = .000
X = 300.000 MACH = 4.500
JET PC = .000

RUN NO. 4608/ 0 RN/L = 2.41 GRADIENT INTERVAL = -5.00/ 5.00

| Y | Z | X | ALPHA | BETA | PHI | CN | CLM | CY | CYN | CBL | CA |
|---|---|---|---|---|---|---|---|---|---|---|---|
| -201.330 | 100.450 | 300.02000 | -.15764 | 15.30900 | .18903 | -.02424 | .00666 | -.54638 | .16740 | -.06477 | .22905 |
| -201.110 | 150.430 | 300.05000 | -.15845 | 15.30900 | .17990 | -.00867 | -.00462 | -.54668 | .16731 | -.06668 | .22789 |
| -201.340 | 200.380 | 300.13000 | -.15905 | 15.31100 | .17082 | .00252 | -.01348 | -.54430 | .16502 | -.06787 | .22519 |
| -200.630 | 250.330 | 300.01000 | -.16022 | 15.31300 | .17837 | -.00229 | -.01110 | -.54144 | .16263 | -.06553 | .22109 |
| -200.620 | 300.100 | 299.98000 | -.16182 | 15.31300 | .20126 | -.02144 | .00238 | -.53850 | .16102 | -.06012 | .21951 |
| -200.840 | 400.230 | 300.07000 | -.15949 | 15.31200 | .20798 | -.03146 | .01081 | -.53126 | .15744 | -.05713 | .22043 |
| -200.770 | 425.180 | 299.96000 | -.15899 | 15.31200 | .20490 | -.03145 | .01065 | -.52871 | .15588 | -.05720 | .22042 |
| -200.920 | 500.100 | 300.06000 | -.15600 | 15.31400 | .19472 | -.03519 | .01294 | -.52152 | .15105 | -.05750 | .22040 |
| -201.060 | 600.130 | 300.10000 | -.15431 | 15.31500 | .19105 | -.03887 | .01558 | -.51891 | .14921 | -.05761 | .22075 |
| | GRADIENT | .00000 | .00000 | .00000 | .00000 | .00000 | .00000 | .00000 | .00000 | .00000 | .00000 |

IA143, AEDC V41A-P8A, O/ET W/R.H. SRB SEPARATING (OVX892) ( 23 MAY 77 )

REFERENCE DATA

SREF = 2690.0000 SQ.FT. XMRP = 1097.0000 IN. XT
LREF = 1290.3000 INCHES YMRP = .0000 IN. YT
BREF = 1290.3000 INCHES ZMRP = 450.0000 IN. ZT
SCALE = .0100

PARAMETRIC DATA

ALPHA = .000 BETA = 15.000
DALPHA = .000 DBETA = -8.000
X = 300.000 MACH = 4.500
JET PC = .000

RUN NO. 4582/ 0 RN/L = 2.37 GRADIENT INTERVAL = -5.00/ 5.00

| Y | Z | X | ALPHA | BETA | PHI | CN | CLM | CY | CYN | CBL | CA |
|---|---|---|---|---|---|---|---|---|---|---|---|
| -51.135 | 249.910 | 300.05000 | -.15928 | 15.32200 | .21042 | -.01508 | .00242 | -.54766 | .16210 | -.05968 | .22362 |
| -50.670 | 299.680 | 299.99000 | -.15785 | 15.31700 | .21427 | -.02785 | .01128 | -.53922 | .15958 | -.05730 | .22344 |
| -50.658 | 399.230 | 300.11000 | -.15685 | 15.31300 | .19904 | -.03192 | .01184 | -.52572 | .15356 | -.05758 | .22330 |
| -51.493 | 424.640 | 300.18000 | -.15664 | 15.31400 | .19648 | -.03269 | .01205 | -.52372 | .15238 | -.05765 | .22335 |
| -50.942 | 499.410 | 300.03000 | -.15480 | 15.31400 | .19089 | -.03750 | .01502 | -.51931 | .14960 | -.05777 | .22311 |
| -51.042 | 599.520 | 300.06000 | -.15448 | 15.31400 | .19093 | -.03951 | .01644 | -.51984 | .14976 | -.05782 | .22362 |
| | GRADIENT | .00000 | .00000 | .00000 | .00000 | .00000 | .00000 | .00000 | .00000 | .00000 | .00000 |

IA143, AEDC V41A-P8A, O/ET W/R.H. SRB SEPARATING (OVX893) ( 23 MAY 77 )

REFERENCE DATA

SREF = 2690.0000 SQ.FT. XMRP = 1097.0000 IN. XT
LREF = 1290.3000 INCHES YMRP = .0000 IN. YT
BREF = 1290.3000 INCHES ZMRP = 450.0000 IN. ZT
SCALE = .0100

PARAMETRIC DATA

ALPHA = .000 BETA = 15.000
DALPHA = -10.000 DBETA = -8.000
X = 300.000 MACH = 4.500
JET PC = .000

RUN NO. 4614/ 0 RN/L = 2.40 GRADIENT INTERVAL = -5.00/ 5.00

| Y | Z | X | ALPHA | BETA | PHI | CN | CLM | CY | CYN | CBL | CA |
|---|---|---|---|---|---|---|---|---|---|---|---|
| -51.460 | 425.220 | 300.15000 | -.16325 | 15.31100 | .22289 | -.01373 | .00022 | -.54187 | .16383 | -.05655 | .21880 |
| -50.919 | 499.370 | 299.97000 | -.15738 | 15.31300 | .19791 | -.02739 | .00788 | -.52351 | .15237 | -.05732 | .21956 |
| -50.644 | 599.350 | 299.93000 | -.15432 | 15.31500 | .19075 | -.03819 | .01507 | -.51857 | .14899 | -.05757 | .22057 |
| | GRADIENT | .00000 | .00000 | .00000 | .00000 | .00000 | .00000 | .00000 | .00000 | .00000 | .00000 |

IA143, AEDC V41A-P8A, O/ET W/R.H. SRB SEPARATING (OVXB94) ( 23 MAY 77 )

REFERENCE DATA

SREF = 2690.0000 SQ.FT. XMRP = 1097.0000 IN. XT
LREF = 1290.3000 INCHES YMRP = .0000 IN. YT
BREF = 1290.3000 INCHES ZMRP = 450.0000 IN. ZT
SCALE = .0100

PARAMETRIC DATA

ALPHA = .000 BETA = 15.000
DALPHA = .000 DBETA = -8.000
X = 300.000 MACH = 4.500
JET PC = .000

RUN NO. 4581/ 0 RN/L = 2.37 GRADIENT INTERVAL = -5.00/ 5.00

| Y | Z | X | ALPHA | BETA | PHI | CN | CLM | CY | CYN | CBL | CA |
|---|---|---|---|---|---|---|---|---|---|---|---|
| -201.320 | 99.996 | 300.17000 | -.15844 | 15.31300 | .19032 | -.01963 | .00335 | -.53987 | .16183 | -.06271 | .22755 |
| -200.390 | 249.650 | 299.82000 | -.15838 | 15.31400 | .20363 | -.03391 | .01273 | -.53190 | .15681 | -.05799 | .22298 |
| -201.240 | 299.740 | 300.08000 | -.15822 | 15.31300 | .20507 | -.03487 | .01378 | -.53023 | .15634 | -.05743 | .22355 |
| -200.640 | 399.520 | 299.97000 | -.15661 | 15.31300 | .19610 | -.03522 | .01348 | -.52337 | .15234 | -.05769 | .22326 |
| -200.880 | 424.750 | 299.84000 | -.15588 | 15.31400 | .19375 | -.03675 | .01443 | -.52169 | .15114 | -.05776 | .22327 |
| -201.130 | 499.650 | 300.04000 | -.15477 | 15.31500 | .19132 | -.03969 | .01650 | -.52003 | .14985 | -.05785 | .22344 |
| -200.910 | 599.680 | 299.96000 | -.15479 | 15.31500 | .19113 | -.03977 | .01654 | -.52002 | .14986 | -.05788 | .22370 |
| | GRADIENT | .00000 | .00000 | .00000 | .00000 | .00000 | .00000 | .00000 | .00000 | .00000 | .00000 |

IA143, AEDC V41A-P8A, O/ET W/R.H. SRB SEPARATING (OVXB95) ( 23 MAY 77 )

REFERENCE DATA

SREF = 2690.0000 SQ.FT. XMRP = 1097.0000 IN. XT
LREF = 1290.3000 INCHES YMRP = .0000 IN. YT
BREF = 1290.3000 INCHES ZMRP = 450.0000 IN. ZT
SCALE = .0100

PARAMETRIC DATA

ALPHA = .000 BETA = 15.000
DALPHA = -10.000 DBETA = -8.000
X = 300.000 MACH = 4.500
JET PC = .000

RUN NO. 4613/ 0 RN/L = 2.40 GRADIENT INTERVAL = -5.00/ 5.00

| Y | Z | X | ALPHA | BETA | PHI | CN | CLM | CY | CYN | CBL | CA |
|---|---|---|---|---|---|---|---|---|---|---|---|
| -201.330 | 100.460 | 300.06000 | -.16360 | 15.30700 | .16162 | .01893 | -.02670 | -.56212 | .17700 | -.07420 | .22703 |
| -199.550 | 250.220 | 299.78000 | -.16310 | 15.31200 | .19681 | -.00647 | -.00779 | -.54847 | .16673 | -.06334 | .21971 |
| -200.660 | 299.980 | 299.86000 | -.16283 | 15.31300 | .21047 | -.02250 | .00368 | -.54190 | .16294 | -.05900 | .21875 |
| -200.590 | 399.800 | 299.90000 | -.15937 | 15.31200 | .20806 | -.03060 | .01038 | -.53118 | .15725 | -.05708 | .22036 |
| -201.130 | 424.970 | 300.16000 | -.15877 | 15.31200 | .20457 | -.03084 | .01031 | -.52864 | .15574 | -.05721 | .22033 |
| -201.180 | 499.790 | 300.00000 | -.15606 | 15.31400 | .19465 | -.03474 | .01264 | -.52137 | .15096 | -.05748 | .22042 |
| -201.400 | 599.760 | 299.99000 | -.15427 | 15.31500 | .19098 | -.03885 | .01556 | -.51878 | .14913 | -.05759 | .22066 |
| | GRADIENT | .00000 | .00000 | .00000 | .00000 | .00000 | .00000 | .00000 | .00000 | .00000 | .00000 |

IA143, AEDC V41A-P8A, O/ET W/R.H. SRB SEPARATING (OVXB96) ( 23 MAY 77 )

REFERENCE DATA

SREF = 2690.0000 SQ.FT. XMRP = 1097.0000 IN. XT
LREF = 1290.3000 INCHES YMRP = .0000 IN. YT
BREF = 1290.3000 INCHES ZMRP = 450.0000 IN. ZT
SCALE = .0100

PARAMETRIC DATA

ALPHA = .000 BETA = 15.000
DALPHA = -5.000 DBETA = .000
X = 300.000 MACH = 4.500
JET PC = .000

RUN NO. 4591/ 0 RN/L = 2.38 GRADIENT INTERVAL = -5.00/ 5.00

| Y | Z | X | ALPHA | BETA | PHI | CN | CLM | CY | CYN | CBL | CA |
|---|---|---|---|---|---|---|---|---|---|---|---|
| -100.830 | 100.250 | 300.07000 | -.15418 | 15.31800 | .17739 | -.01887 | .00403 | -.54561 | .16284 | -.06635 | .23059 |
| -100.770 | 150.190 | 300.10000 | -.15608 | 15.31600 | .17693 | -.00711 | -.00419 | -.54638 | .16402 | -.06673 | .22987 |
| -100.410 | 200.000 | 300.07000 | -.15731 | 15.31700 | .17611 | -.00145 | -.00929 | -.54349 | .16215 | -.06624 | .22524 |
| | GRADIENT | .00000 | .00000 | .00000 | .00000 | .00000 | .00000 | .00000 | .00000 | .00000 | .00000 |

RUN NO. 4592/ 0 RN/L = 2.38 GRADIENT INTERVAL = -5.00/ 5.00

| Y | Z | X | ALPHA | BETA | PHI | CN | CLM | CY | CYN | CBL | CA |
|---|---|---|---|---|---|---|---|---|---|---|---|
| -199.780 | 198.540 | 300.05000 | -.15785 | 15.31200 | .17579 | -.00652 | -.00702 | -.53694 | .16032 | -.06507 | .22391 |
| -201.180 | 150.050 | 300.06000 | -.15756 | 15.31100 | .17974 | -.01200 | -.00231 | -.53883 | .16217 | -.06479 | .22725 |
| -201.170 | 100.040 | 300.02000 | -.15721 | 15.31000 | .18888 | -.02416 | .00655 | -.53948 | .16275 | -.06308 | .22789 |
| | GRADIENT | .00000 | .00000 | .00000 | .00000 | .00000 | .00000 | .00000 | .00000 | .00000 | .00000 |

IA143, AEDC V41A-P8A, O/ET W/R.H. SRB SEPARATING (OVXB97) ( 23 MAY 77 )

REFERENCE DATA

SREF = 2690.0000 SQ.FT. XMRP = 1097.0000 IN. XT
LREF = 1290.3000 INCHES YMRP = .0000 IN. YT
BREF = 1290.3000 INCHES ZMRP = 450.0000 IN. ZT
SCALE = .0100

PARAMETRIC DATA

ALPHA = .000 BETA = 15.000
DALPHA = -10.000 DBETA = .000
X = 300.000 MACH = 4.500
JET PC = .000

RUN NO. 4609/ 0 RN/L = 2.41 GRADIENT INTERVAL = -5.00/ 5.00

| Y | Z | X | ALPHA | BETA | PHI | CN | CLM | CY | CYN | CBL | CA |
|---|---|---|---|---|---|---|---|---|---|---|---|
| -151.560 | 100.460 | 300.24000 | -.15562 | 15.31000 | .17627 | -.01751 | .00212 | -.54811 | .16777 | -.06770 | .23011 |
| -151.170 | 150.560 | 300.13000 | -.15766 | 15.31000 | .17101 | -.00178 | -.00931 | -.54879 | .16797 | -.06895 | .22887 |
| -151.130 | 200.350 | 300.20000 | -.15872 | 15.31300 | .16973 | .00463 | -.01457 | -.54628 | .16555 | -.06848 | .22568 |
| | GRADIENT | .00000 | .00000 | .00000 | .00000 | .00000 | .00000 | .00000 | .00000 | .00000 | .00000 |

IA143, AEDC V41A-P8A, O/ET W/R.H. SRB SEPARATING (OVXB98) ( 23 MAY 77 )

REFERENCE DATA

SREF = 2690.0000 SQ.FT. XMRP = 1097.0000 IN. XT
LREF = 1290.3000 INCHES YMRP = .0000 IN. YT
BREF = 1290.3000 INCHES ZMRP = 450.0000 IN. ZT
SCALE = .0100

PARAMETRIC DATA

ALPHA = .000 BETA = 15.000
DALPHA = -5.000 DBETA = -4.000
X = 300.000 MACH = 4.500
JET PC = .000

RUN NO. 4594/ 0 RN/L = 2.38 GRADIENT INTERVAL = -5.00/ 5.00

| Y | Z | X | ALPHA | BETA | PHI | CN | CLM | CY | CYN | CBL | CA |
|---|---|---|---|---|---|---|---|---|---|---|---|
| -101.350 | 100.210 | 299.95000 | -.15699 | 15.32000 | .18967 | -.01764 | .00330 | -.55600 | .16740 | -.06596 | .22912 |
| -100.520 | 150.210 | 299.97000 | -.15812 | 15.31800 | .18755 | -.00530 | -.00489 | -.55499 | .16801 | -.06639 | .22931 |
| -100.530 | 199.870 | 299.96000 | -.15839 | 15.31800 | .18339 | .00102 | -.01040 | -.54918 | .16446 | -.06588 | .22465 |
| -99.970 | 299.470 | 299.76000 | -.16043 | 15.31400 | .21431 | -.02867 | .00977 | -.53935 | .16083 | -.05749 | .22118 |
| | GRADIENT | .00000 | .00000 | .00000 | .00000 | .00000 | .00000 | .00000 | .00000 | .00000 | .00000 |

IA143, AEDC V41A-P8A, O/ET W/R.H. SRB SEPARATING (OVXB99) ( 23 MAY 77 )

REFERENCE DATA

SREF = 2690.0000 SQ.FT. XMRP = 1097.0000 IN. XT
LREF = 1290.3000 INCHES YMRP = .0000 IN. YT
BREF = 1290.3000 INCHES ZMRP = 450.0000 IN. ZT
SCALE = .0100

PARAMETRIC DATA

ALPHA = .000 BETA = 15.000
DALPHA = -10.000 DBETA = -4.000
X = 300.000 MACH = 4.500
JET PC = .000

RUN NO. 4611/ 0 RN/L = 2.40 GRADIENT INTERVAL = -5.00/ 5.00

| Y | Z | X | ALPHA | BETA | PHI | CN | CLM | CY | CYN | CBL | CA |
|---|---|---|---|---|---|---|---|---|---|---|---|
| -101.650 | 100.400 | 300.07000 | -.15912 | 15.32100 | .15189 | .01736 | -.02493 | -.56781 | .17367 | -.07649 | .22616 |
| -100.780 | 150.450 | 300.07000 | -.15916 | 15.31900 | .18068 | .00412 | -.01213 | -.56953 | .17575 | -.07109 | .22893 |
| -100.260 | 200.490 | 299.84000 | -.16149 | 15.31800 | .18121 | .01698 | -.02126 | -.56669 | .17478 | -.07044 | .22724 |
| | GRADIENT | .00000 | .00000 | .00000 | .00000 | .00000 | .00000 | .00000 | .00000 | .00000 | .00000 |

RUN NO. 4612/ 0 RN/L = 2.40 GRADIENT INTERVAL = -5.00/ 5.00

| Y | Z | X | ALPHA | BETA | PHI | CN | CLM | CY | CYN | CBL | CA |
|---|---|---|---|---|---|---|---|---|---|---|---|
| -199.210 | 198.090 | 299.52000 | -.15947 | 15.31100 | .17528 | .00109 | -.01245 | -.54456 | .16498 | -.06697 | .22416 |
| -200.940 | 150.410 | 299.97000 | -.15888 | 15.30900 | .17532 | -.00179 | -.00975 | -.54833 | .16818 | -.06799 | .22720 |
| -200.920 | 100.170 | 299.92000 | -.15797 | 15.30800 | .17837 | -.01202 | -.00234 | -.54925 | .16911 | -.06767 | .22892 |
| | GRADIENT | .00000 | .00000 | .00000 | .00000 | .00000 | .00000 | .00000 | .00000 | .00000 | .00000 |

IA143, AEDC V41A-P8A, O/ET W/R.H. SRB SEPARATING (OVXC00) ( 23 MAY 77 )

REFERENCE DATA

SREF = 2690.0000 SQ.FT. XMRP = 1097.0000 IN. XT
LREF = 1290.3000 INCHES YMRP = .0000 IN. YT
BREF = 1290.3000 INCHES ZMRP = 450.0000 IN. ZT
SCALE = .0100

PARAMETRIC DATA

ALPHA = .000 BETA = 15.000
DALPHA = -5.000 DBETA = -4.000
X = 300.000 MACH = 4.50J
JET PC = .000

RUN NO. 4593/ 0 RN/L = 2.38 GRADIENT INTERVAL = -5.00/ 5.00

| Y | Z | X | ALPHA | BETA | PHI | CN | CLM | CY | CYN | CBL | CA |
|---|---|---|---|---|---|---|---|---|---|---|---|
| -201.020 | 100.120 | 300.04000 | -.15743 | 15.31100 | .18590 | -.01927 | .00306 | -.53991 | .16269 | -.06378 | .22746 |
| -200.570 | 150.050 | 299.98000 | -.15744 | 15.31200 | .18111 | -.01193 | -.00234 | -.53863 | .16142 | -.06436 | .22617 |
| -200.500 | 199.940 | 299.98000 | -.15781 | 15.31300 | .17991 | -.00899 | -.00511 | -.53708 | .15988 | -.06414 | .22320 |
| | GRADIENT | .00000 | .00000 | .00000 | .00000 | .00000 | .00000 | .00000 | .00000 | .00000 | .00000 |

IA143, AEDC V41A-P8A, O/ET W/R.H. SRB SEPARATING (OVXC01) ( 23 MAY 77 )

REFERENCE DATA

SREF = 2690.0000 SQ.FT. XMRP = 1097.0000 IN. XT
LREF = 1290.3000 INCHES YMRP = .0000 IN. YT
BREF = 1290.3000 INCHES ZMRP = 450.0000 IN. ZT
SCALE = .0100

PARAMETRIC DATA

ALPHA = .000 BETA = 15.000
DALPHA = -6.000 DBETA = -2.000
X = 300.000 MACH = 4.500
JET PC = .000

RUN NO. 4606/ 0 RN/L = 2.40 GRADIENT INTERVAL = -5.00/ 5.00

| Y | Z | X | ALPHA | BETA | PHI | CN | CLM | CY | CYN | CBL | CA |
|---|---|---|---|---|---|---|---|---|---|---|---|
| -101.190 | 100.160 | 300.05000 | -.15514 | 15.32000 | .17910 | -.01724 | .00238 | -.55064 | .16445 | -.06697 | .22870 |
| -99.919 | 200.100 | 300.01000 | -.15846 | 15.31800 | .17897 | .00206 | -.01175 | -.54860 | .16446 | -.06673 | .22445 |
| -99.840 | 299.540 | 299.89000 | -.16111 | 15.31500 | .21356 | -.02811 | .00873 | -.54041 | 16112 | -.05785 | .22025 |
| | GRADIENT | .00000 | .00000 | .00000 | .00000 | .00000 | .00000 | .00000 | .00000 | .00000 | .00000 |

IA143, AEDC V41A-P8A, O/ET W/R.H. SRB SEPARATING (OVXC02) ( 23 MAY 77 )

REFERENCE DATA

SREF = 2690.0000 SQ.FT. XMRP = 1097.0000 IN. XT
LREF = 1290.3000 INCHES YMRP = .0000 IN. YT
BREF = 1290.3000 INCHES ZMRP = 450.0000 IN. ZT
SCALE = .0100

PARAMETRIC DATA

ALPHA = .000 BETA = 15.000
DALPHA = -6.000 DBETA = -2.000
X = 300.000 MACH = 4.500
JET PC = .000

RUN NO. 4635/ 0 RN/L = 2.39 GRADIENT INTERVAL = -5.00/ 5.00

| Y | Z | X | ALPHA | BETA | PHI | CN | CLM | CY | CYN | CBL | CA |
|---|---|---|---|---|---|---|---|---|---|---|---|
| -101.200 | 100.090 | 300.08000 | -.15524 | 15.32000 | .17944 | -.01702 | .00224 | -.54965 | .16410 | -.06679 | .22817 |
| -100.080 | 200.170 | 300.01000 | -.15835 | 15.31800 | .17907 | .00228 | -.01191 | -.54801 | .16419 | -.06661 | .22380 |
| -99.770 | 299.510 | 299.90000 | -.16120 | 15.31500 | .21345 | -.02758 | .00832 | -.53969 | .16082 | -.05781 | .21964 |
| | GRADIENT | .00000 | .00000 | .00000 | .00000 | .00000 | .00000 | .00000 | .00000 | .00000 | .00000 |

IA143, AEDC V41A-P8A, O/ET W/R.H. SRB SEPARATING (OVXC03) ( 23 MAY 77 )

REFERENCE DATA

SREF = 2690.0000 SQ.FT. XMRP = 1097.0000 IN. XT
LREF = 1290.3000 INCHES YMRP = .0000 IN. YT
BREF = 1290.3000 INCHES ZMRP = 450.0000 IN. ZT
SCALE = .0100

PARAMETRIC DATA

ALPHA = .000 BETA = 15.000
DALPHA = .000 DBETA = 4.000
X = 600.000 MACH = 4.500
JET PC = .000

RUN NO. 4585/ 0 RN/L = 2.37 GRADIENT INTERVAL = -5.00/ 5.00

| Y | Z | X | ALPHA | BETA | PHI | CN | CLM | CY | CYN | CBL | CA |
|---|---|---|---|---|---|---|---|---|---|---|---|
| -100.710 | 200.060 | 599.98000 | -.15965 | 15.31200 | .21056 | -.03565 | .01407 | -.53321 | .15867 | -.05708 | .22261 |
| -100.990 | 249.720 | 600.20000 | -.15862 | 15.31100 | .20415 | -.03420 | .01280 | -.52862 | .15603 | -.05732 | .22271 |
| -99.850 | 399.410 | 600.23000 | -.15440 | 15.31400 | .19110 | -.03928 | .01626 | -.51932 | .14953 | -.05771 | .22291 |
| -101.190 | 449.770 | 600.22000 | -.15447 | 15.31500 | .19106 | -.03925 | .01627 | -.51923 | .14950 | -.05772 | .22306 |
| -100.760 | 499.910 | 600.12000 | -.15450 | 15.31500 | .19105 | -.03921 | .01626 | -.51949 | .14957 | -.05775 | .22326 |
| -101.170 | 599.910 | 600.16000 | -.15448 | 15.31400 | .19103 | -.03928 | .01631 | -.51939 | .14953 | -.05773 | .22344 |
| | GRADIENT | .00000 | .00000 | .00000 | .00000 | .00000 | .00000 | .00000 | .00000 | .00000 | .00000 |

RUN NO. 4586/ 0 RN/L = 2.37 GRADIENT INTERVAL = -5.00/ 5.00

| Y | Z | X | ALPHA | BETA | PHI | CN | CLM | CY | CYN | CBL | CA |
|---|---|---|---|---|---|---|---|---|---|---|---|
| -301.080 | 599.880 | 600.18000 | -.15444 | 15.31400 | .19101 | -.03926 | .01629 | -.51934 | .14952 | -.05771 | .22335 |
| -300.960 | 499.810 | 600.16000 | -.15441 | 15.31400 | .19097 | -.03922 | .01626 | -.51916 | .14947 | -.05769 | .22321 |
| -300.790 | 449.830 | 600.11000 | -.15453 | 15.31400 | .19111 | -.03932 | .01630 | -.51930 | .14953 | -.05770 | .22330 |
| -300.500 | 399.840 | 599.98000 | -.15434 | 15.31400 | .19086 | -.03921 | .01623 | -.51923 | .14950 | -.05771 | .22312 |
| -300.680 | 249.790 | 599.92000 | -.15441 | 15.31400 | .19102 | -.03917 | .01622 | -.51889 | .14939 | -.05765 | .22303 |
| -300.350 | 199.870 | 599.89000 | -.15445 | 15.31400 | .19102 | -.03922 | .01622 | -.51906 | .14941 | -.05768 | .22296 |
| | GRADIENT | .00000 | .00000 | .00000 | .00000 | .00000 | .00000 | .00000 | .00000 | .00000 | .00000 |

IA143, AEDC V41A-P8A, O/ET W/R.H. SRB SEPARATING (OVXC04) ( 23 MAY 77 )

REFERENCE DATA

SREF = 2690.0000 SQ.FT. XMRP = 1097.0000 IN. XT
LREF = 1290.3000 INCHES YMRP = .0000 IN. YT
BREF = 1290.3000 INCHES ZMRP = 450.0000 IN. ZT
SCALE = .0100

PARAMETRIC DATA

ALPHA = .000 BETA = 15.000
DALPHA = -15.000 DBETA = 4.000
X = 600.000 MACH = 4.500
JET PC = .000

RUN NO. 4636/ 0 RN/L = 2.39 GRADIENT INTERVAL = -5.00/ 5.00

| Y | Z | X | ALPHA | BETA | PHI | CN | CLM | CY | CYN | CBL | CA |
|---|---|---|---|---|---|---|---|---|---|---|---|
| -101.240 | 200.560 | 599.99000 | -.16635 | 15.31000 | .16724 | .02574 | -.03296 | -.55613 | .17244 | -.07150 | .21969 |
| -100.540 | 250.220 | 599.88000 | -.16662 | 15.31100 | .21138 | -.01497 | -.00297 | -.54880 | .16794 | -.06062 | .21756 |
| -99.749 | 399.660 | 599.64000 | -.15805 | 15.31300 | .20065 | -.03206 | .01072 | -.52480 | .15361 | -.05721 | .21938 |
| -100.960 | 450.030 | 599.87000 | -.15563 | 15.31500 | .19384 | -.03627 | .01363 | -.52012 | .15019 | -.05743 | .21977 |
| -101.100 | 500.050 | 599.85000 | -.15443 | 15.31500 | .19136 | -.03871 | .01537 | -.51870 | .14905 | -.05754 | .21994 |
| -101.010 | 599.690 | 599.88000 | -.15450 | 15.31500 | .19130 | -.03867 | .01544 | -.51836 | .14898 | -.05749 | .22063 |
| | GRADIENT | .00000 | .00000 | .00000 | .00000 | .00000 | .00000 | .00000 | .00000 | .00000 | .00000 |

RUN NO. 4637/ 0 RN/L = 2.38 GRADIENT INTERVAL = -5.00/ 5.00

| Y | Z | X | ALPHA | BETA | PHI | CN | CLM | CY | CYN | CBL | CA |
|---|---|---|---|---|---|---|---|---|---|---|---|
| -300.550 | 600.050 | 600.06000 | -.15449 | 15.31500 | .19130 | -.03865 | .01545 | -.51855 | .14905 | -.05751 | .22077 |
| -301.250 | 500.350 | 600.10000 | -.15450 | 15.31500 | .19126 | -.03872 | .01543 | -.51847 | .14900 | -.05750 | .22054 |
| -300.850 | 450.330 | 599.91000 | -.15447 | 15.31500 | .19121 | -.03871 | .01544 | -.51844 | .14898 | -.05751 | .22061 |
| -300.890 | 400.430 | 600.00000 | -.15447 | 15.31500 | .19121 | -.03871 | .01542 | -.51858 | .14903 | -.05754 | .22041 |
| -301.150 | 250.380 | 600.02000 | -.15446 | 15.31500 | .19194 | -.03874 | .01532 | -.51877 | .14918 | -.05746 | .21927 |
| -301.220 | 200.430 | 600.01000 | -.15484 | 15.31400 | .17168 | -.02189 | .00201 | -.52225 | .15171 | -.06252 | .21889 |
| | GRADIENT | .00000 | .00000 | .00000 | .00000 | .00000 | .00000 | .00000 | .00000 | .00000 | .00000 |

IA143, AEDC V41A-P8A, O/ET W/R.H. SRB SEPARATING (OVXC05) ( 23 MAY 77 )

REFERENCE DATA

SREF = 2690.0000 SQ.FT. XMRP = 1097.0000 IN. XT
LREF = 1290.3000 INCHES YMRP = .0000 IN. YT
BREF = 1290.3000 INCHES ZMRP = 450.0000 IN. ZT
SCALE = .0100

PARAMETRIC DATA

ALPHA = .000 BETA = 15.000
DALPHA = -15.000 DBETA = 4.000
X = 600.000 MACH = 4.500
JET PC = .000

RUN NO. 4673/ 0 RN/L = 2.38 GRADIENT INTERVAL = -5.00/ 5.00

| Y | Z | X | ALPHA | BETA | PHI | CN | CLM | CY | CYN | CBL | CA |
|---|---|---|---|---|---|---|---|---|---|---|---|
| -101.120 | 200.540 | 599.95000 | -.16626 | 15.31000 | .16700 | .02703 | -.03381 | -.55655 | .17251 | -.07162 | .21921 |
| -100.400 | 250.140 | 599.85000 | -.16661 | 15.31100 | .21104 | -.01382 | -.00384 | -.54915 | .16802 | -.06072 | .21704 |
| -100.000 | 399.590 | 599.78000 | -.15787 | 15.31300 | .20073 | -.03148 | .01037 | -.52528 | .15363 | -.05720 | .21910 |
| -101.040 | 450.000 | 599.89000 | -.15531 | 15.31500 | .19370 | -.03565 | .01322 | -.52029 | .15009 | -.05742 | .21918 |
| -101.420 | 500.030 | 600.09000 | -.15408 | 15.31500 | .19121 | -.03818 | .01509 | -.51832 | .14880 | -.05743 | .21962 |
| -100.870 | 599.790 | 599.82000 | -.15426 | 15.31500 | .19119 | -.03823 | .01514 | -.51847 | .14886 | -.05746 | .22018 |
| | GRADIENT | .00000 | .00000 | .00000 | .00000 | .00000 | .00000 | .00000 | .00000 | .00000 | .00000 |

IA143, AEDC V41A-P8A, O/ET W/R.H. SRB SEPARATING (OVXC06) ( 23 MAY 77 )

REFERENCE DATA

SREF = 2690.0000 SQ.FT. XMRP = 1097.0000 IN. XT
LREF = 1290.3000 INCHES YMRP = .0000 IN. YT
BREF = 1290.3000 INCHES ZMRP = 450.0000 IN. ZT
SCALE = .0100

PARAMETRIC DATA

ALPHA = .000 BETA = 15.000
DALPHA = .000 DBETA = -12.000
X = 600.000 MACH = 4.500
JET PC = .000

RUN NO. 4583/ 0 RN/L = 2.37 GRADIENT INTERVAL = -5.00/ 5.00

| Y | Z | X | ALPHA | BETA | PHI | CN | CLM | CY | CYN | CBL | CA |
|---|---|---|---|---|---|---|---|---|---|---|---|
| -101.540 | 249.940 | 600.03000 | -.16159 | 15.31200 | .21766 | -.02768 | .00945 | -.53958 | .16196 | -.05703 | .22294 |
| -100.510 | 399.370 | 599.74000 | -.15447 | 15.31500 | .19113 | -.03932 | .01631 | -.51959 | .14967 | -.05778 | .22312 |
| -101.430 | 449.700 | 600.04000 | -.15455 | 15.31500 | .19110 | -.03942 | .01636 | -.52007 | .14980 | -.05785 | .22334 |
| -101.340 | 499.700 | 599.99000 | -.15460 | 15.31500 | .19105 | -.03945 | .01639 | -.51950 | .14963 | -.05778 | .22343 |
| -101.200 | 599.480 | 600.03000 | -.15456 | 15.31500 | .19107 | -.03939 | .01639 | -.51955 | .14964 | -.05779 | .22346 |
| | GRADIENT | .00000 | .00000 | .00000 | .00000 | .00000 | .00000 | .00000 | .00000 | .00000 | .00000 |

IA143, AEDC V41A-P8A, O/ET W/R.H. SRB SEPARATING (OVXC07) ( 23 MAY 77 )

REFERENCE DATA

SREF = 2690.0000 SQ.FT. XMRP = 1097.0000 IN. XT
LREF = 1290.3000 INCHES YMRP = .0000 IN. YT
BREF = 1290.3000 INCHES ZMRP = 450.0000 IN. ZT
SCALE = .0100

PARAMETRIC DATA

ALPHA = .000 BETA = 15.000
DALPHA = -15.000 DBETA = -12.000
X = 600.000 MACH = 4.500
JET PC = .000

RUN NO. 4642/ 0 RN/L = 2.38 GRADIENT INTERVAL = -5.00/ 5.00

| Y | Z | X | ALPHA | BETA | PHI | CN | CLM | CY | CYN | CBL | CA |
|---|---|---|---|---|---|---|---|---|---|---|---|
| -101.820 | 450.390 | 600.06000 | -.15782 | 15.31300 | .19882 | -.02961 | .00873 | -.52321 | .15249 | -.05719 | .21749 |
| -101.320 | 499.950 | 599.85000 | -.15435 | 15.31500 | .19145 | -.03834 | .01504 | -.51833 | .14881 | -.05745 | .21905 |
| -100.960 | 599.720 | 599.71000 | -.15448 | 15.31500 | .19135 | -.03866 | .01538 | -.51852 | .14898 | -.05749 | .22036 |
| | GRADIENT | .00000 | .00000 | .00000 | .00000 | .00000 | .00000 | .00000 | .00000 | .00000 | .00000 |

IA143, AEDC V41A-P8A, O/ET W/R.H. SRB SEPARATING (OVXC08) ( 23 MAY 77 )

REFERENCE DATA

SREF = 2690.0000 SQ.FT. XMRP = 1097.0000 IN. XT
LREF = 1290.3000 INCHES YMRP = .0000 IN. YT
BREF = 1290.3000 INCHES ZMRP = 450.0000 IN. ZT
SCALE = .0100

PARAMETRIC DATA

ALPHA = .000 BETA = 15.000
DALPHA = .000 DBETA = -12.000
X = 600.000 MACH = 4.500
JET PC = .000

RUN NO. 4584/ 0 RN/L = 2.37 GRADIENT INTERVAL = -5.00/ 5.00

| Y | Z | X | ALPHA | BETA | PHI | CN | CLM | CY | CYN | CBL | CA |
|---|---|---|---|---|---|---|---|---|---|---|---|
| -301.240 | 199.910 | 600.00000 | -.15466 | 15.31400 | .19190 | -.03907 | .01610 | -.52037 | .15012 | -.05777 | .22290 |
| -300.710 | 249.820 | 599.84000 | -.15448 | 15.31500 | .19094 | -.03937 | .01635 | -.51947 | .14956 | -.05777 | .22335 |
| -300.910 | 399.580 | 599.89000 | -.15444 | 15.31400 | .19101 | -.03930 | .01634 | -.51945 | .14961 | -.05775 | .22340 |
| -301.240 | 449.750 | 599.96000 | -.15450 | 15.31500 | .19103 | -.03932 | .01636 | -.51970 | .14967 | -.05779 | .22351 |
| -301.060 | 499.750 | 599.93000 | -.15441 | 15.31400 | .19099 | -.03924 | .01631 | -.51941 | .14959 | -.05773 | .22341 |
| -300.820 | 599.630 | 599.82000 | -.15468 | 15.31500 | .19125 | -.03933 | .01631 | -.51943 | .14957 | -.05774 | .22333 |
| | GRADIENT | .00000 | .00000 | .00000 | .00000 | .00000 | .00000 | .00000 | .00000 | .00000 | .00000 |

IA143, AEDC V41A-P8A, O/ET W/R.H. SRB SEPARATING (OVXC09) ( 23 MAY 77 )

REFERENCE DATA

SREF = 2690.0000 SQ.FT. XMRP = 1097.0000 IN. XT
LREF = 1290.3000 INCHES YMRP = .0000 IN. YT
BREF = 1290.3000 INCHES ZMRP = 450.0000 IN. ZT
SCALE = .0100

PARAMETRIC DATA

ALPHA = .000 BETA = 15.000
DALPHA = .000 DBETA = -12.000
X = 600.000 MACH = 4.500
JET PC = .000

RUN NO. 4678/ 0 RN/L = 2.38 GRADIENT INTERVAL = -5.00/ 5.00

| Y | Z | X | ALPHA | BETA | PHI | CN | CLM | CY | CYN | CBL | CA |
|---|---|---|---|---|---|---|---|---|---|---|---|
| -301.100 | 200.030 | 599.97000 | -.15427 | 15.31500 | .19217 | -.03768 | .01480 | -.51914 | .14935 | -.05742 | .21950 |
| -301.120 | 249.790 | 599.98000 | -.15424 | 15.31500 | .19127 | -.03817 | .01510 | -.51853 | .14886 | -.05747 | .21995 |
| -300.730 | 399.610 | 599.87000 | -.15426 | 15.31500 | .19133 | -.03813 | .01511 | -.51845 | .14887 | -.05745 | .22009 |
| -300.980 | 449.720 | 599.94000 | -.15427 | 15.31500 | .19134 | -.03812 | .01509 | -.51870 | .14898 | -.05750 | .22005 |
| -300.940 | 499.680 | 599.88000 | -.15437 | 15.31500 | .19142 | -.03816 | .01509 | -.51900 | .14901 | -.05753 | .22018 |
| -300.720 | 599.640 | 599.84000 | -.15430 | 15.31500 | .19135 | -.03811 | .01507 | -.51840 | .14887 | -.05745 | .22003 |
| | GRADIENT | .00000 | .00000 | .00000 | .00000 | .00000 | .00000 | .00000 | .00000 | .00000 | .00000 |

IA143, AEDC V41A-P8A, O/ET W/R.H. SRB SEPARATING (OVXC10) ( 23 MAY 77 )

REFERENCE DATA

SREF = 2690.0000 SQ.FT. XMRP = 1097.0000 IN. XT
LREF = 1290.3000 INCHES YMRP = .0000 IN. YT
BREF = 1290.3000 INCHES ZMRP = 450.0000 IN. ZT
SCALE = .0100

PARAMETRIC DATA

ALPHA = .000 BETA = 15.000
DALPHA = -15.000 DBETA = -12.000
X = 600.000 MACH = 4.500
JET PC = .000

RUN NO. 4643/ 0 RN/L = 2.38 GRADIENT INTERVAL = -5.00/ 5.00

| Y | Z | X | ALPHA | BETA | PHI | CN | CLM | CY | CYN | CBL | CA |
|---|---|---|---|---|---|---|---|---|---|---|---|
| -301.240 | 200.480 | 599.76000 | -.15806 | 15.31200 | .18779 | -.02421 | .00380 | -.52828 | .15586 | -.06071 | .21791 |
| -300.780 | 250.450 | 599.68000 | -.15666 | 15.31400 | .19954 | -.03690 | .01403 | -.52403 | .15274 | -.05722 | .21851 |
| -300.420 | 400.220 | 599.70000 | -.15424 | 15.31500 | .19124 | -.03846 | .01528 | -.51855 | .14898 | -.05751 | .21992 |
| -300.650 | 450.150 | 599.68000 | -.15440 | 15.31500 | .19129 | -.03850 | .01534 | -.51875 | .14907 | -.05754 | .22052 |
| -300.610 | 500.080 | 599.66000 | -.15429 | 15.31500 | .19113 | -.03845 | .01533 | -.51839 | .14897 | -.05751 | .22043 |
| -300.790 | 599.840 | 599.63000 | -.15440 | 15.31500 | .19124 | -.03853 | .01535 | -.51870 | .14906 | -.05755 | .22049 |
| | GRADIENT | .00000 | .00000 | .00000 | .00000 | .00000 | .00000 | .00000 | .00000 | .00000 | .00000 |

IA143, AEDC V41A-P8A, O/ET W/R.H. SRB SEPARATING (OVXC11) ( 23 MAY 77 )

REFERENCE DATA

SREF = 2690.0000 SQ.FT. XMRP = 1097.0000 IN. XT
LREF = 1290.3000 INCHES YMRP = .0000 IN. YT
BREF = 1290.3000 INCHES ZMRP = 450.0000 IN. ZT
SCALE = .0100

PARAMETRIC DATA

ALPHA = .000 BETA = 15.000
DALPHA = -7.000 DBETA = -4.000
X = 600.000 MACH = 4.500
JET PC = .000

RUN NO. 4607/ 0 RN/L = 2.41 GRADIENT INTERVAL = -5.00/ 5.00

| Y | Z | X | ALPHA | BETA | PHI | CN | CLM | CY | CYN | CBL | CA |
|---|---|---|---|---|---|---|---|---|---|---|---|
| -201.110 | 200.190 | 599.81000 | -.15780 | 15.31200 | .20164 | -.03590 | .01327 | -.52722 | .15499 | -.05748 | .21988 |
| -200.460 | 299.800 | 599.82000 | -.15529 | 15.31400 | .19384 | -.03750 | .01456 | -.52085 | .15060 | -.05753 | .22023 |
| -200.690 | 399.740 | 599.86000 | -.15452 | 15.31500 | .19111 | -.03907 | .01564 | -.51919 | .14928 | -.05765 | .22091 |
| | GRADIENT | .00000 | .00000 | .00000 | .00000 | .00000 | .00000 | .00000 | .00000 | .00000 | .00000 |

IA143, AEDC V41A-P8A, O/ET W/R.H. SRB SEPARATING (OVXC12) ( 23 MAY 77 )

REFERENCE DATA

SREF = 2690.0000 SQ.FT. XMRP = 1097.0000 IN. XT
LREF = 1290.3000 INCHES YMRP = .0000 IN. YT
BREF = 1290.3000 INCHES ZMRP = 450.0000 IN. ZT
SCALE = .0100

PARAMETRIC DATA

ALPHA = .000 BETA = 15.000
DALPHA = -5.000 DBETA = .000
X = 600.000 MACH = 4.500
JET PC = .000

RUN NO. 4595/ 0 RN/L = 2.41 GRADIENT INTERVAL = -5.00/ 5.00

| Y | Z | X | ALPHA | BETA | PHI | CN | CLM | CY | CYN | CBL | CA |
|---|---|---|---|---|---|---|---|---|---|---|---|
| -101.290 | 200.170 | 600.07000 | -.16243 | 15.31200 | .21221 | -.02674 | .00684 | -.54052 | .16256 | -.05837 | .21969 |
| -100.390 | 299.490 | 599.97000 | -.15878 | 15.31200 | .20493 | -.03154 | .01092 | -.52883 | .15609 | -.05723 | .22088 |
| -100.200 | 399.170 | 599.92000 | -.15425 | 15.31400 | .19169 | -.03786 | .01524 | -.51949 | .14956 | -.05760 | .22132 |
| | GRADIENT | .00000 | .00000 | .00000 | .00000 | .00000 | .00000 | .00000 | .00000 | .00000 | .00000 |

RUN NO. 4596/ 0 RN/L = 2.41 GRADIENT INTERVAL = -5.00/ 5.00

| Y | Z | X | ALPHA | BETA | PHI | CN | CLM | CY | CYN | CBL | CA |
|---|---|---|---|---|---|---|---|---|---|---|---|
| -300.470 | 399.240 | 599.87000 | -.15423 | 15.31500 | .19125 | -.03845 | .01564 | -.51886 | .14924 | -.05760 | .22149 |
| -301.320 | 299.950 | 600.07000 | -.15414 | 15.31500 | .19116 | -.03847 | .01568 | -.51902 | .14929 | -.05761 | .22163 |
| -301.540 | 199.950 | 600.07000 | -.15406 | 15.31500 | .19114 | -.03873 | .01576 | -.51903 | .14922 | -.05759 | .22123 |
| | GRADIENT | .00000 | .00000 | .00000 | .00000 | .00000 | .00000 | .00000 | .00000 | .00000 | .00000 |

IA143, AEDC V41A-P8A, O/ET W/R.H. SRB SEPARATING (OVXC13) ( 23 MAY 77 )

REFERENCE DATA

SREF = 2690.0000 SQ.FT. XMRP = 1097.0000 IN. XT
LREF = 1290.3000 INCHES YMRP = .0000 IN. YT
BREF = 1290.3000 INCHES ZMRP = 450.0000 IN. ZT
SCALE = .0100

PARAMETRIC DATA

ALPHA = .000 BETA = 15.000
DALPHA = -10.000 DBETA = .000
X = 600.000 MACH = 4.500
JET PC = .000

RUN NO. 4620/ 0 RN/L = 2.39 GRADIENT INTERVAL = -5.00/ 5.00

| Y | Z | X | ALPHA | BETA | PHI | CN | CLM | CY | CYN | CBL | CA |
|---|---|---|---|---|---|---|---|---|---|---|---|
| -101.120 | 200.560 | 599.96000 | -.16650 | 15.31200 | .19831 | -.00541 | -.01018 | -.54898 | .16731 | -.06327 | .21890 |
| -99.860 | 299.760 | 599.75000 | -.16147 | 15.31100 | .21416 | -.02986 | .00967 | -.53535 | .16019 | -.05692 | .22007 |
| -100.480 | 399.370 | 599.90000 | -.15601 | 15.31400 | .19500 | -.03541 | .01307 | -.52129 | .15100 | -.05745 | .21993 |
| | GRADIENT | .00000 | .00000 | .00000 | .00000 | .00000 | .00000 | .00000 | .00000 | .00000 | .00000 |

RUN NO. 4621/ 0 RN/L = 2.39 GRADIENT INTERVAL = -5.00/ 5.00

| Y | Z | X | ALPHA | BETA | PHI | CN | CLM | CY | CYN | CBL | CA |
|---|---|---|---|---|---|---|---|---|---|---|---|
| -300.430 | 398.340 | 599.83000 | -.15446 | 15.31500 | .19117 | -.03876 | .01551 | -.51866 | .14907 | -.05756 | .22077 |
| -301.280 | 300.130 | 599.93000 | -.15439 | 15.31500 | .19116 | -.03872 | .01549 | -.51866 | .14908 | -.05757 | .22060 |
| -301.480 | 200.240 | 600.03000 | -.15448 | 15.31500 | .18798 | -.03612 | .01324 | -.51969 | .14954 | -.05844 | .21975 |
| | GRADIENT | .00000 | .00000 | .00000 | .00000 | .00000 | .00000 | .00000 | .00000 | .00000 | .00000 |

IA143, AEDC V41A-P8A, O/ET W/R.H. SRB SEPARATING (OVXC14) ( 23 MAY 77 )

REFERENCE DATA

SREF = 2690.0000 SQ.FT. XMRP = 1097.0000 IN. XT
LREF = 1290.3000 INCHES YMRP = .0000 IN. YT
BREF = 1290.3000 INCHES ZMRP = 450.0000 IN. ZT
SCALE = .0100

PARAMETRIC DATA

ALPHA = .000 BETA = 15.000
DALPHA = -5.000 DBETA = -8.000
X = 600.000 MACH = 4.500
JET PC = .000

RUN NO. 4598/ 0 RN/L = 2.41 GRADIENT INTERVAL = -5.00/ 5.00

| Y | Z | X | ALPHA | BETA | PHI | CN | CLM | CY | CYN | CBL | CA |
|---|---|---|---|---|---|---|---|---|---|---|---|
| -101.490 | 401.320 | 600.04000 | -.15433 | 15.31500 | .19179 | -.03758 | .01503 | -.51978 | .14969 | -.05766 | .22115 |
| -101.700 | 300.590 | 600.00000 | -.16035 | 15.31100 | .21053 | -.02771 | .00857 | -.53331 | .15875 | -.05[illegible]09 | .22073 |
| -102.350 | 200.190 | 600.14000 | -.16519 | 15.31300 | .22291 | -.02153 | .00387 | -.54967 | .16723 | -.05820 | .21960 |
| | GRADIENT | .00000 | .00000 | .00000 | .00000 | .00000 | .00000 | .00000 | .00000 | .00000 | .00000 |

RUN NO. 4597/ 0 RN/L = 2.41 GRADIENT INTERVAL = -5.00/ 5.00

| Y | Z | X | ALPHA | BETA | PHI | CN | CLM | CY | CYN | CBL | CA |
|---|---|---|---|---|---|---|---|---|---|---|---|
| -305.080 | 200.910 | 599.81000 | -.15410 | 15.31500 | .19157 | -.03843 | .01562 | -.51957 | .14953 | -.05762 | .22129 |
| -300.880 | 299.750 | 599.82000 | -.15406 | 15.31500 | .19113 | -.03849 | .01563 | -.51916 | .14932 | -.05762 | .22133 |
| -300.880 | 399.730 | 599.87000 | -.15413 | 15.31500 | .19118 | -.03842 | .01564 | -.51897 | .14928 | -.05761 | .22154 |
| | GRADIENT | .00000 | .00000 | .00000 | .00000 | .00000 | .00000 | .00000 | .00000 | .00000 | .00000 |

IA143, AEDC V41A-P8A, O/ET W/R.H. SRB SEPARATING (OVXC15) ( 23 MAY 77 )

REFERENCE DATA

SREF = 2690.0000 SQ.FT. XMRP = 1097.0000 IN. XT
LREF = 1290.3000 INCHES YMRP = .0000 IN. YT
BREF = 1290.3000 INCHES ZMRP = 450.0000 IN. ZT
SCALE = .0100

PARAMETRIC DATA

ALPHA = .000 BETA = 15.000
DALPHA = -10.000 DBETA = -8.000
X = 600.000 MACH = 4.500
JET PC = .000

RUN NO. 4615/ 0 RN/L = 2.40 GRADIENT INTERVAL = -5.00/ 5.00

| Y | Z | X | ALPHA | BETA | PHI | CN | CLM | CY | CYN | CBL | CA |
|---|---|---|---|---|---|---|---|---|---|---|---|
| -101.280 | 200.460 | 599.93000 | -.17113 | 15.31100 | .21889 | -.00072 | -.01271 | -.56398 | .17601 | -.06241 | .21820 |
| -99.881 | 299.880 | 599.68000 | -.16416 | 15.31000 | .22509 | -.02446 | .00648 | -.54378 | .16534 | -.05658 | .21963 |
| -100.450 | 349.820 | 599.73000 | -.16065 | 15.31100 | .20870 | -.02705 | .00750 | -.53133 | .15780 | -.05704 | .21972 |
| -100.740 | 399.820 | 599.82000 | -.15627 | 15.31300 | .19542 | -.03403 | .01207 | -.52200 | .15142 | -.05745 | .21984 |
| | GRADIENT | .00000 | .00000 | .00000 | .00000 | .00000 | .00000 | .00000 | .00000 | .00000 | .00000 |

IA143, AEDC V41A-P8A, O/ET W/R.H. SRB SEPARATING (OVXC16) ( 23 MAY 77 )

REFERENCE DATA

SREF = 2690.0000 SQ.FT. XMRP = 1097.0000 IN. XT
LREF = 1290.3000 INCHES YMRP = .0000 IN. YT
BREF = 1290.3000 INCHES ZMRP = 450.0000 IN. ZT
SCALE = .0100

PARAMETRIC DATA

ALPHA = .000 BETA = 15.000
DALPHA = -10.000 DBETA = -8.000
X = 600.000 MACH = 4.500
JET PC = .000

RUN NO. 4617/ 0 RN/L = 2.40 GRADIENT INTERVAL = -5.00/ 5.00

| Y | Z | X | ALPHA | BETA | PHI | CN | CLM | CY | CYN | CBL | CA |
|---|---|---|---|---|---|---|---|---|---|---|---|
| -301.520 | 200.380 | 599.95000 | -.15532 | 15.31400 | .19239 | -.03634 | .01344 | -.52156 | .15105 | -.05801 | .21929 |
| -301.040 | 300.140 | 599.90000 | -.15445 | 15.31500 | .19113 | -.03886 | .01554 | -.51892 | .14918 | -.05761 | .22065 |
| -300.740 | 399.910 | 599.73000 | -.15454 | 15.31500 | .19130 | -.03874 | .01552 | -.51863 | .14909 | -.05756 | .22085 |
| | GRADIENT | .00000 | .00000 | .00000 | .00000 | .00000 | .00000 | .00000 | .00000 | .00000 | .00000 |

IA143, AEDC V41A-P8A, O/ET W/R.H. SRB SEPARATING (OVXC17) ( 23 MAY 77 )

REFERENCE DATA

SREF = 2690.0000 SQ.FT. XMRP = 1097.0000 IN. XT
LREF = 1290.3000 INCHES YMRP = .0000 IN. YT
BREF = 1290.3000 INCHES ZMRP = 450.0000 IN. ZT
SCALE = .0100

PARAMETRIC DATA

ALPHA = .000 BETA = 15.000
DALPHA = -10.000 DBETA = -4.000
X = 600.000 MACH = 4.500
JET PC = .000

RUN NO. 4619/ 0 RN/L = 2.39 GRADIENT INTERVAL = -5.00/ 5.00

| Y | Z | X | ALPHA | BETA | PHI | CN | CLM | CY | CYN | CBL | CA |
|---|---|---|---|---|---|---|---|---|---|---|---|
| -101.500 | 300.280 | 599.98000 | -.16236 | 15.31000 | .21806 | -.02778 | .00848 | -.53807 | .16198 | -.05675 | .21992 |
| -100.940 | 349.740 | 599.88000 | -.15936 | 15.31200 | .20475 | -.02996 | .00943 | -.52845 | .15585 | -.05720 | .21982 |
| -100.920 | 399.820 | 599.80000 | -.15611 | 15.31400 | .19514 | -.03515 | .01290 | -.52140 | .15103 | -.05745 | .21994 |
| | GRADIENT | .00000 | .00000 | .00000 | .00000 | .00000 | .00000 | .00000 | .00000 | .00000 | .00000 |

IA143, AEDC V41A-P8A, O/ET W/R.H. SRB SEPARATING (OVXC18) ( 23 MAY 77 )

REFERENCE DATA

SREF = 2690.0000 SQ.FT. XMRP = 1097.0000 IN. XT
LREF = 1290.3000 INCHES YMRP = .0000 IN. YT
BREF = 1290.3000 INCHES ZMRP = 450.0000 IN. ZT
SCALE = .0100

PARAMETRIC DATA

ALPHA = .000 BETA = 15.000
DALPHA = -15.000 DBETA = -4.000
X = 600.000 MACH = 4.500
JET PC = .000

RUN NO. 4638/ 0 RN/L = 2.38 GRADIENT INTERVAL = -5.00/ 5.00

| Y | Z | X | ALPHA | BETA | PHI | CN | CLM | CY | CYN | CBL | CA |
|---|---|---|---|---|---|---|---|---|---|---|---|
| -101.260 | 300.560 | 599.82000 | -.16562 | 15.30900 | .23204 | -.02608 | .00755 | -.54825 | .16833 | -.05632 | .21885 |
| -100.400 | 350.190 | 599.65000 | -.16308 | 15.31000 | .21787 | -.02566 | .00659 | -.53739 | .16193 | -.05673 | .21869 |
| -100.360 | 400.070 | 599.67000 | -.15866 | 15.31200 | .20235 | -.03030 | .00946 | -.52593 | .15441 | -.05712 | .21888 |
| | GRADIENT | .00000 | .00000 | .00000 | .00000 | .00000 | .00000 | .00000 | .00000 | .00000 | .00000 |

RUN NO. 4639/ 0 RN/L = 2.38 GRADIENT INTERVAL = -5.00/ 5.00

| Y | Z | X | ALPHA | BETA | PHI | CN | CLM | CY | CYN | CBL | CA |
|---|---|---|---|---|---|---|---|---|---|---|---|
| -200.920 | 398.560 | 599.37000 | -.15467 | 15.31500 | .19229 | -.03790 | .01487 | -.51895 | .14940 | -.05745 | .21976 |
| -201.430 | 350.520 | 599.88000 | -.15647 | 15.31300 | .19728 | -.03544 | .01307 | -.52281 | .15205 | -.05735 | .21955 |
| -201.000 | 300.490 | 599.80000 | -.15839 | 15.31200 | .20375 | -.03429 | .01231 | -.52751 | .15531 | -.05720 | .21955 |
| | GRADIENT | .00000 | .00000 | .00000 | .00000 | .00000 | .00000 | .00000 | .00000 | .00000 | .00000 |

IA143, AEDC V41A-P8A, O/ET W/R.H. SRB SEPARATING (OVXC19) ( 23 MAY 77 )

REFERENCE DATA

SREF = 2690.0000 SQ.FT. XMRP = 1097.0000 IN. XT
LREF = 1290.3000 INCHES YMRP = .0000 IN. YT
BREF = 1290.3000 INCHES ZMRP = 450.0000 IN. ZT
SCALE = .0100

PARAMETRIC DATA

ALPHA = .000 BETA = 15.000
DALPHA = -10.000 DBETA = -4.000
X = 600.000 MACH = 4.500
JET PC = .000

RUN NO. 4618/ 0 RN/L = 2.39 GRADIENT INTERVAL = -5.00/ 5.00

| Y | Z | X | ALPHA | BETA | PHI | CN | CLM | CY | CYN | CBL | CA |
|---|---|---|---|---|---|---|---|---|---|---|---|
| -201.400 | 200.450 | 599.90000 | -.15920 | 15.31200 | .19918 | -.03031 | .00875 | -.53027 | .15703 | -.05879 | .21929 |
| -200.720 | 300.020 | 599.82000 | -.15665 | 15.31400 | .19765 | -.03596 | .01349 | -.52328 | .15233 | -.05741 | .22003 |
| -200.960 | 349.950 | 599.87000 | -.15498 | 15.31500 | .19290 | -.03776 | .01479 | -.52002 | .14996 | -.05754 | .22025 |
| -200.780 | 399.960 | 599.74000 | -.15443 | 15.31500 | .19129 | -.03876 | .01554 | -.51881 | .14913 | -.05757 | .22066 |
| | GRADIENT | .00000 | .00000 | .00000 | .00000 | .00000 | .00000 | .00000 | .00000 | .00000 | .00000 |

IA143, AEDC V41A-P8A, O/ET W/R.H. SRB SEPARATING (OVXC20) ( 23 MAY 77 )

REFERENCE DATA

SREF = 2690.0000 SQ.FT. XMRP = 1097.0000 IN. XT
LREF = 1290.3000 INCHES YMRP = .0000 IN. YT
BREF = 1290.3000 INCHES ZMRP = 450.0000 IN. ZT
SCALE = .0100

PARAMETRIC DATA

ALPHA = .000 BETA = 15.000
DALPHA = -15.000 DBETA = -8.000
X = 600.000 MACH = 4.500
JET PC = .000

RUN NO. 4641/ 0 RN/L = 2.38 GRADIENT INTERVAL = -5.00/ 5.00

| Y | Z | X | ALPHA | BETA | PHI | CN | CLM | CY | CYN | CBL | CA |
|---|---|---|---|---|---|---|---|---|---|---|---|
| -101.300 | 401.570 | 600.12000 | -.16069 | 15.31100 | .20809 | -.02580 | .00633 | -.53001 | .15724 | -.05696 | .21790 |
| -101.950 | 350.720 | 599.99000 | -.16591 | 15.30800 | .22795 | -.02071 | .00342 | -.54442 | .16661 | -.05637 | .21783 |
| -101.950 | 300.680 | 599.96000 | -.16916 | 15.30600 | .24609 | -.02176 | .00489 | -.55810 | .17459 | -.05583 | .21739 |
| | GRADIENT | .00000 | .00000 | .00000 | .00000 | .00000 | .00000 | .00000 | .00000 | .00000 | .00000 |

RUN NO. 4640/ 0 RN/L = 2.38 GRADIENT INTERVAL = -5.00/ 5.00

| Y | Z | X | ALPHA | BETA | PHI | CN | CLM | CY | CYN | CBL | CA |
|---|---|---|---|---|---|---|---|---|---|---|---|
| -203.120 | 301.170 | 600.11000 | -.15873 | 15.31200 | .20531 | -.03354 | .01172 | -.52848 | .15598 | -.05710 | .21875 |
| -200.670 | 350.240 | 599.86000 | -.15677 | 15.31300 | .19831 | -.03476 | .01255 | -.52322 | .15241 | -.05726 | .21896 |
| -201.070 | 400.250 | 599.81000 | -.15487 | 15.31500 | .19276 | -.03749 | .01453 | -.51952 | .14970 | -.05747 | .21952 |
| | GRADIENT | .00000 | .00000 | .00000 | .00000 | .00000 | .00000 | .00000 | .00000 | .00000 | .00000 |

IA143, AEDC V41A-P8A, O/ET W/R.H. SRB SEPARATING (OVXC21) ( 23 MAY 77 )

REFERENCE DATA

SREF = 2690.0000 SQ.FT. XMRP = 1097.0000 IN. XT
LREF = 1290.3000 INCHES YMRP = .0000 IN. YT
BREF = 1290.3000 INCHES ZMRP = 450.0000 IN. ZT
SCALE = .0100

PARAMETRIC DATA

ALPHA = .000 BETA = 15.000
DALPHA = -10.000 DBETA = -8.000
X = 600.000 MACH = 4.500
JET PC = .000

RUN NO. 4616/ 0 RN/L = 2.40 GRADIENT INTERVAL = -5.00/ 5.00

| Y | Z | X | ALPHA | BETA | PHI | CN | CLM | CY | CYN | CBL | CA |
|---|---|---|---|---|---|---|---|---|---|---|---|
| -201.470 | 300.180 | 600.01000 | -.15702 | 15.31300 | .19870 | -.03532 | .01300 | -.52390 | .15292 | -.05735 | .21991 |
| -201.010 | 349.880 | 599.84000 | -.15525 | 15.31400 | .19346 | -.03732 | .01443 | -.52032 | .15027 | -.05751 | .22013 |
| -200.810 | 399.920 | 599.84000 | -.15450 | 15.31500 | .19126 | -.03896 | .01560 | -.51852 | .14907 | -.05755 | .22051 |
| | GRADIENT | .00000 | .00000 | .00000 | .00000 | .00000 | .00000 | .00000 | .00000 | .00000 | .00000 |

IA143, AEDC V41A-P8A, O/ET W/R.H. SRB SEPARATING (OVXC22) ( 23 MAY 77 )

REFERENCE DATA

SREF = 2690.0000 SQ.FT. XMRP = 1097.0000 IN. XT
LREF = 1290.3000 INCHES YMRP = .0000 IN. YT
BREF = 1290.3000 INCHES ZMRP = 450.0000 IN. ZT
SCALE = .0100

PARAMETRIC DATA

ALPHA = .000 BETA = 15.000
DALPHA = -5.000 DBETA = 4.000
X = 900.000 MACH = 4.500
JET PC = .000

RUN NO. 4601/ 0 RN/L = 2.41 GRADIENT INTERVAL = -5.00/ 5.00

| Y | Z | X | ALPHA | BETA | PHI | CN | CLM | CY | CYN | CBL | CA |
|---|---|---|---|---|---|---|---|---|---|---|---|
| -101.200 | 200.070 | 900.00000 | -.15487 | 15.31400 | .19374 | -.03742 | .01481 | -.52110 | .15059 | -.05760 | .22049 |
| -101.180 | 274.880 | 899.98000 | -.15405 | 15.31500 | .19120 | -.03843 | .01560 | -.51909 | .14930 | -.05765 | .22097 |
| -100.320 | 423.870 | 899.79000 | -.15407 | 15.31500 | .19105 | -.03844 | .01561 | -.51918 | .14932 | -.05765 | .22143 |
| -100.620 | 499.640 | 899.90000 | -.15411 | 15.31400 | .19112 | -.03853 | .01563 | -.51912 | .14933 | -.05762 | .22138 |
| -100.800 | 599.870 | 899.94000 | -.15408 | 15.31500 | .19109 | -.03842 | .01561 | -.51900 | .14927 | -.05762 | .22135 |
| | GRADIENT | .00000 | .00000 | .00000 | .00000 | .00000 | .00000 | .00000 | .00000 | .00000 | .00000 |

RUN NO. 4602/ 0 RN/L = 2.41 GRADIENT INTERVAL = -5.00/ 5.00

| Y | Z | X | ALPHA | BETA | PHI | CN | CLM | CY | CYN | CBL | CA |
|---|---|---|---|---|---|---|---|---|---|---|---|
| -400.500 | 600.070 | 899.93000 | -.15405 | 15.31400 | .19100 | -.03851 | .01562 | -.51918 | .14933 | -.05765 | .22135 |
| -400.830 | 499.960 | 899.96000 | -.15412 | 15.31500 | .19110 | -.03848 | .01560 | -.51929 | .14939 | -.05767 | .22140 |
| -400.810 | 425.010 | 900.02000 | -.15454 | 15.31500 | .19103 | -.03904 | .01570 | -.51921 | .14934 | -.05767 | .22145 |
| -400.830 | 275.140 | 900.07000 | -.15451 | 15.31400 | .19091 | -.03918 | .01576 | -.51891 | .14923 | -.05763 | .22144 |
| -400.910 | 200.150 | 899.84000 | -.15448 | 15.31400 | .19091 | -.03919 | .01578 | -.51870 | .14917 | -.05758 | .22145 |
| | GRADIENT | .00000 | .00000 | .00000 | .00000 | .00000 | .00000 | .00000 | .00000 | .00000 | .00000 |

IA143, AEDC V41A-P8A, O/ET W/R.H. SRB SEPARATING (OVXC23) ( 23 MAY 77 )

REFERENCE DATA

SREF = 2690.0000 SQ.FT. XMRP = 1097.0000 IN. XT
LREF = 1290.3000 INCHES YMRP = .0000 IN. YT
BREF = 1290.3000 INCHES ZMRP = 450.0000 IN. ZT
SCALE = .0100

PARAMETRIC DATA

ALPHA = .000 BETA = 15.000
DALPHA = -20.000 DBETA = 4.000
X = 900.000 MACH = 4.500
JET PC = .000

RUN NO. 4666/ 0 RN/L = 2.37 GRADIENT INTERVAL = -5.00/ 5.00

| Y | Z | X | ALPHA | BETA | PHI | CN | CLM | CY | CYN | CBL | CA |
|---|---|---|---|---|---|---|---|---|---|---|---|
| -101.050 | 200.500 | 899.72000 | -.16176 | 15.30900 | .21943 | -.03471 | .01259 | -.53792 | .16260 | -.05652 | .21778 |
| -100.640 | 275.660 | 899.72000 | -.15762 | 15.31200 | .20260 | -.03343 | .01168 | -.52659 | .15470 | -.05717 | .21801 |
| -99.818 | 424.750 | 899.51000 | -.15428 | 15.31500 | .19128 | -.03825 | .01514 | -.51856 | .14891 | -.05749 | .21996 |
| -100.200 | 499.800 | 899.61000 | -.15431 | 15.31500 | .19118 | -.03827 | .01517 | -.51874 | .14898 | -.05753 | .22027 |
| -100.390 | 599.500 | 899.46000 | -.15424 | 15.31500 | .19114 | -.03823 | .01518 | -.51868 | .14896 | -.05753 | .22030 |
| | GRADIENT | .00000 | .00000 | .00000 | .00000 | .00000 | .00000 | .00000 | .00000 | .00000 | .00000 |

IA143, AEDC V41A-P8A, O/ET W/R.H. SRB SEPARATING (OVXC23) ( 23 MAY 77 )

REFERENCE DATA

SREF = 2690.0000 SQ.FT. XMRP = 1097.0000 IN. XT
LREF = 1290.3000 INCHES YMRP = .0000 IN. YT
BREF = 1290.3000 INCHES ZMRP = 450.0000 IN. ZT
SCALE = .0100

PARAMETRIC DATA

ALPHA = .000 BETA = 15.000
DALPHA = -20.000 DBETA = 4.000
X = 900.000 MACH = 4.500
JET PC = .000

RUN NO. 4667/ 0 RN/L = 2.37 GRADIENT INTERVAL = -5.00/ 5.00

| Y | Z | X | ALPHA | BETA | PHI | CN | CLM | CY | CYN | CBL | CA |
|---|---|---|---|---|---|---|---|---|---|---|---|
| -399.890 | 598.890 | 899.49000 | -.15426 | 15.31500 | .19114 | -.03826 | .01519 | -.51870 | .14895 | -.05751 | .22042 |
| -400.750 | 500.540 | 899.90000 | -.15437 | 15.31500 | .19128 | -.03829 | .01520 | -.51885 | .14898 | -.05752 | .22046 |
| -400.490 | 425.640 | 899.88000 | -.15424 | 15.31500 | .19119 | -.03823 | .01520 | -.51838 | .14886 | -.05746 | .22037 |
| -400.860 | 275.610 | 899.89000 | -.15447 | 15.31500 | .19143 | -.03830 | .01517 | -.51874 | .14897 | -.05750 | .22033 |
| -400.750 | 200.580 | 899.96000 | -.15438 | 15.31500 | .19139 | -.03824 | .01517 | -.51861 | .14893 | -.05747 | .22029 |
| | GRADIENT | .00000 | .00000 | .00000 | .00000 | .00000 | .00000 | .00000 | .00000 | .00000 | .00000 |

IA143, AEDC V41A-P8A, O/ET W/R.H. SRB SEPARATING (OVXC24) ( 23 MAY 77 )

REFERENCE DATA

SREF = 2690.0000 SQ.FT. XMRP = 1097.0000 IN. XT
LREF = 1290.3000 INCHES YMRP = .0000 IN. YT
BREF = 1290.3000 INCHES ZMRP = 450.0000 IN. ZT
SCALE = .0100

PARAMETRIC DATA

ALPHA = .000 BETA = 15.000
DALPHA = -5.000 DBETA = -8.000
X = 900.000 MACH = 4.500
JET PC = .000

RUN NO. 4599/ 0 RN/L = 2.41 GRADIENT INTERVAL = -5.00/ 5.00

| Y | Z | X | ALPHA | BETA | PHI | CN | CLM | CY | CYN | CBL | CA |
|---|---|---|---|---|---|---|---|---|---|---|---|
| -100.730 | 275.020 | 899.77000 | -.15408 | 15.31500 | .19180 | -.03788 | .01519 | -.51959 | .14961 | -.05761 | .22048 |
| -100.380 | 424.530 | 899.74000 | -.15410 | 15.31500 | .19114 | -.03837 | .01560 | -.51923 | .14938 | -.05766 | .22151 |
| -101.160 | 499.580 | 899.72000 | -.15397 | 15.31400 | .19097 | -.03844 | .01561 | -.51907 | .14932 | -.05763 | .22130 |
| -100.620 | 599.280 | 899.70000 | -.15419 | 15.31500 | .19125 | -.03843 | .01561 | -.51936 | .14944 | -.05766 | .22153 |
| | GRADIENT | .00000 | .00000 | .00000 | .00000 | .00000 | .00000 | .00000 | .00000 | .00000 | .00000 |

IA143, AEDC V41A-P8A, O/ET W/R.H. SRB SEPARATING (OVXC25) ( 23 MAY 77 )

REFERENCE DATA

SREF = 2690.0000 SQ.FT. XMRP = 1097.0000 IN. XT
LREF = 1290.3000 INCHES YMRP = .0000 IN. YT
BREF = 1290.3000 INCHES ZMRP = 450.0000 IN. ZT
SCALE = .0100

PARAMETRIC DATA

ALPHA = .000 BETA = 15.000
DALPHA = -20.000 DBETA = -16.000
X = 900.000 MACH = 4.500
JET PC = .000

RUN NO. 4668/ 0 RN/L = 2.37 GRADIENT INTERVAL = -5.00/ 5.00

| Y | Z | X | ALPHA | BETA | PHI | CN | CLM | CY | CYN | CBL | CA |
|---|---|---|---|---|---|---|---|---|---|---|---|
| -101.030 | 425.480 | 899.63000 | -.15411 | 15.31500 | .19132 | -.03779 | .01471 | -.51817 | .14856 | -.05736 | .21883 |
| -100.710 | 500.100 | 899.32000 | -.15384 | 15.31500 | .19112 | -.03820 | .01490 | -.51822 | .14861 | -.05741 | .21812 |
| -100.550 | 599.890 | 899.48000 | -.15424 | 15.31500 | .19131 | -.03817 | .01508 | -.51849 | .14886 | -.05746 | .21976 |
| | GRADIENT | .00000 | .00000 | .00000 | .00000 | .00000 | .00000 | .00000 | .00000 | .00000 | .00000 |

IA143, AEDC V41A-P8A, O/ET W/R.H. SRB SEPARATING (OVXC26) ( 23 MAY 77 )

REFERENCE DATA

SREF = 2690.0000 SQ.FT. XMRP = 1097.0000 IN. XT
LREF = 1290.3000 INCHES YMRP = .0000 IN. YT
BREF = 1290.3000 INCHES ZMRP = 450.0000 IN. ZT
SCALE = .0100

PARAMETRIC DATA

ALPHA = .000 BETA = 15.000
DALPHA = -5.000 DBETA = -12.000
X = 900.000 MACH = 4.500
JET PC = .000

RUN NO. 4600/ 0 RN/L = 2.41 GRADIENT INTERVAL = -5.00/ 5.00

| Y | Z | X | ALPHA | BETA | PHI | CN | CLM | CY | CYN | CBL | CA |
|---|---|---|---|---|---|---|---|---|---|---|---|
| -401.320 | 200.050 | 899.82000 | -.15406 | 15.31500 | .19113 | -.03840 | .01561 | -.51936 | .14939 | -.05766 | .22147 |
| -400.920 | 275.060 | 899.78000 | -.15412 | 15.31500 | .19120 | -.03839 | .01563 | -.51920 | .14937 | -.05766 | .22156 |
| -400.490 | 424.580 | 899.69000 | -.15403 | 15.31400 | .19105 | -.03834 | .01556 | -.51906 | .14930 | -.05763 | .22138 |
| -400.740 | 499.840 | 899.62000 | -.15419 | 15.31500 | .19127 | -.03845 | .01560 | -.51940 | .14940 | -.05767 | .22146 |
| -400.800 | 599.560 | 899.78000 | -.15405 | 15.31500 | .19111 | -.03837 | .01563 | -.51951 | .14943 | -.05770 | .22160 |
| | GRADIENT | .00000 | .00000 | .00000 | .00000 | .00000 | .00000 | .00000 | .00000 | .00000 | .00000 |

IA143, AEDC V41A-P8A, O/ET W/R.H. SRB SEPARATING (OVXC27) ( 23 MAY 77 )

REFERENCE DATA

SREF = 2690.0000 SQ.FT. XMRP = 1097.0000 IN. XT
LREF = 1290.3000 INCHES YMRP = .0000 IN. YT
BREF = 1290.3000 INCHES ZMRP = 450.0000 IN. ZT
SCALE = .0100

PARAMETRIC DATA

ALPHA = .000 BETA = 15.000
DALPHA = -20.000 DBETA = -16.000
X = 900.000 MACH = 4.500
JET PC = .000

RUN NO. 4669/ 0 RN/L = 2.37 GRADIENT INTERVAL = -5.00/ 5.00

| Y | Z | X | ALPHA | BETA | PHI | CN | CLM | CY | CYN | CBL | CA |
|---|---|---|---|---|---|---|---|---|---|---|---|
| -401.150 | 200.520 | 899.58000 | -.15430 | 15.31500 | .19142 | -.03825 | .01512 | -.51880 | .14893 | -.05748 | .21994 |
| -400.970 | 275.950 | 899.72000 | -.15428 | 15.31500 | .19143 | -.03817 | .01511 | -.51850 | .14887 | -.05747 | .21985 |
| -400.150 | 425.840 | 899.44000 | -.15429 | 15.31500 | .19131 | -.03821 | .01513 | -.51865 | .14891 | -.05747 | .22023 |
| -400.320 | 500.470 | 899.40000 | -.15428 | 15.31500 | .19129 | -.03815 | .01514 | -.51876 | .14895 | -.05751 | .22029 |
| -400.070 | 600.170 | 899.34000 | -.15422 | 15.31500 | .19123 | -.03814 | .01513 | -.51878 | .14897 | -.05750 | .22028 |
| | GRADIENT | .00000 | .00000 | .00000 | .00000 | .00000 | .00000 | .00000 | .00000 | .00000 | .00000 |

IA143, AEDC V41A-P8A, O/ET W/R.H. SRB SEPARATING (OVXC28) ( 23 MAY 77 )

REFERENCE DATA

SREF = 2690.0000 SQ.FT. XMRP = 1097.0000 IN. XT
LREF = 1290.3000 INCHES YMRP = .0000 IN. YT
BREF = 1290.3000 INCHES ZMRP = 450.0000 IN. ZT
SCALE = .0100

PARAMETRIC DATA

ALPHA = .000 BETA = 15.000
DALPHA = -10.000 DBETA = .000
X = 900.000 MACH = 4.500
JET PC = .000

RUN NO. 4622/ 0 RN/L = 2.39 GRADIENT INTERVAL = -5.00/ 5.00

| Y | Z | X | ALPHA | BETA | PHI | CN | CLM | CY | CYN | CBL | CA |
|---|---|---|---|---|---|---|---|---|---|---|---|
| -101.400 | 300.270 | 900.02000 | -.15440 | 15.31500 | .19111 | -.03881 | .01552 | -.51862 | .14901 | -.05755 | .22059 |
| -100.850 | 399.500 | 899.82000 | -.15447 | 15.31500 | .19120 | -.03877 | .01553 | -.51888 | .14917 | -.05759 | .22083 |
| -100.930 | 499.300 | 899.79000 | -.15459 | 15.31500 | .19133 | -.03883 | .01556 | -.51889 | .14917 | -.05759 | .22094 |
| | GRADIENT | .00000 | .00000 | .00000 | .00000 | .00000 | .00000 | .00000 | .00000 | .00000 | .00000 |

RUN NO. 4623/ 0 RN/L = 2.39 GRADIENT INTERVAL = -5.00/ 5.00

| Y | Z | X | ALPHA | BETA | PHI | CN | CLM | CY | CYN | CBL | CA |
|---|---|---|---|---|---|---|---|---|---|---|---|
| -300.590 | 498.610 | 899.65000 | -.15448 | 15.31500 | .19118 | -.03877 | .01552 | -.51856 | .14909 | -.05756 | .22076 |
| -300.870 | 400.080 | 899.70000 | -.15455 | 15.31500 | .19133 | -.03878 | .01556 | -.51881 | .14913 | -.05757 | .22094 |
| -301.150 | 300.110 | 899.72000 | -.15439 | 15.31500 | .19108 | -.03878 | .01554 | -.51862 | .14909 | -.05755 | .22085 |
| | GRADIENT | .00000 | .00000 | .00000 | .00000 | .00000 | .00000 | .00000 | .00000 | .00000 | .00000 |

IA143, AEDC V41A-P8A, O/ET W/R.H. SRB SEPARATING (OVXC29) ( 23 MAY 77 )

REFERENCE DATA

SREF = 2690.0000 SQ.FT. XMRP = 1097.0000 IN. XT
LREF = 1290.3000 INCHES YMRP = .0000 IN. YT
BREF = 1290.3000 INCHES ZMRP = 450.0000 IN. ZT
SCALE = .0100

PARAMETRIC DATA

ALPHA = .000 BETA = 15.000
DALPHA = -15.000 DBETA = .000
X = 900.000 MACH = 4.500
JET PC = .000

RUN NO. 4651/ 0 RN/L = 2.38 GRADIENT INTERVAL = -5.00/ 5.00

| Y | Z | X | ALPHA | BETA | PHI | CN | CLM | CY | CYN | CBL | CA |
|---|---|---|---|---|---|---|---|---|---|---|---|
| -101.320 | 300.640 | 899.90000 | -.15428 | 15.31500 | .19217 | -.03758 | .01466 | -.51927 | .14942 | -.05746 | .21907 |
| -100.500 | 399.880 | 899.82000 | -.15437 | 15.31500 | .19126 | -.03843 | .01526 | -.51862 | .14898 | -.05751 | .22029 |
| -100.400 | 499.560 | 899.61000 | -.15428 | 15.31500 | .19124 | -.03825 | .01525 | -.51833 | .14886 | -.05747 | .22042 |
| | GRADIENT | .00000 | .00000 | .00000 | .00000 | .00000 | .00000 | .00000 | .00000 | .00000 | .00000 |

RUN NO. 4652/ 0 RN/L = 2.38 GRADIENT INTERVAL = -5.00/ 5.00

| Y | Z | X | ALPHA | BETA | PHI | CN | CLM | CY | CYN | CBL | CA |
|---|---|---|---|---|---|---|---|---|---|---|---|
| -300.580 | 497.850 | 899.17000 | -.15430 | 15.31500 | .19127 | -.03824 | .01521 | -.51867 | .14898 | -.05752 | .22037 |
| -300.890 | 400.380 | 899.76000 | -.15427 | 15.31500 | .19123 | -.03826 | .01521 | -.51833 | .14889 | -.05746 | .22028 |
| -301.130 | 300.430 | 899.83000 | -.15423 | 15.31500 | .19117 | -.03828 | .01525 | -.51833 | .14890 | -.05747 | .22036 |
| | GRADIENT | .00000 | .00000 | .00000 | .00000 | .00000 | .00000 | .00000 | .00000 | .00000 | .00000 |

IA143, AEDC V41A-P8A, O/ET W/R.H. SRB SEPARATING (OVXC30) ( 23 MAY 77 )

REFERENCE DATA

SREF = 2690.0000 SQ.FT. XMRP = 1097.0000 IN. XT
LREF = 1290.3000 INCHES YMRP = .0000 IN. YT
BREF = 1290.3000 INCHES ZMRP = 450.0000 IN. ZT
SCALE = .0100

PARAMETRIC DATA

ALPHA = .000 BETA = 15.000
DALPHA = -10.000 DBETA = -12.000
X = 900.000 MACH = 4.500
JET PC = .000

RUN NO. 4628/ 0 RN/L = 2.38 GRADIENT INTERVAL = -5.00/ 5.00

| Y | Z | X | ALPHA | BETA | PHI | CN | CLM | CY | CYN | CBL | CA |
|---|---|---|---|---|---|---|---|---|---|---|---|
| -101.230 | 300.240 | 899.66000 | -.15566 | 15.31400 | .19500 | -.03552 | .01313 | -.52170 | .15108 | -.05747 | .21926 |
| -100.820 | 400.020 | 899.81000 | -.15440 | 15.31500 | .19125 | -.03875 | .01546 | -.51873 | .14908 | -.05755 | .22037 |
| -100.540 | 499.510 | 899.56000 | -.15433 | 15.31500 | .19103 | -.03869 | .01547 | -.51855 | .14904 | -.05754 | .22065 |
| | GRADIENT | .00000 | .00000 | .00000 | .00000 | .00000 | .00000 | .00000 | .00000 | .00000 | .00000 |

RUN NO. 4629/ 0 RN/L = 2.38 GRADIENT INTERVAL = -5.00/ 5.00

| Y | Z | X | ALPHA | BETA | PHI | CN | CLM | CY | CYN | CBL | CA |
|---|---|---|---|---|---|---|---|---|---|---|---|
| -301.170 | 499.170 | 899.69000 | -.15442 | 15.31500 | .19115 | -.03874 | .01550 | -.51868 | .14911 | -.05755 | .22076 |
| -301.540 | 400.570 | 899.98000 | -.15432 | 15.31500 | .19106 | -.03868 | .01549 | -.51843 | .14901 | -.05752 | .22072 |
| -301.700 | 300.400 | 899.91000 | -.15446 | 15.31500 | .19120 | -.03872 | .01550 | -.51873 | .14911 | -.05757 | .22079 |
| | GRADIENT | .00000 | .00000 | .00000 | .00000 | .00000 | .00000 | .00000 | .00000 | .00000 | .00000 |

IA143, AEDC V41A-P8A, O/ET W/R.H. SRB SEPARATING (OVXC31) ( 23 MAY 77 )

REFERENCE DATA

SREF = 2690.0000 SQ.FT. XMRP = 1097.0000 IN. XT
LREF = 1290.3000 INCHES YMRP = .0000 IN. YT
BREF = 1290.3000 INCHES ZMRP = 450.0000 IN. ZT
SCALE = .0100

PARAMETRIC DATA

ALPHA = .000 BETA = 15.000
DALPHA = -15.000 DBETA = -12.000
X = 900.000 MACH = 4.500
JET PC = .000

RUN NO. 4644/ 0 RN/L = 2.38 GRADIENT INTERVAL = -5.00/ 5.00

| Y | Z | X | ALPHA | BETA | PHI | CN | CLM | CY | CYN | CBL | CA |
|---|---|---|---|---|---|---|---|---|---|---|---|
| -101.260 | 300.300 | 899.66000 | -.15825 | 15.31200 | .20277 | -.03102 | .00988 | -.52631 | .15460 | -.05712 | .21751 |
| -100.910 | 400.090 | 899.70000 | -.15414 | 15.31500 | .19135 | -.03833 | .01520 | -.51842 | .14886 | -.05748 | .21945 |
| -100.700 | 499.770 | 899.50000 | -.15437 | 15.31500 | .19133 | -.03828 | .01522 | -.51823 | .14889 | -.05746 | .22029 |
| | GRADIENT | .00000 | .00000 | .00000 | .00000 | .00000 | .00000 | .00000 | .00000 | .00000 | .00000 |

RUN NO. 4645/ 0 RN/L = 2.37 GRADIENT INTERVAL = -5.00/ 5.00

| Y | Z | X | ALPHA | BETA | PHI | CN | CLM | CY | CYN | CBL | CA |
|---|---|---|---|---|---|---|---|---|---|---|---|
| -301.260 | 499.320 | 899.46000 | -.15437 | 15.31500 | .19138 | -.03826 | .01524 | -.51884 | .14904 | -.05755 | .22045 |
| -301.750 | 400.710 | 899.91000 | -.15439 | 15.31500 | .19138 | -.03827 | .01520 | -.51858 | .14897 | -.05750 | .22032 |
| -301.910 | 300.540 | 899.96000 | -.15444 | 15.31500 | .19145 | -.03828 | .01527 | -.51876 | .14902 | -.05752 | .22067 |
| | GRADIENT | .00000 | .00000 | .00000 | .00000 | .00000 | .00000 | .00000 | .00000 | .00000 | .00000 |

IA143, AEDC V41A-P8A, O/ET W/R.H. SRB SEPARATING (OVXC32) ( 23 MAY 77 )

REFERENCE DATA

SREF = 2690.0000 SQ.FT. XMRP = 1097.0000 IN. XT
LREF = 1290.3000 INCHES YMRP = .0000 IN. YT
BREF = 1290.3000 INCHES ZMRP = 450.0000 IN. ZT
SCALE = .0100

PARAMETRIC DATA

ALPHA = .000 BETA = 15.000
DALPHA = -12.000 DBETA = -6.000
X = 900.000 MACH = 4.500
JET PC = .000

RUN NO. 4634/ 0 RN/L = 2.39 GRADIENT INTERVAL = -5.00/ 5.00

| Y | Z | X | ALPHA | BETA | PHI | CN | CLM | CY | CYN | CBL | CA |
|---|---|---|---|---|---|---|---|---|---|---|---|
| -200.980 | 300.430 | 899.60000 | -.15451 | 15.31500 | .19129 | -.03871 | .01547 | -.51869 | .14910 | -.05754 | .22074 |
| -200.280 | 399.740 | 899.57000 | -.15469 | 15.31500 | .19142 | -.03882 | .01552 | -.51891 | .14917 | -.05758 | .22090 |
| -200.330 | 499.820 | 899.64000 | -.15449 | 15.31500 | .19126 | -.03870 | .01545 | -.51870 | .14910 | -.05755 | .22066 |
| | GRADIENT | .00000 | .00000 | .00000 | .00000 | .00000 | .00000 | .00000 | .00000 | .00000 | .00000 |

IA143, AEDC V41A-P8A, O/ET W/R.H. SRB SEPARATING (OVXC33) ( 23 MAY 77 )

REFERENCE DATA

SREF = 2690.0000 SQ.FT. XMRP = 1097.0000 IN. XT
LREF = 1290.3000 INCHES YMRP = .0000 IN. YT
BREF = 1290.3000 INCHES ZMRP = 450.0000 IN. ZT
SCALE = .0100

PARAMETRIC DATA

ALPHA = .000 BETA = 15.000
DALPHA = -15.000 DBETA = -6.000
X = 900.000 MACH = 4.500
JET PC = .000

RUN NO. 4648/ 0 RN/L = 2.37 GRADIENT INTERVAL = -5.00/ 5.00

| Y | Z | X | ALPHA | BETA | PHI | CN | CLM | CY | CYN | CBL | CA |
|---|---|---|---|---|---|---|---|---|---|---|---|
| -200.940 | 400.380 | 899.62000 | -.15436 | 15.31500 | .19138 | -.03832 | .01528 | -.51893 | .14910 | -.05755 | .22059 |
| -199.860 | 599.210 | 899.22000 | -.15454 | 15.31500 | .19163 | -.03829 | .01525 | -.51894 | .14909 | -.05753 | .22052 |
| -200.600 | 799.290 | 899.37000 | -.15441 | 15.31500 | .19142 | -.03828 | .01524 | -.51850 | .14895 | -.05748 | .22041 |
| -201.390 | 999.700 | 899.74000 | -.15420 | 15.31500 | .19115 | -.03825 | .01522 | -.51862 | .14897 | -.05750 | .22042 |
| | GRADIENT | .00000 | .00000 | .00000 | .00000 | .00000 | .00000 | .00000 | .00000 | .00000 | .00000 |

IA143, AEDC V41A-P8A, O/ET W/R.H. SRB SEPARATING (OVXC34) ( 23 MAY 77 )

REFERENCE DATA

SREF = 2690.0000 SQ.FT. XMRP = 1097.0000 IN. XT
LREF = 1290.3000 INCHES YMRP = .0000 IN. YT
BREF = 1290.3000 INCHES ZMRP = 450.0000 IN. ZT
SCALE = .0100

PARAMETRIC DATA

ALPHA = .000 BETA = 15.000
DALPHA = -10.000 DBETA = -4.000
X = 900.000 MACH = 4.500
JET PC = .000

RUN NO. 4624/ 0 RN/L = 2.39 GRADIENT INTERVAL = -5.00/ 5.00

| Y | Z | X | ALPHA | BETA | PHI | CN | CLM | CY | CYN | CBL | CA |
|---|---|---|---|---|---|---|---|---|---|---|---|
| -201.010 | 300.200 | 899.68000 | -.15452 | 15.31500 | .19122 | -.03881 | .01553 | -.51881 | .14916 | -.05758 | .22087 |
| -200.770 | 349.980 | 899.74000 | -.15442 | 15.31500 | .19101 | -.03883 | .01554 | -.51878 | .14916 | -.05761 | .22084 |
| -200.480 | 400.020 | 899.57000 | -.15442 | 15.31500 | .19113 | -.03874 | .01550 | -.51883 | .14917 | -.05759 | .22076 |
| | GRADIENT | .00000 | .00000 | .00000 | .00000 | .00000 | .00000 | .00000 | .00000 | .00000 | .00000 |

RUN NO. 4625/ 0 RN/L = 2.39 GRADIENT INTERVAL = -5.00/ 5.00

| Y | Z | X | ALPHA | BETA | PHI | CN | CLM | CY | CYN | CBL | CA |
|---|---|---|---|---|---|---|---|---|---|---|---|
| -300.670 | 399.180 | 899.54000 | -.15459 | 15.31500 | .19131 | -.03881 | .01554 | -.51894 | .14921 | -.05762 | .22091 |
| -301.490 | 350.230 | 899.84000 | -.15453 | 15.31500 | .19123 | -.03884 | .01552 | -.51901 | .14923 | -.05763 | .22074 |
| -301.160 | 300.240 | 899.82000 | -.15451 | 15.31500 | .19122 | -.03882 | .01551 | -.51871 | .14910 | -.05756 | .22069 |
| | GRADIENT | .00000 | .00000 | .00000 | .00000 | .00000 | .00000 | .00000 | .00000 | .00000 | .00000 |

IA143, AEDC V41A-P8A, O/ET W/R.H. SRB SEPARATING (OVXC35) ( 23 MAY 77 )

REFERENCE DATA

SREF = 2690.0000 SQ.FT. XMRP = 1097.0000 IN. XT
LREF = 1290.3000 INCHES YMRP = .0000 IN. YT
BREF = 1290.3000 INCHES ZMRP = 450.0000 IN. ZT
SCALE = .0100

PARAMETRIC DATA

ALPHA = .000 BETA = 15.000
DALPHA = -15.000 DBETA = -4.000
X = 900.000 MACH = 4.500
JET PC = .000

RUN NO. 4649/ 0 RN/L = 2.37 GRADIENT INTERVAL = -5.00/ 5.00

| Y | Z | X | ALPHA | BETA | PHI | CN | CLM | CY | CYN | CBL | CA |
|---|---|---|---|---|---|---|---|---|---|---|---|
| -201.120 | 300.720 | 899.79000 | -.15422 | 15.31500 | .19115 | -.03828 | .01522 | -.51848 | .14894 | -.05748 | .22042 |
| -200.760 | 350.210 | 899.72000 | -.15416 | 15.31500 | .19108 | -.03826 | .01522 | -.51845 | .14893 | -.05749 | .22029 |
| -200.770 | 400.220 | 899.66000 | -.15432 | 15.31500 | .19125 | -.03824 | .01520 | -.51841 | .14891 | -.05749 | .22025 |
| | GRADIENT | .00000 | .00000 | .00000 | .00000 | .00000 | .00000 | .00000 | .00000 | .00000 | .00000 |

RUN NO. 4650/ 0 RN/L = 2.37 GRADIENT INTERVAL = -5.00/ 5.00

| Y | Z | X | ALPHA | BETA | PHI | CN | CLM | CY | CYN | CBL | CA |
|---|---|---|---|---|---|---|---|---|---|---|---|
| -300.390 | 398.920 | 899.31000 | -.15431 | 15.31500 | .19130 | -.03825 | .01522 | -.51884 | .14907 | -.05755 | .22039 |
| -301.390 | 350.470 | 899.85000 | -.15426 | 15.31500 | .19122 | -.03819 | .01521 | -.51868 | .14899 | -.05754 | .22041 |
| -300.980 | 300.450 | 899.65000 | -.15425 | 15.31500 | .19123 | -.03826 | .01520 | -.51855 | .14897 | -.05749 | .22031 |
| | GRADIENT | .00000 | .00000 | .00000 | .00000 | .00000 | .00000 | .00000 | .00000 | .00000 | .00000 |

IA143, AEDC V41A-P8A, O/ET W/R.H. SRB SEPARATING (OVXC36) ( 23 MAY 77 )

REFERENCE DATA

SREF = 2690.0000 SQ.FT. XMRP = 1097.0000 IN. XT
LREF = 1290.3000 INCHES YMRP = .0000 IN. YT
BREF = 1290.3000 INCHES ZMRP = 450.0000 IN. ZT
SCALE = .0100

PARAMETRIC DATA

ALPHA = .000 BETA = 15.000
DALPHA = -10.000 DBETA = -8.000
X = 900.000 MACH = 4.500
JET PC = .000

RUN NO. 4627/ 0 RN/L = 2.38 GRADIENT INTERVAL = -5.00/ 5.00

| Y | Z | X | ALPHA | BETA | PHI | CN | CLM | CY | CYN | CBL | CA |
|---|---|---|---|---|---|---|---|---|---|---|---|
| -201.490 | 400.990 | 900.01000 | -.15456 | 15.31500 | .19134 | -.03873 | .01550 | -.51883 | .14915 | -.05758 | .22088 |
| -201.650 | 350.430 | 899.82000 | -.15458 | 15.31500 | .19132 | -.03878 | .01552 | -.51855 | .14907 | -.05753 | .22081 |
| -201.790 | 300.380 | 899.92000 | -.15452 | 15.31500 | .19132 | -.03876 | .01552 | -.51880 | .14914 | -.05756 | .22080 |
| | GRADIENT | .00000 | .00000 | .00000 | .00000 | .00000 | .00000 | .00000 | .00000 | .00000 | .00000 |

RUN NO. 4626/ 0 RN/L = 2.38 GRADIENT INTERVAL = -5.00/ 5.00

| Y | Z | X | ALPHA | BETA | PHI | CN | CLM | CY | CYN | CBL | CA |
|---|---|---|---|---|---|---|---|---|---|---|---|
| -302.310 | 300.860 | 899.85000 | -.15449 | 15.31500 | .19123 | -.03874 | .01550 | -.51867 | .14912 | -.05756 | .22073 |
| -300.950 | 350.090 | 899.78000 | -.15455 | 15.31500 | .19130 | -.03875 | .01553 | -.51855 | .14906 | -.05755 | .22086 |
| -300.970 | 400.010 | 899.83000 | -.15455 | 15.31500 | .19135 | -.03872 | .01553 | -.51866 | .14911 | -.05756 | .22086 |
| | GRADIENT | .00000 | .00000 | .00000 | .00000 | .00000 | .00000 | .00000 | .00000 | .00000 | .00000 |

IA143, AEDC V41A-P8A, O/ET W/R.H. SRB SEPARATING (OVXC37) ( 23 MAY 77 )

REFERENCE DATA

SREF = 2690.0000 SQ.FT. XMRP = 1097.0000 IN. XT
LREF = 1290.3000 INCHES YMRP = .0000 IN. YT
BREF = 1290.3000 INCHES ZMRP = 450.0000 IN. ZT
SCALE = .0100

PARAMETRIC DATA

ALPHA = .000 BETA = 15.000
DALPHA = -15.000 DBETA = -8.000
X = 900.000 MACH = 4.500
JET PC = .000

RUN NO. 4646/ 0 RN/L = 2.37 GRADIENT INTERVAL = -5.00/ 5.00

| Y | Z | X | ALPHA | BETA | PHI | CN | CLM | CY | CYN | CBL | CA |
|---|---|---|---|---|---|---|---|---|---|---|---|
| -201.390 | 300.660 | 899.88000 | -.15427 | 15.31500 | .19133 | -.03813 | .01519 | -.51856 | .14898 | -.05750 | .22035 |
| -200.950 | 350.300 | 899.76000 | -.15444 | 15.31500 | .19142 | -.03827 | .01520 | -.51852 | .14894 | -.05749 | .22032 |
| -200.680 | 400.120 | 899.60000 | -.15445 | 15.31500 | .19149 | -.03825 | .01522 | -.51839 | .14894 | -.05747 | .22039 |
| | GRADIENT | .00000 | .00000 | .00000 | .00000 | .00000 | .00000 | .00000 | .00000 | .00000 | .00000 |

RUN NO. 4647/ 0 RN/L = 2.37 GRADIENT INTERVAL = -5.00/ 5.00

| Y | Z | X | ALPHA | BETA | PHI | CN | CLM | CY | CYN | CBL | CA |
|---|---|---|---|---|---|---|---|---|---|---|---|
| -300.380 | 399.150 | 899.33000 | -.15441 | 15.31500 | .19140 | -.03829 | .01523 | -.51867 | .14899 | -.05750 | .22044 |
| -300.970 | 350.510 | 899.54000 | -.15439 | 15.31500 | .19135 | -.03827 | .01524 | -.51849 | .14893 | -.05749 | .22043 |
| -301.500 | 300.490 | 899.75000 | -.15446 | 15.31500 | .19151 | -.03829 | .01523 | -.51863 | .14899 | -.05749 | .22041 |
| | GRADIENT | .00000 | .00000 | .00000 | .00000 | .00000 | .00000 | .00000 | .00000 | .00000 | .00000 |

IA143, AEDC V41A-P8A, O/ET W/R.H. SRB SEPARATING (OVXC38) ( 23 MAY 77 )

REFERENCE DATA

SREF = 2690.0000 SQ.FT. XMRP = 1097.0000 IN. XT
LREF = 1290.3000 INCHES YMRP = .0000 IN. YT
BREF = 1290.3000 INCHES ZMRP = 450.0000 IN. ZT
SCALE = .0100

PARAMETRIC DATA

ALPHA = .000 BETA = 15.000
DALPHA = -15.000 DBETA = 4.000
X = 1200.000 MACH = 4.500
JET PC = .000

RUN NO. 4603/ 0 RN/L = 2.41 GRADIENT INTERVAL = -5.00/ 5.00

| Y | Z | X | ALPHA | BETA | PHI | CN | CLM | CY | CYN | CBL | CA |
|---|---|---|---|---|---|---|---|---|---|---|---|
| -101.050 | .536 | 1199.80000 | -.15439 | 15.31500 | .19424 | -.04201 | .01768 | -.51998 | .14984 | -.05720 | .21987 |
| -100.770 | 101.280 | 1200.00000 | -.15452 | 15.31500 | .19106 | -.03915 | .01574 | -.51900 | .14923 | -.05760 | .22129 |
| -100.610 | 200.660 | 1199.80000 | -.15449 | 15.31400 | .19092 | -.03914 | .01577 | -.51936 | .14937 | -.05768 | .22168 |
| | GRADIENT | .00000 | .00000 | .00000 | .00000 | .00000 | .00000 | .00000 | .00000 | .00000 | .00000 |

IA143, AEDC V41A-P8A, O/ET W/R.H. SRB SEPARATING (OVXC39) ( 23 MAY 77 )

REFERENCE DATA

SREF = 2690.0000 SQ.FT. XMRP = 1097.0000 IN. XT
LREF = 1290.3000 INCHES YMRP = .0000 IN. YT
BREF = 1290.3000 INCHES ZMRP = 450.0000 IN. ZT
SCALE = .0100

PARAMETRIC DATA

ALPHA = .000 BETA = 15.000
DALPHA = -15.000 DBETA = -2.000
X = 1200.000 MACH = 4.500
JET PC = .000

RUN NO. 4674/ 0 RN/L = 2.38 GRADIENT INTERVAL = -5.00/ 5.00

| Y | Z | X | ALPHA | BETA | PHI | CN | CLM | CY | CYN | CBL | CA |
|---|---|---|---|---|---|---|---|---|---|---|---|
| -101.250 | .534 | 1199.50000 | -.15410 | 15.31500 | .19364 | -.04040 | .01643 | -.52017 | .14974 | -.05734 | .21803 |
| -100.470 | 101.240 | 1199.80000 | -.15412 | 15.31500 | .19118 | -.03816 | .01502 | -.51845 | .14883 | -.05746 | .21946 |
| -100.280 | 200.620 | 1199.60001 | -.15432 | 15.31500 | .19133 | -.03822 | .01513 | -.51841 | .14888 | -.05745 | .22002 |
| | GRADIENT | .00000 | .00000 | .00000 | .00000 | .00000 | .00000 | .00000 | .00000 | .00000 | .00000 |

RUN NO. 4675/ 0 RN/L = 2.38 GRADIENT INTERVAL = -5.00/ 5.00

| Y | Z | X | ALPHA | BETA | PHI | CN | CLM | CY | CYN | CBL | CA |
|---|---|---|---|---|---|---|---|---|---|---|---|
| -600.850 | 200.560 | 1199.70000 | -.15419 | 15.31500 | .19123 | -.03811 | .01509 | -.51862 | .14895 | -.05749 | .22009 |
| -601.030 | 100.550 | 1199.70000 | -.15434 | 15.31500 | .19130 | -.03823 | .01512 | -.51868 | .14897 | -.05751 | .22007 |
| -601.100 | .584 | 1199.70000 | -.15426 | 15.31500 | .19135 | -.03806 | .01508 | -.51839 | .14888 | -.05745 | .22007 |
| | GRADIENT | .00000 | .00000 | .00000 | .00000 | .00000 | .00000 | .00000 | .00000 | .00000 | .00000 |

IA143, AEDC V41A-P8A, O/ET W/R.H. SRB SEPARATING (OVXC40) ( 23 MAY 77 )

REFERENCE DATA

SREF = 2690.0000 SQ.FT. XMRP = 1097.0000 IN. XT
LREF = 1290.3000 INCHES YMRP = .0000 IN. YT
BREF = 1290.3000 INCHES ZMRP = 450.0000 IN. ZT
SCALE = .0100

PARAMETRIC DATA

ALPHA = .000 BETA = 15.000
DALPHA = -25.000 DBETA = 4.000
X = 1200.000 MACH = 4.500
JET PC = .000

RUN NO. 4672/ 0 RN/L = 2.37 GRADIENT INTERVAL = -5.00/ 5.00

| Y | Z | X | ALPHA | BETA | PHI | CN | CLM | CY | CYN | CBL | CA |
|---|---|---|---|---|---|---|---|---|---|---|---|
| -100.880 | 400.870 | 1199.80000 | -.15438 | 15.31500 | .19149 | -.03808 | .01509 | -.51846 | .14885 | -.05746 | .22010 |
| -100.210 | 499.520 | 1199.20000 | -.15426 | 15.31500 | .19125 | -.03818 | .01511 | -.51855 | .14889 | -.05748 | .22005 |
| -100.380 | 599.420 | 1199.20000 | -.15425 | 15.31500 | .19126 | -.03809 | .01507 | -.51868 | .14891 | -.05749 | .22013 |
| | GRADIENT | .00000 | .00000 | .00000 | .00000 | .00000 | .00000 | .00000 | .00000 | .00000 | .00000 |

IA143, AEDC V41A-P8A, O/ET W/R.H. SRB SEPARATING (OVXC41) ( 23 MAY 77 )

REFERENCE DATA

SREF = 2690.0000 SQ.FT. XMRP = 1097.0000 IN. XT
LREF = 1290.3000 INCHES YMRP = .0000 IN. YT
BREF = 1290.3000 INCHES ZMRP = 450.0000 IN. ZT
SCALE = .0100

PARAMETRIC DATA

ALPHA = .000 BETA = 15.000
DALPHA = -25.000 DBETA = -2.000
X = 1200.000 MACH = 4.500
JET PC = .000

RUN NO. 4679/ 0 RN/L = 2.38 GRADIENT INTERVAL = -5.00/ 5.00

| Y | Z | X | ALPHA | BETA | PHI | CN | CLM | CY | CYN | CBL | CA |
|---|---|---|---|---|---|---|---|---|---|---|---|
| -101.040 | 400.770 | 1199.60001 | -.15411 | 15.31500 | .19122 | -.03803 | .01500 | -.51836 | .14877 | -.05746 | .21946 |
| -100.470 | 499.810 | 1199.39999 | -.15409 | 15.31500 | .19122 | -.03814 | .01496 | -.51850 | .14875 | -.05744 | .21922 |
| -99.585 | 599.610 | 1199.10001 | -.15402 | 15.31500 | .19109 | -.03814 | .01496 | -.51840 | .14874 | -.05744 | .21913 |
| | GRADIENT | .00000 | .00000 | .00000 | .00000 | .00000 | .00000 | .00000 | .00000 | .00000 | .00000 |

RUN NO. 4680/ 0 RN/L = 2.38 GRADIENT INTERVAL = -5.00/ 5.00

| Y | Z | X | ALPHA | BETA | PHI | CN | CLM | CY | CYN | CBL | CA |
|---|---|---|---|---|---|---|---|---|---|---|---|
| -600.880 | 600.750 | 1199.70000 | -.15411 | 15.31500 | .19113 | -.03808 | .01507 | -.51857 | .14893 | -.05750 | .21994 |
| -600.960 | 500.690 | 1199.70000 | -.15424 | 15.31500 | .19131 | -.03813 | .01509 | -.51857 | .14891 | -.05746 | .22008 |
| -600.820 | 400.710 | 1199.60001 | -.15421 | 15.31500 | .19128 | -.03801 | .01507 | -.51855 | .14890 | -.05748 | .22015 |
| | GRADIENT | .00000 | .00000 | .00000 | .00000 | .00000 | .00000 | .00000 | .00000 | .00000 | .00000 |

IA143, AEDC V41A-P8A, O/ET W/R.H. SRB SEPARATING (OVXC42) ( 23 MAY 77 )

REFERENCE DATA

SREF = 2690.0000 SQ.FT. XMRP = 1097.0000 IN. XT
LREF = 1290.3000 INCHES YMRP = .0000 IN. YT
BREF = 1290.3000 INCHES ZMRP = 450.0000 IN. ZT
SCALE = .0100

PARAMETRIC DATA

ALPHA = .000 BETA = 15.000
DALPHA = -15.000 DBETA = -8.000
X = 1200.000 MACH = 4.500
JET PC = .000

RUN NO. 4605/ 0 RN/L = 2.41 GRADIENT INTERVAL = -5.00/ 5.00

| Y | Z | X | ALPHA | BETA | PHI | CN | CLM | CY | CYN | CBL | CA |
|---|---|---|---|---|---|---|---|---|---|---|---|
| -101.080 | 200.420 | 1199.50000 | -.15452 | 15.31500 | .19108 | -.03914 | .01573 | -.51914 | .14927 | -.05765 | .22114 |
| -102.510 | 100.470 | 1199.89999 | -.15433 | 15.31500 | .19095 | -.03921 | .01566 | -.51908 | .14915 | -.05764 | .22027 |
| -102.050 | .046 | 1199.60001 | -.15426 | 15.31500 | .19231 | -.04021 | .01600 | -.52061 | .15009 | -.05769 | .21824 |
| | GRADIENT | .00000 | .00000 | .00000 | .00000 | .00000 | .00000 | .00000 | .00000 | .00000 | .00000 |

RUN NO. 4604/ 0 RN/L = 2.41 GRADIENT INTERVAL = -5.00/ 5.00

| Y | Z | X | ALPHA | BETA | PHI | CN | CLM | CY | CYN | CBL | CA |
|---|---|---|---|---|---|---|---|---|---|---|---|
| -600.910 | .672 | 1199.80000 | -.15445 | 15.31400 | .19096 | -.03907 | .01574 | -.51882 | .14922 | -.05760 | .22146 |
| -601.050 | 100.580 | 1199.60001 | -.15451 | 15.31400 | .19097 | -.03911 | .01574 | -.51879 | .14923 | -.05762 | .22132 |
| -601.150 | 200.510 | 1199.60001 | -.15455 | 15.31500 | .19097 | -.03913 | .01574 | -.51903 | .14928 | -.05765 | .22145 |
| | GRADIENT | .00000 | .00000 | .00000 | .00000 | .00000 | .00000 | .00000 | .00000 | .00000 | .00000 |

IA143, AEDC V41A-P8A, O/ET W/R.H. SRB SEPARATING (OVXC43) ( 23 MAY 77 )

REFERENCE DATA

SREF = 2690.0000 SQ.FT. XMRP = 1097.0000 IN. XT
LREF = 1290.3000 INCHES YMRP = .0000 IN. YT
BREF = 1290.3000 INCHES ZMRP = 450.0000 IN. ZT
SCALE = .0100

PARAMETRIC DATA

ALPHA = .000 BETA = 15.000
DALPHA = -15.000 DBETA = -8.000
X = 1200.000 MACH = 4.500
JET PC = .000

RUN NO. 4677/ 0 RN/L = 2.38 GRADIENT INTERVAL = -5.00/ 5.00

| Y | Z | X | ALPHA | BETA | PHI | CN | CLM | CY | CYN | CBL | CA |
|---|---|---|---|---|---|---|---|---|---|---|---|
| -101.170 | 200.350 | 1199.60001 | -.15416 | 15.31500 | .19115 | -.03819 | .01507 | -.51845 | .14883 | -.05747 | .21967 |
| -102.290 | 100.450 | 1199.80000 | -.15400 | 15.31500 | .19118 | -.03824 | .01499 | -.51843 | .14874 | -.05745 | .21878 |
| -102.260 | .016 | 1199.70000 | -.15415 | 15.31500 | .19191 | -.03873 | .01488 | -.52008 | .14977 | -.05768 | .21689 |
| | GRADIENT | .00000 | .00000 | .00000 | .00000 | .00000 | .00000 | .00000 | .00000 | .00000 | .00000 |

RUN NO. 4676/ 0 RN/L = 2.38 GRADIENT INTERVAL = -5.00/ 5.00

| Y | Z | X | ALPHA | BETA | PHI | CN | CLM | CY | CYN | CBL | CA |
|---|---|---|---|---|---|---|---|---|---|---|---|
| -603.100 | .253 | 1199.39999 | -.15422 | 15.31500 | .19124 | -.03813 | .01511 | -.51882 | .14902 | -.05753 | .22011 |
| -600.810 | 100.580 | 1199.60001 | -.15423 | 15.31500 | .19123 | -.03813 | .01511 | -.51860 | .14893 | -.05750 | .22009 |
| -600.750 | 200.460 | 1199.70000 | -.15426 | 15.31500 | .19124 | -.03819 | .01510 | -.51897 | .14908 | -.05756 | .22005 |
| | GRADIENT | .00000 | .00000 | .00000 | .00000 | .00000 | .00000 | .00000 | .00000 | .00000 | .00000 |

IA143, AEDC V41A-P8A, O/ET W/R.H. SRB SEPARATING (OVXC44) ( 23 MAY 77 )

REFERENCE DATA

SREF = 2690.0000 SQ.FT. XMRP = 1097.0000 IN. XT
LREF = 1290.3000 INCHES YMRP = .0000 IN. YT
BREF = 1290.3000 INCHES ZMRP = 450.0000 IN. ZT
SCALE = .0100

PARAMETRIC DATA

ALPHA = .000 BETA = 15.000
DALPHA = -25.000 DBETA = -20.000
X = 1200.000 MACH = 4.500
JET PC = .000

RUN NO. 4670/ 0 RN/L = 2.37 GRADIENT INTERVAL = -5.00/ 5.00

| Y | Z | X | ALPHA | BETA | PHI | CN | CLM | CY | CYN | CBL | CA |
|---|---|---|---|---|---|---|---|---|---|---|---|
| -100.660 | 400.480 | 1199.30000 | -.15378 | 15.31500 | .19104 | -.03809 | .01479 | -.51789 | .14840 | -.05736 | .21774 |
| -100.630 | 500.260 | 1199.20000 | -.15406 | 15.31500 | .19115 | -.03820 | .01499 | -.51825 | .14868 | -.05740 | .21917 |
| -100.640 | 600.230 | 1199.30000 | -.15421 | 15.31500 | .19123 | -.03813 | .01512 | -.51857 | .14889 | -.05749 | .22012 |
| | GRADIENT | .00000 | .00000 | .00000 | .00000 | .00000 | .00000 | .00000 | .00000 | .00000 | .00000 |

RUN NO. 4671/ 0 RN/L = 2.37 GRADIENT INTERVAL = -5.00/ 5.00

| Y | Z | X | ALPHA | BETA | PHI | CN | CLM | CY | CYN | CBL | CA |
|---|---|---|---|---|---|---|---|---|---|---|---|
| -600.700 | 400.660 | 1199.50000 | -.15413 | 15.31500 | .19115 | -.03809 | .01506 | -.51846 | .14885 | -.05748 | .21984 |
| -600.650 | 500.640 | 1199.50000 | -.15421 | 15.31500 | .19134 | -.03805 | .01511 | -.51855 | .14889 | -.05746 | .22025 |
| -600.860 | 600.680 | 1199.50000 | -.15427 | 15.31500 | .19134 | -.03805 | .01513 | -.51831 | .14883 | -.05744 | .22027 |
| | GRADIENT | .00000 | .00000 | .00000 | .00000 | .00000 | .00000 | .00000 | .00000 | .00000 | .00000 |

IA143, AEDC V41A-P8A, O/ET W/R.H. SRB SEPARATING (OVXC45) ( 23 MAY 77 )

REFERENCE DATA

SREF = 2690.0000 SQ.FT. XMRP = 1097.0000 IN. XT
LREF = 1290.3000 INCHES YMRP = .0000 IN. YT
BREF = 1290.3000 INCHES ZMRP = 450.0000 IN. ZT
SCALE = .0100

PARAMETRIC DATA

ALPHA = .000 BETA = 15.000
DALPHA = -10.000 DBETA = .000
X = 1200.000 MACH = 4.500
JET PC = .000

RUN NO. 4632/ 0 RN/L = 2.39 GRADIENT INTERVAL = -5.00/ 5.00

| Y | Z | X | ALPHA | BETA | PHI | CN | CLM | CY | CYN | CBL | CA |
|---|---|---|---|---|---|---|---|---|---|---|---|
| -201.180 | -49.418 | 1199.70000 | -.15442 | 15.31500 | .19076 | -.03861 | .01523 | -.51894 | .14915 | -.05769 | .22008 |
| -201.360 | .704 | 1199.89999 | -.15452 | 15.31500 | .19123 | -.03879 | .01549 | -.51855 | .14904 | -.05753 | .22066 |
| -200.400 | 100.590 | 1199.70000 | -.15445 | 15.31500 | .19118 | -.03870 | .01546 | -.51853 | .14904 | -.05752 | .22070 |
| -200.500 | 150.220 | 1199.70000 | -.15465 | 15.31500 | .19144 | -.03880 | .01550 | -.51903 | .14919 | -.05758 | .22095 |
| | GRADIENT | .00000 | .00000 | .00000 | .00000 | .00000 | .00000 | .00000 | .00000 | .00000 | .00000 |

RUN NO. 4633/ 0 RN/L = 2.39 GRADIENT INTERVAL = -5.00/ 5.00

| Y | Z | X | ALPHA | BETA | PHI | CN | CLM | CY | CYN | CBL | CA |
|---|---|---|---|---|---|---|---|---|---|---|---|
| -398.930 | 148.220 | 1199.30000 | -.15443 | 15.31500 | .19114 | -.03871 | .01548 | -.51851 | .14906 | -.05754 | .22070 |
| -401.010 | 100.410 | 1199.70000 | -.15452 | 15.31500 | .19125 | -.03875 | .01548 | -.51845 | .14904 | -.05751 | .22074 |
| -401.050 | .490 | 1199.70000 | -.15451 | 15.31500 | .19123 | -.03873 | .01550 | -.51850 | .14905 | -.05753 | .22077 |
| -401.220 | -49.546 | 1199.70000 | -.15466 | 15.31500 | .19141 | -.03877 | .01548 | -.51861 | .14908 | -.05754 | .22071 |
| | GRADIENT | .00000 | .00000 | .00000 | .00000 | .00000 | .00000 | .00000 | .00000 | .00000 | .00000 |

IA143, AEDC V41A-P8A, O/ET W/R.H. SRB SEPARATING (OVXC46) ( 23 MAY 77 )

REFERENCE DATA

SREF = 2690.0000 SQ.FT. XMRP = 1097.0000 IN. XT
LREF = 1290.3000 INCHES YMRP = .0000 IN. YT
BREF = 1290.3000 INCHES ZMRP = 450.0000 IN. ZT
SCALE = .0100

PARAMETRIC DATA

ALPHA = .000 BETA = 15.000
DALPHA = -20.000 DBETA = .000
X = 1200.000 MACH = 4.500
JET PC = .000

RUN NO. 4664/ 0 RN/L = 2.37 GRADIENT INTERVAL = -5.00/ 5.00

| Y | Z | X | ALPHA | BETA | PHI | CN | CLM | CY | CYN | CBL | CA |
|---|---|---|---|---|---|---|---|---|---|---|---|
| -200.680 | 300.710 | 1199.70000 | -.15428 | 15.31500 | .19127 | -.03821 | .01516 | -.51877 | .14898 | -.05751 | .22033 |
| -200.720 | 400.280 | 1199.70000 | -.15433 | 15.31500 | .19128 | -.03825 | .01519 | -.51874 | .14898 | -.05751 | .22044 |
| -200.650 | 500.050 | 1199.60001 | -.15431 | 15.31500 | .19130 | -.03821 | .01519 | -.51870 | .14897 | -.05751 | .22034 |
| | GRADIENT | .00000 | .00000 | .00000 | .00000 | .00000 | .00000 | .00000 | .00000 | .00000 | .00000 |

RUN NO. 4665/ 0 RN/L = 2.38 GRADIENT INTERVAL = -5.00/ 5.00

| Y | Z | X | ALPHA | BETA | PHI | CN | CLM | CY | CYN | CBL | CA |
|---|---|---|---|---|---|---|---|---|---|---|---|
| -400.170 | 498.560 | 1199.10001 | -.15445 | 15.31500 | .19143 | -.03824 | .01521 | -.51843 | .14889 | -.05747 | .22047 |
| -400.990 | 400.540 | 1199.70000 | -.15428 | 15.31500 | .19133 | -.03812 | .01515 | -.51848 | .14891 | -.05747 | .22029 |
| -401.070 | 300.490 | 1199.70000 | -.15417 | 15.31500 | .19114 | -.03816 | .01517 | -.51884 | .14904 | -.05754 | .22044 |
| | GRADIENT | .00000 | .00000 | .00000 | .00000 | .00000 | .00000 | .00000 | .00000 | .00000 | .00000 |

IA143, AEDC V41A-P8A, O/ET W/R.H. SRB SEPARATING (OVXC47) ( 23 MAY 77 )

REFERENCE DATA

SREF = 2690.0000 SQ.FT. XMRP = 1097.0000 IN. XT
LREF = 1290.3000 INCHES YMRP = .0000 IN. YT
BREF = 1290.3000 INCHES ZMRP = 450.0000 IN. ZT
SCALE = .0100

PARAMETRIC DATA

ALPHA = .000 BETA = 15.000
DALPHA = -10.000 DBETA = -8.000
X = 1200.000 MACH = 4.500
JET PC = .000

RUN NO. 4630/ 0 RN/L = 2.39 GRADIENT INTERVAL = -5.00/ 5.00

| Y | Z | X | ALPHA | BETA | PHI | CN | CLM | CY | CYN | CBL | CA |
|---|---|---|---|---|---|---|---|---|---|---|---|
| -200.840 | -49.456 | 1199.70000 | -.15438 | 15.31500 | .18754 | -.03655 | .01348 | -.51934 | .14936 | -.05846 | .21973 |
| -201.280 | .618 | 1199.60001 | -.15450 | 15.31500 | .19124 | -.03880 | .01550 | -.51840 | .14896 | -.05751 | .22048 |
| -200.480 | 100.820 | 1199.60001 | -.15435 | 15.31500 | .19109 | -.03869 | .01547 | -.51861 | .14907 | -.05755 | .22065 |
| -200.650 | 150.510 | 1199.50000 | -.15443 | 15.31500 | .19115 | -.03865 | .01546 | -.51853 | .14902 | -.05754 | .22069 |
| | GRADIENT | .00000 | .00000 | .00000 | .00000 | .00000 | .00000 | .00000 | .00000 | .00000 | .00000 |

RUN NO. 4631/ 0 RN/L = 2.40 GRADIENT INTERVAL = -5.00/ 5.00

| Y | Z | X | ALPHA | BETA | PHI | CN | CLM | CY | CYN | CBL | CA |
|---|---|---|---|---|---|---|---|---|---|---|---|
| -398.840 | 148.160 | 1198.80000 | -.15445 | 15.31500 | .19124 | -.03864 | .01545 | -.51862 | .14908 | -.05755 | .22069 |
| -401.340 | 100.370 | 1199.60001 | -.15445 | 15.31500 | .19117 | -.03867 | .01545 | -.51898 | .14918 | -.05761 | .22077 |
| -400.980 | .222 | 1199.39999 | -.15470 | 15.31500 | .19144 | -.03884 | .01546 | -.51881 | .14911 | -.05756 | .22059 |
| -401.020 | -49.717 | 1199.50000 | -.15459 | 15.31500 | .19147 | -.03869 | .01546 | -.51888 | .14915 | -.05756 | .22073 |
| | GRADIENT | .00000 | .00000 | .00000 | .00000 | .00000 | .00000 | .00000 | .00000 | .00000 | .00000 |

IA143, AEDC V41A-P8A, O/ET W/R.H. SRB SEPARATING (OVXC48) ( 23 MAY 77 )

REFERENCE DATA

SREF = 2690.0000 SQ.FT. XMRP = 1097.0000 IN. XT
LREF = 1290.3000 INCHES YMRP = .0000 IN. YT
BREF = 1290.3000 INCHES ZMRP = 450.0000 IN. ZT
SCALE = .0100

PARAMETRIC DATA

ALPHA = .000 BETA = 15.000
DALPHA = -20.000 DBETA = -12.000
X = 1200.000 MACH = 4.500
JET PC = .000

RUN NO. 4658/ 0 RN/L = 2.38 GRADIENT INTERVAL = -5.00/ 5.00

| Y | Z | X | ALPHA | BETA | PHI | CN | CLM | CY | CYN | CBL | CA |
|---|---|---|---|---|---|---|---|---|---|---|---|
| -201.350 | 300.660 | 1199.60001 | -.15423 | 15.31500 | .19128 | -.03816 | .01519 | -.51860 | .14894 | -.05749 | .22034 |
| -200.250 | 400.190 | 1199.30000 | -.15410 | 15.31500 | .19114 | -.03807 | .01517 | -.51862 | .14897 | -.05751 | .22037 |
| -200.160 | 499.920 | 1199.20000 | -.15421 | 15.31500 | .19126 | -.03809 | .01516 | -.51853 | .14894 | -.05749 | .22032 |
| | GRADIENT | .00000 | .00000 | .00000 | .00000 | .00000 | .00000 | .00000 | .00000 | .00000 | .00000 |

RUN NO. 4659/ 0 RN/L = 2.38 GRADIENT INTERVAL = -5.00/ 5.00

| Y | Z | X | ALPHA | BETA | PHI | CN | CLM | CY | CYN | CBL | CA |
|---|---|---|---|---|---|---|---|---|---|---|---|
| -400.550 | 498.790 | 1198.80000 | -.15427 | 15.31500 | .19137 | -.03814 | .01517 | -.51890 | .14904 | -.05752 | .22045 |
| -401.290 | 400.590 | 1199.70000 | -.15418 | 15.31500 | .19115 | -.03815 | .01516 | -.51861 | .14892 | -.05749 | .22030 |
| -401.570 | 300.590 | 1199.70000 | -.15422 | 15.31500 | .19120 | -.03817 | .01516 | -.51859 | .14893 | -.05750 | .22024 |
| | GRADIENT | .00000 | .00000 | .00000 | .00000 | .00000 | .00000 | .00000 | .00000 | .00000 | .00000 |

IA143, AEDC V41A-P8A, O/ET W/R.H. SRB SEPARATING (OVXC49) ( 23 MAY 77 )

REFERENCE DATA

SREF = 2690.0000 SQ.FT. XMRP = 1097.0000 IN. XT
LREF = 1290.3000 INCHES YMRP = .0000 IN. YT
BREF = 1290.3000 INCHES ZMRP = 450.0000 IN. ZT
SCALE = .0100

PARAMETRIC DATA

ALPHA = .000 BETA = 15.000
DALPHA = -15.000 DBETA = -4.000
X = 1200.000 MACH = 4.500
JET PC = .000

RUN NO. 4653/ 0 RN/L = 2.39 GRADIENT INTERVAL = -5.00/ 5.00

| Y | Z | X | ALPHA | BETA | PHI | CN | CLM | CY | CYN | CBL | CA |
|---|---|---|---|---|---|---|---|---|---|---|---|
| -201.270 | 400.510 | 1199.60001 | -.15431 | 15.31500 | .19121 | -.03829 | .01526 | -.51819 | .14884 | -.05746 | .22042 |
| -200.660 | 450.030 | 1199.50000 | -.15423 | 15.31500 | .19110 | -.03832 | .01525 | -.51850 | .14894 | -.05749 | .22052 |
| -200.840 | 500.060 | 1199.50000 | -.15425 | 15.31500 | .19114 | -.03835 | .01525 | -.51842 | .14892 | -.05749 | .22028 |
| | GRADIENT | .00000 | .00000 | .00000 | .00000 | .00000 | .00000 | .00000 | .00000 | .00000 | .00000 |

RUN NO. 4654/ 0 RN/L = 2.38 GRADIENT INTERVAL = -5.00/ 5.00

| Y | Z | X | ALPHA | BETA | PHI | CN | CLM | CY | CYN | CBL | CA |
|---|---|---|---|---|---|---|---|---|---|---|---|
| -300.760 | 499.400 | 1199.39999 | -.15429 | 15.31500 | .19124 | -.03825 | .01521 | -.51849 | .14893 | -.05749 | .22035 |
| -301.140 | 450.510 | 1199.60001 | -.15431 | 15.31500 | .19130 | -.03824 | .01523 | -.51843 | .14892 | -.05746 | .22052 |
| -301.150 | 400.570 | 1199.60001 | -.15420 | 15.31500 | .19119 | -.03821 | .01520 | -.51843 | .14892 | -.05747 | .22034 |
| | GRADIENT | .00000 | .00000 | .00000 | .00000 | .00000 | .00000 | .00000 | .00000 | .00000 | .00000 |

IA143, AEDC V41A-P8A, O/ET W/R.H. SRB SEPARATING (OVXC50) ( 23 MAY 77 )

REFERENCE DATA

SREF = 2690.0000 SQ.FT. XMRP = 1097.0000 IN. XT
LREF = 1290.3000 INCHES YMRP = .0000 IN. YT
BREF = 1290.3000 INCHES ZMRP = 450.0000 IN. ZT
SCALE = .0100

PARAMETRIC DATA

ALPHA = .000 BETA = 15.000
DALPHA = -20.000 DBETA = -4.000
X = 1200.000 MACH = 4.500
JET PC = .000

RUN NO. 4660/ 0 RN/L = 2.38 GRADIENT INTERVAL = -5.00/ 5.00

| Y | Z | X | ALPHA | BETA | PHI | CN | CLM | CY | CYN | CBL | CA |
|---|---|---|---|---|---|---|---|---|---|---|---|
| -200.540 | 400.590 | 1199.30000 | -.15412 | 15.31500 | .19111 | -.03812 | .01516 | -.51836 | .14886 | -.05746 | .22027 |
| -200.700 | 450.420 | 1199.39999 | -.15428 | 15.31500 | .19132 | -.03817 | .01516 | -.51887 | .14904 | -.05753 | .22036 |
| -200.700 | 500.300 | 1199.39999 | -.15423 | 15.31500 | .19126 | -.03811 | .01517 | -.51845 | .14893 | -.05749 | .22030 |
| | GRADIENT | .00000 | .00000 | .00000 | .00000 | .00000 | .00000 | .00000 | .00000 | .00000 | .00000 |

RUN NO. 4661/ 0 RN/L = 2.38 GRADIENT INTERVAL = -5.00/ 5.00

| Y | Z | X | ALPHA | BETA | PHI | CN | CLM | CY | CYN | CBL | CA |
|---|---|---|---|---|---|---|---|---|---|---|---|
| -300.740 | 499.200 | 1199.20000 | -.15431 | 15.31500 | .19126 | -.03823 | .01518 | -.51861 | .14895 | -.05750 | .22035 |
| -300.730 | 450.720 | 1199.70000 | -.15413 | 15.31500 | .19116 | -.03812 | .01517 | -.51850 | .14891 | -.05747 | .22037 |
| -301.280 | 400.590 | 1199.80000 | -.15422 | 15.31500 | .19118 | -.03824 | .01517 | -.51875 | .14898 | -.05751 | .22029 |
| | GRADIENT | .00000 | .00000 | .00000 | .00000 | .00000 | .00000 | .00000 | .00000 | .00000 | .00000 |

IA143, AEDC V41A-P8A, O/ET W/R.H. SRB SEPARATING (OVXC51) ( 23 MAY 77 )

REFERENCE DATA

SREF = 2690.0000 SQ.FT. XMRP = 1097.0000 IN. XT
LREF = 1290.3000 INCHES YMRP = .0000 IN. YT
BREF = 1290.3000 INCHES ZMRP = 450.0000 IN. ZT
SCALE = .0100

PARAMETRIC DATA

ALPHA = .000 BETA = 15.000
DALPHA = -15.000 DBETA = -8.000
X = 1200.000 MACH = 4.500
JET PC = .000

RUN NO. 4656/ 0 RN/L = 2.38 GRADIENT INTERVAL = -5.00/ 5.00

| Y | Z | X | ALPHA | BETA | PHI | CN | CLM | CY | CYN | CBL | CA |
|---|---|---|---|---|---|---|---|---|---|---|---|
| -200.830 | 400.340 | 1199.60001 | -.15426 | 15.31500 | .19120 | -.03826 | .01521 | -.51845 | .14892 | -.05746 | .22039 |
| -201.320 | 450.110 | 1199.70000 | -.15435 | 15.31500 | .19126 | -.03828 | .01519 | -.51838 | .14888 | -.05747 | .22027 |
| -200.590 | 500.150 | 1199.50000 | -.15420 | 15.31500 | .19120 | -.03914 | .01521 | -.51853 | .14892 | -.05748 | .22057 |
| | GRADIENT | .00000 | .00000 | .00000 | .00000 | .00000 | .00000 | .00000 | .00000 | .00000 | .00000 |

IA143, AEDC V41A-P8A, O/ET W/R.H. SRB SEPARATING (OVXC52) ( 23 MAY 77 )

REFERENCE DATA

SREF = 2690.0000 SQ.FT. XMRP = 1097.0000 IN. XT
LREF = 1290.3000 INCHES YMRP = .0000 IN. YT
BREF = 1290.3000 INCHES ZMRP = 450.0000 IN. ZT
SCALE = .0100

PARAMETRIC DATA

ALPHA = .000 BETA = 15.000
DALPHA = -20.000 DBETA = -8.000
X = 1200.000 MACH = 4.500
JET PC = .000

RUN NO. 4663/ 0 RN/L = 2.38 GRADIENT INTERVAL = -5.00/ 5.00

| Y | Z | X | ALPHA | BETA | PHI | CN | CLM | CY | CYN | CBL | CA |
|---|---|---|---|---|---|---|---|---|---|---|---|
| -200.960 | 501.790 | 1200.00000 | -.15421 | 15.31500 | .19121 | -.03810 | .01517 | -.51866 | .14894 | -.05750 | .22046 |
| -201.310 | 450.740 | 1199.70000 | -.15419 | 15.31500 | .19118 | -.03815 | .01516 | -.51831 | .14883 | -.05745 | .22024 |
| -201.910 | 400.790 | 1199.80000 | -.15409 | 15.31500 | .19102 | -.03815 | .01512 | -.51839 | .14885 | -.05748 | .22005 |
| | GRADIENT | .00000 | .00000 | .00000 | .00000 | .00000 | .00000 | .00000 | .00000 | .00000 | .00000 |

RUN NO. 4662/ 0 RN/L = 2.38 GRADIENT INTERVAL = -5.00/ 5.00

| Y | Z | X | ALPHA | BETA | PHI | CN | CLM | CY | CYN | CBL | CA |
|---|---|---|---|---|---|---|---|---|---|---|---|
| -303.070 | 401.060 | 1199.80000 | -.15416 | 15.31500 | .19112 | -.03815 | .01518 | -.51822 | .14883 | -.05746 | .22023 |
| -300.800 | 450.480 | 1199.60001 | -.15410 | 15.31500 | .19103 | -.03814 | .01516 | -.51817 | .14882 | -.05745 | .22021 |
| -301.810 | 500.410 | 1199.80000 | -.15421 | 15.31500 | .19123 | -.03810 | .01516 | -.51850 | .14891 | -.05748 | .22034 |
| | GRADIENT | .00000 | .00000 | .00000 | .00000 | .00000 | .00000 | .00000 | .00000 | .00000 | .00000 |

IA143, AEDC V41A-P8A, O/ET W/R.H. SRB SEPARATING (OVXC53) ( 23 MAY 77 )

REFERENCE DATA

SREF = 2690.0000 SQ.FT. XMRP = 1097.0000 IN. XT
LREF = 1290.3000 INCHES YMRP = .0000 IN. YT
BREF = 1290.3000 INCHES ZMRP = 450.0000 IN. ZT
SCALE = .0100

PARAMETRIC DATA

ALPHA = .000 BETA = 15.000
DALPHA = -15.000 DBETA = -8.000
X = 1200.000 MACH = 4.500
JET PC = .000

RUN NO. 4655/ 0 RN/L = 2.38 GRADIENT INTERVAL = -5.00/ 5.00

| Y | Z | X | ALPHA | BETA | PHI | CN | CLM | CY | CYN | CBL | CA |
|---|---|---|---|---|---|---|---|---|---|---|---|
| -300.800 | 300.430 | 1199.50000 | -.15425 | 15.31500 | .19115 | -.03826 | .01521 | -.51833 | .14889 | -.05747 | .22032 |
| -300.840 | 400.140 | 1199.50000 | -.15421 | 15.31500 | .19115 | -.03823 | .01519 | -.51845 | .14893 | -.05749 | .22030 |
| -301.200 | 450.220 | 1199.60001 | -.15435 | 15.31500 | .19132 | -.03824 | .01521 | -.51868 | .14901 | -.05753 | .22038 |
| -300.990 | 500.250 | 1199.60001 | -.15427 | 15.31500 | .19123 | -.03821 | .01519 | -.51859 | .14898 | -.05751 | .22031 |
| | GRADIENT | .00000 | .00000 | .00000 | .00000 | .00000 | .00000 | .00000 | .00000 | .00000 | .00000 |

IA143, AEDC V41A-P8A, O/ET W/R.H. SRB SEPARATING (OVXC54) ( 23 MAY 77 )

REFERENCE DATA

SREF = 2690.0000 SQ.FT. XMRP = 1097.0000 IN. XT
LREF = 1290.3000 INCHES YMRP = .0000 IN. YT
BREF = 1290.3000 INCHES ZMRP = 450.0000 IN. ZT
SCALE = .0100

PARAMETRIC DATA

ALPHA = .000 BETA = 15.000
DALPHA = -18.000 DBETA = -8.000
X = 1200.000 MACH = 4.500
JET PC = .000

RUN NO. 4657/ 0 RN/L = 2.38 GRADIENT INTERVAL = -5.00/ 5.00

| Y | Z | X | ALPHA | BETA | PHI | CN | CLM | CY | CYN | CBL | CA |
|---|---|---|---|---|---|---|---|---|---|---|---|
| -301.480 | 400.490 | 1199.70000 | -.15427 | 15.31500 | .19126 | -.03817 | .01517 | -.51880 | .14903 | -.05755 | .22026 |
| -300.520 | 599.770 | 1199.30000 | -.15440 | 15.31500 | .19133 | -.03822 | .01513 | -.51811 | .14880 | -.05744 | .22002 |
| -300.020 | 799.510 | 1199.10001 | -.15414 | 15.31500 | .19105 | -.03821 | .01517 | -.51856 | .14892 | -.05750 | .22028 |
| -301.020 | 999.680 | 1199.39999 | -.15419 | 15.31500 | .19115 | -.03819 | .01516 | -.51865 | .14898 | -.05751 | .22025 |
| | GRADIENT | .00000 | .00000 | .00000 | .00000 | .00000 | .00000 | .00000 | .00000 | .00000 | .00000 |

IA143, AEDC V41A-P8A, O/ET W/R.H. SRB SEPARATING (OVXC55) ( 23 MAY 77 )

REFERENCE DATA

SREF = 2690.0000 SQ.FT. XMRP = 1097.0000 IN. XT
LREF = 1290.3000 INCHES YMRP = .0000 IN. YT
BREF = 1290.3000 INCHES ZMRP = 450.0000 IN. ZT
SCALE = .0100

PARAMETRIC DATA

ALPHA = .000 BETA = -15.000
DALPHA = .000 DBETA = .000
X = .000 MACH = 4.500
JET PC = .000

RUN NO. 4681/ 0 RN/L = 2.39 GRADIENT INTERVAL = -5.00/ 5.00

| Y | Z | X | ALPHA | BETA | PHI | CN | CLM | CY | CYN | CBL | CA |
|---|---|---|---|---|---|---|---|---|---|---|---|
| -50.809 | .198 | -.33979 | -.15672 | -15.27900 | -.16896 | -.04227 | .01359 | .48931 | -.14855 | .05810 | .22413 |
| -50.211 | 24.911 | -.30444 | -.15452 | -15.28000 | -.16874 | -.03938 | .01323 | .49009 | -.14893 | .05835 | .22421 |
| -50.564 | 99.732 | -.26506 | -.15123 | -15.28300 | -.17170 | -.03274 | .01168 | .49243 | -.14871 | .05803 | .22421 |
| -51.232 | 149.690 | -.31276 | -.15138 | -15.28600 | -.17535 | -.02869 | .00969 | .49400 | -.14806 | .05739 | .22384 |
| -52.772 | 250.440 | -.30651 | -.15401 | -15.29200 | -.18223 | -.02111 | .00474 | .49511 | -.14632 | .05585 | .22349 |
| -51.340 | 350.710 | -.14160 | -.16067 | -15.30200 | -.18888 | -.02802 | .00581 | .50552 | -.14757 | .05616 | .22273 |
| -50.101 | 474.790 | -.25996 | -.16158 | -15.31200 | -.19247 | -.04252 | .01446 | .52226 | -.15244 | .05857 | .22333 |
| -50.275 | 499.810 | -.25263 | -.16152 | -15.31200 | -.19341 | -.04393 | .01552 | .52430 | -.15360 | .05883 | .22366 |
| -49.907 | 599.530 | -.20477 | -.16208 | -15.31100 | -.19499 | -.04460 | .01604 | .52589 | -.15470 | .05892 | .22447 |
| | GRADIENT | .00000 | .00000 | .00000 | .00000 | .00000 | .00000 | .00000 | .00000 | .00000 | .00000 |

RUN NO. 4682/ 0 RN/L = 2.40 GRADIENT INTERVAL = -5.00/ 5.00

| Y | Z | X | ALPHA | BETA | PHI | CN | CLM | CY | CYN | CBL | CA |
|---|---|---|---|---|---|---|---|---|---|---|---|
| -150.610 | 599.550 | -.29184 | -.16205 | -15.31100 | -.19491 | -.04462 | .01606 | .52588 | -.15468 | .05892 | .22456 |
| -150.430 | 499.810 | -.22103 | -.16199 | -15.31100 | -.19497 | -.04459 | .01602 | .52558 | -.15459 | .05887 | .22421 |
| -150.450 | 474.750 | -.19047 | -.16186 | -15.31100 | -.19492 | -.04449 | .01597 | .52562 | -.15454 | .05886 | .22399 |
| -150.490 | 349.720 | -.26042 | -.16201 | -15.31200 | -.19135 | -.03955 | .01235 | .51715 | -.14975 | .05766 | .22348 |
| -150.340 | 249.670 | -.29010 | -.15944 | -15.30300 | -.18379 | -.03045 | .00725 | .50204 | -.14493 | .05631 | .22326 |
| -149.620 | 149.720 | -.30120 | -.15723 | -15.29500 | -.17404 | -.03308 | .00867 | .49235 | -.14334 | .05671 | .22355 |
| -149.930 | 100.020 | -.32198 | -.15541 | -15.29100 | -.17049 | -.03383 | .00955 | .49003 | -.14359 | .05713 | .22351 |
| -150.070 | 25.146 | -.27601 | -.15523 | -15.29000 | -.16799 | -.03421 | .00956 | .48765 | -.14285 | .05718 | .22392 |
| -150.080 | .046 | -.07818 | -.15604 | -15.29000 | -.16935 | -.03365 | .00892 | .48687 | -.14240 | .05674 | .22354 |
| | GRADIENT | .00000 | .00000 | .00000 | .00000 | .00000 | .00000 | .00000 | .00000 | .00000 | .00000 |

IA143, AEDC V41A-P8A, O/ET W/R.H. SRB SEPARATING (OVXC56) ( 23 MAY 77 )

REFERENCE DATA

SREF = 2690.0000 SQ.FT. XMRP = 1097.0000 IN. XT
LREF = 1290.3000 INCHES YMRP = .0000 IN. YT
BREF = 1290.3000 INCHES ZMRP = 450.0000 IN. ZT
SCALE = .0100

PARAMETRIC DATA

ALPHA = .000 BETA = -15.000
DALPHA = .000 DBETA = .000
X = .000 MACH = 4.500
JET PC = .000

RUN NO. 4683/ 0 RN/L = 2.39 GRADIENT INTERVAL = -5.00/ 5.00

| Y | Z | X | ALPHA | BETA | PHI | CN | CLM | CY | CYN | CBL | CA |
|---|---|---|---|---|---|---|---|---|---|---|---|
| -50.569 | -.006 | -.36000 | -.15684 | -15.28000 | -.16909 | -.04210 | .01354 | .49040 | -.14900 | .05831 | .22442 |
| -49.981 | 24.900 | -.20728 | -.15449 | -15.28000 | -.16868 | -.03924 | .01320 | .49051 | -.14917 | .05846 | .22445 |
| -50.576 | 99.604 | -.27252 | -.15118 | -15.28300 | -.17162 | -.03252 | .01158 | .49259 | -.14887 | .05809 | .22427 |
| -51.185 | 149.780 | -.26889 | -.15119 | -15.28600 | -.17516 | -.02837 | .00963 | .49425 | -.14820 | .05748 | .22408 |
| -52.789 | 250.400 | -.27672 | -.15398 | -15.29200 | -.18193 | -.02157 | .00496 | .49545 | -.14648 | .05599 | .22344 |
| -51.460 | 350.700 | -.17231 | -.16064 | -15.30200 | -.18876 | -.02792 | .00574 | .50578 | -.14768 | .05625 | .22256 |
| -50.044 | 474.760 | -.24398 | -.16159 | -15.31200 | -.19241 | -.04240 | .01441 | .52281 | -.15265 | .05868 | .22355 |
| -50.291 | 499.760 | -.24696 | -.16151 | -15.31200 | -.19339 | -.04382 | .01548 | .52495 | -.15388 | .05896 | .22382 |
| -50.090 | 599.500 | -.42327 | -.16200 | -15.31100 | -.19491 | -.04443 | .01598 | .52617 | -.15486 | .05898 | .22463 |
| | GRADIENT | .00000 | .00000 | .00000 | .00000 | .00000 | .00000 | .00000 | .00000 | .00000 | .00000 |

RUN NO. 4684/ 0 RN/L = 2.39 GRADIENT INTERVAL = -5.00/ 5.00

| Y | Z | X | ALPHA | BETA | PHI | CN | CLM | CY | CYN | CBL | CA |
|---|---|---|---|---|---|---|---|---|---|---|---|
| -150.280 | 599.530 | -.19297 | -.16196 | -15.31100 | -.19487 | -.04434 | .01595 | .52606 | -.15483 | .05898 | .22458 |
| -150.720 | 499.780 | -.33480 | -.16193 | -15.31100 | -.19485 | -.04449 | .01601 | .52624 | -.15484 | .05901 | .22440 |
| -150.220 | 474.720 | -.15601 | -.16185 | -15.31200 | -.19494 | -.04431 | .01592 | .52604 | -.15477 | .05897 | .22406 |
| -150.450 | 349.770 | -.20735 | -.16192 | -15.31100 | -.19120 | -.03906 | .01207 | .51718 | -.14980 | .05769 | .22349 |
| -150.010 | 249.620 | -.33661 | -.15930 | -15.30300 | -.18346 | -.03035 | .00722 | .50186 | -.14511 | .05637 | .22320 |
| -149.500 | 149.720 | -.33643 | -.15701 | -15.29500 | -.17379 | -.03287 | .00866 | .49222 | -.14354 | .05679 | .22357 |
| -149.930 | 99.928 | -.24354 | -.15521 | -15.29100 | -.17022 | -.03368 | .00955 | .49054 | -.14393 | .05730 | .22373 |
| -149.910 | 25.208 | -.23596 | -.15507 | -15.28900 | -.16775 | -.03409 | .00949 | .48765 | -.14310 | .05727 | .22371 |
| -150.510 | .065 | -.30872 | -.15602 | -15.29000 | -.16921 | -.03372 | .00899 | .48738 | -.14282 | .05690 | .22369 |
| | GRADIENT | .00000 | .00000 | .00000 | .00000 | .00000 | .00000 | .00000 | .00000 | .00000 | .00000 |

IA143, AEDC V41A-P8A, O/ET W/R.H. SRB SEPARATING (OVXC57) ( 23 MAY 77 )

REFERENCE DATA

SREF = 2690.0000 SQ.FT. XMRP = 1097.0000 IN. XT
LREF = 1290.3000 INCHES YMRP = .0000 IN. YT
BREF = 1290.3000 INCHES ZMRP = 450.0000 IN. ZT
SCALE = .0100

PARAMETRIC DATA

ALPHA = .000 BETA = -15.000
DALPHA = -5.000 DBETA = .000
X = .000 MACH = 4.500
JET PC = .000

RUN NO. 4697/ 0 RN/L = 2.40 GRADIENT INTERVAL = -5.00/ 5.00

| Y | Z | X | ALPHA | BETA | PHI | CN | CLM | CY | CYN | CBL | CA |
|---|---|---|---|---|---|---|---|---|---|---|---|
| -50.602 | 25.218 | -.34492 | -.16405 | -15.28000 | -.18084 | -.03331 | .00595 | .48615 | -.14655 | .05490 | .22382 |
| -50.400 | 99.737 | -.26025 | -.15367 | -15.27900 | -.17206 | -.03275 | .01025 | .48635 | -.14696 | .05681 | .22395 |
| -50.784 | 150.030 | -.26024 | -.15052 | -15.28200 | -.17154 | -.02671 | .00842 | .48716 | -.14598 | .05684 | .22407 |
| -52.055 | 250.350 | -.19475 | -.15099 | -15.28800 | -.17723 | -.01561 | .00251 | .48792 | -.14391 | .05546 | .22382 |
| -51.849 | 350.930 | -.15349 | -.15853 | -15.29700 | -.18445 | -.01970 | .00137 | .49616 | -.14422 | .05518 | .22248 |
| -50.597 | 475.360 | -.12693 | -.16107 | -15.31100 | -.19024 | -.03693 | .01104 | .51657 | -.14956 | .05773 | .22317 |
| -50.490 | 499.930 | -.31184 | -.16118 | -15.31200 | -.19081 | -.03944 | .01253 | .51889 | -.15061 | .05812 | .22299 |
| -50.314 | 599.860 | -.28698 | -.16157 | -15.31100 | -.19488 | -.04372 | .01565 | .52510 | -.15433 | .05875 | .22400 |
| | GRADIENT | .00000 | .00000 | .00000 | .00000 | .00000 | .00000 | .00000 | .00000 | .00000 | .00000 |

RUN NO. 4698/ 0 RN/L = 2.40 GRADIENT INTERVAL = -5.00/ 5.00

| Y | Z | X | ALPHA | BETA | PHI | CN | CLM | CY | CYN | CBL | CA |
|---|---|---|---|---|---|---|---|---|---|---|---|
| -150.260 | 599.640 | -.36339 | -.16181 | -15.31100 | -.19492 | -.04382 | .01573 | .52547 | -.15449 | .05882 | .22469 |
| -150.400 | 499.850 | -.30385 | -.16146 | -15.31100 | -.19412 | -.04331 | .01523 | .52411 | -.15367 | .05868 | .22326 |
| -150.350 | 474.930 | -.23473 | -.16150 | -15.31200 | -.19315 | -.04214 | .01433 | .52204 | -.15238 | .05840 | .22299 |
| -149.970 | 349.680 | -.30448 | -.16118 | -15.31000 | -.18928 | -.03211 | .00796 | .51071 | -.14699 | .05672 | .22270 |
| -150.370 | 249.690 | -.47438 | -.15869 | -15.30000 | -.17932 | -.02778 | .00540 | .49435 | -.14224 | .05573 | .22303 |
| -149.740 | 149.840 | -.41798 | -.15656 | -15.29200 | -.17206 | -.02946 | .00643 | .48654 | -.14153 | .05601 | .22268 |
| -150.120 | 100.160 | -.40233 | -.15728 | -15.29000 | -.17264 | -.02815 | .00539 | .48455 | -.14133 | .05556 | .22303 |
| -150.280 | 25.623 | -.33073 | -.16272 | -15.29100 | -.18175 | -.02100 | -.00030 | .48116 | -.13890 | .05282 | .22403 |
| | GRADIENT | .00000 | .00000 | .00000 | .00000 | .00000 | .00000 | .00000 | .00000 | .00000 | .00000 |

IA143, AEDC V41A-P8A, O/ET W/R.H. SRB SEPARATING (OVXC58) ( 23 MAY 77 )

REFERENCE DATA

SREF = 2690.0000 SQ.FT. XMRP = 1097.0000 IN. XT
LREF = 1290.3000 INCHES YMRP = .0000 IN. YT
BREF = 1290.3000 INCHES ZMRP = 450.0000 IN. ZT
SCALE = .0100

PARAMETRIC DATA

ALPHA = .000 BETA = -15.000
DALPHA = .000 DBETA = -4.000
X = .000 MACH = 4.500
JET PC = .000

RUN NO. 4686/ 0 RN/L = 2.39 GRADIENT INTERVAL = -5.00/ 5.00

| Y | Z | X | ALPHA | BETA | PHI | CN | CLM | CY | CYN | CBL | CA |
|---|---|---|---|---|---|---|---|---|---|---|---|
| -48.129 | 247.470 | 2.49250 | -.14674 | -15.28700 | -.17346 | -.00721 | -.00055 | .48812 | -.14469 | .05641 | .22361 |
| -52.157 | 350.770 | -.13570 | -.15836 | -15.29800 | -.18508 | -.01776 | .00045 | .49881 | -.14532 | .05563 | .22233 |
| -50.786 | 474.890 | -.27191 | -.16130 | -15.31200 | -.19052 | -.03954 | .01259 | .51932 | -.15082 | .05835 | .22308 |
| -50.651 | 499.740 | -.27437 | -.16123 | -15.31200 | -.19161 | -.04153 | .01391 | .52186 | -.15214 | .05863 | .22326 |
| -50.678 | 599.500 | -.39295 | -.16196 | -15.31100 | -.19491 | -.04445 | .01601 | .52608 | -.15482 | .05897 | .22460 |
| | GRADIENT | .00000 | .00000 | .00000 | .00000 | .00000 | .00000 | .00000 | .00000 | .00000 | .00000 |

IA143, AEDC V41A-P8A, O/ET W/R.H. SRB SEPARATING (OVXC59) ( 23 MAY 77 )

REFERENCE DATA

SREF = 2690.0000 SQ.FT. XMRP = 1097.0000 IN. XT
LREF = 1290.3000 INCHES YMRP = .0000 IN. YT
BREF = 1290.3000 INCHES ZMRP = 450.0000 IN. ZT
SCALE = .0100

PARAMETRIC DATA

ALPHA = .000 BETA = -15.000
DALPHA = -5.000 DBETA = -4.000
X = .000 MACH = 4.500
JET PC = .000

RUN NO. 4696/ 0 RN/L = 2.40 GRADIENT INTERVAL = -5.00/ 5.00

| Y | Z | X | ALPHA | BETA | PHI | CN | CLM | CY | CYN | CBL | CA |
|---|---|---|---|---|---|---|---|---|---|---|---|
| -49.114 | 475.130 | 2.62340 | -.15931 | -15.30900 | -.18675 | -.02850 | .00619 | .51039 | -.14679 | .05715 | .22132 |
| -50.417 | 499.950 | -.21338 | -.15990 | -15.31100 | -.18732 | -.03339 | .00894 | .51363 | -.14790 | .05767 | .22197 |
| -50.522 | 599.870 | -.45083 | -.16135 | -15.31100 | -.19493 | -.04349 | .01545 | .52538 | -.15433 | .05878 | .22305 |
| | GRADIENT | .00000 | .00000 | .00000 | .00000 | .00000 | .00000 | .00000 | .00000 | .00000 | .00000 |

IA143, AEDC V41A-P8A, O/ET W/R.H. SRB SEPARATING (OVXC60) ( 23 MAY 77 )

REFERENCE DATA

SREF = 2690.0000 SQ.FT. XMRP = 1097.0000 IN. XT
LREF = 1290.3000 INCHES YMRP = .0000 IN. YT
BREF = 1290.3000 INCHES ZMRP = 450.0000 IN. ZT
SCALE = .0100

PARAMETRIC DATA

ALPHA = .000 BETA = -15.000
DALPHA = .000 DBETA = -4.000
X = .000 MACH = 4.500
JET PC = .000

RUN NO. 4685/ 0 RN/L = 2.39 GRADIENT INTERVAL = -5.00/ 5.00

| Y | Z | X | ALPHA | BETA | PHI | CN | CLM | CY | CYN | CBL | CA |
|---|---|---|---|---|---|---|---|---|---|---|---|
| -146.150 | -2.127 | 2.25090 | -.15297 | -15.28100 | -.15860 | -.02938 | .00650 | .47341 | -.13916 | .05654 | .22335 |
| -150.950 | 24.851 | -.31363 | -.15150 | -15.28100 | -.15685 | -.02797 | .00618 | .47371 | -.13919 | .05693 | .22324 |
| -150.840 | 99.567 | -.17490 | -.15140 | -15.28400 | -.15909 | -.02442 | .00458 | .47563 | -.13874 | .05668 | .22352 |
| -150.970 | 149.770 | -.22833 | -.15255 | -15.28800 | -.16310 | -.02439 | .00441 | .47898 | -.13886 | .05634 | .22304 |
| -151.850 | 250.340 | -.05269 | -.15769 | -15.29800 | -.17617 | -.02507 | .00372 | .49114 | -.14098 | .05569 | .22240 |
| -151.060 | 350.300 | -.20277 | -.16099 | -15.31000 | -.18870 | -.03066 | .00705 | .51139 | -.14731 | .05700 | .22226 |
| -150.610 | 474.940 | -.36058 | -.16144 | -15.31200 | -.19341 | -.04363 | .01530 | .52450 | -.15365 | .05887 | .22324 |
| -150.290 | 499.840 | -.15653 | -.16158 | -15.31100 | -.19470 | -.04422 | .01580 | .52606 | -.15471 | .05896 | .22359 |
| -150.050 | 599.690 | -.26049 | -.16193 | -15.31100 | -.19485 | -.04439 | .01603 | .52627 | -.15491 | .05900 | .22489 |
| | GRADIENT | .00000 | .00000 | .00000 | .00000 | .00000 | .00000 | .00000 | .00000 | .00000 | .00000 |

IA143, AEDC V41A-P8A, O/ET W/R.H. SRB SEPARATING (OVXC61) ( 23 MAY 77 )

REFERENCE DATA

SREF = 2690.0000 SQ.FT. XMRP = 1097.0000 IN. XT
LREF = 1290.3000 INCHES YMRP = .0000 IN. YT
BREF = 1290.3000 INCHES ZMRP = 450.0000 IN. ZT
SCALE = .0100

PARAMETRIC DATA

ALPHA = .000 BETA = -15.000
DALPHA = -5.000 DBETA = -4.000
X = .000 MACH = 4.500
JET PC = .000

RUN NO. 4695/ 0 RN/L = 2.40 GRADIENT INTERVAL = -5.00/ 5.00

| Y | Z | X | ALPHA | BETA | PHI | CN | CLM | CY | CYN | CBL | CA |
|---|---|---|---|---|---|---|---|---|---|---|---|
| -146.190 | 24.491 | 2.10880 | -.15941 | -15.28100 | -.16888 | -.01653 | -.00327 | .46688 | -.13504 | .05281 | .22305 |
| -151.050 | 99.666 | -.23993 | -.15292 | -15.28200 | -.16008 | -.02012 | .00106 | .46814 | -.13565 | .05493 | .22214 |
| -150.590 | 149.920 | -.15037 | -.15176 | -15.28500 | -.15949 | -.02005 | .00157 | .47014 | -.13526 | .05528 | .22205 |
| -151.290 | 249.970 | -.05278 | -.15526 | -15.29400 | -.16927 | -.01984 | .00084 | .48080 | -.13717 | .05507 | .22161 |
| -151.470 | 350.460 | -.12932 | -.15833 | -15.30500 | -.18220 | -.02191 | .00202 | .49819 | -.14196 | .05562 | .22035 |
| -150.930 | 475.430 | -.03800 | -.16138 | -15.31200 | -.19075 | -.03903 | .01199 | .51746 | -.14977 | .05782 | .22208 |
| -150.420 | 500.060 | -.26111 | -.16128 | -15.31200 | -.19175 | -.04053 | .01308 | .51993 | -.15103 | .05813 | .22229 |
| -150.190 | 600.070 | -.12692 | -.16169 | -15.31100 | -.19491 | -.04382 | .01569 | .52508 | -.15433 | .05877 | .22396 |
| | GRADIENT | .00000 | .00000 | .00000 | .00000 | .00000 | .00000 | .00000 | .00000 | .00000 | .00000 |

IA143, AEDC V41A-P8A, O/ET W/R.H. SRB SEPARATING (OVXC62) ( 23 MAY 77 )

REFERENCE DATA

SREF = 2690.0000 SQ.FT. XMRP = 1097.0000 IN. XT
LREF = 1290.3000 INCHES YMRP = .0000 IN. YT
BREF = 1290.3000 INCHES ZMRP = 450.0000 IN. ZT
SCALE = .0100

PARAMETRIC DATA

ALPHA = .000 BETA = -15.000
DALPHA = .000 DBETA = .000
X = 300.000 MACH = 4.500
JET PC = .000

RUN NO. 4687/ 0 RN/L = 2.39 GRADIENT INTERVAL = -5.00/ 5.00

| Y | Z | X | ALPHA | BETA | PHI | CN | CLM | CY | CYN | CBL | CA |
|---|---|---|---|---|---|---|---|---|---|---|---|
| -50.502 | 100.040 | 299.69000 | -.15599 | -15.29700 | -.17768 | -.03779 | .01281 | .50369 | -.14880 | .05839 | .22430 |
| -52.360 | 249.620 | 299.60000 | -.15958 | -15.30400 | -.18806 | -.03571 | .01097 | .51140 | -.14975 | .05750 | .22356 |
| -51.214 | 300.070 | 299.57000 | -.15942 | -15.30600 | -.18942 | -.03504 | .01083 | .51402 | -.15043 | .05769 | .22331 |
| -52.057 | 400.570 | 299.55000 | -.16135 | -15.31100 | -.19116 | -.03841 | .01208 | .51861 | -.15078 | .05805 | .22382 |
| -50.974 | 425.040 | 299.58000 | -.16142 | -15.31100 | -.19117 | -.03984 | .01286 | .51962 | -.15117 | .05823 | .22383 |
| -50.881 | 500.530 | 299.66000 | -.16149 | -15.31200 | -.19366 | -.04399 | .01558 | .52500 | -.15404 | .05894 | .22358 |
| -50.486 | 599.620 | 299.61000 | -.16186 | -15.31100 | -.19485 | -.04432 | .01595 | .52588 | -.15477 | .05893 | .22455 |
| | GRADIENT | .00000 | .00000 | .00000 | .00000 | .00000 | .00000 | .00000 | .00000 | .00000 | .00000 |

RUN NO. 4688/ 0 RN/L = 2.38 GRADIENT INTERVAL = -5.00/ 5.00

| Y | Z | X | ALPHA | BETA | PHI | CN | CLM | CY | CYN | CBL | CA |
|---|---|---|---|---|---|---|---|---|---|---|---|
| -200.350 | 599.340 | 299.59000 | -.16196 | -15.31100 | -.19489 | -.04437 | .01595 | .52620 | -.15487 | .05898 | .22462 |
| -200.480 | 499.710 | 299.56000 | -.16183 | -15.31100 | -.19484 | -.04431 | .01597 | .52609 | -.15485 | .05896 | .22468 |
| -200.300 | 424.570 | 299.56000 | -.16165 | -15.31100 | -.19467 | -.04411 | .01582 | .52570 | -.15461 | .05892 | .22400 |
| -200.390 | 399.750 | 299.52000 | -.16160 | -15.31200 | -.19361 | -.04361 | .01530 | .52441 | -.15366 | .05880 | .22363 |
| -199.080 | 299.240 | 299.49000 | -.16166 | -15.31200 | -.19130 | -.04181 | .01391 | .51927 | -.15086 | .05813 | .22384 |
| -199.340 | 249.660 | 299.64000 | -.16177 | -15.31200 | -.19083 | -.04048 | .01304 | .51764 | -.14995 | .05784 | .22407 |
| -198.520 | 100.360 | 299.80000 | -.16013 | -15.31000 | -.18650 | -.03798 | .01174 | .51276 | -.14768 | .05769 | .22354 |
| | GRADIENT | .00000 | .00000 | .00000 | .00000 | .00000 | .00000 | .00000 | .00000 | .00000 | .00000 |

IA143, AEDC V41A-P8A, O/ET W/R.H. SRB SEPARATING (OVXC63) ( 23 MAY 77 )

REFERENCE DATA

SREF = 2690.0000 SQ.FT. XMRP = 1097.0000 IN. XT
LREF = 1290.3000 INCHES YMRP = .0000 IN. YT
BREF = 1290.3000 INCHES ZMRP = 450.0000 IN. ZT
SCALE = .0100

PARAMETRIC DATA

ALPHA = .000 BETA = -15.000
DALPHA = -10.000 DBETA = .000
X = 300.000 MACH = 4.500
JET PC = .000

RUN NO. 4721/ 0 RN/L = 2.40 GRADIENT INTERVAL = -5.00/ 5.00

| Y | Z | X | ALPHA | BETA | PHI | CN | CLM | CY | CYN | CBL | CA |
|---|---|---|---|---|---|---|---|---|---|---|---|
| -50.349 | 100.320 | 299.53000 | -.16224 | -15.29500 | -.18718 | -.03130 | .00666 | .49864 | -.14655 | .05535 | .22338 |
| -51.596 | 250.090 | 299.52000 | -.15861 | -15.30000 | -.18221 | -.02901 | .00659 | .49785 | -.14429 | .05595 | .22288 |
| -51.698 | 300.200 | 299.39000 | -.15965 | -15.30300 | -.18593 | -.02728 | .00551 | .50227 | -.14546 | .05600 | .22256 |
| -52.257 | 401.000 | 299.78000 | -.16048 | -15.30900 | -.18839 | -.02776 | .00553 | .50965 | -.14669 | .05670 | .22212 |
| -51.169 | 425.590 | 299.66000 | -.16070 | -15.31000 | -.18922 | -.03067 | .00723 | .51213 | -.14764 | .05702 | .22216 |
| -51.565 | 501.150 | 299.71000 | -.16122 | -15.31200 | -.19057 | -.03849 | .01183 | .51763 | -.14992 | .05791 | .22246 |
| -50.360 | 600.580 | 299.77000 | -.16153 | -15.31100 | -.19498 | -.04383 | .01560 | .52502 | -.15427 | .05871 | .22327 |
| | GRADIENT | .00000 | .00000 | .00000 | .00000 | .00000 | .00000 | .00000 | .00000 | .00000 | .00000 |

IA143, AEDC V41A-P8A, O/ET W/R.H. SRB SEPARATING (OVXC64) ( 23 MAY 77 )

REFERENCE DATA

SREF = 2690.0000 SQ.FT. XMRP = 1097.0000 IN. XT
LREF = 1290.3000 INCHES YMRP = .0000 IN. YT
BREF = 1290.3000 INCHES ZMRP = 450.0000 IN. ZT
SCALE = .0100

PARAMETRIC DATA

ALPHA = .000 BETA = -15.000
DALPHA = -10.000 DBETA = .000
X = 300.000 MACH = 4.500
JET PC = .000

RUN NO. 4719/ 0 RN/L = 2.40 GRADIENT INTERVAL = -5.00/ 5.00

| Y | Z | X | ALPHA | BETA | PHI | CN | CLM | CY | CYN | CBL | CA |
|---|---|---|---|---|---|---|---|---|---|---|---|
| -199.650 | 100.420 | 299.73000 | -.16555 | -15.31100 | -.19496 | -.02478 | .00211 | .50199 | -.14152 | .05345 | .22312 |
| -199.880 | 150.030 | 299.50000 | -.16241 | -15.31000 | -.18931 | -.03112 | .00673 | .50544 | -.14355 | .05541 | .22305 |
| -200.390 | 200.190 | 299.55000 | -.16162 | -15.31100 | -.18818 | -.03386 | .00854 | .50848 | -.14520 | .05634 | .22264 |
| -200.540 | 250.340 | 299.66000 | -.16156 | -15.31100 | -.18900 | -.03566 | .00977 | .51158 | -.14677 | .05686 | .22286 |
| -201.000 | 300.250 | 299.51000 | -.16154 | -15.31100 | -.18973 | -.03788 | .01120 | .51395 | -.14793 | .05722 | .22284 |
| -201.660 | 400.710 | 299.53000 | -.16186 | -15.31200 | -.19193 | -.04085 | .01315 | .51840 | -.15041 | .05782 | .22282 |
| -200.670 | 425.290 | 299.55000 | -.16170 | -15.31200 | -.19268 | -.04135 | .01358 | .52041 | -.15138 | .05806 | .22285 |
| -200.620 | 500.520 | 299.79000 | -.16150 | -15.31100 | -.19494 | -.04364 | .01552 | .52493 | -.15427 | .05870 | .22339 |
| -200.770 | 600.440 | 299.60000 | -.16193 | -15.31100 | -.19515 | -.04390 | .01571 | .52524 | -.15446 | .05875 | .22441 |
| | GRADIENT | .00000 | .00000 | .00000 | .00000 | .00000 | .00000 | .00000 | .00000 | .00000 | .00000 |

IA143, AEDC V41A-P8A, O/ET W/R.H. SRB SEPARATING (OVXC65) ( 23 MAY 77 )

REFERENCE DATA

SREF = 2690.0000 SQ.FT. XMRP = 1097.0000 IN. XT
LREF = 1290.3000 INCHES YMRP = .0000 IN. YT
BREF = 1290.3000 INCHES ZMRP = 450.0000 IN. ZT
SCALE = .0100

PARAMETRIC DATA

ALPHA = .000 BETA = -15.000
DALPHA = .000 DBETA = -8.000
X = 300.000 MACH = 4.500
JET PC = .000

RUN NO. 4690/ 0 RN/L = 2.39 GRADIENT INTERVAL = -5.00/ 5.00

| Y | Z | X | ALPHA | BETA | PHI | CN | CLM | CY | CYN | CBL | CA |
|---|---|---|---|---|---|---|---|---|---|---|---|
| -50.227 | 249.840 | 299.77000 | -.15552 | -15.29700 | -.18027 | -.01036 | -.00278 | .49812 | -.14577 | .05662 | .22315 |
| -51.485 | 300.100 | 299.88000 | -.15829 | -15.30100 | -.18384 | -.01889 | .00087 | .50147 | -.14575 | .05633 | .22207 |
| -52.794 | 400.660 | 300.05000 | -.15919 | -15.30800 | -.18713 | -.02825 | .00646 | .51054 | -.14746 | .05719 | .22260 |
| -51.245 | 425.050 | 299.78000 | -.15968 | -15.31000 | -.18737 | -.03118 | .00799 | .51252 | -.14787 | .05749 | .22295 |
| -51.228 | 500.730 | 299.85000 | -.16094 | -15.31200 | -.19101 | -.04020 | .01312 | .52042 | -.15136 | .05842 | .22291 |
| -49.660 | 599.750 | 299.58000 | -.16176 | -15.31100 | -.19482 | -.04383 | .01576 | .52535 | -.15447 | .05881 | .22473 |
| | GRADIENT | .00000 | .00000 | .00000 | .00000 | .00000 | .00000 | .00000 | .00000 | .00000 | .00000 |

IA143, AEDC V41A-P8A, O/ET W/R.H. SRB SEPARATING (OVXC66) ( 23 MAY 77 )

REFERENCE DATA

SREF = 2690.0000 SQ.FT. XMRP = 1097.0000 IN. XT
LREF = 1290.3000 INCHES YMRP = .0000 IN. YT
BREF = 1290.3000 INCHES ZMRP = 450.0000 IN. ZT
SCALE = .0100

PARAMETRIC DATA

ALPHA = .000 BETA = -15.000
DALPHA = -10.000 DBETA = -8.000
X = 300.000 MACH = 4.500
JET PC = .000

RUN NO. 4728/ 0 RN/L = 2.40 GRADIENT INTERVAL = -5.00/ 5.00

| Y | Z | X | ALPHA | BETA | PHI | CN | CLM | CY | CYN | CBL | CA |
|---|---|---|---|---|---|---|---|---|---|---|---|
| -50.625 | 425.210 | 302.89000 | -.15758 | -15.30300 | -.17422 | -.00715 | -.00765 | .49205 | -.13942 | .05598 | .21943 |
| -51.261 | 501.560 | 300.39000 | -.15734 | -15.30800 | -.18149 | -.02484 | .00372 | .50502 | -.14454 | .05711 | .21847 |
| -50.581 | 600.800 | 300.02000 | -.16052 | -15.31200 | -.19252 | -.04175 | .01394 | .52259 | -.15251 | .05860 | .22036 |
| | GRADIENT | .00000 | .00000 | .00000 | .00000 | .00000 | .00000 | .00000 | .00000 | .00000 | .00000 |

IA143, AEDC V41A-P8A, O/ET W/R.H. SRB SEPARATING (OVXC67) ( 23 MAY 77 )

REFERENCE DATA

SREF = 2690.0000 SQ.FT. XMRP = 1097.0000 IN. XT
LREF = 1290.3000 INCHES YMRP = .0000 IN. YT
BREF = 1290.3000 INCHES ZMRP = 450.0000 IN. ZT
SCALE = .0100

PARAMETRIC DATA

ALPHA = .000 BETA = -15.000
DALPHA = .000 DBETA = -8.000
X = 300.000 MACH = 4.500
JET PC = .000

RUN NO. 4689/ 0 RN/_ = 2.39 GRADIENT INTERVAL = -5.00/ 5.00

| Y | Z | X | ALPHA | BETA | PHI | CN | CLM | CY | CYN | CBL | CA |
|---|---|---|---|---|---|---|---|---|---|---|---|
| -200.430 | 99.925 | 299.61000 | -.15531 | -15.30600 | -.17153 | -.02350 | .00346 | .49291 | -.13857 | .05654 | .22232 |
| -203.650 | 249.300 | 300.14000 | -.15981 | -15.31000 | -.18458 | -.03002 | .00635 | .50659 | -.14423 | .05665 | .22092 |
| -201.650 | 300.080 | 299.62000 | -.16100 | -15.31100 | -.18818 | -.03393 | .00868 | .51128 | -.14667 | .05696 | .22158 |
| -202.740 | 400.670 | 299.87000 | -.16128 | -15.31200 | -.19115 | -.04009 | .01282 | .51855 | -.15038 | .05797 | .22261 |
| -200.530 | 424.940 | 299.70000 | -.16145 | -15.31200 | -.19242 | -.04119 | .01360 | .52066 | -.15152 | .05820 | .22269 |
| -201.100 | 500.180 | 299.63000 | -.16157 | -15.31100 | -.19491 | -.04365 | .01560 | .52495 | -.15431 | .05875 | .22364 |
| -200.340 | 599.820 | 299.64000 | -.16180 | -15.31100 | -.19491 | -.04370 | .01570 | .52546 | -.15452 | .05883 | .22470 |
| | GRADIENT | .00000 | .00000 | .00000 | .00000 | .00000 | .00000 | .00000 | .00000 | .00000 | .00000 |

IA143, AEDC V41A-P8A, O/ET W/R.H. SRB SEPARATING (OVXC68) ( 23 MAY 77 )

REFERENCE DATA

SREF = 2690.0000 SQ.FT. XMRP = 1097.0000 IN. XT
LREF = 1290.3000 INCHES YMRP = .0000 IN. YT
BREF = 1290.3000 INCHES ZMRP = 450.0000 IN. ZT
SCALE = .0100

PARAMETRIC DATA

ALPHA = .000 BETA = -15.000
DALPHA = -10.000 DBETA = -8.000
X = 300.000 MACH = 4.500
JET PC = .000

RUN NO. 4724/ 0 RN/L = 2.39 GRADIENT INTERVAL = -5.00/ 5.00

| Y | Z | X | ALPHA | BETA | PHI | CN | CLM | CY | CYN | CBL | CA |
|---|---|---|---|---|---|---|---|---|---|---|---|
| -200.570 | 100.400 | 299.71000 | -.16174 | -15.30500 | -.17913 | -.01057 | -.00684 | .48093 | -.13245 | .05230 | .22144 |
| -201.190 | 249.560 | 299.63000 | -.15815 | -15.30900 | -.17550 | -.01879 | -.00078 | .49174 | -.13659 | .05522 | .22047 |
| -201.600 | 300.050 | 299.58000 | -.16002 | -15.31000 | -.17948 | -.01980 | -.00058 | .49641 | -.13861 | .05541 | .22044 |
| -202.580 | 400.810 | 300.04000 | -.16073 | -15.31200 | -.18641 | -.03102 | .00630 | .50859 | -.14478 | .05667 | .21890 |
| -201.160 | 425.350 | 299.82000 | -.16086 | -15.31200 | -.18842 | -.03407 | .00834 | .51177 | -.14657 | .05698 | .21912 |
| -201.530 | 500.870 | 299.95000 | -.16083 | -15.31200 | -.19155 | -.03971 | .01228 | .51890 | -.15029 | .05791 | .21979 |
| -200.970 | 600.590 | 299.69000 | -.16131 | -15.31100 | -.19501 | -.04372 | .01544 | .52485 | -.15408 | .05865 | .22213 |
| | GRADIENT | .00000 | .00000 | .00000 | .00000 | .00000 | .00000 | .00000 | .00000 | .00000 | .00000 |

IA143, AEDC V41A-P8A, O/ET W/R.H. SRB SEPARATING (OVXC69) ( 23 MAY 77 )

REFERENCE DATA

SREF = 2690.0000 SQ.FT. XMRP = 1097.0000 IN. XT
LREF = 1290.3000 INCHES YMRP = .0000 IN. YT
BREF = 1290.3000 INCHES ZMRP = 450.0000 IN. ZT
SCALE = .0100

PARAMETRIC DATA

ALPHA = .000 BETA = -15.000
DALPHA = -10.000 DBETA = -8.000
X = 300.000 MACH = 4.500
JET PC = .000

RUN NO. 4725/ 0 RN/L = 2.39 GRADIENT INTERVAL = -5.00/ 5.00

| Y | Z | X | ALPHA | BETA | PHI | CN | CLM | CY | CYN | CBL | CA |
|---|---|---|---|---|---|---|---|---|---|---|---|
| -195.460 | 100.320 | 302.14000 | -.16142 | -15.30400 | -.17905 | -.01156 | -.00607 | .48186 | -.13313 | .05258 | .22133 |
| -201.230 | 249.510 | 299.75000 | -.15839 | -15.30900 | -.17575 | -.01882 | -.00078 | .49190 | -.13663 | .05524 | .22046 |
| -201.710 | 300.110 | 299.61000 | -.16000 | -15.31000 | -.17947 | -.02006 | -.00048 | .49650 | -.13864 | .05541 | .22028 |
| -202.640 | 400.760 | 300.16000 | -.16074 | -15.31200 | -.18647 | -.03115 | .00635 | .50874 | -.14486 | .05666 | .21902 |
| -201.220 | 425.360 | 299.70000 | -.16090 | -15.31200 | -.18848 | -.03408 | .00832 | .51155 | -.14651 | .05693 | .21901 |
| -201.390 | 500.900 | 300.05000 | -.16091 | -15.31200 | -.19157 | -.03982 | .01232 | .51904 | -.15035 | .05794 | .21985 |
| -200.930 | 600.590 | 299.76000 | -.16136 | -15.31100 | -.19496 | -.04390 | .01544 | .52483 | -.15408 | .05865 | .22195 |
| | GRADIENT | .00000 | .00000 | .00000 | .00000 | .00000 | .00000 | .00000 | .00000 | .00000 | .00000 |

IA143, AEDC V41A-P8A, O/ET W/R.H. SRB SEPARATING (OVXC70) ( 23 MAY 77 )

REFERENCE DATA

SREF = 2690.0000 SQ.FT. XMRP = 1097.0000 IN. XT
LREF = 1290.3000 INCHES YMRP = .0000 IN. YT
BREF = 1290.3000 INCHES ZMRP = 450.0000 IN. ZT
SCALE = .0100

PARAMETRIC DATA

ALPHA = .000 BETA = -15.000
DALPHA = -10.000 DBETA = -8.000
X = 300.000 MACH = 4.500
JET PC = .000

RUN NO. 4726/ 0 RN/L = 2.38 GRADIENT INTERVAL = -5.00/ 5.00

| Y | Z | X | ALPHA | BETA | PHI | CN | CLM | CY | CYN | CBL | CA |
|---|---|---|---|---|---|---|---|---|---|---|---|
| -195.440 | 100.320 | 302.16000 | -.16127 | -15.30400 | -.17896 | -.01150 | -.00609 | .48159 | -.13304 | .05252 | .22137 |
| -201.320 | 249.520 | 299.67000 | -.15824 | -15.30900 | -.17556 | -.01886 | -.00077 | .49190 | -.13664 | .05525 | .22039 |
| -201.570 | 300.030 | 299.65000 | -.15998 | -15.31000 | -.17942 | -.01998 | -.00047 | .49639 | -.13861 | .05543 | .22039 |
| -202.460 | 400.790 | 300.14000 | -.16083 | -15.31200 | -.18664 | -.03112 | .00637 | .50892 | -.14489 | .05668 | .21913 |
| -201.270 | 425.370 | 299.74000 | -.16077 | -15.31100 | -.18840 | -.03408 | .00837 | .51174 | -.14660 | .05696 | .21914 |
| -201.650 | 500.870 | 299.91000 | -.16083 | -15.31200 | -.19152 | -.03982 | .01234 | .51883 | -.15030 | .05791 | .21986 |
| -201.000 | 600.590 | 299.74000 | -.16125 | -15.31100 | -.19488 | -.04377 | .01543 | .52473 | -.15408 | .05865 | .22200 |
| | GRADIENT | .00000 | .00000 | .00000 | .00000 | .00000 | .00000 | .00000 | .00000 | .00000 | .00000 |

IA143, AEDC V41A-P8A, O/ET W/R.H. SRB SEPARATING (OVXC71) ( 23 MAY 77 )

REFERENCE DATA

SREF = 2690.0000 SQ.FT. XMRP = 1097.0000 IN. XT
LREF = 1290.3000 INCHES YMRP = .0000 IN. YT
BREF = 1290.3000 INCHES ZMRP = 450.0000 IN. ZT
SCALE = .0100

PARAMETRIC DATA

ALPHA = .000 BETA = -15.000
DALPHA = -10.000 DBETA = -8.000
X = 300.000 MACH = 4.500
JET PC = .000

RUN NO. 4727/ 0 RN/L = 2.39 GRADIENT INTERVAL = -5.00/ 5.00

| Y | Z | X | ALPHA | BETA | PHI | CN | CLM | CY | CYN | CBL | CA |
|---|---|---|---|---|---|---|---|---|---|---|---|
| -195.420 | 100.290 | 302.19000 | -.16132 | -15.30400 | -.17896 | -.01156 | -.00607 | .48148 | -.13303 | .05251 | .22130 |
| -201.160 | 249.510 | 299.79000 | -.15821 | -15.30900 | -.17549 | -.01883 | -.00078 | .49178 | -.13661 | .05524 | .22041 |
| -201.480 | 300.090 | 299.57000 | -.15989 | -15.31000 | -.17930 | -.02003 | -.00052 | .49647 | -.13863 | .05542 | .22019 |
| -202.590 | 400.790 | 300.25000 | -.16069 | -15.31200 | -.18643 | -.03106 | .00631 | .50844 | -.14474 | .05663 | .21887 |
| -201.210 | 425.360 | 299.69000 | -.16085 | -15.31200 | -.18847 | -.03400 | .00831 | .51151 | -.14651 | .05693 | .21901 |
| -201.390 | 500.890 | 299.96000 | -.16089 | -15.31200 | -.19154 | -.03987 | .01233 | .51873 | -.15028 | .05790 | .21977 |
| -201.140 | 600.580 | 299.76000 | -.16142 | -15.31100 | -.19509 | -.04385 | .01544 | .52434 | -.15393 | .05857 | .22190 |
| | GRADIENT | .00000 | .00000 | .00000 | .00000 | .00000 | .00000 | .00000 | .00000 | .00000 | .00000 |

IA143, AEDC V41A-P8A, O/ET W/R.H. SRB SEPARATING (OVXC72) ( 23 MAY 77 )

REFERENCE DATA

SREF = 2690.0000 SQ.FT. XMRP = 1097.0000 IN. XT
LREF = 1290.3000 INCHES YMRP = .0000 IN. YT
BREF = 1290.3000 INCHES ZMRP = 450.0000 IN. ZT
SCALE = .0100

PARAMETRIC DATA

ALPHA = .000 BETA = -15.000
DALPHA = -5.000 DBETA = .000
X = 300.000 MACH = 4.500
JET PC = .000

RUN NO. 4699/ 0 RN/L = 2.40 GRADIENT INTERVAL = -5.00/ 5.00

| Y | Z | X | ALPHA | BETA | PHI | CN | CLM | CY | CYN | CBL | CA |
|---|---|---|---|---|---|---|---|---|---|---|---|
| -100.220 | 100.150 | 299.56000 | -.15664 | -15.29900 | -.17757 | -.03413 | .01015 | .49944 | -.14546 | .05730 | .22361 |
| -100.650 | 149.950 | 299.48000 | -.15768 | -15.30100 | -.17984 | -.03346 | .00947 | .50174 | -.14572 | .05719 | .22354 |
| -100.810 | 199.750 | 299.49000 | -.15858 | -15.30400 | -.18390 | -.03323 | .00936 | .50530 | -.14656 | .05700 | .22306 |
| | GRADIENT | .00000 | .00000 | .00000 | .00000 | .00000 | .00000 | .00000 | .00000 | .00000 | .00000 |

RUN NO. 4700/ 0 RN/L = 2.40 GRADIENT INTERVAL = -5.00/ 5.00

| Y | Z | X | ALPHA | BETA | PHI | CN | CLM | CY | CYN | CBL | CA |
|---|---|---|---|---|---|---|---|---|---|---|---|
| -200.640 | 200.470 | 299.86000 | -.16099 | -15.31100 | -.18845 | -.03732 | .01108 | .51275 | -.14759 | .05730 | .22306 |
| -200.210 | 150.140 | 299.46000 | -.16042 | -15.31000 | -.18705 | -.03640 | .01061 | .51091 | -.14665 | .05714 | .22309 |
| -200.020 | 100.290 | 299.63000 | -.16050 | -15.31000 | -.18693 | -.03498 | .00974 | .50898 | -.14565 | .05674 | .22311 |
| | GRADIENT | .00000 | .00000 | .00000 | .00000 | .00000 | .00000 | .00000 | .00000 | .00000 | .00000 |

IA143, AEDC V41A-P8A, O/ET W/R.H. SRB SEPARATING (OVXC73) ( 23 MAY 77 )

REFERENCE DATA

SREF = 2690.0000 SQ.FT. XMRP = 1097.0000 IN. XT
LREF = 1290.3000 INCHES YMRP = .0000 IN. YT
BREF = 1290.3000 INCHES ZMRP = 450.0000 IN. ZT
SCALE = .0100

PARAMETRIC DATA

ALPHA = .000 BETA = -15.000
DALPHA = -10.000 DBETA = .000
X = 300.000 MACH = 4.500
JET PC = .000

RUN NO. 4720/ 0 RN/L = 2.40 GRADIENT INTERVAL = -5.00/ 5.00

| Y | Z | X | ALPHA | BETA | PHI | CN | CLM | CY | CYN | CBL | CA |
|---|---|---|---|---|---|---|---|---|---|---|---|
| -149.960 | 100.430 | 299.77000 | -.16277 | -15.30500 | -.18962 | -.02366 | .00226 | .49741 | -.14158 | .05388 | .22336 |
| -150.040 | 149.920 | 299.60000 | -.16084 | -15.30600 | -.18598 | -.02825 | .00549 | .50079 | -.14292 | .05537 | .22316 |
| -150.620 | 200.190 | 299.51000 | -.15994 | -15.30700 | -.18485 | -.03039 | .00695 | .50344 | -.14384 | .05610 | .22266 |
| | GRADIENT | .00000 | .00000 | .00000 | .00000 | .00000 | .00000 | .00000 | .00000 | .00000 | .00000 |

IA143, AEDC V41A-P8A, O/ET W/R.H. SRB SEPARATING (OVXC74) ( 23 MAY 77 )

REFERENCE DATA

SREF = 2690.0000 SQ.FT. XMRP = 1097.0000 IN. XT
LREF = 1290.3000 INCHES YMRP = .0000 IN. YT
BREF = 1290.3000 INCHES ZMRP = 450.0000 IN. ZT
SCALE = .0100

PARAMETRIC DATA

ALPHA = .000 BETA = -15.000
DALPHA = -5.000 DBETA = -4.000
X = 300.000 MACH = 4.500
JET PC = .000

RUN NO. 4702/ 0 RN/L = 2.39 GRADIENT INTERVAL = -5.00/ 5.00

| Y | Z | X | ALPHA | BETA | PHI | CN | CLM | CY | CYN | CBL | CA |
|---|---|---|---|---|---|---|---|---|---|---|---|
| -100.500 | 100.100 | 299.59000 | -.15358 | -15.29200 | -.17017 | -.03103 | .00890 | .49035 | -.14359 | .05723 | .22354 |
| -100.160 | 149.820 | 299.75000 | -.15505 | -15.29600 | -.17220 | -.02806 | .00661 | .49128 | -.14238 | .05677 | .22339 |
| -100.480 | 199.700 | 299.67000 | -.15680 | -15.30000 | -.17637 | -.02846 | .00649 | .49565 | -.14305 | .05665 | .22321 |
| -102.680 | 300.020 | 299.68000 | -.15917 | -15.30600 | -.18500 | -.02516 | .00418 | .50368 | -.14466 | .05624 | .22185 |
| | GRADIENT | .00000 | .00000 | .00000 | .00000 | .00000 | .00000 | .00000 | .00000 | .00000 | .00000 |

IA143, AEDC V41A-P8A, O/ET W/R.H. SRB SEPARATING (OVXC75) ( 23 MAY 77 )

REFERENCE DATA

SREF = 2690.0000 SQ.FT. XMRP = 1097.0000 IN. XT
LREF = 1290.3000 INCHES YMRP = .0000 IN. YT
BREF = 1290.3000 INCHES ZMRP = 450.0000 IN. ZT
SCALE = .0100

PARAMETRIC DATA

ALPHA = .000 BETA = -15.000
DALPHA = -10.000 DBETA = -4.000
X = 300.000 MACH = 4.500
JET PC = .000

RUN NO. 4722/ 0 RN/L = 2.40 GRADIENT INTERVAL = -5.00/ 5.00

| Y | Z | X | ALPHA | BETA | PHI | CN | CLM | CY | CYN | CBL | CA |
|---|---|---|---|---|---|---|---|---|---|---|---|
| -100.250 | 100.410 | 299.61000 | -.15900 | -15.29200 | -.17724 | -.02444 | .00280 | .48559 | -.14089 | .05467 | .22247 |
| -101.010 | 150.020 | 299.54000 | -.15641 | -15.29100 | -.17306 | -.02559 | .00437 | .48467 | -.14057 | .05536 | .22270 |
| -100.900 | 200.200 | 299.54000 | -.15614 | -15.29700 | -.17281 | -.02562 | .00454 | .48728 | -.13971 | .05566 | .22278 |
| | GRADIENT | .00000 | .00000 | .00000 | .00000 | .00000 | .00000 | .00000 | .00000 | .00000 | .00000 |

RUN NO. 4723/ 0 RN/L = 2.40 GRADIENT INTERVAL = -5.00/ 5.00

| Y | Z | X | ALPHA | BETA | PHI | CN | CLM | CY | CYN | CBL | CA |
|---|---|---|---|---|---|---|---|---|---|---|---|
| -201.370 | 200.840 | 299.60000 | -.16041 | -15.31000 | -.18218 | -.02735 | .00432 | .49912 | -.14034 | .05549 | .22197 |
| -200.150 | 150.640 | 299.59000 | -.16104 | -15.30900 | -.18322 | -.02489 | .00279 | .49594 | -.13888 | .05459 | .22245 |
| -199.590 | 100.860 | 299.91000 | -.16408 | -15.30900 | -.18826 | -.01801 | -.00217 | .49181 | -.13661 | .05261 | .22266 |
| | GRADIENT | .00000 | .00000 | .00000 | .00000 | .00000 | .00000 | .00000 | .00000 | .00000 | .00000 |

IA143, AEDC V41A-P8A, O/ET W/R.H. SRB SEPARATING (OVXC76) ( 23 MAY 77 )

REFERENCE DATA

SREF = 2690.0000 SQ.FT. XMRP = 1097.0000 IN. XT
LREF = 1290.3000 INCHES YMRP = .0000 IN. YT
BREF = 1290.3000 INCHES ZMRP = 450.0000 IN. ZT
SCALE = .0100

PARAMETRIC DATA

ALPHA = .000 BETA = -15.000
DALPHA = -5.000 DBETA = -4.000
X = 300.000 MACH = 4.500
JET PC = .000

RUN NO. 4701/ 0 RN/L = 2.39 GRADIENT INTERVAL = -5.00/ 5.00

| Y | Z | X | ALPHA | BETA | PHI | CN | CLM | CY | CYN | CBL | CA |
|---|---|---|---|---|---|---|---|---|---|---|---|
| -200.770 | 100.140 | 299.42000 | -.15883 | -15.30900 | -.18058 | -.02946 | .00641 | .50004 | -.14125 | .05610 | .22279 |
| -200.530 | 149.850 | 299.66000 | -.15906 | -15.30900 | -.18114 | -.03061 | .00693 | .50225 | -.14225 | .05645 | .22229 |
| -200.830 | 199.760 | 299.51000 | -.16000 | -15.31000 | -.18342 | -.03190 | .00753 | .50507 | -.14344 | .05654 | .22261 |
| | GRADIENT | .00000 | .00000 | .00000 | .00000 | .00000 | .00000 | .00000 | .00000 | .00000 | .00000 |

IA143, AEDC V41A-P8A, O/ET W/R.H. SRB SEPARATING (OVXC77) ( 23 MAY 77 )

REFERENCE DATA

SREF = 2690.0000 SQ.FT. XMRP = 1097.0000 IN. XT
LREF = 1290.3000 INCHES YMRP = .0000 IN. YT
BREF = 1290.3000 INCHES ZMRP = 450.0000 IN. ZT
SCALE = .0100

PARAMETRIC DATA

ALPHA = .000 BETA = -15.000
DALPHA = -6.000 DBETA = -2.000
X = 300.000 MACH = 4.500
JET PC = .000

RUN NO. 4717/ 0 RN/L = 2.39 GRADIENT INTERVAL = -5.00/ 5.00

| Y | Z | X | ALPHA | BETA | PHI | CN | CLM | CY | CYN | CBL | CA |
|---|---|---|---|---|---|---|---|---|---|---|---|
| -99.979 | 100.120 | 299.83000 | -.15554 | -15.29400 | -.17479 | -.03294 | .00962 | .49409 | -.14485 | .05701 | .22351 |
| -99.876 | 199.800 | 299.91000 | -.15784 | -15.30100 | -.17957 | -.03121 | .00795 | .49886 | -.14433 | .05663 | .22319 |
| -101.680 | 299.900 | 299.74000 | -.15975 | -15.30600 | -.18682 | -.02824 | .00605 | .50644 | -.14600 | .05645 | .22241 |
| | GRADIENT | .00000 | .00000 | .00000 | .00000 | .00000 | .00000 | .00000 | .00000 | .00000 | .00000 |

IA143, AEDC V41A-P8A, O/ET W/R.H. SRB SEPARATING (OVXC78) ( 23 MAY 77 )

REFERENCE DATA

SREF = 2690.0000 SQ.FT. XMRP = 1097.0000 IN. XT
LREF = 1290.3000 INCHES YMRP = .0000 IN. YT
BREF = 1290.3000 INCHES ZMRP = 450.0000 IN. ZT
SCALE = .0100

PARAMETRIC DATA

ALPHA = .000 BETA = -15.000
DALPHA = -6.000 DBETA = -2.000
X = 300.000 MACH = 4.500
JET PC = .000

RUN NO. 4749/ 0 RN/L = 2.38 GRADIENT INTERVAL = -5.00/ 5.00

| Y | Z | X | ALPHA | BETA | PHI | CN | CLM | CY | CYN | CBL | CA |
|---|---|---|---|---|---|---|---|---|---|---|---|
| -101.450 | 100.240 | 299.32000 | -.15507 | -15.29300 | -.17437 | -.03274 | .00945 | .49421 | -.14485 | .05700 | .22323 |
| -100.780 | 199.680 | 299.65000 | -.15709 | -15.29900 | -.17880 | -.03109 | .00789 | .49886 | -.14433 | .05662 | .22295 |
| -101.500 | 300.000 | 299.82000 | -.15915 | -15.30500 | -.18623 | -.02821 | .00604 | .50642 | -.14594 | .05642 | .22232 |
| | GRADIENT | .00000 | .00000 | .00000 | .00000 | .00000 | .00000 | .00000 | .00000 | .00000 | .00000 |

IA143, AEDC V41A-P8A, O/ET W/R.H. SRB SEPARATING (OVXC79) ( 23 MAY 77 )

REFERENCE DATA

SREF = 2690.0000 SQ.FT. XMRP = 1097.0000 IN. XT
LREF = 1290.3000 INCHES YMRP = .0000 IN. YT
BREF = 1290.3000 INCHES ZMRP = 450.0000 IN. ZT
SCALE = .0100

PARAMETRIC DATA

ALPHA = .000 BETA = -15.000
DALPHA = .000 DBETA = 4.000
X = 600.000 MACH = 4.500
JET PC = .000

RUN NO. 4693/ 0 RN/L = 2.39 GRADIENT INTERVAL = -5.00/ 5.00

| Y | Z | X | ALPHA | BETA | PHI | CN | CLM | CY | CYN | CBL | CA |
|---|---|---|---|---|---|---|---|---|---|---|---|
| -100.120 | 199.890 | 599.65000 | -.16177 | -15.31100 | -.19216 | -.03949 | .01272 | .51899 | -.15098 | .05793 | .22420 |
| -100.490 | 249.830 | 599.59000 | -.16157 | -15.31100 | -.19218 | -.04177 | .01415 | .52071 | -.15184 | .05829 | .22425 |
| -100.950 | 400.310 | 599.54000 | -.16165 | -15.31100 | -.19491 | -.04372 | .01566 | .52549 | -.15449 | .05881 | .22422 |
| -100.850 | 449.950 | 599.44000 | -.16181 | -15.31100 | -.19499 | -.04375 | .01569 | .52535 | -.15447 | .05880 | .22447 |
| -100.780 | 500.090 | 599.50000 | -.16178 | -15.31100 | -.19493 | -.04372 | .01569 | .52522 | -.15445 | .05877 | .22465 |
| -100.940 | 600.580 | 599.48000 | -.16186 | -15.31100 | -.19496 | -.04379 | .01575 | .52549 | -.15453 | .05882 | .22487 |
| | GRADIENT | .00000 | .00000 | .00000 | .00000 | .00000 | .00000 | .00000 | .00000 | .00000 | .00000 |

RUN NO. 4694/ 0 RN/L = 2.38 GRADIENT INTERVAL = -5.00/ 5.00

| Y | Z | X | ALPHA | BETA | PHI | CN | CLM | CY | CYN | CBL | CA |
|---|---|---|---|---|---|---|---|---|---|---|---|
| -300.160 | 599.320 | 599.43000 | -.16186 | -15.31100 | -.19496 | -.04386 | .01572 | .52570 | -.15458 | .05883 | .22481 |
| -300.390 | 499.640 | 599.53000 | -.16181 | -15.31100 | -.19493 | -.04374 | .01570 | .52520 | -.15445 | .05877 | .22469 |
| -300.150 | 449.430 | 599.45000 | -.16188 | -15.31100 | -.19498 | -.04376 | .01571 | .52524 | -.15446 | .05878 | .22475 |
| -299.820 | 399.600 | 599.43000 | -.16175 | -15.31100 | -.19485 | -.04376 | .01571 | .52517 | -.15444 | .05877 | .22470 |
| -299.330 | 249.780 | 599.58000 | -.16181 | -15.31100 | -.19496 | -.04375 | .01572 | .52550 | -.15454 | .05881 | .22478 |
| -300.050 | 199.890 | 599.48000 | -.16161 | -15.31100 | -.19484 | -.04364 | .01564 | .52527 | -.15445 | .05877 | .22443 |
| | GRADIENT | .00000 | .00000 | .00000 | .00000 | .00000 | .00000 | .00000 | .00000 | .00000 | .00000 |

IA143, AEDC V41A-P8A, O/ET W/R.H. SRB SEPARATING (OVXC80) ( 23 MAY 77 )

REFERENCE DATA

SREF = 2690.0000 SQ.FT. XMRP = 1097.0000 IN. XT
LREF = 1290.3000 INCHES YMRP = .0000 IN. YT
BREF = 1290.3000 INCHES ZMRP = 450.0000 IN. ZT
SCALE = .0100

PARAMETRIC DATA

ALPHA = .000 BETA = -15.000
DALPHA = -15.000 DBETA = 4.000
X = 600.000 MACH = 4.500
JET PC = .000

RUN NO. 4750/ 0 RN/L = 2.38 GRADIENT INTERVAL = -5.00/ 5.00

| Y | Z | X | ALPHA | BETA | PHI | CN | CLM | CY | CYN | CBL | CA |
|---|---|---|---|---|---|---|---|---|---|---|---|
| -100.350 | 200.550 | 599.37000 | -.16090 | -15.30800 | -.18830 | -.03158 | .00749 | .50863 | -.14609 | .05635 | .22292 |
| -100.490 | 250.190 | 599.30000 | -.16130 | -15.30900 | -.18938 | -.03544 | .00966 | .51284 | -.14773 | .05696 | .22296 |
| -101.410 | 400.720 | 599.45000 | -.16079 | -15.31000 | -.19201 | -.04149 | .01383 | .52076 | -.15180 | .05819 | .22260 |
| -100.750 | 450.770 | 599.50000 | -.16063 | -15.31000 | -.19329 | -.04313 | .01510 | .52394 | -.15361 | .05865 | .22269 |
| -100.920 | 500.980 | 599.46000 | -.16089 | -15.31000 | -.19431 | -.04370 | .01553 | .52488 | -.15431 | .05868 | .22310 |
| -101.380 | 601.600 | 599.73000 | -.16119 | -15.31000 | -.19445 | -.04374 | .01567 | .52500 | -.15443 | .05870 | .22420 |
| | GRADIENT | .00000 | .00000 | .00000 | .00000 | .00000 | .00000 | .00000 | .00000 | .00000 | .00000 |

IA143, AEDC V41A-P8A, O/ET W/R.H. SRB SEPARATING (OVXC80) ( 23 MAY 77 )

REFERENCE DATA

SREF = 2690.0000 SQ.FT. XMRP = 1097.0000 IN. XT
LREF = 1290.3000 INCHES YMRP = .0000 IN. YT
BREF = 1290.3000 INCHES ZMRP = 450.0000 IN. ZT
SCALE = .0100

PARAMETRIC DATA

ALPHA = .000 BETA = -15.000
DALPHA = -15.000 DBETA = 4.000
X = 600.000 MACH = 4.500
JET PC = .000

RUN NO. 4751/ 0 RN/L = 2.38 GRADIENT INTERVAL = -5.00/ 5.00

| Y | Z | X | ALPHA | BETA | PHI | CN | CLM | CY | CYN | CBL | CA |
|---|---|---|---|---|---|---|---|---|---|---|---|
| -300.240 | 600.460 | 599.49000 | -.16128 | -15.31000 | -.19450 | -.04373 | .01567 | .52516 | -.15447 | .05872 | .22439 |
| -300.080 | 499.850 | 599.12000 | -.16122 | -15.31000 | -.19444 | -.04374 | .01570 | .52515 | -.15447 | .05872 | .22452 |
| -299.810 | 450.020 | 599.23000 | -.16111 | -15.30900 | -.19429 | -.04373 | .01565 | .52505 | -.15446 | .05871 | .22423 |
| -299.660 | 400.060 | 599.31000 | -.16131 | -15.31000 | -.19449 | -.04387 | .01569 | .52522 | -.15450 | .05873 | .22431 |
| -299.260 | 250.220 | 599.38000 | -.16113 | -15.31000 | -.19433 | -.04354 | .01542 | .52452 | -.15412 | .05860 | .22359 |
| -299.640 | 200.560 | 599.56000 | -.16129 | -15.31000 | -.19443 | -.04298 | .01497 | .52407 | -.15379 | .05846 | .22342 |
| | GRADIENT | .00000 | .00000 | .00000 | .00000 | .00000 | .00000 | .00000 | .00000 | .00000 | .00000 |

IA143, AEDC V41A-P8A, O/ET W/R.H. SRB SEPARATING (OVXC81) ( 23 MAY 77 )

REFERENCE DATA

SREF = 2690.0000 SQ.FT. XMRP = 1097.0000 IN. XT
LREF = 1290.3000 INCHES YMRP = .0000 IN. YT
BREF = 1290.3000 INCHES ZMRP = 450.0000 IN. ZT
SCALE = .0100

PARAMETRIC DATA

ALPHA = .000 BETA = -15.000
DALPHA = .000 DBETA = -12.000
X = 600.000 MACH = 4.500
JET PC = .000

RUN NO. 4691/ 0 RN/L = 2.39 GRADIENT INTERVAL = -5.00/ 5.00

| Y | Z | X | ALPHA | BETA | PHI | CN | CLM | CY | CYN | CBL | CA |
|---|---|---|---|---|---|---|---|---|---|---|---|
| -100.580 | 249.840 | 599.60000 | -.15732 | -15.30500 | -.17887 | -.01973 | .00102 | .50076 | -.14337 | .05688 | .22135 |
| -102.860 | 400.360 | 600.34000 | -.16092 | -15.31200 | -.19101 | -.03997 | .01292 | .51979 | -.15103 | .05833 | .22221 |
| -101.800 | 450.070 | 599.78000 | -.16104 | -15.31200 | -.19369 | -.04303 | .01503 | .52433 | -.15367 | .05877 | .22252 |
| -101.560 | 500.160 | 599.81000 | -.16141 | -15.31100 | -.19485 | -.04360 | .01557 | .52527 | -.15436 | .05879 | .22350 |
| -101.780 | 601.190 | 599.92000 | -.16178 | -15.31100 | -.19492 | -.04372 | .01567 | .52517 | -.15441 | .05877 | .22451 |
| | GRADIENT | .00000 | .00000 | .00000 | .00000 | .00000 | .00000 | .00000 | .00000 | .00000 | .00000 |

IA143, AEDC V41A-P8A, O/ET W/R.H. SRB SEPARATING (OVXC82) ( 23 MAY 77 )

REFERENCE DATA

SREF = 2690.0000 SQ.FT. XMRP = 1097.0000 IN. XT
LREF = 1290.3000 INCHES YMRP = .0000 IN. YT
BREF = 1290.3000 INCHES ZMRP = 450.0000 IN. ZT
SCALE = .0100

PARAMETRIC DATA

ALPHA = .000 BETA = -15.000
DALPHA = .000 DBETA = -12.000
X = 600.000 MACH = 4.500
JET PC = .000

RUN NO. 4692/ 0 RN/L = 2.39 GRADIENT INTERVAL = -5.00/ 5.00

| Y | Z | X | ALPHA | BETA | PHI | CN | CLM | CY | CYN | CBL | CA |
|---|---|---|---|---|---|---|---|---|---|---|---|
| -300.630 | 199.840 | 599.58000 | -.16128 | -15.31200 | -.19199 | -.04026 | .01271 | .51856 | -.15030 | .05786 | .22059 |
| -301.100 | 250.110 | 599.85000 | -.16117 | -15.31200 | -.19353 | -.04175 | .01398 | .52182 | -.15225 | .05822 | .22155 |
| -302.930 | 400.210 | 600.32000 | -.16167 | -15.31100 | -.19485 | -.04382 | .01565 | .52547 | -.15443 | .05882 | .22397 |
| -301.540 | 450.170 | 599.82000 | -.16160 | -15.31100 | -.19475 | -.04373 | .01570 | .52537 | -.15447 | .05880 | .22450 |
| -301.180 | 500.160 | 599.89000 | -.16192 | -15.31100 | -.19505 | -.04380 | .01571 | .52536 | -.15451 | .05880 | .22461 |
| -301.020 | 600.490 | 599.76000 | -.16187 | -15.31100 | -.19497 | -.04375 | .01572 | .52560 | -.15456 | .05884 | .22485 |
| | GRADIENT | .00000 | .00000 | .00000 | .00000 | .00000 | .00000 | .00000 | .00000 | .00000 | .00000 |

IA143, AEDC V41A-P8A, O/ET W/R.H. SRB SEPARATING (OVXC83) ( 23 MAY 77 )

REFERENCE DATA

SREF = 2690.0000 SQ.FT. XMRP = 1097.0000 IN. XT
LREF = 1290.3000 INCHES YMRP = .0000 IN. YT
BREF = 1290.3000 INCHES ZMRP = 450.0000 IN. ZT
SCALE = .0100

PARAMETRIC DATA

ALPHA = .000 BETA = -15.000
DALPHA = .000 DBETA = -12.000
X = 600.000 MACH = 4.500
JET PC = .000

RUN NO. 4716/ 0 RN/L = 2.39 GRADIENT INTERVAL = -5.00/ 5.00

| Y | Z | X | ALPHA | BETA | PHI | CN | CLM | CY | CYN | CBL | CA |
|---|---|---|---|---|---|---|---|---|---|---|---|
| -300.830 | 199.970 | 599.66000 | -.16111 | -15.31200 | -.19155 | -.04004 | .01258 | .51828 | -.15008 | .05784 | .22079 |
| -301.810 | 249.940 | 599.70000 | -.16139 | -15.31200 | -.19353 | -.04180 | .01389 | .52181 | -.15216 | .05823 | .22150 |
| -303.410 | 400.250 | 600.17000 | -.16171 | -15.31100 | -.19496 | -.04395 | .01571 | .52507 | -.15432 | .05872 | .22395 |
| -301.360 | 450.150 | 600.00000 | -.16187 | -15.31100 | -.19504 | -.04399 | .01575 | .52529 | -.15443 | .05875 | .22443 |
| -300.800 | 500.170 | 600.07000 | -.16215 | -15.31200 | -.19541 | -.04392 | .01574 | .52551 | -.15453 | .05879 | .22459 |
| -301.260 | 600.500 | 599.73000 | -.16187 | -15.31100 | -.19509 | -.04382 | .01576 | .52527 | -.15448 | .05875 | .22483 |
| | GRADIENT | .00000 | .00000 | .00000 | .00000 | .00000 | .00000 | .00000 | .00000 | .00000 | .00000 |

IA143, AEDC V41A-P8A, O/ET W/R.H. SRB SEPARATING (OVXC84) ( 23 MAY 77 )

REFERENCE DATA

SREF = 2690.0000 SQ.FT. XMRP = 1097.0000 IN. XT
LREF = 1290.3000 INCHES YMRP = .0000 IN. YT
BREF = 1290.3000 INCHES ZMRP = 450.0000 IN. ZT
SCALE = .0100

PARAMETRIC DATA

ALPHA = .000 BETA = -15.000
DALPHA = -15.000 DBETA = -12.000
X = 600.000 MACH = 4.500
JET PC = .000

RUN NO. 4757/ 0 RN/L = 2.39 GRADIENT INTERVAL = -5.00/ 5.00

| Y | Z | X | ALPHA | BETA | PHI | CN | CLM | CY | CYN | CBL | CA |
|---|---|---|---|---|---|---|---|---|---|---|---|
| -296.090 | 200.980 | 602.58000 | -.16360 | -15.31000 | -.18030 | -.02641 | .00187 | .50266 | -.14195 | .05486 | .21824 |
| -301.160 | 250.200 | 599.49000 | -.16277 | -15.31000 | -.18996 | -.03009 | .00470 | .50791 | -.14466 | .05566 | .21817 |
| -302.530 | 400.200 | 599.98000 | -.16044 | -15.31000 | -.19411 | -.04123 | .01332 | .52229 | -.15256 | .05808 | .21865 |
| -301.900 | 450.750 | 599.77000 | -.16025 | -15.31000 | -.19433 | -.04239 | .01424 | .52399 | -.15357 | .05841 | .21918 |
| -301.990 | 500.960 | 599.95000 | -.16032 | -15.31000 | -.19405 | -.04319 | .01480 | .52386 | -.15357 | .05847 | .21989 |
| -302.030 | 601.480 | 600.38000 | -.16118 | -15.31100 | -.19453 | -.04411 | .01541 | .52426 | -.15379 | .05853 | .22171 |
| | GRADIENT | .00000 | .00000 | .00000 | .00000 | .00000 | .00000 | .00000 | .00000 | .00000 | .00000 |

IA143, AEDC V41A-P8A, O/ET W/R.H. SRB SEPARATING (OVXC85) ( 23 MAY 77 )

REFERENCE DATA

SREF = 2690.0000 SQ.FT. XMRP = 1097.0000 IN. XT
LREF = 1290.3000 INCHES YMRP = .0000 IN. YT
BREF = 1290.3000 INCHES ZMRP = 450.0000 IN. ZT
SCALE = .0100

PARAMETRIC DATA

ALPHA = .000 BETA = -15.000
DALPHA = -7.000 DBETA = -4.000
X = 600.000 MACH = 4.500
JET PC = .000

RUN NO. 4718/ 0 RN/L = 2.38 GRADIENT INTERVAL = -5.00/ 5.00

| Y | Z | X | ALPHA | BETA | PHI | CN | CLM | CY | CYN | CBL | CA |
|---|---|---|---|---|---|---|---|---|---|---|---|
| -200.370 | 200.230 | 599.61000 | -.16098 | -15.31200 | -.18835 | -.03885 | .01178 | .51413 | -.14790 | .05752 | .22249 |
| -202.130 | 299.780 | 599.38000 | -.16143 | -15.31200 | -.19257 | -.04154 | .01377 | .52079 | -.15159 | .05817 | .22259 |
| -202.270 | 400.670 | 599.63000 | -.16149 | -15.31100 | -.19487 | -.04368 | .01547 | .52491 | -.15423 | .05868 | .22318 |
| | GRADIENT | .00000 | .00000 | .00000 | .00000 | .00000 | .00000 | .00000 | .00000 | .00000 | .00000 |

IA143, AEDC V41A-P8A, O/ET W/R.H. SRB SEPARATING (OVXC86) ( 23 MAY 77 )

REFERENCE DATA

SREF = 2690.0000 SQ.FT. XMRP = 1097.0000 IN. XT
LREF = 1290.3000 INCHES YMRP = .0000 IN. YT
BREF = 1290.3000 INCHES ZMRP = 450.0000 IN. ZT
SCALE = .0100

PARAMETRIC DATA

ALPHA = .000 BETA = -15.000
DALPHA = -5.000 DBETA = .000
X = 600.000 MACH = 4.500
JET PC = .000

RUN NO. 4703/ 0 RN/L = 2.39 GRADIENT INTERVAL = -5.00/ 5.00

| Y | Z | X | ALPHA | BETA | PHI | CN | CLM | CY | CYN | CBL | CA |
|---|---|---|---|---|---|---|---|---|---|---|---|
| -100.280 | 200.030 | 599.47000 | -.16051 | -15.31000 | -.18847 | -.03412 | .00950 | .51272 | -.14812 | .05735 | .22322 |
| -101.690 | 299.850 | 599.44000 | -.16139 | -15.31100 | -.19170 | -.04048 | .01326 | .51946 | -.15107 | .05809 | .22350 |
| -101.340 | 400.540 | 599.52000 | -.16120 | -15.31100 | -.19317 | -.04297 | .01505 | .52332 | -.15315 | .05865 | .22354 |
| | GRADIENT | .00000 | .00000 | .00000 | .00000 | .00000 | .00000 | .00000 | .00000 | .00000 | .00000 |

RUN NO. 4704/ 0 RN/L = 2.39 GRADIENT INTERVAL = -5.00/ 5.00

| Y | Z | X | ALPHA | BETA | PHI | CN | CLM | CY | CYN | CBL | CA |
|---|---|---|---|---|---|---|---|---|---|---|---|
| -300.790 | 400.390 | 599.50000 | -.16185 | -15.31100 | -.19502 | -.04377 | .01569 | .52524 | -.15442 | .05875 | .22458 |
| -299.380 | 299.850 | 599.37000 | -.16173 | -15.31100 | -.19493 | -.04376 | .01569 | .52540 | -.15446 | .05878 | .22450 |
| -299.750 | 200.130 | 599.36000 | -.16168 | -15.31100 | -.19483 | -.04342 | .01540 | .52436 | -.15396 | .05860 | .22387 |
| | GRADIENT | .00000 | .00000 | .00000 | .00000 | .00000 | .00000 | .00000 | .00000 | .00000 | .00000 |

IA143, AEDC V41A-P8A, O/ET W/R.H. SRB SEPARATING (OVXC87) ( 23 MAY 77 )

REFERENCE DATA

SREF = 2690.0000 SQ.FT. XMRP = 1097.0000 IN. XT
LREF = 1290.3000 INCHES YMRP = .0000 IN. YT
BREF = 1290.3000 INCHES ZMRP = 450.0000 IN. ZT
SCALE = .0100

PARAMETRIC DATA

ALPHA = .000 BETA = -15.000
DALPHA = -10.000 DBETA = .000
X = 600.000 MACH = 4.500
JET PC = .000

RUN NO. 4734/ 0 RN/L = 2.39 GRADIENT INTERVAL = -5.00/ 5.00

| Y | Z | X | ALPHA | BETA | PHI | CN | CLM | CY | CYN | CBL | CA |
|---|---|---|---|---|---|---|---|---|---|---|---|
| -100.200 | 200.370 | 599.46000 | -.16007 | -15.30800 | -.18697 | -.03187 | .00811 | .50936 | -.14668 | .05694 | .22286 |
| -100.900 | 299.840 | 599.47000 | -.16176 | -15.31100 | -.19104 | -.03822 | .01147 | .51678 | -.14957 | .05761 | .22283 |
| -101.730 | 400.670 | 599.53000 | -.16129 | -15.31100 | -.19257 | -.04195 | .01412 | .52163 | -.15216 | .05837 | .22271 |
| | GRADIENT | .00000 | .00000 | .00000 | .00000 | .00000 | .00000 | .00000 | .00000 | .00000 | .00000 |

RUN NO. 4735/ 0 RN/L = 2.39 GRADIENT INTERVAL = -5.00/ 5.00

| Y | Z | X | ALPHA | BETA | PHI | CN | CLM | CY | CYN | CBL | CA |
|---|---|---|---|---|---|---|---|---|---|---|---|
| -300.720 | 401.160 | 599.68000 | -.16174 | -15.31100 | -.19488 | -.04393 | .01569 | .52516 | -.15445 | .05874 | .22428 |
| -299.150 | 299.990 | 599.42000 | -.16163 | -15.31100 | -.19499 | -.04375 | .01563 | .52477 | -.15428 | .05866 | .22386 |
| -299.730 | 200.480 | 599.41000 | -.16195 | -15.31100 | -.19508 | -.04304 | .01496 | .52409 | -.15378 | .05849 | .22339 |
| | GRADIENT | .00000 | .00000 | .00000 | .00000 | .00000 | .00000 | .00000 | .00000 | .00000 | .00000 |

IA143, AEDC V41A-P8A, O/ET W/R.H. SRB SEPARATING (OVXC88) ( 23 MAY 77 )

REFERENCE DATA

SREF = 2690.0000 SQ.FT. XMRP = 1097.0000 IN. XT
LREF = 1290.3000 INCHES YMRP = .0000 IN. YT
BREF = 1290.3000 INCHES ZMRP = 450.0000 IN. ZT
SCALE = .0100

PARAMETRIC DATA

ALPHA = .000 BETA = -15.000
DALPHA = -5.000 DBETA = -8.000
X = 600.000 MACH = 4.500
JET PC = .000

RUN NO. 4706/ 0 RN/L = 2.40 GRADIENT INTERVAL = -5.00/ 5.00

| Y | Z | X | ALPHA | BETA | PHI | CN | CLM | CY | CYN | CBL | CA |
|---|---|---|---|---|---|---|---|---|---|---|---|
| -99.997 | 399.730 | 599.48000 | -.16084 | -15.31200 | -.19094 | -.03996 | .01282 | .51977 | -.15095 | .05828 | .22193 |
| -98.981 | 299.170 | 599.25000 | -.16040 | -15.31200 | -.18657 | -.03048 | .00670 | .51112 | -.14640 | .05728 | .22104 |
| -98.171 | 200.000 | 599.10000 | -.15622 | -15.30300 | -.17872 | -.02399 | .00435 | .50084 | -.14435 | .05705 | .22264 |
| | GRADIENT | .00000 | .00000 | .00000 | .00000 | .00000 | .00000 | .00000 | .00000 | .00000 | .00000 |

RUN NO. 4705/ 0 RN/L = 2.40 GRADIENT INTERVAL = -5.00/ 5.00

| Y | Z | X | ALPHA | BETA | PHI | CN | CLM | CY | CYN | CBL | CA |
|---|---|---|---|---|---|---|---|---|---|---|---|
| -295.500 | 198.060 | 602.38000 | -.16169 | -15.31200 | -.19386 | -.04093 | .01332 | .52098 | -.15172 | .05797 | .22179 |
| -302.020 | 299.940 | 599.65000 | -.16142 | -15.31100 | -.19494 | -.04334 | .01527 | .52455 | -.15402 | .05862 | .22273 |
| -302.400 | 400.480 | 599.65000 | -.16160 | -15.31100 | -.19485 | -.04386 | .01568 | .52506 | -.15435 | .05874 | .22392 |
| | GRADIENT | .00000 | .00000 | .00000 | .00000 | .00000 | .00000 | .00000 | .00000 | .00000 | .00000 |

IA143, AEDC V41A-P8A, O/ET W/R.H. SRB SEPARATING (OVXC89) ( 23 MAY 77 )

REFERENCE DATA

SREF = 2690.0000 SQ.FT. XMRP = 1097.0000 IN. XT
LREF = 1290.3000 INCHES YMRP = .0000 IN. YT
BREF = 1290.3000 INCHES ZMRP = 450.0000 IN. ZT
SCALE = .0100

PARAMETRIC DATA

ALPHA = .000 BETA = -15.000
DALPHA = -10.000 DBETA = -8.000
X = 600.000 MACH = 4.500
JET PC = .000

RUN NO. 4729/ 0 RN/L = 2.40 GRADIENT INTERVAL = -5.00/ 5.00

| Y | Z | X | ALPHA | BETA | PHI | CN | CLM | CY | CYN | CBL | CA |
|---|---|---|---|---|---|---|---|---|---|---|---|
| -100.540 | 200.300 | 599.54000 | -.15566 | -15.30300 | -.17425 | -.02339 | .00373 | .49439 | -.14092 | .05655 | .22285 |
| -101.760 | 299.930 | 599.88000 | -.16068 | -15.31000 | -.18453 | -.02317 | .00192 | .50598 | -.14397 | .05655 | .22115 |
| -101.580 | 350.230 | 599.88000 | -.15996 | -15.31200 | -.18517 | -.03051 | .00653 | .51018 | -.14576 | .05730 | .22025 |
| -101.910 | 400.720 | 599.86000 | -.15994 | -15.31200 | -.18843 | -.03674 | .01054 | .51603 | -.14877 | .05791 | .21975 |
| | GRADIENT | .00000 | .00000 | .00000 | .00000 | .00000 | .00000 | .00000 | .00000 | .00000 | .00000 |

IA143, AEDC V41A-P8A, O/ET W/R.H. SRB SEPARATING (OVXC90) ( 23 MAY 77 )

REFERENCE DATA

SREF = 2690.0000 SQ.FT. XMRP = 1097.0000 IN. XT
LREF = 1290.3000 INCHES YMRP = .0000 IN. YT
BREF = 1290.3000 INCHES ZMRP = 450.0000 IN. ZT
SCALE = .0100

PARAMETRIC DATA

ALPHA = .000 BETA = -15.000
DALPHA = -10.000 DBETA = -8.000
X = 600.000 MACH = 4.500
JET PC = .000

RUN NO. 4731/ 0 RN/L = 2.40 GRADIENT INTERVAL = -5.00/ 5.00

| Y | Z | X | ALPHA | BETA | PHI | CN | CLM | CY | CYN | CBL | CA |
|---|---|---|---|---|---|---|---|---|---|---|---|
| -300.540 | 200.340 | 599.38000 | -.16236 | -15.31100 | -.19385 | -.03872 | .01137 | .51786 | -.15021 | .05727 | .22071 |
| -301.340 | 299.840 | 599.49000 | -.16146 | -15.31100 | -.19481 | -.04243 | .01437 | .52352 | -.15331 | .05835 | .22149 |
| -302.070 | 400.460 | 599.77000 | -.16133 | -15.31100 | -.19481 | -.04379 | .01549 | .52473 | -.15413 | .05864 | .22274 |
| | GRADIENT | .00000 | .00000 | .00000 | .00000 | .00000 | .00000 | .00000 | .00000 | .00000 | .00000 |

IA143, AEDC V41A-P8A, O/ET W/R.H. SRB SEPARATING (OVXC91) ( 23 MAY 77 )

REFERENCE DATA

SREF = 2690.0000 SQ.FT. XMRP = 1097.0000 IN. XT
LREF = 1290.3000 INCHES YMRP = .0000 IN. YT
BREF = 1290.3000 INCHES ZMRP = 450.0000 IN. ZT
SCALE = .0100

PARAMETRIC DATA

ALPHA = .000 BETA = -15.000
DALPHA = -10.000 DBETA = -4.000
X = 600.000 MACH = 4.500
JET PC = .000

RUN NO. 4733/ 0 RN/L = 2.39 GRADIENT INTERVAL = -5.00/ 5.00

| Y | Z | X | ALPHA | BETA | PHI | CN | CLM | CY | CYN | CBL | CA |
|---|---|---|---|---|---|---|---|---|---|---|---|
| -100.410 | 300.160 | 599.47000 | -.16132 | -15.31100 | -.18831 | -.03231 | .00765 | .51178 | -.14690 | .05705 | .22198 |
| -101.160 | 350.270 | 599.65000 | -.16074 | -15.31100 | -.18932 | -.03741 | .01098 | .51614 | -.14905 | .05778 | .22142 |
| -100.920 | 400.710 | 599.68000 | -.16090 | -15.31200 | -.19123 | -.03999 | .01275 | .51942 | -.15080 | .05813 | .22161 |
| | GRADIENT | .00000 | .00000 | .00000 | .00000 | .00000 | .00000 | .00000 | .00000 | .00000 | .00000 |

IA143, AEDC V41A-P8A, O/ET W/R.H. SRB SEPARATING (OVXC92) ( 23 MAY 77 )

REFERENCE DATA

SREF = 2690.0000 SQ.FT. XMRP = 1097.0000 IN. XT
LREF = 1290.3000 INCHES YMRP = .0000 IN. YT
BREF = 1290.3000 INCHES ZMRP = 450.0000 IN. ZT
SCALE = .0100

PARAMETRIC DATA

ALPHA = .000 BETA = -15.000
DALPHA = -15.000 DBETA = -4.000
X = 600.000 MACH = 4.500
JET PC = .000

RUN NO. 4752/ 0 RN/L = 2.37 GRADIENT INTERVAL = -5.00/ 5.00

| Y | Z | X | ALPHA | BETA | PHI | CN | CLM | CY | CYN | CBL | CA |
|---|---|---|---|---|---|---|---|---|---|---|---|
| -100.100 | 300.450 | 599.60000 | -.16116 | -15.30900 | -.18704 | -.02710 | .00417 | .50811 | -.14516 | .05637 | .22154 |
| -101.060 | 350.410 | 599.51000 | -.16098 | -15.31000 | -.18736 | -.03192 | .00713 | .51096 | -.14631 | .05690 | .22134 |
| -101.380 | 400.710 | 599.69000 | -.16001 | -15.31100 | -.18813 | -.03624 | .01013 | .51521 | -.14846 | .05767 | .22050 |
| | GRADIENT | .00000 | .00000 | .00000 | .00000 | .00000 | .00000 | .00000 | .00000 | .00000 | .00000 |

RUN NO. 4753/ 0 RN/L = 2.39 GRADIENT INTERVAL = -5.00/ 5.00

| Y | Z | X | ALPHA | BETA | PHI | CN | CLM | CY | CYN | CBL | CA |
|---|---|---|---|---|---|---|---|---|---|---|---|
| -200.180 | 400.970 | 599.71000 | -.16062 | -15.31000 | -.19304 | -.04215 | .01421 | .52213 | -.15257 | .05829 | .22136 |
| -199.920 | 350.250 | 599.31000 | -.16109 | -15.31100 | -.19207 | -.04044 | .01280 | .51939 | -.15082 | .05784 | .22136 |
| -200.350 | 300.470 | 599.17000 | -.16118 | -15.31000 | -.19015 | -.03858 | .01126 | .51541 | -.14872 | .05732 | .22102 |
| | GRADIENT | .00000 | .00000 | .00000 | .00000 | .00000 | .00000 | .00000 | .00000 | .00000 | .00000 |

IA143, AEDC V41A-P8A, O/ET W/R.H. SRB SEPARATING (OVXC93) ( 23 MAY 77 )

REFERENCE DATA

SREF = 2690.0000 SQ.FT. XMRP = 1097.0000 IN. XT
LREF = 1290.3000 INCHES YMRP = .0000 IN. YT
BREF = 1290.3000 INCHES ZMRP = 450.0000 IN. ZT
SCALE = .0100

PARAMETRIC DATA

ALPHA = .000 BETA = -15.000
DALPHA = -10.000 DBETA = -4.000
X = 600.000 MACH = 4.500
JET PC = .000

RUN NO. 4732/ 0 RN/L = 2.39 GRADIENT INTERVAL = -5.00/ 5.00

| Y | Z | X | ALPHA | BETA | PHI | CN | CLM | CY | CYN | CBL | CA |
|---|---|---|---|---|---|---|---|---|---|---|---|
| -200.460 | 200.350 | 599.37000 | -.16116 | -15.31100 | -.18758 | -.03711 | .01045 | .51156 | -.14650 | .05709 | .22215 |
| -201.550 | 299.850 | 599.44000 | -.16142 | -15.31200 | -.19188 | -.04070 | .01311 | .51906 | -.15062 | .05793 | .22222 |
| -200.670 | 350.170 | 599.69000 | -.16127 | -15.31200 | -.19316 | -.04199 | .01416 | .52170 | -.15221 | .05829 | .22218 |
| -201.210 | 400.500 | 599.56000 | -.16127 | -15.31100 | -.19458 | -.04333 | .01521 | .52423 | -.15385 | .05860 | .22254 |
| | GRADIENT | .00000 | .00000 | .00000 | .00000 | .00000 | .00000 | .00000 | .00000 | .00000 | .00000 |

IA143, AEDC V41A-P8A, O/ET W/R.H. SRB SEPARATING (OVXC94) ( 23 MAY 77 )

REFERENCE DATA

SREF = 2690.0000 SQ.FT. XMRP = 1097.0000 IN. XT
LREF = 1290.3000 INCHES YMRP = .0000 IN. YT
BREF = 1290.3000 INCHES ZMRP = 450.0000 IN. ZT
SCALE = .0100

PARAMETRIC DATA

ALPHA = .000 BETA = -15.000
DALPHA = -15.000 DBETA = -8.000
X = 600.000 MACH = 4.500
JET PC = .000

RUN NO. 4755/ 0 RN/L = 2.38 GRADIENT INTERVAL = -5.00/ 5.00

| Y | Z | X | ALPHA | BETA | PHI | CN | CLM | CY | CYN | CBL | CA |
|---|---|---|---|---|---|---|---|---|---|---|---|
| -100.340 | 400.240 | 599.61000 | -.15835 | -15.31000 | -.18137 | -.02731 | .00468 | .50733 | -.14438 | .05733 | .21976 |
| -99.048 | 350.190 | 599.41000 | -.15972 | -15.30900 | -.18238 | -.02128 | .00057 | .50386 | -.14289 | .05640 | .21998 |
| -99.368 | 300.460 | 599.32000 | -.15874 | -15.30700 | -.18023 | -.01612 | -.00200 | .49821 | -.14051 | .05566 | .22098 |
| | GRADIENT | .00000 | .00000 | .00000 | .00000 | .00000 | .00000 | .00000 | .00000 | .00000 | .00000 |

RUN NO. 4754/ 0 RN/L = 2.38 GRADIENT INTERVAL = -5.00/ 5.00

| Y | Z | X | ALPHA | BETA | PHI | CN | CLM | CY | CYN | CBL | CA |
|---|---|---|---|---|---|---|---|---|---|---|---|
| -200.560 | 300.170 | 599.80000 | -.16115 | -15.31000 | -.18700 | -.03391 | .00798 | .50978 | -.14546 | .05666 | .22069 |
| -200.770 | 350.350 | 599.64000 | -.16072 | -15.31100 | -.18883 | -.03699 | .01021 | .51421 | -.14790 | .05730 | .22014 |
| -200.990 | 400.630 | 599.73000 | -.16077 | -15.31100 | -.19146 | -.03937 | .01193 | .51854 | -.15020 | .05777 | .21968 |
| | GRADIENT | .00000 | .00000 | .00000 | .00000 | .00000 | .00000 | .00000 | .00000 | .00000 | .00000 |

IA143, AEDC V41A-P8A, O/ET W/R.H. SRB SEPARATING (OVXC95) ( 23 MAY 77 )

REFERENCE DATA

SREF = 2690.0000 SQ.FT. XMRP = 1097.0000 IN. XT
LREF = 1290.3000 INCHES YMRP = .0000 IN. YT
BREF = 1290.3000 INCHES ZMRP = 450.0000 IN. ZT
SCALE = .0100

PARAMETRIC DATA

ALPHA = .000 BETA = -15.000
DALPHA = -10.000 DBETA = -8.000
X = 600.000 MACH = 4.500
JET PC = .000

RUN NO. 4730/ 0 RN/L = 2.40 GRADIENT INTERVAL = -5.00/ 5.00

| Y | Z | X | ALPHA | BETA | PHI | CN | CLM | CY | CYN | CBL | CA |
|---|---|---|---|---|---|---|---|---|---|---|---|
| -200.590 | 300.230 | 599.39000 | -.16115 | -15.31200 | -.18955 | -.03828 | .01124 | .51511 | -.14838 | .05750 | .22106 |
| -201.420 | 350.280 | 599.63000 | -.16110 | -15.31200 | -.19167 | -.04019 | .01260 | .51877 | -.15041 | .05789 | .22061 |
| -201.490 | 400.710 | 599.82000 | -.16101 | -15.31200 | -.19332 | -.04227 | .01421 | .52232 | -.15248 | .05839 | .22092 |
| | GRADIENT | .00000 | .00000 | .00000 | .00000 | .00000 | .00000 | .00000 | .00000 | .00000 | .00000 |

IA143, AEDC V41A-P8A, O/ET W/R.H. SRB SEPARATING (OVXC96) ( 23 MAY 77 )

REFERENCE DATA

SREF = 2690.0000 SQ.FT. XMRP = 1097.0000 IN. XT
LREF = 1290.3000 INCHES YMRP = .0000 IN. YT
BREF = 1290.3000 INCHES ZMRP = 450.0000 IN. ZT
SCALE = .0100

PARAMETRIC DATA

ALPHA = .000 BETA = -15.000
DALPHA = -5.000 DBETA = 4.000
X = 900.000 MACH = 4.500
JET PC = .000

RUN NO. 4709/ 0 RN/L = 2.40 GRADIENT INTERVAL = -5.00/ 5.00

| Y | Z | X | ALPHA | BETA | PHI | CN | CLM | CY | CYN | CBL | CA |
|---|---|---|---|---|---|---|---|---|---|---|---|
| -100.230 | 200.120 | 899.39000 | -.16125 | -15.31200 | -.19089 | -.04085 | .01344 | .51952 | -.15090 | .05825 | .22348 |
| -100.830 | 275.120 | 899.35000 | -.16137 | -15.31200 | -.19333 | -.04307 | .01506 | .52350 | -.15323 | .05870 | .22339 |
| -101.310 | 425.510 | 899.39000 | -.16182 | -15.31100 | -.19503 | -.04384 | .01572 | .52544 | -.15452 | .05877 | .22463 |
| -100.510 | 500.310 | 899.33000 | -.16185 | -15.31100 | -.19504 | -.04376 | .01569 | .52528 | -.15448 | .05877 | .22460 |
| -100.620 | 600.330 | 899.40000 | -.16194 | -15.31100 | -.19514 | -.04385 | .01573 | .52560 | -.15457 | .05880 | .22477 |
| | GRADIENT | .00000 | .00000 | .00000 | .00000 | .00000 | .00000 | .00000 | .00000 | .00000 | .00000 |

RUN NO. 4710/ 0 RN/L = 2.39 GRADIENT INTERVAL = -5.00/ 5.00

| Y | Z | X | ALPHA | BETA | PHI | CN | CLM | CY | CYN | CBL | CA |
|---|---|---|---|---|---|---|---|---|---|---|---|
| -400.470 | 600.090 | 899.40000 | -.16174 | -15.31100 | -.19491 | -.04383 | .01574 | .52549 | -.15453 | .05879 | .22471 |
| -399.570 | 499.510 | 899.33000 | -.16195 | -15.31100 | -.19513 | -.04384 | .01572 | .52543 | -.15453 | .05878 | .22470 |
| -399.620 | 424.830 | 899.35000 | -.16181 | -15.31100 | -.19494 | -.04384 | .01571 | .52526 | -.15444 | .05877 | .22455 |
| -399.670 | 275.040 | 899.34000 | -.16194 | -15.31100 | -.19507 | -.04394 | .01576 | .52527 | -.15448 | .05876 | .22471 |
| -399.690 | 200.170 | 899.43000 | -.16187 | -15.31100 | -.19500 | -.04383 | .01573 | .52509 | -.15442 | .05875 | .22464 |
| | GRADIENT | .00000 | .00000 | .00000 | .00000 | .00000 | .00000 | .00000 | .00000 | .00000 | .00000 |

IA143, AEDC V41A-P8A, O/ET W/R.H. SRB SEPARATING (OVXC97) ( 23 MAY 77 )

REFERENCE DATA

SREF = 2690.0000 SQ.FT. XMRP = 1097.0000 IN. XT
LREF = 1290.3000 INCHES YMRP = .0000 IN. YT
BREF = 1290.3000 INCHES ZMRP = 450.0000 IN. ZT
SCALE = .0100

PARAMETRIC DATA

ALPHA = .000 BETA = -15.000
DALPHA = -5.000 DBETA = -8.000
X = 900.000 MACH = 4.500
JET PC = .000

RUN NO. 4707/ 0 RN/L = 2.40 GRADIENT INTERVAL = -5.00/ 5.00

| Y | Z | X | ALPHA | BETA | PHI | CN | CLM | CY | CYN | CBL | CA |
|---|---|---|---|---|---|---|---|---|---|---|---|
| -100.720 | 275.030 | 899.44000 | -.16069 | -15.31200 | -.18982 | -.03842 | .01181 | .51790 | -.14989 | .05813 | .22146 |
| -102.870 | 425.870 | 899.78000 | -.16177 | -15.31100 | -.19523 | -.04385 | .01568 | .52537 | -.15446 | .05877 | .22384 |
| -101.240 | 500.300 | 899.72000 | -.16185 | -15.31100 | -.19503 | -.04383 | .01568 | .52510 | -.15444 | .05873 | .22452 |
| -101.970 | 600.660 | 899.61000 | -.16176 | -15.31100 | -.19490 | -.04378 | .01570 | .52489 | -.15438 | .05872 | .22452 |
| | GRADIENT | .00000 | .00000 | .00000 | .00000 | .00000 | .00000 | .00000 | .00000 | .00000 | .00000 |

IA143, AEDC V41A-P8A, O/ET W/R.H. SRB SEPARATING (OVXC98) ( 23 MAY 77 )

REFERENCE DATA

SREF = 2690.0000 SQ.FT. XMRP = 1097.0000 IN. XT
LREF = 1290.3000 INCHES YMRP = .0000 IN. YT
BREF = 1290.3000 INCHES ZMRP = 450.0000 IN. ZT
SCALE = .0100

PARAMETRIC DATA

ALPHA = .000 BETA = -15.000
DALPHA = -5.000 DBETA = -12.000
X = 900.000 MACH = 4.500
JET PC = .000

RUN NO. 4708/ 0 RN/L = 2.40 GRADIENT INTERVAL = -5.00/ 5.00

| Y | Z | X | ALPHA | BETA | PHI | CN | CLM | CY | CYN | CBL | CA |
|---|---|---|---|---|---|---|---|---|---|---|---|
| -397.650 | 198.140 | 902.90000 | -.16170 | -15.31100 | -.19492 | -.04395 | .01568 | .52510 | -.15433 | .05872 | .22394 |
| -401.060 | 274.850 | 899.78000 | -.16173 | -15.31100 | -.19497 | -.04391 | .01572 | .52511 | -.15436 | .05873 | .22423 |
| -403.010 | 425.450 | 899.81000 | -.16179 | -15.31100 | -.19495 | -.04380 | .01572 | .52551 | -.15457 | .05881 | .22471 |
| -401.420 | 500.230 | 899.75000 | -.16188 | -15.31100 | -.19509 | -.04373 | .01567 | .52559 | -.15458 | .05881 | .22467 |
| -401.950 | 600.550 | 899.87000 | -.16196 | -15.31100 | -.19516 | -.04387 | .01573 | .52563 | -.15460 | .05881 | .22471 |
| | GRADIENT | .00000 | .00000 | .00000 | .00000 | .00000 | .00000 | .00000 | .00000 | .00000 | .00000 |

IA143, AEDC V41A-P8A, O/ET W/R.H. SRB SEPARATING (OVXC99) ( 23 MAY 77 )

REFERENCE DATA

SREF = 2690.0000 SQ.FT. XMRP = 1097.0000 IN. XT
LREF = 1290.3000 INCHES YMRP = .0000 IN. YT
BREF = 1290.3000 INCHES ZMRP = 450.0000 IN. ZT
SCALE = .0100

PARAMETRIC DATA

ALPHA = .000 BETA = -15.000
DALPHA = -10.000 DBETA = .000
X = 900.000 MACH = 4.500
JET PC = .000

RUN NO. 4736/ 0 RN/L = 2.39 GRADIENT INTERVAL = -5.00/ 5.00

| Y | Z | X | ALPHA | BETA | PHI | CN | CLM | CY | CYN | CBL | CA |
|---|---|---|---|---|---|---|---|---|---|---|---|
| -100.240 | 300.130 | 899.35000 | -.16108 | -15.31200 | -.19214 | -.04177 | .01402 | .52169 | -.15209 | .05846 | .22249 |
| -101.870 | 400.850 | 899.36000 | -.16147 | -15.31100 | -.19482 | -.04389 | .01562 | .52514 | -.15437 | .05873 | .22345 |
| -101.310 | 500.900 | 899.46000 | -.16172 | -15.31100 | -.19491 | -.04386 | .01571 | .52527 | -.15449 | .05876 | .22444 |
| | GRADIENT | .00000 | .00000 | .00000 | .00000 | .00000 | .00000 | .00000 | .00000 | .00000 | .00000 |

RUN NO. 4737/ 0 RN/L = 2.39 GRADIENT INTERVAL = -5.00/ 5.00

| Y | Z | X | ALPHA | BETA | PHI | CN | CLM | CY | CYN | CBL | CA |
|---|---|---|---|---|---|---|---|---|---|---|---|
| -300.080 | 500.110 | 899.28000 | -.16191 | -15.31100 | -.19506 | -.04395 | .01575 | .52540 | -.15453 | .05877 | .22464 |
| -299.830 | 399.820 | 899.26000 | -.16188 | -15.31100 | -.19513 | -.04385 | .01571 | .52531 | -.15451 | .05875 | .22453 |
| -299.660 | 299.990 | 899.36000 | -.16193 | -15.31100 | -.19516 | -.04389 | .01569 | .52515 | -.15446 | .05872 | .22435 |
| | GRADIENT | .00000 | .00000 | .00000 | .00000 | .00000 | .00000 | .00000 | .00000 | .00000 | .00000 |

IA143, AEDC V41A-P8A, O/ET W/R.H. SRB SEPARATING (OVXD00) ( 23 MAY 77 )

REFERENCE DATA

SREF = 2690.0000 SQ.FT. XMRP = 1097.0000 IN. XT
LREF = 1290.3000 INCHES YMRP = .0000 IN. YT
BREF = 1290.3000 INCHES ZMRP = 450.0000 IN. ZT
SCALE = .0100

PARAMETRIC DATA

ALPHA = .000 BETA = -15.000
DALPHA = -15.000 DBETA = .000
X = 900.000 MACH = 4.500
JET PC = .000

RUN NO. 4765/ 0 RN/L = 2.38 GRADIENT INTERVAL = -5.00/ 5.00

| Y | Z | X | ALPHA | BETA | PHI | CN | CLM | CY | CYN | CBL | CA |
|---|---|---|---|---|---|---|---|---|---|---|---|
| -100.080 | 300.410 | 899.42000 | -.16058 | -15.31000 | -.19069 | -.04037 | .01294 | .51974 | -.15101 | .05816 | .22209 |
| -101.470 | 400.670 | 899.34000 | -.16084 | -15.31000 | -.19431 | -.04372 | .01547 | .52472 | -.15421 | .05865 | .22253 |
| -101.840 | 501.380 | 899.42000 | -.16114 | -15.30900 | -.19433 | -.04392 | .01564 | .52489 | -.15440 | .05868 | .22372 |
| | GRADIENT | .00000 | .00000 | .00000 | .00000 | .00000 | .00000 | .00000 | .00000 | .00000 | .00000 |

RUN NO. 4766/ 0 RN/L = 2.38 GRADIENT INTERVAL = -5.00/ 5.00

| Y | Z | X | ALPHA | BETA | PHI | CN | CLM | CY | CYN | CBL | CA |
|---|---|---|---|---|---|---|---|---|---|---|---|
| -300.190 | 501.030 | 899.29000 | -.16124 | -15.31000 | -.19436 | -.04384 | .01563 | .52529 | -.15456 | .05875 | .22416 |
| -299.570 | 399.940 | 899.07000 | -.16120 | -15.30900 | -.19434 | -.04389 | .01569 | .52484 | -.15440 | .05868 | .22414 |
| -299.340 | 300.410 | 899.30000 | -.16117 | -15.30900 | -.19432 | -.04393 | .01566 | .52472 | -.15433 | .05866 | .22375 |
| | GRADIENT | .00000 | .00000 | .00000 | .00000 | .00000 | .00000 | .00000 | .00000 | .00000 | .00000 |

IA143, AEDC V41A-P8A, O/ET W/R.H. SRB SEPARATING (OVXD01) ( 23 MAY 77 )

REFERENCE DATA

SREF = 2690.0000 SQ.FT. XMRP = 1097.0000 IN. XT
LREF = 1290.3000 INCHES YMRP = .0000 IN. YT
BREF = 1290.3000 INCHES ZMRP = 450.0000 IN. ZT
SCALE = .0100

PARAMETRIC DATA

ALPHA = .000 BETA = -15.000
DALPHA = -10.000 DBETA = -12.000
X = 900.000 MACH = 4.500
JET PC = .000

RUN NO. 4742/ 0 RN/L = 2.40 GRADIENT INTERVAL = -5.00/ 5.00

| Y | Z | X | ALPHA | BETA | PHI | CN | CLM | CY | CYN | CBL | CA |
|---|---|---|---|---|---|---|---|---|---|---|---|
| -101.610 | 300.100 | 899.09000 | -.15924 | -15.31200 | -.18594 | -.03443 | .00923 | .51347 | -.14740 | .05785 | .21977 |
| -104.190 | 401.360 | 899.87000 | -.16086 | -15.31100 | -.19485 | -.04315 | .01490 | .52444 | -.15389 | .05859 | .22020 |
| -102.200 | 500.950 | 899.83000 | -.16149 | -15.31100 | -.19490 | -.04393 | .01561 | .52460 | -.15419 | .05864 | .22305 |
| | GRADIENT | .00000 | .00000 | .00000 | .00000 | .00000 | .00000 | .00000 | .00000 | .00000 | .00000 |

RUN NO. 4743/ 0 RN/L = 2.40 GRADIENT INTERVAL = -5.00/ 5.00

| Y | Z | X | ALPHA | BETA | PHI | CN | CLM | CY | CYN | CBL | CA |
|---|---|---|---|---|---|---|---|---|---|---|---|
| -299.870 | 499.800 | 899.28000 | -.16182 | -15.31100 | -.19505 | -.04396 | .01568 | .52487 | -.15435 | .05868 | .22399 |
| -298.690 | 399.190 | 898.94000 | -.16169 | -15.31100 | -.19500 | -.04402 | .01563 | .52468 | -.15414 | .05862 | .22332 |
| -297.940 | 299.700 | 899.00000 | -.16145 | -15.31100 | -.19500 | -.04373 | .01533 | .52485 | -.15412 | .05865 | .22215 |
| | GRADIENT | .00000 | .00000 | .00000 | .00000 | .00000 | .00000 | .00000 | .00000 | .00000 | .00000 |

IA143, AEDC V41A-P8A, O/ET W/R.H. SRB SEPARATING (OVXD02) ( 23 MAY 77 )

REFERENCE DATA

SREF = 2690.0000 SQ.FT. XMRP = 1097.0000 IN. XT
LREF = 1290.3000 INCHES YMRP = .0000 IN. YT
BREF = 1290.3000 INCHES ZMRP = 450.0000 IN. ZT
SCALE = .0100

PARAMETRIC DATA

ALPHA = .000 BETA = -15.000
DALPHA = -15.000 DBETA = -12.000
X = 900.000 MACH = 4.500
JET PC = .000

RUN NO. 4758/ 0 RN/L = 2.39 GRADIENT INTERVAL = -5.00/ 5.00

| Y | Z | X | ALPHA | BETA | PHI | CN | CLM | CY | CYN | CBL | CA |
|---|---|---|---|---|---|---|---|---|---|---|---|
| -100.430 | 300.490 | 899.59000 | -.15899 | -15.31000 | -.18434 | -.03173 | .00741 | .51028 | -.14598 | .05737 | .22012 |
| -103.790 | 400.810 | 900.21000 | -.15952 | -15.31000 | -.19297 | -.04163 | .01376 | .52292 | -.15286 | .05845 | .21795 |
| -101.870 | 502.180 | 900.79000 | -.16015 | -15.31000 | -.19405 | -.04321 | .01501 | .52411 | -.15373 | .05856 | .22013 |
| | GRADIENT | .00000 | .00000 | .00000 | .00000 | .00000 | .00000 | .00000 | .00000 | .00000 | .00000 |

RUN NO. 4759/ 0 RN/L = 2.39 GRADIENT INTERVAL = -5.00/ 5.00

| Y | Z | X | ALPHA | BETA | PHI | CN | CLM | CY | CYN | CBL | CA |
|---|---|---|---|---|---|---|---|---|---|---|---|
| -299.110 | 499.700 | 899.08000 | -.16111 | -15.31000 | -.19439 | -.04404 | .01560 | .52465 | -.15416 | .05862 | .22292 |
| -298.080 | 399.560 | 898.88000 | -.16096 | -15.31000 | -.19433 | -.04395 | .01546 | .52443 | -.15400 | .05859 | .22214 |
| -298.600 | 300.650 | 899.15000 | -.16064 | -15.31000 | -.19417 | -.04321 | .01483 | .52403 | -.15376 | .05851 | .22062 |
| | GRADIENT | .00000 | .00000 | .00000 | .00000 | .00000 | .00000 | .00000 | .00000 | .00000 | .00000 |

IA143, AEDC V41A-P8A, O/E W/R.H. SRB SEPARATING (OVXD03) ( 23 MAY 77 )

REFERENCE DATA

SREF = 2690.0000 SQ.FT. XMRP = 1097.0000 IN. XT
LREF = 1290.3000 INCHES YMRP = .0000 IN. YT
BREF = 1290.3000 INCHES ZMRP = 450.0000 IN. ZT
SCALE = .0100

PARAMETRIC DATA

ALPHA = .000 BETA = -15.000
DALPHA = -12.000 DBETA = -6.000
X = 900.000 MACH = 4.500
JET PC = .000

RUN NO. 4748/ 0 RN/L = 2.38 GRADIENT INTERVAL = -5.00/ 5.00

| Y | Z | X | ALPHA | BETA | PHI | CN | CLM | CY | CYN | CBL | CA |
|---|---|---|---|---|---|---|---|---|---|---|---|
| -200.360 | 300.430 | 899.41000 | -.16068 | -15.31000 | -.19418 | -.04307 | .01494 | .52443 | -.15394 | .05858 | .22172 |
| -202.210 | 400.450 | 899.69000 | -.16116 | -15.31000 | -.19446 | -.04394 | .01567 | .52472 | -.15419 | .05864 | .22347 |
| -201.850 | 501.220 | 899.83000 | -.16113 | -15.30900 | -.19418 | -.04387 | .01567 | .52477 | -.15431 | .05868 | .22411 |
| | GRADIENT | .00000 | .00000 | .00000 | .00000 | .00000 | .00000 | .00000 | .00000 | .00000 | .00000 |

IA143, AEDC V41A-P8A, O/ET W/R.H. SRB SEPARATING (OVXD04) ( 23 MAY 77 )

REFERENCE DATA

SREF = 2690.0000 SQ.FT. XMRP = 1097.0000 IN. XT
LREF = 1290.3000 INCHES YMRP = .0000 IN. YT
BREF = 1290.3000 INCHES ZMRP = 450.0000 IN. ZT
SCALE = .0100

PARAMETRIC DATA

ALPHA = .000 BETA = -15.000
DALPHA = -15.000 DBETA = -6.000
X = 900.000 MACH = 4.500
JET PC = .000

RUN NO. 4762/ 0 RN/L = 2.38 GRADIENT INTERVAL = -5.00/ 5.00

| Y | Z | X | ALPHA | BETA | PHI | CN | CLM | CY | CYN | CBL | CA |
|---|---|---|---|---|---|---|---|---|---|---|---|
| -195.990 | 373.640 | 901.52000 | -.16090 | -15.31000 | -.19422 | -.04398 | .01556 | .52481 | -.15422 | .05867 | .22259 |
| -203.340 | 602.590 | 900.38000 | -.16129 | -15.31000 | -.19441 | -.04392 | .01572 | .52516 | -.15449 | .05873 | .22437 |
| -201.990 | 802.240 | 900.04000 | -.16129 | -15.31000 | -.19444 | -.04387 | .01569 | .52492 | -.15443 | .05870 | .22423 |
| -200.380 | 1000.100 | 899.35000 | -.16122 | -15.31000 | -.19433 | -.04387 | .01570 | .52489 | -.15444 | .05871 | .22420 |
| | GRADIENT | .00000 | .00000 | .00000 | .00000 | .00000 | .00000 | .00000 | .00000 | .00000 | .00000 |

IA143, AEDC V41A-P8A, O/ET W/R.H. SRB SEPARATING (OVXD05) ( 23 MAY 77 )

REFERENCE DATA

SREF = 2690.0000 SQ.FT. XMRP = 1097.0000 IN. XT
LREF = 1290.3000 INCHES YMRP = .0000 IN. YT
BREF = 1290.3000 INCHES ZMRP = 450.0000 IN. ZT
SCALE = .0100

PARAMETRIC DATA

ALPHA = .000 BETA = -15.000
DALPHA = -10.000 DBETA = -4.000
X = 900.000 MACH = 4.500
JET PC = .000

RUN NO. 4738/ 0 RN/L = 2.38 GRADIENT INTERVAL = -5.00/ 5.00

| Y | Z | X | ALPHA | BETA | PHI | CN | CLM | CY | CYN | CBL | CA |
|---|---|---|---|---|---|---|---|---|---|---|---|
| -200.380 | 300.230 | 899.43000 | -.16144 | -15.31100 | -.19497 | -.04359 | .01535 | .52481 | -.15422 | .05866 | .22253 |
| -200.800 | 350.130 | 899.55000 | -.16156 | -15.31100 | -.19491 | -.04396 | .01565 | .52496 | -.15429 | .05869 | .22340 |
| -201.050 | 400.530 | 899.50000 | -.16171 | -15.31100 | -.19493 | -.04392 | .01570 | .52522 | -.15443 | .05874 | .22410 |
| | GRADIENT | .00000 | .00000 | .00000 | .00000 | .00000 | .00000 | .00000 | .00000 | .00000 | .00000 |

RUN NO. 4739/ 0 RN/L = 2.38 GRADIENT INTERVAL = -5.00/ 5.00

| Y | Z | X | ALPHA | BETA | PHI | CN | CLM | CY | CYN | CBL | CA |
|---|---|---|---|---|---|---|---|---|---|---|---|
| -300.280 | 400.510 | 899.52000 | -.16188 | -15.31100 | -.19516 | -.04383 | .01568 | .52528 | -.15450 | .05874 | .22446 |
| -299.410 | 349.970 | 899.41000 | -.16179 | -15.31100 | -.19500 | -.04394 | .01571 | .52498 | -.15441 | .05871 | .22419 |
| -299.120 | 300.160 | 899.61000 | -.16171 | -15.31100 | -.19492 | -.04391 | .01568 | .52516 | -.15444 | .05874 | .22405 |
| | GRADIENT | .00000 | .00000 | .00000 | .00000 | .00000 | .00000 | .00000 | .00000 | .00000 | .00000 |

IA143, AEDC V41A-P8A, O/ET W/R.H. SRB SEPARATING (OVXD06) ( 23 MAY 77 )

REFERENCE DATA

SREF = 2690.0000 SQ.FT. XMRP = 1097.0000 IN. XT
LREF = 1290.3000 INCHES YMRP = .0000 IN. YT
BREF = 1290.3000 INCHES ZMRP = 450.0000 IN. ZT
SCALE = .0100

PARAMETRIC DATA

ALPHA = .000 BETA = -15.000
DALPHA = -15.000 DBETA = -4.000
X = 900.000 MACH = 4.500
JET PC = .000

RUN NO. 4763/ 0 RN/L = 2.38 GRADIENT INTERVAL = -5.00/ 5.00

| Y | Z | X | ALPHA | BETA | PHI | CN | CLM | CY | CYN | CBL | CA |
|---|---|---|---|---|---|---|---|---|---|---|---|
| -200.010 | 300.380 | 899.42000 | -.16070 | -15.31000 | -.19410 | -.04297 | .01485 | .52434 | -.15390 | .05858 | .22163 |
| -200.670 | 350.370 | 899.35000 | -.16105 | -15.31000 | -.19454 | -.04372 | .01539 | .52486 | -.15423 | .05866 | .22237 |
| -201.180 | 400.420 | 899.41000 | -.16111 | -15.31000 | -.19433 | -.04408 | .01564 | .52496 | -.15432 | .05869 | .22314 |
| | GRADIENT | .00000 | .00000 | .00000 | .00000 | .00000 | .00000 | .00000 | .00000 | .00000 | .00000 |

RUN NO. 4764/ 0 RN/L = 2.38 GRADIENT INTERVAL = -5.00/ 5.00

| Y | Z | X | ALPHA | BETA | PHI | CN | CLM | CY | CYN | CBL | CA |
|---|---|---|---|---|---|---|---|---|---|---|---|
| -300.770 | 401.080 | 899.49000 | -.16129 | -15.31000 | -.19448 | -.04396 | .01569 | .52506 | -.15443 | .05870 | .22404 |
| -300.270 | 350.540 | 899.10000 | -.16112 | -15.31000 | -.19434 | -.04389 | .01565 | .52472 | -.15430 | .05866 | .22365 |
| -300.180 | 300.550 | 898.98000 | -.16111 | -15.31000 | -.19435 | -.04398 | .01568 | .52461 | -.15423 | .05863 | .22352 |
| | GRADIENT | .00000 | .00000 | .00000 | .00000 | .00000 | .00000 | .00000 | .00000 | .00000 | .00000 |

IA143, AEDC V41A-P8A, O/ET W/R.H. SRB SEPARATING (OVXD07) ( 23 MAY 77 )

REFERENCE DATA

SREF = 2690.0000 SQ.FT. XMRP = 1097.0000 IN. XT
LREF = 1290.3000 INCHES YMRP = .0000 IN. YT
BREF = 1290.3000 INCHES ZMRP = 450.0000 IN. ZT
SCALE = .0100

PARAMETRIC DATA

ALPHA = .000 BETA = -15.000
DALPHA = -10.000 DBETA = -8.000
X = 900.000 MACH = 4.500
JET PC = .000

RUN NO. 4741/ 0 RN/L = 2.40 GRADIENT INTERVAL = -5.00/ 5.00

| Y | Z | X | ALPHA | BETA | PHI | CN | CLM | CY | CYN | CBL | CA |
|---|---|---|---|---|---|---|---|---|---|---|---|
| -200.340 | 400.070 | 899.54000 | -.16158 | -15.31100 | -.19490 | -.04403 | .01562 | .52485 | -.15425 | .05868 | .22314 |
| -199.380 | 349.600 | 899.17000 | -.16138 | -15.31100 | -.19501 | -.04370 | .01541 | .52486 | -.15417 | .05865 | .22244 |
| -199.700 | 299.960 | 899.10000 | -.16123 | -15.31100 | -.19486 | -.04305 | .01490 | .52402 | -.15375 | .05851 | .22146 |
| | GRADIENT | .00000 | .00000 | .00000 | .00000 | .00000 | .00000 | .00000 | .00000 | .00000 | .00000 |

RUN NO. 4740/ 0 RN/L = 2.39 GRADIENT INTERVAL = -5.00/ 5.00

| Y | Z | X | ALPHA | BETA | PHI | CN | CLM | CY | CYN | CBL | CA |
|---|---|---|---|---|---|---|---|---|---|---|---|
| -301.130 | 299.810 | 899.73000 | -.16172 | -15.31100 | -.19506 | -.04399 | .01566 | .52497 | -.15429 | .05869 | .22352 |
| -300.900 | 350.170 | 899.55000 | -.16190 | -15.31100 | -.19518 | -.04403 | .01567 | .52548 | -.15449 | .05875 | .22394 |
| -300.880 | 400.380 | 899.64000 | -.16164 | -15.31100 | -.19491 | -.04388 | .01570 | .52509 | -.15443 | .05872 | .22419 |
| | GRADIENT | .00000 | .00000 | .00000 | .00000 | .00000 | .00000 | .00000 | .00000 | .00000 | .00000 |

IA143, AEDC V41A-P8A, O/ET W/R.H. SRB SEPARATING (OVXD08) ( 23 MAY 77 )

REFERENCE DATA

SREF = 2690.0000 SQ.FT. XMRP = 1097.0000 IN. XT
LREF = 1290.3000 INCHES YMRP = .0000 IN. YT
BREF = 1290.3000 INCHES ZMRP = 450.0000 IN. ZT
SCALE = .0100

PARAMETRIC DATA

ALPHA = .000 BETA = -15.000
DALPHA = -15.000 DBETA = -8.000
X = 900.000 MACH = 4.500
JET PC = .000

RUN NO. 4760/ 0 RN/L = 2.39 GRADIENT INTERVAL = -5.00/ 5.00

| Y | Z | X | ALPHA | BETA | PHI | CN | CLM | CY | CYN | CBL | CA |
|---|---|---|---|---|---|---|---|---|---|---|---|
| -199.420 | 300.590 | 899.61000 | -.16040 | -15.31000 | -.19296 | -.04200 | .01405 | .52202 | -.15254 | .05828 | .22054 |
| -200.520 | 350.320 | 899.78000 | -.16060 | -15.31000 | -.19422 | -.04320 | .01499 | .52457 | -.15400 | .05860 | .22129 |
| -202.000 | 400.680 | 899.40000 | -.16076 | -15.31000 | -.19425 | -.04377 | .01538 | .52441 | -.15402 | .05860 | .22191 |
| | GRADIENT | .00000 | .00000 | .00000 | .00000 | .00000 | .00000 | .00000 | .00000 | .00000 | .00000 |

RUN NO. 4761/ 0 RN/L = 2.39 GRADIENT INTERVAL = -5.00/ 5.00

| Y | Z | X | ALPHA | BETA | PHI | CN | CLM | CY | CYN | CBL | CA |
|---|---|---|---|---|---|---|---|---|---|---|---|
| -300.420 | 400.950 | 899.54000 | -.16120 | -15.31000 | -.19437 | -.04405 | .01569 | .52489 | -.15431 | .05869 | .22348 |
| -299.870 | 350.470 | 899.32000 | -.16112 | -15.31000 | -.19430 | -.04404 | .01559 | .52472 | -.15420 | .05865 | .22303 |
| -299.580 | 300.580 | 899.30000 | -.16102 | -15.31000 | -.19425 | -.04387 | .01540 | .52469 | -.15413 | .05864 | .22239 |
| | GRADIENT | .00000 | .00000 | .00000 | .00000 | .00000 | .00000 | .00000 | .00000 | .00000 | .00000 |

IA143, AEDC V41A-P8A, O/ET W/R.H. SRB SEPARATING (OVXD09) ( 23 MAY 77 )

REFERENCE DATA

SREF = 2690.0000 SQ.FT. XMRP = 1097.0000 IN. XT
LREF = 1290.3000 INCHES YMRP = .0000 IN. YT
BREF = 1290.3000 INCHES ZMRP = 450.0000 IN. ZT
SCALE = .0100

PARAMETRIC DATA

ALPHA = .000 BETA = -15.000
DALPHA = -15.000 DBETA = 4.000
X = 1200.000 MACH = 4.500
JET PC = .000

RUN NO. 4711/ 0 RN/L = 2.40 GRADIENT INTERVAL = -5.00/ 5.00

| Y | Z | X | ALPHA | BETA | PHI | CN | CLM | CY | CYN | CBL | CA |
|---|---|---|---|---|---|---|---|---|---|---|---|
| -99.737 | .682 | 1199.30000 | -.16363 | -15.31100 | -.19692 | -.04045 | .01283 | .52162 | -.15246 | .05754 | .22378 |
| -99.927 | 100.670 | 1199.10001 | -.16262 | -15.31100 | -.19638 | -.04134 | .01368 | .52306 | -.15320 | .05802 | .22267 |
| -99.933 | 199.970 | 1199.20000 | -.16134 | -15.31100 | -.19492 | -.04343 | .01536 | .52487 | -.15421 | .05870 | .22268 |
| | GRADIENT | .00000 | .00000 | .00000 | .00000 | .00000 | .00000 | .00000 | .00000 | .00000 | .00000 |

RUN NO. 4712/ 0 RN/L = 2.40 GRADIENT INTERVAL = -5.00/ 5.00

| Y | Z | X | ALPHA | BETA | PHI | CN | CLM | CY | CYN | CBL | CA |
|---|---|---|---|---|---|---|---|---|---|---|---|
| -603.080 | 203.290 | 1199.70000 | -.16180 | -15.31100 | -.19502 | -.04372 | .01567 | .52507 | -.15441 | .05875 | .22443 |
| -599.870 | 100.660 | 1199.20000 | -.16184 | -15.31100 | -.19501 | -.04381 | .01571 | .52501 | -.15440 | .05873 | .22456 |
| -600.170 | .709 | 1199.10001 | -.16180 | -15.31100 | -.19501 | -.04378 | .01573 | .52498 | -.15440 | .05872 | .22466 |
| | GRADIENT | .00000 | .00000 | .00000 | .00000 | .00000 | .00000 | .00000 | .00000 | .00000 | .00000 |

IA143, AEDC V41A-P8A, O/ET W/R.H. SRB SEPARATING (OVXD10) ( 23 MAY 77 )

REFERENCE DATA

SREF = 2690.0000 SQ.FT. XMRP = 1097.0000 IN. XT
LREF = 1290.3000 INCHES YMRP = .0000 IN. YT
BREF = 1290.3000 INCHES ZMRP = 450.0000 IN. ZT
SCALE = .0100

PARAMETRIC DATA

ALPHA = .000 BETA = -15.000
DALPHA = -15.000 DBETA = -8.000
X = 1200.000 MACH = 4.500
JET PC = .000

RUN NO. 4714/ 0 RN/L = 2.39 GRADIENT INTERVAL = -5.00/ 5.00

| Y | Z | X | ALPHA | BETA | PHI | CN | CLM | CY | CYN | CBL | CA |
|---|---|---|---|---|---|---|---|---|---|---|---|
| -100.300 | 200.480 | 1199.39999 | -.16095 | -15.31100 | -.19466 | -.04299 | .01504 | .52477 | -.15403 | .05870 | .22162 |
| -99.134 | 100.840 | 1199.20000 | -.16174 | -15.31200 | -.19499 | -.04161 | .01389 | .52281 | -.15292 | .05819 | .22184 |
| -100.030 | .559 | 1199.39999 | -.16338 | -15.31100 | -.19580 | -.03984 | .01216 | .51981 | -.15157 | .05736 | .22264 |
| | GRADIENT | .00000 | .00000 | .00000 | .00000 | .00000 | .00000 | .00000 | .00000 | .00000 | .00000 |

RUN NO. 4713/ 0 RN/L = 2.39 GRADIENT INTERVAL = -5.00/ 5.00

| Y | Z | X | ALPHA | BETA | PHI | CN | CLM | CY | CYN | CBL | CA |
|---|---|---|---|---|---|---|---|---|---|---|---|
| -603.350 | .729 | 1200.50000 | -.16182 | -15.31100 | -.19497 | -.04383 | .01568 | .52493 | -.15440 | .05872 | .22437 |
| -599.520 | 100.120 | 1199.20000 | -.16175 | -15.31100 | -.19494 | -.04378 | .01571 | .52506 | -.15440 | .05872 | .22469 |
| -600.500 | 200.350 | 1199.30000 | -.16169 | -15.31100 | -.19492 | -.04369 | .01567 | .52515 | -.15445 | .05875 | .22451 |
| | GRADIENT | .00000 | .00000 | .00000 | .00000 | .00000 | .00000 | .00000 | .00000 | .00000 | .00000 |

IA143, AEDC V41A-P8A, O/ET W/R.H. SRB SEPARATING (OVXD11) ( 23 MAY 77 )

REFERENCE DATA

SREF = 2690.0000 SQ.FT. XMRP = 1097.0000 IN. XT
LREF = 1290.3000 INCHES YMRP = .0000 IN. YT
BREF = 1290.3000 INCHES ZMRP = 450.0000 IN. ZT
SCALE = .0100

PARAMETRIC DATA

ALPHA = .000 BETA = -15.000
DALPHA = -5.000 DBETA = -12.000
X = 1200.000 MACH = 4.500
JET PC = .000

RUN NO. 4715/ 0 RN/L = 2.39 GRADIENT INTERVAL = -5.00/ 5.00

| Y | Z | X | ALPHA | BETA | PHI | CN | CLM | CY | CYN | CBL | CA |
|---|---|---|---|---|---|---|---|---|---|---|---|
| -600.410 | 199.960 | 1199.10001 | -.16178 | -15.31100 | -.19499 | -.04377 | .01570 | .52492 | -.15438 | .05871 | .22449 |
| -599.680 | 100.200 | 1199.20000 | -.16177 | -15.31100 | -.19490 | -.04390 | .01575 | .52517 | -.15445 | .05875 | .22468 |
| -599.550 | .269 | 1199.30000 | -.16187 | -15.31100 | -.19504 | -.04387 | .01572 | .52497 | -.15439 | .05871 | .22455 |
| | GRADIENT | .00000 | .00000 | .00000 | .00000 | .00000 | .00000 | .00000 | .00000 | .00000 | .00000 |

IA143, AEDC V41A-P8A, O/ET W/R.H. SRB SEPARATING (OVXD12) ( 23 MAY 77 )

REFERENCE DATA

SREF = 2690.0000 SQ.FT. XMRP = 1097.0000 IN. XT
LREF = 1290.3000 INCHES YMRP = .0000 IN. YT
BREF = 1290.3000 INCHES ZMRP = 450.0000 IN. ZT
SCALE = .0100

PARAMETRIC DATA

ALPHA = .000 BETA = -15.000
DALPHA = -10.000 DBETA = .000
X = 1200.000 MACH = 4.500
JET PC = .000

RUN NO. 4746/ 0 RN/L = 2.39 GRADIENT INTERVAL = -5.00/ 5.00

| Y | Z | X | ALPHA | BETA | PHI | CN | CLM | CY | CYN | CBL | CA |
|---|---|---|---|---|---|---|---|---|---|---|---|
| -200.450 | -49.535 | 1199.10001 | -.16394 | -15.31000 | -.19844 | -.03950 | .01209 | .52177 | -.15262 | .05716 | .22347 |
| -199.990 | .184 | 1199.10001 | -.16248 | -15.31000 | -.19587 | -.04142 | .01360 | .52236 | -.15294 | .05778 | .22345 |
| -200.700 | 100.460 | 1199.10001 | -.16101 | -15.31000 | -.19465 | -.04272 | .01479 | .52427 | -.15398 | .05846 | .22243 |
| -200.670 | 150.180 | 1199.10001 | -.16084 | -15.31000 | -.19428 | -.04351 | .01541 | .52461 | -.15419 | .05864 | .22292 |
| | GRADIENT | .00000 | .00000 | .00000 | .00000 | .00000 | .00000 | .00000 | .00000 | .00000 | .00000 |

RUN NO. 4747/ 0 RN/L = 2.38 GRADIENT INTERVAL = -5.00/ 5.00

| Y | Z | X | ALPHA | BETA | PHI | CN | CLM | CY | CYN | CBL | CA |
|---|---|---|---|---|---|---|---|---|---|---|---|
| -401.790 | 151.330 | 1199.39999 | -.16142 | -15.31000 | -.19458 | -.04379 | .01566 | .52537 | -.15453 | .05876 | .22441 |
| -399.960 | 100.320 | 1199.00000 | -.16130 | -15.31000 | -.19440 | -.04382 | .01569 | .52517 | -.15448 | .05873 | .22447 |
| -399.760 | .376 | 1199.10001 | -.16132 | -15.31000 | -.19447 | -.04381 | .01569 | .52524 | -.15448 | .05875 | .22437 |
| -399.920 | -49.464 | 1199.20000 | -.16132 | -15.31000 | -.19444 | -.04390 | .01572 | .52505 | -.15444 | .05871 | .22442 |
| | GRADIENT | .00000 | .00000 | .00000 | .00000 | .00000 | .00000 | .00000 | .00000 | .00000 | .00000 |

IA143, AEDC V41A-P8A, O/ET W/R.H. SRB SEPARATING (OVXD13) ( 23 MAY 77 )

REFERENCE DATA

SREF = 2690.0000 SQ.FT. XMRP = 1097.0000 IN. XT
LREF = 1290.3000 INCHES YMRP = .0000 IN. YT
BREF = 1290.3000 INCHES ZMRP = 450.0000 IN. ZT
SCALE = .0100

PARAMETRIC DATA

ALPHA = .000 BETA = -15.000
DALPHA = -10.000 DBETA = -8.000
X = 1200.000 MACH = 4.500
JET PC = .000

RUN NO. 4744/ 0 RN/L = 2.40 GRADIENT INTERVAL = -5.00/ 5.00

| Y | Z | X | ALPHA | BETA | PHI | CN | CLM | CY | CYN | CBL | CA |
|---|---|---|---|---|---|---|---|---|---|---|---|
| -200.400 | -49.565 | 1199.30000 | -.16461 | -15.31000 | -.19852 | -.03900 | .01142 | .52027 | -.15193 | .05692 | .22278 |
| -200.950 | .366 | 1199.20000 | -.16336 | -15.31000 | -.19666 | -.04067 | .01282 | .52128 | -.15238 | .05751 | .22286 |
| -200.850 | 100.470 | 1199.30000 | -.16191 | -15.31100 | -.19603 | -.04123 | .01351 | .52312 | -.15324 | .05806 | .22099 |
| -200.300 | 150.150 | 1199.50000 | -.16115 | -15.31100 | -.19492 | -.04298 | .01490 | .52427 | -.15396 | .05855 | .22148 |
| | GRADIENT | .00000 | .00000 | .00000 | .00000 | .00000 | .00000 | .00000 | .00000 | .00000 | .00000 |

IA143, AEDC V41A-P8A, O/ET W/R.H. SRB SEPARATING (OVXD13) ( 23 MAY 77 )

REFERENCE DATA

SREF = 2690.0000 SQ.FT. XMRP = 1097.0000 IN. XT
LREF = 1290.3000 INCHES YMRP = .0000 IN. YT
BREF = 1290.3000 INCHES ZMRP = 450.0000 IN. ZT
SCALE = .0100

PARAMETRIC DATA

ALPHA = .000 BETA = -15.000
DALPHA = -10.000 DBETA = -8.000
X = 1200.000 MACH = 4.500
JET PC = .000

RUN NO. 4745/ 0 RN/L = 2.40 GRADIENT INTERVAL = -5.00/ 5.00

| Y | Z | X | ALPHA | BETA | PHI | CN | CLM | CY | CYN | CBL | CA |
|---|---|---|---|---|---|---|---|---|---|---|---|
| -402.580 | 151.420 | 1200.00000 | -.16191 | -15.31100 | -.19514 | -.04392 | .01569 | .52500 | -.15439 | .05871 | .22422 |
| -400.160 | 100.420 | 1199.10001 | -.16171 | -15.31100 | -.19494 | -.04393 | .01570 | .52484 | -.15432 | .05867 | .22420 |
| -399.570 | .392 | 1199.20000 | -.16194 | -15.31100 | -.19515 | -.04377 | .01543 | .52486 | -.15431 | .05864 | .22367 |
| -399.830 | -49.581 | 1199.30000 | -.16213 | -15.31100 | -.19540 | -.04364 | .01534 | .52472 | -.15422 | .05859 | .22371 |
| | GRADIENT | .00000 | .00000 | .00000 | .00000 | .00000 | .00000 | .00000 | .00000 | .00000 | .00000 |

IA143, AEDC V41A-P8A, O/ET W/R.H. SRB SEPARATING (OVXD14) ( 23 MAY 77 )

REFERENCE DATA

SREF = 2690.0000 SQ.FT. XMRP = 1097.0000 IN. XT
LREF = 1290.3000 INCHES YMRP = .0000 IN. YT
BREF = 1290.3000 INCHES ZMRP = 450.0000 IN. ZT
SCALE = .0100

PARAMETRIC DATA

ALPHA = .000 BETA = -15.000
DALPHA = -15.000 DBETA = -4.000
X = 1200.000 MACH = 4.500
JET PC = .000

RUN NO. 4767/ 0 RN/L = 2.38 GRADIENT INTERVAL = -5.00/ 5.00

| Y | Z | X | ALPHA | BETA | PHI | CN | CLM | CY | CYN | CBL | CA |
|---|---|---|---|---|---|---|---|---|---|---|---|
| -195.370 | 399.640 | 1201.50000 | -.16116 | -15.30900 | -.19428 | -.04393 | .01567 | .52485 | -.15441 | .05869 | .22389 |
| -200.760 | 450.850 | 1199.60001 | -.16113 | -15.30900 | -.19425 | -.04381 | .01566 | .52473 | -.15437 | .05869 | .22402 |
| -201.080 | 500.860 | 1199.30000 | -.16113 | -15.30900 | -.19431 | -.04380 | .01571 | .52515 | -.15453 | .05872 | .22448 |
| | GRADIENT | .00000 | .00000 | .00000 | .00000 | .00000 | .00000 | .00000 | .00000 | .00000 | .00000 |

RUN NO. 4768/ 0 RN/L = 2.38 GRADIENT INTERVAL = -5.00/ 5.00

| Y | Z | X | ALPHA | BETA | PHI | CN | CLM | CY | CYN | CBL | CA |
|---|---|---|---|---|---|---|---|---|---|---|---|
| -300.990 | 500.470 | 1198.89999 | -.16129 | -15.31000 | -.19443 | -.04387 | .01570 | .52513 | -.15450 | .05874 | .22424 |
| -300.330 | 450.080 | 1199.00000 | -.16126 | -15.31000 | -.19436 | -.04390 | .01568 | .52488 | -.15444 | .05870 | .22413 |
| -299.930 | 400.290 | 1199.10001 | -.16125 | -15.30900 | -.19438 | -.04390 | .01570 | .52467 | -.15440 | .05867 | .22409 |
| | GRADIENT | .00000 | .00000 | .00000 | .00000 | .00000 | .00000 | .00000 | .00000 | .00000 | .00000 |