OP

AN INTEGRATED APPROACH TO ENGINEERING SYNTHESIS AND ANALYSIS

Richard Lion Fox, 1965

UNIVERSITY MICROFILMS, INC.
A Subsidiary of Xerox Corporation
Ann Arbor

XEROX

(NASA-CR-157615) AN INTEGRATED APPROACH TO ENGINEERING SYNTHESIS AND ANALYSIS Ph.D. Thesis (Case Inst. of Tech.) 219 p

N78-78751

Unclas
00/66 29180

This "O-P Book" Is an Authorized Reprint of the Original Edition, Produced by Microfilm-Xerography by University Microfilms, Inc., Ann Arbor, Michigan, 1966

This dissertation has been microfilmed exactly as received

65-13,794

FOX, Richard Lion, 1935-
AN INTEGRATED APPROACH TO ENGINEERING SYNTHESIS AND ANALYSIS.

Case Institute of Technology, Ph.D., 1965
Engineering Mechanics

University Microfilms, Inc., Ann Arbor, Michigan

AN INTEGRATED APPROACH TO ENGINEERING SYNTHESIS AND ANALYSIS

A Thesis Submitted to
Case Institute of Technology
In Partial Fulfillment of the Requirements
for the Degree of
Doctor of Philosophy

LIBRARY COPY
SEP 30 1966
LEWIS RESEARCH CENTER
CLEVELAND, OHIO

by

Richard L. Fox

1965

Thesis Advisor: Professor L. A. Schmit, Jr.

Please Note:
Some pages have blurred
and indistinct type.
Filmed as received.
University Microfilms, inc.

ABSTRACT

An integrated method is presented for the synthesis of engineering systems whose analysis may be constituted as a system of linear or nonlinear algebraic equations. This is accomplished by casting the analysis problem as a residual minimization subject to inequality constraints on behavior and merit. A rational scheme is developed for converting these constraints into penalty functions and the resulting unconstrained minimization problem is solved for a decreasing sequence of merit constraints which leads to an optimum design.

The method is illustrated by the development of several capabilities for the weight minimization of truss structures. These include two distinct capabilities for the synthesis of a general three dimensional truss with an arbitrary number of nodes, members and topology. The design variables considered are the diameter and wall thickness of each tubular member, and the failure modes that are considered are excessive displacement, yielding, column buckling, and local crippling.

Material and geometric nonlinearities are included in some of these capabilities and one provides for the optional linking together of various design parameters.

The results of several numerical examples are presented. These demonstrate the operation and efficacy of the method.

A method is presented for utilizing existing matrix assemblers in conjunction with the integrated method.

ACKNOWLEDGEMENT

The author wishes to express his appreciation to the following:

To the National Aeronautics Space Administration for their support under grant No. NsG 110-61.

To Professor Lucien A. Schmit, Jr., whose generous help, support and enthusiasm were literally indispensable to the success of this work and made it an enjoyable task.

To Miss Sandy Huffman for the excellent typing work on this manuscript, for her help in key punching the programs, and for her patience and forebearance.

SUMMARY OF COMMON SYMBOLS

The symbols and notation given below are those which have a more or less uniform meaning throughout the text. The number in parentheses following the description of some of the symbols refers to the equation in which it first appears and where it is usually defined in detail. The arrow over a symbol indicates a vector, i.e., $\vec{X} = \{ x_1, x_2, \ldots x_n \}$; the symbol $\nabla\psi$ indicates the gradient of the function i.e. $\nabla\psi = \{\partial\psi/\partial x_1, \ldots \partial\psi/\partial x_n\}$; the function $< s >^n$ is the bracket function (see 2.6 and preceeding).

$\overline{A}_i^*$	the area of the ith member	(3.1)
$\overline{A}_{oi}^*$	a constant of the order of magnitude of $\overline{A}_i$	(3.28)
BND_j	the general simple penalty function	(3.38)
$BNDD_r$	the $\overline{D}_r$ penalty function	(3.94)
$BNDR_r$	the $\overline{D}_r/\overline{T}_r$ penalty function	(3.79)
$BNDS_{rk}$	the $\overline{\sigma}_{rk}$ penalty function	(3.98)
$BNDT_r$	the $\overline{T}_r$ penalty function	(3.95)
$BNDU_j$	the $\overline{U}_{sik}$ penalty function	(3.97)
C_{ik}	see equation	(3.19)
$\overline{D}_r^*$	the mean tube diameter	(3.62)
$\overline{d}_i^*$	the distance to the attachment of the ith member	(3.3)
$(D/t)_i$	the D over t ratio of the ith member	(3.40)

* These same symbols without the over bar are non-dimensional.

E_i	Young's modulus	(3.5)
E_{trk}	the tangent modulus in the rth member under the kth load condition	(3.77)
EB_{rk}	the Euler buckling penalty function	(3.99)
EQX_k, EQY_k, EQ_{sik}	equilibrium residuals	(3.21)(3.22),(3.67)
FW	the weight penalty function	(3.31)
G_{ik}	a buckling function	(3.39)
H	the height of the m-bar truss	(3.3)
K_A, K_σ, K_u	nondimensionalizing factors	(3.7)-(3.11)
K_i	A constant	(3.6)
KD_r	a constant	(3.87)
KT_r	a constant	(3.63)
LC_{rk}	the local crippling penalty function	(3.78)
LDX_{ik}	x projection of the deformed length	(3.16)
LDY_{ik}	y projection of the deformed length	(3.17)
LD_{ik}	the deformed length	(3.18)
$LGTH_r, LO_i$	the original length	(3.26),(3.60)
M_i	a set of integers	(3.67)
$M2_i$	a collection of integer pairs	(3.86)
N_r	a set of integer pairs	(3.64)
P_k	the magnitude of the kth load	(3.1)
$\tilde{P}$	a constant	(3.27)
$\bar{P}$	a constant	(3.21)
P_{sik}	the sth component of the kth load condition applied to the ith node	(3.62)
PX_k, PY_k	load components	(3.12),(3.13)

p_i	an integer power	(3.5)
R_i	a constant	(3.23)
S_{ik}	see equation	(3.20)
SD_{ik}	the stress displacement residual	(3.28)
SF_{ik}	the column buckling safety factor	(3.40)
$SF^{(e)}$	the column buckling safety factor	(3.76)
$SF^{(c)}$	the local crippling safety factor	(3.77)
s	a small constant	(3.45)
$\bar{T}_r^*$	the wall thickness of a tube	(3.62)
TB_{ik}	the tangent modulus buckling penalty	(3.39)
$\bar{u}_k^*$	the displacement in the x direction for the kth load condition	(3.3)
$\bar{u}_{sik}^*$	displacement components	(3.63)
$\bar{v}_k^*$	the displacement in the y direction for the kth load condition	(3.3)
W	the weight	(3.29)
W_o	the drawdown weight (or goal)	(3.30)
Y_i	a yield stress	(3.5)
$\bar{\alpha}_i$	coefficient of thermal expansion	(3.5)
α_k	the angle of the kth load	(3.1)
α_v	a generalized design variable	(3.87)
β_{ik}	the angle between the ith member for the kth load condition and the x axis	(3.1)
β_w	a generalized design variable	(3.88)
γ_{sri}	a direction cosine	(3.61)

Δ	a drawdown increment	
ΔT_{ik}	temperature change	(3.5)
δ_i	a constant	(3.30)
ε	a convergence criterion	
ε_{rk}	engineering strain	
η_i	a constant	(3.24)
$\theta(\vec{x})$	the analysis residual	(2.2)
λ	with a subscript, a penalty constant, see (3.45), (3.50),(3.54), (3.81)-(3.85)	
ρ	weight density	(3.29)
$\bar{\sigma}_{ik}^{*}$	the stress in the ith member in the kth load condition	(3.1)
$\bar{\sigma}_{rk}^{(c)*}$	the local crippling stress limit	(3.77)
$\bar{\sigma}_{ik}^{(e)}$	the column buckling stress limit	(3.39)
τ_{ik}	a constant	(3.25)
$\psi(\vec{x})$	the integrated analysis synthesis function	(2.6)
$\psi_{\infty}(\vec{x})$	the maximum integrated analysis-synthesis function	(2.9)

TABLE OF CONTENTS

Abstract ii
Acknowledgements iii
Summary of Common Symbols iv

I. Introduction 1

A. General Background 1
B. Some Philosophical Discussion 7

II. The Basic Ideas of the Integrated Synthesis-Analysis Method 14

III. Specific Examples of ψ-Functions 22

A. The m-bar Truss 24
B. The General Space Truss, Force-Displacement Method 39
C. The General Space Truss, Displacement Method 46
D. A Simplified Method for Linear Technologies 52
E. An Unsuccessful ψ-function for a Dynamics Problem 57

IV. Minimization Techniques 63

A. Algorithms for Minimization 63
B. A Scheme for Extrapolation Between Draw-Downs 68

V. Numerical Results 72

A. The m-bar Truss 72
B. General Space Truss Examples 77
1. Planar Cases 77
2. Three dimensional cases 80

VI. Discussion and Conclusions 83

Figures 90
Tables 109
References 116

Appendix A, Formulas for $\nabla\psi$ 118
Appendix B, Bibliography on Minimization Techniques 125
Appendix C, Minimization Technique 128
Appendix D, Computer Program Listings 134
Appendix E, Example Computer Output 172

Chapter I

INTRODUCTION

A. General Background

To produce superior designs has long been a goal of the engineer. In situations where the requirements of a task permit more than one design solution it is often deemed desirable to choose the best possible solution to the problem. This quest for the optimum design has taken many forms and has called upon a wide variety of techniques. One class of techniques which has recently evoked strong interest is automated optimum design or synthesis as it will be called in this paper. Synthesis is a concept characterized by the idea that techniques can be developed that will lead inexorably to an optimum design in much the same way that analysis leads to a prediction of the behavior of the mathematical model (and hopefully of the real system). The choice of the word "synthesis" for this concept is as an antonym of the word "analysis".

Synthesis has analogous characteristics with analysis in that just as an analysis may not predict a failure mode or phenomena that it was not general enough to consider, a synthesis will not produce a design which it is not able to consider. Thus a design process can be called synthesis when it leads without uncertainty to a more or less unique result which is the best

possible design from some restricted class of designs. A discussion of some of the more philosophical aspects of optimization will be found in section B of Chapter I.

By and large synthesis techniques to date have been so-called design space* types. In these, an orthogonal space is visualized in which each coordinate represents one design variable. Starting from a given point (i.e. design) a path is generated which leads to an optimum design. In this space surfaces are imagined upon which each design has equal merit. For example, if the weight of a structure is taken as its measure of merit, the design space will contain surfaces of equal weight designs. Note that every point is called a design even if it cannot perform the assigned task or tasks. When a design can perform its intended function it is called an acceptable point or design. The complement of this set of points is, of course, the set of unacceptable points.†

In most reasonable problems these two sets of points are separated by a single surface called the composite constraint surface. Every neighborhood of a point on this surface contains

---

* The underlined words in this section are constituents of a jargon which while of more or less common usage is by no means uniformly defined.

† In mathematical programming argot these are referred to as feasible or unfeasible points.

points of both sets. The points of the surface are called bound points and generally are in the set of acceptable points. The composite constraint surface is continuous but may have seams along which it does not have a continuously turning tangent. These seams occur because the surface is a patchwork of surfaces each of which represents a different design requirement or the same requirement applied to a different task or function. It should be noted that these surfaces often cannot be determined as explicit functions of the design variables. This fact leads to some considerable difficulties as will be discussed below.

The optimum design is usually a point on the composite constraint surface and is the best point of the acceptable set. In other words it is a point on the best merit contour having at least one point in the acceptable region. The optimum may be at a point where the tangent to the constraint surface is continuous or at a seam or an intersection of seams.

The concept of the design space has been very useful in that it has made it possible to bring to bear a number of valuable techniques from the mathematical programming area and has also lead to the development of new methods particularly applicable to engineering problems.

A sampling of this work is reported in references 1 through 8. These methods have generally been successful in solving the problems set down but there has been a trend toward increasing

difficulty as the complexity of technology or sheer size of the problem grows. This seems to be due both to the above mentioned lack of explicit knowledge of the constraint surfaces and to their complexity. Many of these methods are practical attempts to avoid the need for explicit functional relations and some of the more recent work notably that of Gallagher et al.[8]* has sought to obtain approximate explicit knowledge of some of their properties.

The principle design space methods that have been applied to design problems are Steepest Descent-Alternate step and the Methods of Feasible Directions and its variants. These will now be described and discussed.

1. Steepest Descent-Alternate Step

This method avoids any need for explicit knowledge of the composite constraint surface. A point in the acceptable region is chosen and a redesign is made (called a move) in a direction normal to the constant merit surface family. This new design is analyzed and tested against the constraints. If the point is acceptable and not bound (called a free point) another steep descent move is made perhaps with some acceleration. This process is continued until a bound point is obtained by iteration. This occurrence ends the steepest descent mode and the alternate step mode is entered. This consists of a side step away from the

---

* Raised numbers in parentheses indicate references listed at the end of the text.

constraint to a free point of the same merit as the bound point. Since there is no knowledge of the orientation of the composite constraint surface this side step move must be made by some trial and error process of generating points on the constraint merit contour. This may require the analysis of a large number of designs before the sought after free point is obtained.

After the free point of the same merit as the bound point is obtained the steepest descent mode is reentered and so on until no alternate step can be made. This terminates the process and the last bound point is the optimum design.

This method has been relatively successful[1-7] in problems of small size where the analysis could be performed with relative ease. Because of the large number of analyses which usually must be made the technique tends to be less efficient as either the size or complexity grows.

2. The Methods of Feasible Directions.

These methods are characterized by the use of specific local knowledge of the orientation of the normals to the constraining surfaces to direct the redesign process. In most engineering problems this information must be obtained by some sort of finite difference operation about a bound point. This requires the partial or complete reanalysis of at least as many designs as there are design variables and usually requires twice that number.

There are many ways in which this information may be used to direct the next redesign. First it is noted that the normal or normals to the constraining surfaces define locally the "segment" of the design space into which it may be possible to move without violating the constraints. From this concept, the various techniques range from optimizing the move direction[9] to taking a fixed choice[8]. The methods also vary in the rationale used to select the move distance once the direction is established. This also may require the reanalysis of a number of designs.

These techniques have the very valuable feature that when an optimum is obtained the process terminates in a definite fashion since, if the only directions of improvement lie outside the permissible segment, the design is an optimum. In contrast with this desirable feature the methods tend to suffer from the need for a large number of analyses much as do the steepest descent-alternate step methods.

The method put forth in this paper is an attempt to avoid the design-analysis cycle inherent in the design space methods. It will no doubt ultimately be determined that various engineering problems will best be solved by different methods. The method of this paper shows promise for complex technologies and large systems.

B. Some Philosophical Discussion

Because the endeavor to design engineering objects which are optimum in some technical sense is an increasingly active area of research and practice it has brought forth a multitude of interesting questions of both philosophical and practical importance. The following is a discussion of some of these at a qualitative level. Many of the ideas presented are a distillation of long hours of conversation with people at Case Institute of Technology to all of whom the author is forever indebted. This discussion may be skipped by the reader who wants merely to know what research was done and what was accomplished. The author expresses these ideas here because there maybe no other vehicle in which such a discussion is appropriate.

Three questions which seem inextricably intertwined are 1) Why optimize?, 2) Optimize with respect to what property?, 3) How large a part of a system should be optimized?.

Setting aside for the moment the question of whether it is actually possible to optimize the solution to any engineering problem the answer to "Why optimize?" may seem trivial. If we are considering, for example, a girder bridge for a highway application, the lowest cost bridge which fulfills all of the design requirements has obvious advantages. In the design of a field pack for a foot soldier the lightest possible pack which performs all of the necessary functions also has obvious desir-

ability. Thus at the outset one might say a design should be optimized when an important property of the design is not or cannot be specified in advance.

If part of the design requirements for the girder bridge were that it cost less than x dollars, one might consider the job finished when such a bridge was designed. However, if there was still some design leeway left, the designer might choose to widen the bridge to the widest possible size to increase safety; or he might maximize its maintainability or life expectancy or, the press of competition being what it is, he might still choose to minimize cost. In other words, if, after all the design requirements are met, there is still some elbow room the designer may choose or have chosen for him some design property to optimize. Of course in some design situations what is left to vary after meeting the requirements is of no importance. These are problems to which optimization is meaningless.

The above considerations have already involved the question of choosing a design property to optimize. Amending and inverting an earlier statement one would say that a design should be optimized with respect to the most important design property which is not specified in advance. This may seem obvious but the catch is that it is not always a simple matter to determine which is the most important property of a design.

For example, an airplane wing might be designed for minimum drag with a specified lift or maximum lift with a specified drag or minimum weight with specified drag and lift or to have the lift minus the weight a specified value and minimize the drag etc.

Questions of what property or combination of properties are the most important for optimization brings one to the question of how large a part of a complete system should be optimized. The very existence of open-ended design properties is the direct result of the fact that the system is only a part of a larger design problem. In the example of the airplane wing we may really be trying to obtain some design requirement for the whole ship such as payload, range, speed or cost per ton mile. Because it seems virtually impossible to consider (at least analytically) the entire airframe, aerodynamic shape, engines, control system, etc. at once, the problem is broken into smaller pieces and linked together by various "merit criteria." The merit criteria are chosen by experience, intuition and often by sheer expediency.

Thus an airplane built up of engines optimized with respect to fuel consumption and having a prescribed thrust and weight, a wing shape optimized for drag and having a prescribed lift, and a structure designed after the aerodynamic envelope is designed and optimized for weight might be a good design but would probably not be optimum. The coupling merit criteria of fuel consumption, drag, and weight are selected to reflect the goal of say minimum

cost per ton-mile for the complete ship but actually they may only tend to bring the design in that direction. It is usually easy to convince oneself that in design problems such as an airplane it is necessary to break the problem down into smaller sub-problems which are linked together by merit criteria; but how far should this breaking down be carried? A common answer has been that the largest subsystem that can practically be handled by an automatic algorithm should be optimized. It is the author's opinion that this is not the best answer to the question and the following discussion is an attempt to illuminate his reasons.

In the above, the word "optimize" has been used as if it were a sort of mathematical operation. Every optimization problem could theoretically be solved, in a sense, by trying all admissible combinations of the design variables for the selected design type and picking the combination which yields a design which satisfies all the requirements and gives the best value of the merit criterion. This method, of course, is impractical even for small problems and becomes impossible for problems of any practical size. However, even if it were possible to utilize such a method, the optimization problem is really still not solved because the selection of design has been made from a limited class. For example, imagine that an optimum truss structure has been designed by this method for a given application; it

is not inconceivable that a stiffened shell would be "more optimum" and after the optimum stiffened shell was designed it is possible that the optimum of some altogether new type of structural system would be even better. Of course, this is not to say that knowing the optimum design of a given type is useless, for otherwise how does one know that the stiffened shell is better than the truss unless one compares the optimum of each?

Practical optimization is then the selection of the best of several types of design and can be considered complete only when all reasonable design types have been compared on an optimum basis. Thus a creative effort is needed to devise the best types of design for a given application and then the theoretical operation of optimization is applied to each type. Unfortunately, the theoretical operation cannot usually be carried out completely.

Many optimization algorithms which are better than the "try them all" method have been developed and have produced useful results but as the design problems get more complex they are all partially frustrated by a common enemy--the relative minima (or maxima). This difficulty is characterized by the existence of several designs of significantly different merit, each of which has no acceptable designs of better or equal merit in some finite neighborhood of them. In other words the relative minima causes one to conclude he has an optimum design because there appears to be no redesign possible, when, in fact, a large and perhaps

unexpected perturbation of the design variables would result in an improvement. Almost without exception workers have concluded that there is no real solution to this problem short of a multiple running of the particular algorithm from different starting points which in the limit approaches the "try them all" method.

Faced with what some (the author included) contend is the inevitability of the relative minima problem, even the automatic algorithms leave the problem of design still in the hands of the human designer because he must not only choose good design types but he must also help the algorithm find its way to the best of the relative minima. It should be noted that most automatic algorithms need only to be put in the vicinity of a relative minimum and they will then converge to that "nearest" one. This in fact is really not too different from asking the designer to select the best design subtype.

Most occurences of relative minima have been shown to be characterized by differences in design subtype within a design type. A notable example of this situation is found in the work of Schmit and Kicher[2] where the relative minima in the design of a waffle plate were characterized by the distinction between thick (unstiffened) and thin (stiffened) sheet designs.

Thus if the designer starts off with a particular design and from it the algorithm evolves a similar design with a 20% improvement in merit he can take comfort from the 20% saving but

he must also take the responsibility as a creative engineer if it develops that a considerably different starting design leads to a relative minima with a 75% improvement in merit over the first design.

Therefore, getting back to the question of how large a subsystem should be optimized with an automatic algorithm, it is the author's opinion that it should be the largest one for which the designer has at least some qualitative insight. It is likely that a large, complex engineering system will be a better design if it is made up of truly optimum subsystems linked together by carefully considered merit criterion than if it is automatically designed as one system over which no one is wise enough to be able to exert creative control. It should be noted that there does not now exist a capability so comprehensive as to be guilty of this error and the point is made only to establish that the development of extremely large comprehensive interdisciplinary synthesis capabilities can not currently be viewed as even the ultimate goal of synthesis research. Of course, if the day arrives when computers are made capable of creative thought this point may need to be reconsidered (perhaps by the computer itself).

Chapter II

THE BASIC IDEAS OF THE INTEGRATED SYNTHESIS-ANALYSIS METHOD

The integrated method described in this chapter is applicable to engineering problems for which the analysis is constituted as a system of algebraic equations relating the behavior variables. This includes the large class of problems which are naturally in this form as well as those problems which are ordinarily transformed into such a system. The examples in this paper are primarily of structural engineering problems but the ideas extend to other types of problems with some reservations (see section E). The following development is a general one and does not refer to any specific technological area.

Consider the system of equations representing the analysis of some engineering problem

$$f_i(\vec{x}, \vec{a}) = 0 \qquad i = 1,2, \ldots, n \qquad (2.1)$$

where $\vec{x}$ is the vector of behavior variables such as stress, displacement, flow rate, or temperature and $\vec{a}$ is the vector of design variables such as diameter, inductance, spring stiffness, or any other physical property or group of properties for which an independent choice may be made. For any well set problem, given an $\vec{a}_j$ there corresponds a unique $\vec{x}_j$. This is the analysis problem which must be solved repeatedly in the design-analysis cycle methods. Note that the system 2.1 need not be linear; it may even be transcedental in some problems.

One of the many possible ways to solve such an analysis problem is as follows. Assume $\vec{a}$ is a chosen vector (i.e. design), $\vec{a}_j$. Define the function

$$\theta(\vec{x}) = \sum_{i=1}^{n} [f_i(\vec{x}, \vec{a}_j)]^2 \qquad (2.2)$$

If there is a solution to the problem it will occur where

$$\theta(\vec{x}) \rightarrow \text{MIN} = 0 \qquad (2.3)$$

and $\vec{x} \rightarrow \vec{x}_j$

Thus the analysis problem may be stated as

Find $\vec{x}$ such that the nonnegative function

$$\theta(\vec{x}) \rightarrow \text{MIN} = 0 .$$

There are many techniques for solving this unconstrained minimization problem and some of these are discussed in Chapter III. For specific systems 2.1 and a given minimizing technique it can often be shown that this approach is equivalent to one of the common iterative solution methods (it may not, however, be as efficient as some of the more refined methods).

Consider now that the design variables $\vec{a}$ are permitted to vary simultaneously with $\vec{x}$ in the minimization problem above. That is

$$\theta = \theta(\vec{x}, \vec{a}) = \theta(\vec{X})$$

where

$$\vec{X} = (a_1, a_2, \ldots a_k, x_1\ x_2, \ldots, x_n) \qquad (2.4)$$

The problem does not now have a unique solution because there are a large number of $\vec{a}$'s for which an $\vec{x}$ may be found which in turn makes $\theta(\vec{x}) \to MIN = 0$.

A design problem is one in which a design (an $\vec{a}$) is sought such that the behavior (an $\vec{x}$) and the design satisfy some constraints

$$g_t(\vec{X}) \leq 0 \qquad t = 1,2, \ldots T$$

To help solidify ideas the following set of constraints from a simple structures problem may be useful

$$g_t = \sigma_i - \sigma_y \leq 0 \qquad t = 1, 2, \ldots, n$$

$$g_t = \sigma_y - \sigma_i \leq 0 \qquad t = n+1, \ldots, 2n$$

$$g_t = d_j - D_U \leq 0 \qquad t = 2n+1, \ldots, 2n+k$$

$$g_t = D_L - d_j \leq 0 \qquad t = 2n+k+1, \ldots, 2n+2k$$

Here the σ_i are stresses and are the x_i of the problem, σ_y is the yield stress in both tension and compression; the d_j are diameters of members and are the a's of the problem; D_U and D_L are the largest and smallest permissible values of d_j. In many problems, the constraining relations are much more complex and often all of the variables appear in some of the $g_t(\vec{x})$.

The constrained minimization problem

Find $\vec{X}$ such that the nonnegative function

$$\theta(\vec{X}) \to MIN = 0$$

and

$$g_t(\vec{X}) \leq 0 \qquad t = 1,2, \ldots, T$$

generally has many solutions. However it may have none or it may have only a "small" region of solutions. If it has no solution the design problem as originally stated has no solution; if it has only a small region of solutions then the design problem has essentially one solution and optimization is not feasible. However, if many solutions exist and there is defined a merit function $M(\vec{X})$ which represents the criterion by which one acceptable design may be chosen over another* then synthesis may be carried out.

This can be stated as the double minimization problem

Find $\vec{X}$ such that the functions

$$0(\vec{X}) \rightarrow MIN = 0$$

$$M(\vec{X}) \rightarrow MIN$$

and

$$g_t(\vec{X}) \leq 0 \qquad t = 1,2, \ldots, T$$

but there are no efficient techniques which will solve this double problem as a minimization problem. Some reflection will serve to convince the reader that the creation of a new function $0'(\vec{X}) = 0(\vec{X}) + M(\vec{X})$ will not work.

---

* It is assumed here that decreasing values of M represent improving designs. This can obviously always be arranged by a sign change.

A way around this dilemma is to introduce another constraint

$$M(\vec{X}) - M_o \leq 0$$

where M_o is some preselected number representing a goal for the merit.

Any solution to the problem

Find $\vec{X}$ such that

$$\theta(X) \rightarrow MIN = 0$$

and

$$g_t(\vec{X}) \leq 0 \qquad t = 1,2, \ldots T \qquad (2.5)$$

$$M(\vec{X}) - M_o \leq 0$$

will be an acceptable design (given by $\vec{a}_o$) and its analysis (given by $\vec{x}_o$) which has a merit equal to or better than M_o. To optimize, the M_o may be replaced by $M_1 = M(\vec{X}_o)(1 - \Delta)$ and the process repeated. This "draw-down" cycle may be executed using $M_{q+1} = M(X_q)(1 - \Delta)$ where Δ is some preselected increment. Eventually an M_{q+1} will be selected for which the problem has no solution and the optimum will be known within ΔM_q as $\vec{X}_q$.

Stating the synthesis problem as the minimization problem 2.5 is of no advantage unless a method can be developed which will efficiently solve it. Since the constraints are expressed as explicit functions of the variables X_j, one of the methods of feasible directions could be used. However the genesis of the problem and some of its special properties point to a

different approach. This involves converting problem 2.5 into an unconstrained minimization problem.

Defining the bracket function notation as

$$< s >^n = \begin{cases} s^n & s \geq 0 \quad n \geq 0 \\ 0 & s < 0 \end{cases}$$

A function may be constructed

$$\psi(\vec{X}) = \theta(\vec{X}) + < M(\vec{X}) - M_o >^2 + \sum_{t=1}^{T} < g_t(\vec{X}) >^2. \qquad (2.6)$$

This function is nonnegative and has continuous first derivatives if the $g_t(\vec{X})$ do. This latter fact will be of importance when explicit minimization techniques are discussed.

The unconstrained minimization problem

Find $\vec{X}$ such that

$$\psi(\vec{X}) \rightarrow MIN = 0 \qquad (2.7)$$

is equivalent to 2.5. Problem 2.7 however lends itself to more straightforward approaches than does 2.5 and these will be discussed in Chapter III.

First, however, it should be noted that the choice of an exponent of 2 in equations 2.2 and 2.6 is not essential. The following definition could have just as well been made

$$\psi_p(\vec{X}) = \{ \sum_{i=1}^{n} [f_i(\vec{X})]^{2p} + < M(\vec{X}) - M_o >^{2p} + \sum_{t=1}^{T} < g_t(\vec{X}) >^{2p} \}^{1/p} \tag{2.8}$$

and problem 2.7 remains unchanged for integer $p \geq 1$. It can be seen with a little thought that as p grows

$$\psi_p \rightarrow \underset{\text{over all } t \text{ and } i}{\mathrm{MAX}}[f_i^{\,2}(\vec{X}),\ < M(\vec{X}) - M_o >^2,\ \ g_t(\vec{X})^2] \tag{2.9}$$

The right hand expression in 2.9 can be called ψ_∞. It is clear that

$$\psi_\infty \leq \psi_p \tag{2.10}$$

for any finite p and that ψ_∞ does not have continuous first derivatives.

This property is illustrated by the following simple two dimensional function

$$\psi_p = \{(x-y-1)^{2p} + (x-2y)^{2p}\}^{1/p}$$

Typical level curves for this are shown for $p = 1, 2, \infty$ in Figure 1. It is clear that the level curves for ψ_∞ do not have continuously turning tangents along the lines A-A and B-B and therefore $\nabla\psi_\infty$ is not defined there. Since most practical methods of finding the minimum of ψ require the gradient of ψ a finite p must be used.

The general policy adopted for this paper is to apply the minimizer to ψ_1 (hereafter called simply ψ) but to terminate the process when $\psi_\infty < \varepsilon$, where ε is a small positive constant. This question is considered in detail near the end of section A of Chapter III.

Chapter III

SPECIFIC EXAMPLES OF ψ-FUNCTIONS

In order to illustrate the technique described in Chapter II a number of ψ-functions for various problems will be developed in detail in this chapter. Most of these were successfully programmed for use on the digital computer and sample cases run with them are given in Chapter V.

The system used for most of these developments is the pin-ended truss structure. The reason for this choice is that the truss is typical of many engineering structures in the following ways

1. The number of physical degrees of freedom can become very large
2. The system may be analyzed with varying degrees of sophistication
3. There are a variety of ways of formulating the problem (displacement, force, force-displacement)
4. There are a wide variety of possible behavior requirements for the structure which range from simple restrictions to rather complex requirements.

The truss considered here is made up of straight pin-connected tubular members. Loads are considered to be applied only at the joints and some joints are considered fixed in space. Thermal loads are also considered in one development.

The design restrictions are assumed to be of the following types:

1. limitations on the design variables directly such as maximum and minimum member size etc.
2. simple upper and lower limits on stress in the individual members.
3. simple limits on displacements
4. limits on stress which may vary with the design, such as member buckling limits.

These do not exhaust the possibilities but are among the common design restrictions used for this type of structure. There are weaknesses in the stress limit concept of stability control implied by 4 which will be commented upon in the numerical examples chapter and in the conclusions.

The analysis of the truss will first of all be based upon linear statically indeterminate analysis. Beyond this, various nonlinearities will be included in some of the developments. These nonlinear aspects, which are important in certain light-weight, high performance structures are:

1. equilibrium equations are based upon deformed geometry,
2. displacements and deformations are considered to be large,

3. force levels are considered to be high enough that the force-deformation law must be taken to be nonlinear.

Because of the severe difficulties involved with nonconservative behavior, both from the analysis and failure criterion standpoints, the system will be considered elastic and the loads will maintain their directions and magnitudes under deflection of the nodes.

The next section is a complete development of a ψ-function for an m-bar, single node, planar truss including all nonlinearities described above.

A. Consider the m bar-planar truss shown in Figure 2.

Each load condition k, where $k = 1,\ldots,L$ is specified by giving the magnitude of the load P_k, the angle α_k measured clockwise from the positive x axis to the load P_k, and the temperature change in each member ΔT_{ik}, for $i = 1,\ldots,m$. The cross sectional areas $\bar{A}_i$ and the position of the attachment points $\bar{d}_i$ are the design variables. Note that the option to treat the $\bar{d}_i$ as preassigned design parameters exists.

The equilibrium equations representing the sum of the forces in the x and y directions at the node p' respectively are

$$\sum_{i=1}^{m} \bar{A}_i \, \bar{\sigma}_{ik} \cos \beta_{ik} + P_k \cos \alpha_k = 0; \quad k = 1,2, \ldots, L \qquad (3.1)$$

$$\sum_{i=1}^{m} \bar{A}_i \, \bar{\sigma}_{ik} \sin \beta_{ik} - P_k \sin \alpha_k = 0; \quad k = 1,2, \ldots, L \tag{3.2}$$

where $\bar{A}_i$ is the cross sectional area of the ith member, β_{ik} is the angle between the ith member, in the deformed state for the kth load condition and the positive x axis, and $\bar{\sigma}_{ik}$ is the stress in the ith member due to the kth load condition. From the geometry of Fig. 2 it follows that:

$$\cos \beta_{ik} = \frac{(\bar{d}_i - \bar{u}_k)}{[(H - \bar{v}_k)^2 + (\bar{d}_i - \bar{u}_k)^2]^{1/2}} \tag{3.3}$$

and

$$\sin \beta_{ik} = \frac{(H - \bar{v}_k)}{[(H - \bar{v}_k)^2 + (\bar{d}_i - \bar{u}_k)^2]^{1/2}} \tag{3.4}$$

where $\bar{u}_k$ is the x component of the displacement of node p, $\bar{v}_k$ is the y component of the displacement of the node p, and H is a preassigned parameter giving the normal distance from node p to the support surface r-r prior to deformation. The stresses $\bar{\sigma}_{ik}$ and the displacements $\bar{u}_k$, $\bar{v}_k$ are the behavior variables. Using the Ramberg-Osgood stress-strain relation the stress-displacement equation for the ith member in the kth load condition is

$$\frac{\bar{\sigma}_{ik}}{E_i} + K_i \left(\frac{\sigma_{ik}}{E_i}\right)^p + \bar{\alpha}_i \, \Delta T_{ik} = \frac{\left[(H - \bar{v}_k)^2 + (\bar{d}_i - \bar{u}_k)^2\right]^{1/2}}{(H^2 + \bar{d}_i)^{1/2}} - 1 \tag{3.5}$$

$$i = 1,2, \ldots, m$$

$$k = 1,2, \ldots, L$$

where

$$K_i = \frac{3}{7}\left[\frac{E_i}{Y_i}\right]^{p_i - 1} \tag{3.6}$$

Y_i is the yield stress and $\bar{\alpha}_i$ is the thermal expansion coefficient for the material of the ith member. The exponent p_i depends on the material used for the ith member and it is convenient to restrict p_i to positive odd integer values for the present purposes.

The physical variables are $\bar{A}_i$, $\bar{\sigma}_{ik}$, $\bar{u}_k$, $\bar{v}_k$, and $\bar{d}_i$. However the ψ-function may have better properties if the variables on which it depends are scaled so as to be of the order $\pm$ 1. This is accomplished by introducing dimensionless variables as follows:

$$\bar{A}_i = K_A \, A_i \tag{3.7}$$

$$\bar{\sigma}_{ik} = K_\sigma \, \sigma_{ik} \tag{3.8}$$

$$\bar{u}_k = K_u \, u_k \tag{3.9}$$

$$\bar{v}_k = K_u \, v_k \tag{3.10}$$

$$\bar{d}_i = H \, d_i \tag{3.11}$$

where the K_Λ, K_σ, and K_u are constants equal to the expected average order of magnitude of the areas, stresses and displacements respectively.

Let the following notation:

$$PX_k = + P_k \cos \alpha_k \tag{3.12}$$

$$PY_k = - P_k \sin \alpha_k \tag{3.13}$$

$$\cos \beta_{ik} = \frac{LDX_{ik}}{LD_{ik}} \tag{3.14}$$

$$\sin \beta_{ik} = \frac{LDY_{ik}}{LD_{ik}} \tag{3.15}$$

$$LDX_{ik} = d_i - \frac{K_u}{H} u_k = \frac{\overline{LDX}_{ik}}{H} \tag{3.16}$$

$$LDY_k = 1 - \frac{K_u}{H} v_k = \frac{\overline{LDY}_{ik}}{H} \tag{3.17}$$

$$LD_{ik} = [(1 - \frac{K_u}{H} v_k)^2 + (d_i - \frac{K_u}{H} u_k)^2]^{1/2} \tag{3.18}$$

$$C_{ik} = K_\Lambda K_\sigma \cos \beta_{ik} \tag{3.19}$$

$$S_{ik} = K_\Lambda K_\sigma \sin \beta_{ik} \tag{3.20}$$

be introduced. If both of the equilibrium equations (Eqs. 3.1 and 3.2) are divided by $\overline{P}$, the average magnitude of the nonzero applied loads P_k, then the functions EQX_k and EQY_k may be defined as follows:

$$EQX_k(A_i, \sigma_{ik}, u_k, v_k, d_i) = \frac{\sum_{i=1}^{m} A_i \, \sigma_{ik} \, C_{ik} + PY_k}{\overline{P}} \tag{3.21}$$

$$k = 1,2, \ldots, L$$

$$EQY_k(A_i, \ \ ik, u_k, v_k, d_i) = \frac{\sum_{i=1}^{m} A_i \, \sigma_{ik} \, S_{ik} + PY_k}{\overline{P}} \tag{3.22}$$

These two functions represent the fraction of the average applied load by which each of the equilibrium equations is unsatisfied in the kth load condition. If the dimensionless design variables A_i, d_i and the dimensionless behavior variables σ_{ik}, u_k, v_k, satisfy equilibrium then

$$EQX_k = EQY_k = 0 \qquad k = 1,2, \ldots, L$$

The stress displacement equations may be treated in a similar manner. Let the notation

$$R_i = \frac{3}{7}\left[\frac{K_\sigma}{Y_i}\right]^{p_i - 1} \tag{3.23}$$

$$\eta_i = \frac{E_i}{K_\sigma} \tag{3.24}$$

$$\tau_{ik} = \frac{\overline{\alpha}_i \, E_i \, \Delta T_{ik}}{K_\sigma} \tag{3.25}$$

$$LO_i = [1 + d_i^2]^{1/2} = \frac{\overline{LO}_i}{H} \tag{3.26}$$

$$\tilde{P} = \frac{\overline{P}}{K_A K_\sigma} \tag{3.27}$$

be introduced. Now multiplying Eq. (3.5) by $E_i \bar{A}_{oi}$, where $\bar{A}_{oi}$ is a constant of the order $\bar{A}_i$, and dividing by $\bar{P}$ leads to the following definition of the function SD_{ik}:

$$SD_{ik}(A_i, \sigma_{ik}, u_k, v_k, d_i) = (A_{oi}/\bar{P})[\sigma_{ik} + R_i(\sigma_{ik})^{p_i} + \tau_{ik} + \eta_i (1 - \frac{LD_{ik}}{LO_i})] \tag{3.28}$$

$$i = 1,2, \ldots, m$$

$$k = 1,2, \ldots, L$$

This function represents the fraction of the average applied load by which the two representations of the force in member i for load condition k differ. Therefore sets of variables (A_i, σ_{ik}, u_k, v_k, d_i) that satisfy the analysis equations have the property that

$$EQX_k = 0 \qquad k = 1,2, \ldots, L$$

$$EQY_k = 0 \qquad k = 1,2, \ldots, L$$

$$SD_{ik} = 0 \qquad i = 1,2, \ldots, m; \quad k = 1,2, \ldots, L$$

The weight of the m bar planar truss may be expressed as follows:

$$W = \sum_{i=1}^{m} (H^2 + \bar{d}_i^{\,2})^{1/2} \rho_i \bar{A}_i \tag{3.29}$$

where ρ_i is the weight density of the material for the ith member. Let the notation

$$\delta_i = \frac{\rho_i H K_A}{W_o} \tag{3.30}$$

$$W_o = \text{draw-down weight}$$

be introduced. Then a function $FW(A_i, d_i)$, which represents the fraction of W_o by which the weight W exceeds W_o, is defined as follows

$$FW(A_i, d_i) = < \frac{W - W_o}{W_o} > = <\sum_{i=1}^{m} \delta_i \, LO_i \, A_i - 1 >^1 \tag{3.31}$$

In general, there are upper and lower bounds on all the variables A_i, σ_{ik}, u_k, v_k, d_i. Let the set of variables be represented by x_j where

$$x_j = A_i \quad j = i \quad ; \quad i = 1, 2, \ldots, m \tag{3.32}$$

$$x_j = \sigma_{ik} \quad j = mk+i; \quad i = 1, 2, \ldots, m \quad k = 1, 2, \ldots, L \tag{3.33}$$

$$x_j = u_k \qquad j = m(1+L) + 2k-1; \quad k = 1, 2, \ldots, L \qquad (3.34)$$

$$x_j = v_k \qquad j = m(1+L) + 2k \;; \quad k = 1, 2, \ldots, L \qquad (3.35)$$

$$x_j = d_i \qquad j = m(1+L) + 2L+i; \quad i = 1, 2, \ldots, m \qquad (3.36)$$

Note that for a complete set of variables $j = 1, 2, \ldots \ell$ and

$$\ell = 2(m + L) + m \cdot L \qquad (3.37)$$

A function providing a penalty for violating an upper or a lower bound for each variable x_j may now be defined as follows:

$$BND_j = \langle LB_j - x_j \rangle^1 - \langle x_j - UB_j \rangle^1 \qquad (3.38)$$

$$j = 1, 2, \ldots, \ell$$

where LB_j and UB_j are the lower and upper bounds on the variables x_j respectively.

In addition to simple bounds, provision is made for limiting the stress in order to preclude buckling. The Euler-Engesser, or tangent modulus, buckling stress constraint may be expressed as follows:*

$$\begin{aligned} TB_{ik} &= \langle \sigma_{ik}^{(c)} - \sigma_{ik} \rangle^1 \\ &= \langle G_{ik} A_i - \sigma_{ik} \rangle^1 \end{aligned} \qquad (3.39)$$

---

* An annular section is assumed for each member.

where

$$G_{ik} = -\frac{1}{SF_{ik}} \frac{\pi K_A}{8H^2 (LO_i)^2} \frac{\eta_i}{[1 + M_i R_i (\sigma_{ik})^{(p_i - 1)}]} [(D/t)_i + \frac{1}{(D/t)_i}] \tag{3.40}$$

SF_{ik} = a buckling stress safety factor for the ith member in the kth load condition

and $(D/t)_i$ = the mean diameter to thickness ratio for the ith member

The minimum weight design of the m bar planar truss (Fig. 2) subject to L distinct load conditions with stress, displacement and buckling limitations can be accomplished by solving the following problem for a sequence of decreasing values of W_o:

<u>Given:</u> the preassigned parameters

$(D/t)_i$, SF_{ik}, H, p_i, Y_i, E_i, $\bar{\alpha}_i$, P_k, α_k, ΔT_{ik};

a set of initial values $\bar{A}_i$, $\bar{\sigma}_{ik}$, $\bar{u}_k$, $\bar{v}_k$, $\bar{d}_i$, W_o:

and a set of bounds LB_j, UB_j;

<u>Find:</u> $\bar{A}_i$, $\bar{\sigma}_{ik}$, $\bar{u}_k$, $\bar{v}_k$, $\bar{d}_i$ such that

$$\psi (A_i, \sigma_{ik}, u_k, v_k, d_i) \rightarrow MIN$$

where ψ is given by

$$\psi = \lambda_W (FW)^2 + \sum_{k=1}^{L} [EQX_k^{\,2} + EQY_k^{\,2} + \sum_{i=1}^{m} (SD_{ik})^2]$$

$$+ \sum_{j=1}^{\ell} \lambda_j \, BND_j^{\,2} + \sum_{k=1}^{L} \sum_{i=1}^{m} \lambda_{TB_{ik}} (TB_{ik}) \qquad (3.41)$$

and the λ's are positive multipliers to be discussed subsequently. It is apparent that any set of values for the variables A_i, σ_{ik}, u_k, v_k, and d_i for which $\psi = 0$ describes an acceptable design A_i, d_i of weight W_o or less and behavior σ_{ik}, u_k, v_k. It is again remarked that ψ and $\nabla\psi$ are continuous.

The method used to seek $\psi \to 0$ will be numerical and therefore a criterion is needed to determine when ψ_∞* is near enough to zero to be considered converged. From the way that the functions EQX_k, EQY_k, and SD_{ik} are defined it is clear that an ε may be chosen such that the requirement

$$\text{MAX } [EQX_k^2, EQY_k^2, SD_{ik}^2] < \varepsilon$$

will be meaningful in terms of the physical problem. For example, $\varepsilon = .0001$ insures that at worst an equilibrium or force-displacement equation will be unsatisfied by 1% of the average force level applied to the structure. It can of course be chosen smaller but it should be noted that, even in a linear problem

---

*$\psi_\infty \equiv \text{MAX } [\lambda_W \, FW^2, EQX_k^2, EQY_k^2, SD_{ik}^2, \lambda_j \, BND_j^2, \lambda_{TB_{ik}} \, TB_{ik}^2]$ see the end of Chapter II.

where the analysis solution is obtained by matrix inversion, the residuals are seldom truly zero due to roundoff noise and other factors.[10] It is suggested that the above method offers a controlled and physically significant criterion for analysis accuracy.

The λ's must now be chosen so that when $\psi_\infty \leq \varepsilon$ the various constituents of ψ will be meaningfully satisfied. Consider first the fractional weight function term

$$\lambda_W < \frac{W}{W_o} - 1 >^2 \leq \varepsilon \tag{3.42}$$

The λ_W is to be selected so that this criterion imposes what is necessary while at the same time not being so stringent as to unnecessarily delay convergence. It is required that the weight W not exceed the draw-down weight W_o by more than a small fraction of the incremental weight decrease ΔW_o. In other words, it is required that if $W - W_o > 0$, then

$$W - W_o << \Delta W_o \tag{3.43}$$

Now if s is an assigned number, small compared with unity then it follows from Eq. 43 that

$$\frac{W}{W_o} - 1 \leq s\Delta \tag{3.44}$$

and substituting into Eq. 3.42 and taking the equality yields

$$\lambda_W = \frac{\varepsilon}{s^2 \Delta^2} \tag{3.45}$$

Use of the value for λ_W given by Eq. 3.45 insures that when $\psi_\infty \leq \varepsilon$

$$\frac{W}{W_o} - 1 \leq s\Delta \tag{3.46}$$

since

$$\lambda_W < \frac{W}{W_o} - 1 >^2 \leq \varepsilon$$

implies

$$\frac{\varepsilon}{s^2 \Delta^2} < \frac{W}{W_o} - 1 >^2 \leq \varepsilon$$

which reduces to Eq. 3.46 if $W - W_o > 0$.

The determination of the λ_j's associated with the simple bounds can be treated in a similar fashion. Let Q_j be the amount by which the dimensionless variables x_j may be permitted to violate the bound LB_j or UB_j. Assume the upper bound UB_j happens to be the active bound, then it is required that

$$\lambda_j \, (x_j - UB_j)^2 \leq \varepsilon \tag{3.47}$$

must insure that

$$x_j - UB_j \leq Q_j \tag{3.48}$$

Substituting Eq. 3.48 into Eq. 3.47 yields

$$\lambda_j \, (Q_j)^2 \geq \varepsilon \tag{3.49}$$

Taking the equality and solving for λ_j gives

$$\lambda_j = \frac{\varepsilon}{Q_j^{\,2}} \tag{3.50}$$

It follows that when $\psi_\infty \leq \varepsilon$ the values of x_j will never exceed $UB_j + Q_j$ nor be less than $LB_j - Q_j$.

The determination of the $\lambda_{TB_{ik}}$ associated with the buckling stress limitations can also be treated in a similar manner. Let g be the fraction of the dimensionless allowable buckling stress by which the dimensionless allowable stress $G_{ik} A_i$ and the dimensionless stress σ_{ik} may differ. Then it is required that

$$\lambda_{TB_{ik}} (G_{ik} A_i - \sigma_{ik})^2 \leq \varepsilon \tag{3.51}$$

insure that

$$G_{ik} A_i - \sigma_{ik} \leq G_{ik} A_i g \tag{3.52}$$

Substituting Eq. 3.52 into Eq. 3.51 yields

$$\lambda_{TB_{ik}} (G_{ik} A_i g)^2 \geq \varepsilon \tag{3.53}$$

Taking the equality and solving for $\lambda_{TB_{ik}}$ gives

$$\lambda_{TB_{ik}} = \frac{\varepsilon}{(G_{ik} A_i g)^2} \tag{3.54}$$

Thus the numbers s, Δ, Q_j, g and ε must be selected in order to construct the ψ-function. This is no particular burden as these quantities all have a clear engineering significance in this context.

The ψ-function for the m bar planar truss with a linearized analysis can be obtained by specialization of the foregoing formulation. The parts of the ψ-function effected by linearization are EQX_k, EQY_k, SD_{ik} and TB_{ik}. The influence of linearizing the analysis of the functions EQX_k and EQY_k leaves Eqs. 3.21 and 3.22 unchanged however Eqs. 3.19 and 3.20 are modified to read

$$C_i = K_A K_\sigma \cos \beta_i \tag{3.19'}$$

and

$$S_i = K_A K_\sigma \sin \beta_i \tag{3.20'}$$

where β_i is the angle between the ith member and the positive x axis in the undefomed state. This simplification follows from the assumption that the equilibrium equations can be based on the undeformed geometry of the structure. The influence of linearizing the analysis on the functions SD_{ik} can be obtained by setting R_i to zero in Eq. 3.28 and noting that

$$[1 - \frac{LD_{ik}}{LO_i}] = \frac{(K_u/H)\,[2(v_k + d_i u_k) - \frac{K_u}{H}(v_k^2 + u_k^2)]}{LO_i\,(LO_i + LD_{ik})} \tag{3.55}$$

For small displacements

$$\frac{K_u}{H}(v_k^2 + u_k^2) << 2\,(v_k + d_i u_k) \tag{3.56}$$

and for small deformations

$$LO_i \ (LO_i + LD_{ik}) \cong 2 \ (LO_i)^2 \tag{3.57}$$

therefore

$$[1 - \frac{LD_{ik}}{LO_i}] \cong \frac{K_u}{\Pi \ LO_i} [v_k \sin \beta_i + u_k \cos \beta_i] \tag{3.58}$$

Thus the resulting expression for SD_{ik} based on a linearized analysis is

$$SD_{ik} = (\frac{A_{oi}}{\bar{P}}) [\sigma_{ik} + \tau_{ik} + \eta_i \frac{K_u}{\Pi \ LO_i} (v_k \sin \beta_i + u_k \cos \beta_i)] \tag{3.59}$$

The influence of linearizing the analysis of the function TB_{ik} is obtained by setting R_i to zero in Eq. 3.40. The buckling stress limits are then based on the Euler buckling stress rather than on the tangent modulus buckling stress.

As mentioned earlier many of the algorithms for solving the unconstrained minimization problem require a knowledge of the gradient of the function being minimized (see Chapter IV). The partial derivatives of the m bar truss ψ-function are given in appendix A.

The above development is somewhat cumbersome but it has a structure that will be repeated in the rest of the ψ-function developments in this paper. This structure is roughly as follows:

1. Identification of the design variables
2. Statement of the analysis equations and the generation of the normalized residuals.
3. Identification of the design limitations and the development of the penalty functions
4. A study of the accuracy requirements and the development of the λ's

A final step which is usually necessary, as mentioned above, is the taking of the gradient of ψ. This can be an onerous task but it is simply a sequence of algebraic operations.

In section D of this chapter a method is given which simplifies much of the work if an analysis capability is already in existence.

B. The General Space Truss, Force-Displacement Method

In this section a ψ-function is developed for a general space truss. The configuration, in contrast with the m bar truss, is considered fixed and geometric nonlinearities are omitted. This latter is because of certain inconsistencies in the handling of stability which are discussed at the end of section A of Chapter V. The design variables are the mean diameter and wall thickness of the tubular members; this is a significant addition in that it permits both Euler buckling and local crippling to be considered as independent failure modes.

The material nonlinearity is retained in the analysis but all members are assumed to be made of the same material.

Consider the member shown in Fig. 3 as one of m members of a space truss. The node i, located in space at (z_{1i}, z_{2i}, z_{3i}), is displaced to position i' under the action of a loading system P_{sik}, s = 1, ... d; i = 1, ..., n; k = 1, ... L, where there are d dimensions, n nodes and L load conditions. Define two sets or tables of integers as follows

1. M_i is the set of integers denoting the members joining node i
2. N_r is a pair of integers denoting the pair of nodes joined by member r

For example the tetrahedral truss shown in Fig. 4 would have the following tables

$$M_1 = (1; 3; 4)$$

$$M_2 = (2; 3; 6)$$

$$M_3 = (1; 2; 5)$$

$$M_4 = (4; 5; 6)$$

and

$$N_1 = (1, 3) \qquad N_4 = (1, 4)$$

$$N_2 = (2, 3) \qquad N_5 = (3, 4)$$

$$N_3 = (1, 2) \qquad N_6 = (2, 4)$$

It is clear that one table is redundant but having both simplifies both notation and programming.

The length of the rth member is given by

$$LGTH_r = \left[\sum_{s=1}^{d} (z_{sj} - z_{si})^2 \right]^{1/2} \quad i,j = N_r \quad r = 1, \ldots, m \tag{3.60}$$

The direction cosine of the rth member to the sth coordinate axis from the ith node is given by

$$\gamma_{sri} = \frac{z_{sj} - z_{si}}{LGTH_r} = - \gamma_{srj} \qquad i,j = N_r \tag{3.61}$$

The members are tubular with the design variables taken as $\bar{D}_r$ (mean diameter) and $\bar{T}_r$ (wall thickness) and thus the equilibrium equations are

$$\sum_{r \epsilon M_i} \bar{\sigma}_{rk} \bar{D}_r \bar{T}_r \pi \gamma_{sri} + P_{sik} = 0 \tag{3.62}$$

$$s = 1, \ldots, d$$
$$i = 1, \ldots, n$$
$$k = 1, \ldots, L$$

The engineering strain in the rth member for the kth load condition is

$$\epsilon_{rk} = \frac{\left[\sum_{s=1}^{d} (z_{sj} + \bar{u}_{sjk} - z_{si} - \bar{u}_{sik})^2\right]^{1/2} - LGTH_r}{LGTH_r} \tag{3.63}$$

Neglecting products of the displacements and assuming them small compared to member length we have approximately

$$\epsilon_{rk} \doteq \frac{\sum_{s=1}^{d} (\bar{u}_{sjk} - \bar{u}_{sik})\, \gamma_{sri}}{LGTH_r} \qquad i,j = N_r \tag{3.64}$$

Taking the stress strain relation

$$\epsilon_{rk} = \frac{\bar{\sigma}_{rk}}{E} + \frac{3}{7}\,\frac{Y}{E}\left[\frac{\bar{\sigma}_{rk}}{E}\right]^p \tag{3.65}$$

the stress displacement relations become

$$\frac{\bar{\sigma}_{rk}}{E} + \frac{3}{7}\,\frac{Y}{E}\left[\frac{\bar{\sigma}_{rk}}{Y}\right]^p - \frac{1}{LGTH_r}\sum_{s=1}^{d} (\bar{u}_{sjk} - \bar{u}_{sik})\, \gamma_{sri} = 0 \tag{3.66}$$

Defining K_D, K_T, K_σ and K_u as the nondimensionalizing factors and taking $K_D\, K_T\, K_\sigma\, \Pi$ as the normalizing factor, we have the residuals

$$EQ_{sik} = \begin{cases} \sum_{r \in M_i} \sigma_{rk}\, D_r T_r \gamma_{sri} + \dfrac{P_{sik}}{K_\sigma K_D K_T\, \Pi}, & \text{if the } i^{th} \text{ node is free in the } s^{th} \text{ direction.} \\ 0 & \text{, otherwise} \end{cases} \tag{3.67}$$

and

$$SD_{rk} = D_{ro}T_{ro}\left[\sigma_{rk} + \frac{3}{7}\frac{Y}{K_\sigma}\left[\frac{\sigma_{rk}K_c}{Y}\right]^p - \frac{E\,K_u}{LGTH_r}\sum_{s=1}^{d}\gamma_{sri}(u_{sjk} - u_{sik})\right] \tag{3.68}$$

These have similar meanings to the residuals for the m-bar truss except that the normalizing force is taken to be $K_D\,K_T\,K_\sigma\,\Pi$, the fictitious average force level in the structure.

The weight of the structure is given by

$$W = \sum_{r=1}^{m} \rho\, D_r\, T_r\, \Pi\, K_D\, K_T\, LGTH_r \tag{3.69}$$

and thus the weight penalty can be defined as

$$PW = \left\langle \sum_{r=1}^{m} \frac{\rho\, D_r\, T_r\, \Pi\, K_D\, K_T\, LGTH_r}{W_o} - 1 \right\rangle^1 \tag{3.70}$$

A system or relations similar to equations 3.32 - 3.37 can be given

$$x_j = D_r \quad j = r \;; \qquad r = 1,2, \ldots, m \tag{3.71}$$

$$x_j = T_r \quad j = m+r; \qquad r = 1,2, \ldots, m \tag{3.72}$$

$$x_j = \sigma_{rk} \quad j = 2m+L(r-1)+k: \; r = 1,2, \ldots, m; \; k = 1,2,\ldots L \tag{3.73}$$

$$x_j = u_{sik} \quad j = 2m+m\cdot L+(k-1)\cdot n\cdot d+(i-1)\cdot d+s$$

$$i = 1, 2, \ldots n$$

$$s = 1, \ldots, d$$

$$k = 1, 2, \ldots L$$

and the functions

$$BND_j = \langle LB_j - x_j \rangle^1 - \langle x_j - UB_j \rangle^1 \qquad (3.74)$$

$$j = 1,2, \ldots 2m + m \cdot L + L \cdot n \cdot d = \ell$$

defined.

The Euler-Engesser penalty similar to the m bar truss is given as

$$TB_{rk} = \left\langle \frac{\bar{\sigma}_{rk}}{\bar{\sigma}_{rk}^{(c)}} - 1 \right\rangle^1 \qquad (3.75)$$

Here it was decided for convenience to divide through by $\bar{\sigma}_{rk}^{(c)}$ thus making λ_{TB} a constant. The definition of TB_{rk} is then

$$TB_{rk} = \left\langle - \frac{\sigma_{rk} K_\sigma \, SSF^{(c)} LGTH_r^{\,2} \left[1 + \frac{3}{7} p \left(\frac{\sigma_{rk} K_\sigma}{Y}\right)^{p-1}\right]}{\pi^2 E \left(D_r^{\,2} K_D^{\,2} + T_r^{\,2} K_T^{\,2}\right)} - 1 \right\rangle^1 \qquad (3.76)$$

The local crippling stress limit of the thin wall tube is given as[11]

$$\bar{\sigma}_{rk}^{(c)} = \frac{k_2 \left[E \, E_{trk}\right]^{1/2} \bar{T}_r}{SF^{(c)} \, \bar{D}_r} \qquad (3.77)$$

Therefore the local crippling penalty is

$$LC_{rk} = \left\langle - \frac{\sigma_{rk} K_\sigma K_D SF^{(c)} D_r \left[1 + \frac{3}{7} p \left(\frac{\sigma_{rk} K_\sigma}{Y}\right)^{p-1}\right]^{1/2}}{K_T \, k_2 \, E \, T_r} - 1 \right\rangle^1 \qquad (3.78)$$

A further design restriction is necessary to prevent an absurd design where $\bar{T}_r > \bar{D}_r$. This is a penalty

$$BNDR_r = \langle LBR_r - \frac{D_r}{T_r} \rangle^1 - \langle \frac{D_r}{T_r} - UBR_r \rangle^1 \tag{3.79}$$

is needed. Here $LBR_r \geq 1$ and UBR_r is provided as a generality in case some upper restriction on D_r/T_r is desired.

The complete ψ-function may be given as

$$\psi = \lambda_W (FB)^2 + \sum_{s=1}^{d} \sum_{i=1}^{n} \sum_{k=1}^{L} EO_{sik}^2 + \sum_{r=1}^{m} \sum_{k=1} SD_{rk}^2$$

$$+ \sum_{j=1}^{\ell} \lambda_{B_j} BND_j^2 + \sum_{r=1}^{m} \lambda_R BNDR_r^2$$

$$+ \sum_{r=1}^{m} \sum_{k=1}^{L} [\lambda_{TB} TB_{rk}^2 + \lambda_{LC} LC_{rk}^2] \tag{3.80}$$

where the λ's, developed similarly to the m bar truss, are

$$\lambda_W = \frac{\epsilon}{(S\Delta)^2} \tag{3.81}$$

$$\lambda_{B_j} = \frac{\epsilon}{Q_j^2} K^2 \tag{3.82}$$

$$\lambda_R = \frac{\epsilon}{QR^2} \tag{3.83}$$

$$\lambda_{TB} = \frac{\epsilon}{QE^2} \tag{3.84}$$

$$\lambda_{LC} = \frac{\epsilon}{QC^2} \tag{3.85}$$

In the operation of the computer program developed from this ψ-function any of the D_r or T_r can be considered preassigned. Also optionally the consideration of buckling may be suppressed and if desired the material may be taken as linear elastic.

Again the components of grad ψ are given in Appendix A.

Numerical cases run with the program were for the most part satisfactory but two questions arose.

1. What, if any, effect would the pure displacement formulation have upon the operation of the method?
2. Would it be possible to link the diameters and thicknesses of some members so that symmetry and other similar restrictions could be imposed upon the structure?

The answers to these questions were sought by the following ψ-function development.

C. The General Space Truss, Displacement Method.

Consider the truss of section B and define a collection of sets of integer pairs $M2_i$ as the pair (r,j) where r is the member number of a member joining node i and j is the number of the node to which it connects node i. For example, the tetrahedral truss of Fig. 4 will have $\{M2\}$ as

$$M2_1 = (1, 3; 3, 2; 4, 4)$$

$$M2_2 = (2, 3; 3, 1; 6, 4)$$

$$M2_3 = (1, 1; 2, 2; 5, 4)$$

$$M2_4 = (4, 1; 5, 3; 6, 2)$$

N_r is defined as before.

Taking the linearized strain and assuming a linear stress-strain law the equilibrium equations take the form

$$\sum_{r \varepsilon M2_i} \frac{\sum_{s=1}^{d} \gamma_{sri}(\bar{u}_{sjk} - \bar{u}_{sik})}{LGTH_r} E \bar{D}_r \bar{T}_r \Pi \gamma_{sri} + P_{sik} = 0 \qquad (3.86)$$

where j corresponds to the r of the set $M2_i$.

Unfortunately this indexing notation, as the reader has no doubt decided, is rather clumsy but it programs for the computer quite handily. For this encroachment of the machine the writer apologizes. The equation reads better if the definition

$$\varepsilon_{rk} = \sum_{s=1}^{d} \frac{\gamma_{sri}(\bar{u}_{sjk} - \bar{u}_{sik})}{LGTH_r} \qquad i,j = N_r \qquad (3.64)$$

is substituted into 3.86; which results in

$$\sum_{r \varepsilon M2_i} [\varepsilon_{rk} E \bar{D}_r \bar{T}_r \Pi \gamma_{sri}] + P_{sik} = 0 \qquad (3.86')$$

It should be emphasized that ϵ_{rk} is not a variable in this ψ-function but merely an intermediate result introduced for convenience.

In order to provide for linking of the actual design quantities $\bar{D}_r$ and $\bar{T}_r$ two generalized design variable sets are introduced, α_V and β_W. Thus if $\bar{D}_1$, $\bar{D}_5$ and $\bar{D}_6$ for example are to be linked together and $\bar{D}_2$, $\bar{D}_3$ and $\bar{D}_4$ are linked we calculate

$$\bar{D}_1 = KD_1\ \alpha_1 \qquad \bar{D}_2 = KD_3\ \alpha_2$$

$$\bar{D}_5 = KD_5\ \alpha_1 \qquad \bar{D}_3 = KD_3\ \alpha_2.$$

$$\bar{D}_6 = KD_6\ \alpha_1 \qquad \bar{D}_4 = KD_4\ \alpha_2$$

where KD_r are preassigned constants. Suppose it was desired that $\bar{D}_1 = \bar{D}_5 = \bar{D}_6/2$ and that $\bar{D}_2 = \bar{D}_3 = \bar{D}_4$ then there would be two design variables α_1 and α_2 and the KD_r might be taken arbitrarily as

$$KD_1 = 1,\quad KD_2 = 2,\quad KD_3 = 2,\quad KD_4 = 2$$

$$KD_5 = 1,\quad KD_6 = 0.5$$

The same sort of development holds for the $\bar{T}_r$. To formalize this, define two groups of integer sets C^α and C^β where C_V^α contains the member numbers of all members whose diameters are controlled by α_V and C_V^β contains the member numbers of all members whose thicknesses are controlled by β_V. Thus

$$\bar{D}_r = KD_r\,\alpha_v \qquad r \in C_v^{\alpha} \qquad v = 1, \ldots A \tag{3.87}$$

$$\bar{T}_r = KT_r\,\beta_w \qquad r \in C_v^{\beta} \qquad w = 1, \ldots B \tag{3.88}$$

where A is the number of α's and B is the number of β's. The total number of design variables is A+B. The program that was developed has the option to fix any α or β thus preassigning a group of $\bar{D}$'s or $\bar{T}$'s.

The variables of ψ will now be represented by their x_j counterparts as in relations 3.32-3.36.

$$x_j = \alpha_v \qquad j = v \qquad v = 1, 2, \ldots A \tag{3.89}$$

$$x_j = \beta_w \qquad j = A+w \qquad w = 1, 2, \ldots B \tag{3.90}$$

$$x_j = u_{sik} \qquad j = A+B+(k-1)\cdot n\cdot d + (i-1)d + s \tag{3.91}$$

$$s = 1, \ldots d$$

$$i = 1, \ldots n$$

$$k = 1, \ldots L$$

Where u_{sik} is the nondimensionalized displacement

$$u_{sik} = \bar{u}_{sik}/K_u \tag{3.92}$$

The range on j is $j = 1,2, \ldots, A+B+L\cdot n\cdot d \equiv \ell$

The equilibrium residuals can be expressed as

$$EQ_{sik} = \sum_{r \in M2_i} \frac{[\varepsilon_{rk}\, E\, \bar{D}_r\, \bar{T}_r\, \Pi\, \gamma_{sri}] + P_{sik}}{\bar{P}} \tag{3.93}$$

where as before $\bar{P}$ is the average of the nonzero applied loads.

The penalties will now be developed. There are no direct restrictions on the α's or β's. (although there could be in some problems) but there are on the $\bar{D}$'s and $\bar{T}$'s. Set

$$BNDD_r = \langle LBD_r - \bar{D}_r \rangle^1 - \langle \bar{D}_r - UBD_r \rangle^1 \tag{3.94}$$

$$BNDT_r = \langle LBT_r - \bar{T}_r \rangle^1 - \langle \bar{T}_r - UBT_r \rangle^1 \tag{3.95}$$

$$BNDR_r = \langle LBR_r - \bar{D}_r/\bar{T}_r \rangle^1 - \langle \bar{D}_r/\bar{T}_r - UBR_r \rangle^1 \tag{3.96}$$

The ordinary direct displacement limits, written in terms of their x_j counterparts, are

$$BNDU_j = \langle LBU_j - x_j \rangle^1 - \langle x_j - UBU_j \rangle^1 \tag{3.97}$$

$$j = A+B+1, \quad A+B+2, \ldots A+B+L \cdot n \cdot d$$

The direct simple stress limits are of a more complicated nature than before because they involve a number of displacements

$$BNDS_{rk} = \langle LBS_{rk} - \epsilon_{rk} E \rangle^1 - \langle \epsilon_{rk} E - UBS_{rk} \rangle^1$$

$$= \langle LBS_{rk} - \sum_{s=1}^{d} \frac{\gamma_{sri} (u_{sjk} - u_{sik}) K_u}{LGTH_r} E \rangle^1 -$$

$$\langle \sum_{s=1}^{d} \frac{\gamma_{sri} (u_{sjk} - u_{sik}) K_u}{LGTH_r} E - UBS_{rk} \rangle^1 \tag{3.98}$$

$$i,j \in N_r$$

The buckling stress limits are also quite complicated, a possibility alluded to in Chapter II when the general form of the g(x) was discussed. These penalties are

$$EB_{rk} = < - \frac{\epsilon_{rk}\ 8\ SF^{(e)} LGTH_r^{\ 2}}{\pi^2(\bar{D}_r^{\ 2} + \bar{T}_r^{\ 2})} - 1 >^1 \qquad (3.99)$$

$$LC_{rk} = < - \frac{\epsilon_{rk}\ SF^{(c)}\ \bar{D}_r}{k_2\ \bar{T}_r} - 1 >^1 \qquad (3.100)$$

To bring into focus the fact that each constituent of the function is a function of the x_j only, this latter term will be rewritten in terms of x_j and known constants

$$LC_{rk} = < - [\sum_{s=1}^{d} \gamma_{sri}(x_{A+B+(j-1)d+(k-1)n\cdot d+s} - x_{A+B+(i-1)d+(k-1)n\cdot d+s})$$

$$SF^{(c)}\ KD_r\ x_V/LGTH_r\ k_2\ KT_r\ x_W] - 1 >^1 \qquad (3.101)$$

where $i,j = N_r$, $\quad r \in C_V^{\alpha}$, $\quad r \in C_W^{\beta}$

The weight penalty can be written as

$$FW = < \frac{\sum_{r=1}^{m} \bar{D}_r\ \bar{T}_r\ \pi\ \rho\ LGTH_r}{W_o} - 1 >^1 \qquad (3.102)$$

and thus the complete ψ-function is

$$\psi = \lambda_W (FW)^2 + \sum_{s=1}^{d} \sum_{i=1}^{n} \sum_{k=1}^{L} EQ_{sik}^{\ 2}$$

$$+ \sum_{r=1}^{m} [\lambda_{D_r} BNDD_r^2 + \lambda_{T_r} BNDT_r^2 + \lambda_R BNDR_r^2]$$

$$+ \sum_{r=1}^{m} \sum_{k=1}^{L} [\lambda_{S_{rk}} BNDS_{rk}^2 + \lambda_{EB} EB_{rk}^2 + \lambda_{LC} LC_{rk}^2]$$

$$+ \sum_{j=A+B+1}^{\ell} \lambda_{u_j} BNDU_j^2 \qquad (3.103)$$

Comparing the form of 3.80 with this it is noted that the elimination of the stress variables has reduced the overall number of variables and number of analysis equations with an accompanying increment in complexity of the constraint penalties.

D. A Simplified Method for Linear Technologies

The preceeding direct developments of ψ-functions can become tedious and when one examines the partial derivative of these in Appendix A they are even more so. Much of this hand work can be eliminated in the event that a matrix formulation for the problem exists and is pre-programmed. Because many organizations have highly developed matrix generation and inversion programs for problems which they deal with frequently, it is of some interest to determine how these resources can be employed

in conjuction with the integrated analysis-synthesis concept.

Assuming the analysis of the problem being dealt with can be formulated as the solution to

$$A \vec{Y}_k = \vec{B}_k \qquad k = 1, 2, \ldots L \tag{3.104}$$

where the $\vec{B}_k$ are L distinct load conditions and the $\vec{Y}_k$ are L vectors of behavior variables, and that an automated capability exists to generate the matrix A given the design variables, it is clear that the residuals can be calculated as

$$\theta = \sum_{k=1}^{L} \{A \vec{Y}_k - \vec{B}_k\} \cdot \{A \vec{Y}_k - \vec{B}_k\} = \sum_{k=1}^{L} \vec{R}_k \cdot \vec{R}_k \tag{3.105}$$

where the ith component of $\vec{R}_k$ is

$$r_{ik} = \sum_{j=1}^{n} (a_{ij} y_{jk}) - b_{ik} \tag{3.106}$$

This calculation is easily programmed; however since A may be sparse more computation may be involved than in the direct ψ-function formulation.

The laborious work of deriving the formulas for $\nabla\theta$ is somewhat relieved by use of the following identity

$$\frac{\partial\theta}{\partial y_{ik}} = 2 \sum_{j=1}^{n} a_{ji} r_{jk} \tag{3.107}$$

Since the assembly of the matrix A is being considered a "black

box", the specific dependence of the a_{ij} upon the design variables, d_s, is not known and the partial derivatives

$$\frac{\partial \theta}{\partial d_s} = 2 \sum_{k=1}^{L} \sum_{j=1}^{n} \sum_{i=1}^{n} \frac{\partial a_{ji}}{\partial d_s} y_{ik} r_{jk} \tag{3.108}$$

cannot be calculated directly.

One possibility is to calculate $\frac{\partial a_{ij}}{\partial d_s}$ by finite difference as

$$\frac{\partial a_{ij}}{\partial d_s} \doteq \frac{\bar{a}_{ijs} - a_{ij}}{\Delta d_s} \tag{3.109}$$

where

$$\bar{a}_{ijs} = a_{ij} (d_1, d_2, \ldots d_s + \Delta d_s, \ldots, d_S) \tag{3.110}$$

This rather crude finite difference formula may actually work quite well because in many problems the a_{ij} are linear (although unknown from the "black box" stand point) functions of the design variables. Thus if

$$a_{ij} = \alpha_{ij1} d_1 + \alpha_{ij2} d_2 + \ldots \alpha_{ijS} d_S \tag{3.111}$$

then

$$\frac{\partial a_{ij}}{\partial d_s} = \alpha_{ijs} = \frac{\bar{a}_{ijs} - a_{ij}}{\Delta d_s} \tag{3.112}$$

and the $\partial a_{ij}/\partial d_s$ needs to be evaluated only once and does not depend upon the value of the design variables.

If the function is nonlinear some care will have to be exercised in the choice of Δd_s and a new $\bar{a}_{ijs}$ will have to be assembled for each new design point $\vec{D} = \{d_s\}$.

Using this representation of the derivative

$$\frac{\partial\theta}{\partial d_s} = \frac{2}{\Delta d_s} \sum_{k=1}^{L} \sum_{j=1}^{n} \sum_{i=1}^{n} (\bar{a}_{jis} - a_{ji})\, y_{ik}\, r_{jk} \qquad (3.113)$$

of if the a_{ij} are known to be linear in d_s the α_{ijs} can be calculated and stored once and for all giving

$$\frac{\partial\theta}{\partial d_s} = 2 \sum_{k=1}^{L} \sum_{j=1}^{n} \sum_{i=1}^{n} \alpha_{jis}\, y_{ik}\, r_{jk} \qquad (3.114)$$

In many cases the penalty functions can be generalized in a similar manner but the diversity of types makes it unrewarding to attempt to outline any here.

Making the conversion to the general variables x_j as was done in the other ψ-function developments we may set

$$x_j = d_s \qquad j = s \qquad s = 1,2, \ldots S \qquad (3.115)$$

$$x_j = y_{ik} \qquad j = S+(k-1)n+i \qquad i = 1,2, \ldots, n \qquad (3.116)$$
$$k = 1,2, \ldots, L$$

and define

$$\psi = \theta + \text{PENALTIES} \qquad (117)$$

Thus the components of $\nabla\psi = \{\frac{\partial\psi}{\partial x_j}\}$ are

$$\frac{\partial\psi}{\partial x_s} = 2 \sum_{k=1}^{L} \sum_{j=1}^{n} \sum_{i=1}^{n} \alpha_{jis}\, y_{ik}\, r_{jk} + \frac{\partial}{\partial x_s} (\text{PENALTIES}) \quad (3.118)$$

$$s = 1, \ldots S$$

$$\frac{\partial\psi}{\partial x_{S+(k-1)n+i}} = 2 \sum_{j=1}^{n} a_{ji}\, r_{jk} + \frac{\partial}{\partial x_{S+(k-1)n+i}} (\text{PENALTIES}) \quad (3.119)$$

$$i = 1, 2, \ldots n$$

$$k = 1, 2, \ldots L$$

It should be emphasized that this form of computation may be inefficient, however it may save much human labor in the development of ψ-functions and provides a method of utilizing the highly efficient existing matrix assemblers. It is incidentially noted that if the a_{ij} are linear in the d_s and the α_{ijs} are calculated it is possible to dispense with the matrix assembler because A may be constructed as

$$A = \sum_{s=1}^{S} [\alpha]_s\, d_s \quad (3.120)$$

where $[\alpha]_s$ is simply the sth "sheet" of the three dimensional array $[\alpha_{ijs}]$. Furthermore many of the matrix products may be performed in advance and need not be repeated. A drawback is that computer storage requirements may get excessive.

The ideas presented above are summarized in Figs. 5 and 6 which are rough block diagrams assuming the existence of a matrix assembler.

E. An Unsuccessful ψ-function for a Dynamics Problem

An attempt to develop a ψ-function for a class of dynamics problems was unsuccessful and its presentation here is for the sake of completeness. At the outset it should be noted that this failure does not imply that dynamics problems are not amenable to synthesis or even that the integrated method is totally inapplicable but only that the rather brute force approach attempted is intractable.

What is meant here by a dynamics problem is one in which the behavior which is to be restricted and/or the behavior to be optimized is a function of time. Note that a problem where the natural frequencies are to be restricted and say the weight is to be minimized is not a dynamics problem in the sense intended here. Furthermore the work was directed toward lumped dynamic systems.

The problems considered were of the class whose system of governing differential equations is of the form

$$\ddot{x}_{ik} = f_i\,(a_1, \ldots a_m, \vec{x}_k, \dot{\vec{x}}_k, t) + r_{ik}\,(t) \qquad (3.121)$$

where $a_1, \ldots a_m$ are the design variables and $\vec{x}_k$ is the vector of displacements corresponding to the kth driving function

$\vec{r}_k(t)$, i.e. $\vec{x}_k = (x_{1k}, x_{2k}, \ldots x_{nk})$. The constraints or design limitations are of the form

$$g_{jk}\,(a_1, \ldots a_m, \vec{x}_k, t) \leq 0 \qquad (3.122)$$

$$j = 1, 2, \ldots T \qquad 0 \leq t$$

$$k = 1, 2, \ldots L$$

and the merit criterion is of the form

$$M = \max\,[\Psi_k(a_1, \ldots a_m, \vec{x}_k)] \qquad (3.123)$$

$$0 \leq t$$

$$k = 1, \ldots T$$

The problem for which the integrated approach was attempted is given in ref. 5. Consider the spring-mass-damper system shown in Fig. 7 where $\{\ddot{y}_k(t)\}$ is a set of known, finite duration inputs (i.e. shock pulses). The governing differential equation is

$$m\,\ddot{x}_k + c\,(\dot{x}_k - \dot{y}_k) + K\,(x_k - y_k) = 0 \qquad (3.124)$$

or defining

$$z_k \equiv (y_k - x_k) \qquad (3.125)$$

$$\ddot{y}_k(t) \equiv r_k(t) \qquad (3.126)$$

then

$$\ddot{z}_k = -\frac{c}{m}\,\dot{z}_k - \frac{K}{m}\,z_k + r_k(t) \qquad (3.127)$$

The design restrictions are taken as

$$LC \leq c \leq UC \tag{3.128}$$

$$LK \leq K \leq LK \tag{3.129}$$

$$\max\ [\max\ (\ |z_k|\ )] \leq U_z \tag{3.130}$$

$$k=1,\ ..\ L, 0 \leq t$$

with both c and K as design variables.

The merit criterion is

$$M = \max\ [\max\ (\ |\ddot{x}_k|\ ) \tag{3.131}$$

$$k = 1,\ ..\ L \quad 0 \leq t$$

or in terms of z_k

$$M = \max\ [\max\ (|\frac{c}{m}\dot{z}_k + \frac{K}{m}\ z_k|)\ ] \tag{3.132}$$

$$k = 1,\ ..\ L \quad 0 \leq t$$

In order to cast this problem in the integrated synthesis-analysis form, numerical integration of 3.127 was used to obtain a system of algebraic equations. For so simple a dynamics problem this may be somewhat extreme but it was intended that this problem serve as a model for more difficult differential equations.

Writing (3.127) as a system of first order equations

$$\dot{Z}_{1k} = Z_{2k} \tag{3.133}$$

$$\dot{Z}_{2k} = -\frac{c}{m} Z_{2k} - \frac{K}{m} Z_{1k} + r_k(t) \tag{3.134}$$

or in vector form

$$\dot{\vec{Z}}_k = \vec{F}(\vec{Z}_k, t) \tag{3.135}$$

where

$$\vec{F}(\vec{Z}_k, t) = \begin{Bmatrix} Z_{2k} \\ \\ -\frac{c}{m} Z_{2k} - \frac{K}{m} Z_{1k} + r_k(t) \end{Bmatrix} \tag{3.136}$$

the modified Euler method may be applied as

$$\vec{Z}_k^{q+1} = \vec{Z}^q + \frac{h}{2}\left[\vec{F}(\vec{Z}_k^q, t_q) + \vec{F}(\vec{Z}^{q+1}, t_{q+1})\right] \tag{3.137}$$

where h is a small increment in time and $t_{q+1} = t_q + h$, $t_o = 0$. Taking the initial conditions to be zero

$$\vec{Z}_k = 0$$

or

$$Z_{1k}^o = Z_{2k}^o = 0$$

The analysis residuals were defined as

$$\vec{R}_k^o = \vec{Z}_k^1 - \frac{h}{2}\left[\vec{F}_k^o + \vec{F}_k^1\right] \tag{3.138}$$

$$\vec{R}_k^q = \vec{Z}_k^{q+1} - \vec{Z}_k^q - \frac{h}{2}\left[\vec{F}_k^q + \vec{F}_k^{q+1}\right] \tag{3.139}$$

$$q = 1, 2, \ldots$$

$$k = 1, 2, \ldots L$$

The penalty functions

$$PC = -\langle C - LC \rangle^1 + \langle UC - C \rangle^1 \tag{3.140}$$

$$PK = -\langle K - LK \rangle^1 + \langle UK - K \rangle^1 \tag{3.141}$$

$$Pz_k^q = -\langle Z_{1k}^q - U_z \rangle^1 + \langle U_z - Z_{1k}^q \rangle^1 \tag{3.142}$$

and merit drawdown penalty

$$M_k^q = -\langle \frac{c}{m} Z_{2k}^q + \frac{K}{m} Z_{1k}^q - M_o \rangle^1 + \langle M_o - \frac{c}{m} Z_{2k}^q - \frac{K}{m} Z_{1k}^q \rangle^1 \tag{3.143}$$

were defined.

The ψ-function was then

$$\psi = \sum_{k=1}^{L} \sum_{q=0}^{p} [(\vec{P}_k^q)^2 + (\vec{P}_{2k}^q)^2 + (M_k^q)] + PC^2 + PK^2 \tag{3.144}$$

wherein all Z_{ik}^q except where $q = 0$ and c and K are taken as variables and p is chosen to be large enough so that all significant maxima will have occured at $t < t_p$.

It is true $\psi = 0$ only when a choice of c, K and Z_k^q is such that the approximate analysis equations and all penalties are satisfied, however it turns out that ψ always has other minima than $\psi = 0$. This fact was discovered when a computer program embodying this formulation was run. The extra minima occurs as follows: assume that there is only one driving function for simplicity and that all $\vec{R}^q = 0$ except $\vec{R}^v$ and that $M^v \neq 0$; there is then a choice of c, K, Z_1^v, and Z_2^v such that

$$\frac{\partial \psi}{\partial Z_i^q} = 0 \qquad i = 1, 2, \quad q = 1, \ldots p \tag{3.145}$$

$$\frac{\partial \psi}{\partial c} = 0 \tag{3.146}$$

$$\frac{\partial \psi}{\partial k} = 0 \tag{3.147}$$

Even if this difficulty could be avoided by handling the behavior and draw down constraints directly and solving the constrained minimization problem, the method is impractical. Even though it is possible to consider (3.137) as a system of simultaneous equations, the residual minimization process is a poor attack because the problem is an initial value problem and not a boundary value problem. In other words since $\vec{Z}_k^q$ depends upon $\vec{Z}_k^{q-1}$, $\vec{Z}_k^{q-2}$, ..., $\vec{Z}_k^{o}$ but not upon $\vec{Z}_k^{q+1}$, $\vec{Z}_k^{q+2}$ ... it is difficult to reflect design and analysis changes which are induced by situations occuring at one time back through earlier times.

Chapter IV

MINIMIZATION TECHNIQUES

Central to the development of operational capabilities using the integrated method are algorithms for finding the unconstrained minimum of a function of many variables. It is clear that the overall efficiency of the method depends strongly upon the efficiency of the chosen algorithm. There is a large literature on the subject and a selected bibliography is given in Appendix B.

This chapter contains a brief discussion of some of the common methods and in particular of the one used in the development of the numerical results for this paper and a recommendation for evaluation of one which promises to be superior.

A. Algorithms for Minimization.

Aside from random search and certain organized probe techniques such as relaxation, the bulk of the methods are of the steepest descent type. These are based upon the idea, apparently first put forward by Cauchy that if a sequence of points $\{ \vec{x}^q \}$ is generated so that

$$\vec{x}^{q+1} = \vec{x}^q - h_q \nabla\psi(\vec{x}^q) \tag{4.1}$$

and each h_q is a positive scalar constant chosen so that

$$\psi(\vec{x}^{q+1}) < \psi(\vec{x}^q) \tag{4.2}$$

the sequence $\{ \psi(\vec{x}^q) \}$ will tend to a minimum. Of course $\psi(\vec{x})$ must have at least one minimum if the method is to work; if it has more than one, there is in general no way to know which of these relative minima the process will tend to.

The method can be extremely slow depending upon the function $\psi(\vec{x})$ and the rationale used to generate the sequence $\{h_q\}$. Perhaps the simplest way to determine acceptable values for h_q is to guess at a value and try the $\vec{x}^{q+1}$ it yields. If $\psi(\vec{x}^{q+1}) \geq \psi(\vec{x}^q)$ h_q may be reduced repeatedly until a suitable value is found. This technique is usually quite inefficient both because of the large number of trials which may be necessary to determine the h_q's and because the sequence $\{ x^q \}$ itself may converge slowly.

Most of the other techniques based upon the idea embody different, more or less logical, methods to obtain the h_q. The one employed in this paper to obtain the numerical results is essentially the same as that given in ref. 12 and is also described in detail in Appendix C*. The rationale used in this method for arriving at the values of h_q is to pick them such that $\psi(\vec{x}^{q+1})$ takes on the smallest value it can for that particular move. That is, if $\vec{x}^{q+1}$ is generated as in equation 4.1 then

---

* The computer program which embodies this technique is called QUADOPT in this paper and is listed in Appendix D.

$\psi(\vec{x}^{q+1})$ may be thought of as a function of the single scalar h_q and a value of h_q is sought such that $\psi(h_q) \rightarrow$ MIN. The logic behind this is that each step should yield the greatest possible reduction in ψ.

The drawback in this is that

$$\nabla\psi(\vec{x}^{q+1}) \cdot \nabla\psi(\vec{x}^{q}) = 0 \qquad (4.3)$$

in other words each move is orthogonal to the previous one. This causes the moves to zig-zag and progress can be very slow. The technique used to "break-up" this pattern is to occasionally take a move in the direction $\vec{R} = \vec{x}^{q} - \vec{x}^{q-2}$ instead of $\nabla\psi(\vec{x}^{q})$. Thus

$$\vec{x}^{q+1} = \vec{x}^{q} - h_q\,(\vec{x}^{q} - \vec{x}^{q-2}) \qquad (4.4)$$

and again h_q is chosen for a minimum of $\psi(\vec{x}^{q+1})$

This two stage algorithm was used to obtain the results for this paper. It generally works well but in some cases it is inefficient. The difficulty seems to be due to the eccentricity of the function ψ. If locally ψ is imagined to be approximated by a positive quadratic function the hyperellipsoids which are its level surfaces may be very elongated and narrow. Indeed if these hypersurfaces were spheres the method would obtain the solution in one step. This idea can be mathematically justified and has led to the development of a generalization of the steepest descent method as follows

$$\vec{x}^{q+1} = \vec{x}^{q} - h_q M \nabla\psi (\vec{x}^{q}) \tag{4.4}$$

where M is a matrix. If M is such that

$$\{M \nabla\psi(x^{q})\}^T \{ \nabla\psi (x^{q}) \} > 0 \tag{4.5}$$

Then the move will still cause $\psi(\vec{x}^{q+1}) < \psi(\vec{x}^{q})$ for some choice of h_q. The ideal M would be one which yielded the solution in one move or, viewing this another way, transformed the ellipsoids into spheres. If ψ is actually quadratic then the choice

$$M = [\frac{\partial^2\psi}{\partial x_i \partial x_j}]^{-1}, \quad h_q = 1 \tag{4.6}$$

is perfect because if

$$\psi = (A \vec{X} - B)^2 \tag{4.7}$$

where A is a matrix, then

$$\nabla\psi = 2A^T (A \vec{X} - \vec{B}) \tag{4.8}$$

and

$$M = [2 A^T A]^{-1} \tag{4.9}$$

and then

$$\psi(\vec{x}^{q+1}) = \{ A[\vec{X}^{q} - (A^TA)^{-1} A^T (A X^{q} - B)] - B \}^2$$

$$= \{ A[\vec{X}^{q} - \vec{X}^{q} + A^{-1} B] - B\}^2 = 0 \tag{4.10}$$

Of course this choice of M is not easy to compute and in fact no effort has been saved over finding the solution of $A\vec{X} = \vec{B}$ directly in the case where ψ is quadratic.

A method called the variable metric method which successively develops an approximation to M as the sequence $\{\vec{x}^q\}$ is generated is given in references (13) and (14). This method has been found to be quite efficient and its only drawback seems to be the computer storage requirements for M which gets large when many variables are involved.

When the work reported on in this paper was undertaken, the efficiency of the newly developed variable matrix method was felt to be offset by the necessity for large amounts of computer storage capacity and by the possible need to use auxiliary storage for large problems.

It was therefore decided to use the method previously described with the attitude that the integrated method of synthesis and analysis could be developed and tested independently of the minimizing algorithm.

It has developed however that the efficiency of the variable metric method was underestimated and perhaps an order of magnitude improvement in speed can be expected. Therefore it is recommended that in further work with the integrated approach, the variable metric method be evaluated by direct comparison with the method used in this paper.

B. A Scheme for Extrapolation Between Draw-downs

A device which has been used to speed up the draw-down sequence considerably is an extrapolation from the solution of one draw-down to the next. The idea involved is simple; if $\vec{X}_1$ is the design-analysis point corresponding to the minimum of ψ with M_1 the merit goal and $\vec{X}_2$ corresponds to the minimum of ψ for the goal M_2 then $\vec{X}_3 = 2\vec{X}_2 - \vec{X}_1$ is likely to be near a minimum of ψ corresponding to a merit of $M_3 = 2M_2 - M_1$.

This hypothesis can be justified as follows: Suppose the analysis is linear and can be expressed as the matrix problem

$$A\,y = \vec{B} \tag{4.11}$$

and suppose $\vec{y}_1$ is the solution to this problem for $A = A_1$ and $\vec{y}_2$ corresponds to $A = A_2$ then if

$$\delta \equiv A_1 - A_2 \tag{4.12}$$

and

$$\Delta\vec{y}_1 \equiv \vec{y}_2 - \vec{y}_1 \tag{4.13}$$

then

$$\vec{y}_2 = (I - A_1^{-1}\,\delta)^{-1}\,\vec{y}_1 \tag{4.14}$$

For "small" δ

$$(I - A_1^{-1}\delta)^{-1} = I + A_1^{-1}\delta + (A_1^{-1}\delta)^2 + (A_1^{-1}\delta)^3 + \ldots \tag{4.15}$$

and

$$\vec{y}_2 = \left[I + \sum_{r=1}^{\infty} (A_1^{-1}\,\delta)^r \right] \vec{y}_1 = \vec{y}_1 + \left[\sum_{r=1}^{\infty} (A^{-1}\,\delta)^r \right] \vec{y}_1 \quad (4.16)$$

and thus

$$\Delta\,\vec{y}_1 = \sum_{r=1}^{\infty} (A_1^{-1}\,\delta)\,\vec{y}_1 \quad (4.17)$$

Now if $A_3 = 2A_2 - A_1 = A_1 - 2\delta$ then the solution to $A_3 y_3 = \vec{B}_3$ is

$$\vec{y}_3 = (I - 2A_1^{-1}\,\delta)^{-1}\,\vec{y}_1 \quad (4.18)$$

If 2δ is "small" then

$$\begin{aligned} \vec{y}_3 &= \{I + [2A_1^{-1}\,\delta] + [2A_1^{-1}\,\delta]^2 + \dots\}\,\vec{y}_1 \\ &= \vec{y}_1 + 2\Delta\,\vec{y}_1 + \{\sum_{r=2}^{\infty} (2r-2)(A_1^{-1}\,\delta)^r\}\,\vec{y}_1 \end{aligned} \quad (4.19)$$

or approximately

$$\vec{y}_3 = \vec{y}_1 + 2\Delta\,\vec{y}_1 = 2\,\vec{y}_2 - \vec{y}_1 \quad (4.20)$$

If the matrix A is nearly a linear function of the design variables $d_1, \dots d_s$ so that $a_{ij} \cong \alpha_{1ij}\,d_1 + \alpha_{2ij}\,d_2 \dots \alpha_{sij}\,d_s$ and if the d_i are changed to $d_i - \gamma_i$ then the a_{ij} are changed to $a_{ij} - \delta_{ij} = a_{ij} - (\alpha_{1ij}\,\gamma_1 + \alpha_{2ij}\,\gamma_2 \dots + \alpha_{sij}\,\gamma_s)$ and the change $d_i - 2\,\gamma_i$ changes a_{ij} to $a_{ij} - 2\,\delta_{ij}$. Thus if $\psi(\vec{X}_1) = 0$ and $\psi(\vec{X}_2) = 0$ then, unless a new constraint is encountered, $\psi(2\vec{X}_2 - \vec{X}_1) \cong 0$. If the merit criterion is a nearly linear function of $\vec{X}$ and M_1 is associated with $\vec{X}_1$ and M_2 is associated

with $\vec{X}_2$ then $M_3 = 2M_2 - M_1$ will be associated with $\vec{X}_3$.

In the event that the extrapolation causes a new constraint to be violated the minimizer algorithm will seek a new $\vec{X}_3' \neq \vec{X}_3$ for which $\psi(\vec{X}_3') = 0$. Generally the next extrapolation $\vec{X}_4 = 2\vec{X}_3' - \vec{X}_2$, will not cause the same constraint penalty to become active because the restrictions encountered by $\vec{X}_3'$ are reflected into $\vec{X}_4$. In other words the extrapolation guides the process along or away from the constraints.

Chapter V

NUMERICAL RESULTS

In this chapter numerical results are presented for several example problems for each of the ψ-functions developed in Chapter III. These results have been obtained using digital computer programs based upon these ψ-functions and the minimizer algorithm discussed in Chapter IV and in Appendix C. The complete final output sheets are included in Appendix E.

Table 12 contains a summary of the computer running times for the results presented below. The times presented are the actual 1107 running times for the Algol programs and estimated Fortran running times. These latter are merely the Algol times divided by 5. This factor was obtained by comparing the execution times of a simple program coded in both Algol and Fortran.

The extreme generality of the Algol compiler is ideal for the experimental type of work involved in this project but this same generality also causes it to produce less efficient operating programs. All of the results in this paper were obtained with Algol 60 programs with the exception of those for the m-bar truss which were done with Algol 58 a faster but less general compiler which has been phased out of the present operating system at Case Institute of Technology.

These running times are presented for completeness and care must be exercised in drawing any conclusions from them.

The only difference between Case 1 and Case 2 is that Case 1 is based on a linear analysis and Case 2 employs the nonlinear analysis. For Case 1 then, the only additional data are the values of the ψ-function control parameters and they are

$$\varepsilon = 0.0001 \qquad s = 0.1$$

$$\Delta = 0.05 \qquad g = 0.01$$

The results for Case 1 are shown in Table 2 and they compare well with previous results[2] obtained using a design space based method. The previously reported result is

$$\Lambda_1 = 1.124 \text{ in.}$$

$$\Lambda_2 = 0.523 \text{ in.}$$

$$\Lambda_3 = 1.610 \text{ in.}$$

$$W = 8.869 \text{ lbs}$$

For Case 2 the ψ-function control parameters are the same as those used for Case 1, however the nonlinear analysis is retained and this requires the following additional data

$$Y = 71.5 \text{ ksi} \qquad M_i = 11$$

The results for Case 2 are also shown in Table 2, and they may be compared with those obtained in Case 1 using a linearized analysis. It is interesting to note that in Case 2 the displacements are generally larger, which is not surprising. In particular it is seen that the stresses $\bar{\sigma}_{31}$ and $\bar{\sigma}_{32}$ are close to

PAGE 74 INTENTIONALLY BLANK

their limiting values in Case 1, while $\bar{\sigma}_{31}$ and $\bar{u}_3$ are nearly bound in Case 2. Note that the minimum weight design achieved based on the nonlinear analysis is slightly heavier than that obtained when the analysis is linearized. This is reasonable since the linearized analysis was based on the initial tangent modulus, which implies a stiffness that is not actually present at higher stress levels.

Next consider a three bar aluminum truss subject to four distinct load conditions for which H = 20 in. and the $\bar{d}_i$ and $\bar{A}_i$ are design variables. The four load conditions are given in Table 3. Note that load conditions 2 and 4 are obtained from load conditions 1 and 3 respectively by multiplying the magnitude of the loads by the not unfamiliar factor 1.5. The material properties used in Case 3 are

$$E_i = 10 \times 10^3 \text{ ksi}$$

$$\rho_i = 0.1 \text{ lbs/in}^3$$

$$Y_i = 45 \text{ ksi}$$

$$N_i = 11$$

The ratio $(D/t)_i$ is assigned a value of 20. The buckling stress safety factors for load conditions 1 and 3 are set to 1.5 and those for load conditions 2 and 4 are set to unity.

The stress limits for load conditions 1 and 3 are taken to be $\pm$ 45 ksi, and for load conditions 2 and 4 they are taken to be $\pm$ 65 ksi (see Table 4). The displacement limits, for load conditions 1 and 3 are set to $\pm$ 0.2 in. and for load conditions 2 and 4 they are taken to be $\pm$ 2.0 in (see Table 4). The results for Case 3 are shown in Table 4 and were obtained using the same ψ-function control parameters as in Cases 1 and 2. Note that the displacements are all small and that the stress $\bar{\sigma}_{12}$ is critical in buckling.

At this point it is noted that the stress limit concept of dealing with local buckling causes some inconsistencies when used with synthesis methods. Simply stated the problem is that the synthesis method cannot reduce a member to zero if in any load condition it is subject to negative strain. One would have hoped that if a member were unnecessary a synthesis algorithm would automatically eliminate it. Using the stress limit concept for buckling this will generally not happen. Consider for example, Case 1 and assume that the three bar design given in Table 2 is the optimum m-bar truss for the loads. Now if a fourth very small member were added with say $\bar{A}_4$ = 0.02 in. and $\bar{d}_4$ = 25.0 in. then the negative strain produced by loads 1 and 3 would cause the member to buckle and hence the synthesis would be obliged to "beef it up" when in fact it should eliminate it.

One remedy for this problem is the use of a method currently under development* wherein the Euler buckling of members is permitted and their post buckling behavior taken into account. This analysis is nonlinear but would lend itself to the integrated formulation. The incorporation of this method could be used as follows; if no external reasons required the existence of a particular member then the synthesis could reduce its size. Ultimately it might buckle but if there were no restriction against bucking and this action did not cause an adverse redistribution of forces in the structure it could be successfully eliminated.

The preliminary results from this analysis method are very promising and when it is complete it is recommended that it be incorporated in a synthesis capability. The imminence of this development is what prompted the elimination of the geometric nonlinearities from the second two ψ-function developments. It was felt that true, consistent stability control, of both a local and general nature would have to await this development and that, having shown that such nonlinearities could be handled in the case of the n-bar truss, further work with

---

* Mr. Robert Mallett is developing this analysis technique at Case Institute of Technology under Air Force Contract AF 33(615)-1022.

geometric nonlinearities would be unrewarding.

B. General Space Truss Examples

1. Planar Cases

Consider the planar truss shown in Fig. 8 which is subject to the 3 load conditions shown. The structure is to be made of steel and thus $E = 3 \times 10^7$ psi. and $\rho = 0.28$ lb/in^3. This problem was solved for a variety of design limitations in order to investigate the influence of these limitations upon the character of the optimum design. This sequence of problems was done with only the tube diameters as design variables; the tube wall thicknesses were all set arbitrarily at 0.0318 in.

While the loading pattern is symmetric the support condition are not, therefore the design may be unsymmetric. In the case of the force-displacement program the design-variable linking feature is not present and the chips must be let fall where they will; however in the displacement program symmetry may be imposed upon the design if desired.

The first set of design limitations for which the problem was solved were; stress bounds $\pm$ 50,000 psi, Euler buckling and local crippling, and maximum displacement of any node in any direction for any load condition = $\pm$ 0.15 in. (Case 4.A).

Starting with the design given in Table 5 weighing 106.0 lbs. the force-displacement program evolved the final design listed in Table 5 which weighed 79.6 lbs. This design has the

Euler buckling stress limit critical for member 11 in load condition 1 and the downward displacement of node 2 in load condition 1 equal to its limit. The other two load conditions are non-critical at the solution; a clever engineer may or may not have been able to predict this.

Starting again with the same design and using the displacement program a final design was produced as given in Table 5 which weighed 82.6 lbs. This design was only critical in the downward displacement of node 2 in load condition 1.

The differences in these two designs come from two sources. First the difference in final weight is due to the fact that the weight is reduced in increments--in this case 5% at a time. Thus the weight of 79.6 is probably close to the optimum and 82.6 is probably slightly less than 5% higher than optimum. If it had been considered important the answer could have been ground down in 1%, 1/2% etc. increments.

The difference in final designs is striking even allowing for the weight difference. This can be attributed to the fact that, within limits, the material distribution (given a constant weight) in the truss only weakly affects the stiffness at node 2. That is, there are a variety of designs having the same weight and some deflection of node 2 under load condition 1. A secondary choice might then be made among these using some other criterion such as the one least nearly critical in Euler buckling.

In order to test further the hypothesis that the same stiffness could be obtained in this problem by a variety of designs the problem was run with the same design limitations but using the linking feature of the displacement program to obtain a symmetric design. The starting design and the final design weighing 81.0 lbs. are given in Table 6. This design was critical only in the vertical displacement of node 2 in load condition 1.

A second set of design limitations for this problem was chosen (Case 4.B). The only difference between this and the first was that the maximum permitted displacement was ± 0.20 in. -- 0.05 in. greater than before. The same starting point was used and the final design as obtained using the displacement program only, weighs 68.1 lbs as given in Table 7. This design is critical in Euler buckling in members 4, 6, and 11 in load condition 1 and members 7 and 9 in load condition 2 and is critical in displacement at node 2 in load condition 1.

A third set of design limitations for the problem was chosen to be identical with the first set with the exception that the maximum permitted displacement was ± 0.25 in. (Case 4.c). Starting with the same initial design as before, a design weighing 55.4 lbs. was obtained using the force-displacement program and one weighing 56.1 lbs using the displacement program. These designs are given in Table 8.

These designs are essentially fully stressed, that is, every member is critical in buckling in at least one load condition and displacement bounds are not active. It is believed that this optimum is unique or very nearly so.

When the optimum design is fully stressed its synthesis can more efficiently be performed using the familiar stress ratio method, however it should be noted that as the preceeding examples show it is not usually possible to say a priori that the optimum design will be fully stressed.

2. Three dimensional cases

Consider the truss shown in Fig. 9 which is subject to the 4 load conditions given in Table 9. The structure is to be made of magnesium with $E = 6.5 \times 10^6$ psi and $\rho = 0.065$ lb/in^3. Optima were obtained assuming both linear and nonlinear behavior of the material. For the nonlinear solution Y was taken as 1.7×10^4 psi and p as 9. The design variables were the diameter and wall thickness of the tubes and both column buckling and local crippling were considered as possible failure modes. The maximum and minimum permissible stresses were taken to be $+ 3.0 \times 10^4$ and -1.7×10^4 psi. Displacement limits were not considered.

The design will obviously be symmetric and therefore in the application of the displacement program only two load conditions

needed to be considered (1 and 3) and the linking feature was used to insure symmetry. The starting design and final designs for both programs using the linear material are given in Table 10. It turns out that load conditions 1 and 2 are not active at the optimum; they were, however, active during the drawdown sequence.

It is interesting to note that several unsuccessful attempts were made to outguess the program. When the displacement program had obtained a design weighing 6.37 lbs. the program was stopped because it was felt that member 1 had become too small and that it should carry more load across the truss to the opposite side. The design was changed from $D_1 = 2.29$, $D_2 = D_3 = D_4 = D_5 = 1.57$, $D_6 = D_7 = D_8 = D_9 = 3.56$, $T_1 = 0.010$, $T_2 = T_3 = T_4 = T_5 = 0.026$, $T_6 = T_7 = T_8 = T_9 = 0.016$ to $D_1 = 2.29$, $D_2 = D_3 = D_4 = D_5 = 2.0$, $D_6 = D_7 = D_8 = D_9 = 3.56$, $T_1 = 0.030$, $T_2 = T_3 = T_4 = T_5 = 0.020$, $T_6 = T_7 = T_8 = T_9 = 0.016$, which weighed 6.62 lbs. The synthesis was restarted and the process terminated with the result given in Table 10 in which member 1 has become small again.

It was then felt that member 1 should perhaps be eliminated altogether because of this result. Removing member 1 the truss becomes determinate and the techniques of ref. 11 can be used to find the fully stressed-optimum design which is

$D_2 = D_3 = D_4 = D_5 = 3.10 \quad D_6 = D_7 = D_8 = D_9 = 3.64,$
$T_2 = T_3 = T_4 = T_5 = 0.0113 \quad T_6 = T_7 = T_8 = T_9 = 0.018$ which weighs 6.16 lbs and is heavier than the result obtained by synthesis with member 1 present. It is also interesting to note that the fully stressed design with member 1 omitted involved both load conditions whereas the optimum does not.

The results using the nonlinear material properties are given in Table 11. As one would expect, the result is heavier reflecting the reduced stiffness of the tangent modulus.

Chapter VI

DISCUSSIONS AND CONCLUSIONS

The approach to the synthesis program described in the preceeding converts what is usually handled as a constrained minimization in design space to a sequence of unconstrained minimization problems in an integrated space. The motivation for the particular techniques developed is that the quest for an acceptable improved design with an acceptable behavior is carried our simultaneously with the analysis problem (in fact they are one problem) thus eliminating the repeated analysis of many designs which are then rejected. These techniques contain the following novel elements.

1. An integrated attack of the problem. The consideration of the problem in the integrated space, while not entirely new, has not previously been successfully handled because, as a mathematical programming problem, it has nonlinear constraints and objective (merit) function.

2. The draw-down concept. The idea of constituting the merit function as an inequality constraint yields a minimization problem in the integrated space in which the function being minimized (the analysis residual) has a known minimum. The advantage of this is reflected in the following.

3. The conversion to an unconstrained minimization problem in the integrated space. Because the function being minimized is the analysis residual and its minimum is known, the penalty function may be used to transform the constraints and construct an unconstrained minimization problem. The penalty function is not new but when used in the usual minimization problem where the constrained minimum of the function is not known the multipliers (λ's) cannot be determined with any confidence. In the approach described in this paper once the convergence criterion for the residuals is established the λ's may be explicitly determined.

4. The analysis convergence control. The integrated method makes it possible to apply rational engineering judgments in deciding the degree of accuracy of the analysis necessary in relation to the synthesis problem.

The body of experience gained in applying the method to actual problems has generally supported the hope that the desired advantages are present. The running of these problems has also brought out two particular weaknesses in the method. These are summarized below with suggested avenues of study.

1. The initial value problem and the near initial value problem. The true initial value problem attempted in Chapter III section E failed when the finite difference

residuals were used in the integrated method. While the details of the reason for this has not been completely studied, it is clear that it is related to the propagation nature of the analysis problem. A similar difficulty was encountered in the application of the general truss programs to cantilever beam like structures. In a sense these are similar to initial value problems and when synthesis of such structures was undertaken, the method, while not completely foiled, was extremely slow.

The relationship between these difficulties suggests that a thorough study of the mathematical properties of the ψ-functions for such problems would be rewarding. Another remedy for the near propagation problems may be found in the application of the variable metric minimization method (see 4 below).

2. The termination problem. In the application of the integrated method a sequence of merit goals is generated and attained. This sequence terminates when an unachievable goal is set. The discovery that the current goal is beyond reach is presently made only when the minimizer finds a minimum of ψ (i.e. when $\nabla\psi \to 0$) which is not zero. The satisfaction of this termination criterion often requires a protracted computational period and when it is satisfied the only information gained

is that the last achieved goal is the optimum (actually that it is within Δ of the optimum). There are a number of tests which have recently been developed for use in the design space which determine whether or not a given design is a local optimum. If such tests can be adapted or similar ones developed for use with the integrated method a large increment in efficiency during the termination phase will be obtained.

If the measure of an idea is the number of new questions it poses, the integrated method is a rich one. The following is a list of some extensions, areas of possible improvement, modification, or investigation which have come to light in the course of this research.

1. The defficiency of stress limit buckling control. This problem has been discussed in Chapter V section A and here it is merely reiterated that the prospects for including the nonlinear post buckling behavior in the integrated method seem very promising.

2. The possibility of handling the constants directly. The conversion of all constraints into penalties while convenient may be somewhat inefficient in the case of certain constraints. Many constraints are linear so that if the more complicated constraints are treated using penalty functions, the resulting functions may be minimized subject to these linear in-

equality constraints. This problem has been found to be somewhat more tractable than when both constraints and objective function are nonlinear.

3. Control parameter studies. The convergence criterion (ϵ), penalty constants (λ's), tolerances (Q's) and the drawdown increment (Δ) have a complicated and interrelated effect upon the efficiency of the integrated method and there are many possibilities for study involving these numbers. One example of such an investigation comes from the proposal to vary the convergence criterion (ϵ) from one drawdown to the next. Thus at the beginning of the draw-down sequence a looser criterion could be applied than near the end. The advantage of this is that the less stringent the criterion the faster the convergence. The analysis needs to be really sharpened only as the optimum design is approached. The unresolved question, of course, is how to determine nearness to the optimum design.

Another possibility along the same lines is the idea of varying the drawdown increment. Large drawdowns if they can be accomplished are more efficient than small ones, however, generally one would like the last few to be small so as to bracket the optimum within closer limits.

An interesting question involves the λ's and Q's

(the penalty constants and tolerances). If the actual upper limit on some quantity is $\overline{UB}_j$ and the penalty is constructed as $\lambda_j < x_j - UB_j >^2$ where $UB_j = \overline{UB}_j - Q_j$ and $\lambda_j = \epsilon/Q_j^2$ then when ψ_∞ is less than ϵ, x_j will be less than $\overline{UB}_j$. When Q_j is a relatively small percentage of UB_j the penalty merely acts to prevent violation of UB_j; however if Q_j were a larger fraction (say 30%) then the penalty might serve to guide the minimization process away from the constraints. In other words "thicker" bounds might give some "warning" that a limit was being approached. In preliminary attempts with this idea the process has not been hastened but slowed, however perhaps a more organized study would be fruitful.

4. Minimization technique development. As mentioned earlier (Chapter IV) an investigation of the variable metric method applied to the ψ-function should yield considerable improvement in speed. It may be possible to circumvent the disadvantage of excessive storage requirements that this method has. There is some reason to suspect that the metric can be approximated by a block diagonal matrix which has much smaller storage requirements. The fact that the residuals for each load condition are uncoupled from every other load conditions and that the only coupling that enters is through the design variables suggests that the metric

which uncouples all the equations has this block diagonal form.

5. Computer aided formulation. Since much of the human labor expended in solving a problem using the integrated method is the repetative organized drudgery involved in the formulation and programming of ψ and $\nabla\psi$ a possible area of investigation is the programming of a computer to do the programming. In other words what is suggested is a ψ-function compiler. With such a compiler all that the engineer would need to do is supply the analysis and constraint equations and the computer would construct a program that would compute ψ and $\nabla\psi$. While the development of such a compiler is not a trivial task the organization of the integrated method is such that it can be logically described and thus programmed. It is likely that programs so produced would be less efficient than the "hand made" ones just as compiled programs are usually less efficient than machine language programs.

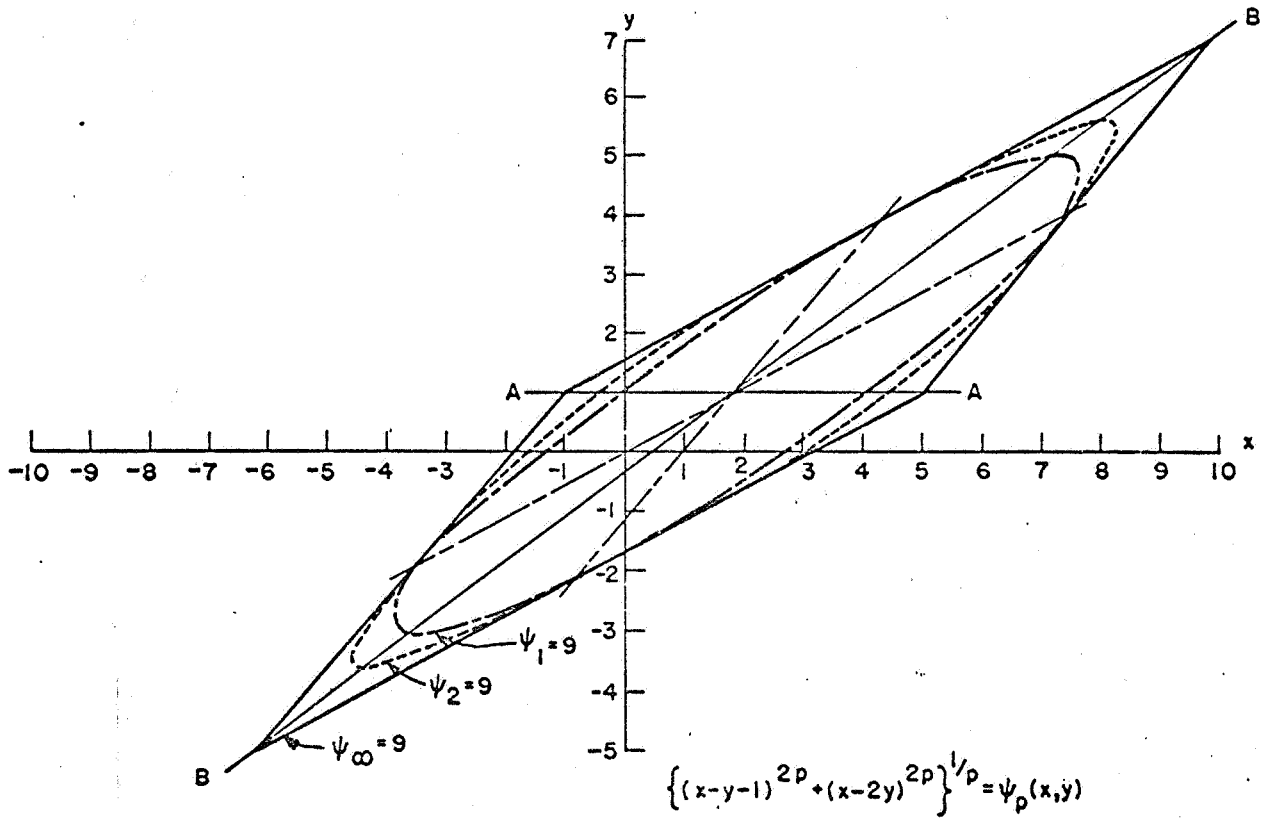

FIGURE I TYPICAL LEVEL CURVES OF Ψp

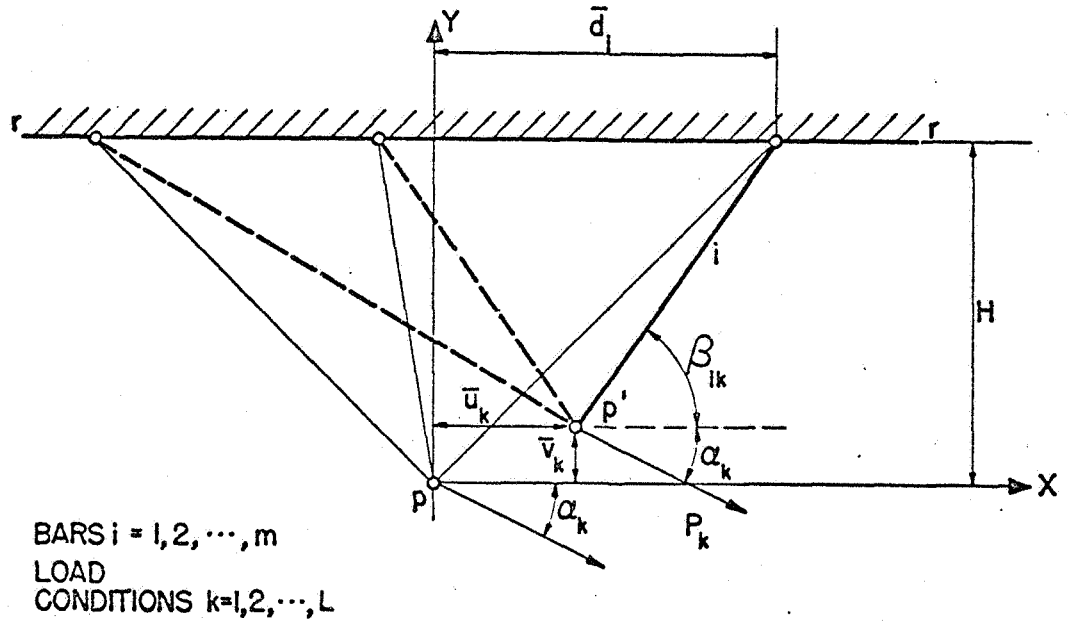

FIGURE 2 THE m-BAR TRUSS

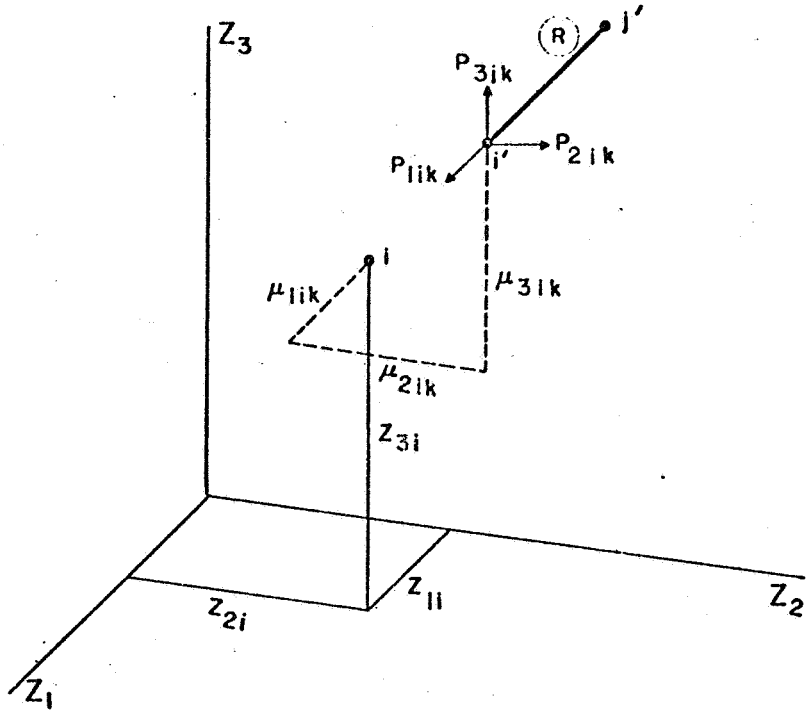

FIGURE 3 THE GENERAL SPACE TRUSS

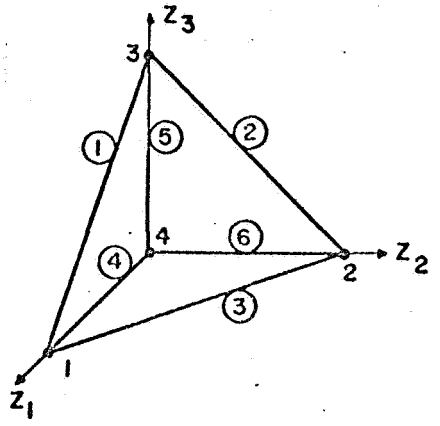

FIGURE 4 A TETRAHEDRAL TRUSS EXAMPLE

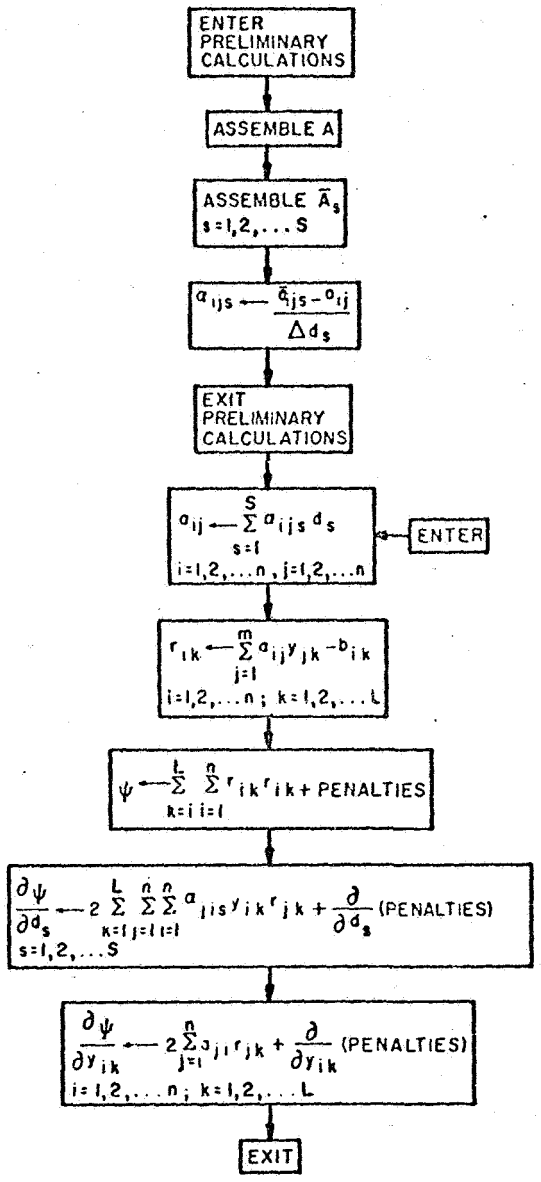

FIGURE 5 FLOW DIAGRAM OF SIMPLIFIED Ψ-FUNCTION, LINEAR DEPENDENCE ON DESIGN VARIABLES

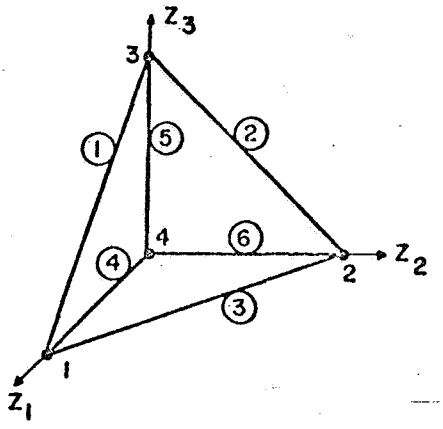

FIGURE 4 A TETRAHEDRAL TRUSS EXAMPLE

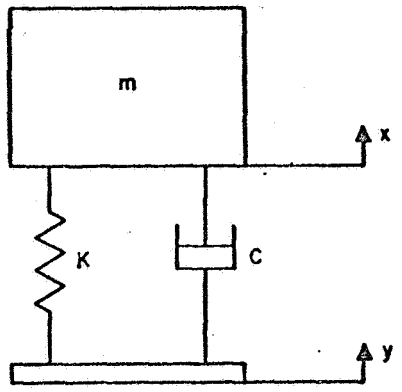

FIGURE 7 SHOCK ISOLATOR SYSTEM

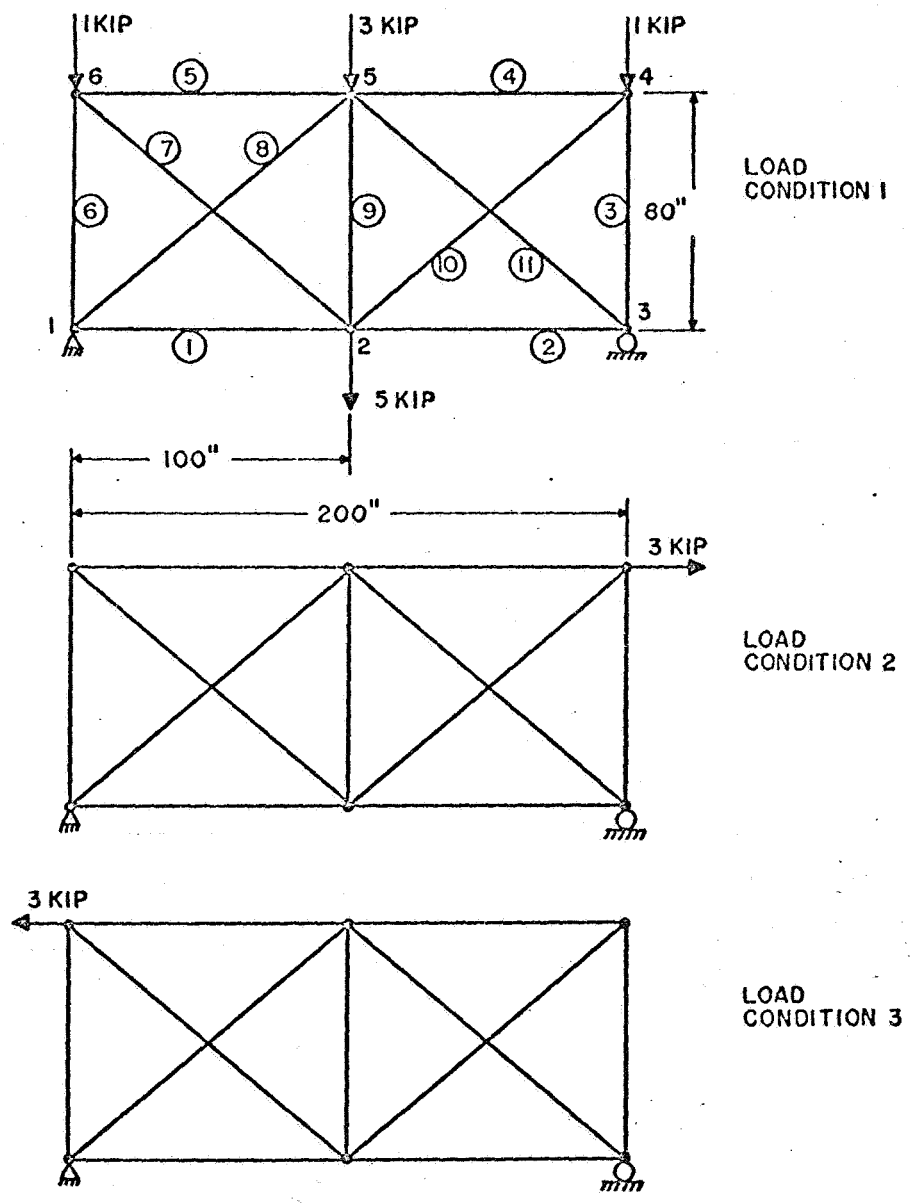

FIGURE 8 CASE 4, CONFIGURATION AND LOADS

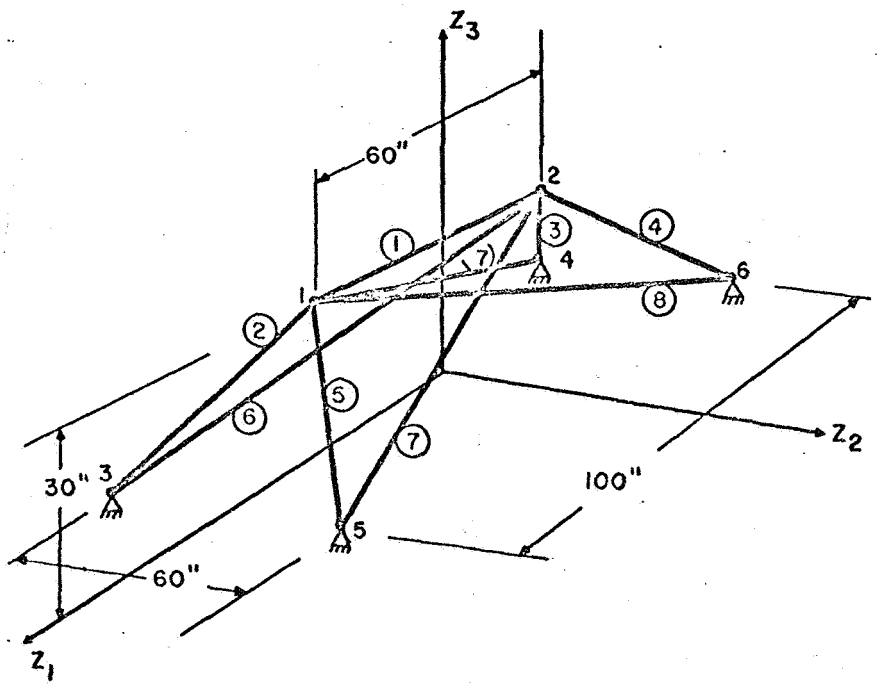

FIGURE 9 CASE 5 CONFIGURATION

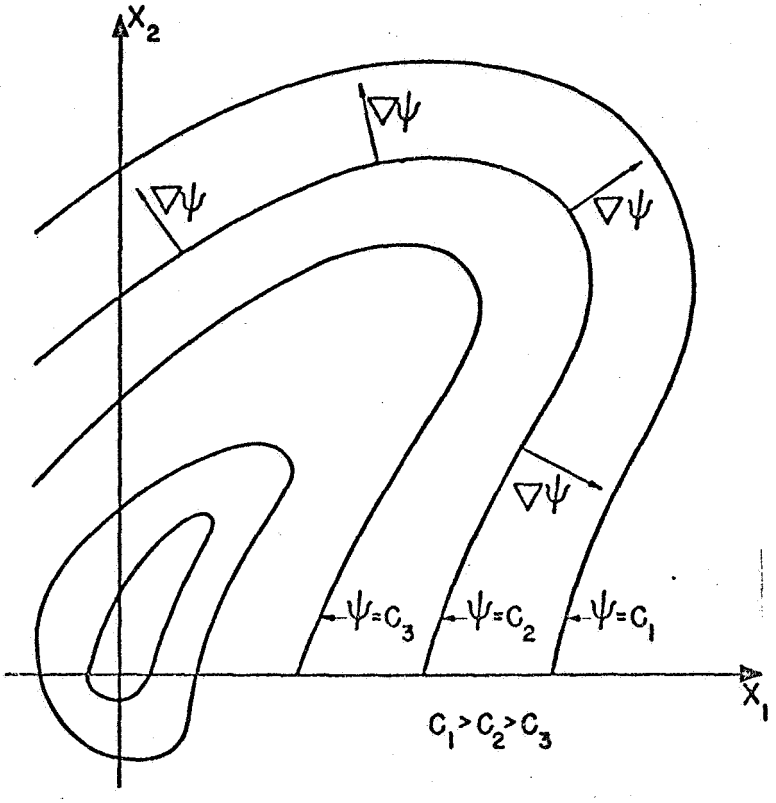

FIGURE 10 GRADIENT DIRECTIONS

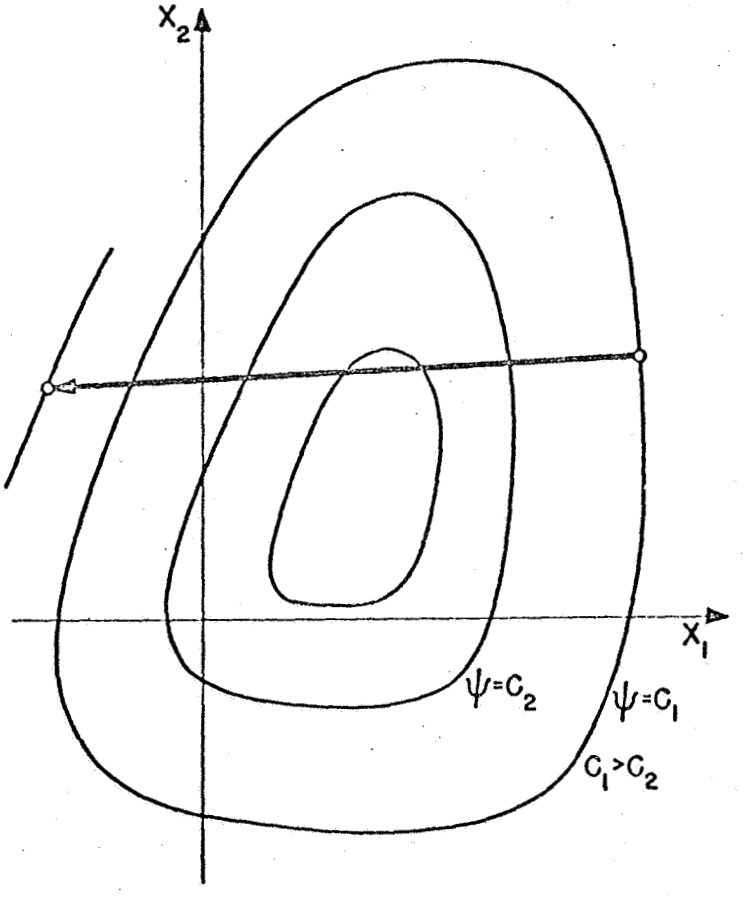

FIGURE 11 STEP OF-H TOO LONG

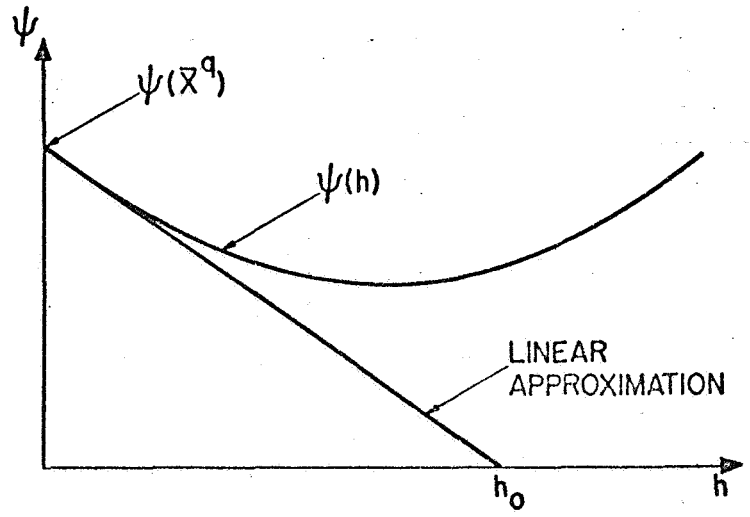

FIGURE 12 THE LINEAR APPROXIMATION TO ESTIMATE MOVE DISTANCE

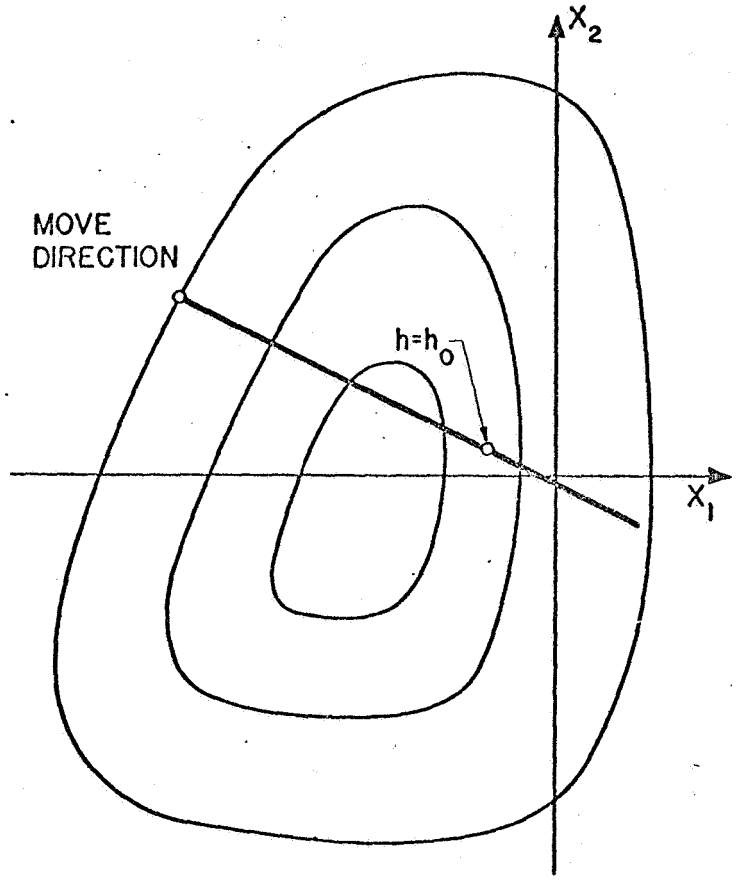

FIGURE 13 THE LINEAR ESTIMATE

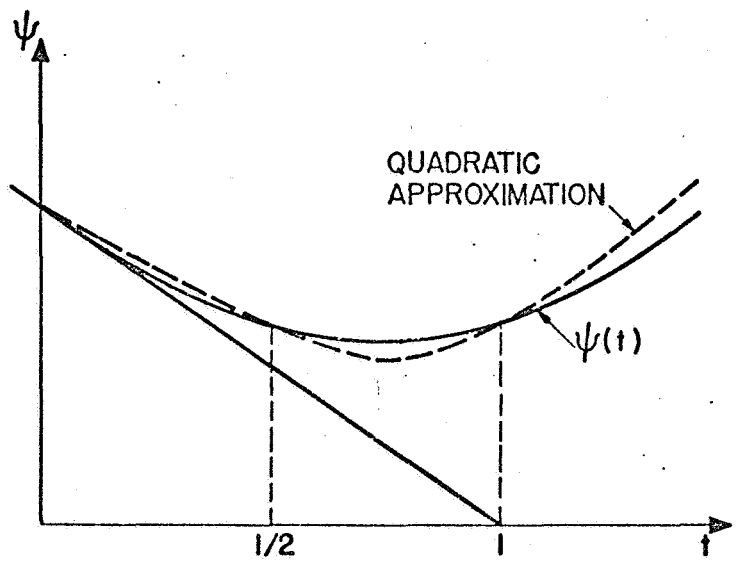

FIGURE 14 THE QUADRATIC APPROXIMATION TO ESTIMATE MOVE DISTANCE

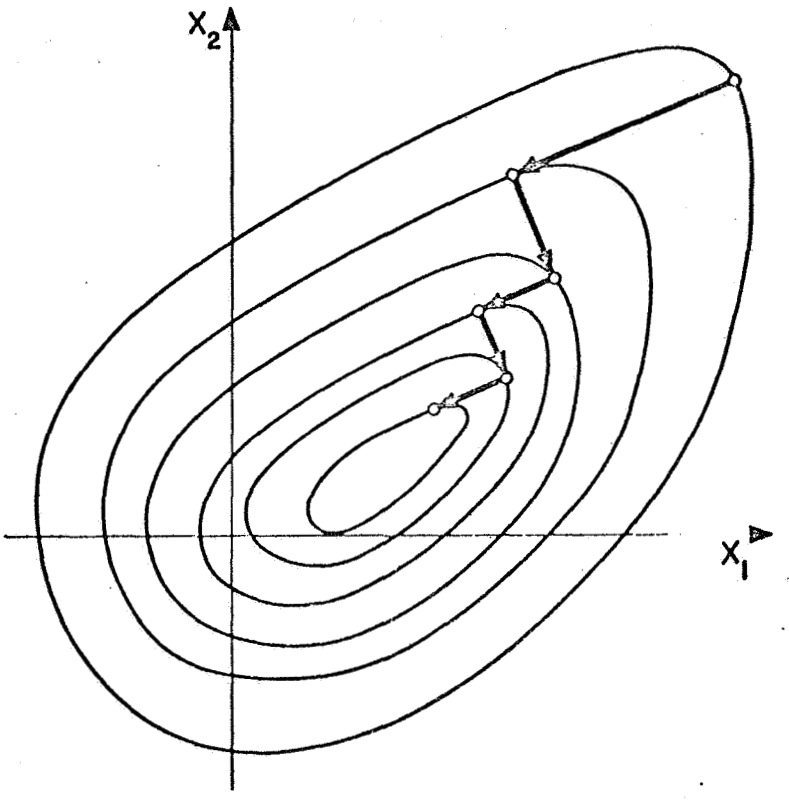

FIGURE 15. THE ZIGZAG IN TWO DIMENSIONS

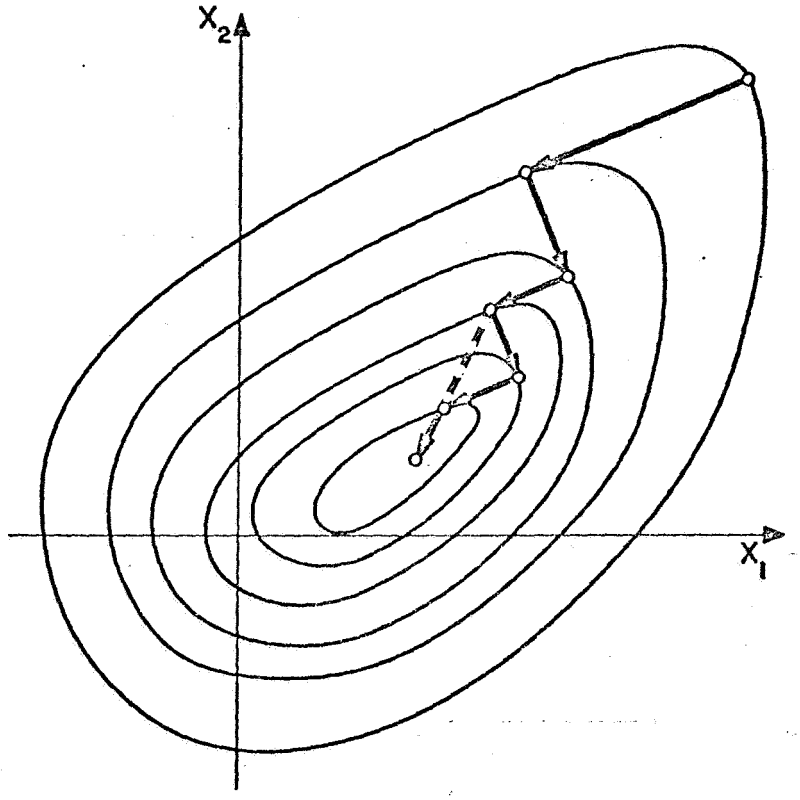

FIGURE 16 THE ANTI-ZIGZAG MOVE

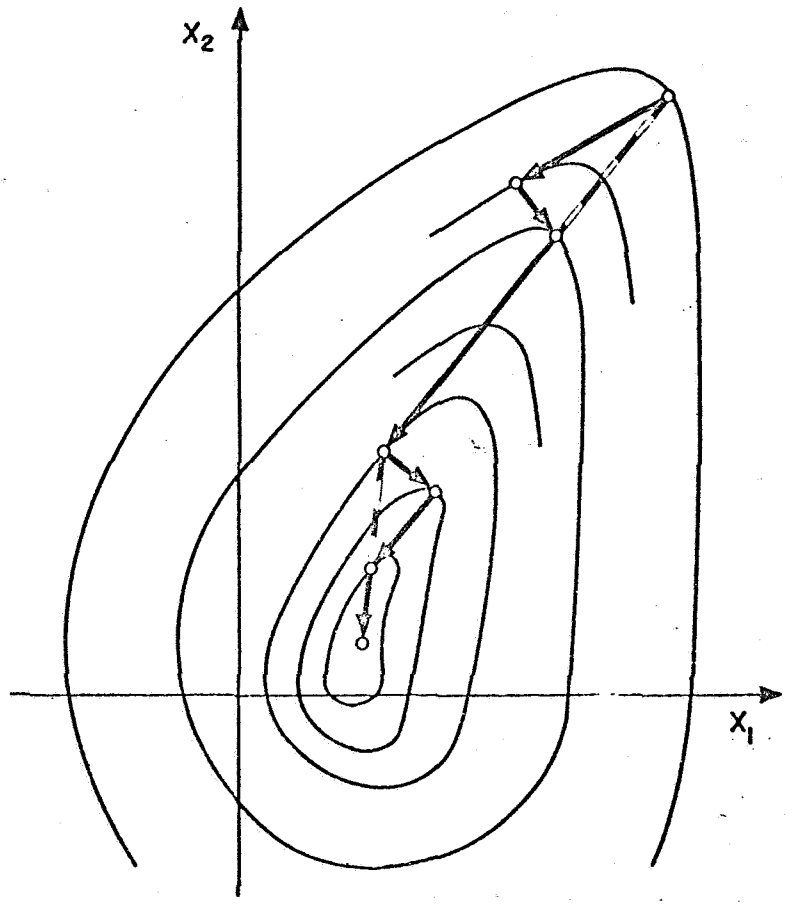

FIGURE 17 THE COMPLETE MINIMIZATION PROCESS

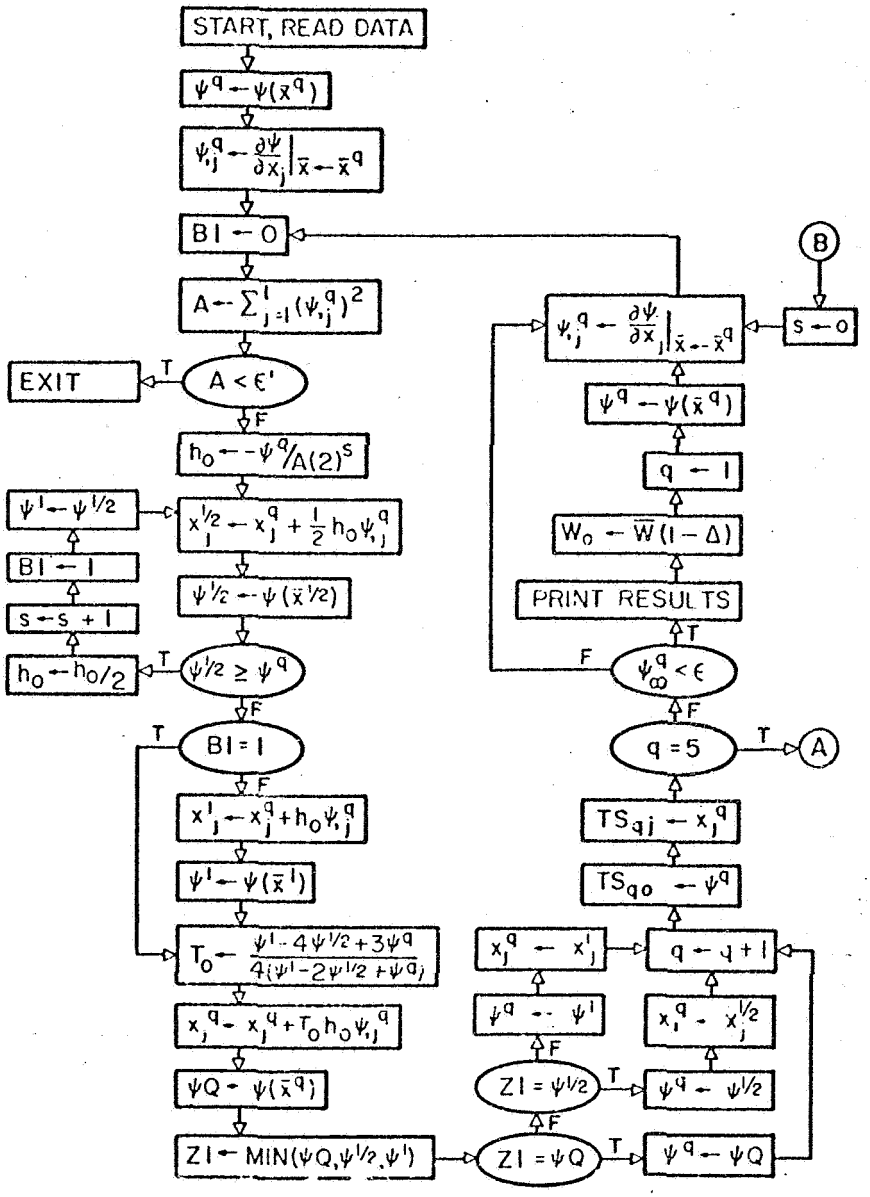

FIGURE 18a FLOW DIAGRAM FOR MINIMIZER ALGORITHM

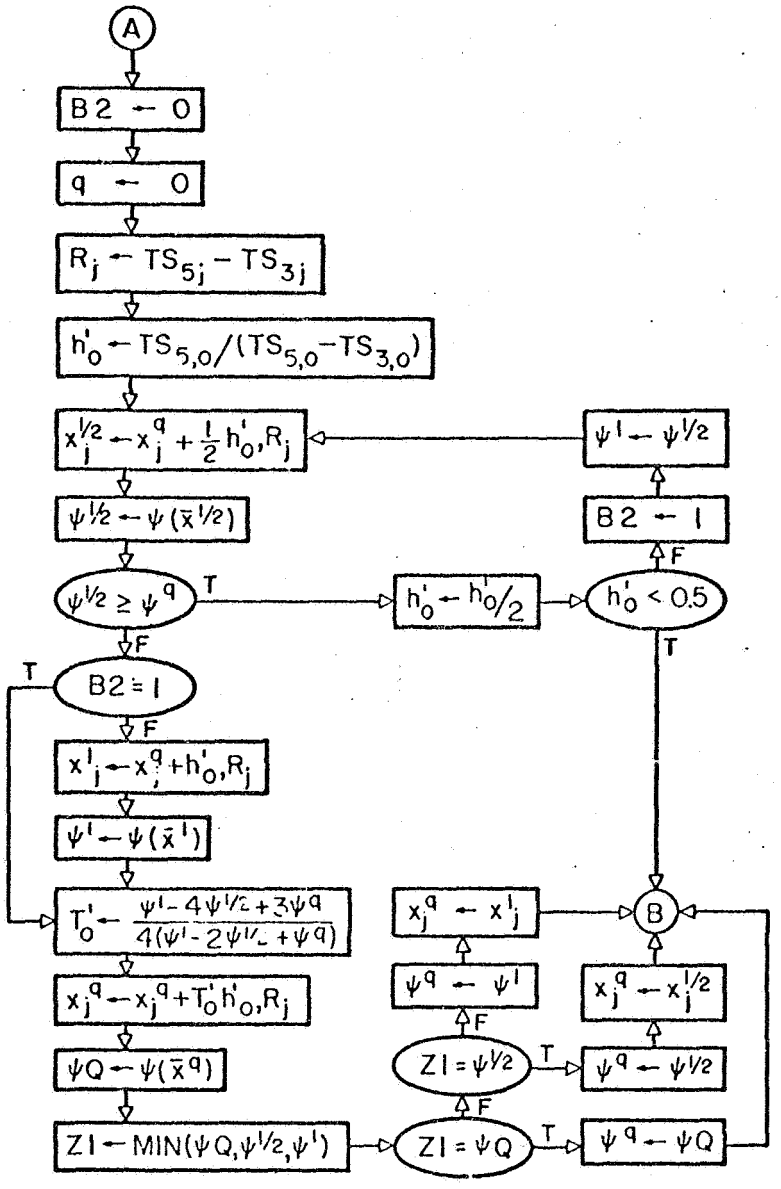

FIGURE 18b FLOW DIAGRAM FOR MINIMIZER ALGORITHM

TABLE 1

Load Conditions for
Cases 1 and 2

Load Condition	P_k Kips	α_k Degrees	ΔT_{1k} °F	ΔT_{2k} °F	ΔT_{3k} °F
1	100	0	50	100	150
2	135	135	150	100	50
3	100	35	0	0	0

TABLE 2

Numerical Results
Cases 1 and 2

j	k Load Condition		LB_j	UB_j	Q_j	Case 1 $K x_j$ START	Case 1 $K x_j$ FINAL	Case 2 $K x_j$ START	Case 2 $K x_j$ FINAL
1		$\bar{A}_1$	0.02	3.0	0.01	1.6	1.171	1.6	1.176
2	N/A	$\bar{A}_2$	0.02	3.0	0.01	1.5	0.540	1.5	0.484
3		$\bar{A}_3$	0.02	3.0	0.01	2.0	1.573	2.0	1.635
4		$\bar{\sigma}_{11}$	-70.8	70.8	0.7	50.00	54.43	50.00	54.32
5	1	$\bar{\sigma}_{21}$	-70.8	70.8	0.7	50.00	17.73	50.00	21.07
6		$\bar{\sigma}_{31}$	-70.8	70.8	0.7	-10.00	-49.32	-10.00	-47.36*
7		$\bar{\sigma}_{12}$	-70.8	70.8	0.7	-10.00	-20.61	-10.00	-19.29
8	2	$\bar{\sigma}_{22}$	-70.8	70.8	0.7	50.00	62.91	50.00	66.76
9		$\bar{\sigma}_{32}$	-70.8	70.8	0.7	50.00	70.48*	50.00	68.46
10		$\bar{\sigma}_{13}$	-70.8	70.8	0.7	50.00	68.85	50.00	66.73
11	3	$\bar{\sigma}_{23}$	-70.8	70.8	0.7	50.00	46.30	50.00	56.85
12		$\bar{\sigma}_{33}$	-70.8	70.8	0.7	-10.00	-22.34	-10.00	-22.16
13	1	$\bar{u}_1$	-0.198	0.198	0.002	0.100	0.174	0.100	0.174
14		$\bar{v}_1$	-0.198	0.198	0.002	0.100	-0.060	0.100	-0.065
15	2	$\bar{u}_2$	-0.198	0.198	0.002	0.100	-0.150	0.100	-0.181
16		$\bar{v}_2$	-0.198	0.198	0.002	0.100	-0.146	0.100	-0.180
17	3	$\bar{u}_3$	-0.198	0.198	0.002	0.100	0.175	0.100	0.196*
18		$\bar{v}_3$	-0.198	0.198	0.002	0.100	-0.089	0.100	-0.113
19		$\bar{d}_1$				-20.0	-20.0	-20.0	-20.0
20	N/A	$\bar{d}_2$	N/A	N/A	N/A	0	0	0	0
21		$\bar{d}_3$				+20.0	+20.0	+20.0	+20.0
		$\bar{W}$				N/A	8.934	N/A	9.005
		W_o				14.00	8.921	14.00	8.980

TABLE 3
Load Conditions for Case 3

Load Condition	P_k kips	α_k Degrees
1	100	0
2	150	0
3	70	270
4	105	270

Note: $\Delta T_{ik} = 0$; $i = 1,2,3$; $k = 1,2,3,4$

TABLE 4
Numerical Results - Case 3

j	k Load Condition		LB_j	UB_j	Q_j	Case 3 $K\,x_j$ START	Case 3 $K\,x_j$ FINAL
1		$\bar{\Lambda}_1$	0.01	4.0	0.01	3.00	0.887
2	N/A	$\bar{\Lambda}_2$	0.01	4.0	0.01	4.00	1.92
3		$\bar{\Lambda}_3$	0.01	4.0	0.01	4.00	2.65
4		$\bar{\sigma}_{11}$	-44.55	44.55	0.45	-5.00	-26.8
5	1	$\bar{\sigma}_{21}$	-44.55	44.55	0.45	0.00	-27.4
6		$\bar{\sigma}_{31}$	-44.55	44.55	0.45	5.00	28.8
7		$\bar{\sigma}_{12}$	-64.35	64.35	0.65	-7.00	-40.2*
8	2	$\bar{\sigma}_{22}$	-64.35	64.35	0.65	0.00	-40.9
9		$\bar{\sigma}_{32}$	-64.35	64.35	0.65	7.00	43.2
10		$\bar{\sigma}_{13}$	-44.55	44.55	0.45	-4.00	-17.6
11	3	$\bar{\sigma}_{23}$	-44.55	44.55	0.45	-4.00	-15.9
12		$\bar{\sigma}_{33}$	-44.55	44.55	0.45	-4.00	-17.6
13		$\bar{\sigma}_{14}$	-64.35	64.35	0.65	-5.00	-26.4
14	4	$\bar{\sigma}_{24}$	-64.35	64.35	0.65	-5.00	-23.9
15		$\bar{\sigma}_{34}$	-64.35	64.35	0.65	-5.00	-26.3
16	1	$\bar{u}_1$	-0.198	+0.198	0.002	0.100	0.114
17		$\bar{v}_1$	-0.198	+0.198	0.002	0.100	-0.003
18	2	$\bar{u}_2$	-1.98	+1.98	0.02	0.100	0.208
19		$\bar{v}_2$	-1.98	+1.98	0.02	0.100	-0.014
20	3	$\bar{u}_3$	-0.198	+0.198	0.002	0.100	-0.002
21		$\bar{v}_3$	-0.198	+0.198	0.002	0.100	0.059
22	4	$\bar{u}_4$	-1.98	+1.98	0.02	0.100	-0.003
23		$\bar{v}_4$	-1.98	+1.98	0.02	0.100	0.089
24	N/A	$\bar{d}_1$	-200.0	+200.0	2.0	0.00	16.1
25		$\bar{d}_2$	-200.0	+200.0	2.0	20.0	18.0
26		$\bar{d}_3$	-200.0	+200.0	2.0	-25.0	-17.13
		$\bar{W}$				N/A	14.43
		W_o				30.0	14.41

TABLE 5. Case 4.A

Displacement limits ± 0.15 in.

Member	Initial Diameters	4.A.1 Force Displacement Program Final Diameters	4.A.2 Displacement Program Final Diameters
1	4.00	3.36	3.87
2	3.10	2.09	2.44
3	3.49	2.65	2.50
4	3.42	2.56	2.50
5	3.27	2.21	2.22
6	3.14	2.07	2.00
7	3.96	2.07	2.92
8	3.61	2.87	3.28
9	2.20	1.41	1.26
10	3.55	3.10	3.00
11	3.20	2.33	2.65
Weight	106.0 lbs.	79.6 lbs.	82.6 lbs

TABLE 6, Case 4.A.3

Displacement limits ± 0.15 in. and linking for symmetry

Member	Initial Diameters	Final Diameters
1	3.5	3.51
2	3.5	3.51
3	3.1	1.88
4	3.3	1.95
5	3.3	1.95
6	3.1	1.88
7	3.2	2.09
8	3.4	3.22
9	2.2	1.77
10	3.2	2.09
11	3.4	3.22
Weight	104.1 lbs	81.0 lbs.

TABLE 7, Case 4.B

Displacement limits ± 0.20 in.

Member	Initial Diameters	Displacement Program Final Diameters
1	4.00	3.93
2	3.10	2.15
3	3.49	1.85
4	3.42	1.86
5	3.27	1.65
6	3.14	1.56
7	3.96	1.13
8	3.61	3.07
9	2.20	1.01
10	3.55	2.12
11	3.20	2.45
Weight	106.0 lb.	68.1 lb.

TABLE 8, Case 4.C

Displacement limits ± 0.25 in.

Member	Initial Diameters	4.C.1 Force Displacement Program Final Diameters	4.C.2 Displacement Program Final Diameters
1	4.00	1.88	1.85
2	3.10	1.41	1.32
3	3.49	1.68	1.69
4	3.42	1.81	1.84
5	3.27	1.60	1.69
6	3.14	1.57	1.61
7	3.96	0.88	1.08
8	3.61	2.68	2.66
9	2.20	1.02	1.01
10	3.55	1.48	1.49
11	3.20	2.48	2.50
Weight	106.0 lbs.	55.4 lbs.	56.1 lbs.

TABLE 9

Load Conditions for Case 5

Load Condition 1		Load Condition 2	
$\vec{P}_{11}$	$\vec{P}_{21}$	$\vec{P}_{12}$	$\vec{P}_{22}$
0.0	0.0	0.0	0.0
1700.0	-1700.0	-1700.0	1700.0
0.0	0.0	0.0	0.0

Load Condition 3		Load Condition 4	
$\vec{P}_{13}$	$\vec{P}_{23}$	$\vec{P}_{14}$	$\vec{P}_{24}$
0.0	4000.0	-4000.0	0.0
0.0	0.0	0.0	0.0
0.0	-3000.0	-3000.0	0.0

TABLE 10, Case 5.A

Member	Initial		5.A.1 Force Displacement Final		5.A.2 Displacement Final	
	D	t	D	t	D	t
1	2.80	0.008	2.16	0.008	2.16	0.012
2	1.07	0.079	1.81	0.016	1.80	0.018
3	1.07	0.079	2.03	0.014	1.80	0.018
4	1.07	0.079	1.88	0.015	1.80	0.018
5	1.07	0.079	1.82	0.016	1.80	0.018
6	3.33	0.030	3.59	0.017	3.55	0.016
7	3.33	0.030	3.59	0.017	3.55	0.016
8	3.33	0.030	3.59	0.017	3.55	0.016
9	3.33	0.030	3.59	0.017	3.55	0.016
Weight	10.94 lbs.		5.96 lbs.		6.03 lbs.	

TABLE 11, Case 5.B

Member	Initial D	Initial t	Final D	Final t
1	2.11	0.20	2.03	0.012
2	1.89	0.016	2.11	0.015
3	1.89	0.016	2.20	0.014
4	1.89	0.016	2.20	0.014
5	1.89	0.016	2.11	0.015
6	3.00	0.030	3.64	0.018
7	3.00	0.030	3.64	0.018
8	3.00	0.030	3.64	0.018
9	3.00	0.030	3.64	0.018
Weight	8.26 lbs.		6.54 lbs.	

TABLE 12

Running Time Summary

Case	Program	No.of Variables	No.of Active Con-straints at Optimum	1107* Algol running time (sec.)	Est. Fortran time
1	m-bar truss	18	2	17	---
2	m-bar truss (non-linear)	18	2-3	50	---
3	m-bar truss (non-linear)	26	1-2	200	---
4.A.1	Force-Displacement	71	2	1416	283
4.A.2	Displacement	38	1	221	44
4.A.3	Displacement	33	1	375	75
4.B	Displacement	38	6	394	79
4.C.1	Force-Displacement	71	9-11	3160†	632
4.C.2	Displacement	38	9-11	1532	307
5.A.1	Force-Displacement	78	12	8468	1700
5.A.2	Displacement	30	4-5	3651**	730
5.B	Force-Displacement (nonlinear)	48	10	496	99

* These times do not include termination time.

† This run was stopped at 63.0 lbs. and restarted using a 2% drawdown instead of the 5% used up to that point.

** This run was interrupted at 6.6 lbs. and perturbed and restarted (see text).

REFERENCES

1. Schmit, L. A., "Structural Design by Systematic Synthesis," Proc. 2nd Natl. Conf. on Electronic Comp., Structural Div. Am. Soc. Civil Engrs., Pittsburgh, Penna. 105-132, (1960).

2. Schmit, L. A., and Kicher, T. P., "Structural Synthesis of Symmetric Waffle Plates," NASA TN D-1691, (December 1962).

3. Schmit, L. A., and Mallett, R.H., "Structural Synthesis and Design Parameter Hierarchy," J. Struct. Div. Proc. Am. Soc. Civil Engrs., 89, No. ST4, 269-299 (August 1963)

4. Schmit, L. A., Kicher, T. P. and Morrow, W.M., "Structural Synthesis Capability for Integrally Stiffened Waffle Plates," AIAA Journal 1, 2820-2836 (December 1963).

5. Schmit, L. A. and Fox, R. L., "Synthesis of a Simple Shock Isolator," NASA CR 55, (June 1964).

6. Feder, D. P., "Automatic Lens Design Methods," J. Opt. Soc. Am. 47, 902-912 (1957).

7. Schmit, L. A. and Mallett, R. H., "Design Synthesis in a Multi-dimensional Space with Automated Material Selection," EDC Report No. 2-62-2, Case Institute of Technology, (August 1962).

8. Gellatly, R.A., Gallagher, R.H., Luberacki, W.A., "Development of a Procedure for Automated Synthesis of Minimum Weight Structures," Air Force Contract AF 33(657)-11748. Preliminary copy.

9. Zoutendijk, G., Methods of Feasible Directions, (Elsevier Publishing Company, 1960).

10. Hamming, R. W., Numerical Methods for Scientists and Engineers, (McGraw-Hill Book Co., Inc., New York, 1962), p. 88-90.

11. Shanley, F. R., Weight-Strength Analysis of Aircraft Structures, 2nd ed. (Dover Publications, Inc., 1960).

References (cont.)

12. Mayers, J., and Budiansky, B.,"Analysis of Behavior of Simply Supported Flat Plates Compressed beyond the Buckling Load into the Plastic Range,"Appendix C, NACA TN 3368, February 1955.

13. Davidon, W. C., "Variable Metric Method for Minimization," AEC Res. Develop. Rep. ANL-5990, (1959).

14. Fletcher, R. and Powell, M.J.D., "A Rapidly Convergent Descent Method for Minimization," Brit. Computer J. 6, 163-168, (1963).

APPENDIX A

FORMULAS FOR $\nabla\psi$

The minimization techniques used to find the minimum of ψ required the computation of $\nabla\psi$. This appendix contains the formulas for the components of $\nabla\psi$ for the three ψ functions developed in Chapter III.

a. The m-bar truss

$$\frac{\partial\psi}{\partial A_i} = \frac{\partial\psi}{\partial x_j} = 2\,\lambda_W\, FW\, \delta_i\, LO_i$$

$$+ 2 \sum_{k=1}^{L} \left[EQX_k \frac{\sigma_{ik}\, C_{ik}}{\bar{p}} + EQY_k \frac{\sigma_{ik}\, S_{ik}}{\bar{p}} \right]$$

$$+ 2\, \lambda_{B_j}\, BND_j$$

$$+ 2 \sum_{k=1}^{L} \left[\lambda_{T_{ik}}\, TB_{ik}\, G_{ik} - 2\, TB_{ik}^{2} \frac{\lambda_{T_{ik}}}{A_i} \right],$$

$j = i$ (A.1)

$$\frac{\partial\psi}{\partial\sigma_{ik}} = \frac{\partial\psi}{\partial x_j} = 2\, EQX_k \frac{A_i\, C_{ik}}{\bar{p}} + 2\, EQY_k \frac{A_i\, \delta_{ij}}{\bar{p}}$$

$$+ 2\, SD_{ik} \frac{A_{oi}}{\hat{p}} \left[1 + R_i\, p_i\, \sigma_{ik}^{\,p_i - 1} \right]$$

$$+ 2\, \lambda_{B_j}\, BND_j$$

$$+ 2\, \lambda_{TB_{ik}}\, TB_{ik} \left\{ \frac{A_i\, \pi K_{A\eta_i} \left(\frac{D}{t} + \frac{t}{D} \right) \left[p_i R_i (p_i - 1) \sigma_{ik}^{\,p_i - 2} \right]}{SF_{ik}\, SH^2 LO_i^{\,2} \left[1 + p_i R_i \sigma_{ik}^{\,p_i - 1} \right]^2} - 1 \right\}$$

$$- 2\, TB_{ik}^{2} \frac{\varepsilon}{(A_i q)^2 G_{ik}^{3}} \left\{ \frac{\pi K_A \eta_i \left(\frac{D}{t} + \frac{t}{D}\right)_i \left[p_i R_i (p_i - 1) \sigma_{ik}^{\,p_i - 2} \right]}{SF_{ik}\; 8H^2 LO_i^{\,2} \left[1 + p_i R_i \sigma_{ik}^{\,p_i - 1} \right]^2} \right\} ,$$

$j = mk + i$ (A.2)

$$\frac{\partial \psi}{\partial u_k} = \frac{\partial \psi}{\partial x_j} = 2\, EQX_k \frac{K_A K_\sigma K_u}{H\, \overline{P}} \sum_{i=1}^{m} A_i\, \sigma_{ik} \left[- \frac{LDY_{ik}^{\,2}}{LD_{ik}^{\,3}} \right]$$

$$+ 2\, EQY_k \frac{K_A K_\sigma K_u}{H\, \overline{P}} \sum_{i=1}^{m} A_i\, \sigma_{ik} \left[\frac{LDY_{ik}\; LDX_{ik}}{LD_{ik}^{\,3}} \right]$$

$$+ 2 \sum_{i=1}^{m} SD_{ik} \left[\frac{A_{oi}\; \eta_i\; K_u\; LDX_{ik}}{\overline{P}\;\; LO_i\; H\; LD_{ik}} \right]$$

$$+ 2\, \lambda_{B_j}\, BND_j ,$$ (A.3)

$j = m\,(1+L) + 2k-1$

$$\frac{\partial \psi}{\partial v_k} = \frac{\partial \psi}{\partial x_j} = 2\, EQX_k \frac{K_A K_\sigma K_u}{H\, \overline{P}} \sum_{i=1}^{m} A_i\, \sigma_{ik} \left[\frac{LDX_{ik}\; LDY_{ik}}{LD_{ik}^{\,3}} \right]$$

$$- 2\, EQY_k \frac{K_A K_\sigma K_u}{H\, \overline{P}} \sum_{i=1}^{m} A_i\, \sigma_{ik} \left[\frac{LDX_{ik}^{\,2}}{LD_{ik}^{\,3}} \right]$$

$$+ 2 \sum_{i=1}^{m} SD_{ik} \frac{A_{oi}\; \eta_i\; K_u}{\overline{P}\; LO_i\; H} \left[\frac{LDY_{ik}}{LD_{ik}} \right]$$

$$+ 2\, \lambda_{B_j}\, BND_j ,$$

$j = m(1+L) + 2k$ (A.4)

$$\frac{\partial\psi}{\partial d_i} = \frac{\partial\psi}{\partial x_j} = 2\,\lambda_W\,FW\,\frac{\delta_i\,A_i\,d_i}{LO_i}$$

$$+\,2\sum_{k=1}^{L}\left\{EQX_k\,\frac{K_A\,K_\sigma\,A_i\,\sigma_{ik}}{\bar{P}}\left[\frac{LDY_{ik}^{\,2}}{LD_{ik}^{\,3}}\right]\right.$$

$$\left.-\,EQX_k\,\frac{K_A\,K_\sigma\,A_i\,\sigma_{ik}}{\bar{P}}\left[\frac{LDY_{ik}\,LDX_{ik}}{LD_{ik}^{\,3}}\right]\right\}$$

$$+\,2\sum_{k=1}^{L}SD_{ik}\,\frac{A_i\,\eta_i}{P}\left[\frac{LDX_{ik}}{LD_{ik}LO_i}-\frac{d_i\,LD_{ik}}{LO_i^{\,3}}\right]$$

$$+\,2\,\lambda_{B_j}\,BND_j$$

$$+\sum_{k=1}^{L}2\,\lambda_{T_{ik}}\,TB_{ik}\left\{\frac{\pi\,\eta_i\,K_A}{8\pi^2SF_{ik}\left(1+p_iR_i\sigma_{ik}^{\,p_i-1}\right)}\left(\frac{D}{t}+\frac{t}{D}\right)_i\frac{d_iA_i}{LO_i^4}\right\}$$

$$+\sum_{k=1}^{L}4\,TB_{ik}^{\,2}\lambda_{T_{ik}}\left\{\frac{\pi\,\eta_i\,K_A}{8\pi^2SF_{ik}\left(1+p_iR_i\sigma_{ik}^{\,p_i-1}\right)}\left(\frac{D}{t}+\frac{t}{D}\right)_i\frac{d_i}{G_{ik}LO_i^4}\right\}$$

$$j = m(1+L) + 2n+i \qquad (A.5)$$

b. Force-Displacement Method, General Space Truss

$$\frac{\partial\psi}{\partial D_r} = \frac{\partial\psi}{\partial x_{j'}} = \sum_{k=1}^{L}\sum_{s=1}^{d}\left[2EQ_{sik}\sigma_{rk}T_r\gamma_{sri} + 2EQ_{sjk}\sigma_{rk}T_r\gamma_{srj}\right]$$

$$+\,2\,\lambda_R\,BNDR_r\,\frac{K_D}{T_rK_T}$$

$$+\sum_{k=1}^{L}2\lambda_{TB}\,TB_{rk}\,\frac{K_\sigma 16SF^{(c)}LGTH_r\left[\bar{\sigma}_{rk}+\frac{3}{7}\frac{pY}{K_\sigma}\left(\frac{\sigma_{rk}K_\sigma}{Y}\right)^p\right]D_rK_D}{\pi\,E\,(D_r^{\,2}\,K_D^{\,2}+T_r^{\,2}K_T^{\,2})^2}$$

$$+ \sum_{k=1}^{L} 2\,\lambda_{LC}\,LC_{rk} \left\{ \frac{\sigma_{rk} K_\sigma K_D SF^{(c)} \left[1 + \frac{3}{7} p \left(\frac{\sigma_{rk} K_\sigma}{Y} \right)^{p-1} \right]^{1/2}}{K_T\, k_2\, E\, T_r} \right\}$$

$$+ 2\,\lambda_W\, FW\, \frac{\pi K_D K_T \rho}{WPD}\, T_r + 2\lambda_j\, BND_j\,, \qquad (A.6)$$

$j' = r, \quad i,j = N_r$

$$\frac{\partial \psi}{\partial T_r} = \frac{\partial \psi}{\partial x_{j'}} = \sum_{k=1}^{L} \sum_{s=1}^{d} [2\, EQ_{sik} \sigma_{rk} D_r Y_{sri} + 2\, EQ_{sjk} \sigma_{srj} D_r Y_{srj}]$$

$$- 2\,\lambda_R\, BNDR_r\, \frac{D_r\, K_D}{T_r^{\,2} K_T}$$

$$+ \sum_{k=1}^{L} 2\,\lambda_{TB}\, TB_{rk} \left\{ \frac{K_\sigma 16 SF^{(c)} LGTH_r^2 \left[\sigma_{rk} + \frac{3pY}{7K_\sigma} \left(\frac{\sigma_{rk} K_\sigma}{Y} \right)^p \right] K_T^2\, T_r}{\pi^2\, E\, (D_r^{\,2} K_D^{\,2} + T_r^{\,2} K_r^{\,2})^2} \right\}$$

$$+ \sum_{k=1}^{L} 2\lambda_{LC} LC_{rk} \left\{ \frac{\sigma_{rk} K_\sigma K_D SF^{(c)} D_r \left[1 + \frac{3p}{7} \left(\frac{\sigma_{rk} K_\sigma}{Y} \right)^{p-1} \right]^{1/2}}{K_T\, k_2\, E\, T_r^{\,2}} \right\}$$

$$+ 2\,\lambda_W\, FW\, \frac{\pi K_D K_T \rho}{WPD}\, D_r + 2\,\lambda_{B_j}\, BND_j\,,$$

$j' = m+r \qquad i,j = N_r$ (A.7)

$$\frac{\partial \psi}{\partial \sigma_{rk}} = \frac{\partial \psi}{\partial x_{j'}} = \sum_{s=1}^{d} [2\, EQ_{sik} D_r T_r Y_{sri} + 2\, EQ_{sjk} D_r T_r Y_{srj}]$$

$$+ 2\, SD_{rk} D_{ro} T_{ro} \left[1 + \frac{3p}{7} \left(\frac{\sigma_{rk} K_\sigma}{Y} \right)^{p-1} \right]$$

$$- 2\ \lambda_{TB}\ TB_{rk} \left\{ \frac{K_\sigma 8SF^{(c)} LGTH_r^2 \left[1 + \frac{3p^2}{7} \left(\frac{\sigma_{rk} K_\sigma}{Y} \right)^{p-1} \right]}{\pi^2 E (D_r^2 K_D^2 + T_r^2 K_T^2)} \right\}$$

$$- 2\ \lambda_{LC} LC_{rk} \left\{ \frac{K_\sigma K_D SF^{(c)} D_r \left[2 + \frac{3p(p+1)}{7} \left(\frac{\sigma_{rk} K_\sigma}{Y} \right)^{p-1} \right]}{K_T k_2 E T_r^2 \left[1 + \frac{3p}{7} \left(\frac{\sigma_{rk} K_\sigma}{Y} \right)^{p-1} \right]^{1/2}} \right\}$$

$$+ 2\ \lambda_{B_j}\ BND_j\ , \qquad (A.8)$$

$j' = 2M + L\ (r-1) + k \qquad i,j = N_r$

$$\frac{\partial \psi}{\partial u_{sik}} = \frac{\partial \psi}{\partial x_{j'}} = \sum_{r \varepsilon M_i} 2\ SD_{rk} \frac{E\ K_u\ D_{ro}\ T_{ro}}{K_\sigma\ LGTH_r} \gamma_{sri}$$

$$+ 2\ \lambda_{B_j}\ BND_j$$

$j' = 2m + m \cdot L + (i-1)d + (k-1)\ n \cdot d + s$

C. Displacement Method, General Space Truss

$$\frac{\partial \psi}{\partial \alpha_v} = \frac{\partial \psi}{\partial x_{j'}} = \sum_{r \varepsilon C_v^\alpha} \frac{\partial \psi}{\partial \bar{D}_r} \frac{\partial \bar{D}_r}{\partial \alpha_v} = \sum_{r \varepsilon C_v^\alpha} \frac{\partial \psi}{\partial \bar{D}_r} KD_r$$

$$= \sum_{r \varepsilon C_v^\alpha} \left\{ \sum_{k=1}^{L} \sum_{s=1}^{d} \frac{(2\ EQ_{sik} \gamma_{sik} + 2\ EQ_{sjk} \gamma_{srj}) \varepsilon_{rk}\ \pi \bar{T}_r\ E}{\bar{P}} \right.$$

$$+ 2\ \lambda_{R_r}\ BNDR_r\ \frac{1}{\bar{T}_r} + 2\ \lambda_{D_r}\ BNDD_r$$

$$+ \sum_{k=1}^{L} 2\ \lambda_{EB}\ EB_{rk}\ \frac{16\ SF^{(c)}\ LGTH_r\ \varepsilon_{rk}\ \bar{D}_r}{\pi\ (\bar{D}_r^2 + \bar{T}_r^2)^2}$$

$$+ \sum_{k=1}^{L} 2\,\lambda_{LC}\, LC_{rk}\, \frac{\epsilon_{rk}\, SF^{(c)}}{k_2\, \overline{T}_r}$$

$$+ 2\,\lambda_{W}\, FW\, \frac{\Pi\,\rho}{WPD}\, \overline{T}_r \Bigg\}\, KD_r\,, \qquad (A.9)$$

$$j' = v \quad i,j = N_r$$

$$\frac{\partial\psi}{\partial\beta_w} = \frac{\partial\psi}{\partial x_{j'}} = \sum_{r\epsilon C_w^{\beta}} \frac{\partial\psi}{\partial T_r}\, KT_r$$

$$= \sum_{r\epsilon C_w^{\beta}} \Bigg\{ \sum_{k=1}^{L} \sum_{s=1}^{d} \frac{(2\, EQ_{sik}\gamma_{sik} + 2\, EQ_{sjk}\gamma_{sjk})\epsilon_{rk}\, \overline{T}_r E\Pi)}{\overline{P}}$$

$$- 2\,\lambda_{R_r}\, BNDR_r\, \frac{\overline{D}_r}{\overline{T}_r^2} + 2\,\lambda_{T_r}\, BNDT_r$$

$$+ \sum_{k=1}^{L} 2\,\lambda_{EB}\, EB_{rk}\, \frac{16\, SF^{(c)} LGTH_r^2\, \epsilon_{rk}\, \overline{T}_r}{\Pi\, (\overline{D}_r^{\,2} + \overline{T}_r^{\,2})^2}$$

$$+ \sum_{k=1}^{L} 2\,\lambda_{LC}\, LC_{rk}\, \frac{\epsilon_{rk}\, SF^{(c)}\, \overline{D}_r}{k_2\, \overline{T}_r^{\,2}}$$

$$+ 2\,\lambda_{W}\, FW\, \frac{\Pi\,\rho}{WPD}\, \overline{D}_r \Bigg\}\, KT_r \qquad (A.10)$$

$$j' = A + w \qquad i,j = N_r$$

$$\frac{\partial\psi}{\partial u_{sik}} = \frac{\partial\psi}{\partial x_{j'}} = \sum_{s'=1}^{d} \Bigg\{ 2\, EQ_{s'ik} \sum_{r\epsilon M2_i} - \frac{\gamma_{sri}\, E\overline{D}_r\, \overline{T}_r\, \gamma_{s'ri}\Pi}{\overline{P}\;\; LGTH_r} \Bigg\}$$

$$+ \sum_{r,j \epsilon M2_i} \sum_{s'=1}^{d} \left\{ 2\, EO_{s'jk} \left[- \frac{\gamma_{sri}\, E\bar{D}_r\, \bar{T}_r\, \gamma_{s'rj}}{\bar{P}\, LGTH_r} \right] \right\}$$

$$- \sum_{r \epsilon M2_i} 2\, \lambda_{S_{rk}}\, BNDS_{rk}\, \frac{E\, \gamma_{sri}}{LGTH_r}\, K_u$$

$$+ \sum_{r \epsilon M2_i} 2\, \lambda_{EB}\, EB_{rk} \left[\frac{8SF^{(c)} LGTH_r^{\,2}}{E(\bar{D}_r^2 + \bar{T}_r^2)} \right] \frac{\gamma_{sri}}{LGTH_r}\, K_u$$

$$+ \sum_{r \epsilon M2_i} 2\, \lambda_{LC}\, LC_{rk} \left[\frac{SF^{(c)}\, \bar{D}_r}{k_2\, \bar{T}_r} \right] \frac{\gamma_{sri}}{LGTH_r}\, K_u$$

$$+ \lambda_{u_j}\, BNDU_j\,, \qquad (A.11)$$

$$j' = A + B + (i-1)d + (k-1)\, n \cdot d + s$$

APPENDIX B

BIBLIOGRAPHY ON MINIMIZATION TECHNIQUES

1. Beckenbach, E.F., Modern Mathematics for the Engineer, (McGraw-Hill Book Co., Inc., New York, 1956). 1st ed., Chap. 18, pp. 448-479.

2. Booth, A.D., Numerical Methods (Butterworths Scientific Publications Ltd., 1957), 1st ed., Chapt. 9, pp. 154-160.

3. Booth, A.D., "An Application of the Method of Steepest Descent to the Solution of Systems of Non-Linear Simultaneous Equations," Quart. J. Mech. Appl. Math, 2, 460-468, (1949).

4. Box, G.E.P., "The Exploration and Exploitation of Response Surfaces: Some General Considerations and Examples," Biometrics 10, 16-60 (1954).

5. Box, G.E.P., Wilson, K.B., "On the Experimental Attainment of Optimum Conditions," J. Roy. Stat. Soc., Ser. B:13, 1-45 (1951).

6. Bromberg, N.S., "Maximization and Minimization of Complicated Multivariable Functions," Brit. Commun. Electron. 58, 725-730 (1962).

7. Brooks, S.H., "A Discussion of Random Methods for Seeking Maxima," Operations Res. Soc. 6, 244-251 (1958).

8. Brooks, S.H., "A Comparison of Maximum-Seeking Methods," Operations Res. Soc. 7, 430-457 (1959).

9. Cauchy, A.L., "Méthode générale pour la résolution des systémes d'equations simultanées," Compt. Rend. 25, 536, (1847).

10. Chao, F.H., "Comparison of Gradient Methods with Applications," Sci. Sinica (Peking) 7, 565-581 (1958).

11. Crockett, J.B., and Chernoff, H., "Gradient Methods of Maximization," Pacific J. Math. 5, 33-50 (1955).

12. Curry, H., "The Method of Steepest Descent for Non-Linear Minimization Problems," Quart. Appl. Math. 2, 258-261 (1954).

13. Davidon, W. C., "Variable Metric Method for Minimization," AEC Res. Develop. Rep. ANL-5990, (1959).

14. Feder, D. P., "Automatic Lens Design with a High-Speed Computer," J. Opt. Soc. Am. 52, 177-183 (1962).

15. Fletcher, R., and Powell, M.J.D., "A Rapidly Convergent Descent Method for Minimization," Brit. Computer J. 6, 163-168, (1963).

16. Hestenes, M.R., "Iterative Computational Methods," Commun. Pure Appl. Math. 8, 85-96 (1955).

17. Hoerl, A.E., "Optimum Solution of Many Variables Equations," Chem. Eng. Progr. 55, 69-78 (1959).

18. Kelley, H.J., Optimization Techniques (Academic Press, New York, 1962), edited by Leitmann, G., 1st ed., Chap. 6, pp. 206-232.

19. Levenberg, K., "A Method for the Solution of Certain Non-Linear Problems in Least Squares," Quart. Appl. Math. 2, 164-168 (1944).

20. Mugele, R.A., "A Nonlinear Digital Optimizating Program for Process Control Systems," IBM J. Res. Develop. 1, 15-32 (1962).

21. Powell, M.J.D., "An Iterative Method for Finding Stationary Values of a Function of Several Variables," Brit. Computer J. 5, 147 (1962).

22. Rosenbrock, H.H., "An Automatic Method for Finding the Greatest or Least Values of a Function," Brit. Computer J. 3, 175-184 (1960).

23. Shah, V., Buehler, R.J., and Kempthorne, O., "The Method of Parallel Tangents (PARTAN) for Finding an Optimum," Office Naval Res. Rep. Nr-042-207 (1962).

24. Spang, H.A., "A Review of Minimization Techniques for Non-Linear Functions," SIAM Review 4, 343-365, (1962).

25. Synge, J.L., "A Geometrical Interpretation of the Relaxation Method," Quart. J. Appl. Math. 1, 87-89 (1943).

26. Temple, G., "The General Theory of Relaxation Methods Applied to Linear Systems," Proc. Roy. Soc. Ser. A: 169, 476-500 (1939).

27. Turner, L.R., "Solution of Nonlinear Systems," Ann. N.Y., Acad. Sci. Ser. 3:86, 817-827 (1960).

28. Wheeling, R.F., "Optimizers: Their Structure," Commun. Assoc. Computing Mach. 3, 632-638 (1960).

APPENDIX C

MINIMIZATION TECHNIQUE

Having constructed a ψ function appropriate to a given synthesis problem the development of an algorithm for finding a set of values for the variables such that $\psi \to MIN \leq \varepsilon$ may be considered as a separate problem.

It is well known that $\nabla\psi$ is a vector normal to the surface ψ = constant. Furthermore the gradient direction is the direction of greatest positive change in the function ψ. This is illustrated in Fig. 10 for two dimensions. Let the vector $\vec{x}^1$ be modified such that the greatest change in ψ occurs, then

$$\vec{x} = \vec{x}^1 + h \nabla\psi \ (\vec{x}^1) \qquad (C.1)$$

where h is a scalar quantity. It can be shown that there exists an $h < 0$ such that $\psi(\vec{x}) < \psi(\vec{x}^1)$ unless $\nabla\psi \ (\vec{x}^1) = 0$. This suggests that a negative gradient modification process, applied repeatedly, will lead to an $\vec{x}$ for which $\psi \to MIN$. The problem of finding h remains however. If it is too large, as shown in Fig. 11, ψ will get larger; if h is too small the process will be extremely slow. One approach to estimating a "best" value for h is as follows. If $\vec{x}$ is to be determined, as in Eq. C.1, then $\psi(\vec{x})$ may be considered a function of h alone. The Taylor expansion to linear terms is

$$\psi(\vec{x}) = \psi(\vec{x}^1) + \{ \vec{x} - \vec{x}^1 \} \cdot \nabla\psi(x^1) \qquad (C.2)$$

and eliminating $\vec{x}$ from the right hand side using Eq. (C.2) gives

$$\psi(\vec{x}) = \psi(\vec{x}^q) + h\, \nabla\psi(\vec{x}^q) \cdot \nabla\psi\, (\vec{x}^q) \qquad (C.3)$$

Let $\psi\, (\vec{x}^q)$ be set to zero in Eq. C.3 then for the linear approximation this value of h, designated h_o, is given by

$$h_o = - \frac{\psi\, (\vec{x}^q)}{\nabla\psi\, (\vec{x}^q) \cdot \nabla\psi\, (\vec{x}^q)} \qquad (C.4)$$

This is interpreted geometrically in Figs. 12 and 13. This gives an order of magnitude estimate for h, but the minimum value of ψ in the gradient direction is sought, and a quadratic approximation will be better. Therefore let

$$\vec{x} = \vec{x}^q + T\, h_o\, \nabla\psi\, (\vec{x}^q) \qquad (C.5)$$

and write

$$\psi\, (T) = a\, T^2 + b\, T + c \qquad (C.6)$$

and evaluate ψ at T = 1 and 1/2

$$\psi\, (1) = a + b + c \qquad (C.7)$$

$$\psi\, (1/2) = (a/4) + (b/2) + c \qquad (C.8)$$

Note that at T = 0,

$$\psi\, (0) = \psi(\vec{x}^q) = c \qquad (C.9)$$

Solving eqs. C.7, C.8, and C.9 for a, b, and c yields

$$a = 2\, [\, \psi(1) - 2\psi\, (1/2) + \psi(\vec{x}^q)] \qquad (C.10)$$

$$b = - \psi\, (1) + 4\, \psi(1/2) - 3\psi\, (\vec{x}^q) \qquad (C.11)$$

$$c = \psi\, (\vec{x}^q)$$

and the minimum is obtained by setting

$$\frac{d\psi(T)}{dT} = 2\,aT + b = 0 \qquad (C.13)$$

Therefore, the value of T for which $\psi(T)$ equals a minimum, in the quadratic approximation, is designated T_o and is given by

$$T_o = -\frac{b}{2a} = \frac{\psi(1) - 4\psi\,(1/2) + 3\psi\,(\vec{x}^{l})}{4\,[\psi(1) - 2\psi\,(1/2) + \psi\,(\vec{x}^{l})]} \qquad (C.14)$$

This is illustrated in Fig. 14.

Let a move be made to the point $\vec{x}^{l+1}$ defined by

$$\vec{x}^{l+1} = \vec{x}^{l} + T_o\, h_o\, \nabla\psi\,(\vec{x}^{l}) \qquad (C.15)$$

where h_o is given by Eq. C.4 and T_o is given by Eq. C.14. Now if the entire process is repeated using $\vec{x}^{l+1}$ as the starting point to find $\vec{x}^{l+2}$ the process will tend to make $\psi \to$ MIN.

It is interesting to notice that if the quadratic approximation works well then

$$\nabla\psi\,(\vec{x}^{l+1}) \cdot \nabla\psi\,(\vec{x}^{l}) \cong 0 \qquad (C.16)$$

This means that successive moves may be essentially normal to each other causing the path to "zig zag" (see Fig. 15) and the process then become quite slow. However, if occasionally moves are made in a direction defined by the vector

$$\vec{R} = \vec{x}^{l+2} - \vec{x}^{l} \qquad (C.17)$$

the process may be accelerated. The motivation for such a move is more intuitive then theoretical and Fig. 16 gives an insight into why it usually works.

Specifically a move is made as follows:

$$\vec{x} = \vec{x}^{q+2} + h' \vec{R} \tag{C.18}$$

where h' is to be determined. Proceeding in a manner similar to that previously discussed, consider ψ a linear function of h' that is

$$\psi (h') = e h' + f \tag{C.19}$$

Now when h' = -1

$$\vec{x} = \vec{x}^{q+2} - \{ \vec{x}^{q+2} - \vec{x}^{q} \} = \vec{x}^{q} \tag{C.20}$$

therefore

$$\psi (-1) = \psi(\vec{x}^{q}) = - e + f \tag{C.21}$$

and when h' = 0

$$\psi (0) = \psi(\vec{x}^{q+2}) = f \tag{C.22}$$

from which it follows that

$$\psi (h) = [\psi (\vec{x}^{q+2}) - \psi (\vec{x}^{q})] h' + \psi(\vec{x}^{q+2}) \tag{C.23}$$

Let $\psi(h')$ be set to zero in Eq. C.23 for the linear approximation, this value of h', is designated h'_o and is given by

$$h'_o = - \frac{\psi (\vec{x}^{q+2})}{[\psi (\vec{x}^{q+2}) - \psi(\vec{x}^{q})]} \tag{C.24}$$

This gives an order of magnitude estimate for h', but the minimum value for ψ in the R direction is sought and a quadratic approximation will be better. Therefore let

$$\vec{x} = \vec{x}^{q+2} + T' h'_o \vec{R} \tag{C.25}$$

write

$$\psi(T') = a'(T')^2 + b'T' + c' \tag{C.26}$$

and evaluate $\psi(T')$ at T' = 0, 1/2 and 1, then

$$\psi(0) = \psi(\vec{x}^{q+2}) = c' \tag{C.27}$$

$$\psi(1/2) = (a'/4) + (b'/2) + c' \tag{C.28}$$

$$\psi(1) = a' + b' + c' \tag{C.29}$$

Solving Eqs. C.27, C.28 and C.29 for a', b', and c' yields

$$a' = 2\,[\psi(1) - 2\,\psi(1/2) + \psi(x^{q+2})] \tag{C.30}$$

$$b' = -\,\psi(1) + 4\,\psi(1/2) - 3\psi(x^{q+2}) \tag{C.31}$$

$$c' = \psi(x^{q+2}) \tag{C.32}$$

and the minimum is obtained by setting

$$\frac{d\psi\,(T')}{dT'} = 2\,a'T' + b' = 0 \tag{C.33}$$

Therefore the value of T' for which (T') equals a minimum, in the quadratic approximation, is designated T'_o and is given by

$$T'_o = -\,\frac{b'}{2a'} \tag{C.34}$$

where a' and b' are obtained from Eqs. C.30 and C.31. The move then is finally defined by

$$\vec{x}^{q+3} = \vec{x}^{q+2} + T_o' \, h_o' \, \{ \vec{x}^{q+2} - \vec{x}^{q} \} \qquad (C.35)$$

where h_o' is given by Eq. C.24 and T_o' is given by Eq. C.34.

It is important to note that it is not always possible to find an improved value of ψ in the direction $\vec{R}$. When an attempt to move in the $\vec{R}$ direction fails to yield a decrease in ψ, the gradient method may be resumed. After a successful $\vec{R}$ direction move, it is clear that gradient moves should be resumed for at least two moves. Fig. 17 illustrates the entire process in two dimensions for a hypothetical ψ function and Fig. 18 shows a complete flow diagram based on the essentials of the minimization technique just described.

APPENDIX D

COMPUTER PROGRAM LISTINGS

The following are listings of the Algol programs used in obtaining the numerical results given in this paper. The programs listed are

1. PSI3, an Algol procedure for calculating ψ, ψ_∞ and $\nabla\psi$ for the Force displacement formulation.
2. PSI4, an Algol procedure for calculating ψ, ψ_∞ and $\nabla\psi$ for the displacement formulation.
3. QUADPT, an Algol procedure embodying the minimization algorithm described in Appendix C.
4. P3EXTR, the main Algol program for use with the stress displacement program.
5. P4EXTR, the main Algol program for use with the displacement program.

Listing of PSI3

```
PROCEDURE PSI3(SYN,STARTING,DRAWINGDOWN,CALCULATEPSI,CALCULATEGRAD,TOP,
  X,DX,PSI,PSII)$
VALUE STARTING,DRAWINGDOWN,CALCULATEPSI,CALCULATEGRAD,SYN                $
BOOLEAN STARTING,DRAWINGDOWN,CALCULATEPSI,CALCULATEGRAD,SYN              $
REAL PSI,PSII$
INTEGER TOP$
REAL ARRAY X,DX$
  BEGIN
  OWN INTEGER NDS,MAS,LDS,PWR,DIMS                                       $
  OWN BOOLEAN LINEAR,NONLINEAR,BKL                                       $
  OWN REAL E,RHO,YS,KD,KT,KSIG,KU,KDOT,PI,SFE,SFC,WPD,DELTA,LAMW,LAME,
    LAMC,QUE,QUC,UBR,LBR,ESS,KAE,KDTRHO,EKUDKS,QUR,LAMR,KSIGDTPI,KSDYS
    ,K2 ,EPS,EC,CC,KSDYSPSD                                              $
  OWN REAL ARRAY LAMB(1..200),NF(1..20),Q(1..200),Z(1..3,1..20),
    LGSQ(1..20),     LGTH(1..20),P(1..3,1..20,1..10),LH(1..200),
    UB(1..200),GAM(1..3,1..20,1..20)                                     $
  OWN INTEGER ARRAY MATLE(0..20,0..6),MAVSND(1..20,1..2)$
  OWN BOOLEAN ARRAY FIXED(1..20,1..3),PREASS(1..20,1..2)$
INTEGER I,J,K,R,S,TI1,TI2,TI3,TI4,TI5                                    $
REAL TS1,TS2,TS3,TS4,TS5,TS6,FW                                          $
REAL ARRAY EQ(1..3,1..20,1..10),SD(1..20,1..10),RND(1..TOP),
      RNDR(1..20),EA(1..20,1..10),LC(1..20,1..10),MM(1..20,1..10),
      SRMM(1..20,1..10),SSL(1..20,1..10),DSPTS(1..20)                    $
  STRING ANATP(10)$
  LIST DATA(NDS,MAS,LDS,DIMS,
    FOR I=(1,1,NDS) DO (      MATLE(I,0),
      FOR R=(1,1,MATLE(I,0)) DO MATLE(I,R)   ),
    FOR R=(1,1,MAS) DO (      MAVSND(R,1),MAVSND(R,2)    ),
    FOR I=(1,1,NDS) DO FOR S=(1,1,DIMS) DO FIXED(I,S),
    FOR R=(1,1,MAS) DO (PREASS(R,1),PREASS(R,2)),
    ANATP(1,9),
    FOR I=(1,1,NDS) DO FOR S=(1,1,DIMS) DO Z(S,I),
    FOR K=(1,1,LDS)DO FOR I=(1,1,NDS)DO FOR S=(1,1,DIMS)DO P(S,I,K),
    FOR J=(1,1,TOP) DO (LH(J),X(J),UB(J),Q(J)),
    E,RHO,QUE,QUC,UBR,LBR,ESS,QUR,       K2,BKL,SFE,SFC,EPS),
    O1(DIMS,NDS,MAS,LDS),
    O2(ANATP,E,RHO),
    O22(YS,PWR),
    O3(WPD),
    O5(I,FOR S=(1,1,DIMS)DO (Z(S,I),IF FIXED(I,S) THEN 'FIXED'ELSE
       'FREE ')),
    O7(K),
    O8(I,FOR S=(1,1,DIMS)DO P(S,I,K)),
    O10(R,MAVSND(R,1),MAVSND(R,2)),
    O12(J,LH(J),X(J),UB(J),Q(J),IF PREASS(J,1) THEN 'FIXED' ELSE
        '      '),
    O13(J,LH(J),X(J),UB(J),Q(J),IF PREASS(J-MAS,2) THEN 'FIXED' ELSE
        '      '),
    O14(J,LH(J),X(J),UB(J),Q(J),'      ')$
  FORMAT
```

```
  F1(E1, 'SYNTHESIS OF A',I2,' DIMENSIONAL',I3,' NODE',I3,' MEMBER ',
    'TRUSS SUBJECT TO',I3,' LOADS',A1),
  F2('THE MATERIAL IS ',S9,'ELASTIC WITH E=',R12.6,' AND RHO=',R12.6,
     A1),
  F22('THE RAMBERG-OSGOOD CONSTANTS ARE YS=',R12.6,' M=',I2,A1),
  F3('THE INITIAL WEIGHT IS ',R12.6,A1),
  F4(A2,'NODE COORDINATES',A1),
  F5('NODE',I3,X2,...DIMS..(R12.6,X2,S5,X2),A1),
  F6(A2,'LOADS',A1),
  F7('CONDITION',I2,A1),
  F8('NODE',I3, X2,...DIMS..(R12.6,X2),A1),
  F9(E1,'CONNECTIONS',A1),
  F10('MEMBER',I3,' CONNECTS NODES',I3,' AND',I3,A1),
 F11(X6,'LOWER BOUND',X3,'INITIAL VALUE',X3,'UPPER BOUND',X2,
    'TOLERANCE',A1),
  F12(I4,X2,4(R12.6,X4),S5,A1),
  F13('INITIAL VALUES',A3,'DIAMETERS',A2),
  F14('THICKNESSES',A1),
  F15('STRESSES',A1),
  F16('DISPLACEMENTS',A1)$
IF STARTING THEN
  BEGIN
  READ(DATA)$
  READ(DELTA)$
  WRITE(DATA)$
  IF ANATP(1,9) EQL 'NONLINEAR' THEN
  BEGIN
    READ(YS,PWR)$
    LINEAR=FALSE$
    NONLINEAR=TRUE$
   END
  ELSE IF ANATP(1,6) EQL 'LINEAR' THEN
    BEGIN
    LINEAR=TRUE$
    NONLINEAR=FALSE$
   END
  ELSE
    WRITE('DATA ERROR IN ANALYSIS TYPE')$
  IF TOP NEQ (2+LDS)MBS+DIMS*LDS*NDS THEN
    WRITE('ERROR IN X VECTOR LENGTH')$
  END$
  IF STARTING THEN
    BEGIN
    FOR R=(1,1,MBS) DO
      BEGIN
      TS1=0.0$
      I=MBVSND(R,1)$
      J=MBVSND(R,2)$
      FOR S=(1,1,DIMS) DO
        TS1=(Z(S,J)-Z(S,I))**2+TS1$
      LGSQ(R)=TS1$
      LGTH(R)=SQRT(TS1)$
      FOR S=(1,1,DIMS) DO
        BEGIN
```

```
      GAM(S,R,I)=(Z(S,J)-Z(S,I))/LGTH(R)$
      GAM(S,R,J)=-GAM(S,R,I)$
      END$
    END$
  KD=KT=KSIG=KU=1.0$
  PI=3.1415927$
  LAMR=EPS/(DUR**2)$
  LAME=EPS/(DUE**2)$
  LAMC=EPS/(DUC**2)$
  TS1=0.0$
  FOR R=(1,1,MBS) DO
    TS1=X(R)*X(MBS+R)*PI*LGTH(R)*RHO+TS1$
  XPD=TS1$
  WRITE(F1,01)$
  WRITE(F2,02)$
  IF NONLINEAR THEN
  WRITE(F22,022)$
  WRITE(F3,03)$
  WRITE(F4)$
  FOR I=(1,1,NDS) DO
     WRITE(F5,05)$
  WRITE(F6)$
  FOR K=(1,1,LDS) DO
     BEGIN
     WRITE(F7,07)$
     FOR I=(1,1,NDS) DO
       WRITE(F8,08)$
     END$
  WRITE(F9)$
   FOR R=(1,1,MBS) DO
     WRITE(F10,010)$
  WRITE(F13)$
  WRITE(F11)$
  FOR J=(1,1,MBS) DO
     WRITE(F12,012)$
  WRITE(F14)$
  WRITE(F11)$
  FOR J=(MBS+1,1,2MBS) DO
     WRITE(F12,013)$
  WRITE(F15)$
  WRITE(F11)$
  FOR J=(2MBS+1,1,MBS(2+LDS)) DO
     WRITE(F12,014)$
  WRITE(F16)$
  WRITE(F11)$
  FOR J=(2MBS+MBS*LDS+1,1,TOP) DO
     WRITE(F12,014)$
  END$
IF DRAWINGDOWN OR STARTING THEN
  BEGIN
  REAL KDP,KTP,KSIGP,KUP                                          $
 TS1=TS2=0.0$
  COMMENT COMPUTE KD AND KT $
  FOR J=(1,1,MBS)DO
```

```
  BEGIN
   TS1=ABS(KD*X(J))+TS1$
  TS2=ABS(KT*X(MBS+J))+TS2$
  END$
KDP=KD$
KD=TS1/MBS$
KTP=KT$
KT=TS2/MBS $
COMMENT COMPUTE ADJUSTMENTS ON UB,LB,D(X),T(X)AND LAMB$
FOR J=(1,1,MBS) DO
  BEGIN
  LB(J)=LB(J)*KDP/KD$
  UB(J)=UB(J)*KDP/KD$
  LB(MBS+J)=LB(MBS+J)*KTP/KT$
  UB(MBS+J)=UB(MBS+J)*KTP/KT$
  X(J)=X(J)*KDP/KD$
  X(MBS+J)=X(MBS+J)*KTP/KT$
  LAMB(J)=EPS((KD/D(J))**2)$
  LAMB(MBS+J)=EPS((KT/D(MBS+J))**2)$
  END$
TS1=TS2=0.0$
COMMENT COMPUTE KSIG$
FOR J=(2*MBS+1,1,MBS(2+LDS)) DO
  TS1=ABS(X(J)*KSIG)+TS1$
KSIGP=KSIG$
KSIG=TS1/(LDS*MBS)$
COMMENT
CALCULATE NORMALIZING FACTORS FOR STRESS DISPLACEMENT EQUATIONS$
FOR R=(1,1,MBS) DO
  NF(R)=X(R)X(MBS+R)$
COMMENT ADJUST UB,LB,LAMB,AND STRESSES$
FOR J=(2*MBS+1,1,MBS(2+LDS)) DO
  BEGIN
  LB(J)=LB(J)*KSIGP/KSIG$
  UB(J)=UB(J)*KSIGP/KSIG$
  X(J)=X(J)*KSIGP/KSIG$
  LAMB(J)=EPS((KSIG/D(J))**2)$
  END$
COMMENT CALCULATE KU$
FOR J=(2*MBS+MBS*LDS+1,1,TOP) DO
  TS2=ABS(X(J)*KU)+TS2$
KUP=KU$
KU=TS2/(NDS*LDS*DIMS)$
COMMENT COMPUTE ADJUSTMENTS ON UB,LB,LAMB,AND DISPLACEMENTS$
FOR J=(2*MBS+MBS*LDS+1,1,TOP) DO
  BEGIN
  LB(J)=LB(J)*KUP/KU$
  UB(J)=UB(J)*KUP/KU$
  X(J)=X(J)*KUP/KU$
  LAMB(J)=EPS((KU/D(J))**2)$
  END$
KDTPRHO=KD*KT*PI*RHO$
KSIGDTPI=KSIG*KD*KT*PI$
KDDT=KD/KT$
```

```
      EKUDKS=E*KU/KSIG$
      EC=-KSIG*R*SFE/((PI**2)E)$
      CC=-KSIG*KD*SFC/(KT*K2*E)$
      IF NONLINEAR THEN
        BEGIN
        KAE=(3.0/7.0)(YS/KSIG)$
        KSOYS=KSIG/YS$
        KSOYSPSQ=(3/7)KSOYS*(PWR**2)$
        END$
      COMMENT COMPUTE THE WEIGHT$
      TS1=0.0$
      FOR R=(1,1,MBS) DO
        TS1=X(R)X(MBS+R)LGTH(R)+TS1$
      TS1=TS1*KDTPRHO$
      IF DRAWINGDOWN THEN
        BEGIN
         LIST
            DD1(TS1,WPO),
PCHLST(FOR J=(1,1,MBS)DO(LB(J)KD,X(J)KD,UB(J)KD,Q(J)),
       FOR J=(MBS+1,1,2MBS)DO(LB(J)KT,X(J)KT,UB(J)KT,Q(J)),
       FOR J=(2MBS+1,1,2MBS+LDS*MBS)DO(LB(J)KSIG,X(J)KSIG,UB(J)KSIG,Q(J)
       ),
       FOR J=(2MBS+LDS*MBS+1,1,TOP)DO(LB(J)KU,X(J)KU,UB(J)KU,Q(J))),
            DD2(LBR,UBR,
                FOR R=(1,1,MBS)DO(R,X(R)KD,X(MBS+R)KT,
                (X(R)/X(MBS+R))KDOT)),
            DD4(K,FOR R=(1,1,MBS)DO(R,X(2MBS+LDS(R-1)+K)*KSIG,
               - (PI**2)E((X(R)KD)**2+(X(MBS+R)KT)**2)/
               (RSFE(LGTH(R)**2)(IF NONLINEAR THEN
                1.0+(3.0/7.0)PWR((X(2MBS+LDS(R-1)+K)KSOYS)**(PWR-1))
                ELSE 1.0)),-KT*K2*E*X(MBS+R)/(KD*SFC*X(R)*
                IF NONLINEAR THEN SQRT(1.0+(3.0/7.0)PWR*
                ((X(2MBS+LDS(R-1)+K)KSOYS)**(PWR-1)))ELSE 1.0),
                LB(2MBS+LDS(R-1)+K)KSIG,UB(2MBS+LDS(R-1)+K)KSIG),
                FOR I=(1,1,NDS)DO(I,FOR S=(1,1,DIMS)DO
                X(MBS(2+LDS)+(I-1)DIMS+(K-1)NDS*DIMS+S)KU))$
          FORMAT
PCHFRMT(4(R14.8,X3),A1),
            DF1(    'DRAWDOWN CYCLE COMPLETE, WEIGHT=',R12.6,A1,
               'NEW DRAWDOWN GOAL WILL BE WPO=',R12.6,A1.1),
            DF2('THE DESIGN IS',A1,'MEMBER  D        T       D/T',
               '       LIMITS ',D6.2,' AND ',D6.2,A1,
              (X1,I2,X3,D5.2,X3,D5.3,X2,D6.2,A1)),
            DF3('THE ANALYSIS',A3),
            DF4('LOAD CONDITION',I3,A2,'MEMBER STRESS        EULER',
               '         CRIPPLING',X11,'LIMITS',A1,
               ..MBS..(X1,I2    ,5(R13.4),A1),'NODE',X13,'DISPLACEMENTS',
              A2,..NDS..(X1,I2,X3,..DIMS..(R10.4,X3),A1))$
        WPO=TS1(1.0-DELTA)$
            LAMW=EPS/((DELTA*ESS)**2)$
         WRITE(DF1,DD1)$
         TS1=CLOCK$
         WRITE(DF2,DD2)$
         WRITE(DF3)$
```

```
      FOR K=(1,1,LDS) DO
        WRITE(DF4,D04)$
      TS1=CLOCK-TS1$
      WRITE(TS1)$
      END$
    END$
  IF CALCULATEPSI OR CALCULATEGRAD THEN
    BEGIN
    IF SYN THEN
      BEGIN
      TS1=0.0$
      FOR R=(1,1,MBS) DO
      TS1=X(R)X(MBS+R)LGTH(R)+TS1$
      TS1=TS1*KDTPRHO$
      FW=IF TS1 GTR WPD THEN TS1/WPD-1.0 ELSE 0.0$
      END$
    COMMENT CALCULATE EQUILIBRIUM RESIDUALS$
    FOR K=(1,1,LDS) DO
      BEGIN
      TI1=2*MBS+K-LDS$
      FOR I=(1,1,NDS) DO
        FOR S=(1,1,DIMS) DO
          BEGIN
          IF NOT FIXED(I,S)  THEN
            BEGIN
            TI2=MBTLE(I,0)$
            TS1=0.0$
            FOR J=(1,1,TI2) DO
              BEGIN
              R=MBTLE(I,J)$
              TS1=X(TI1+R*LDS)X(R)X(MBS+R)GAM(S,R,I)+TS1$
              END$
            FQ(S,I,K)=TS1+P(S,I,K)/KSIGDTPI$
            END
          ELSE
            FQ(S,I,K)=0.0$
          END$
      END$
    COMMENT COMPUTE STRESS-DISPLACEMENT RESIDUALS$
    FOR K=(1,1,LDS) DO
      FOR R=(1,1,MBS) DO
      BEGIN
      TS1=0.0$
      I=MBVSND(R,1)$
      J=MBVSND(R,2)$
      TI1=2*MBS+MBS*LDS+(I-1) DIMS+(K-1)NDS*DIMS $
      TI2=TI1-(I-1)DIMS+(J-1) DIMS $
      TI3=2*MBS+LDS(R-1)+K$
      FOR S=(1,1,DIMS) DO
        TS1=GAM(S,R,I)(X(TI2+S)-X(TI1+S))+TS1$
      TS1=TS1*EKUOKS/LGTH(R)$
      IF NONLINEAR THEN
        BEGIN
        TS3=SSL(R,K)=X(TI3)+KAE((X(TI3)KSOYS)**PWR)$
```

```
      TS2=MM(R,K)=1.0+(3/7)PAR((X(TI3)KSOYS)**(PAR-1))$
      SRMM(R,K)=SQRT(TS2)$
      SD(R,K)=(NF(R))(TS3-TS1)$
      END$
    IF LINEAR THEN
      BEGIN
      TS3=SSL(R,K)=X(TI3)$
      MM(R,K)=SRMM(R,K)=1.0$
      SD(R,K)=NF(R)(X(TI3)-TS1)$
      END$
    END$
COMMENT COMPUTE PENALTY FUNCTIONS$
IF SYN THEN
  BEGIN
  FOR J=(1,1,TOP) DO
    BEGIN
    TS1=X(J)-UB(J) $
    TS2=LB(J)-X(J) $
    BND(J)=IF TS1 GTR 0.0 THEN TS1 ELSE IF TS2 GTR 0.0 THEN -TS2
           ELSE 0.0$
    END$
  FOR R=(1,1,MBS) DO
    BEGIN
    TS1=((X(R)/X(MBS+R))KDOT)-UBR$
    TS2=LBR-(TS1+UBR)$
    BNDR(R)=IF TS1 GTR 0.0 THEN TS1 ELSE IF TS2 GTR 0.0 THEN -TS2
            ELSE 0.0 $
    END$
IF BKL THEN
   FOR R=(1,1,MBS) DO
      BEGIN
      DSPIS(R)=TS1=(X(R)*KO)**2+(X(MBS+R)*KT)**2$
      TS1=TS1/LGSQ(R)$
      TS2=X(R)/X(MBS+R)$
      FOR K=(1,1,LDS) DO
         BEGIN
         TI1=2MBS+LDS(R-1)+K$
         TS3=(FL*X(TI1)*MM(R,K)/TS1)-1.0$
         ER(R,K)=IF TS3 GTR 0.0 THEN TS3 ELSE 0.0$
         TS3=(CC*X(TI1)*TS2*SRMM(R,K))-1.0$
         LC(R,K)=IF TS3 GTR 0.0 THEN TS3 ELSE 0.0$
         END$
      END$
  END$
END$
IF CALCULATEPSI  THEN
  BEGIN
  TS1=TS3=0.0$
  FOR K=(1,1,LDS) DO
    BEGIN
    FOR I=(1,1,NDS) DO
      FOR S=(1,1,DIMS) DO
        BEGIN
        TS2=FQ(S,I,K)**2$
```

```
        TS3=MAX(TS3,TS2)$
        TS1=TS2+TS1$
        END$
      FOR R=(1,1,MRS) DO
        BEGIN
        TS2=SD(R,K)**2$
        TS3=MAX(TS3,TS2)$
        TS1=TS2+TS1$
        END$
    END$
  IF SYM THEN
    BEGIN
    FOR J=(1,1,TOP) DO
      BEGIN
      TS2=LAMA(J)(BJ)(J)**2)$
      TS3=MAX(TS3,TS2)$
      TS1=TS2+TS1$
      END$
    FOR R=(1,1,MRS) DO
      BEGIN
      TS2=LAMR(BNDR(R)**2)$
      TS3=MAX(TS3,TS2)$
      TS1=TS2+TS1$
      END$
    TS3=MAX(TS3,LAMW(FW**2))$
    TS1=LAMW(FW**2)+TS1$
    IF BKL THEN
      BEGIN
      FOR R=(1,1,MRS) DO
         FOR K=(1,1,LDS) DO
            BEGIN
            TS2=LAME(EB(R,K)**2)$
            TS4=LAMC(LC(R,K)**2)$
            TS3=MAX(TS3,TS2,TS4)$
            TS1=TS2+TS4+TS1$
            END$
      END$
    END$
  PSI=TS1$
  PSII=TS3$
  END$
IF CALCULATEGRAD THEN
   BEGIN
   FOR R=(1,1,MRS) DO
         BEGIN
            TI1=MRVSD(R,1)$
            TI2=MRVSD(R,2)$
            TI3=2*MRS+LDS(R-1)$
            TS1=TS3=TS4=0.0$
            FOR K=(1,1,LDS) DO
               BEGIN
               TS2=0.0$
               IF BKL THEN
                  BEGIN
```

```
            TS3=EH(R,K)XM(R,K)X(TI3+K)+TS3$
            TS4=EL(R,K)SRMV(R,K)X(TI3+K)+TS4$
            END$
         FOR S=(1,1,DIMS) DO
            TS2=(EQ(S,TI1,K)-ED(S,TI2,K))GAM(S,R,TI1)+TS2$
         TS1=TS2*X(TI3+K)+TS1$
         DX(TI3+K)=2TS2*X(R)*X(MBS+R)
                   +2SD(R,K)NE(R)AM(R,K)
                   +IF SYN THEN 2LAMB(TI3+K)AND(TI3+K)
                      +IF BKL THEN
                      2LAME*ED(R,K)*EC*LGSO(R)*
                     (((XM(R,K)-1.0)PWR)+1.0)/DSPTS(R)
                      +2LAMC*LC(R,K)*CC*X(R)*
                      (IF LINEAR THEN 1.0 ELSE
                      (2.0+(3/7)PWR(PWR+1)*
                      ((X(TI3+K)KSO(S)**(PWR-1))/
                      (2*SRMM(R,K))))/X(MBS+R)
                      ELSE 0.0
                   ELSE 0.0$
         END$
      IF NOT PREASS(R,1) AND SYN THEN
         DX(R)=2TS1*X(MBS+R)+2LAMA(R)AND(R)
               +2LAMB  *BNDR(R)KDOT/X(MBS+R)
               +2LAMW*EW*KDTPRHO*X(MBS+R)LGTH(R)/WPO
               +IF BKL THEN
               -2LAME*2*EC*(KD**2)*LGSO(R)*X(R)*TS3/
                                                (DSPTS(R)**2)
               +2LAMC*CC*TS4/X(MBS+R)
               ELSE 0.0
      ELSE
         DX(R)=0.0$
      IF NOT PREASS(R,2) AND SYN THEN
         DX(MBS+R)=2TS1*X(R)+2LAMA(MBS+R)AND(MBS+R)
                   -2LAMB  *BNDR(R)X(R)KDOT/(X(MBS+R)**2)
                   +2LAMW*EW*KDTPRHO*X(R)LGTH(R)/WPO
                   +IF BKL THEN
                   -2LAME*2*EC*(KD**2)*LGSO(R)*X(MBS+R)
                   TS3/(DSPTS(R)**2)
                   -2LAMC*CC*TS4*X(R)/(X(MBS+R)**2)
                   ELSE 0.0
      ELSE
         DX(MBS+R)=0.0$
   END$
FOR S=(1,1,DIMS) DO
   FOR K=(1,1,LDS) DO
      FOR I=(1,1,NDS) DO
         BEGIN
         TI2=(2+LDS)MBS+(I-1)DIMS+(K-1)NDS*DIMS+S$
         IF NOT FIXED(I,S) THEN
            BEGIN
            TS1=0.0$
            TI1=MATLE(I,0)$
            FOR J=(1,1,TI1) DO
               BEGIN
```

```
                R=MATLE(I,J)$
                TS1=SU(R,K)NF(R)EKJOKS*GAM(S,R,I)/LGTH(R)+TS1$
                END$
            DX(TI2)= 2TS1+IF SYN THEN 2LAMB(TI2)AND(TI2)
                    ELSE 0.0$
            END
        ELSE
            DX(TI2)=0.0$
        END
    END$
END PSI3$
```

Listing of PSI4

```
PROCEDURE PSIH(SYN,STARTING,DRAWINGDOWN,OUTPUT,PNCH,CALCULATEPSI,
   CALCULATEGRAD,TOP,X,DX,PSI,PSII)$
   VALUE SYN,STARTING,DRAWINGDOWN,OUTPUT,PNCH,CALCULATEPSI,
      CALCULATEGRAD,TOP$

   BOOLEAN SYN,STARTING,DRAWINGDOWN,OUTPUT,PNCH,CALCULATEPSI,
      CALCULATEGRAD$

   INTEGER TOP$

   REAL ARRAY X,DX$

   REAL PSI,PSII$
   BEGIN
   OWN INTEGER NDS,MBS,LDS,DIMS,ALPHAS,BETAS,LLU,ULU,APB,AMAX,BMAX,
                MBMAX$
   BOOLEAN SY,ST,DR,OU,PN,CP,CG                                          $
   SY=SYN$
   ST=STARTING$
   DR=DRAWINGDOWN$
   OU=OUTPUT$
   PN=PNCH$
   CP=CALCULATEPSI$
   CG=CALCULATEGRAD$
   IF ST THEN
      BEGIN
      READ(NDS,MBS,LDS,DIMS,ALPHAS,BETAS)$
      LLU=ALPHAS+BETAS+1$
      ULU=ALPHAS+BETAS+DIMS*NDS*LDS$
      IF ULU NEQ TOP THEN
         WRITE("ULU NOT EQUAL TO TOP,CHECK DATA")$
      READ(AMAX,BMAX,MBMAX)$
      APB=ALPHAS+BETAS$
      END$

      BEGIN
      OWN BOOLEAN BKL$

      OWN REAL E,RHO,KU,SFS,SFC,WPD,DELTA,LAMW,LAME,LAMC,LAMR,QUE,
         QUC,QUR,UBR,LBR,ESS,K2,EPS,PH,PI$

      OWN REAL ARRAY LAMD(1..MBS),LAMT(1..MBS),QD(1..MBS),QT(1..MBS),
         LAMS(1..MBS,1..LDS),QS(1..MBS,1..LDS),Z(1..DIMS,1..NDS),
         LGTH(1..MBS),LGTHSQ(1..MBS),LAMU(LLU..ULU),QU(LLU..ULU),
         P(1..DIMS,1..NDS,1..LDS),LBD(1..MBS),UBD(1..MBS),LBT(1..MBS),
         UBT(1..MBS),LBU(LLU..ULU),UBU(LLU..ULU),KD(1..MBS),KT(1..MBS),
         LBS(1..MBS,1..LDS),UBS(1..MBS,1..LDS),
         GAM(1..DIMS,1..MBS,1..NDS)$

   OWN BOOLEAN ARRAY FIXED(1..NDS,1..DIMS),PREASSA(1..ALPHAS),
```

```
   PREASSB(1..BETAS)$

OWN INTEGER ARRAY MATLE2(1..2,0..MAMAX,1..NDS),MAVSND(1..MAS,1..2)
          ,ACT(0..AMAX,1..ALPHAS),BCT(0..BMAX,1..BETAS)$

INTEGER I,J,K,R,S,V,W,IP,RP,KP,SP,TI1,TI2,TI3,TI4,TI5,TI6,TI7$

REAL TS1,TS2,TS3,TS4,TS5,TS6,TS7,KUP,FW$

REAL ARRAY STRAIN(1..MAS,1..LDS),EQ(1..DIMS,1..NDS,1..LDS),
   RND(1..MAS),RNDT(1..MAS),BNDR(1..MAS),RNDU(LLU..ULU),
   RNDS(1..MAS,1..LDS),DSPTS( ..MAS),DD(1..MAS),
   D(1..MAS),T(1..MAS),LB(1..MAS,1..LDS),LC(1..MAS,1..LDS)        $

LIST DATA1(FOR I=(1,1,NDS)DO(MATLE2(1,0,I),
      FOR V=(1,1,MATLE2(1,0,I))DO(MATLE2(1,V,I),MATLE2(2,V,I)))),
     OUTP1(I,MATLE2(1,0,I),FOR V=(1,1,MATLE2(1,0,I))DO
          (MATLE2(1,V,I),MATLE2(2,V,I))),
     DATA2(FOR R=(1,1,MAS) DO(MAVSND(R,1),MAVSND(R,2))),
     OUTP2(FOR R=(1,1,MAS) DO(R,MAVSND(R,1),MAVSND(R,2))),
     DATA3(FOR V=(1,1,ALPHAS) DO(ACT(0,V),FOR W=(1,1,ACT(0,V)) DO
          ACT(W,V))),
     OUTP3(V,ACT(0,V),FOR W=(1,1,ACT(0,V)) DO ACT(W,V)),
     DATA4(FOR V=(1,1,BETAS)  DO(BCT(0,V),FOR W=(1,1,BCT(0,V)) DO
          BCT(W,V))),
     OUTP4(V+ALPHAS,BCT(0,V),FOR W=(1,1,BCT(0,V))DO BCT(W,V)),
     DATA5(FOR V=(1,1,ALPHAS) DO PREASSA(V)),
     OUTP5(FOR V=(1,1,ALPHAS) DO (V,IF PREASSA(V) THEN
          'PREASSIGNED' ELSE 'VARIABLE   ')),
     DATA6(FOR V=(1,1,BETAS)  DO PREASSB(V)),
     OUTP6(FOR V=(1,1,BETAS)  DO(V+ALPHAS,IF PREASSB(V) THEN
          'PREASSIGNED' ELSE 'VARIABLE   ')),
     DATA7(FOR I=(1,1,NDS) DO FOR S=(1,1,DIMS) DO Z(S,I)),
     OUTP7(1,FOR S=(1,1,DIMS) DO Z(S,I)),
     DATA8(FOR K=(1,1,LDS) DO FOR I=(1,1,NDS) DO FOR S=(1,1,DIMS)
          DO P(S,I,K)),
     OUTP8(I,FOR S=(1,1,DIMS) DO P(S,I,K)),
     DATA9(FOR R=(1,1,MAS) DO(LBD(R),UBD(R),QD(R))),
     OUTP9(FOR R=(1,1,MAS) DO(R,LBD(R) ,UBD(R),QD(R))),
     DATA10(FOR R=(1,1,MAS) DO(LBT(R),UBT(R),QT(R))),
     OUTP10(FOR R=(1,1,MAS) DO(R,LBT(R),UBT(R),QT(R))),
     DATA11(FOR K=(1,1,LDS) DO FOR R=(1,1,MAS) DO
           (LBS(R,K),UBS(R,K),QS(R,K))),
     OUTP11(FOR K=(1,1,LDS) DO FOR R=(1,1,MAS) DO
           (R,K,LBS(R,K),UBS(R,K),QS(R,K))),
     DATA12(FOR J=(LLU,1,ULU) DO (LBU(J),UBU(J),QU(J))),
     OUTP12(FOR K=(1,1,LDS) DO FOR I=(1,1,NDS) DO FOR S=(1,1,DIMS)
           DO( K,I,S,LBU(APB+(I-1)DIMS+(K-1)NDS*DIMS+S),
           UBU(APB+(I-1)DIMS+(K-1)NDS*DIMS+S),
           QU(APB+(I-1)DIMS+(K-1)NDS*DIMS+S))),
     DATA13(FOR I=(1,1,NDS) DO FOR S=(1,1,DIMS) DO FIXED(I,S)),
     OUTP13(I,S),
     DATA14(FOR R=(1,1,MAS) DO KD(R)),
     DATA15(FOR R=(1,1,MAS) DO KT(R)),
```

```
      OUTP14(FOR R=(1,1,NRS) DO(R,KD(R),KT(R))),
      DATA16(FOR J=(LLJ,1,JLU) DO X(J)),
      OUTP16(FOR I=(1,1,NDS) DO FOR S=(1,1,DIMS) DO
              (S,I,K,X(APR+(I-1)*DIMS+(K-1)*NDS*DIMS+S))),
      DATA17(E,RHO,SFE,SFC,DELTA,DUF,DUC,DUR,UBR,LBR,ESS,X2,EPS)$

FORMAT F1('SYNTHESIS OF A ',I2,' NODE,',I2,' MEMBER,',I1,' DIMEN',
   'SIONAL TRUSS SUBJECT TO ',I1,' LOADS',A1),
      F2('THE INITIAL WEIGHT IS',R10.4,A4.1),
      F3('THE MATERIAL CONSTANTS ARE',A2.1,
         'E=',R10.4,A1,
         'RHO=',R10.4,A1,'K2=',R10.4,A1),
      F4('THE CONTROL CONSTANTS ARE',A2.1,
         'EPSILON=',R10.4,A1,
         'S=',R10.4,A1,
         'DELTA=',R10.4,A1),
      F5('THE SPECIAL LIMITS ARE',A2.1,
         'SFE-NUE=',R10.4,'-',R10.4,'=',R10.4,A1,
         'SFC-NUC=',R10.4,'-',R10.4,'=',R10.4,A1,
         'LBR-NUR=',R10.4,'-',R10.4,'=',R10.4,A1,
         'UBR+NUR=',R10.4,'+',R10.4,'=',R10.4,A1),
      F6('TOPOLOGICAL DESCRIPTION OF STRUCTURE..',A3.1),
      F7('NODE ',I2,' IS JOINED BY ',I1,' MEMBERS',A1,
        ('MEMBER ',I2,' JOINS IT TO NODE ',I2,A1)),
      F8('THUS..',A2.1),
      F9('MEMBER ',I2,' CONNECTS NODES ',I2,'  AND ',I2,A1),
      F10(E1,'DESIGN CONTROL DESCRIPTION..',A1.2),
      F11('X(',I2,') CONTROLS THE DIAMETERS OF ',I2,' MEMBERS',A1,
         (I2,A1)),
      F12('X(',I2,') CONTROLS THE THICKNESS OF',I3,' MEMBERS',A1,
         (I2,A1)),
      F13('X(',I2,') IS ',S11,A1),
      F14('DESIGN VARIABLE PREASSIGNMENT..',A3.1),
      F15(E1,'NODE COORDINATES..',A1.1),
      F16('NODE ',I2,' IS AT ',3(R10.4,X3),A1),
      F17('NODE ',I2,3(X3,R10.4),A1),
      F18(E1,'LOAD CONDITIONS..',A1.2),
      F19('CONDITION ',I1,A2),
      F20(E1,'DESIGN-ANALYSIS LIMITATIONS..',A1.3),
      F21('DIAMETER',A1,' R   LOWER   UPPER   TOLERANCE',A1,
         (I2,X1,3R10.4,A1)),
      F22('THICKNESS',A2,(I2,X1,3R10.4,A1)),
      F23('STRESSES',A2,'MEMBER LOAD  LOWER    UPPER     TOLERA',
         'NCE',A1,(X3,I2,X3,I2,X2,3R10.4,A1)),
      F24('DISPLACEMENTS',A2,'LOAD  NODE  DIRECTION   LOWER',
         '   UPPER     TOLERANCE',A1,(X2,I2,X2,I2,X4,I2,X10,
         3R10.4,A1)),
      F25('NODE FIXITY..',A5.2),
      F26('NODE ',I2,' IS FIXED IN THE ',I1,' DIRECTION',A1),
      F27(E1,'INITIAL DESIGN',A1,'MEMBER   DIAMETER    THICKNESS',
        ,A1,(X2,I2,X4,R10.4,X2,R10.4,A1)),
      F28(E1),
      F29('INITIAL TRIAL ANALYSIS',A5.2),
      F30('LOAD CONDITION ',I2,A1.1),
```

```
        F31('U(',I1,',',I2,',',I1,')=',R10.4,A1),
        F32('PH=',R10.4,A4,1),
        F33('THIS DESIGN WEIGHS',R10.4,A1,
           'THE NEW GOAL WILL BE',R10.4,A1,2)                          $

IF ST THEN
   BEGIN
   WRITE(F28)$
   WRITE(F1,NDS,MAS,DIMS,LDS)$
   READ(BKL)$
   WRITE(IF BKL THEN 'BUCKLING CONSIDERED' ELSE
      'BUCKLING NOT CONSIDERED')$
   READ(DATA17)$
   WRITE(F3,E,RHO,K2)$
   WRITE(F4,EPS,ESS,DELTA)$
   WRITE(F5,SFE,QUE,SFE-QUE,SFC,QUC,SFC-QUC,LBR,QUR,LBR-QUR,
         UBR,QUR,UBR+QUR)$
   READ(DATA1)$
   WRITE(F28)$
   WRITE(F6)$
   FOR I=(1,1,NDS) DO
      WRITE(F7,OUTP1)$
   READ(DATA2)$
   WRITE(F8)$
   WRITE(F9,OUTP2)$
   READ(DATA3)$
   WRITE(F10)$
   FOR V=(1,1,ALPHAS) DO
      WRITE(F11,OUTP3)$
   READ(DATA4)$
   FOR V=(1,1,BETAS) DO
      WRITE(F12,OUTP4)$
   READ(DATA5)$
   WRITE(F14)$
   FOR V=(1,1,ALPHAS) DO
      WRITE(F13,OUTP5)$
   READ(DATA6)$
   FOR V=(1,1,BETAS) DO
      WRITE(F13,OUTP6)$
   READ(DATA7)$
   WRITE(F15)$
   FOR I=(1,1,NDS) DO
      WRITE(F16,OUTP7)$
   READ(DATA8)$
   WRITE(F18)$
   FOR K=(1,1,LDS)DO
      BEGIN
         WRITE(F19,K)$
         FOR I=(1,1,NDS) DO
            WRITE(F17,OUTP8)$
      END$
   WRITE(F20)$
   READ(DATA9)$
   WRITE(F21,OUTP9)$
```

```
        READ(DATA10)$
        WRITE(F22,OUTP10)$
        READ(DATA11)$
        WRITE(F23,OUTP11)$
        READ(DATA12)$
        WRITE(F24,OUTP12)$
        READ(DATA13)$
        WRITE(F25)$
        FOR I=(1,1,NDS) DO
        FOR S=(1,1,DIMS) DO
              IF FIXED(I,S) THEN
                 WRITE(F26,OUTP13)$
        READ(DATA14)$
        READ(DATA15)$
        WRITE(F27,OUTP14)$
        READ(DATA16)$
        WRITE(F29)$
        FOR K=(1,1,LDS) DO
           BEGIN
           WRITE(F30,K)$
           WRITE(F31,OUTP16)$
           END$
COMMENT COMPUTE THE LENGTHS , SQUARES OF LENGTHS,AND DIRECTION COSINES $
        FOR R=(1,1,MBS) DO
           BEGIN
           TS1=0.0$
           I=MBVSND(R,1)$
           J=MBVSND(R,2)$
           FOR S=(1,1,DIMS) DO
              TS1=(Z(S,J)-Z(S,I))**2+TS1$
           LGTH(R)=SQRT(TS1)$
           LGTHSQ(R)=TS1$
           FOR S=(1,1,DIMS) DO
              BEGIN
              GAM(S,R,I)=(Z(S,J)-Z(S,I))/LGTH(R)$
              GAM(S,R,J)=-GAM(S,R,I)$
              END$
           END$
COMMENT COMPUTE LAMS(R,K),LAMD(R),LAMT(R)                                $
        FOR R=(1,1,MBS) DO
           BEGIN
           LAMD(R)=EPS/(QD(R)**2)$
           LAMT(R)=EPS/(QT(R)**2)$
           FOR K=(1,1,LDS) DO
              LAMS(R,K)=EPS/(QS(R,K)**2)$
           END$
COMMENT COMPUTE PB                                                       $
        TS1=0.0$TI1=0$
        FOR K=(1,1,LDS) DO
           FOR I=(1,1,NDS) DO
              FOR S=(1,1,DIMS) DO
                 BEGIN
                 IF P(S,I,K) NEQ 0.0 THEN
                    BEGIN
```

```
                    TS1=ABS(P(S,I,K))+TS1$
                    TI1=1+TI1$
                    END$
                 END$
          PR=TS1/TI1$
          WRITE(F32,PR)$
COMMENT INITIALIZE ALPHAS AND BETAS ,KU,PI,LAMR,LAME,LAMC,LAMW          $
          FOR J=(1,1,APB) DO
             X(J)=1.0$
          KU=1.0$
          PI=3.1415927$
          LAMR=EPS/(QUR**2)$
          LAME=EPS/(QUE**2)$
          LAMC=EPS/(QUC**2)$
          LAMW=EPS/((ESS*DELTA)**2)$
COMMENT COMPUTE INITIAL WEIGHT                                          $
          TS1=0.0$
          FOR R=(1,1,VBS) DO
             TS1=KT(R)KD(R)PI*LGTH(R)*RHO+TS1$
          WPD=TS1$
          WRITE(F2,WPD)$
          END$

       IF DR OR ST THEN
          BEGIN
COMMENT COMPUTE KU                                                      $
          TS1=0.0$
          FOR J=(LLU,1,ULU)DO
             TS1=ABS(X(J)*KU)+TS1$
          KUP=KU$
          KU=TS1/(ULU-LLU+1)$
COMMENT ADJUST X,LBU,UBU,AND LAMU                                       $
          FOR J=(LLU,1,ULU) DO
             BEGIN
             LBU(J)=LBU(J)KUP/KU$
             X(J)=X(J)KUP/KU$
             UBU(J)=UBU(J)KUP/KU$
             LAMU(J)=EPS((KU/QU(J))**2)$
             END$
COMMENT ADJUST ALPHAS AND BETAS                                         $
          FOR V=(1,1,ALPHAS) DO
             BEGIN
             TI1=ACT(0,V)$
             FOR W=(1,1,TI1) DO
                BEGIN
                TI2=ACT(W,V)$
                KD(TI2)=KD(TI2)X(V)$
                END$
             X(V)=1.0$
             END$
          FOR V=(1,1,BETAS) DO
             BEGIN
             TI1=BCT(0,V)$
             FOR W=(1,1,TI1) DO
```

```
                BEGIN
                TI2=ACT(W,V)$
                KT(TI2)=KT(TI2)X(ALPHAS+V)$
                END$
            X(ALPHAS+V)=1.0$
            END$
        END$

      IF OR THEN
        BEGIN
COMMENT CALCULATE WPD                                                    $
        TS1=0.0$
        FOR R=(1,1,MBS)DO
            TS1=KT(R)KD(R)PI*LGTH(R)*RHO+TS1$
        WPD=TS1(1.0-DELTA)$
        WRITE(F33,TS1,WPD)$
        END$
TRACE 16,17 $
      IF CG OR CP OR DU OR PN OR DR THEN
        BEGIN
COMMENT CALCULATE STRAINS                                                $
        FOR K=(1,1,LDS) DO
            FOR R=(1,1,MBS) DO
                BEGIN
                TS1=0.0$
                I=MBVSND(R,1)$
                J=MBVSND(R,2)$
                TI1=APR+(I-1)DIMS+(K-1)NDS*DIMS$
                TI2=APR+(J-1)DIMS+(K-1)NDS*DIMS$
                FOR S=(1,1,DIMS) DO
                    TS1=GAM(S,R,I)(X(TI2+S)-X(TI1+S))+TS1$
                STRAIN(R,K)=TS1*KU/LGTH(R)$
                END$
COMMENT SET UP  D(2) AND T(R)                                            $
        FOR V=(1,1,ALPHAS) DO
            BEGIN
            TI1=ACT(0,V)$
            FOR W=(1,1,TI1) DO
                BEGIN
                TI2=ACT(W,V)$
                D(TI2)=KD(TI2)X(V)$
                END$
            END$
        FOR V=(1,1,BETAS) DO
            BEGIN
            TI1=ACT(0,V)$
            FOR W=(1,1,TI1) DO
                BEGIN
                TI2=ACT(W,V)$
                T(TI2)=KT(TI2)X(ALPHAS+V)$
                END$
            END$

COMMENT CALCULATE EQUILIBRIUM RESIDUALS                                  $
```

```
        FOR K=(1,1,LDS) DO
           FOR I=(1,1,NDS) DO
              FOR S=(1,1,DIMS) DO
                 BEGIN
                 IF NOT FIXED(I,S) THEN
                    BEGIN
                    TI1=MATLE2(1,0,I)$
                    TS1=0.0$
                    FOR V=(1,1,TI1) DO
                       BEGIN
                       R=MATLE2(I,V,I)$
                       TS1=STRAIN(R,K) *D(R)*T(R)*GAM(S,R,I)+TS1$
                       END$
                    TS1=TS1*E*PI$
                    EQ(S,I,K)=(TS1+P(S,I,K))/PB$
                    END
                 ELSE
                    EQ(S,I,K)=0.0$
                 END$
        IF SY THEN
           BEGIN
COMMENT COMPUTE WEIGHT PENALTY                                          $
           TS1=0.0$
           FOR R=(1,1,MBS) DO
              TS1=D(R)T(R)LGTH(R)+TS1$
           TS1=TS1*PI*RHO$
           FW=IF TS1 GTR WPO THEN (TS1/WPO)-1.0 ELSE 0.0$
COMMENT COMPUTE D ,T AND D/T PENALTIES                                  $
           FOR R=(1,1,MBS) DO
              BEGIN
              TS1=D(R)-UBD(R)$
              TS2=LBD(R)-D(R)$
              BNDD(R)=IF TS1 GTR 0.0 THEN TS1 ELSE IF TS2 GTR 0.0 THEN
                 -TS2 ELSE 0.0$
              TS1=T(R)-UBT(R)$
              TS2=LBT(R)-T(R)$
              BNDT(R)=IF TS1 GTR 0.0 THEN TS1 ELSE IF TS2 GTR 0.0 THEN
                 -TS2 ELSE 0.0$
              TS3=DOT(R)=D(R)/T(R)$
              TS1=TS3-UBR$
              TS2=LBR-TS3$
              BNDR(R)=IF TS1 GTR 0.0 THEN TS1 ELSE IF TS2 GTR 0.0 THEN
                 -TS2 ELSE 0.0$
              END$
COMMENT COMPUTE DIRECT DISPLACEMENT PENALTIES                           $
           FOR J=(LLU,1,ULU) DO
              BEGIN
              TS1=X(J)-UBU(J)$
              TS2=LBU(J)-X(J)$
              BNDU(J)=IF TS1 GTR 0.0 THEN TS1 ELSE IF TS2 GTR 0.0 THEN
                 -TS2 ELSE 0.0$
              END$
COMMENT COMPUTE SIMPLE STRESS LIMIT BOUNDS                              $
           FOR R=(1,1,MBS) DO
```

```
                FOR K=(1,1,LDS) DO
                   BEGIN
                   TS1=STRAIN(R,K)E-UBS(R,K)$
                   TS2=LBS(R,K)-STRAIN(R,K)E$
                   BNDS(R,K)=IF TS1 GTR 0.0 THEN TS1 ELSE IF TS2 GTR 0.0
                      THEN -TS2 ELSE 0.0$
                   END$
             IF BKL THEN
                BEGIN
COMMENT
COMPUTE BUCKLING PENALTIES                                                $
                FOR R=(1,1,MBS) DO
                   BEGIN
                   DSPTS(R)=J(R)**2+T(R)**2$
                   FOR K=(1,1,LDS) DO
                      BEGIN
                      TS1=(-(B*SFE*LGTHS)(R)STRAIN(R,K))/((PI**2)*
                         DSPTS(R)))-1.0$
                      EB(R,K)=IF TS1 GTR 0.0 THEN TS1 ELSE 0.0$
                      TS1=(-(STRAIN(R,K)*SFC*DDT(R))/K2)-1.0$
                      LC(R,K)=IF TS1 GTR 0.0 THEN TS1 ELSE 0.0$
                      END$
                   END$
                END$
             END$
COMMENT END OF PSI CONSTITUENT COMPUTATION                                $
          END$
       IF CP THEN
          BEGIN
          TS1=TS3=0.0$
          FOR K=(1,1,LDS) DO
             FOR I=(1,1,NDS) DO
                FOR S=(1,1,DIMS) DO
                   BEGIN
                   TS2=EQ(S,I,K)**2$
                   TS3=MAX(TS2,TS3)$
                   TS1=TS2+TS1$
                   END$
          IF SY THEN
                FOR K=(1,1,LDS) DO
                   BEGIN
                   FOR R=(1,1,MBS) DO
                      BEGIN
                      TS2=LAMS(R,K)(BNDS(R,K)**2)$
                      IF BKL THEN
                         BEGIN
                         TS4=LAMC(EB(R,K)**2)$
                         TS5=LAMC(LC(R,K)**2)$
                         TS3=MAX(TS2,TS3,TS4,TS5)$
                         TS1=TS2+TS4+TS5+TS1$
                         END
                      ELSE
                         BEGIN
                         TS3=MAX(TS2,TS3)$
```

```
                    TS1=TS2+TS1$
                    END$
                 END$
              END$
        IF SY THEN
           BEGIN
           FOR R=(1,1,MBS) DO
              BEGIN
              TS2=LAMB(BNDB(R)**2)$
              TS4=LAMD(R)(BNDD(R)**2)$
              TS5=LAMT(R)(BNDT(R)**2)$
              TS3=MAX(TS2,TS4,TS5,TS3)$
              TS1=TS2+TS4+TS5+TS1$
              END$
           FOR J=(LLU,1,ULU) DO
              BEGIN
              TS2=LAMU(J)(BNDU(J)**2)$
              TS3=MAX(TS2,TS3)$
              TS1=TS2+TS1$
              END$
           TS2=LAMW(FW**2)$
           TS3=MAX(TS2,TS3)$
           TS1=TS2+TS1$
           END$
        PSI=TS1$
        PSII=TS3$
        END$
COMMENT END OF PSI AND PSII CALCULATION                                    $
      IF CG THEN
        BEGIN
COMMENT SET ALL PARTIALS TO ZERO                                           $
        FOR J=(1,1,TOP) DO
           DX(J)=0.0$
COMMENT CALCULATE PARTIALS OF ANALYSIS WITH RESPECT TO U'S                 $
        FOR SP=(1,1,DIMS) DO
           FOR IP=(1,1,NDS) DO
              BEGIN
COMMENT IF THE I'TH NODE IN THE S'TH DIRECTION IS NOT FIXED                $
              IF NOT FIXED(IP,SP) THEN
                 BEGIN
                 TI2=APB+(IP-1)DIMS+SP-NDS*DIMS$
                 TI1=MBTLE2(1,0,IP)$
                 FOR S=(1,1,DIMS) DO
                    BEGIN
                    TS1=0.0$
                    FOR V=(1,1,TI1) DO
                       BEGIN
                       R=MBTLE2(1,V,IP)$
                       TS1=((-GAM(SP,R,IP)GAM(S,R,IP)D(R)T(R))/LGTH(R))
                          +TS1$
                       END$
                    TS1=TS1*E*KU*PI/PB$
                    FOR KP=(1,1,LDS)DO
                       DX(TI2+KP*NDS*DIMS)=ZED(S,IP,KP)*TS1+
```

```
                    DX(TI2+KP*NDS*DIMS)$
                 END$
              FOR KP=(1,1,LDS) DO
                 BEGIN
                 TI3=TI2+KP*NDS*DIMS$
                 TS1=0.0$
                 FOR V=(1,1,TI1) DO
                    BEGIN
                    J=MATLE2(2,V,IP)$
                    R=MATLE2(1,V,IP)$
                    FOR S=(1,1,DIMS) DO
                       TS1=EQ(S,J,KP)(GAM(SP,R,J)GAM(S,R,J)D(R)T(R)/
                          LGTH(R))+TS1$
                    END$
                 DX(TI3)=(TS1*2*E*KJ*PI/PA)+DX(TI3)$
                 END$
              END$
           END$
        IF SY THEN
           BEGIN
COMMENT COMPUTE PARTIALS WITH RESPECT TO PENALTIES IF SYNTHESIZING AND
   OF ANALYSIS WITH RESPECT TO ALPHAS AND BETAS                          $
           FOR V=(1,1,ALPHAS) DO
              BEGIN
              IF NOT PREASSA(V) THEN
                 BEGIN
                 TS1=0.0$
                 TI1=ACT(0,V)$
                 FOR W=(1,1,TI1) DO
                    BEGIN
                    R=ACT(W,V)$
                    I=MAVSND(R,1)$
                    J=MAVSND(R,2)$
                    TS2=0.0$
                    FOR K=(1,1,LDS) DO
                       BEGIN
                       TS3=0.0$
                       FOR S=(1,1,DIMS) DO
                          TS3=(EQ(S,I,K)-EQ(S,J,K))GAM(S,R,I)+TS3$
                       TS2=TS3*2*STRAIN(R,K)*E*T(R)*PI/PH+TS2$
                       END$
COMMENT TS2 HERE IS THE PARTIAL OF THE ANALYSIS WITH RESPECT TO D(R)   $
                    TS1=TS2*KD(R)+TS1$
                    END$
COMMENT TS1 IS THE PARTIAL OF THE ANALYSIS WITH RESPECT TO ALPHA(V)    $

COMMENT NOW FOR PENALTIES INVOLVING ALPHA(V)                           $
                 FOR W=(1,1,TI1) DO
                    BEGIN
                    R=ACT(W,V)$
                    TS2=0.0$
                    IF BKL THEN
                       BEGIN
```

```
                    FOR K=(1,1,LDS) DO
                       BEGIN
                       TS2=2*LAMF*EB(R,K)*
                          (16*SFF*LGTHSQ(R)*STRAIN(R,K)*D(R))/
                          ((PI**2)*(DSPTS(R)**2))+

                          2*LAMC*LC(R,K)*
                          (-STRAIN(R,K)*SFC/(K2*T(R)))+

                          TS2$
                       END$
                    END$
                 TS2=TS2+2*LAMR*BNDR(R)*(1/T(R))+
                    2*LAMD(R)*BNDD(R)+
                    2*LAMW*FW*(PI*RHO*T(R)*LGTH(R)/WPD)$
COMMENT TS2 HERE IS THE PARTIAL OF ALL ACTIVE PENALTIES WITH RESPECT TO
      D(R)                                                                $
                 TS1=TS2*KD(R)+TS1$
                 END$
              X V  TS1
              END$
           END$
COMMENT NOW WITH RESPECT TO BETA                                          $
        FOR V=(1,1,BETAS) DO
           BEGIN
           IF NOT PREASSB(V) THEN
              BEGIN
              TS1=0.0$
              TI1=BCT(0,V)$
              FOR W=(1,1,TI1) DO
                 BEGIN
                 R=BCT(W,V)$
                 I=MBVSND(R,1)$
                 J=MBVSND(R,2)$
                 TS2=0.0$
                 FOR K=(1,1,LDS) DO
                    BEGIN
                    TS3=0.0$
                    FOR S=(1,1,DIMS) DO
                       TS3=(EQ(S,I,K)-EQ(S,J,K))GAM(S,R,I)+TS3$
                    TS2=TS3*2*STRAIN(R,K)*E*D(R)*PI/PR+TS2$
                    END$
COMMENT TS2 IS THE PARTIAL OF THE ANALYSIS WITH RESPECT TO T(R)           $
                 TS1=TS2*KT(R)+TS1$
                 END$
COMMENT NOW FOR PENALTIES INVOLVING BETA(V)                               $
              FOR W=(1,1,TI1) DO
                 BEGIN
                 R=BCT(W,V)$
                 TS2=0.0$
                 IF BKL THEN
                    BEGIN
                    FOR K=(1,1,LDS) DO
                       BEGIN
```

```
                        TS2=2*LAME*FB(R,K)*
                           (B*SFE*LGTHSQ(R)*STRAIN(R,K)*T(R))/
                           ((PI**2)*(DSPTS(R)**2))+
                           2*LAMC*LC(R,K)*
                           (STRAIN(R,K)*SFC*J(R)/(K2*(T(R)**2)))+

                           TS2$
                        END$
                     END$
                  TS2=TS2+2*LAMR*BNDR(R)*(-J(R)/(T(R)**2))+
                     2*LAMT(R)*BNDT(R)+
                     2*LAMW*FW*(PI*RHO*J(R)*LGTH(R)/WPD)$
                  TS1=TS2*KT(R)+TS1$
                  END$
               DX(ALPHAS+V)=TS1$
               END$
            END$
COMMENT NOW THE PARTIALS OF THE PENALTIES WITH RESPECT TO U
      FIRST THE SIMPLE U BOUNDS                                          $
            FOR J=(LLU,1,ULU) DO
               DX(J)=2*LAMU(J)*BNDU(J)+DX(J)$
COMMENT NOW THE PARTIALS OF THE STRESS LIMITS                            $
            FOR K=(1,1,LDS) DO
               FOR S=(1,1,DIMS) DO
                  FOR I=(1,1,NDS) DO
                     BEGIN
                     IF NOT FIXED(I,S) THEN
                        BEGIN
                        TI1=MATLE2(1,0,I)$
                        TS1=TS2=TS3=0.0$
                        FOR V=(1,1,TI1) DO
                           BEGIN
                           R=MATLE2(1,V,I)$
                           TS1=2*LAMS(R,K)*BNDS(R,K)*(-GAM(S,R,I)*E*KU/
                              LGTH(R))+TS1$
                           IF BKL THEN
                              BEGIN
                             TS1=2*LAME*FB(R,K)*(B*SFE*LGTH(R)*KU*
                                 GAM(S,R,I)/((PI**2)*DSPTS(R)))+TS2$
                              TS3=2*LAMC*LC(R,K)*(SFC*DDT(R)*GAM(S,R,I)*
                              KU/(K2*LGTH(R)))+TS3$
                              END$
                           END$
                        DX(APH+(I-1)DIMS+(K-1)NDS*DIMS+S)=TS1+TS2+TS3+
                        DX(APH+(I-1)DIMS+(K-1)NDS*DIMS+S)$
                        END$
                     END$
            END$
      END$
COMMENT END OF GRADIENT CALCULATION                                      $
TRACE OFF$
      IF OU OR DR THEN
         BEGIN
        FORMAT DD1('THE DESIGN..  D/T LIMITS=',D6.2,'AND',D6.1,A3.0,
```

```
            'MEMBER  DIAMETER  THICKNESS  'AREA',X6,
            'D(R)/T(R)   MOMENT OF INERTIA',A1.0),
        DD2(X1,I2,X6,D6.3,X6,D5.3,X4,D6.3,X7,D6.2,X9,R10.4,A1.0),
        DD3('THE ANALYSIS',A2.1),
        DD4('LOAD CONDITION',I1,A1.0,'STRESSES',A1.0,
            'MEMBER  STRESS   FORCE       EULER LIM.',X2,
            'CRIPPLING LIM.   LOWER LIM.  UPPER LIM.',A1.0),
        DD5(X2,I2,X2,D9.1,X1,D9.1,X2,D10.1,X3,D10.1,X7,D9.1,
            X2,D9.1,A1.0),
        DD6('DISPLACEMENTS',A2.0,'NODE',A1.0),
        DD7(X1,I2,X4,3(D9.5,X3),A1.0)$

LIST    DL1(LBR-GUR,UBR+GUR),
        DL2(FOR R=(1,1,MBS) DO(R,D(R),T(R),PI*D(R)T(R),D(R)/T(R),
            (D(R)**2+T(R)**2)D(R)T(R)*PI/8)),
        DL3(K),
        DL4(FOR R=(1,1,MBS) DO(R,STRAIN(R,K)E,STRAIN(R,K)E*PI*
            D(R)*
            T(R),(-(PI**2*E(D(R)**2+T(R)**2))/
            ((SFE-GUE)A*LGTHSQ(R)),(-K2*E*T(R)/((SFC-GUC)D(R))),
            LBS(R,K)-DS(R,K),UBS(R,K)+DS(R,K)))),
        DL5(I,FOR S=(1,1,DIMS)DO( K-1*X(APR+(K-1)NDS*DIMS+(I-1)*
            DIMS+S)))$

    WRITE(DD1,DL1)$
    WRITE(DD2,DL2)$
    WRITE(DD3)$
    FOR K=(1,1,LDS) DO
       BEGIN
       WRITE(DD4,DL3)$
       WRITE(DD5,DL4)$
       WRITE(DD6)$
       FOR I=(1,1,NDS) DO
          WRITE(DD7,DL5)$
       END$
    END$
  END$
END PSI4$
```

Listing of QUADOPT

```
PROCEDURE QUADOPT(MV,MD,CP,CV,UB,FN,OUTCRITERION,HALVINGCYCLES,
GRADIENTWANTED,OUTLABEL,SYN,PSI)$

COMMENT THIS PROCEDURE ATTEMPTS TO MAKE A MOVE FROM CP IN THE
DIRECTION MV USING AN INITIAL GUESS FOR DISTANCE OF MD.
THE PROCEDURE FN PROVIDES THE VALUE OF THE FUNCTION AND/OR ITS
DERIVATIVES IF WANTED.  OUTCRITERION IS A TERMINATION INDICATOR,
1 IF TERMINATION IS TO BE DONE WHEN HALVING CYCLES IS TOO LARGE,
2 WHEN TERMINATION IS TO BE DONE WHEN MD IS TOO SMALL$

REAL MD,CV,PSI$
INTEGER UB,OUTCRITERION,HALVINGCYCLES$
BOOLEAN GRADIENTWANTED,SYN$
REAL ARRAY MV,CP$
LABEL OUTLABEL$
PROCEDURE FN$
    BEGIN
    REAL T2$
    INTEGER I$
    BOOLEAN B,REDOGRADIENT$
    REAL ARRAY X1(1..UB),X2(1..UB),X3(1..UB),THET(1..3),PS(1..3)$
    STRING WORDS(120)$
    SWITCH SW1=VIOPOINTREST,FULLPOINTREST,QUADPOINTREST$
    SWITCH SW2=OUTONHALVING,OUTONMD$
    REDOGRADIENT=FALSE$
    B=FALSE$
    L1..
    FOR I=(1,1,UB) DO
        X1(I)=CP(I)+MD*MV(I)/2$
    FN(SYN,FALSE,FALSE,TRUE,FALSE,UB,X1,MV,THET(1),PS(1))$
    IF THET(1) GTR CV THEN
        BEGIN
        MD=MD/2$
        HALVINGCYCLES=HALVINGCYCLES+1$
        GO TO SW2(OUTCRITERION)$
        OUTONHALVING..
        IF HALVINGCYCLES GTR 20 THEN
            GO TO OUTLABEL
        ELSE
            GO TO OK$
        OUTONMD..
        IF MD LSS 0.5 THEN
            BEGIN
            WORDS='MD TOO SMALL'$
            WRITE(WORDS,MD)$
            REDOGRADIENT=TRUE$
            GO TO DONE$
            END$
        OK..
```

```
      B=TRUE$
      THET(2)=THET(1)$
      PS(2)=PS(1)$
      GO TO L1$
      END$
  IF B THEN GO TO L2$
  FOR I=(1,1,UB) DO
      X2(I)=CP(I)+MD*MV(I)$
  FN(SYN,FALSE,FALSE,TRUE,FALSE,UB,X2,MV,THET(2),PS(2))$
  L2..
  TZ=(THET(2)-4THET(1)+3CV)/(4(THET(2)-2THET(1)+CV))$
  FOR I=(1,1,UB) DO
      CP(I)=CP(I)+TZ*MD*MV(I)$
  FN(SYN,FALSE,FALSE,TRUE,GRADIENTWANTED,UB,CP,MV,THET(3),PS(3))$
  TZ=MIN(THET)$
  FOR I=3,1,2 DO
      IF TZ EQL THET(I) THEN GO TO SW1(I)$
  MIDPOINTBEST..
  WRITE('MIDPOINT BEST')$
  PSII=PS(1)$
 CV=THET(1)$
  FOR I=(1,1,UB) DO
      CP(I)=X1(I)$
  REDOGRADIENT=GRADIENTWANTED$
  GO TO DONE$
  FULLPOINTBEST..
  WRITE('FULL POINT BEST')$
  PSII=PS(2)$
  CV=THET(2)$
  FOR I=(1,1,UB) DO
      CP(I)=X2(I)$
  REDOGRADIENT=GRADIENTWANTED$
  GO TO DONE$
  QUADPOINTBEST..
  PSII=PS(3)$
  CV=THET(3)$
  DONE..
  IF REDOGRADIENT THEN
   FN(SYN,FALSE,FALSE,FALSE,TRUE,UB,CP,MV,CV,PSII)$
  END QUADOPT $
```

Listing of P3EXTR

```
BEGIN
INTEGER TOPP,ZZP$
REAL EPSP$
READ(TOPP,EPSP,ZZP)$
   BEGIN
   INTEGER TCUTOFF,TIME ,R,S, TOP,ZZ,I,J$
   REAL M,EPS,PSI,INC,PSIF,PSIH,PSII$
   BOOLEAN SS,T,F,EXTRAP                                                    $
   REAL ARRAY X(1..TOPP),XP(1..TOPP),FDG(1..TOPP),DX(1..TOPP),
                XM(1..ZZP,0..TOPP),XPP(1..TOPP)$
   FORMAT TM(E1,'AFTER',I4,'SEC',A2),
          CO('TERMINATING ON TIME, T=',I4,A2,E1)$
   LOCAL LABEL FD,NG,L1 $

EXTERNAL PROCEDURE QUADOPT$
EXTERNAL PROCEDURE PSI3$

R=0$
T=TRUE$
F=FALSE$
TOP=TOPP$
EPS=EPSP$
ZZ=ZZP$
TCUTOFF=150$
WRITE('T MAX',TCUTOFF)$
TIME=CLOCK$
SS=F$
EXTRAP=F$
PSI3(SS,TRUE,FALSE,TRUE,TRUE,TOP,X,DX,PSI,PSII)$
GO TO CYCLE$
DRAWDOWN..
WRITE(TM,CLOCK-TIME)$
SS=T$
S=0$
R=0$
IF EXTRAP THEN
   BEGIN
   FOR J=(1,1,TOP) DO
      BEGIN
      FDG(J)=2X(J)-XP(J)$
      XP(J)=X(J)$
      END$
   PSI3(SS,F,T,F,F,TOP,X,DX,PSI,PSII)$
   FOR J=(1,1,TOP) DO
      BEGIN
      XPP(J)=X(J)$
      X(J)=IF X(J) EQL 0.0 THEN 0.0 ELSE FDG(J)*X(J)/XP(J)$
      XP(J)=XPP(J)$
      END$
   PSI3(SS,F,F,T,T,TOP,X,DX,PSI,PSII)$
```

```
    TCUTOFF=CLOCK-TIME$
    TIME=CLOCK$
    WRITE('EXTRAPOLATING','TIME ALLOWED..',TCUTOFF)$
    GO TO CYCLE$
    END
 ELSE
    BEGIN
    PSI3(SS,F,T,T,T,TOP,X,DX,PS1,PSII)$
    FOR J=(1,1,TOP) DO
       XP(J)=X(J)$
    EXTRAP=T$
    TCUTOFF=900$
    WRITE('DIRECT CONVERGENCE','TIME ALLOWED..',TCUTOFF)$
    GO TO CYCLE$
    END$
 CYCLE..
 WRITE(PS1,PSII)$
 MO=0.0$
 FOR I=(1,1,TOP) DO
    MO=DX(I)**2+MO$
 MO=-PSI/(MO(2**S))$
 QUADOPT(DX,MO,X,PSI,TOP,PSI3,1,S,(R+1 LSS ZZ),FD,SS,PSII)$
 R=R+1$
 FOR I=(1,1,TOP) DO
    XM(R,I)=X(I)$
 XM(R,0)=PSI$
 IF R GEQ ZZ THEN
    BEGIN
     WRITE(PSI,PSII,'ZIG-ZAG')$
     ZZ=RAMDOM(21753)(ZZP-3)+3$
    FOR I=(1,1,TOP) DO
        DX(I)=XM(R,I)-XM(R-2,I)$
    MO=-XM(R,0)/(XM(R,0)-XM(R-2,0))$
    R=0$
    S=0$
    QUADOPT(DX,MO,X,PSI,TOP,PSI3,2,S,T,NG,SS,PSII)$
    S=0$
    END$
 NG..
 IF PSII LSS EPS THEN
    GO TO DRAWDOWN$
 GO TO CYCLE$
 FD..
    WRITE('X',X,'DX',DX)$
    WRITE('PSI',PSI)$
    WRITE('PSII',PSII)$
    FOR J=(1,1,TOP) DO
       XP(J)=X(J)$
    INC=0.1 $
    LI..
    FOR J=1 STEP 1 UNTIL TOP DO
       BEGIN
          IF X(J) NEQ 0.0 THEN BEGIN
       XP(J)=X(J)(1.0+INC)$
```

```
      PSI3(SS,F,F,T,F,IOP,XP,DX,PSIF,PSII)$
       XP(J)=X(J)(1.0-INC)$
      PSI3(SS,F,F,T,F,IOP,XP,DX,PSIB,PSII)$
       FDG(J)=(PSIF-PSIB)/(2*X(J)*INC)$
       XP(J)=X(J)$
          END ELSE FDG(J)=0.0$
       END$
    WRITE('FINITE DIFF',FDG)$
    IF INC GTR 0.0001 THEN
       BEGIN
       INC=INC/2$
       GO TO L1$
       END$
    END$
END$
FINISH
```

Listing of P4EXTR

```
BEGIN
INTEGER TOP,ZZ$
READ(TOP,ZZ)$
   BEGIN
   INTEGER TIME,R,S,ZZP,I,J$
   REAL MD,EPS,PSI,PSII,INC,FP,BP$
   BOOLEAN SS,T,F,EXTRAP,PCH,FIN$
   REAL ARRAY X(1..TOP),XP(1..TOP),XPP(1..TOP),DX(1..TOP),
             XM(1..ZZ,0..TOP),FDG(1..TOP)$
   BOOLEAN ARRAY CHECK(1..TOP)$
   FORMAT TM(E1,'AFTER',I4,'SEC',A2)$
   LOCAL LABEL FD,NG,L1 $

EXTERNAL PROCEDURE QUADOPT$
EXTERNAL PROCEDURE PSI4$

R=0$
T=TRUE$
F=FALSE$
ZZP=ZZ$
READ(EPS,PCH)$
TIME=CLOCK$
SS=F$
EXTRAP=F$
PSI4(SS,T,F,F,F,T,T,TOP,X,DX,PSI,PSII)$
TRACE 16,17$
GO TO CYCLE$
DRAWDOWN..
WRITE(TM,CLOCK-TIME)$
SS=T$
S=0$
R=0$
IF EXTRAP THEN
   BEGIN
   FOR J=(1,1,TOP) DO
      BEGIN
      FDG(J)=2X(J)-XP(J)$
      XP(J)=X(J)$
      END$
   PSI4(SS,F,T,F,F,F,F,TOP,X,DX,PSI,PSII)$
   FOR J=(1,1,TOP) DO
      BEGIN
      XPP(J)=X(J)$
      X(J)=IF X(J) EQL 0.0 THEN 0.0 ELSE FDG(J)*X(J)/XP(J)$
      XP(J)=XPP(J)$
      END$
   PSI4(SS,F,F,F,F,T,T,TOP,X,DX,PSI,PSII)$
   TIME=CLOCK$
   WRITE('EXTRAPOLATING')$
   GO TO CYCLE$
```

```
   END
ELSE
   BEGIN
   PSI4(SS,F,T,T,PCH,T,T,TOP,X,DX,PSI,PSII)$
   FOR J=(1,1,TOP) DO
      XP(J)=X(J)$
   EXTRAP=T$
   WRITE('DIRECT CONVERGENCE')$
   GO TO CYCLE$
   END$
CYCLE..
WRITE(PSI,PSII)$
MD=0.0$
FOR I=(1,1,TOP) DO
   MD=DX(I)**2+MD$
MD=-PSI/(MD(2**S))$
QUADOPT(DX,MD,X,PSI,TOP,PSI4,1,S,(R+1 LSS ZZ), FD,SS,PSII)$
R=R+1$
FOR I=(1,1,TOP) DO
   XM(R,I)=X(I)$
XM(R,0)=PSI$
IF R GEQ ZZ THEN
   BEGIN
    WRITE(PSI,PSII,'ZIG-ZAG')$
    ZZ=RANDOM(21753)(ZZP-3)+3$
IF (XM(R,0)-XM(R-2,0)) EQL 0.0    THEN GO TO FD$
   FOR I=(1,1,TOP) DO
       DX(I)=XM(R,I)-XM(R-2,I)$
   MD=-XM(R,0)/(XM(R,0)-XM(R-2,0))$
   R=0$
   S=0$
   QUADOPT(DX,MD,X,PSI,TOP,PSI4,2,S,T,NG,SS,PSII)$
   S=0$
   END$
NG..
IF PSII LSS EPS THEN
   GO TO DRAWDOWN$
GO TO CYCLE$
FD..
   WRITE('X',X,'DX',DX)$
   WRITE('PSI',PSI)$
   WRITE('PSII',PSII)$
   FOR J=(1,1,TOP) DO
      BEGIN
      XP(J)=X(J)$
      CHECK(J)=F$
      END$
   INC=0.01$
   FIN=T$
TRACE OFF$
   L1..
   WRITE('INC',INC)$
   FOR J=(1,1,TOP) DO
      BEGIN
```

```
      IF (X(J) NEQ 0.0) AND NOT CHECK(J) THEN
         BEGIN
         XP(J)=X(J)(1.0+INC)$
         PSI4(SS,F,F,F,F,T,F,TOP,XP,DX,FP,PSII)$
         XP(J)=X(J)(1.0-INC)$
         PSI4(SS,F,F,F,F,T,F,TOP,XP,DX,BP ,PSII)$
         WRITE(J,DX(J),(FP-BP)/(2INC*X(J)),BP,PSI,FP)$
         XP(J)=X(J)$
         END
      ELSE
         IF X(J) EQL 0.0 THEN
            WRITE(J,DX(J),0.0,0)
         ELSE
            WRITE(J,CHECK(J))$
      MD=IF DX(J) NEQ 0.0 THEN
         ABS(((FP-BP)/(2INC*X(J))-DX(J))/DX(J)))
         ELSE 0.0$
      IF MD LSS 0.001 THEN
         CHECK(J)=T
      ELSE
         FIN=F$
      END$
   IF NOT FIN THEN
      BEGIN
      INC=INC/2$
         BEGIN
         END$
      END$
   QUITS,,
   END$
END$
FINISH
```

APPENDIX E

EXAMPLE COMPUTER OUTPUT

The following are the computer output sheets for Cases 4 and 5. The first item is the complete computer output for Case 4.A.2 showing the initial output and subsequent drawdown cycles as well as the final output. The rest of the items are the final output only, for each of the other runs.

Complete Output for Case 4.A.2

```
SYNTHESIS OF A  6 NODE+11 MEMBER+2 DIMENSIONAL TRUSS SUBJECT TO 3 LOADS

BUCKLING CONSIDERED

THE MATERIAL CONSTANTS ARE

E= 3.000+07
RHO= 2.799+-01
K2= 4.000+-01

THE CONTROL CONSTANTS ARE

EPSILON= 9.999+-04
S= 1.000+-01
DELTA= 5.000+-02

THE SPECIAL LIMITS ARE

SEF-OUF= 1.000+00- 9.999+-03= 1.000+00
SEC-OUC= 1.000+00- 9.999+-03= 1.000+00
LBR-OLB= 9.999+-03- 9.999+-03= 0.000+00
UBR+OUB= 3.000+02+ 9.999+-03= 3.000+02

TOPOLOGICAL DESCRIPTION OF STRUCTURE..

NODE  1 IS JOINED BY 3 MEMBERS
MEMBER  1 JOINS IT TO NODE  2
MEMBER  8 JOINS IT TO NODE  5
MEMBER  6 JOINS IT TO NODE  6
NODE  2 IS JOINED BY 5 MEMBERS
MEMBER  1 JOINS IT TO NODE  1
MEMBER  2 JOINS IT TO NODE  3
MEMBER  7 JOINS IT TO NODE  6
MEMBER  9 JOINS IT TO NODE  5
MEMBER 10 JOINS IT TO NODE  4
NODE  3 IS JOINED BY 3 MEMBERS
MEMBER  2 JOINS IT TO NODE  2
MEMBER  3 JOINS IT TO NODE  4
MEMBER 11 JOINS IT TO NODE  5
NODE  4 IS JOINED BY 3 MEMBERS
MEMBER  3 JOINS IT TO NODE  3
MEMBER  4 JOINS IT TO NODE  5
MEMBER 10 JOINS IT TO NODE  2
NODE  5 IS JOINED BY 5 MEMBERS
MEMBER  4 JOINS IT TO NODE  4
MEMBER  5 JOINS IT TO NODE  6
MEMBER  8 JOINS IT TO NODE  1
MEMBER  9 JOINS IT TO NODE  2
MEMBER 11 JOINS IT TO NODE  3
NODE  6 IS JOINED BY 3 MEMBERS
MEMBER  5 JOINS IT TO NODE  5
MEMBER  6 JOINS IT TO NODE  1
MEMBER  7 JOINS IT TO NODE  2

THUS..

MEMBER  1 CONNECTS NODES  1  AND  2
MEMBER  2 CONNECTS NODES  2  AND  3
MEMBER  3 CONNECTS NODES  3  AND  4
MEMBER  4 CONNECTS NODES  4  AND  5
MEMBER  5 CONNECTS NODES  5  AND  6
MEMBER  6 CONNECTS NODES  6  AND  1
MEMBER  7 CONNECTS NODES  6  AND  2
MEMBER  8 CONNECTS NODES  5  AND  1
MEMBER  9 CONNECTS NODES  5  AND  2
MEMBER 10 CONNECTS NODES  2  AND  4
MEMBER 11 CONNECTS NODES  3  AND  5
```

```
DESIGN CONTROL DESCRIPTION..

X( 1) CONTROLS THE DIAMETERS OF  1 MEMBERS
 1
X( 2) CONTROLS THE DIAMETERS OF  1 MEMBERS
 2
X( 3) CONTROLS THE DIAMETERS OF  1 MEMBERS
 3
X( 4) CONTROLS THE DIAMETERS OF  1 MEMBERS
 4
X( 5) CONTROLS THE DIAMETERS OF  1 MEMBERS
 5
X( 6) CONTROLS THE DIAMETERS OF  1 MEMBERS
 6
X( 7) CONTROLS THE DIAMETERS OF  1 MEMBERS
 7
X( 8) CONTROLS THE DIAMETERS OF  1 MEMBERS
 8
X( 9) CONTROLS THE DIAMETERS OF  1 MEMBERS
 9
X(10) CONTROLS THE DIAMETERS OF  1 MEMBERS
10
X(11) CONTROLS THE DIAMETERS OF  1 MEMBERS
11
X(12) CONTROLS THE THICKNESS OF  6 MEMBERS
 1
 2
 3
 4
 5
 6
X(13) CONTROLS THE THICKNESS OF  5 MEMBERS
 7
 8
 9
10
11

DESIGN VARIABLE PREASSIGNMENT..

X( 1) IS VARIABLE
X( 2) IS VARIABLE
X( 3) IS VARIABLE
X( 4) IS VARIABLE
X( 5) IS VARIABLE
X( 6) IS VARIABLE
X( 7) IS VARIABLE
X( 8) IS VARIABLE
X( 9) IS VARIABLE
X(10) IS VARIABLE
X(11) IS VARIABLE
X(12) IS PREASSIGNED
X(13) IS PREASSIGNED
```

NODE COORDINATES..

NODE	1	IS AT	0.000E+00	0.000E+00
NODE	2	IS AT	1.000E+02	0.000E+00
NODE	3	IS AT	2.000E+02	0.000E+00
NODE	4	IS AT	2.000E+02	8.000E+01
NODE	5	IS AT	1.000E+02	8.000E+01
NODE	6	IS AT	0.000E+00	8.000E+01

LOAD CONDITIONS..

CONDITION 1

NODE	1	0.000E+00	0.000E+00
NODE	2	0.000E+00	-5.000E+03
NODE	3	0.000E+00	0.000E+00
NODE	4	0.000E+00	-1.000E+03
NODE	5	0.000E+00	-3.000E+03
NODE	6	0.000E+00	-1.000E+03

CONDITION 2

NODE	1	0.000E+00	0.000E+00
NODE	2	0.000E+00	0.000E+00
NODE	3	0.000E+00	0.000E+00
NODE	4	3.000E+03	0.000E+00
NODE	5	0.000E+00	0.000E+00
NODE	6	0.000E+00	0.000E+00

CONDITION 3

NODE	1	0.000E+00	0.000E+00
NODE	2	0.000E+00	0.000E+00
NODE	3	0.000E+00	0.000E+00
NODE	4	0.000E+00	0.000E+00
NODE	5	0.000E+00	0.000E+00
NODE	6	-3.000E+03	0.000E+00

DESIGN-ANALYSIS LIMITATIONS..

DIAMETER

P	LOWER	UPPER	TOLERANCE
1	0.999.-03	5.989.+00	9.999.-03
2	0.999.-03	5.989.+00	9.999.-03
3	0.999.-03	5.989.+00	9.999.-03
4	0.999.-03	5.989.+00	9.999.-03
5	0.999.-03	5.989.+00	9.999.-03
6	0.999.-03	5.989.+00	9.999.-03
7	0.999.-03	5.989.+00	9.999.-03
8	0.999.-03	5.989.+00	9.999.-03
9	0.999.-03	5.989.+00	9.999.-03
10	0.999.-03	5.989.+00	9.999.-03
11	0.999.-03	5.989.+00	9.999.-03

THICKNESS

1	0.999.-03	1.900.-01	9.999.-03
2	0.999.-03	1.900.-01	9.999.-03
3	0.999.-03	1.900.-01	9.999.-03
4	0.999.-03	1.900.-01	9.999.-03
5	0.999.-03	1.900.-01	9.999.-03
6	0.999.-03	1.900.-01	9.999.-03
7	0.999.-03	1.900.-01	9.999.-03
8	0.999.-03	1.900.-01	9.999.-03
9	0.999.-03	1.900.-01	9.999.-03
10	0.999.-03	1.900.-01	9.999.-03
11	0.999.-03	1.900.-01	9.999.-03

STRESSES

MEMBER	LOAD	LOWER	UPPER	TOLERANCE
1	1	-4.990.+04	4.990.+04	1.000.+02
2	1	-4.990.+04	4.990.+04	1.000.+02
3	1	-4.990.+04	4.990.+04	1.000.+02
4	1	-4.990.+04	4.990.+04	1.000.+02
5	1	-4.990.+04	4.990.+04	1.000.+02
6	1	-4.990.+04	4.990.+04	1.000.+02
7	1	-4.990.+04	4.990.+04	1.000.+02
8	1	-4.990.+04	4.990.+04	1.000.+02
9	1	-4.990.+04	4.990.+04	1.000.+02
10	1	-4.990.+04	4.990.+04	1.000.+02
11	1	-4.990.+04	4.990.+04	1.000.+02
1	2	-4.990.+04	4.990.+04	1.000.+02
2	2	-4.990.+04	4.990.+04	1.000.+02
3	2	-4.990.+04	4.990.+04	1.000.+02
4	2	-4.990.+04	4.990.+04	1.000.+02
5	2	-4.990.+04	4.990.+04	1.000.+02
6	2	-4.990.+04	4.990.+04	1.000.+02
7	2	-4.990.+04	4.990.+04	1.000.+02
8	2	-4.990.+04	4.990.+04	1.000.+02
9	2	-4.990.+04	4.990.+04	1.000.+02
10	2	-4.990.+04	4.990.+04	1.000.+02
11	2	-4.990.+04	4.990.+04	1.000.+02
1	3	-4.990.+04	4.990.+04	1.000.+02
2	3	-4.990.+04	4.990.+04	1.000.+02
3	3	-4.990.+04	4.990.+04	1.000.+02
4	3	-4.990.+04	4.990.+04	1.000.+02
5	3	-4.990.+04	4.990.+04	1.000.+02
6	3	-4.990.+04	4.990.+04	1.000.+02
7	3	-4.990.+04	4.990.+04	1.000.+02
8	3	-4.990.+04	4.990.+04	1.000.+02
9	3	-4.990.+04	4.990.+04	1.000.+02
10	3	-4.990.+04	4.990.+04	1.000.+02
11	3	-4.990.+04	4.990.+04	1.000.+02

DISPLACEMENTS

LOAD	NODE	DIRECTION	LOWER	UPPER	TOLERANCE
1	1	1	-1.479E-01	1.479E-01	1.999E-03
1	1	2	-1.479E-01	1.479E-01	1.999E-03
1	2	1	-1.479E-01	1.479E-01	1.999E-03
1	2	2	-1.479E-01	1.479E-01	1.999E-03
1	3	1	-1.479E-01	1.479E-01	1.999E-03
1	3	2	-1.479E-01	1.479E-01	1.999E-03
1	4	1	-1.479E-01	1.479E-01	1.999E-03
1	4	2	-1.479E-01	1.479E-01	1.999E-03
1	5	1	-1.479E-01	1.479E-01	1.999E-03
1	5	2	-1.479E-01	1.479E-01	1.999E-03
1	6	1	-1.479E-01	1.479E-01	1.999E-03
1	6	2	-1.479E-01	1.479E-01	1.999E-03
2	1	1	-1.479E-01	1.479E-01	1.999E-03
2	1	2	-1.479E-01	1.479E-01	1.999E-03
2	2	1	-1.479E-01	1.479E-01	1.999E-03
2	2	2	-1.479E-01	1.479E-01	1.999E-03
2	3	1	-1.479E-01	1.479E-01	1.999E-03
2	3	2	-1.479E-01	1.479E-01	1.999E-03
2	4	1	-1.479E-01	1.479E-01	1.999E-03
2	4	2	-1.479E-01	1.479E-01	1.999E-03
2	5	1	-1.479E-01	1.479E-01	1.999E-03
2	5	2	-1.479E-01	1.479E-01	1.999E-03
2	6	1	-1.479E-01	1.479E-01	1.999E-03
2	6	2	-1.479E-01	1.479E-01	1.999E-03
3	1	1	-1.479E-01	1.479E-01	1.999E-03
3	1	2	-1.479E-01	1.479E-01	1.999E-03
3	2	1	-1.479E-01	1.479E-01	1.999E-03
3	2	2	-1.479E-01	1.479E-01	1.999E-03
3	3	1	-1.479E-01	1.479E-01	1.999E-03
3	3	2	-1.479E-01	1.479E-01	1.999E-03
3	4	1	-1.479E-01	1.479E-01	1.999E-03
3	4	2	-1.479E-01	1.479E-01	1.999E-03
3	5	1	-1.479E-01	1.479E-01	1.999E-03
3	5	2	-1.479E-01	1.479E-01	1.999E-03
3	6	1	-1.479E-01	1.479E-01	1.999E-03
3	6	2	-1.479E-01	1.479E-01	1.999E-03

NODE FIXITY..

NODE 1 IS FIXED IN THE 1 DIRECTION
NODE 1 IS FIXED IN THE 2 DIRECTION
NODE 3 IS FIXED IN THE 2 DIRECTION

INITIAL DESIGN

MEMBER	DIAMETER	THICKNESS
1	4.002E+00	3.180E-02
2	3.109E+00	3.180E-02
3	3.489E+00	3.180E-02
4	3.415E+00	3.180E-02
5	3.267E+00	3.180E-02
6	3.140E+00	3.180E-02
7	2.961E+00	3.180E-02
8	3.605E+00	3.180E-02
9	2.198E+00	3.180E-02
10	3.552E+00	3.180E-02
11	3.198E+00	3.180E-02

INITIAL TRIAL ANALYSIS

LOAD CONDITION 1

U(1, 1,1)= 0.000E+00
U(2, 1,1)= 0.000E+00
U(1, 2,1)= 2.347E-02
U(2, 2,1)=-1.144E-01
U(1, 3,1)= 4.975E-02
U(2, 3,1)= 0.000E+00
U(1, 4,1)=-3.089E-04
U(2, 4,1)=-2.298E-02
U(1, 5,1)= 2.419E-02
U(2, 5,1)=-4.919E-02
U(1, 6,1)= 4.601E-02
U(2, 6,1)=-2.303E-02

LOAD CONDITION 2

U(1, 1,2)= 0.000E+00
U(2, 1,2)= 0.000E+00
U(1, 2,2)= 1.522E-02
U(2, 2,2)= 3.262E-03
U(1, 3,2)= 1.976E-02
U(2, 3,2)= 0.000E+00
U(1, 4,2)= 4.446E-02
U(2, 4,2)=-6.697E-03
U(1, 5,2)= 2.570E-02
U(2, 5,2)=-3.066E-03
U(1, 6,2)= 2.231E-02
U(2, 6,2)= 2.250E-03

LOAD CONDITION 3

U(1, 1,3)= 0.000E+00
U(2, 1,3)= 0.000E+00
U(1, 2,3)=-1.828E-02
U(2, 2,3)= 1.729E-02
U(1, 3,3)=-2.647E-02
U(2, 3,3)= 0.000E+00
U(1, 4,3)=-2.218E-02
U(2, 4,3)= 4.417E-03
U(1, 5,3)=-2.932E-02
U(2, 5,3)= 1.746E-02
U(1, 6,3)=-5.267E-02
U(2, 6,3)=-4.802E-03

AFTER 5SEC
THIS DESIGN WEIGHS 1.000E+02
THE NEW GOAL WILL BE 1.007E+02

THE DESIGN.. D/T LIMITS= 0.00AND 300.0

MEMBER	DIAMETER	THICKNESS	AREA	D(R)/T(R)	MOMENT OF INERTIA
1	4.002	.031	.399	125.68	8.010E-01
2	3.109	.031	.310	97.76	3.753E-01
3	3.489	.031	.348	109.71	5.304E-01
4	3.415	.031	.341	107.42	4.978E-01
5	3.267	.031	.326	102.76	4.358E-01
6	3.140	.031	.313	98.77	3.870E-01
7	2.961	.031	.295	93.14	3.245E-01
8	3.605	.031	.360	113.36	5.851E-01
9	2.198	.031	.219	69.15	1.328E-01
10	3.542	.031	.354	111.72	5.601E-01
11	3.186	.031	.319	100.59	4.088E-01

THE ANALYSIS

LOAD CONDITION1
STRESSES

MEMBER	STRESS	FORCE	ELLER LIM.	CRIPPLING LIM.	LOWER LIM.	UPPER LIM.
1	7038.9	2814.9	-54310.2	-95328.5	-50000.0	50000.0
2	7865.6	2449.2	-36778.1	-122740.4	-50000.0	50000.0
3	-8617.9	-3003.8	-70402.6	-109372.3	-50000.0	50000.0
4	-7353.5	-2509.5	-43192.1	-111709.6	-50000.0	50000.0
5	-6539.4	-2135.0	-39530.8	-116768.6	-50000.0	50000.0
6	-8638.1	-2710.6	-57059.9	-121489.0	-50000.0	50000.0
7	9261.4	2740.5	-19401.9	-128831.8	-50000.0	50000.0
8	-10089.2	-3633.6	-29331.3	-105852.0	-50000.0	50000.0
9	6736.3	1260.1	-27069.9	-173533.4	-50000.0	50000.0
10	9044.2	3210.2	-28491.3	-107402.1	-50000.0	50000.0
11	-9844.3	-3146.1	-23097.1	-119287.2	-50000.0	50000.0

DISPLACEMENTS

NODE		
1	0.00000	0.00000
2	.02346	-.11449
3	.04074	0.00000
4	-.00030	-.02298
5	.02420	-.09919
6	.04600	-.02303

LOAD CONDITION2
STRESSES

MEMBER	STRESS	FORCE	ELLER LIM.	CRIPPLING LIM.	LOWER LIM.	UPPER LIM.
1	4577.4	1830.5	-54310.2	-95328.5	-50000.0	50000.0
2	1347.9	410.6	-36778.1	-122740.4	-50000.0	50000.0
3	-2476.9	-863.3	-70402.6	-109372.3	-50000.0	50000.0
4	5614.3	1915.9	-43192.1	-111709.6	-50000.0	50000.0
5	1029.4	336.0	-39530.8	-116768.6	-50000.0	50000.0
6	845.3	265.2	-57059.9	-121489.0	-50000.0	50000.0
7	-1437.0	-425.2	-19401.9	-128831.8	-50000.0	50000.0
8	4126.9	1486.3	-29331.3	-105852.0	-50000.0	50000.0
9	-2713.0	-596.0	-27069.9	-173533.4	-50000.0	50000.0
10	3895.4	1382.7	-28491.3	-107402.1	-50000.0	50000.0
11	-1675.4	-535.4	-23097.1	-119287.2	-50000.0	50000.0

DISPLACEMENTS

NODE		
1	0.00000	0.00000
2	.01525	.00326
3	.01975	0.00000
4	.04445	-.00460
5	.02573	-.00396
6	.02930	.00325

LOAD CONDITION 3

STRESSES

MEMBER	STRESS	FORCE	EULER LIM.	CRIPPLING LIM.	LOWER LIM.	UPPER LIM.
1	-5460.2	-2191.6	-54310.2	-95328.5	-50000.0	50000.0
2	-2463.6	-765.2	-36778.1	-122740.4	-50000.0	50000.0
3	1654.2	576.6	-70602.6	-106372.3	-50000.0	50000.0
4	2133.3	720.0	-43192.1	-111709.8	-50000.0	50000.0
5	7011.5	2289.1	-34530.8	-116748.8	-50000.0	50000.0
6	-1800.3	-564.9	-57049.9	-121082.0	-50000.0	50000.0
7	3060.8	905.7	-19401.4	-129831.0	-50000.0	50000.0
8	-2800.4	-1010.0	-29131.3	-135852.0	-50000.0	50000.0
9	64.6	19.2	-27979.9	-173533.8	-50000.0	50000.0
10	-2604.0	-924.3	-28491.3	-107602.1	-50000.0	50000.0
11	3073.3	982.2	-23097.1	-114287.2	-50000.0	50000.0

DISPLACEMENTS

NODE		
1	0.00000	0.00000
2	-.01826	.01729
3	-.02647	0.00000
4	-.02219	.00641
5	-.02030	.01746
6	-.05267	-.00060

DIRECT CONVERGENCE

1.1100E-01	1.1080E-01
2.1335E-02	6.0725E-03
1.4707E-02	4.1890E-03
1.5308E-02	5.0021E-03
1.6470E-02	4.6364E-03
1.3816E-02	4.6023E-03
1.3268E-02	4.4025E-03
1.3801E-02	4.4716E-03
1.2393E-02	4.1219E-03
1.2032E-02	4.1629E-03
1.1709E-02	3.8566E-03

ZIG-ZAG

8.9344E-03	1.9637E-03
7.8991E-03	1.9535E-03
7.5940E-03	1.8032E-03
7.4057E-03	1.7617E-03
7.2523E-03	1.6426E-03

ZIG-ZAG

6.5777E-03	2.0236E-03
6.0081E-03	1.3249E-03
5.8519E-03	1.5135E-03
5.7542E-03	1.4944E-03
5.6683E-03	1.4849E-03
5.5913E-03	1.4809E-03
5.5185E-03	1.4376E-03
5.4483E-03	1.4557E-03
5.3796E-03	1.4013E-03
5.3120E-03	1.4244E-03
5.2455E-03	1.3632E-03

ZIG-ZAG

AFTER 69SEC
THIS DESIGN WEIGHS 1.008E+02
THE NEW GOAL WILL BE 9.580E+01

THE DESIGN.. D/T LIMITS= 0.00AND 300.0

MEMBER	DIAMETER	THICKNESS	AREA	L(R)/T(R)	MOMENT OF INERTIA
1	4.081	.031	.407	128.35	8.493E-01
2	2.985	.031	.298	93.88	3.323E-01
3	3.238	.031	.323	101.85	4.243E-01
4	3.195	.031	.319	100.48	4.074E-01
5	3.035	.031	.303	95.46	3.494E-01
6	2.895	.031	.289	91.04	3.030E-01
7	2.681	.031	.267	84.31	2.407E-01
8	3.587	.031	.358	112.80	5.765E-01
9	1.957	.031	.192	60.61	8.944E-02
10	3.354	.031	.335	105.47	4.713E-01
11	3.108	.031	.310	97.74	3.751E-01

THE ANALYSIS

LOAD CONDITION1
STRESSES

MEMBER	STRESS	FORCE	EULER LIM.	CRIPPLING LIM.	LOWER LIM.	UPPER LIM.
1	7067.0	2890.0	-61669.0	-93487.4	-50000.0	50000.0
2	8262.9	2464.4	-32991.4	-127819.6	-50000.0	50000.0
3	-9154.8	-2962.2	-60672.0	-117817.6	-50000.0	50000.0
4	-7846.3	-2504.7	-37793.0	-119423.6	-50000.0	50000.0
5	-6699.6	-2031.9	-34116.0	-125695.1	-50000.0	50000.0
6	-9209.4	-2663.6	-48477.2	-131807.7	-50000.0	50000.0
7	9833.3	2633.8	-16224.6	-142329.3	-50000.0	50000.0
8	-10496.5	-3761.7	-29044.4	-106374.8	-50000.0	50000.0
9	6904.7	1329.5	-21490.0	-197981.8	-50000.0	50000.0
10	9521.9	3190.7	-25392.7	-113767.0	-50000.0	50000.0
11	-10146.0	-3150.7	-21807.9	-122762.8	-50000.0	50000.0

DISPLACEMENTS

NODE		
1	0.00000	0.00000
2	.02362	-.12092
3	.05116	0.00000
4	-.00152	-.02441
5	.02462	-.10250
6	.04695	-.02455

LOAD CONDITION2
STRESSES

MEMBER	STRESS	FORCE	EULER LIM.	CRIPPLING LIM.	LOWER LIM.	UPPER LIM.
1	4536.4	1849.9	-61669.0	-93487.4	-50000.0	50000.0
2	1089.2	444.1	-32991.4	-127819.6	-50000.0	50000.0
3	-2702.7	-874.5	-60672.0	-117817.6	-50000.0	50000.0
4	6055.3	1932.9	-37793.0	-119423.6	-50000.0	50000.0
5	1070.0	324.5	-34116.0	-125695.1	-50000.0	50000.0
6	920.5	266.2	-48477.2	-131807.7	-50000.0	50000.0
7	-1613.9	-432.3	-16224.6	-142329.3	-50000.0	50000.0
8	4283.3	1506.4	-29044.4	-106374.8	-50000.0	50000.0
9	-3045.4	-586.4	-21490.0	-197981.8	-50000.0	50000.0
10	4120.7	1380.8	-25392.7	-113767.0	-50000.0	50000.0
11	-1763.5	-547.6	-21807.9	-122762.8	-50000.0	50000.0

DISPLACEMENTS

NODE		
1	0.00000	0.00000
2	.01612	.00390
3	.02008	0.00000
4	.04653	-.00720
5	.02635	-.00421
6	.02278	.00245

LOAD CONDITION3
STRESSES

MEMBER	STRESS	FORCE	EULER LIM.	CRIPPLING LIM.	LOWER LIM.	UPPER LIM.
1	-5400.0	-2202.0	-61669.0	-93487.4	-50000.0	50000.0
2	-2618.5	-780.9	-32991.4	-127819.6	-50000.0	50000.0
3	1723.2	557.6	-60672.0	-117817.6	-50000.0	50000.0
4	2241.6	715.5	-37793.0	-119423.4	-50000.0	50000.0
5	7543.5	2287.9	-34116.0	-125695.1	-50000.0	50000.0
6	-2025.5	-585.8	-48477.2	-131807.7	-50000.0	50000.0
7	3368.7	907.6	-16224.6	-142329.3	-50000.0	50000.0
8	-2830.9	-1014.5	-20044.4	-106374.5	-50000.0	50000.0
9	105.4	20.3	-21490.0	-197081.8	-50000.0	50000.0
10	-2761.3	-925.3	-25392.7	-113767.0	-50000.0	50000.0
11	3249.1	1007.7	-21807.9	-122762.8	-50000.0	50000.0

DISPLACEMENTS

NODE		
1	0.00000	0.00000
2	-.01800	.01783
3	-.02672	0.00000
4	-.02250	.00459
5	-.02997	.01812
6	-.05511	-.00540

EXTRAPOLATING
6.1114E-03 2.6232E-03

AFTER 35EC
THIS DESIGN WEIGHS 9.573+01
THE NEW GOAL WILL BE 9.094+01

THE DESIGN.. D/T LIMITS= 0.00AND 300.0

MEMBER	DIAMETER	THICKNESS	AREA	D(R)/T(R)	MOMENT OF INERTIA
1	4.165	.031	.416	130.99	9.028+-01
2	2.885	.031	.285	89.80	2.909+-01
3	3.009	.031	.300	94.63	3.403+-01
4	2.975	.031	.297	93.57	3.291+-01
5	2.820	.031	.281	88.69	2.802+-01
6	2.641	.031	.263	83.05	2.300+-01
7	2.422	.031	.242	76.19	1.776+-01
8	3.543	.031	.354	111.44	5.558+-01
9	1.673	.031	.167	52.63	5.857+-02
10	3.162	.031	.315	99.44	3.950+-01
11	3.011	.031	.300	94.69	3.410+-01

THE ANALYSIS

LOAD CONDITION1
STRESSES

MEMBER	STRESS	FORCE	ELLER LIM.	CRIPPLING LIM.	LOWER LIM.	UPPER LIM.
1	7159.1	2979.4	-64231.9	-91603.2	-50000.0	50000.0
2	8610.3	2456.6	-30191.5	-133615.7	-50000.0	50000.0
3	-9721.5	-2922.6	-52374.5	-126808.3	-50000.0	50000.0
4	-8341.1	-2479.7	-32778.0	-128235.1	-50000.0	50000.0
5	-6837.9	-1926.8	-29449.9	-135288.0	-50000.0	50000.0
6	-9752.4	-2573.1	-40341.9	-144489.7	-50000.0	50000.0
7	10469.2	2534.0	-13250.0	-157499.9	-50000.0	50000.0
8	-10871.2	-3848.9	-28346.8	-107675.8	-50000.0	50000.0
9	8220.5	1374.6	-16207.2	-227985.6	-50000.0	50000.0
10	10007.7	3161.8	-22572.3	-120666.1	-50000.0	50000.0
11	-10429.2	-3137.5	-20466.8	-126721.7	-50000.0	50000.0

DISPLACEMENTS

NODE		
1	0.00000	0.00000
2	.02386	-.12755
3	.05256	0.00000
4	-.00272	-.02592
5	.02507	-.10862
6	.04786	-.02600

LOAD CONDITION2
STRESSES

MEMBER	STRESS	FORCE	ELLER LIM.	CRIPPLING LIM.	LOWER LIM.	UPPER LIM.
1	4509.5	1876.7	-64231.9	-91603.2	-50000.0	50000.0
2	1597.4	455.7	-30191.5	-133615.7	-50000.0	50000.0
3	-2921.0	-878.1	-52374.5	-126808.3	-50000.0	50000.0
4	6493.8	1930.5	-32778.0	-128235.1	-50000.0	50000.0
5	1119.5	315.4	-29449.9	-135288.0	-50000.0	50000.0
6	998.8	263.5	-40341.9	-144489.7	-50000.0	50000.0
7	-1786.0	-432.3	-13250.0	-157499.9	-50000.0	50000.0
8	4266.9	1510.7	-28346.8	-107675.8	-50000.0	50000.0
9	-3437.1	-574.7	-16207.2	-227985.6	-50000.0	50000.0
10	4332.3	1368.7	-22572.3	-120666.1	-50000.0	50000.0
11	-1879.8	-565.5	-20466.8	-126721.7	-50000.0	50000.0

DISPLACEMENTS

NODE		
1	0.00000	0.00000
2	.01503	.00459
3	.02035	0.00000
4	.04862	-.00778
5	.02697	-.00456
6	.02324	.00266

LOAD CONDITION3

STRESSES

MEMBER	STRESS	FORCE	EULER LIM.	CRIPPLING LIM.	LOWER LIM.	UPPER LIM.
1	-5311.4	-2210.4	-64231.9	-91603.2	-50000.0	50000.0
2	-2797.6	-798.2	-30191.5	-133615.7	-50000.0	50000.0
3	1818.9	546.8	-52374.5	-126808.3	-50000.0	50000.0
4	2309.5	686.6	-32778.0	-124235.1	-50000.0	50000.0
5	8149.7	2296.5	-29449.9	-135288.0	-50000.0	50000.0
6	-2224.7	-586.9	-40341.9	-144489.7	-50000.0	50000.0
7	3753.6	908.5	-13250.0	-157499.9	-50000.0	50000.0
8	-2839.5	-1005.3	-28346.8	-107675.8	-50000.0	50000.0
9	132.3	22.1	-16207.2	-227985.6	-50000.0	50000.0
10	-2910.2	-919.4	-22572.3	-120666.1	-50000.0	50000.0
11	3374.0	1015.0	-20466.8	-126721.7	-50000.0	50000.0

DISPLACEMENTS

NODE		
1	0.00000	0.00000
2	-.01770	.01836
3	-.02703	0.00000
4	-.02280	.00485
5	-.03049	.01872
6	-.05766	-.00593

EXTRAPOLATING

1.1542+-02	5.7033+-03
6.8374+-03	2.9281+-03
4.7046+-03	2.4326+-03
3.4878+-03	1.6219+-03
2.7925+-03	1.4667+-03
2.3846+-03	1.1482+-03
2.1161+-03	1.0975+-03

ZIG-ZAG

AFTER 21SEL
THIS DESIGN WEIGHS 9.118E+01
THE NEW GOAL WILL BE 8.662E+01

THE DESIGN.. D/T LIMITS= 0.00AND 300.0

MEMBER	DIAMETER	THICKNESS	AREA	D(R)/T(R)	MOMENT OF INERTIA
1	4.109	.031	.419	132.06	9.249E-01
2	2.709	.031	.270	86.20	2.484E-01
3	2.854	.031	.285	89.76	2.904E-01
4	2.703	.031	.270	87.83	2.721E-01
5	2.642	.031	.264	83.10	2.305E-01
6	2.411	.031	.240	75.84	1.752E-01
7	2.174	.031	.217	68.37	1.283E-01
8	3.492	.031	.348	109.83	5.321E-01
9	1.469	.031	.146	46.21	3.965E-02
10	3.005	.031	.300	94.51	3.390E-01
11	2.934	.031	.293	92.29	3.157E-01

THE ANALYSIS

LOAD CONDITION1
STRESSES

MEMBER	STRESS	FORCE	ELLER LIM.	CRIPPLING LIM.	LOWER LIM.	UPPER LIM.
1	7181.7	3013.1	-65279.1	-90865.4	-50000.0	50000.0
2	8970.5	2426.3	-27177.7	-140830.4	-50000.0	50000.0
3	-10429.0	-2973.8	-47120.0	-133692.8	-50000.0	50000.0
4	-8829.4	-2463.8	-28878.8	-136619.3	-50000.0	50000.0
5	-7047.2	-1860.5	-25852.3	-144396.0	-50000.0	50000.0
6	-10363.6	-2497.0	-33684.3	-158221.6	-50000.0	50000.0
7	11097.3	2410.4	-10670.8	-175508.6	-50000.0	50000.0
8	-11199.0	-3907.8	-27534.8	-109251.8	-50000.0	50000.0
9	9892.8	1452.4	-12494.9	-259667.8	-50000.0	50000.0
10	10555.1	3169.2	-20386.9	-126969.5	-50000.0	50000.0
11	-10678.4	-3130.9	-19440.7	-130023.3	-50000.0	50000.0

DISPLACEMENTS

NODE		
1	0.00000	0.00000
2	.02393	-.13477
3	.05384	0.00000
4	-.00393	-.02781
5	.02549	-.10839
6	.04898	-.02763

LOAD CONDITION2
STRESSES

MEMBER	STRESS	FORCE	ELLER LIM.	CRIPPLING LIM.	LOWER LIM.	UPPER LIM.
1	8457.9	1670.3	-65279.1	-90865.4	-50000.0	50000.0
2	1720.0	465.6	-27177.7	-140830.4	-50000.0	50000.0
3	-3070.7	-875.6	-47120.0	-133692.8	-50000.0	50000.0
4	6959.2	1941.9	-28878.8	-136619.3	-50000.0	50000.0
5	1200.5	316.9	-25852.3	-144396.0	-50000.0	50000.0
6	1100.4	265.1	-33684.3	-158221.6	-50000.0	50000.0
7	-1961.6	-426.0	-10670.8	-175508.6	-50000.0	50000.0
8	4297.2	1499.4	-27534.8	-109251.8	-50000.0	50000.0
9	-3956.8	-580.9	-12494.9	-259667.8	-50000.0	50000.0
10	4562.4	1375.8	-20386.9	-126969.5	-50000.0	50000.0
11	-2032.6	-595.9	-19440.7	-130023.3	-50000.0	50000.0

DISPLACEMENTS

NODE		
1	0.00000	0.00000
2	.01885	.00541
3	.02059	0.00000
4	.05079	-.00818
5	.02759	-.00513
6	.02359	.00293

LOAD CONDITION 3

STRESSES

MEMBER	STRESS	FORCE	BULLER LIM.	CRIPPLING LIM.	LOWER LIM.	UPPER LIM.
1	-5239.6	-2198.3	-65279.1	-90865.4	-50000.0	50000.0
2	-2958.9	-800.9	-27177.7	-160830.0	-50000.0	50000.0
3	1978.9	564.3	-47120.0	-133692.8	-50000.0	50000.0
4	2522.0	703.7	-28878.8	-136819.3	-50000.0	50000.0
5	8714.5	2300.7	-25852.3	-148396.0	-50000.0	50000.0
6	-2367.2	-570.3	-33644.3	-158221.6	-50000.0	50000.0
7	4135.4	896.2	-10870.8	-175508.6	-50000.0	50000.0
8	-2933.0	-1023.4	-27534.8	-109251.8	-50000.0	50000.0
9	19.1	2.8	-12494.9	-259867.8	-50000.0	50000.0
10	-2989.4	-897.6	-20388.9	-126963.5	-50000.0	50000.0
11	3502.8	1027.0	-19440.7	-130023.3	-50000.0	50000.0

DISPLACEMENTS

NODE		
1	0.00000	0.00000
2	-.01746	.01857
3	-.02732	0.00000
4	-.02284	.00527
5	-.03125	.01902
6	-.06030	-.00831

EXTRAPOLATING

6.1536E-03	3.3882E-03
3.7280E-03	1.8020E-03
3.1758E-03	1.3354E-03
2.8657E-03	1.2145E-03
2.6848E-03	1.1914E-03
2.5356E-03	1.0817E-03
2.4197E-03	1.0735E-03

AFTER 20SEC
THIS DESIGN WEIGHS 8.681+01
THE NEW GOAL WILL BE 8.247+01

THE DESIGN.. D/T LIMITS= 0.00AND 300.0

MEMBER	DIAMETER	THICKNESS	AREA	L(R)/T(R)	MOMENT OF INERTIA
1	4.221	.031	.421	132.74	9.393+-01
2	2.565	.031	.256	80.66	2.108+-01
3	2.674	.031	.267	84.09	2.388+-01
4	2.626	.031	.262	82.60	2.263+-01
5	2.462	.031	.246	77.43	1.865+-01
6	2.200	.031	.219	69.19	1.330+-01
7	1.956	.031	.195	61.52	9.352+-02
8	3.470	.031	.346	109.13	5.220+-01
9	1.278	.031	.127	40.20	2.611+-02
10	2.849	.031	.284	89.59	2.888+-01
11	2.840	.031	.283	89.33	2.863+-01

THE ANALYSIS

LOAD CONDITION1
STRESSES

MEMBER	STRESS	FORCE	EULER LIM.	CRIPPLING LIM.	LOWER LIM.	UPPER LIM.
1	7227.8	3048.0	-65951.1	-90401.3	-50000.0	50000.0
2	9329.9	2391.0	-24358.3	-148759.0	-50000.0	50000.0
3	-11103.4	-2966.5	-41365.4	-142890.7	-50000.0	50000.0
4	-9377.9	-2461.0	-25543.3	-145267.0	-50000.0	50000.0
5	-7201.5	-1771.6	-22446.7	-154064.7	-50000.0	50000.0
6	-11006.6	-2419.3	-28001.7	-173835.1	-50000.0	50000.0
7	11804.3	2307.0	-8639.5	-195058.3	-50000.0	50000.0
8	-11515.4	-3992.4	-27182.9	-109056.8	-50000.0	50000.0
9	11705.8	1495.1	-9459.3	-298461.3	-50000.0	50000.0
10	11136.9	3169.9	-18321.7	-133035.8	-50000.0	50000.0
11	-10931.0	-3102.4	-18216.6	-134321.3	-50000.0	50000.0

DISPLACEMENTS

NODE		
1	0.00000	0.00000
2	.02409	-.14240
3	.05519	0.00000
4	-.00826	-.02960
5	.02599	-.11118
6	.05000	-.02935

LOAD CONDITION2
STRESSES

MEMBER	STRESS	FORCE	EULER LIM.	CRIPPLING LIM.	LOWER LIM.	UPPER LIM.
1	4425.5	1866.2	-65951.1	-90401.3	-50000.0	50000.0
2	1864.9	477.9	-24358.3	-148759.0	-50000.0	50000.0
3	-3218.5	-859.9	-41365.4	-142890.7	-50000.0	50000.0
4	7421.0	1947.5	-25543.3	-145267.0	-50000.0	50000.0
5	1256.7	309.1	-22446.7	-154064.7	-50000.0	50000.0
6	1193.7	262.3	-28001.7	-173835.1	-50000.0	50000.0
7	-2143.9	-419.0	-8639.5	-195058.3	-50000.0	50000.0
8	4325.7	1499.7	-27182.9	-109056.8	-50000.0	50000.0
9	-4481.4	-572.4	-9459.3	-298461.3	-50000.0	50000.0
10	4789.0	1363.1	-18321.7	-133035.8	-50000.0	50000.0
11	-2131.7	-605.0	-18216.6	-134321.3	-50000.0	50000.0

DISPLACEMENTS

NODE		
1	0.00000	0.00000
2	.01475	.00634
3	.02096	0.00000
4	.05287	-.00858
5	.02813	-.00560
6	.02394	.00318

LOAD CONDITION 3

STRESSES

MEMBER	STRESS	FORCE	BUCKLING LIM.	CRIPPLING LIM.	LOWER LIM.	UPPER LIM.
1	-5100.2	-2176.0	-65451.1	-90401.3	-50000.0	50000.0
2	-3120.5	-799.6	-24358.3	-148759.0	-50000.0	50000.0
3	2064.2	556.8	-41365.4	-142490.7	-50000.0	50000.0
4	2643.3	693.6	-25543.3	-145267.0	-50000.0	50000.0
5	9362.2	2303.2	-22446.7	-154964.7	-50000.0	50000.0
6	-2513.0	-552.3	-28001.7	-173435.1	-50000.0	50000.0
7	4545.2	888.3	-8439.5	-195058.3	-50000.0	50000.0
8	-2974.6	-1031.3	-27182.9	-100956.6	-50000.0	50000.0
9	-27.9	-3.5	-9459.3	-298461.3	-50000.0	50000.0
10	-3108.2	-884.7	-18321.7	-133935.8	-50000.0	50000.0
11	3619.7	1027.3	-18216.6	-134321.3	-50000.0	50000.0

DISPLACEMENTS

NODE		
1	0.00000	0.00000
2	-.01720	.01952
3	-.02760	0.00000
4	-.02301	.00555
5	-.03182	.01945
6	-.06303	-.00670

EXTRAPOLATING

8.2037E-03	5.8768E-03
6.4542E-03	2.7197E-03
5.0416E-03	2.6799E-03
5.7244E-03	2.2801E-03
5.5868E-03	2.3029E-03
5.4864E-03	2.0795E-03
5.4055E-03	2.0991E-03
5.3371E-03	1.9413E-03
5.2778E-03	1.9617E-03
5.2252E-03	1.8370E-03

ZIG-ZAG

4.8174E-03	1.3092E-03
4.7019E-03	1.2577E-03
4.6607E-03	1.2675E-03
4.6304E-03	1.2670E-03
4.6030E-03	1.2512E-03
4.5810E-03	1.2800E-03

ZIG-ZAG

4.4925E-03	1.3346E-03
4.3946E-03	1.2530E-03
4.3747E-03	1.2789E-03
4.3551E-03	1.2467E-03
4.3358E-03	1.2704E-03
4.3167E-03	1.2371E-03
4.2978E-03	1.2609E-03
4.2790E-03	1.2276E-03
4.2603E-03	1.2508E-03
4.2418E-03	1.2179E-03
4.2234E-03	1.2406E-03

ZIG-ZAG

FULL POINT BEST

1.8730E-03	1.0565E-03

AFTER 68SEC
THIS DESIGN WEIGHS 6.201+01
THE NEW GOAL WILL BE 7.648+01

THE DESIGN.. D/T LIMITS= 0.00AND 300.0

MEMBER	DIAMETER	THICKNESS	AREA	L(R)/T(R)	MOMENT OF INERTIA
1	3.872	.031	.386	121.78	7.253.-01
2	2.443	.031	.244	78.83	1.821.-01
3	2.498	.031	.249	78.57	1.948.-01
4	2.507	.031	.250	78.84	1.968.-01
5	2.219	.031	.221	69.78	1.364.-01
6	1.990	.031	.198	62.59	9.850.-02
7	1.916	.031	.191	60.26	8.789.-02
8	3.282	.031	.327	103.22	4.417.-01
9	1.264	.031	.126	39.75	2.523.-02
10	2.999	.031	.299	94.33	3.371.-01
11	2.647	.031	.264	83.24	2.316.-01

THE ANALYSIS

LOAD CONDITION1
STRESSES

MEMBER	STRESS	FORCE	EULER LIM.	CRIPPLING LIM.	LOWER LIM.	UPPER LIM.
1	7906.2	3058.9	-55513.0	-94635.0	-50000.0	50000.0
2	9568.9	2340.5	-22096.4	-156188.5	-50000.0	50000.0
3	-12106.2	-3022.1	-36112.8	-152717.3	-50000.0	50000.0
4	-10155.7	-2543.7	-23267.9	-152205.1	-50000.0	50000.0
5	-7970.5	-1766.9	-18228.3	-171967.0	-50000.0	50000.0
6	-12227.8	-2431.5	-22917.9	-191712.8	-50000.0	50000.0
7	12044.4	2305.7	-8289.3	-199136.4	-50000.0	50000.0
8	-12355.2	-4051.8	-24320.9	-116246.9	-50000.0	50000.0
9	11531.7	1456.2	-9246.0	-301885.6	-50000.0	50000.0
10	10872.8	3256.4	-20309.7	-127210.6	-50000.0	50000.0
11	-11442.6	-3025.9	-15815.2	-144160.2	-50000.0	50000.0

DISPLACEMENTS

NODE		
1	0.00000	0.00000
2	.02635	-.14850
3	.05831	0.00000
4	-.00718	-.03228
5	.02866	-.11775
6	.05323	-.03260

LOAD CONDITION2
STRESSES

MEMBER	STRESS	FORCE	EULER LIM.	CRIPPLING LIM.	LOWER LIM.	UPPER LIM.
1	4669.7	1806.7	-55513.0	-94635.0	-50000.0	50000.0
2	1717.0	419.1	-22096.4	-156188.5	-50000.0	50000.0
3	-3444.9	-859.9	-36112.8	-152717.3	-50000.0	50000.0
4	7666.6	1920.2	-23267.9	-152205.1	-50000.0	50000.0
5	1471.1	326.1	-18228.3	-171967.0	-50000.0	50000.0
6	1278.6	254.2	-22917.9	-191712.8	-50000.0	50000.0
7	-2150.4	-411.6	-8289.3	-199136.4	-50000.0	50000.0
8	4555.6	1494.0	-24320.9	-116246.9	-50000.0	50000.0
9	-4710.4	-594.8	-9246.0	-301885.6	-50000.0	50000.0
10	4502.4	1373.2	-20309.7	-127210.6	-50000.0	50000.0
11	-2043.2	-540.3	-15815.2	-144160.2	-50000.0	50000.0

DISPLACEMENTS

NODE		
1	0.00000	0.00000
2	.01456	.00783
3	.02128	0.00000
4	.05423	-.00918
5	.02868	-.00472
6	.02377	.00340

LOAD CONDITION 3

STRESSES

MEMBER	STRESS	FORCE	EULER LIM.	CRIPPLING LIM.	LOWER LIM.	UPPER LIM.
1	-5559.7	-2151.0	-55513.0	-98535.0	-50000.0	50000.0
2	-3071.5	-749.7	-22096.4	-156188.4	-50000.0	50000.0
3	2233.0	557.4	-36112.8	-152717.3	-50000.0	50000.0
4	2858.3	710.9	-23267.9	-152205.1	-50000.0	50000.0
5	10248.4	2271.9	-18228.3	-171067.0	-50000.0	50000.0
6	-2861.0	-568.9	-22917.9	-191712.8	-50000.0	50000.0
7	4770.8	913.3	-8289.3	-199136.4	-50000.0	50000.0
8	-3037.1	-996.0	-24320.9	-114246.9	-50000.0	50000.0
9	-22.3	-2.8	-9246.0	-301885.8	-50000.0	50000.0
10	-2992.4	-696.7	-20309.7	-127210.8	-50000.0	50000.0
11	3712.9	981.8	-15815.2	-144160.2	-50000.0	50000.0

DISPLACEMENTS

NODE		
1	0.00000	0.00000
2	-.01853	.02035
3	-.02877	0.00000
4	-.02337	.00595
5	-.03203	.02029
6	-.06699	-.00762

EXTRAPOLATING

1.5374E-02	1.0940E-02
1.3791E-02	1.0545E-02
1.3249E-02	1.0296E-02
1.2930E-02	1.0032E-02
1.2676E-02	9.8126E-03
1.2457E-02	9.5792E-03
1.2262E-02	9.3755E-03
1.2083E-02	9.1597E-03
1.1916E-02	8.9692E-03
1.1761E-02	8.7688E-03

ZIG-ZAG

9.4957E-03	4.0364E-03
8.9259E-03	3.9773E-03
8.8428E-03	3.9354E-03
8.7849E-03	3.9160E-03
8.7362E-03	3.8899E-03
8.6927E-03	3.8745E-03
8.6530E-03	3.8485E-03
8.6160E-03	3.8310E-03
8.5814E-03	3.8040E-03

ZIG-ZAG

8.0656E-03	3.1700E-03
7.8715E-03	2.9375E-03
7.8333E-03	2.8821E-03
7.8082E-03	2.8742E-03
7.7870E-03	2.8310E-03
7.7684E-03	2.8221E-03
7.7509E-03	2.7795E-03
7.7343E-03	2.7717E-03
7.7182E-03	2.7326E-03
7.7028E-03	2.7256E-03

ZIG-ZAG

7.2594E-03	2.7053E-03
7.0417E-03	2.1715E-03
7.0073E-03	2.2843E-03
6.9896E-03	2.2180E-03
6.9769E-03	2.2393E-03
6.9666E-03	2.1870E-03
6.9574E-03	2.2026E-03

ZIG-ZAG
6.8827E-03 1.9151E-03
6.8492E-03 1.9509E-03
6.8313E-03 1.9491E-03
6.8194E-03 1.9588E-03

ZIG-ZAG
6.7962E-03 1.9744E-03
6.7841E-03 2.0123E-03
6.7749E-03 1.9713E-03
6.7671E-03 1.9999E-03
6.7599E-03 1.9651E-03
6.7529E-03 1.9926E-03
6.7461E-03 1.9604E-03
6.7394E-03 1.9878E-03
6.7327E-03 1.9566E-03
6.7261E-03 1.9841E-03

ZIG-ZAG

MIDPOINT BEST
5.6225E-03 1.7715E-03
5.5776E-03 1.7785E-03
5.4695E-03 1.7880E-03
5.4416E-03 1.7850E-03
5.4250E-03 1.7868E-03
5.4136E-03 1.7831E-03
5.4051E-03 1.7844E-03
5.3981E-03 1.7809E-03
5.3929E-03 1.7817E-03

ZIG-ZAG
5.3876E-03 1.7786E-03
5.3822E-03 1.7779E-03
5.3749E-03 1.7766E-03
5.3704E-03 1.7733E-03
5.3663E-03 1.7730E-03
5.3622E-03 1.7680E-03
5.3585E-03 1.7678E-03

ZIG-ZAG
5.3105E-03 1.7024E-03
5.2752E-03 1.6991E-03
5.2694E-03 1.6942E-03
5.2655E-03 1.6906E-03
5.2622E-03 1.6844E-03
5.2590E-03 1.6816E-03

ZIG-ZAG

MIDPOINT BEST
5.2322E-03 1.6254E-03
5.2246E-03 1.6231E-03
5.2197E-03 1.6219E-03
5.2168E-03 1.6202E-03
5.2141E-03 1.6199E-03
5.2115E-03 1.6175E-03
5.2089E-03 1.6173E-03

ZIG-ZAG
5.1722E-03 1.5925E-03
5.1634E-03 1.5906E-03
5.1573E-03 1.5891E-03
5.1540E-03 1.5868E-03
5.1511E-03 1.5858E-03
5.1484E-03 1.5828E-03

MIDPOINT BEST
5.1458E-03 1.5826E-03
5.1432E-03 1.5794E-03
5.1409E-03 1.5795E-03

```
ZIG-ZAG
   5.1224E-03  1.5546E-03
   5.1083E-03  1.5552E-03
   5.1006E-03  1.5564E-03
   5.0975E-03  1.5553E-03

ZIG-ZAG
   5.0959E-03  1.5553E-03
   5.0927E-03  1.5555E-03
   5.0903E-03  1.5534E-03
   5.0879E-03  1.5535E-03

MIDPOINT BEST
   5.0855E-03  1.5515E-03
   5.0831E-03  1.5517E-03

ZIG-ZAG
   5.0686E-03  1.5422E-03
   5.0607E-03  1.5417E-03

MIDPOINT BEST
   5.0553E-03  1.5420E-03
   5.0526E-03  1.5405E-03
   5.0505E-03  1.5407E-03
   5.0482E-03  1.5387E-03
   5.0459E-03  1.5390E-03

ZIG-ZAG

MIDPOINT BEST
   5.0345E-03  1.5316E-03
   5.0276E-03  1.5310E-03

MIDPOINT BEST
   5.0228E-03  1.5307E-03
   5.0200E-03  1.5296E-03
   5.0177E-03  1.5296E-03
   5.0154E-03  1.5278E-03
   5.0132E-03  1.5282E-03
   5.0110E-03  1.5263E-03

ZIG-ZAG
   4.9996E-03  1.5192E-03
   4.9927E-03  1.5195E-03

MIDPOINT BEST
   4.9880E-03  1.5204E-03
   4.9855E-03  1.5190E-03
   4.9832E-03  1.5194E-03

ZIG-ZAG
   4.9715E-03  1.5157E-03
   4.9674E-03  1.5141E-03

MIDPOINT BEST
   4.9630E-03  1.5124E-03
   4.9601E-03  1.5117E-03
   4.9574E-03  1.5116E-03

ZIG-ZAG

   4.9505E-03  1.5096E-03
   4.9419E-03  1.5065E-03
   4.9389E-03  1.5061E-03


ROUTINE TERMINATED AT MERR$
OPERATOR KILLED RUN

END OF RUN - -    PROJECT    35001    PROGRAMMER  Z    DATE:    10 OCT 64
```

CASE 4.A.1 FINAL OUTPUT

```
DRAWDOWN CYCLE COMPLETE, ACTUAL= 7.96269,+01
NEW DRAWDOWN GOAL WILL BE WPD= 7.56474,+01

THE DESIGN IS
MEMBER  D        T       D/T        LIMITS   1.00 AND 500.00
  1     3.36     .031   105.75
  2     2.09     .031    65.77
  3     2.65     .031    83.36
  4     2.56     .031    80.68
  5     2.21     .031    69.62
  6     2.07     .031    65.22
  7     2.07     .031    65.30
  8     2.87     .031    90.55
  9     1.41     .031    44.61
 10     3.10     .031    97.57
 11     2.33     .031    73.57

THE ANALYSIS

LOAD CONDITION  1
MEMBER STRESS        EULER        CRIPPLING          LIMITS
  1     8.891,+03   -4.186,+04   -1.134,+05   -4.999,+04    4.999,+04
  2     1.073,+04   -1.619,+04   -1.824,+05   -4.999,+04    4.999,+04
  3    -1.194,+04   -4.065,+04   -1.439,+05   -4.999,+04    4.999,+04
  4    -1.056,+04   -2.436,+04   -1.487,+05   -4.999,+04    4.999,+04
  5    -8.804,+03   -1.814,+04   -1.723,+05   -4.999,+04    4.999,+04
  6    -1.237,+04   -2.488,+04   -1.839,+05   -4.999,+04    4.999,+04
  7     1.209,+04   -9.735,+03   -1.837,+05   -4.999,+04    4.999,+04
  8    -1.345,+04   -1.871,+04   -1.325,+05   -4.999,+04    4.999,+04
  9     8.749,+03   -1.164,+04   -2.689,+05   -4.999,+04    4.999,+04
 10     1.119,+04   -2.173,+04   -1.229,+05   -4.999,+04    4.999,+04
 11    -1.235,+04   -1.235,+04   -1.630,+05   -4.999,+04    4.999,+04

NODE              DISPLACEMENTS
  1     0.000,+00    0.000,+00
  2     2.959,-02   -1.519,-01
  3     6.530,-02    0.000,+00
  4    -5.532,-03   -3.180,-02
  5     2.962,-02   -1.288,-01
  6     5.890,-02   -3.295,-02

LOAD CONDITION  2
MEMBER STRESS        EULER        CRIPPLING          LIMITS
  1     5.468,+03   -4.186,+04   -1.134,+05   -4.999,+04    4.999,+04
  2     1.813,+03   -1.619,+04   -1.824,+05   -4.999,+04    4.999,+04
  3    -3.378,+03   -4.065,+04   -1.439,+05   -4.999,+04    4.999,+04
  4     7.336,+03   -2.436,+04   -1.487,+05   -4.999,+04    4.999,+04
  5     1.538,+03   -1.814,+04   -1.723,+05   -4.999,+04    4.999,+04
  6     1.312,+03   -2.488,+04   -1.839,+05   -4.999,+04    4.999,+04
  7    -2.097,+03   -9.735,+03   -1.837,+05   -4.999,+04    4.999,+04
  8     5.165,+03   -1.871,+04   -1.325,+05   -4.999,+04    4.999,+04
  9    -4.402,+03   -1.164,+04   -2.689,+05   -4.999,+04    4.999,+04
 10     4.623,+03   -2.173,+04   -1.229,+05   -4.999,+04    4.999,+04
 11    -2.080,+03   -1.235,+04   -1.630,+05   -4.999,+04    4.999,+04

NODE              DISPLACEMENTS
  1     0.000,+00    0.000,+00
  2     1.822,-02    7.107,-03
  3     2.426,-02    0.000,+00
  4     5.639,-02   -9.009,-03
  5     3.193,-02   -4.629,-03
  6     2.680,-02    3.500,-03
```

CASE 4.A.1 FINAL OUTPUT

LOAD CONDITION 3

MEMBER	STRESS	EULER	CRIPPLING	LIMITS	
1	-6.635,+03	-4.186,+04	-1.134,+05	-4.999,+04	4.999,+04
2	-3.437,+03	-1.619,+04	-1.824,+05	-4.999,+04	4.999,+04
3	2.338,+03	-4.065,+04	-1.439,+05	-4.999,+04	4.999,+04
4	3.025,+03	-2.436,+04	-1.487,+05	-4.999,+04	4.999,+04
5	1.021,+04	-1.814,+04	-1.723,+05	-4.999,+04	4.999,+04
6	-2.846,+03	-2.485,+04	-1.839,+05	-4.999,+04	4.999,+04
7	4.552,+03	-9.735,+03	-1.837,+05	-4.999,+04	4.999,+04
8	-3.393,+03	-1.871,+04	-1.325,+05	-4.999,+04	4.999,+04
9	2.214,+02	-1.164,+04	-2.689,+05	-4.999,+04	4.999,+04
10	-3.200,+03	-2.173,+04	-1.229,+05	-4.999,+04	4.999,+04
11	3.949,+03	-1.235,+04	-1.630,+05	-4.999,+04	4.999,+04

NODE	DISPLACEMENTS	
1	0.000,+00	0.000,+00
2	-2.210,-02	2.227,-02
3	-3.355,-02	0.000,+00
4	-2.676,-02	6.233,-03
5	-3.684,-02	2.286,-02
6	-7.089,-02	-7.590,-03

CASE 4.A.3 FINAL OUTPUT

THIS DESIGN WEIGHS 8.101,+01
THE NEW GOAL WILL BE 7.595,+01

THE DESIGN.. D/T LIMITS= 0.00AND 300.0

MEMBER	DIAMETER	THICKNESS	AREA	D(R)/T(R)	MOMENT OF INERTIA
1	3.507	.031	.350	110.30	5.389,-01
2	3.507	.031	.350	110.30	5.389,-01
3	1.880	.031	.187	59.14	8.311,-02
4	1.950	.031	.194	61.34	9.271,-02
5	1.950	.031	.194	61.34	9.271,-02
6	1.880	.031	.187	59.14	8.311,-02
7	2.094	.031	.209	65.87	1.148,-01
8	3.221	.031	.321	101.30	4.175,-01
9	1.773	.031	.177	55.75	6.952,-02
10	2.094	.031	.209	65.87	1.148,-01
11	3.221	.031	.321	101.30	4.175,-01

THE ANALYSIS

LOAD CONDITION1
STRESSES

MEMBER	STRESS	FORCE	EULER LIM.	CRIPPLING LIM.	LOWER LIM.	UPPER LIM.
1	8519.9	2985.5	-45541.4	-138789.7	-50000.0	50000.0
2	8649.0	3030.8	-45541.4	-138789.7	-50000.0	50000.0
3	-12935.8	-2439.5	-20453.2	-212889.0	-50000.0	50000.0
4	-9347.4	-1821.5	-14087.0	-195523.8	-50000.0	50000.0
5	-9199.4	-1792.7	-14087.0	-195523.8	-50000.0	50000.0
6	-13052.1	-2452.5	-20453.2	-212889.0	-50000.0	50000.0
7	11273.4	2359.1	-9904.4	-182174.4	-50000.0	50000.0
8	-12366.7	-3990.0	-23422.5	-118455.3	-50000.0	50000.0
9	11312.2	2003.7	-18185.9	-215221.7	-50000.0	50000.0
10	11099.7	2322.7	-9904.4	-182174.4	-50000.0	50000.0
11	-12159.1	-3913.2	-23422.5	-118455.3	-50000.0	50000.0

DISPLACEMENTS

NODE		
1	0.00000	0.00000
2	.02839	-.14973
3	.05722	0.00000
4	-.00311	-.03449
5	.02804	-.11955
6	.05871	-.03480

LOAD CONDITION2
STRESSES

MEMBER	STRESS	FORCE	EULER LIM.	CRIPPLING LIM.	LOWER LIM.	UPPER LIM.
1	5061.0	1773.5	-45541.4	-138789.7	-50000.0	50000.0
2	1429.6	500.9	-45541.4	-138789.7	-50000.0	50000.0
3	-4277.6	-803.7	-20453.2	-212889.0	-50000.0	50000.0
4	10239.5	1995.4	-14087.0	-195523.8	-50000.0	50000.0
5	1438.1	290.2	-14087.0	-195523.8	-50000.0	50000.0
6	1178.5	221.4	-20453.2	-212889.0	-50000.0	50000.0
7	-1699.6	-355.5	-9904.4	-182174.4	-50000.0	50000.0
8	4843.1	1558.5	-23422.5	-118455.3	-50000.0	50000.0
9	-3278.6	-580.7	-18185.9	-215221.7	-50000.0	50000.0
10	6126.1	1281.9	-9904.4	-182174.4	-50000.0	50000.0
11	-1959.6	-530.5	-23422.5	-118455.3	-50000.0	50000.0

DISPLACEMENTS

NODE		
1	0.00000	0.00000
2	.01687	.00507
3	.02163	0.00000
4	.06354	-.01140
5	.02941	-.00367
6	.02461	.00314

CASE 4.A.3 FINAL OUTPUT

LOAD CONDITION 5

STRESSES

MEMBER	STRESS	FORCE	EULER LIM.	CRIPPLING LIM.	LOWER LIM.	UPPER LIM.
1	16271.4	-2137.5	-45541.4	-113743.7	-50000.0	50000.0
2	-2647.5	-927.5	-45541.4	-113743.7	-50000.0	50000.0
3	2175.0	414.7	-20455.2	-212849.0	-50000.0	50000.0
4	2721.7	530.4	-14087.0	-135523.9	-50000.0	50000.0
5	11513.4	2243.7	-14087.0	-135523.9	-50000.0	50000.0
6	-3154.5	-534.5	-20455.2	-212849.0	-50000.0	50000.0
7	4569.1	956.1	-9414.4	-132174.4	-50000.0	50000.0
8	-2974.5	-958.3	-25422.5	-113455.3	-50000.0	50000.0
9	-453.1	-154.9	-18185.9	-215221.7	-50000.0	50000.0
10	-5295.4	-587.5	-9414.4	-132174.4	-50000.0	50000.0
11	3807.4	1225.5	-25422.5	-113455.5	-50000.0	50000.0

DISPLACEMENTS

NODE		
1	0.00000	0.00000
2	-.02040	.12545
3	-.02372	0.00000
4	-.02834	.10540
5	-.03541	.12141
6	-.07179	-.00943

CASE 4.B FINAL OUTPUT

THIS DESIGN WEIGHS 6.814+.01
THE NEW GOAL WILL BE 6.473+.01
THE DESIGN.. D/T LIMITS= 0.00AND 300.0

MEMBER	DIAMETER	THICKNESS	AREA	D(IN)/T(IN)	MOMENT OF INERTIA
1	3.930	.031	.392	123.60	7.584+-01
2	2.147	.031	.214	67.54	1.237+-01
3	1.847	.031	.164	58.09	7.875+-02
4	1.859	.031	.185	58.48	8.033+-02
5	1.647	.031	.164	51.81	5.589+-02
6	1.563	.031	.156	49.16	4.775+-02
7	1.133	.031	.113	35.65	1.821+-02
8	3.068	.031	.306	96.49	3.608+-01
9	1.010	.031	.100	31.77	1.289+-02
10	2.118	.031	.211	66.62	1.167+-01
11	2.454	.031	.245	77.19	1.847+-01

THE ANALYSIS

LOAD CONDITION1
STRESSES

MEMBER	STRESS	FORCE	EULER LIM.	CRIPPLING LIM.	LOWER LIM.	UPPER LIM.
1	8440.7	3314.5	-57185.2	-97083.6	-50000.0	50000.0
2	11609.9	2491.2	-17078.5	-177662.6	-50000.0	50000.0
3	-15409.5	-2643.9	-14742.6	-206559.4	-50000.0	50000.0
4	-12566.3	-2338.3	-12803.5	-205197.5	-50000.0	50000.0
5	-8454.7	-1391.8	-10053.4	-231578.2	-50000.0	50000.0
6	-13930.9	-2176.0	-14143.2	-244061.6	-50000.0	50000.0
7	16652.5	1886.0	-2902.8	-336596.4	-50000.0	50000.0
8	-14718.8	-4512.2	-21253.0	-124355.4	-50000.0	50000.0
9	18907.9	1908.6	-5910.1	-377658.8	-50000.0	50000.0
10	14031.8	2970.0	-10132.6	-180110.7	-50000.0	50000.0
11	-13261.9	-3252.2	-13600.8	-155454.9	-50000.0	50000.0

DISPLACEMENTS

NODE		
1	0.00000	0.00000
2	.02813	-.18779
3	.06683	0.00000
4	-.01251	-.04109
5	.02943	-.13737
6	.05761	-.03714

LOAD CONDITION2
STRESSES

MEMBER	STRESS	FORCE	EULER LIM.	CRIPPLING LIM.	LOWER LIM.	UPPER LIM.
1	4335.9	1702.6	-57185.2	-97083.6	-50000.0	50000.0
2	2065.3	447.4	-17078.5	-177662.6	-50000.0	50000.0
3	-4362.1	-808.7	-14742.6	-206559.4	-50000.0	50000.0
4	10546.0	1959.3	-12803.5	-205197.5	-50000.0	50000.0
5	1815.0	298.7	-10053.4	-231578.2	-50000.0	50000.0
6	1409.3	220.1	-14143.2	-244061.6	-50000.0	50000.0
7	-2860.9	-326.2	-2902.8	-336596.4	-50000.0	50000.0
8	4910.4	1505.3	-21253.0	-124355.4	-50000.0	50000.0
9	-5819.7	-587.4	-5910.1	-377658.8	-50000.0	50000.0
10	6115.9	1294.5	-10132.6	-180110.7	-50000.0	50000.0
11	-2395.1	-587.3	-13600.8	-155454.9	-50000.0	50000.0

CASE 4.B FINAL OUTPUT

DISPLACEMENTS

NODE		
1	0.00000	0.00000
2	.01445	.01073
3	.02140	0.00000
4	.06582	-.01168
5	.03067	-.00478
6	.02662	.00375

LOAD CONDITION 3

STRESSES

MEMBER	STRESS	FORCE	EULER LIM.	CRIPPLING LIM.	LOWER LIM.	UPPER LIM.
1	-5157.4	-2025.2	-57185.2	-97083.6	-50000.0	50000.0
2	-3652.0	-785.8	-17078.5	-177662.6	-50000.0	50000.0
3	2531.8	467.2	-14742.6	-206559.4	-50000.0	50000.0
4	3406.9	632.9	-12803.5	-205197.5	-50000.0	50000.0
5	14058.8	2314.3	-10053.4	-231578.2	-50000.0	50000.0
6	-3366.0	-525.7	-14143.2	-244061.6	-50000.0	50000.0
7	7432.9	841.8	-2902.8	-336596.4	-50000.0	50000.0
8	-3445.7	-1056.3	-21253.0	-124355.4	-50000.0	50000.0
9	-324.8	-32.7	-5910.1	-377658.8	-50000.0	50000.0
10	-3617.1	-765.6	-10132.6	-180110.7	-50000.0	50000.0
11	4322.8	1060.1	-13600.8	-155454.9	-50000.0	50000.0

DISPLACEMENTS

NODE		
1	0.00000	0.00000
2	-.01719	.02223
3	-.02039	0.00000
4	-.02457	.00675
5	-.03593	.02137
6	-.08279	-.00897

CASE 4.C.1 FINAL OUTPUT

```
DRAWDOWN CYCLE COMPLETE, WEIGHT= 5.53911E+01
NEW DRAWDOWN GOAL WILL BE APD= 5.42833E+01

THE DESIGN IS
MEMBER  D        T        D/T       LIMITS   1.00 AND 500.00
  1     1.88     .031     59.31
  2     1.41     .031     44.40
  3     1.68     .031     52.93
  4     1.81     .031     57.22
  5     1.60     .031     50.54
  6     1.57     .031     49.46
  7      .88     .031     27.75
  8     2.68     .031     84.51
  9     1.02     .031     32.15
 10     1.48     .031     46.70
 11     2.48     .031     78.06

THE ANALYSIS

LOAD CONDITION  1
MEMBER STRESS        EULER        CRIPPLING          LIMITS
  1    1.723E+04   -1.317E+04   -2.022E+05   -4.999E+04    4.999E+04
  2    1.881E+04   -7.383E+03   -2.702E+05   -4.999E+04    4.999E+04
  3   -1.643E+04   -1.039E+04   -2.207E+05   -4.999E+04    4.999E+04
  4   -1.229E+04   -1.226E+04   -2.096E+05   -4.999E+04    4.999E+04
  5   -9.582E+03   -9.564E+03   -2.374E+05   -4.999E+04    4.999E+04
  6   -1.432E+04   -1.431E+04   -2.425E+05   -4.999E+04    4.999E+04
  7    2.283E+04   -1.760E+03   -4.322E+05   -4.999E+04    4.999E+04
  8   -1.632E+04   -1.630E+04   -1.419E+05   -4.999E+04    4.999E+04
  9    1.902E+04   -6.056E+03   -3.730E+05   -4.999E+04    4.999E+04
 10    1.897E+04   -4.979E+03   -2.569E+05   -4.999E+04    4.999E+04
 11   -1.593E+04   -1.391E+04   -1.537E+05   -4.999E+04    4.999E+04

NODE              DISPLACEMENTS
  1    0.000E+00    0.000E+00
  2    5.721E-02   -2.291E-01
  3    1.197E-01    0.000E+00
  4    1.234E-02   -4.391E-02
  5    5.329E-02   -1.785E-01
  6    8.517E-02   -3.621E-02

LOAD CONDITION  2
MEMBER STRESS        EULER        CRIPPLING          LIMITS
  1    8.485E+03   -1.317E+04   -2.022E+05   -4.999E+04    4.999E+04
  2    3.935E+03   -7.383E+03   -2.702E+05   -4.999E+04    4.999E+04
  3   -4.488E+03   -1.039E+04   -2.207E+05   -4.999E+04    4.999E+04
  4    1.118E+04   -1.226E+04   -2.096E+05   -4.999E+04    4.999E+04
  5    9.655E+02   -9.564E+03   -2.374E+05   -4.999E+04    4.999E+04
  6    6.644E+02   -1.431E+04   -2.425E+05   -4.999E+04    4.999E+04
  7   -1.767E+03   -1.760E+03   -4.322E+05   -4.999E+04    4.999E+04
  8    6.206E+03   -1.630E+04   -1.419E+05   -4.999E+04    4.999E+04
  9   -5.988E+03   -6.056E+03   -3.730E+05   -4.999E+04    4.999E+04
 10    8.016E+03   -4.979E+03   -2.569E+05   -4.999E+04    4.999E+04
 11   -2.888E+03   -1.391E+04   -1.537E+05   -4.999E+04    4.999E+04

NODE              DISPLACEMENTS
  1    0.000E+00    0.000E+00
  2    2.836E-02    6.713E-04
  3    4.139E-02    0.000E+00
  4    8.246E-02   -1.201E-02
  5    4.526E-02   -1.479E-02
  6    4.165E-02    1.960E-03
```

CASE 4.C.1 FINAL OUTPUT

LOAD CONDITION 3

MEMBER	STRESS	EULER	CRIPPLING	LIMITS	
1	-9.835E+03	-1.317E+04	-2.022E+05	-4.999E+04	4.999E+04
2	-5.719E+03	-7.583E+03	-2.702E+05	-4.999E+04	4.999E+04
3	2.702E+03	-1.639E+04	-[illegible].207E+05	-4.999E+04	4.999E+04
4	3.271E+03	-1.226E+04	-2.096E+05	-4.999E+04	4.999E+04
5	1.531E+04	-9.564E+03	-2.374E+05	-4.999E+04	4.999E+04
6	-2.503E+03	-1.431E+04	-2.425E+05	-4.999E+04	4.999E+04
7	7.342E+03	-1.760E+03	-4.322E+05	-4.999E+04	4.999E+04
8	-4.708E+03	-1.630E+04	-1.419E+05	-4.999E+04	4.999E+04
9	8.055E+02	-6.056E+03	-3.730E+05	-4.999E+04	4.999E+04
10	-4.951E+03	-4.979E+03	-2.569E+05	-4.999E+04	4.999E+04
11	4.412E+03	-1.391E+04	-1.537E+05	-4.999E+04	4.999E+04

NODE	DISPLACEMENTS	
1	0.000E+00	0.000E+00
2	-3.244E-02	2.962E-02
3	-5.140E-02	0.000E+00
4	-4.009E-02	6.960E-03
5	-5.070E-02	3.130E-02
6	-1.015E-01	-6.819E-03

CASE 4.0.2 FINAL OUTPUT

THIS DESIGN WEIGHS 5.510,+01
THE NEW GOAL WILL BE 5.529,+01

THE DESIGN.. D/T LIMITS= 0.00AND 300.0

MEMBER	DIAMETER	THICKNESS	AREA	D(R)/T(R)	MOMENT OF INERTIA
1	1.846	.031	.184	59.07	7.959,-02
2	1.325	.031	.132	41.52	2.999,-02
3	1.698	.031	.169	53.41	5.121,-02
4	1.840	.031	.183	57.87	7.785,-02
5	1.687	.031	.169	53.05	5.001,-02
6	1.616	.031	.161	50.81	5.272,-02
7	1.077	.031	.107	33.89	1.554,-02
8	2.655	.031	.255	83.52	2.340,-01
9	1.014	.031	.101	31.89	1.304,-02
10	1.489	.031	.148	45.85	4.131,-02
11	2.502	.031	.249	78.65	1.955,-01

THE ANALYSIS

LOAD CONDITION1
STRESSES

MEMBER	STRESS	FORCE	EULER LIM.	CRIPPLING LIM.	LOWER LIM.	UPPER LIM.
1	17000.9	3135.5	-12525.9	-215527.8	-50000.0	50000.0
2	20279.5	2532.0	-5489.9	-283255.5	-50000.0	50000.0
3	-16535.1	-2315.7	-15589.3	-224557.7	-50000.0	50000.0
4	-12405.4	-2280.9	-12534.7	-217353.9	-50000.0	50000.0
5	-10457.0	-1752.7	-10541.1	-225155.1	-50000.0	50000.0
6	-14954.5	-2415.9	-15108.1	-235135.8	-50000.0	50000.0
7	20942.5	2254.8	-2523.5	-354075.4	-50000.0	50000.0
8	-15779.1	-4137.0	-15924.2	-143555.9	-50000.0	50000.0
9	17971.5	1821.9	-5954.5	-375245.0	-50000.0	50000.0
10	19344.8	2874.3	-5011.5	-255129.3	-50000.0	50000.0
11	-13983.6	-3495.5	-14131.8	-152505.1	-50000.0	50000.0

DISPLACEMENTS

NODE		
1	0.00000	0.00000
2	.05655	-.22728
3	.12425	0.00000
4	.01587	-.04419
5	.05722	-.17935
6	.09208	-.03940

LOAD CONDITION2
STRESSES

MEMBER	STRESS	FORCE	EULER LIM.	CRIPPLING LIM.	LOWER LIM.	UPPER LIM.
1	8589.0	1584.5	-12525.9	-215527.8	-50000.0	50000.0
2	3749.7	495.9	-5489.9	-283255.5	-50000.0	50000.0
3	-4378.0	-742.8	-15589.3	-224557.7	-50000.0	50000.0
4	11280.0	2073.8	-12534.7	-217353.9	-50000.0	50000.0
5	1193.2	201.1	-10541.1	-225155.1	-50000.0	50000.0
6	1050.7	159.5	-15108.1	-235135.8	-50000.0	50000.0
7	-2282.5	-245.7	-2523.5	-354075.4	-50000.0	50000.0
8	6356.7	1586.8	-15924.2	-143555.9	-50000.0	50000.0
9	-5895.6	-597.3	-5954.5	-375245.0	-50000.0	50000.0
10	7922.8	1174.2	-5011.5	-255129.3	-50000.0	50000.0
11	-2767.5	-591.8	-14131.8	-152505.1	-50000.0	50000.0

DISPLACEMENTS

NODE		
1	0.00000	0.00000
2	.02863	.00227
3	.04112	0.00000
4	.08310	-.01157
5	.04550	-.01344
6	.04152	.00241

CASE 4.C.2 FINAL OUTPUT

LOAD CONDITION3

STRESSES

MEMBER	STRESS	FORCE	EULER LIM.	CRIPPLING LIM.	LOWER LIM.	UPPER LIM.
1	-10570.5	-1350.2	-12520.9	-215527.9	-50000.0	50000.0
2	-6449.1	-352.9	-5437.9	-243255.5	-50000.0	50000.0
3	2849.8	483.5	-15589.3	-224557.7	-50000.0	50000.0
4	3391.4	524.5	-12554.7	-217353.9	-50000.0	50000.0
5	14514.9	2446.7	-19541.1	-225135.1	-50000.0	50000.0
6	-2504.5	-420.4	-15104.1	-235135.9	-50000.0	50000.0
7	6158.0	554.1	-2525.5	-554775.4	-50000.0	50000.0
8	-9549.5	-1217.2	-15424.2	-143555.9	-50000.0	50000.0
9	589.9	54.7	-5454.5	-375245.0	-50000.0	50000.0
10	-4945.5	-735.1	-5011.5	-255127.3	-50000.0	50000.0
11	4423.8	1115.9	-14131.4	-152505.1	-50000.0	50000.0

DISPLACEMENTS

NODE		
1	0.00000	0.00000
2	-.03523	.03345
3	-.05673	0.00000
4	-.04158	.10758
5	-.05249	.13512
6	-.10127	-.00544

CASE 5.A.1 FINAL OUTPUT

```
BRANDOWN CYCLE COMPLETE, WEIGHT= 5.95E16+00
NEW BRANDOWN GOAL WILL BE WPL= 5.60025+00

THE DESIGN IS
MEMBER  D        T        D/T        LIMITS  10.00 AND 500.00
  1     2.16     .008   249.27
  2     1.81     .015   114.41
  3     2.03     .014   143.04
  4     1.88     .015   123.25
  5     1.82     .015   114.72
  6     3.58     .017   206.29
  7     3.58     .017   206.29
  8     3.59     .017   206.26
  9     3.59     .017   206.29

THE ANALYSIS

LOAD CONDITION  1
MEMBER STRESS        EULER          CRIPPLING          LIMITS
  1     2.020,+00   -1.022,+04   -1.022,+04   -1.689,+04   2.989,+04
  2     1.124,+04   -1.163,+04   -2.225,+04   -1.689,+04   2.989,+04
  3    -1.123,+04   -1.476,+04   -1.781,+04   -1.689,+04   2.989,+04
  4     1.123,+04   -1.272,+04   -2.068,+04   -1.689,+04   2.989,+04
  5    -1.123,+04   -1.164,+04   -2.221,+04   -1.689,+04   2.989,+04
  6    -3.016,+03   -1.235,+04   -1.235,+04   -1.689,+04   2.989,+04
  7     3.015,+03   -1.235,+04   -1.235,+04   -1.689,+04   2.989,+04
  8    -3.015,+03   -1.235,+04   -1.235,+04   -1.689,+04   2.989,+04
  9     3.016,+03   -1.235,+04   -1.235,+04   -1.689,+04   2.989,+04

NODE              DISPLACEMENTS
  1     2.333,-05    1.265,-01   -5.361,-05
  2     4.700,-06   -1.266,-01    3.533,-07
  3     0.000,+00    0.000,+00    0.000,+00
  4     0.000,+00    0.000,+00    0.000,+00
  5     0.000,+00    0.000,+00    0.000,+00
  6     0.000,+00    0.000,+00    0.000,+00

LOAD CONDITION  2
MEMBER STRESS        EULER          CRIPPLING          LIMITS
  1    -2.020,+00   -1.022,+04   -1.022,+04   -1.689,+04   2.989,+04
  2    -1.124,+04   -1.163,+04   -2.225,+04   -1.689,+04   2.989,+04
  3     1.123,+04   -1.476,+04   -1.781,+04   -1.689,+04   2.989,+04
  4    -1.123,+04   -1.272,+04   -2.068,+04   -1.689,+04   2.989,+04
  5     1.123,+04   -1.164,+04   -2.221,+04   -1.689,+04   2.989,+04
  6     3.016,+03   -1.235,+04   -1.235,+04   -1.689,+04   2.989,+04
  7    -3.015,+03   -1.235,+04   -1.235,+04   -1.689,+04   2.989,+04
  8     3.015,+03   -1.235,+04   -1.235,+04   -1.689,+04   2.989,+04
  9    -3.016,+03   -1.235,+04   -1.235,+04   -1.689,+04   2.989,+04

NODE              DISPLACEMENTS
  1    -2.333,-05   -1.265,-01    5.361,-05
  2    -4.700,-06    1.266,-01   -3.533,-07
  3     0.000,+00    0.000,+00    0.000,+00
  4     0.000,+00    0.000,+00    0.000,+00
  5     0.000,+00    0.000,+00    0.000,+00
  6     0.000,+00    0.000,+00    0.000,+00
```

CASE 5.A.2 FINAL OUTPUT

THE NEW GOAL WILL BE 5.72E+00

THE DESIGN.. D/T LIMITS= 9.SQUARE ROOT.1

MEMBER	DIAMETER	THICKNESS	AREA	L(R)/T(R)	MOMENT OF INERTIA
1	2.160	.012	.062	176.88	4.813.-02
2	1.804	.018	.104	97.56	4.269.-02
3	1.804	.018	.104	97.56	4.269.-02
4	1.804	.018	.104	97.56	4.269.-02
5	1.804	.018	.104	97.56	4.269.-02
6	3.546	.016	.166	210.18	2.956.-01
7	3.546	.016	.166	210.18	2.956.-01
8	3.546	.016	.166	210.18	2.956.-01
9	3.546	.016	.166	210.18	2.956.-01

THE ANALYSIS

LOAD CONDITION 3

STRESSES

MEMBER	STRESS	FORCE	ELLER LIM.	CRIPPLING LIM.	LOWER LIM.	UPPER LIM.
1	0.0	0.0	-10654.6	-10654.0	-17000.0	30000.0
2	10037.4	1052.5	-11471.2	-26649.0	-17000.0	30000.0
3	-10037.4	-1052.5	-11471.2	-26649.0	-17000.0	30000.0
4	10037.4	1052.5	-11471.2	-26649.0	-17000.0	30000.0
5	-10037.4	-1052.5	-11471.2	-26649.0	-17000.0	30000.0
6	-2692.9	-506.3	-12303.0	-12369.0	-17000.0	30000.0
7	2692.9	506.3	-12303.0	-12369.0	-17000.0	30000.0
8	-2692.9	-506.3	-12303.0	-12369.0	-17000.0	30000.0
9	2692.9	506.3	-12303.0	-12369.0	-17000.0	30000.0

DISPLACEMENTS

NODE			
1	0.00000	.11324	0.00000
2	0.00000	-.11324	0.00000
3	0.00000	0.00010	0.00000
4	0.00000	0.00000	0.00000
5	0.00000	0.00010	0.00000
6	0.00000	0.00010	0.00000

LOAD CONDITION 4

STRESSES

MEMBER	STRESS	FORCE	ELLER LIM.	CRIPPLING LIM.	LOWER LIM.	UPPER LIM.
1	-9693.1	-734.9	-10654.6	-10654.0	-17000.0	30000.0
2	-1608.0	-174.9	-11471.2	-26649.0	-17000.0	30000.0
3	-10537.5	-1105.0	-11471.2	-26649.0	-17000.0	30000.0
4	-10463.3	-1098.9	-11471.2	-26649.0	-17000.0	30000.0
5	-1608.0	-174.9	-11471.2	-26649.0	-17000.0	30000.0
6	-12248.7	-2303.1	-12303.0	-12369.0	-17000.0	30000.0
7	1481.5	363.7	-12303.0	-12369.0	-17000.0	30000.0
8	1481.5	363.7	-12303.0	-12369.0	-17000.0	30000.0
9	-12212.7	-2296.3	-12303.0	-12369.0	-17000.0	30000.0

DISPLACEMENTS

NODE			
1	.02938	0.00010	.00076
2	.11885	-.00075	-.19736
3	0.00000	0.00010	0.00000
4	0.00000	0.00010	0.00000
5	0.00000	0.00010	0.00000
6	0.00000	0.00010	0.00000

PAGE 205 INTENTIONALLY BLANK

CASE 5.B FINAL OUTPUT

DRAWDOWN CYCLE COMPLETE, WEIGHT= 6.[illegible]
NEW DRAWDOWN GOAL WILL BE WPE= 6.[illegible]

THE DESIGN IS

MEMBER	D	T	D/T	LIMITS 10.00 AND 900.00
1	2.03	.012	105.[illegible]	
2	2.11	.014	142.[illegible]	
3	2.20	.014	155.[illegible]	
4	2.20	.014	155.[illegible]	
5	2.11	.014	142.[illegible]	
6	3.64	.018	195.[illegible]	
7	3.64	.018	194.[illegible]	
8	3.64	.018	194.[illegible]	
9	3.64	.018	195.[illegible]	

THE ANALYSIS

LOAD CONDITION 3

MEMBER	STRESS	EULER	CRIPPLING	LIMITS	
1	-8.814,+03	-8.[illegible],+03	-1.[illegible]	-1.689,+04	2.989,+04
2	-1.660,+03	-1.542,+04	-1.[illegible]	-1.689,+04	2.989,+04
3	-1.112,+04	-1.538,+04	-1.[illegible]	-1.689,+04	2.989,+04
4	-1.111,+04	-1.537,+04	-1.[illegible]	-1.689,+04	2.989,+04
5	-1.660,+03	-1.541,+04	-1.[illegible]	-1.689,+04	2.989,+04
6	-1.120,+04	-1.122,+04	-1.[illegible]	-1.689,+04	2.989,+04
7	1.453,+03	-1.271,+04	-1.[illegible]	-1.689,+04	2.989,+04
8	1.454,+03	-1.270,+04	-1.[illegible]	-1.689,+04	2.989,+04
9	-1.120,+04	-1.122,+04	-1.[illegible]	-1.689,+04	2.989,+04

NODE	DISPLACEMENTS		
1	2.382,-02	1.711,-06	-2.[illegible]-03
2	1.049,-01	-1.584,-06	-1.[illegible]-01
3	0.000,+00	0.000,+00	0.000,+00
4	0.000,+00	0.000,+00	0.000,+00
5	0.000,+00	0.000,+00	0.000,+00
6	0.000,+00	0.000,+00	0.000,+00

LOAD CONDITION 4

MEMBER	STRESS	EULER	CRIPPLING	LIMITS	
1	-8.806,+03	-8.849,+03	-1.[illegible]	-1.689,+04	2.989,+04
2	-1.109,+04	-1.412,+04	-1.[illegible]	-1.689,+04	2.989,+04
3	-1.665,+03	-1.737,+04	-1.[illegible]	-1.689,+04	2.989,+04
4	-1.664,+03	-1.735,+04	-1.[illegible]	-1.689,+04	2.989,+04
5	-1.109,+04	-1.412,+04	-1.[illegible]	-1.689,+04	2.989,+04
6	1.452,+03	-1.276,+04	-1.[illegible]	-1.689,+04	2.989,+04
7	-1.119,+04	-1.118,+04	-1.[illegible]	-1.689,+04	2.989,+04
8	-1.119,+04	-1.118,+04	-1.[illegible]	-1.689,+04	2.989,+04
9	1.452,+03	-1.277,+04	-1.[illegible]	-1.689,+04	2.989,+04

NODE	DISPLACEMENTS		
1	-1.049,-01	-2.678,-06	-1.[illegible]-01
2	-2.385,-02	-2.265,-06	-2.[illegible]-03
3	0.000,+00	0.000,+00	0.000,+00
4	0.000,+00	0.000,+00	0.000,+00
5	0.000,+00	0.000,+00	0.000,+00
6	0.000,+00	0.000,+00	0.000,+00