BELLCOMM, INC.
1100 SEVENTEENTH STREET, N.W. WASHINGTON, D.C. 20036

COVER SHEET FOR TECHNICAL MEMORANDUM

TITLE- A Lunar Exploration Program

TM- 68-1012-1

DATE- January 5, 1968

FILING CASE NO(S)- 710

AUTHOR(S)-N. W. Hinners
D. B. James
F. N. Schmidt

FILING SUBJECT(S)- Lunar Exploration
(ASSIGNED BY AUTHOR(S)-

ABSTRACT

A Lunar Exploration Program has been developed which covers the period from the first lunar landing to the mid-70's. It is based upon a reasonable set of assumptions regarding hardware capability and evolution, an increase in scientific endeavor, launch rates, budgetary constraints, operational learning, lead times, and interaction with other space programs. The program is divided into four phases:

a) An Apollo phase employing current Apollo hardware

b) A Lunar Exploration phase utilizing an Extended Lunar Module (ELM) with increased landed payload weight and staytime capability

c) A Lunar Orbital Survey and Exploration phase using the AAP-1A carrier or the LM-ATM to mount remote sensors and photographic equipment on a manned polar orbit mission

d) A Lunar Surface Rendezvous and Exploration phase which uses a modified LM (Lunar Payload Module) in an unmanned landing to provide increased scientific payload and expendables necessary to extend the accompanying manned ELM mission to two weeks duration.

(NASA-CR-92746) A LUNAR EXPLORATION PROGRAM (Bellcomm, Inc.) 45 p

N79-71549

Unclas
00/12 11072

FF No. 61 CR-92146
(NASA CR OR TMX OR AD NUMBER) (CATEGORY)
[redacted]

BA-145A (3-67)

SEE REVERSE SIDE FOR DISTRIBUTION LIST

DISTRIBUTION

COMPLETE MEMORANDUM TO

CORRESPONDENCE FILES:

OFFICIAL FILE COPY
plus one white copy for each additional case referenced

TECHNICAL LIBRARY (4)

NASA Headquarters

Messrs. R. J. Allenby/SL
H. L. Anderton/RET
E. P. Andrews/MLA
W. O. Armstrong/MB
D. A. Beattie/MTL
R. P. Bryson/SL
H. Cohen/MLR
P. E. Culbertson/MLA
D. S. Diller/MAT-3
F. P. Dixon/MTY
S. E. Dwornik/SL
J. A. Edwards/MLO
H. S. Fosque/TA
M. R. Gill/SL
J. M. Goldberg/MTL
P. Grosz/MTL
R. J. Gutheim/SF
G. H. Hage/MA
E. W. Hall/MTG
J. B. Hanley/MTL
D. P. Hearth/SL
W. Jakobowski/SL
L B. James/MA
R. W. Johnson/MTL
J. I. Kanter/REG
T. A. Keegan/MA-2
L. J. Kosofsky/SL
F. W. Kretzmann/MPR
E. W. Land,Jr./MAO
D. R Lord/MTD
B. Maggin/PT
C. W. Mathews/ML
B. Milwitzky/SL
M. W. Molloy/SL

NASA Headquarters (Cont'd)

Messrs. O. W. Nicks/SD
W. T. O'Bryant/SL
M. J. Raffensperger/MTE
L. Reiffel/MA-6
W. H. Rock/MLR
R. C. Ruhle/MAO
A. L. Ryan/MLR
M. Savage/MLT
L. R. Scherer/SL
W. C. Schneider/MA
A. D. Schnyer/MTV
J. D. Stevenson/MO
A. T. Strickland/SL
M. J. Swetnick/SL
P. G. Thome/SF
J. H. Turnock/MA-4
K. L. Wadlin/SL
M. G. Waugh/MTP
V. R. Wilmarth/SL
F. A. Zihlman/SL

Goddard Space Flight Center

Messrs. I. Adler/641
N. F. Ness/612
D. J. Williams/611

Kennedy Space Center

Mr. W. B. Shapbell/AA-SVO

Langley Research Center

Mr. C. H. Nelson/159

Marshall Space Flight Center

Messrs. L. F. Belew/I-S/AA
L. L. Bradford/R-AS-P
E. A. Clanton/I-S/AA
N. W. Lutkefedder/I-S/AA
R. D. Stewart/I-S/AA

Ames Research Center

Messrs. B. Y. Creer/210-9
L. Roberts/202-5 (2)
G. Allan Smith,Jr./210-5
J. S. White/210-3

DISTRIBUTION

Manned Spacecraft Center

Messrs. P. R. Bell/TH
J. W. Dietrich/TH2
J. E. Dornbach/TH3
J. M. Eggleston/TH
M. A. Faget/EA
J. Funk/FM8
H. E. Gartrell/KF
J. W. Harris/TA
W. N. Hess/TA
E. A. King/TH2
T. R. Kloves/ET
J. P. Loftus/PD8
O. E. Maynard/PD
A. J. Meyer,Jr./ET
F. T. Pearce/TB
J. H. Sasser/TH3
H. H. Schmitt/CB
J. R. Sevier/PD12
J. W. Small/TD
W. E. Stoney/ET
J. J. Taylor/FM8
R. F. Thompson/KA
R. E. Vale/TA
J. M. West/AD

Jet Propulsion Laboratory

Messrs. J. B. Adams/183-501
J. D. Burke/111-110
A. R. Hibbs/111-116
L. D. Jaffe/169-335

U. S. Geological Survey

Messrs. A. H. Chidester/Flagstaff
H. Masursky/Menlo Park
E. M. Shoemaker/Flagstaff
D. E. Wilhelms/Menlo Park

Lamont Geological Observatory

Dr. P. Gast

Southwest Center for Advanced Studies

Dr. F. Johnson

Univ. of California

Messrs. J. Arnold/San Diego
A. L. Burlingame/Berkeley

Univ. of Virginia

Dr. L. W. Fredrick

Stanford Univ.

Dr. R. Jahns

Mass. Institute of Technology

Dr. E. Simmons

Franklin and Marshall College

Dr. D. Wise

Smithsonian Astrophysical Observatory

Dr. C. Lundquist

DISTRIBUTION

Bellcomm, Inc.

Messrs. F. G. Allen
G. M. Anderson
D. R. Anselmo
A. P. Boysen, Jr.
J. P. Downs
J. Gillespie
D. R. Hagner
P. L. Havenstein
F. Heap
J. J. Hibbert
W. C. Hittinger
B. T. Howard
C. M. Klingman
J. Kranton
K. E. Martersteck
R. K. McFarland
J. Z. Menard
V. S. Mummert
I. D. Nehama
G. T. Orrok
J. W. Powers
T. L. Powers
I. M. Ross
P. S. Schaenman
R. L. Selden
J. M. Tschirgi
R. L. Wagner
J. E. Waldo
All Members Division 101

BELLCOMM, INC.
1100 Seventeenth Street, N.W. Washington, D.C. 20036

SUBJECT: A Lunar Exploration Program - Case 710

DATE: January 5, 1968

FROM: N. W. Hinners
D. B. James
F. N. Schmidt

TM-68-1012-1

TECHNICAL MEMORANDUM

1.0 INTRODUCTION

With the Lunar Orbiter program essentially completed and Surveyor near its terminus, we will soon be entering the manned Apollo phase of lunar exploration. It is, therefore, prudent to look seriously now at the total lunar exploration program rationale, to see the next phase both in the context of our preceding programs and of succeeding phases.

Up to now, Apollo mission planning has concentrated on the first lunar landing. This is a natural consequence of the large effort required to accomplish the basic goal of the lunar landing and the test flights preceding. On the other hand, planning for AAP lunar missions usually commences with the 10th or later Saturn V system for the prime reasons that no one knows at what juncture Apollo will be successful and that several years might be required to make spacecraft modifications. It is the intent of this memorandum to structure a total program in the sense of filling the gap in planning between Apollo and AAP. It is not total in the sense of all lunar exploration but is based upon the assumption that lunar exploration will be a continuing aspect of human endeavor with or without gaps of significant duration.

There exist a number of guidelines upon which the program is built. Foremost is a desire to program an evolution in both the science and technology into the plan but within the bounds of reason, such bounds being dictated largely by economic and schedule considerations. This means making maximum use of Apollo capability. It also means that existing Lunar Orbiter photography will be used for candidate site selection and mission planning. The program must also contain well defined decision points and indicate what happens if the decisions are not made. This has resulted in a program with floating decision points with regard to time and specific spacecraft. That is, the program can contract in terms of accomplishments if decisions are made to go ahead early with changes or it can stretch out if a particular mission is unsuccessful.

2.0 PROGRAM PLAN DESCRIPTION

A. Format and Vehicle Assignments

As a convenient and useful format for summary purposes, we depict the program in terms of a Flight Mission Assignments Plan (FMAP). As can be seen from Figures 2, 8, and 23, no vehicle assignments have been made to the Saturn V's, CSM's or LM's in order to connote the flexibility. For the purposes of this study an independent numbering system has been used, namely, Lunar Landing Missions and Lunar Orbital Missions. Nine possible single launch landing missions are described, one orbital mission, and two dual landing missions which could carry to about launch vehicle 520.

B. Phasing

Four mission phases (see Figure 1) have been designated with general characteristics applicable to each phase. These phases, to be discussed below, are:

1. Apollo Lunar Landing Missions
2. Lunar Surface Exploration Missions
3. Lunar Orbital Survey and Exploration
4. Lunar Surface Rendezvous and Exploration

In order to progress from one phase to the next, clearcut decisions will have to have been made at some earlier point. Those deicisons usually refer to hardware modifications or new starts.

In the discussion of each phase we shall concentrate on the system to be used, the constraining operations, and the technological and scientific aspects.

2.1 Apollo Lunar Landing Missions

This phase of lunar flight commences with the first manned lunar landing and continues for five missions or until sufficient confidence and experience has been achieved with basic Apollo hardware as well as with the astronaut's operational capability on the lunar surface. We envision pushing Apollo from the first ultra-conservative mission to the limit of its capability by the last in this sequence. The importance of acquiring this basic information in a stepwise manner

cannot be overemphasized. Since simulations are not entirely satisfactory, it is only by actual mission conduct that we will know for certain what are propellant budgets, guidance errors, viewing problems, and astronaut operational capability.

Figure 2 summarizes the series of missions in the first phase. LLM 1 is targeted to a mare for the obvious reason that all of the Apollo candidate landing sites are in mare areas. It is not certain which particular mare site will be the target for LLM 1 and in most respects it does not matter. The prime mission objectives of demonstrations of the landing capability and manned surface operation and sample collection are site independent. A prime "engineering" objective is to determine soil mechanics properties. The staytime of 22 hrs with two EVA periods appears to be consonant with judicious use of a new system in a new environment.

LLM 2, flown three months after LLM 1, is targeted to another mare site and has all the scientific objectives of LLM 1 plus the deployment of ALSEP #1 (see Figure 3 for ALSEP arrays). In the CSM,we carry several rather simple experiments designed to obtain data which will be useful in designing a full-fledged lunar orbital mission later in the program.

LLM 3 provides the first real use of the basic Apollo capability to work toward increasing the scientific return. It is here that the redesignation capability is put to use. This capability exists in Apollo primarily for the purposes of manually targeting the LM to good areas in the landing ellipse after the prime G & N system has aimed the LM to the ellipse. For this purpose there is about 90 ft/sec in the ΔV budget. Figure 4 indicates how some of this might be used to get close to a point during landing rather than avoiding areas. The Apollo ellipse is shown with overlays of lines of equal ΔV. It can be seen that, assuming redesignation is made from 30 K ft uprange at 8 K ft altitude, one can reach almost any point in the ellipse. As an example of the type of feature one would aim for, we show a "fresh" crater with boulders nearby. The particular value of such a crater is that one can be certain that the rocks have come from that particular site and are not ejecta from some distant region. The samples provide a reasonably unaltered sample of mare fill. Through analysis of the radioactivity of the rocks, one may determine the age of the crater and thus measure the relative rates of lunar processes. On LLM 3 we continue orbital experiments including photography

of targets-of-opportunity, IR and UV feasibility experiments, and cosmic ray and micrometeoroid environment experiments. These would require auxiliary equipment in the CM such as the scientific airlock module for exposing micrometeoroid plates and emulsion stacks to the environment.

LLM 4 is now targeted to a more significant feature in the Apollo zone, namely a wrinkle ridge. This is the first opportunity to look at structure in the mare other than simple layering as exposed in very shallow craters. The ALSEP on this mission, #3, carries the heat flow experiment for the first time. Since the lunar hand-held drill is part of the heat flow experiment, this mission may be the first on which any significant core (up to 3 m) is brought back to earth for analysis. The importance of this is in determining the stratigraphic sequences and relationships of lunar surface materials, a problem which may be only partially investigated with coring tubes on earlier missions.

LLM 5 pushes basic Apollo capability and astronaut operations to the limit in going to a 36 hr stay with four EVA's. This time can be well spent in investigating the highland-mare relationship and sampling, unambiguously, the highland material. ALSEP #4 differs from #3 in that it has an Active Seismic Experiment in place of the Heat Flow Experiment. In a sense it would be better to fly the ASE earlier for the reason that its three geophones and four charges do not enable one to decipher complex structure. It would be more likely to provide interpretable information on subsurface structure in a region where one feels the subsurface is relatively simple.

One should note that we are suggesting that after the second lunar landing mission, the launch interval be increased to six months. This assumes that LLM 2 is too close on the heels of LLM 1 to affect its launch date. By stretching the launch interval one gains feedback from the previous flight (relative to sampling, minor equipment changes, operations workload,* and mission planning) and at the same time saves spacecraft for more efficient use later in the program. For example, suppose that after the first successful landing a decision is made to proceed with development of the Extended LM (ELM). The lead-time may be about two years in which case seven more launches with Apollo hardware

---

*Lunar Orbiter experience indicates that missions on three month centers are extremely hard on ground support personnel.

would have been made before an ELM mission if launches continue at three month centers whereas only four more are used on the six month basis. Three spacecraft are gained for modification.

At this juncture we should note that the five missions are not rigidly fixed in the program. Progress in the use of Apollo capability should proceed as fast as practical and missions of lesser accomplishment deleted. For example, if redesignation proves feasible by LLM 2, then LLM 3 or 4 would replace LLM 2. Then either of two options exists: contract the Apollo Lunar Landing Phase to four missions or, if there is no new or modified hardware, add another mission utilizing the maximum Apollo capability. If it proves feasible to fly an ALSEP on LLM 1, then we add a new ALSEP to LLM 5.

2.1.1 Summary of Accomplishments of Phase One

As was stated in the introduction, an attempt has been made to show an increase in scientific endeavor and exploration capability with each mission.

The first mission initiates the exploration activity of man on the lunar surface with the Apollo system and returns the first lunar samples for scientific analysis on earth. The second mission will develop the capability of man to deploy scientific instruments on the moon which will transmit data on lunar properties over an extended period of time. The return of samples from a different marial area will also constitute part of LLM 2.

On mission 3 an additional EVA is shown as part of the exploration profile to take advantage of the redesignation testing to land to a point of scientific interest. As on all missions, the return of samples is considered significant but particularly so when they are collected in geologic context.

The fourth mission makes use of the redesignation capability developed on the previous mission to land near a point of interest (wrinkle ridge) within an Apollo type ellipse. Three EVA periods are again shown.

The number of EVA's is again extended on the fifth mission, as is the staytime in order to allow sufficient time for useful geologic traverses as well as for deployment of the Active Seismic Experiment.

The scientific activities of each landing on a mission-by-mission basis appear in Figures 5 through 7.

Collectively, however, we can say that these missions will give us a first-cut, albeit limited, understanding of the moon in terms of its structure, composition, processes, environment and history. They enabled us to set up four small geophysical stations (ALSEP or Apollo Lunar Surface Experiments Packages) operating at least one year each. Additionally, on each mission one or more geological traverses of several thousand meters maximum distance from the landing spot will have been made and of the order of 50 lbs of lunar sample returned. While one cannot predict exactly what we will find, we can, as is done below, make educated guesses on the qualitative extent of our knowledge by the end of Apollo and encourage potential investigators to think beyond.

2.1.1.1 Structure

From the geological traverses and the Active Seismic Experiments, we should have a reasonable picture of the structure of the upper 500 feet of several mare. This picture should include estimates of the depth of the fragmental layer, the extent of layering in the marial fill, possibly on the existence of cavernous structure, and detailed knowledge of the fine structure of the very topmost material which is responsible for the visible and IR response. Clues to structure deeper than about 500 feet will come from the Passive Seismic Experiment if there is a natural source of lunar seismic energy, from the heat flow experiment, from high resolution photographs of deep craters, and possibly from analysis of orbital parameters. Even if the seismic and heat flow experiments are successful, however, one expects that, as on earth, the experiments will have to be repeated at many locations before large scale structural relationships will be decipherable.

2.1.1.2 Composition

It is expected that the major rock types constituting mare will be known both from astronaut description and from analysis of returned lunar sample. This assumes that the samples can be shown to be indigenous to the collection locale. Such a "proof" is likely to be circumstantial until a mission such as LLM 3 or 4 when crater bottoms, debris, or ridges may provide bona fide in situ samples. Further clues to the composition at depth may come from analysis of heat flow data although, judging from terrestrial experience, one is not going to be justified in constructing valid lunar models based on one experimental point.

One can assume that during the Apollo missions material will have been collected which does not appear indigenous to the mare. Such material is apt to include meteorites and continental rocks (in crater ejecta) but it will be surprising if positive identification is made of the source although a successful scientific Surveyor landing on a continental site may provide a rough correlation. All in all, results from Apollo sample analysis should give an indication as to whether or not lunar material has differentiated but it will not suffice to give much in the way of qualitative lunar bulk composition.

2.1.1.3 Processes

From analysis of returned lunar samples, in situ observations, and ALSEP experiments we expect to begin to obtain information on the relative importance of meteoroid impacts and volcanic phenomena as shapers of lunar topography. The limited radius-of-operation from the Apollo spacecraft and probable occurrence of both processes lead one to suspect that there will be no unambiguous answer.

2.1.1.4 Environment

It is expected that the ALSEP experiments will provide extensive information on the current interaction of the solar wind, cosmic rays and the earth's magnetospheric tail with the lunar surface. Analysis of returned samples will elucidate some of the past history of the interactions but with only a few sample spots, one would be surprised to find a clear-cut answer. The magnetometer, of course, will establish the existence or non-existence of a lunar magnetic field. If one exists, however, little will be known relative to spatial variations.

The total lunar atmospheric pressure and crude information on the specific composition should be known. It is probable that better measurements will be required.

2.1.1.5 History (sequence of events)

A history of the moon, including a sequence of events, will be an end product of the lunar exploration. Although many relative ages of lunar features are already known, it is expected that the Apollo missions will enable us to obtain, via radioactive dating techniques applied to returned samples, the first absolute ages. Limitations on the time and radius-of-operations available to Apollo

astronauts however, make it likely that most meaningful determinations must await future missions when samples are collected in context and the detailed geology becomes known.

In summary, the Apollo missions will provide first-cut answers to many of the questions posed relative to the moon. It is expected, however, that most Apollo lunar-related experiments will have to be repeated or improved for at least three reasons. One, the number of missions is insufficient to obtain the necessary number of data points (selenographical spread). Secondly, the experiments may not have been properly designed for the as-now-unknown lunar environment, and, third, the opportunity for conducting a better experiment may be dependent upon longer staytime and mobility. The next phase is designed to rectify these problems.

2.2 Lunar Exploration Phase

The Lunar Exploration phase, depicted in the FMAP format in Figure 8, commences with both modified Apollo hardware which can provide an increase in lunar staytime, landed payload and site flexibility and a change in philosophy. Using the Extended LM for approximately three day staytime, we now target a mission to a specific site to investigate specific lunar features and relationships among various features. This requires many changes in operations in addition to the redesignation used in the Apollo phase. These changes are a result of wanting to keep several launch opportunities available each month for a specific target and for gaining payload by optimizing propellant budgets. It is obvious that in order to proceed with this phase, a decision to develop the ELM and some payload items had to have been made soon after the first successful lunar landing. Consisting of four missions, this phase is expected to capitalize upon the results of the Apollo phase and commence the true lunar exploration.

In order to allow for more than one launch attempt to the same site within a given number of days of a launch opportunity and yet maintain the sun angle constraints at touchdown of 7° - 20°, either the translunar flight time or the number of lunar orbits prior to CSM - LM separation can be varied. Figure 9 shows that a landing can be achieved on the first and third days, within the lighting constraints, by having flight times to the moon of 125 hours and 95 hours respectively. Figure 10 shows that by varying the number of lunar orbits prior to CSM-LM separation, landings can also be made within the lighting constraints by launching on various days within the launch opportunity.

Payload delivery to the lunar surface can be increased by taking advantage of the additional capability of the service propulsion system to deliver the ELM to lower altitudes than those used in the Apollo phase.

The first mission in the sequence is LLM 6 and is targeted to the Tobias Mayer Domes region (Figure 11) of the moon (13° N, 32° W). The objectives, payload, and profile will be described in more detail for this mission since LLM 7, 8 and 9 follow a similar format.

2.2.1 Objectives at Tobias Mayer Domes Region

The Tobias Mayer Domes area was chosen for an example LLM 6 mission for the reason that it is one of the potential AAP science sites photographed on the Lunar Orbiter V mission which is not far from the Apollo Zone and which appears to have scientifically interesting, but structurally simple, features. The latter is occasioned by the fact that the mission does not include mobility aids and one must count on being able to decipher relationships in a short time over small distances.

Figure 12 is a reproduction of a LO V medium resolution photograph of the area (frame M-167). It depicts the general geologic setting of one typical dome. Situated on the eastern edge of Oceanus Procellarum, it is bound on the east by a nearly 2 km highland ridge and on the west by a sinuous rille. The dome also displays a well developed, elongated, large (5 km in length) summit crater. The schematic profile across all these structural features (Figure 12) illustrates their mutual relationships. It is constructed with the assumption that the mare material in which the rille is situated is at about the same elevation as the mare material east of the highland ridge. This elevation has been considered the "mare level," i.e., zero elevation.

There are two distinct structural trends in the area which form part of the "lunar grid pattern." One is northeasterly and the other northwesterly. The highland ridge, as well as the portion of the rille NW of the dome, are parallel to the former; whereas the elongation of the summit crater, the part of the sinuous rille southwest of the dome, the crater chains and conspicuous crater clusters designate the northwesterly structural trend. The grid pattern is also manifested in the small-scale structures of the sinuous rille.

For two reasons we have looked at three subareas, X, Y, and Z of Figure 12, of the dome region. First, it is obvious that on a three day mission with no mobility aids one cannot hope to see all the features of interest. Second, the approach paths to the targets differ. In order to reach X, the LM radar system must be able to cope with topography of 1 to 2 km relief less than 10 km from the aim point; while for Y, a reasonably flat approach is available for 30 km from the east.

The geologic objectives and expected accomplishments of a mission to any one of the three areas are listed in Table I. From the table, it is evident that in all three cases, the study of the rille is an essential part of the exploration. Other features of major scientific interest within areas X, Y and Z are the dome boundary, the crater chain and the highland ridge, respectively.

The emphasis on the rille is influenced by the hypothesis that it is structurally controlled. From Figure 12, it is evident that, north and south of the dome, the rille runs in a general north-south direction. However, the path of the rille is conspicuously affected by the position of the dome.

This situation per se suggests that the rille is structurally controlled. A further indication of this is, as mentioned above, the fact that, northwest and southwest of the dome, the rille follows the two main structural trends of the region. In small detail most portions of the rille are also controlled by the northeast-southwest and northwest-southeast structural directions.

Thus, from the above discussion we establish the belief that the occurrence of the dome along with the sinuous rille is not accidental. Both features are genetically interrelated. Therefore, the most interesting area of study (in an Apollo-type mission) would be that where both features could be reached, area X.

A surface mission profile for a three day, 6 EVA exploration for area X is outlined in Figure 16. We have assumed that the astronauts have a radius of operation of 1 km and that EVA periods are dual exploration (2 astronauts) of three hours each. Profiles for areas Y and Z would not look greatly different.

With regard to the ALSEP experiments, it would appear that the experiment complement might be the same for X, Y, and Z. We envision that each of these locations offers a great potential for an improved active seismic experiment in order to investigate what looks like structural contact, e.g., dome-rille, rille-crater, and highland-mare.

The next step, which is underway, is to consider LLM 6 with mobility aids such as the LFU or LSSM and more staytime.

As an indication of the changes to be expected, let us consider a landing point identical to that assigned to Area Y (Figure 14). In order to reach all geologically interesting features (rille walls and floor, structures of the dome, contact region between rille and dome, summit crater of dome, crater chain, highland ridge, and highland-mare contact), the required range for the LFU would be on the order of 25 km.

2.2.2 Extended LM

The Lunar Exploration Phase depends upon the introduction of new systems, the first of which is the Extended LM (ELM). As noted before, the decision would have to be made after the first successful landing to go ahead with development of the ELM in order to have it for LLM 6. This assumes that there is a two year lead-time and that all the necessary feasibility and engineering design studies had been conducted.

The Extended LM is a concept for Lunar Exploration missions that assumes confidence from early Apollo landings and the existence of Apollo growth potential in terms of reduced margins, relaxed constraints, and optimized profiles which will provide improved, general capability. These improvements are then used in some combination for increased staytime and activity, landed payload weight and volume, returned payload weight, and in landing flexibility and accuracy.

In missions LLM 6 through 9, the increased capability has been used primarily for increasing staytime (added expendables, additional electrical power [solar array], cryogenic oxygen supply) and for additional descent payload (e.g., Figure 17).

The techniques for increasing payload may be divided into two types. The first type increases LM separation weight by reducing descent engine performance requirements. In this

category there are two items: initiating LM descent from 50,000 ft circular conditions and reduction in high gate altitude. These two items result in a net payload increase of 1,000 lbs. The second type reduces LM ascent fuel requirement and does not affect LM separation weight. Here ascent propellant is off-loaded and additional payload is added for delivery to the surface. The increase in capability possible here is obtained by the use of the CSM for active rendezvous and the possible deletion of the rendezvous radar and the associated ascent fuel saved by ascending into a lower altitude orbit. The net payload increase for these items is 600 lbs.

The total payload capability including the present Apollo 300 lbs is 1,900 lbs. The expendables required to increase the staytime from 1 1/2 days to 3 days are included in the 1,900 lbs and would reduce the net available to ∿1,300 lbs maximum.

2.2.2.1 ELM Payload

A science payload landed weight of about 550 lbs is categorized in Figure 17. This represents about 250 lbs more than was available from Apollo, such increase being about equally divided between an advanced ALSEP and other science equipment. The configuration of the advanced or follow-on ALSEP is shown in Figure 18. Building upon the technology developed for the initial ALSEP, it makes use of an RTG power supply and a central station for data handling. An increase in experiment weight to between 100 and 150 lbs would enable one to fly a full complement of lunar experiments including seismic (passive and active), magnetic, heat flow, gravimetric, laser ranging, atmospheric, and micrometeoroid. Consonant with this increase in experiments is a small increase in power, lifetime, data rate, and volume. It is highly desirable to have a reprogrammable central station in order to allow experiment selection as late as possible prior to flight and, possibly, to allow real-time experiment selection. In order to do this, modularity is needed in the experiments to allow a "plug-in" mode not available on the current ALSEP and to allow experiments to be stowed in volumes other than the SEQ bay of the LM.

If frequency assignment becomes a problem when several ALSEP's are operating simultaneously on the lunar surface, data storage with command readout may be necessary.

Concerning the experiments themselves, at least four new ones are desirable and have progressed sufficiently to be

thought ready for implementation and include the tidal gravimeter, micrometeoroid detector, laser ranging, and mass spectrometer. Several experiments now on ALSEP could utilize up-rating. The sensitivity of the PSE can be increased if early experience indicates that it is warranted, and its frequency response increased to obtain tidal data. The HFE can be improved either by using a new, more sensitive sensing mechanism, or by drilling deeper holes in order to increase the absolute gradient measured. The ASE up-rating would consist of adding more geophones and replacing the mortar charges with astronaut buried charges. The exact number of each will be a function of the geology at a specific site and it may require some quasi-real time data analysis in order to make the decision.

2.2.3 LLM 7 - 9

The objectives of LLM 6 - 9 are summarized in Figure 8. LLM 7 is targeted to another science area where one would investigate new structures on the lunar surface. For example, one of the large straight rilles such as Hyginus, which may have a different origin than the sinuous rille seen on LLM 6. Another potential target for this mission, with no mobility aids, is Orbiter site V-P-8, which contains a linear rille and a relatively bright crater cluster. An advanced ALSEP would again be carried as would orbital feasibility experiments.

LLM 8 and 9 also carry advanced ALSEP's on ELM missions. They now, however, carry a mobility aid such as a lunar flying unit (LFU). As depicted in Figure 19, the LFU which might be carried on an ELM is a one-man vehicle weighing about 200 lbs dry. Still in the study phase, LFU's should make use of engine developments already in progress or completed and also should use LM propellants. The latter is critical to ELM missions where limited payloads prevent one from carrying significant propellant for LFU missions over that available from use of reserve and residual LM propellants.

The availability of LFU's changes the character of lunar exploration in that it allows one to land in smooth spots but traverse several kilometers to rough or high elevation regions in a minimum of time. In Figure 20 one sees hypothetical traverses laid out (Ref. 1) for a 3 day ELM mission to the Flamsteed ring. The initial study assumed that two LFU's were available for use. Should only one be carried, the character of that particular mission would not change drastically since extreme conservatism has been assumed

in such a first-time use. The kind of activity or sequencing which might change would be flying to the base of the ridge prior to flying to the crest. This would have to be done to test the slope stability in case the LFU must be abandoned at the crest and the astronaut return down-slope on foot.

If an LFU is to be designed, built and tested in time for LLM 8, a go-ahead must be made, assuming a two year development, after the second or third Apollo landing. Detail design studies must obviously commence prior to any lunar landing--probably in the beginning of FY 70. An earlier delivery than LLM 8 would be welcome, for the LFU has the capability of so increasing the exploration return that it is practically site-independent. Whether or not one would include an LFU on the first ELM mission, LLM 6, is dubious for there are tasks associated with a new ELM which might take considerable time, thus not leaving much for exploration if an EVA period is used for LFU familiarization and testing. Alternatively, this suggests that possibly one should not select complicated sites for the first LFU mission. (Flamsteed does not appear overly complicated.)

LLM 9 is essentially a duplicate of LLM 8. Targeted to the Fra Mauro area, with an abundance of domes and rilles, one would concentrate the exploration on determining structural relationships, studying rille-filling processes, and starting geophysical profiling with a gravity survey across a small rille. The scientific accomplishments of this phase are summarized in Figures 21 and 22.

2.3 Lunar Orbital Survey and Exploration

A logical place for inclusion of a lunar orbital survey mission is prior to the next quantum jump in lunar exploration, the dual missions. Prior, for the reason that the orbital mission should have as one of its prime objectives the acquisition of data from potential subsequent surface sites which will allow one to pick the best of those available and pre-plan as much as possible. The other objective of the mission would be to acquire data from the entire lunar surface for scientific reasons and interpret it based on ground-truth obtained at landing sites. If one wishes to go with a full lunar survey of 28 days in lunar polar orbit, it is evident that an augmented 35 day CSM must be available. Additionally, as much of the instrumentation as possible should have been flown prior on the CSM of standard Apollo or ELM missions. As yet, there is no configuration available for this mission but one would hope to take advantage of experience gained through earth orbital remote sensing with the Applications 1-A package.

Because of the differing requirements for many remote sensors, relative to sun angle on the lunar surface, the hardware has been specified to have the option for continued use in an unmanned mode.

The payload for the orbital mission and the expected results are shown in Figure 24. The reader is referred to a discussion by W. L. Piotrowski (Ref. 2) for details on equipment and accomplishments.

2.4 Lunar Surface Rendezvous and Exploration

This phase is introduced after the orbital mission (Figure 23). With a dual launch, a step function in staytime and in landed payload weight can be achieved at the cost of two launches per mission.

The manned delivery system is similar to the Extended LM with the option of augmenting the descent stage in order that it would have a reasonable capability by itself. This would be useful in the event of a rendezvous failure or because a less geologically complex target had been chosen for a single mission. The unmanned system, the Lunar Payload Module (LPM), is a LM, augmented or not, in which all of the normal ascent features have been eliminated, i.e., crew provisions, life support, ascent electrical power, the ascent engine, ascent propellant tanks, controls and displays. In their place would be logistics payload items and their support systems up to about 8,000 lbs while the guidance system would be modified to provide an unmanned landing capability. Figure 25 shows a weight breakdown of a typical LPM payload.

Just because the dual missions have greater weight capability and longer staytime does not mean that one can relax the necessity of landing to a point as was required in the Lunar Surface Exploration phase. Here the mission is complicated by the fact that the LPM has to land unmanned and the LM crew have to work with both vehicles on the surface, i.e., they have to be close together. Thus, if the unmanned vehicle lands first it should have a CEP of about 100 m for efficiency and the manned vehicle should land as close to it as possible using redesignation procedures. A number of schemes have been suggested, see Fig. 26, to achieve a CEP of 100 m, of which TV guidance with man in the loop appears the most promising. A less promising alternative is to have the manned vehicle land first and then "talk down" the unmanned vehicle which would have been stored in orbit.

At this phase in the exploration, if it has not already occurred, one will have to land in rough terrain or at least approach a landing site over rough terrain. Here current design and operations of the landing radar would be inadequate, as illustrated in Figure 27. The most serious problem is that of the very rough and relatively unknown approach path and the solutions which are currently being examined use much steeper descents such that the landing radar looks at the site itself rather than at some other, unknown altitude terrain. Increased steepness of descent costs fuel and, hence, one must find means of reducing the ΔV required to eliminate guidance errors or pay the penalty in the form of lower landed payload weight.

2.4.1 Missions

To illustrate the Lunar Surface Rendezvous and Exploration phase, two missions have been chosen, Figure 23. The first is targeted to the Hyginus Rille or the Davy Crater chain. The Davy Crater chain would be the best example but the photography of this site is limited to earth based or Orbiter IV photography of about 100 m resolution. The Marius Hills area was chosen for the second mission.

On the first mission a Saturn V would launch a CSM/LPM to the moon. The astronauts would conduct a normal mission except for manning the LM. The LM descent would take place in an automatic mode with either earth or CSM override using TV for terminal guidance. The LPM, having landed and the health of its payload items monitored, would be shut down to await the arrival of astronauts in the following month. On the same mission the astronauts in the CSM would locate and photograph the landed LPM and release subsatellites carried in the empty bay of the SM. On subsequent delivery missions the LPM delivery crew could be used to perform some of the functions of a Lunar Orbital Mission, i.e., photography and remote sensor observations, perhaps requiring an extended stay in lunar orbit.

The manned mission landing would be similar to an extended LM mission landing except that it would use the LPM as the redesignation target and land close to the LPM so that the problem of transferring stores would be minimized.

2.4.2 Science

The dual mission provides a quantum jump in the ability to conduct lunar science, primarily through the increase in payload and in time available to use mobility devices

and conduct experiments which are too time consuming for an ELM mission.

The Local Scientific Survey Module (LSSM) has been introduced to augment the Lunar Flying Units used with the earlier ELM missions. Several versions of the LSSM have been studied, and Figure 28 illustrates the capability of a 1,000 lb version.

The scientific instrumentation, Figures 25 and 29, differs from that used earlier in four ways. A moderate depth (∿100 ft) drill can be carried for use at the landing site and a smaller drill (∿10 ft) for use on the LSSM. An enlarged science station can be used which enables one to conduct all significant experiments at one site and to deploy a local net of seismic stations. Traverse geophysics utilizing the LSSM will enable us to obtain the first detailed look at the lunar subsurface over distances significant relative to observed topography. Lastly, preliminary sample analysis is done in situ to allow sample selection for earth return, and to allow real time changes in the scientific conduct of the mission.

The expected results at two example dual mission sites are shown in Figures 30 and 31. The point to be emphasized is that for the first time we expect to be able to decipher relationships among the variety of lunar features rather than simply determining the nature of an isolated feature. This is directly related to having time to conduct detailed observations, having mobility, and conducting geophysical probing of the subsurface. In addition to the surface exploration, orbital remote sensing is accomplished on both the LPM delivery mission and on the manned segment.

3.0 SUMMARY

A Lunar Exploration Program has been developed which covers the period from the first lunar landing to the mid-70's. It is based upon a reasonable set of assumptions regarding hardware capability and evolution, an increase in scientific endeavor, launch rates, budgetary constraints, operational learning, lead times, and interaction with other space programs. The program is divided into four phases: Apollo; Lunar Exploration; Lunar Orbital Survey and Exploration; and Lunar Surface Rendezvous and Exploration. Characterizing each phase is a particular hardware concept, an evolution in the use of that hardware, and a specific type of scientific mission. Program flexibility is derived from

the ability to expand or contract each phase. Decision points are defined and are related to the phasing.

The Apollo phase commences with the first lunar landing and continues for four missions or until sufficient experience has been achieved such that the next phase may commence. Using standard Apollo hardware, missions evolve from ~22 hours and 2 EVA's on the lunar surface to the full capability of 36 hours and 3 or 4 EVA's. Landing sites are all in the "Apollo zone". However, redesignation, used to avoid hazards in mission 1, is used to get close to interesting features such as fresh craters or ridges, in succeeding missions. Sampling and ALSEP deployment are prime science objectives. Simple orbital experiments are conducted such as multispectral photography with Hasselblad cameras. Mission spacing is increased to 6 months to allow sufficient feedback and to avoid using an excessive (i.e., undesirable) number of spacecraft in the Apollo phase.

The Lunar Exploration Phase commences about two years after Apollo and consists of 4 flights of the Extended LM (ELM), a modification of basic Apollo LM hardware. This assumes a decision was made to proceed with the ELM immediately after the first Apollo success and the prior completion of all engineering design. ELM missions extend lunar staytime to 3 or 4 days with landed payloads approaching 1,000 lbs. Advanced ALSEP's and mobility devices consume a major portion of this payload. Return of samples collected in geologic contexts remains a prime objective. Landing sites are selected from available Orbiter photography but relaxation of the free-return constraint opens up sites outside the Apollo zone. A specific mission is targeted to a specific site. Several launch opportunities to a given site are provided by either varying translunar flight time or by waiting in lunar orbit. Orbital remote sensing experiments are conducted, including IR and metric photography.

A Lunar Orbital Survey Mission is indicated after the Lunar Surface Exploration phase and might well be the end of the "current buy" spacecraft. This 28-day lunar polar orbit mission is flown after the Apollo's and ELM's, in order to have several "ground-truth" sites and to allow prior "feasibility" experiments to be flown. This positioning also enables one to make use of an augmented CSM developed for earth-orbital use. It occurs before the next phase since we do not now have the data upon which to pick sites for dual missions. A subsatellite is deployed in orbit for magnetic, gravity, and X-ray sensing.

Two dual missions are delineated in the Lunar Surface Rendezvous and Exploration phase. A Lunar Payload Module (LPM) is delivered as an unmanned cargo carrier to the surface and thus provides a rendezvous target for a manned ELM up to 3 months later. An 8,000 lb payload includes a mobility device(s), advanced science stations and ELM staytime extension to about two weeks. Deciphering of the interrelationships of several lunar features, conduct of "traverse" geophysics, and utilization of preliminary sample analysis in situ are new scientific features of the mission.

A pacing item in dual missions is payload development. To be ready for a mid-70's launch, such payloads must be defined this year and science systems concepts studied with regard to feasibility and preliminary design. The technique of the unmanned landing must be developed. The possibility of augmentation of the LM and Saturn S-V has to be considered and may be mandatory if the ELM concept does not prove out in the sense of non-availability of Apollo margins.

N. W. Hinners

D. B. James

F. N. Schmidt

NWH
1012-DBJ-hjt
FNS

Attachments:
Acknowledgements
Figures 1-31
References

ACKNOWLEDGEMENTS

The authors wish to acknowledge the efforts of the members of the Lunar Exploration Department who have contributed to this memorandum, as well as many other individuals within Bellcomm, NASA, and the scientific community who have contributed their ideas and stimulating discussions.

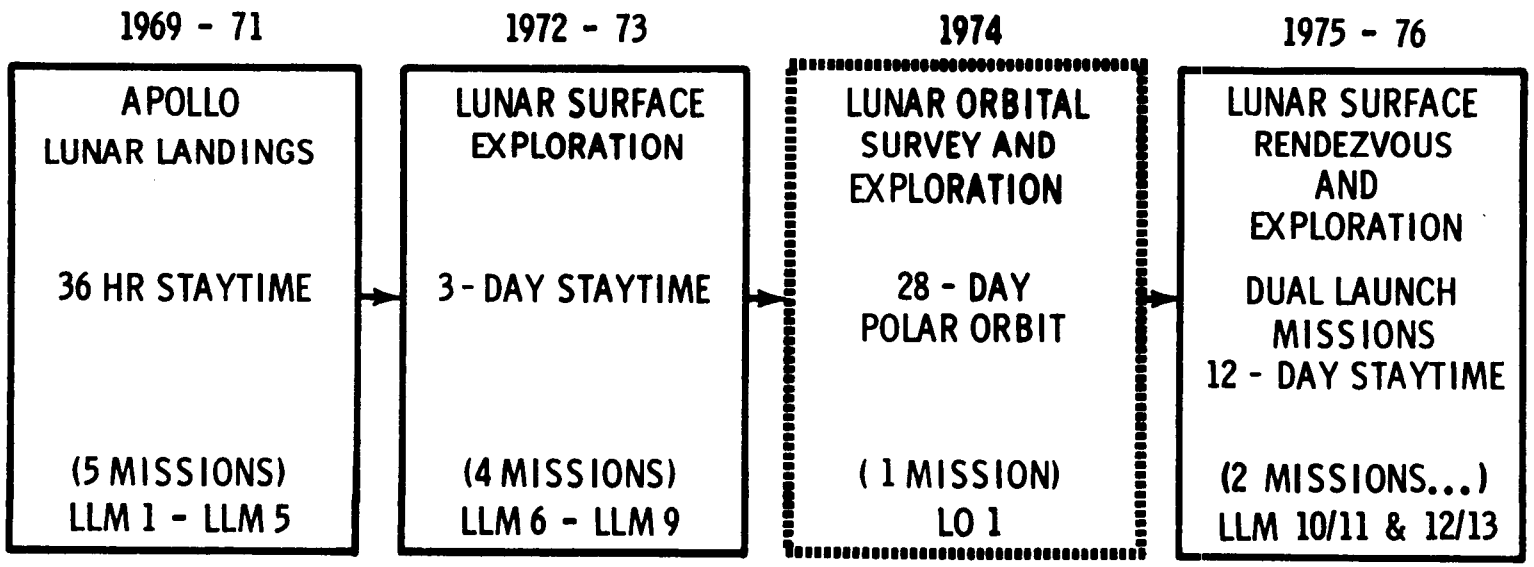

FIGURE 1 - CANDIDATE LUNAR EXPLORATION PROGRAM

MISSION NUMBER	(FIRST APOLLO LANDING) LLM 1	LLM 2	LLM 3	LLM 4	LLM 5
SITE	MARE	2nd MARE	FRESH CRATER IN MARE	4th MARE, WRINKLE RIDGE	HIGHLAND-MARE CONTACT
OBJECTIVE	DEMONSTRATE LANDING CAPABILITY AND MANNED OPERATION ON SURFACE, COLLECT SAMPLE	DEPLOY ALSEP I SAMPLE 2nd MARE	DEMONSTRATE REDESIGNATION CAPABILITY, ALSEP II SAMPLE 3rd MARE SAMPLE FRESH ROCK EXPOSURES	DEPLOY ALSEP III STUDY OF WRINKLE RIDGE	EXTEND SURFACE STAY STUDY CONTACT DEPLOY ALSEP IV
STAYTIME	22 HRS, 2 EVA's	22 HRS, 2 EVA's	> 22 HRS, 3 EVA's	> 22 HRS, 3 EVA's	36 HRS, 4 EVA's
PAYLOAD	LGE TV CAMERA	SAME AS LLM 1 & ALSEP I CM EXP'TS	SAME AS LLM 1 & ALSEP II CM EXP'TS	SAME AS LLM 1 & ALSEP III CM EXP'TS	SAME AS LLM 1 & ALSEP IV CM EXP'TS
PROFILE	LOR/FR	LOR/FR	LOR/FR REDESIGNATION	SAME AS LLM 3	SAME AS LLM 3

MISSION INTERVALS OF AT LEAST 6 MONTHS

FIGURE 2 - APOLLO LUNAR LANDING MISSIONS

	ALSEP I	ALSEP II	ALSEP III	ALSEP IV
PASSIVE SEISMIC EXPERIMENT (PSE	X	X	X	X
COLD CATHODE GAUGE EXPERIMENT (CCGE)	X	X	X	X
SUPRATHERMAL ION DETECTOR EXPERIMENT (SIDE)	X	X		X
SOLAR WIND SPECTROMETER (SWS) (MEDIUM ENERGY)	X	X		
CHARGED PARTICLE LUNAR ENVIRONMENT EXPERIMENT (CPLEE) (CAN ALSO MEASURE LOW ENERGY SOLAR WIND)			X	X
LUNAR SURFACE MAGNETOMETER (LSM)	X	X		
HEAT FLOW EXPERIMENT (HFE) (INCLUDES APOLLO LUNAR SURFACE DRILL)			X	
ACTIVE SEISMIC EXPERIMENT (ASE)				X
LUNAR RANGING RETRO REFLECTOR (LR^3)	(BACK-UP)			

FIGURE 3 - CURRENT ALSEP ARRAYS (9/67)

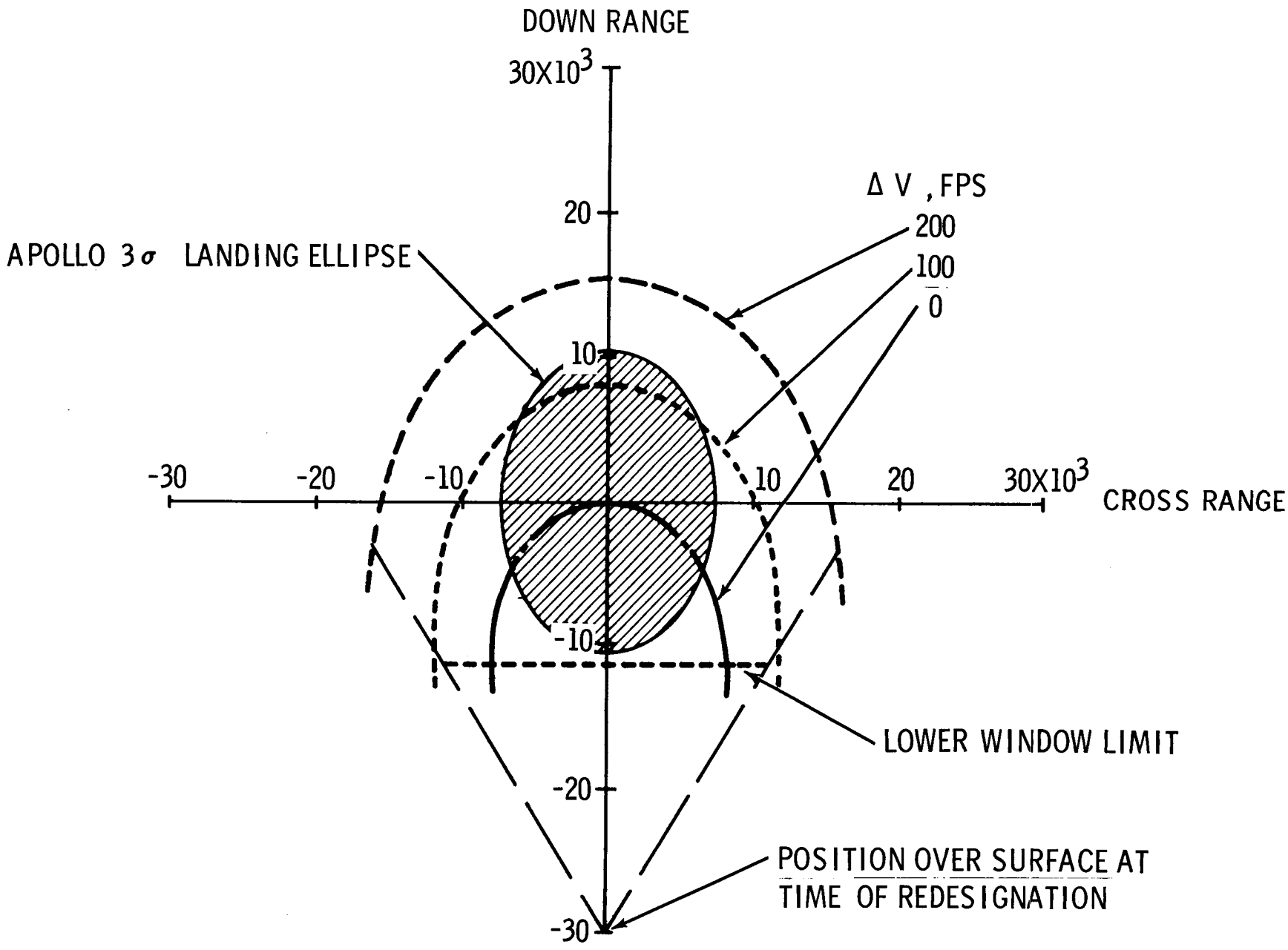

FIGURE 4 - OVERHEAD PROFILE OF FOOTPRINT CAPABILITY FROM 8000 FT ALTITUDE

LLM 1 (1st MARE)

- LM PERFORMANCE
- SOIL MECHANICS
  - BEARING STRENGTH
  - ANGLE OF REPOSE
  - COHESION
- ASTRONAUT CAPABILITY ON LUNAR SURFACE
  - MOBILITY
  - ORIENTATION
  - ABILITY TO SELECT SAMPLES
- SAMPLE ANALYSIS (122 EXP'TS BY 110 P. I. 's)
  - DESCRIPTIVE MINERALOGY AND PETROLOGY
  - CRYSTALLOGRAPHY
  - RADIATION EFFECTS
  - SHOCK EFFECTS
  - ALPHA PARTICLE - AUTORADIOGRAPHY
  - ELEMENTAL AND ISOTOPIC ANALYSIS
    - NEUTRON ACTIVATION
    - MICROPROBE INVESTIGATION
  - MASS SPECTROSCOPY
  - COSMIC-RAY INDUCED AND NATURAL RADIOACTIVITY
  - MAGNETIC AND ELECTRICAL PROPERTIES
  - THERMAL-ELASTIC-MECHANICAL PROPERTIES
  - BIOCHEMICAL AND ORGANIC ANALYSIS
  - EFFECT OF SURFACE CONTAMINATION BY APOLLO
  - MICROMETEOROID HAZARD
  - RADAR REFLECTIVITY
  - PHOTOGRAPHY OF SURFACE FROM CM

FIGURE 5 - SCIENTIFIC ACCOMPLISHMENTS OF FIRST LUNAR LANDING MISSION

LLM 2 (2nd MARE)

- COMPARISON OF RED/BLUE MARIA
- SAMPLE ANALYSIS (COMPARISON WITH 1st MARE)
- SOIL MECHANICS
- ABILITY OF ASTRONAUT TO DEPLOY EQUIPMENT AND TIME REQUIRED
- ALSEP I (PSE, LSM, SWS, SIDE, CCGE)
  - SEISMIC NOISE LEVEL OF MOON
  - TOTAL PRESSURE
  - TRANSIENT ATMOSPHERIC PHENOMENA
  - DIFFUSION CONSTANT FOR GASES
  - PRESENCE OF NEARBY MAGNETIC MATERIALS
  - LUNAR MAGNETIC FIELD
  - INTERACTION OF LUNAR MAGNETIC FIELD AND SOLAR WIND
  - CHARGED PARTICLE ENVIRONMENT
  - DUST ACCRETION
- ORBITAL EXPERIMENTS ON CM
  - POLARIMETRY AND PHOTOMETRY OF MOON
  - PHOTOGRAPHY OF TARGETS OF OPPORTUNITY
  - MULTISPECTRAL FEASIBILITY STUDY

LLM 3 (FRESH CRATER IN MARE)

- DIFFERENCES IN RED/BLUE MARIA
- VARIATIONS IN THREE MARIA
- SAMPLING OF CRATER AND MARE
  - DEPTH COMPOSITION OF MARE
  - EFFECT OF LUNAR ENVIRONMENT ON SAMPLES (FRESH ROCK FROM CRATER)
  - LAYERING, STRUCTURE, MANTLING, MASS WASTING, SHOCK EFFECTS
  - AGES OF SAMPLED MATERIAL
- ALSEP II
  - COMPARISON OF TWO REGIONS OF MOON
  - SEISMIC TRAVEL TIMES
    - EPICENTER DETERMINATION
- REDESIGNATION CAPABILITY
- ORBITAL EXPERIMENTS ON CM
  - PHOTOGRAPHY
  - IR AND UV FEASIBILITY EXPERIMENTS
  - COSMIC RAY AND MICROMETEOROID ENVIRONMENT

FIGURE 6 - SCIENTIFIC ACCOMPLISHMENTS OF SECOND AND THIRD LUNAR LANDING MISSIONS

LLM 4 (WRINKLE RIDGE IN FOURTH MARE)

- SAMPLING OF WRINKLE RIDGE AND FOURTH MARE
  - SAMPLE ANALYSIS
    - COMPARISON OF FOUR MARIA
    - STRUCTURAL SETTING OF RIDGE
    - ORIGIN OF MARE MATERIAL
- ALSEP III (PSE, CCGE, HFE, CPLEE)
  - TRIANGULATION (PSE, CCGE)
  - LUNAR HEAT FLOW
  - CHARGED PARTICLE ENVIRONMENT
- ORBITAL EXPERIMENTS ON CM
  - PHOTOGRAPHY
  - IR SPECTROSCOPY FEASIBILITY

LLM 5 (HIGHLAND-MARE CONTACT)

- SAMPLING OF MARE AND HIGHLAND MATERIALS
- STRUCTURAL RELATIONSHIPS AT CONTACT
- ALSEP IV (PSE, ASE, SIDE/CCGE)
  - IMPROVED TRIANGULATION
  - ACTIVE SEISMOLOGY
- ORBITAL EXPERIMENTS ON CM
  - PHOTOGRAPHY
  - MICROWAVE FEASIBILITY
  - SEARCH, ACQUIRE, AND TRACK SURFACE TARGETS

FIGURE 7 - SCIENTIFIC ACCOMPLISHMENTS OF FOURTH AND FIFTH LUNAR LANDING MISSIONS

MISSION NUMBER	LLM 6*	LLM 7*	LLM 8	LLM 9
SITE	T. MAYER DOME	LINEAR RILLE AND CRATER-CLUSTER I-P1	ONE SITE REQUIRING AN LFU (FLAMSTEED RING)	ONE SITE REQUIRING AN LFU (e.g., RIM AND FLOOR OF CRATER) FRA MAURO
OBJECTIVE	1) EXPLORING SINGLE SCIENTIFIC SITE 2) NFR W/ELM DELIVERY	1) SAME AS LLM 6 EXCEPT TO DIFFERENT SITE	1) EXPLORE A SINGLE SCIENTIFIC SITE THAT IS COMMENSURATE WITH A 3 DAY STAY AND USE OF AN LFU 2) SAME AS LLM 6	SAME AS LLM 8 EXCEPT TO DIFFERENT SITE
STAYTIME	3 DAY, 6 EVA's	3 DAY, 6 EVA's	3 DAY, 6 EVA's	3 DAY, 6 EVA's
PAYLOAD	GEOLOGIC TOOLS GEOPHYSICAL EXP'TS CM EXP'TS	SIMILAR TO LLM 6	SIMILAR TO LLM 6 LFU W/SAMPLE CONTAINERS SMALL SCIENTIFIC PACKAGES	SIMILAR TO LLM 8
PROFILE	LOR/NFR, REDESIGNATION, VARIATIONS IN FLIGHT TIME OR WAIT IN LUNAR ORBIT FOR 2 LAUNCH OPPORTUNITIES. ELM DELIVERY FROM LESS THAN 80 NM ALTITUDE.		SAME AS LLM 6 & 7 OPTIMIZE ELM DESCENT TO INCREASE FUEL RESIDUALS	SAME AS LLM 8

* NO LFU

FIGURE 8 - LUNAR SURFACE EXPLORATION

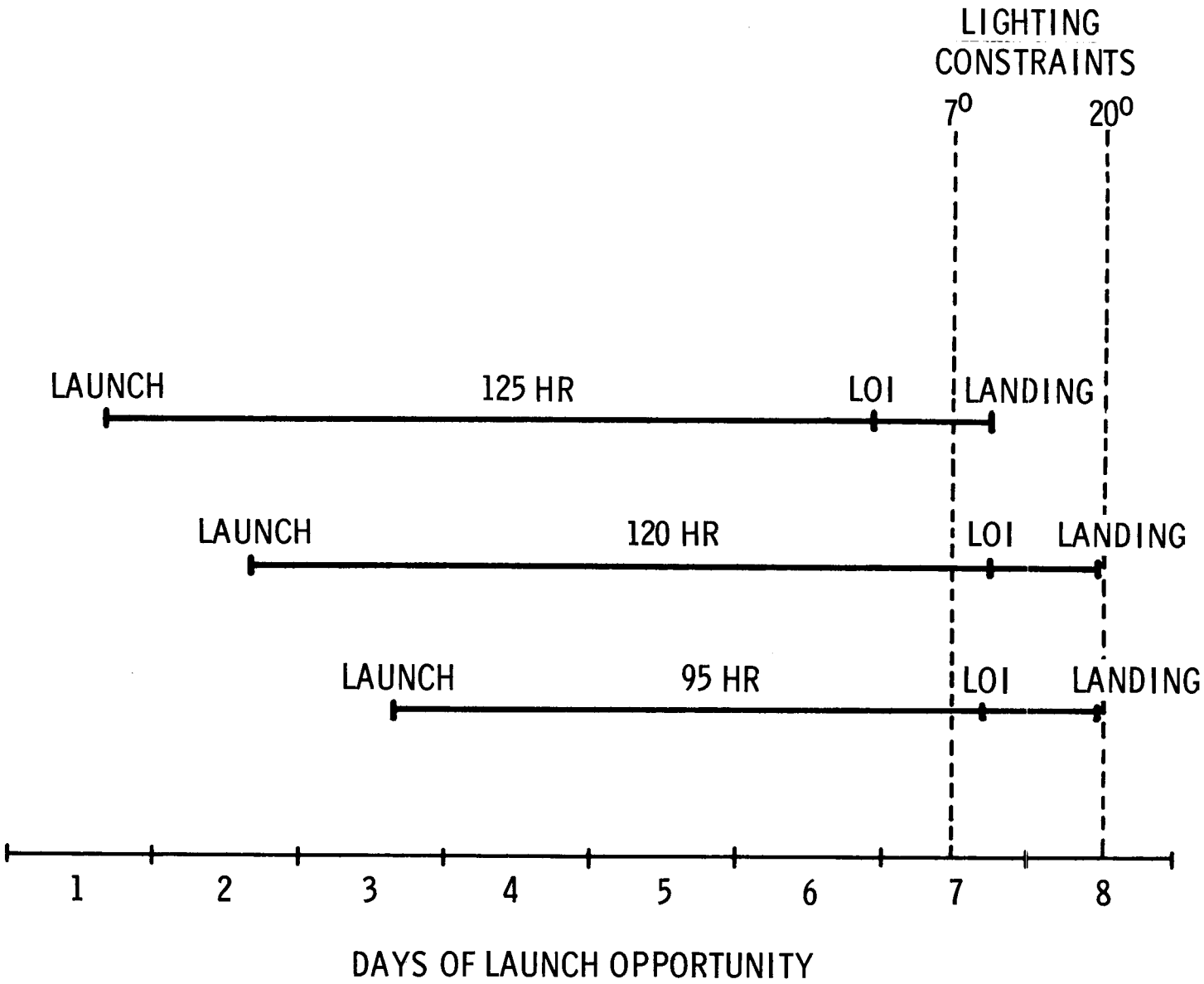

FIGURE 9 - LAUNCH WINDOW EXTENSION VARIABLE TRANSLUNAR FLIGHT TIME

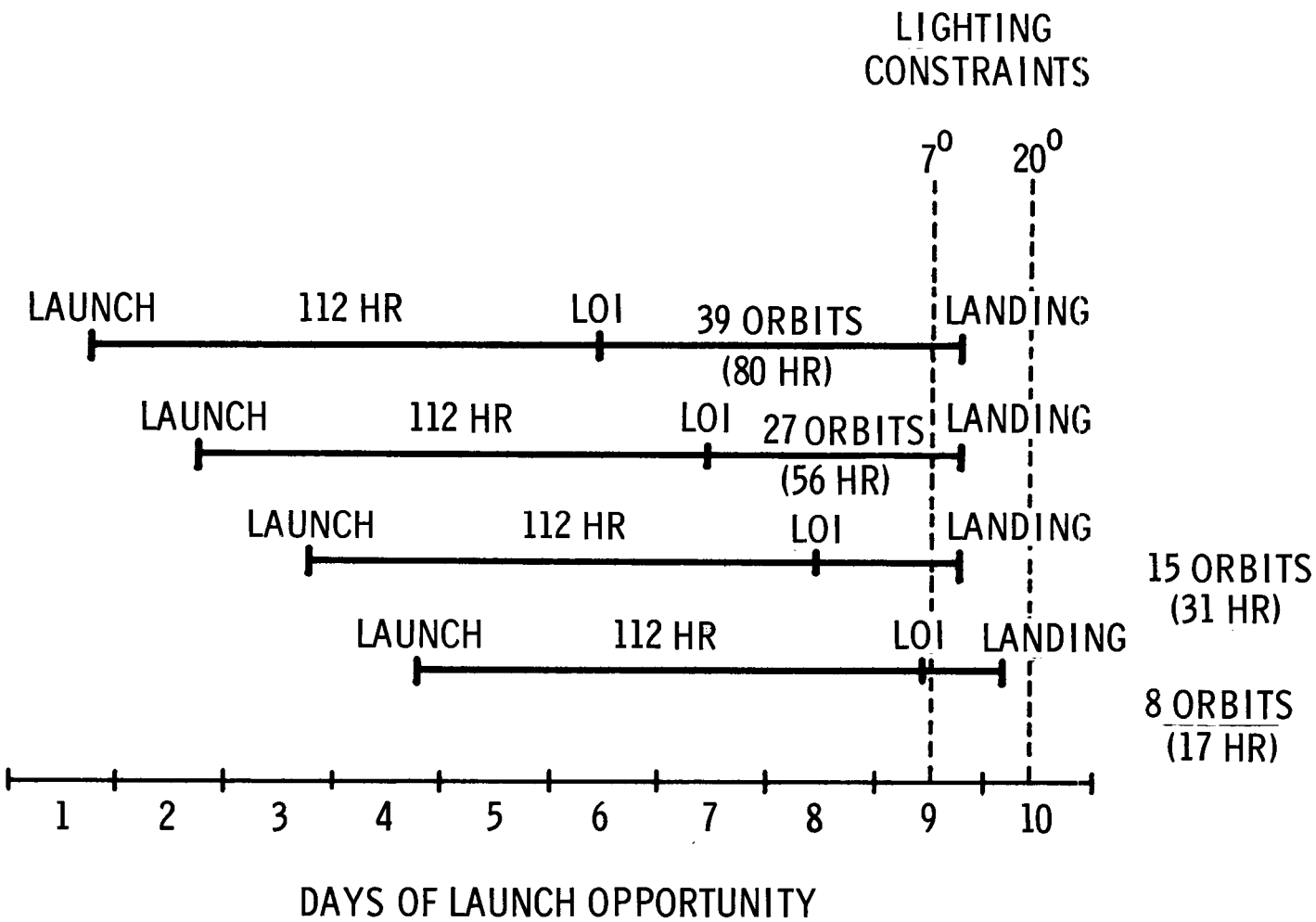

FIGURE 10 - LAUNCH WINDOW EXTENSION LUNAR ORBIT COAST ALM

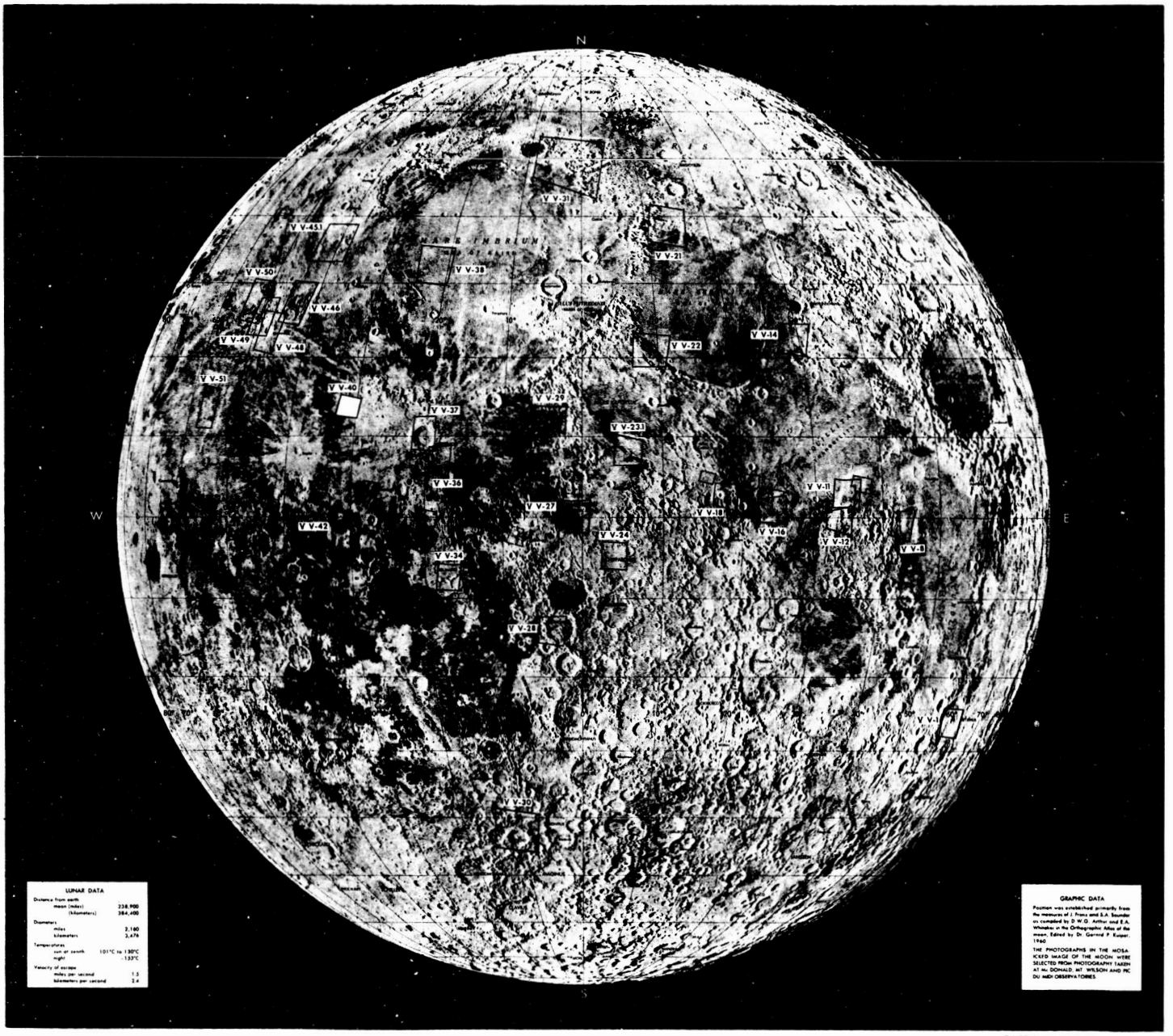

BASE MAP REDUCED FROM LEM-1
PRODUCED BY ACIC

FIGURE 11 - INDEX MAP OF TOBIAS MAYER DOMES AREA (V V-40)

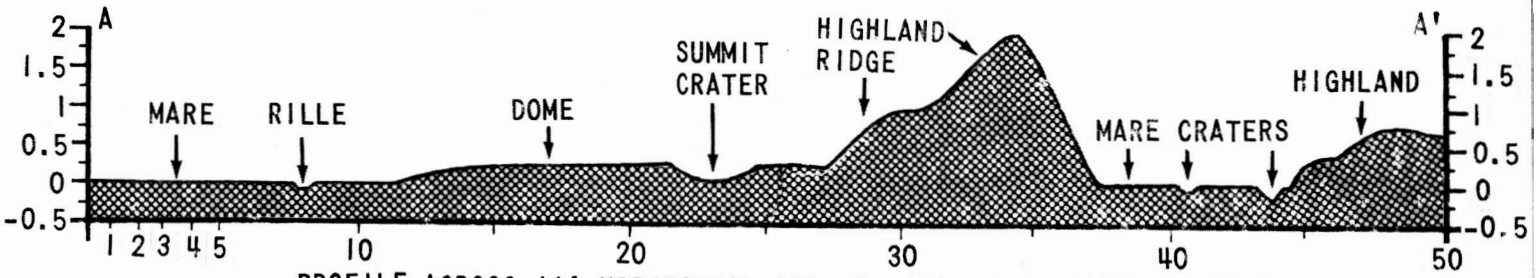

PROFILE ACROSS AA'. HORIZONTAL AND VERTICAL SCALES ARE IN KM

FIGURE 12 - LO-V PHOTOGRAPH OF A DOME SOUTHWEST OF CRATER TOBIAS MAYER ON THE EASTERN RIM OF OCEANUS PROCELLARUM. AREAS MARKED X, Y, AND Z ARE SHOWN IN DETAIL IN FIGURES 13, 14, AND 15 RESPECTIVELY

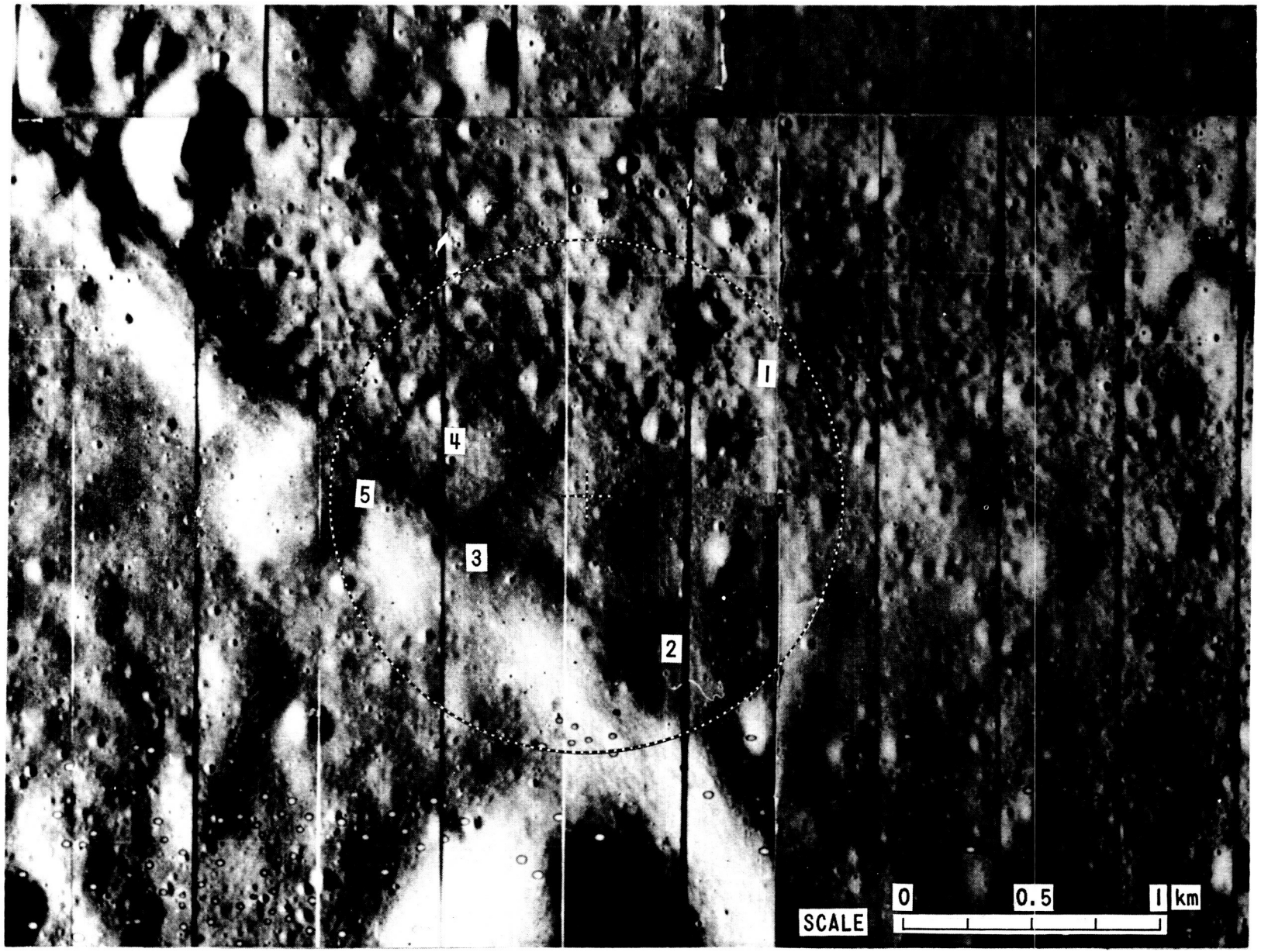

FIGURE 13 - A DESIRABLE LANDING POINT IN THE TOBIAS MAYER DOMES AREA. NUMBERS INDICATE THE GEOLOGICALLY INTERESTING SPOTS. THE RADIUS OF THE CIRCLE IS 1 km

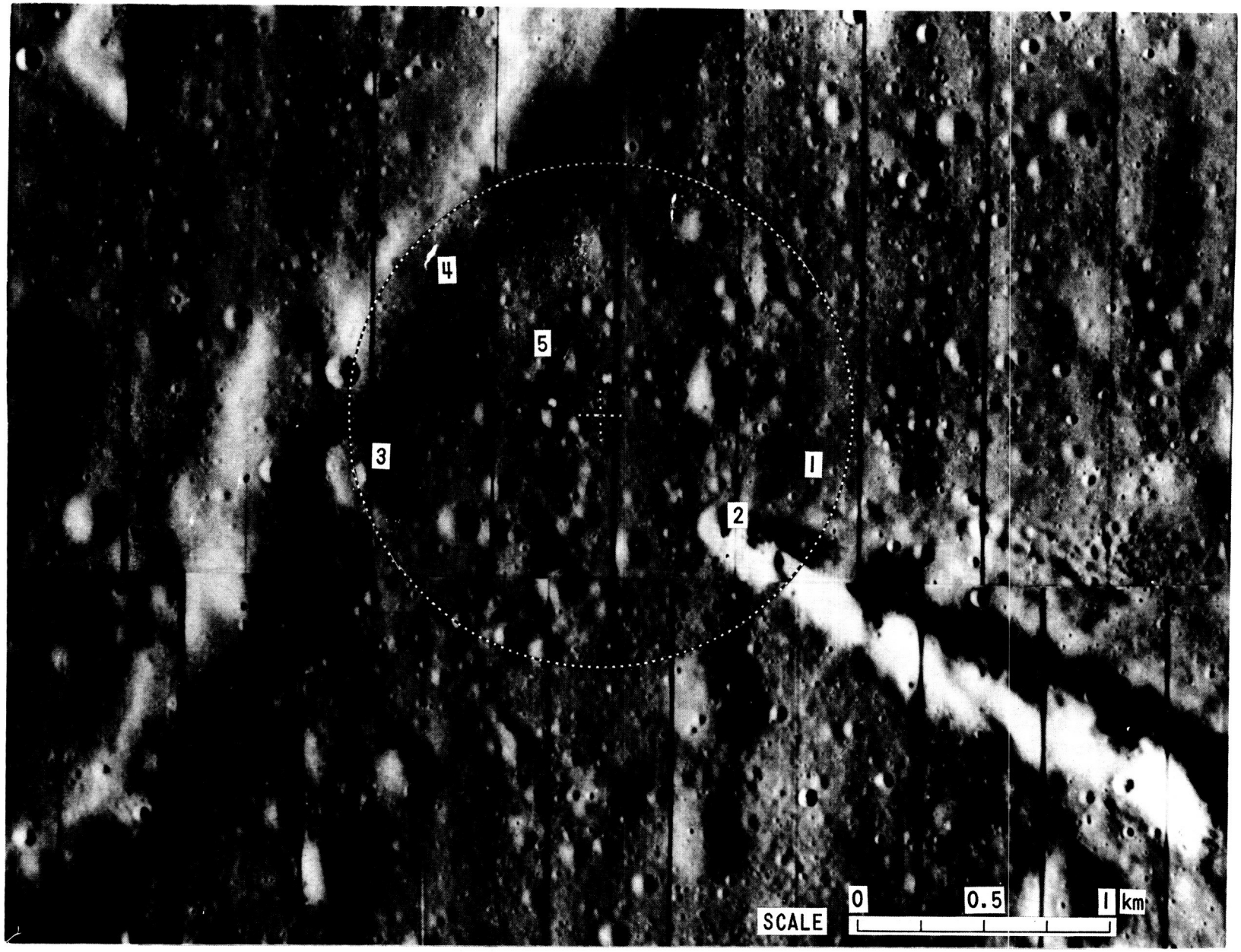

FIGURE 14 - AN ALTERNATE LANDING POINT IN THE TOBIAS MAYER DOMES AREA. NUMBERS INDICATE THE GEOLOGICALLY INTERESTING SPOTS. THE RADIUS OF THE CIRCLE IS 1 km

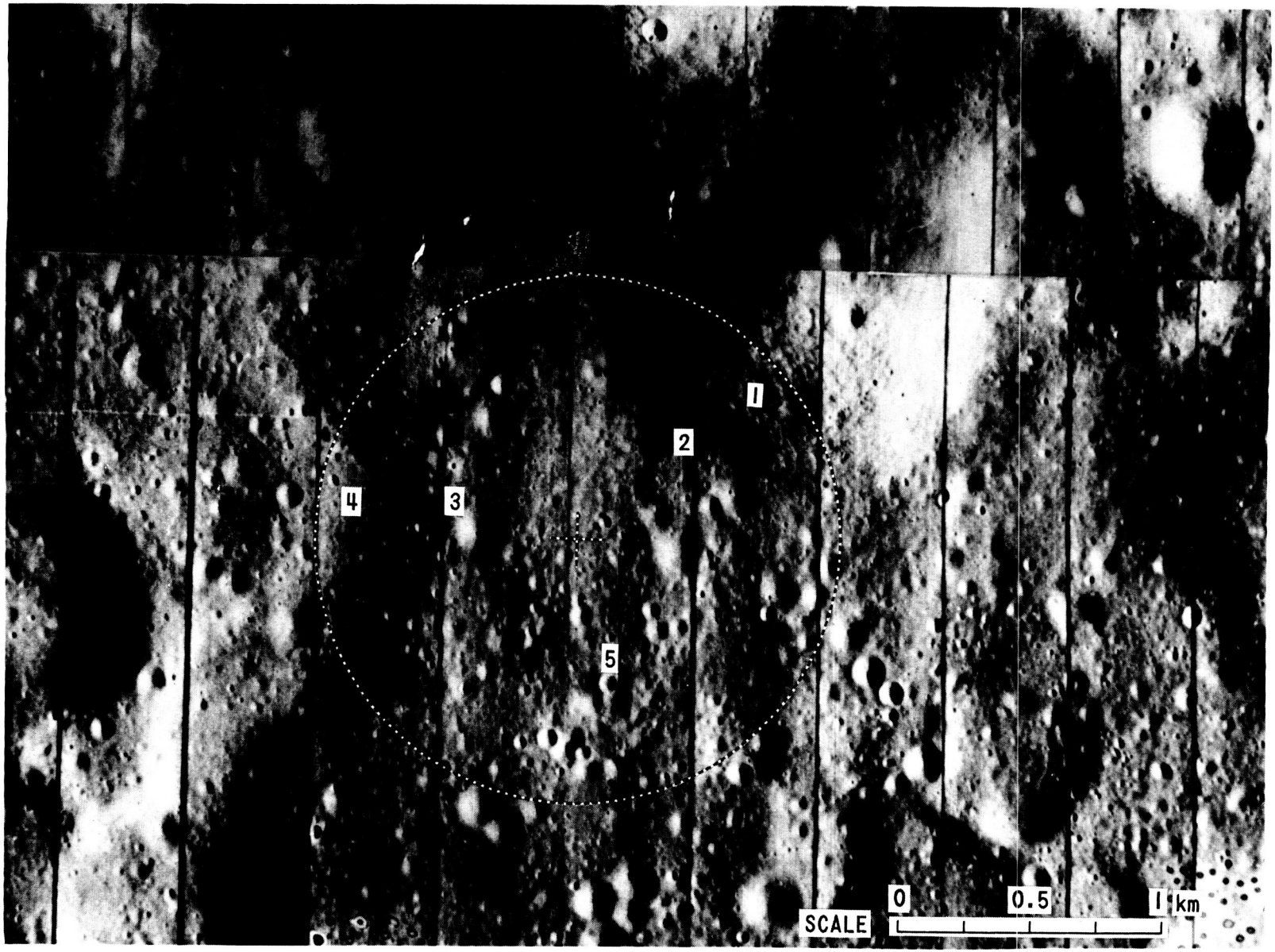

FIGURE 15 - A SECOND ALTERNATE LANDING POINT IN THE TOBIAS MAYER DOMES AREA. NUMBERS INDICATE THE GEOLOGICALLY INTERESTING SPOTS. THE RADIUS OF THE CIRCLE IS 1 km

EVA 1: LANDING AREA

UNLOAD EQUIPMENT
DEPLOY ALSEP
PHOTOGRAPH SURFACE TEXTURES
SAMPLE SURFACE MATERIALS

EVA 2: DOME BOUNDARY (1)*

EXAMINE STRUCTURES ALONG DOME
SAMPLE IN SITU EXPOSED BEDS
SAMPLE ROCKS NEAR SMALL CRATERS
DRILL FOR A SUBSURFACE SAMPLE

EVA 3: DOME-RILLE CONTACT (2)

EXAMINE DOME BOUNDARY
PROCEED TO CONTACT WITH RILLE
SAMPLE AREA OF CONTACT
PHOTOGRAPH RILLE WALL STRUCTURES
DRILL AT RILLE EDGE

EVA 4: RILLE WALLS AND FLOOR (3)

STUDY DOWN-SLOPE STRUCTURES
SAMPLE ALONG HORIZONTAL TRAVERSE
SAMPLE ALONG VERTICAL TRAVERSE
SEARCH FOR MASS-WASTED MATERIAL
STUDY AND SAMPLE RILLE FLOOR

EVA 5: CRATERS AND RILLE

SAMPLE DARK HALO FRESH CRATER (4)
PROCEED TO FAULTED CRATER (5)
SAMPLE EXPOSED ROCKS
STUDY STRUCTURES ON FLOOR

EVA 6: FINAL TESTS

CONDUCT TRAVERSE IN LANDING AREA
REVISIT AREA OF FURTHER INTEREST
CHECK ALSEP EXPERIMENTS
PREPARE SAMPLES FOR RETURN

---

*NUMBERS (1) THROUGH (5) REFER TO SPECIFIC SPOTS IN FIGURE 3.

FIGURE 16 - TIME SCHEDULE FOR FIELD WORK

	WEIGHT IN POUNDS
LUNAR SURVEYING SYSTEM, CAMERA AND HAND-HELD DRILL	100
ALSEP EXPERIMENTS	150
ALSEP SUPPORTING POWER AND CENTRAL STATION	150
GEOLOGIC TOOLS, SAMPLE CONTAINERS AND ENGINEERING EQUIPMENT	150
TOTAL	550

FIGURE 17 - APPROXIMATE DESCENT PAYLOAD

UP-RATE CURRENT ALSEP

- > 100 LBS EXPERIMENTS
- ~ 100 WATTS
- ~ 2 KBITS/SEC
- $\gtrsim$ 20 FT^3 ALLOWABLE VOLUME
- INCREASED LIFETIME

ADD FLEXIBILITY

- REPROGRAMMABLE C.S.
- DATA STORAGE
- MODULAR EXPERIMENTS

NEW EXPERIMENTS

e.g., TIDAL GRAVIMETER
LASER RANGING
MICROMETEOROID
MASS SPECTROMETER

UP-RATE CURRENT EXPERIMENTS

e.g., PSE, HFE, ASE

FIGURE 18 - FOLLOW-ON ALSEP

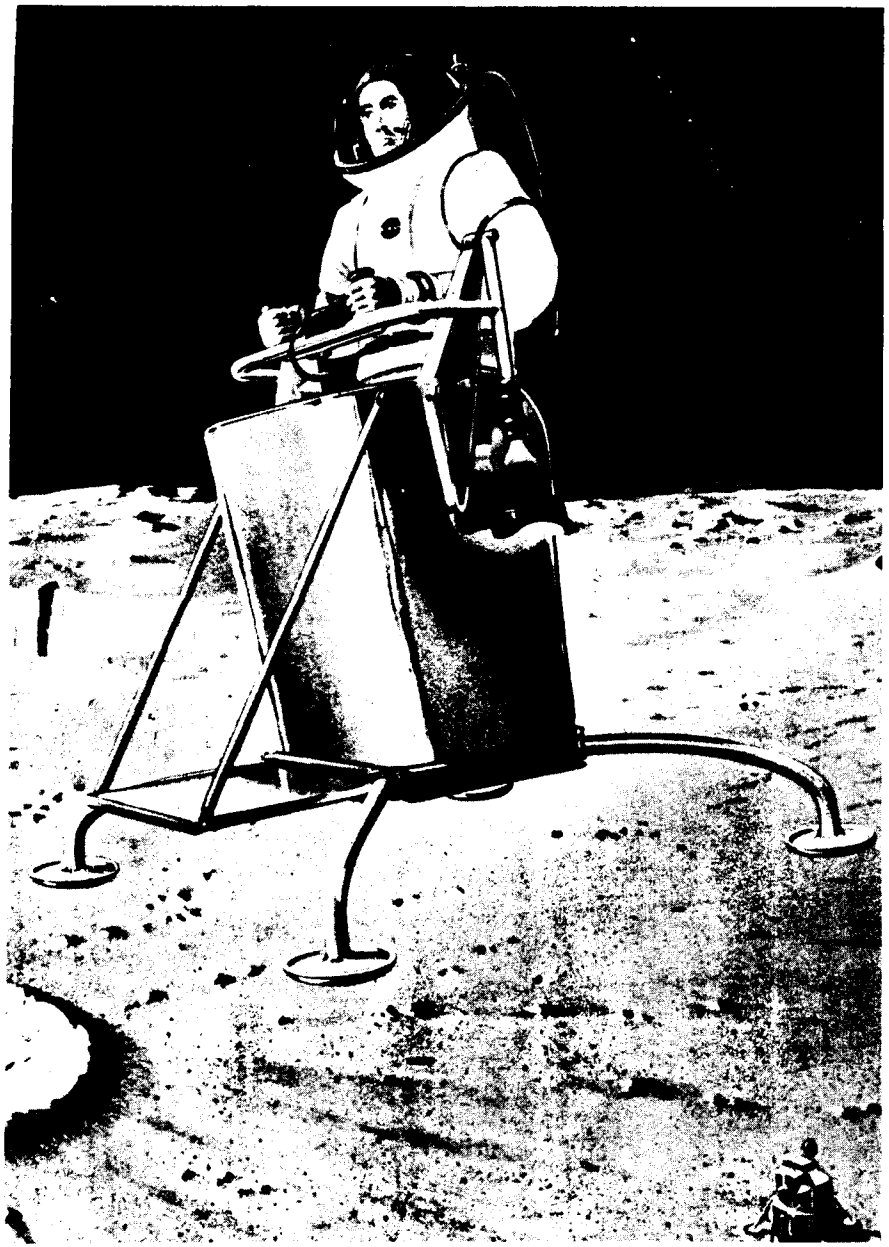

FIGURE 19 - LUNAR FLYING VEHICLE

ADVANTAGES

1. MINIMUM TRIP TIME
2. RESCUE CAPABILITY
3. EXPLORATION OF AREAS INACCESSIBLE BY SURFACE MOBILITY AIDS OR BY FOOT
4. ENHANCED RANGE CAPABILITY

CHARACTERISTICS

1. PAYLOAD CAPABILITY ~ 400 LBS
2. MAXIMUM RANGE ~ 8 NM
3. USE OF LM PROPELLANTS DESIRABLE
4. DRY WEIGHT OF 170-190 LBS

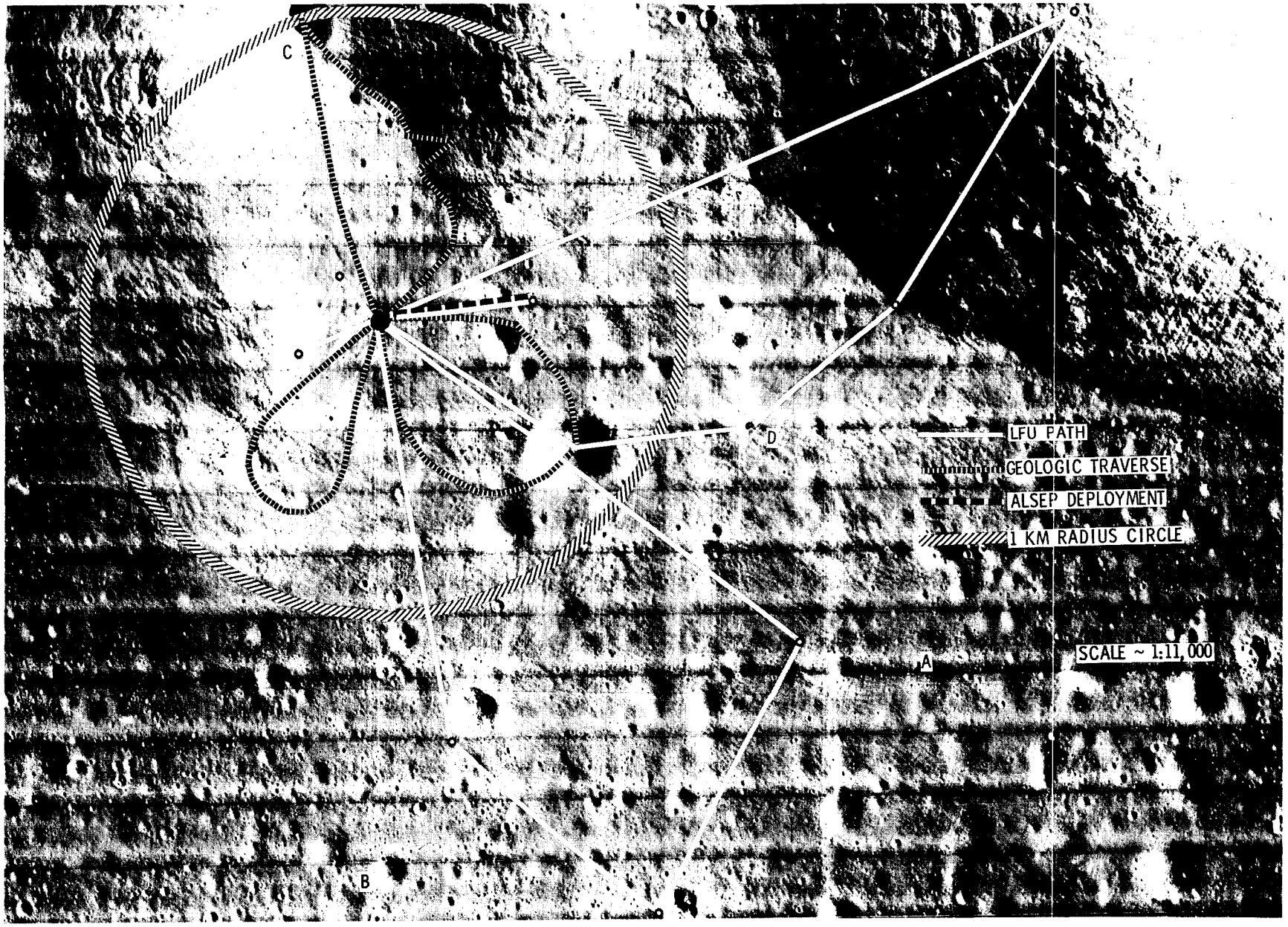

FIGURE 20 - ELM SITE AT FLAMSTEED RING

LLM 6 (T. MAYER DOME)

- DETERMINATION OF STRUCTURAL GEOLOGY OF DOME BOUNDARY
- STUDY OF GROSS FEATURES OF SINUOUS RILLE
- DETERMINATION OF RELATIONSHIPS BETWEEN DOME AND RILLE
- SAMPLING OF EXPOSURES AT BASE OF DOME AND ALONG WALLS OF RILLE
- SAMPLING OF TALUS OR OTHER INDICATIONS OF EROSION/DEPOSITION
- STUDY OF THE CRATER-CLUSTER
- DEFINITION OF TECTONIC ORIGINS AND AGE RELATIONSHIPS OF STRUCTURES
- EMPLACED GEOPHYSICAL EXPERIMENTS (~300 LBS)
  - TIDAL GRAVIMETER, PSE, ASE
  - SWS/LSM, MAGNETOTELLURIC EXPERIMENTS
  - MASS SPECTROMETER, TOTAL PRESSURE GAUGE
  - RADAR TRANSPONDER, LASER CORNER REFLECTOR
  - HFE
- PALEOMAGNETIC STUDIES
- ORBITAL EXPERIMENTS IN CM
  - FEASIBILITY EXPERIMENTS FOR REMOTE SENSORS

LLM 7 (I-P1)

- STUDY OF THE STRUCTURAL SETTING OF A TYPICAL LINEAR RILLE
- COMPARISON WITH CHARACTERISTICS OF SINUOUS RILLES
- DETERMINATION OF THE TECTONIC ORIGINS OF LINEAR RILLES
- SAMPLING OF DIFFERENT ALBEDO MATERIALS SURROUNDING BRIGHT CRATER-CLUSTER FOR DETERMINATION OF ALBEDO VARIATIONS
- DEFINITION OF RELATIONSHIPS BETWEEN RILLE AND CRATER CLUSTER
- EMPLACED GEOPHYSICAL EXPERIMENTS
- ORBITAL EXPERIMENTS IN CM
  - CORRELATIONS BETWEEN MAGNETIC FIELDS ON SURFACE AND AT ORBITAL ALTITUDES
  - SOLAR WIND OBSERVATIONS

FIGURE 21 - SCIENTIFIC ACCOMPLISHMENTS OF SIXTH AND SEVENTH LUNAR LANDING MISSIONS

LLM 8 (FLAMSTEED RING)

- DETERMINE MARE-RIDGE STRUCTURE AND RIDGE-MARE CONTACT RELATIONSHIP
- ORIGIN OF PATTERNED GROUND AND RELATIONSHIP TO SCARPS
- ORIGIN AND TECTONIC RELATIONSHIPS OF CONVEX SCARPS
- ORIGIN OF ROCK MORAINE
- EVALUATION OF LFU's FOR USE IN GEOLOGICAL TRAVERSES
- EVALUATE MULTIPLE PLSS
- TEST DX COMMUNICATIONS
- DEPLOYMENT OF EMPLACED GEOPHYSICAL PACKAGE
- ORBITAL EXPERIMENTS IN CM
  - MULTISPECTRAL PHOTOGRAPHY FEASIBILITY STUDY
  - IR EMISSION AND REFLECTION SPECTROSCOPY
  - COMMUNICATION WITH LFU

LLM 9 (FRA MAURO)

- ORIGIN AND STRUCTURE OF DOMES AND RILLES
- DETERMINATION OF ALBEDO CONTRASTS
- SEDIMENTATION PROCESSES WHICH FILL RILLES
- AGE AND STRUCTURAL RELATIONSHIPS OF RILLE-RIM
- SAMPLE RIM-MARE COMPOSITIONAL DIFFERENCES
- GRAVITY PROFILE OF RILLE
- EVALUATION OF LFU IN ROUGH TERRAIN
- EMPLACED GEOPHYSICAL EXPERIMENTS
- ORBITAL EXPERIMENTS IN CM
  - SEARCH FOR SURFACE UV LUMINESCENCE
  - MICROWAVE SPECTROSCOPY
  - PHOTOGRAPHY

FIGURE 22 - SCIENTIFIC ACCOMPLISHMENTS OF EIGHTH AND NINTH LUNAR LANDING MISSIONS

MISSION NUMBER	LO-1	LLM 10/11		LLM 12/13	
SITE		HYGINUS RILLE OR DAVY CRATER CHAIN		MARIUS HILLS (~250 KM SQUARE)*	
OBJECTIVE	1. REMOTE SENSING EXTENDING DATA FROM SURFACE MISSIONS 2. PHOTO SURVEY FOR DUAL LUNAR SURFACE MISSIONS	1. DEMONSTRATE DELIVERY OF LPM (UM) TO SURFACE FROM LUNAR ORBIT 2. PHOTO LOCATE LPM 3. SUBSATELLITE RELEASE IN L.O.	1. DEMONSTRATE LUNAR SURFACE RENDEZVOUS W/LPM 2. EXPLORATION WITH LSSM & LFU	1. DELIVER LPM TO MARIUS SCIENCE AREA 2. CONTINUE ORBITAL SENSING OF MANNED L. O. MISSION	1. DETAILED EXPLORATION OF MARIUS SITE AFTER RENDEZVOUS IN MORE DIFFICULT TERRAIN THAN DEALT WITH IN LLM 10/11
CONFIG.	SA V, AUG CSM LM/ATM W/CMG's & SOLAR PANEL	SA V, AUG CSM LPM W/LSSM & LFU	SA V AUG CSM AUG LM	SAME AS LLM 10	SAME AS LLM 11
PAYLOAD	L.O. TYPE PHOTO SYSTEM, METRIC MAPPING REMOTE SENSORS	LPM PHOTO EQUIP. SUBSATELLITES	2nd LFU GEOSCIENCE EXPERIMENTS	LPM PHOTO EQUIP. REMOTE SENSORS	SAME AS LLM 11
PROFILE	LUNAR POLAR ORBIT, 28 DAY STAY, EXPERIMENT OPTION TO CONTINUE FOR 6 MOS. UNMANNED	LPM DELIVERY FROM L.O. WITH TERMINAL GUIDANCE BY CSM	LOR/NFR SIMILAR TO LLM 6 & 7	SAME AS LLM 10	SAME AS LLM 11

* REQUIRES MORE MOBILITY THAN LLM 10/11

FIGURE 23 - LUNAR ORBITAL SURVEY AND EXPLORATION AND LUNAR SURFACE RENDEZVOUS AND EXPLORATION

OBJECTIVES:

1. EXPLORATION OF MOON USING REMOTE SENSORS
2. DETAILED SCIENTIFIC EXAMINATION OF SITES OF MAJOR SCIENTIFIC INTEREST
   A. GEOLOGIC AND TOPOGRAPHIC MAPPING OF SITES
   B. PHOTOGRAPHY
3. EXTRAPOLATION OF GROUND TRUTH TO REST OF MOON

PROFILE:

POLAR ORBIT, 28 DAY STAYTIME, EXPERIMENTAL OPTION TO CONTINUE FOR 6 MONTHS UNMANNED

PAYLOAD:

GAMMA RAY SPECTROMETER
RADAR ALTIMETER
GRAVITY GRADIOMETER
IR RADIOMETER
X-RAY FLUORESCENCE
IR SPECTROMETER
UV ABSORPTION AND LUMINESCENCE
MICROWAVE IMAGER
MULTICHANNEL MICROWAVE RADIOMETER
VHF REFLECTIVITY
METRIC AND HIGH RESOLUTION CAMERAS
LASER ALTIMETER

RESULTS:

IDENTIFICATION OF SCIENTIFICALLY MOST INTERESTING SITES AND NEARBY LANDING ZONES
GEOLOGIC AND TOPOGRAPHIC MAPS OF SCIENTIFIC SITES
THREE DIMENSIONAL BRIGHTNESS TEMPERATURE MAP
GEOMETRIC SHAPE OF MOON
IDENTIFICATION OF GRAVITATIONAL ANOMALIES
COMPOSITION OF SURFACE AND DISTRIBUTION OF MATERIALS
ESTIMATION OF LUNAR HEAT FLOW
KNOWLEDGE OF κ, ρ, c, σ, TO DEPTH OF SEVERAL METERS

FIGURE 24 - LUNAR ORBITAL SURVEY AND EXPLORATION

LSSM (INCLUDING UNLOADING PENALTY)	1100 LBS
2 LUNAR FLYING UNITS (FULL TANKS)	1000
2 ADDITIONAL LFU FUEL CHARGES (300 LBS EA)	600
100' DRILL	250
10' DRILL	100
ELECTRICAL POWER PACKAGE	500
PLSS UNITS (2 FOR LSSM + 2 SPARE)	260
PLSS EXPENDABLES (LiOH + BATTERIES)	400
HARD SUITS - SPARE	120
RTG + BATTERIES (2 UNITS FOR LUNAR STORAGE POWER)	200
MISC. SCIENTIFIC EQUIPMENT	1000
ALSEP ARRAYS	500
*LM RESUPPLY	1000
PACKAGING & TIE-DOWN PENALTY	970
TOTAL	8000 LBS

*NOT REQUIRED IF AUGMENTED LM HAS DESIRED STAYTIME CAPABILITY

FIGURE 25 - TYPICAL LPM PAYLOAD

LAND LPM TO A PREDESIGNATED POINT WITH A CEP OF ABOUT 100 M WITH:

(A) TV GUIDANCE WITH MAN IN LOOP

(B) MAN TO RECOGNIZE SITE AND AIM LPM GUIDANCE (LASER SPOT)

OR (C) AUTOMATIC PATTERN RECOGNITION GUIDANCE.

ALTERNATIVES:

(A) IF SITE IS MARKED (e.g., TRANSPONDER, ETC.) HOME LPM TO MARKER

(B) LAND LM FIRST AND HAVE ASTRONAUTS TALK LPM DOWN

FIGURE 26 - DUAL MISSION: LM PLUS LPM

PROBLEMS	POSSIBLE SOLUTIONS
1. TERRAIN CLEARANCE WITH FAILED LR	1. RAISE HI-GATE ALTITUDE PROVIDE BACKUP RADAR ALTIMETER
2. PITCH OSCILLATIONS DUE TO ROUGH INPUTS TO GUIDANCE	2. DATA SMOOTHING (IMPROVEMENT OVER CURRENT FILTERING) STEEPER DESCENT
3. TRAJECTORY SHAPE ALTERED BECAUSE OF ALTITUDE DIFFERENCE BETWEEN SITE AND APPROACH (AFFECTS LOOK ANGLE)	3. PROGRAMMED ELEVATION DIFFERENCES IF KNOWN. STEEP DESCENT: A) REDUCES ALTITUDE DIFFERENCE OVER SLOPES B) ALLOWS USE OF LR ALTITUDE BEAM FOR RANGING TO SITE

FIGURE 27 - LANDING OVER ROUGH TERRAIN

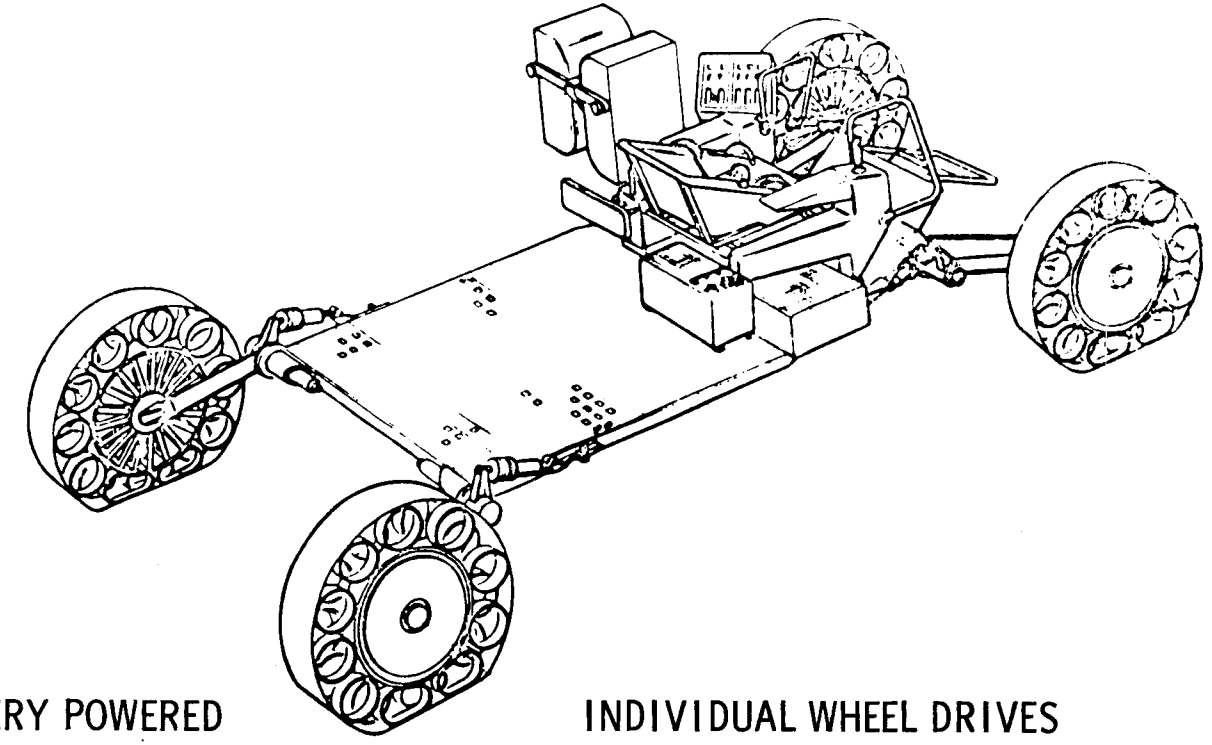

BATTERY POWERED

INDIVIDUAL WHEEL DRIVES

CAPABLE OF 14 - DAY MISSION AFTER 90 DAYS LUNAR STORAGE

NOMINAL SPEED CAPABILITY OF 8 KM/HR

INDIVIDUAL SORTIE DURATIONS OF 3 - 6 HRS

8 KM RADIUS OF OPERATION

25 KM RANGE PER SORTIE

200 KM RANGE PER MISSION

2000 LBS OPERATIONAL WEIGHT:

1000 LBS - BASIC VEHICLE

700 LBS - CARGO CAPABILITY

300 LBS - ONE MAN CREW

FIGURE 28 - LOCAL SCIENTIFIC SURVEY MODULE (LSSM)

GEOPHYSICAL SCIENCE STATION (LIFETIME: 5 YR MIN., 10 YR DESIGN GOAL)

ALSEP CENTRAL STATION, POWER, DATA SYSTEM		170 LBS
EXPERIMENTS (IN ORDER OF PRIORITY)		
PSE	25 LBS	
LR^3 - RADAR TRANSPONDER	20	
TIDAL GRAVIMETER	15	
MASS SPECTROMETER	20	
HEAT FLOW (ALSD)	35	
LSM/SWS	25	
CCGE	10	
SIDE	10	
MICROMETEORITE DETECTOR	10	
		170 LBS
		340 LBS

GEOPHYSICS IN SUPPORT OF GEOLOGY

ASE (NO MORTAR, LARGE CHARGES)	20 LBS
TRAVERSE GRAVIMETER - g MEASUREMENTS	5
SURVEY MAGNETOMETER	5
"GEIGER COUNTER"	5
MINI-ALSEP	110
PSE	
HFE	
	145 LBS

• MINI-ALSEP WILL NOT BE REQUIRED IF FOUR OTHER ALSEP PACKAGES (PSE, LR^3, LSM, MS) ARE OPERATIONAL IN AN ACCEPTABLE TRIANGULATION GEOMETRY

SCIENTIFIC COMPLEMENT OF LSSM (UNMANNED MODE)

6 MINI-ALSEP's (OR RGM) (PSE, MS, LSM/SWS, LR^3)*	480 LBS
CHEMICAL ANALYZERS	50
X-RAY DIFFRACTOMETER	
SAMPLE CANISTERS	
BIOCHEMICAL ANALYZER	50
TRAVERSE GRAVIMETER	5
TRAVERSE MAGNETOMETER	5
TRAVERSE GEIGER COUNTER	5
TRAVERSE RADAR SOUNDER	20
	615 LBS

FIGURE 29 - GEOPHYSICS EXPERIMENTS FOR LUNAR EXPLORATION

IN SITU STUDY OF MATERIALS AT LANDING POINT
POSSIBLE DIFFERENCES BETWEEN MARE AND "CAYLEY FORMATION"
STRUCTURE AT RIM OF HYGINUS CRATER
FLOOR MATERIAL OF HYGINUS CRATER
CONTACTS OF RILLE AND HYGINUS CRATER
RELATIONSHIPS OF RILLE AND SURFACE MATERIALS
FLOOR DEPOSITS OF RILLE
STRUCTURE OF CRATER CHAINS
RELATIONSHIPS OF RILLE AND CRATER CHAINS
GENESIS OF "CAYLEY FORMATION" AND CRATER HYGINUS
ORIGIN OF RILLE AND OF CRATER CHAINS

GEOSCIENCE TRAVERSES (LSSM)
- SEISMIC, GRAVITATIONAL, AND MAGNETIC PROFILES
  - ACROSS CONTACT OF ROCK UNITS
  - ACROSS RILLE
  - ALONG A CRATER CHAIN

EMPLACEMENT OF GEOSCIENCES PACKAGES

SUBSATELLITE OBSERVATIONS
- CORRELATIONS BETWEEN ORBITAL AND SURFACE MAGNETIC FIELDS
- SOLAR WIND MEASUREMENTS
- GRAVITY GRADIOMETER - LASER ALTIMETER

FIGURE 30 - LLM 10/11 SCIENTIFIC ACCOMPLISHMENTS

STUDY OF VOLCANIC DOMES
STUDY OF CRATER CHAINS
STUDY OF SINUOUS RILLES, EROSIONAL FEATURES, FLOOR MATERIAL
DETERMINATION OF STRUCTURAL RELATIONSHIPS OF VOLCANIC FEATURES
DETERMINATION OF MINERALOGY AND PETROLOGY OF IGNEOUS PROVINCE
- COMPARISON WITH OTHER IGNEOUS PROVINCES
- EFFECT OF MIXING/ASSIMILATION/DIFFERENTIATION

STUDY OF OUTGASSING
- DETERMINATION OF PRIMORDIAL ATMSOPHERE

GEOSCIENCES TRAVERSE (LSSM)
- SEISMIC, GRAVITATIONAL ,AND MAGNETIC PROFILES OF REGION

EMPLACEMENT OF GEOSCIENCES PACKAGE

OBSERVATIONS FROM CM WITH NARROW BEAM WIDTH SENSORS
- EXTRAPOLATION OF GROUND TRUTH TO ENTIRE MARIUS REGION
  - THREE DIMENSIONAL BRIGHTNESS TEMPERATURE MAP
  - IDENTIFICATION OF GRAVITATIONAL ANOMALIES
  - DETERMINATION OF ELEMENTAL AND MINERALOGICAL COMPOSITION
- EVALUATION OF REMOTE SENSING TECHNIQUES FOR EARTH AND PLANETARY APPLICATIONS

• BECAUSE OF THE VASTNESS OF THE REGION MUCH MORE MOBILITY THAN IS AVAILABLE IN LLM 10/11 IS REQUIRED. AN UNMANNED LSSM IN CONJUNCTION WITH ORBITAL SENSING COULD BE USED TO COMPLETE EXPLORATION OF SITE.

FIGURE 31 - LLM 12/13 (MARIUS HILLS*) SCIENTIFIC ACCOMPLISHMENTS

REFERENCES

1. "Extended LM Lunar Surface Mission Description," Bellcomm Memorandum for File, N. W. Hinners, September 28, 1967

2. "Role of the Orbital Mission Remote Sensors in a Lunar Exploration Plan," Bellcomm Memorandum for File, W. L. Piotrowski, April 21, 1967