(NASA-CR-119270) APOLLO 16 LM ASCENT STAGE IMPACT WITHIN 10 KM OF THE LANDING SITE (Bellcomm, Inc.) 4 p

N79-71703

Unclas
00/12 12076

FF No. (NASA CR OR TMX OR AD NUMBER) (CATEGORY)
[redacted]

Bellcomm
955 L'Enfant Plaza North, S.W.
Washington, D.C. 20024

date: June 23, 1971

B71 06038

to: Distribution

from: R. J. Stern

subject: Apollo 16 - LM Ascent Stage Impact Within 10 km of the Landing Site -- Case 310

AUG 1971 RECEIVED NASA STI FACILITY INPUT BRANCH

MEMORANDUM FOR FILE

The possibility of impacting the LM ascent stage within 10 km of the ALSEP on Apollo 16 (Descartes) for use in the Active Seismometer experiment was investigated. The ΔV capability exists to target the LM deorbit maneuver to a point biased 1 nm crossrange from the ALSEP such that the probability of being within 10 km of the ALSEP is approximately .6. Under these conditions the probability of the ascent stage impacting within a 1000 ft. square centered at the ALSEP is very low ($<10^{-6}$).

The LM deorbit maneuver was investigated for the prime launch opportunity for the Descartes mission, March 17, 1972. The deorbit maneuver occurs during the 52nd revolution in lunar orbit. Ten minutes of MSFN coverage after acquisition of signal (AOS) are required in which to command the LM for deorbit. Since the required ΔV for impacting at an easterly site such as Descartes increases with elapsed time after AOS the maneuver was assumed to occur at the earliest time possible, AOS + 10 min. A summary of the maneuver is presented in Table 1.

The dispersion ellipse for the impact, illustrated in Figure 1, has 3σ dimensions of ± 19.25 nm downrange and ± 0.73 nm crossrange (Reference 1). The crossrange bias of the impact location relative to the ALSEP is somewhat arbitrary but should be at least .73 nm to reduce the probability of impact too close to the ALSEP. A bias of 1 nm provides for a very low probability of this occurring and does not significantly degrade the probability of the impact lying within 10 km of the ALSEP. The downrange bias should be

---

Ref. 1: Spacecraft Operational Trajectory for Apollo 15 (Mission J-1) Volume I, Mission Profile, April 16, 1971, Page 4-121.

zero to maximize the probability of impacting within 10 km. It should be noted that the 0.6 probability of lying within a circle of 10 km is dependent primarily on the downrange dimension of the dispersion ellipse.

Preliminary investigations at MSC indicate that the required ΔV of 206 ft/sec should be within the capability of the LM ascent stage after rendezvous and jettison.

R. J. Stern

2013-RJS-jab

R. J. Stern

Attachments

TABLE 1

LM DEORBIT SUMMARY

EVENT	LATITUDE (DEG.)	LONGITUDE (DEG.)	ΔV (FPS)	AZIMUTH (DEG.)
DEORBIT	3.45	86.35	206.3	-100.35
IMPACT	-8.78	14.56	----	-96.48

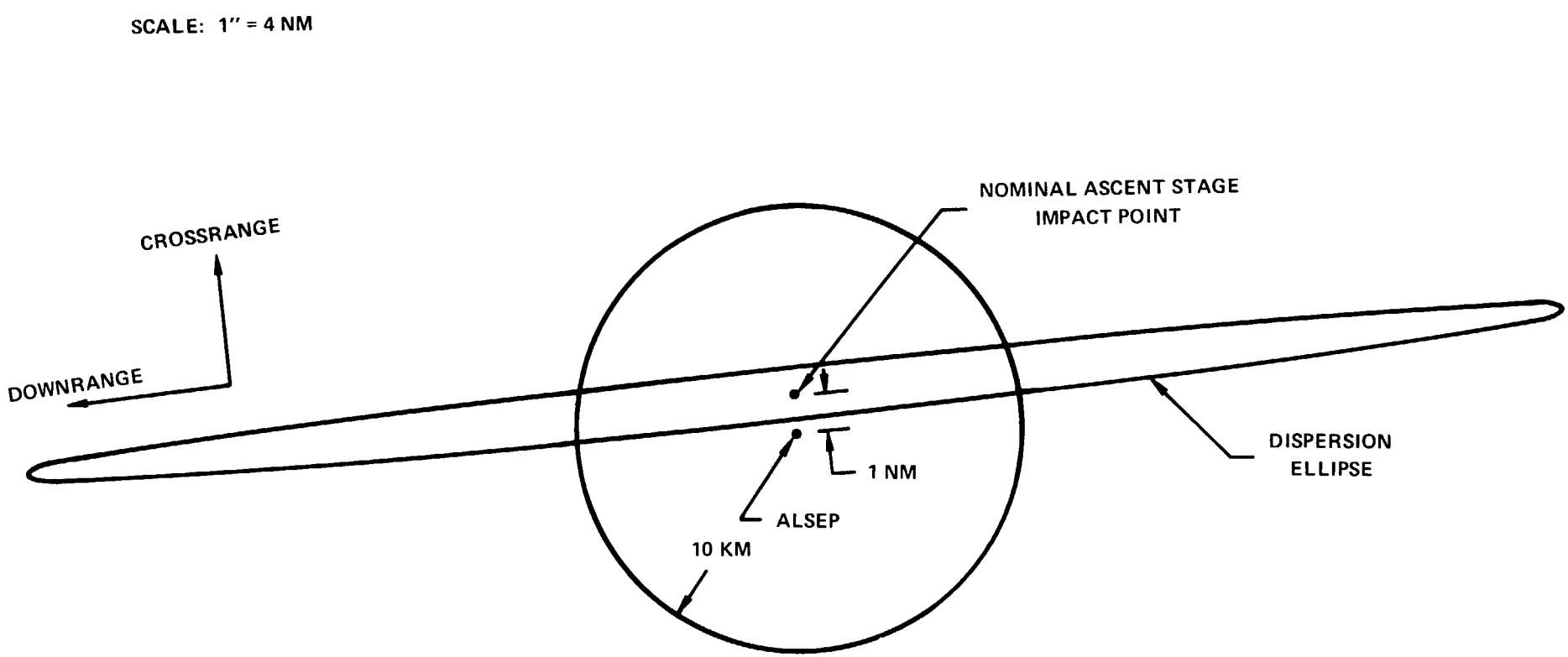

FIGURE 1 - IMPACT GEOMETRY