ANOMALIES IN THE APOLLO ENTRY GUIDANCE PROGRAM

by F. S. Pooley
J. A. Stiles

February 20, 1967

Prepared by Bell Telephone Laboratories, Incorporated
on behalf of Bellcomm, Inc.

[redacted]

BELLCOMM, INC.
1100 Seventeenth Street, N.W. Washington, D.C. 20036

SUBJECT: Entry Guidance Errors
Case 310

DATE: February 27, 1967

FROM: R. V. Sperry

MEMORANDUM FOR FILE

It has been discovered recently that the entry guidance as used in the AS-501 mission can occasionally result in misses of 100 NM or more despite apparently reasonable initial flight conditions. The attached report discusses this problem, which has already been reviewed with the Reentry Studies Section, MPAD/MSC.

2012-WGH-jan

R. V. Sperry

Attachment
"Anomalies In The Apollo
Entry Guidance Program"

Copy to
Messrs. T. A. Keegan-NASA/MA

A. Cohen-MSC/PD4
L. Dunseith-MSC/FM2
T. Gibson-MSC-FM2
C. A. Graves-MSC/FM5
J. P. Mayer-MSC/FM
H. Tindell-MSC/FM

I. Bogner
J. O. Cappellari, Jr.
D. R. Hagner
W. G. Heffron
W. C. Hittinger
B. T. Howard
C. M. Klingman
J. Z. Menard
V. S. Mummert
I. D. Nehama
B. H. Niedfeldt
I. M. Ross
T. H. Thompson
R. L. Wagner
Central Files
Department 1023
Library

1. Summary

Anomalous behavior has been found during a study of the Apollo entry guidance system at lunar return velocities. This results in the creation of "holes" in the entry corridor: that is, values of variables (such as flight path angle) within the corridor boundaries for which a large miss occurs. One such hole is near the AS-501 nominal entry conditions. The extreme sensitivity to very small changes in many variables, and the consequent sharpness of the holes, does not allow confidence in the operation of the guidance program.

Holes are caused by crossrange control interfering with downrange control when the range is sufficiently long to require a ballistic skip. It is recommended that the guidance equations be redesigned to allow for this interaction. Short of a redesign, the interaction may be reduced by widening the lateral deadband. This will probably eradicate the holes if the widening is sufficient; but, with so complicated a program, a specific change cannot be recommended until its effects for all entry conditions in the corridor are carefully examined.

This study was performed by the Control Systems Analysis Department on behalf of Bellcomm, Inc.

2. Existence of Holes

Several holes were encountered during a determination of the entry corridor (flight path angle versus velocity). Two of these holes are discussed in this report:

1. The first was found for a range, R, of 2500 miles, L/D of 0.34, entry velocity, V, of 36,133 ft./sec., and entry flight path angle, γ, of -7.0°. For this combination of values, the spacecraft undershot the target by some 200 miles.
2. For the same range R = 2500 miles, but L/D = 0.38, V = 36,333, γ = -7.13, there is an overshoot of about 200 miles.

The second combination is particularly important as it represents the nominal entry conditions for AS-501.

Also, because of the ineffectiveness of the GLIMITER in the final phase, it was found that a trajectory which overshoots has a maximum load factor greater than the specified 10g. Values of about 13g are usual for the AS-501 hole, for example.

3. Characteristics of Holes

Holes have two striking characteristics: sharpness and small size. Sharpness means that as a variable (such as flight path angle) moves across a hole boundary, the miss changes suddenly from a small value (say less than 2 miles) to a large value (say 200 miles). This step-function change is due to a switch between different paths in the guidance program.

By smallness of size we mean that for at least one variable (flight path angle), the hole occurs for only a small range of values; 0.03° is the greatest width in flight path angle we have found. Sharpness and smallness are illustrated by the following typical table of flight path angle and miss across the AS-501 hole. All other variables were held constant for these trajectories:

γ, degrees	Miss, n.m.
-7.12	0.8
-7.13	193.5
-7.14	281.4
-7.15	374.4
-7.16	489.4
-7.17	0.3

This smallness means that a very detailed search would be needed to find all holes present; and smallness exists in other variables than flight path angle. For example, the width of the AS-501 hole in initial flight path azimuth is only about 0.5°. There are many variables to which the hole shape is sensitive. Examples are initial velocity, target position, vehicle characteristics, atmosphere model, and various guidance constants. Variation in any of these will cause the hole's location in, say, flight path angle, to change. Some changes move the hole slightly away from the AS-501 nominal γ of -7.13°. However, the existence of holes at all is undesirable, so it is necessary to understand and remove them. A short explanation of the contributing factors in the guidance is needed first.

4. Guidance System Background

The entry guidance program has to control downrange and crossrange with a single control variable, roll angle. To do this, downrange guidance is given precedence and crossrange is controlled by a simple switching scheme. Nevertheless, the crossrange guidance does interfere with the downrange, for during a roll reversal the vertical

component of the lift vector is not what the downrange guidance requires. It is this interaction which causes the holes. The downrange guidance, if left alone, could have done its job properly for the two holes considered. This has been tested by preventing roll reversals during first entry of hole trajectories (ones with large downrange misses). A small downrange miss resulted, but there was a large crossrange miss.

Since crossrange control cannot be abandoned, the interaction that causes holes must be examined more closely. Figure 1, simplified from reference 1, shows the features of the guidance program in the exit steering phase (UPCONTROL) that concern us. Depending on the values of velocity V and drag D, the L/D command to the lateral logic is computed in one of three different ways.

If V is greater than the previously predicted pullout velocity V_1, L/D is found by the pullout guidance equation, based on a reference trajectory with reference L/D full lift up (LAD). This L/D may be modified by the NEGTEST block, which prevents lift down* if $D > 175$ ft./sec.^{2}; near the two holes, there is no modification, as down lift is never called for by the pullout guidance.

If $V \leq V_1$, and D is greater than the predicted pullout acceleration A_o, full up lift (LAD) is commanded.

---

*This also prevents roll reversals through the downward vertical.

If $D \leq A_o$, an L/D is first found from the exit guidance equation, based on a reference trajectory with an L/D of LEWD (0.2 in our cases). This L/D is then modified by the clamp, a limiter which reduces the L/D excursion for deviations of more than 0.1 from the nominal; and then modified further by NEGTEST.

The final L/D command passes in all cases to the lateral logic block. The operation of this is straightforward. However, it is not clear exactly how the autopilot executes a roll change when supplied with a commanded roll angle φ_c by the lateral logic. We have simulated two simple schemes that might be used. Neither takes account of the present roll rate. In the first, the lift vector is rolled in the direction for which the angle between commanded and actual vector is less than 180°; we shall call this the $\leq 180°$ scheme. In the second, the roll rate and direction are found simply by subtracting the actual roll angle from the roll command of the lateral logic, dividing by the guidance interval, and limiting. Due to manipulation of the role command by K1ROLL, for a roll reversal this scheme would cause a roll through the upward or downward vertical according as the commanded lift vector was up or down, regardless of the value of the actual

roll angle φ. We shall call this the up if φ_c up scheme. For both schemes there are singular pairs of values of φ and φ_c, for which a roll reversal could take place either over or under. For the $<180°$ scheme, any pair of values of φ and φ_c 180° apart is singular. For the up if φ_c up scheme, the only singular condition is when φ_c is horizontal (90° or 270°). Thus, singularity problems are less likely with this scheme. Its disadvantage is that a reversal could take up to 270° of rolling. Roll singularity is undesirable as it represents a possible division of logical paths, and so is capable of producing a hole.

The opinion of the Reentry Studies Section, MSC, is that the $< 180°$ scheme is the one used. We have simulated both. In our simulation, we assume infinite roll acceleration, but limit roll rate to 15°/sec.

5. Causes of Holes

Let us now look at a typical trajectory in the neighborhood of the holes. Trajectories for the two holes are quite similar, all having the following structure:

UPCONTROL phase starts about 70 seconds after entry, with, first, four guidance cycles in pullout guidance. The next guidance cycle is either still in pullout guidance, or, V having fallen below V_1, is a cycle of full up lift. Exit guidance is then entered, with NEGTEST operating for its first five cycles. The drag then falls below 175 ft./sec.^{2} and lift down is allowed. At some time near the end of NEGTEST's operation, either before or after, a roll reversal is commanded. Since this reversal may go either way, the various trajectories are no longer similar after this point.

It is worth noting that this trajectory behavior is not what one would expect from a simple interpretation of the UPCONTROL strategy. The trajectory type is one for which it was predicted in trajectory planning (RANGE PREDICTION) that the nominal L/D profile would cause an undershoot. By increasing the pullout velocity V_1, the exit reference trajectory was then altered to one which would hit. If the prediction of pullout velocity V_1 and acceleration A_o were accurate, and the pullout guidance effective, the velocity would equal

V_1 before pullout, and before the acceleration decreased to A_o. In fact, V equals V_1 <u>after</u> pullout, and either before or after drag equals A_o, depending on the trajectory. Further, after V_1 had been attained, we would expect that L/D would be greater than nominal (0.2); for our prediction said that a nominal trajectory would fall short. However, L/D is actually negative for several cycles after the beginning of exit guidance. These differences from what we should expect could be due to inaccurate predictions, or to unsuitable guidance equations.

We have described common elements of the trajectories. It is the points in which they differ which determine whether the trajectory misses or not. The critical points of difference are four:

1. LAD or pullout guidance can be used for the fifth cycle of UPCONTROL phase.
2. Roll reversal can be commanded before or after the end of NEGTEST.
3. The guidance can come out of NEGTEST commanding either lift up or lift down.
4. <180 or up if φ_c up autopilot logic can be used.

(1) can cause quite a difference in lift profile, and so in the subsequent trajectory, even though the effect persists

only over one cycle.* (2), (3), and (4) determine whether the roll reversal goes through the upward or downward vertical. The effect of different combinations is shown in Figure 2; assuming that, if the reversal is after NEGTEST, it is commanded on the first cycle after, as usually happens.

A good way to study the irregular behavior near holes is to compare roll histories for trajectories which follow the different possible logical paths. This is done for the undershoot hole in Table 1. The two roll histories are for trajectories with V = 36133, L/D = 0.34, R = 2500, and γ = -7.0 and -7.005. The first trajectory undershoots by 179 miles; the second hits. The periods of roll during which the roll angle φ does not equal the commanded roll angle φ_c of the previous cycle are shown by the brackets. Both trajectories show the typical behavior to 92 seconds, the last cycle of NEGTEST. One cycle of lift down is then commanded (φ_c = 93°), and thereafter lift up. The trajectory that missed actually had reversal commanded during this lift up (at 96 seconds), but it was using a <180° autopilot which resulted in a downward roll. A downward roll would have resulted from <u>either</u> autopilot, however, had reversal been commanded a cycle earlier.

---

* To demonstrate this sensitivity, a simplified two-dimensional simulation was made of an open-loop trajectory flown with L/D = 0.38 to pullout and 0.2 to exit. If, at pullout, the L/D was changed to -0.38 for one guidance cycle (2 seconds), the subsequent range changed by 800 miles.

Roll reversal is the only obvious reason why these trajectories undershoot. In Table 2, though, there is another identifiable disturbing factor: the single cycle of full up lift when $V < V_1$ but $D > A_o$. Table 2 shows roll histories for three neighboring trajectories about the AS-501 hole. As in Table 1, the periods during which φ does not equal φ_c of the previous cycle are shown by brackets.

The first trajectory overshoots by 350 miles. It is biased in the overshoot direction by the cycle of full up lift at 79 seconds, and then has a roll reversal commanded in NEGTEST, which thus has to be upwards. The second trajectory is identical to the first, except that the roll reversal is delayed one cycle by slightly widening the lateral deadband (KLAT was increased from 0.0125 to 0.0135). Since lift down is commanded for that cycle, the roll reversal is downward and the trajectory hits. This is the behavior shown by the TRW operational trajectory,[2] which is very close to our trajectory until roll reversal.

The third trajectory has the same lateral deadband as the first, but the CM drag coefficient has been decreased 1%. This removes the cycle of LAD, so that, although the roll reversal is in NEGTEST and upward, the trajectory hits. Roll reversal is commanded earlier for this trajectory as the

absence of the LAD cycle leaves more lift to the side, so that the lateral deadband is exceeded sooner.

If we examine the later times in Table 2, we see that the exit guidance equation tries to compensate for the disturbance of the roll reversal. For trajectory 2 it commands full up lift, and for trajectory 3 tries to command lift down. However, this down lift is severely limited by the clamp. Trajectory 3 still hits, but for trajectory 1, this same limiting is fatal. The loss of drag and the gain reduction in the guidance equation toward exit further reduce control effectiveness.

Thus, we have the complete pattern of interaction that causes holes: the downrange guidance is sensitive enough to be able to bias the trajectory early in the up-control phase. A roll reversal, which the downrange guidance cannot take account of in trajectory planning, can compound the error. Finally, clamp and gain limitations in the down-range guidance can prevent its subsequent response from being effective.

6. Recommendations

The downrange guidance should be redesigned to take account of the interaction with crossrange due to roll reversal. Short of this, it might be possible to modify the existing guidance by predicting when a roll reversal was going to occur and what its direction would be, and then modifying the current L/D to reduce the effect of reversal. If the reversal were to be upwards, the present L/D would be reduced, for example. The amount of modification needed would have to be found by experiment, but a small change would be bound to help.

Such large changes in the program are probably impractical for early Apollo missions. For them, some further patches can be made. The most effective would be to reduce interaction by delaying roll reversal until the drag is lower and the potential for downrange disturbance less. This could be done either by using a locking switch based on drag (as was done in the AS-202 program, when it was called LATSW), or by widening the lateral deadband. Both are about equivalent for nominal azimuth (the situation where holes are most likely, for roll reversal then occurs as early as possible), but the drag switch would be less able to deal with a wrong initial roll direction, and it would probably be more difficult to find a suitable drag threshold than lateral deadband. Deadband increase is therefore recommended; if this would impair second entry crossrange control, a smaller deadband could be used during that part of the flight. Though experiment is needed, a rough estimate shows that the deadband can be increased

considerably. Thus at entry, the azimuthal capability is about ±6°, but the present deadband is only about ±2°. A 50% increase (KLAT, say, 0.02) therefore seems permissible. A smaller increase (about 20%) would remove the observed holes.

It might help in general to simplify the program by removing the LAD block in UPCONTROL, and replacing the <180° autopilot by an up if φ_c up autopilot. The first provides an undesirable disturbance in roll history, and the second a possibly sensitively balanced choice of paths. In fact, both the holes we have described would go away if these two changes were made.

If it were not possible to change the program at all, roll reversal could still be delayed by initially offsetting the trajectory in azimuth. This would not be desirable as a permanent practice, however, as it would leave a gap in the middle of the crossrange capability. Another possible fix without changing the guidance equations is to reduce range. This would reduce the sensitivity of range to the exit conditions, and allow the exit guidance to do a better job since less modification of the exit guidance reference trajectory would be needed.

F. S. Pooley

F. S. POOLEY

J. A. Stiles

J. A. STILES

WH-4264-$\frac{\text{FSP}}{\text{JAS}}$-NGC

Atts.
References
Tables 1 & 2
Figures 1 & 2

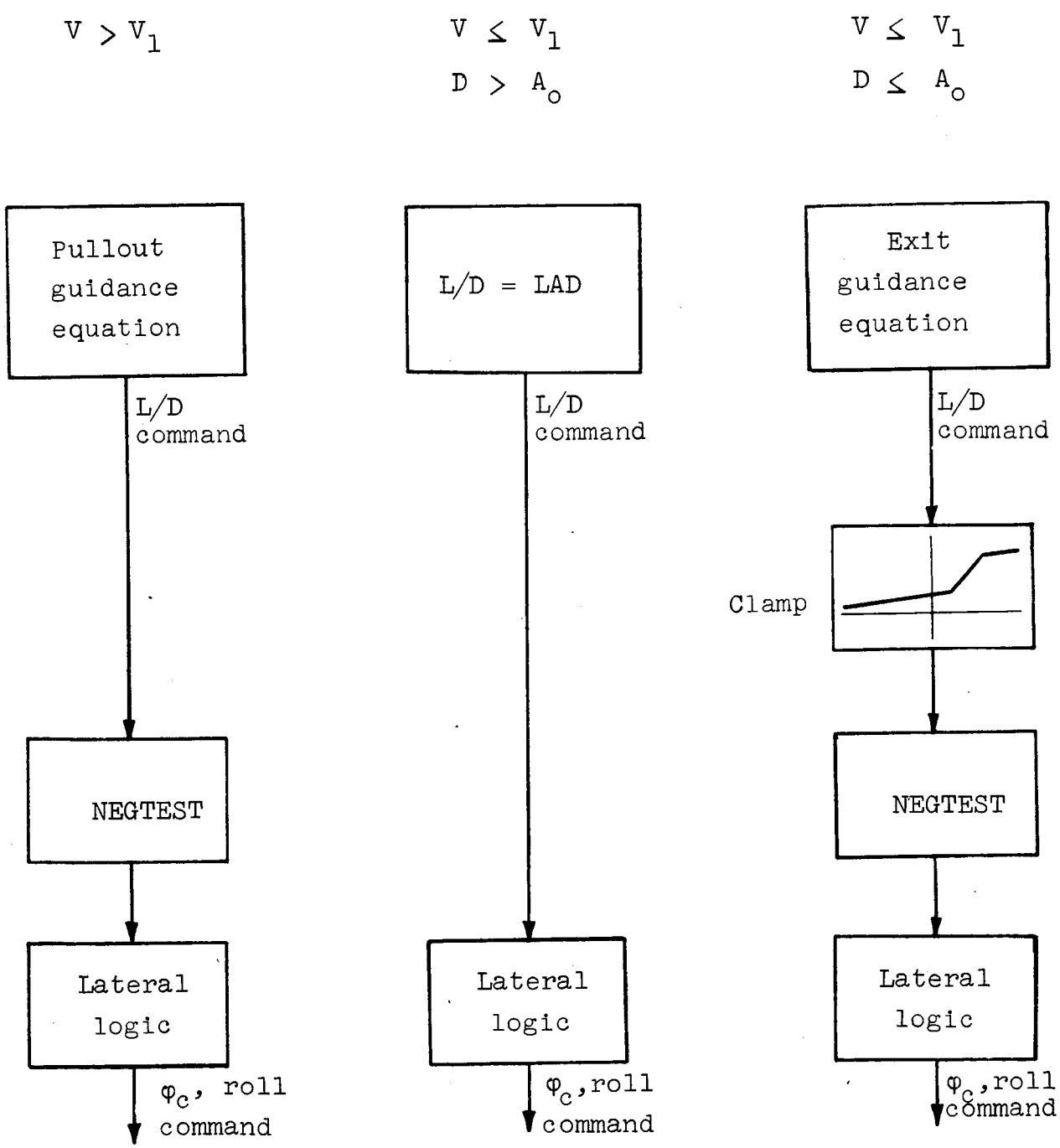
$V > V_1$
Pullout guidance equation
L/D command
NEGTEST
Lateral logic
φ_c, roll command
$V \leq V_1$
$D > A_o$
L/D = LAD
L/D command
Lateral logic
φ_c, roll command
$V \leq V_1$
$D \leq A_o$
Exit guidance equation
L/D command
Clamp
NEGTEST
Lateral logic
φ_c, roll command

Figure 1.

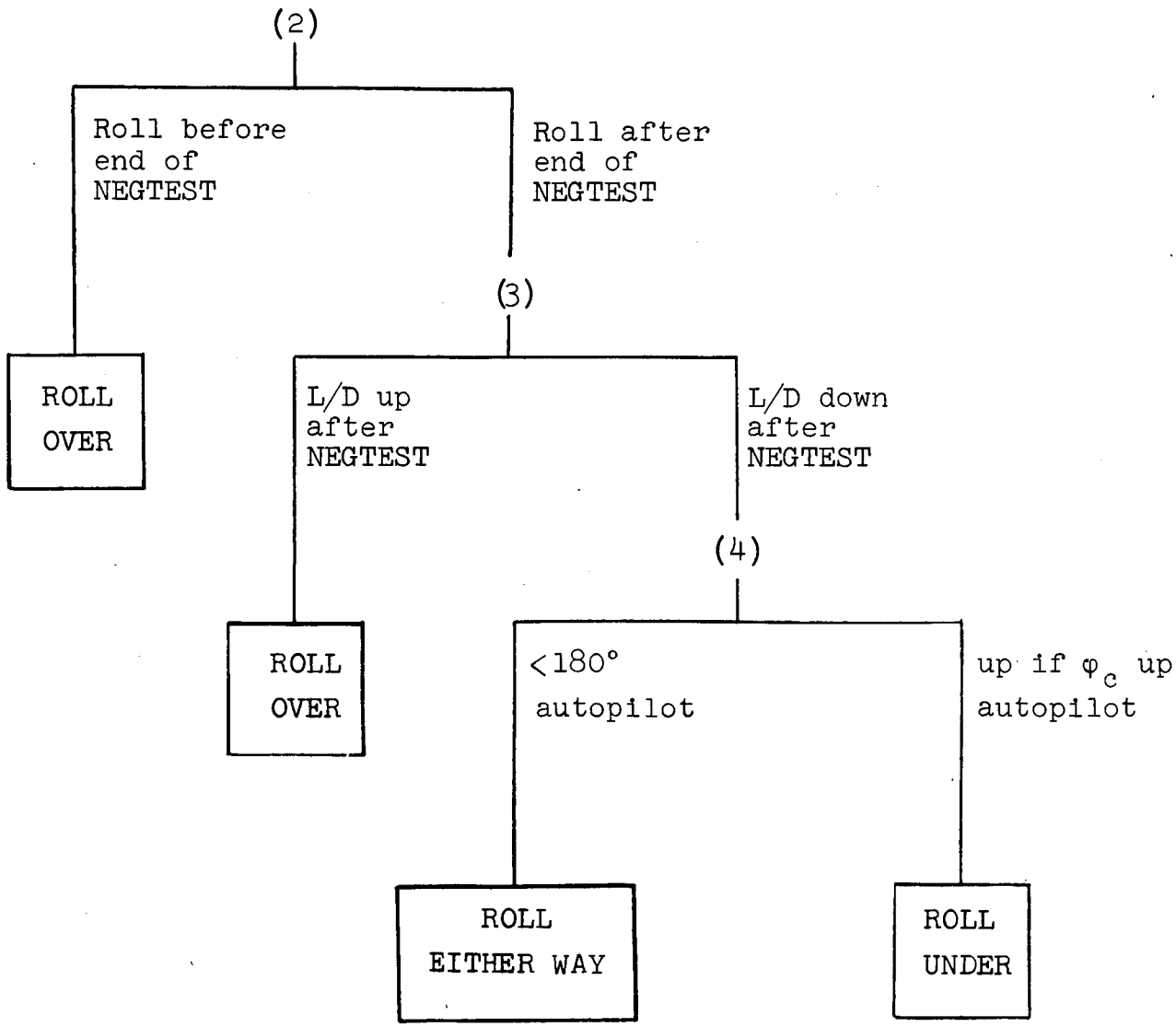
(2)
Roll before end of NEGTEST
Roll after end of NEGTEST
ROLL OVER
(3)
L/D up after NEGTEST
L/D down after NEGTEST
ROLL OVER
(4)
<180° autopilot
up if φ_c up autopilot
ROLL EITHER WAY
ROLL UNDER

Figure 2.

Table 1. Undershoot hole: $V = 36133$, $R = 2500$, $L/D = 0.34$,

$\gamma = -7.0$(Traj. 1), -7.005(Traj. 2)

Time from entry, sec.	φ_c, degrees		φ, degrees	
	Traj. 1. Undershoot	Traj. 2. Hit	Traj. 1. Undershoot	Traj. 2. Hit
	UPCONTROL phase starts at 74 sec.			
74	0	0	0	0
76	0	0	0	0
78	0	0	0	0
80	0	0	0	0
82	0	0	0	0
84	-90	-90	0	0
86	-90	-90	-30	-30
88	-90	-90	-60	-60
90	-90	-90	-90	-90
92	-90	-90	-90	-90
94	-93.3	-92.6	-90	-90
96	87.1	86.5	-93.3	-92.6
98	80	84	-123	-63
100	72	84	-153	-33
102	15	85	-183	-3
104	15	85	-213	27
106	15	85	-243	57
108	15	84	-273	85
110	15	82	-303	84
112	15	81	-333	82
114	15	79	-345	81

Table 2. Overshoot hole: $V = 36333.6$, $R = 2500$, $L/D = 0.38$, $\gamma = -7.13$

Time from entry, sec.	φ_c, degrees			φ, degrees		
	Traj. 1. Overshoot	Traj. 2. Hit	Traj. 3. Hit	Traj. 1. Overshoot	Traj. 2. Hit	Traj. 3. Hit
	UPCONTROL phase starts at 71 sec.					
71	0	0	0	0	0	0
73	0	0	0	0	0	0
75	-20	-20	-20	0	0	0
77	-45	-45	-45	-20	-20	-20
79	0(LAD)	0(LAD)	-59	-45	-45	-45
81	-90	-90	-90	-15	-15	-59
83	-90	-90	-90	-45	-45	-89
85	-90	-90	-90	-75	-75	-90
87	-90	-90	90	-90	-90	-90
89	90	-90	86	-90	-90	-60
91	110	-253	89	-60	-90	-30
93	111	-262	94	-30	-120	0
95	112	-273	98	0	-150	30
97	112	-283	98	30	-180	60
99	110	-318	95	60	-210	90
101	105	-345	91	90	-240	95
103	101	-345	88	105	-270	91
105	97	-345	85	101	-300	88
107	94	-345	83	97	-330	85
109	91	-345	82	94	-345	83
111	89	-345	81	91	-345	82

REFERENCES

1. Guidance system operations plan, AS-501. Volume I: Operations. MIT Instrumentation Laboratory R-537, Rev. 1; December 1966.

2. AS-501 spacecraft operational trajectory, Volume II: trajectory listing and simulation input data. TRW note No. 66-FMT-465; November 15, 1966.