71-10233
(ACCESSION NUMBER) (THRU)
41 B1
(PAGES) (CODE)
CR-119292 31
(NASA CR OR TMX OR AD NUMBER) (CATEGORY)
FF No. 602(C)
AVAILABLE TO U.S. GOVERNMENT AGENCIES ONLY

Bellcomm
955 L'Enfant Plaza North, S.W.
Washington, D. C. 20024

B71 06056

date: June 30, 1971

to: Distribution

from: C. S. Rall

subject: Propulsive Landing of Ballistic Vehicles - Case 105-4

AUG 1971
RECEIVED
NASA STI FACILITY
INPUT BRANCH

(NASA-CR-119292) PROPULSIVE LANDING OF BALLISTIC VEHICLES (Bellcomm, Inc.) 41 p
N79-71980
Unclas
00/13 12863

ABSTRACT

Basic requirements for pinpoint vertical landing of reusable ballistic vehicles are identified. The goal of using main rocket propulsion with a maximum ΔV penalty of less than about 300 meters per second appears to be a reasonable one.

The desire for a pinpoint landing with low ΔV indicates the need for fully automatic systems, including onboard navigation. Because of expected drift, radio updates of the onboard inertial navigation system are necessary for the last few hundred kilometers before landing. Possible applications and the limitations of current aircraft navigation aids are discussed.

Three separate guidance phases during reentry and landing are identified. Trim offset to obtain small amounts of lift during reentry is obtained through use of a flap on the side of the vehicle. With lift modulation, either through roll steering or flap position changes, a guidance phase similar to that of Gemini or Apollo reentry appears quite adequate to come within several kilometers of the target point. An intermediate phase using active flap changes is then needed during subsonic speeds to come within several hundred meters of the target. A terminal braking phase using the main engines and an explicit guidance similar to that of the Apollo Lunar Module is used between an altitude of about 600 meters and touchdown.

Several problem areas are identified. The details of reentry guidance need to be analyzed to determine the minimum vehicle L/D needed to keep loads below 3g and to allow for expected navigation and guidance dispersions. An L/D of 0.3 appears to be adequate, but smaller values are desirable from a boost performance standpoint. The aerothermodynamics of base-first cones with a flap attached need to be studied further. A detailed simulator, including wind effects and perhaps six degrees-of-freedom, is necessary to demonstrate concept validity, minimum intermediate phase flap power requirements, and terminal phase ΔV requirements.

Bellcomm
955 L'Enfant Plaza North, S.W.
Washington, D. C. 20024

B71 06056

date: June 30, 1971

to: Distribution

from: C. S. Rall

subject: Propulsive Landing of Ballistic Vehicles - Case 105-4

MEMORANDUM FOR FILE

1.0 INTRODUCTION

1.1 Ballistic Earth Orbit Shuttle Concepts

Several reusable one and two stage ballistic vehicles (Ref. 1-7) have been suggested as alternatives to NASA's current Earth orbit shuttle concept of two lifting body vehicles. Physically, many of these vehicles have a conical shape similar to that of the Apollo command module. However, the cone is frequently truncated; and the cone half angle is often less than Apollo's 33°. Ascent propulsion is supplied either by a large diameter plug nozzle engine situated around the base of the cone or by a number of high chamber pressure bell nozzle engines placed around the base. Take-off, naturally, is vertical.

The landing is also performed vertically after a base-first reentry from orbit. This is the phase of the problem considered here.

1.2 Landing Requirements

The most important requirements are that the vehicle touch down with very small horizontal and vertical velocities (less than about 1 to 3 m/sec) in the proper tail-sitting altitude. Additionally, the deceleration felt by the vehicle and its contents should be limited to the NASA space shuttle guideline of 3g.

In order for this concept to realize its potential performance and cost advantages, the characteristic ΔV required for the landing maneuver should be kept to about 300 m/sec ($\sim$ 1000 ft/sec.). Velocity changes of this magnitude can be reasonably supplied by the main engines in a throttled condition. If larger characteristic ΔV's are needed, a different

system such as turbojet lift engines may be necessary to keep the weight penalty reasonable. In addition to the weight and payload penalty, the addition of such a system adds complexity. Hence, a landing ΔV penalty of 300 m/sec or less is desirable.

Landing accuracy can also affect the cost of operations. Landing should certainly take place near the launch site to minimize the ground operations required before the next launch. The ultimate solution would be to have the vehicle land on the launch pad. This feat requires a landing within about 3 m ($\sim$ 10 ft) of the target, but the requirement is strongly influenced by launch pad and vehicle design.

1.3 Aspects of the Problem

The remainder of this memorandum is divided into three main sections according to the three aspects of meeting the landing requirements:

1. Navigation - What is the present state (position and velocity) of the vehicle?

2. Guidance - What should be done now to get the vehicle to the target point?

3. Control - How should the thrust or aerodynamic surfaces be changed to carry out the guidance commands?

Figure 1 shows the relationships among these three functions and the physical operation of the vehicle. Most of the blocks labeled as navigation, guidance, and control systems are contained within the central computer of the vehicle. The separation between the guidance system and the control system is not sharply defined, but only generally indicated. For this reason, they are considered together in Section 3.

The concept that is most poorly defined for the present problem and that contributes most strongly to ΔV is guidance; and hence, the most attention is paid to it.

2.0 NAVIGATION

2.1 Apollo Reentry Navigation

Before deorbit from an orbital Apollo or Gemini mission, position and velocity information derived from the MSFN tracking network must be used to initialize the onboard inertial system (Ref. 8). The updating information has 3σ

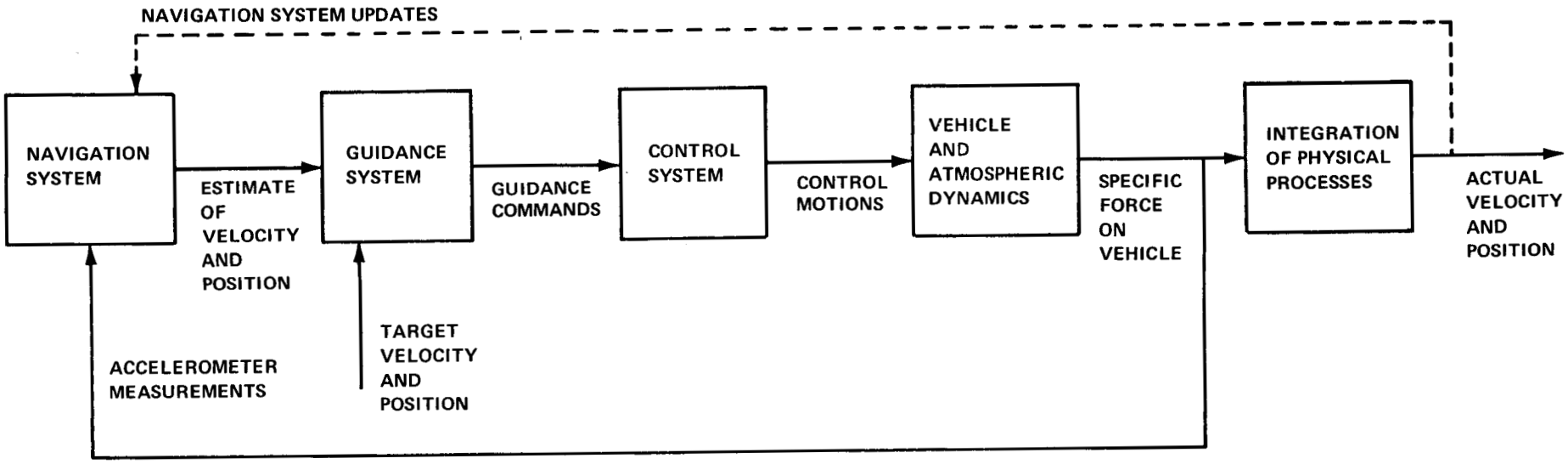

FIGURE 1 - NAVIGATION, GUIDANCE, AND CONTROL FUNCTIONS

accuracies of about 1 km and .75 m/sec in each axis. The resulting 3σ position indication errors for the nominal AS-204 reentry were 4.4 km downrange, 1.7 km crossrange, and 3.8 km in altitude.

During reentry, the Apollo command module depends on its inertial navigation system to keep track of the state of the vehicle. Attitude initialization errors, gyro drift, and accelerometer bias contribute to reentry navigation errors. If the Inertial Measuring Unit (IMU) is aligned between 15 and 60 minutes before retrofire and if the accelerometer outputs are not used until an altitude of 120 km (400,000 ft) is reached, the 3σ dispersions in actual miss for the nominal AS-204 reentry are 6.1 km downrange and 5.3 km crossrange.

The total (RSS) dispersions due to these navigation errors are then about 7.5 km downrange and 5.6 km crossrange with an altitude indication error of several km (3σ).

2.2 Navigation Accuracy Improvement

Obviously, in order to land propulsively on the launch pad, the navigation accuracy must be improved considerably over that indicated above; but the improved accuracy need not come at the beginning of the reentry. The final accuracy must be somewhat better than the 3 m touchdown miss allowed, but that degree of accuracy need not come until very close to touchdown.

With a piloted, aircraft-like vehicle, the terminal navigation accuracy is supplied by the pilot's vision; but with future shuttle concepts, a fully automatic landing is desirable. Navigation updating (the dotted information path in Figure 1) may be supplied by one or more electromagnetic (radio or laser) links to sites near the target.

The navigation system cannot be updated by radio links during reentry until the vehicle is out of blackout. However, with orbital reentry of a low density vehicle, blackout ends well short of the target point (Ref. 9). Navigational accuracy requirements at various points in the trajectory are dependent upon the capability for error correction in the remaining portion of the trajectory and the cost of making up those errors. The information presented in Ref. 10 and 11 and discussed in Appendix A indicates that navigation updates should begin at least about 100 to 300 km short of the landing site, because from that distance any expected errors can be corrected by Apollo-like guidance.

2.3 Possible Mechanizations of Navigational Updates

This subsection discusses some possible devices which could be used to make measurements and supply updates for the vehicle inertial navigation system. It is assumed that most of the antenna gain and transmitter power will be on the ground, since antennas on the entry vehicle must survive reentry.

2.3.1 Radio Beacons

Radio beacons are transponders which allow the vehicle to make measurements of range and range rate between the vehicle and the beacon. Transponders aboard the Apollo spacecraft and aboard interplanetary spacecraft perform this function for Earth-based tracking networks. The difference with any transponders used in the present situation is that the range is much less and the measurements must be taken much more often.

A range measurement from one beacon gives a sphere of uncertainty for the position of the vehicle. A second range measurement from a second beacon gives a circle of uncertainty from the intersection of two spheres of uncertainty. The exact position can then be completely determined either by a radar altimeter measurement or by a measurement from a third beacon.

The equipment needed to give the desired range and accuracy remains to be determined.

2.3.2 Microwave Scanning Beam Systems

A development model of a microwave scanning beam system has been tested as an accurate substitute for the present Instrument Landing Systems (ILS) for all weather aircraft landing (Ref. 12 and 13). The system consists of electronics and two narrow-beamwidth antennas (one for azimuth and one for elevation) which scan back and forth while they transmit information on the angle at which they are pointed. When the aircraft receives this information, it knows that it is at the indicated angle from the transmitting station. 3σ deviations obtained from the four-year-old test results are as follows:

Elevation angle:	.09°
Azimuth angle:	.15°
Range:	90m

An acquisition range of up to about 40 km is indicated by Ref. 13.

With a few changes in specifications, such a system could be used for the ballistic booster landing. To do this, the acquisition range must be increased by about an order of magnitude, but the feasibility of this range extension is unknown. The range measurements are essentially useless for the final phases of landing because of their poor accuracy, although they are useful before the final phases. In addition, because of the almost vertical terminal descent of the ballistic booster landing, the angles through which the antennas must operate are much larger than those necessary for an aircraft on final approach to a conventional runway. However, if two transmitting facilities are located within about 1 km of the landing site and in different directions from it, the azimuth accuracy given above can supply better than 3 m horizontal accuracy (3σ) for the touchdown. In addition, future accuracy improvements do not seem unlikely.

2.3.3 Aircraft Navigational Aids

Several other aircraft navigational aids presently in existence present the opportunity for additional intermediate range navigational information. Existing facilities that are not coincident with the launch site could be used.

One navigational concept is TACAN. Each station can supply range and azimuth information at a maximum range of from 320 km to 480 km. 3σ position accuracy of the system is said to be 0.6 km in distance from the station and 2.3° in azimuth from the station (Ref. 14).

Another useful concept is LORAN-C. Three stations are required for a complete position fix. Maximum range extends from 2200 km to 3700 km. Position can be determined to the order of 300 m (3σ) (Ref. 14).

Other concepts exist, but most are less useful due to poorer accuracies, requirements for long tracking times, and restricted coverage.

2.3.4 Laser Radar

Laser radar systems, employing cooperative lasers at both ends of the radar link, have been investigated for use in rendezvous and docking operations in space (Ref. 15). At short ranges, the system simulated has angular errors about the same as the microwave scanning beam systems discussed above, but the 3σ range accuracy is about 0.1 m. In addition, accurate range rate and angular rate information is supplied by the radar. An acquisition range of about 120 km is claimed for the system.

However, the optical wavelength used can be effectively blocked by rain and clouds, thereby precluding its use as a primary aid. A laser radar may nevertheless be desirable to supplement a radio frequency system for high accuracy in the terminal phase of the landing, although it would be useful only below the operational ceiling.

3.0 GUIDANCE AND CONTROL

This section discusses the philosophy of how the vehicle should be guided through the reentry and landing. First, methods of obtaining small amounts of lift are discussed. Then, Apollo guidance for reentry from orbit is discussed and identified as a reasonable approach for the vehicles considered. The terminal, propulsive landing phase is next discussed, and fuel requirements are identified. Finally, the need for an intermediate guidance phase is indicated and two possible approaches for this phase are discussed.

3.1 Obtaining Lift

To perform a controlled entry maneuver without active propulsion, some lift is necessary from the vehicle shape and angle-of-attack. Gemini and Apollo generate a trim angle-of-attack by a center-of-mass offset from the vehicle centerline. The vehicle then flys at this angle-of-attack even if no thruster control torques are applied to the vehicle.

Center-of-mass offset could be used in the present concept with an asymmetric internal arrangement and perhaps with fluid that could be pumped to one side or the other of the craft. However, this course requires extra tankage and plumbing and fairly long times for fluid transfer.

An apparently more attractive concept to supply a trim angle-of-attack is a flap which hangs out from the side of the vehicle into the airstream. However, there is a good deal more that should be known about the aerodynamics of such a configuration with various flap sizes and positions. One needs to know dynamic stability coefficients as well as lift and moment versus angle-of-attack so that flap size and allowable center-of-mass location range can be determined. Investigation of local heating effects in the vicinity of the flap should also be included. The data should extend from hypersonic speeds to subsonic speeds, and the subsonic data should include information at large angles-of-attack for use during the intermediate and terminal phases of the reentry.

3.2 Roll Modulated Entry

During Apollo reentries, downrange distance is controlled by the amount of lift in the vertical direction, and the crossrange distance is controlled by the amount of lift in the horizontal direction. At a given flap setting and a given speed, the trim lift and drag cannot be altered. A desired lift in the vertical direction (L_D) is obtained by rolling the entire vehicle about the velocity vector to a roll angle ϕ given by

$$\phi = \text{Arcos}\left(\frac{L_D/D}{L_{trim}/D}\right) \tag{1}$$

Lateral control is achieved by controlling the sign of ϕ.

In Gemini and Apollo, this roll angle is controlled by the attitude control rockets. These rockets must fire to accelerate, maintain, and decelerate the angular velocity about the velocity vector.

An important advantage of this roll steering guidance scheme is that it requires only small amounts of control propellant for angular rate damping about all three axes and angular accelerations and displacements about the roll axis. Propulsion is not needed to offset any steady-state torques.

An alternative for roll control is the possibility of employing small flaps or tabs associated with the main flap or of being able to twist the entire main flap. These possibilities suggest the need for further aerodynamic and structural investigation of modified configurations.

The use of one control (roll angle) to control two terminal variables (downrange miss and crossrange miss) makes it difficult to null both of the variables at the same time. The roll rate available and the number of roll angle reversals are limited to hold down control propellant consumption and maintain reasonable levels of crew comfort. Control of the downrange miss implies that some error must be allowed to build up in the crossrange miss. In fact, even at the end of an Apollo reentry, a lateral miss of less than about 2 km is not attempted (Ref. 8).

In addition, the guidance system stops trying to reduce the miss by the time the vehicle speed drops to the sonic level. The parachutes are opened soon afterwards. The CM can drift a few km between opening of the parachutes and splashdown.

The maximum deceleration felt by the vehicle and its occupants during a reentry is a function of the range between the reentry point and the target. Figure 2 (from Ref. 8) gives this maximum as a function of the range between the target and the entry point; each point on the curve represents a separate reentry trajectory. For this curve, the guidance used was that for the AS-204 mission, and L/D = 0.28. Note that at two ranges the maximum deceleration is close to 3g and that for intermediate ranges the maximum deceleration stays below about 4.5g. Keeping the maximum deceleration down to the NASA guideline of 3g over a continuum of ranges seems reasonable with some modification of the guidance, but guidance details and the minimum L/D needed remain to be investigated.

With the accuracy and maximum g-levels achievable from roll steering guidance, it seems reasonable to use something similar to it for most of the ballistic booster reentry, but not for that part of the entry "close" to the target because of the inability of the roll steering to carry on there with sufficient comfort and accuracy.

An alternative to roll control of the vertical component of lift is active control of the trim flap. Active flap control changes the trim L/D but because of the forces on the flap requires sizable amounts of power. Therefore, this type of control should be considered only if active flap control, as discussed below, is used during the intermediate phase.

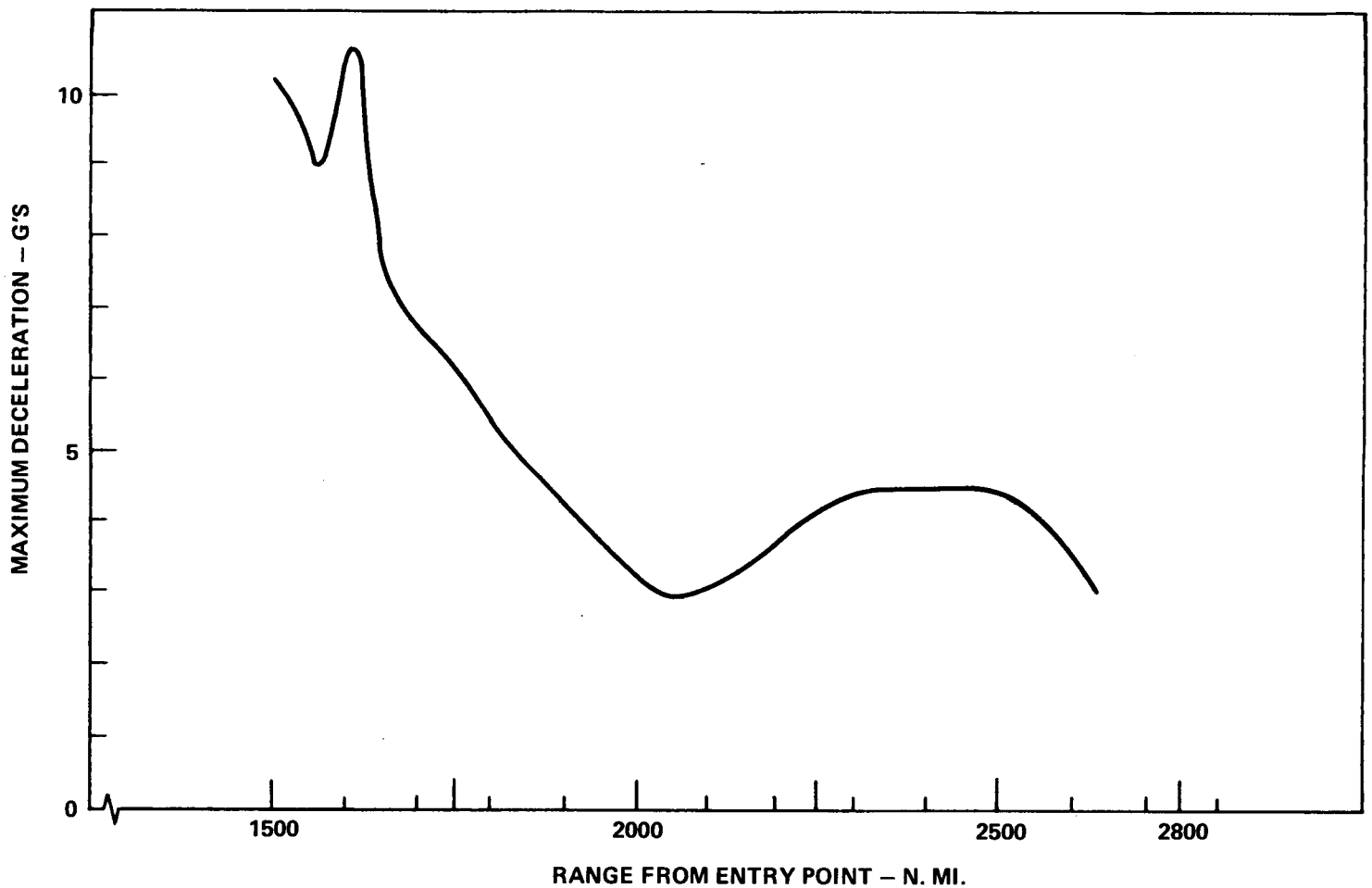

FIGURE 2 - EFFECT OF RANGE ON G'S (FROM REF. 8)

3.3 Propulsive Landing

Use of the main engines is necessary to arrest the terminal descent speed of the vehicle so that it will touch down softly. Guidance to the exact landing point must also take place during this phase.

3.3.1 Propulsion Requirements

It can be shown by optimal control theory (Ref. 16) that the minimum fuel strategy for a propulsive landing is to apply an impulse of maximum available thrust directly opposite to the velocity vector at the lowest possible altitude. This strategy will not get one to the desired target point, but it sets a bound on how well one can do.

The maximum thrust is set by the maximum specific force to which the vehicle and its cargo may be subjected. The maximum deceleration felt by passengers is set at (c+g) and the engines throttled to make up the difference between the aerodynamic drag and this value. With the vehicle falling vertically downward at terminal velocity V_o through a constant density atmosphere, the characteristic ΔV required to stop the vehicle is shown in Appendix B to be,

$$\Delta V = V_o\left(1 + \frac{2}{3}\frac{g}{c}\right) = V_o\left(1 + \frac{4}{3}\frac{h_o g}{V_o^2}\right) \tag{2}$$

The altitude h_o at ignition for the vehicle to just stop at the ground is shown to be,

$$h_o = \frac{1}{2}\frac{V_o^2}{c} \tag{3}$$

and the time required for the maneuver is shown to be,

$$T = \frac{V_o}{c} = 2\frac{h_o}{V_o} \quad . \tag{4}$$

With V_o = 100 m/sec and c = 2g (c+g = 3g), one has ΔV = 133 m/sec, h_o = 255 m, and T = 5.1 sec. With c = g, these numbers become ΔV = 167 m/sec, h_o = 510 m, and T = 10.2 sec.

Even if the vehicle is headed directly for the landing point as this simplified analysis supposes, there are several disadvantages to this type of thrust profile. The time is short, the engine ignition altitude is low, and the ΔV penalties can be severe for substantial increases in time and ignition altitude. In addition, the engines must come on very strongly at the beginning of the maneuver and must cut off suddenly at the end of the maneuver just as the vehicle is touching down. One would prefer the thrust to build up slowly at the beginning of the maneuver and taper off at the end of the maneuver.

A thrust profile which satisfies these desires is one in which the deceleration is made to follow the form $a = a_o + Jt + \frac{1}{2} St^2$. This may be called a constant snap (constant S) acceleration profile. Again, the vehicle is initially falling vertically over the target at terminal velocity V_o. The deceleration is set to zero (the vehicle and contents feel g) at the beginning and the end of the maneuver. The maximum deceleration during the maneuver occurs at the middle of the maneuver and is set equal to c. Appendix C shows that the characteristic ΔV required to perform the specified maneuver is,

$$\Delta V = V_o\left(1 + \frac{33}{35}\frac{g}{c}\right) = V_o\left(1 + \frac{44}{35}\frac{h_o g}{V_o^2}\right) \quad . \tag{5}$$

The initial altitude h_o and the maximum deceleration c are related by,

$$h_o = \frac{3}{4}\frac{V_o^2}{c} \quad . \tag{6}$$

The time required for the maneuver is given by

$$T = \frac{3}{2}\frac{V_o}{c} = 2\frac{h_o}{V_o} \quad . \tag{7}$$

With V_o = 100 m/sec and c = 2g, ΔV = 147 m/sec, h_o = 383 m, and T = 7.7 sec. With c = g, ΔV = 194 m/sec, h_o = 766 m, and T = 15.3 sec. The net effect of using this propulsive profile is to taper off the ends of the propulsive phase, to increase the ignition altitude and time, and to increase the ΔV for the maneuver.

3.3.2 Propulsive Landing Guidance and Control

The Apollo lunar module (LM) during its descent trajectory uses an explicit guidance scheme (Ref. 17) which commands the vehicle thrust according to the formula

$$\underline{a}_T = -\underline{g} + \underline{A}_T - \underline{J}_T\, t_{go} + \underline{S}_T\, t_{go}^{\,2}/2 \qquad (8)$$

where $\underline{A}_T$, $\underline{J}_T$, $\underline{S}_T$, and t_{go} are respectively the terminal acceleration vector, the terminal jerk, the snap (nominally constant), and the time to go. $\underline{J}_T$ and $\underline{S}_T$ are continuously recalculated to drive the position and velocity to the desired values at the final time. One should note that this guidance scheme is compatible with the acceleration profile suggested above. In the present problem, the terminal acceleration and velocity are set equal to zero for a gentle touchdown.

Performing this guidance in the atmosphere requires that the atmosphere be taken into account. This is done by commanding the net specific force on the vehicle according to the explicit guidance. The commanded attitude and thrust level must then be calculated such that the thrust force and the lift and drag forces add up to the commanded specific force on the vehicle. A method for doing this is indicated in Appendix D.

Attitude control about the pitch and yaw axes during the propulsive landing could be obtained by differential throttling of the main engines. With a large diameter aerospike engine, separate segments of the aerospike would be differentially throttled. With the greatly reduced weight of the landing vehicle (because of the large amount of boost fuel consumed), the lower landing thrust level could be achieved by shutting down main engines or segments of an aerospike engine as well as by throttling engines or segments in use. The flap would most probably be closed during this phase of the landing.

The limited roll control needed is achieved by the attitude control rockets.

Problem areas associated with this type of control include throttling rate requirements for the engines or segments. Subsonic aerodynamic characteristics at low and high angles of attack with flow injection from the engine(s) are also important.

3.3.3 Propulsion Requirements with Lateral Miss

With the guidance scheme indicated, the effect on the trajectory profile and the characteristic ΔV requirements were investigated.

Figure 3 shows the ΔV requirements for landing with lateral miss. The terminal velocity of the vehicle is about 88 m/sec at sea level. The engines (and the explicit guidance) were always started at an altitude of 600 m with an initial speed of 90 m/sec. This altitude and speed combination gives about a maximum of 2g felt by the vehicle and contents. The initial time-to-go was set at twice a modified range divided by the initial speed. This figure shows that ΔV penalties due to miss can be kept within about 30% of the minimum if the miss is less than several hundred meters (about half of the ignition altitude). With the values chosen here, the propulsive ΔV requirement can then be kept to about 2.5 times the terminal velocity.

What Figure 3 does not show is that the trajectories corresponding to large ΔV's tend to be undesirable also due to large thrust levels (approaching 3g) being required at the beginning and very close to the end of the trajectories and due to high angular rotation rates being required just as the vehicle touches down. These characteristics also indicate that the lateral miss at engine ignition should be kept to the order of half the ignition altitude.

3.4 Intermediate Phase

3.4.1 Intermediate Phase Guidance

Because the terminal phase guidance requires a miss of a few hundred meters or less and because the roll steering reentry guidance can only be depended upon to supply a miss of a few kilometers, an intermediate phase is needed to reduce the roll steering miss to an amount acceptable for the terminal phase guidance. It would be expected to operate in the range between sonic speed and about 600 meters altitude.

The philosophy of this phase of guidance should be to control the downrange and crossrange miss with a minimum of effort. This control could be achieved by controlling the attitude so that aerodynamic lift (up to the maximum subsonic lift-to-drag ratio) would guide the vehicle toward the target.

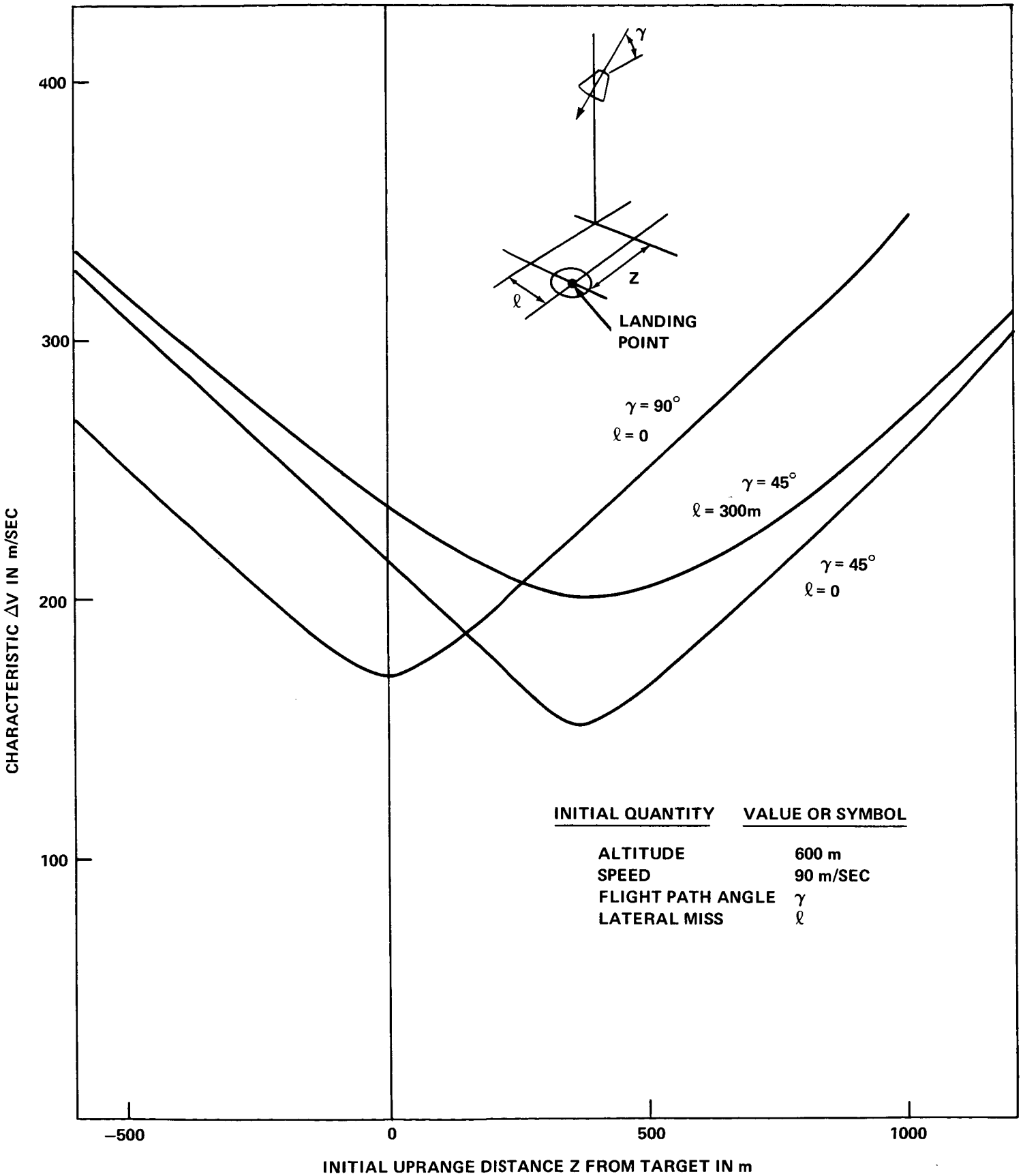

FIGURE 3 - MISS EFFECTS ON ΔV REQUIREMENTS

During the intermediate phase, if the guidance system predicts that the vehicle cannot reach the target even at the maximum available lift-to-drag ratio, then something more than this minimum control must be carried out. In this instance, the main engines should be employed at a thrust level of one g or so until the predicted miss at some easily achievable L/D is reduced to zero.

The capability at moderate L/D, however, is large enough so that the main engines should be seldom needed during the intermediate phase. If the nominal intermediate phase path is straight down from 16 km altitude and the maximum L/D achievable is 0.25, then as is shown in Appendix E an equilibrium glide will allow the vehicle to reach anywhere within a circle 4 km in radius and centered at the base of the nominal path.

As is discussed below there appear to be two possible ways to supply the necessary lift control: the angle-of-attack could be modulated either by operating the main engines at minimum levels or by actively changing the angle of the flap.

3.4.2 Intermediate Phase Using Main Engines

Main engines could be used during the intermediate phase at minimum thrust levels to control the attitude about the pitch and yaw axes to give an angle-of-attack and lift. Attitude control rockets could supplement the main engines and would be needed for roll control. It is expected that the flap would be closed at the beginning of this phase.

The primary question to be answered concerning this scheme is, what "minimum" thrust levels are necessary and what ΔV do they imply? The basic requirement on the thrust levels is the control moment required to oppose aerodynamic and inertial torques. Appendix F estimates the minimum thrust required to oppose the aerodynamic torques during the equilibrium glide at L/D = 0.25 from an altitude of 16 km. The estimate is based on the Apollo aerodynamic data of Ref. 18 and indicates a minimum ΔV on the order of 100 m/sec. This amount is considerably greater than what one would like to expend in this phase.

"Minimum" thrust level may be limited further by engine design. A certain minimum thrust level may be required to keep the engine running properly. Low levels of throttling may also have a reduction in I_{sp} associated with them. Something greater than the minimum thrust possible may be desirable to allow for more rapid control response.

3.4.3 Intermediate Phase Using Flap Variation

A second possible method for the intermediate phase is to vary the flap angle to supply lift variation. Roll motions to direct the lift vector would be accomplished either by attitude control rockets or by small flaps associated with the main flap. The attitude control rockets might also be needed for damping attitude oscillations.

With this intermediate phase scheme, the nominal trajectory would be designed to use about half of the maximum lift available. Then the range could be extended or shortened by moving the flap out or in without requiring large roll displacements. If on the other hand, the nominal trajectory were based on zero lift, then small retargeting changes could require very large roll angle changes.

This scheme would avoid the use of any large amounts of propulsion during the intermediate phase but would require the addition of an auxiliary power unit (APU) system to supply power to move the flap outward in the presence of aerodynamic loads. Appendix G estimates the maximum flap power requirements to be on the order of ten horsepower for a vehicle weighing 100 tons at landing.

Even if the power requirements were known very well, the APU system weight would still be uncertain. Both Ref. 19 and Ref. 20 estimate the weight of a redundant APU system with a maximum output of 225 horsepower, and their estimates differ by a factor of almost three primarily due to different system integration concepts. The heavier estimate of Ref. 20, in addition, gives the weight of external hydraulic lines and actuators as more than twice the APU system weight for the NASA shuttle orbiter. In any case, the ballistic vehicle would have a lower weight requirement due to lower power requirements and shorter, lighter hydraulic lines in the compact ballistic vehicle shape. A weight penalty of 500 kg for the 100 ton vehicle, which appears to be conservative, is equivalent to a ΔV penalty of 20 m/sec at an I_{sp} of 400 sec.

In any case, active flap modulation appears to have a weight advantage over main engine control during the intermediate phase.

Further investigation of a few points is indicated. Subsonic aerodynamic force and moment data are needed for a large range of flap angles so that the vehicle response and flap power requirements can be predicted. Flap response time (and hence power) requirements should be better determined by a detailed guidance simulation.

3.5 Wind Effects

During the reentry descent, wind gusts and shears will disturb the ability of the vehicle to reach the target. From Apollo studies (Ref. 8), little disturbance may be expected during the initial (roll steering) phase of the reentry. However, during the intermediate and final phases of the landing, when the target must be approached with considerable precision, wind effects can be much more serious.

During the intermediate phase, winds could conceivably force the vehicle to use most or all of its capability to reach the target. As is indicated in Appendix E, if the vehicle nominally falls vertically from an altitude of 16 km at a steady speed of 100 m/sec and has available L/D = 0.25, then a steady wind of 25 m/sec (90 km/hr = 49 knots) with a completely uncertain direction reduces the radius of the available (with certainty) target circle from 4 km to zero. A gust could also cause attitude oscillations until a new equilibrium is reached.

During the final phase, winds can cause both disturbing moments and disturbing forces on the vehicle. Disturbing moments should be overcome easily because of the large moment capability of differential main engine control. However, differences between actual aerodynamic loads and calculated aerodynamic loads could conceivably cause stability problems with the guidance equations. Also, strong winds could affect the accuracy of the touchdown. With feed-back of the measured acceleration and the engine response time indicated by Ref. 21 and 22, Appendix H estimates the maximum touchdown error due to winds to be on the order of 5 sec^2 a_g where a_g is the acceleration due to the unknown component of the wind. ($a_g \approx 1$ m/sec^2 for a wind of 30 m/sec = 60 knots.)

For both the intermediate and final phases, knowledge of the wind over the landing site is useful and perhaps even necessary. The effect of known winds can be taken into account so that they will not disturb the landing accuracy. Therefore, a wind profile measurement should be made shortly before the landing so that the reentry can be retargeted slightly to offset the wind disturbance. Then, one will be left with wind dispersion effects due only to gusts and other changes in the wind profile between the time of the measurement and the time of the actual landing. The expected statistics of the residual uncertainty in the wind will eventually determine the exact ΔV that must be set aside for the landing maneuver.

More exact understanding of the wind effects awaits the results of accurate (probably six degree-of-freedom) simulations of reentries and landings in the presence of winds.

4.0 CONCLUSIONS AND RECOMMENDATIONS

4.1 Conclusions

The need for three phases of guidance for reentry and landing has been indicated: (1) an initial reentry phase similar in philosophy to the roll steering guidance of Apollo; (2) an intermediate phase between the altitude at which sonic speed is reached and about 600 meters altitude using active flap control to reduce the dispersions; and (3) a final phase of propulsive landing using main engines for a soft and accurate landing.

The reentry and landing will require radio links for updating the inertial navigation system. Improvements in the capabilities of present systems would be required to do the entire navigational updating job. However, some existing systems could be used in a supplementary manner.

It appears feasible to land a reusable ballistic vehicle with an equivalent characteristic ΔV penalty of less than about 300 m/sec, although intermediate phase flap power requirements and wind effects must be better understood before this statement can be made with certainty.

4.2 Recommendations for Further Study

The following points need to be investigated to complete a preliminary definition of the vehicle and to obtain a more complete intermediate phase definition and an accurate ΔV penalty:

1. Initial phase trajectory and guidance design so that the minimum L/D required for a 3g limit over a footprint is known.

2. A reasonable (perhaps six degree-of-freedom) simulation (with winds) of the intermediate and final phases so that flap power, navigation accuracy, and attitude control requirements can be accurately determined.

3. Low speed aerodynamics at low and high angles of attack with the flap so that the flap size and flap power requirements can be better determined.

Additional studies might include:

1. APU and actuation system design to better determine the weight penalty for an actively modulated flap.

2. Local heating effects due to flap deployment at hypersonic speeds.

3. Low speed aerodynamics with fluid injection from the main engines (final phase aerodynamics).

4. Attitude control jet sizing and propellant requirements for reentry and landing.

5. Aerodynamics of flaps for roll control.

6. More accurate supersonic and transonic aerodynamics with the flap.

7. Consequences of landing at an unprepared site (such as would happen if the prepared site were missed).

8. Reliability and fault detection requirements (since high reliability is needed and short times are available for fault detection).

C. S. Rall

C. S. Rall

1014-CSR-ulg

Attachments
Appendices A to H

REFERENCES

1. Marks, A. E., "Space Transportation System Analysis," Bellcomm Technical Memorandum, to be published.

2. "Project SERV: A Space Shuttle Feasibility Study," Chrysler Corporation Space Division, New Orleans, 19 November 1969.

3. "Preliminary Evaluation of Alternative Shuttle Concepts," OART Mission Analysis Division, March 1970.

4. Marks, A. E., "Trip Report - Ballistic Booster Studies at NASA MAD - Case 105-4," Bellcomm Memorandum for File, B70-12031, 11 December 1970.

5. Johnson, C. E., "Trip Report - Project SERV Space Shuttle Status Review at MSFC - Case 105-4," Bellcomm Memorandum for File, B70-12038, 16 December 1970.

6. Bono, P., Senator, F. E., and Garcia, D., "The Enigma of Booster Recovery - Ballistic or Winged?" Missile and Space Systems Division, Douglas Aircraft Company, Rpt. No. 670382, 1967.

7. Koelle, D. E., "Project BETA: A Single-Stage Reusable Launch Vehicle," Space Flight, Vol. 12, No. 5, May 1970, pp. 197-200.

8. Bogner, I. and Heffron, W. G., "Capabilities of the Entry Guidance Equations for Earth Orbital Speed Entry," Bellcomm Technical Memorandum, TR-67-310-1, 14 February 1967.

9. Heffron, W. G., private communication, 3 November 1970.

10. Morth, R., "Reentry Guidance for Apollo," M.I.T. Instrumentation Laboratory, Rpt. No. R-532, Cambridge, January 1966.

11. "Guidance System Operations Plan for Manned CM Earth Orbital and Lunar Missions Using Program COLOSSUS, Section 5, Guidance Equations," M.I.T. Instrumentation Laboratory, Rpt. No. R-577, Cambridge, revision of 11 July 1968.

12. Spinner, L. N. and Bencivenga, V. L., "Summary Report: Advanced Scanning Beam Guidance System for All Weather Landing," Federal Aviation Administration, Rpt. No. RD-68-2, Washington, D. C., February 1968.

13. "Your Window to the Deck," AIL Division of Cutler-Hammer, Farmingdale, New York, 1969.

14. Labrecque, R. J., "Automatic Landing Systems and Navigation Aids for Application to the Space Shuttle," NASA MSC, MSC Internal Note No. 70-FM-175, Houston, 4 November 1970.

15. Wyman, C. L., "Test Performance of an Experimental Laser Radar for Rendezvous and Docking," Journal of Spacecraft and Rockets, Vol. 5, No. 4, April 1968, pp. 430-433.

16. Meditch, J. S., "The Pontryagin Maximum Principle and Some of the Applications," Chapter 2 in, Leondes, C. T., ed., Advances in Control Systems, Volume 1, Academic Press, New York, 1964, pp. 55-74.

17. Sorensen, J. A., "The Use of Delta Guidance for Improved Trajectory Control and Fuel Cost During LM Descent - Case 310," Bellcomm Technical Memorandum, TM-70-2014-6, 11 June 1970.

18. "Apollo Technical Manual - System Dynamics - Aerodynamic Data Manual," North American Aviation, No. ARM 2-1, 15 August 1963.

19. "Preliminary Design of an Auxiliary Power Unit (APU) for the Space Shuttle," Phase I Final Report, Airresearch Manufacturing Company, Los Angeles, 15 December 1970.

20. "Power Generation and Operations Trade Study," McDonnell Douglas Aircraft Corporation, 15 January 1971.

21. "Space Shuttle Bell Nozzle Topping Cycle Engine," Rocketdyne, North American Rockwell, December 1969.

22. Marks, A. E., private communication, 2 February 1971.

APPENDIX A

Apollo Guidance Capability

This appendix is concerned with the ability of Apollo command module reentry guidance and aerodynamic lift capability to change the target point at different times during a reentry trajectory. In particular, the retargeting would come from navigation updates; and skipout control from supercircular entry is not of interest for the orbital missions of concern. Therefore, Apollo final phase reference parameters are presented in Table A1 and discussed below.

The data of Table A1 (Ref. 10 or 11) is based on a reference trajectory with a constant vertical component of lift over drag (L_D/D) equal to 0.18. The table is used to predict the range expected and to calculate the L_D/D needed to reach the target. Reference parameters (first four columns) are compared with measured parameters and a range prediction (using columns five and six) is obtained for the reference L_D/D (0.18). Column seven is then used to calculate the L_D/D that should be used to reach the target. Speed is used as the independent variable for these comparisons and calculations. Column eight (Y) is the lateral switching criterion less a small constant bias term. It is generated by the simple form of a constant times the square of the speed. When the predicted lateral miss becomes greater than this criterion, the sign of the roll angle is reversed so as to reduce the lateral miss. According to Ref. 10, Y should represent about half of the lateral range capability along the reference trajectory, implying a roll angle of about 30°. However, plots of sample trajectories in Ref. 10 indicate that Y is probably somewhat less than half the lateral capability, particularly near the end of the trajectory.

For a given retargeting distance, the lateral capability appears to be the limiting one. One-tenth of column seven (about 1/3 of the range retargeting capability) is more than Y. From the columns of range-to-go and Y, one finds that retargeting of 10 nmi (18 km) is easily possible from a range of 250 km (140 nmi). The 5.6 km 3σ crossrange dispersion of Section 2.1 can be corrected easily from a range of 100 km (52 nmi). These ranges represent a measure of the minimum range at which navigation updates must begin in order to correct 3σ navigational dispersions.

TABLE A1. REFERENCE PARAMETERS FOR APOLLO GUIDANCE

[1] reference speed in ft/sec	[2] reference vertical velocity ($\dot{h}$) in ft/sec	[3] reference drag in ft/sec^2	[4] range to go in nmi	[5] $\frac{d(\text{range})}{d(\dot{h})}$ in $\frac{\text{nmi}}{\text{ft/sec}}$	[6] $\frac{d(\text{range})}{d(\text{drag})}$ in $\frac{\text{nmi}}{\text{ft/sec}^2}$	[7] $\frac{d(\text{range})}{d(L_D/D)}$ in nmi	[8] lateral switching criterion (Y) in nmi
994	-691	41	2.2	.0025	- .035	6	.06
2103	-719	60	9	.0036	- .056	11	.3
3922	-694	82	22	.0070	- .090	22	1.0
6295	-609	94	46	.0145	- .141	48	2.6
8531	-493	99	75	.0248	- .198	94	4.7
10101	-416	102	100	.0339	- .237	141	6.6
14014	-352	119	171	.0614	- .331	329	13
15951	-416	125	210	.0768	- .361	466	17
18357	-566	120	267	.0998	- .496	683	22
20829	-781	95	344	.1335	- .648	981	28
23090	-927	28	505	.218	-2.02	1385	35
23500	-820	6	643	.305	-3.35	1508	36
35000	-820	6	794	.305	-3.35	1508	80

Taken from Reference 11.

APPENDIX B

Constant Deceleration Terminal Propulsion Maneuver

The altitude, time, and characteristic ΔV for a constant deceleration terminal propulsion maneuver are calculated in this appendix. The thrust is varied to make up the difference between the constant deceleration and the drag.

The important quantities used here are as follows:

h = altitude (h_o = initial altitude)

V_o = initial downward velocity

c = the constant deceleration ($c+g$ is felt by vehicle and contents).

The equations of motion are,

$$\ddot{h} = c \tag{B1}$$

$$\dot{h} = -V_o + ct \tag{B2}$$

$$h = h_o - V_o t + \frac{1}{2} ct^2 \quad . \tag{B3}$$

At the final time T, $\dot{h}$ and h are zero. Hence one has,

$$T = \frac{V_o}{c} \tag{B4}$$

$$h_o = \frac{1}{2} \frac{V_o^{\,2}}{c} \tag{B5}$$

The characteristic ΔV for the maneuver is now desired. The deceleration supplied by the engine is given by,

$$a_E = c + g - \frac{D}{m} \tag{B6}$$

where,

$$\frac{D}{m} = \frac{\rho c_D A}{2m} \dot{h}^2 \tag{B7}$$

in a constant density atmosphere. Using the above expression for $\dot{h}$ and integrating gives,

$$\Delta V = \int_0^{\frac{V_o}{c}} a_E \, dt = V_o\left[1 + \frac{g}{c} - \frac{1}{3}\left(\frac{\rho c_D A}{2m}\right)\frac{V_o^{\,2}}{c}\right]$$

$$= V_o\left[1 + 2\,\frac{h_o g}{V_o^{\,2}} - \frac{2}{3}\,h_o\left(\frac{\rho c_D A}{2m}\right)\right] \quad . \tag{B8}$$

If the initial speed V_o corresponds to terminal velocity, then,

$$\left(\frac{\rho c_D A}{2m}\right) V_o^{\,2} = g \tag{B9}$$

and,

$$\Delta V = V_o\left[1 + \frac{2}{3}\,\frac{g}{c}\right] = V_o\left[1 + \frac{4}{3}\,\frac{h_o g}{V_o^{\,2}}\right] \tag{B10}$$

APPENDIX C

Constant Snap Terminal Propulsion Maneuver

This appendix calculates the characteristics of a terminal propulsion maneuver, in which the snap is constant and the initial and terminal accelerations are zero (the vehicle feels g). Again the thrust is varied to make up the difference between the deceleration and the drag.

The important quantities used here are listed as follows:

h = altitude (h_o = initial altitude)

V_o = initial downward velocity

c = the maximum deceleration (the vehicle and contents feel a maximum of c+g)

S = the constant snap during the maneuver

J = the initial jerk in the maneuver

The equations of motion are,

$$h = a_o + Jt + \frac{1}{2} St^2 \tag{C1}$$

$$\dot{h} = -V_o + a_o t + \frac{1}{2} Jt^2 + \frac{1}{6} St^3 \tag{C2}$$

$$h = h_o - V_o t + \frac{1}{2} a_o t^2 + \frac{1}{6} St^3 + \frac{1}{24} St^4 \tag{C3}$$

The characteristics of the trajectory are then determined as follows: At the initial time and at the final time T, $\ddot{h} = 0$. Hence,

$$a_o = 0 \tag{C4}$$

$$J = -\frac{1}{2} ST \tag{C5}$$

The maximum in $\ddot{h}$ (found when $\dddot{h} = 0$) is c, and

$$S = -\frac{8\,c}{T^2} \tag{C6}$$

At the final time T, $\dot{h} = 0$ gives,

$$T = \frac{3}{2}\frac{V_o}{c} \tag{C7}$$

and the relation h = 0 at the final time gives the result,

$$h_o = \frac{3}{4}\frac{V_o^2}{c} \tag{C8}$$

Characteristic ΔV is calculated next. With a constant density atmosphere the engine accleration is given by,

$$\begin{aligned} a_E &= \ddot{h} + g - \left(\frac{\rho c_D A}{2m}\right)\dot{h}^2 \\ &= \left(Jt + \frac{1}{2}St^2\right) + g - \left(\frac{\rho c_D A}{2m}\right)\left(-V_o + \frac{1}{2}Jt^2 + \frac{1}{6}St^3\right)^2 \end{aligned} \tag{C9}$$

Integration gives,

$$\begin{aligned} \Delta V &= \int_o^{\frac{3}{2}\frac{V_o}{c}} a_E dt = V_o\left[1 + \frac{3}{2}\frac{g}{c} - \frac{39}{70}\left(\frac{\rho c_D A}{2m}\right)\frac{V_o^2}{c}\right] \\ &= V_o\left[1 + 2\frac{h_o g}{V_o^2} - \frac{26}{35}h_o\left(\frac{\rho c_D A}{2m}\right)\right] \end{aligned} \tag{C10}$$

If the initial speed V_o corresponds to terminal velocity, then Equation (B9) holds and,

$$\Delta V = V_o\left[1 + \frac{33}{35}\frac{g}{c}\right] = V_o\left[1 + \frac{44}{35}\frac{h_o g}{V_o^2}\right] \tag{C11}$$

APPENDIX D

Calculation of Commanded Thrust Vector

During the final propulsion phase of a propulsive landing, the thrust acceleration vector must be calculated so that the resulting thrust acceleration, lift, and drag add up to the commanded vehicle acceleration minus the gravity vector. With the thrust acceleration, lift acceleration, drag acceleration, and commanded acceleration being respectively represented by the vectors $\underline{a}_E$, $\underline{a}_L$, $\underline{a}_D$, and $\underline{a}_C$, the desired relationship is,

$$\underline{a}_E + \underline{a}_L + \underline{a}_D = \underline{a}_C - \underline{g} \tag{D1}$$

Remember that $\underline{a}_L$ is a function of $\underline{a}_E$, because engine thrust is directed along the vehicle centerline and the vehicle must be reoriented to change the thrust direction (this also changes the lift). $\underline{a}_E$ is to be calculated to satisfy this relationship.

The problem is, in general, one in three dimensions; however, the forces of interest lie in the plane of the velocity vector $\underline{V}$ and the commanded specific force vector $(\underline{a}_C - \underline{g})$. Orthogonal unit vectors to describe this plane may be indicated by,

$$\underline{i}_V = \text{unit } (\underline{V}) = \left(\frac{1}{V}\right) \underline{V} \tag{D2}$$

$$\underline{i}_L = \text{unit } (\underline{V} \times ((\underline{a}_C - \underline{g}) \times \underline{V})) = \text{unit } (V^2(\underline{a}_C - \underline{g}) - \underline{V}^T(\underline{a}_C - \underline{g})\underline{V}) \tag{D3}$$

Thrust acceleration, drag accleration, and lift acceleration may then be indicated by the following expressions:

$$\underline{a}_E = a_E\ (-\underline{i}_V \cos\alpha + \underline{i}_L \sin\alpha) \tag{D4}$$

$$\underline{a}_D = -\frac{\rho c_D A}{2m} V^2\ \underline{i}_V \tag{D5}$$

$$\underline{a}_L = \frac{\rho C_{L\alpha} A}{2m\ n} V^2 \sin(n\alpha)\ \underline{i}_L \tag{D6}$$

The lift is modeled with sin $(n\alpha)$ in its expression to reflect the fact that lift reaches a maximum at an angle-of-attack α considerably less than 90°. $C_{L\alpha}$ conventionally is the slope of the lift curve at zero angle-of-attack. Note also that the angle-of-attack is zero for zero lift. The drag is modeled as a constant.

Solution of Equation (D1) for $\underline{a}_E$ now becomes the problem of choosing the two scalars a_E and α. Equation (D1) can be rewritten in the form,

$$\underline{a}_E + \underline{a}_L = \underline{a}_C - \underline{g} - \underline{a}_D = \underline{x} \tag{D7}$$

Taking the inner product of Equation (D7) first with $-\underline{i}_V$ and then with $\underline{i}_L$ gives the following two scalar equations:

$$a_E \cos\alpha = -\underline{i}_V^T \underline{x} = x_V \tag{D8}$$

$$a_E \sin\alpha + \frac{\rho C_{L\alpha} A}{2m\ n} V^2 \sin(n\alpha) = \underline{i}_L^T \underline{x} = x_L \tag{D9}$$

Multiplying Equation (D8) by sin α and Equation (D9) by cos α, substituting the result from (D8) into (D9), and rearranging gives the result,

$$x_V \sin\alpha + \frac{\rho C_{L\alpha} A}{2m\ n} \cos\alpha \sin n\alpha - x_L \cos\alpha = 0 \tag{D10}$$

This equation must be iteratively solved for α and the result substituted into Equation (D8) to solve for a_E.

APPENDIX E

Equilibrium Glide

Consider a vehicle gliding at constant speed and constant lift-to-drag ratio (L/D). Let β be the flight-path angle (measured from the vertical). The equilibrium of forces in the horizontal direction gives,

$$L \cos \beta = D \sin \beta \tag{E1}$$

$$\tan \beta = (L/D) \tag{E2}$$

$(L/D) = 0.25$ gives $\beta = 14°$.

If the vehicle glides from an altitude h_o to zero altitude, the lateral range covered is,

$$r = h_o \tan \beta = h_o (L/D) \tag{E3}$$

h_o = 16 km (53 Kft) and $(L/D) = 0.25$ gives a lateral range of 4 km (2.2 nmi).

If the vehicle is falling vertically at 100 m/sec, an unknown wind of 25 m/sec can reduce the lateral range capability to zero. A vertical velocity of 100 m/sec gives a lateral velocity of (L/D) (100 m/sec) relative to the air mass. $(L/D) = 0.25$ results in a lateral velocity of 25 m/sec. If there is a wind and its direction is completely unknown, the worst it could do is blow from the direction in which one is trying to guide the vehicle. A wind of 25 m/sec could then reduce the lateral velocity to zero and the lateral range covered to zero. A wind of half this velocity would have half this effect.

APPENDIX F

Minimum ΔV Required

This appendix estimates the minimum ΔV needed to perform the equilibrium glide maneuver from an altitude h_o of 16 km that was discussed in Appendix E. Remember that this maneuver gives a landing point displacement of 4 km. Figure F1 presents Apollo command module aerodynamic data (Ref. 18) for two subsonic mach numbers. The stabilizing moments are presented for two different center-of-mass locations. With the smaller half cone angles of the ballistic booster concepts, the L/D curve would probably have a lower slope and would peak at a lower value of the angle-of-attack. At a given angle-of-attack, the C_M's could very possibly be larger. Thus, Apollo data is probably somewhat optimistic for the booster concept.

The ΔV required depends upon the aerodynamic moment that must be overcome. This moment is given by

$$M = \frac{\rho}{2} V^2 C_M dA \qquad \text{(F1)}$$

where ρ is the air density, V is the speed, C_M is the moment coefficient as before, d is the reference length (the diameter of the cone base), and A is the reference area (the area of the cone base). If we now let m be the mass of the vehicle, $T = h_o/V$ be the time for the vehicle to fall from altitude h_o, and p be the moment arm upon which the engine thrust acts to supply the moment (it must be about d/2 or smaller), then the minimum ΔV required may be estimated by

$$\Delta V_{min} = \frac{MT}{pm} = \left(\frac{C_m}{C_D}\right) \left(\frac{d}{p}\right) \left(\frac{\rho C_D A V^2}{2m}\right) T = S\lambda a_D T \qquad \text{(F2)}$$

In this expression, a_D is the drag acceleration and should be close to 1 g. $\lambda = d/p$ must be 2 or greater, and $\delta = C_M/C_D$ is determined by the c.m. location and the aerodynamics.

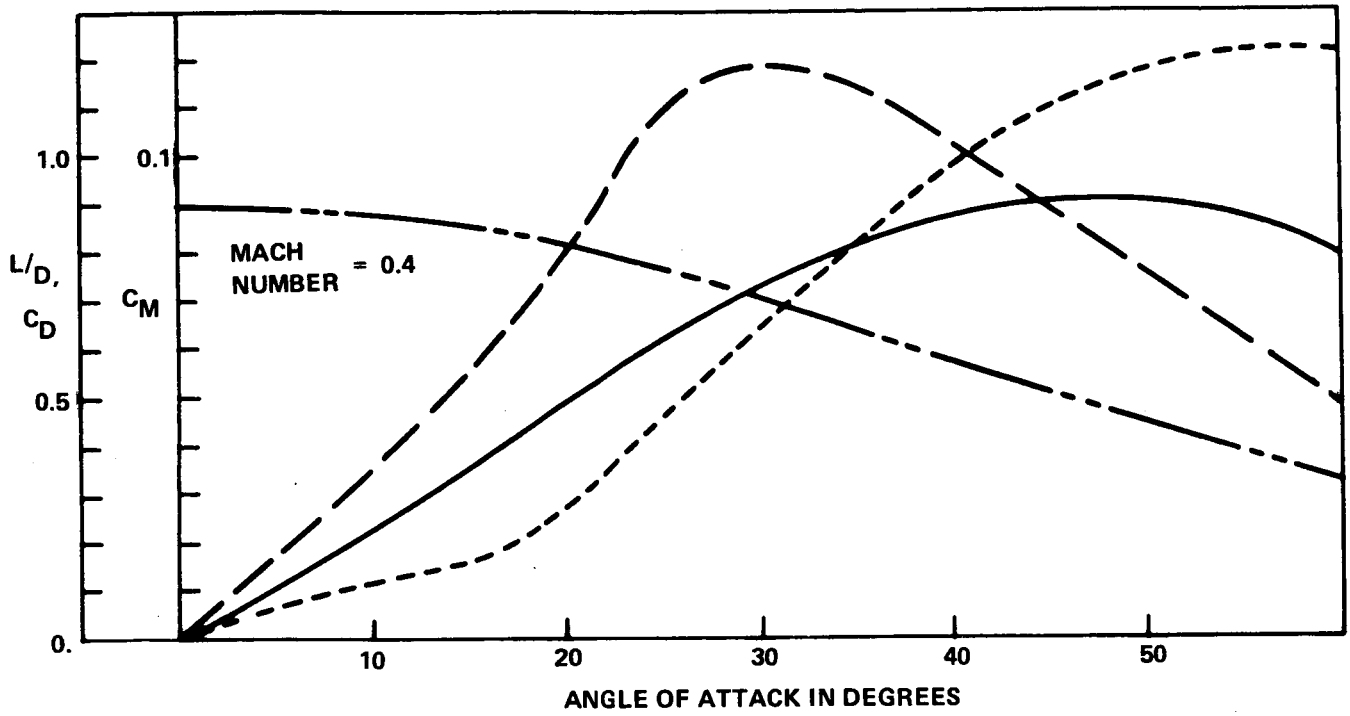

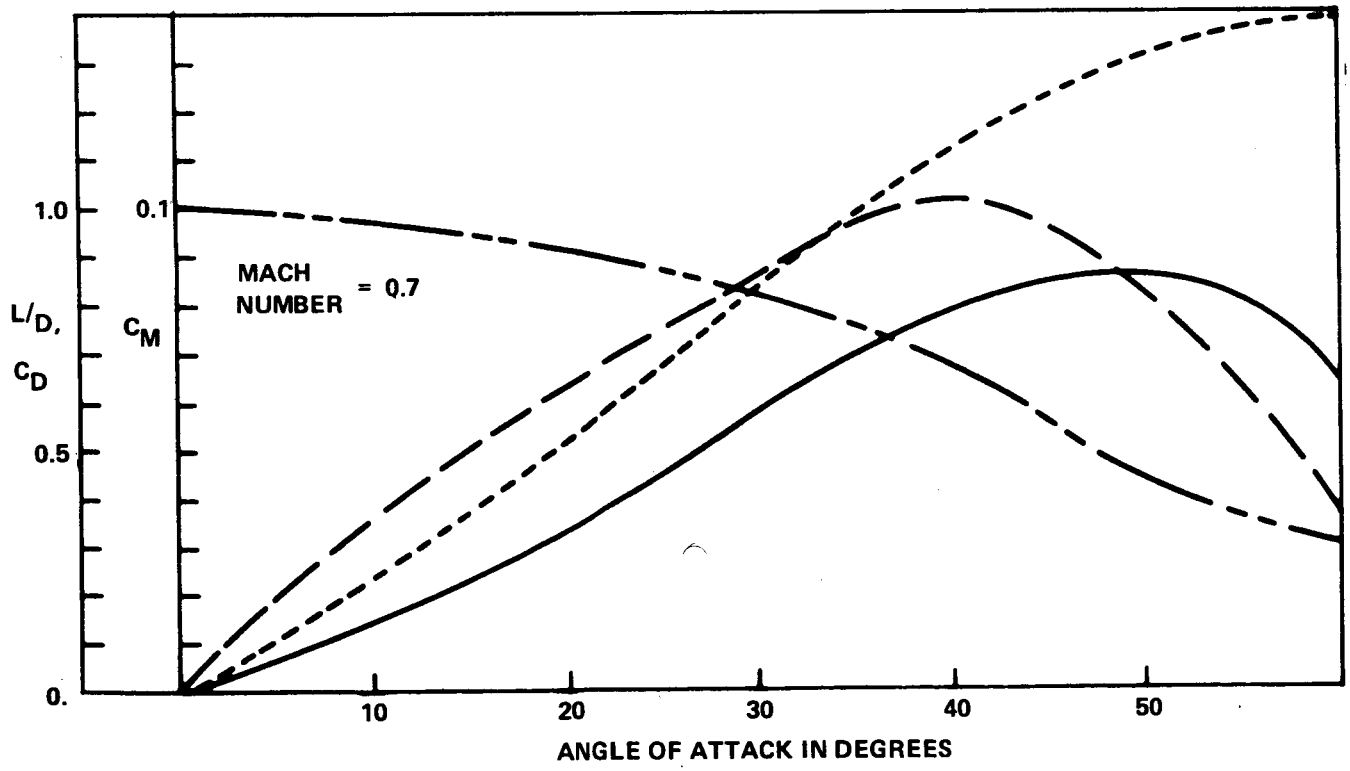

L/D — CD

CM WITH C.M. d FROM CONE APEX

CM WITH C.M. d/2 FROM CONE APEX

d = DIAMETER OF CONE BASE

FIGURE F1 - APOLLO COMMAND MODULE LANDING CONFIGURATION SUBSONIC DATA (FROM REF. 18)

To get a low estimate of the ΔV required, take $\lambda = 2$, $a_D = 10$ m/sec^2, and an average speed of 200 m/sec so that $T = 80$ sec. Considering the mach number = 0.7 aerodynamic data, L/D = 0.25 is achieved at an angle-of-attack of 17°, which gives $\delta = 0.043$ with the less stable c.m. location. These numbers result in $\Delta V_{min} = 70$ m/sec. Taking an average speed half that given above and hence doubling the time, taking $a_D = 13$ m/sec^2 and $\lambda = 3$, and reading the less stable data from the mach number = 0.4 curves, gives $\Delta V_{min} = 100$ m/sec. This same data but using the more stable curve gives $\Delta V_{min} = 300$ m/sec.

With an I_{sp} of 400 sec, a ΔV of 100 m/sec requires an expenditure of 2.5% of the vehicle weight in fuel. A vehicle with a landing weight of 100 tons requires 2.5 tons to perform the maneuver. The weights might be higher still from performance degradation of deeply throttled engines. The penalties appear higher than one would like to pay.

APPENDIX G

Flap Power Requirements

Flap power requirements during the intermediate phase (using the flap for control) are needed to determine if this type of control should be employed. Let the subscripts v and f refer to the vehicle and the flap respectively. Also let M indicate moment, F, force, d, base diameter, and p, the moment arm of the flap center of aerodynamic pressure from the c.m. Then,

$$M_v = \frac{C_M}{C_D} d \frac{\rho C_D A V^2}{2} = M_f = F_f p \tag{G1}$$

$$F_f = m\left(\frac{C_M}{C_D}\right)\left(\frac{d}{p}\right)\left(\frac{\rho C_D S V^2}{2m}\right) = m\delta\lambda a_D \tag{G2}$$

where a_D = drag acceleration, $\delta = C_M/C_D$, and $\lambda = d/p$. If all of F_f acts on the flap at a distance p_h from the hinge, then the flap power requirement is,

$$P_f = \omega\ p_h\ F_f = \omega\ p_h\ m\delta\lambda a_D \tag{G3}$$

With $p_h = 1$ m, $\omega = 20°$/sec (the agency shuttle requirement - Ref. 20), $\lambda = 2$, $a_D = 1$ g, $\delta = 0.043$ (pessimistic), and m = 100 tons, the power requirement is,

$$P_f = 30 \text{ Kw} = 40 \text{ hp} \tag{G4}$$

The actual requirement is probably much smaller. Much of F_f will be due to pressure changes on the surface of the vehicle in the vicinity of the flap. A more optimistic value for δ is 0.016. The rate requirement should be considerably less, because the ballistic shuttle does not use the flap to control critically timed maneuvers such as flairing a glide for a horizontal landing; use 10°/sec. Then the power requirement is,

$$P_f = 3 \text{ Kw} = 4 \text{ hp} \qquad \text{(G5)}$$

The agency shuttle orbiter is said to require a peak power of about 225 hp (Ref. 20) from its auxilary power unit (APU) system. Weights for the APU system, including 3 redundant APU's, fuel, and tankage, but excluding plumbing and remote actuators are reported to range between 1700 kg (Ref. 20) and 625 kg (Ref. 19). This difference is primarily due to a completely separate system in Ref. 20, versus tankage and power conditioning shared with the attitude control system in Ref. 19. Ref. 20 also reports that the hydraulic lines and remote actuators weigh about 3900 kg.

The power system required for the ballistic shuttle concept should be much lighter. Not only is the peak power requirement much less, but the total energy required is also much less due to the relatively short period in which active control is required. Ref. 19 gives the APU system weight (without external hydraulic lines) for 100 hp with 10 hp-hr of energy storage as about 100 kg. Small external plumbing and actuator weights also may be expected due to having only one main control surface that may have the APU placed close to it instead of several surfaces spread widely throughout the vehicle. Because of the small power and energy requirements, alternative power supplies and power transport mechanisms may be lighter than APU systems.

APPENDIX H

Gust Response in Hover

In order to obtain an estimate of the effect of wind gusts during the propulsive landing phase on landing accuracy, a simplified model is used. The vehicle is assumed to be hovering at a constant altitude when a wind gust of some velocity hits the vehicle. Control of lateral position x is obtained by commanding the vehicle attitude angle θ from the vertical. Attitude control is obtained by differential throttling of engines whose response is modeled as a first order lag with time constant τ. For the space shuttle engines presently under consideration and with the throttle valves inserted in the liquid lines, τ is about 0.25 sec (Ref. 21 and 22). A signal flow diagram of the assumed system is shown in Figure H-1, which uses s as the Laplace variable, x as the lateral position, and A's and L's as gains. a_g is the lateral acceleration due to winds. The limiting of control variables or rates is not modeled. Although the actual system would be complicated and digitally implemented and include a decreasing altitude and aerodynamic effects, the linear model shown here should give a good first approximation of the effects of gusts just before touchdown.

The system response to a step gust force is desired. Evaluation of the signal flow diagram gives the steady state response as

$$x = (g\, L_1)^{-1}\, a_g \quad . \qquad \text{(H1)}$$

With the gains chosen to give good response speed in both angle and position, the position control is dominated by a mildly oscillatory response with a characteristic time of about $10\tau = 2.5$ sec. The steady-state response corresponding to these characteristics is given approximately as,

$$x = 80\tau^2\, a_g = 5\ \text{sec}^2\, a_g \quad . \qquad \text{(H2)}$$

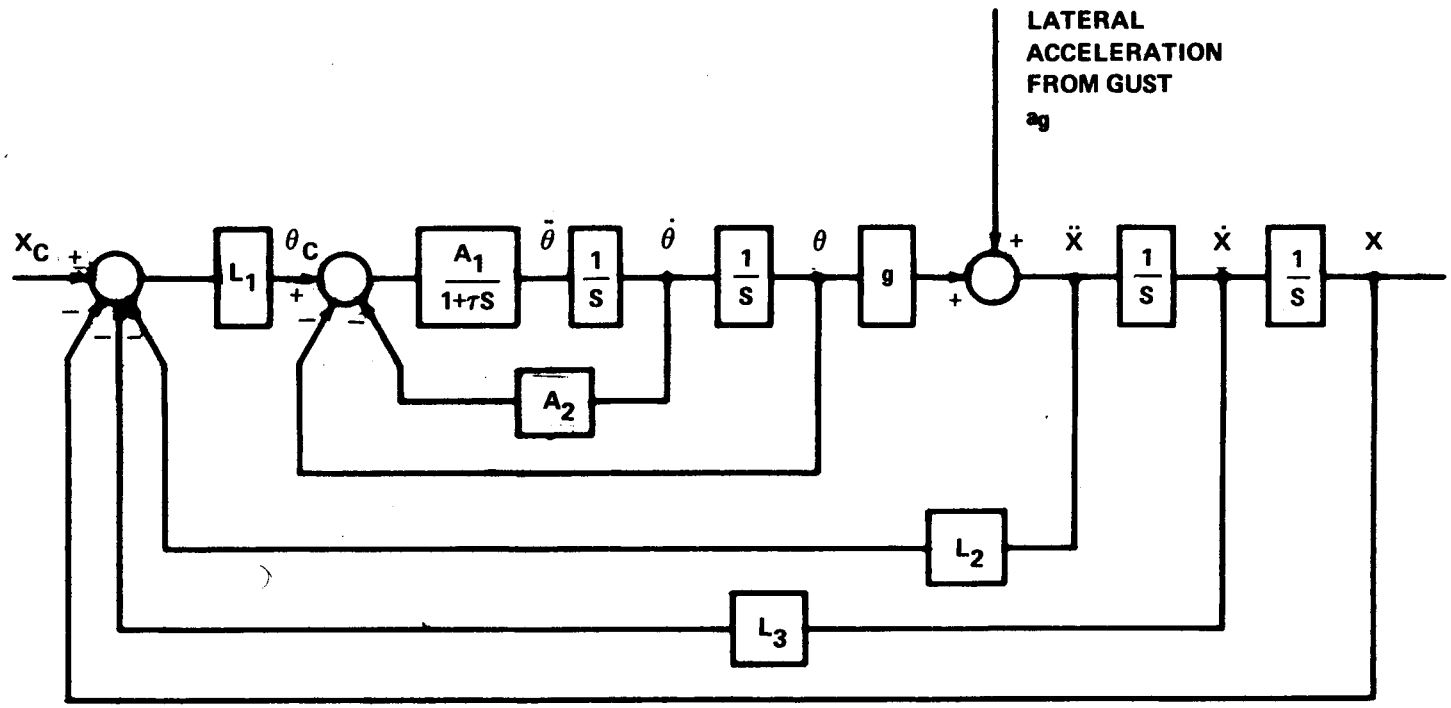

FIGURE H1 - SIGNAL FLOW DIAGRAM FOR HOVERING VEHICLE

This value is dependent upon the gains chosen and can be reduced to zero by not having feedback of the attitude angle. However, there will be a transient response in any case, and this expression supplies an estimate of the maximum deviation from the commanded position.

If a vehicle of the shape considered has a terminal velocity of 100 m/sec, then a lateral acceleration a_g of about 1 m/sec^2 will be supplied by a gust of about 30 m/sec = 60 knots; and the steady state vehicle displacement will be 5 meters. A gust of 20 knots gives 0.5 m displacement. If steady-state wind components can be estimated and accounted for, then the landing characteristics of the vehicle in moderately gusty air should be quite adequate.

SUBJECT: Propulsive Landing of Ballistic Vehicles - Case 105-4

FROM: C. S. Rall

DISTRIBUTION LIST

NASA Headquarters

W. O. Armstrong/MTX
P. E. Culbertson/MT
L. E. Day/MH
E. W. Hall/MTG
H. Hall/MT-2
T. A. Keegan/MTE
M. Kitchens/MTE
A. S. Lyman/MRT
A. D. Schnyer/MTE
M. G. Waugh/MT-1
J. W. Wild/MTE

MSC

D. E. Fielder/HC
A. J. Meyer/HD

MSFC

W. G. Huber/PD-SA-DIR
L. T. Spears/PD-SA-DIR

Ames Research Center

E. W. Gomersall/MO
J. S. MacKay/MP

Bellcomm, Inc.

A. P. Boysen, Jr.
J. O. Cappellari, Jr.
K. R. Carpenter
D. R. Hagner
W. G. Heffron
H. S. London
E. D. Marion
K. E. Martersteck

Bellcomm, Inc. (cont'd.)

J. Z. Menard
G. T. Orrok
W. Strack
J. W. Timko
M. P. Wilson
All Members, Department 1011
All Members, Department 1013
Central Files
Department 1024 File
Library

Abstract Only

J. P. Downs
D. P. Ling
R. L. Wagner