BELLCOMM, INC.
1100 Seventeenth Street, N.W. Washington, D.C. 20036

SUBJECT: Automation of Launch Vehicle Checkout-AS-501 - Case 320

DATE: December 8, 1967

FROM: D. M. Duty

(NASA-CR-92794) AUTOMATION OF LAUNCH VEHICLE CHECKOUT-AS-501 (Bellcomm, Inc.) 10 p
N79-72078
Unclas
00/15 11054

MEMORANDUM FOR FILE

INTRODUCTION

In July 1966, a plan for automation of the Saturn Launch Vehicle Checkout was jointly developed by MSFC and KSC. This plan provided the approach to automate test programs that were being conducted manually. Automation criteria, implementation, configuration control, baselines, projections, scheduling and responsibilities were established in the plan for both Saturn 1B and Saturn V.

This memorandum reviews the present status of launch vehicle checkout automation for Saturn V.

HARDWARE CONFIGURATION

The Saturn V launch vehicle checkout configuration is shown in Figure 1. The test program software is being developed for use in the block labeled SLCC (Saturn Launch Computer Complex). Figure 2 is a block diagram of the SLCC system showing the breakout of the computers used in the Launch Control Center and the Mobile Launcher.

TEST PROGRAM DEVELOPMENT

The effort to automate Saturn V checkout involves the development of test programs for the RCA 110A computers used in the SLCC. The present status of this effort is presented in matrix form in the attached table.

This table is subdivided into six (6) major areas of test program development.

- LVDC/LVDA
- ST 124M Inertial Platform System
- Control Systems
- Measurement and Telemetry
- Networks
- Propellants

FF No. 602(A)
(ACCESSION NUMBER) (THRU)
10 (PAGES) 54 (CODE)
CR-92794 (NASA CR OR TMX OR AD NUMBER) (CATEGORY)
AVAILABLE TO NASA OFFICES AND NASA RESEARCH CENTERS ONLY

In each area, the test programs presently identified for automation through AS-503 are listed versus their vehicle effectivity. The column identified as AS-501 Baseline is an indication of those programs projected for automation on AS-501 in the automation development plan of 1966. A comparison of this column with the AS-501 Delivered column shows the baseline plan was accomplished and exceeded by a substantial margin.

The AS-502 Delivered status shows a number of new programs to be effective on AS-502. These and those AS-501 programs updated to the AS-502 configuration meet or exceed the projections of the established plan.

New programs to be effective on AS-503 are indicated in the last column. AS-502 programs will be updated to the AS-503 configuration.

SUMMARY

The test programs or their functions listed in the attached table are to be implemented as of AS-503. Additional programs identified for automation are projected through AS-504 but may be incorporated during AS-503 checkout.

Based upon the accomplishments to date and the present level of effort, the automation plan projections for automation of Saturn V checkout are being met or exceeded.

D. M. Duty

2032-DMD-gmp

Attachments
Figure 1: Saturn V Launch Vehicle Checkout Configuration
Figure 2: Saturn V Launch Computer Complex
Saturn V Test Program Development

FIGURE 1

SATURN V LAUNCH VEHICLE CHECKOUT CONFIGURATION

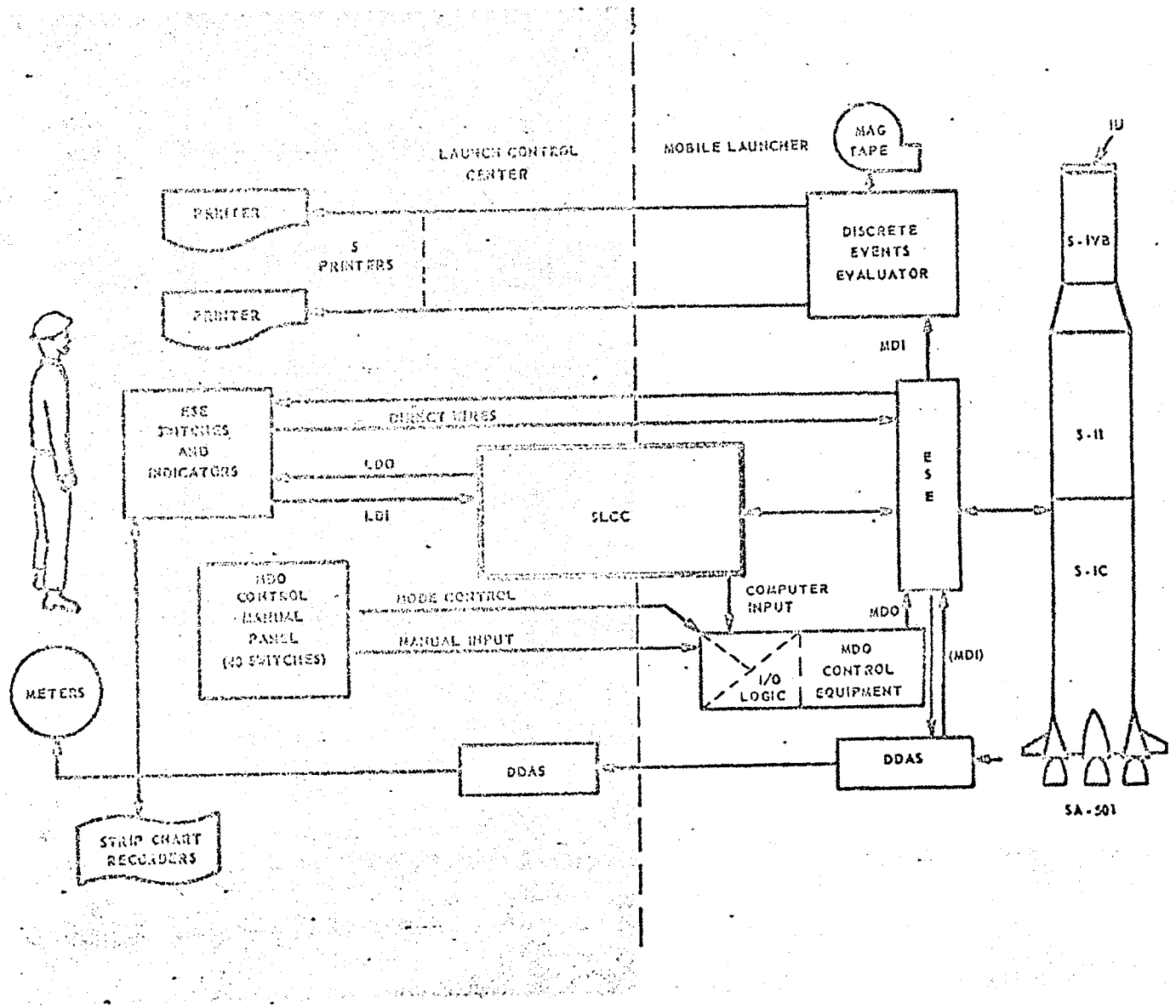

FIGURE 2

SATURN V LAUNCH COMPUTER COMPLEX

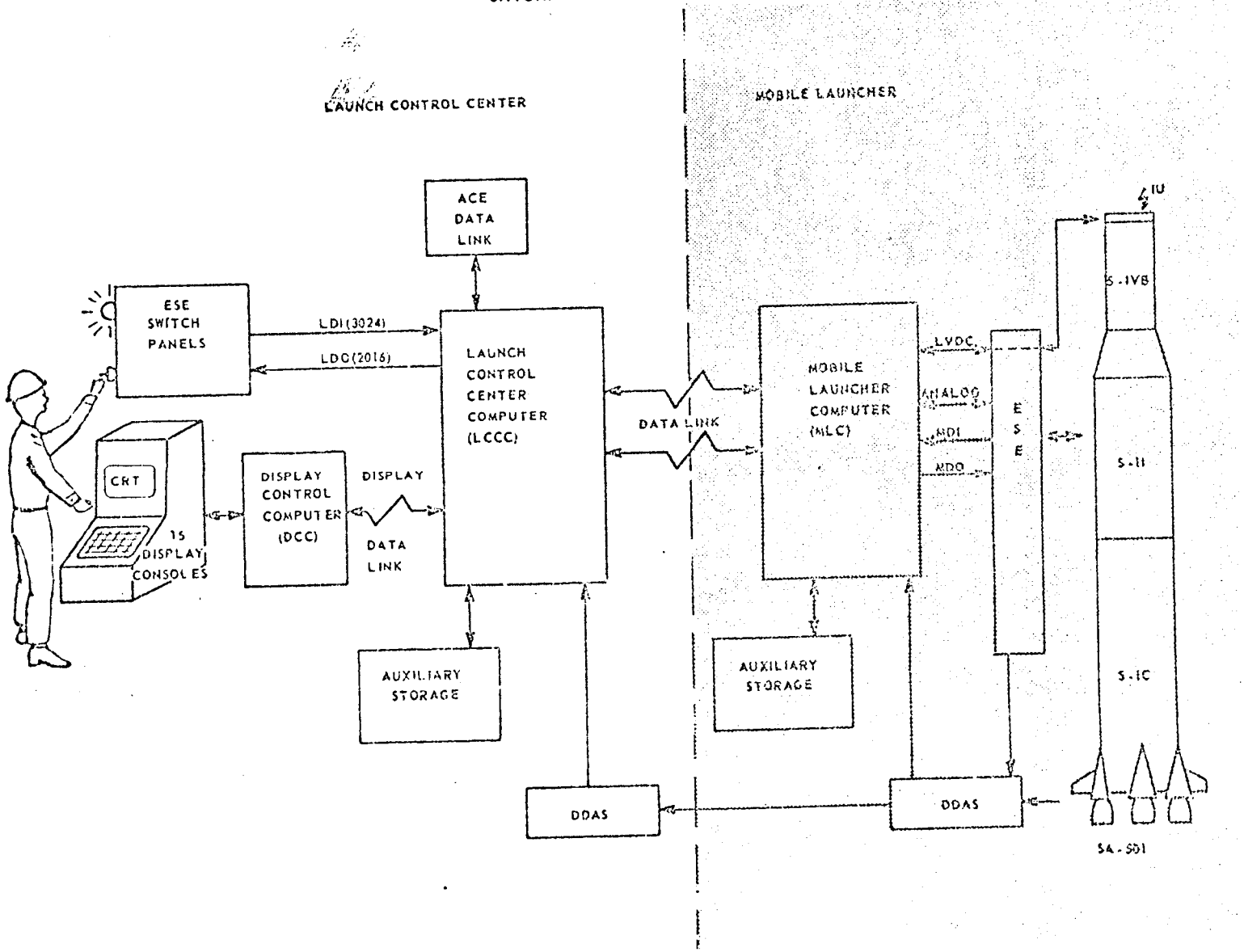

SATURN V TEST PROGRAM DEVELOPMENT

	IVAR	PROGRAM NAME	AS-501 BASELINE PLAN	AS-501 DELIVERED	AS-502 DELIVERED	AS-503 NEW PROGRAMS
		LVDC/LVDA				
1	FT03	IU LVDC/LVDA Switch Selector Interface	X	X	X	
2	FT04	IU Power ON/OFF and/or Redundancy	X	X	X	
3	FT05	IU Data Load and/or Verify	X	X	X	
4	FT06	IU Gimbal Angle Read	X	X	X	
5	FT07	IU Sector Dump	X	X	X	
6	FT08	IU Core Map Loader	X	X	X	
7	FT10	IU Ladder Output Test	X	X	X	
8	FT20	IU Self Test	X	X	X	
9	FT23	IU Sector Sum Check	X	X	X	
0	FT25	IU Discrete Input	X	X	X	
1	FT27	IU Similated Flight Monitor	X	X	X	
2	FT31	IU Accelerometer Pulse Count		X	X	
3	FT33	IU Discrete Output	X	X	X	
4	FT35	LVDC/LVDA DDAS Test			X	
5	FT42	IU Prepare to Launch	X	X	X	
6	FT43	IU Computer Interface Unit Test	X	X	X	
7	FT45	IU Digital Command Systems	X	X	X	
8	FT47	IU Preflight Command System	X	X	X	
9	FT49	IU Accelerometer Monitor Display Control			X	

			AS-501 BASELINE PLAN	AS-501 DELIVERED	AS-502 DELIVERED	AS-503 NEW PROGRAMS
20	FT54	IU Guidance and Control Steering		X	X	
21	FU01	IU Simulated Plus Time Table Generator		X	X	
22	FZ01	IU Simulated Flight Post-Test Processor	X	X	X	
23	FE50	IU Accelerometer Monitor			X	
		ST-124M INERTIAL PLATFORM SYSTEM				
24	GT11	IU ST-124M TURN ON		X	X	
25	GT12	IU ST-124M TURN OFF		X	X	
26	GT13	IU ST-124 Stability				X
27	GT14	IU ST-124 Torquing				X
28	GT15	IU ST-124 Positioning				X
29	GT16	IU Azimuth Laying	X	X	X	
30	GT17	IU ST-124M Status		X	X	
31	GE01	IU Azimuth Laying Monitor		X		
32	GE02	IU Accelerometer Monitor	X	X		
33	GE03	IU ST-124M Null Test			X	

			AS-501 BASELINE PLAN	AS-501 DELIVERED	AS-502 DELIVERED	AS-503 NEW PROGRAMS
		CONTROL SYSTEMS				
34	CTA1	IU Substitute Ramp			X	
35	CTC1	IU Control System Gain Test				X
36	CTC2	IU Control Computer Relay Redundancy				X
37	CTC3	IU Control Computer Comparator Test				X
38	CTC4	IU EDS/CRG Test				X
39	CTC5	IU APS Gain Test				X
40	CTC6	IU Control System End-to-End Polarity				X
41	CT00	IU S-VB APS Firing Test	X	X	X	
42	CT23	IU EDS/CRG Rate Excessive Test	X	X	X	
43	CT51	IU A_o Gain (All Stages)	X	X	X	
		MEASUREMENTS AND TELEMETRY				
44	ME01	LV RACS Rapid Control	X	X	X	
45	ME02	S-IC ECS Temperature Graphic Display			X	
46	MT01	LV GSE/Vehicle Measurement Calibration	X	X	X	
47	MT04	LV GSE/Vehicle Interface (DDAS)		X	X	
48	MT05	GSE/Vehicle Measuring Switch Scan		X		
49	MU01	DDAS/RACS Preprocessor	X	X	X	
50	MU02	LV GSE/RACS Tolerance Update	X	X	X	
51	TT01	LV Telemetry Preflight Calibration	X	X	X	

		PROGRAM NAME	AS-501 BASELINE PLAN	AS-501 DELIVERED	AS-502 DELIVERED	AS-503 NEW PROGRAMS
		NETWORKS				
52	NA01	Flight Sequence and EBW Test, Part I	X	X		
53	NA02	Flight Sequence and EBW Test, Part II	X	X		
54	NA03	Switch Selector Functional	X	X		
55	NA04	S-IVB Switch Selector Reset	X	X		
56	NA05	S-IC Cutoff Sensor Functional		X		
57	NASS NT02	SLCC Switch Selector Interface	X	X		
58	NT04	S-II Propellant Level and Depletion Functional	X	X		
59	NT07	S-IC Pressure Switch Monitor	X	X	X	
60	NT94	DCC Remote Load-Unload			X	
61	NT95	MLC Remote Loader			X	
62	MT97	Discrete Activity Monitor			X	
63	NT98	Discrete Reinitialization			X	
64	NT99	Action Table Update			X	
65	NE01	Tower Test Set Up	X	X		
66	NES4	S-IVB Power Distribution Display Data				X

			AS-501 BASELINE PLAN	AS-501 DELIVERED	AS-502 DELIVERED	AS-503 NEW PROGRAM
67	NTE0	Engine Out Abort Test	X	X		
68	NTE1	Rate Excessive		X		
69	NTE2	Space Vehicle Abort Test		X		
70	NTE3	Command Module Indicator Verification	X	X		
71	NEBM	S-IC Bus Monitor			X	
72	NTDR	S-IC Discrete Response Time			X	
73	QAS2	S-II Switch Selector Functional		X		
74	QASP	S-II Separation System Functional		X		
75	QAPP	S-II Propellant Dispersion		X		
76	XAEB	S-IVB EBW Subsystem Test		X		
77	XAPS	S-IVB Power Set-up		X		
78	ZT96	Operating System Close Out			X	
79	N/A	S-II Function Executor Critical Monitor				X
80	N/A	S-II Monitor				X
		PROPELLANTS				
81	BT01	S-IC Propellant Monitor	X	X	X	
82	BE01	S-IC Propellant Temperature Monitor			X	
83	BE02	S-IC Propellant Level Monitor			X	
84	PTP4	S-IVB Propellant Utilization Functional			X	
85	PTP5	S-II Propellant Utilization Functional	X	X	X	
86		OPERATING SYSTEM	X	X	X	

BELLCOMM, INC.

Subject: Automation of Launch Vehicle Checkout - AS-501 - Case 320

From: D. M. Duty

Distribution List

NASA Headquarters

Messrs. L. E. Day/MAT
G. H. Hage/MA
L. B. James/MA
T. A. Keegan/MA-2
R. V. Murad/MAT
S. C. Phillips/MA

Bellcomm, Inc.

Messrs. C. Bidgood
A. P. Boysen Jr.
D. R. Hagner
W. C. Hittinger
B. T. Howard
J. Z. Menard
I. D. Nehama
J. J. O'Connor
T. L. Powers
I. M. Ross
R. L. Wagner
Department 1023
Department 2032
Central Files
Library