BELLCOMM, INC.
1100 Seventeenth Street, N.W. Washington, D.C. 20036

SUBJECT: Studies of Solar Orientation for AAP-1/AAP-2 - Case 600-3

DATE: September 8, 1967

FROM: J. Kranton

ABSTRACT

This memorandum is a digest of the results of studies on solar orientation of the OWS/CSM spacecraft on the AAP-1/AAP-2 mission.

It is concluded that a reaction thrust system using either two axis control with spin up or the POP mode (i.e. OWS roll axis perpendicular to orbit plane) is suitable for solar orientation. Of these two modes the POP mode appears preferable principally due to the present uncertainty regarding the effects of spin.

[redacted] 62-71557
[redacted]
(PAGES) (CODE) 31
FACILITY FORM 602

N79-72298

(NASA-CR-154827) STUDIES OF SOLAR ORIENTATION FOR APP-1/APP-2 (Bellcomm, Inc.) 24 p

Unclas
00/17 12563

[redacted]

AUG 1977
RECEIVED
NASA STI FACILITY
INPUT BRANCH

BELLCOMM, INC.
1100 Seventeenth Street, N.W. Washington, D.C. 20036

SUBJECT: Studies of Solar Orientation for AAP-1/AAP-2 - Case 600-3

DATE: September 8, 1967

FROM: J. Kranton

MEMORANDUM FOR FILE

INTRODUCTION

This memorandum is a digest of the resutls of studies on solar orientation of the OWS/CSM spacecraft on the AAP-1/AAP-2 mission . Reaction thrust and CMG methods were considered. The results of these studies together with a specific recommendation were presented to C. W. Mathews on August 26, 1967. The vu-graphs used in that presentation are used as figures in this memorandum. The text of the memorandum assumes familiarity with the background leading to the studies. Should the reader desire amplification on any of the points in the text or the figures please contact the author.

REACTION THRUST METHODS

The basic premise for this phase of the study was that reaction thrusters are mounted on the aft skirt of the S-IVB (Figure 1). The long moment arm this location provides minimizes the propellant required to counteract gravity-gradient and aerodynamic disturbance torques.

Alternate methods of docking the CSM to the OWS are shown on Figure 2. The port 3 dock has the disadvantage that in a solar orientation the sides of the CSM do not face the sun. This translates into a power burden to maintain a satisfactory environment in the CSM. For this reason the port 3 dock is rejected.

The various reaction thrust methods studied for solar orientation are listed Figure 3 and are portrayed on Figures 4 through 9.

At this point we will eliminate the quasi-inertial mode.[1] The reason is that implementation of this mode is more complex than any of the other modes while the propellant requirements are not remarkably less.

---

[1] B. D. Elrod,"Quasi-Inertial Stabilization of the AAP-1/AAP-2 Cluster Configuration",Technical Report TR-67-600-3-1, April 14, 1967.

Each of the reaction thrust methods was simulated[2] to determine the propellant requirements for a 28-day mission. The results are presented in Figures 10 through 13. The curves indicate the propellant required for stabilization for 28 days assuming β constant. Actually β is variable and the real requirement depends on the average value of β.[3] Analyzing the results, we see that the gravity-gradient roll-control mode does not offer propellant savings over other solar oriented modes. This coupled with degraded solar efficiency and a more severe OWS environmental control problem eliminates this mode from further consideration.

We conclude that from a minimum propellant viewpoint the two best modes are (1) two axis control with spin up and (2) POP (i.e. OWS roll axis perpendicular to orbit plane.) A summary of the requirements for these modes is given in Figure 14. It should be noted that the POP mode requires the least propellant but has the disadvantage of requiring the addition of a pair of horizon sensors to the AACS. The number of APS modules shown are sufficient for the entire OWS mission.

Concluding remarks on the reaction thrust methods are given on Figure 17.

CMG METHODS

The results of the studies of CMG methods for solar orientation are summarized on Figure 19. Briefly, simulations have demonstrated that an active system with two CMG's can adequately solar orient the OWS/CSM. Definite conclusions on a passive CMG system are not available as of this writing due to difficulties with the simulation. However, three CMG's may be required for such a system.

An active two CMG system will be more costly in both system weight and dollars than a reaction thrust system and is therefore not recommended.

---

(2) The simulations included the effects of gravity-gradient and aerodynamic torques.

(3) W. W. Hough, "The Effect of Launch Time on the Performance of a Solar Array/Battery Electrical Power System", Technical Memorandum TM-67-1022-3, July 11, 1967.

CONCLUSION:

It is concluded that a reaction thrust system using either two axis control with spin up or the POP mode is suitable for solar orientation. Of these two modes the POP mode appears preferable principally due to the present uncertainty regarding the effects of spin. The advantages and disadvantages of the POP mode are listed on Figure 20.

J. Kranton

1022-JK-mef J. Kranton

Attachments
Figures 1 through 20

STUDIES OF SOLAR ORIENTATION FOR AAP 1/AAP 2

STARTING BASIS

- AACS ON OWS IS REQUIRED FOR ORBITAL STORAGE IN LOCAL VERTICAL MODE AND TO COUNTERACT CSM DOCKING IMPULSE
- AACS WILL CONTAIN HORIZON SENSORS AND RATE GYROS FOR ACQUIRING AND MAINTAINING LOCAL VERTICAL MODE
- REACTION THRUSTERS WILL BE MOUNTED ON AFT SKIRT OF S-IVB

GOAL

- SOLAR ORIENT AAP 1/AAP 2 FOR 28 DAYS WITH MINIMAL INCREMENT TO AACS IN COST AND WEIGHT

FIGURE 1

ALTERNATE AAP 1/AAP 2 CONFIGURATIONS STUDIED

PORT 3 DOCK

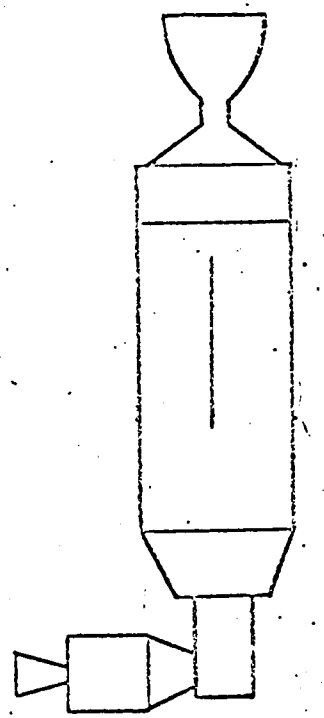

PORT 4 DOCK

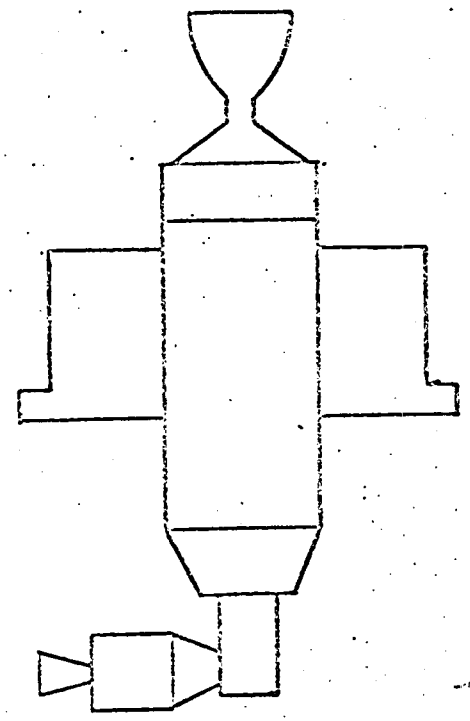

PORT 5 DOCK

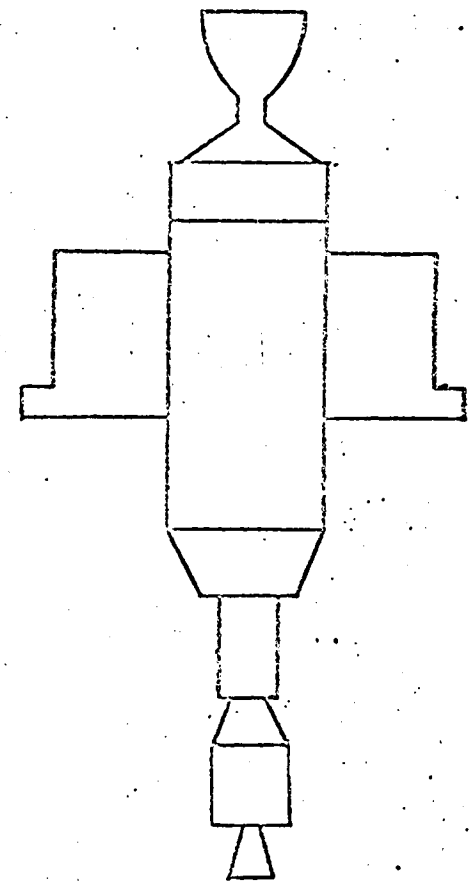

FIGURE 2

REACTION THRUST METHODS FOR SOLAR ORIENTATION OF AAP 1/AAP 2

- THREE AXIS CONTROL (i.e., INERTIAL ORIENTATION)
  - A. OWS ROLL AXIS IN PLANE
  - B. OWS ROLL AXIS OUT-OF-PLANE
- OWS ROLL AXIS PERPENDICULAR TO ORBIT PLANE (POP), SINGLE AXIS MOVEABLE PANELS
- TWO AXIS CONTROL, PERMIT ROTATION ABOUT SOLAR VECTOR
  - A. NO SPIN UP
  - B. SPIN UP AND MAINTAIN SPEED
- GRAVITY GRADIENT STABILIZATION WITH ROLL CONTROL FOR OPTIMUM SOLAR ORIENTATION
- QUASI-INERTIAL

FIGURE 3

THREE AXIS CONTROL

ROLL AXIS IN ORBIT PLANE

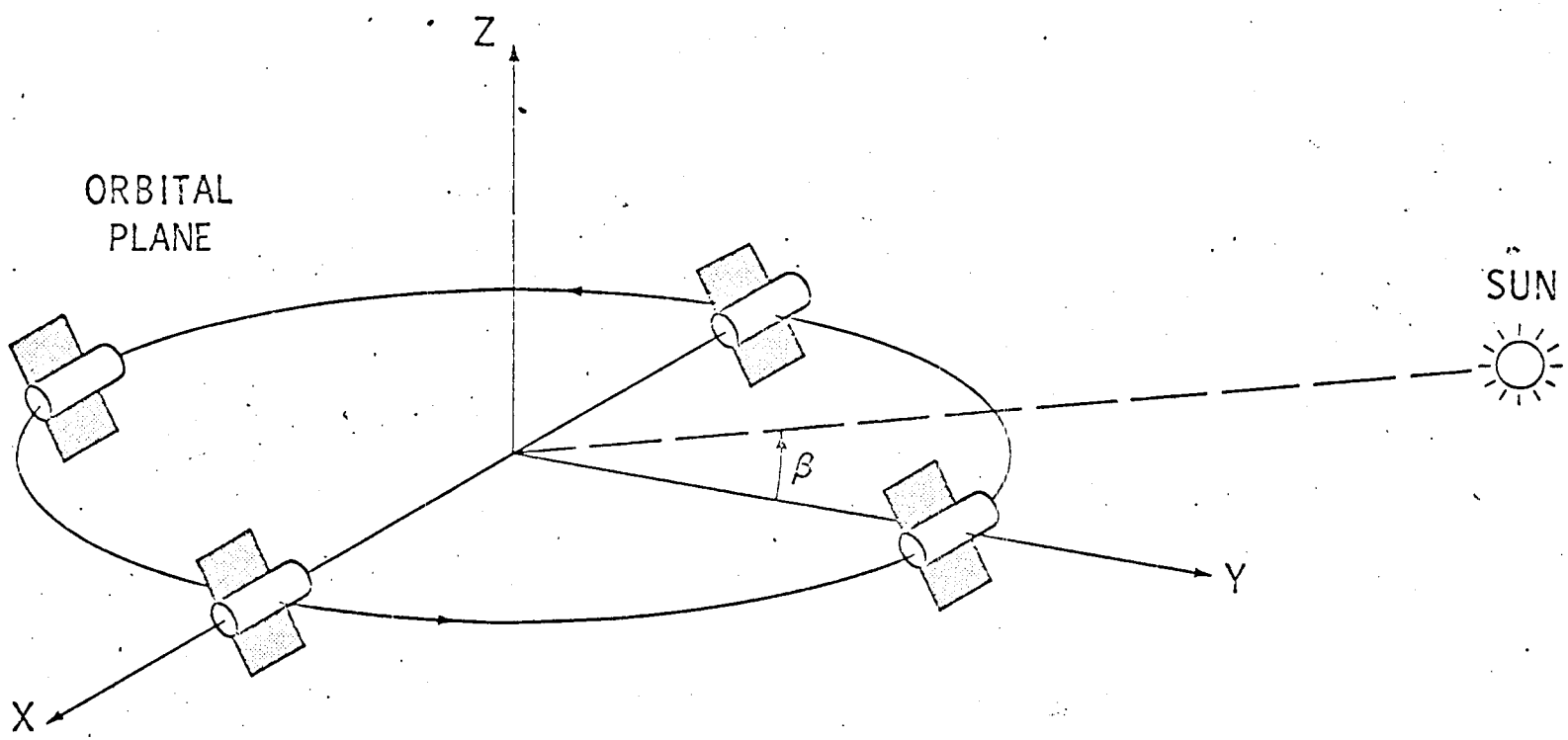

FIGURE 4

THREE AXIS CONTROL

ROLL AXIS OUT OF ORBIT PLANE

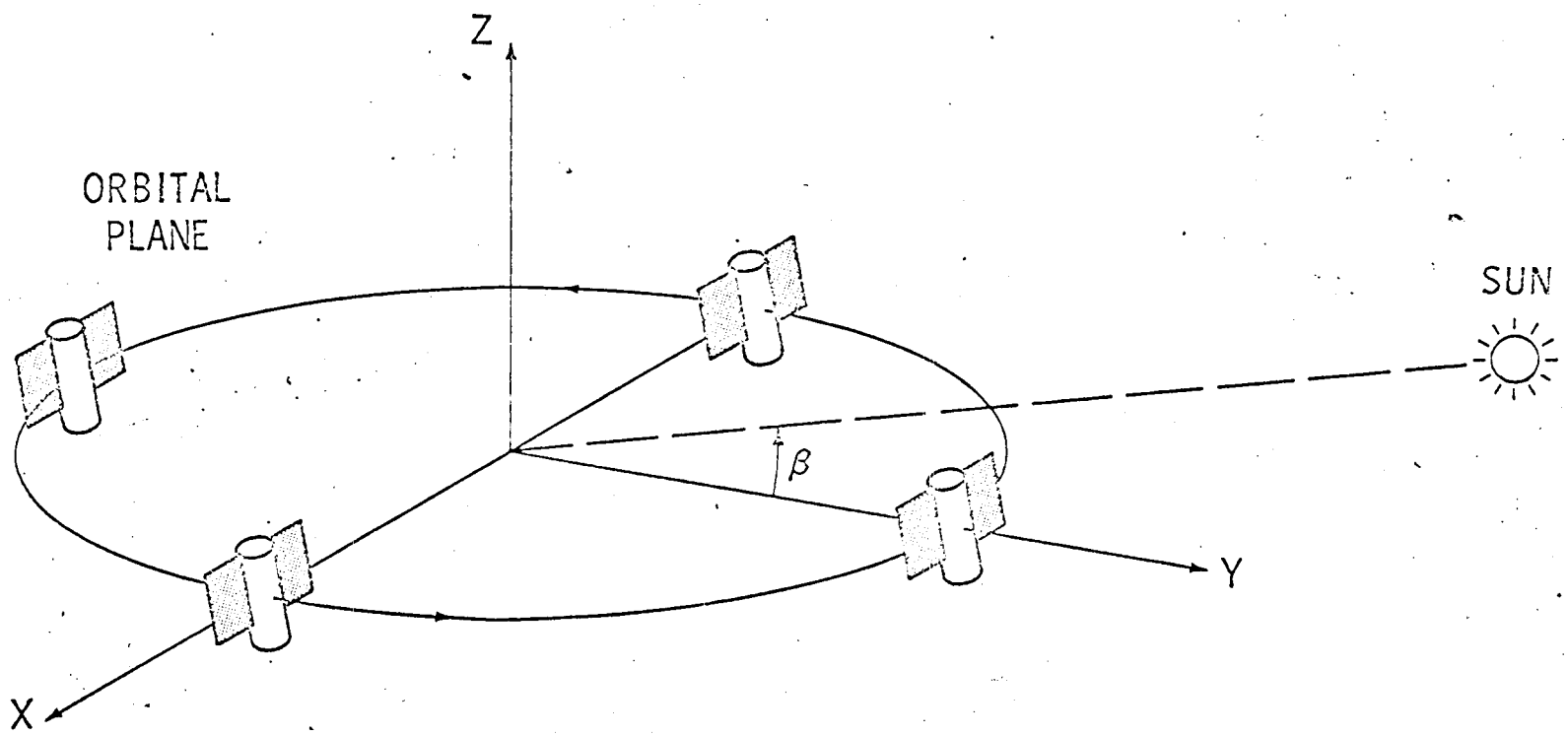

FIGURE 5

ROLL AXIS PERPENDICULAR TO ORBIT PLANE (POP)

SINGLE AXIS MOVEABLE PANELS

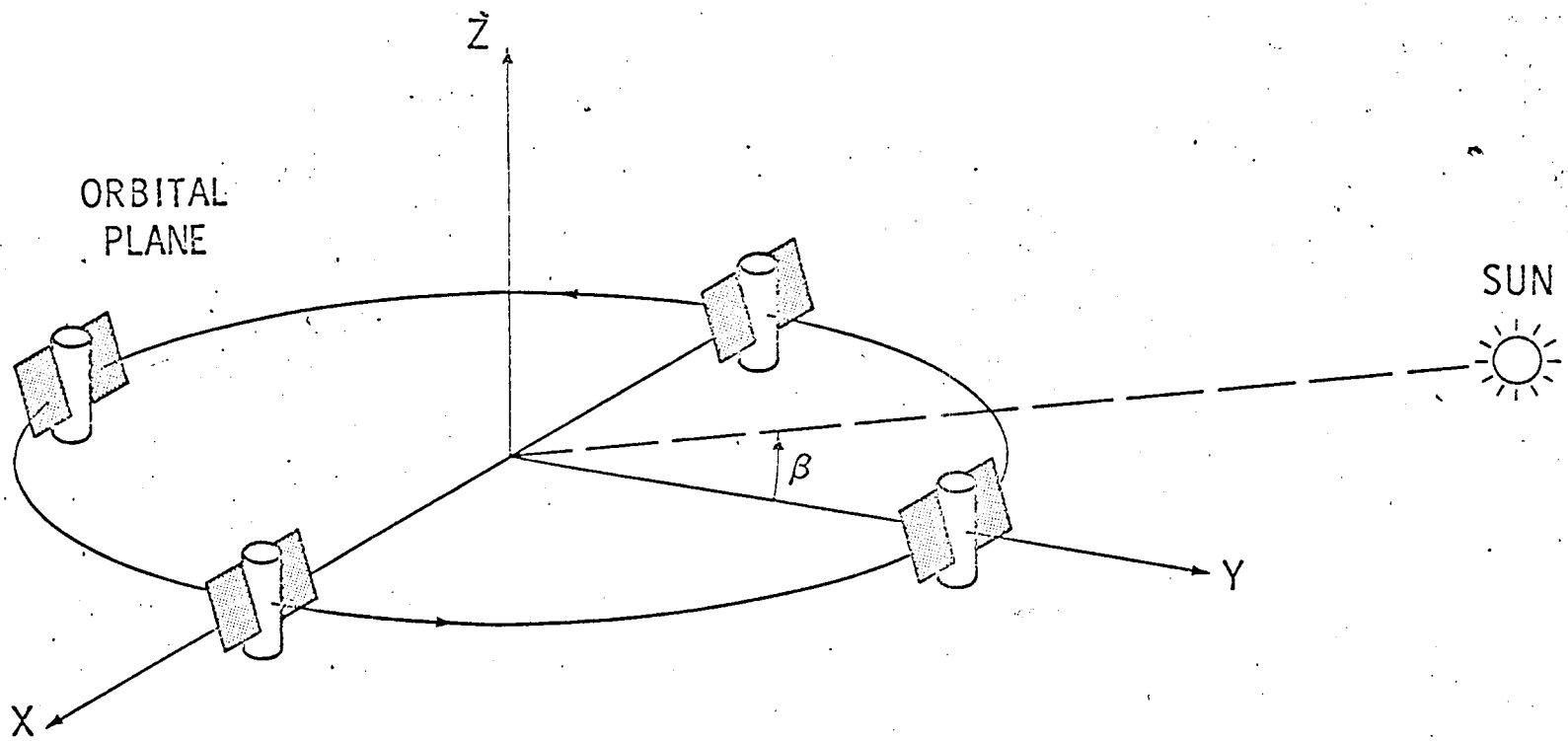

FIGURE 6

TWO AXIS CONTROL

ROTATION ABOUT SOLAR VECTOR PERMITTED

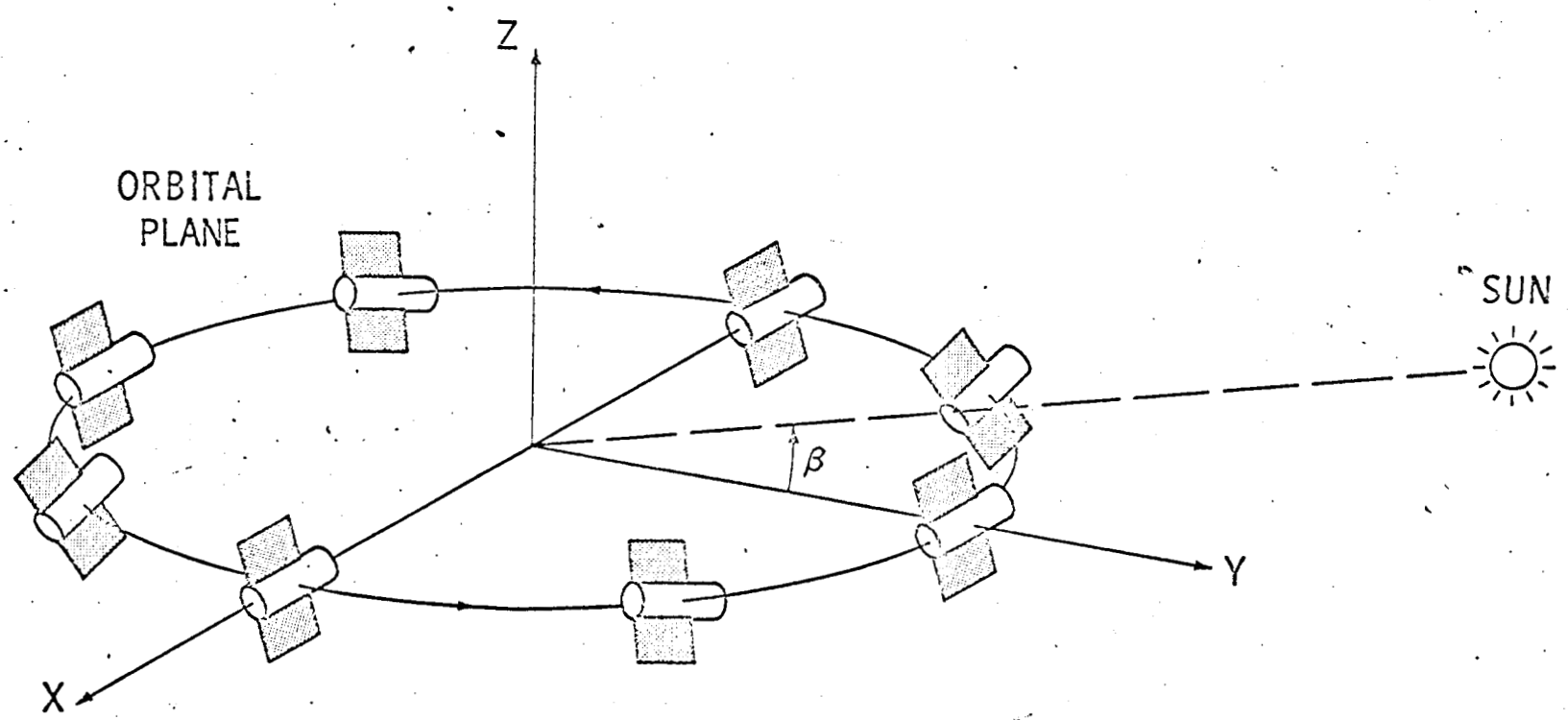

FIGURE 7

GRAVITY GRADIENT WITH ROLL CONTROL

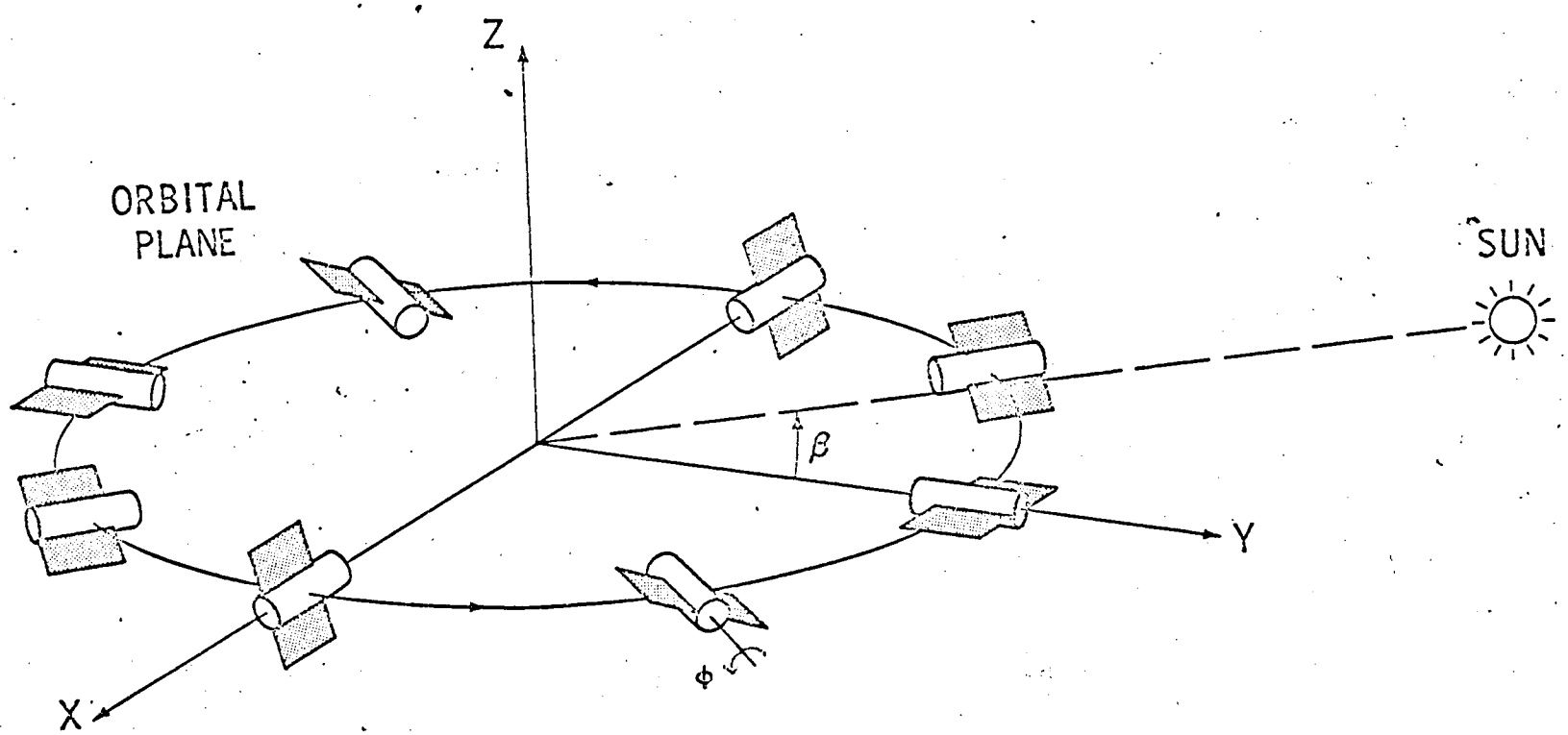

FIGURE 8

QUASI - INERTIAL

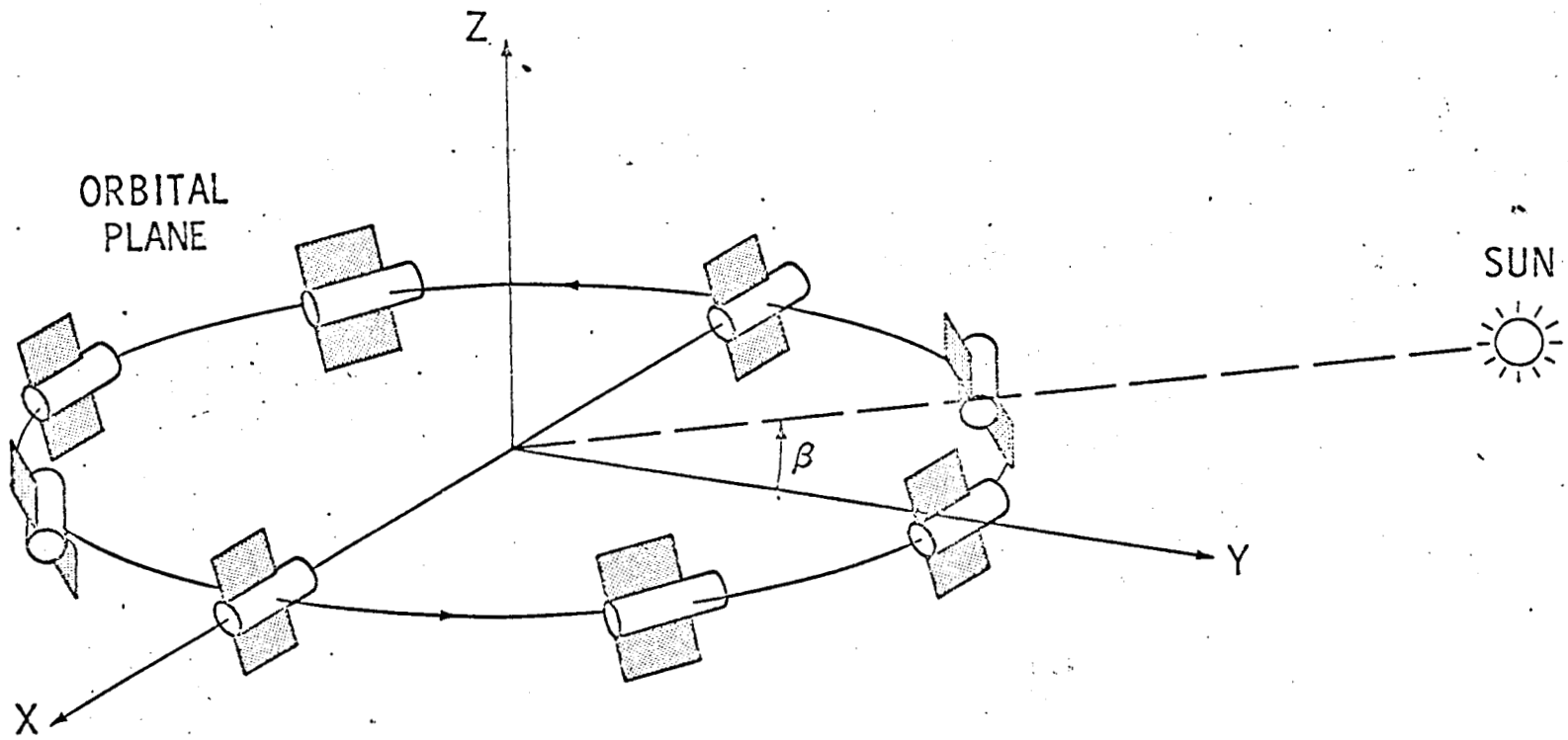

FIGURE 9

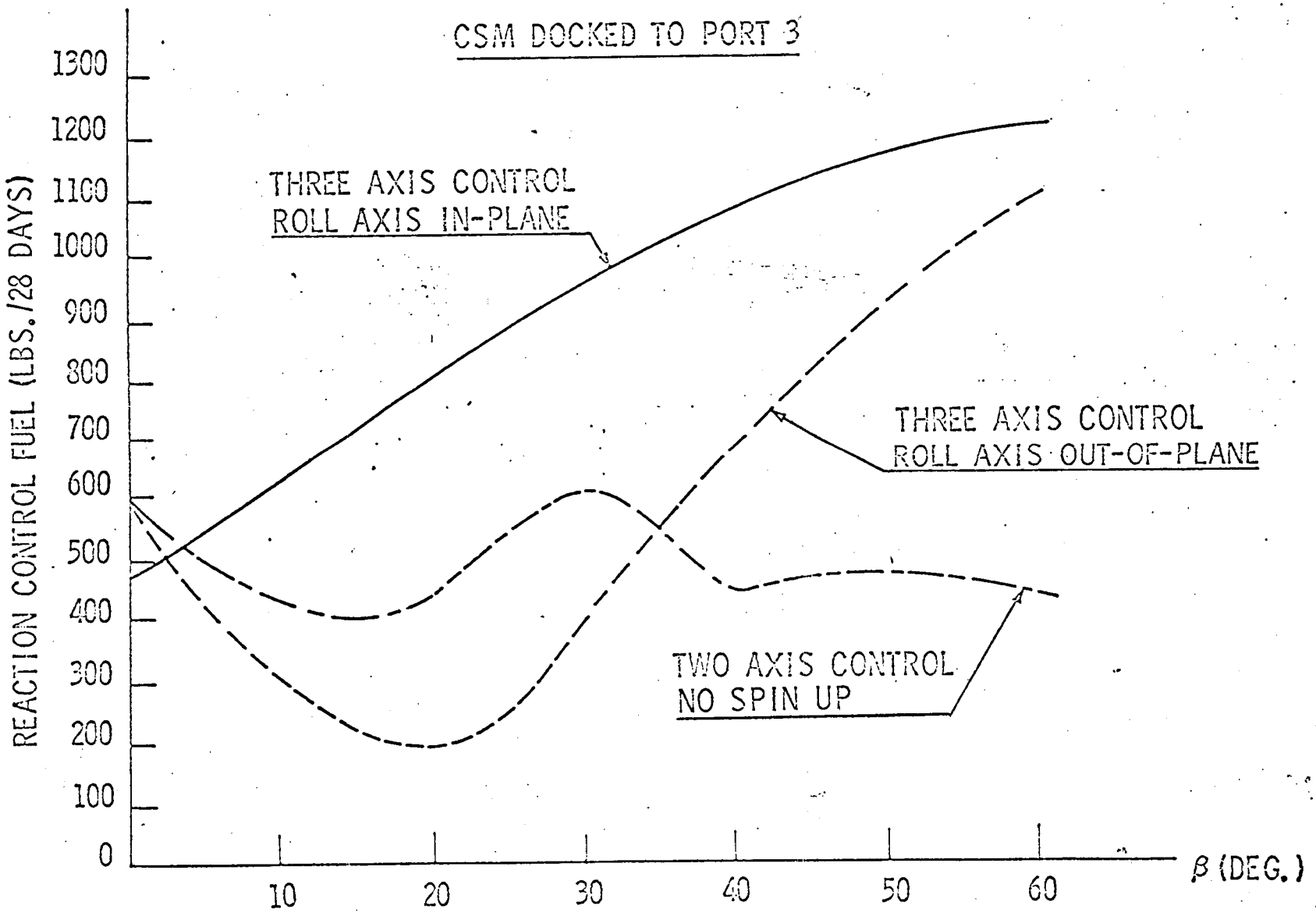
CSM DOCKED TO PORT 3
REACTION CONTROL FUEL (LBS./28 DAYS)
1300
1200
1100
1000
900
800
700
600
500
400
300
200
100
0
10
20
30
40
50
60
β (DEG.)
THREE AXIS CONTROL
ROLL AXIS IN-PLANE
THREE AXIS CONTROL
ROLL AXIS OUT-OF-PLANE
TWO AXIS CONTROL
NO SPIN UP

FIGURE 10

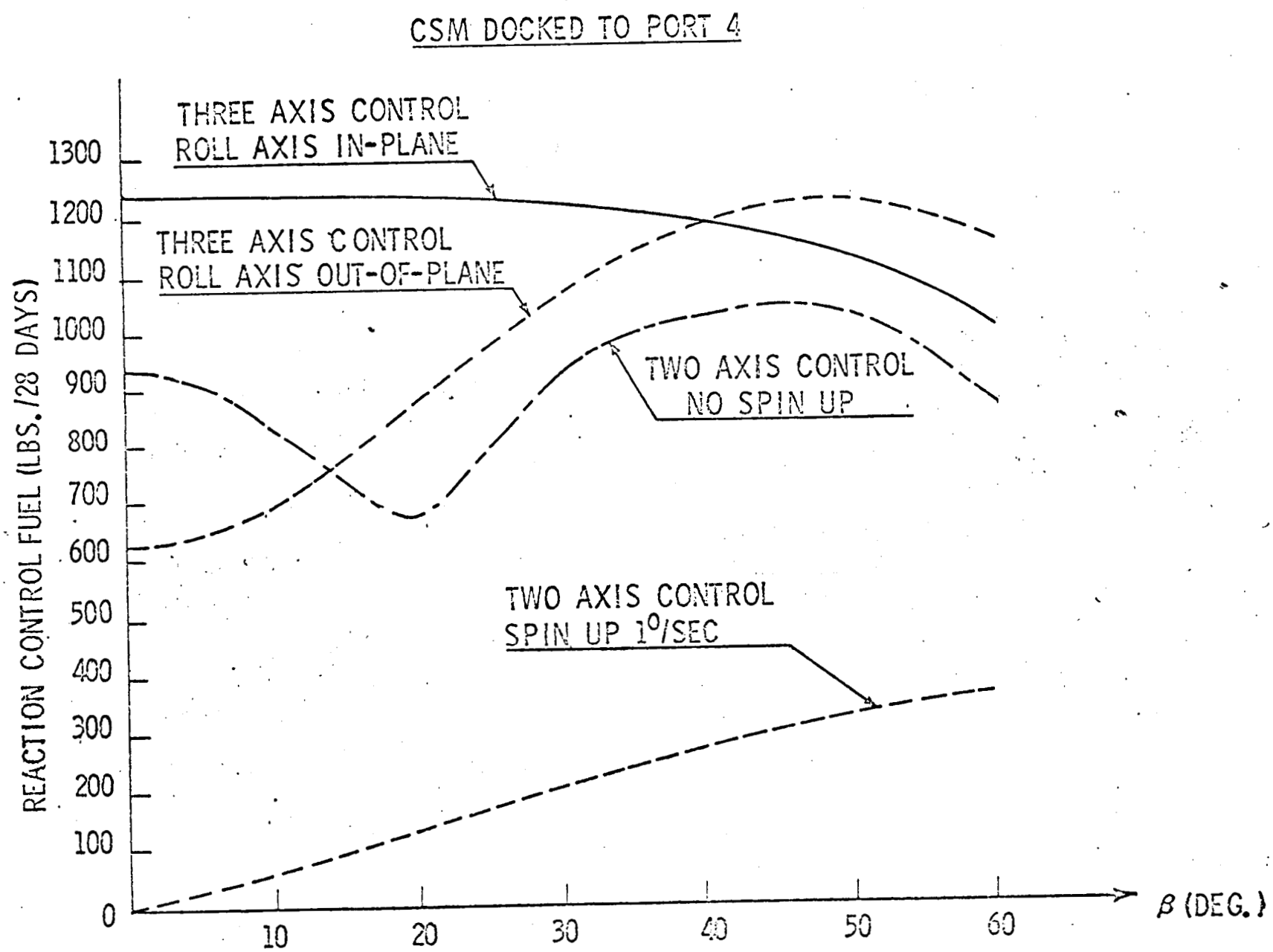
CSM DOCKED TO PORT 4
THREE AXIS CONTROL
ROLL AXIS IN-PLANE
THREE AXIS CONTROL
ROLL AXIS OUT-OF-PLANE
TWO AXIS CONTROL
NO SPIN UP
TWO AXIS CONTROL
SPIN UP 1°/SEC
REACTION CONTROL FUEL (LBS./28 DAYS)
1300
1200
1100
1000
900
800
700
600
500
400
300
200
100
0
10
20
30
40
50
60
β (DEG.)

FIGURE 11

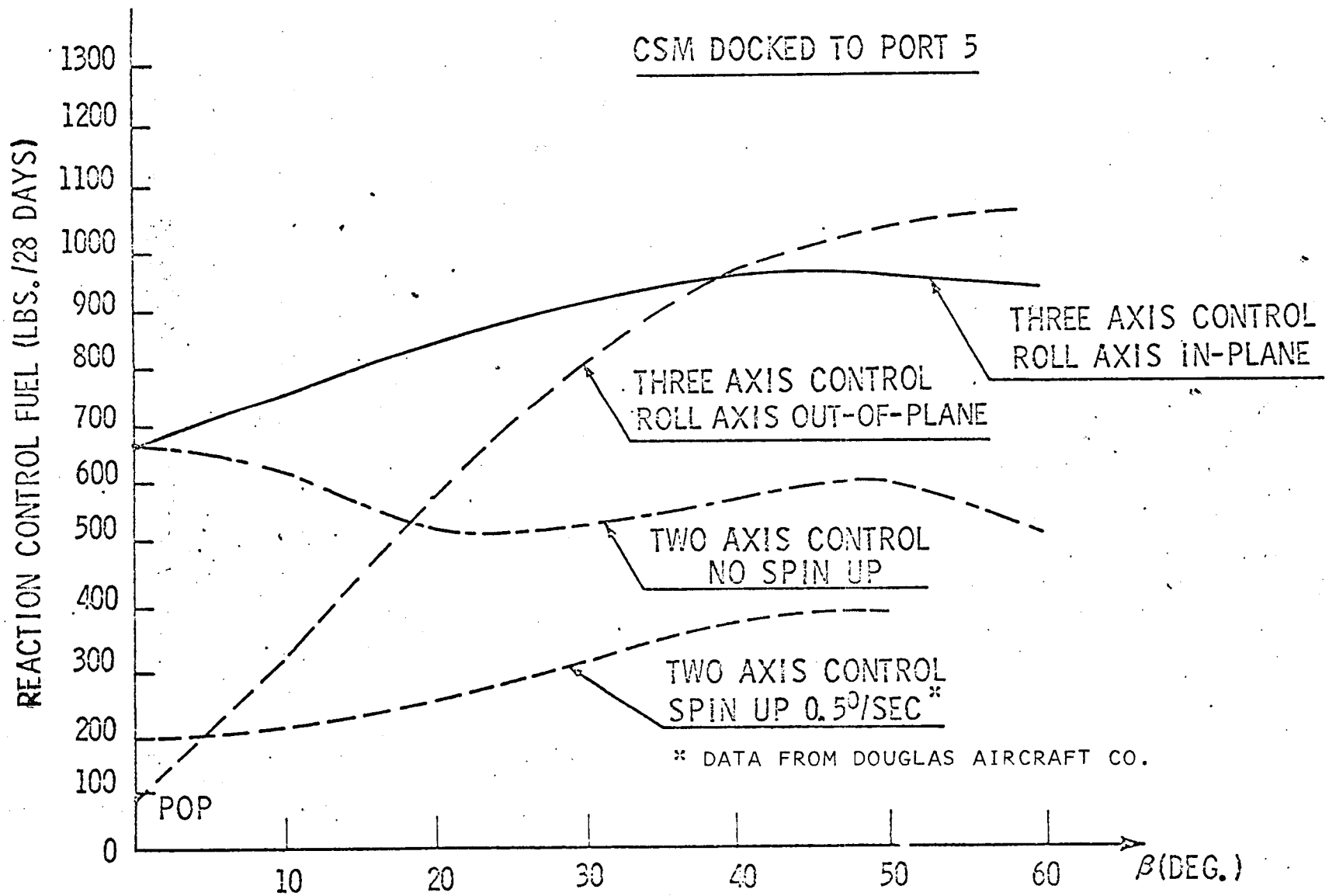
CSM DOCKED TO PORT 5
REACTION CONTROL FUEL (LBS./28 DAYS)
1300
1200
1100
1000
900
800
700
600
500
400
300
200
100
0
POP
10
20
30
40
50
60
β(DEG.)
THREE AXIS CONTROL
ROLL AXIS IN-PLANE
THREE AXIS CONTROL
ROLL AXIS OUT-OF-PLANE
TWO AXIS CONTROL
NO SPIN UP
TWO AXIS CONTROL
SPIN UP 0.5°/SEC*
* DATA FROM DOUGLAS AIRCRAFT CO.

FIGURE 12

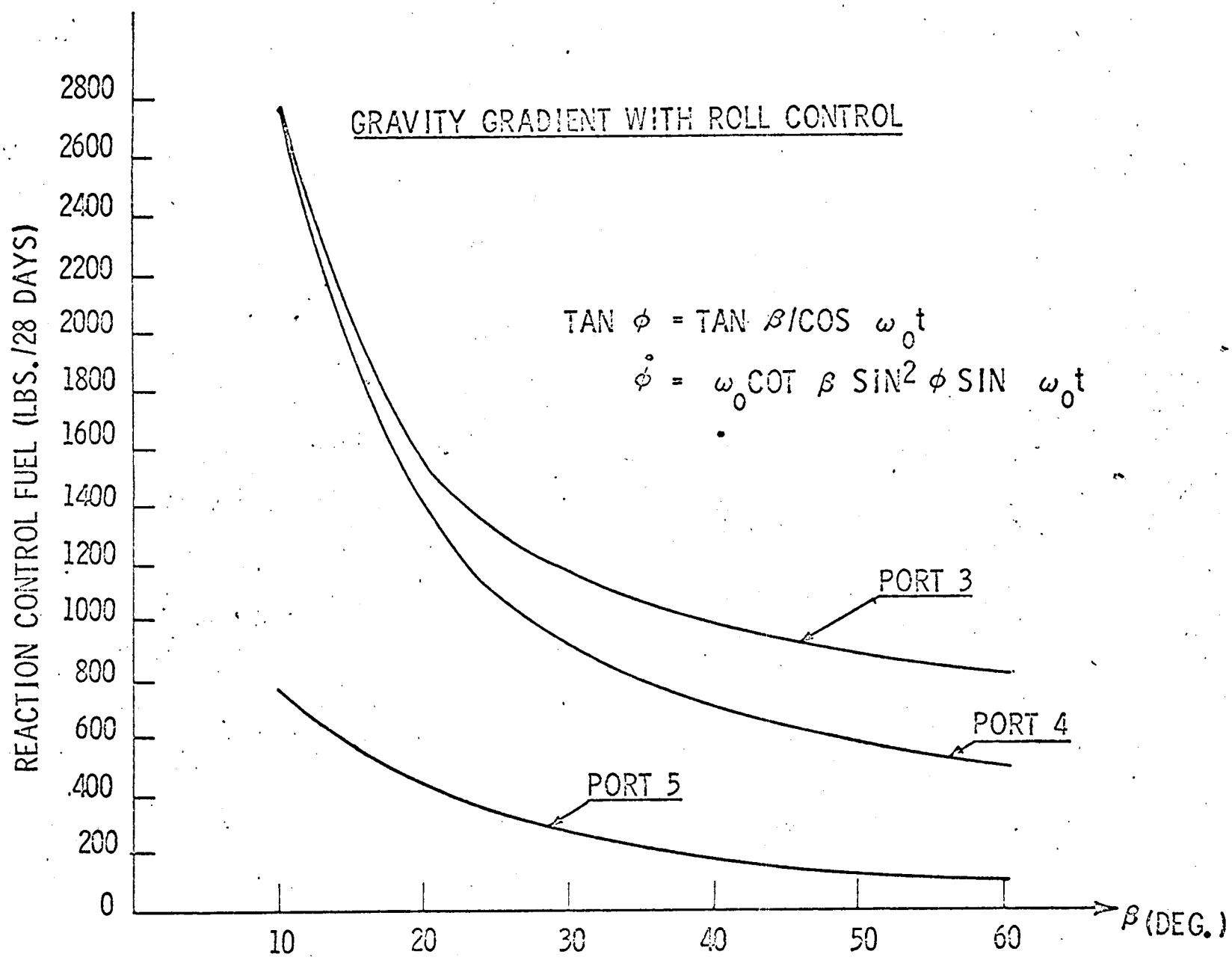
GRAVITY GRADIENT WITH ROLL CONTROL
TAN ϕ = TAN β/COS $\omega_0 t$
$\dot{\phi}$ = ω_0 COT β SIN^2 ϕ SIN $\omega_0 t$
REACTION CONTROL FUEL (LBS./28 DAYS)
2800
2600
2400
2200
2000
1800
1600
1400
1200
1000
800
600
400
200
0
10
20
30
40
50
60
β (DEG.)
PORT 3
PORT 4
PORT 5

FIGURE 13

SUMMARY OF RESULTS, REACTION THRUST METHODS

OPTION	DOCKING PORT	DEAD BAND	PROPELLANT (LBS./28 DAYS)		ELECTRONICS INCREMENT *	APS MODULES
TWO AXIS CONTROL NO SPIN UP	5	5°	650		NONE	4
TWO AXIS CONTROL WITH SPIN UP	4	5°	550++ #	372+	NONE	2 - 3
		30°	487++ #	321+ #		
	5	5°	400++ #			
POP	5	5°	87		PAIR OF HOR. SEN.	2

* ALL OPTIONS REQUIRE SUN SENSORS

\+ MAX. β, SPIN SPEED 0.5^{o}/SEC.

++MAX. β, SPIN SPEED 1.0^{o}/SEC.

\# DATA FROM DOUGLAS AIRCRAFT CO.

FIGURE 14

GRAVITY GRADIENT WITH ROLL CONTROL

ϕ VS. TIME

$$\tan \phi = \tan \beta / \cos \omega_0 t$$

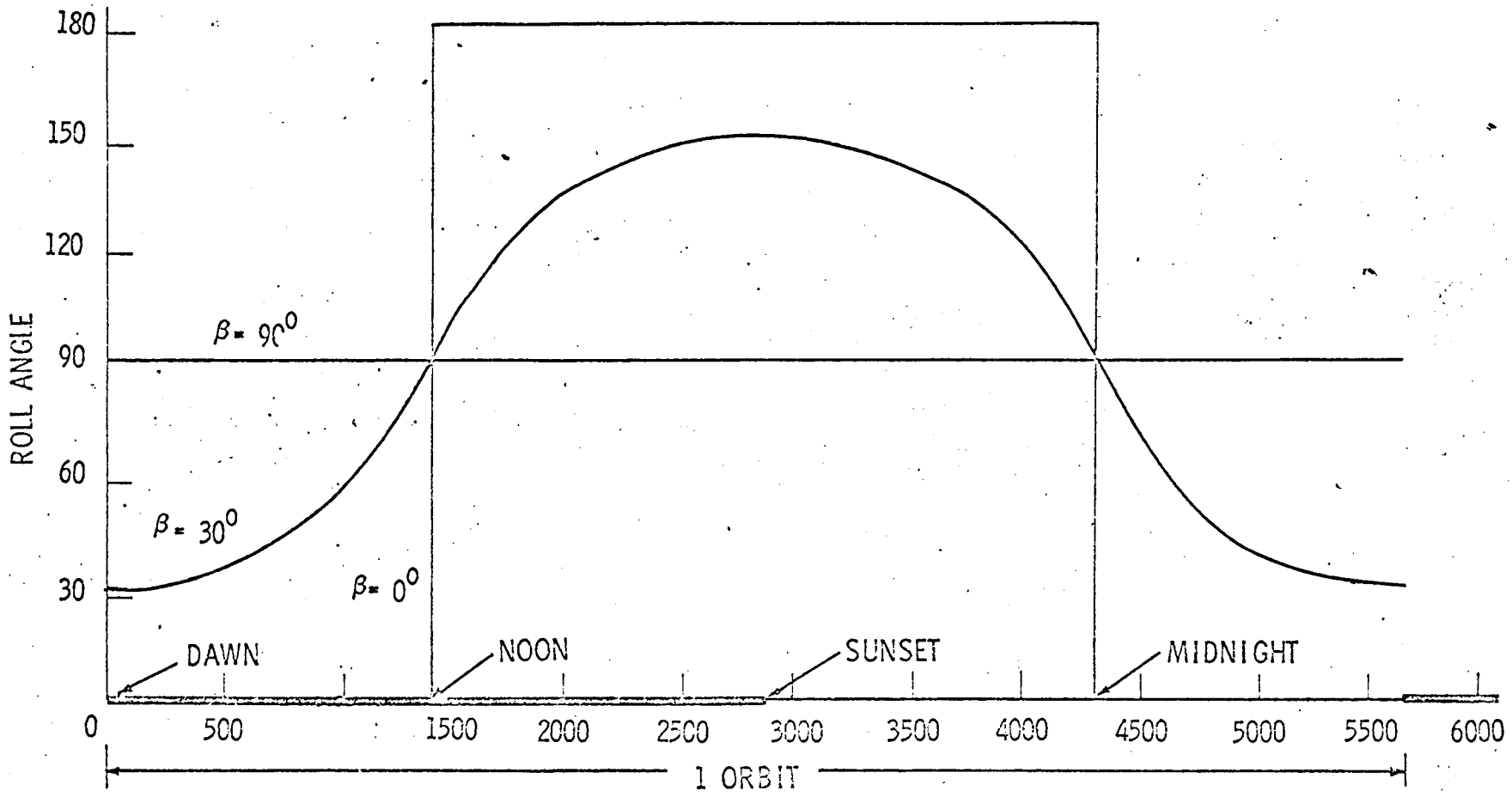

FIGURE 15

APS MODULES *

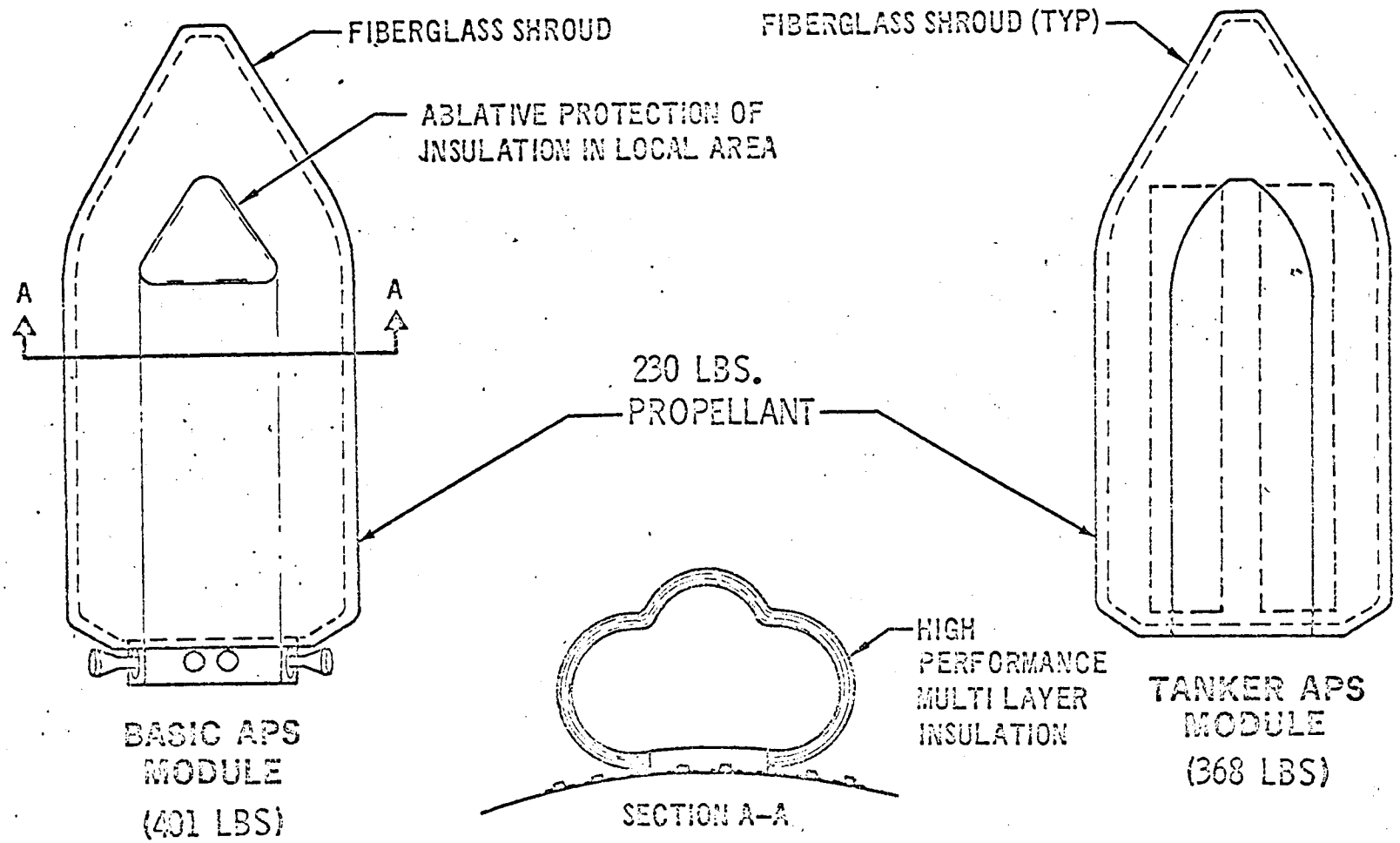

* FROM DOUGLAS AIRCRAFT CO.

FIGURE 16

CONCLUDING REMARKS, REACTION THRUST METHODS

- MIN. PROPELLANT DESIRED TO MIN. NUMBER OF THRUSTER IGNITIONS AS WELL AS WEIGHT
- TWO AXIS CONTROL, WITH SPIN
  - OWS ENVIRONMENT CONTROL SAME AS FOR SOLAR ORIENTATION WITH NO SPIN (MSFC)
  - MSC HAS ACTION FROM MSFC TO IDENTIFY EFFECTS OF SPIN, IF ANY
- POP
  - PROBABLY OWS ENVIRONMENTAL CONTROL NOT MORE DIFFICULT THAN WITH SOLAR ORIENTATION (MSFC STUDYING)
  - SOLAR PANEL ROTATION ACCEPTABLE

FIGURE 17

MODEL R-1E ROCKET ENGINE 22 lb THRUST *

THRUST
22 LBS @ 180 PSIA PROPELLANT SUPPLY PRESSURE
OPERATIONAL RANGE – 15 TO 27 LBS THRUST

COOLING
RADIATION

IGNITION
HYPERGOLIC

PERFORMANCE
STEADY STATE SPECIFIC IMPULSE – 276 SEC NOMINAL @ O/F = 1.6
PULSE PERFORMANCE – SEE CURVE
IMPULSE BIT @ 10 MS PULSE WIDTH – 0.12 LB-SEC

VALVES
ELECTRICALLY LINKED SOLENOIDS
POWER REQUIREMENTS – 35 WATTS @ 28 VOLTS DC
OPENING RESPONSE – 9 MS @ 28 VOLTS DC
VALVES CAN BE FURNISHED WITH PIGTAILS
OR MECHANICAL CONNECTOR AS REQUIRED.

LIFE
BURN TIME – 220 MINUTES OR MORE
IGNITIONS – 100,000 +

WEIGHT
2.88 LBS

CHAMBER PRESSURE NOZZLE AREA RATIO
93 PSIA 40:1

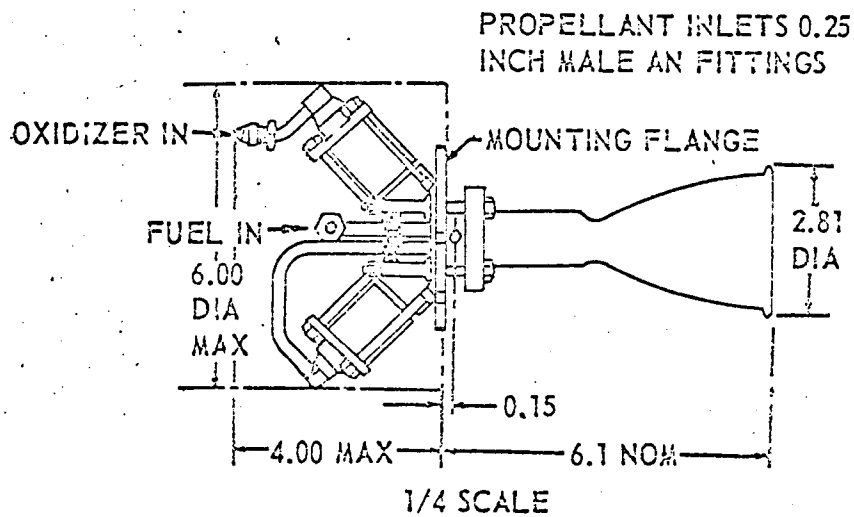

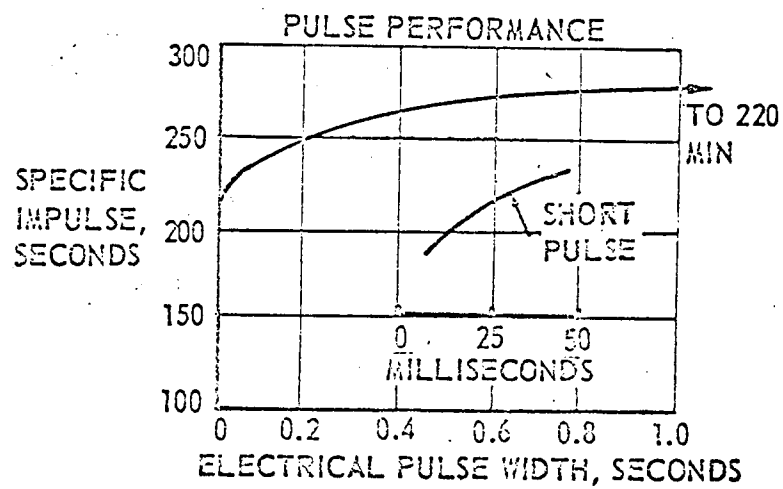

* FROM DOUGLAS AIRCRAFT CO.

FIGURE 18

CMG METHODS OF SOLAR ORIENTATION

REMARKS

- REQUIRE SUN SENSOR, AACS HORIZON SENSORS AND RATE GYROS TO PLACE AND HOLD ROLL AXIS OF OWS IN ORBIT PLANE
- ACTIVE CMG's: TWO CMG's ARE ADEQUATE TO SOLAR ORIENT OWS WITH CSM DOCKED TO PORT 5
- PASSIVE CMG's: ELIMINATES CONTINUOUS POWER DRAIN BY SUN SENSOR AND CMG TORQUE MOTORS; THREE CMG's MAY BE REQUIRED

CONCLUSION

- MINIMUM CMG SYSTEM FOR SOLAR ORIENTATION OF AAP 1/AAP 2 IS TWO CMG's WITH ACTIVE CONTROL. WEIGHT INCREMENT TO OWS IS APPROX. 1,185 LBS. PLUS 100 LBS. FUEL FOR MOMENTUM DUMP

FIGURE 19

RECOMMENDATION FOR SOLAR ORIENTATION OF AAP 1/AAP 2

- POP MODE

  ADVANTAGES

  - MIN. SYSTEM WEIGHT INCREMENT
  - MIN. NUMBER OF THRUSTER IGNITIONS
  - CONTROL IMPLEMENTATION NOT COMPLEX

  DISADVANTAGES

  - COST OF ADDITIONAL HORIZON SENSORS
  - ROTATION OF PANELS

FIGURE 20

BELLCOMM, INC.

Subject: Studies of Solar Orientation for AAP-1/AAP-2

From: J. Kranton

Distribution List

NASA Headquarters

Messrs. H. Cohen/MLR
P. E. Culbertson/MLA
J. H. Disher/MLD
J. A. Edwards/MLO
L. K. Fero/MLV
J. P. Field, Jr./MLP
T. A. Keegan/MA-2
C. W. Mathews/ML
M. Savage/MLT
W. C. Schneider/MLM

MSC

Messrs. H. W. Dotts/KS
W. B. Evans/GV-5
W. J. Klinar/EG-23

MSFC

Messrs. W. B. Chubb/R-ASTR-NGD
N. R. Gilino/R-ASTR-S
W. Horton/R-ASTR
R. Ise/I-S/AA

Bellcomm

Messrs. A. P. Boysen
D. R. Hagner
W. C. Hittinger
B. T. Howard
J. Z. Menard
I. D. Nehama
I. M. Ross
R. L. Wagner
Div. 101 Supervision
Div. 102 Supervision
All Members Dept. 1021, 1022, 1024
Department 1023
Central File
Library