(NASA-CR-126087) USER'S GUIDE FOR SACSIM: SKYLAB ATTITUDE CONTROL SIMULATION (Bellcomm, Inc.) 28 p

N79-72427

Unclas
00/18 12197

Bellcomm

955 L'Enfant Plaza North, S.W.
Washington, D. C. 20024

B72 03006

date: March 8, 1972

to: Distribution

from: R. W. Grutzner

subject: User's Guide for SACSIM - Skylab Attitude Control Simulation
Case 620

MEMORANDUM FOR FILE

I. Introduction

SACSIM is a computer program designed to simulate spacecraft attitude hold and maneuver operations during various portions of the Skylab mission. The program integrates up to 22 first order differential equations in evaluating spacecraft attitude and rate response to various disturbance and command torques.

This memorandum provides a listing of the input variables necessary to make a simulation run and assumes the user has some familiarity with the system terminology, i.e. input description is definitive rather than explanatory. In addition to the input definitions, a brief description of the simulator scope, components and logic flow is presented.

The dynamics and control equations which form the basis of the program were provided by various (present and former) members of Department 1022, viz. B. D. Elrod, S. C. Chu, J. J. Fearnsides, J. Kranton and W. Levidow.

II. Scope

The intended uses of the program are to:

a) Study various Skylab mission modes i.e. solar inertial, local vertical, quasi-inertial and momentum dump.

b) Exercise and evaluate various control moment gyroscope (CMG) laws i.e. CMG steering, rotation and distribution laws.

c) Investigate contingency modes, e.g. cases where one or more CMGs fail.

III. Simulator Components

Figure 1 (due to B. D. Elrod) is a block diagram of the Skylab attitude control system. The program written to simulate same consists of a main program, an integration package,[1] 50 subroutines, the Bellcomm vector package[2] and a routine analogous to the vector package for quaternion operations.[3] The following table identifies those variables whose derivatives are integrated by the program:

Name	Type	Description
OMEGA	vector	vehicle rate
P	quaternion	relates vehicle system to command system
Q	quaternion	relates command system to solar inertial system
R	quaternion	relates vehicle system to solar inertial system
ALPHG	vector	CMG outer gimbal angles
BETAG	vector	CMG inner gimbal angles
PSI	scalar	quasi-inertial parameter[4]

Appendix 1 is a listing of some of the major routines and a brief statement of purpose. Appendix 2 lists the CØMMØN sections and gives a general description of the type of variables found in each. Appendix 3 is a cross reference of the various subroutine calls and Appendix 4 relates the CØMMØN sections to the subroutines.

IV. Logic Flow

In order to simulate the essential functions of the attitude control system as well as the vehicle dynamics, the basic cycle time of the simulator was chosen as one second, the value used by the ATMDC "slow loop". Thus the normal integration step size is one second and is reduced only at certain points on the orbit where it is necessary to integrate "exactly" to an event (node crossing, orbital midnight, etc.) in order to output or save data at these times.

The program functions can be segmented into: a) initialization, b) timing, c) control, d) input-output, and e) dynamic simulation. With reference to Figure 2 it is seen that the initialization consists of reading data and conversion to appropriate units. This section of the program also initializes the integrators and performs several auxillary computations.

Those computations beginning with the TIMING section and continuing through the DYNAMICS section are included within the main program loop and are executed once per cycle. The following table gives a brief explanation of the various steps displayed in Figure 2:

Step	Function
4	compute spatial and timing parameters, e.g. angular displacement from orbit noon and time-to-go until next nodal crossing. Establish the integration step size for the ensuing cycle.
5	the orbit number is incremented by one at each midnight crossing. The run terminates when either the orbit number exceeds the required number or when 'time' is greater than the input value of final time (Step 21)
6,7	if the cycle time has not been reduced by NAVTIM the current value of 'time', (which due to the integration routine is computed as a sum rather than a multiple of the loop index) is corrected for small accumulated error.
6,8	if we are to integrate over a portion of a cycle (cycle time has been reduced by NAVTIM, step 4), it is apparent that something other than usual sequencing is occurring. Therefore a print is requested which will provide information relative to the event being executed (midnight crossing, etc). If this condition obtains, the CONTROL section is skipped and no new commands are generated until the program is back in normal cycle sequence i.e. the ATMDC equations are only computed at one second intervals.
9,10	computes command rate if vehicle is in local vertical mode.

Step	Function
9,11	computes command rate if vehicle is in quasi-inertial mode.
9,12	computes command rate, rate error and attitude error for dump mode.
13	computes rate and attitude errors for modes other than dump.
14,15	if the thruster attitude control system (TACS) is operative its error signal is computed here. The logic determining which thrusters to fire and for how long is included as is the computation of the resulting torque and impulse usage. If the thrusters are fired impulsively, the change in OMEGA is computed.
16,17	if the CMGs are operative, step 17 first computes the desired control torque (a function of the rate and attitude errors) and then the gimbal angle rates which are functions of the desired torque.
18,19	prior to entering the integration routine, data may be printed or saved for subsequent plotting. The frequency is under input control.
20	integration routines - VEDYN computes vehicle dynamics within the integration interval. The commanded rates and the gimbal angle rates are held constant over the interval.
21	see step 5 description.
22	prior to terminating the run, the plot routines operate on the data saved at step 19.

V. INPUT Variables (see V-2 for further explanation of variables followed by asterisk)

Variable Name	Units	Dimension	COMMON Block	Definition and nominal value (zero unless otherwise indicated)
ACCLIM	deg/sec^2		ZLV	Maximum Vehicle angular acceleration (.00199798)
ADØTD	deg/sec	3	INTEG	Vector of initial outer gimbal angle rates
ALPH	deg	4	PHYCØN	right ascensions of stars used by star tracker (95.82, 186.2, 24.14, 0.)
ALPHAL*	deg		ELRØD	launch azimuth
ALPHG0	deg	3	INTEG	vector of initial outer gimbal angles (45., 45., 45.)
AREF	ft^2		VEHCØN	reference area used in aero. torque computations (856.)
A0		3,3	CNTRØL	TACS error = $A0*\bar{\varepsilon}_{\phi}+A1*\bar{\varepsilon}_{\omega}$
A1	sec	3,3	CNTRØL	A0=(1.,1.,1.), A1=(10.,10.,10.) both diagonal
BDØTD	deg/sec	3	INTEG	vector of initial inner gimbal angle rates
BETAG0	deg	3	INTEG	vector of initial inner gimbal angles
CINT0	sec		SEQENS	basic integration interval (1.)
DAYS	days		DENS	number of calendar days since December 31, 1957 (5316.)
DELT	deg	4	PHYCØN	declinations of stars used by star tracker (-52.674,-62.92,-57.399,0.)

Variable Name	Units	Dimension	COMMON Block	Definition and nominal value (zero unless otherwise indicated)
DNUZL	deg		LEVIDØ	limiting value on $\Delta\nu_z$ as computed by dump equations (5.)
DREF	ft		VEHCØN	reference diameter used in aero. torque computations (33.)
DURZLV(J,I)	deg	2,20	ZLV	angular duration of maneuvers into (J=1) and out of (J=2) local vertical mode on Ith orbit (See figure 3)
E	deg		PHYCØN	earth equatorial inclination with respect to ecliptic (23.5)
ELIM	1/sec		KRANTN	limiter used in computing desired CMG torque per unit spin axis momentum; $\dot{\bar{h}}^T = -K0*\bar{\varepsilon}_\phi - K1*\bar{\varepsilon}_\omega$ the magnitude of each component of $K0*\bar{\varepsilon}_\phi$, $K1*\bar{\varepsilon}_\omega$ and $\dot{\bar{h}}^T$ is limited to ELIM (.179687)
EPSLN1*			KRANTN	tolerances associated with J. Kranton CMG control law
EPSLN2*			KRANTN	
EPSUN			ELRØD	earth orbital eccentricity (.016)
ETAN0	deg		ELRØD	initial S/C angular displacement from orbital noon
ETAX*	deg		ELRØD	minimum angle between the sun line and the orbital plane
FJET	lb	3,6	VEHCØN	components (in vehicle system) of force produced by each of the six thruster jets (See V-1i)

Variable Name	Units	Dimension	COMMON Block	Definition and nominal value (zero unless otherwise indicated)
G		3,3	CNTRØL	rate sensor gains i.e. $\bar{\omega}_{sensed} = G\ \bar{\omega}_{vehicle}$ (1.,1.,1.) diagonal
GAMDØT	deg/day		PHYCØN	mean annual sun angle rate (.9856)
GAMMY0	deg		PHYCØN	angle between vernal equinox and sun when earth is at perihelion
GAMSL	deg		CNTRØL	acquisition sun sensor output limit (3.)
GPLIM	1/sec		KRANTN	limit on CMG steering law 'GP' coefficients (25.)
GXLIM			KRANTN	limit on CMG steering law 'GX' coefficients (25.)
H	ft-lb-sec		KRANTN	magnitude of CMG spin angular momentum (2300.)
HDAIN	ft-lb-sec	3	LEVIDØ	deviation of "average" momentum from desired. If input, the computed value of HDA is overwritten
HDA1	ft-lb-sec	3	LEVIDØ	value of HDA on previous orbit
HDKIN	ft-lb-sec	3	LEVIDØ	orbital bias momentum. If input, computed value of HDK is overwritten
HDB	ft-lb-sec	3	LEVIDØ	desired average dump momentum
HDIN	ft-lb-sec	3	LEVIDØ	optional input value of momentum to be dumped. If input, the computed value of HD is overwritten
HL			KRANTN	if VMAG $(\overline{HA}_i) > HL$ and $GP_i > 0$, set $GP_i = 0$ $\quad i = 1,2,3$ where $\overline{HA}_1 = \bar{h}_1 + \bar{h}_2$ $\overline{HA}_2 = \bar{h}_2 + \bar{h}_3$ $\overline{HA}_3 = \bar{h}_1 + \bar{h}_3$ (1.96)

Variable Name	Units	Dimension	COMMON Block	Definition and nominal value (zero unless otherwise indicated)
HLIM	ft-lb-sec		FRNSID	maximum value of CMG momentum such that TACS momentum management function is not activated (6400.)
HMB	ft-lb-sec		KRANTN	magnitude of commanded bias angular momentum
HN	ft-lb-sec		LEVIDØ	orbital z axis bias momentum magnitude
HTD	ft-lb-sec	3	KRANTN	desired CMG momentum when operating in caged mode
HTDØTL	1/sec		KRANTN	limiting value of desired CMG torque per unit spin axis angular momentum (.2)
ICAGE			KRANTN	= 1 for caged operation
IDLAW			KRANTN	= 1 to use CMG distribution law
IDOCK			KRANTN	= 1 for docked configuration
IDPV(J,I)	hollerith	5,20	PLTCØM	array of names of dep. variables to be plotted i.e. IDPV(J,I) = 'NAME' defines the Jth variable to be plotted on the Ith frame as 'NAME' (See V-1a for table of permissible names)
IEN			CNTRØL	= 1 to mix TACS error signals on X and Z axes
IGIM*			KRANTN	= 1 or 2 to compute dynamic origin for CMG steering law
IG1			KRANTN	= 0 for CMG #1 inoperative = 1 for CMG #1 operative (1)
IG2			KRANTN	= 0 for CMG #2 inoperative 1 for CMG #2 operative (1)

Variable Name	Units	Dimension	COMMON Block	Definition and nominal value (zero unless otherwise indicated)
IG3			KRANTN	= 0 for CMG #3 inoperative
				= 1 for CMG #3 operative (1)
II1	ft-lb-sec^2	3,3	VEHCØN	undocked inertia matrix (See V-1b)
II2	ft-lb-sec^2	3,3	VEHCØN	docked inertia matrix (See V-1c)
IKHAT			QUASI	indicator for quasi-inertial mode (See V-1j)
INDTRQ			DYNAMC	torque indicator (2)
				= 0 no torque (venting torque may be applied - see TVENT)
				= 1 aero. torque only
				= 2 gravity gradient torque only
				= 3 aero. and gravity gradient torques
INDV(I)	hollerith	20	PLTCØM	array of independent variable names for plotting i.e. INDP(I) = 'NAME' defines the independent variable for the Ith plot to be 'NAME' (See V-1a)
IOPT			KRANTN	= 1 to use J. Kranton CMG control law
IPLOT	hollerith		PLTCØM	= 'PAPER' for on-line plots only
				= 'MICRØ' for SC4020 plots only
				= 'BOTH' for both types
				= 0 for no plots
IPRINC	ft-lb-sec^2	3,2	VEHCØN	undocked and docked principal axis diagonal inertias (See V-1d)

Variable Name	Units	Dimension	COMMON Block	Definition and nominal value (zero unless otherwise indicated)
IRLAW			KRANTN	= 1 to use CMG rotation law (1)
IRLIM			KRANTN	= 1 to limit CMG gimbal angle rates (1)
ISP	sec		VEHCØN	specific impulse of thrusters (5.5)
ITACS			FRNSID	= 0 no TACS
				= 1 TACS used for both error control and CMG momentum management
				= 2 TACS used only for momentum management (1)
ITRMNL			SEQENS	= 1 if running from remote terminal; generates a short print out
ITITLE(I)	hollerith	20	PLTCØM	forty-eight character (max) title to be displayed on Ith plot e.g. ITITLE(I) = 'GIMBAL ANGLES VS. TIME'
JMØDE(J,I)		11,20	ELRØD	defines Jth mode on Ith orbit to be;
				1 - solar-inertial
				2 - local vertical
				3 - dock (not defined)
				4 - undock (not defined)
				5 - momentum dump
				6 - quasi-inertial
JØBL			PHYCØN	oblateness constant in earth potential equation (.001624)
KDM			KRANTN	gain factor used in CMG distribution law

Variable Name	Units	Dimension	COMMON Block	Definition and nominal value (zero unless otherwise indicated)
KE			KRANTN	gain factor for caged operation
KML			LEVIDØ	constant used in generation of adjustments for momentum dump maneuvers
KR	1/sec		KRANTN	gain factor used in CMG rotation law
KRL			LEVIDØ	maneuver rate constant
K0		3,3	KRANTN	matrices used in computing CMG desired
K1		3,3	KRANTN	output torque per unit spin angular momentum i.e. $\dot{\bar{h}}^T = -(K0*\bar{\varepsilon}_\phi + K1*\bar{\varepsilon}_\omega)$ (See V-1f)
LSLAT	deg		PHYCØN	launch site latitude (28.5)
MK			FRNSID	limit used in determining how TACS are fired i.e. $\varepsilon_{TACS} < 1.$ no firing; $1. < \varepsilon_{TACS} < MK$ minimum-impulse firing; $\varepsilon_{TACS} > MK$ full-on firing
MU	NM^3/sec^2		PHYCØN	earth gravitation constant (62750.504)
MUE	deg		CNTRØL	sun sensor error threshold for strapdown update
M0	deg		PHYCØN	mean anomaly of earth on January 1 (-3.52)
NØRBS			SEQENS	number of orbits (including partial orbits) to be simulated
NUZ	deg		LEVIDØ	angle about Z axis by which X axis is out of orbital plane

Variable Name	Units	Dimension	COMMON Block	Definition and nominal value (zero unless otherwise indicated)
ØGWGHT			KRANTN	weighting factor applied to outer gimbal angles in rotation law (.45714286)
ØH	NM		ELRØD	orbital altitude (circular)
ØHMAX	NM		ELRØD	apogee altitude (elliptic)
ØHMIN	NM		ELRØD	perigee altitude (elliptic)
ØI*	deg		ELRØD	orbital inclination (50.)
ØMBIAS	deg/sec	3	CNTRØL	bias value in commanded vehicle rate
ØMEGAE	deg/hr		PHYCØN	earth rotation rate (15.)
ØMEGA0	deg/sec	3	INTEG	spacecraft initial angular velocity
ØMPD	deg		ELRØD	displacement of initial perigee location with respect to ascending node (.1)
PHIC	deg		CNTRØL	conical half angle of FSS field of view (3.)
PHIDB	deg		DENS	longitudinal displacement of diurnal bulge from sub-solar point (30.)
PHIELM		2	KRANTN	if $\lvert\bar{\varepsilon}_\phi\rvert$>PHIELM and any gimbal is on a stop, a message is printed indicating that the reset logic should have been executed (.87273445E-2 if in dump mode, .87273445E-3 if not in dump mode)
PHILIM	deg		CNTRØL	attitude error limit (2.5)
PLTSEC	sec		PLTCØM	interval at which plot data are saved (100.)
PRTCHG(I)	sec	29	SEQENS	the time at which PRTSEC(I+1) becomes effective (29*10.E36)

Variable Name	Units	Dimension	COMMON Block	Definition and nominal value (zero unless otherwise indicated)
PRTSEC	sec	30	SEQENS	print frequencies (50.,29*0.)
P0		4	INTEG	initial value of P quaternion (0.,0.,0.,1.)
Q0		4	INTEG	initial value of Q quaternion (0.,0.,0.,1.)
RATLIM	deg/sec		ZLV	maximum vehicle rate (.3)
RATM	in	3	VEHCØN	vehicle system coordinates of the ATM with respect to station zero (3544.8,0.,0.)
RCG	in	3,2	VEHCØN	vehicle system coordinates of the center of mass with respect to station zero (see V-1h)
RE	NM		PHYCØN	earth radius (3443.9)
RHØD	deg		LEVIDØ	dump interval half angle
RHØMIN	deg		LEVIDØ	minimum allowable value of .5*dump interval after S-I pass
RHØSI	deg		LEVIDØ	minimum allowable value of .5*dump interval after Z/LV pass (45.)
RT	in	3,6,2	VEHCØN	vehicle system coordinates of the six thrusters in the undocked and docked configurations (see V-1g)
SCALE			KRANTN	gain constant in J. Kranton CMG control law
SCALE1		6	KRANTN	diagonal matrix used in J. Kranton control law (6*1.)
SGHDL	ft-lb-sec	3	LEVIDØ	limit vector used in dump computations (3*34500.)
SGHD1	ft-lb-sec	3	LEVIDØ	accumulations of momentum bias which are proportional to momentum bias which has not been dumped (on previous orbit)

Variable Name	Units	Dimension	COMMON Block	Definition and nominal value (zero unless otherwise indicated)
SL			KRANTN	limit on CMG rotation law 'S' functions (.04)
TFIN	sec		SEQENS	ending time of run
TGMT0*	days		ELRØD	GMT at launch
TIMLV(I)	deg	20	ZLV	angular duration of Z/LV pass on Ith orbit
TMIB	sec		VEHCØN	effective 'on-time' for minimum-impulse-bit thruster firing (.08)
TØLR		23	SEQENS	integration error criteria (22*.00001,.000001)
TØRFAC			KRANTN	multiplier to artificially modify gravity gradient torque (1.)
TN	sec		ELRØD	difference between GMT clock noon and true noon at launch
TQIMC(I)	sec		QUASI	time with respect to midnight to begin quasi-inertial mode on Ith orbit
TV(I)	sec	30	DYNAMC	time to begin Ith venting torque (30*10.E35)
TVENT	ft-lb	3,30	DYNAMC	array of venting torques
TPV		3,3	ELRØD	transformation matrix from body system to principal axis system (see V-1e)
TZLVMC(I)	sec	20	ZLV	orbit angle with respect to midnight at which Z/LV maneuver is to begin on Ith orbit
XI			DENS	sunspot number

Variable Name	Units	Dimension	COMMON Block	Definition and nominal value (zero unless otherwise indicated)
XMAX(I)		20	PLTCØM	maximum value of abscissa on I<u>th</u> plot
XMIN(I)		20	PLTCØM	minimum value of abscissa on I<u>th</u> plot
YMAX(I)		20	PLTCØM	maximum value of ordinate on I<u>th</u> plot
YMIN(I)		20	PLTCØM	minimum value of ordinate on I<u>th</u> plot

V-1 Additional Data

a) Permissible variable names for plotting (additional variables may be easily added to this list)

'TIME'	elaped time since start of run
'ØMEGA1'	vehicle rate
'ØMEGA2'	
'ØMEGA3'	
'PHIER1'	vehicle attitude error
'PHIER2'	
'PHIER3'	
'WERR1'	vehicle rate error
'WERR2'	
'WERR3'	
'EN1'	combined TACS error signal
'EN2'	
'EN3'	
'ALPHG1'	outer gimbal angles -45°
'ALPHG2'	
'ALPHG3'	
'BETAG1'	inner gimbal angles
'BETAG2'	
'BETAG3'	
'DELØM1'	$\Delta\varpi$ resulting from minimum impulse
'DELØM2'	thruster firings
'DELØM3'	
'ALDØT1'	outer gimbal angle rates
'ALDØT2'	
'ALDØT3'	
'BRDØT1'	inner gimbal angle rates
'BTDØT2'	
'BTDØT3'	
'THETD1'	command rate
'THETD2'	
'THETD3'	
'DELTH1'	$(H_{VEHICLE}+H_{CMG}) - (H_{VEHICLE}+H_{CMG})_0$
'DELTH2'	
'DELTH3'	
'EZAXIS'	angle between local vertical and vehicle z axis
'GIMMAG'	square root of sum of squares of weighted gimbal angles

'HHTMAG'	magnitude of CMG momentum
'RSSTØT'	square root of sum of squares of gimbal angle rates
'SPSI'	displacement of X principal axis relative to local vertical
'SPSID'	rate of SPSI
'CPSI'	displacement of X principal axis relative to orbital noon
'CPSID'	rate of CPSI
'ETAN'	displacement of vehicle from orbital noon
'LATSC'	spacecraft latitude
'LØNGSC'	spacecraft longitude
'HT1'	sum of the three CMG spin unit vectors
'HT2'	
'HT3'	
'HTD1'	rates of HT1, HT2, HT3
'HTD2'	
'HTD3'	
'H11'	components of CMG #1 spin unit vector
'H12'	
'H13'	
'H21'	components of CMG #2 spin unit vector
'H22'	
'H23'	
'H31'	components of CMG #3 spin unit vector
'H32'	
'H33'	
'HHT1'	components of total CMG angular momentum
'HHT2'	
'HHT3'	
'HHT1U'	components of unit CMG angular momentum
'HHT2U'	
'HHT3U'	
'HMAG'	magnitude of total CMG angular momentum
'TCMG1'	components of delivered CMG torque
'TCMG2'	
'TCMG3'	
'HTDØT1'	components of desired CMG torque per unit spin axis angular momentum
'HTDØT2'	
'HTDØT3'	
'HHTDT1'	components of desired CMG torque
'HHTDT2'	
'HHTDT3'	

'RSSGMD'	square root of sum of squares of weighted gimbal angle rates
'PERR'	eigenaxis rotation relating vehicle and command systems
'QERR'	eigenaxis rotation relating command and solar inertial systems
'RERR'	eigenaxis rotation relating vehicle and solar inertial systems
'PHIDS1'	components of sensed spacecraft rate
'PHIDS2'	
'PHIDS3'	
'TGG1'	components of gravity gradient torque
'TGG2'	
'TGG3'	
'TAERØ1'	components of aerodynamic torque
'TAERØ2'	
'TAERØ3'	
'DN1'	angles defining CMG dynamic origin for
'DN2'	CMG rotation law
'DN3'	
'DN4'	
'DN5'	
'DN6'	
'PØLE1'	inner and outer gimbal angles (CMG#1),
'PØLE2'	such that $\hat{h}_1$ is parallel to total CMG momentum
'PØLE3'	inner and outer gimbal angles (CMG#2),
'PØLE4'	such that $\hat{h}_2$ is parallel to total CMG momentum
'PØLE5'	inner and outer gimbal angles (CMG#3),
'PØLE6'	such that $\hat{h}_3$ is parallel to total CMG momentum

b) Undocked Inertia Matrix

726241.	-11125.	-286614.
- 11125.	4506154.	- 21654.
-286614.	-21654.	4452278.

c) Docked Inertia Matrix

726241.	-11125.	-286614.
- 11125.	4506154.	- 21654.
-286614.	-21654.	4452278.

d) Principal axis inertias (diagonal)

Undocked	Docked
704279.376	704279.376
4516387.01	4516387.01
4463991.01	4463991.01

e) Transformation matrix - body to principal

.9970814	.0033522	.0762676
.0306450	.8974342	-.4400816
-.0699204	.4411347	.8947126

f) K0 and K1

K0

$$\begin{bmatrix} 3.8 & 0 & 0 \\ 0 & 27.9 & 0 \\ 0 & 0 & 27.4 \end{bmatrix}$$

K1

$$\begin{bmatrix} 40.6 & 0 & 0 \\ 0 & 34.1 & 0 \\ 0 & 0 & 277.8 \end{bmatrix}$$

g) RT

Undocked

Thruster#	1	2	3	4	5	6
X	2758.7	2758.7	2758.7	2758.7	2758.7	2758.7
Y	0	0	0	0	0	0
Z	137.5	137.5	137.5	-137.5	-137.5	-137.5

Docked

X	2758.7	2758.7	2758.7	2758.7	2758.7	2758.7
Y	0	0	0	0	0	0
Z	137.5	137.5	137.5	-137.5	-137.5	-137.5

h) RCG

	Undocked	Docked
X	3300.5	3300.5
Y	- 2.3	- 2.3
Z	-26.4	-26.4

i) FJET (lbs)

	Thruster #					
	1	2	3	4	5	6
X	0.	0.	0.	0	0	0
Y	-50.	0.	50.	50.	0	-50.
Z	0.	-50.	0.	0	50.	0

j) IKHAT - this input determines how KHAT (a quasi-inertial parameter) is to be computed

IKHAT

1 KHAT = (IP(2)-IP(1))/IP(3)

2 KHAT = (IP(3)-IP(1))/IP(2)

3 KHAT = $\cos^2\Phi_0$(IP(2)-IP(1))/IP(3)+$\sin^2\Phi_0$(IP(3)-IP(1))/IP(2)

4 KHAT = input value

5 KHAT = $$\frac{\alpha\sin^2\Phi_0(IP(3)-IP(1))/IP(2)+\cos^2\Phi_0(IP(2)-IP(1))/IP(3)}{\alpha\sin^2\Phi_0+\cos^2\Phi_0}$$

$$\alpha = 1-\left[\frac{IP(3)-IP(2)}{IP(3)}\right]$$

in the above IP are principal axis inertias and Φ_0 is the angular displacement about the X principal axis of the Z principal axis from the orbit normal

V-2 Further explanation of inputs (See V)

ALPHAL
ØI

the launch azmiuth and the orbital inclination are equivalent specifications, given the launcher latitude. If ALPHAL is input, inclination is computed and if inclination (ØI) is input, the launch azmiuth is computed

EPSLN1
EPSLN2

in the implementation of a CMG control law by Chu and Kranton (See Reference 5 pg 7 equation 10) a test was necessary to prevent the inversion of a possibly singular matrix;

if determ $C_k Q_k^{-1} C_k^{\,1} < \text{EPSLN1}$,

then set $C_k Q_k^{-1} C_k^{\,1} = C_k Q_k^{-1} C_k^{\,1} + \begin{bmatrix} \text{EPSLN2} & 0 & 0 \\ 0 & \text{EPSLN2} & 0 \\ 0 & 0 & \text{EPSLN2} \end{bmatrix}$

IGIM

in computing the dynamic origin for the CMG steering law if

IGIM = 1 use the unit vector normal to the orbit plane

IGIM = 2 use the vector sum of the CMG unit spin angular momentum vectors

ETAX
TGMT0

in defining the spacial parameters of the orbit, the GMT at launch and either the launch azimuth or the orbit inclination completely define all the parameters. However in most cases what is desired is a particular value of ETAX. The ATMDC equations compute ETAX from TGMT0 but for this application the 'inverse' relationship is required and would necessitate the addition of an iterative routine to the program. As an alternative the iterative routine was run separately and a table built into the program such that ETAX may be input and TGMT0 looked up, <u>but only for 50° inclination orbits and only in integral multiples of 5° in ETAX.</u> For other desired values of ETAX, the iterative routine must first be run to determine the proper TGMT0.

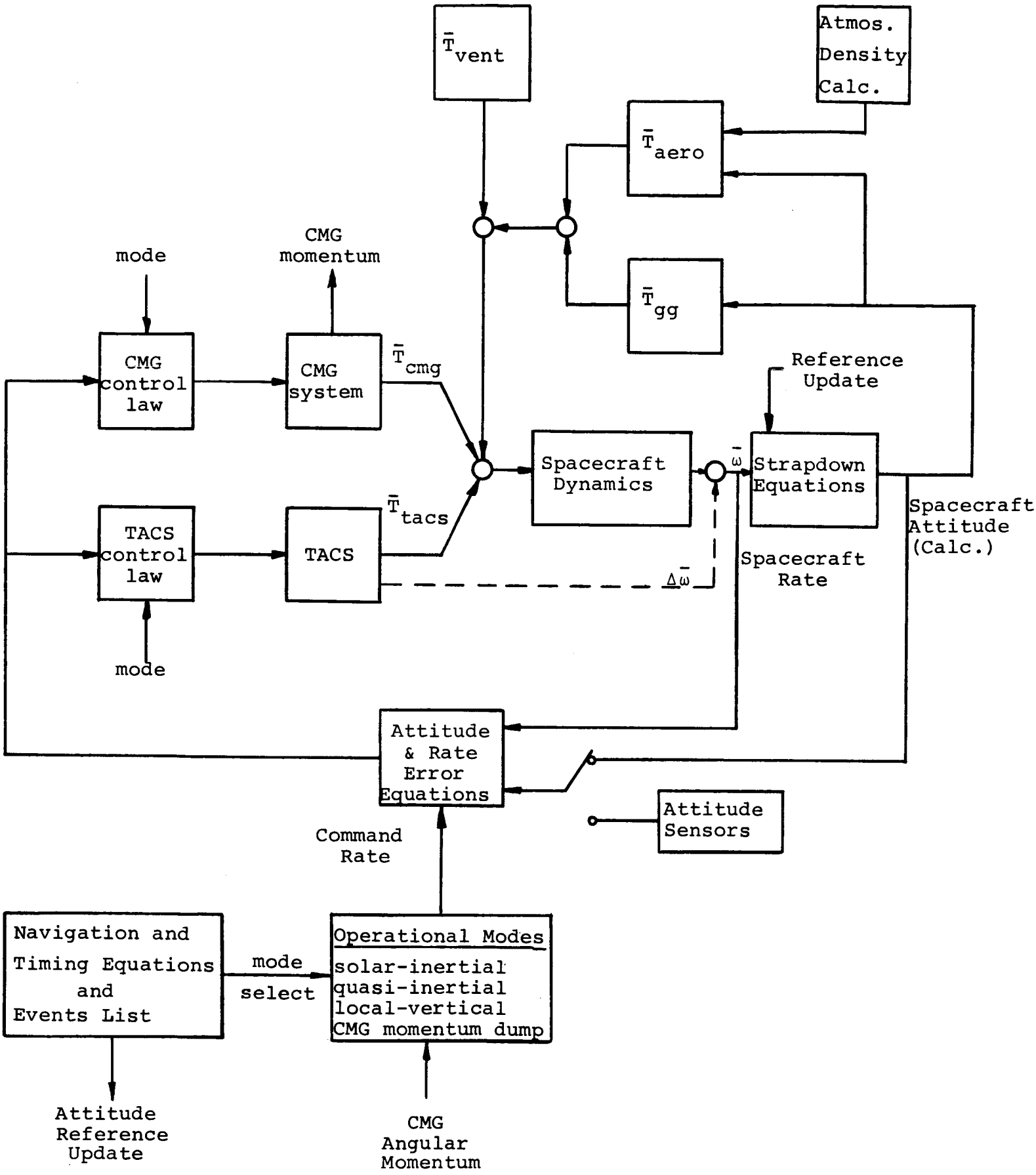

Simplified Block Diagram of Skylab Attitude Control System

Figure 1

SACSIM LOGIC FLOW

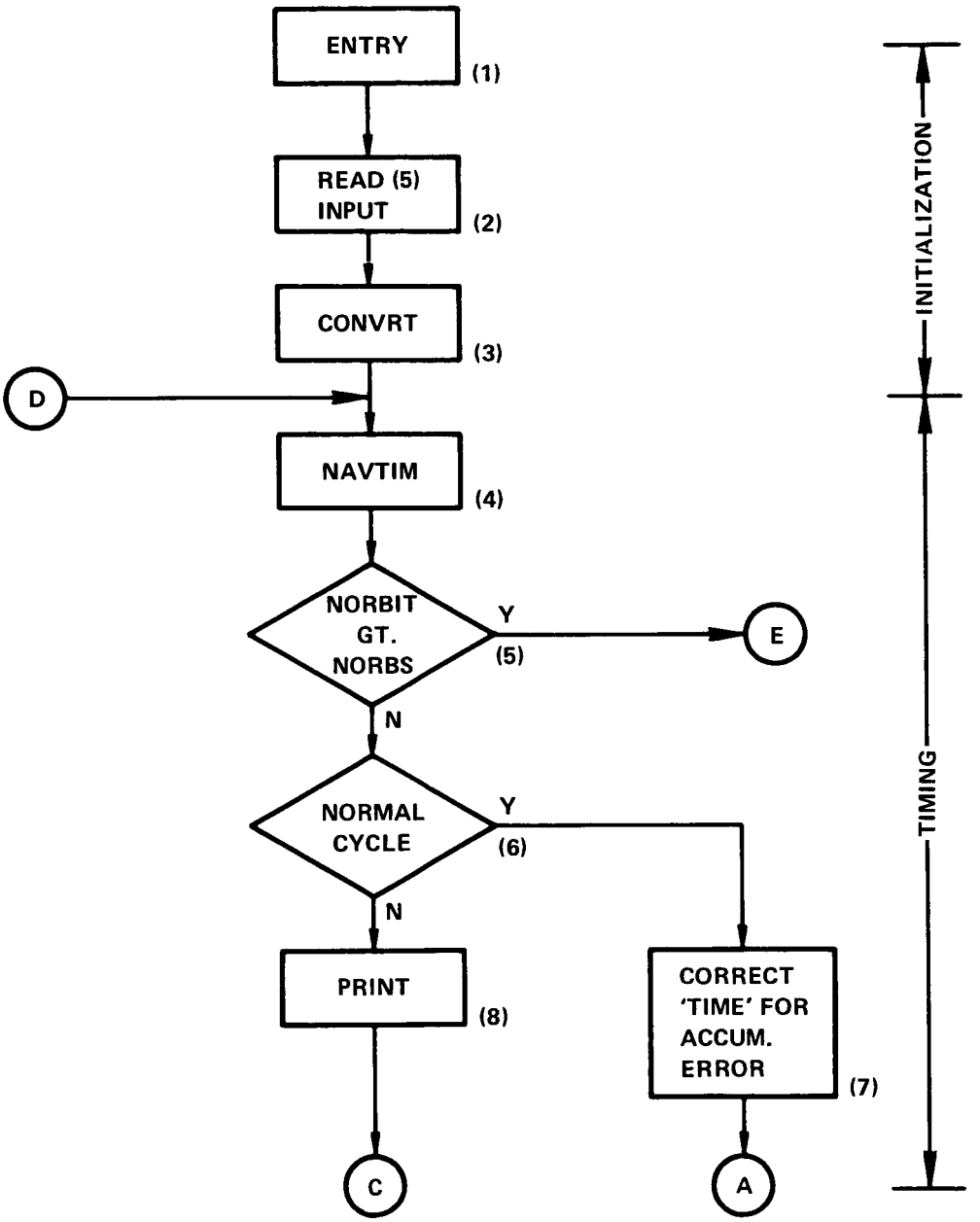

FIGURE 2

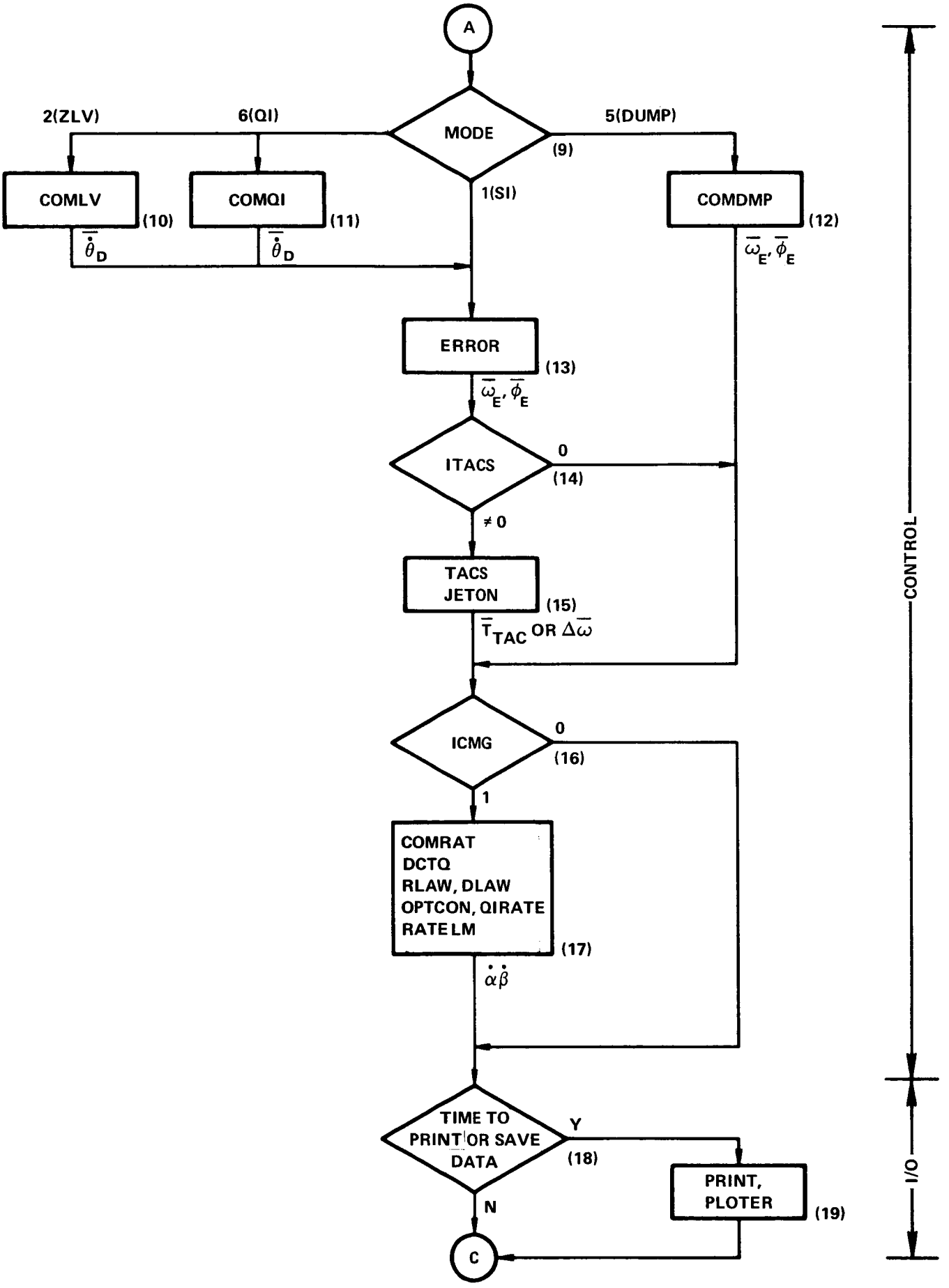

FIGURE 2 (CONTINUED)

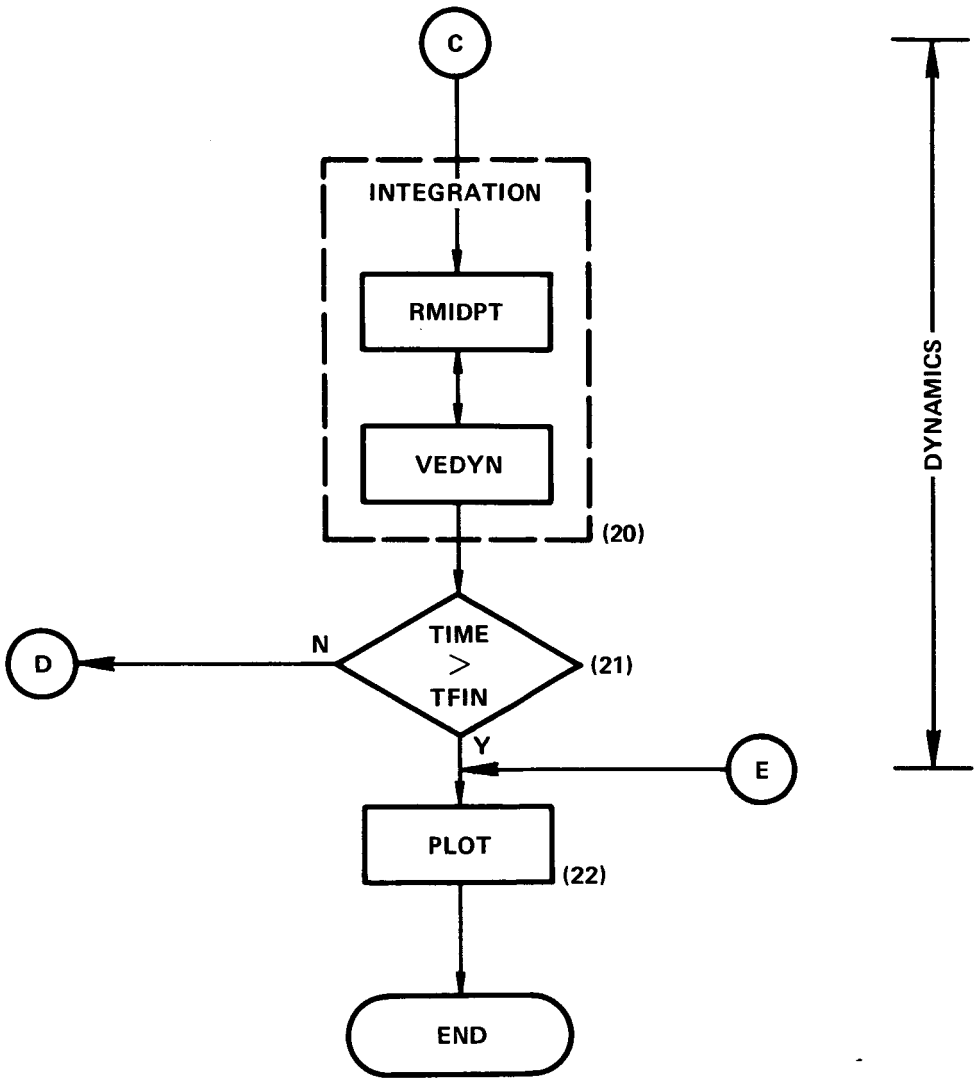

FIGURE 2 (CONTINUED)

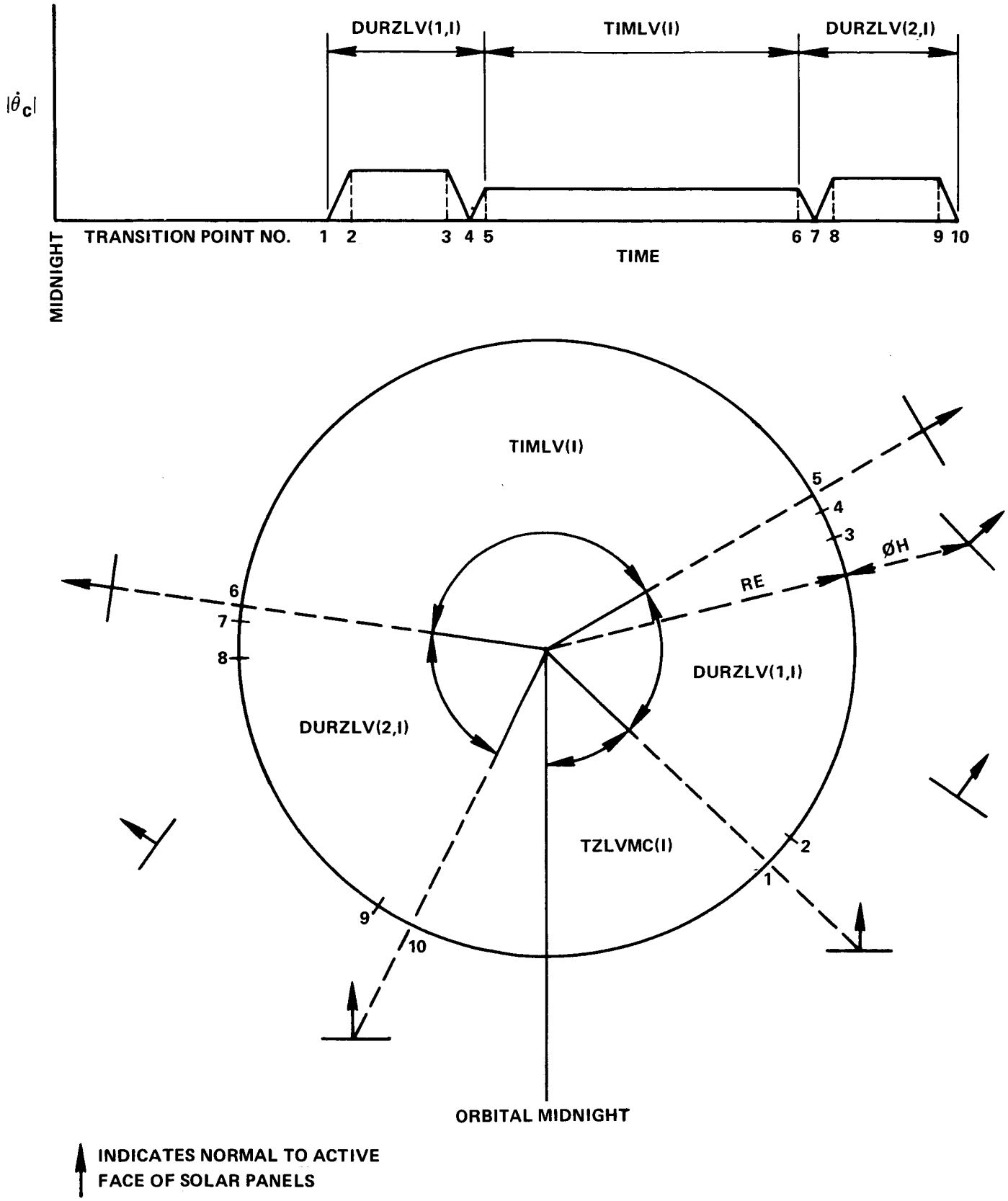

FIGURE 3 - LOCAL VERTICAL MANEUVER FOR Ith ORBIT

R. W. Grutzner

1022-RWG-mef

Attachments

References

1. N. J. Kirkendall and C. B. Mummert, "NUMERS & RMIDPT - Numerical Integration Subroutines for Ordinary Differential Equations - Case 804", Memorandum for File B70 04058, April 23, 1970.

2. C. O. Guffee, "Additions to the Vector-Matrix Function Subroutines - Case 610", Memorandum for File B69 05011, May 7, 1969.

3. R. W. Grutzner, "QPACK - Quaternion Function Subroutines - Case 620", Memorandum for File B70 12040, December 14, 1970.

4. B. D. Elrod, "The Quasi-Inertial and Wide-Deadband Modes as Backup Attitude Options for the Skylab Mission - Case 620", Technical Memorandum TM-71-1022-3, June 19, 1971.

5. S. C. Chu and J. Kranton, "Design of Control Laws for Control Moment Gyroscopes with Application to Skylab - Case 620", Technical Memornadum TM-71-1022-4, September 3, 1971.

Appendix 1

Major Subroutines

CØMDMP	computes dump maneuver commands
CØMLV	computes local vertical maneuvers commands
CØMQI	computes quasi-inertial commands
CØMRAT	computes gimbal angle rates
CØMTQ	computes delivered CMG torque given gimbal rates
CØNVRT	initialization routine-converts to radians, sets constants, etc.
DCTQ	converts rate and attitude errors to desired CMG torques
DENSE	computes atmospheric density
ERRØR	computes attitude and rate errors
JETØN	computes TACS torques, delta omega and comulative impulse usage
NAVTIM	does all geographic and timing calculations and controls discontinuities in integration
ØPTCØN	implementation of Kranton's CMG control law
ØUTPUT	print routine for subroutine NAVTIM
PLØTER	saves data and generates plots
PRINT	print routine for other variables e.g. gimbal angles, torques, etc.
RATELM	handles rate limiting and gimbal stop encounter logic
REFCØR	handles coordinate transformation
SACSIM	main program
TACS	simulates PRD TACS firing logic
TIMING	sets up sequence of events/orbit
TØRQ	computes aero and/or gravity-gradient torques

VEDYN	computes all derivatives (which are subsequently integrated)

Appendix 2

CØMMØN Sections

Block	Variables relate generally to:
ANGLES	sines, cosines and tangents of gimbal angles
CNTRØL	attitude control system errors
DENS	atmospheric density
DYNAMC	external and control torques
ELRØD	navigation and timing
FRNSID	thruster attitude control system
INTEG	integration routines and various derivatives
KRANTN	CMG control laws
LEVIDØ	dump equations
PHYCØN	physical constants
PLTCØM	plotting inputs
PRTPLT	those variables it is desired to print or plot i.e. duplicates variables from several other CØMMØN blocks and retains them in an easily accessed block
QUASI	quasi inertial mode
QUATRN	coordinate systems
SEQUENS	program sequencing logic
VEHCØN	properties of the Skylab vehicle; inertias, reference areas etc.
ZLV	local vertical mode

APPENDIX 3

CALLING ROUTINE \ CALLED ROUTINE	ANGMAG	BLØCKDATA	CØMDØK	CØMLV	CØMQI	CØMTQ	DAYLIT	DENSE	ELIP	GIMNØM	IDWØRD	JETØN	MESSG	ØUTPUT	PØSITN	QIRATE	RATELM	RLAW	SCT	SUMDØT	TACS	TØRQ	VENT	ZLVTIM
AUXVAR	■																■							
CØMDMP																								■
CØMDPS									■															
CØMMAN																	■							■
CØMRAT				■				■	■	■				■		■	■	■	■					
CØNVRT										■									■					
DCTQ																	■		■					
DLAW																			■					
ERRØR																			■					
G1G2G3																								
INTRPL																								
NAVTIM			■		■													■				■		
ØPTCØN										■														
PLØTER		■									■													
PRINT		■												■										
QPACK																	■							
REFCØR																				■				
SACSIM			■		■	■	■	■		■			■	■	■	■	■	■			■	■		
SISUBM																								
TABLE																								
TIMING				■								■												
VEDYN			■	■				■			■					■	■				■			
XLAM						■									■		■	■				■	■	

APPENDIX 4

SUBROUTINE \ CØMMØN BLØCK	CNTRØL	DYNAMC	FRNSID	KRANTN	PHYCØN	PRTPLT	QUATRN	VEHCØN
ANGMAG								
BLØCKDATA								
CØMDØK								
CØMLV								
CØMQI								
CØMTQ								
DAYLIT								
DENSE								
ELIP								
GIMNØM								
IDWØRD								
JETØN								
MESSG								
ØUTPUT								
PØSITN								
QIRATE								
RATELM								
RLAW								
SCT								
SUMDØT								
TACS								
TØRQ								
VENT								
ZLVTIM								

SUBROUTINE \ CØMMØN BLØCK	ANGLES	DENS	ELRØD	INTEG	LEVIDØ	PLTCØM	QUASI	SEQENS	ZLV
AUXVAR	■	■	■	■	■	■	■	■	■
CØMDMP	■	■	■	■	■	■	■	■	■
CØMDPS					■				
CØMMAN		■	■	■	■		■		■
CØMRAT	■	■	■	■	■		■	■	
CØNVRT	■	■	■	■	■				■
DCTQ	■			■				■	
DLAW		■			■		■		
ERRØR				■					
G1G2G3	■		■	■	■				
INTRPL					■				
NAVTIM			■	■	■			■	■
ØPTCØN	■	■	■	■	■	■	■	■	■
PLØTER						■			
PRINT			■						
QPACK	■	■	■	■	■	■	■	■	
REFCØR		■	■	■	■		■	■	
SACSIM	■	■	■	■	■	■	■	■	■
SISUBM	■		■						
TABLE									
TIMING	■	■	■	■	■	■	■		
VEDYN		■	■	■	■		■	■	■
XLAM	■	■	■	■					

MAR 27 1972

Bellcomm

955 L'Enfant Plaza North, S.W.
Washington, D. C. 20024

B72 03006

date: March 8, 1972

to: Distribution

from: R. W. Grutzner

subject: User's Guide for SACSIM - Skylab Attitude Control Simulation Case 620

ABSTRACT

The attached memorandum presents a detailed listing of the inputs necessary to run the SACSIM program for simulating the Skylab Attitude Control System. The listing includes pre-set numerical values of these inputs. A brief description of the simulator scope, components, and logic flow is also presented.

MAY 1972
RECEIVED
NASA STI FACILITY
INPUT BRANCH