TM-71-1022-2

TECHNICAL MEMORANDUM

STRUCTURAL WOBBLE DAMPING OF A SPINNING SKYLAB

Bellcomm

CR-118419
NASA CR OR TMX OR AD NUMBER) (CATEGORY)
[redacted] ONLY

JUL 1971
RECEIVED
NASA STI FACILITY
INPUT BRANCH

BELLCOMM, INC.
955 L'ENFANT PLAZA NORTH, S.W., WASHINGTON, D.C. 20024

COVER SHEET FOR TECHNICAL MEMORANDUM

TITLE- Structural Wobble Damping of a Spinning Skylab

TM- 71-1022-2

FILING CASE NO(S)- 620

DATE- April 20, 1971

AUTHOR(S)- P. G. Smith

FILING SUBJECT(S) (ASSIGNED BY AUTHOR(S))- Spin Stabilization
Structural Damping
Random Vibration

ABSTRACT

A discrete parameter representation of a spinning flexible Skylab spacecraft (including ballast booms) is investigated to determine how well structural damping attenuates wobble motion. Equations of motion are derived and linearized, and damping behavior is evaluated by calculating root mean square response to random disturbances representing crew motion. The response provides a measure of damping performance inasmuch as it varies inversely with the amount of damping in the system, as does the more commonly used measure of system damping, the system time constant. It is found, however, that the two measures behave differently when design parameters other than damping (for example, stiffness) are considered, and this raises the question: how should one design a "well-damped" system?

Response to random excitation is obtained by solving a linear matrix equation for the state covariance matrix. Asymptotic stability is required of the zero solution to the equations of motion in order to solve the matrix equation, and this necessitates suppressing those modes of motion that are stable but not asymptotically so by using integrals of the equations of motion.

BA-145A (8-68)

SEE REVERSE SIDE FOR DISTRIBUTION LIST

DISTRIBUTION

COMPLETE MEMORANDUM TO

CORRESPONDENCE FILES:

OFFICIAL FILE COPY
plus one white copy for each additional case referenced

TECHNICAL LIBRARY (4)

NASA Headquarters

H. Cohen/MLQ
J. H. Disher/MLD
W. B. Evans/MLO
J. P. Field, Jr./MLB
W. D. Green, Jr./MLA
W. H. Hamby/MLO
T. E. Hanes/MLA
A. S. Lyman/MR
M. Savage/MLE
W. C. Schneider/ML

MSC

K. J. Cox/EG23
O. K. Garriott/CB
K. S. Kleinknecht/KA
B. McMahon/EG431
O. G. Smith/KW

MSFC

W. B. Chubb/S&E-ASTR-SG
C. R. Ellsworth/PD-SA-DIR
C. C. Hagood/S&E-CSE-A
G. B. Hardy/PM-AA-EI
R. G. Smith/PM-SAT-MGR
H. E. Worley, Jr./S&E-AERO-DO
G. F. von Tiesenhausen/PD-SA-O

Martin Marietta/Denver

G. Rodney

McDonnell Douglas/West

R. J. Thiele

COMPLETE MEMORANDUM TO (CONTINUED)

MIT - Charles Stark Draper Lab

J. Turnbull/23C

North American Rockwell/Downey

J. A. Jansen/BB-48

Langley Research Center

P. R. Kurzhals

Bellcomm, Inc.

R. A. Bass
A. P. Boysen
J. P. Downs
D. R. Hagner
W. G. Heffron
K. E. Martersteck
J. Z. Menard
R. V. Sperry
J. W. Timko
M. P. Wilson
G. D. Wolske
Departments 1022, 1033
Division 102 Supervision
Department 1024 File
Central File

ABSTRACT ONLY

D. P. Ling
R. L. Wagner

BA-146 (8-64)

BELLCOMM, INC.
955 L'ENFANT PLAZA NORTH, S.W. WASHINGTON, D.C. 20024

SUBJECT: Structural Wobble Damping of a Spinning Skylab - Case 620

DATE: April 21, 1971

FROM: P. G. Smith

TM-71-1022-2

TECHNICAL MEMORANDUM

Introduction

This memorandum deals with the question: given a spinning spacecraft, is the energy dissipation inherent in the structure sufficient to attenuate wobble motions as they arise in service? Although this subject has been investigated for cases in which damping devices other than the structure provide dissipation,[1] the literature on structural wobble damping[2-6] is directed more toward methods of analysis than toward numerical results. (Thomson and Reiter[4] do present results for very simple configurations.) The present work includes both analysis (by a method different than any suggested in the references) and numerical results for Skylab in an artificial gravity configuration.

The sequel is organized as follows: The spacecraft,which spins about an axis slightly inclined to the geometric Z axis shown in Fig. 1, is modeled as a discrete parameter system. Equations of motion are developed for the appendages and for the system as a whole. A means is described for finding system response to "colored noise"excitation representing crew motion. Finally, results are presented in terms of root mean square (rms) wobble angle

response to crew motion, and these results are compared with those obtained by using the system time constant as a measure of performance.

System Description

The spacecraft shown in Fig. 1 is idealized as a rigid central body and eight appendages, namely, the six solar cell arrays and the two ballast booms. (The booms' function is to make the spin axis one of stable rotation.) Attitude of the central body relative to an inertial reference frame is specified by means of Euler angle rotations of magnitude θ_3, θ_1, θ_2 carried out sequentially about the (geometric) Z,X,Y axes, respectively. Inasmuch as the solar arrays behave to a first approximation as cantilever beams with deflections in the Z direction, each of the arrays is modeled as a particle whose motion relative to the central body is constrained to be parallel to the Z axis. Similarly, each boom is modeled as a particle whose relative motion is constrained to be parallel to the XZ plane. A spring and a dashpot are provided for each of these ten relative degrees of freedom.

Let body 1 denote the central body, let bodies 2 and 3 denote the booms, and let bodies 4-9 denote the solar arrays. Introduce a body 10 to represent a crewman, whose motion relative to body 1 is prescribed; the prescribed crew motion constitutes a system excitation. For body i, m_i denotes its mass and $\underline{p}_i$ denotes its mass center location relative to the system mass center.

The analysis is performed using a set of right-handed, mutually orthogonal unit vectors $\underline{i}_1$, $\underline{i}_2$, $\underline{i}_3$ fixed in the central body and respectively parallel to X, Y, Z.

Appendage Equations

For reasons that will become apparent later, we seek a minimal-order set of motion equations. Toward this end, let

$$\underline{r}_i = \underline{p}_i - \underline{p}_1 \quad , \quad i = 2,\ldots, 10 \tag{1}$$

By definition of $\underline{p}_i$,

$$\sum_{i=1}^{10} m_i \, \underline{p}_i = \underline{0} \tag{2}$$

from which

$$\underline{p}_1 = -\left(\sum_{i=1}^{10} m_i\right)^{-1} \sum_{i=2}^{10} m_i \, \underline{r}_i \tag{3}$$

Let

$$\underline{r}_i = (p_i+u_{2i-3})\underline{i}+q_i\underline{j}+(r_i+u_{2i-2})\underline{k}, \quad i=2,3$$

$$\underline{r}_i = p_i\underline{i}+q_i\underline{j}+(r_i+u_{i+1})\underline{k}, \quad i=4,\ldots, 9$$

$$\underline{r}_{10} = (p_{10}+v_1)\underline{i}+(q_{10}+v_2)\underline{j}+(r_{10}+v_3)\underline{k} \tag{4}$$

where $u_i=u_i(t)$, $i=1, \ldots, 10$, are system generalized coordinates and $v_i=v_i(t)$, $i=1, 2, 3$, are prescribed translational crew motions; $\underline{r}_i=p_i\underline{i}+q_i\underline{j}+r_i\underline{k}$ when the structure is undeformed and $v_1=v_2=v_3=0$. Equations (1), (3), and (4) relate $\underline{p}_i$, $i=1, \ldots, 10$, to the generalized coordinates and prescribed crew motions.

Generalized coordinates u_{11}, u_{12}, u_{13} are related to the central body Euler angles θ_1, θ_2, θ_3 in the following way:

$$\begin{aligned} \theta_1 &= u_{11} \\ \theta_2 &= u_{12} + \beta \\ \theta_3 &= u_{13} + \Omega t \end{aligned} \tag{5}$$

where β, which arises due to asymmetry of the vehicle in the XZ plane, is the angle between the Z axis and the axis of maximum moment of inertia of the composite undeformed vehicle (the spin axis), and where Ω is the spin speed. The angular velocity of the central body, linearized in u_{11}, u_{12}, u_{13}, is

$$\begin{aligned} \underline{\omega} = {} & [\cos\beta(\dot{u}_{11}-\Omega u_{12}) - \sin\beta(\dot{u}_{13}+\Omega)]\underline{i} \\ & +(\dot{u}_{12}+\Omega u_{11})\underline{j} \\ & +[\cos\beta(\dot{u}_{13}+\Omega)+\sin\beta(\dot{u}_{11}- u_{12})]\underline{k} \end{aligned} \tag{6}$$

Acceleration of body i relative to the vehicle mass center is

$$\underline{a}_i = \ddot{\underline{p}}_i + 2\underline{\omega}\times\dot{\underline{p}}_i + \dot{\underline{\omega}}\times\underline{p}_i + \underline{\omega}\times(\underline{\omega}\times\underline{p}_i) \tag{7}$$

where dots denote time derivatives taken in a reference frame fixed in the central body. Appendage equations of motion are obtained simply by applying D'Alembert's principle to each appendage. For the booms this gives

$$\begin{aligned} m_i\ \underline{a}_i\cdot\underline{i} + k_B u_{2i-3} + d_B\dot{u}_{2i-3} &= 0 \\ m_i\ \underline{a}_i\cdot\underline{k} + k_B u_{2i-2} + d_B\dot{u}_{2i-2} &= 0, \quad i=2,\ 3 \end{aligned} \tag{8}$$

where k_B and d_B are the boom stiffness and damping coefficients, respectively. One equation is obtained similarly for each of the six solar arrays, so that altogether there are ten second-order appendage equations.

Total System Equations

Provided the crewman's prescribed rotations, v_4, v_5, v_6, remain small, the angular velocity of the crewman relative to the central body is

$$\underline{\lambda} = \dot{v}_4\ \underline{i} + \dot{v}_5\ \underline{j} + \dot{v}_6\ \underline{k} \tag{9}$$

The system angular momentum with respect to its mass center is

$$\underline{H} = \underline{I}\cdot\underline{\omega}+L(\underline{\omega}+\underline{\lambda})+\sum_{i=1}^{10} m_i\underline{p}_i\times(\dot{\underline{p}}_i+\underline{\omega}\times\underline{p}_i) \tag{10}$$

where $\underline{I}$ is the central body centroidal inertia dyadic and where L is the centroidal moment of inertia of the crewman, who is considered inertially spherical. In the absence of external torques acting on the system, three second-order equations of motion may be obtained from

$$\dot{\underline{H}} + \underline{\omega} \times \underline{H} = \underline{0} \tag{11}$$

These equations together with the ten appendage equations constitute a 26th-order system, that is, thirteen second-order equations in $u_1, \ldots, u_{13}$.

The system can be reduced to twenty-third order by integrating (11) to obtain $\underline{H} = \underline{C}$, where $\underline{C}$ is constant in an inertial reference frame. The integration constant may be evaluated by setting $u_1,\ldots,u_{13},\dot{u}_1,\ldots,\dot{u}_{13},v_1,v_2,v_3,\dot{v}_1,\ldots,\dot{v}_6$ all to zero. Then

$$\underline{H} = J\Omega\underline{N} \tag{12}$$

where J is the maximum moment of inertia of the undeformed vehicle and $\underline{N}$ is a unit vector parallel to the inertially fixed spin axis.

$$\underline{N} = -(\cos\beta u_{12}+\sin\beta)\underline{i}+u_{11}\underline{j}-(\sin\beta u_{12}-\cos\beta)\underline{k} \tag{13}$$

Equations (10) and (12) are combined to obtain the equations of motion

$$\underline{I}\cdot\underline{\omega}+L(\underline{\omega}+\underline{\lambda})+\sum_{i=1}^{10} m_i\underline{p}_i\times(\dot{\underline{p}}_i+\underline{\omega}\times\underline{p}_i)-J\Omega\underline{N} = \underline{0} \tag{14}$$

which may be used in place of (11). Now (14) constitutes a system of three scalar equations that may be differentiated, solved for $\ddot{u}_{11}$, $\ddot{u}_{12}$, $\ddot{u}_{13}$, and used to eliminate these quantities from the appendage equations. When this is done the ten appendage equations and the three scalar equations (14) can be written in the form $d\hat{u}/dt = f(\tilde{u}, \hat{u}, t)$ where $\tilde{u}^T=[u_1,\ldots,u_{10}]$ and $\hat{u}^T=[\dot{u}_1,\ldots,\dot{u}_{10},u_{11},u_{12},u_{13}]$, which together with ten equations of the form $d\tilde{u}/dt = [\dot{u}_1,\ldots,\dot{u}_{10}]^T$ constitute a 23rd-order set of equations of motion.*

Inspection of (1) - (14) reveals that u_{13} does not in fact appear in the equations of motion. Therefore, u_{13} may be deleted from $\hat{u}$ and the last equation of $d\hat{u}/dt = f(\tilde{u},\hat{u},t)$ may be deleted from the set of equations without affecting the solution

*Superscript T denotes matrix transposition.

for the remaining variables. The set of equations is now of 22nd order, the importance of which will be discussed shortly.

Response to Random Crew Motion

The 22nd-order system of equations of motion, when linearized, can be written in the form

$$\dot{y} = Ay + B_1 v + B_2 \dot{v} + B_3 \ddot{v} + C \tag{15}$$

where $y^T = [u_1, \ldots, u_{12}, \dot{u}_1, \ldots, \dot{u}_{10}]$, where $v^T = [v_1, \ldots, v_6]$, and where matrices $A(22 \times 22)$, B_i, $i=1,2,3$ (all 22×6), and C (22×1) are all time invariant. Our objective is to find the rms value of y when crew motions $v_1(t), \ldots, v_6(t)$ are stationary random processes whose power spectral densities are specified. Rather than work with (15) directly, it is more convenient to use the abbreviated equation

$$\dot{y}' = Ay' + B_1 v + B_2 \dot{v} + B_3 \ddot{v} \tag{16}$$

whose solutions differ from those of (15) by the constant amount $A^{-1}C$; clearly, y and y' have the same covariance matrices.

Random crew motion data comes in the form of measured power spectral densities for the forces and moments exerted by a crewman performing various activities.[7] The simplest acceptable analytical form for the filters associated with such power spectral densities is

$$F(s) = \frac{as^2}{s^3+bs^2+cs+d} \tag{17}$$

(Any simpler rational function would give rise to unbounded mean square output in either force or displacement.) That is, if so-called white noise is passed through a linear filter whose transfer function is F(s), the output would be an acceptable representation of random crew motion forces or moments. Some of the measured data[7] fits the analytical form (17) quite well. The prescribed crew motions v_i are obtained by dividing (17) by the crewman's inertia and then integrating twice to obtain displacement.

By combining (16) with six of the crew motion filters just described (converted to differential equation form) one obtains

$$\dot{x} = Kx + w \tag{18}$$

where the 40 × 1 vector x comprises the twenty-two elements of y' followed by the eighteen new state variables associated with the six third-order filters, where

$$K = \left[\begin{array}{c|c|c|c} A & B_1M & B_2M & B_3M \\ \hline & & U & \\ \hline & & & U \\ \hline & \begin{matrix} -d_1 & & \\ & \ddots & \\ & & -d_6 \end{matrix} & \begin{matrix} -c_1 & & \\ & \ddots & \\ & & -c_6 \end{matrix} & \begin{matrix} -b_1 & & \\ & \ddots & \\ & & -b_6 \end{matrix} \end{array}\right] \tag{19}$$

and where w is null except for its last six elements, which are the independent white noise functions $w_1(t),\ldots,w_6(t)$; in (19), M is a 6 × 6 matrix that is null except for the diagonal elements a_1/m_{10}, a_2/m_{10}, a_3/m_{10}, a_4/L, a_5/L, a_6/L, respectively, U denotes the 6 × 6 identity matrix, and a_i, b_i, c_i, d_i are the six sets of filter coefficients as shown in (17).

It follows from (18) that when both x(0) and w(t) have zero mean, x(t), t>0, also has zero mean. In this case, the state covariance matrix is

$$P(t) = E\{x(t)x^T(t)\} \tag{20}$$

where E is the expectation operator, and the diagonal elements of P(t) constitute the desired mean square values of the state. The asymptotic value $P = \lim_{t\to\infty} P(t)$ is the solution of the matrix equation.[8]

$$KP + PK^T + W = 0 \tag{21}$$

For the case at hand, the 40 × 40 matrix W is null except for the last six diagonal elements, which have unit value.

Equation (21) has a unique solution only if K has no purely imaginary eigenvalues,[9] which is possible only if none of the eigenvalues of A are imaginary. Recall that A arises from a dynamical model possessing sixteen degrees of freedom (six for the central body and ten for the appendage relative motions). Hence, the complete linearized equations of motion possess thirty-two eigenvalues, ten of which can be expected to be imaginary (see Appendix A). The equations of motion have been reduced to 22nd-order, however, and the motivation for this was precisely to eliminate the ten troublesome eigenvalues. (Recall that gross translation was suppressed by use of (3), system angular momentum was fixed in both magnitude and direction by use of (12), and finally the unnecessary variable u_{13} was dropped.)

In specific cases the eigenvalues of K can be found numerically, and when all have negative real parts, means are available for solving (21) numerically.[10]

Application and Discussion

The vehicle parameters of greatest interest are spin speed, appendage natural frequencies (or equivalently, stiffnesses), and appendage damping ratios. Representative values of these quantities for Skylab are given in Table I, and a complete set

Table I

Basic data for Skylab spacecraft

Name	Value	Comments
Spin speed, Ω	0.63 rad/sec	6.0 rpm
Boom natural frequency, ω_B	0.55 rad/sec	Applies to all four boom degrees of freedom
ATM solar array natural frequency	1.14 rad/sec	Applies to four arrays; first cantilever mode
OWS solar array natural frequency	2.65 rad/sec	Applies to two arrays; first cantilever mode
Boom damping ratio	.002	
Solar array damping ratio	.02	Applies to all six arrays

of parameters is given in Appendix B. The boom natural frequency, ω_B, which is given in the table for $\Omega=0$, is augmented as a function of Ω to accommodate an effective increase in stiffness with Ω. (This is the opposite of the lateral softening phenomenon encountered in axially loaded columns.[11])

Before results for random excitation are presented, it is instructive to consider the system's characteristic response in wobble, that is, the natural frequency and time constant associated with wobble motion. These two quantities are obtained from the imaginary and real parts, respectively, of the pair of eigenvalues associated with wobble motion (see Appendix A). The effect of varying boom natural frequency is shown in Fig. 2. Observe that wobble frequency drops to zero at about $\omega_B=0.47$ rad/sec. Below this value one of the wobble motion eigenvalues, which are both now real, becomes positive. Therefore, the motion is unstable, and (21) cannot be solved when ω_B is less than about 0.47 rad/sec. Similar results are obtained when the natural frequencies of other appendages are varied.

Fig. 3 illustrates the effect of varying spin speed Ω; similar to the situation just discussed, wobble frequency drops to zero and the motion becomes unstable as Ω is raised above 0.7 rad/sec. The initial slope of the wobble frequency vs. Ω curve, shown in Fig. 3, is obtainable from the rigid body eigenvalues associated with wobble (given in

Appendix A). Apparently, the vehicle behaves as a rigid body at low spin speeds; at higher speeds appendage relative displacements become substantial, eventually to the extent that spin about the axis of maximum moment of inertia of the undeformed vehicle is no longer stable. (This does not imply that stable spin about some other axis does not exist.)

For random crew motion excitation, we use data for an activity that involves the unpacking and setting up of a shower bag.[7] This activity is chosen because it is the most vigorous one available for which the measured power spectral densities in all three forces and torques fit the analytical form (17) well.

The response variable of interest is wobble angle, ϕ, defined as the angle between the inertially fixed spin axis and an axis fixed in the central body that is the axis of maximum moment of inertia of the undeformed vehicle. Provided the state variables remain small

$$\phi = \sqrt{u_{11}^2 + u_{12}^2} \tag{22}$$

Figs. 4 and 5 show how rms wobble angle varies with ω_B and Ω, respecitvely. These curves should be compared with those for wobble motion time constant, Figs. 2 and 3, respectively; ϕ_{rms} and the time constant are related measures of performance in that both vary inversely with the amount of damping in the system (these curves are not presented). As can be seen by comparing Figs. 2 and 4 or Figs. 3 and 5, however,

the analogy between the measures of performance fails when parameters ω_B or Ω, respectively, are involved.

Conclusions

A certain amount of energy dissipation is needed in a spinning spacecraft in order to keep wobble motions acceptably small in the presence of random excitations, such as those due to crew motion. It is shown that for Skylab, structural damping alone is sufficient to hold wobble to about one degree rms in the presence of crew motion.

Although energy dissipation is essential in attenuating random disturbances, the system time constant, which is a commonly used measure of damping, is not always indicative of rms response. For example, rms wobble angle decreases as appendages are made stiffer (Fig. 4), but the time constant increases with appendage stiffness (Fig. 2). This unexpected behavior has prompted further investigation, and a simple model, amenable to analytical solution, has been found to also exhibit increasing time constant and decreasing rms wobble angle as appendage stiffness is increased.[12] The simple model confirms the results presented in Figs. 2 and 4.

This investigation is focused on a specific spacecraft design, but the methods used are applicable to a large class of spinning spacecraft. In particular, the covariance matrix approach to random vibration is a powerful technique - applicable as well to time-varying (linear) systems incorporating control elements - that is seldom used in attitude and structural dynamics.

When using the covariance matrix technique on time invariant systems, special consideration must be given to writing equations of motion whose solutions are asymptotically stable. This was the most difficult aspect of the present investigation.

P. G. Smith

1022-PGS-mef

P. G. Smith

Attachments
Appendices A-B
References
Figures 1-5

Appendix A

The objective here is to show that for a spinning, flexible, dissipative system free of external forces and torques, one can expect the linearized equations of motion to possess ten purely imaginary (including zero) eigenvalues. What follows is not intended to be a proof but merely a persuasive argument.

First observe that one may use as generalized coordinates three mutually orthogonal translations of the system mass center in an inertial reference frame. The associated equations of motion take the form $m\ddot{x}=0$, $m\ddot{y}=0$, $m\ddot{z}=0$, and it is clear that these equations, which are not coupled with the remainder of the equations of motion, contribute six zero eigenvalues to the set of system eigenvalues.

There are three degrees of freedom associated with the attitude of the system as a whole. Conclusions regarding the corresponding eigenvalues can be reached by investigating the motion of a spinning torque-free rigid body. Suppose that the body has centroidal principal moments of inertia I_1, I_2, I_3, that ϕ_1, ϕ_2, ϕ_3 are small rotations about the respective principal axes, and that there is in addition spin at rate Ω about the 3-axis. The linearized equations of motion are then

$$I_1(\ddot{\phi}_1-\Omega\dot{\phi}_2)+(I_3-I_2)\Omega(\dot{\phi}_2+\Omega\phi_1) = 0 \tag{A-1}$$

$$I_2(\ddot{\phi}_2+\Omega\dot{\phi}_1)+(I_1-I_3)\Omega(\dot{\phi}_1-\Omega\phi_2) = 0 \tag{A-2}$$

$$I_3\ddot{\phi}_3 = 0 \tag{A-3}$$

The third equation is uncoupled from the first two, and its eigenvalues are both zero. Observe from the equations that ϕ_3 may be changed by an arbitrary (small) amount δ without affecting the motion (except that ϕ_3 will be incremented by δ). The same conclusion may be reached by observing that since no external forces or torques act, the motion is unaffected by an arbitrary reorientation about the spin axis, and this argument holds for a flexible dissipative body as well. Furthermore, observe that a change in $\dot{\phi}_3$ constitutes a change in system angular momentum; this violates the principle of conservation of angular momentum, which holds for both rigid and dissipative systems. We conclude that motions about the spin axis of a dissipative system are characterized by an equation of form (A-3), and therefore, dissipative systems have a pair of zero eigenvalues associated with spin axis motion, as do rigid systems.

The eigenvalues of (A-1) and (A-2) are $\pm i\Omega$ and $\pm i\mathcal{I}\Omega$ where $i^2=-1$ and $\mathcal{I} = [(I_3-I_1)(I_3-I_2)/(I_1I_2)]^{1/2}$. The characteristic solutions associated with the first pair of eigenvalues are

$$\phi_1 = C_1 \sin\Omega t + C_2 \cos\Omega t \tag{A-4}$$

$$\phi_2 = -C_2 \sin\Omega t + C_1 \cos\Omega t \tag{A-5}$$

where C_1 and C_2 are arbitrary constants. Now suppose that the body 1, 2, 3 axes are aligned with inertially fixed X,Y,Z axes and that the body is rotated through small angles γ_1 and γ_2 about X and Y, respectively, and then spun up about the 3-axis. The Z-axis now has direction cosines $(\gamma_1 \sin\Omega t - \gamma_2 \cos\Omega t)$, $(\gamma_2 \sin\Omega t + \gamma_1 \cos\Omega t)$, and 1 relative to the 1, 2, 3 axes. The same direction cosines can be obtained by rotating an amount

$$\phi_1' = \gamma_2 \sin\Omega t + \gamma_1 \cos\Omega t \tag{A-6}$$

about the 1-axis and

$$\phi_2' = -\gamma_1 \sin\Omega t + \gamma_2 \cos\Omega t \tag{A-7}$$

about the 2-axis. By comparing (A-6), (A-7) with (A-4), (A-5) it can be seen that motions (A-4) and (A-5) constitute pure spin about an inertially fixed axis that has been rotated through angles C_2 and C_1 about X and Y, respectively. Consequently, motions

associated with the eigenvalues $\pm i\Omega$ have to do with inertial orientation of the system angular momentum vector, and inasmuch as the angular momentum of a dissipative system is also inertially constant, eigenvalues $\pm i\Omega$ are expected for this system too.

It has been shown that a spinning dissipative system can be expected to have eight zero eigenvalues and a pair $\pm i\Omega$. The remaining pair associated with gross motion, if such can be identified, must therefore have to do with wobble.

Appendix B

System Parameters Used in the Analysis*

i	m_i (slugs)	p_i (ft)	q_i (ft)	r_i (ft)
1	5819.2	-	-	-
2	13.0	0	- 99.80	11.48
3	13.0	0	100.20	- 8.52
4	24.8	1.10	- 18.86	-20.39
5	24.8	39.22	- 18.86	-20.39
6	24.8	39.22	19.26	-20.39
7	24.8	1.10	19.26	-20.39
8	50.8	-19.04	- 30.15	- 3.94
9	50.8	-19.04	30.55	6.90
10	6.0	-31.00	7.20	8.48

$$\underline{I} = 508689\underline{i}\ \underline{i} - 1327\underline{i}\ \underline{j} + 196898\underline{i}\ \underline{k}$$
$$-1327\underline{j}\ \underline{i} + 4238856\underline{j}\ \underline{j} - 9270\underline{j}\ \underline{k}$$
$$+196898\underline{k}\ \underline{i} - 9270\underline{k}\ \underline{j} + 4047079\underline{k}\ \underline{k}\ \text{slug-ft}^2$$

$L = 12$ slug-ft^2

$d_A = 1.136$, $d_g = .0148$, $d_w = 5.426$ lb-sec/ft

$k_A = 32.48$, $k_g = 4.00$, $k_w = 362.22$ lb/ft

$\beta = 3.8193367$ deg

---

*These data, considered representative, are compiled in part from References 13-15.

i	a_i	b_i (sec^{-1})	c_i (sec^{-2})	d_i (sec^{-3})
1	6.79 lb/sec	4.34	10.9	.00471
2	7.28 lb/sec	5.37	15.3	.00776
3	15.6 lb/sec	3.57	28.9	.0202
4	12.0 ft-lb/sec	5.11	20.5	.0121
5	20.1 ft-lb/sec	3.47	8.46	.00320
6	4.42 ft-lb/sec	5.28	19.1	.0108

REFERENCES

1. Proceedings of the Symposium on Attitude Stabilization and Control of Dual-Spin Spacecraft, Aerospace Corporation, August 1967, pp. 75-109.
2. Kuebler, M. E., "Gyroscopic Motion of an Unsymmetrical Satellite Under No External Forces," TN D-596, December 1960, NASA.
3. Thomson, W. T., and Reiter, G. S., "Motion of an Asymmetric Spinning Body with Internal Dissipation," AIAA Journal, Vol. 1, No. 6, June 1963, pp. 1429-1430.
4. Thomson, W. T., and Reiter, G. S., "Attitude Drift of Space Vehicles," Journal of the Astronautical Sciences, Vol. 7, 1960, pp. 29-34.
5. Likens, P. W., "Modal Method for Analysis of Free Rotations of Spacecraft," AIAA Journal, Vol. 5, No. 7, July 1967, pp. 1304-1308.
6. Likens, P. W., "Effects of Energy Dissipation on the Free Body Motions of Spacecraft," TR 32-860, July 1, 1966, Jet Propulsion Laboratory, Pasadena, California.
7. "Crew Motion Data Analysis," Technical Report ED-2002-644, October 14, 1968, Martin Marietta Corporation, Denver, Colorado.

8. Kailath, T., "An Innovations Approach to Least-Squares Estimation, Part 1: Linear Filtering in Additive White Noise," IEEE Trans. Automatic Control, Vol. AC-13, December 1968, pp. 646-655; see Appendix I.

9. Gantmacher, F. R., The Theory of Matrices, Vol. I. Chelsea, New York, 1960, p. 225.

10. Smith, P. G., "Numerical Solution of the Matrix Equation $AX + XA^T + B = 0$," to be published in IEEE Trans. Automatic Control, Vol. AC-16, No. 3, June 1971.

11. Timoshenko, S. P., and Gere, J. M., Theory of Elastic Stability, 2nd ed., McGraw-Hill, New York, 1961, pp. 3-6.

12. Smith, P. G., "Spinning Flexible Spacecraft Wobble Motion and its Dependence on Flexibility," Bellcomm Memorandum for File in preparation.

13. Hough, W. W., "Inertia Properties for Skylab II Artificial G Study," unpublished notes, March 20, 1970.

14. Stephens, H. E., "Updated Orbital Workshop Structural Model Analysis," Bellcomm Memorandum for File B70 10010, October 6, 1970.

15. Personal communication, H. E. Stephens and L. E. Voelker, June 1970.

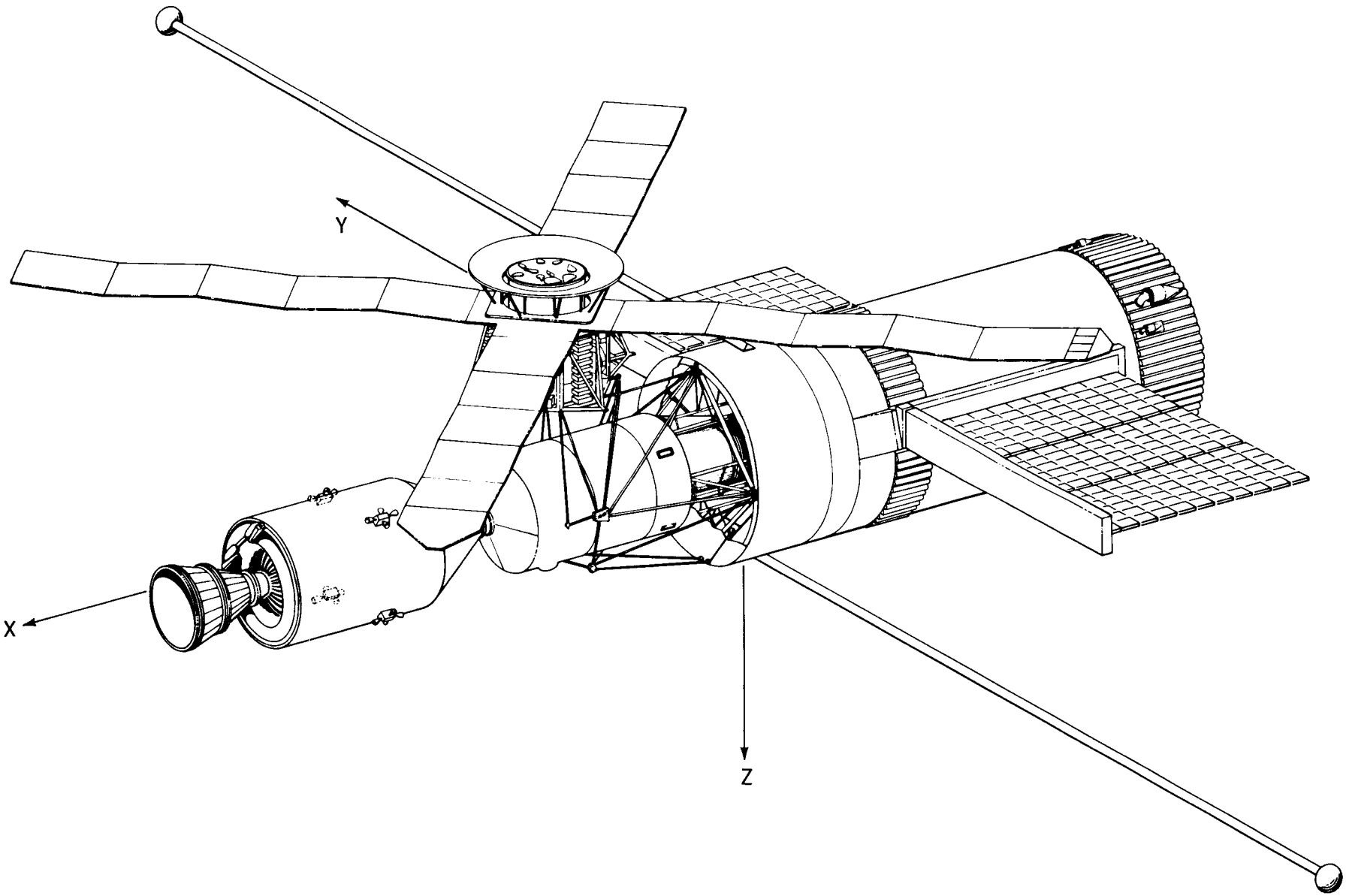

FIGURE 1 - THE SKYLAB ARTIFICIAL GRAVITY CONFIGURATION

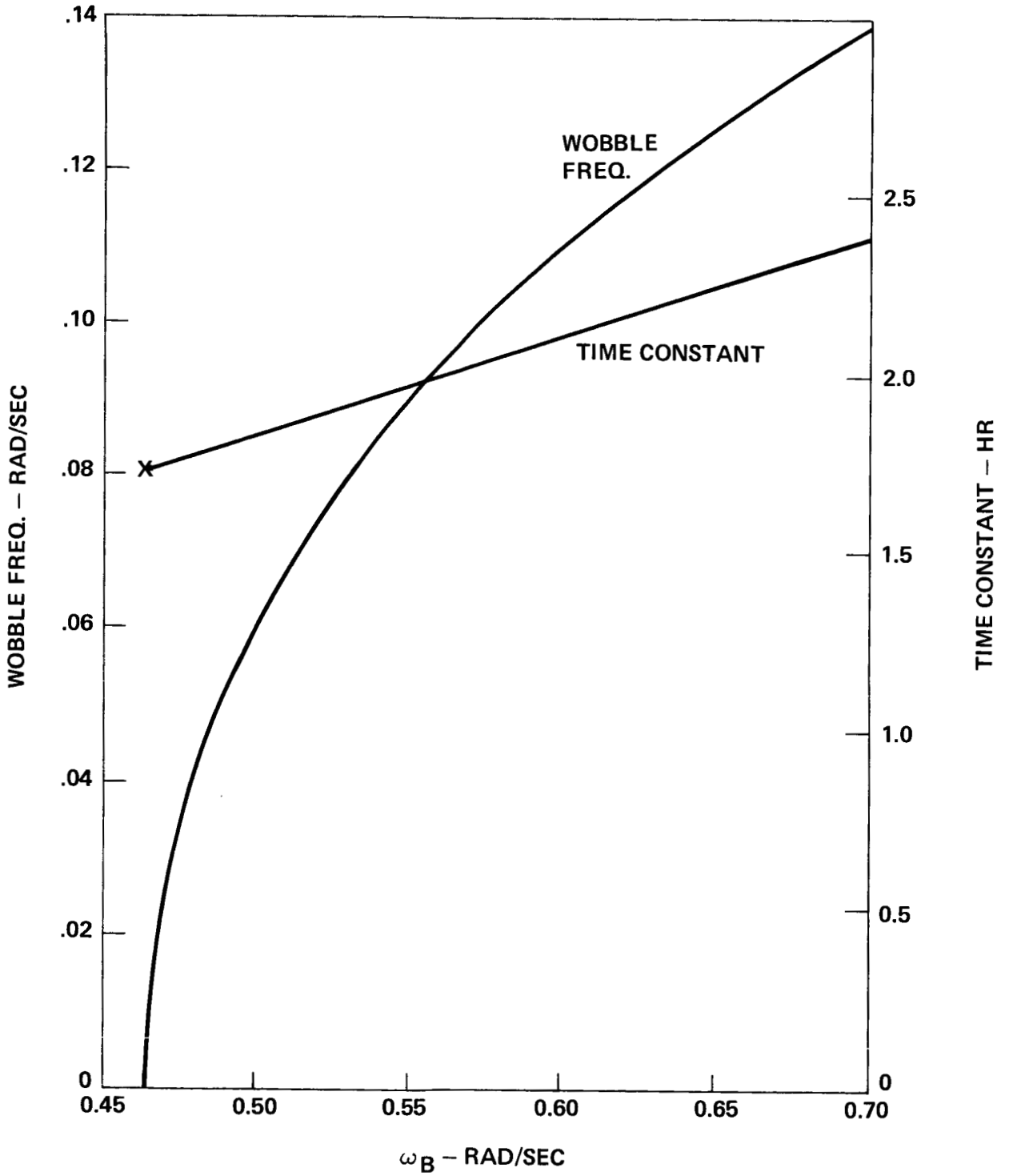

FIGURE 2 - CHARACTERISTIC WOBBLE MOTION VS APPENDAGE NATURAL FREQUENCY

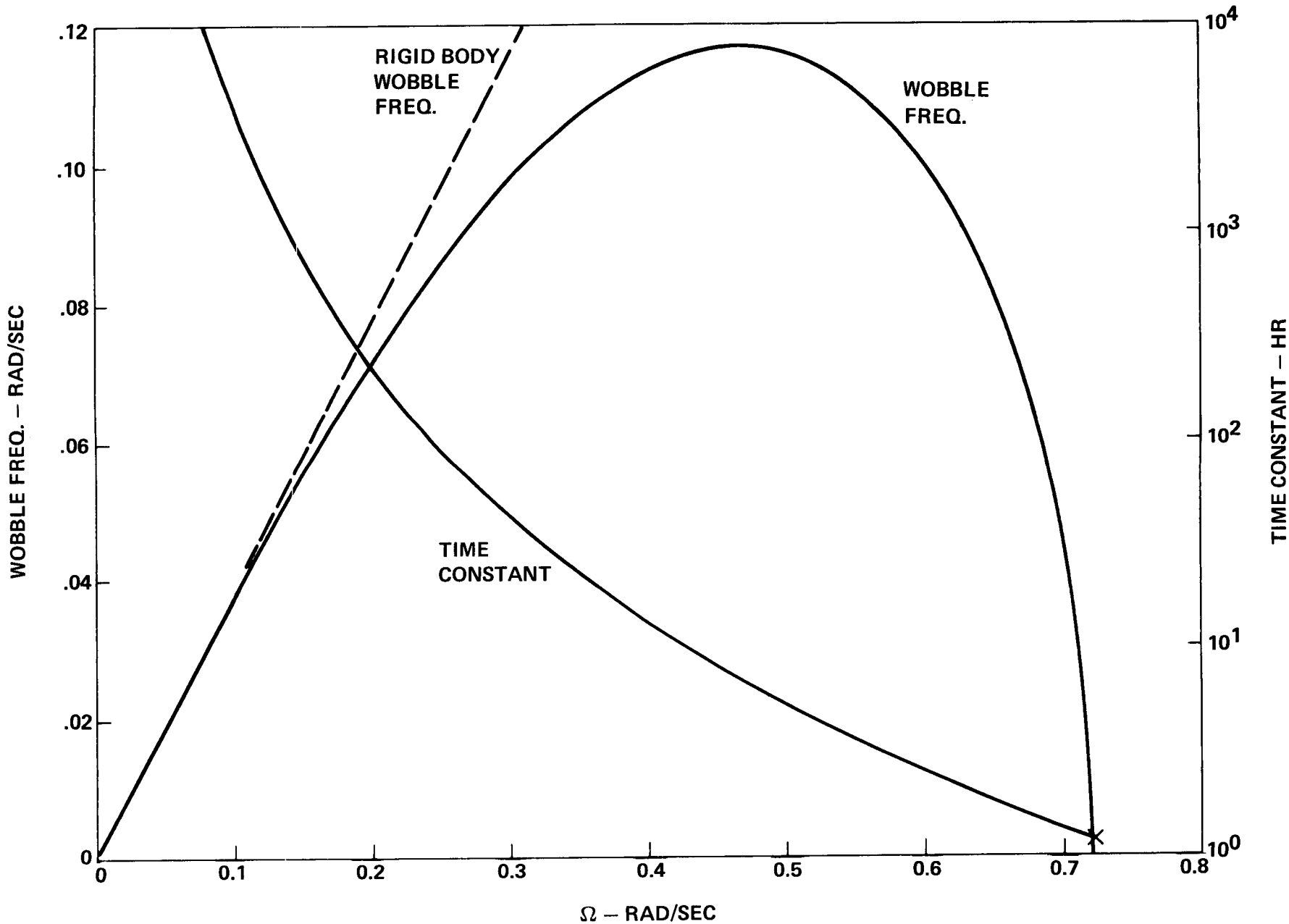

FIGURE 3 - CHARACTERISTIC WOBBLE MOTION VS SPIN SPEED

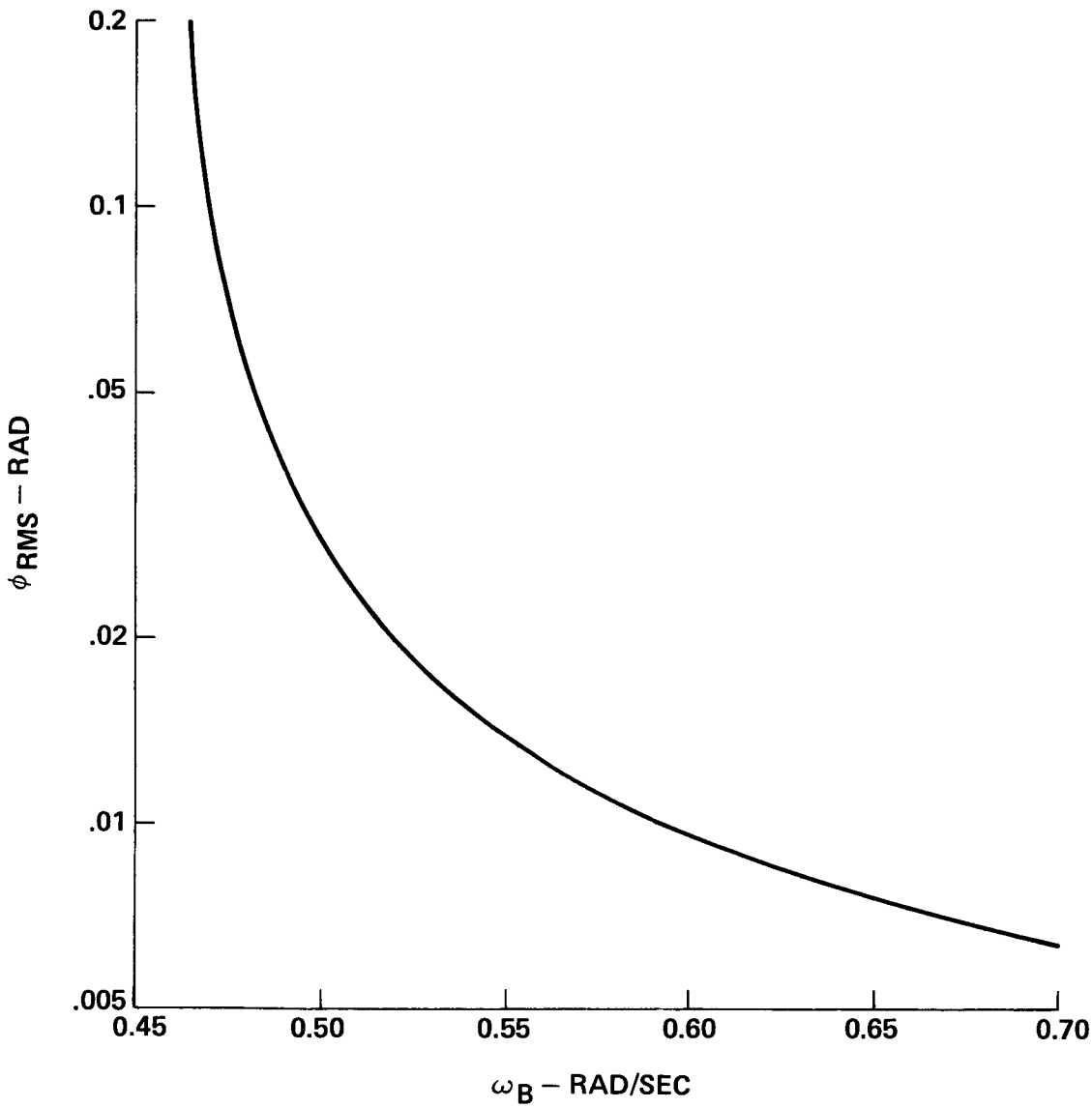

FIGURE 4 - RMS WOBBLE ANGLE VS APPENDAGE NATURAL FREQUENCY

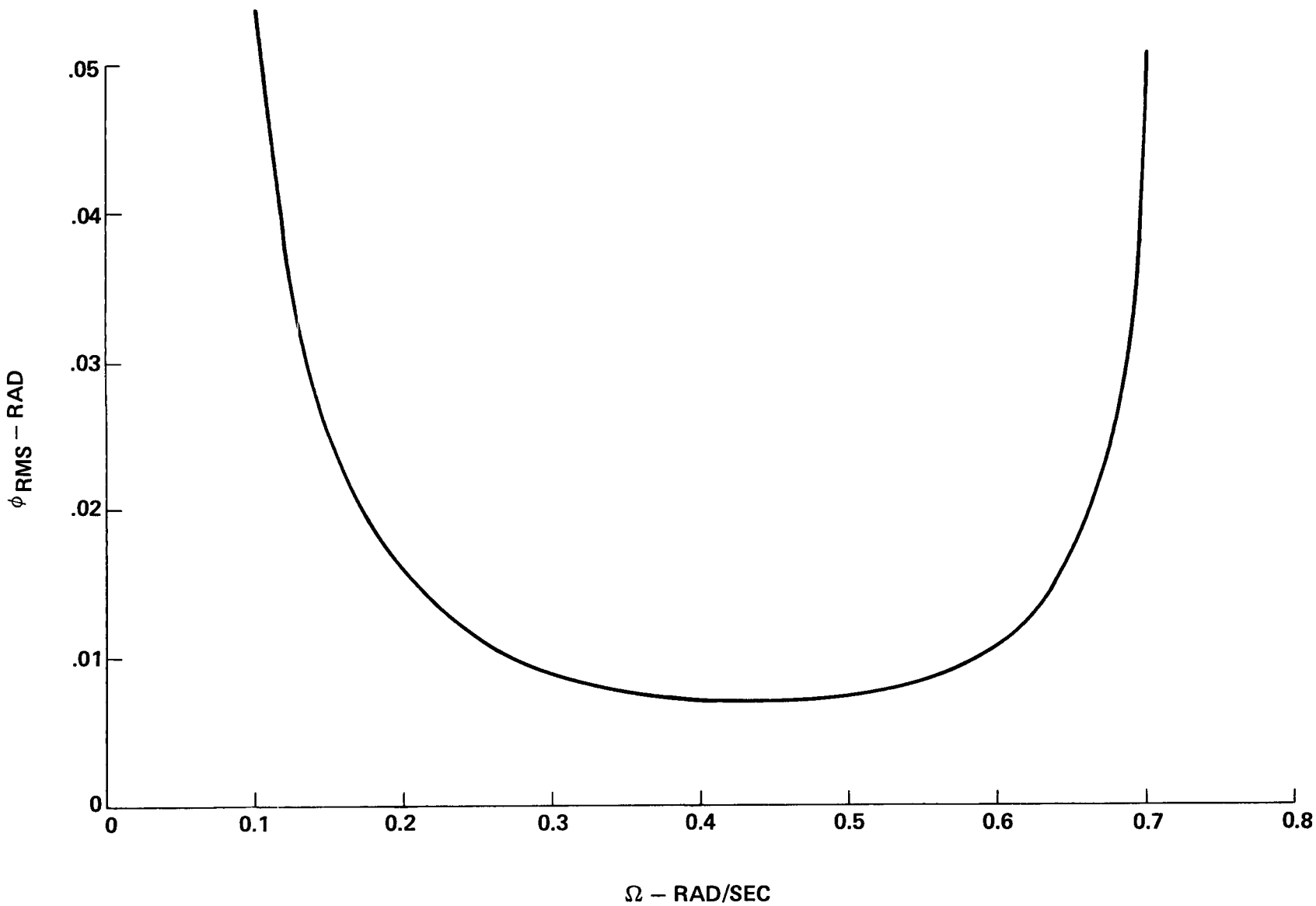

FIGURE 5 - RMS WOBBLE ANGLE VS SPIN SPEED