Rough Draft

(NASA-CR-59270) LLS DATA ACQUISITION PAYLOADS (Bellcomm, Inc.) 58 p

N79-72501

Unclas
00/18 12895

FACI CR59270
(NASA CR OR TMX OR AD NUMBER)

10
(CATEGORY)

LLS DATA ACQUISITION PAYLOADS

DECEMBER 11, 1962

BELLCOMM INC.

BELLCOMM INC.

NAS w - 000417

[redacted]

STUDY AREAS

1. LUNAR SURFACE MODEL
2. DATA ACQUISITION PAYLOAD - SITE SURVEY
3. DATA ACQUISITION PAYLOAD - SCIENTIFIC FACILITY

LUNAR SURFACE MODEL

LUNAR SURFACE CHARACTERISTICS

I. LUNAR ATMOSPHERE

II. LUNAR SURFACE TEMPERATURES

III. LARGE-SCALE SURFACE FEATURES

IV. SMALL-SCALE SURFACE ROUGHNESS

V. NATURE OF THE SURFACE MATERIALS

a. CHEMICAL COMPOSITION
b. RADIOACTIVITY
c. TEXTURE AND STRUCTURE
d. BEARING STRENGTH
e. THERMAL AND ELECTRICAL CONDUCTIVITY

UNIQUE LUNAR SURFACE CHARACTERISTICS DUE TO EARLY LOSS AND PRESENT LACK OF AN ATMOSPHERE

1. PRESERVATION OF THE ORIGINAL, ANCIENT SURFACE FEATURES

2. MODIFICATION, TO AN UNKNOWN EXTENT, OF ORIGINAL SURFACE FEATURES BY MICROMETEORITE AND SECONDARY PARTICLE BOMBARDMENT

3. POSSIBLE PRODUCTION BY SOLAR AND COSMIC RADIATION OF SURFACE MATERIAL QUITE UNLIKE ANYTHING FOUND ON EARTH

LUNAR SURFACE TEMPERATURE

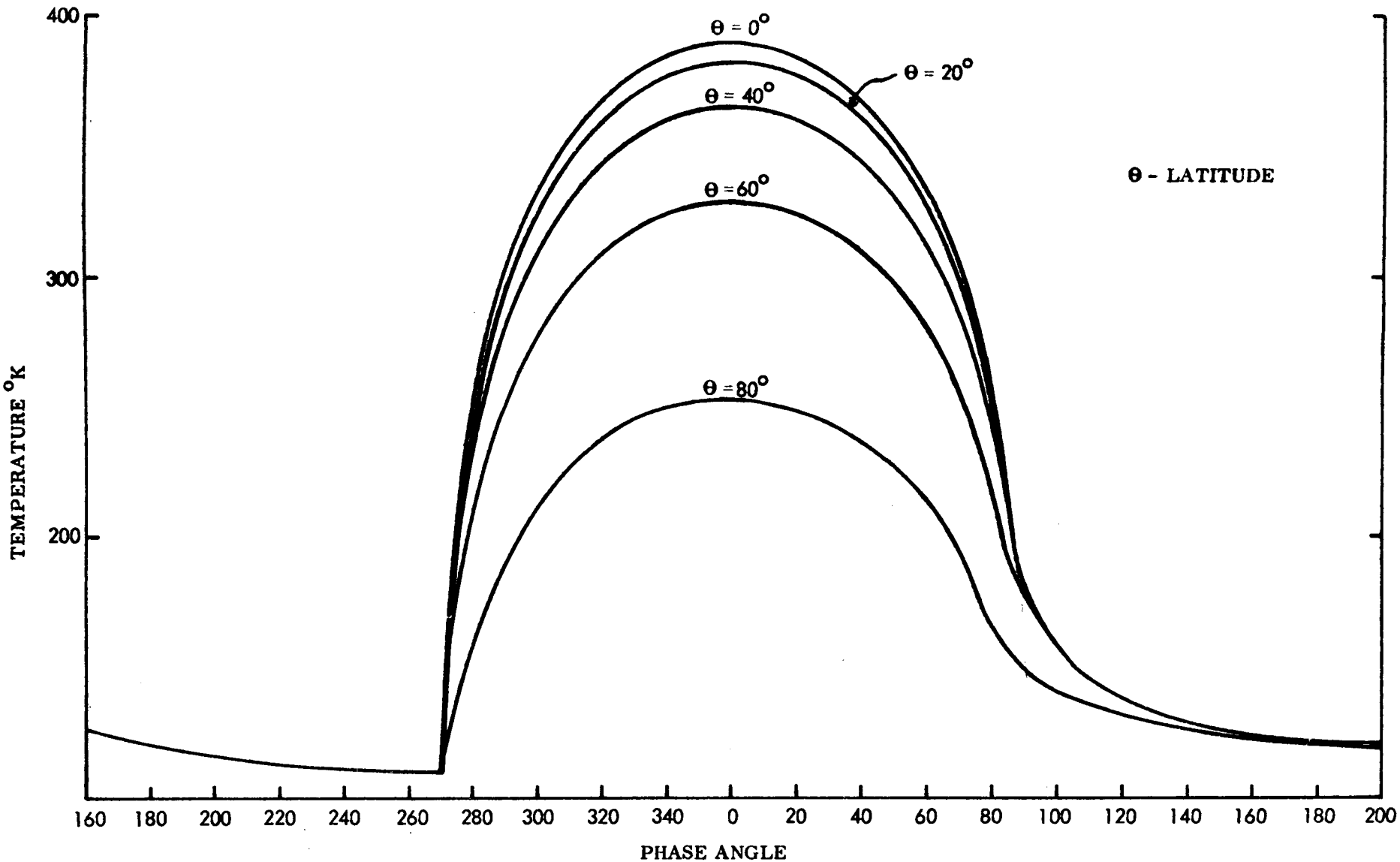

LARGE-SCALE SURFACE FEATURES

older

1. PRE-MARIAL - CONTINENTS
2. MARIAL
3. POST-MARIAL - SUPERIMPOSED ON BOTH OF THE OLDER SYSTEMS

younger

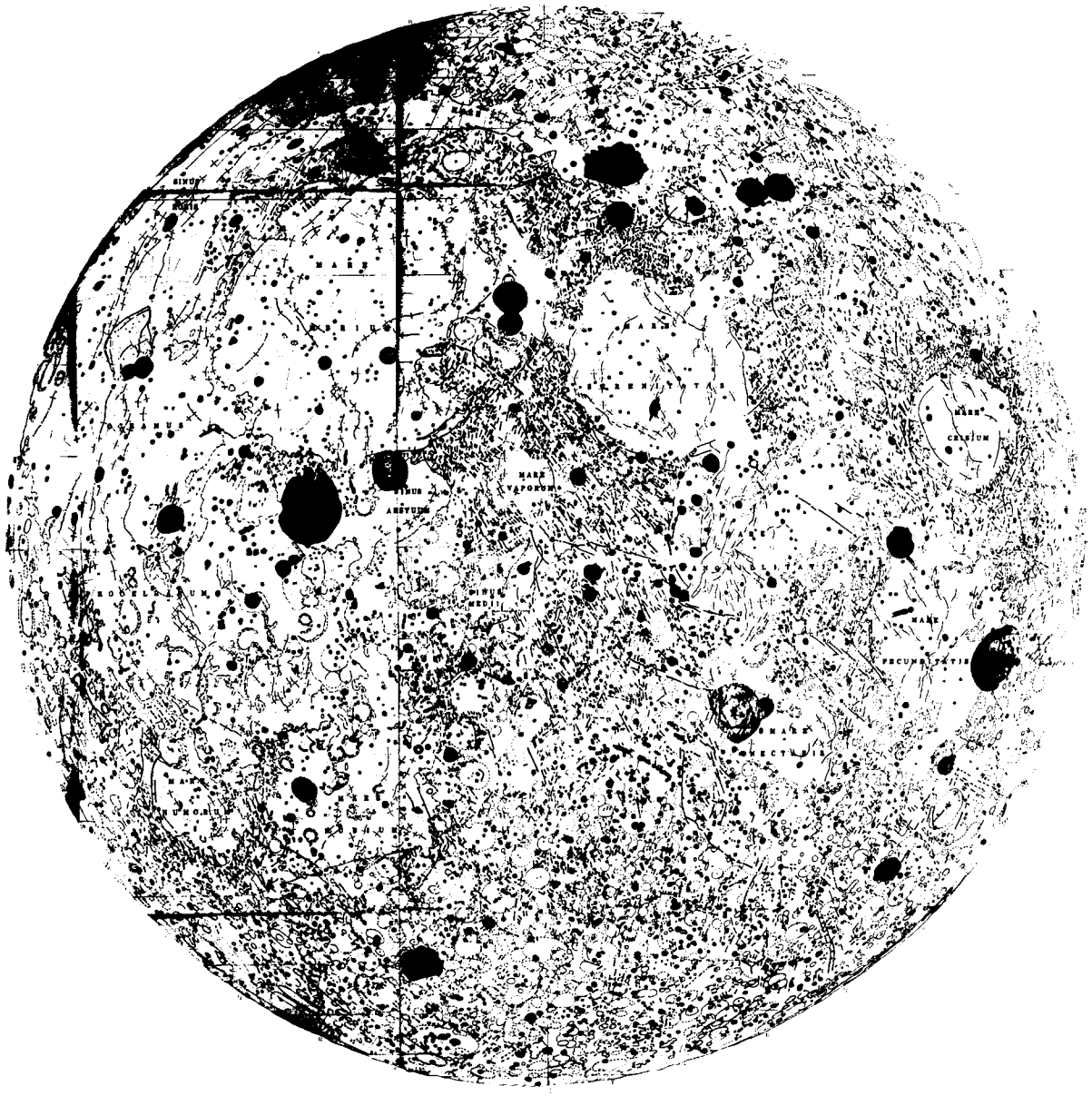
SINUS
IRIDUM
MARE
IMBRIUM
MARE
SERENITATIS
MARE
CRISIUM
MARE
VAPORUM
SINUS
ARDUUM
SINUS
MEDII
MARE
FECUNDITATIS
MARE
TRANQUILLITATIS
OCEANUS
PROCELLARUM
MARE
NUBIUM

CONCLUSIONS BASED ON LARGE-SCALE FEATURES

1. PRE-MARIAL PERIOD PRODUCED AN EXTREMELY ROUGH, HEAVILY FRACTURED SURFACE
2. MARIAL PERIOD COVERED MUCH OF ABOVE WITH SMOOTH (LARGE-SCALE) MATERIAL
3. POST-MARIAL PERIOD - SHORTER AND/OR LESS INTENSE PROCESSES

METHODS FOR DETERMINING SMALL-SCALE ROUGHNESS

1. RADAR

2. DEDUCTION FROM LARGE-SCALE FEATURES, POSSIBLE ORIGIN, AND SUBSEQUENT MODIFYING PROCESSES.

DEDUCED SMALL-SCALE SURFACE ROUGHNESS

1. CONTINENTS - ROUGH, HAZARDOUS

2. POST-MARIAL CRATERS - ROUGH, HAZARDOUS

3. MARIAL

   a. ROUGH, HAZARDOUS
   b. MODERATELY ROUGH, NON-HAZARDOUS WITH CARE
   c. SMOOTH - NON-HAZARDOUS
   d. HETEROGENEOUS - DISTRIBUTION?

ALL MODIFIED TO AN UNCERTAIN EXTENT BY MICROMETEORITIC "SANDBLASTING".

SMOOTH MODEL

A. SLOPES GREATER THAN 15 DEG WILL NOT BE ENCOUNTERED.

B. PROTUBERANCES LARGER THAN 10 CENTIMETERS WILL NOT BE ENCOUNTERED ON THE GREATER PORTION OF THE LUNAR SURFACE. THE LARGER PROTUBERANCES WHICH MAY OCCUR OCCASIONALLY SHOULD BE AVOIDED BY MANEUVERING THE ROVING VEHICLE.

C. THE DEGREE OF EXISTENCE OF CREVICES OR RILLS ON THE LUNAR SURFACE IS UNKNOWN. DESIGN STUDIES WILL ASSUME THAT SUCH FEATURES MAY BE AVOIDED BY MANEUVERING THE ROVING VEHICLE.

ROUGH MODEL — MARIA

a) ROCK TYPE: VOLCANIC AA-TYPE LAVA WILL COVER MOST OF THE SURFACE

b) NATURE OF SURFACE: IRREGULAR, WITH SMALL SCALE VESICULES GIVING A PUMICE-LIKE SURFACE. LARGE SCALE IRREGULARITIES WILL RESULT FROM FLOW STRUCTURES AND THE BLOCKY NATURE OF AA-TYPE LAVA.

c) SIZE OF IRREGULARITIES: 1. VESICULES-MICROSCOPIC TO 2 cm. COVERING MOST OF SURFACE, 2. BLOCKS AND SPINES— 2 cm TO 1 METER. COVERING MOST OF SURFACE, 3. FLOW AND LAVA STRUCTURES—1 METER TO SEVERAL METERS, LOCALIZED

POSSIBLE LUNAR SURFACE MATERIALS

1. WHISKER MAT
2. ROCK FROTH
3. DUST
    a. DISCRETE PARTICLES
    b. FUSED OR SINTERED PARTICLES

WELL-BEHAVED DUST

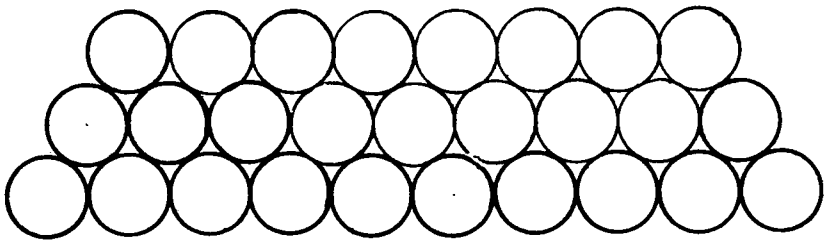

STICKY DUST

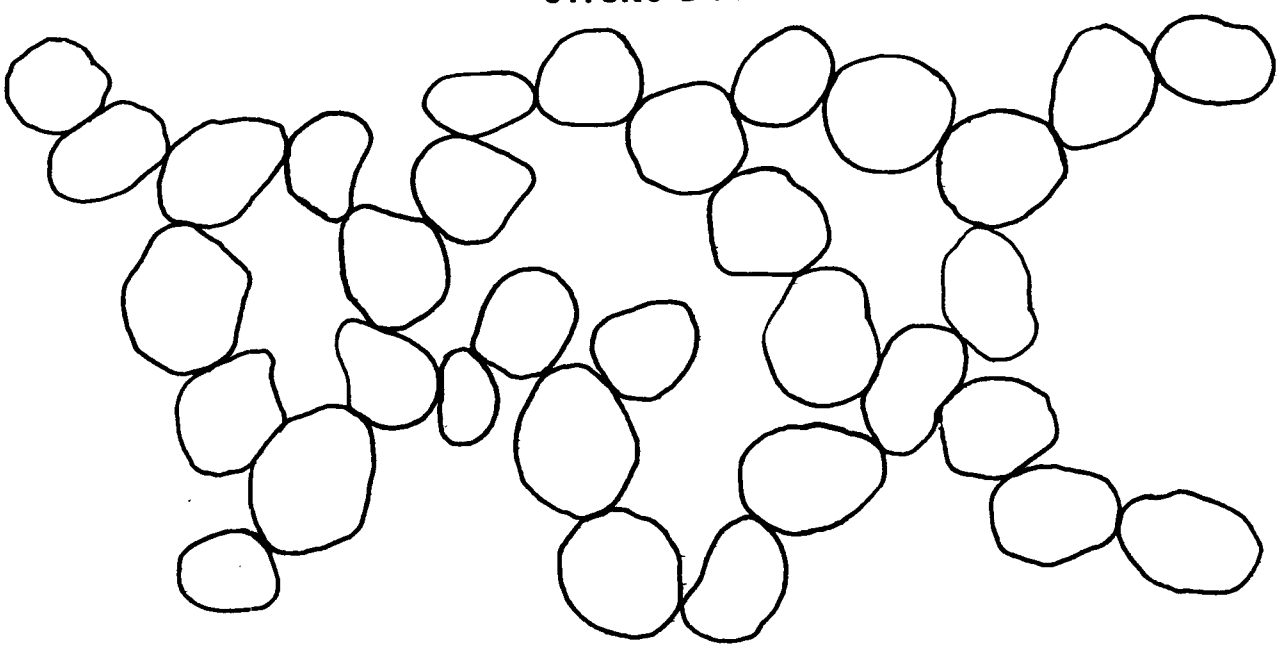

BRIDGING OF TOPOGRAPHIC FEATURES OF NEGATIVE RELIEF

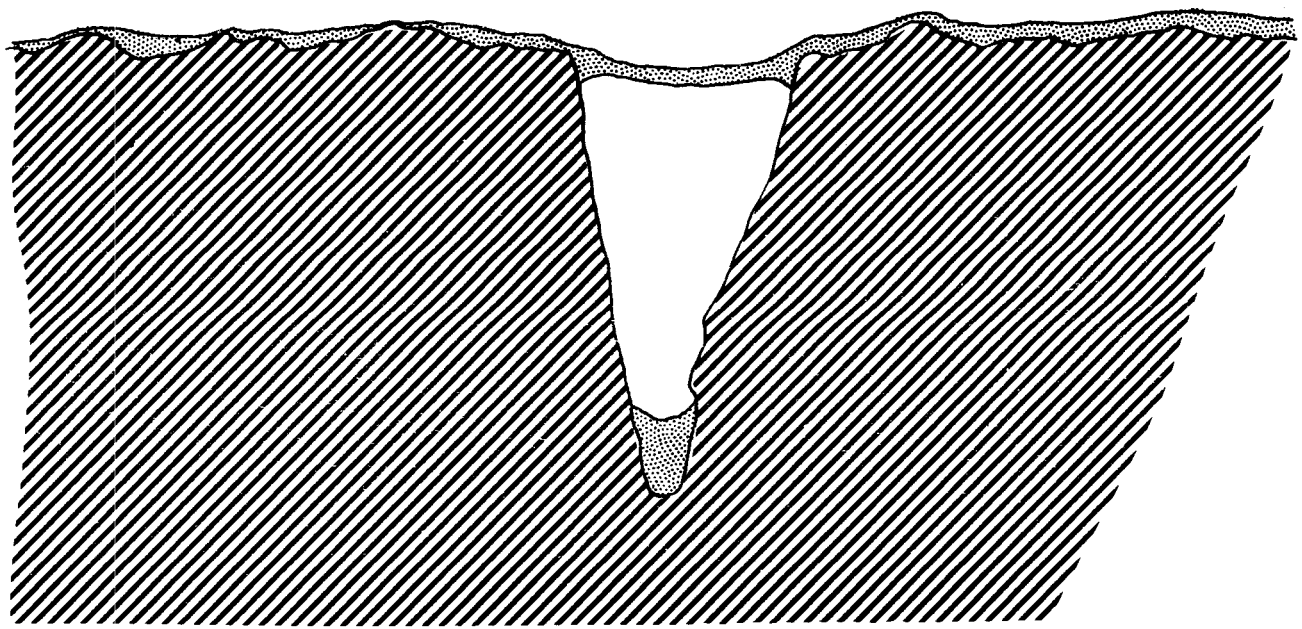

NEAR SURFACE VOIDS

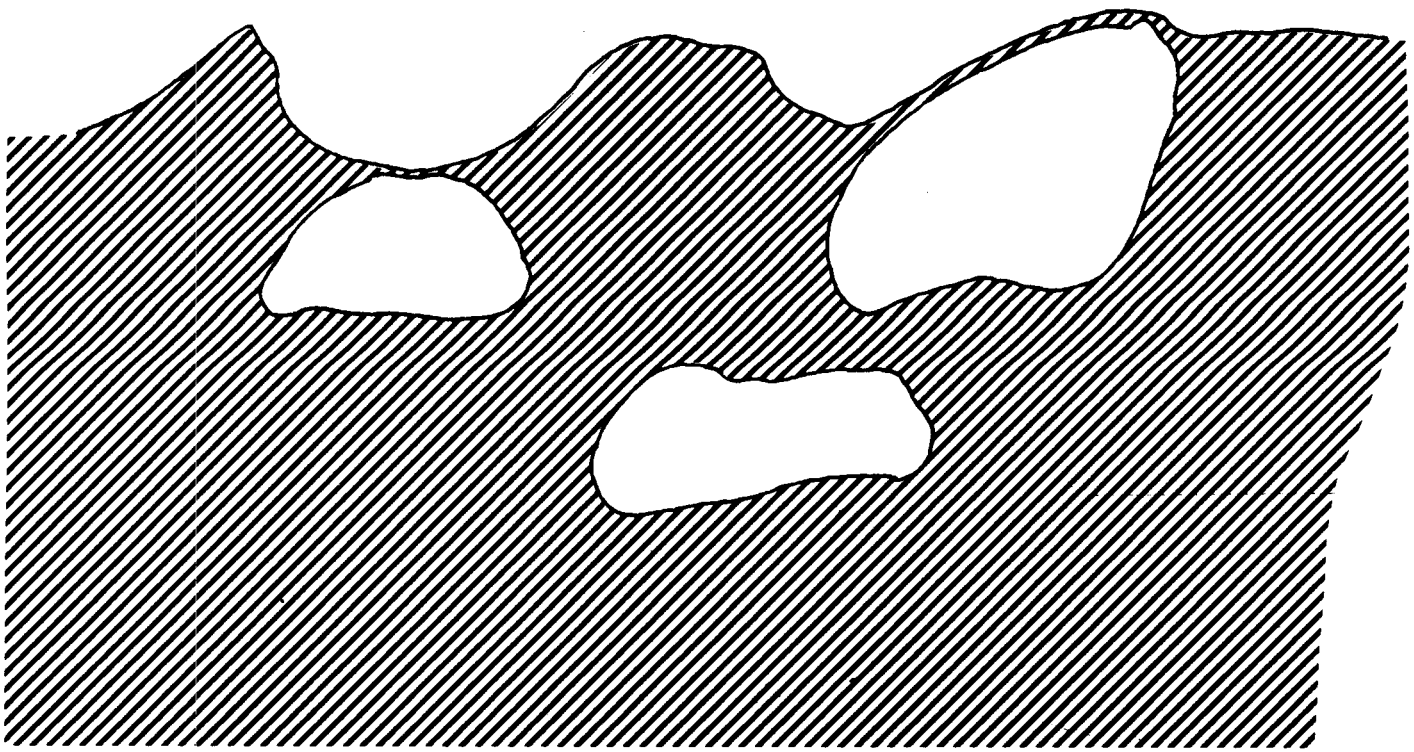

DATA ACQUISITION PAYLOAD

SITE SURVEY

SITE SURVEY PAYLOAD
(SSP)
FOR THE
LUNAR LOGISTICS SYSTEM

TASK:

TO CONFIRM THE SUITABILITY OF A PARTICULAR LANDING AREA FOR APOLLO

MEANS:

MEASUREMENT INSTRUMENTS LANDED IN THE AREA BY A C1–B LUNAR LOGISTICS VEHICLE

USEFULNESS OF A SITE SURVEY PAYLOAD

A. CAN SAVE MEN AND VEHICLES BY DISQUALIFYING A LANDING AREA

B. IF THE SURFACE IS ROUGH, AND ONLY A FRACTION OF THE AREA IS SUITABLE FOR LANDING, THE SSP CAN SEEK, QUALIFY, AND MARK THE BEST SPOT.

USEFULNESS OF ROVER:

A. FOR ROUGH MODEL, ROVER CAN SEEK AND VERIFY A GOOD LANDING SITE FAR FROM THE BUS

B. ROVER CAN CHECK THE LANDING AREA NEAR THE BUS

C. ROVER CAN ACHIEVE STATISTICAL CONFIDENCE IN THE PROPERTIES OF THE SURFACE FOR A GENERAL AREA OR A TYPE OF TERRAIN.

DESIGN PRINICPLES

1. MEASUREMENTS VITAL TO:

   A. LANDING OF APOLLO BUG
   B. SURVIVAL OF APOLLO BUG IN LUNAR ENVIRONMENT
   C. SAFETY OF MAN IN LUNAR ENVIRONMENT

2. WHERE POSSIBLE, THE LATEST APOLLO DESIGN SHOULD BE CLOSELY SIMULATED.

3. ROVER USED FOR SEEKING AND VERIFYING A LANDING SITE

4. RELIABILITY IS OF MORE IMPORTANCE THAN PRECISION OR NON-CRITICAL MEASUREMENTS.

5. INSTRUMENTS ARE OF THREE TYPES
   A. SINGLE POINT (BUS MOUNTED)
   B. POINT DISTRIBUTIONS (ROVER)
   C. CONTINUOUS DISTRIBUTIONS (ROVER)

6. OPERATIONAL FLEXIBILITY TO TAKE ADVANTAGE OF EARLY INFORMATION

PRIMARY MEASUREMENTS

MEASUREMENTS	INSTRUMENTS
TOPOGRAPHY: FEATURES ROUGHNESS SLOPES MAPS	BUS: LANDING CAMERA ROVER: STEREO TV CAMERAS INCLINOMETER EARTH SENSOR
BEARING STRENGTH	BUS: OBSERVATION OF LANDING GEAR ROVER: OBSERVATION OF WHEELS THRUST COLUMN
VOID DETECTION	ROVER: TV CAMERAS, PYROMETER, GAMMA RAY SCATTER DENSITY MEASUREMENT
THERMAL BALANCE	BUS: TEMPERATURE SENSORS ROVER: SPACE SUIT SIMULATOR, TEMPERATURE SENSORS, PYROMETER
LANDER PERFORMANCE	BUS: ACCELERATION AND MOTION SENSORS ROVER: OBSERVATION OF BUS

SECONDARY MEASUREMENTS

MEASUREMENTS	INSTRUMENTS
MICROMETEOROID PENETRATION	BUS: SENSOR
NATURE OF SURFACE	BUS: SKID MARKS
	ROVER: TRACKS, RAKE, TV
CHEMICAL ACTIVITY	ROVER: OBSERVATION OF AREA UNDER BUS, SMALL ROCKET, DROPPING REAGENT
OPTICAL EROSION, DUST COVERING	ROVER: SLIDING GLASS WINDOW PAINT COATS OBSERVATION OF BUS
RADAR REFLECTIVITY	BUS: LANDING RADAR
ABRASION	ROVER: DRAGGING SAMPLE OF SPACE SUIT MATERIAL
GROUND WAVE PROPAGATION	BUS: TRANSMITTER
	ROVER: RECEIVER
RADIATION HOTSPOTS	ROVER: GEIGER COUNTER
DENSITY, LAYERING, AND CREVASSES	ROVER: ACOUSTIC SENSORS AND EXPLOSIVE CHARGES

ROVER

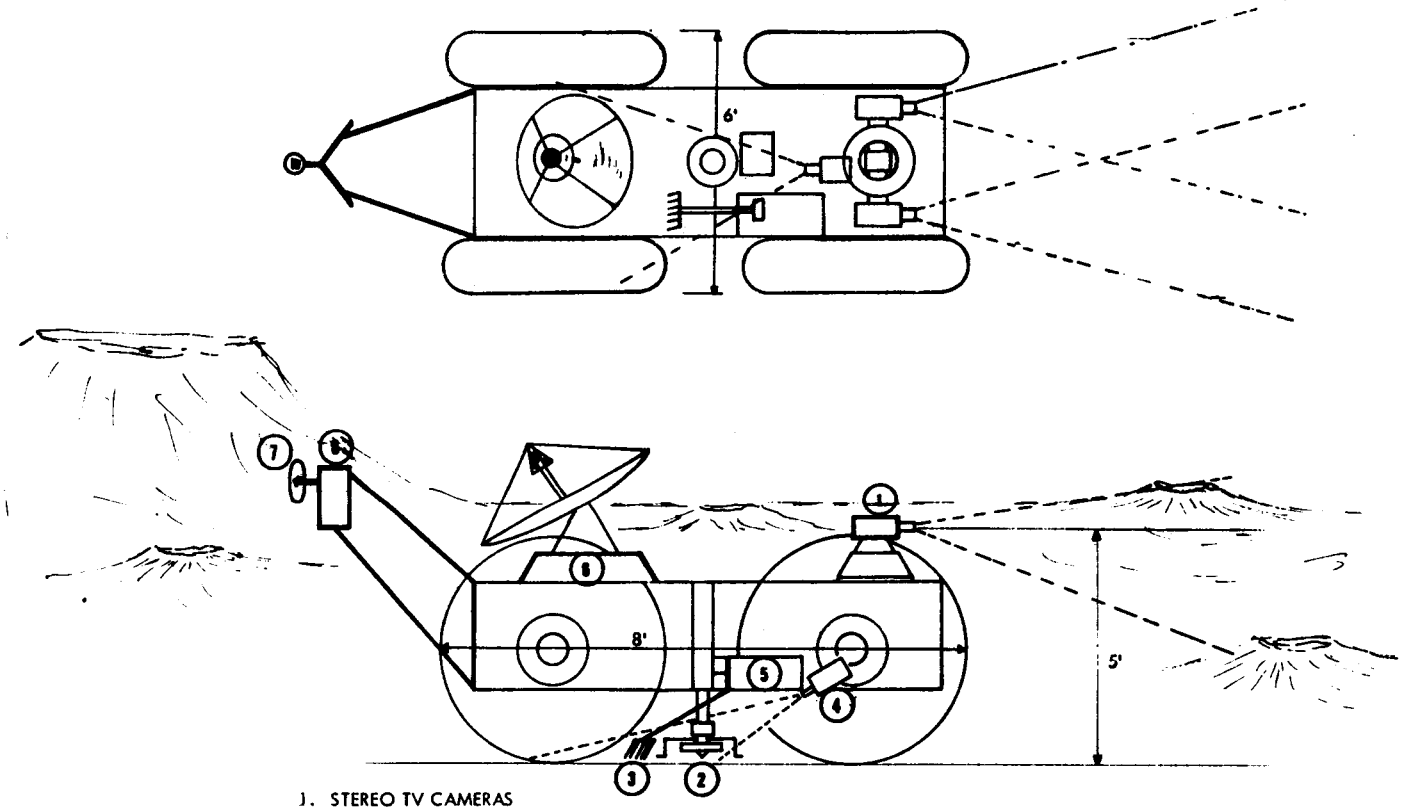

1. STEREO TV CAMERAS
2. BEARING STRENGTH
3. RAKE
4. SURFACE TV CAMERA
5. INSTRUMENTS SEPARATED FROM SURFACE
6. ATTITUDE REFERENCE
7. SUIT THERMAL SIMULATOR
8. MIRROR TO ISOLATE (7)

NOMINAL ROVER CAPABILITY

INSTRUMENTS	200 LB.
MOTIVE POWER	1 KW
RANGE	200 MILES
LIFETIME	10 DAYS
WHEELS	4 FT. DIAMETER
WHEELBASE	6 FT.
TRACK	5 FT.

SURFACE NAVIGATION AND GUIDANCE

CONTROL IS BY OPERATOR FROM EARTH

- START
- STOP
- TURN LEFT OR RIGHT
- BACK UP

HIS PRINCIPAL SOURCE OF INFORMATION IS THE STEREO CAMERAS.

DURING MOTION, DISTANCE TRAVELLED IS FOUND BY DEAD RECKONING, ANGLE IS TAKEN FROM THE EARTH-SEEKING ANTENNA MOUNT.

WHILE STOPPED, POSITION IS FOUND FROM ANGLE SIGHTINGS OF LAND MARKS.

SLOPE IS MEASURED BY A TWO-DEGREE-OF-FREEDOM DAMPED PENDULUM (INCLINOMETER).

STEREO TV CAMERAS

MECHANICAL LAYOUT

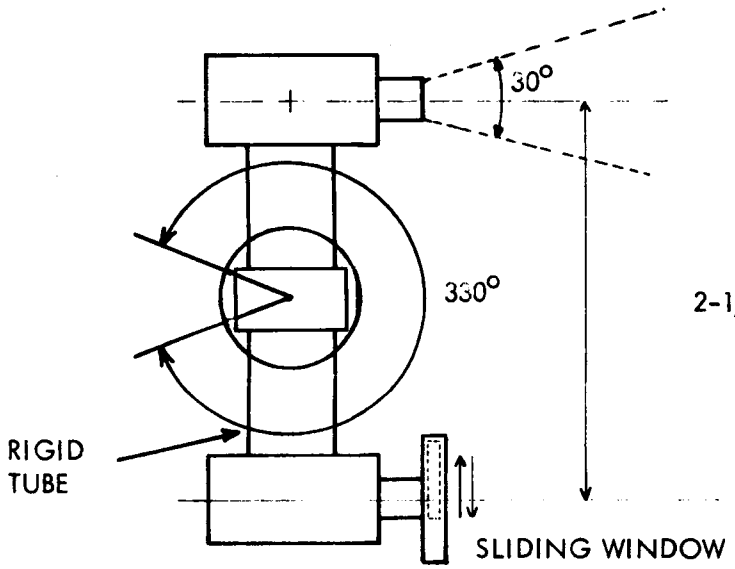

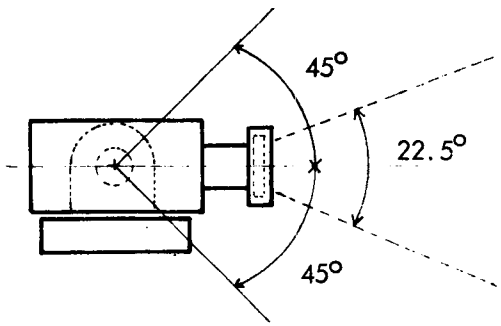

FIELD OF VIEW

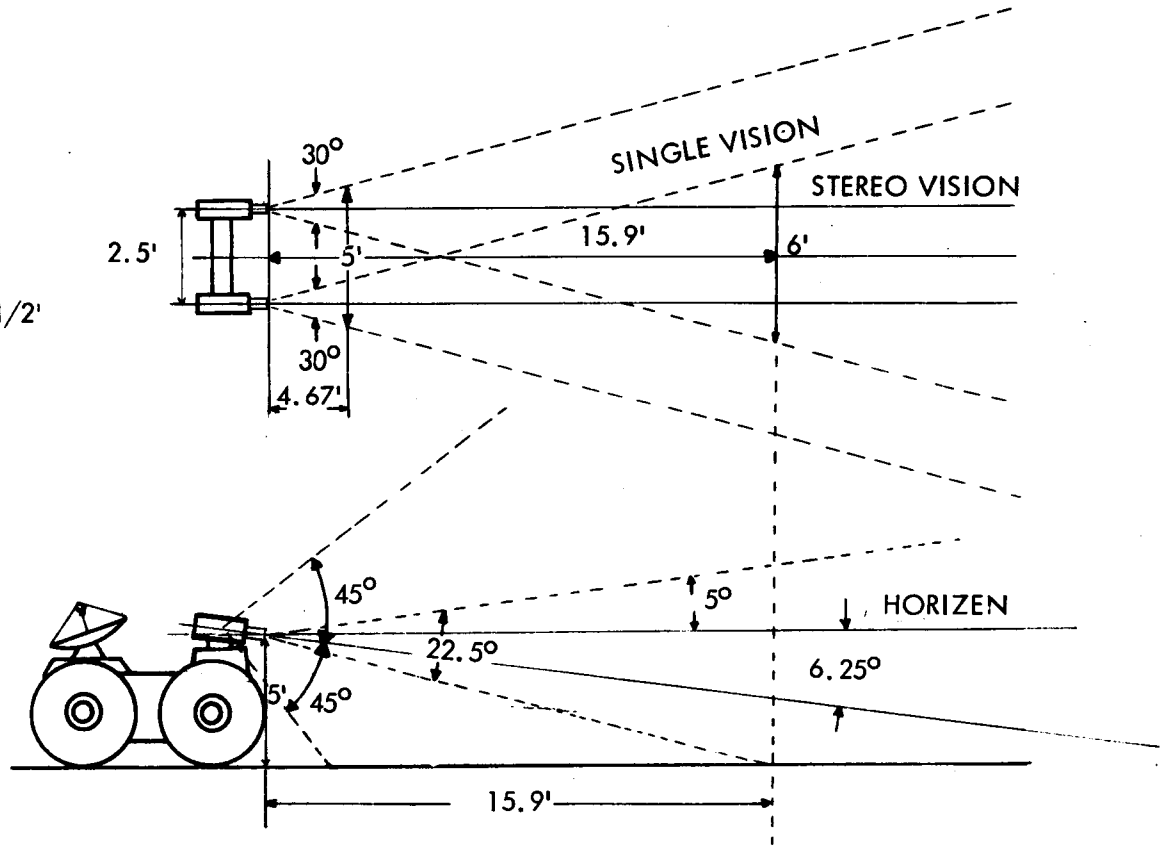

TELEVISION CAMERAS

NUMBER OF CAMERAS	3
TYPE	VIDICON
FRAMES PER SECOND	2
FIELD OF VISION	30° x 22.5^{o}
RESOLUTION (LINES)	800 x 600
RESOLUTION (ANGULAR)	.524 MR
BANDWIDTH	500 KC

NORMAL OPERATION:
TRANSMITTER TIME SHARED ON ALTERNATE FRAMES BY STEREO CAMERA.

SURFACE MEASUREMENT OPERATION:
TRANSMITTER TIME SHARED BETWEEN ONE STEREO CAMERA AND THE SURFACE CAMERA.

ANTENNA	5 FOOT DISH
TRANSMITTER POWER	10 WATTS
WEIGHT 3 x 15 LB.	45 LB.
MOUNTS AND CABLING	15 LB.
TOTAL	60 LB.

THERMAL SIMULATION

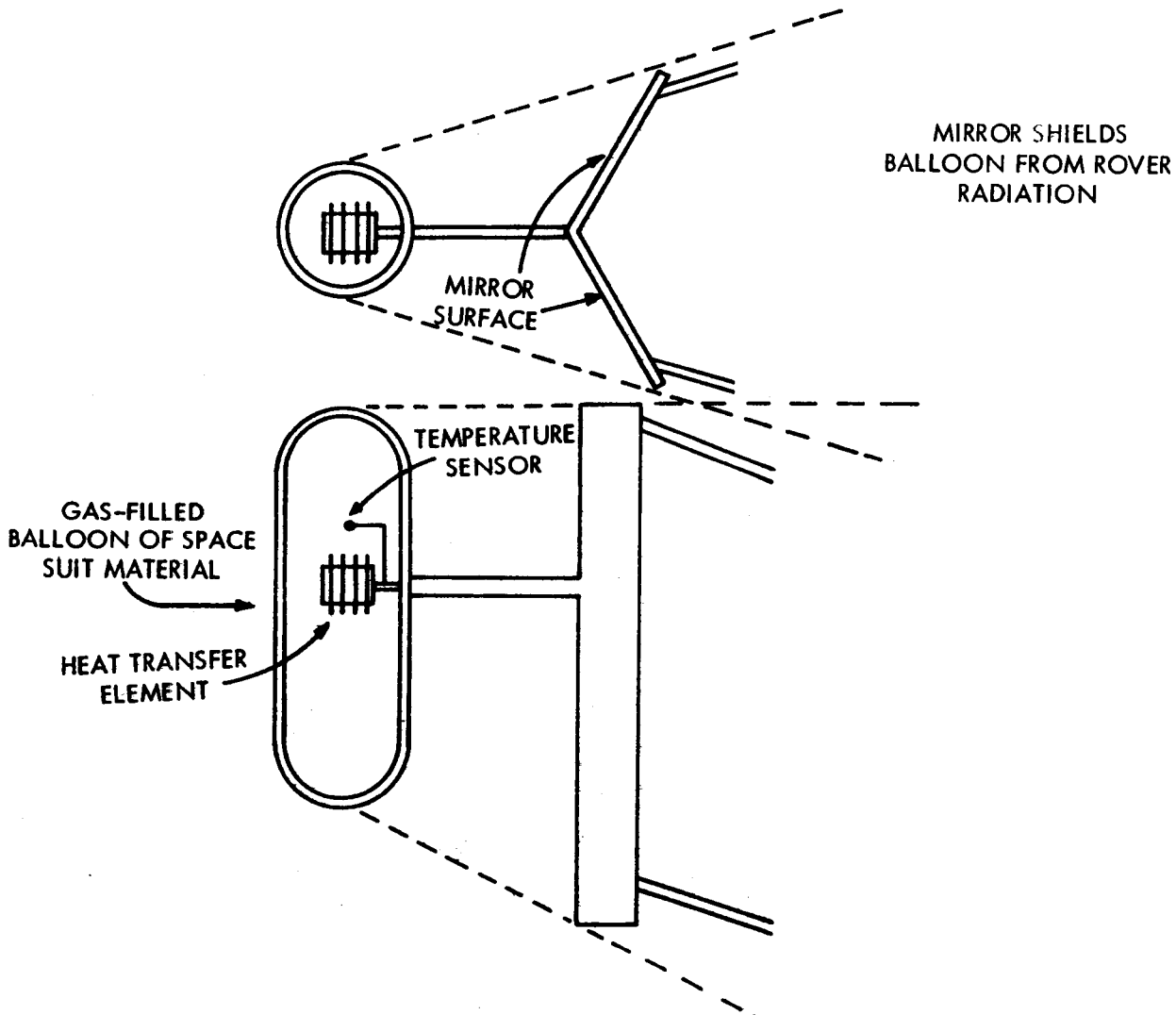

BEARING STRENGTH

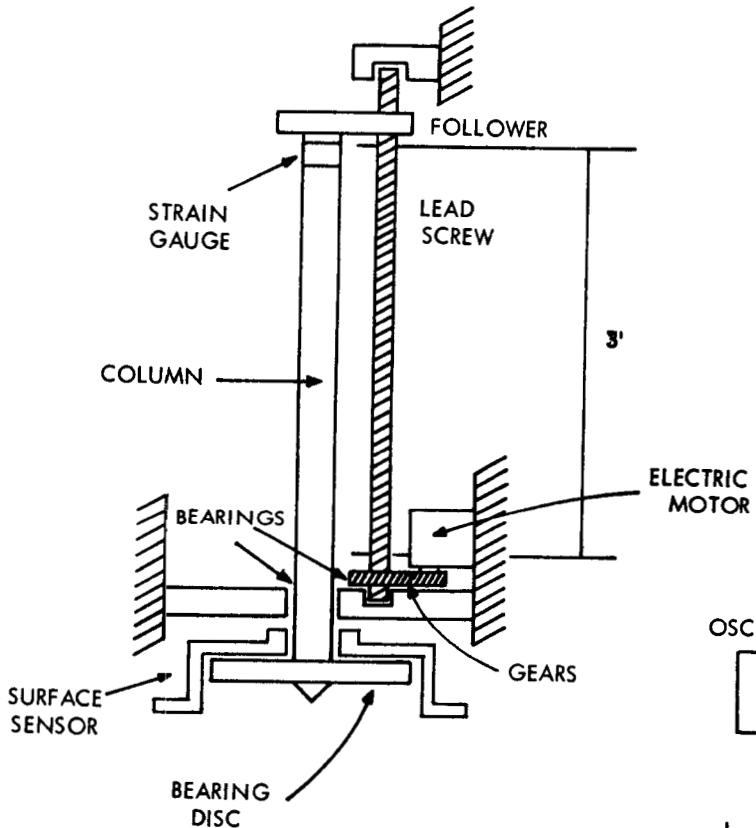

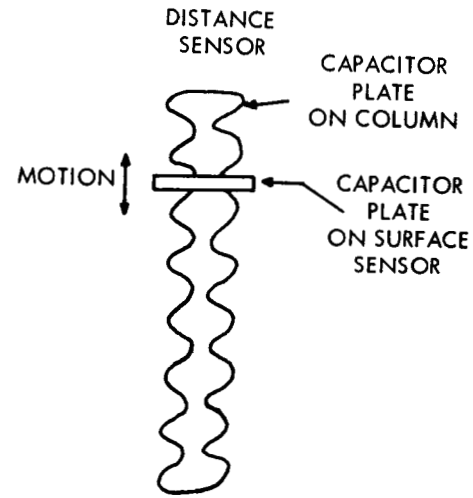

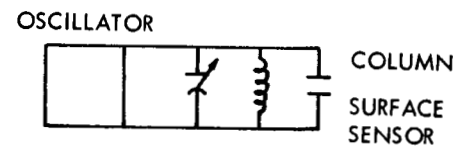

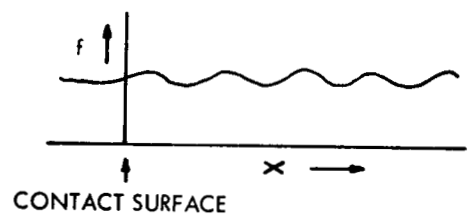

BEACON

300 MILE RANGE
TRANSPONDER TYPE
PHASE COHERENT
OMNIDIRECTIONAL ANTENNA
400 KC BANDWIDTH
ACCURACY - 15 METERS

ABRASION MEASUREMENT

TINY WIRES IMBEDDED IN THE MATERIAL OF THE ASTRONAUT'S BOOTS.
ATTACHED TO RAKE.

REAGENT GUN

TANK
ELECTRICALLY CONTROLLED VALVE DROPS OR SPRAYS WATER OR OTHER
ROCKET EXHAUST AND FUEL MATERIAL ON THE SURFACE

VOID DETECTION

METHOD - GAMMA RAY BACKSCATTER

SOURCE - Co^{60}

SHIELD BETWEEN SOURCE AND DETECTOR	13 LB.
GEIGER COUNTER AND CONTROLS	2 LB.
TOTAL	15 LB.

TEMPERATURE SENSORS

SPREAD OVER BUS AND VEHICLES TO MONITOR TEMPERATURE CONTROL

THERMISTORS

BRIDGE DETECTOR

ACCURACY - $\pm 1^{o}K$

PYROMETER

IR OPTICS

BOLOMETER BRIDGE

MEASURES SURFACE RADIATION

LANDER PERFORMANCE

STRAIN GAUGES

- PIEZOELECTRIC TRANSDUCERS
- BRIDGE DETECTOR
- MOUNTED ON LANDING LEGS

MOTION DETECTORS

- BREAK WIRES MOUNTED ON SHOCK ABSORBERS

WEIGHT SUMMARY FOR THE NOMINAL MISSION

ROVER:		
STRUCTURE	280	LB
WHEELS, MOTORS, ETC.	200	
POWER	450	
COMMUNICATIONS	200	
NAVIGATION AND CONTROL	20	
THERMAL CONTROL	50	
ROVER WEIGHT:	1200	LB
ROVER INSTRUMENTS	200	
BUS INSTRUMENTS AND UNLOADER	100	
TOTAL LANDED PAYLOAD	1500	LB

INSTRUMENT FOR 1500 LB. PAYLOAD (ROVER)

		WEIGHT (LB)
ROVER:		
	TV CAMERAS (3)	60
	INCLINOMETER	1
	BEARING STRENGTH	30
	SURFACE RAKE	5
	SUIT SIMULATOR	10
	TEMPERATURE SENSORS	5
	PYROMETER	5
	VOID DETECTION	15
	REAGENT GUN	5
	ABRASION	10
	CABLING	15
		161 LB
	WEIGHT MARGIN	39 LB (20%)
	TOTAL	200 LB
BUS:		
	BEACON	5
	LANDER PERFORMANCE	10
	TEMPERATURE SENSORS	5
	CABLING	5
		25 LB

INSTRUMENTS FOR 2000 LB. PAYLOAD (ROVER AND LANDER)

	WEIGHT (LB)	
ADDITIONS TO ROVER:		
GROUND WAVE RECEIVER	5	
RADIATION	15	
SMALL ROCKET	10	
ACOUSTIC SENSOR	15	
EXPLOSIVE CHARGES	20	
	65	
ADDITIONS TO BUS		
GROUND WAVE TRANSMITTER	50	
DRILL	60	
SUBSURFACE SONDE	10	
MICROMETEOROID PENETRATION	40	
ACOUSTIC SENSOR	15	
POWER	110	
STRUCTURE & CABLING	50	
	335	
ROVER	65	
WEIGHT MARGIN	100	(20%)
	500	

NOMINAL SCAN PATTERN FOR ROVER

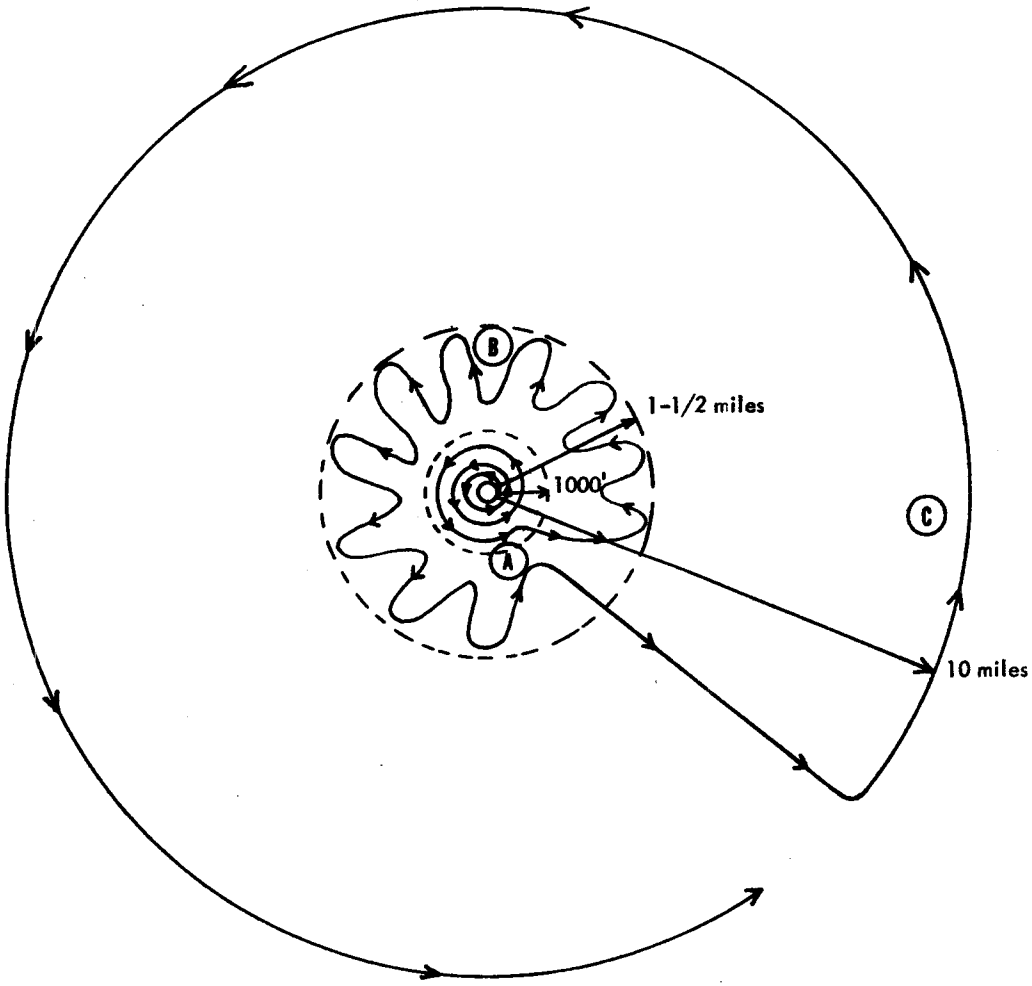

A. FINE SPIRAL SCAN OF AREA CLOSE TO LANDER.

B. COARSE SCAN OF SURROUNDING AREA.

C. SURVEY OF REMOTE LOCATIONS.

MAPPING WITH TV CAMERAS

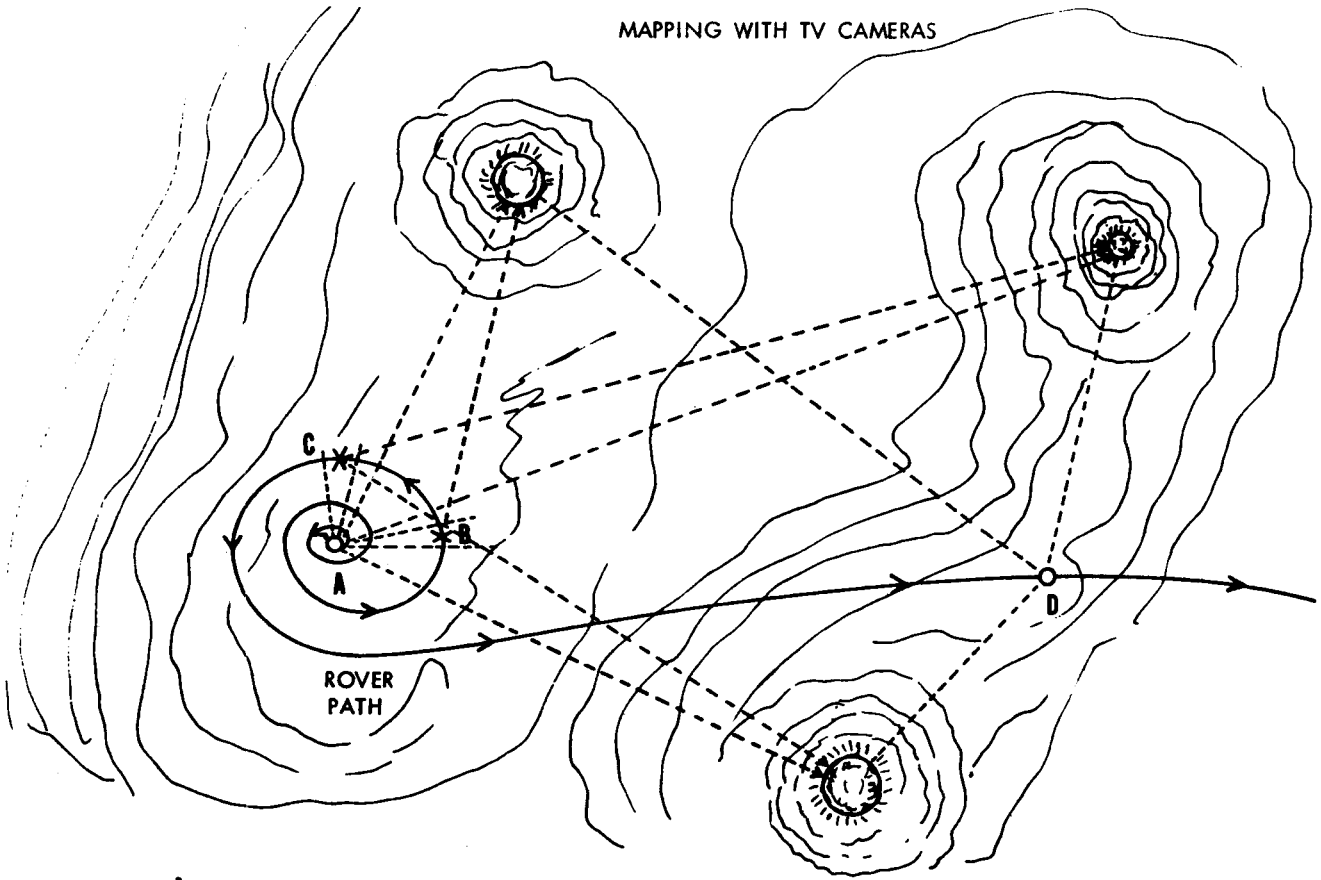

A. ON LANDER, PICK FEATURES FOR BENCHMARKS. MEASURE AZIMUTH ANGLE FROM EARTH.

B,C. INTERMEDIATE BASELINE POINTS. MEASURE DISTANCE FROM LANDER BY STEREO. MEASURE AZIMUTH TO LANDER AND BENCHMARKS.

D. DETERMINE ROVER POSITION FROM AZIMUTH ANGLE OF BENCHMARKS.

INSTRUMENTS FOR 1000 LB. PAYLOAD

(NO ROVER)

	WEIGHT (LB)
BEACON	5
TV CAMERAS (3)	60
RANGING RADAR	30
INCLINOMETER	1
BEVAMETER	30
IMPACT BALLS (16)	53
SURFACE SAMPLER AND PROCESSOR	88
DRILL	60
SUBSURFACE SONDE	10
LANDER PERFORMANCE	10
TEMPERATURE SENSORS	5
SUIT SIMULATOR	10
SPECTRAL PYROMETER	7
MICROMETEOROID PENETRATION	40
MICROMETEOROID EROSION	1
RADIATION	10
ABRASION	1
	421
COMMUNICATIONS	125
POWER	150
STRUCTURE & CABLING	100
	796 LB
WEIGHT MARGIN	204 LB (20%)
	1000 LB

DATA ACQUISITION PAYLOAD

SCIENTIFIC FACILITY

Arnold Pierce

OBJECTIVE:

TO INCREASE THE EARLY SCIENTIFIC DATA ACQUISITION CAPABILITY OF APOLLO BY

a) PROVIDING AN INTEGRATED, SEMIPERMANENT, SELF-CONTAINED SCIENTIFIC LABORATORY, SHORT OF A MAJOR LUNAR BASE

b) TAKING ADVANTAGE OF MAN'S DECISION-MAKING ABILITY AND MAKING MAXIMUM USE OF HIS UNIQUE MANIPULATIVE CAPABILITIES

c) PROVIDING A PROTECTED ENVIRONMENT, LEAVING ASTRONAUT FREE OF HEAVY GLOVES

d) MINIMIZING ASTRONAUT'S TIME UNPROTECTED ON LUNAR SURFACE

PRESENT APOLLO SCIENTIFIC CAPABILITY

a) SURVEY SURFACE RADIATION -- GEIGER-MULLER COUNTER

b) MEASURE THERMAL GRADIENT PROBE AND RECORDER

c) PHOTOGRAPH SURFACE AND ROCK FORMATIONS --VISIBLE, IR, UV

d) DETERMINE COMMUNICATION PATH LOSS --TRANSMITTER, RECEIVER, AND DIRECTIONAL ANTENNA

e) MAKE ROCK & SOIL ANALYSIS AND SAMPLE RETURN

f) RETURN A 5 FOOT CORE SAMPLE TO EARTH

g) CARRY OUT SEISMIC STUDIES -- TWO SEISMOGRAPHS WITH EXPLOSIVE CHARGES

h) MAKE ATMOSPHERE ANALYSIS -- MASS SPECTROMETER AND PRESSURE SENSOR

i) MEASURE ACCELERATION DUE TO GRAVITY -- PENDULUM, ETC.

j) MEASURE MAGNETIC FIELD -- MAGNETOMETER

ADVANTAGES OF A UNIFIED LABORATORY

a) COMMON STRUCTURE, POWER SUPPLY AND TELEMETRY EQUIPMENT

b) CONVENIENT ACCESS TO ALL EQUIPMENT

c) MONITORING OF SETUP AND INITIAL RESULTS FROM EARTH

d) ONCE SET UP, CAN RUN UNATTENDED FOR LONG PERIODS

e) CENTRALIZED TEST AND CHECKOUT FACILITY

EXPERIMENTS PLANNED FOR SCIENTIFIC FACILITY

a) EXPERIMENTS TO PROVIDE INFORMATION FOR IMMEDIATE USE ON THE LUNAR SURFACE

b) EXPERIMENTS TO PROVIDE INFORMATION NEEDED FOR PLANNING OF FUTURE TRIPS

c) LONG-TERM, ACCURATE, RELATIVELY SOPHISTICATED EXPERIMENTS TO MEASURE PARAMETERS OF THE LUNAR INTERIOR, SURFACE, AND ATMOSPHERE

d) ASTROPHYSICAL EXPERIMENTS USING THE MOON AS AN EARTH-ORIENTED SPACE PLATFORM

e) LUNAR MOTION

IMMEDIATE USE EXPERIMENTS

a) REAL-TIME TELEVISION (200kc BANDWIDTH, 15 FRAMES/SEC TO VIEW LEM TAKEOFF

b) RADIO AND FLASHING LIGHT BEACONS TO AID LEM IN FINDING THE LABORATORY

FUTURE PLANNING EXPERIMENTS

a) MAKE A HIGH RESOLUTION RECORD OF THE IMMEDIATE SURROUNDINGS USING A TELESCOPIC FILM CAMERA WITH ZOOM LENS

b) MAKE THERMAL GRADIENT MEASUREMENTS AND TAKE CORE SAMPLE FOR RETURN TO EARTH USING A DRILLED HOLE IN THE LUNAR SURFACE

c) DETERMINE METEORITE FLUX AND MASS AND VELOCITY SPECTRUM USING A LARGE SENSOR

LONG-TERM EXPERIMENTS

a) MEASURE SEISMIC ACTIVITY OF THE MOON

b) MEASURE SEISMIC REFRACTIVE INDEX VERSUS DEPTH USING AN EXPLOSIVE CHARGE

c) MEASURE DENSITY AND COMPOSITION OF NEUTRAL AND CHARGED COMPONENTS OF LUNAR ATMOSPHERE USING A MASS SPECTROMETER

d) MEASURE TEMPERATURE OF IONS AND ELECTRONS IN LUNAR ATMOSPHERE USING A RETARDING POTENTIAL CHAMBER AND A LANGMUIR PROBE

e) MEASURE ACCURATELY THE ACCELERATION DUE TO GRAVITY

f) MEASURE LUNAR SURFACE POTENTIALS ANALOGOUS TO TELLURIC POTENTIALS IF THEY EXIST

g) MEASURE EARTH'S ALBEDO AND OBSERVE CLOUD COVER BY MEANS OF A HIGH RESOLUTION SLOW TELEVISION SYSTEM

h) DETERMINE LUNAR MASS DISTRIBUTION BY MEANS OF RADIO TRACKING OF DISCARDED LEM FROM LUNAR SURFACE

ASTROPHYSICAL MEASUREMENTS

SUN

MEASURE ABSOLUTE FLUX AS A FUNCTION OF TIME AND ENERGY SPECTRUM OF THE FOLLOWING RADIATIONS:

INFRA-RED VISIBLE	(QUIET SUN)
ULTRA-VIOLET SOFT X-RAY γ-RAY	(SOLAR FLARE)
PROTONS AND ELECTRONS	(SOLAR WIND AND SOLAR FLARE)
ELECTROMAGNETIC NOISE	

MEASURE MAGNETIC FIELD VARIATIONS (SOLAR FLARE)

COSMIC RAYS

MEASURE FLUX AS A FUNCTION OF TIME, AND MASS AND ENERGY SPECTRUM OF COSMIC RAYS

PLANETARY OBSERVATIONS

OBSERVE THE ALBEDO OF THE PLANETS

LUNAR MOTION MEASUREMENTS

a) MEASURE GEOMETRICAL LIBRATION BY MONITORING ERROR SIGNAL FROM EARTH-ORIENTED SERVO-CONTROLLED ANTENNA

b) MEASURE CHANGES IN EARTH-MOON DISTANCE BY RECORDING THE PHASE OF A LUNAR-BASED STABLE OSCILLATOR SIGNAL

GEOMETRICAL LIBRATION

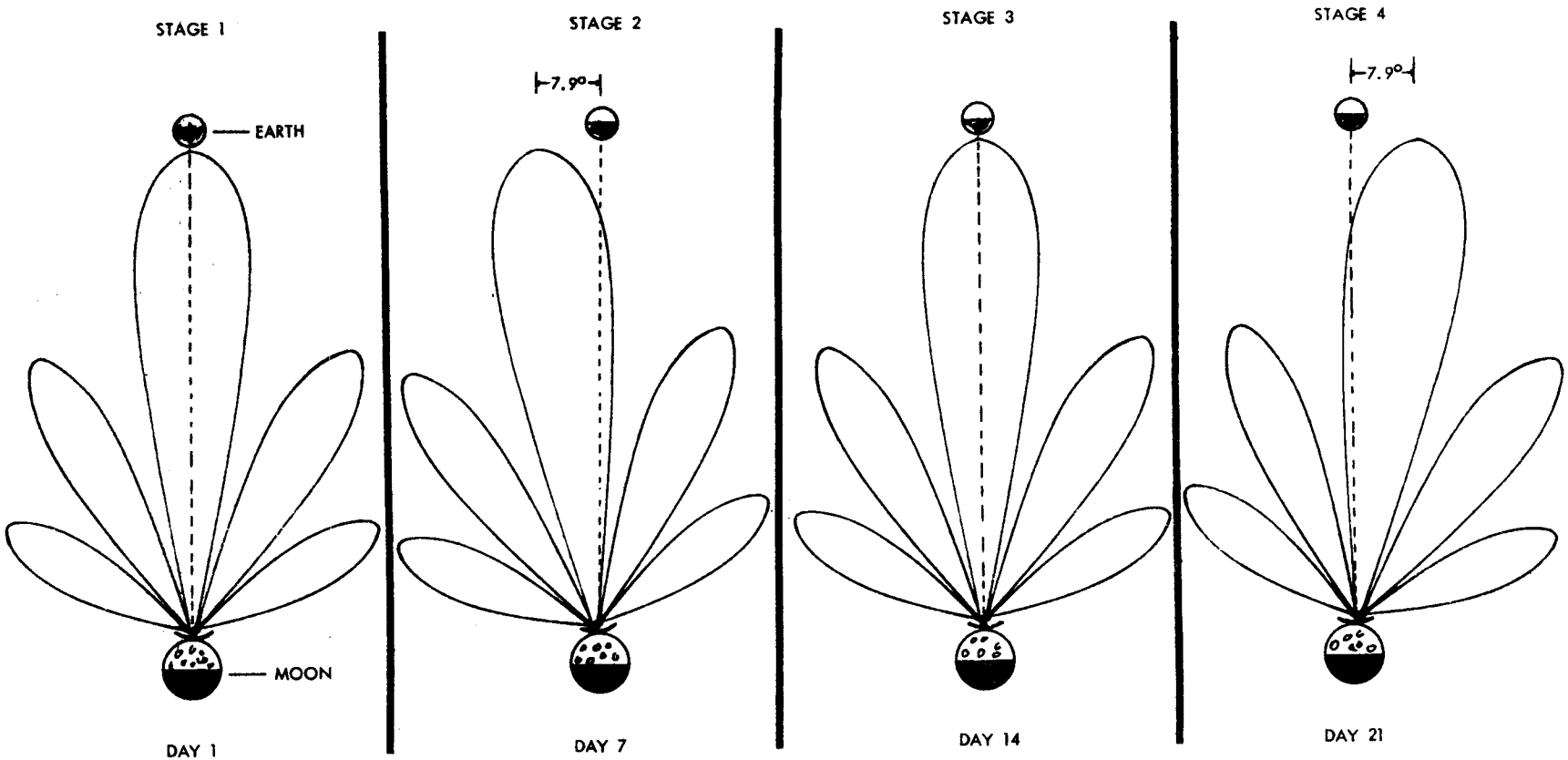

ESSENTIAL WEIGHTS

STRUCTURE	550 POUNDS	
LIFE SUPPORT SYSTEM	350	
DRILL FUEL CELL	80	(7 KWH, 6 HOURS, 1.7 FEET/HR.)
SNAP POWER SUPPLY (80-W.)	100	
SUBTOTAL.	1080 POUNDS	

WEIGHT BUDGET

	POUNDS
DRILL AND BITS	165
TELEMETRY ANTENNA	25
TELEMETRY TRANSMITTER	40
COMMAND RECEIVER	10
TV CAMERA	25
TELESCOPE (3") AND SERVO SYSTEM	25
SIGNAL PROCESSING APPARATUS	10
SEISMOMETERS (3)	30
SEISMOMETER AMPLIFIERS (3)	15
TEMPERATURE & ELECTRICAL CONDUCTIVITY PROBE	10
TEMPERATURE SENSOR AMPLIFIER & COMMUTATOR	5
ELECTRICAL CONDUCTIVITY AMPLIFIER & COMMUTATOR	5
SOLAR RADIO NOISE RECEIVER & COMMUTATOR	10
SOLAR NOISE ANTENNAS (4)	20
METEORITE AMPLIFIER & COMMUTATOR	10
SURFACE POTENTIAL AMPLIFIER	2
EXPLOSIVE CHARGES & MORTAR	20
GRAVITOMETER & AMPLIFIER	25
MASS SPECTROMETER & AMPLIFIER	25
SURFACE POTENTIAL AMPLIFIER & PROBES	5
LEM TRACKING RECEIVERS & ANTENNAS	30
METEORITE SENSOR (10 FEET SQUARE)	20
RADIO BEACON & ANTENNA	5
FLASHING LIGHT BEACON	5
SOLAR FLARE SCINTILLATORS & PULSE HEIGHT ANALYZERS	50
COSMIC RAY SCINTILLATORS & PULSE HEIGHT ANALYZERS	50
INFRARED SCANNING SPECTROMETER	20
VISIBLE SCANNING SPECTROMETER	20
MAGNETOMETER	20
STABLE OSCILLATOR	20
TOTAL	722

LONG-TERM BASIC POWER REQUIREMENTS

COMMAND RECEIVER	2	WATTS
TELEMETRY TRANSMITTER	15	
SIGNAL PROCESSING APPARATUS	2	
TV CAMERA	10	
METEORITE AMPLIFIER	2	
SEISMOMETER AMPLIFIERS (3)	6	
SURFACE POTENTIAL AMPLIFIER	2	
TRACKING RECEIVERS (2)	4	
SOLAR NOISE RECEIVERS (4)	4	
TEMPERATURE AMPLIFIER	2	
ELECTRICAL CONDUCTIVITY AMPLIFIER	2	
UV, X-RAY, GAMMA RAY COUNTERS, PULSE HEIGHT ANALYZERS	6	
SOLAR FLARE PROTON AND ELECTRON COUNTERS, AND PULSE HEIGHT ANALYZERS	4	
SOLAR WIND PROTON SENSOR	2	
COSMIC RAY SCINTILLATOR AMPLIFIERS AND PULSE HEIGHT ANALYZERS (5)	10	
STABLE OSCILLATOR	5	
MAGNETOMETER	5	
TOTAL	83	WATTS

TELEMETRY CHANNEL ALLOCATION

1 TV CHANNEL	200	KC/S
2 CHANNELS @ 10 KC/S MAGNETOMETER 2 VOICE CHANNELS	20	KC/S
10 CHANNELS @ 1 KC/S 1 UV COUNTER 1 X-RAY COUNTER 1 γ-RAY COUNTER 1 PROTON (SOLAR FLARE) COUNTER 1 ELECTRON (SOLAR FLARE) COUNTER 5 COSMIC RAY SCINTILLATORS	10	KC/S
2 CHANNELS @ 100 C/S 1 METEORITE SENSOR 1 PROTON (SOLAR WIND) COUNTER	200	C/S
6 CHANNELS @ 10 C/S 3 SEISMOMETERS 2 TRACKING RECEIVERS 1 SOLAR NOISE RECEIVER	60	C/S
GUARD SPACE ALLOWANCE	19.74	KC/S
TOTAL BANDWIDTH	250	KC/S

DUAL-MODE TELEVISION SYSTEM

4 FOOT DIAMETER ANTENNA

1 INCH VIDICON

MODE A	MODE B	
160	1024	LINES
160	1024	ELEMENTS/ LINE
15	0.4	FRAMES/SEC.
200	200	KC BANDWIDTH
5	5	WATTS ANTENNA POWER
41	41	DB. S/N $\left(\frac{\text{PEAK-TO-PEAK SIGNAL}}{\text{RMS NOISE}}\right)$

CAPSULE CROSS-SECTION

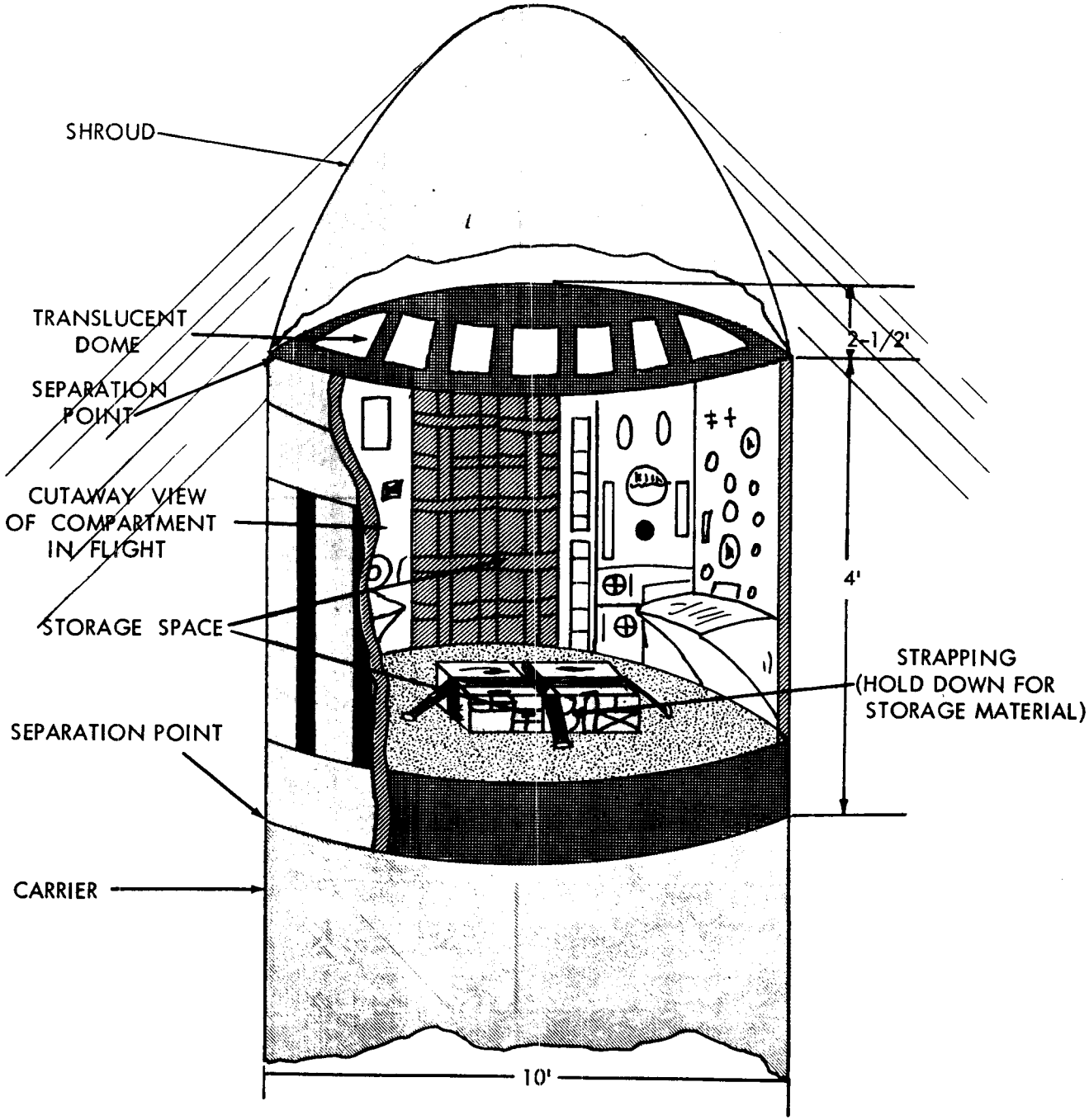
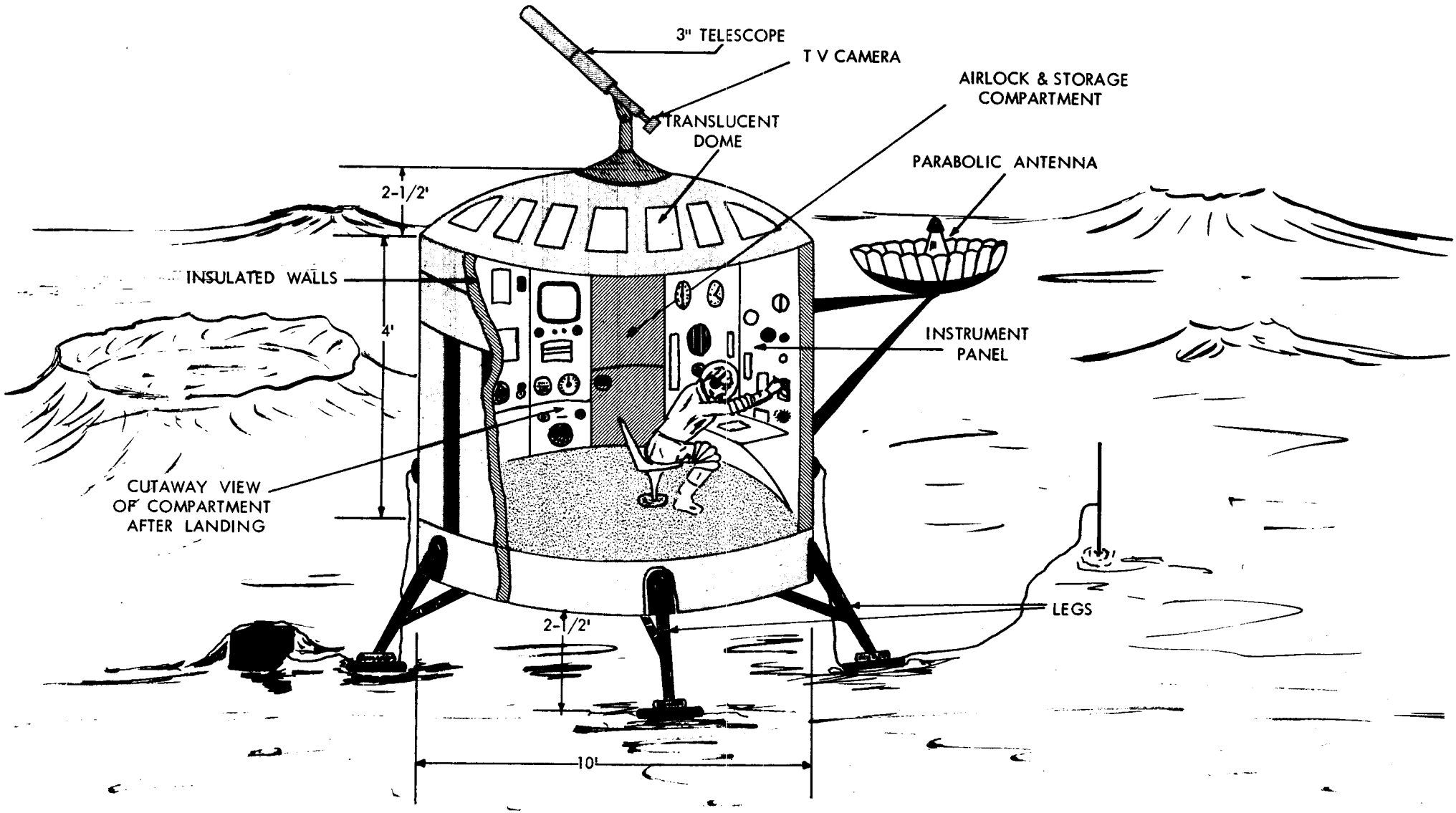
LUNAR SCIENTIFIC FACILITY