BELLCOMM, INC.
955 L'ENFANT PLAZA NORTH, S.W. WASHINGTON, D.C. 20024

B69 09098

SUBJECT: Analysis of the Parallel Operation of the AM and ATM EPS on the SWS - Case 620

DATE: September 30, 1969

FROM: B. W. Moss

ABSTRACT

A computer simulation model which describes the Saturn V Workshop Electrical Power System is used to evaluate performance with the individual power systems (AM and ATM) paralleled. A set of operating conditions is described which permits interchange of power between the systems so that positive margin can be maintained on each system.

Operating independently and supplying projected mission average loads, the power supplied and margins are

AM EPS:3810 w (+15 w margin)

ATM EPS:2885 w (+715 w margin)

With the systems paralleled and no-load voltage settings of VAM = 29.6 volts and VATM = 30.4 volts, the power supplied and margins are

AM EPS:3539 w (+286 w margin)

ATM EPS:3170 w (+430 w margin)

In all cases, bus voltages are maintained sufficiently above specified minimum voltage limits at mission average power levels to provide reasonable assurance that they will be acceptable at higher power levels.

(NASA-CR-107366) ANALYSIS OF THE PARALLEL OPERATION OF THE AM AND ATM EPS ON THE SWS (Bellcomm, Inc.) 15 p

N79-72795

Unclas
00/33 11681

FF No. 602
(PAGES) (CODE)
CR-107366
(NASA CR OR TMX OR AD NUMBER) (CATEGORY)
[redacted]

BELLCOMM, INC.
955 L'ENFANT PLAZA NORTH, S.W. WASHINGTON, D.C. 20024

B69 09098

SUBJECT: Analysis of the Parallel Operation of the AM and ATM EPS on the SWS - Case 620

DATE: September 30, 1969

FROM: B. W. Moss

MEMORANDUM FOR FILE

INTRODUCTION

The Saturn Workshop (SWS) includes an Orbital Workshop (OWS), an Airlock Module (AM), a Multiple Docking Adapter (MDA), and an Apollo Telescope Mount (ATM); the SWS and a docked Command and Service Module (CSM) is the Orbital Assembly (OA). During orbital operations, electrical power will be supplied by a solar array-battery (SA/B) system installed on the OWS/AM and a SA/B system installed on the ATM.

Tables I and II give performance capabilities of the two EPSs. Table III gives the projected loads for the OA from Reference 6 and the resulting system margins.

If the two EPSs are operated independently, existing margin on one system cannot be used to supply power deficit on the other without extensive and complex load transfer networks. If operation were possible in a parallel, power-sharing mode,

1. a more flexible, unified power system would result with no need for switching and complex interconnections to support power transfer,

2. the possibility would exist for integrated and centralized power management and system monitoring, and,

3. less need would exist for astronaut participation in switching of loads.

However, if the systems are paralleled with the presently planned no-load voltage settings - VAM = 31.0 volts and VATM = 29.0 volts - power will transfer from the AM EPS to the ATM EPS further reducing the AM margin and increasing the ATM margin. In order to transfer power from the ATM EPS to the AM EPS, VATM must be set higher than VAM. A computer simulation model has been developed which permits evaluation of the performance of the two systems in a power-sharing mode for various conditions of VAM and VATM.

TABLE I

AM EPS CHARACTERISTICS

AM EPS	
Solar Array (Reference 1)	
Area	1360 ft^2
BOL Power Rating	12100 w
EOL Power Rating (8 mos.)	11600 w *
Net EOL Power Rating	11150 w **
Battery (Reference 2)	
AH Rating	33 AH
WH Recharge Efficiency	0.677
Charger (Reference 2)	
Type	Buck
Efficiency	0.95
Regulator (Reference 2)	
Type	Buck
Efficiency	0.95
Bus Power	
Minimum Continuous (β=0)	4390 w 3825 w ***
Distribution Loss (Reference 4)	15%

* Degraded at 1/2% per month
** Includes 4% penalty for ATM shadowing
*** Includes penalty for bus split 9.1%, regulator mismatch 164 w.

TABLE II

ATM EPS CHARACTERISTICS

ATM EPS	
Solar Array (Reference 3)	
Area	1200 ft^2
BOL Power Rating	10480 w
EOL Power Rating (8 months)	10060 w *
Battery	
AH Rating	20 AH
WH Recharge Efficiency (Reference 4)	0.70
Charger	
Type	Buck
Efficiency (Reference 4)	0.96
Regulator	
Type	Buck/Boost
Efficiency (Reference 4)	0.875
Bus Power	
Minimum Continuous (β=0) EOL	3965 W
	3845 w **
(Reference 5)	3600 w ***
Distribution Loss (Reference 4)	14%

* Degraded at 1/2% per month

** Includes 3% penalty for regulator mismatch (Reference 5)

*** Based on thermal limit for charger-battery-regulator-modules

TABLE III

SWS POWER REQUIREMENTS

(Reference 6)

OWS	1269 w	
MDA (Note 1)	200 w	
AM	966 w	
CSM	1100 w	
System Loss	275 w	(Note 2)
	3810 w	
AM EPS Capability (Table I)	3825 w	
Margin	+15 w	
ATM (Note 4)	2637 w	
System Loss	248 w	(Note 3)
	2885 w	
ATM EPS Capability (Table II)	3600 w	
Margin	+715 w	
Total System Margin	+730 w	

Notes

1. ATM C&D Console located in MDA but powered from ATM.
2. Line loss with VAM = 31.0 volts
3. Line loss with VATM = 29.0 volts
4. Includes cold gas ACS located in OWS and ATM C&D console located in MDA.

ANALYSIS MODEL DESCRIPTION

A network was set up as shown in Figure 1 based on information supplied by Reference 7. The values of the load resistances are determined in the program by assuming an initial value of voltage at the load in question and solving for the resistance by

$$R = \frac{V^2}{P}$$

Where

R = resistance in ohms

V = voltage across R

P = given power in watts

The network is then solved for the loop currents and the voltage across the load determined from

$$V = IR$$

where

R = resistance determined earlier

I = net current through R determined from the loop currents

This voltage is compared to the initial value assumed and, if different by more than an arbitrary limit, the resistance values are recalculated as before using this new value of V. This iteration is continued until subsequent values differ by less than the established limit.

The total power delivered by the AM EPS (PAMT) and by the ATM EPS (PATMT) are determined as is the total system loss (PLOSS). The source and load currents are determined from the loop currents. The voltages at the various buses -- AM main bus (VAML), CM main bus (VCM), and ATM main bus (VATML) -- are determined. The minimum acceptable limits for these bus voltages are VAML (min) = 27.0 v., VCM (min) = 26.5 v., and VATML (min) = 26.0 v.

The program is so written that any of the system parameters -- voltage setting, power, cabling resistance,

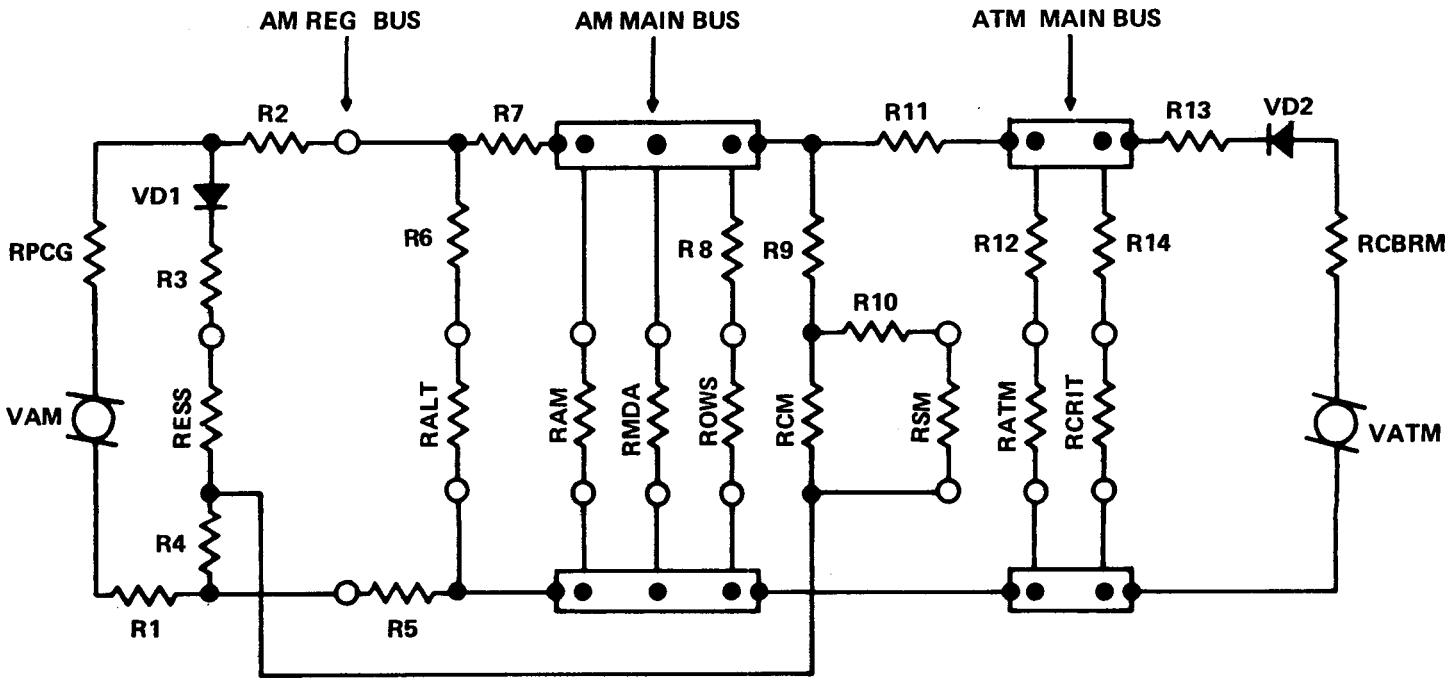

VAM = AM REG NO - LOAD VOLTAGE
VATM = ATM REG NO-LOAD VOLTAGE
VESS = AM ESSENTIAL BUS VOLTAGE
VALT = AM ALTERNATE BUS VOLTAGE
VAML = AM MAIN BUS VOLTAGE
VOWS = OWS BUS VOLTAGE
VCM = CM MAIN BUS VOLTAGE
VSM = SM MAIN BUS VOLTAGE
VATML = ATM BUS VOLTAGE
VCRIT = ATM CRITICAL BUS VOLTAGE

VDI = ISOLATION DIODE DROP
VD2 = ISOLATION DIODE DROP
RPCG = AM REG DROOP (PER REG)
RCBRM = ATM REG DROOP (PER REG)
R1, R2 = CABLING RES (REG TO BUS)
R3,R4,R6, R8, R12, R14= CABLING RES (BUS TO LOAD)

R5, R7, R9, R10, R11, = CABLING RES (BUS TO BUS)

R13 = CABLING RES (CBRM TO BUS)

RESS = AM ESSENTIAL BUS LOAD
RALT = AM ALTERNATE BUS LOAD
RAM = AM LOAD
RMDA = MDA LOAD
ROWS = OWS LOAD
RCM = CM LOAD
RSM = SM LOAD
RATM = ATM LOAD
RCRIT = ATM CRITICAL LOADS
NPCG = NUMBER OF PCGS IN PARALLEL
NCBRM = NUMBER OF CBRMS IN PARALLEL

FIGURE 1 - SYSTEM NETWORK

number of regulators in parallel -- can be changed at will for system tradeoff evaluation. A set of 42 data points were run for which the number of iterations per data point averaged 8. Each data point consists of a determination of all load currents, bus voltages, power delivered by each EPS, and total system loss for a given set of cabling resistance, AM and ATM no-load voltage settings, and load requirements.

EVALUATION OF RESULTS

The data points examined were for values of VAM between 28.8 v and 31.0 v and for VATM between 28.0 v and 30.4 v. Where data were not available for some of the network components, e.g., the umbilical connecting the AM and ATM main buses, values were assumed which were consistent with the values of the other network components. Figures 2 and 3 show the power sharing performance and bus voltages respectively as functions of ATM and AM no-load voltage settings. Figure 4 shows the total system losses. Figure 5 shows the transfer current.

CONCLUSIONS AND RECOMMENDATIONS

From Figure 3, we see that the CM bus voltage cannot be maintained above its minimum limit of 26.5 volts for any AM setting below 29.6 volts unless the ATM setting is above 29.6 volts. If now, we establish the AM no-load voltage setting at 29.6 volts, Figure 2 shows that the AM power capability is exceeded for any ATM setting below 29.53 volts. In order to maintain some margin on each EPS, an ATM no-load voltage setting of 30.4 volts is recommended.

For purposes of comparison, a run was made for which R11 (the power transfer umbilical between AM & ATM buses) was set at 10000 ohms (effectively an open circuit). These two conditions are compared on Table 4 for the same loads and same voltage settings as well as for the planned voltage settings.

The advantages of operation in the power-sharing mode are apparent in the comparison.

ACKNOWLEDGEMENT

The assistance and advice of Mrs. P. R. Dowling in some of the more difficult programming steps is gratefully acknowledged.

1022-BWM-cf

B. W. Moss

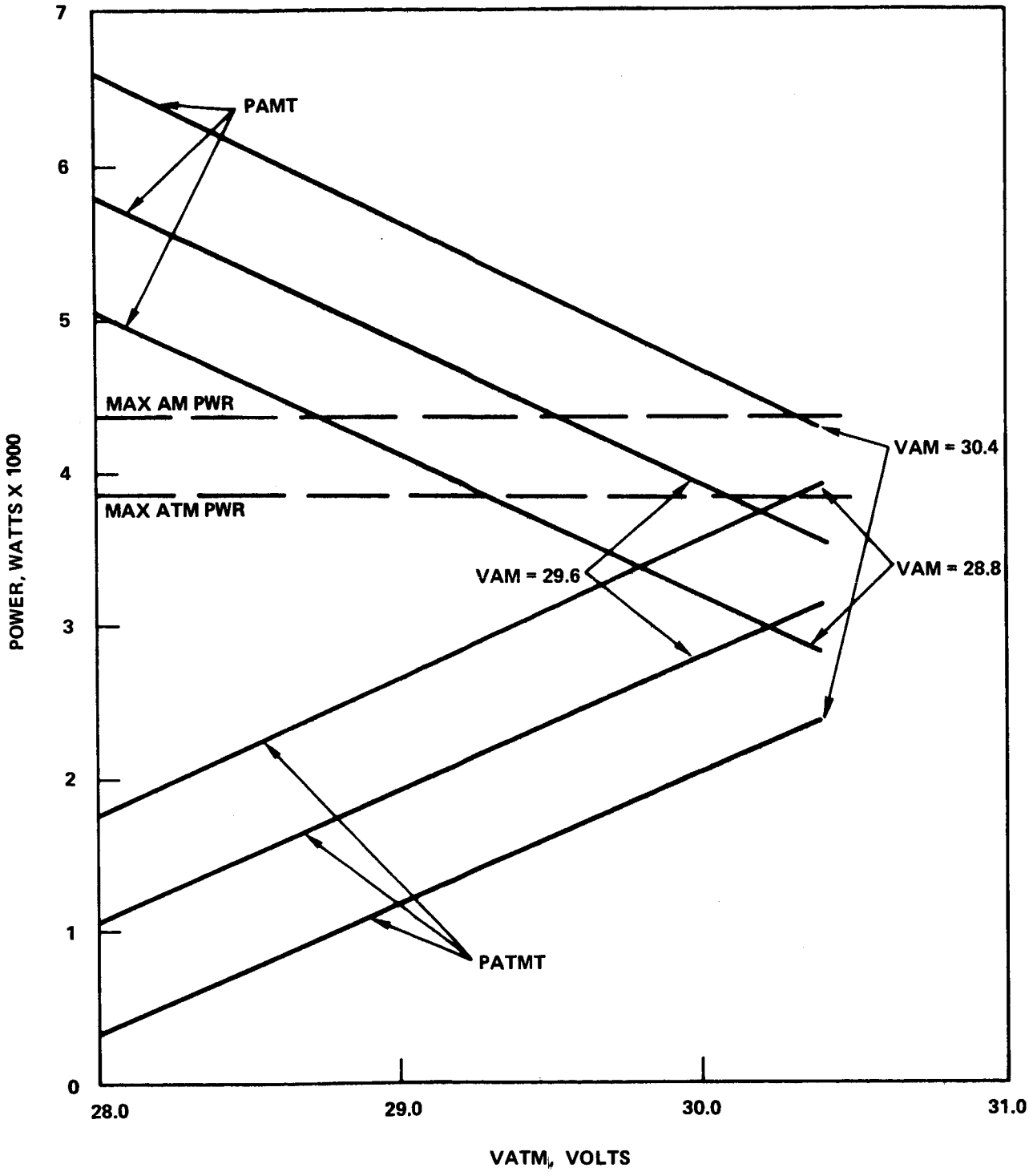

FIGURE 2- POWER SHARING

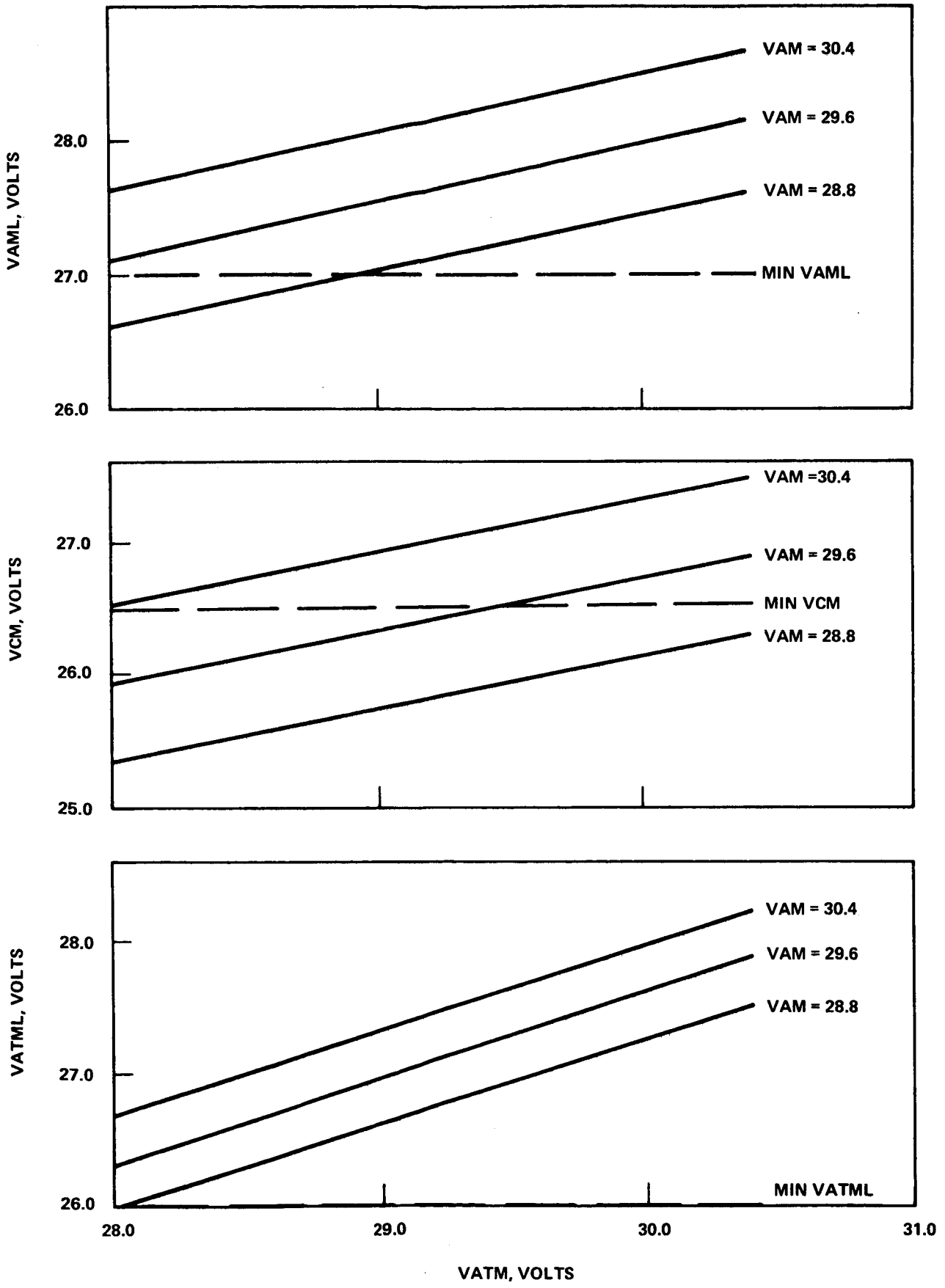

FIGURE 3- BUS VOLTAGES

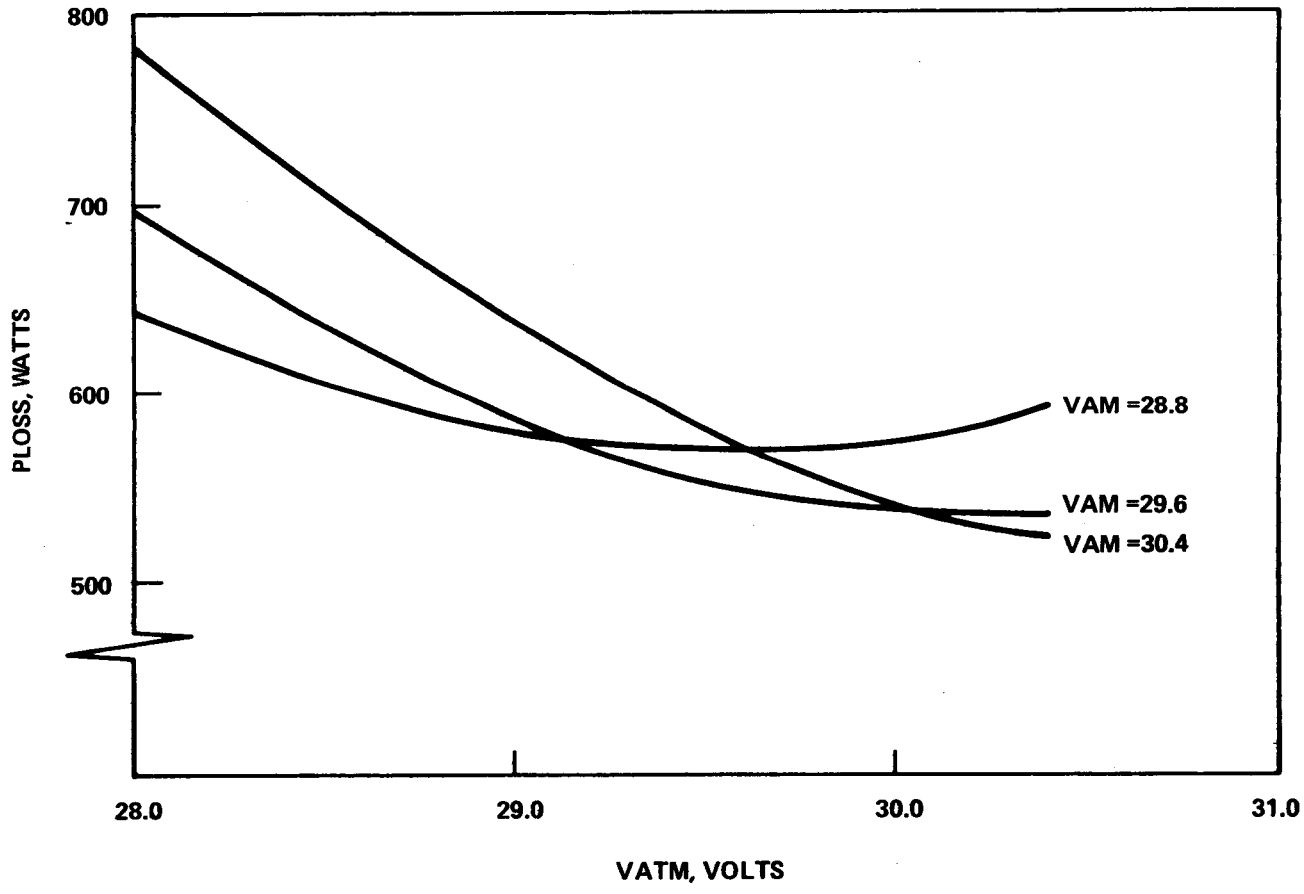

FIGURE 4 - SYSTEM LOSS

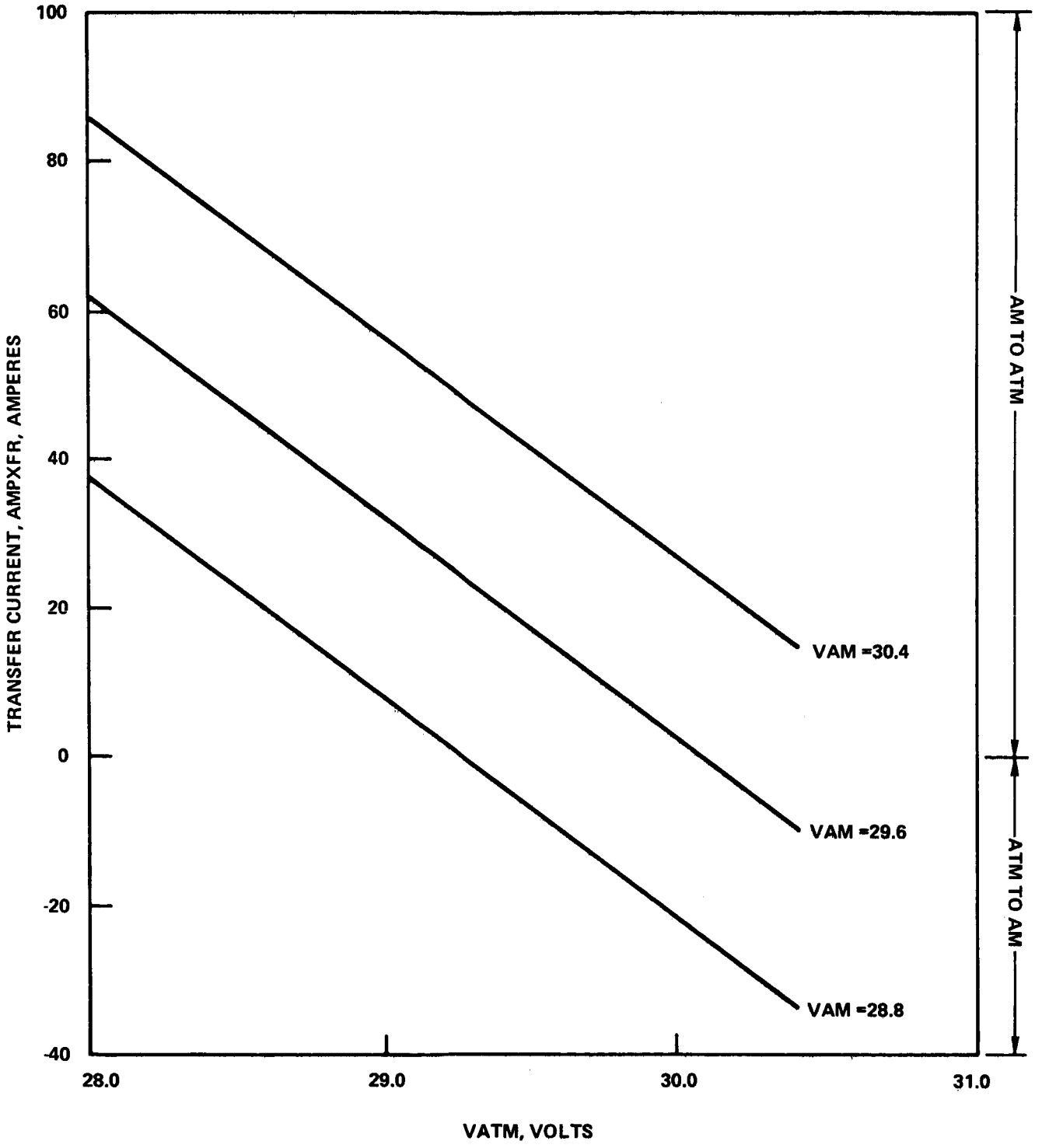

FIGURE 5 - TRANSFER CURRENT

TABLE IV

COMPARISON OF POWER SHARING AND INDEPENDENT OPERATION

	INDEPENDENT		POWER SHARING
VAM	31.0 v.	29.6 v.	29.6 v.
VATM	29.0 v.	30.4 v.	30.4 v.
AM EPS Load	3535 w	3535 w	
AM EPS Line Loss	275 w	307 w	
PAMT	3810 w	3842 w	3539 w
AM EPS Capability	3825 w	3825 w	3825 w
AM EPS Margin	+15 w	-17 w	+286 w
AMT EPS Load	2637 w	2637 w	
ATM EPS Line Loss	248 w	227 w	
PAMT	2885 w	2864 w	3170 w
ATM EPS Capability	3600 w	3600 w	3600 w
ATM EPS Margin	+715 w	+736 w	+430 w
AM and ATM Loads	6172 w	6172 w	6172 w
Total Line Loss	523 w	534 w	537 w
Total System Load	6695 w	6706 w	6709 w
Total Capability	7425 w	7425 w	7425 w
Total System Margin	+730 w	+719 w	+716 W
VAML	29.47 v.	27.99 v.	28.12 v.
VCM	28.30 v.	26.74 v.	26.87 v.
VATML	26.50 v.	27.99 v.	27.86

REFERENCES

1. Weight and Performance Review, MSFC, 9/26/68

2. Airlock Electrical Power System Specification (Preliminary), MDAC, Report G-076, 4/8/68

3. Baseline Review, Hq., 2/27/68

4. D. Baker and R. Lanier, MSFC, Personal Communication, 3/5/68

5. ATM CBRM Critical Design Review, 9/4/69

6. Saturn V Workshop, Program Definition Study, Technical Considerations, MSFC, 7/7/69

7. Minutes of Second AAP Power Working Group Meeting, 5/22/68

BELLCOMM, INC.

Subject: Analysis of the Parallel Operation of the AM and ATM EPS on the SWS - Case 620

From: B.W. Moss

Distribution List

NASA Headquarters

H. Cohen/MLR
P. E. Culbertson/MLA
J. H. Disher/MLD
W. B. Evans/MLO
L. K. Fero/MLV
J. P. Field, Jr./MLP
T. A. Keegan/MA-2
M. Savage/MLT
W. C. Schneider/ML

MSC

R. Cohen/KS
H. W. Dotts/KS
P. S. Miglicco/KS
J. D. Murrell/EP-5
R. F. Thompson/KA

MSFC

R. M. Aden/S&E/ASTR/E
L. F. Belew/I-S/AA
H. J. Fichtner/S&E/CSE/G
C. B. Graff/S&E/ASTR/EP
G. Hardy/I-S/AA
J. McDonough/S&E/CSE/A
J. D. Stroud/S&E/ASTR/SE

Bellcomm

A. P. Boysen
D. R. Hagner
W. G. Heffron
B. T. Howard
J. Z. Menard
J. M. Nervik
J. W. Timko
R. L. Wagner
M. P. Wilson

Departments 2031, 2034 Supervision
Department 1024 File
All members Division 102
Central File
Library