869 01018

BELLCOMM, INC.
955 L'ENFANT PLAZA NORTH, S.W. WASHINGTON, D. C. 20024

SUBJECT: The RB-57F - NASA Earth Resources Aircraft Second Design Review, General Dynamics, Fort Worth, Texas, October 31, 1968 - Case 630

DATE: January 10, 1969

FROM: B. E. Sabels

ABSTRACT

The RB-57F high flying aircraft and its earth resources sensor payload will be delivered to NASA-MSC in April, 1969. The Phase 1 payload of photographic, imaging and spectral sensors is almost identical with the present P3A (Electra) payload flown out of MSC over earth resources test sites. However, while a crew of 10-14 operate the P3A payload, this role plus the guidance of the plane will be carried out largely by a Model 6211 inflight programmer computer. The presence of a crew of two on 1969-70 RB-57F test flight missions will be necessary. Potentially, the aircraft and its payload could be operated fully automatically during later test flight phases (without any crew).

It is expected that the experience of the RB-57F earth resources sensor operation will impact scientific experimentation in the unmanned earth applications programs and on manned space stations of the AAP era.

(NASA-CR-104037) THE RB-57F - NASA EARTH RESOURCES AIRCRAFT SECOND DESIGN REVIEW, GENERAL DYNAMICS, FORT WORTH, TEXAS, OCTOBER 31, 1968 (Bellcomm, Inc.) 24 p

N79-72922

Unclas
00/43 11469

FF No. 602(A)
27 (PAGES)
CR-104037 (NASA CR OR TMX OR AD NUMBER)
[redacted]
None (CODE)
(CATEGORY)

BELLCOMM, INC.
955 L'ENFANT PLAZA NORTH, S.W. WASHINGTON, D.C. 20024

SUBJECT: The RB-57F - NASA Earth Resources Aircraft Second Design Review, General Dynamics, Fort Worth, Texas October 31, 1968 - Case 630

DATE: January 10, 1969

FROM: B.E. Sabels

MEMORANDUM FOR FILE

I. INTRODUCTION

Preliminary information on the RB 57F - NASA Earth Resources aircraft program was presented by this writer in an earlier memorandum.* Since then, General Dynamics, Fort Worth, has contracted with NASA-MSC to modify one RB-57F aircraft and equip it with a Phase 1 sensor pallet, using existing cameras and other sensors. G.D. has expended some 4,000 man hours of study work to define the $1.7 Million program. They are presently overhauling the aircraft assigned by the U.S. Air Force. As of November 4, 1968, a mockup of the sensor pallet and the controls in the co-pilot's station are ready (Fig. 1,2,3). The engineering drawings are considered final, and the procurement phase (November 68) will be followed by the manufacturing phase (December 68 through March 69) for a flight test and delivery target of April 1969.

The second design and status review held on October 31, 1968, gave the approximately 30 participants from NASA, Air Force and General Dynamics one more opportunity to discuss the proposed Phase 1 sensor pallet. Some rearrangements of hardware were suggested, as pointed out below. This writer was impressed by the detailed planning, especially relating to the programming of navigation, mission control, and sensor operation, a good part of which must be considered applicable to the scientific payload operation on manned and unmanned orbital platforms and space stations of the AAP series. The subject will be stressed below.

II. PALLET CONFIGURATION AND GROUND SUPPORT CART

Figure 4 displays the phase 1 sensor pallet, consisting of (1) 6 multispectral 70mm cameras, (2) RS-7 IR

---

*B.E. Sabels, The RB-57F Aircraft Program for Earth Resources Remote Sensing, Case 710, Memorandum for File, February 16, 1966, Bellcomm, Inc.

scanner imager, (3) NAS9-6817 IR radiometer, (4) fast-scan IR spectrometer, (5) 35mm borehole camera, (6) 2RC8 cameras, IR and BW, (7) APN-159 radar altimeter, (8) various support experiments.

The sensor complement agrees with the present P3A aircraft payload configuration, except for the radar altimeter (7). Therefore, its composition appears to be largely dictated by availability. The complement, including pallet structure and support facilities, exceeds the weight allowance set forth in initial NASA-USAF agreements. About 2/3 of the weight is contributed by sensors, and 1/3 by support and structural material. It is expected that new, especially developed sensors will be integrated into the Phase 1 payload one by one, replacing the present sensors. Thus, we will gradually arrive at a Phase 2 payload after a number of substitutions.

Figure 5 gives the air conditioning schematic for the Phase 1 payload. Windows, spectrometer enclosures, power supplies and recorders are objects of environmental control.

The sensor pallet will be stationed at NASA-MSC/ Ellington AFB except for missions and modifications. While on the ground and in transit, the pallet will be housed in the ground support cart. The cart, described in Figure 6, allows simulation of airplane signals, has provisions for electric power and air conditioning, testing and data reduction equipment. Besides storage, the cart will make possible the testing and operation of equipment on the pallet, and the testing of the airplane and equipment with the pallet by the side of the aircraft.

III. NAVIGATION, STABILIZATION AND RECORDING SYSTEMS

As described in another memorandum*, the payload in NASA-MSC's P3A, which is identical with the RB57F Phase 1 payload (except for the radar altimeter), requires 10-14 people as operators and displays some 50 square feet of instrument panel. Considerable automation of navigation,

---

*B. E. Sabels, A Typical Earth Resources Aircraft Test Flight, Case 630, Memorandum for File, January 1969, Bellcomm, Inc.

operation and recording is required to reduce the service work to the capability of one man. Also, the flying altitude and velocity impose increased accuracy requirements on the navigational system, which can be best solved by automation.

Figure 7 illustrates the system cost in dollars for several systems with navigational error characteristics given in miles/hour. The automatic navigational system to be used for the RB57F is Litton's LTN-51 which is presently being tested by a major airline. Systems with an accuracy exceeding the LTN-51's 1.5 nm/h exist, but are classified and more expensive.

The accuracy analysis of the NASA selected system, as shown in Figures 8a and 8b yields a total navigational error of about 2% of the distance travelled, or a 95% position probability of being within 3.81% of the distance travelled. Because the distance between service base and test site will be about 500-1000 miles, the automatic system will deliver the plane at target within an error circle of about 20 to 40 miles, if no updating occurs. With corrective inputs from radio beacons etc., the plane can reach its target automatically within a few miles.

The navigational system is illustrated in Figure 9. The key role of the programmer computer, autopilot and navigational computer is clear. Mission and traffic control is performed by eight radio links, which are as follows. UHF radio permits short range voice transmission air-to-air or air-to-ground, in the 225 to 399.9 mc range. VHF radio permits voice transmission in the 116 to 149 mc range. HF radio offers the 2. to 30 mc range for voice, CW or data communication. VHF Nav provides voice and VOR-LVC navigation transmission in the 108 to 152 mc range. ADF provides automatic visual beaming indication of the direction of arrival of RF energy and reception of RF in the range 100-1750 kc. TACAN is the airborne navigation interrogator--responder providing range, azimuth, and beacon identity information with reference to ground stations. The interphone provides high intelligibility intercommunication and radio monitoring, and the LFF provides automatic selective identificative and air traffic control.

The stabilization and holding performance of the automatic pilot is essential for sensor operation. Figure 10 gives 3 sigma limits for pitch, role and yaw under smooth and moderately turbulent conditions. Movements of 20-40 mr/sec

in roll and pitch appear to be in order. This corresponds to a relative motion of two to three times the motion due to the ground speed of the plane. Consequently, the photographic cameras (RC-8 and Hasselblad) will be stabilized, probably with the Aeroflex T-28 mount which, however, has reliability problems.

The recording systems in aircraft and ground cart are similar and give the second crewman the capability of remote control and oscilloscope display of video data. However, most service functions such as calibration, supporting measurements, camera timing, are initiated and carried out within the pallet (Figure 13).

IV. PROGRAMMER COMPUTER

The most significant innovation in the earth resource sensor payload is the programmer computer, that will in effect take over 90% of the payload operational function, if comparison with the P3A payload and its 10 operations is made, in addition to operating the aircraft. The automatic operation of the RB57F payload will no doubt affect automatic scientific spacecraft and space station payloads, and it is therefore considered to be very significant.

Figures 12 and 13 outline the programmer functions. The Model 6211 inflight programmer is operated by tape that is prepared at the USAF Logistics Command in implementation of mission objectives. The primary function of the programmer is to update the taped program with actual flight data, such as drift, and other corrections, and to put out guidance and control signals for the operation of the aircraft. In addition, the programmer initiates all service and operational signals necessary for the payload activation. The crew members have the option to override the computer or to modify the program at any time. This is their primary function. Without crew interference, the programmer computer will guide the aircraft through a flight mission as programmed by AFLC (AF Logistics Command).

V. SCHEDULE AND OTHER ITEMS

Figure 14 gives the program completion schedule, which will probably slip by one month, leading to a delivery in April 1969, based on a 5-day workweek. Monthly design reviews are intended. The design was considered frozen with

the completion of this meeting. Several design problems were addressed, such as the relocation of the RS7 power supply system to simplify the air conditioning system, and to make space available for a dual channel spectrometer. The size of optical (fused silica) windows was discussed, which is critically related to lead time and cost. Procurement must be initiated now, so that windows and all other items are at hand by February 28, 1969.

VI. SUMMARY AND CONCLUSIONS

By April, 1969, the NASA Earth Resources Survey Program will have at its disposal a high flying aircraft and experimental sensor payload that represents a significant advance over low flying payloads operated to date, and a step function increase in automation and utilization of man. Military know-how has been applied to the needs of a civilian program, and room has been made for improvements of sensors and capabilities toward manned and unmanned space systems. Specifically, the off-loading of the crew by computer systems makes the presence of man for the operation of the payload and the aircraft almost a matter of choice.

Clearly, the NASA RB 57F will require an operator for the key functions of the sensor payload. But the functions of this operator could be taken over by the computer as well, if desired. Complete computerization of the RB 57F payload operation may even have some advantages because the second station operator will not be able to act as a technician nor as a decision maker. Therefore, he is little more than a passenger.

B. E. Sabels

1015:BES:mat

Attachments
Figures 1-14

FIGURE I - RB57F SECOND STATION, LEFT SIDE

FIGURE 2 - RB57F SECOND STATION, RIGHT SIDE

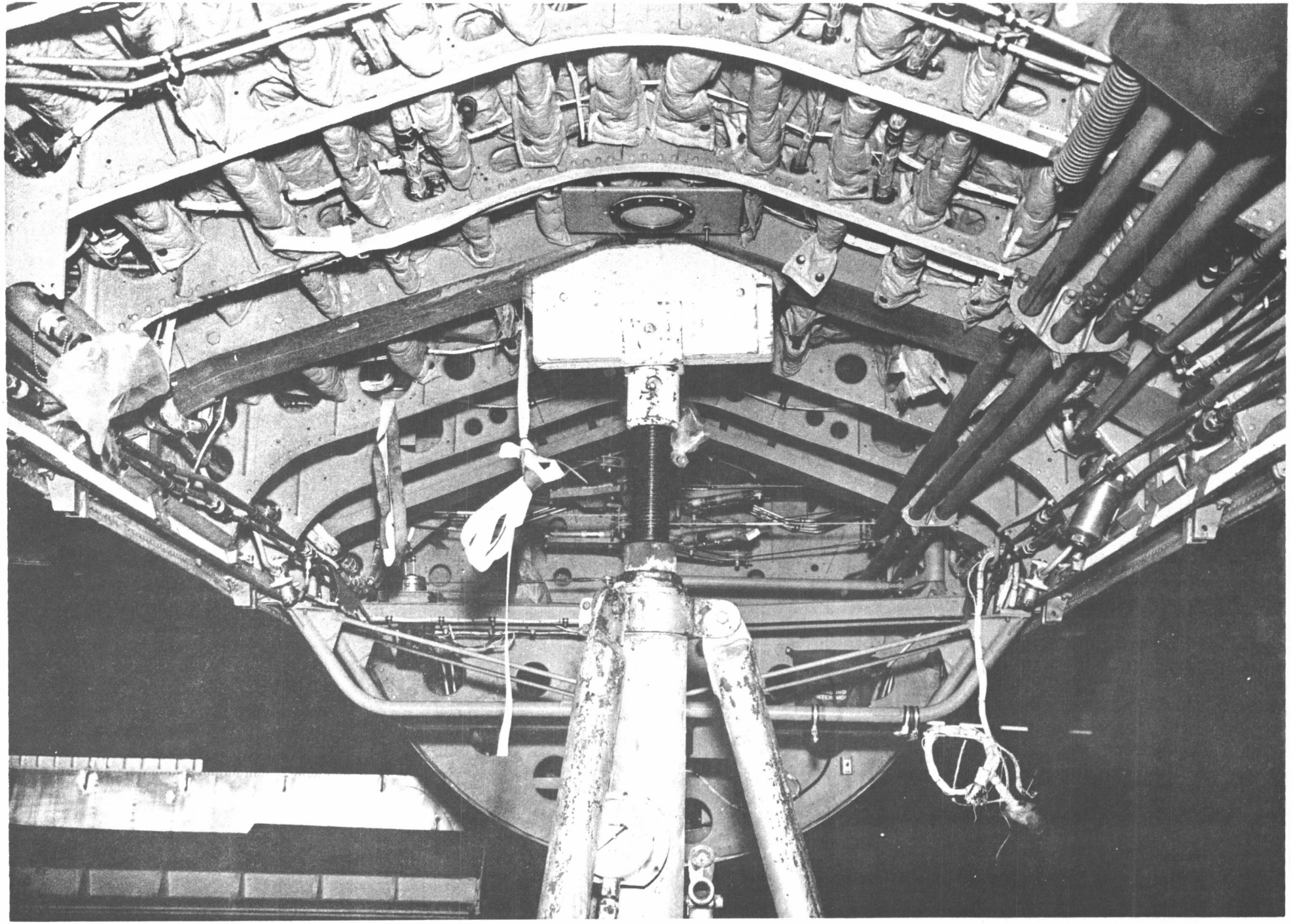

FIGURE 3 - RB57F INSTRUMENT BAY (BOTTOM REMOVED)

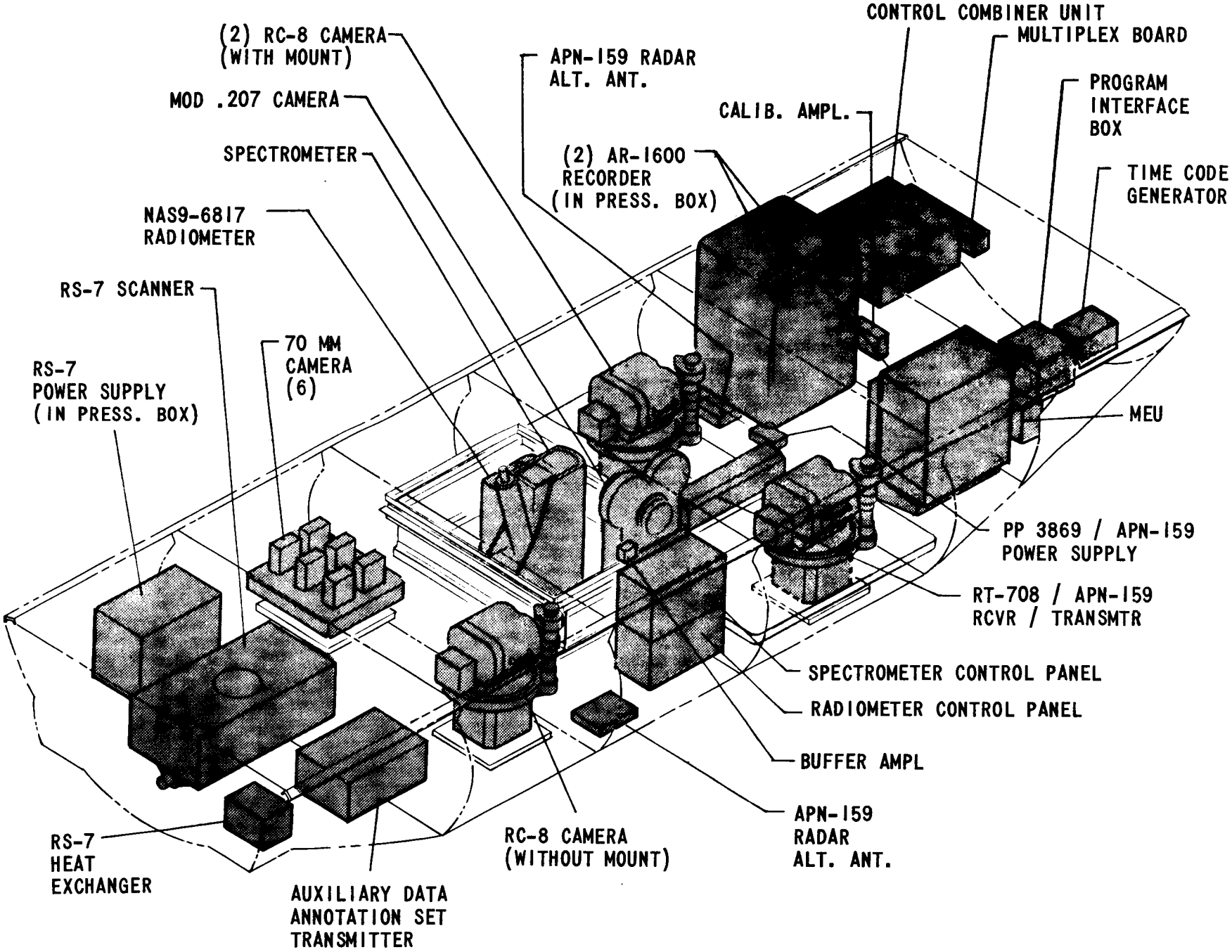

FIGURE 4 - NASA PALLET CONFIGURATION

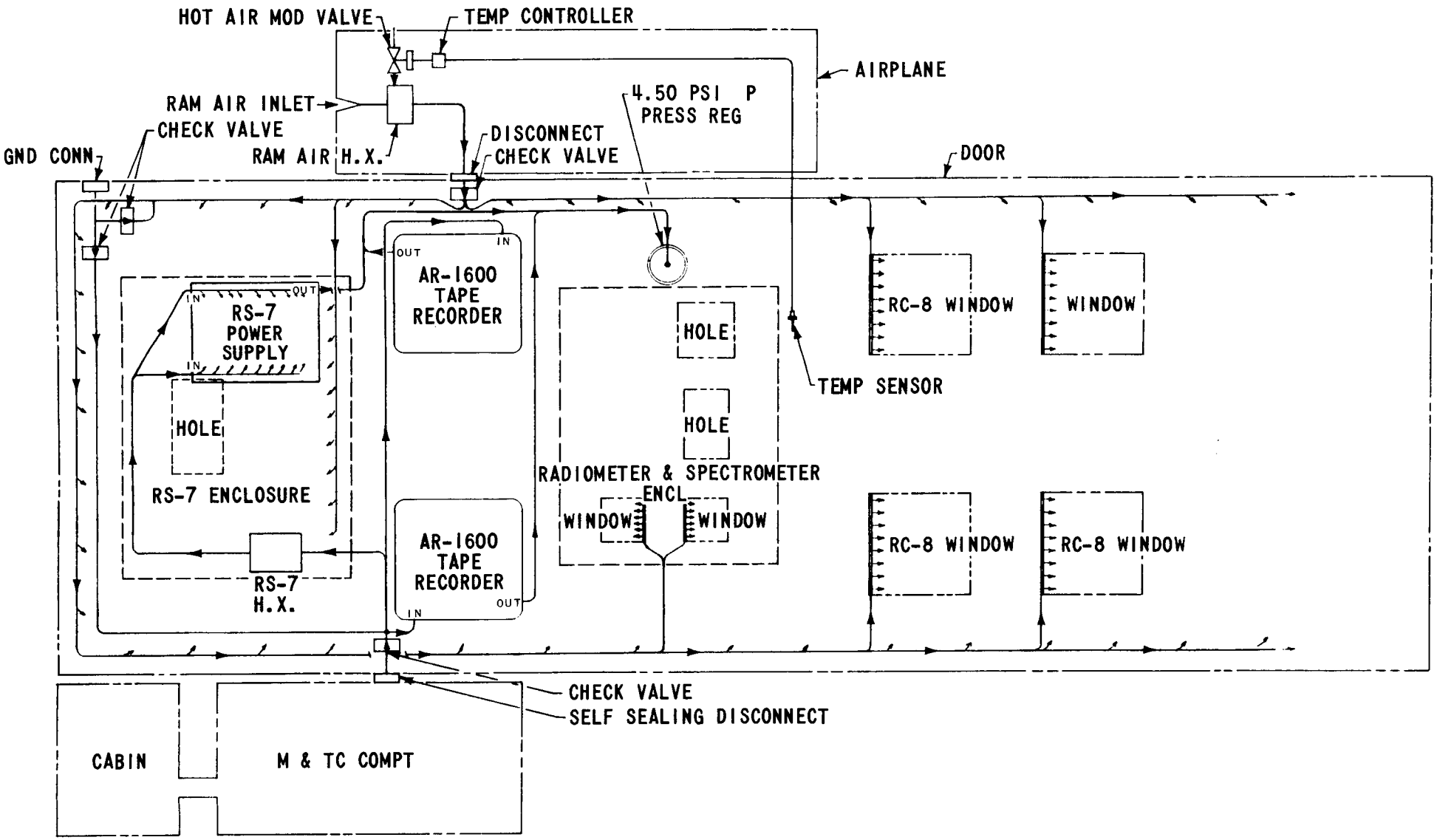

FIGURE 5 - PROPOSED ECS SCHEMATIC FOR 0044-RR-G26 PAYLOAD

- CHECKOUT PHILOSOPHY
    1. Operation & Test of Equipment on Pallet
    2. Test of Airplane
    3. Test of Airplane and Equipment with Pallet by Side of Airplane

- CONTENTS OF CART
    - Simulator of Airplane Signals
    - Space Provisions for Control Panels
    - Data Reduction Equipment
    - Test Equipment
    - Test Harnesses
    - Storage Facilities
    - Provisions for Electric Power & Air Conditioning

FIGURE 6 - GROUND SUPPORT CART

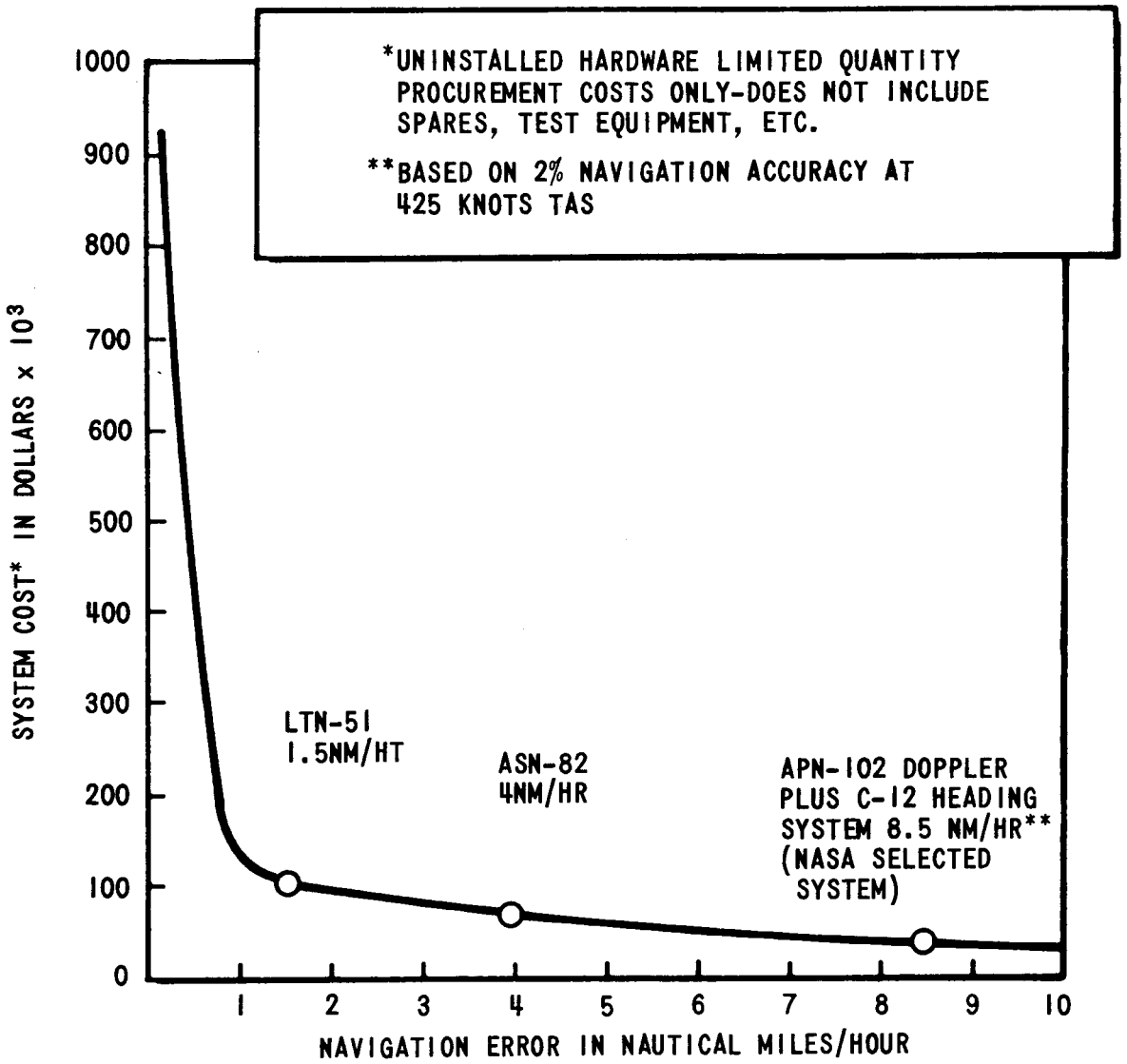

FIGURE 7 - NAVIGATION SYSTEM ACCURACY/COST RELATIONSHIP

NAVIGATION SYSTEM ACCURACY	TRACK ERROR IN %	CROSSTRACK ERROR IN %
Directional Errors		1.665
Doppler Errors		
a. .3% + 1.5 kts @ 425 ktas	.65	
b. Drift Angle 1/4^{0}	-	.435
c. Boresight Error 1/4^{0}	-	.435
AN/ASN-41A Computer .28%	.20	.20
TOTAL	.68	1.785

Total RMS Nav Error	1.905% of Dist. Traveled
95% Position Probability	3.81% of Dist. Traveled
CEP	1.43% of Dist. Traveled

FIGURE 8a - ACCURACY ANALYSIS OF NASA SELECTED SYSTEM

DIRECTIONAL ERRORS	RMS ERROR IN DEGREES	CROSSTRACK ERROR IN % OF DISTANCE TRAVELED
Flux Valve Error	± 1/4	± .435
Uncompensated Onboard Electric Field Uncert.	± 1/4	± .435
Flux Valve to Doppler Flexure	± 1/3	± .580
Magnetic Variation		
a. Mag Var Mapping Error	± 1/3	± .580
b. Mag Var Entry Error	Negl.	
c. Operator Update Error	± 2/3	± 1.160
d. Mag Var Time Variation (Dinural)	± 1/4	± .435
e. Mag Var Altitude Variation	± 1/4	± .435
	± 1.0	1.665

FIGURE 8b - ACCURACY ANALYSIS OF NASA SELECTED SYSTEM

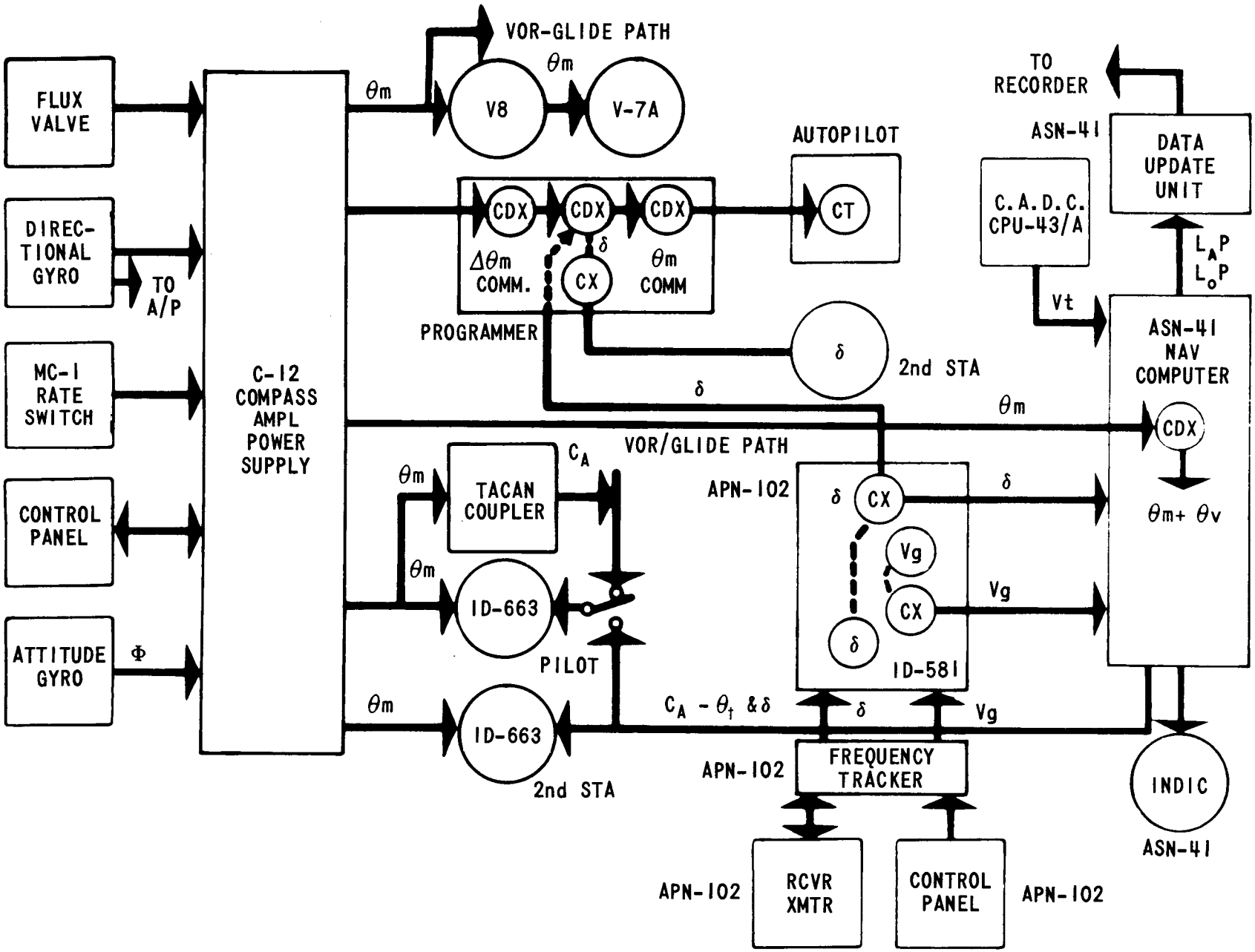

FIGURE 9 - G-26 HEADING AND NAVIGATION SYSTEM

	RATES				DISPLACEMENTS (STATIC AND DYNAMIC)				PRIMARY MODE PERIODS
	SMOOTH		MODERATE TURBULENCE		SMOOTH		MODERATE TURBULENCE		
	0/SEC	MR/SEC	0/SEC	MR/SEC	DEG	MR	DEG	MR	SEC
PITCH									
ELEVATOR CHANNEL	1.0	17.4	2.0	34.8	*0.3	*5.2	0.7	12.2	*1-2
ALT., MACH, IAS	1.4	24.4	2.8	48.8	0.7	12.2	1.7	29.7	*1-2; AND 17-30
ROLL									
AILERON CHANNEL (HDG. HOLD), OR HDG. SELECT	1.0	17.4	2.5	44	*0.5	*8.7	*1.2	*21	*1.3-2.5; AND 20-35
YAW									
RUDDER CHANNEL	*0.1	*1.7	*0.3	*5.2	0.2	3.5	0.5	8.7	*6-10
HDG. HOLD/HDG. SELECT	0.2	3.4	0.5	8.7	*0.4	*7.0	*1.0	*17.4	*6-10; AND 20-35

*FZE-282

FIGURE 10 - RB-57F AUTOPILOT HOLDING PERFORMANCE
(THESE VALUES CORRESPOND TO THE 3σ VALUE OF A STANDARD DISTRIBUTION)

ASSUMED OPERATIONAL CONSTRAINTS

- FLIGHT DURATION 6 TO 8 HOURS — 2 Hrs. Data Taking Over Tgt.
- MAX ALTITUDE OVER TEST SITE
- VISUAL IDENT. OF GND REFERENCES
- VISUAL ESTABLISHMENT OF GND TRACK
- VERTICALITY KNOWLEDGE TO ± .5 DEG.

NAVIGATIONAL ACCURACIES

• OVER LAND (DAY)	± 10 n. mi.
• OVER LAND (NIGHT)	± 10 n. mi.
• OVER WATER	± 20 n. mi.

* In Terms of Latitude & Longitude

USE OF NAVIGATION SYSTEM

- ▶ SIMPLE KNOWLEDGE OF PRESENT POSITION FOR RECORDING
- NEED FOR REAL TIME CORRELATION OF SIGHTING DATA WITH NAV. DATA
- NEED FOR STABILIZATION OF SENSOR DATA WITH PLATFORM VERTICAL
- NEED FOR CONTROL OF AIRCRAFT FLIGHT PATH WITH NAVIGATION SYSTEM

CANDIDATE SYSTEMS

- ▶ DOPPLER RADAR/HEADING-ATTITUDE REFERENCE SYSTEM WITH NAV. COMPUTER
- PURE INERTIAL WITH NAVIGATION COMPUTER
- DOPPLER HARS PLUS LORAN W/NAV.COMP.

INERTIAL PLUS LORAN W/NAV. COMP.

FIGURE 11 - G26 NAVIGATION STUDIES

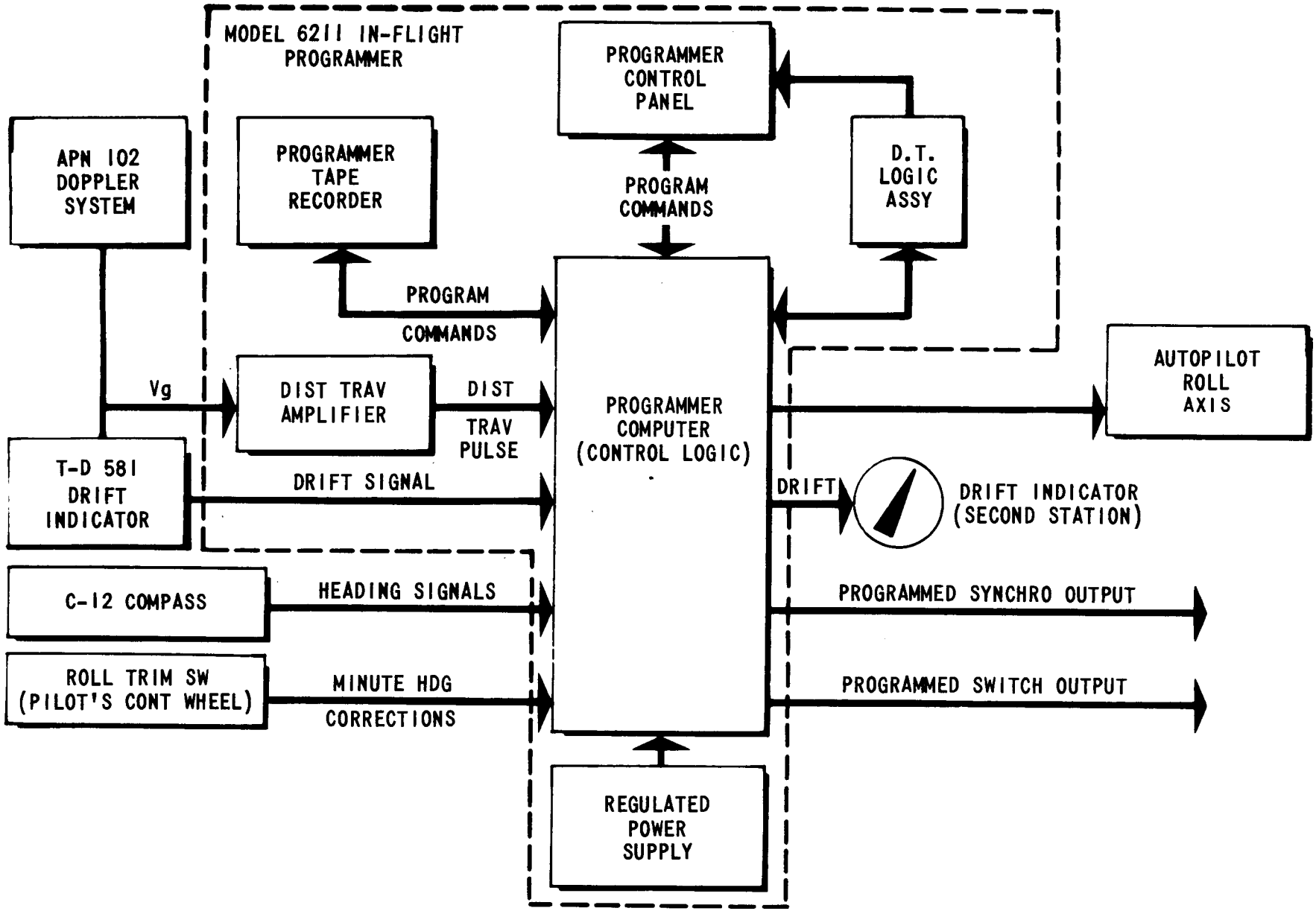

FIGURE 12 - PROGRAMMER BLOCK DIAGRAM

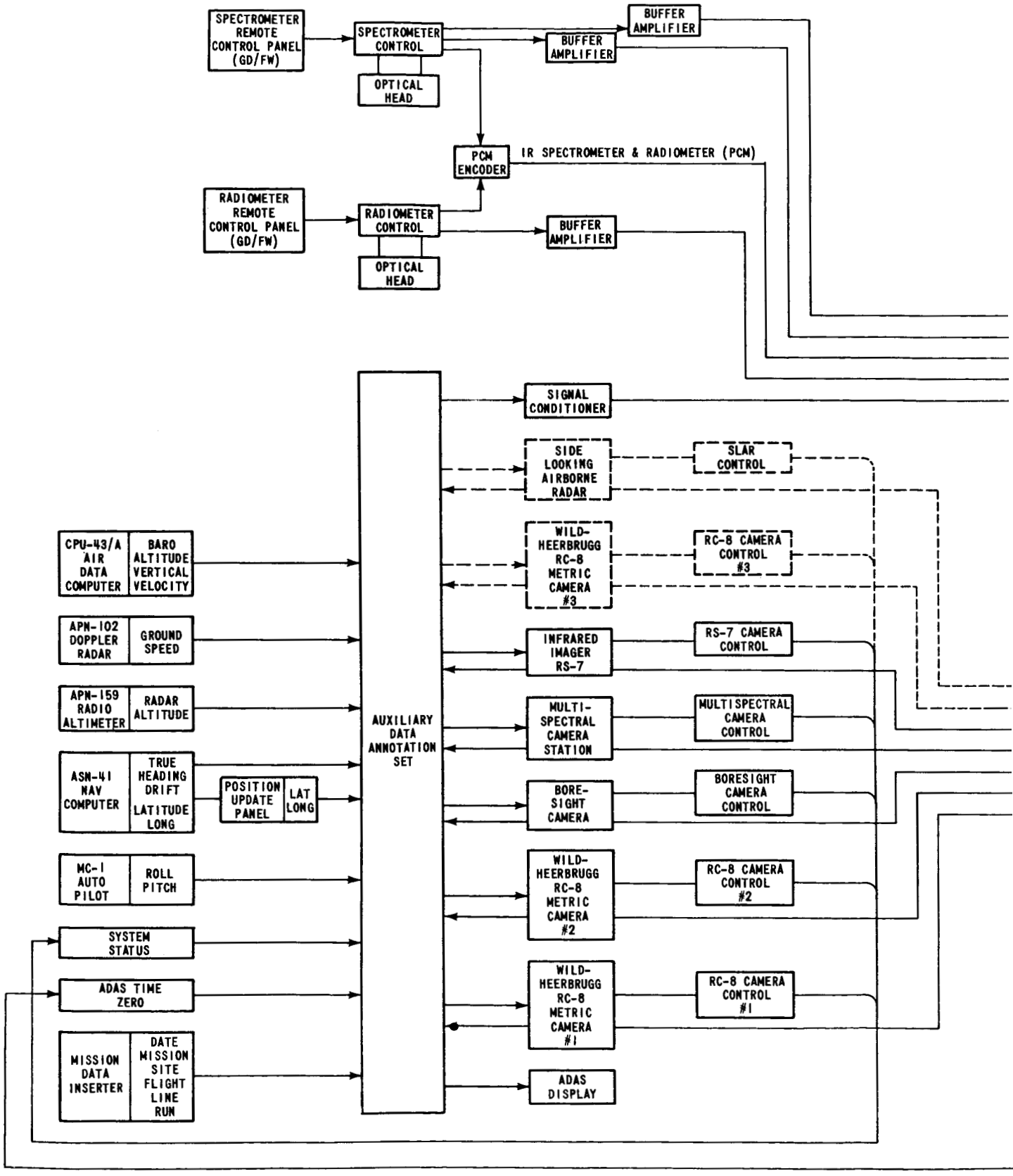

FIGURE 13 - RB57F EARTH RESOU
AIRBORNE RECORDIN

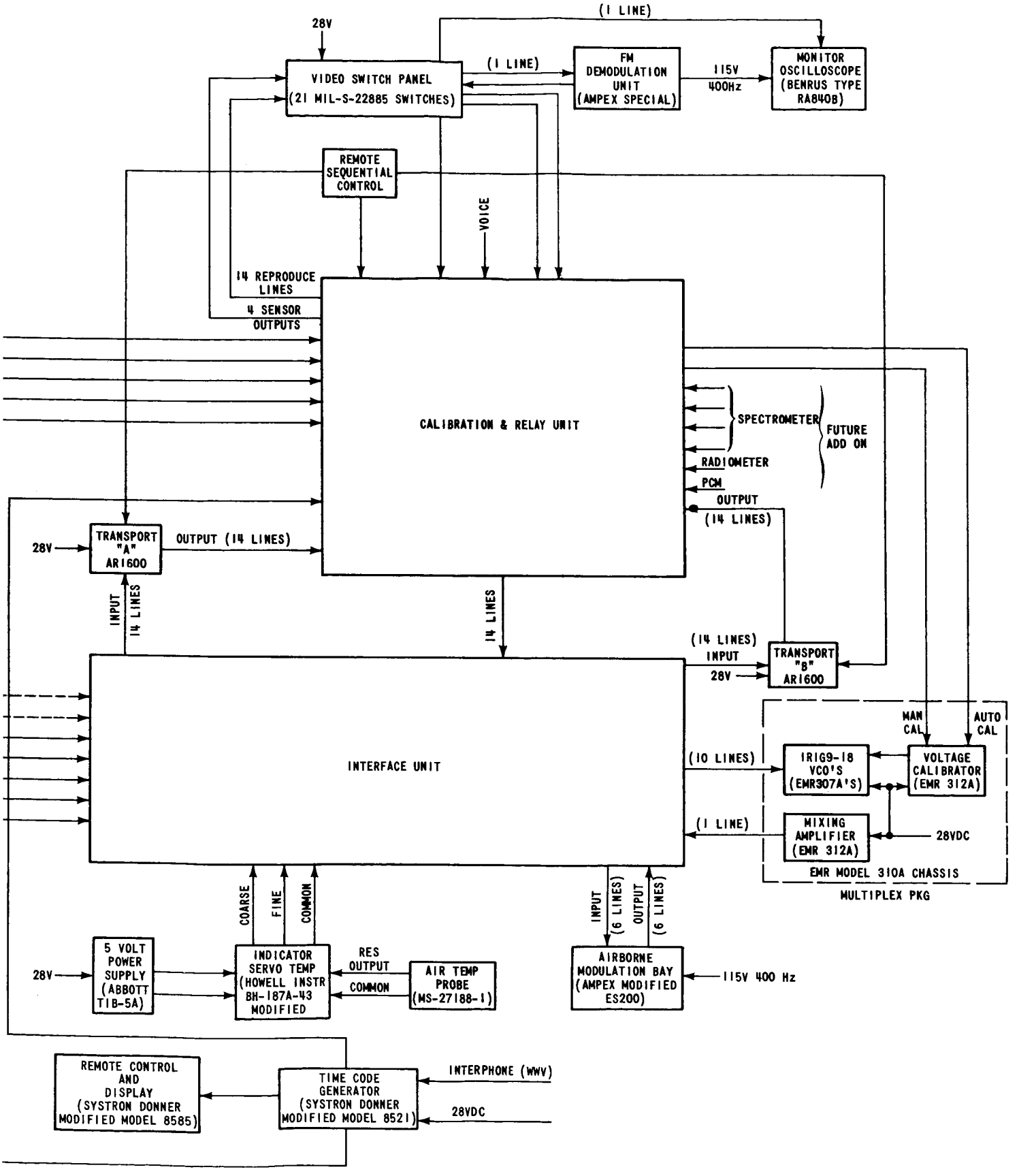

RCES PAYLOAD AND AUXILLARY SENSORS
G SYSTEM (AFTER GENERAL DYNAMICS VB101768)

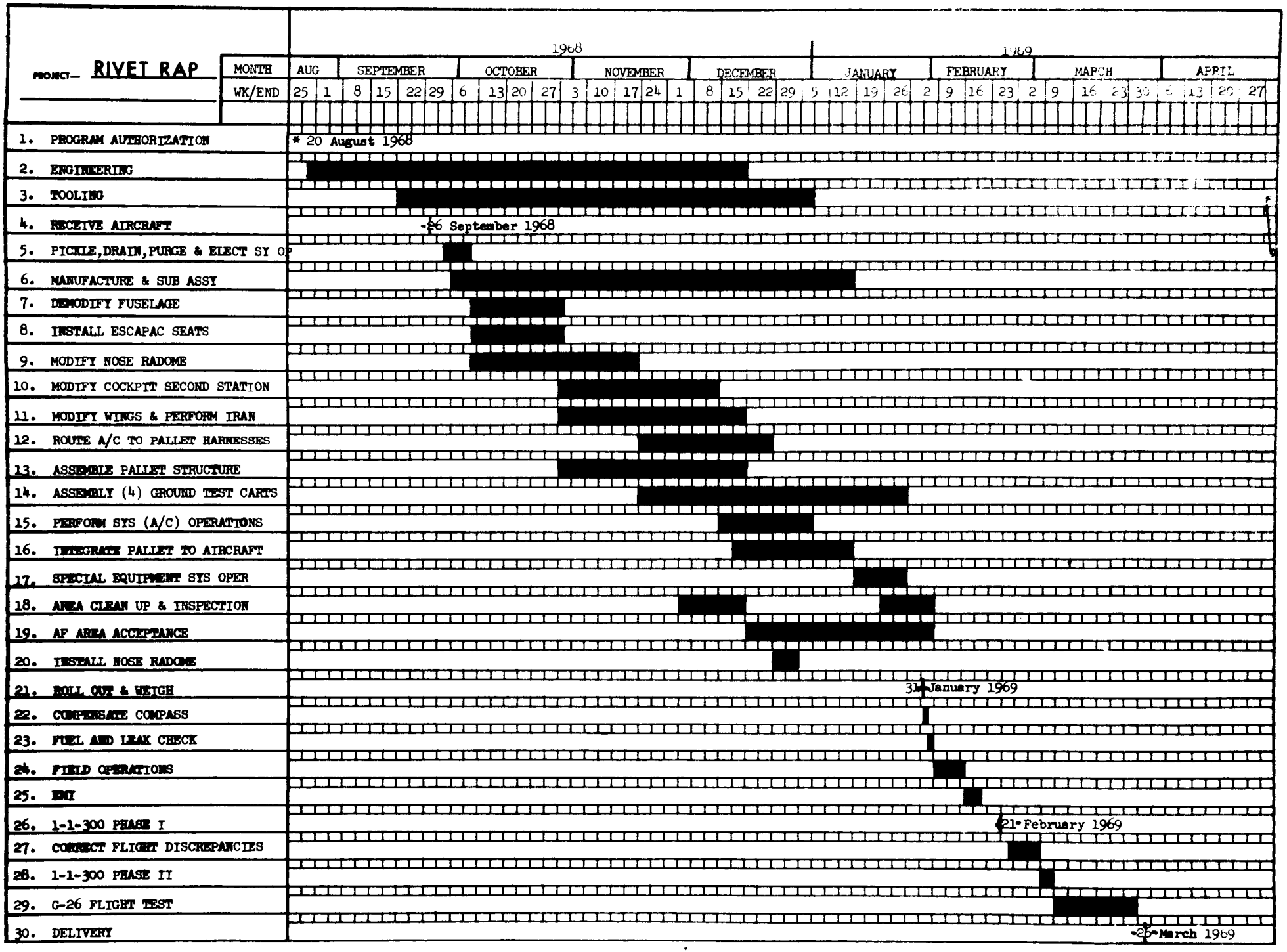

FIGURE 14 - PROJECT COMPLETION SCHEDULE

BELLCOMM, INC.

Subject: The RB-57F - NASA Earth Resources Aircraft Second Design Review, General Dynamics, Fort Worth, Texas, October 31, 1968 - Case 630

From: B. E. Sabels

DISTRIBUTION LIST

NASA Headquarters

W. O. Armstrong/MTX
C. D. Centers/SAR
C. J. Donlan/MD-T
T. A. George/SAB
E. W. Hall/MTG
L. Jaffe/SA
T. A. Keegan/MA-2
J. D. Koutsandreas/SAR
R. L. Lohman/MTY
D. R. Lord/MTD
L. Roberts/OART-M (2)
A. D. Schnyer/MTV
M. Tepper/SAD
R. Terwilliger/MLA
M. G. Waugh/MTP
J. W. Wild/MTE

Manned Spacecraft Center

J. Dornbach/TH3
N. Foster/TF
W. Hess/TA
R. Piland/TH

Bellcomm, Inc.

Messrs. F. G. Allen
G. M. Anderson
J. D. Belz
A. P. Boysen, Jr.
D. A. Chisholm
C. L. Davis
D. A. DeGraaf
J. P. Downs
D. R. Hagner
P. L. Havenstein
N. W. Hinners
W. W. Hough
B. T. Howard
D. B. James
J. Kranton
H. S. London
K. E. Martersteck
J. Z. Menard
G. T. Orrok
I. M. Ross
F. N. Schmidt
J. W. Timko
A. R. Vernon
R. L. Wagner
J. E. Waldo

All Members Division 101
Department 1024 File
Central File
Library