BELLCOMM, INC.
955 L'ENFANT PLAZA NORTH, S.W. WASHINGTON, D.C. 20024

SUBJECT: LM-A Preliminary Design Review
Case 620

DATE: October 21, 1968

FROM: D. P. Woodard
J. E. Waldo

ABSTRACT

Results of the Environmental Control/Thermal working group sessions for the October 8-11, 1968, AAP LM-A PDR are summarized in the following memorandum. Highlights include:

- An increase in the CM to LM-A O_2 transfer rate to 19.4 lbs/hr.
- Increased redundancy in the water pressure control and EVA O_2 supply lines.
- Means to transfer water from the CM to the LM-A storage tanks.

Further analysis is needed to:

- Determine realistic atmosphere interchange conditions between the LM-A and its docked module.
- Specify ATM CDC temperatures in relation to the NASA crew comfort criteria.
- Determine if the present RCS plume deflectors are adequate to protect the stowed ATM solar arrays.

MAR 1969
N79-73049

(NASA-CR-100219) LM-A PRELIMINARY DESIGN REVIEW (Bellcomm, Inc.) 14 p

Unclas
00/54 11372

FF No. 60
CR 100219
(NASA CR OR TMX OR AD NUMBER) (CATEGORY)
[redacted]

BELLCOMM, INC.
955 L'ENFANT PLAZA NORTH, S.W. WASHINGTON, D. C. 20024

SUBJECT: LM-A Preliminary Design Review
Case 620

DATE: October 21, 1968

FROM: D. P. Woodard
J. E. Waldo

MEMORANDUM FOR FILE

The AAP LM-A Preliminary Design Review (PDR) was held at GAEC, Bethpage, New York. Working groups met on October 8-9, and pre-board and board meetings were held October 10-11, 1968. The Environmental Control/Thermal sessions were attended by D. P. Woodard/MLS, J. E. Waldo/MLS, and J. Marsh/MLT for NASA Headquarters. A complete list of the working group and the agenda are attached.

On October 8, 1968, the working group was briefed on the system for the PDR configuration and "post PDR data". The PDR configuration and supporting documentation were according to the mission requirements existing on July 29, 1968.* Effects of changes since the cutoff date were included in a second set of schematics, etc., labeled "post PDR data". The changes affecting ECS/Thermal are deletion of the ARS suit loop and new water storage and interface requirements.

The following sections of the LM-A environmental control subsystem, together with supporting documentation, were reviewed by the ECS/Thermal working group:

(1) OSCPCS - oxygen supply and cabin pressure control section,

(2) AECVS - atmosphere exchange and cabin ventilation section,

(3) HTS - heat transport section,

(4) HRS - heat rejection section,

(5) WMS - water management section,

(6) LCGSS - liquid cooled garment support section.

---

*LM-A Requirements Document-Revision E, updated by letter ARL 225-46, July 29, 1968.

In addition, (7) the design of the RCS plume deflectors (-x axis thrusters) and (8) cooling of the ATM controls and displays console (CDC) located in the LM-A cabin were considered. Group discussions of these topics and recommended changes to the subsystem are summarized in the following paragraphs. More details can be supplied by the authors.

(1) OSCPCS

A schematic of the LM-A OSCPCS is given in Figure 1.

(a) Increase the CM to LM-A O_2 transfer rate from 15 lbs/hr to 19.4 lbs/hr. A higher transfer rate will reduce cabin repressurization time and permit increased flow for EVA.

(b) Provide redundant pressure control lines from the reference pressure source assembly to the water pressure regulators; make the reference pressure source assembly relief valve redundant. These changes should decrease the possibility of reference pressure loss to the water pressure regulators.

(c) Install an O_2 filter in the accumulator - regulator path; use filters with pressure relief by-pass features for non-redundant paths.

(d) Equip the O_2 pre-breathing stations with disconnects and flow limiters as provided in the O_2 umbilical supply; install a redundant O_2 pressure regulator assembly. These changes will provide a redundant O_2 supply for EVA.

(e) Reduce the docked interface leak rate from 0.1 lb/hr. to 0.05 lb/hr. MSC feels that NR data supports a lower leak rate.

(2) AECVS

Preliminary design has assumed that atmosphere exchange between the LM-A and the docked module will be isothermal.

(a) The LM-A ECS has no capability for removing latent heat or for condensation control. The original capability was eliminated by removal of the suit circuit.

(b) Conditions of atmosphere exchange between the LM-A and the docked module require specification; namely:

- supply flow rate;
- supply temperature;
- supply dew point.

Analysis should be performed to determine realistic interchange conditions.

(c) The CEI, ASP 247-1, as now written, is pre-PDR oriented. Considerable work is required to include changes resulting from removal of the suit circuit and the original atmosphere revitalization section.

(d) The need for a CO_2 partial pressure sensor is questioned. CO_2 could build up in localized, low velocity areas.

(3) HTS

The post-PDR HTS/HRS schematic is shown in Figure 2.

(a) Features of the secondary HTS loop have been removed and the secondary recirculation pump has been replumbed into the remaining, primary loop. An automatic switchover is provided from pump 1 to pump 2 (operated from a differential pressure sensor). The third pump is controlled manually.

(b) The freon boilers, for pre-launch and low altitude cooling, vent into the SLA volume. This was not considered to present a major contamination problem.

(4) HRS

(a) The radiators (100 ft^2 maximum area) are designed to operate from 4000 to 700 BTU/hr with an absorbed external input of 30 to 40 BTU/hr. $ft.^2$ The panels are coated with S-13G paint having a solar absorptivity of $.18 \begin{smallmatrix} +.12 \\ -0 \end{smallmatrix}$ and an emissivity of $.85 \pm .05$.

(b) The design operating range is achieved by:

- varying the coolant flow rate (number of operating pumps),
- regenerative heat exchangers,
- manual on-off valve to by-pass the heat exchangers.

(5) WMS

The post-PDR WMS schematic is given in Figure 3.

(a) Recharge capability from the CM is to be provided which will reduce the required number of water tanks from 4 to 3.

(b) The 490 water module is retained from the LM. Suggestions were made to redesign the module to avoid several compromises and to provide increased redundancy and reliability.

(6) LCGSS

The post-PDR LCGSS schematic is attached, Figure 4.

(a) A number of questions were raised as to the heat rejection adequacy of the LCGSS. The present evaporator (type 224) will reject 2000 BTU/hr at an outlet temperature of 45°F and a coolant flow rate of 230 lbs/hr. A RID was submitted to provide 2500 BTU/hr cooling at the same outlet temperature and flow rate.

(b) Additional RID's are:

- provide automatic switching from pump 1 to pump 2 in both pump assemblies;
- provide duplicate, parallel umbilical inlet and outlet water disconnects to each pump-sublimator loop;
- equip each inlet and outlet umbilical path with shut-off valves;
- replace the present sublimators and associated equipment with CM type water boilers and associated equipment.

(c) The heaters in each loop have 125 watts capacity, maintain the minimum loop temperature at 40°F, and require approximately 3/4 hour to dry out the sublimator.

(7) RCS Plume Deflectors

(a) Using GAEC data, the present deflector design is marginal. The stowed ATM solar array should not exceed 240°F. The deflector design results in a plume heat input of about 1/2 solar constant. The steady state equilibrium temperature of the external panel is greater than 200°F in direct sunlight. Plume heating will increase this temperature.

(b) A RID was submitted to establish firm requirements for the deflector performance and to modify the present design if necessary.

(8) ATM CDC

(a) Crew comfort is strongly affected by the CDC temperature:

- a warmer panel implies a cooler cabin gas temperature,
- a cooler panel requires a more elaborate coolant network.

A realistic set of comfort conditions should be defined so that the design can be completed.

(b) The allowable coolant pressure drop across the CDC cold plates must be resolved:

- GAEC is using 2 psid,
- Bendix is using 3.5 psid.

D. P. Woodard

D. P. Woodard

J. E. Waldo

J. E. Waldo

1022-DPW/JEW- mef

Attachments
Figures 1-4
Agenda

OSCPS

OXYGEN SUPPLY AND CABIN PRESSURIZATION SECTION

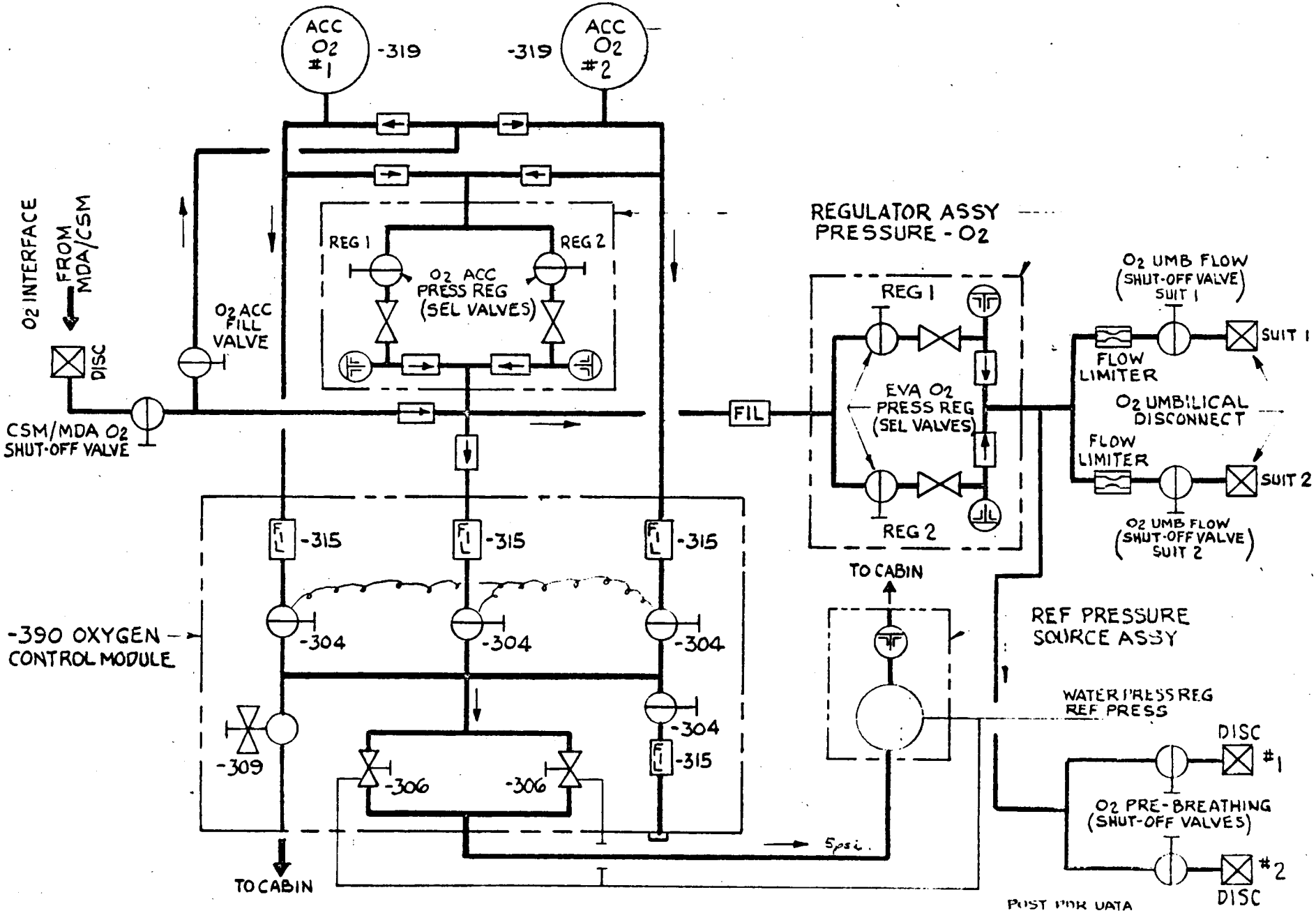

POST PDR DATA

FIG 1

HEAT TRANSPORT - HEAT REJECTION - ATMOSPHERE EXCHANGE AND CABIN VENTILATION SECTIONS

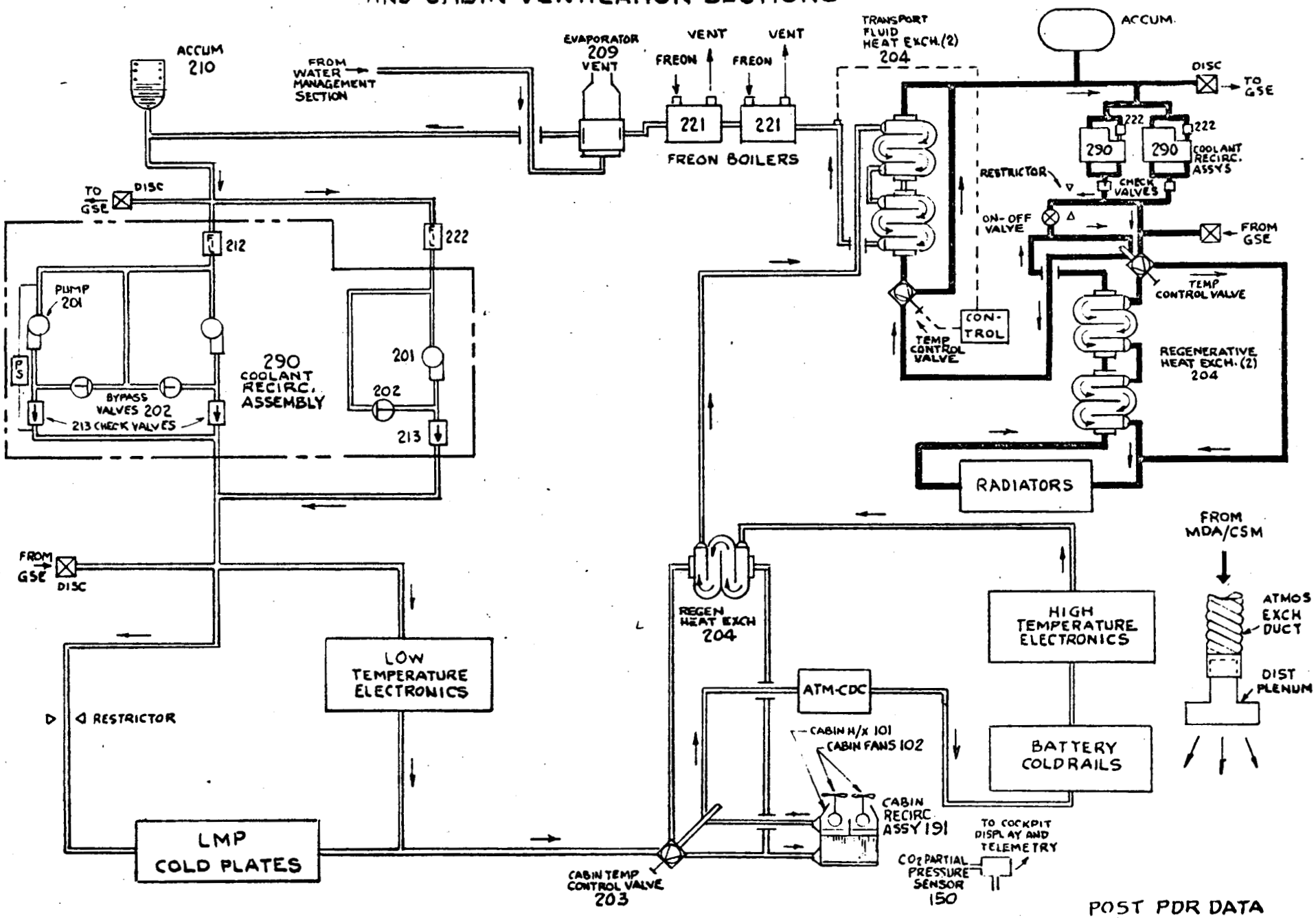

POST PDR DATA

FIG. 2

WATER MANAGEMENT SECTION SCHEMATIC

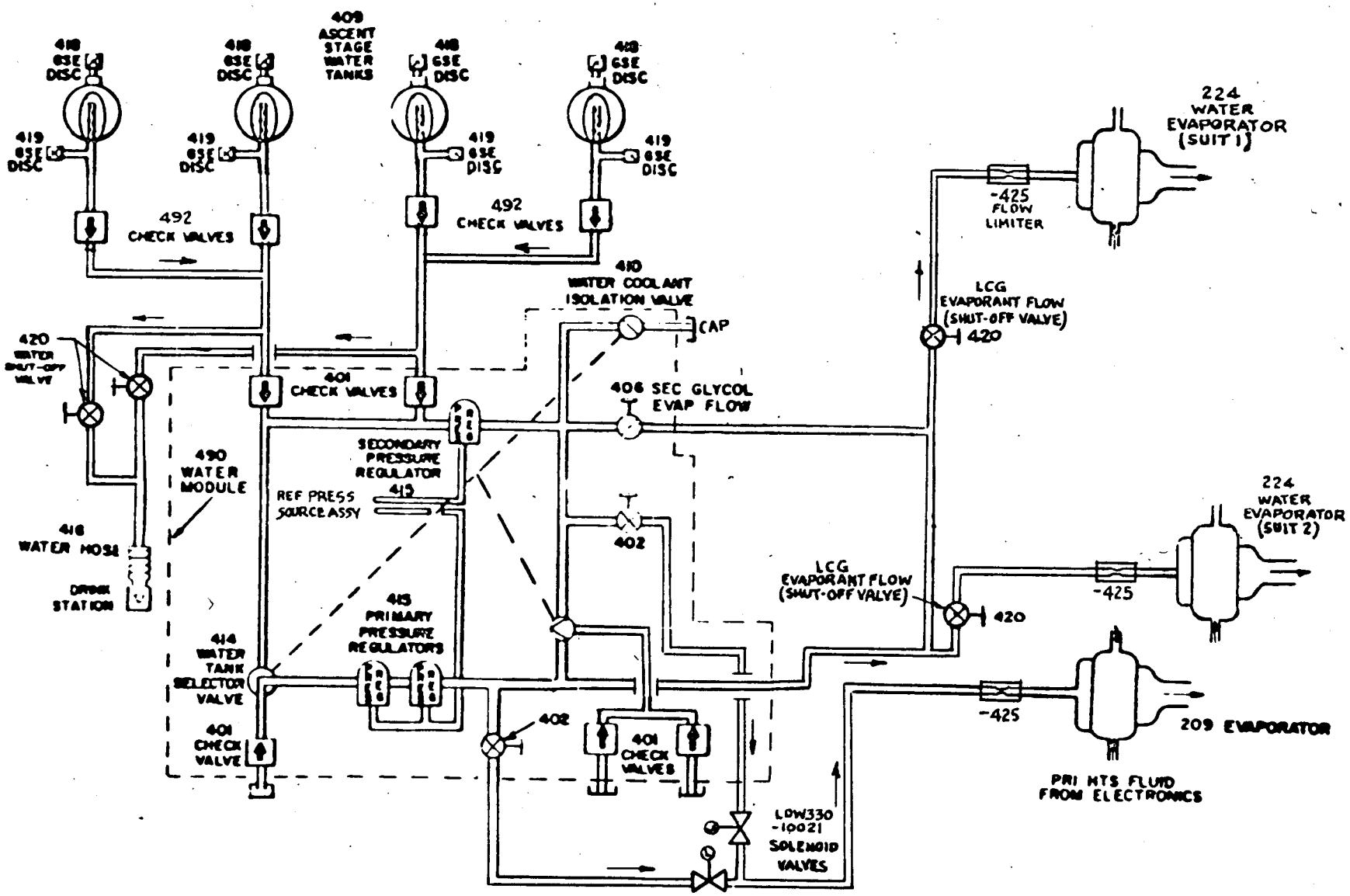

FIG 3

POST PDR DATA

LCGSS

LIQUID COOLED GARMENT SUPPORT SECTION

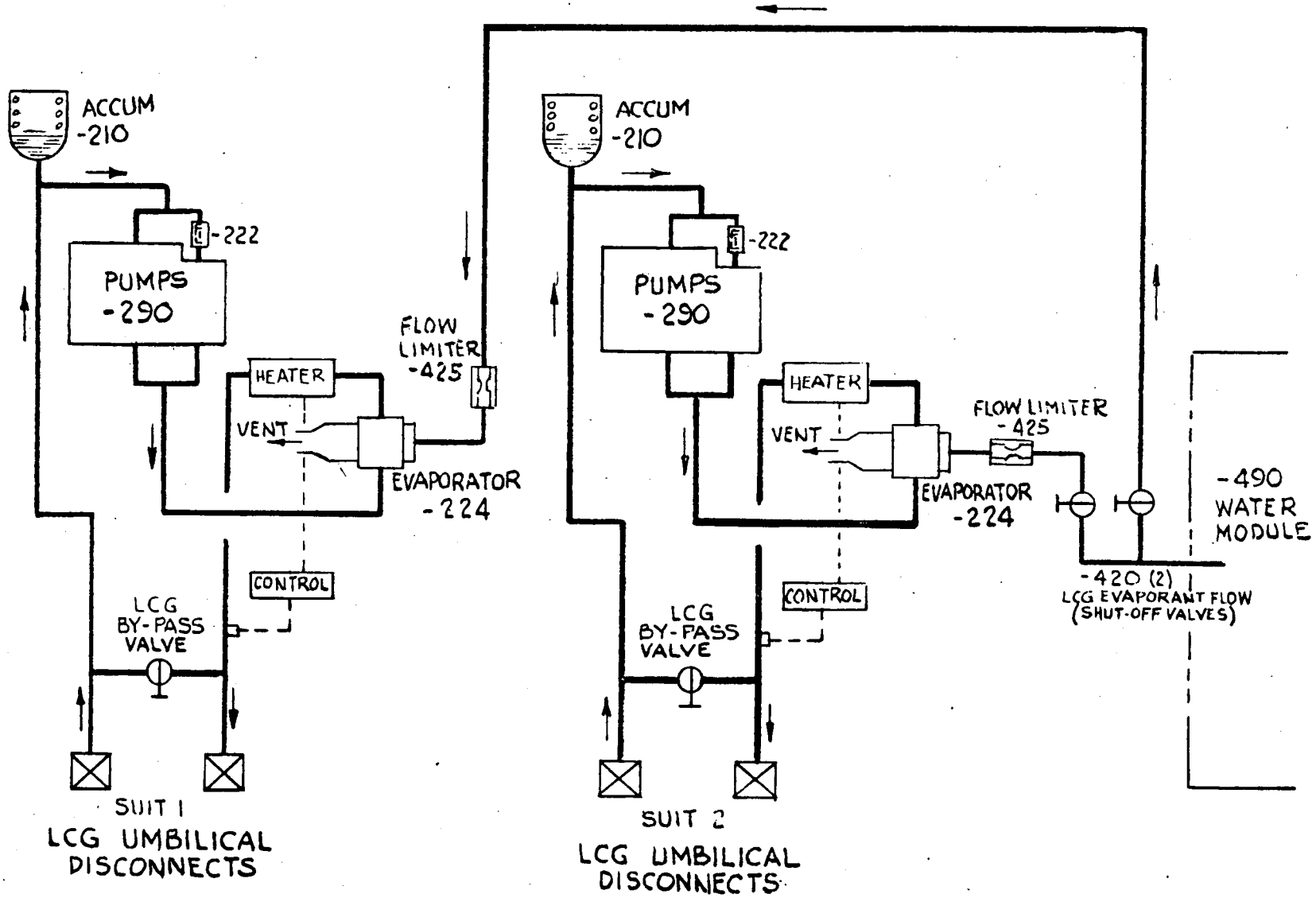

FIG. 4

AGENDA - ENVIRONMENTAL CONTROL/THERMAL

WORKING GROUP MEETING

TUESDAY, OCTOBER 8

TOPIC	ITEMS OR DOCUMENTS TO BE REVIEWED	TIME
REVIEW OF ECS REQUIREMENTS AND CONFIGURATION	° FUNCTIONAL REQUIREMENTS SUMMARY	10:30 A.M.
	° FUNCTIONAL BLOCK DIAGRAMS AND LEVEL III SCHEMATICS	
	° CONTROLS AND DISPLAYS FUNCTIONAL SET	
	° HARDWARE LIST	
	° ISOMETRIC HARDWARE LOCATOR	
PDR DOCUMENTATION	° CONTRACT END ITEM SPECIFICATION (ASP247-1)	12:00 NOON
	PARAGRAPHS: ECS - 3.4.5, 3.4.7.7, 3.4.7.10	
	THERMAL - 3.1.2.8.2, 3.1.13, 3.4.1.2.4.4.3	
	° LM-A/ATM PERFORMANCE & INTERFACE SPECIFICATION (ASP247-10) PARAGRAPHS:	
	ECS - 3.2.2.6, 4.3	
	THERMAL - 3.1.2.3.3, 3.2.1.9.2.1, TABLE II, APPENDIX A ATM-29, 30, 32	
	L U N C H	1:20 P.M.
	° LM-A/OA PERFORMANCE AND INTERFACE SPECIFICATION (ASP247-11) PARAGRAPHS:	2:00 P.M.
	ECS - 3.1.2.3, 3.2.3.6, 3.2.9	
	THERMAL - 3.2.4	
	° GENERAL TEST PLAN - ECS DEVELOPMENT (APL258-1)	
	PARAGRAPH: 4.2.2.2	

AGENDA - ENVIRONMENTAL CONTROL/THERMAL (CONTINUED)

TUESDAY, OCTOBER 8 (CONTINUED)

TOPIC	ITEMS OR DOCUMENTS TO BE REVIEWED	TIME
REVIEW OF SELECTED SUBJECTS	° ENVIRONMENTAL CONTROL - LM-A CABIN REPRESSURIZATION - RADIATOR DESIGN - THERMAL CONTROL EQUIPMENT PERFORMANCE	3:00 P.M.
	° THERMAL - LM-A THERMAL BALANCE - LM-A THERMAL SKINS - AERO/THERMAL DESIGN OF PLUME DEFLECTORS	

WEDNESDAY, OCTOBER 9

TOPICS REQUIRING ACTION	° ENVIRONMENTAL CONTROL/THERMAL - LCG EQUIPMENT - REQUIREMENTS/PERFORMANCE - OA AND CSM/LM-A ATMOSPHERE EXCHANGE - ATM C&D CONSOLE COOLING & MSC CREW COMFORT CRITERIA - EVA OPERATIONAL PROCEDURES & C/W LOGIC - OXYGEN TRANSFER INTERFACE TEMPERATURES - LM-A/CSM WATER INTERFACE - CLUSTER THERMAL BALANCE	8:30 A.M.

AGENDA - ENVIRONMENTAL CONTROL/THERMAL (CONTINUED)

WEDNESDAY, OCTOBER 9 (CONTINUED)

TOPIC	ITEMS OR DOCUMENTS TO BE REVIEWED	TIME
REVIEW OF ADDITIONAL PDR DOCUMENTS	° SINGLE POINT FAILURE SUMMARY (ARP255-016) PARAGRAPHS: ECS - 2.0 (C), TABLE I	11:00 A.M.
	° SPACECRAFT OPERATIONAL DATA BOOK PARAGRAPHS: ECS - 3.5, 4.4 THERMAL - 4.7.5	
	° CONSUMABLES REPORT PARAGRAPHS: ECS - 4.1, 4.2, 4.3, 6.0	
	° MEASUREMENTS LIST (AED236-1) ALL ECS MEASUREMENTS	
REVIEW OF DEFERRED ITEMS AS APPLICABLE		12:00 NOON
COMPLETE SUBMISSION OF RIDS TO SCREENING GROUP		BY 1:20 P.M.
	LUNCH	1:20 P.M.
REVIEW PDR RIDS SUBMITTED TO W.G. FROM SCREENING COMM.		2:00 P.M.
MOCKUP TOUR (AS SCHEDULED)		

ECS/THERMO

WORKING GROUP

#2

ATTENDEES

G. P. Hurd	MSC/R&QA (GE)	HU 8-0850
R. E. Renman	GAEC	516 LR 5-1371
A.R. Mendelsohn	GAEC	516 LR 5-9355
John Marsh	NASA/HDQ	202 962-0876
Joseph Alario	GAEC	516 LR 5-9355
R. L. Middleton	NASA/MSFC	576-7817
R. L. Frost	NASA/MSC	HU 3-4041
J. M. Janney	NASA/MSC	HU 3-5589
P. J. Weitz	NASA/MSC	483-2221
J. C. Cody	NASA/MSFC	876-7729
T. K. Lau	GAEC	516 LR 5-1371
Lou Royce	GAEC	516 LR 5-1371
J. C. Howell	Martin	303 794-5211 ext. 3984
J. M. Ashura	Martin	303 794-5211 ext. 2011
O. Porr	GAEC	LR 5-9083
J. E. Waldo	MLS/BELLCOMM	202 484-7680
D. P. Woodard	MLS/BELLCOMM	202 484-7681
Ralph Burns	NASA/MSFC	877-3173
D. C. Muller	MSFC/Bendry	201 288-2000 ext. 4598
R. D. Wegrich	MSFC/R-SE-A	205 876-8058/9331
C. N. Crews	MSC/KS	713 HU 3-4041
Travis Brown	MSC	HU 3-3871

BELLCOMM, INC.

Subject: LM-A Preliminary Design Review

From: D. P. Woodard
J. E. Waldo

Distribution List

NASA Headquarters

Messrs. E. P. Andrews/MLA
H. Cohen/MLR
P. E. Culbertson/MLA
J. H. Disher/MLD
J. A. Edwards/MLO
L. K. Fero/MLV
J. P. Field, Jr./MLP
T. A. Keegan/MA-2
H. T. Luskin/ML
J. Marsh/MLT
M. Savage/MLT

Bellcomm

Messrs. A. P. Boysen
D. A. Chisholm
D. R. Hagner
B. T. Howard
J. Z. Menard
I. M. Ross
J. W. Timko
R. L. Wagner
Div. 101 Supervision
Depts. 2015, 2034 Supervision
All Members Depts. 1021, 1022, 1024, 1025
Department 1024 File
Central File
Library