FLAMMABILITY, ODOR, AND OFFGASSING REQUIREMENTS AND TEST PROCEDURES FOR MATERIALS IN ENVIRONMENTS WHICH SUPPORT COMBUSTION

DRAFT COPY

December 1970

Prepared by:

Skylab Intercenter Working Group

Released by:

H. Cohen, OMSF

(NASA-TM-79493) FLAMMABILITY, ODOR, AND OFFGASSING REQUIREMENTS AND TEST PROCEDURES FOR MATERIALS IN ENVIRONMENTS WHICH SUPPORT COMBUSTION (NASA) 86 p

N79-73496

Unclas

00/25 42962

CONTENTS

PARAGRAPH	TITLE	PAGE
1.0	INTRODUCTION	1
1.1	Purpose	1
1.2	Scope	1
1.3	Applicable Documents	1
2.0	GENERAL REQUIREMENTS	3
2.1	Materials Selection	3
2.1.1	Materials Grouping and Restrictions	3
2.1.2	Batch/Lot Approval	4
2.1.3	Materials	4
2.2	Material Usage Categorization and Requirements	4
2.2.1	Type A Exposed Materials in the Crew Bay Environment	7
2.2.2	Type B Special Applications and Minor Exposed Materials	7
2.2.3	Type C Low Pressure Oxygen Supply Materials	7
2.2.4	Type D Materials in High Pressure LOX/GOX Systems	7
2.2.5	Type E Sealed Containers	9
2.2.6	Type F Vented Containers	9
2.2.7	Type G Material Applications in Non-Flight Equipment	9
2.2.8	Type H Material in Unpressurized Portions of the Spacecraft	10
2.2.9	Type I Materials for Combustion Supporting Environments other than oxygen	10
2.3	Test Requirements	10
2.4	System Flammability Requirements	11
2.5	Metallic Materials	12

CONTENTS (CONTINUED)

PARAGRAPH	TITLE	PAGE
2.6	Isolation of Group II Materials	12
2.7	Electrical/Electromechanical Equipment	12
2.8	Test Records	12
2.9	Total Spacecraft Offgassing	12
3.0	MATERIALS CONTROL PROGRAM REQUIREMENTS	12
3.1	Scope	12
3.2	Control Program Complexity	13
4.0	QUALITY ASSURANCE PROVISIONS	16
5.0	TEST No. 1 - UPWARD PROPAGATION TEST	17
6.0	TEST NO. 2 - DOWNWARD PROPAGATION RATE TEST	22
7.0	TEST No. 3 - FLASH AND FIRE POINT TESTS	27
8.0	TEST NO. 4 - ELECTRICAL WIRE INSULATION AND ACCESSORY FLAMMABILITY TEST	33
9.0	TEST NO. 5 - ELECTRICAL CONNECTOR POTTING FLAMMABILITY TEST	37
10.0	TEST No. 6 - ODOR TEST	42
11.0	TEST NO. 7 - DETERMINATION OF OFFGASSING PRODUCTS AND CARBON MONOXIDE TEST	48
12.0	TEST NO. 8 - FLAMMABILITY TEST FOR MATERIALS IN VENTED CONTAINERS TEST	54

CONTENTS (CONTINUED)

PARAGRAPH	TITLE	PAGE
13.0	TEST NO. 9 - ELECTRICAL OVERLOAD TEST FOR SEALED CONTAINERS TEST	58
14.0	TEST NO. 10 - GUIDELINES FOR SIMULATED PANEL AND ASSEMBLY FLAMMABILITY TEST	63
15.0	TEST NO. 11 - GUIDELINES FOR SIMULATED CREW BAY CONFIGURATION FLAMMABILITY VERIFICATION TEST	67
16.0	TEST NO. 12 - GUIDELINES FOR TOTAL SPACECRAFT OFFGASSING TEST	69
17.0	TEST NO. 13 - GOX PNEUMATIC TEST GUIDELINES	72

FIGURES

NUMBER	TITLE	PAGE
1	Flammability Test Data Form	
2	Functional Diagram	28
3	Typical Oscilloscope Displays	31
4	Potting Flammability Test Equipment Schematic	39
4a	Sample Configuration	60
5	Oxygen Bomb Equipment	74
6	Test Chamber	75
7	Conformal Coating Sample Configuration	A-4

TABLES

NUMBER	TITLE	PAGE
1	Matrix of Material Usage Types and Material Group Classifications	5

CONTENTS (CONTINUED)

APPENDICES

NUMBER	TITLE	PAGE
A	Protection Capability of Conformal Costing	A-1

FLAMMABILITY, ODOR, AND TOXICITY REQUIREMENTS AND TEST PROCEDURES FOR MATERIALS IN ENVIRONMENTS WHICH SUPPORT COMBUSTION

1.0 INTRODUCTION

1.1 PURPOSE. This specification controls selections of materials with respect to flammability and offgassing to be used in and around manned spacecraft during flight and test operations.

The control of material selection is based on the following general fire control criteria:

a. The probability of ignition shall be reduced through design measures including elimination of low flash and fire point materials.

b. Any fire shall be restricted to minimum and well defined isolated areas in which no propagation paths are evident.

c. The rate and magnitude of pressure and temperature increase as a result of any fire shall not cause structural damage to the vehicle.

d. The crew shall be protected from the flammability and offgassing effects of any fire, as shall spacecraft systems whose functioning is essential to the safe recovery of the crew.

1.2 SCOPE. This specification establishes flammability, odor, and offgassing acceptance criteria for materials used in environments which support combustion. Design guidelines for materials application, verification tests, and quality assurance test requirements for materials are specified. This document also provides verification for each application; provides test procedures for all tests required with criteria of acceptability where applicable, and defines sample preparation and data reporting.

1.3 APPLICABLE DOCUMENTS

1.3.1 The following documents form a part of this specification to the extent specified herein. Unless otherwise indicated, the issue in effect on date of invitation for bids or request for proposals shall apply.

(Copies of specifications, standards, drawings, and publications required by contractors in connection with specific procurement functions should be obtained from the procuring activity or as directed by the contracting officer.)

SPECIFICATIONS

Military

MIL-W-16878	Wire, Electrical, Insulated, High Temperature
MIL-W-22759	Wire, Electrical, Fluorocarbon-Insulated, Copper and Copper Alloy
MIL-P-25508	Propellant Oxygen, Type 1
MIL-O-27210	Oxygen, Aviators Breathing, Liquid and Gas, Type I

George C. Marshall Space Flight Center

MSFC-SPEC-106B with Amendment I	Testing Compatibility of Materials for Liquid Oxygen Systems
MSFC-SPEC-237A	Solvent, Precision Cleaning agent
MSFC-SPEC-234A	Nitrogen, Space Vehicle Grade
TX-X-985	Compatibility of Materials with Liquid Oxygen - I
TM-X-53052	Compatibility of Materials with Liquid Oxygen - II
TM-X-53533	Compatibility of Materials with Liquid Oxygen - III
TM-X-53773	Compatibility of Materials with Liquid Oxygen - IV

Manned Spacecraft Center Specification

MSC-SPEC-Q3	Pretreatment (Etching) of Teflon Surface Prior to Potting Processes
MSC-NA-D-68-1	Non-metallic Materials Design Guidelines and Test Data Handbook
MSC-SPEC-C20A	Water, High Purity and Distilled, SPEC for

Drawings

NASA/WSTF	Dr. No. 251-10234-2
NASA/WSTF	Dr. No. 252-10235
NASA/WSTF	Dr. No. 222-10167
NASA/WSTF	Dr No. 252-10298

American Society for Testing Materials (ASTM)

ASTM-D568	Test for Flammability of Plastics 0.127 cm (0.050 in) and Under in Thickness
ASTM-D635	Flammability of Plastics, Foams, and Sheeting
ASTM-D65	Flash Point by Tag Closed Tester

Federal Aviation Administration

FAR 25	Airworthiness Standards

2.0 GENERAL REQUIREMENTS

2.1 MATERIALS SELECTION - All materials considered for use in a manned spacecraft including the materials of the spacecraft, stored equipment, or experiments shall be evaluated for flammability, odor, and offgassing characteristics and shall meet the applicable requirements specified in this document.

2.1.1 Materials Grouping and Restrictions - Materials considered for use shall be grouped as follows based upon the results of screening tests and shall be approved for specific applications by the cognizant NASA Center.

Group I: Materials that are non-combustible or self-extinguishing before 6 inches of the sample is consumed in accordance with Test No. 1 (General), utilizing silicone or equivalent igniter or are non-combustible in accordance with Tests No. 4 (Electrical Insulation), and No. 5 (Potting Compounds) as applicable. Group I materials will be verified in end item configuration and/or full scale test unless it can be shown by the rationale resulting from an engineering evaluation and analyses of test data that configuration tests are not required.

NOTE: There are no restrictions on Group I Materials in design.

Group II: Materials that fail to self-extinguish when subjected to Test No. 1. The flame propagation rate of all materials shall be determined in accordance with Test No. 2, Group II materials shall not be used unless functional requirements preclude the use of Group I materials and the materials are specifically approved by the cognizant NASA Center on an individual basis. Should it be imperative to use Group II materials in habitable environments, the functionally acceptable material with the lowest flame propagation rate and the lowest production rate for offgassed products shall be used. Group II materials shall be evaluated according to test No. 3 and shall be acceptable for design if they exhibit a flash or fire point above 450°F. All pertinent test and design data including drawings, photographs, specifications, environmental and functional requirements, and 1 foot square samples of materials in the proper thickness shall be submitted to the cognizant NASA Center for review and approval. Systems utilizing Group II materials in the design shall be subjected to configuration testing in accordance with 2.4 and the use of Group II material in the system design shall be approved by the cognizant NASA Center prior to use in spacecraft.

2.1.2 Batch/Lot Approval - When specified by the Government procuring activity, all materials considered for use on spacecraft shall be batch/lot tested until such time that reactivity characteristics traceable to batch/lot variations are determined.

2.1.3 Materials - Materials shall be evaluated in accordance with the applicable test methods specified herein. A minimum of three specimens (excluding black boxes) of the materials in the thickness intented for use shall be subjected to each applicable test at the maximum use pressure.

2.2 MATERIAL USAGE CATEGORIZATION AND REQUIREMENTS - Table I correlates material usage type (catagories), material groups and test requirements. Material usage shall be categorized as follows:

TABLE I

The following matrix establishes the relationship of Material Usage Types and Material Group classifications in accordance with the specific tests required for each.

Materials Usage Categorization	Group I Materials Required Tests (See Note 1)	Group II Materials (NASA Approval for use required) Required Tests (See Note 1)
Type A - Exposed Materials in the Crew Bay Environment	Tests 1 or 4 or 5 and 6 and 7 and 10 or 11 or 12.	----------
Type B - Special Applications and Minor Exposed Materials	Tests 1 or 4 or 5 and 6 and 7 and 10 or 11 or 12	Tests 2 and 3 and 6 and 7 and 10 or 11 or 12
Type C - Low Pressure Oxygen Supply Materials	Tests 1 or 4 or 5 and 6 and 7 and 10 or 11 or 12	Tests 2 and 3 and 6 and 7 and 10 or 11 or 12
Type D - Materials in High Pressure LOX/GOX/Systems	Tests 4 and 5 and 6 and 7 and 11 or 12 or 13 LOX MSFC 106B (See Note 2)	----------
Type E - Sealed Containers	----------	Tests 2 and 3 and 9 and 10 or 11 (See Note 3)
Type F - Vented Containers	Tests 1 and 8 and 6 and 7	Tests 2 and 3 and 6 and 7 and 8 and 10 or 11 (See Note 3)
Type G - Materials Applications in Nonflight Equipment	Tests 1 or 4 or 5 and 6 and 7 and 10 or 11 or 12	Tests 2 and 3 and 6 and 7 and 10 or 11 or 12

TABLE I (Continued)

Materials Usage Categorization	Group I Materials Required Tests	Group II Materials (NASA Approval for Use Required) Required Tests
Type H - Material in Unpressurized Portions of the Spacecraft	Tests 1 or 4 or 5 and 10 and 11	Tests 2 and 3 and 10 and 11
Type I - Materials in Combustion Supporting Environments other than Oxygen	Detailed tests as required with NASA approval	

NOTE 1: End Item configuration type test or an analysis required for final materials acceptance for use in manned spacecraft.

NOTE 2: Tests 6 and 7 applicable to GOX systems which could affect crew atmosphere.

NOTE 3: Tests 2 and 3 applicable to material selection and not end item sealed or vented container.

2.2.1 Type A Exposed Materials in the Crew Bay Environment

a. This category shall include the material applications that are unlimited with respect to quantity, proximity to ignition sources, or exposure to oxygen and are used over wide areas of the spacecraft. To prevent flame propagation, these materials or their applications must be self-extinguishing as defined herein.

b. Materials shall meet Group I requirements or shall be non-hazardous in their usage configuration by test or analysis.

2.2.2 Type B Special Applications and Minor Exposed Materials

a. This category includes those materials applications in the spacecraft arranged in discrete locations and exposed to the Crew Bay atmosphere. The amount and arrangement of materials shall be limited so as to prevent the spread of fire in the pressurized vehicle.

b. Materials shall be shown to be non-hazardous in their usage configuration by test or analysis.

2.2.3 Type C Low Pressure Oxygen Supply Materials

a. This category shall include those materials used in the suit loop and the emergency oxygen masks (at 20 psia oxygen or less).

b. Materials shall meet group I requirements.

2.2.4 Type D Materials in High Pressure LOX/GOX Systems

a. This category shall include those materials used in greater than 20 psia oxygen systems. Materials shall have been qualified for use in oxygen service as a result of assembly level off-limits and qualification testing.

b. Materials used in oxygen storage, pressurization, and delivery systems shall meet the oxygen compatibility requirements of Specification MSFC-SPEC-106B.

The material shall be subjected to 20 successive tests at 72 foot-pounds (10 kilogram meters) using the test equipment and procedures described in MSFC-SPEC-106B. The material shall show none of the following reactions:

1. Audible explosion
2. Visible flash in a darkened room
3. Discolorations
4. Evidence of burning (charring)

If no reactions occur during the 20 tests, the material shall be accepted. If more than one reaction occurs in 20 tests, the material shall be rejected. If one reaction occurs in 20 tests, the material shall be subjected to an additional 40 tests. If any reaction occurs during the 40 tests, the material shall be rejected.

Data for materials previously tested for the above requirement are listed in NASA Publications TM-X-985, TM-X-53052, TM-X-53533, and TM-X-53773. These publications form a part of this specification. Materials intended to be used in proximity to sources of electrical energy should be evaluated in configurations using "worst-case" electrical and environmental conditions using the techniques of Test No. 4. To be acceptable materials must be self-extinguishing.

Materials which do not meet the acceptance criteria of MSFC-SPEC-106B as stated above, shall undergo threshold determination at the use pressure and temperature and shall be tested pneumatically using Test No. 13.

The approximate threshold value shall be obtained by testing 20 samples at each of the drop heights listed below. The first height at which no reactions are obtained in 20 drops shall be the approximate threshold value. The definitive threshold value shall be determined by 20 tests at drop-height increments of 3 inches starting at a height of 6 inches above the approximate threshold value. The definitive threshold value shall be the higher of the two adjacent heights at which no reaction was obtained.

DROP HEIGHT SCHEDULE FOR APPROXIMATE THRESHOLD VALUE DETERMINATION

Measurement	Inches
1st Height	43.3
2nd Height	33
3rd Height	24
4th Height	15
5th Height	6

2.2.5 Type E Sealed Containers

a. This category shall include those material applications inside sealed (with inert gas, air, and/or potting with no method of receiving or replenishing a supply of oxygen) containers.

b. Where the evaluation analyses of existing data are inadequate, all materials used in sealed containers shall meet the requirements of Test No. 9. The container shall not rupture.

c. Tests Nos. 6 and 7 are generally not required for material applications inside sealed containers.

2.2.6 Type F Vented Containers

a. This category shall include those materials used inside unsealed containers with or without an internal ignition source, removal of materials shall be for operational use only.

b. Where the evaluation analyses of existing data are inadequate, materials used in closed (but not necessarily sealed) containers shall meet the requirements of Test No. 8. The container shall not rupture or permit the escape of flames or burning debris. The container shall not emit gases and heat to the extent that a pressure rise measured in the chamber when related to a corresponding rise in pressure in the module or vehicle might be sufficient to cause rupture of the walls of the habitable areas.

2.2.7 Type G Material Applications in Non-Flight Equipment

a. This category shall include those materials used in non-flight equipment during closed hatch, power-on tests. The contractor shall identify all non-flight equipment and provide the rationale supporting the use of the material in question in a flammable environment.

b. The materials shall meet the requirements of Group 1.

2.2.8 Type H Material in Unpressurized Portions of the Spacecraft

a. The material applications included in this category shall be those in uninhabited portions of the spacecraft.

b. Materials outside the crew bay area shall meet the requirements specified herein, as applicable. The use of materials that fail to meet the applicable flammability requirements shall require design measures to minimize fire hazards. The materials shall be self-extinguishing (in air) when evaluated in accordance with the applicable flammability tests (Test I). The Data based on ASTM Underwriters Laboratory and FAA flammability procedures may be used as an analytical basis for providing rationale for the use of materials in uninhabited areas of the spacecraft provided the test atmosphere is at least as severe as that proposed for use.

2.2.9 Type I Materials for Combustion Supporting Environments Other Than Oxygen

a. This category shall include all materials exposed to environments other than oxygen which are theoretically capable of undergoing exothermic reactions with the environment in question.

b. Materials shall be shown to be self-extinguishing under "worst case" conditions of temperature, pressure, and configuration when ignited with a source capable of providing temperatures in excess of the ignition point of the material in air.

NOTE: Detailed test procedures cannot be provided for this category due to the wide variation in the chemical behavior of the environments involved. In the design of specific test equipment for each environment care must be taken to insure compatibility of all exposed instrumentation.

2.3 TEST REQUIREMENTS

a. Upward Propagation Test - Test No. 1 - Materials shall be nonflammable or shall be self-extinguishing within a specified distance of the ignition source when ignited at the bottom of a vertically oriented specimen and shall not spark, sputter or drip flaming particles.

b. Downward Propagation Rate - Test No. 2 - Materials failing to comply with the requirements of Test No. 1 shall be ignited at the top of a vertically oriented specimen and the flame propagation rate shall be determined and the occurrence of a spark, sputter, drip or transfer of solid mass during burning shall be noted.

c. Odor and Offgassing Analysis - Test Nos. 6 and 7 - The nature and quantity of offgassing and odor products as measured in the test chamber for a given sample size shall not exceed the limits established for astronaut safety by the Manned Spacecraft Center (MSC).

d. Flammability (Electrical insulation and accessories) - Tests Nos. 1 and 4 - Materials shall be non-flammable or self-extinguishing before 50 percent of the insulation is consumed, prior to self-extinction of the flame. Spark, sputter, drip or transfer of solid mass during burning shall be noted.

e. Flammability (Potting compounds and encapsulants)- Test No. 5 - Materials used as potting compound shall be non-flammable when evaluated by Tests No. 1 and 5.

f. Flash and Fire point - Test No. 3-Group II materials shall be evaluated according to Test No. 3 and shall be acceptable for design if they exhibit a flash or fire point above 450°F.

2.4 SYSTEM FLAMMABILITY REQUIREMENTS - The cognizant design organization shall submit to the cognizant NASA Center for review and approval, specific and detailed proposals including drawings, photographs, specifications, test procedures, etc., for all systems that require system tests. System tests shall duplicate contiguous materials and "worst case" operating conditions. The test plan shall identify the worst probable failure modes and the proposed test shall reflect the use of these modes. Test analyses and documentary records including instrumentation data, photographic coverage, etc., shall be provided to the cognizant design activity at the conclusion of each systems test for review and approval. Test No. 10, "Guidelines for Simulated Panel and Assembly Flammability Test" and Test No. 11, "Guidelines for Simulated Crew Bay Configuration Flammability Verification Test" shall be used as a guide in conducting these tests.

2.5 METALLIC MATERIALS - Metallic materials used in design of equipment that will be exposed to the habitable environments shall be non-flammable or self-extinguishing as determined by Test No. 10 and oxygen compatible when tested in accordance with Specification MSFC-SPEC-106B.

2.6 ISOLATION OF GROUP II MATERIALS - All efforts shall be made to isolate Group II materials from the Crew Bay environment and potential ignition sources by suitable design means. The resulting design shall be non-flammable when tested in accordance with the applicable tests.

2.7 ELECTRICAL/ELECTROMECHANICAL EQUIPMENT - Electrical or electromechanical devices such as motors, heaters, control panels, lights, etc., shall meet the requirements of the applicable flammability, odor, and offgassing configuration tests.

2.8 TEST RECORDS - Complete test records shall be prepared by the contractor or design/test activity on each material or system tested. Complete records and additional supporting data that might influence the acceptability of the material shall be submitted to the cognizant program office prior to use or storage in space vehicles.

2.9 TOTAL SPACECRAFT OFFGASSING - The spacecraft or its individual modules shall be offgassed during manned and unmanned chamber tests, the individual components shall be identified and measured, and the total quantity of the products shall be reported to the responsible NASA Medical Office. Where it is not feasible to test a complete spacecraft or a specified module, an analysis of the data obtained from offgassing tests on systems, modules, and spacecraft containing the same or similar materials may be performed by the cognizant design activity and medical office to establish the safety of the spacecraft atmosphere.

3.0 MATERIALS CONTROL PROGRAM REQUIREMENTS

3.1 SCOPE - The total materials control program involves the identification, evaluation, and resolution of potential flammability and offgassing hazards resulting from the use of materials in manned or test spacecraft and associated test equipment. The major elements of a total program are:

a. Materials Identification - Identification and documentation of materials usages, both in original design and in any change.

b. Usage Evaluation - Documentation of material usages and the comparison of test data to establish selection and test requirements to identify potential hazards.

c. Testing - Logic, procedures, and data documentation for the test program to support evaluation and full-scale verification of modules, vehicles, or experiments, if warranted.

d. Hazard Removal - Procedures involved in the removal of any identified hazards.

e. Deviation Procedures - Procedures involved in the documenting and approval of materials which do not meet the established requirements but are proposed for use in the spacecraft due to lack of replacement materials or other considerations.

f. As-built Control - Procedures involved in assuring that no material hazards are introduced from initial design to mission completion.

g. Formal Review Procedures - Procedures utilized to summarize the status of materials to permit certification of acceptability of a given design or a given configuration.

3.2 CONTROL PROGRAM COMPLEXITY - Preparation and implementation of material control program plans are the joint responsibility of the program offices and their respective contractors of contractor-furnished equipment and suppliers of Government-furnished equipment and experiments. The final control plan shall be approved by the responsible program office. The contractor/supplier shall define in the control plan a systematic and continuing program to report and control material usage, status, test, evaluation, substitution, and verification. Before any evaluation testing is conducted, the applicable program office must review and approve the need for the test. Such control plans will contain as a minimum:

a. Test Facilities - Prior to the initiation of a test program, each facility must demonstrate to the cognizant NASA Center that equipment to be used is properly calibrated and will produce the same or equivalent results as related equipment used by other testing agencies. Equivalence in

testing will also be demonstrated by each facility performing tests on standard material samples furnished by the cognizant NASA Center.

b. Test Environment - All tests will be performed in environments under "worst case" conditions as specified by the applicable program office. For example, if actual usage indicates that a material will be subjected to temperatures greater than 160°F, the tests shall be performed with the chamber atmosphere at the maximum temperature to which the material will be exposed. The contractor will submit to the applicable NASA Program Office a list of such materials

c. Test Plans - Test plans shall be prepared for all contemplated configuration tests, simulated crew bay configuration tests, and total spacecraft tests. These test plans shall be submitted to the appropriate program office for approval prior to initiation of test.

d. Verification Testing - Materials will be verified in end-item configurations, such as stowage in vented containers and simulated crew bay configuration flammability verifications, unless it can be shown by evaluation, analyses, and rationale of all test data that the materials applications will not introduce any flammability and offgassing hazards that will jeopardize the mission. These tests, if conducted, will be conducted on representative usage configurations and assemblies typical of each generic class of application.

For required systems or configuration tests, the use of a piece of functional equipment is not mandatory; noncritical electronic and nonflammable parts can be simulated with respect to mass and geometry. The simulation must be approved by the applicable program office. An assembly may be selected for test based on "worst case" configurations of potentially flammable materials. "Worst case" shall include consideration of geometry, spatial relationships and material quantities. "Worst case" is defined as an assembly or materials which analyses indicate, represent a potential ignition/propagation hazard.

This selection must consider:

(1) Proximity of potential ignition hazards

(2) Propagation paths formed by proximal materials

(3) The quantity of flammable material in any given area

(4) The most hazardous oxidizing atmosphere and pressure to which it will be exposed

(5) Consequences of ignition

(6) Heat sink effects

e. Nonflight Equipment - The contractor shall identify nonflight equipment, used during closed hatch tests, and the rationale supporting its use.

f. Materials Evaluation - Materials used in the design and fabrication of manned spacecraft must be evaluated against the requirements of the proper groups. (See 2.1). The materials which do not meet the criteria of the pertinent material screening test shall be treated in one of the following ways:

(1) The materials shall be rejected and a substitute material submitted for evaluation for the application.

(2) The materials shall be subjected to configuration testing or analysis.

(3) A deviation shall be required when

(a) The non-metallic materials at the configuration level will not pass the required application test or analysis based on similarity to other test configurations which indicate a possible hazard exists.

g. Procedures and Requirements Change Control - Procedures shall be established by the various manned spacecraft program offices to resolve material questions, problems, and deviation requests. Changes to test parameters and procedures in this manual shall be approved by the Program Office Materials Representatives convened by MLR.

h. As-built Control - The contractor/supplier shall identify the activities (other than normal quality control) which involve review of post-design release documentation, control of material access to the spacecraft crew bay, and physical examination of the spacecraft by material specialists. Post-release documentation review should include material review dispositions, test preparation sheets which introduce materials without an engineering order, engineering orders, discrepancy reports, standard repair practices, and all applicable process specifications. Material access

control must consider productive materials and non-deliverable materials such as inspection materials and shop aids. Periodic examinations of the spacecraft/equipment at various stages of manufacture shall be conducted as a part of a Fire Safety Inspection Procedure to identify violations of hazardous material usages.

i. Formal Review Procedure - A formal review procedure shall be established to verify materials acceptability. The data presentation shall include applicable drawing identification, verification of drawing review, material status, deviation status, applicable test data, and hazard removal status.

4.0 QUALITY ASSURANCE PROVISIONS - If test facilities other than NASA facilities are used, the contractor shall be responsible to the cognizant NASA Center for assuring that the testing agency conducts the tests in accordance with the following requirements:

a. Unless otherwise specified in the contract or order, the cognizant NASA Center is responsible for the performance of all test requirements as specified herein (performance of tests may be delegated to a test activity approved by NASA . NASA or its designated representative reserves the right to perform any or all of the tests set forth in this specification where such tests are deemed necessary to assure that materials and systems conform to the prescribed requirements.

b. All instrumentation utilized in these tests shall be in current calibration and shall bear appropriate documentation to this effect from an approved calibration laboratory.

c. All materials tested shall be accompanied by manufacturer's identification, and those test specimens shall represent the materials proposed for use in the construction of spacecraft.

d. If assemblies or subassemblies are to be tested, the supplier shall certify that the test articles contain identical materials and potential ignition sources with equivalent geometrical configurations to those produced for use in the spacecraft or that they are identical to the installed equipment.

e. Laboratories and personnel involved in testing to the requirements of this manual shall be certified as to their testing capabilities.

f. The complete results of each test shall be kept and shall be submitted by the cognizant design/test personnel to NASA following completion of each test. All pertinent information specified in the individual test (including photographic records, if applicable) shall be included in the report. Additional information obtained during test of the material/system shall be so identified and submitted with specified test data.

g. The appropriate Program Office will evaluate test data and disposition in writing all applicable material/systems according to criteria specified herein.

5.0 TEST No. 1 - UPWARD PROPAGATION TEST

5.1 PURPOSE - The purpose of the upward propagation test is to determine the flammability characteristics of candidate materials when exposed along the bottom edge to an energized ignition source. Determination shall be made during the tests as to the sample's combustibility, self-extinguishing properties, and total burn time if not self-extinguishing.

5.2 CRITERIA OF ACCEPTABILITY - Materials determined non-combustible or self-extinguishing before 6 inches of the sample is consumed in the vertical position with no sparking, sputtering, or dripping flaming particles when exposed to an energized ignition source placed at the bottom of the sample for a period of $30 \begin{smallmatrix}+20\\-10\end{smallmatrix}$ seconds shall be classified as Group I. Materials that fail the above criteria shall be subjected to Test 2.

5.3 TEST CONDITIONS - The test shall be conducted at the most hazardous test pressure and gas mixture conditions designated for each program.

5.4 TEST EQUIPMENT - The test shall be conducted using the following equipment:

a. Chamber - The test chamber shall have a volume sufficient to assure complete combustion of the sample under test. The test chamber shall have a minimum volume of 98 liters, and shall be suitably constructed and protected to insure safe operation. A window or viewing port for visual observation shall be included. The test chamber shall contain inlets for vacuum, an ignition wire, instrumentation, air, and oxygen. The chamber shall be fully protected against the possibility of operator injury in the

event of explosive rupture. Organic materials used in the construction of the chamber, such as gaskets and seals, shall be of a type which contributes little or no outgassing to the chamber or which can be pre-outgassed by vacuum cycling to a minimal identifiable amount (less than 10 parts per million (ppm) based on chamber volume). A vertical sample holder as specified in (d) below shall be positioned within the test chamber.

b. Pressure Gauge - A pressure gauge capable of measuring operating pressures with an accuracy of 0.1 psia or a pressure transducer and recorder with comparable capability, shall be used.

c. Oxygen Supply - Oxygen used in conducting the test shall be commercially available and shall conform to Specification MIL-O-27210, Type 1, or MIL-P-25508, Type 1. Equipment used to transfer the oxygen to the test chamber shall be efficient and safe.

d. Sample Holder - The sample holder shall consist of a vertically mounted steel clamp which overlaps 1/4-inch on each side of a specimen along the full 12-inch minimum length of the sample, leaving a 2-inch wide by 12-inch long exposed center section. The sample material shall be located in the sample holder such that the bottom of the sample materials is located at least 3 inches from the chamber base to preclude the aid in propagation derived from a build-up of burning residue.

e. Ignition Source - Ignition of the sample shall be accomplished by employing a regulated energy source. The ignition source shall consist of a length of No. 20 gauge bare nichrome wire, having a nominal resistivity of 0.7 ohms per foot, sufficient to wind 6 to 8 turns around a standard silicone ignitor * or equivalent. To be considered equivalent to a silicone ignitor an alternate ignitor shall provide a flame temperature in excess of 1500°F, a flame duration of 25±5 seconds, and a flame envelope 1" x 1/2" x 1". The alternate ignitor shall not drip, sputter or otherwise expel flaming particles. At least one inch of wire shall be left at each end to permit fastening to the power source lugs. The ignition of the ignitor shall be accomplished by employing a 12 volt regulated direct current (DC) heat source. The igniter shall be placed approximately 0.25 inch from the bottom edge of the sample.

* The silicone rubber rod shall be prepared according to the following procedure:

82.5 parts by weight RTV-60 shall be blended with 17.5 of RTV-577. To the mix, 0.5 parts by weight Thermolite T-12 shall be added and thoroughly mixed. The blend shall be immediately deaerated in a vacuum of not less than 28" mercury for a period of not more than 10 minutes. The compound shall then be cast into a mold which will provide rods, when cured and finished, of 0.22" diameter and 1.25" length. The compound shall be cured either for 24 hours at room temperature or for 4 hours at room temperature followed by 10 hours at 130 $\pm$ 10°F. The cured material shall show a Shore A durometer reading of not less then 40.

All the materials required for formulating the silicone ignitor insert can be purchased from the General Electric Co., Silicone Products Dep't., Waterford, New York.

Ignitors prepared more than three months prior to use shall not be used.

f. Propagation Indicators - Motion picture records shall be kept of each propagation test. The camera shall be 16mm, operating at a rate suitable to provide an accurate indication of the test. The equipment shall be calibrated to the manufacturer's specifications and shall be positioned such that an accurate determination of the total burn characteristics can be made from the films.

g. Propagation Timers - All burning tests shall be visually observed for ignition and combustion characteristics. A stop watch shall be started at the first visual indication of combustion, and stopped when the flame front reaches the top of the sample or the sample self-extinguishes, whichever occurs first.

5.5 SAMPLE PREPARATION - Samples shall be prepared for test as follows:

a. Inspection, Cleaning, Marking - Material samples shall be evaluated in the thickness intended for use, and shall be free of cuts, abrasions, or other flaws as determined by close visual inspection. Prior to testing, the samples shall be cleaned by brushing or by flowing an inert gas over them to remove loose surface contamination. Guage marks (pencil mark, wire, or fiberglass threads) shall be placed across the samples at 1 inch intervals starting at the bottom of the sample.

b. Sizing - Sizing shall be accomplished in accordance with the following:

(1) Films, fabrics, sheets, and composites shall be tested in the "as received" condition. Samples shall be cut in the form of rectangles 2-1/2 inches wide by 12 inches long.

(2) Primers, coating materials, paints, and pressure sensitive tapes shall be applied either on 3 mil thick aluminum foil or the substrate material intended for use if known. The coating shall be applied in a thickness equivalent to normal use and post cured in accordance with prescribed manufacturing practices.

(3) Fluids and greases shall be applied to a suitable non-combustible substrate such as 5 mil thick fiberglass cloth. The substrate shall be allowed to soak in the fluid for a period of 30 minutes. Greases shall be applied to the substrate in a thickness of 10 mils.

NOTE: Materials and components which will be used in an irregular size or shape shall be tested in the "as purchased" configuration. Such samples shall be attached to the sample holder by fiberglass or metal threads when the sample cannot be held by the sample holder. This includes coaxial cable, thermocouple wire, other low energy signal wiring, and electrical wiring.

5.6 PRETEST PROCEDURE - The following pretest checks shall be performed prior to commencement of testing:

a. Verify that all test equipment is clean and is in current calibration, and verify that analytical equipment is calibrated and operative.

b. Observe placement of motion picture camera.

c. Verify that oxygen conforms to the classification specified in 5.4.c.

d. Verify that sample is correctly identified.

e. Prepare three samples as specified in 5.5.

f. If samples are irregularly shaped, describe the shapes.

g. Weigh the samples and record the weight.

h. Record volume of the test chamber in liters.

i. Mount the sample in the sample holder and verify that the exposed center section is 2.0 $\pm$ 0.1 inches wide.

j. Position the sample holder within the chamber.

k. Place the igniter horizontally 0.25 $\pm$ 0.03 inches from the bottom of the sample at the midpoint of the 2-inch exposed width.

5.7 TEST PROCEDURE - Testing of the candidate samples shall be accomplished in accordance with the following procedure:

a. Evacuate the chamber to less than 0.1 psia.

b. Isolate the chamber and monitor the pressure for 1 minute. Testing shall not begin until all leaks are corrected. (A leak is indicated if an increase in pressure of more than 0.1 psia occurs in 5 minutes.)

c. Pressurize the chamber with oxygen at the maximum use pressure.

d. Verify composition of the gas mixture using analytical methods that are accurate and appropriate for the test conditions.

e. Allow the chamber to stabilize at the test pressure, then soak the samples in oxygen for a period of at least 3 minutes.

f. Verify that the chamber pressure is the desired test pressure, then isolate the chamber.

g. Start the motion picture camera and other applicable instruments.

h. Apply current to the ignition wire until the silicone rod ignites.

i. Record whether sample is non-combustible, self-extinguishing, and/or extent of burning.

j. Note combustion characteristics (nature and color of flame, soot, residue, and other pertinent observations).

k. Record the final pressure in the chamber and the final temperature rise.

l. Secure the chamber.

5.8 REPORTING - Report all data on a Flammability Test Form depicted in Figure 1. The completed form shall be submitted to the procuring activity upon conclusion of testing. The form shall contain the following types of information:

a. Name and positive identification of the material.

b. Vendor designation and vendor.

c. Self-extinguishing, or propagation in inches per second.

d. Combustion Characteristics - Distance that flame progressed before extinguishing, flame phenomena and temperature, etc.

e. Disposition or status, dimension, and size of sample material.

f. Name and number of test procedure.

g. Test pressure and test atmosphere.

h. Date of test.

i. Test Number.

j. Identification of the testing agency.

k. Name and signature of test coordinator.

l. Thickness.

m. Substrate material if used.

6.0 TEST NO. 2 - DOWNWARD PROPAGATION RATE

6.1 PURPOSE - The purpose of this test is to determine the downward propagation rate of materials. Materials shall be evaluated for individual flame propagation properties to provide relative rankings for material review and selection.

6.2 TEST CONDITIONS - Pressures and Atmospheres - The test pressure and gas mixture conditions shall be designated by the requirements for each program.

6.3 TEST EQUIPMENT

a. The test chamber shall have a volume of at least 98 liters and be sufficient to assure complete combustion of the sample under test. It shall be suitably constructed and protected to insure safe operation. A window or viewing port for visual observation shall be included. The test chamber shall contain inlets for vacuum, ignition wire, air, oxygen, and gas mixture. The chamber is to be fully protected against the possibility of operator injury in the event of explosive rupture. Organic materials used in the construction of the chamber such as gaskets and seals shall be types which contribute little or no outgassing products to the chamber or which can be pre-outgassed by vacuum cycling to a minimal identifiable amount; i.e., less than 10 ppm based on the chamber volume. A vertical sample holder shall be included and positioned within the test chamber.

Test Agency _____

Test Number _____

Date _____

Material (Chemical) Genesis _____

Chemical Composition _____

Manufacturer _____

Sample Size (including thickness) _____

Power _____

Igniter _____

Chamber Volume _____ Media _____ Vacuum _____

	Top Ignition	Bottom Ignition
Sample Number		
GOX, Percent		
Chamber Pressure (psia)		
Sample Weight (grams)		
Time to Ignition (seconds)		
Total Burning Time (seconds)		
Time to Propagate 5 in. (sec)		
Self Extinguishing		
Weight Consumed (grams)		
Burning Length (inches)		
Time to Propagate (sec)		
Flame Prop. Rate (in/sec.)		
Camera Coverage PPS/CPS		
Combustion Pressure		
Increase, psia		

Description of Test (Narrative)

Figure 1. Flammability Test Data Form

b. Pressure Gauge - A pressure gauge capable of measuring absolute pressures with an accuracy of $\pm$ 0.1 psia or a pressure transducer and recorder with comparable capability shall be used.

c. Gas Supply - The test gas shall be commercially available and shall conform to the appropriate specification. Efficient and safe equipment shall be used for measuring the gas flow and for transferring the gas to the test chamber.

d. Sample Holder - The sample holder shall consist of a vertically mounted steel clamp which will overlap one fourth inch on each side of a specimen along the full twelve inch length of the sample, leaving a two inch wide by twelve inch long exposed center section.

e. Ignition Source - Ignition of the sample shall be accomplished using the ignition source specified in Test No. 1.

f. Propagation Rate Indicators -

(1) A vertical bank of a minimum of four thermocouple indicators positioned on the back of the sample combined with a recorder may be used in lieu of data from other devices. A precision of at least five percent shall be obtained with the measuring device. Loss of more than one thermocouple or loss of either end point thermocouple will invalidate the test.

(2) Motion picture measurements may be used in lieu of thermocouples to measure the propagation rate.

(3) Visual observations using manually activated timing devices may supplement the use of thermocouples or motion picture measurements.

6.4 SAMPLE PREPARATION

a. All material specimens shall be free of cuts, abrasions, or other flaws as determined by close visual inspection without magnification. Samples shall be cleaned by brushing or by flowing an inert gas over the surface to remove loose dirt or contaminants.

b. Films and fabrics shall be tested in their "as received" condition. Specimens shall be cut out in the form of rectangles two and one half inches wide by 12 inches long. Foams or other thick materials shall be tested in the "as-applied" thickness and shall also be two and one half inches wide and 12 inches long, minimum.

c. Primers, coating materials, paints, and tapes shall be applied to a substrate material actually used in the spacecraft whenever possible. The coatings shall be applied in a thickness equivalent to normal practice of use and cured in accordance with prescribed manufacturing practices. If the substrate material used in the spacecraft is not available, the coatings shall be applied to a 2.5 x 12 x 0.003 inch aluminum foil panel.

d. Materials and components which will be applied in an irregular size or shape shall be tested in the "as-used" configuration. They shall be attached to the sample holder by fiberglass or metal threads.

e. Fluids and greases shall be applied to a suitable non-combustible substrate such as 5-mil thick fiberglass cloth. The substrate shall be allowed to soak in the fluid for a period of 30 minutes. Greases shall be applied to the substrate in a thickness of 10 mils.

6.5 PRETEST PROCEDURE

a. Verify that all test equipment is in current calibration.

b. Witness thermocouple setup and checkout and movie camera setup if used.

c. Verify gas certification.

d. Prepare three samples

e. If irregularly shaped samples are tested, describe the shapes.

f. Visually inspect each sample. (There shall be no cuts, abrasions, or other flaws.)

g. Clean samples by brushing or by flowing an inert gas over the surface to remove loose dirt or contaminants.

h. Weigh the samples and record the weight.

i. Record the volume of the test chamber in liters.

j. Verify that the test chamber has a volume of at least 98 liters and is sufficient to assure complete combustion of the sample under test.

k. Mount the sample in the sample holder.

l. Position the sample holder within the chamber.

m. Place the igniter horizontally in contact with the sample and parallel to its two inch width at the top.

6.6 TEST PROCEDURE

a. Evacuate the chamber to less then 0.1 psia.

b. Isolate the chamber and hold the pressure for five minutes. Testing may not begin until all leaks are corrected. A leak is indicated if an increase in pressure of more than 0.1 psia occurs during the 5 minute monitor period.

c. Pressurize the chamber to the test pressure with designated gas or gas mixture.

d. After the chamber has stabilized at the test pressure, soak the samples for three to ten minutes.

e. Verify that the chamber pressure is the test pressure and isolate the chamber.

f. Start the applicable instruments.

g. Apply current to ignition wire until the igniter ignites.

h. Note combustion characteristics (nature and color of flame, soot, and residue, and other pertinent observations).

i. Return the chamber to the normal state.

6.7 REPORTING - The following types of information shall be reported:

a. Name and positive identification of material.

b. Vendor designation and vendor.

c. Propagation rate in inches per second.

d. Combustion characteristics.

e. Disposition or status, dimension and size of sample material, particularly thickness.

f. Test pressure and test atmosphere.

g. Name and number of test procedure.

h. Date of test.

i. Test number.

j. Identity of the testing agency.

k. Name and signature of test coordinator.

l. Thickness.

m. Substrate material.

7.0 TEST No. 3 - FLASH AND FIRE POINT TESTS

7.1 PURPOSE - This test is designed to evaluate the spark ignition characteristics of nonmetallic materials selected for application in and around manned spacecraft.

7.2 TEST CONDITIONS - PRESSURE AND ATMOSPHERE - The test pressure and gas mixture conditions for the pertinent materials category shall be designated by the requirements for each program.

7.3 DEFINITIONS

a. Flash Point - The flash point is the lowest temperature at which a material will give off, at or near its surface, flammable vapor(s) which, when mixed with the test atmosphere and exposed to an ignition source will provide a non-self-sustaining flash or flame.

b. Fire Point - The fire point is the lowest temperature at which the mixture of vapors from the surface of a material and the test atmosphere continue to burn after ignition. A self-sustaining, self-propagating flame whether continuous or intermittent, shall be considered equivalent to flaming combustion.

7.4 SELECTION GUIDELINES - Flash and fire points shall be measured and recorded.

7.5 TEST EQUIPMENT

a. Test Chamber

(1) Construction

(a) The test chamber shall be suitably constructed to insure safe operation. A window or viewing port for visual observations shall be included. The chamber is to be fully protected against the possibility of operator injury in the event of explosive rupture.

(b) Organic material used in the construction of the chamber, such as gaskets and seals, shall be of types which contribute little or no outgassing products to the chamber or which can be preoutgassed by vacuum cycling to a minimal amount of identifiable vapor: i.e., less than 10 ppm based on the chamber volume.

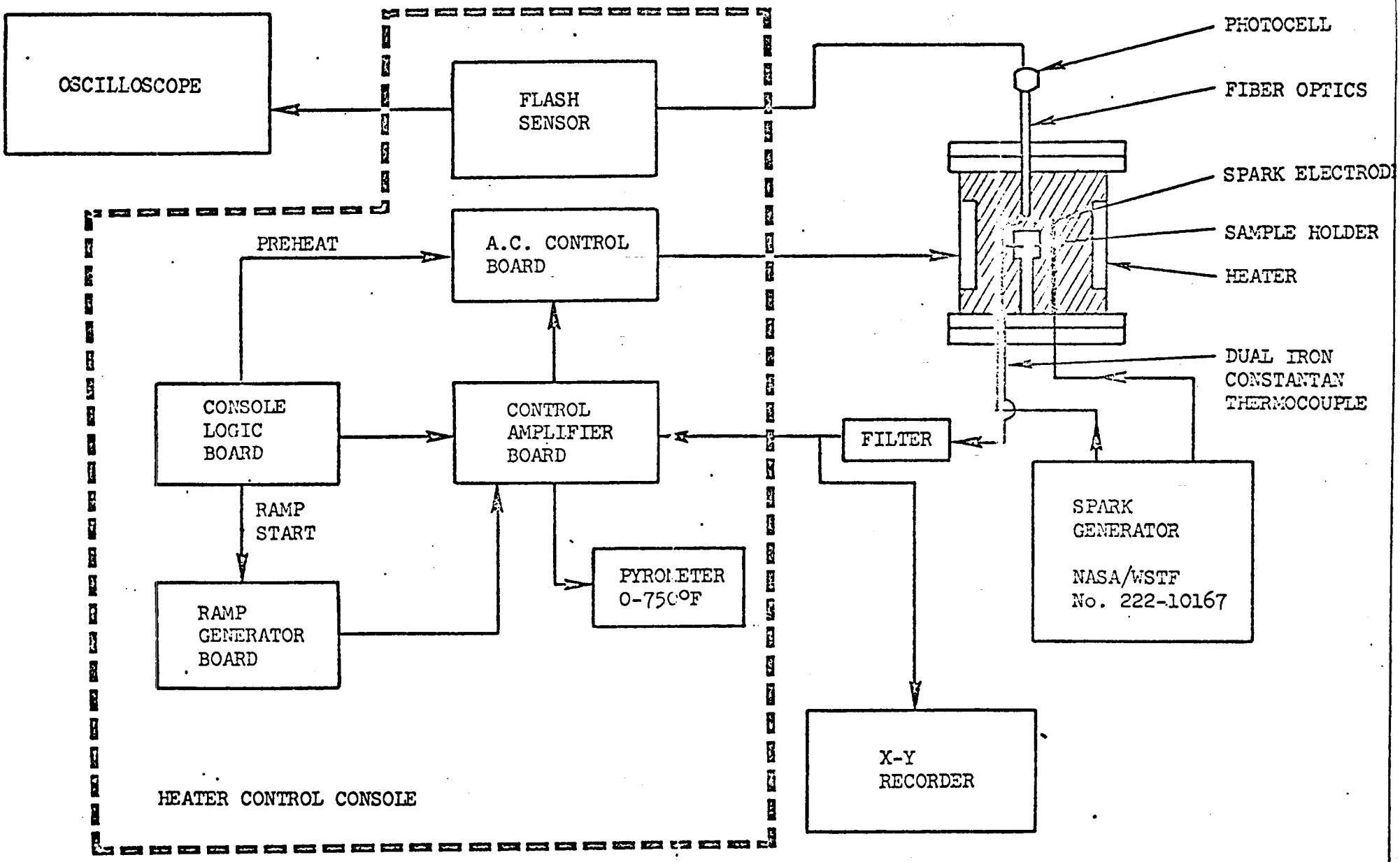

FIGURE 2 TEST SYSTEM ASSEMBLY

(c) The chamber volume shall be large enough to accommodate a sample of size specified in Paragraph 7.6.

(2) Test System Assembly - Figure 2 is a functional diagram of the flash and fire test system.

(3) Test Chamber and Specimen Cup Assembly - Preferably the test chamber and specimen cup assembly shall be constructed according to the specifications of NASA/WSTF drawing No. 251-10234-2. Other designs which produce comparable results may be used.

(4) Temperature Control Unit - The specimen cup shall be heated at 25 $\pm$ 5°F. per minute. NASA/WSTF drawing No. 252-10235 specifies a control unit that may be used to perform this function.

(5) Spark Ignition Equipment

(a) Spark needles shall be made of tungsten shaped to a 0.004 inch radius point.

(b) Spark energy shall be supplied to the electrodes using the high voltage spark generator circuit described in NASA/WSTF drawing No. 222-10167. The average spark energy shall be 50 $\pm$ 20 millijoules with a spark duration of 2$\pm$1 milliseconds.

(6) Gas Systems - The gas mixture delivery system shall consist of corrosion resistant steel tubing of suitable size inside the test chamber. The test gas shall be brought into the chamber through this tube and exhausted directly from the chamber by the same type or any safe and efficient equipment.

(7) Flash and Fire sensor Unit - Flash and fire events shall be determined using a sensor unit constructed as specified in the NASA/WSTF drawing No. 252-10298.

7.6 TEST SPECIMEN PREPARATION

a. The desired test specimen weight is 0.500 grams. If this specimen weight cannot be realized within the adjustment limitation of the sample cut assembly, then decrease the sample weight to 0.400 grams (or 0.300 grams, etc.).

b. Bulk materials, films, fabrics, and foams shall be cut to a cylindrical shape (0.6" diameter) and of sufficient height to make up a specimen weight of 0.500 $\pm$ .005 grams. The cut specimens may be stacked to make up the required weight.

c. Liquids, powders, lubricants, greases, or small solid items shall be poured or otherwise transferred into the cup to make up a 0.500 $\pm$ .005 gram test specimen.

d. Electrical wire insulation shall be stripped from the wire, cut to 1/4" lengths, and placed in the cup to make up a 0.500 $\pm$ .005 gram test specimen.

e. Paints coatings, epoxies, and other such materials that require curing before testing are to be applied to Teflon in the "normal usage" thickness and then cured, stripped from the Teflon and then cut to the test configuration (i.e., disks). The material shall then be stacked in the specimen cup to provide the required sample weight.

f. Materials not suited to testing in the forms described above shall be tested in the most feasible manner. In any event, the test specimen weight shall not exceed 0.500 $\pm$ .005 grams and the distance between the specimen surface and the electrodes shall be maintained to 0.750 $\pm$ 0.025 inches.

g. The specimens shall be cleaned by blowing with dry nitrogen or oxygen.

7.7 TEST PROCEDURE

a. Note that the material has been identified through one of the following:

(1) Manufacturer's certification

(2) NASA certification

(3) Contractor certification

b. The test chamber shall be thoroughly cleaned before each test. Black light may be used to detect the presence of residue.

c. Place 0.500 $\pm$ .005 grams of the test specimen into the cup (see paragraph 7.5.a.3).

d. Place the cup in the cup assembly.

e. Insert the spark electrodes and adjust the spark gap to 0.125 $\pm$ 0.025 inches.

f. Adjust the specimen cup assembly so that the distance between the specimen surface and the spark gap is 0.750 $\pm$ 0.025 inches.

g. Seal the test chamber and evacuate to at least 0.1 psia. NOTE: a pressure rise greater than 0.1 psia in 5 minutes indicates a leak that must be corrected prior to proceeding with the test.

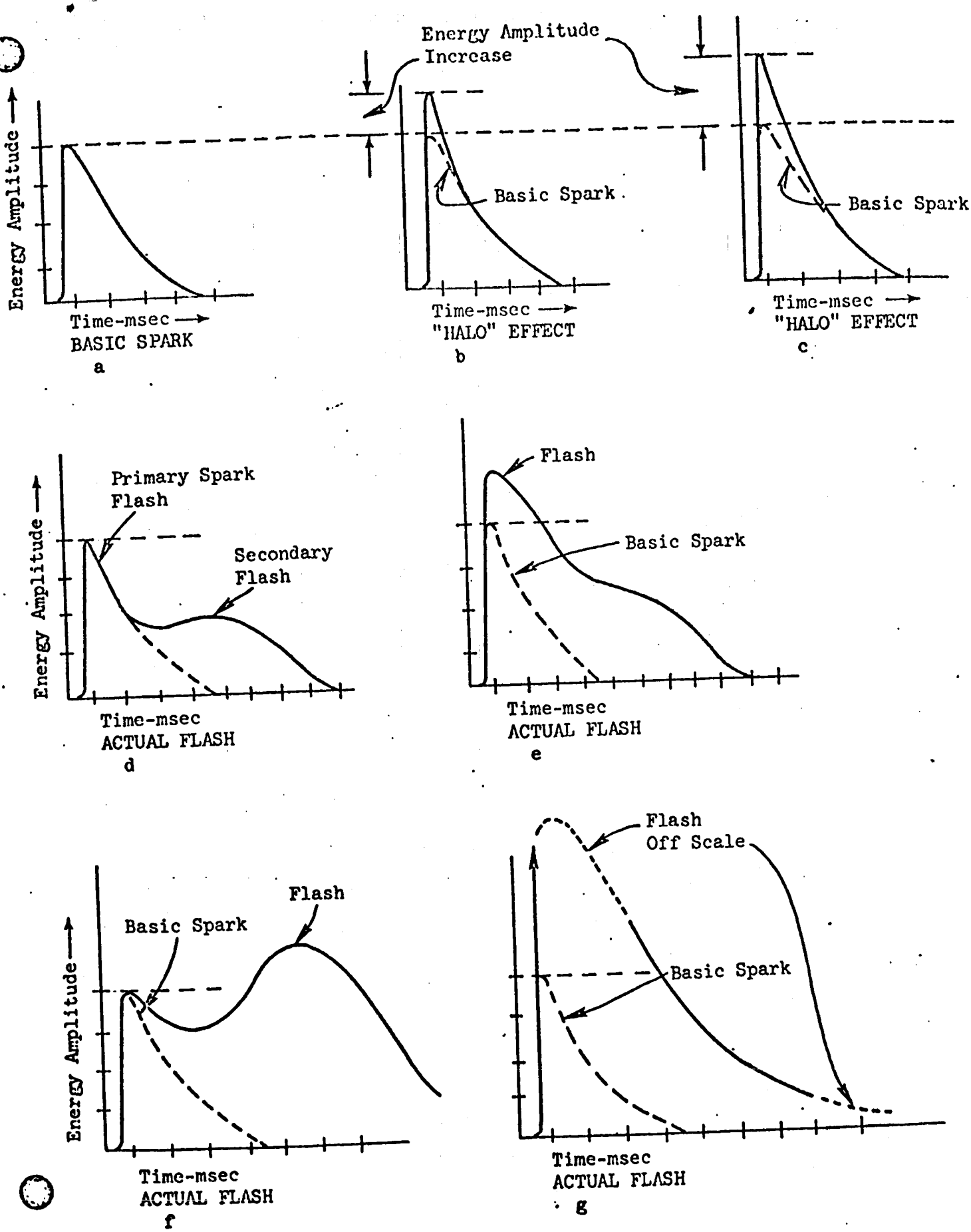

FIGURE 3 TYPICAL OSCILLOSCOPE DISPLAYS

h. Pressurize the chamber to the desired test atmosphere and pressure (Section 7.2).

i. Allow the spark to discharge across the electrodes for a total of 20 times prior to thermal programming. This step will establish spark uniformity.

j. Heat the specimen at the rate of 25° ± 5°F. per minute. A single spark shall be discharged at least once for each 4° ± 1°F. temperature rise.

k. Record flash and fire points as detected electronically (See Section 7.8); record flash and fire points, if visually detected.

l. Testing for flash and fire points shall be stopped when the maximum test temperature of 600°F. has been reached.

m. Depressurize and cool the chamber to ambient temperature.

n. Thoroughly clean the sample cups and interior of the chamber.

o. Repeat steps 7.7.b through 7.8.n until three tests have been conducted.

7.8 ELECTRONIC DETECTION OF FLASH AND FIRE - A major advantage of the test system described in Section 7.5 is that sensitive instrumentation and visual observation are both used to monitor flash occurrences within the chamber. Some materials exhibit an apparent flash which has been defined as the "halo". The system described in Section 7.5 records this "halo" effect and differentiates between the "halo" effect and a true flash point. This is accomplished by means of an oscilloscope, operated in the storage mode so that the spark output can be analyzed and retained on the scope's display console after its occurrence. Typical spark energy outputs observed on the oscilloscope are presented in Figure 3. The basic spark output is characterized as shown in 3a. When a material that exhibits the "halo" is being tested, the amplitude of the basic spark output generally increases by some small increment with each spark after a certain temperature is reached (Figures 3b and 3c). During a period when the "halo" is being observed, the time displacement (horizontal) axis is vertually constant; only the energy amplitude increases. The "halo" does not propagate as does an actual flash. The "halo" appears like an ionized gas that adds energy to the spark only for the duration of the spark. An actual flash self-propagates for a time period longer than the spark time; hence, an increase in the time displacement will be observed.

This is illustrated in Figures 3d and 3e. Materials exhibiting characteristics as illustrated in 3d and 3e are very difficult to visually differentiate from the "halo"; however, the instrumentation presentation clearly indicates the occurrence of a flash. Figures 3f and 3g illustrate the shape of flashes that can easily be visually distinguished. A sustained flash of long duration shall be considered as the fire point. (Section 7.3.b).

7.9 REPORT - The data shall be reported on a suitable form which shall contain the following information:

a. Flash point temperature °F.

b. Fire point temperature °F.

c. The report shall include the following information:

(1) Name and positive identification of the material

(2) Vendor designation and vendor.

(3) Dimensions and size of sample material.

(4) Test pressure and atmosphere.

(5) Maximum test temperature.

(6) Observations (temperature of observed "halo", sample discoloration, etc.).

(7) Name and number of test procedure.

(8) Date of test.

(9) Identity of the test agency.

(10) Name and signature of test coordinator.

8.0 TEST No. 4 - ELECTRICAL WIRE INSULATION AND ACCESSORY FLAMMABILITY

8.1 PURPOSE - This test is designed to screen flammable wire insulation and electrical accessory materials which may be used in manned spacecraft and spacecraft test facilities. Electrical accessory material consist of wire bundle sleeving, heat shrinkable tubing, solder sleeves, bundle ties, cable clamps and identification tags.

8.2 TEST CONDITIONS - PRESSURES AND ATMOSPHERE - The test pressure and gas mixture conditions for the pertinent materials category shall be designated by the requirements for each program.

8.3 CRITERIA OF ACCEPTABILITY - Electrical wire insulation and accessories determined non-combustible in the test atmosphere during the application of current overloads up to the melting point of the electrical wire and which meet the requirements of test 1 shall be classified as Group I.

8.4 TEST EQUIPMENT

a. Test Chamber - Test chamber shall have sufficient volume to insure complete combustion of the wire bundle specimen and shall be suitably constructed and protected to insure safe operation. A window or viewing port for visual observations shall be provided. The test chamber shall contain inlets for vacuum, air, oxygen, gas mixture and a source of power for wire overload. A horizontal sample holder shall be included and positioned within the test chamber.

b. Pressure Gauge - The pressure gauge shall be capable of measuring absolute pressure with an accuracy of $\pm$ 0.1 psia. A comparable pressure transducer may be used.

c. Gas Supply - The test gases shall be commercially available conforming to the appropriate specification. Suitable equipment for transferring gas to the test chamber shall be provided.

d. Sample Holder - The sample holder shall consist of two horizontally mounted electrical connections, i.e,, knurled bolts, spaced twelve inches apart. Three nonflammable center supports shall be provided to support the center and ends of the sample wire bundle. The electrical terminals shall be connected to the ignition power source.

e. Ignition Source - An external electrical power supply shall be provided which is capable of providing a large steady current through one wire of the sample bundle so that a very high temperature will be achieved quickly. The power source must be capable of supplying a current 10 percent above the nominal fusion current for the gauge wire being tested.

Wire Gauge No.	Initial Test Current (AMPS)	Nominal Fusion Current (AMPS)
28	10	15
26	15	20
24	20	30
22	25	40
20	40	60
18	60	80
16	100	120
14	140	160
12	205	225
10	230	300

8.5 SAMPLE PREPARATION

a. Wire Insulation Samples

(1) Insulated wire samples shall be free of cuts, abrasions, or other flaws as determined by close visual inspection.

(2) A test bundle of seven insulated wires, six of which are twelve inches in length and the seventh wire thirteen inches in length, shall be tightly bound together using Bently-Harris STFE-30 or equivalent lacing tape in four places three inches apart. The thirteen inch length of wire shall be positioned on the exterior of the bundle in intimate contact with adjacent wires and shall be stripped of one half inch of insulation on each end. A crimp spade lug terminal shall be used at each end to terminate the overloaded wire and provide a heat sink. The wires shall be laid up parallel to each other and one end of the bundle shall be twisted 180° relative to the other. Electrical harnesses and accessories as used in actual applications, including connectors, may be used in lieu of the above configuration. The mating connector with electrical wiring to power electrodes must be either ceramic insulated wire or bare copper wire of lower gauge number than that used in the test bundle.

b. Electrical Wire Accessories

(1) Accessory specimens shall be free of cuts, abrasions or other flaws as determined by close visual inspection.

(2) Accessory specimens shall be installed over or adjacent to wire bundles, prepared per paragraph 8.5, in the manner in which they are intended to be installed in the spacecraft.

8.6 PRETEST PROCEDURE

a. Verify that all test equipment is in current calibration.

b. Verify gas certification.

c. Note that the material has been identified through one of the items below:

(1) Manufacturer's certification

(2) NASA certification

(3) Contractor certification

d. Visually inspect each sample. (There shall be no cuts, abrasions, or other flaws.)

e. Prepare three samples per paragraph 8.5a.

f. Prepare wire accessories per paragraph 8.5b. Document installation configuration details.

g. Record wire gauge number.

h. Record power supply current capability in amps. Power supply must meet the requirement of paragraph 8.4e for the gauge wire being tested.

i. Record thickness of wire insulation in mils.

j. Record volume of chamber in liters.

k. The sample bundle shall be mounted in the horizontal sample holder and positioned within the test chamber by fastening one end of the stripped wire to each of the electrical connection posts. The sample bundle shall be supported in the middle by a center support, constructed with a non-flammable material.

8.7 TEST PROCEDURE

a. Evacuate the chamber to 0.1 psia or less.

b. Allow the chamber to stand for 5 minutes. A leak is indicated if an increase in the test chamber of greater than 0.1 psia is observed at the end of that time. If a leak occurs, the chamber will be brought to atmospheric pressure, leak corrected, and steps 8.7a and 8.7b repeated. Repressurize the chamber to test pressure with the test gas.

c. After the chamber has stabilized at test pressure soak the specimen for at least 3 minutes. Record soak time.

d. Verify chamber pressure is test pressure and isolate the chamber.

e. Apply a current per initial test current of paragraph 8.4a to the wire. If ignition is not obtained in one minute, the current shall be increased in 5 amp steps at one minute intervals until the wire fails or ignition occurs. If the wire fails, the voltage shall remain applied to the overloaded wire until it is positively established that current does not flow by bridging the gap to adjacent conductors.

f. Record current level at which ignition occurred or the wire failed. Record if combustion was sustained or halted upon removal of ignition source.

8.8 REPORTING - The following data shall be reported:

a. Name and identification of material.

b. Vendor designation and vendor.

c. Results of test.

3.1 Combustion characteristics and phenomena - self-extinguishing or burned.

3.2 Current level at end of test.

3.3 Test pressure and test atmosphere.

d. Name and number of test procedure.

e. Date of test.

f. Test number.

g. Identity of the testing agency.

h. Name and signature of test coordinator.

i. Configuration.

9.0 TEST No. 5 - ELECTRICAL CONNECTOR POTTING FLAMMABILITY TEST

9.1 PURPOSE - This test evaluates the flammability characteristics of spacecraft potting compounds in a specific gas atmosphere environment. It is designed to simulate a short circuit or dielectric breakdown on current carrying wires, or connector contacts within the potting used to environmentally seal electrical connectors.

9.2 TEST CONDITIONS - Pressures and Atmosphere - The test pressure and gas mixture conditions for the pertinent materials category shall be designated by the requirements for each program.

9.3 CRITERIA OF ACCEPTABILITY - Connector potting, and coating compounds determined non-combustible when exposed to an energized ignition source in the test environment at the maximum use pressure shall be classified as Group I.

9.4 TEST EQUIPMENT

a. Test Chamber - Test chamber shall have sufficient volume to insure complete combustion of the potting compound specimen and shall be suitably constructed and protected to insure safe operation. A window or viewing port for visual observations shall be provided. A test chamber shall contain inlets for vacuum, source of power for wire overload, air, oxygen and gas mixture. A horizontal and vertical sample holder and a central connector mount shall be included and positioned within the test chamber. See Figure 4 and 4a.

b. Pressure Gauge - The pressure gauge shall be capable of measuring absolute pressure with an accuracy of $\pm$ 0.1 psia.

c. Gas Supply - The gas shall be commercially available conforming to appropriate specifications.

d. Sample Holder and Connector Mount - The sample holder shall consist of two horizontally mounted electrical connections (bolt with knurled nuts) spaced 12 inches apart. The electrical terminals shall be connected to the ignition power source. A central connector consisting of a vertical panel drilled to receive a horizontal Bendix PT07 Jam Nut Receptacle or equivalent shall be provided.

e. Ignition Source - An external power supply shall be provided which is capable of providing a large steady DC current so that a very high temperature will be achieved quickly. The power source must be capable of supplying 100 amperes of current through the AWG 18 overloaded conductor.

9.5 SAMPLE PREPARATION

a. Prepare three samples for each candidate potting compound per paragraphs 9.6b through 9.6k below.

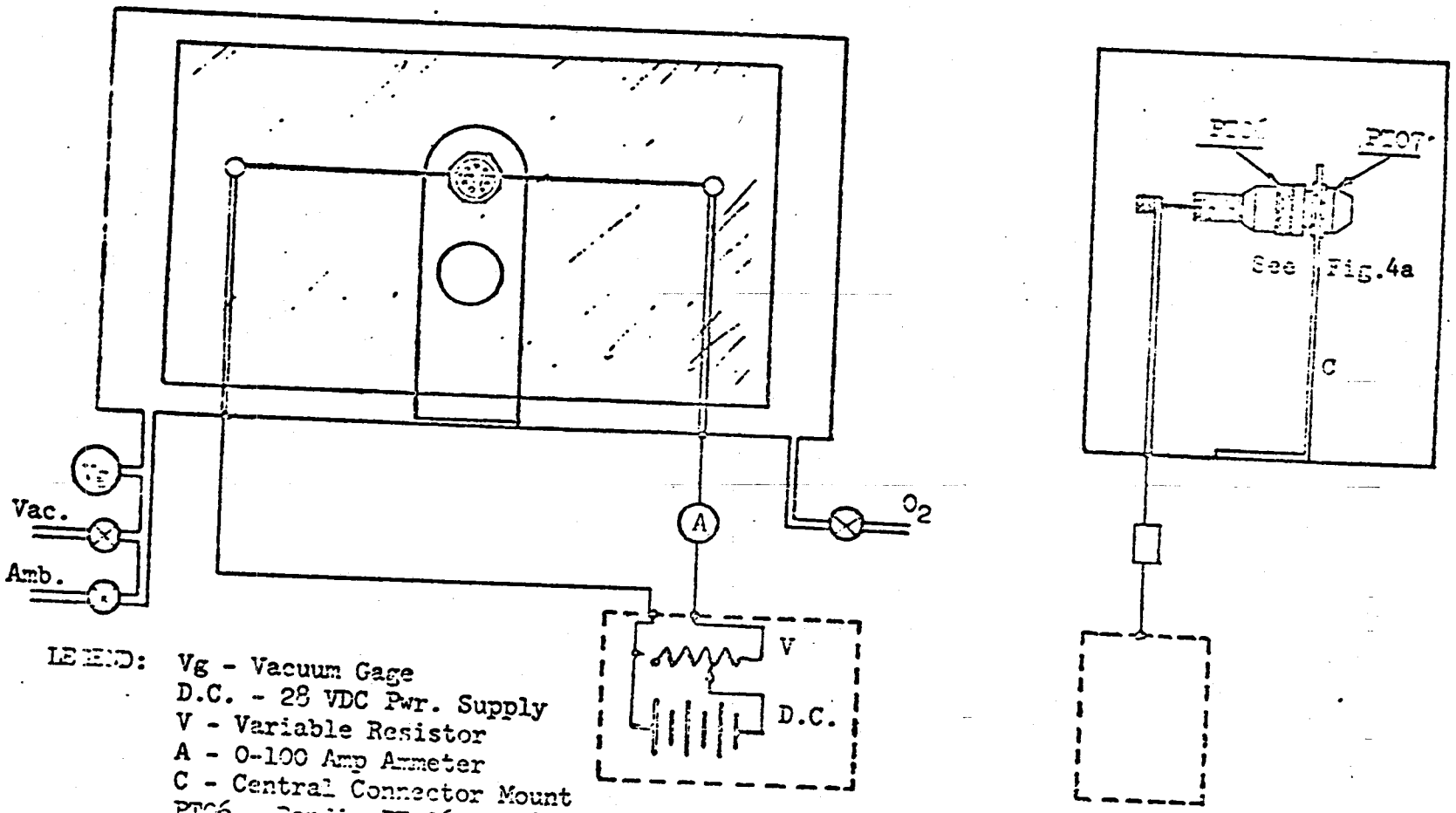

LEGEND:
Vg - Vacuum Gage
D.C. - 28 VDC Pwr. Supply
V - Variable Resistor
A - 0-100 Amp Ammeter
C - Central Connector Mount
PTC6 - Bendix PT 06-CP-18-11P Straight Plug
PTC7 - Bendix PT 07-CP-18-11S Jam Nut Receptacle

FIGURE 4 POTTING FLAMMABILITY TEST EQUIPMENT SCHEMATIC

NOTE: Electrical harnesses and accessories as used in actual applications including connectors may be used in lieu of the hardware called out below. A direct short must be built into this system.

b. Note that the material has been identified through one of the items below:

(1) Manufacturer's certification.

(2) NASA certification

(3) Contractor certification

c. A six inch length of AWG 18 white Teflon insulated wire (MIL-W-16878, Type E, or MIL-W-22759, Type MS21985) shall be prepared as follows:

(1) Form a "U" bend in the middle of the wire and etch the center 4 inch per MSC Specification Q-3.

(2) Strip one quarter inch insulation from each end.

(3) Cut the wire in half such that two inches of etched insulation remain on the unstripped end of each three inch length.

d. Obtain two 6" lengths of AWG 12 white TFE Teflon insulated wire. Strip 1/2" of insulation from one end of each wire, 1/4" from the other end.

e. Crimp the 1/4" exposed AWG 12, 6" wire to the 1/4" exposed AWG 18, 6" wire using a standard copper barrel crimp sleeve. Repeat for the second wire.

f. Slide a 1" length of FEP Teflon heat shrinkable sleeving over each barrel crimp; shrink using a hot air gun.

g. Obtain a Bendix Pygmy PT06CP-18-11P Straight Plug or equivalent. Strip 1/4" from the end of each wire prepared per 9.6. Crimp one wire to contact K and the second wire to adjacent contact L.

h. Crimp nine (9) etched white AWG 18 Teflon insulated wires, each 6" long, in the remaining contacts.

i. Place the potting boot on the connector and fill with the candidate potting compound, per the manufacturer's instructions. Insure that the potting compound is within recommended shelf life. Insure that all steps are followed exactly as they would be in flight hardware, including cleaning and priming of connector rear insert for bondability, degassing potting compound, proper humidity control, etc.

j. Cure per applicable user's procedure of manufacturer's recommended time/temperature for optimum properties.

k. Remove potting boot.

9.6 CENTRAL CONNECTOR PREPARATION

a. Prepare three Central Connectors per paragraphs 9.7b through 9.7e below.

b. Obtain a Bendix Pygmy PT07CP-18-11S Jam Mit Receptacle or equivalent. Crimp a short AWG 16 Teflon insulated jumper between contact K and contact L.

c. Place the potting boot on the connector and fill with the compound to be tested.

d. Cure per manufacturer's instruction.

e. Remove potting boot.

9.7 TEST PROCEDURE - The procedure shall be carried out as follows:

a. The sample prepared per paragraph 9.6 shall be mounted in the sample holder by locking the PT06CP plug to the PT07CP receptacle which has been placed in the vertical panel provided for it, and fastened with a threaded locknut. The stripped ends of the lengths of wire crimped into the plug shall be fastened to the current supply terminals of the sample holder.

b. The test chamber shall be evacuated to a pressure of 0.1 psia or less and repressurized to the test pressure with the test atmosphere. Allow the chamber to stand for one minute. A leak is indicated if an increase in test chamber pressure of 0.1 psia is observed during the 5 minute period after the vacuum pump is closed off from the system. The system shall be brought to atmospheric pressure and the leak corrected before any additional tests are carried out. Repeat the above procedure. Verify atmospheric composition by suitable analytical methods.

c. After the test chamber has been stabilized at the test pressure, soak the specimens three to ten minutes. Apply a current of 55 amperes to the wire. If ignition or considerable degradation is not obtained in one minute, the current shall be increased by 5 amperes (i.e., from 55 to 60 and 60 to 65, etc.) until such time as the wire fails or ignition occurs.

If the wire fails, voltage shall remain applied to the open wire for 1 minute to establish that current does not flow by bridging the gap to adjacent conductors.

d. Three samples of each potting compound shall be tested. The failure of any one sample to meet the criteria of paragraph 9.4 shall be cause for rejection of that compound.

9.8 REPORTING - The test data and pertinent information concerning the materials shall be reported on a form. Minimum information contained will consist of:

a. Name and positive identification of the material

b. Vendor designation and vendor.

c. Usage, quantity, and surface area in the spacecraft.

d. Test pressure and test atmosphere.

e. Results of each test including combustion phenomena if ignition occurs.

f. Date of test.

g. Test number.

h. Identify of the testing agency.

i. Names and signature of Test Coordinator.

j. Configuration

10.0 TEST NO. 6 - ODOR TEST

10.1 PURPOSE - The purpose of this test is to determine the odor characteristics of materials. A material that fails these requirements shall not be used.

10.2 TEST CONDITIONS - Pressures and Atmosphere - The test pressure and gas atmosphere conditions for the pertinent materials category shall be designated by the requirements for each program.

10.3 ODOR TEST REQUIREMENTS AND CRITERIA

a. Selection of Test Panel for Odor Evaluation - The test conductor shall establish a pool of qualified personnel.

(1) Members of the pool shall be male and each member shall be capable of detecting seven basic odors from the following solutions:

Primary Odor	Standard Compound	Amount Dilution in Water
Ethereal	1,2 - dichlorethane	0.4 ml in 500 ml
Comphoraceous	1,8 - cineole	5 ul in 500 ml
Musky	15 - hydroxypenta-decanoic acid lactone	1 mg in 1,000 ml
Floral	1 - methyl - 1 - ethyl - 2 phenyl propanol - 1	0.075 ml in 500 ml
Minty	menthone (dl)	2 ul in 333 ml
Pungent	formic acid	25 ml of 90 percent solution in 500 ml
Putrid (methy disulphide)	methyl dithiomethane	1 ul in 10,000 ml

(2) Members of the pool shall be given three odorless solutions along with the seven primary standards for detection of odor.

(3) The solutions shall be freshly prepared once a month or as needed and stored in closed amber bottles away from heat sources and direct sunlight.

(4) The established pool for odor evaluation shall be requalified every three months.

(5) A panel of at least 5 members shall be selected from the pool for odor evaluations.

(6) Odor panel members should receive a nose and throat examination by a medical staff member prior to, and after, each odor test session.

(7) Members of the pool shall not participate on the panel if their sense of smell is affected in any manner such as recent smoking, ingestion of highly flavored foods and exposure to pungent vapors.

(8) At least one of the seven basic odors shall be presented to the panel members as a standard for sensing odor prior to evaluation of odors from any sample material.

(9) Panel members shall not be permitted to see the material or to know the gas sample being evaluated for odor, nor to see the ratings of the other panelists.

(10) Odor evaluations on sample materials shall be performed in a suitable room actively ventilated and free from extraneous odors.

(11) Odor evaluations shall be performed on every new bottle of oxygen or gas used for the tests.

(12) Provisions shall be made for flushing the face mask of residual odors.

b. Odor Evaluation - Each panel member shall evaluate the odor of a sample according to the following scale:

Members Rating	Test Conductor's Rating
Undetectable	0
Barely detectable	1
Easily detectable	2
Objectionable	3
Irritating	4

(1) An average score of 2.5 or less signifies the material passes the odor test. An average score above 2.5 at any dilution signifies that the material fails.

10.4 TEST DISCIPLINE - Prior to these tests, candidate materials must have been tested for total organics and carbon monoxide and must meet the criteria of acceptability.

10.5 TEST EQUIPMENT

a. Test Chamber - The test chamber shall be made of pyrex glass and its internal volume shall be two liters minimum. The test chamber shall have the following:

(1) A gas tight removable cover.

(2) A sampling valve.

(3) A sampling port capable of being sealed with a septum.

A laboratory vacuum dessicator may be utilized as a test chamber.

b. Oven - The oven shall be capable of providing a constant interior temperature from $70 \pm 2°F$ up to $200 \pm 5°F$.

c. Test Gas Supply - The test gas shall be commercially available and conform to the appropriate specifications. Suitable equipment for transferring gas to the test chamber shall be used.

d. Sample Transfer Equipment - Glass syringes, of 3 cc minimum capacity, shall be used for measuring and transferring sample atmospheres from the test chambers to the panel members' face mask.

e. Pressure Gauge - The pressure gauge shall be capable of measuring absolute pressures to within 0.1 psia accuracy.

f. Olfactometer - The olfactometer shall consist of a mask made of odorless flexible material which can be applied to a panel member's face.

g. All odor testing equipment shall be nonproducers of odor and carbon monoxide, as set forth under the test conditions in Section 10.8.

10.6 PRETEST PROCEDURE - Note that the material has been identified through one of the items below:

a. Manufacturer's certification

b. NASA certification

c. Contractor's certification

10.7 TEST SPECIMENS PREPARATION

a. All the materials tested shall be classified into four categories; surface, volume, weight, or specialized items.

b. Samples based on Surface. This classification is defined as all those materials that are essentially two-dimensional. This would include films, fabrics, coatings, finishes, inks, primers, adhesives, thin film lubricants, tapes, and electrical insulating material.

The sample tested shall have a surface area of 300 $\pm$ 16 square centimeters (46.5 $\pm$ 2.5 square inches) per liter of test container. Coatings, finishings, etc., shall be coated on clean aluminum substrate of .50 $\pm$ 0.1 millimeters (0.020 $\pm$ 0.001 inch thickness). Material thickness, curing process, and method of application shall be in accordance with the manufacturer's recommendations. Material may be coated onto both sides of the aluminum panel. Tapes and other similar materials with an adhesive surface shall be fastened to a similar aluminum panel. In all cases, only the outer surface of a material on the aluminum panel is counted in the surface area determinations. Films, fabrics, and similar materials shall be cut to give 300 $\pm$ 16 square centimeters (46.5 $\pm$ 2.5 square inches) surface. Since these materials are

two-surfaced in use, both the top and bottom surface shall be counted in determining total surface area. Heat shrinkable tubing shall be applied and shrunk to simulate actual use configuration.

c. Samples based on Volume.

This classification is defined as all those materials having a definite volume but having a large real surface area due to surface convolutions or matting. These shall include foams and other blown or foamed materials and insulation padding.

Samples of these materials shall be cut to a thickness of 1.27 ± 0.10 centimeters (0.50 ± 0.05 inch) unless the existing thickness is less than 1.2 centimeters (0.50 inch). In this case, the existing thickness shall be used. The material shall be cut to such a size as to give 50 ± 5 square centimeters (7.75 ± 0.75 square inches) of total surface per liter of test container volume. All surfaces, tops, bottoms, and sides shall be used to compute total surface area. In cases where the natural thickness is such that the material cut would be too large to be placed into the container, two or more pieces may be cut as long as the total surface area requirement is met.

d. Samples based on Weight.

This classification is defined as all those materials having a definite bulk and not falling into the volume classification. This shall include potting compounds, molding compounds, cast or formed objects, solid wires, and thick plastics. Liquids that are not used or applied as coatings or thin films shall be included.

The samples shall be used as much as possible in the supplied configuration and cut to give 5.0 ± 0.25 grams per liter of test container. Potted or molded materials shall be prepared and cured per manufacturer's directions and cut to weight. Liquids shall be placed in a suitable nonreactive dish 5.7 ± .5 centimeters (2.25 ± 0.25 inches) in diameter. Sample weight shall be 5.0 ± 0.25 grams per liter of test container.

e. Specialized Items.

It must be recognized that some materials will not meet the above classifications and must be specially handled. This will most often occur with non-homogeneous materials. These cases will be tested in the manner designated by the Test Engineer in charge. The manner of testing and sample preparation shall be fully reported.

10.8 TEST CONDITIONS

a. The atmosphere and pressure in the test chamber at the start of exposure shall be that specified for each program.

b. The sample materials shall be heated at test temperature of 155 ± 5°F. for a test duration of at least 72 hours.

c. Leak Check - The test system shall not increase in pressure more than 0.1 psia while remaining at a reduced pressure of 0.1 psia for a time period of one hour after isolation from the pump.

d. Odor evaluations shall be started within three hours of the conclusion of the thermal treatment.

e. All measuring equipment shall have the proper calibration stickers.

f. All equipment shall be cleaned in accordance with commonly accepted laboratory practices and shall be given a distilled water rinse and oven-dried at a minimum temperature of 200°F. The equipment shall be free of extraneous odors before each use.

10.9 TEST PROCEDURE - The procedure shall be conducted in the following order:

a. Sample materials shall be prepared according to the conditions outlined under sample preparation in paragraph 10.7.

b. After placing the sample material in the test chamber, the chamber shall be evacuated to 0.1 psia or less. The test chamber shall then be pressurized to test pressure and test atmosphere.

c. The test chamber shall be exposed to a temperature of 155 ± 5°F in an oven for a time period of at least 72 hours, allowing time for initial warm-up.

d. Following the isothermal exposure, the test chamber shall be removed from the oven and allowed to return to room temperature.

e. The pressure in the test chamber shall be measured and recorded after return to room temperature.

f. Observation of distillable residues on interior chamber walls shall be made and recorded.

g. The test chamber shall be pressurized to one atmosphere with test gas and a sampling septum installed.

h. Odor Test - Known volumes of sample atmosphere shall be extracted from the test chamber by means of a syringe and diluted with fresh gas in the following proportions:

(1) One part of sample atmosphere to 29 parts of test gas.

(2) One part of sample atmosphere to 9 parts of test gas.

(3) No dilution, or as drawn from the flask.

(4) Testing shall begin with the greatest dilution and progress toward no dilution. A material that fails at a high dilution shall not be tested at the more concentrated dilutions.

10.10 REPORTING - Unless otherwise specified, the following test data and pertinent information concerning the materials shall be reported.

a. Name and positive identification (paragraph 10.6) of material.

b. Vendor designation and vendor.

c. Total rating numbers determined by the panel members.

d. Definition of the odor as interpreted by each panel member.

e. Status of the material as a result of the test.

f. Name and number of the test procedures.

g. Test pressure, atmosphere, and temperature.

h. Date of test.

i. Identity of the testing agency.

j. Name and signature of test coordinator.

11.0 TEST No. 7 - DETERMINATION OF OFFGASSING PRODUCTS AND CARBON MONOXIDE TEST

11.1 PURPOSE - This procedure determines the criteria for a screening test, which will determine the suitability of non-metallic materials for use in the space vehicle crew compartment environments. The criteria is established with respect to production of offgassing of potentially toxic or objectionable and condensible volatiles. The volatiles are separated into three categories: Carbon Monoxide, Total Offgassing, and Observable Condensates.

11.2 TEST CONDITIONS - Pressures and Atmosphere - The test pressure and gas mixture conditions for the pertinent materials category shall be designated by the requirements for each program.

11.3 CRITERIA OF ACCEPTABILITY

a. The maximum allowable level of total organics, excluding water, in the tested configuration shall not exceed 100 micrograms per gram of sample.

b. The maximum allowable level of carbon monoxide in the tested configuration shall not exceed 25 micrograms of carbon monoxide per gram of sample.

c. Condensates shall be determined as visible or invisible or as a function of any detection system selected by the testing agency in accordance with the requirements and criteria set by the program office.

11.4 TEST DISCIPLINE

a. Each test shall be directed by the cognizant Test Engineer or his appointed alternate.

b. Approval of the test shall be indicated at the end of the test procedure by the signature of the responsible Test Engineer. Entries transcribed to the test data sheets will also be verified by the Test Engineer.

11.5 TEST EQUIPMENT

a. Test Chamber - The test chamber shall have a minimum main chamber volume of two liters. It shall have a configuration and be fabricated of materials which allow ready cleaning. A thermometer or thermocouple and pressure gauge for temperature and pressure determination, respectively, shall be included in the test chamber. The chamber shall be connected so as to permit direct gas sample introduction from the chamber to a gas chromatograph and/or mass spectrometer.

b. Heating Source - The heating unit or oven shall maintain the temperature in the test chamber uniformly constant at 155 $\pm$ 5°F. The temperature during sample exposures shall be recorded.

c. Vacuum Pump - The vacuum pump shall be capable of producing a vacuum in the test system of less than 0.1 psia.

d. Analytical Equipment - The analytical equipment shall consist of the following types of equipment and any other instruments which the tester desires to use efficiently to increase the accuracy, reliability and confidence in the offgassing products evaluation.

(1) Gas Chromatograph System - The gas chromatograph system shall utilize a minimum of two detectors, thermal conductivity and hydrogen flame ionization units with appropriate recorders. As a supplementary detector, the electron capture attachment/recorder is recommended. The separatory columns shall have the capability of separating light organic and inorganic gases, organic sulfides and mercaptans, halogenated hydrocarbons, representative aliphatic and aromatic hydrocarbons including aldehydes, ketones, alcohols, and esters. The hydrogen flame ionization detector has greater sensitivity to organic materials. Conversely, because of the flame ionization detector's lack of sensitivity to the inorganic compounds listed above, the thermal conductivity detector is used for their identification.

(2) Recording Infrared Spectrophotometer capable of analyzing 3 microliters (3 l) or less of liquid with accessories which include an infrared gas cell with 10m path length.

(3) Mass spectrometer.

(4) Cold trapping system suitable for trapping and transfer of microliter quantities of liquid to suitable analytical equipment.

(5) Gas Sampling System suitable for the transfer of measured volumes of gas samples from the test chamber to the gas chromatograph.

(6) Calibration Gas Samples as required to qualify detector sensitivity and readout. The calibrated gas samples may be brought from a manufacturer or made up in the laboratory. The basic calibration gas to be used shall be methane.

11.6 PREPARATION OF TEST EQUIPMENT

a. Prior to the loading of the sample into a container, the container shall be filled to test pressure with the test atmosphere, heated at 155 $\pm$ 5°F for 24 hours, and the gas analyzed for total offgassing and carbon monoxide. The container shall be certified as clean for use if the total organics and carbon monoxide values are 5.0 ppm or less respectively, by volume as methane equivalents, over that of the test atmosphere. After use, the container shall be reused without cleaning if the sample values are equal to or less than the above. If not, the container shall be heated and purged with air or nitrogen by some convenient method, such as a heat gun equiped with a blower, the container then shall be loaded to test pressure with test atmosphere, and tested to the above specifications.

b. Leak Check - The test system shall not increase in pressure more than 0.1 psia while remaining at a reduced pressure of 0.1 psia for a time period of one hour.

11.7 PRETEST PROCEDURE - Note that the material has been identified through one of the following:

a. Manufacturer's certification

b. NASA certification

c. Contractor certification

11.8 TEST SPECIMENS

a. All the materials tested in the program shall be classified into four categories; surface, volume, weight, or specialized items.

b. Samples based on Surface.

This classification is defined as all those materials that are essentially two-dimensional. This would include films, fabrics, coatings, finishes, inks, primers, adhesives, thin film lubricants, tapes, and electrical insulating material.

The sample tested shall have a surface area of 300 ± 16 square centimeters (46.5 ± 2.5 square inches) per liter of test container. Coatings, finishings, etc., shall be coated on clean aluminum substrate of 50 ± 0.1 millimeters (0.020 ± 0.01 inch) thickness. Material thickness, curing process, and method of application shall be in accordance with the manufacturer's recommendations. Material may be coated on both sides of the aluminum panel. Tapes and other similar materials with an adhesive surface shall be fastened to a similar aluminum panel. In all cases, only the outer surface of a material on the aluminum panel is counted in the surface area determinations. Films, fabrics, and similar materials shall be cut to give 300 ± 16 square centimeters (46.5 ± 2.5 square inches) surface area. Since these materials are two-surfaced in use, both the top and bottom surface shall be counted in determining total surface area. Heat shrinkable tubing shall be applied and shrunk to simulate actual use configuration.

c. Samples based on Volume - This classification is defined as all those materials having an indefinite volume but having a large real surface area due to surface convolutions or matting. These shall include foams and other blown or foamed materials and insulation padding.

Samples of these materials shall be cut to a thickness of 1.27 ± 0.10 centimeters (0.50 ± 0.50 inch) unless the existing thickness is less than 1.27 centimeter (0.50 inch). In this case the existing thickness shall be used. The material shall be cut to such a size as to give 50 ± 5.0 square centimeters (7.75± .75 square inches) of total surface per liter of test container volume. All surface, tops, bottoms, and sides shall be used to compute total surface area. In cases where the natural thickness is such that the cut material would be too large to be placed into the container, two or more pieces may be cut as long as the total surface area requirement is met.

d. Samples based on Weight - This classification is defined as all those materials having a definite bulk and not falling into the volume classification. This shall include potting compounds, molding compounds, cast or formed objects, solid wires, and thick plastics. Liquids that are not used or applied as coatings or thin films shall be included. The samples shall be used as much as possible in the supplied configuration and cut to give 5.0 ± 0.25 grams per liter of test container. Potted or molded materials shall be prepared and cured per manufacturer's directions and cut to weight. Liquids shall be placed in a suitable nonreactive dish 2.25 ± 0.25 inches in diameter. Sample weight shall be 5.0 ± 0.25 grams per liter.

e. Specialized Items - It must be recognized that some materials will not meet the above classifications and must be specially handled. This will most often occur with non-homogeneous materials. These cases will be tested in the manner designated by the Test Engineer. The manner of testing and sample preparation shall be fully reported.

11.9 PROCEDURE

a. Purge the test chamber until the minimum test atmosphere concentration is 95 percent oxygen and begin heating. Bring the chamber to 155 ± 5°F and adjust the chamber pressure to test pressure.

b. After twenty-four hours, check the test gas for contaminants with the gas chromatograph. Proceed to 11.9c if the total contamination is less then 5.0 ppm by volume over the test atmosphere. If the contamination exceeds the above value, the test chamber shall be flushed and rechecked after an additional twenty-four hours. This procedure shall be continued until the

contamination is below the specific level of 5 ppm. If the gassing contamination continues indefinitely, revision of the test chamber is indicated.

c. Place a clean weighed specimen prepared per Section 11.8 in the test chamber.

(1) The chamber shall be evacuated through a liquid nitrogen trap to below 0.1 psia. The chamber shall then be closed off and the test gas shall be filtered through a 13 X Molecular Sieve and bled into the chamber to test pressure. The conditions of exposure are held at 155 ± 5°F for a total period of 72 hours. Following the designated exposure period, the evolved gases are piped directly into the gas chromatograph while being maintained at 155 ± 5°F. After the final gas samples are taken, the test specimen is removed from the chamber and weighed. The gases are then analyzed for the following:

(a) Total organic offgassing expressed as methane equivalents.

(b) All outgassing components exceeding 10 μg shall be identified and quantified. These shall include but not be limited to the following:

(1) Organic - Benzene, Xylene, methyl ethyl ketone, n-butanol, chloroform, dichloromethane, 1-4 dioxane, formaldehyde, trichloroethylene, carbonyl fluoride.

(2) Non-Organic - Hydrogen cyanide, hydrogen chloride, ammonia, silicon tetrafluoride.

(c) Quantity of carbon monoxide evolved.

d. Determination of Total Organics - The gas chromatograph and associated equipment may be used for the determination.

e. Outgassing components, including those listed in 11.9c 1b, that exceed 10 μg/g shall be identified and recorded in the reporting format with their estimated concentrations.

f. Determination of Carbon Monoxide - The carbon monoxide content or the evolved gases shall be determined above by utilizing an appropriate separation and analytical technique having the sensitivity to detect within 0.5μg/g CO.

g. All charts, equipment calibration information, and test data are to be retained in the event further identification or evaluation is necessary.

11.10 REPORTING DATA

a. The following test data and pertinent information concerning the material tested shall be reported:

(1) Name and positive identification of the material (Paragraph 10.6).

(2) Vendor designation and vendor.

(3) Weight and size - length, width and thickness of sample tested.

(4) Test pressure and atmosphere.

(5) Results of tests.

(a) Carbon monoxide in micrograms per gram.

(b) Total offgassing in micrograms per gram as methane equivalents.

(c) Identity of all products greater than 10 micrograms/gm.

(d) Identity of inorganic species.

(e) Weight loss, percent.

(f) Presence and quantity of condensibles.

(6) Name and number of test procedure.

(7) Date of test.

(8) Test Number.

(9) Identity of the testing agency.

(10) Name and signature of test coordinator.

12.0 TEST NO. 8 - FLAMMABILITY TEST FOR MATERIALS IN VENTED CONTAINERS

12.1 PURPOSE - This procedure describes the method for determining the combustion characteristics of a fire in a closed (unsealed) container. This procedure is applicable to containers with both internal ignition sources and external ignition sources.

Potentially hazardous materials or instruments containing such materials that are removed from the container for functional purposes must meet the requirements for Group I materials if they are left out of the container beyond a time limit to be set by agreement among the program offices and Flight Crew Operations.

12.2 TEST CONDITIONS - PRESSURES AND ATMOSPHERE - The test pressure and gas mixture conditions for the pertinent materials category shall be designated by the requirements for each program.

12.3 CRITERIA OF ACCEPTABILITY - In the event of an internal fire, the container:

a. Shall not rupture and thus permit the scattering of flaming contents about the chamber.

b. Shall not permit flames or burning materials to emit through vents.

c. Shall not rupture or permit the escape of flames or burning debris. The container shall not emit gases and heat to the extent that a rise in pressure measured in the chamber when related to a corresponding rise in the module or vehicle might be sufficient to cause rupture of the walls of the habitable areas of the vehicle.

12.4 TEST EQUIPMENT

a. The test chamber shall be complete with inlets for the required temperature and pressure measuring devices, vacuum, oxygen, gas mixture, air and ignition wires.

b. Temperature Indicators

(1) Temperature Monitoring - Thermocouple readings may be monitored by multiple point recorders or any equally accurate method. The desired accuracy is $\pm$ 10°F. The thermocouples shall be placed inside the box immediately proximate to but not touching the ignition source and approximately at the center of the top, bottom, and four sides of the interior. Thermocouples shall be placed on the exterior of the container against the top, bottom, and four sides and one-half inch above the one-quarter inch lateral to each vent or vent area.

(2) Motion or still pictures must be taken of the test.

12.5 IGNITION SOURCE

a. Internal Ignition - Any container with an internal ignition source such as electrical configurations.

Ignition Source - The ignition source shall consist of a standard silicone ignitor or equivalent. At least one inch of wire shall be left at

each end to permit fastening to the power source lugs. The ignition of the ignitor shall be accomplished by employing a 12 volt regulated direct current (DC) heat source. The igniter shall be placed approximately 0.25 inch from the item selected as the prime product for ignition.

b. External Ignition - Any container without an internal ignition source.

Ignition Source - A flame source representative of the worst possible S/C fire shall be placed outside the container opposite the most combustible material in the test configuration. Sufficient energy shall be supplied to ignite the configuration or assure that it will not ignite in actual service. The contractor shall furnish analyses to support the selection of ignition sources.

12.6 SAMPLE PREPARATION

a. The container shall be the same size, geometry, and material as the flight container.

b. The equipment to be tested shall be the same, with regard to the nonmetallics as the flight equipment. Electronic parts and similar expensive metallic or ceramic entities may be simulated.

c. The equipment shall be packaged and positioned in the container in the same manner as in the flight article.

12.7 PRETEST PROCEDURE

a. Verify that all test equipment is in current calibration.

b. Verify that the container is the required item.

c. Witness attachment of thermocouples in the designated areas.

d. Observe the packaging and positioning of the materials and equipment.

e. Verify the gas certification.

f. Note that the component, container and/or material has been identified through one of the following:

(1) Manufacturer's certification.

(2) NASA certification.

(3) Contractor certification.

g. Position or observe that the position of the container in the mock-up is the same position in which the flight article would be situated.

h. Verify the placing of the ignition wire in the designated spot in the container.

i. Observe that the ignition wire, thermocouples and other instrument leads are hooked up to the pertinent outlets.

12.8 TEST PROCEDURE

a. The chamber shall be evacuated to a minimum of 0.1 psia.

b. Isolate the chamber and monitor the pressure for five minutes in order to check for leaks. A rise of 0.1 psia during that time indicates a leak which must be rectified before going to the next step.

c. Pressurize the chamber to test pressure with test atmosphere.

d. After the chamber has stabilized at the proper pressure, permit the container to equilibrate for 15 minutes.

e. Verify that the chamber pressure is at test pressure within 0.1 psia and isolate the chamber.

f. Start all applicable instruments including the motion picture camera if one is used.

g. Apply current to the ignition wire until ignition occurs or will not occur.

h. Observe all phenomena occurring in and around the container.

NOTE: The test shall be terminated if the container ruptures or if obviously excessive quantities of fire and smoke are emitted from the vents.

i. Record any pressure rise and the final pressure in the chamber.

j. Remove the container and examine it and its contents and record all observations.

12.9 REPORTING - The following test data and information shall be reported.

a. Identification by generic name of all the materials tested in the container (paragraph 12.7f).

b. Vendor and vendor designation.

c. Construction and source of container.

d. Combustion phenomena.

(1) Presence or absence of flame or ignition failure.

(2) Color of flame, if present.

(3) Evolution of smoke from the box.

(4) Evolution of flame from the vents.

(5) Length of time flame persisted.

(6) Length of time smoke evolved.

(7) Test pressure and test atmosphere.

e. Rate of pressure rise and final pressure in the test chamber.

f. Status, dimension and size of sample materials.

g. Condition of container after the test.

h. Condition of contents of the container after the test.

i. Name and number of test procedure.

j. Date of test.

k. Test number.

l. Identity of the testing agency.

m. Name and signature of test coordinator.

13.0 TEST NO. 9 - ELECTRICAL OVERLOAD TEST FOR SEALED CONTAINERS

13.1 PURPOSE - This procedure describes the method for testing materials packaged in sealed containers and the ability of the containers to withstand, without rupturing, the effects of a fire initiated within the container as a result of an electrical overload. For containers with no internal electrical energy sources, the ignition system descirbed in 12.5.b shall be used.

13.2 TEST CONDITIONS - This test shall be performed for materials configured in a container in the same manner as the flight item. "Worst case" configuration of materials; i.e., a concentration of nonmetallic materials in closed proximity as well as those adjacent to a high voltage or current source, shall be utilized in the test. The test pressure and gas mixture conditions for pertinent materials category shall be designated by the requirements for each program.

13.3 CRITERIA OF ACCEPTABILITY - The sealed container shall not rupture and emit flame, burning particles, smoke or gas as a result of the test.

13.4 TEST EQUIPMENT

a. The test chamber shall allow observation of the extent of scatter in case of rupture and the attendant rise in pressure and temperature in the chamber.

. The chamber shall be complete with inlets for the required temperature and pressure measuring devices, vacuum, oxygen, gas mixture, air and ignition wires.

b. Thermal Characteristics Indicators

(1) Temperature Monitoring - Thermocouple readings may be monitored by multiple point recorders or any equally accurate method. The desired accuracy is $\pm$ 10°F. The thermocouples may be placed inside the container spaced one inch apart along and in contact with the conductor selected for overloading. Where the external igniter is used, the thermocouples shall be placed on and around the material selected for ignition in accordance with the test engineer's direction. Additional thermocouples shall be placed approximately at the center of the top, bottom and four sides of the interior. Thermocouples shall be placed on the exterior of the container against the top, bottom and four sides, approximately in the middle of each panel.

(2) A motion picture camera shall film the phenomena in case the container distorts or ruptures.

(3) Ignition Source - Ignition of the materials in the container with electrical wiring shall be accomplished by utilizing a power supply which is capable of providing a large DC current through one wire of the conductor bundle so that a very high temperature will be achieved quickly. The power source must be capable of supplying a current for that gauge wire being tested. See Test No. 4, paragraph 8.4e, for the initial test current for wire gauge number 28 through 12. Materials in a non-electrical container shall be treated as described in 12.5b.

13.5 SAMPLE PREPARATION

a. The container shall be the same size, geometry and material as the flight container.

b. The equipment to be tested shall be the same, with regard to the non-metallics, as the flight equipment.

FIG. 4A SAMPLE CONFIGURATION

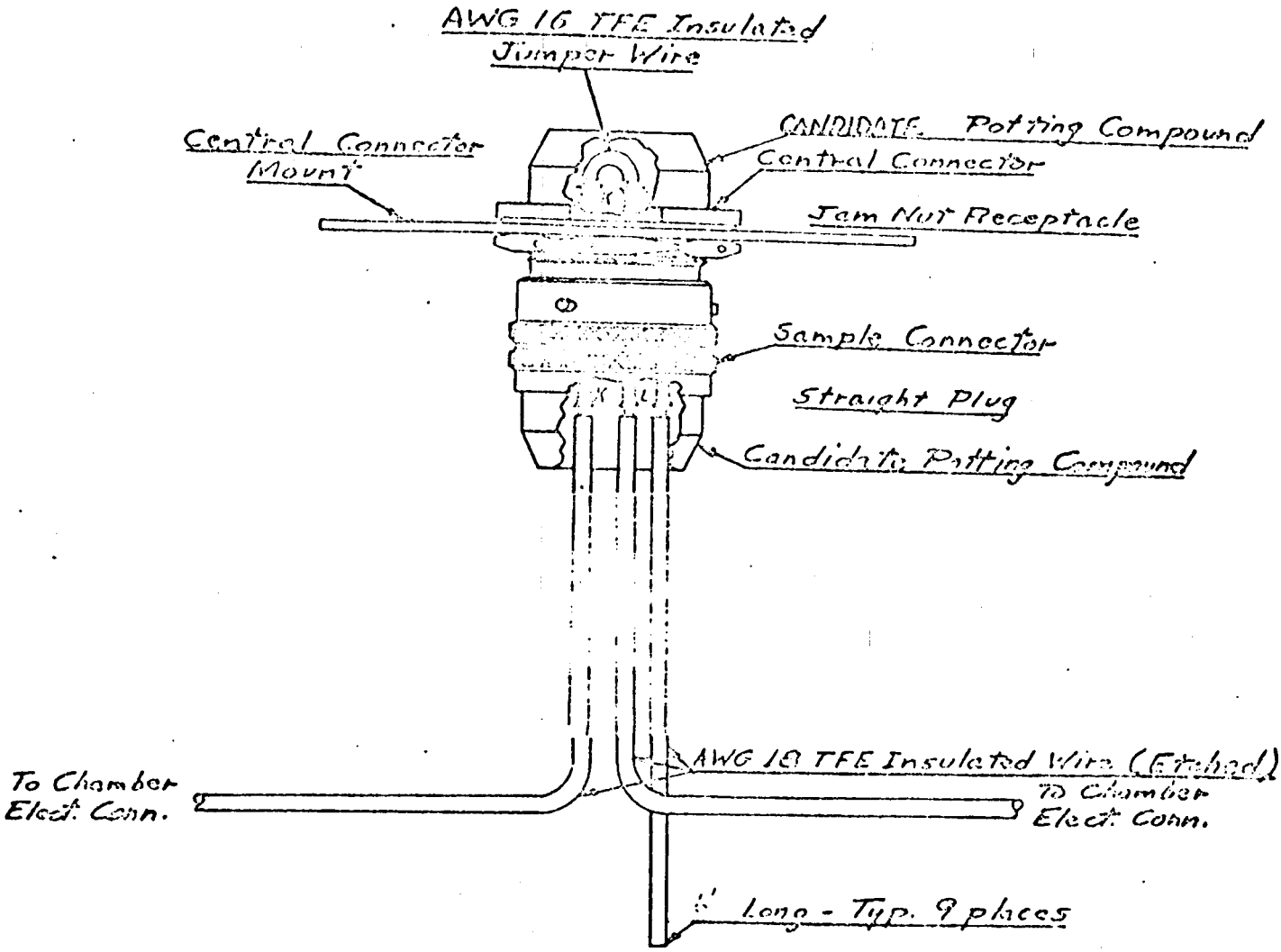

c. The equipment shall be packaged and positioned in the container in the same manner as in the flight article. Thermocouples shall be exited through bushings or any adequate sealable means.

13.6 PRETEST PROCEDURE

a. Verify that all test equipment is in current calibration.

b. Verify that the container is that which is required.

c. Observe that the thermocouples are attached in the designated areas.

d. Verify the packaging and positioning of the materials and equipment.

e. Verify the gas certification.

f. Note that the component/materials have been identified through one of the following:

(1) Manufacturer's certification

(2) NASA certification.

(3) Contractor certification

g. Position or observe the positioning of the container in the chamber.

h. Observe that the thermocouples and other instrument leads are hooked up to the pertinent outlets.

i. Verify that the conductor to be overloaded is hooked up to the proper, high current power supply.

j. Observe that the chamber is filled with its functional atmosphere closed and made secure for the test.

13.7 TEST PROCEDURE

a. The chamber shall be evacuated to a maximum of 0.1 psia and with sustained pumping for 5 minutes.

b. Isolate the chamber and monitor the pressure for five minutes in order to check for leaks. A rise of 0.1 psia during that time indicates a leak which must be repaired before going to the next step.

c. Pressurize the chamber to test pressure with the test atmosphere.

d. Verify that the chamber is at the required test pressure and isolate the chamber.

e. Start all applicable instruments.

f. Apply the current to the selected conductor at the amperage shown for that size conductor in the table in paragraph 8.4e, Test No. 4. If no effect is shown, the current shall be increased in 5 amp steps at one minute intervals until the wire falls or ignition occurs. Observe and record whether ignition occurred or wire failed.

g. If ignition occurred, record all phenomena including temperature rises inside and outside the container and any measurable chamber pressure increases.

h. Remove the container and examine it and its contents and record all observations.

13.8 REPORTING - The following test data and information shall be reported:

a. Identify by generic name the non-metallic materials tested in the container.

b. Component/materials identification for all the non-metallic materials tested in the container (reference paragraph 13.6f).

c. Construction and source of container.

d. Observations

(1) Presence or absence of ignition or fusion of the conductor.

(2) Temperature changes inside the container and those measured on the outer walls of the container.

(3) Phenomena associated with rupture of container, if rupture occurred:

(a) Presense or absence of flame and smoke.

(b) Extent of scatter of burning or smoking materials.

(c) Part of container where rupture occurred.

(d) Pressure and temperature rise in chamber.

e. Dimension, size and status of sample materials.

f. Test pressure and test atmosphere.

g. Condition of container after the test.

h. Condition of the contents after the test.

i. Name and number of the test procedure.

j. Date of test.

k. Test Number.

l. Identity of the testing agency.

m. Name and signature of test coordinator.

14.0 TEST NO. 10 - GUIDELINES FOR SIMULATED PANEL AND ASSEMBLY FLAMMABILITY TEST

14.1 PURPOSE - This procedure describes the method for determining the combustion characteristics particularly the propagation rate, of a number of different sizes and areas of non-metallic materials of similar or different types which make up a functional assembly, subsystem or system in the spacecraft.

(Each Item usually requires a specifically developed procedure. Guidelines for establishing the parameters of the test follow).

The purpose of fire tests on assemblies is to determine the behavior of the assembly under the particular test conditions which shall be representative of the most hazardous situation to which the assembly will be exposed in the spacecraft.

14.2 TEST GUIDELINES - In general, two modes of ignition must be considered:

a. Ignition from an internal source; i.e., wire overload or short circuit.

b. Ignition from an external source; i.e., flame or fire propagated from another nearby burning entity.

14.3 ACCEPTANCE CRITERIA - The effects of burning of the assembly must be considered in light of its influence on the spacecraft external to the assembly, as well as the effects of the fire internal to the assembly.

14.4 GENERAL GUIDELINES

a. Define or select the test assembly. This should be a portion of the spacecraft which is a meaningful and convenient package for fire hazard testing and analysis. The portion selected shall be that definable area vulnerable to a potential fire.

b. Perform a fire hazard analysis on the test assembly.

(1) Material inventory.

(2) Configuration analysis.

(3) Thermal analysis.

c. Design the fire test to obtain the required information. The experimental design will be based on the fire hazard analysis.

d. Write detailed test procedure.

e. Conduct the test.

f. Report and evaluate the results.

g. Make recommendations.

14.5 SPECIFIC GUIDELINES

a. Test conditions

(1) Configuration and materials of the test assembly will duplicate exactly the flight article. Appendix A to this test describes the sample preparation and test procedure for determining the protective capabilities of conformal protective coatings.

(2) Test assembly (combustion element) will be oriented in the chamber as it will be in the operational spacecraft at launch.

(3) The test chamber volume will be sufficient to provide for complete combustion per the fire hazard analysis, and to accommodate the largest assembly to be tested with adequate space around the assembly to allow observation of the extent of projection of burning pieces due to sputtering and expansion of gases internal to the burning mass.

(4) The test assembly will be operational prior to and during the test and will be tested for operation after the test.

(a) The "worst case" mode of operation, determined by the fire hazard analysis, will be selected.

(b) The test assembly will be in operation prior to the test until steady state conditions are reached.

(5) For assemblies containing substitute materials or new designs, the test configuration need not be operational unless economically feasible. The materials shall be configured as in the flight article. Expensive components may be simulated, but the basic material, geometry, and simulated mass of the components must be the same as in the flight assembly.

(6) All thermal interfaces will be simualted.

(a) Cold plates

(b) Structure

(c) Convection due to the cabin fan.

(d) Cabin radiation characteristics.

(7) Environment

(a) Test chamber ambient temperature will be as anticipated in actual use conditions.

(b) Gas environments and pressure shall be defined by program requirements.

(8) Instrumentation. Instrumentation requirements for each test assembly will be determined on an individual basis as part of overall combustion hazard analysis.

(a) Temperature measurements. Temperatures will be continuously recorded during testing.

(1) Temperature measuring recording equipment will have response times equal to or greater than the rate of change of temperature at the location being measured as predicted by thermal calculations.

(2) Locations of temperature measurement devices will depend on the configuration of the assembly being tested. These should provide:

a. A temperature profile of the assembly.

b. Location of ignition sites.

(3) Measure ambient gas temperature.

(4) Measure chamber wall temperature.

(b) Pressure measurement. Continuously measure and record the chamber gas pressure.

(c) Determine quantity and composition of combustion gas generated. Utilize gas chromatography, mass spectrometry, and other applicable methods as outlined in Test No. 7 above.

b. Procedure

(1) Test procedures or plans will be written and documented prior to each test by the contractor and submitted to the cognizant NASA Center and the testing agency.

(2) Each test procedure will receive the approval of cognizant NASA Center personnel prior to tests.

(3) Ignition. The ignition source shall be that detailed in Test No. 8. Ignition will be accomplished at appropriate sites (determined by combustion hazard analysis) and will simulate the following fire conditions.

(a) Momentary heat source produced by any suitable method other than the constant burning silicone igniter.

(b) Ignition source with continuous heat input (internal).

(c) External heat input. A rationale justifying selection of ignition point and means will accompany each test report.

c. Post Test Inspection. The following comparable before and after test data will be obtained:

(1) Color still photographs.

(2) Weight of individual materials.

(3) Operational characteristics

(4) Visual inspection

14.6 TEST REVIEW AND APPROVAL - Specific test plans prepared for assembly tests will be submitted by contractor and GFE organizations for cognizant Center review, prior to the initiation of testing. The responsible test organization should commence test article configuration and instrumentation immediately. If response is not received in 10 working days following receipt of the test plans by the cognizant NASA Center, test programs may be initiated and test plan approval assumed.

14.7 REPORTING - The following test data and information shall be reported:

a. Identification and dimensions of the assembly tested.

b. Identification by generic name of all materials.

c. Vendor and vendor designation for the materials.

d. Weight and surface area of the non-metallic materials.

e. Test atmosphere and pressure.

f. Name and number of the test procedure.

g. Test number and date of test.

h. Combustion characteristics.

(1) Burning rate, sparks, dripping, flame color and size, etc.

i. Initial point of ignition.

j. Flame propagation paths within the assembly.

k. Heat transport paths away from the assembly.

l. Total heat generated.

m. Increase in pressure in the chamber.

n. Quantity and composition of combustion product gases.

o. Evaluation of the effects on the performance of the assembly according to spacecraft hazard categories.

p. Identity of testing agency.

q. Name and signature of test coordinator.

15.0 TEST NO. 11 - GUIDELINES FOR SIMULATED CREW BAY CONFIGURATION FLAMMABILITY VERIFICATION TEST.

15.1 PURPOSE - This procedure will utilize panels and assemblies of "worst case" materials configured in a mock-up vehicle in the same manner as they would be in a flight vehicle for the purpose of determining the propagation, combustion phenomena and behavior of the materials in the event a fire started in the spacecraft.

15.2 TEST CONDITIONS - The test pressure and gas mixture conditions for the pertinent materials category shall be designated by the requirements for each program.

15.3 TEST DISCIPLINE

a. Each test shall be directed by the cognizant Test Engineer or his appointed alternate.

b. Approval of the test shall be indicated at the end of the test procedure by the signature of the responsible Test Engineer. Entries transcribed to the test data sheets will also be verified by the Test Engineer.

c. The test set-up shall simulate the ventilation condition available to the material under test when in the flight condition.

15.4 ACCEPTANCE CRITERIA - The results of the test should demonstrate that there can be no propagation of the fire to adjacent equipment by radiation, conduction or mass transfer. There shall be no sputter, drip, or release of hot or burning particles.

15.5 TEST CONFIGURATION

a. The equipment tested shall be similar in configuration to the flight article. As described in Test No. 10, para. 14.5 (5) the electronic parts can be mock-ups of the same material mass and geometry as the flight part or instrument.

b. All potential propagation paths shall be simulated.

c. Geometric and spatial proximity to spacecraft panels and enclosures shall be simulated.

15.6 IGNITION SOURCE

a. A standard nichrome wire ignition source may be used. It may be wrapped around a high temperature material, as detailed in Test No. 8, Para. 12.5 in order to produce as hot a flame as possible.

b. The source shall be placed as close as possible to or in contact with the most combustible material in the assembly.

c. Sufficient energy shall be supplied to the wire to ignite the insert rod and the test configuration.

15.7 TEST SELECTION CRITERIA - Tests of "worst case" configuration of each generic class of equipment shall be conducted to verify acceptability. The rationale for selecting "worst case" configurations shall have Program Office approval.

15.8 TEST EQUIPMENT - The test shall be performed utilizing a full scale spacecraft mock-up vehicle.

15.9 PRE-TEST PROCEDURES - The pre-test procedures will describe, step-by-step, the preparation of the chamber and the assembly and configuration of the materials within the vehicle. Ignition locations and test termination criteria shall be established. The pre-test documents shall be prepared by the contractor and submitted to the testing agency and the program office for concurrence before the test is run.

15.10 TEST PROCEDURES - The test procedures will describe, step-by-step the final instrumentation of the test items and the chamber, the performance of the test and the post-test disassembly of the test panels for observation. The procedures shall be written by the contractor and submitted to the program office and testing agency for concurrence before the test is run.

15.11 REPORTING - The following test data and information shall be reported:

a. Identification and dimensions of the assemblies tested.

b. Identification by generic name of all materials tested in the complete mock-up test.

c. Vendor and designation for the materials.

d. Weight and surface area of the non-metallic materials.

e. Test atmosphere and pressure.

f. Combustion characteristics.

g. Status and dimensions of tested assembly.

h. Name and number of test procedure.

i. Date of test.

j. Test number.

k. Flame propagation paths within the assemblies and the chamber.

l. Total heat generated.

m. Increase in pressure in the chamber.

n. Quantity and composition of combustion product gases.

o. Evaluation of the effects on the performance of the assembly in relation to spacecraft hazard categories.

p. Identity of the testing agency.

q. Name and signature of the test coordinator.

16.0 TEST NO. 12 - GUIDELINES FOR TOTAL SPACECRAFT OFFGASSING TEST

16.1 PURPOSE - This test is designed to measure the total quantity and individual components of the products offgassed by a spacecraft during manned and unmanned chamber tests and, thereby, determine the toxicological safety of the spacecraft during manned flight.

16.2 TEST CONDITIONS - PRESSURES AND ATMOSPHERES - The test pressure and gas mixture conditions to be utilized during the test shall be designated in accordance with the requirements of each program and shall not be less, quantitatively, than those used in the manned flight vehicle.

16.3 TEST DISCIPLINE

a. Each test shall be directed by the cognizant Test Engineer or his appointed alternate.

b. Approval of the test shall be indicated at the end of the test procedure by the signature of the responsible Test Engineer. Entries transcribed to the test data sheets shall also be verified by the Test Engineer.

c. The test set-up shall simulate the actual conditions to which the materials in the spacecraft will be subjected during flight.

d. The test rationale, plans and procedures shall be approved by the Program Office and the Medical Research and Operations Office.

16.4 ACCEPTANCE CRITERIA - The results of the test shall be evaluated and analyzed by the responsible medical office and the safety of the spacecraft atmosphere shall be established with respect to the measured contaminants. A report confirming the status shall be sent to the Program Office.

16.5 PRE-TEST PROCEDURES.

a. The capability for monitoring the heater control network of the gas sampling lines for determining the temperature shall be supplied.

b. The gas sampling lines from the spacecraft to the gas sampling station shall be leak checked. (A leak rate of no greater than 1×10^{-6} Torr-liter/second will be allowed).

c. The gas sampling lines of the gas sampling station shall be leak checked. (A leak rate of no greater than 1×10^{-6} Torr-liters/second will be allowed).

d. A functional checkout shall be performed to determine the following:

(1) That the temperature of the gas sampling lines will be maintained at $160 \pm 20°F$.

(2) That an adequate flow rate shall be maintained for the cabin gas sampling line.

e. Clean gas sampling lines shall be verified by assuring that no gaseous contaminants are present at concentration levels greater than one ppm. The gas sampling lines shall be heated at $160 \pm 20°F$ during this verification. (This will require introducing high purity nitrogen into the cabin sampling port).

f. The capability for the collection and intermittent replacement of cryogenic traps shall be provided. Each set of cryogenic traps shall include a dry ice solvent cooled trap and a liquid argon cooled trap.

g. The capability for the intermittent collection of gas grab samples shall be provided.

h. The capability for continuous on-line, real time monitoring of concentrations of CO_2, N_2, O_2 and other spacecraft atmospheric contaminants shall be provided. This will necessitate the use of:

(1) CO_2 analyzer

(2) O_2 analyzer

(3) N_2 analyzer

(4) Mass Spectrometer

(5) Any necessary instruments selected from paragraph 11.4d of Test No. 7.

i. A cold (40°F.) water trap located upstream of the on-line real-time instrumentation and the cryogenic trapping system shall be provided.

16.6 TEST PROCEDURE

a. Prior to Manning:

(1) The heater control network shall be monitored and line temperatures recorded hourly during the cryogenic trapping period and immediately prior to obtaining "grab" samples. The Test Director shall be notified if the line temperature is out of tolerance.

(2) Cryogenically trapped samples shall be collected from the cabin during all phases of the test. During this trapping period, (approximately 27 hours) two cryogenic trap sets shall be collected.

(3) Two grab samples shall be obtained prior to each of the first manning of the vehicle. It is recommended that the samples be taken prior to any cabin depressurization below 3 psia.

b. Manned Phase:

(1) Grab sample and unusual mass spectrometric analytical data shall be supplied to the Test Director, Data Evaluation Room, Medical Monitor, the cognizant Medical Office and the Program Office.

(2) The Medical Office shall provide a toxicological evaluation of the grab sample data and of unusual mass spectrometric analytical data to the Program Office.

(3) The heater control network shall be monitored and line temperatures recorded hourly. The Test Director shall be notified if the line temperatures are out of tolerance. (The allowable temperature for the gas sampling lines will be 160 $\pm$ 20°F.)

(4) Grab samples shall be obtained at approximately 90 minute intervals for the duration of each manned phase. After each ingress, an initial grab sample shall be obtained as soon as 5 $\pm$ 1 psia is reached in the course of

pressurization. Subsequent samples shall be collected from the cabin. Exception: If a collection time occurs when the crew is isolated in the suit loop, a sample shall be collected therefrom.

(5) The collection of one set of cryogenic traps from the cabin shall be required for each manning. (Cryogenic trapping will be interrupted while the crew is isolated in the suit loop).

(6) Continuous monitoring on the on-line real-time analytical instrumentation for the duration of the manned phases shall be maintained to obtain data on the concentrations of CO_2, N_2, O_2, and other atmospheric contaminants in the cabin. Any unusual mass spectrometric or other analytical data shall be supplied to the medical office as soon as available.

16.7 POST-TEST REQUIREMENTS

a. The cabin gas sampling line shall be purged with high purity nitrogen as soon as possible after completion of the exposure period in order to remove and cryogenically trap any condensibles. (A maximum of 18 hours will be allowed). The line shall be heated to 170 $\pm$ 5°F. during, and for one hour after, purging. The collection and analysis of this set of cryogenic traps shall be similar to that utilized for the traps noted above.

b. The water trap, upstream of the on-line real-time instrumentation and the cryogenic trapping system, shall be dismantled after the nitrogen purge and analyzed.

c. The analytical data from the cryogenic traps and the "grab" samples shall be reported to the medical office within 26 days of completion of the testing. This requirement for the grab sample analytical data is made primarily because the laboratory may possibly have identified unknowns after the 90-minute laboratory report was submitted.

16.8 REPORTING - A final report containing the complete evaluation and analysis of the test results and data and the recommendations of the Medical Office shall be submitted to the appropriate program office.

17.0 TEST NO. 13 - GOX PNEUMATIC TEST GUIDELINES

17.1 PURPOSE

17.1.1 The purpose of this test is to determine the sensitivity and compatibility of materials with pure gaseous oxygen (GOX) when subjected

to pneumatic impact. The test is applicable to materials selected for use in the high pressure oxygen system (Category D).

17.1.2 All Category D materials according to the enclosed test plan which fail MSFC Spec. 106B criteria must be subjected to mechanical impact threshold determination (ref. 2.2.4) and to GOX high-pressure pneumatic impacts.

17.2 TEST CONDITIONS

17.2.1 Only materials that have passed the other tests required of candidates for high pressure oxygen systems (Category D) shall be subjected to Test No. 13. Upon special request, a material which has failed another Category D test may be subjected to Test No. 13.

17.2.2 Candidate materials shall be tested in 95 $^{+5}_{-0}$ percent GOX (MIL-027210C) at the pressures listed below:

17.2.2.1 The pressure for the pneumatic impact test shall equal the maximum pressure of the intended application multiplied by a factor of 1.33 and rounded to the next higher 500 psia pressure increment. Example: An application pressure of 1100 psia multiplied by a factor or 1.33 equals 1467 psia. The next higher 500 psia increment or 1500 psia would be the screening test pressure.

17.2.3 Standard Test Conditions

17.2.3.1 Pneumatic

17.2.3.1.1 Temperature 70 $\pm$ 10°F

17.2.3.1.2 20 cycles over 40 seconds

17.2.4 Test Equipment

17.2.4.1 The pneumatic test equipment is shown schematically in Figures 5 and 6.

17.3 TEST DISCIPLINE

17.3.1 Each test shall be directed by the cognizant Test Engineer or his appointed alternate.

17.3.2 The cognizant test conductor shall affix his signature to all test data sheets.

17.4 CRITERIA OF ACCEPTABILITY

17.4.1 Pneumatic Test Acceptance Criteria

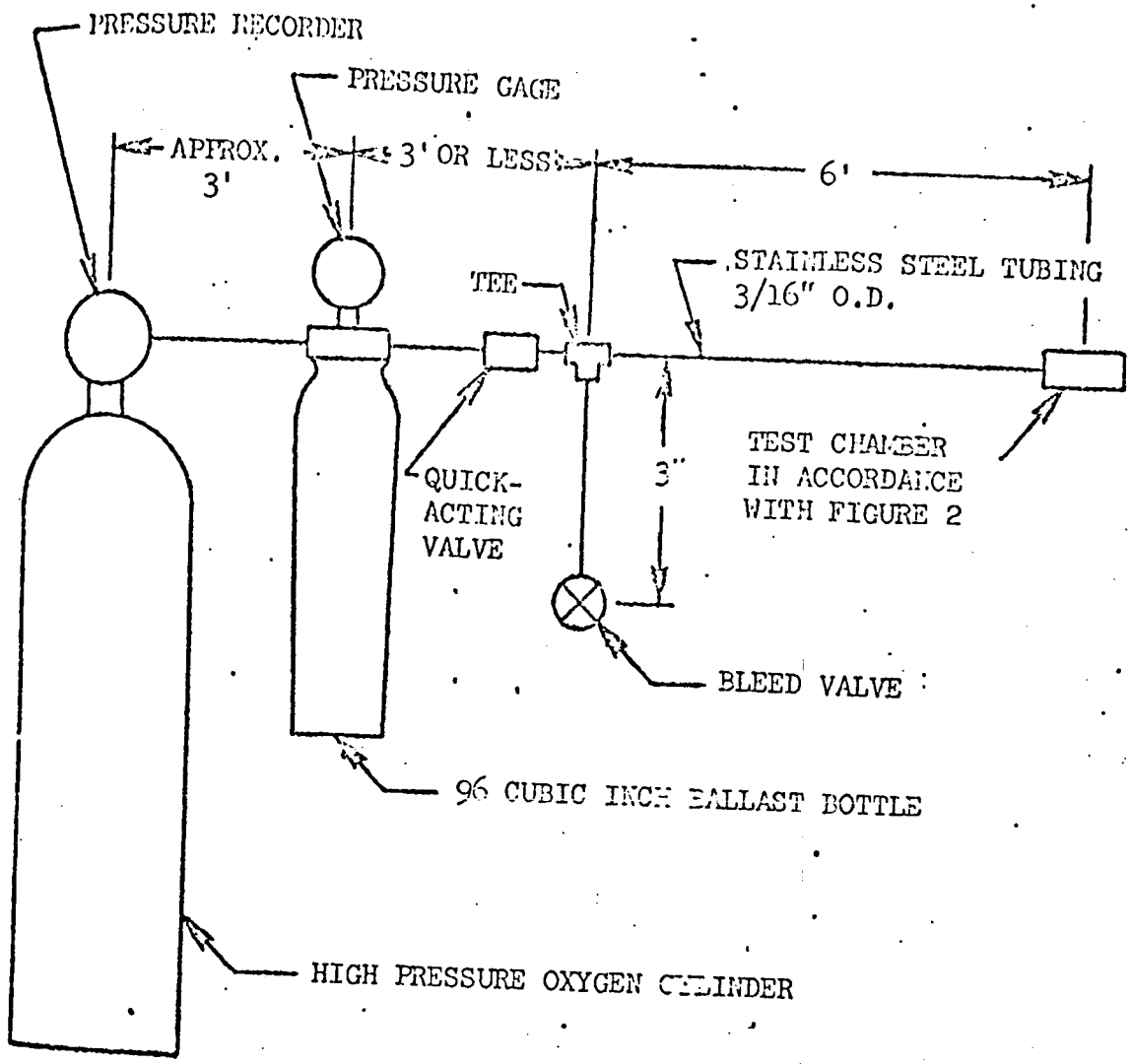

FIGURE 5 OXYGEN BOMB EQUIPMENT

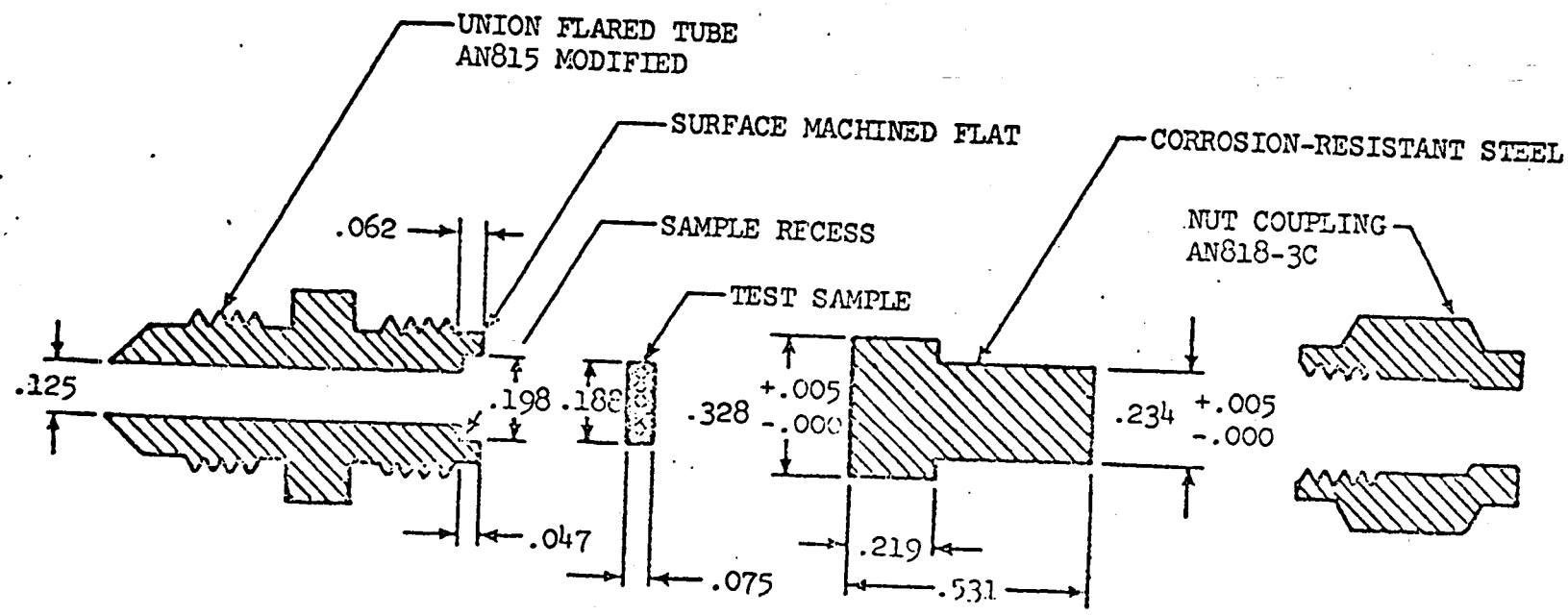

DIMENSIONS IN INCHES. UNLESS OTHERWISE SPECIFIED, TOLERANCE, DECIMALS: ±.005

FIGURE 6 TEST CHAMBER

Candidate materials (Category D) shall be considered acceptable for pneumatic applications at pressures equal to the acceptable pneumatic screening test pressure divided by 1.33. The acceptable pneumatic screening test pressure is defined as the pressure at which no reaction is noted after 20 complete pneumatic cycles.

17.5 SAMPLE PREPARATION

17.5.1 When the test material is submitted, data shall accompany the material giving the proposed application, the maximum pressure of this application, and the maximum pressure to which this application may be subjected in the event of a single point failure in the immediately preceding control point.

17.5.2 Sufficient material shall be available to permit the preparation and testing of at least 12 specimen samples in the thickness intended for use.

17.5.2.1 Solid materials which cannot be provided in sheet form shall be tested in the most feasible manner available to the test agency. Such tests shall be designated as special tests, and the test parameters shall be identified in the test report.

17.5.3 Sampling Cleanliness

Spacecraft material specimens shall be cleaned in the same manner as end item material.

17.6 PRETEST PROCEDURE

17.6.1 Verify that all the test equipment has been thoroughly cleaned.

17.6.2 Verify that all test equipment is in current calibration.

17.6.3 Verify the material identification by one of the items below:

17.6.3.1 Manufacturer's certification

17.6.3.2 NASA certification

17.6.3.3 Contractor Certification

17.6.4 Verify that the cleaned metallic components and GOX transfer lines are assembled, installed and proof tested, and meet cleanliness requirements as follows. The test chamber and components shall be degreased in a solution of a detergent and deionized water or trichlorotrifluoroethane,

depending upon the contaminants. Rinsing or flushing shall be thorough, followed by adequate drying, such as the passage of dry, filtered nitrogen, air, or inert gas over the sample.

17.7 TEST PROCEDURE

17.7.1 Part A - GOX Pneumatic Impact

17.7.1.1 Place the sample in position within the sample chamber cavity (Figure 6) and assemble accordingly.

17.7.1.2 Samples shall be tested in 95 $^{+5}_{-0}$ percent oxygen at a pressure equal to the maximum application pressure multiplied by the factor 1.33 and rounded to the next higher 500 psia pressure increment. (250 psia increment for application-pressure/safety-factor product of less than 1000 psia.)

17.7.1.3 Close the quick acting valve and the bleed valve prior to pressurizing the system.

17.7.1.4 Pass gaseous oxygen from the high pressure oxygen source (Figure 5) through molecular sieve (13X) filters to separate oil and any residual water. The ballast bottle is pressurized to the applicable test pressure specified in 17.7.1.2. Allow for line pressure drops.

17.7.1.5 Stabilize the test chamber (Figure 5) temperature to ambient conditions.

17.7.1.6 The material being tested is subjected to cyclic high pressure oxygen. This is accomplished by opening the quick-acting valve (V_1), pressurizing the test chamber, equalizing the tallest pressure (P_1), and opening the bleed valve (V_2). The sequence is cycled as rapidly as possible to obtain 20 complete cycles within 40 seconds.

17.7.1.7 Disassemble the test chamber.

17.7.1.8 Remove the material sample and examine for evidence of pneumatic GOX incompatibility.

17.7.1.9 Record all observations; i.e,, color photos are required if a visual change is detected.

17.7.1.10 Repeat the above sequence two additional times using a new sample of the test material each time assuring cleanliness requirements are maintained.

17.8 REPORTING - The following test data and information shall be reported:

a. Name of material

b. Vendor and vendor designation

c. Pneumatic impact test results

(1) Pressure change in P_1 before and after test.

(2) Temperature change in the vessel.

(3) Condition of sample after test.

(4) Number of test cycles.

(5) Number of failures versus number of samples tested.

(6) Date of test.

(7) Name and number of test procedure.

(8) Identity of testing organization or agency.

(9) Name and signature of test conductor.

(10) Pertinent comments and observations of test agency.

APPENDIX A

PROTECTION CAPABILITY OF CONFORMAL COATING

1.0 SAMPLE PREPARATION

a. Prepare three samples for each candidate conformal coating compound as follows:

(1) Obtain an eight lug NAS1066-3-8 terminal block. Mount to a 4"x15"X0.020" aluminum base plate. See Figure 7.

(2) Prepare a fourteen inch length of AWG 18 white Teflon insulated wire (MIL-W-22759, Type MS21985) as follows:

(a) Form a "U" bend in the middle of the wire and etch the center four inches per MSC-SPEC-Q-3.

(b) Cut the wire in half and strip one-half inch of insulation from all four ends.

(3) Etch two inches of one end of each of six additional AWG 18 Teflon insulated wires, each two inches long, per MSC-SPEC-Q-3. Strip one-half inch of insulation from the etched ends.

(4) Form a "U" bend in the middle of a ten inch length of AGW 20 white Teflon insulated wire and etch the center 4 inches per MSC-SPEC-Q-3. Cut the etched portion of the wire to obtain a jumper 3 inches long, all of which is etched. Strip one-half inch from each end.

(5) Obtain ten MS20659 terminal lugs and crimp per manufacturer's instructions to conductors at etched ends of wires prepared per 1.0a. (2), (3) , (4) above.

(6) Fasten the nine wires to the terminal block as shown in Figure 7, using standard terminal board hardware.

(7) Overcoat the base plate, terminal block, wire lugs, and wire insulation to within one-eighth inch of the end of the etched portion with the candidate primer (if applicable) and conformal coating compound, applied to recommended thickness and in accordance with recommended application techniques.

(8) Cure per recommended time/temperature process.

1.1 TEST PROCEDURE - The procedure shall be carried out in the following sequence:

a. Verify material identification as one of the following:

(1) Manufacturer's Certification.

(2) NASA Certification.

(3) Contractor Certification

(4) Definite identification not available.

b. The sample, prepared per Appendix A.1.0, shall be placed in the chamber and the stripped end of each 7" wire shall be fastened to a chamber electrical connection.

c. The test chamber shall be evacuated to a pressure of 0.1 psia and repressurized to the test pressure with test atmosphere. Allow the chamber to stand for five minutes. A leak is indicated if an increase in test chamber pressure of 0.1 psia is observed during one minute after the vacuum pump is closed off from the system. The system shall be brought to atmospheric pressure and the leak corrected before any additional tests are carried out. Repeat the above procedure.

d. After the test chamber has been stabilized at the test pressure, soak the specimens ten minutes. Apply a current of 40 amperes to the wire. If ignition or considerable degradation is not observed in one minute, the current shall be increased by 5 amperes (i.e., from 40 to 45 and 45 to 50 etc.) until such time as the wire fails or ignition occurs. If the wire fails, voltage shall remain applied to the open wire until it is positively established that current does not flow by bridging the gap to adjacent conductors.

e. Three samples of each candidate conformal coating shall be tested. The failure of any one sample to meet the criteria of Section 14.3 shall be cause for rejection of that coating.

1.2 REPORT - The following test data and pertinent information concerning the materials shall be reported:

a. Name and positive identification of the material.

b. Vendor designation and vendor

c. Usage, quantity, and surface area in the spacecraft

d. Test pressure and test atmosphere

e. Results of each test, including combustion phenomena if ignition occurs.

f. Date of test

g. Test number

h. Identify of testing agency

i. Name and signature of test coordinator.