Prepared for the
GEORGE C. MARSHALL
SPACE FLIGHT CENTER
Huntsville, Alabama

31 August 1973

Contract No. NAS 8-14000
MSFC No. MSFC-DRL-008A, Line Item 161
IBM No. 73W-00253

SUNFALL MONITOR DESIGN STUDY

Volume III – SYSTEM PARTS LIST AND DRAWINGS

(NASA-CR-161107) SUNFALL MONITOR DESIGN STUDY. VOLUME 3: SYSTEM PARTS LIST AND DRAWINGS (IBM Federal Systems Div.) 81 p

N79-74139

Unclas
00/44 15871

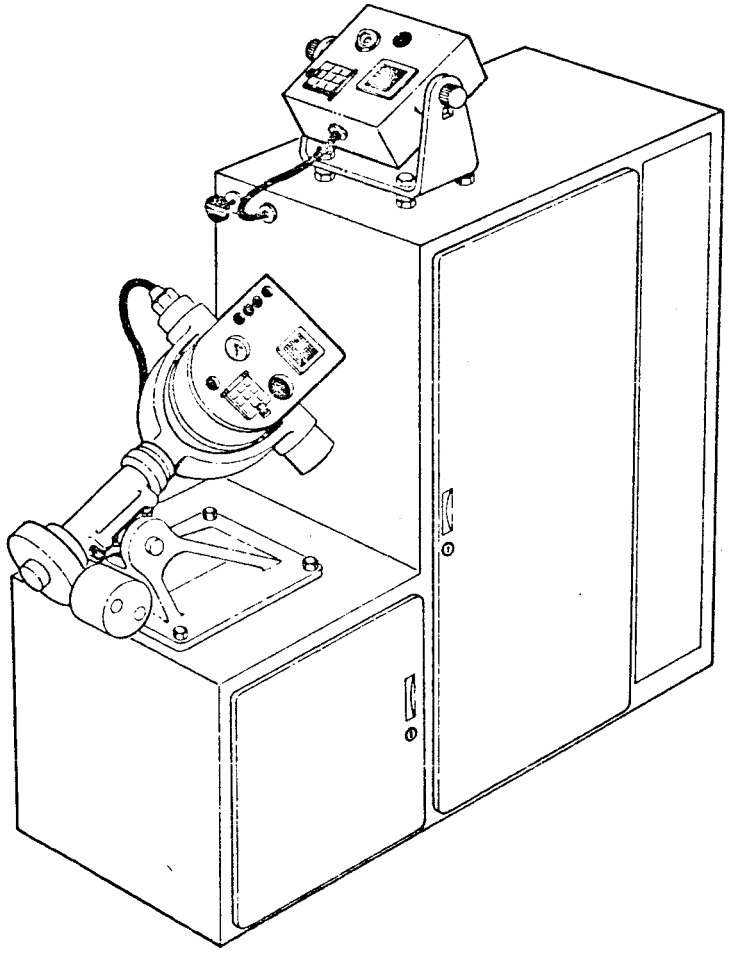

RECEIVED
NASA STI FACILITY
ACCESS DEPT.
MAR 1979

Prepared for the
GEORGE C. MARSHALL
SPACE FLIGHT CENTER
Huntsville, Alabama

31 August 1973

Contract No. NAS 8-14000
MSFC No. MSFC-DRL-008A, Line Item 161
IBM No. 73W-00253

SUNFALL MONITOR DESIGN STUDY

Volume III – SYSTEM PARTS LIST AND DRAWINGS

Classification and Content Approval _____

Data Manager Approval _____

Program Office Approval _____

IBM Federal Systems Division, Electronics Systems Center/Huntsville, Alabama

VOLUME III

TABLE OF CONTENTS

APPENDIX		PAGE
D	Sunfall Monitor Parts List	D-1
	D-1 Summary	D-2
E	Sunfall Monitor Electrical Drawings	E-1
	E-1 Summary	E-2
F	Sunfall Monitor Mechanical Drawings	F-1
	F-1 Summary	F-2

APPENDIX D

SUNFALL MONITOR

PARTS LIST

SECTION D-1

SUMMARY

The parts list presented in this appendix is estimated to be ninety-five percent complete. Before the Sunfall Monitor prototype is built a design check should be performed to verify completeness of these lists and proper correlation with the mechanical drawings.

PARTS LIST	IBM	FEDERAL SYSTEMS DIVISION CODE IDENT 03640 – OWEGO, N.Y. * CODE IDENT 20234 – HUNTSVILLE, AL	CONTRACT NO. NAS 8-14000	* CODE IDENT 20234	PL 7928000	REVISION LTR + DATE
LIST TITLE MONITOR ASSY					EN NO.	SHEET 1 OF 3

ITEM NO.	REFERENCE DESIGNATION	QUANTITY REQUIRED	UNIT MEAS	CODE IDENT	DRAWING OR DOCUMENT NO.	PART OR IDENTIFYING NO.	NOMENCLATURE OR DESCRIPTION	SY	PL	CH
1		1	Ø1			7928820-1	CABINET			
2		1	Ø1			7928804-1	TRACKER			
3		1	Ø1			7928790-1	SENSOR ASSY, TRACKING			
4		1	Ø1			7928730-1	SENSOR ASSY [illegible] ARY			
5		1	Ø1			7928822-1	CHANNEL, MOUNTING			
6		1	Ø1			7928822-2	CHANNEL, MOUNTING			
7		1	Ø1			7928823-1	COVER, LOUVERED			
8		14	Ø1			MS51957-15...	SCR PAN HD 4-40X.38 LG			
9		1	Ø1			7928824-1	COVER LOUVERED			
10		14	Ø1			NAS679C04M	NUT 4-40			
11		1	Ø1	06223			AIR COND	V		
12		1	Ø1	72264		D2020	DATA MANAGEMENT SYSTEM	V		
13		1	Ø1	32097		28[illegible]9	TAPE RECORDER	V		
14		1	Ø1			7928810-1	POWER DISTRIBUTION PANEL			
15		1	Ø1	12199		REF-CEL205T	THERMOCOUPLE REF JCT	V		
16		1	Ø1	79470		1968X4	CONNECTOR, MALE	V		
17		36	11	79470		PT24Ø-6	TUBING	V		
18		4	Ø1	94222		12-304-13-12	SCREW, RETAINING	V		
19		8	Ø1	94222		12-11017-11	RECEPTACLE	V		

UNIT OF MEASURE CODE
01 – PIECE EACH
11 – INCH
12 – FEET
18 – CUBIC FOOT
31 – OUNCE (AVDP)
35 – POUND (TROY)
59 – FLUID OUNCE
66 – CUBIC INCH

SYMBOL CODE (SY): V – VENDOR ITEM, SEE SPECIFICATION OR SOURCE CONTROL DRAWING

PLANNING CODE (PL): K – ALTERNATE ITEM P – BULK MATL (ALL OTHER PL CODES ARE FOR IBM REF ONLY: EG. G – INTER-ZONE GEN J – AS REQD.
L – DO NOT FILL N – VENDOR FURN R – REF X – DO NOT GENERATE Z – DUMMY CONNECT)

CHARACTER CODE (CH): A – WITH BILL OF MATL D – WITHOUT BILL OF MATL R – FACTORY REF

IBM FORM NO 501-6224-1

PARTS LIST	IBM	FEDERAL SYSTEMS DIVISION * CODE IDENT 03640 – OWEGO, N Y CODE IDENT 20234 – HUNTSVILLE, AL	CONTRACT NO.	* CODE IDENT	PL 7928800	REVISION LTR + DATE

LIST TITLE

EN NO.

SHEET 2 OF 3

ITEM NO.	REFERENCE DESIGNATION	QUANTITY REQUIRED	UNIT MEAS	CODE IDENT	DRAWING OR DOCUMENT NO.	PART OR IDENTIFYING NO.	NOMENCLATURE OR DESCRIPTION	SY	PL	CH
20		4	01			MS51957-115	SCR PAN HD 3/8-16UNC X 2.00 LG			
21		12	01			MS35691-19	NUT 3/8-16UNC			
22		1	01	98587		DBX52-19 R	DOOR, BUSTLE	V		
23		1	01	98587		DBX52-19 L	DOOR, BUSTLE	V		
24		1	01	98587		DBX28-19 R	DOOR, BUSTLE	V		
25		1	01	98587		DBX28-19 L	DOOR, BUSTLE	V		
26		42	01			MS24673C49	SCR FL HD 8-32 X .44 LG			
27		32	01			MS51957-45	SCR PAN HD 8-32 X .50 LG			
28		2	01	98587		CG4-25	CHASSIS GUIDE	V		
29		4	01	98587		CS1-19	CHASSIS GUIDE SUPPORT	V		
30		4	01	98587		CG1-25	CHASSIS GUIDE	V		
31		1	01			7928821-1	PANEL, SIDE			
32		1	01			7928833-1	DUCT, BOTTOM			
33		1	01			7928834-1	DUCT, TOP			
34		3	01	72820		PT8-14-19PS	CONNECTOR, BULKHEAD	V		
35		3	01	72820		10-101949-14	GASKET, MTG			
[illegible]		AR	12				INSULATION			
37		AR	31			7906923	ADHESIVE			
38		1	01			9651361	SWITCH, INSTANT POWER OFF			
39		1	01			9510908	SHIELD			

UNIT OF MEASURE CODE
- 01 = PIECE EACH
- 11 = INCH
- 12 = FEET
- 18 = CUBIC FOOT
- 31 = OUNCE (AVDP)
- 35 = OUNCE (TROY)
- 59 = FLUID OUNCE
- 66 = CUBIC INCH

SYMBOL CODE (SY): V = VENDOR ITEM, SEE SPECIFICATION OR SOURCE CONTROL DRAWING

PLANNING CODE (PL): K = ALTERNATE ITEM P = BULK MATL (ALL OTHER PL CODES ARE FOR IBM REF ONLY; EG. G = INTER-ZONE GEN J = AS REQD L = DO NOT FILL N = VENDOR FURN R = REF X = DO NOT GENERATE Z = DUMMY CONNECT)

CHARACTER CODE (CH): A = WITH BILL OF MATL D = WITHOUT BILL OF MATL R = FACTORY REF

PARTS LIST	IBM	FEDERAL SYSTEMS DIVISION * CODE IDENT 03640 - OWEGO, N.Y. CODE IDENT 29234 - HUNTSVILLE, AL	CONTRACT NO.	* CODE IDENT	PL 792 [illegible]	REVISION LTR + DATE

LIST TITLE

EN NO

SHEET 3 OF 3

ITEM NO.	REFERENCE DESIGNATION	QUANTITY REQUIRED	UNIT MEAS	CODE IDENT	DRAWING OR DOCUMENT NO.	PART OR IDENTIFYING NO.	NOMENCLATURE OR DESCRIPTION	SY	FL	CH
40		26	Ø1			MS24693C294	SCR FL HD .25-28UNF X.50LG			
41		26	Ø1			NAS679C4M	NUT .25-28UNF			
42		1	Ø1	82877		MOD2A-TYPE1ØØØ	AIR FLOW SWITCH	V		
43		1	Ø1	13426		PTF-14Ø	HEATER			
44		1	Ø1	82647		M1Ø6Ø-Ø4Ø-1-3-1	THERMOSTAT			
45		1	Ø1	82647		M1110-1ØØ-2-3-1	THERMOSTAT			
46		2	Ø1			MS51957-97	SCR PAN HD .31-18UNC X.87LG			
47		2	Ø1			MS35691-11	NUT .31-18UNC			
48		2	Ø1			MS51957-61	SCR PAN HD 10-24UNC X.38LG			
49		2	Ø1			MS35649-2Ø4	NUT 10-24			
50		AR	59			6084Ø22	ADHESIVE			

UNIT OF MEASURE CODE
- 01 = PIECE EACH
- 11 = INCH
- 12 = FEET
- 18 = CUBIC FOOT
- 31 = OUNCE (AVDP)
- 35 = OUNCE (TROY)
- 59 = FLUID OUNCE
- 65 = CUBIC INCH

SYMBOL CODE (SY): V = VENDOR ITEM, SEE SPECIFICATION OR SOURCE CONTROL DRAWING

PLANNING CODE (PL): K = ALTERNATE ITEM P = BULK MATL (ALL OTHER PL CODES ARE FOR IBM REF ONLY; EG. G = INTER-ZONE GEN J = AS REQD L = DO NOT FILL N = VENDOR FURN R = REF X = DO NOT GENERATE Z = DUMMY CONNECT)

CHARACTER CODE (CH): A = WITH BILL OF MATL D = WITHOUT BILL OF MATL R = FACTORY REF

IBM FORM NO. 152 0321 1

PARTS LIST	IBM	FEDERAL SYSTEMS DIVISION * CODE IDENT 03640 – OWEGO, N Y CODE IDENT 20234 – HUNTSVILLE, AL	CONTRACT NO. NAS 8-11044	* CODE IDENT 20234	PL 7928790	REVISION LTR + DATE

LIST TITLE: [illegible] ASSY, TRACKING

EN NO.:

SHEET 1 OF 3

ITEM NO.	REFERENCE DESIGNATION	QUANTITY REQUIRED	UNIT MEAS	CODE IDENT	DRAWING OR DOCUMENT NO.	PART OR IDENTIFYING NO.	NOMENCLATURE OR DESCRIPTION	SY	PL	CH
1		1	Ø1			7928792	COVER, HOUSING, TOP			
2		1	Ø1			7928791	HOUSING, TRACKING			
3		2	Ø1	23751		PYRT 146	PYRHELIOMETER	V		
4		1	Ø1			7928840-1	HOLDER, CELL SAMPLE ASSY			
5		1	Ø1			7928786-1	LATCH			
6		1	Ø1			7928[illegible]-1	HOLDER			
7		1	Ø1			7928784-1	HOLDER			
8		1	Ø1			7928[illegible]-1	HOLDER			
9		1	C:			TBD	SAMPLE			
10		1	Ø1	12199		7928832-1	TRANSDUCER	V		
11		1	Ø1			7928787-1	HEAT SINK			
12		1	Ø1			7928831-1	COVER, GLASS	V		
13		1	Ø1	82877		BT2A2	BISCUIT BLOWER, RIM INLET	V		
14		AR	59			6084022	ADHESIVE			
15		1	Ø1			7928780-1	GASKET			
16		1	Ø1			7928795-1	HOLDER, SAMPLE			
17		2	Ø1			7928799-1	CLIP, HOLDER			
18		1	Ø1			7928795-1	BRACKET			
19		1	Ø1			7928797-1	BRACKET			

UNIT OF MEASURE CODE
- 01 PIECE EACH
- 11 – INCH
- 12 – FEET
- 19 – CUBIC FOOT
- 31 – OUNCE (AVDP)
- 35 – OUNCE (TROY)
- 59 – FLUID OUNCE
- 66 – CUBIC INCH

SYMBOL CODE (SY): V – VENDOR ITEM, SEE SPECIFICATION OR SOURCE CONTROL DRAWING

PLANNING CODE (PL): K – ALTERNATE ITEM F – BULK MATL (ALL OTHER PL CODES ARE FOR IBM REF ONLY; EG, G – INTER-ZONE GEN J – AS REQD L – DO NOT FILL N – VENDOR FURN R – REF X – DO NOT GENERATE Z – DUMMY CONNECT)

CHARACTER CODE (CH): A – WITH BILL OF MATL D – WITHOUT BILL OF MATL R – FACTORY BILL

PARTS LIST	IBM	FEDERAL SYSTEMS DIVISION * CODE IDENT 03640 – OWEGO, N Y CODE IDENT 20234 – HUNTSVILLE, AL	CONTRACT NO.	* CODE IDENT	PL 7928774	REVISION LTR DATE

LIST TITLE

EN NO.

SHEET 2 OF 2

ITEM NO.	REFERENCE DESIGNATION	QUANTITY REQUIRED	UNIT MEAS	CODE IDENT	DRAWING OR DOCUMENT NO.	PART OR IDENTIFYING NO.	NOMENCLATURE OR DESCRIPTION	SY	PL	CH
21		2	Ø1			7928794-1	BRACKET			
22		1	Ø1			7928796-1	BRACKET			
23		1	Ø1	20751		PYR139	PYRANOMETER	V		
24		1	Ø1			7928793-1	COVER, HOUSING, BOTTOM			
25		1	Ø1	94222		27-99-123-2Ø	GRIP LATCH	V		
26		1	Ø1	09808		4-6219-Ø1ØØ	HINGE, HALF	V		
28		1	Ø1	09808		4-6217-Ø1ØØ	HINGE, HALF	V		
29		2	Ø1			MS24693C6	SCR FL HD 4-40 X .62 LG			
30		8	Ø1			MS24693C2	SCR FL HD 4-40 X .25 LG			
31		3	Ø1			MS51957-37	SCR PAN HD 6-32 X 1.75 LG			
32		11	Ø1			NAS679C Ø6M	NUT 6-32			
33		2	Ø1			MS51957-28	SCR PAN HD 6-32 X .38 LG			
34		10	Ø1			MS51957-26	SCR PAN HD 6-32 X .25 LG			
35		3	Ø1			MS51957-55	SCR PAN HD 8-32 X 2.50 LG			
36		3	Ø1			NAS677C Ø8M	NUT 8-32			
37		4	Ø1			MS51957-12	SCR PAN HD 4-40 X .18 LG			
[illegible]		17	Ø1			MS51957-31	SCR PAN HD 6-32 X .63 LG			
39		1	Ø1			MS51957-29	SCR PAN HD 6-32 X .44 LG			
40		9	Ø1			MS51957-3Ø	SCR PAN HD 6-32 X .50 LG			
[illegible]		1	Ø1			MS24693C28	SCR FL HD 6-32 X .50 LG			

UNIT OF MEASURE CODE
- 01 = PIECE EACH
- 11 = INCH
- 12 = FEET
- 18 = CUBIC FOOT
- 31 = OUNCE (AVDP)
- 35 = OUNCE (TROY)
- 59 = FLUID OUNCE
- 66 = CUBIC INCH

SYMBOL CODE (SY): V = VENDOR ITEM, SEE SPECIFICATION OR SOURCE CONTROL DRAWING

PLANNING CODE (PL): K = ALTERNATE ITEM P = BULK MATL (ALL OTHER PL CODES ARE FOR IBM REF ONLY; EG. G = INTER-ZONE GEN J = AS REQD L = DO NOT FILL N = VENDOR FURN R = REF X = DO NOT GENERATE Z = DUMMY CONNECT)

CHARACTER CODE (CH): A = WITH BILL OF MATL D = WITHOUT BILL OF MATL R = FACTORY REF

PARTS LIST	IBM	FEDERAL SYSTEMS DIVISION * CODE IDENT 03640 - OWEGO, N Y CODE IDENT 20234 - HUNTSVILLE, AL	CONTRACT NO.	* CODE IDENT	PL 7928779	REVISION LTR DATE

LIST TITLE	EN NO.	SHEET
		3 OF 3

ITEM NO.	REFERENCE DESIGNATION	QUANTITY REQUIRED	UNIT MEAS	CODE IDENT	DRAWING OR DOCUMENT NO.	PART OR IDENTIFYING NO.	NOMENCLATURE OR DESCRIPTION	SY	PL	CH
40		2	Ø1			AN96ØC6L	WASHER			
[illegible]		1	Ø1			7928778-1	COUPLING			
[illegible]		1	Ø1	02334		68-9999	DESICCATOR PLUG	V		
[illegible]		1	Ø1	92ØØ3		E2-Ø1Ø	O-RING	V		
44		1	Ø1			PTØ7CE14-19P	CONNECTOR	V		
45		AR	Ø1			TBD	SAMPLE, COLLECTOR			
[illegible]		12	Ø1			MS51957-46	SCR FLH HD 8-32 X .52 LG			
47		2	Ø1			7928847-1	SUPPORT			
[illegible]		1	Ø1			7928[illegible]-1	SUPPORT			
49		4	Ø1			7928540-1	TUBE ASSY			
5Ø		AR	Ø1				SEALANT			

UNIT OF MEASURE CODE
01 - PIECE EACH
11 - INCH
12 - FEET
18 - CUBIC FOOT
31 - OUNCE (AVDP)
35 - OUNCE (TROY)
59 - FLUID OUNCE
66 - CUBIC INCH

SYMBOL CODE (SY): V - VENDOR ITEM, SEE SPECIFICATION OR SOURCE CONTROL DRAWING

PLANNING CODE (PL): K - ALTERNATE ITEM P - BULK MATL (ALL OTHER PL CODES ARE FOR IBM REF ONLY; EG, G - INTER-ZONE GEN J - AS REQD
L - DO NOT FILL N - VENDOR FURN R - REF X - DO NOT GENERATE Z - DUMMY CONNECT)

CHARACTER CODE (CH): A - WITH BILL OF MATL D - WITHOUT BILL OF MATL R - FACTORY REF

IBM FORM NO. 9[illegible]-5524-1

PARTS LIST	IBM	FEDERAL SYSTEMS DIVISION * CODE IDENT 02640 - OWEGO, N Y CODE IDENT 20234 - HUNTSVILLE, AL	CONTRACT NO. NAS 8-14000	* CODE IDENT 20234	PL 7928750	REVISION LTR + DATE

LIST TITLE: ASSY, STATIONARY

EN NO.

SHEET 1 OF 2

ITEM NO.	REFERENCE DESIGNATION	QUANTITY REQUIRED	UNIT MEAS	CODE IDENT	DRAWING OR DOCUMENT NO.	PART OR IDENTIFYING NO.	NOMENCLATURE OR DESCRIPTION	SY	PL	CH
1		1	01			7928782-1	HOUSING, STATIONARY			
2		1	01			7928776-1	BRACKET, WELDMENT			
3		1	01			7928781-1	BRACKET, SCREW STOP			
4		1	01			7928779-1	BAR, SCREW STOP			
5		1	01			7928777-1	SCREW, ADJUSTMENT			
6		1	01			7928778-1	BAR, ADJUSTMENT			
7		1	01			MS24692-84	TAPER PIN			
8		1	01			7928840-1	HOLDER, CELL SAMPLE ASSY			
9		1	01			7928788-1	LATCH			
10		1	01			7928783-1	HOLDER			
11		1	01			7928784-1	HOLDER			
12		1	01			7928786-1	GASKET			
13		1	01			7928785-1	HOLDER			
14		1	01			7928831-1	COVER, GLASS			
15		1	01			TBD	SAMPLE			
16		1	01			7928832-1	TRANDUCER	V		
17		1	01			7928787-1	HEAT SINK			
18		AR	59			6054022	ADHESIVE			
19		1	01	29440		CN1-16	KNURLED KNOB	V		
20		1	01	20751		PYR-139	PYRANOMETER	V		

UNIT OF MEASURE CODE
01 - PIECE EACH
11 - INCH
12 - FEET
18 - CUBIC FOOT
31 - OUNCE (AVDP)
35 - OUNCE (TROY)
59 - FLUID OUNCE
66 - CUBIC INCH

SYMBOL CODE (SY): V - VENDOR ITEM, SEE SPECIFICATION OR SOURCE CONTROL DRAWING

PLANNING CODE (PL): K - ALTERNATE ITEM P - BULK MATL (ALL OTHER PL CODES ARE FOR IBM REF ONLY: EG. G - INTER-ZONE CEN J - AS REQD
L - DO NOT FILL N - VENDOR FURN R - REF X - DO NOT GENERATE Z - DUMMY CONNECT)

CHARACTER CODE (CH): A - WITH BILL OF MATL D - WITHOUT BILL OF MATL R - FACTORY REF

IBM FORM NO. 952 6223

D-10

PARTS LIST	IBM	FEDERAL SYSTEMS DIVISION * CODE IDENT 03640 = OWEGO, N Y CODE IDENT 20234 = HUNTSVILLE, AL	CONTRACT NO.	* CODE IDENT	PL	REVISION LTR DATE

LIST TITLE

CN NO.

SHEET 2 OF 2

ITEM NO	REFERENCE DESIGNATION	QUANTITY REQUIRED	UNIT MEAS	CODE IDENT	DRAWING OR DOCUMENT NO.	PART OR IDENTIFYING NO.	NOMENCLATURE OR DESCRIPTION	SY	PL	CH
21		1	Ø1	82877		BT2A2	DISCONNECT PLUG RING INSERT	V		
22		8	Ø1			MS24693C2	SCR FL HD 4-40X.25 LG			
23		4	Ø1			MS51957-26	SCR PAN HD 6-32 X .25 LG			
24		4	Ø1			MS24693C50	SCR FL HD 8-32X.50 LG			
25		2	Ø1			MS51957-83	SCR PAN HD 1/2 X 1.00 LG			
26		2	Ø1			NAS679C4M	NUT 1/4			
27		4	Ø1			NAS1057T4-312	SPACER			
28		2	Ø1			MS51957-81	SCR PAN HD 1/4 X .75 LG			
29		2	Ø1			MS51957-80	SCR PAN HD 1/4 X .62 LG			
30		[illegible]	Ø1			MS51957-28	SCR PAN HD 6-32 X .3[illegible] LG			
31		3	Ø1			MS51957-55	SCR PAN HD 8-32 X 2.50 LG			
32		3	Ø1			NAS677C08M	NUT 8-32			
33		3	Ø1			MS51957-37	SCR PAN HD 6-32 X 1.75 LG			
34		3	Ø1			NAS677C06M	NUT 6-32			
35		2	Ø1			MS24693C6	SCR FL HD 4-40 X .62 LG			
36		2	Ø1			AN960C6L	WASHER			
37		1	Ø1			7928830-1	COUPLING			
38		1	Ø1	ØØ334		6S8Ø1Ø4	DESICCATOR PLUG	V		
39		1	Ø1	92ØØ3		E2-Ø1Ø	O-RING	V		
40		AR	59				SEALANT			

UNIT OF MEASURE CODE
- 01 = PIECE EACH
- 11 = INCH
- 12 = FEET
- 18 = CUBIC FOOT
- 31 = OUNCE (AVDP)
- 32 = OUNCE (TROY)
- 59 = FLUID OUNCE
- 66 = CUBIC INCH

SYMBOL CODE (SY): V = VENDOR ITEM, SEE SPECIFICATION OR SOURCE CONTROL DRAWING

PLANNING CODE (PL): K = ALTERNATE ITEM P = BULK MATL (ALL OTHER PL CODES ARE FOR IBM REF ONLY; EG, G = INTER-ZONE GEN J = AS REQD L = DO NOT FILL N = VENDOR FURN R = REF X = DO NOT GENERATE Z = DUMMY CONNECT)

CHARACTER CODE (CH): A = WITH BILL OF MATL D = WITHOUT BILL OF MATL R = FACTORY REF

IBM FORM NO 96[illegible]

PARTS LIST

IBM

FEDERAL SYSTEMS DIVISION
CODE IDENT 03640 - OWEGO, N Y
* CODE IDENT 20234 - HUNTSVILLE, AL

CONTRACT NO. NAS 8-14.000

* CODE IDENT 20234 PL 7928810

REVISION LTR + DATE

LIST TITLE: POWER DISTRIBUTION PANEL

EN NO.

SHEET 1 of 3

ITEM NO.	REFERENCE DESIGNATION	QUANTITY REQUIRED	UNIT MEAS	CODE IDENT	DRAWING OR DOCUMENT NO.	PART OR IDENTIFYING NO.	NOMENCLATURE OR DESCRIPTION	SY	PL	CH
1		1	01			7928813-1	PANEL			
2		1	01			7928811-1	CHASSIS			
3		4	01	94222		12-3004-13-12	SCREW, FASTENER	V		
4		4	01	94222		12-11014-12	RETAINING WASHER	V		
5		2	01			85M01321-2	HANDLE			
6		4	01			MS24693C 270	SCR FL HD 10-32 X .38 LG			
7		2	01	05236		310-20	SLIDES	V		
8		1	01			7928812-1	COVER			
9		1	01	27191		9575H2684-28	RELAY	V		
10		1	01	27191		9575H2251-28	RELAY	V		
11		2	01	27191		9575H2257-28	RELAY	V		
12		1	01	27191		9575H2468-2-28	RELAY	V		
13		1	01	59873		P6377	TRANSFORMER	V		
14		1	01	27191		10987H5-1	TERMINAL BLOCK	V		
15		2	01	27191		10987H6-1	TERMINAL BLOCK	V		
16		1	01	27191		10987H7-1	TERMINAL BLOCK	V		
17		1	01	45605		4003-05Z	TIMER	V		
18		1	01	27191		8381K25C	SWITCH	V		
19		1	01	74193		JL-A2A25-2	CIRCUIT BREAKER	V		
20		1	01	74193		JA1A3A0.5-3	CIRCUIT BREAKER	V		

UNIT OF MEASURE CODE
01 = PIECE EACH
11 = INCH
12 = FEET
13 = CUBIC FOOT
31 = OUNCE (AVDP)
35 = OUNCE (TROY)
59 = FLUID OUNCE
66 = CUBIC INCH

SYMBOL CODE (SY): V = VENDOR ITEM, SEE SPECIFICATION OR SOURCE CONTROL DRAWING

PLANNING CODE (PL): K = ALTERNATE ITEM P = BULK MATL (ALL OTHER PL CODES ARE FOR IBM REF ONLY; EG. G = INTER-ZONE GEN J = AS REQD L = DO NOT FILL N = VENDOR FURN R = REF X = DO NOT GENERATE Z = DUMMY CONNECT)

CHARACTER CODE (CH): A = WITH BILL OF MATL D = WITHOUT BILL OF MATL R = FACTORY REF

PARTS LIST | IBM | FEDERAL SYSTEMS DIVISION
* CODE IDENT 03640 – OWEGO, N Y
CODE IDENT 20234 – HUNTSVILLE, AL

CONTRACT NO.

* CODE IDENT PL 792881C

REVISION LTR DATE

LIST TITLE

EN NO.

SHEET 2 OF 3

ITEM NO.	REFERENCE DESIGNATION	QUANTITY REQUIRED	UNIT MEAS	CODE IDENT	DRAWING OR DOCUMENT NO.	PART OR IDENTIFYING NO.	NOMENCLATURE OR DESCRIPTION	SY	PL	CH
21		2	Ø1	74193		JA1A3A6-2	CIRCUIT BREAKER	V		
22		1	Ø1	74193		JA1A2A13-1Ø	CIRCUIT BREAKER	V		
23		3	Ø1	74193		JA1A3AØ.3-1Ø	CIRCUIT BREAKER	V		
24		2	Ø1	74193		JA1A3AØ.4-1Ø	CIRCUIT BREAKER	V		
25		1	Ø1	74193		JA1A2A0.5-3	CIRCUIT BREAKER	V		
26		6	Ø1			MS51957-43	SCR PAN HD 8-32 X .44 LG			
27		1	Ø1	27191		E3ØCM	OPERATOR	V		
28		1	Ø1	27191		E3ØKLA9	CONTACT BLOCK	V		
29		1	Ø1	27191		E3ØKG12	LENS	V		
30		1	Ø1	27191		E3ØKG22	LENS	V		
31		1	Ø1	27191		1Ø25ØT2Ø1C3M36	LIGHT, INDICATOR	V		
32		1	Ø1	26Ø42		5252	DUPLEX OUTLET	V		
33		1	Ø1	26Ø42		5211	PLATE	V		
34		5	Ø1	24324		GOB1102-2	GROMMET	V		
35		1Ø	Ø1			MS51957-45	SCR PAN HD 8-32 X.50 LG			
36		32	Ø1			NAS679CØ8M	NUT 8-32			
37		2Ø	Ø1			MS51957-26	SCR PAN HD 6-32 X.25 LG			
38		4	Ø1			MS24693C5Ø	SCR FL HD 6-32 X.50 LG			
39		13	Ø1			NAS679CØ6M	NUT 6-32			
40		16	Ø1			MS51957-45	SCR PAN HD 8-32 X.62 LG			

UNIT OF MEASURE CODE
01 – PIECE EACH
11 – INCH
12 – FEET
18 – CUBIC FOOT
31 – OUNCE (AVDP)
35 – OUNCE (TROY)
59 – FLUID OUNCE
66 – CUBIC INCH

SYMBOL CODE (SY): V – VENDOR ITEM, SEE SPECIFICATION OR SOURCE CONTROL DRAWING

PLANNING CODE (PL): K – ALTERNATE ITEM P – BULK MATL (ALL OTHER PL CODES ARE FOR IBM REF ONLY; EG. G – INTER-ZONE GEN J – AS REQD
L – DO NOT FILL N – VENDOR FURN R – REF X – DO NOT GENERATE Z – DUMMY CONNECT)

CHARACTER CODE (CH): A – WITH BILL OF MATL D – WITHOUT BILL OF MATL R – FACTORY REF

IBM FORM NO. 952-6324-1

PARTS LIST | IBM

FEDERAL SYSTEMS DIVISION
* CODE IDENT 03940 - OWEGO, N.Y.
CODE IDENT 20224 - HUNTSVILLE, AL

CONTRACT NO.

* CODE IDENT

PL 7922-1

REVISION
LTR
DATE

LIST TITLE

EN NO.

SHEET 3 OF 3

ITEM NO.	REFERENCE DESIGNATION	QUANTITY REQUIRED	UNIT MEAS	CODE IDENT	DRAWING OR DOCUMENT NO.	PART OR IDENTIFYING NO.	NOMENCLATURE OR DESCRIPTION	SY	PL	CH
41		9	01			MS51957-30	SCR PAN HD 6-32 X .50 LG			
42		6	01			MS51957-13	SCR PAN HD 4-40 X .25 LG			
43		6	01			MS51957-43	SCR PAN HD 8-32 X .44 LG			

UNIT OF MEASURE CODE
01 - PIECE EACH
11 - INCH
12 - FEET
13 - CUBIC FOOT
31 - OUNCE (AVOIR)
32 - OUNCE (TROY)
59 - FLUID OUNCE
66 - CUBIC INCH

SYMBOL CODE (SY): V - VENDOR ITEM, SEE SPECIFICATION OR SOURCE CONTROL DRAWING

PLANNING CODE (PL): K - ALTERNATE ITEM P - BULK MATL (ALL OTHER PL CODES ARE FOR IBM REF ONLY; EG. C - INTER-ZONE GEN J - AS REQD L - DO NOT FILL N - VENDOR FURN R - REF X - DO NOT GENERATE Z - DUMMY CONNECT)

CHARACTER CODE (CH): A - WITH BILL OF MATL D - WITHOUT BILL OF MATL R - FACTORY REF

PARTS LIST	IBM	FEDERAL SYSTEMS DIVISION * CODE IDENT 03640 – OWEGO, N Y CODE IDENT 20234 – HUNTSVILLE, AL	CONTRACT NO. NAS 8-14000	* CODE IDENT 20234	PL 7928[illegible]	REVISION LTR + DATE

LIST TITLE: TUBE ASSY

EN NO.:

SHEET 1 OF 1

ITEM NO.	REFERENCE DESIGNATION	QUANTITY REQUIRED	UNIT MEAS	CODE IDENT	DRAWING OR DOCUMENT NO.	PART OR IDENTIFYING NO.	NOMENCLATURE OR DESCRIPTION	SY	PL	CH
1		1	01			7928841-1	TUBE			
2		1	01			7928842-1	CAP, TUBE			
3		1	01			7928844-1	COVER, GLASS			
4		1	01			7928843-1	GASKET			
5		1	01			7928845-1	DISK, SHADE			
[illegible]		1	01			7928846-1	PLUG			
[illegible]		3	01			MS51957-78	SCR, PAN HD 2-56 X .50 LG			
[illegible]		2	01			MS51957-2	SCR, PAN HD 2-56 X 1.5 LG			
[illegible]		1	01	03911		CL704/2	PHOTOCELL	V		
[illegible]		AR	59	71984		RTV 88[illegible]	[illegible]			
11		AR	59			6[illegible]	ADHESIVE			

UNIT OF MEASURE CODE
- 01 = PIECE EACH
- 11 = INCH
- 12 = FEET
- 18 = CUBIC FOOT
- 31 = OUNCE (AVDP)
- 35 = OUNCE (TROY)
- 59 = FLUID OUNCE
- 66 = CUBIC INCH

SYMBOL CODE (SY): V = VENDOR ITEM, SEE SPECIFICATION OR SOURCE CONTROL DRAWING

PLANNING CODE (PL): K = ALTERNATE ITEM P = BULK MATL (ALL OTHER PL CODES ARE FOR IDM REF ONLY; EG. G = INTER-ZONE GEN J = AS REQD L = DO NOT FILL N = VENDOR FURN R = REF X = DO NOT GENERATE Z = DUMMY CONNECT)

CHARACTER CODE (CH): A = WITH BILL OF MATL D = WITHOUT BILL OF MATL R = FACTORY REF

IBM FORM NO. 952-6024-1

PARTS LIST	IBM	FEDERAL SYSTEMS DIVISION * CODE IDENT 03640 – OWEGO, N Y CODE IDENT 20234 – HUNTSVILLE, AL	CONTRACT NO. NAS 8 14000	* CODE IDENT 20234	PL 7928-40	REVISION LTR DATE

LIST TITLE: [illegible] CELL SAMPLE ASSY

EN NO.:

SHEET 1 OF 1

ITEM NO.	REFERENCE DESIGNATION	QUANTITY REQUIRED	UNIT MEAS	CODE IDENT	DRAWING OR DOCUMENT NO.	PART OR IDENTIFYING NO.	NOMENCLATURE OR DESCRIPTION	SY	PL	CH
1		1	Ø1			7928789-1	HOLDER, CELL SAMPLE			
2		2	Ø1	83330		379	BINDING POST	V		
3		2	Ø1	83330		92-1506-1Ø1	TERMINAL, TEFLON	V		
4		1	Ø1	32997		224L2ØOHM	TRIMPOT	V		
5		2	Ø1			MS51957-4	SCR PAN HD 2-56 X .31 LG			
6		1	Ø1	54289	[illegible]	219E-0.1W	RESISTOR			
7		AR	31			SN 60	SOLDER			

UNIT OF MEASURE CODE
01 = PIECE EACH
11 = INCH
12 = FEET
13 = CUBIC FOOT
31 = OUNCE (AVDP)
35 = OUNCE (TROY)
59 = FLUID OUNCE
66 = CUBIC INCH

SYMBOL CODE (SY): V = VENDOR ITEM, SEE SPECIFICATION OR SOURCE CONTROL DRAWING

PLANNING CODE (PL): K = ALTERNATE ITEM P = BULK MATL (ALL OTHER PL CODES ARE FOR IBM REF ONLY; EG, G = INTER-ZONE GEN J = AS REQD L = DO NOT FILL N = VENDOR FURN R = REF X = DO NOT GENERATE Z = DUMMY CONNECT)

CHARACTER CODE (CH): A = WITH BILL OF MATL D = WITHOUT BILL OF MATL R = FACTORY REF

APPENDIX E

SUNFALL MONITOR

ELECTRICAL DRAWINGS

SECTION E-1

SUMMARY

The electrical drawings presented in this section include the Electrical Power and Control Subsystem schematic and system interface cable diagrams for the complete Sunfall Monitor System. Due to the difficulties in achieving the best routings and wire groupings, without access to the physical hardware, point-to-point wiring and detailed cable drawings will be developed during the prototype build phase of the program.

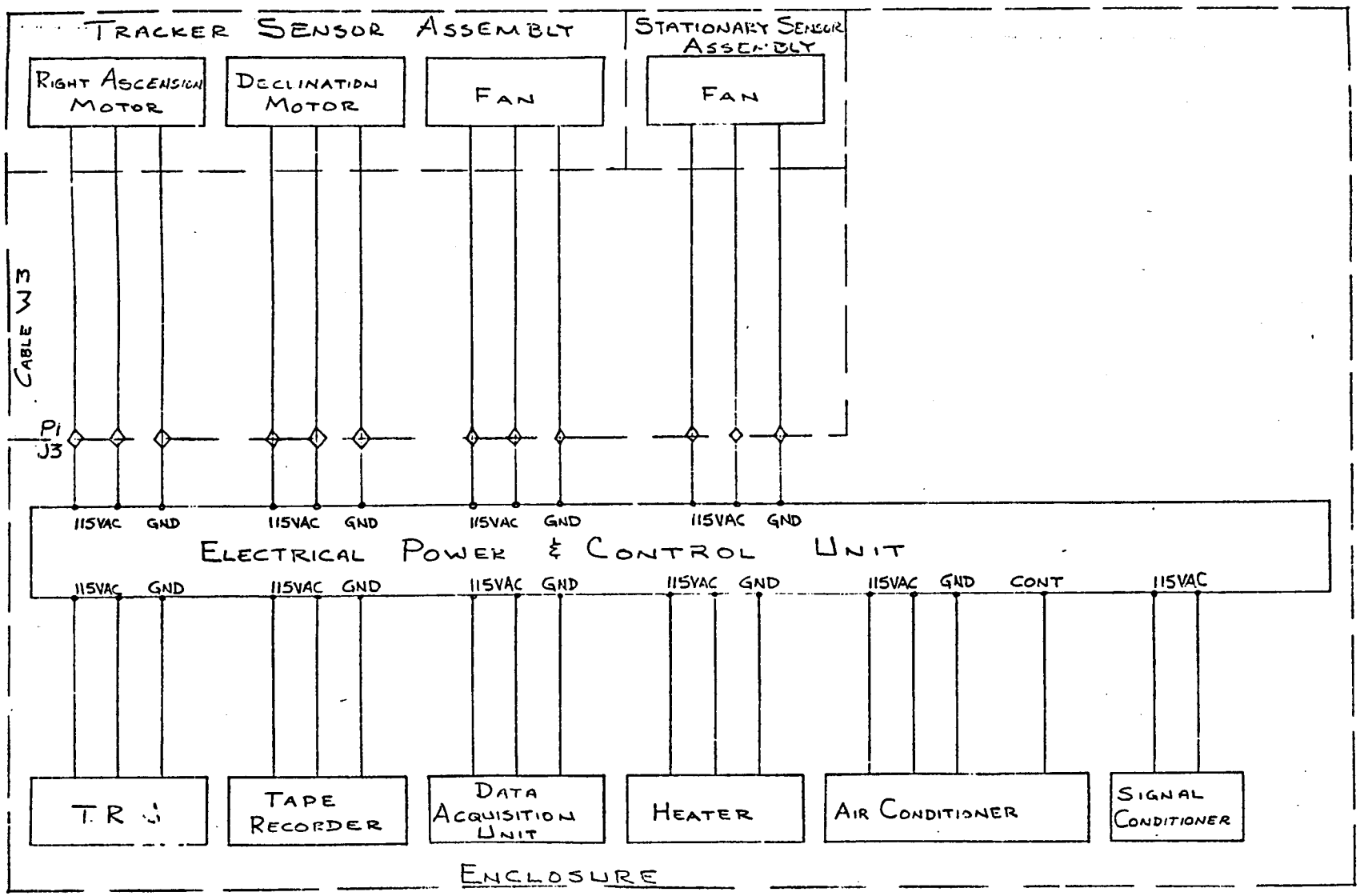

POWER DISTRIBUTION

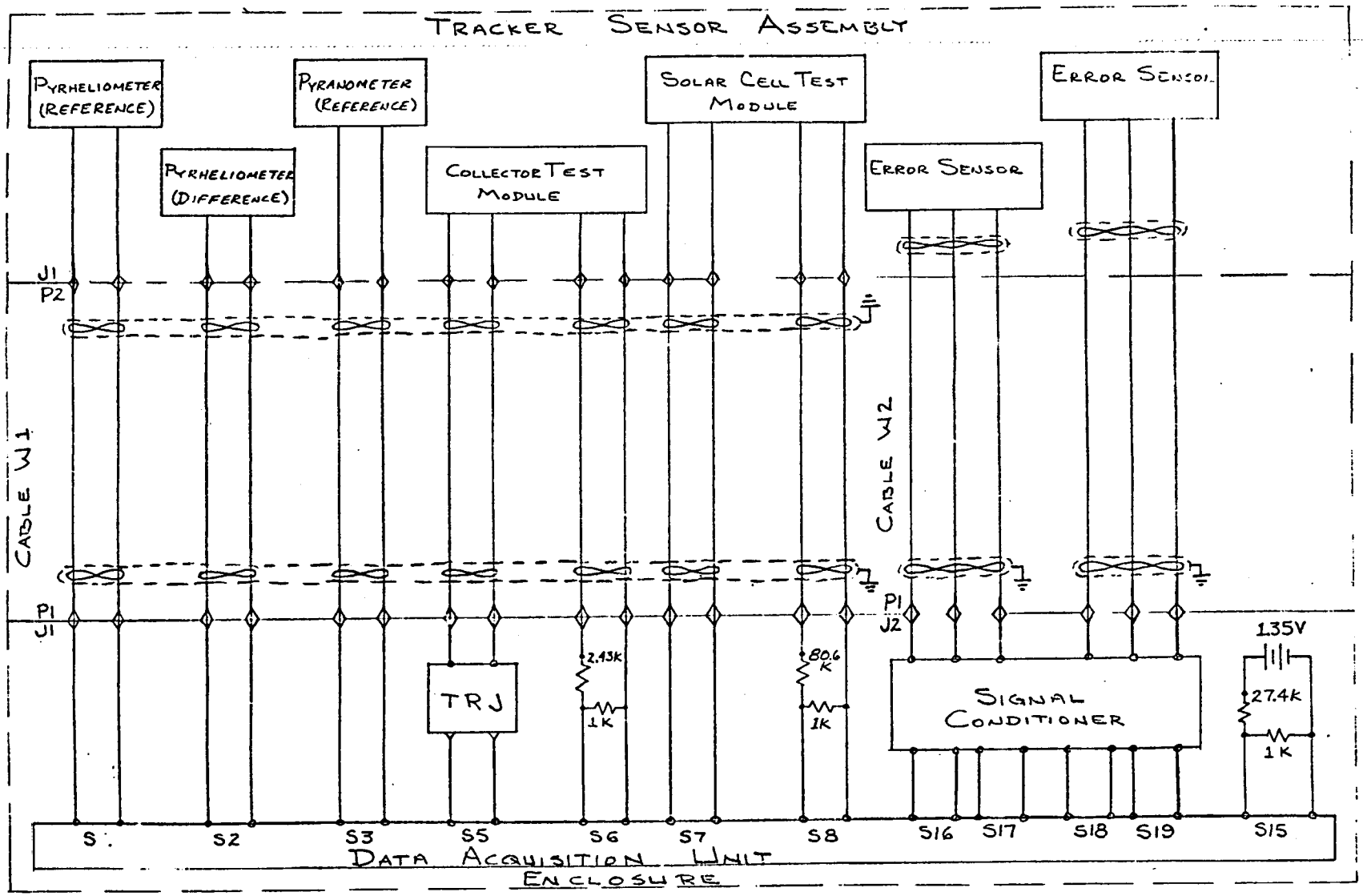

SIGNAL DISTRIBUTION

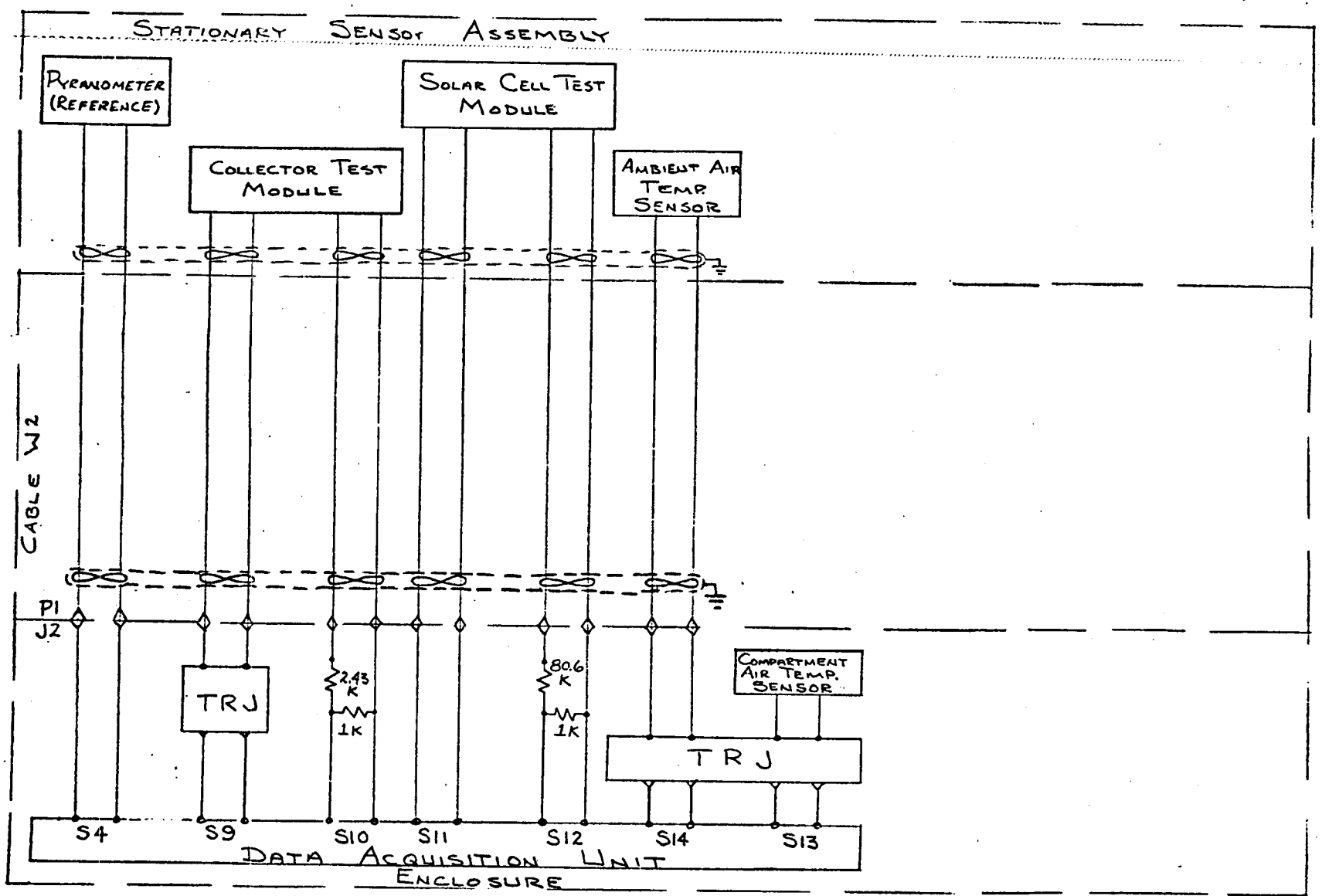

SIGNAL DISTRIBUTION

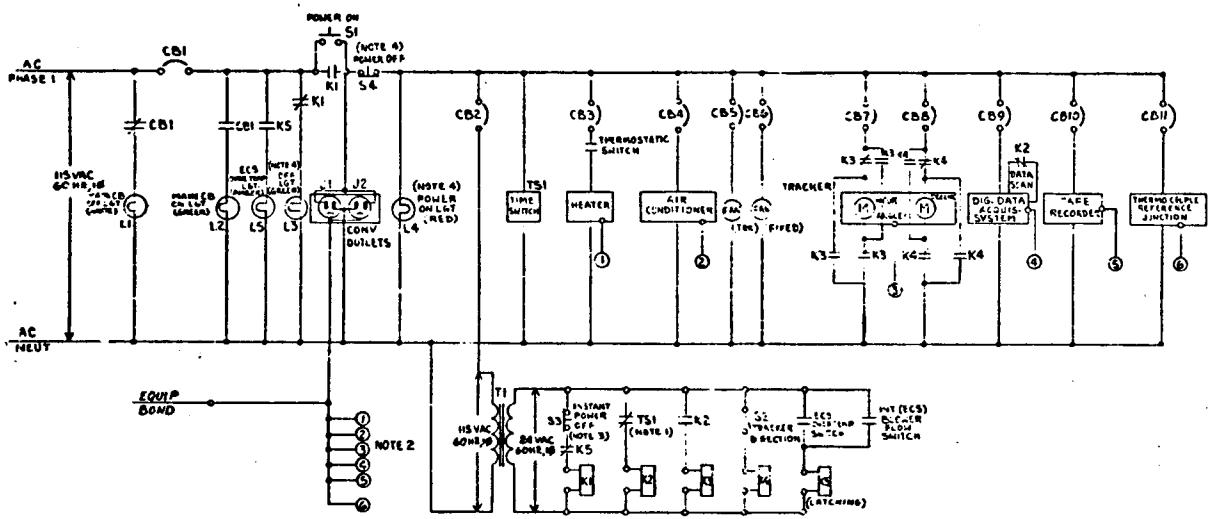

NOTES:

1. TIME SWITCH (TS1) CONTACTS OPEN 15 MIN BEFORE SUNRISE; CLOSE 15 MIN AFTER SUN SET.
2. EQUIPMENT BOND CONNECTIONS INDICATED BY CORRESPONDING NUMBERED CIRCLES AT LOAD UNIT FRAMES.
3. INSTANT PWR OFF PUSHBUTTON LOCATED ON OUTER COVER OF SUNFALL MONITOR ASSEMBLY.
4. S1, S4, L1 & L2 ALL CONTAINED IN MAIN POWER SWITCH ASSY.

PART NO.

28	29	30	31	32	33	34	35	
20	21	22	23	24	25	26	27	
12	13	14	15	1	17	18	19	
4	5	6	7	8	9	10	11	
REV STATUS OF SHEETS				REV SH	1	2	3	

SPECIFICATION NUMBER AND TYPE — NOTE — ITEM NO — APPLIES TO

APPLICABLE IBM SPECIFICATIONS

IF "SOURCE CONTROL DRAWING" ONLY THE ITEM DESCRIBED ON THIS DRAWING WHEN PROCURED FROM THE VENDOR(S) LISTED HEREON IS APPROVED BY IBM.
GAITHERSBURG MD
HUNTSVILLE AL
OWEGO, NY

FOR USE IN THE APPLICATION(S) SPECIFIED HEREON A SUBSTITUTE ITEM SHALL NOT BE USED WITHOUT PRIOR TESTING AND APPROVAL BY IBM OR BY (GOVERNMENT PROCURING ACTIVITY)

UNLESS OTHERWISE SPECIFIED DIMENSIONS AND TOLERANCES ARE IN INCHES AND APPLY TO THE FINISHED PART

TOLERANCE ON: 2 PLACE DECS ± — 3 PLACE DECS ± — ANGLES ± —

MATL — HARD — CASE DEPTH — SURF FINISH

CONTR NO NAS8-14000
PREPARATION DATE 5/26/73
DESIGN CHK DATE
DRAWING CHK DATE
DESIGN APPROVAL DATE
IBM APPROVAL (SPECIFY ACTIVITY) DATE

IBM FEDERAL SYSTEMS DIVISION
GAITHERSBURG, MD. — HUNTSVILLE, AL. — OWEGO, N.Y.

ELECTRICAL POWER AND CONTROL SUB SYSTEM SCHEMATIC

SIZE D — CODE IDENT NO 20234 — DWG NO 7928814

SCALE — WT — SHEET 1 OF 1

APPENDIX F

SUNFALL MONITOR

MECHANICAL DRAWINGS

SECTION F-1

SUMMARY

The mechanical drawings presented in this appendix are estimated to be ninety-five percent complete. Before the Sunfall Monitor prototype is built a design check should be performed to verify mechanical compatibility of all parts.

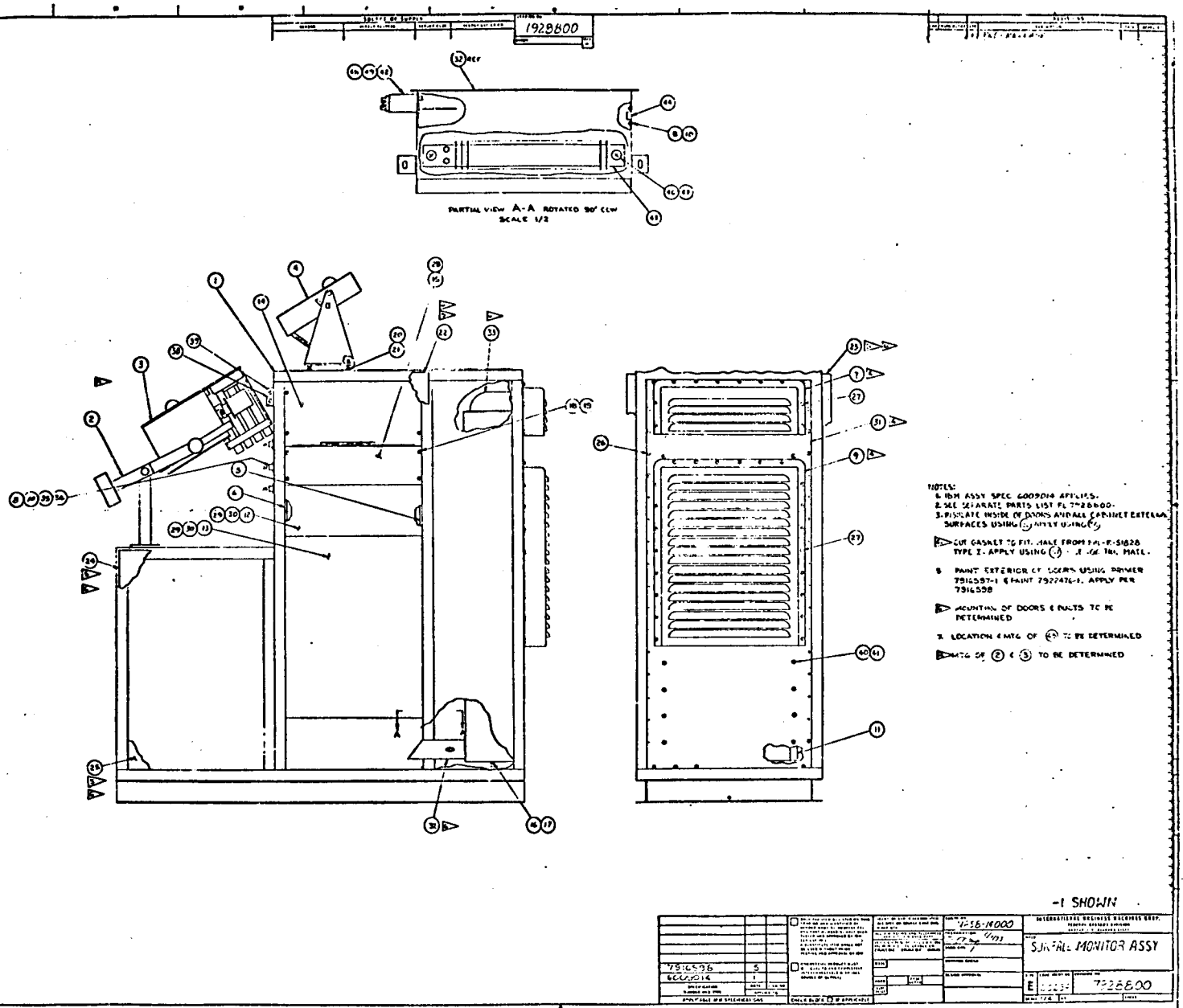
1928800
PARTIAL VIEW A-A ROTATED 90° CCW
SCALE 1/2
NOTES:
1. IBM ASSY SPEC 6009014 APPLIES.
2. SEE SEPARATE PARTS LIST FL 7928600.
3. ISOLATE INSIDE OF DOORS AND ALL CABINET EXTERNAL SURFACES USING
CUT GASKET TO FIT. MADE FROM MIL-R-51828 TYPE I. APPLY USING
PAINT EXTERIOR OF DOORS USING PRIMER 7916597-1 & PAINT 7922476-1. APPLY PER 7916598
MOUNTING OF DOORS & DUCTS TO BE DETERMINED
LOCATION & MTG OF TO BE DETERMINED
MTG OF 2 & 5 TO BE DETERMINED
-1 SHOWN
SUNFALL MONITOR ASSY
7928800

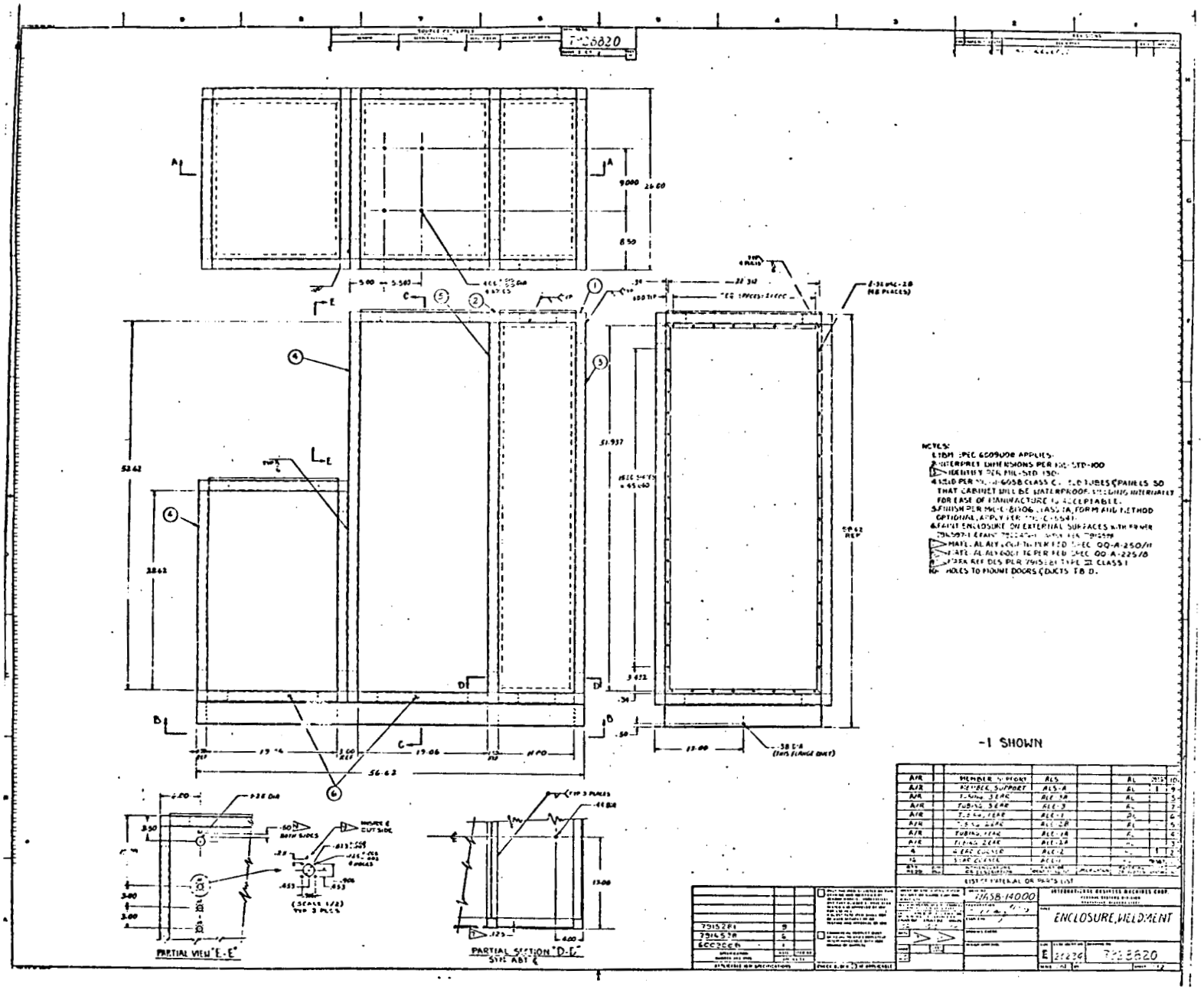
-1 SHOWN
ENCLOSURE, WELDMENT
PARTIAL VIEW "E-E"
PARTIAL SECTION "D-D"
NOTES:

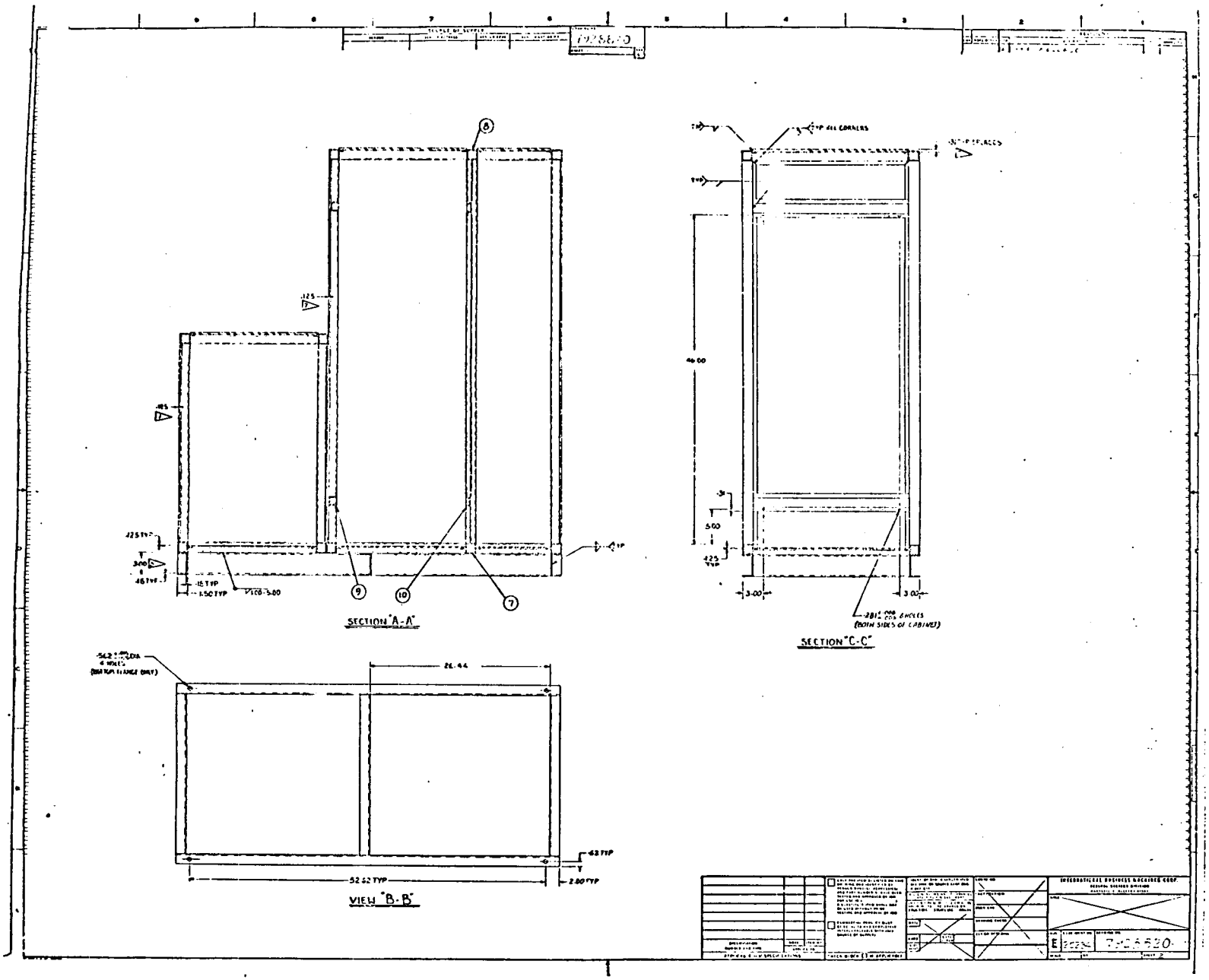
SECTION "A-A"
SECTION "C-C"
VIEW "B-B"
26.44
52.62 TYP
46.00
5.00
3.00
(BOTH SIDES OF CABINET)

APPROVED	SUGGESTED	SOURCE(S) OF SUPPLY		
VENDOR		VENDOR ADDRESS	VENDOR CODE	VENDOR CAT OR P/N
KOOLTRONICS INC		PRINCETON N.J.	06223	KAC4 AIR COND

REVISIONS				
		+	PRE-RELEASE	

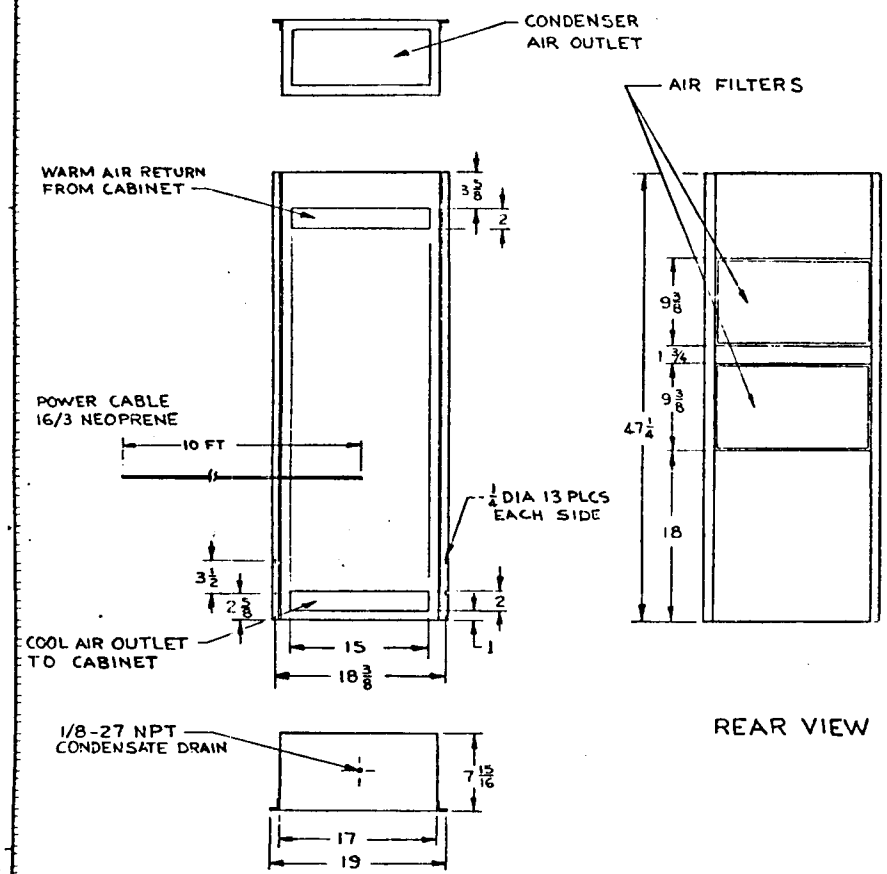

NOTES:

1. IDENTIFY PER MIL-STD-130

SOURCE CONTROL DRAWING

PART NO. -1 SHOWN

REV STATUS OF SHEETS	REV			
	SH	1	2	3

SPECIFICATION NUMBER AND TYPE — NOTE — ITEM NO — APPLIES TO

APPLICABLE IBM SPECIFICATIONS

IF "SOURCE CONTROL DRAWING"— ONLY THE ITEM DESCRIBED ON THIS DRAWING WHEN PROCURED FROM THE VENDOR(S) LISTED HEREON IS APPROVED BY IBM. [ ] GAITHERSBURG, MD [X] HUNTSVILLE, AL [ ] OWEGO, NY [ ] _____

FOR USE IN THE APPLICATION(S) SPECIFIED HEREON. A SUBSTITUTE ITEM SHALL NOT BE USED WITHOUT PRIOR TESTING AND APPROVAL BY IBM OR BY MSFC (GOVERNMENT PROCURING ACTIVITY)

UNLESS OTHERWISE SPECIFIED DIMENSIONS AND TOLERANCES ARE IN INCHES AND APPLY TO THE FINISHED PART.

TOLERANCE ON: 2 PLACE DEC ± 3 PLACE DEC ± ANGLES ±

MATL — HARDN — CASE DEPTH — SHEET

CONTR NO NAS 8-14000

PREPARATION DATE 5/16/73 — DESIGN CHK — DRAWING CHK — DESIGN APPROVAL — OTHER APPROVAL (SPECIFY ACTIVITY)

IBM FEDERAL SYSTEMS DIVISION [ ] GAITHERSBURG, MD [X] HUNTSVILLE, AL [ ] OWEGO, NY

TITLE AIR CONDITIONER ELECTRONIC CABINET

SIZE C — CODE IDENT NO 20234 — DWG NO 7928835

SCALE NONE — WT — SHEET

SUGGESTED SOURCE(S) OF SUPPLY			
		VENDOR CODE	VENDOR PART OR DWG
	CHICAGO, ILL. 60656	98587	MX52

REVISIONS					

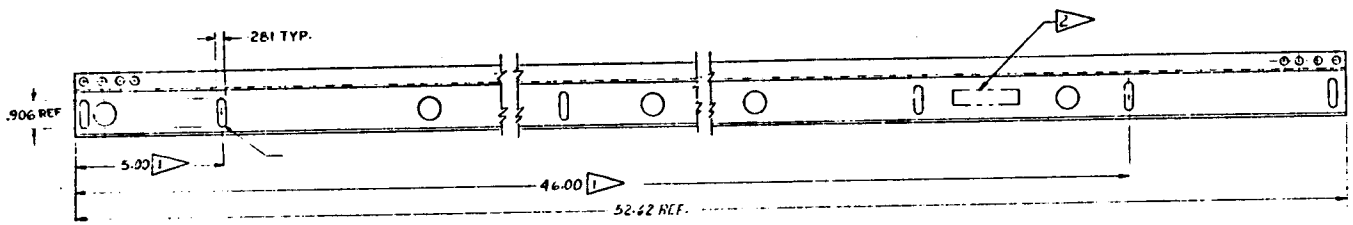

NOTES:

1. ALTER IN ACCORDANCE WITH THIS DWG.
2. IDENTIFY PER MIL-STD-130.
3. IBM SPEC 6009006 APPLIES.
4. INTERPRET DIMENSIONS PER MIL-STD-100

-1 SHOWN
-2 OPP HAND

ALTERED PART DRAWING

28	29	30	31	32	33	34	35	
20	21	22	23	24	25	26	27	
12	13	14	15	16	17	18	19	
4	5	6	7	8	9	10	11	
REV STATUS OF SHEETS				REV				
				SH	1	2	3	

6009006 — SPECIFICATION NUMBER AND TYPE

3 — NOTE / ITEM NO / APPLIES TO

APPLICABLE IBM SPECIFICATIONS

IF "SOURCE CONTROL DRAWING" — ONLY THE ITEM DESCRIBED ON THIS DRAWING WHEN PROCURED FROM THE VENDOR(S) LISTED HEREON IS APPROVED BY IBM, ☐ GAITHERSBURG, MD ☐ HUNTSVILLE, AL ☐ OWEGO, NY ☐ _____

FOR USE IN THE APPLICATION(S) SPECIFIED HEREON. A SUBSTITUTE ITEM SHALL NOT BE USED WITHOUT PRIOR TESTING AND APPROVAL BY IBM OR BY (GOVERNMENT PROCURING ACTIVITY)

UNLESS OTHERWISE SPECIFIED DIMENSIONS AND TOLERANCES ARE IN INCHES AND APPLY TO THE FINISHED PART

TOLERANCE ON: 2 PLACE DEC ±.02 | 3 PLACE DEC ±.010 | ANGLES ±

MATL

HARD — CASE DEPTH

SURF FINISH

CONTR NO: 11A5B-14000

PREPARATION

DESIGN CHK

DRAWING CHK

DESIGN APPROVAL

CHIEF APPROVAL (PROCURING ACTIVITY)

INTERNATIONAL BUSINESS MACHINES CORP.
FEDERAL SYSTEMS DIVISION
OWEGO, NEW YORK 13827

TITLE: CHANNEL, MOUNTING ALTERED

SIZE: D | CODE IDENT NO: 20234 | DWG NO: 7928522

SCALE 1/1 | WT | SHEET

APPROVED SUGGESTED SOURCE(S) OF SUPPLY

REVISION

1+1 PRE-RELEASE

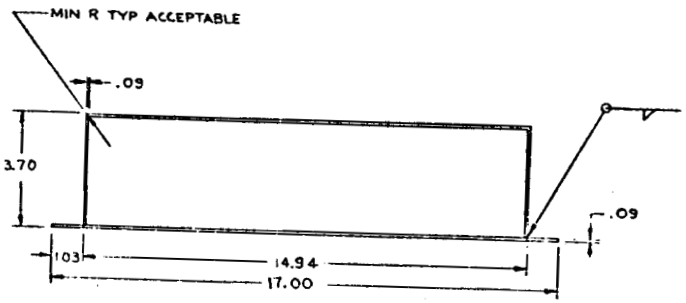

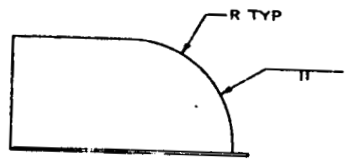

NOTES:

1. IBM SPEC 6009006 APPLIES
2. INTERPRET DIMENSIONS PER MIL-STD-100
3. IDENTIFY PER MIL-STD-130
4. WELD PER MIL-W-6058 CLASS C
5. FINISH PER MIL-C-81706, CLASS 1A, FORM 4 METHOD OPTIONAL. APPLY PER MIL-C-5541

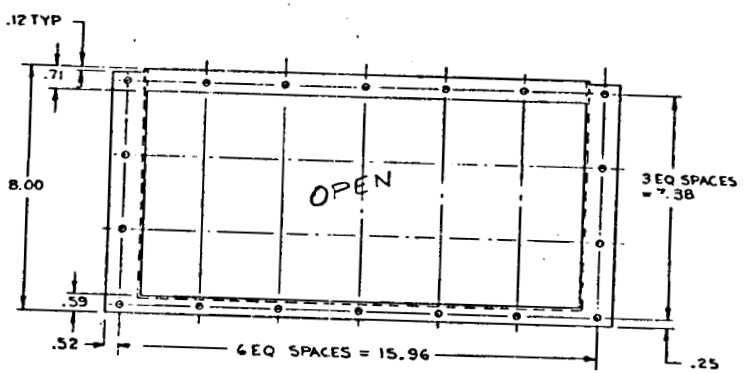

PART NO. -1 SHOWN

28	29	30	31	32	33	34	35
20	21	22	23	24	25	26	27
12	13	14	15	16	17	18	19
4	5	6	7	8	9	10	11
REV STATUS OF SHEETS				REV SH	1	2	3

6009006 — SPECIFICATION NUMBER AND TYPE

1 — NOTE / ITEM NO.

APPLICABLE IBM SPECIFICATIONS

IF "SOURCE CONTROL DRAWING" — ONLY THE ITEM DESCRIBED ON THIS DRAWING WHEN PROCURED FROM THE VENDOR(S) LISTED HEREON IS APPROVED BY IBM, GAITHERSBURG MD HUNTSVILLE AL OAKCO NY

FOR USE IN THE APPLICATION(S) SPECIFIED HEREON. A SUBSTITUTE ITEM SHALL NOT BE USED WITHOUT PRIOR TESTING AND APPROVAL BY IBM OR BY (GOVERNMENT PROCURING ACTIVITY)

UNLESS OTHERWISE SPECIFIED DIMENSIONS AND TOLERANCES ARE NOT ALWAYS APPLY TO THE FINISHED PART

TOLERANCE ON FRACTIONS ± .02 | ± | ±

MATL AL ALY 5052-32 PER QQ-A-250/8

CONTRACT NO. NAS 8-14000

DATE 4/73 | I.E. weighing

IBM FEDERAL SYSTEMS DIVISION — GAITHERSBURG MD — HUNTSVILLE AL — OAKCO NY

DUCT, TOP

D | 20234 | 7928834

SHEET 2

☐ APPROVED ☐ SUGGESTED SOURCE(S) OF SUPPLY

VENDOR	VENDOR ADDRESS	VENDOR CODE	VENDOR CAT OR PN

REVISIONS

CHG	ENGRG NOTICE	LTR	DESCRIPTION	DATE	APPR
		A	PRE-RELEASE		

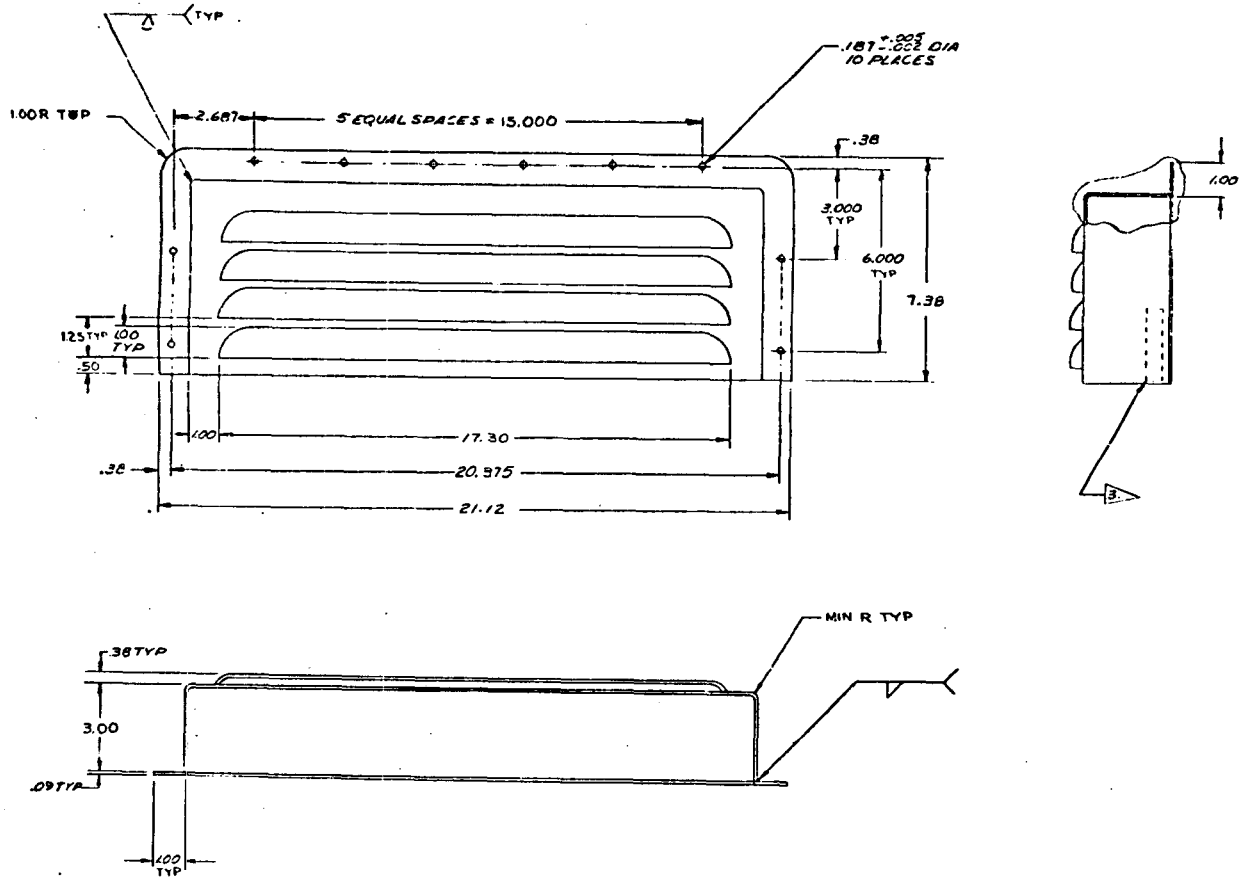

NOTES

1. IBM SPEC 6007006 APPLIES
2. INTERPRET DIMENSIONS PER MIL-D-100
3. IDENTIFY PER MIL-STD-130
4. FINISH PER MIL-C-81706 CLASS 1A FORM & METHOD OPTIONAL. APPLY PER MIL-C-5541
5. PAINT FRONT & EDGES. USE PRIMER 7925577-1 AND PAINT 7922976-1 APPLY PER 7916598

PART NO. -1 SHOWN

28	29	30	31	32	33	34	35
20	21	22	23	24	25	26	27
12	13	14	15	16	17	18	19
4	5	6	7	8	9	10	11
REV STATUS OF SHEETS				REV			
				SH	1	2	3

SPECIFICATION NUMBER AND TYPE	NOTE	ITEM NO
7916598	5	
6007006	1	
APPLICABLE IBM SPECIFICATIONS	APPLIES TO	

IF "SOURCE CONTROL DRAWING"— ONLY THE ITEM DESCRIBED ON THIS DRAWING WHEN PROCURED FROM THE VENDOR(S) LISTED HEREON IS APPROVED BY IBM, ☐ GAITHERSBURG, MD ☐ HUNTSVILLE, AL ☐ OWEGO, NY ☐ _____ FOR USE IN THE APPLICATION(S) SPEC LISTED HEREON. A SUBSTITUTE ITEM SHALL NOT BE USED WITHOUT PRIOR TESTING AND APPROVAL BY IBM OR BY (GOVERNMENT PROCURING ACTIVITY)

UNLESS OTHERWISE SPECIFIED DIMENSIONS AND TOLERANCES ARE IN INCHES AND APPLY TO THE FINISHED PART

TOLERANCE ON: 2 PLACE DEC ±.02 | 3 PLACE DEC ±.010 | ANGLE ±—

MATL ALY ALY 6061-T6 PER QQ-A-250/11

HARD | CASE DEPTH | SURF TREAT

CONTR NO NAS 8-14000

PREPARATION

DSGN CHK

DRAWING CHK

DSGN APPROVAL

OTHER APPROVAL (SPECIFY ACTIVITY)

IBM FEDERAL SYSTEMS DIVISION — GAITHERSBURG, MD — OWEGO, N.Y. — HUNTSVILLE, AL

TITLE COVER, LOUVERED

SIZE D | CODE IDENT NO 20234 | DWG NO 7928823

SERIES 12 | SHEET

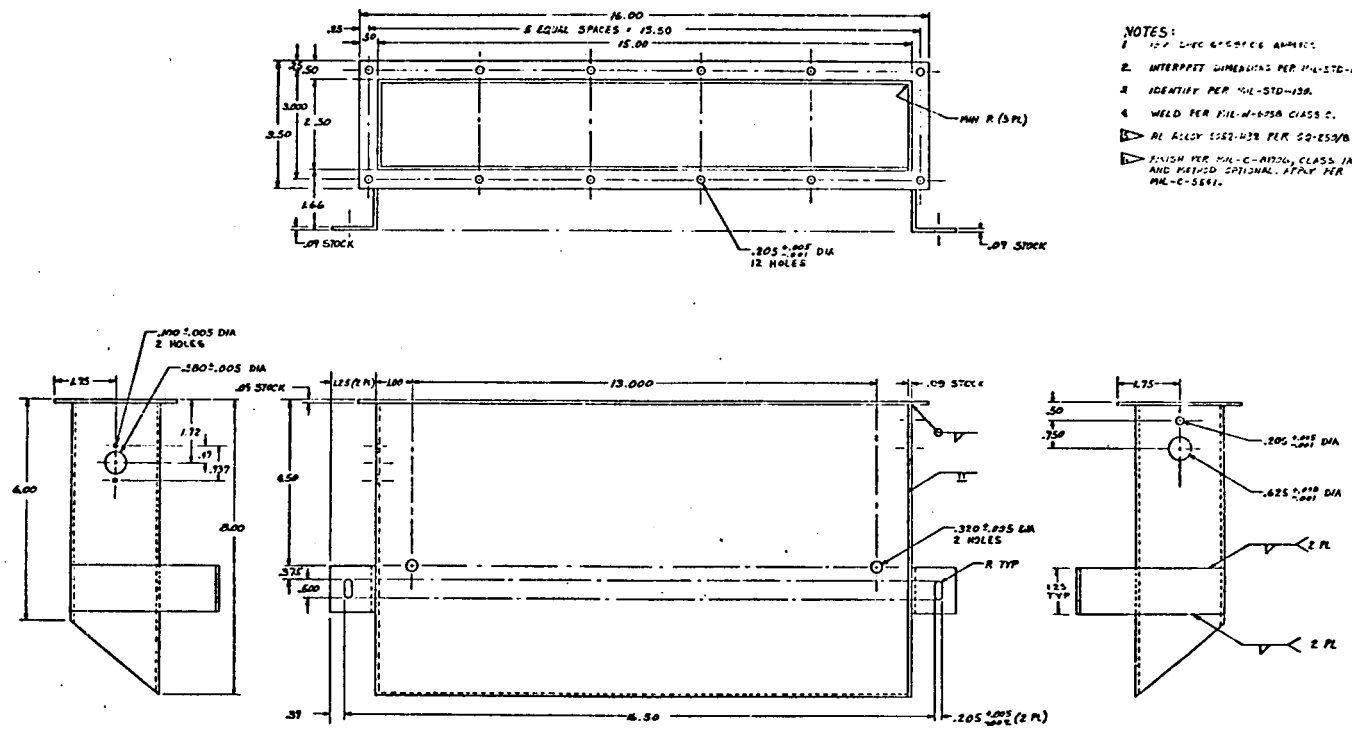

NOTES:

1. [illegible]
2. INTERPRET DIMENSIONS PER MIL-STD-100.
3. IDENTIFY PER MIL-STD-130.
4. WELD PER MIL-W-6858 CLASS C.
5. AL ALLOY 5052-H32 PER QQ-A-250/8
6. FINISH PER MIL-C-81706, CLASS 1A, FORM AND METHOD OPTIONAL. APPLY PER MIL-C-5541.

7928833-1 SHOWN

HCS 8-14000	INTERNATIONAL ORGANICS MACHINED CORP.		
	DUCT, BOTTOM		
E	00234	7928833	

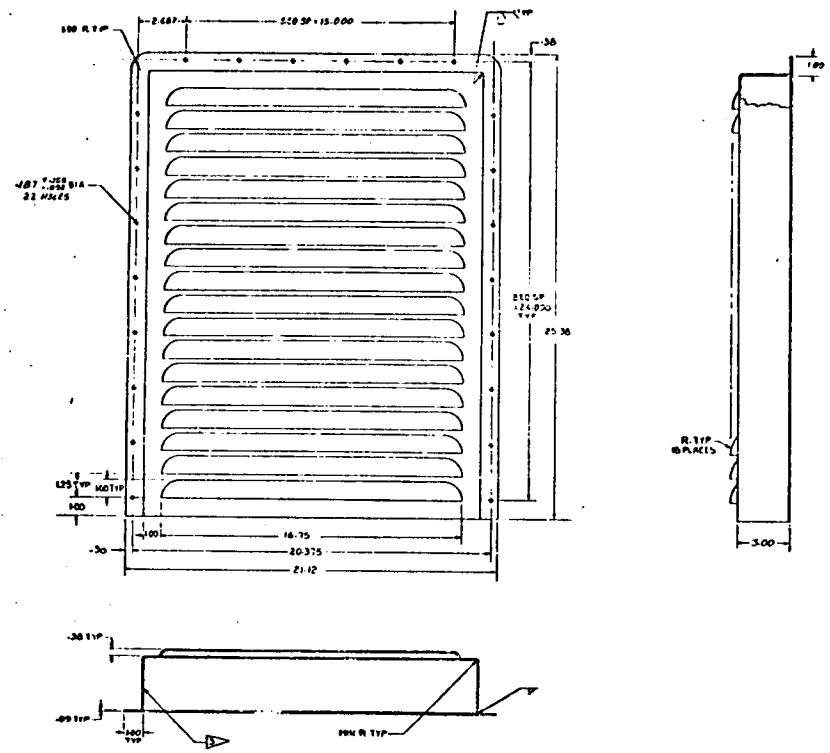

NOTES:
1. IBM SPEC [illegible] 506 APPLIES.
2. INTERPRET DIMENSIONS PER MIL-STD-100.
3. IDENTIFY PER MIL-STD-130.
4. WELD PER MIL-W-6858 CLASS C.
5. FINISH PER MIL-C-81706 CLASS 1A, FORM (METHOD) CHEMICAL, APPLY PER MIL-C-5541
6. PAINT FRONT EDGES: USE PRIMER 7916597-1 & PAINT 7522476-1 APPLY PER 7916598.

-1 SHOWN

7916598	6	
7916596	1	

SPECIFICATIONS
APPLICABLE MIL SPECIFICATIONS

COVER BLOCK ☐ IF APPLICABLE

7958-14000

INTERNATIONAL BUSINESS MACHINES CORP.
FEDERAL SYSTEMS DIVISION
MANASSAS, VIRGINIA

TITLE: COVER, LOUVERED

E | 7925836 | 7925824

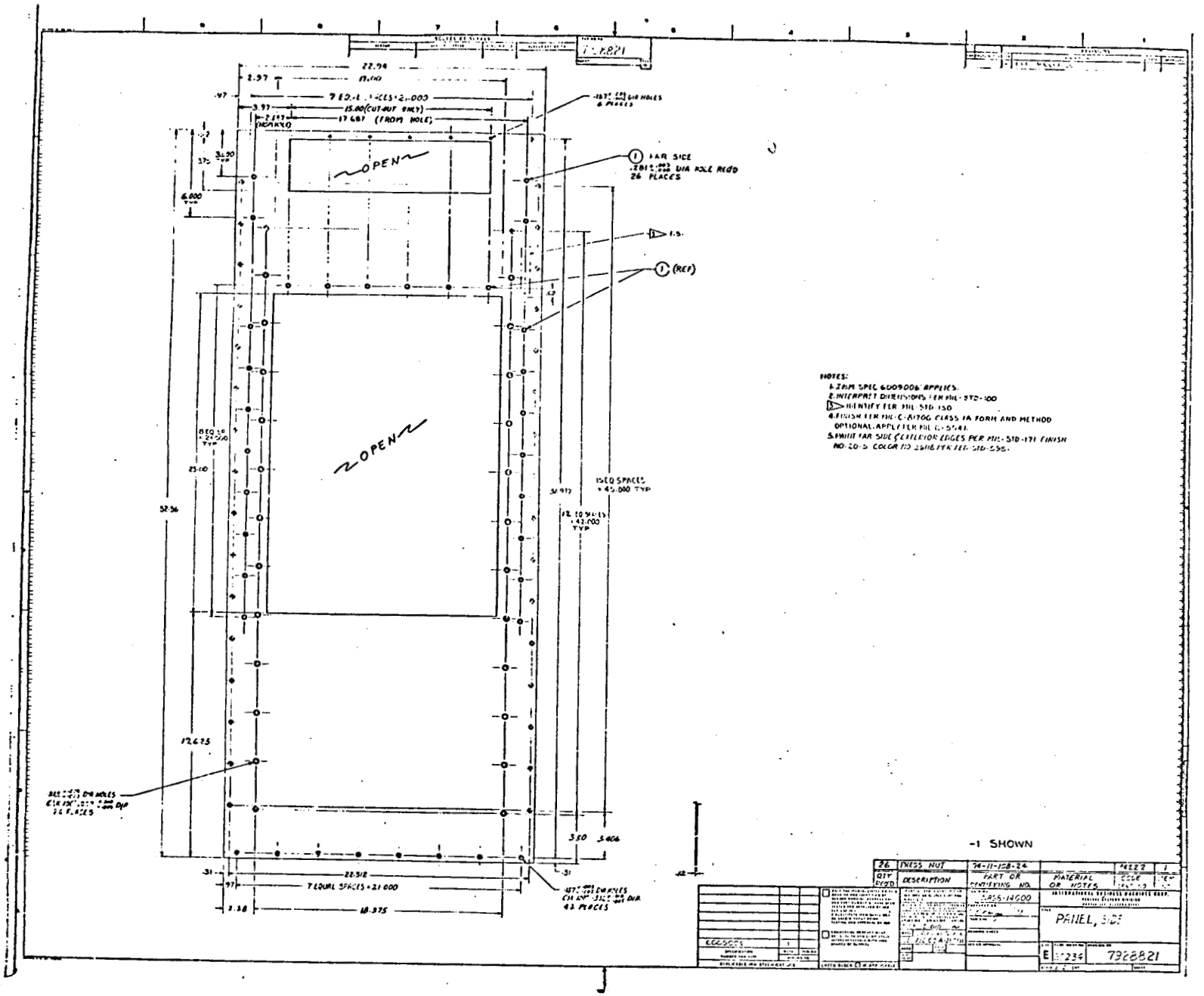
OPEN
OPEN
22.94
7 EQUAL SPACES = 21.000
15.00 (CUT-OUT ONLY)
17.687 (FROM HOLE)
FAR SIDE
26 PLACES
(REF)
15 EQ SPACES = 45.000 TYP
12 EQ SPACES = 42.000 TYP
52.56
25.10
12.675
22.312
7 EQUAL SPACES = 21.000
18.375
3.50
3.406
42 PLACES
HOTES:
1. ZRM SPEC 6009006 APPLIES.
2. INTERPRET DIMENSIONS PER MIL-STD-100
3. IDENTIFY PER MIL-STD-130
4. FINISH PER MIL-C-81706 CLASS IA FORM AND METHOD OPTIONAL. APPLY PER MIL-S-5041.
5. PAINT FAR SIDE & EXTERIOR EDGES PER MIL-STD-171 FINISH NO. 20-5 COLOR NO. 25118 PER FED. STD. 595.
-1 SHOWN
26 PRESS NUT
QTY REQD
DESCRIPTION
PART OR IDENTIFYING NO.
MATERIAL OR NOTES
CODE
PANEL, SIDE
E 11234
7928821

DWG NO. 7928804

+	REVISIONS				
CHK	ENGRG NOTICE	LTR	DESCRIPTION	DATE	APPROVED
		+	PRE-RELEASE		

VENDOR: TBD

VENDOR PART NO: TBD

-1 SHOWN

CONTR NO. NAS8-14000	INTERNATIONAL BUSINESS MACHINES CORP. FEDERAL SYSTEMS DIVISION HUNTSVILLE, ALA. 35807
PREPARATION 1-14-73	TITLE
DSGN CHK	TRACKER
DWG CHK	
DSGN APPROVAL	SIZE A / CODE IDENT NO. 20234 / DWG NO. 7928804
	SCALE / WT / SHEET

955-1685-0

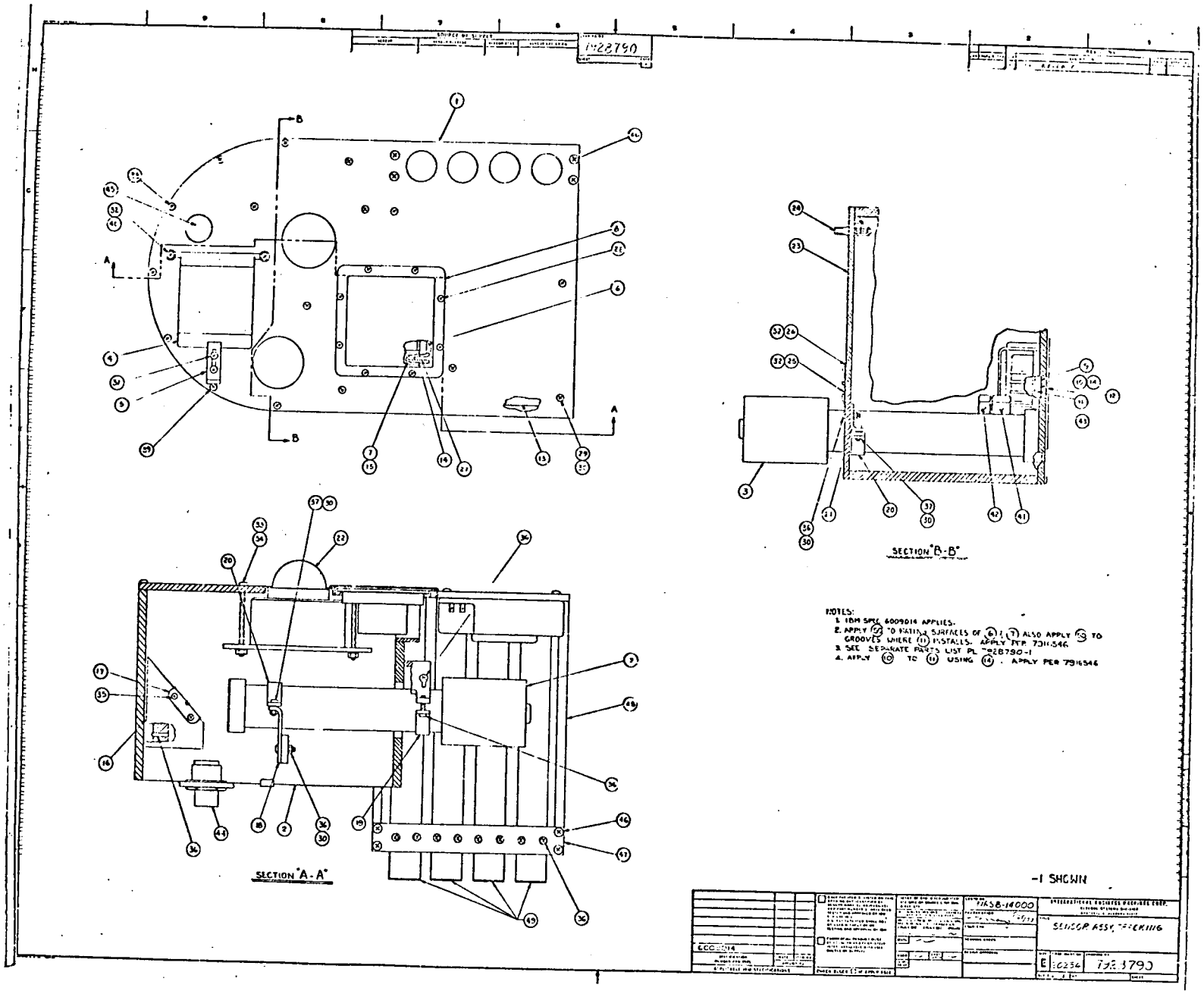
SECTION "B-B"
SECTION "A-A"
NOTES:
1. IBM SPEC 6009014 APPLIES.
2. APPLY TO MATING SURFACES OF ALSO APPLY TO GROOVES WHERE INSTALLS. APPLY PER 7311546
3. SEE SEPARATE PARTS LIST PL
4. APPLY TO USING . APPLY PER 7316546
-1 SHOWN
SENSOR ASSY
E

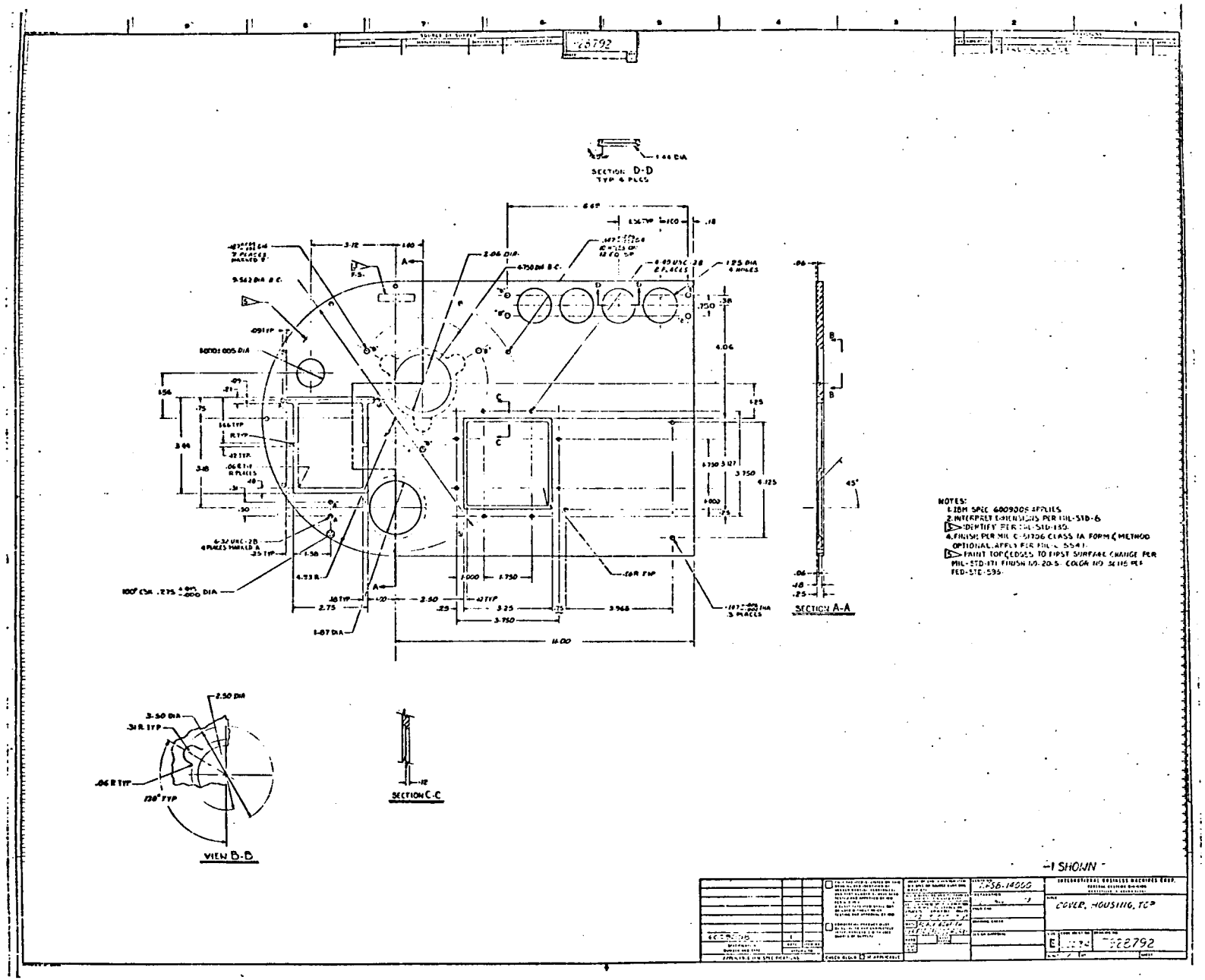
SECTION D-D
TYP 4 PLACES
SECTION A-A
SECTION C-C
VIEW B-B
NOTES:
1. IBM SPEC 6809005 APPLIES.
2. INTERPRET DIMENSIONS PER MIL-STD-8
3. IDENTIFY PER MIL-STD-130.
4. FINISH: PER MIL C-5706 CLASS 1A FORM & METHOD OPTIONAL. APPLY PER MIL-C-5541.
5. PAINT TOP & EDGES TO FIRST SURFACE CHANGE PER MIL-STD-171 FINISH NO. 20-S. COLOR NO. 26115 PER FED-STD-595.
-1 SHOWN
COVER, HOUSING, TOP
E
7728792

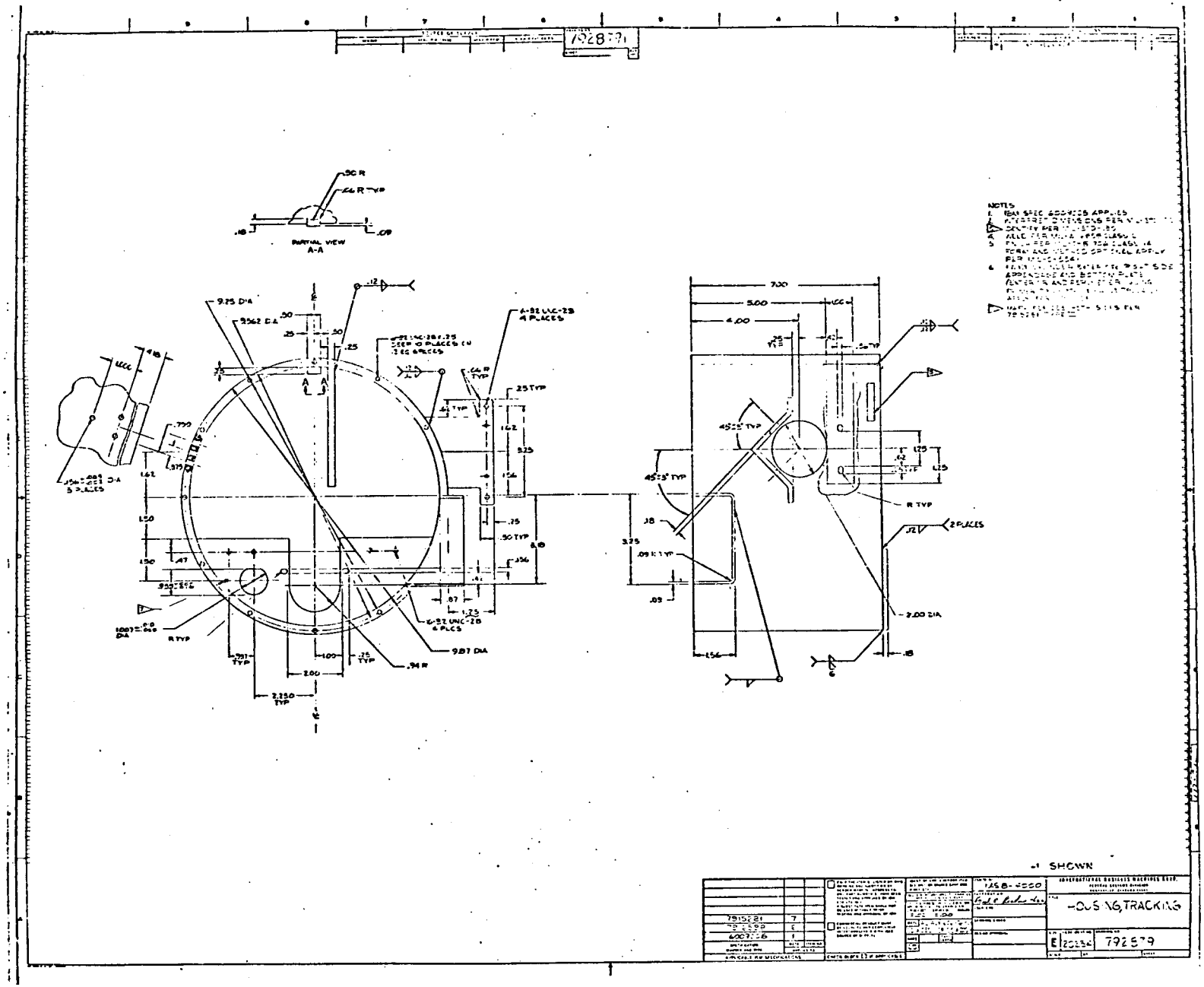
PARTIAL VIEW
A-A
9.75 DIA
9.562 DIA
6-32 UNC-2B
4 PLACES
25 TYP
45° TYP
R TYP
2 PLACES
2.00 DIA
9.87 DIA
.94 R
-1 SHOWN
HOUSING, TRACKING
E 20234
792579

☐ APPROVED ☐ SUGGESTED SOURCE(S) OF SUPPLY

VENDOR	VENDOR ADDRESS	VENDOR CODE	VENDOR CAT. OR PN

REVISIONS

CHK	ENGRG NOTICE	LTR	DESCRIPTION	DATE	APPROVED
		+	PRE-RELEASE		

7928793 ON DWG

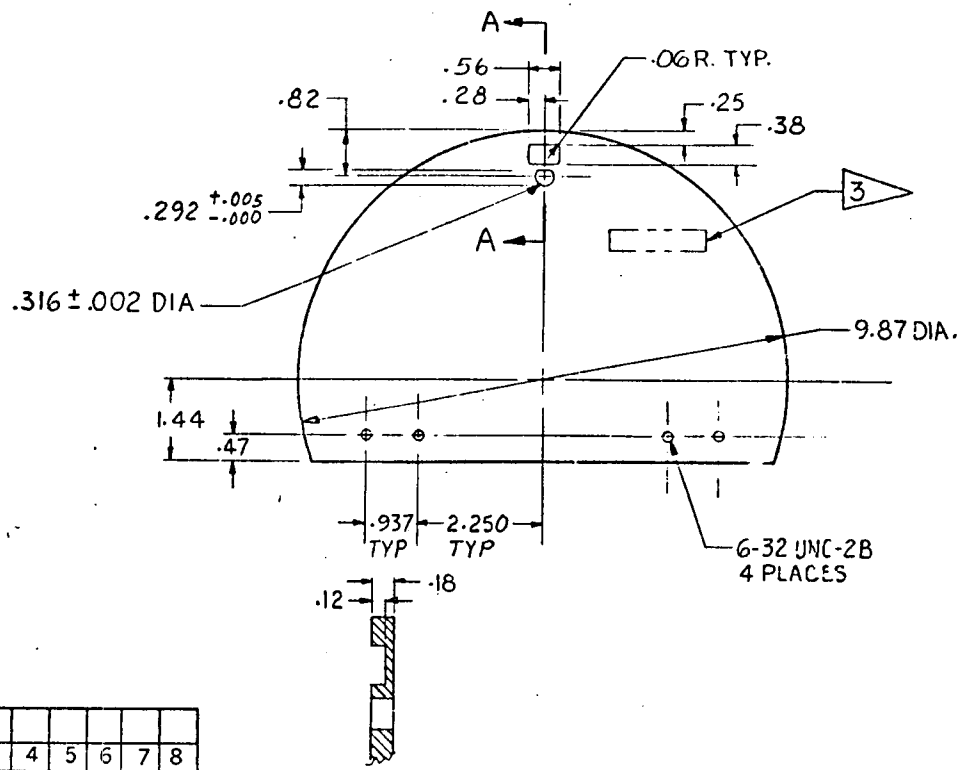

SECTION A-A
(SCALE 1/1)

NOTES:

1. IBM SPEC 6009008 APPLIES
2. INTERPRET DIMENSIONS PER MIL-STD-100
3. IDENTIFY PER MIL-STD-130
4. FINISH PER MIL-C-81706 CLASS IA FORM & METHOD OPTIONAL. APPLY PER MIL-C-5541.
5. PAINT FAR SIDE & EXTERIOR EDGES USING PRIMER 7916597-1 & PAINT 7922476-1 APPLY PER 7916598

2	3	4	5	6	7	8
REV STATUS OF SHEETS				REV		
				SH	1	

PART NO. -1 SHOWN

SPECIFICATION NUMBER AND TYPE	NOTE	ITEM NO.
7916598	5	
6009008	1	
APPLICABLE IBM SPECIFICATIONS	APPLIES TO	

IF "SOURCE CONTROL DRAWING"— ONLY THE ITEM DESCRIBED ON THIS DRAWING WHEN PROCURED FROM THE VENDOR(S) LISTED HEREON IS APPROVED BY IBM. ☐ GAITHERSBURG, MD ☐ HUNTSVILLE, AL ☐ OWEGO, NY

FOR USE IN THE APPLICATION(S) SPECIFIED HEREON A SUBSTITUTE ITEM SHALL NOT BE USED WITHOUT PRIOR TESTING AND APPROVAL BY IBM OR BY

(GOVERNMENT PROCURING ACTIVITY)

UNLESS OTHERWISE SPECIFIED DIMENSIONS AND TOLERANCES ARE IN INCHES AND APPLY TO THE FINISHED PART

TOLERANCE ON: 2 PLACE DEC ±.02 3 PLACE DEC ±.010 ANGLES ±—

MATL AL ALY 6061-T6 PER FED SPEC QQ-A-250/11

HARD | CASE DEPTH | SURF TREAT

CONTR NO NAS8-14000

PREPARATION T. Trago 6/22/73

DSGN CHK

DWG CHK

DESIGN APPROVAL

OTHER APPROVAL (SPECIFY ACTIVITY)

IBM FEDERAL SYSTEMS DIVISION ☐ GAITHERSBURG, MD ☒ HUNTSVILLE, AL ☐ OWEGO, NY

TITLE COVER, HOUSING, BOTTOM

SIZE	CODE IDENT NO	DWG NO.
B	20234	7928793

SCALE 1/2 WT SHEET

ASTROCLOTH M630T

☐ APPROVED ☐ SUGGESTED SOURCE(S) OF SUPPLY			
VENDOR	VENDOR ADDRESS	VENDOR CODE	VENDOR CAT OR PN

DWG NO 7928840

REVISIONS

CHK	ENGRG NOTICE	LTR	DESCRIPTION	DATE	APPROVED
		+	PRE-RELEASE		

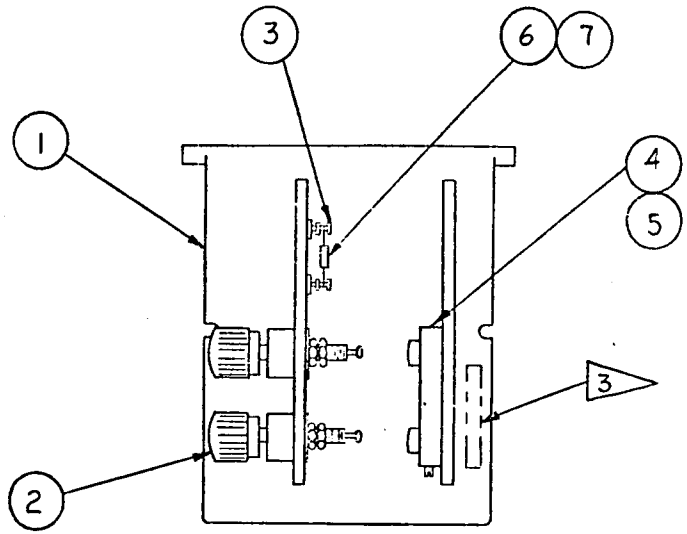

NOTES:

1. IBM SPEC 6009014 APPLIES.
2. SOLDER PER MSFC-PROC-256.
3. IDENTIFY ASSY PER MIL-STD-130.
4. SEE SEPARATE PARTS LIST PL7928840-1

2	3	4	5	6	7	8
REV STATUS OF SHEETS				REV		
				SH	1	

PART NO. -1 SHOWN

SPECIFICATION NUMBER AND TYPE	NOTE	ITEM NO.
6009014	1	
	APPLIES TO	

APPLICABLE IBM SPECIFICATIONS

IF "SOURCE CONTROL DRAWING"— ONLY THE ITEM DESCRIBED ON THIS DRAWING WHEN PROCURED FROM THE VENDOR(S) LISTED HEREON IS APPROVED BY IBM, ☐ GAITHERSBURG, MD ☐ HUNTSVILLE, AL ☐ OWEGO, NY

FOR USE IN THE APPLICATION(S) SPECIFIED HEREON. A SUBSTITUTE ITEM SHALL NOT BE USED WITHOUT PRIOR TESTING AND APPROVAL BY IBM OR BY

(GOVERNMENT PROCURING ACTIVITY)

UNLESS OTHERWISE SPECIFIED DIMENSIONS AND TOLERANCES ARE IN INCHES AND APPLY TO THE FINISHED PART

TOLERANCE ON: 2 PLACE DEC ± 3 PLACE DEC ± ANGLES ±

MATL

HARD | CASE DEPTH

SURF TREAT

CONTR NO NAS8-14000

PREPARATION T. T. Dang 7/18/23

DSGN CHK

DWG CHK

DESIGN APPROVAL

OTHER APPROVAL (SPECIFY ACTIVITY)

IBM FEDERAL SYSTEMS DIVISION ☐ GAITHERSBURG, MD ☐ OWEGO, NY ☒ HUNTSVILLE, AL

TITLE HOLDER, CELL SAMPLE ASSEMBLY

SIZE	CODE IDENT NO	DWG NO.
B	20234	7928840
SCALE 1/1	WT	SHEET

☐ APPROVED ☐ SUGGESTED SOURCE(S) OF SUPPLY

VENDOR	VENDOR ADDRESS	VENDOR CODE	VENDOR CAT. OR PN

7928789

REVISIONS

CHG	ENGRG NOTICE	LTR	DESCRIPTION	DATE	APPROVED
		+	PRE-RELEASE		

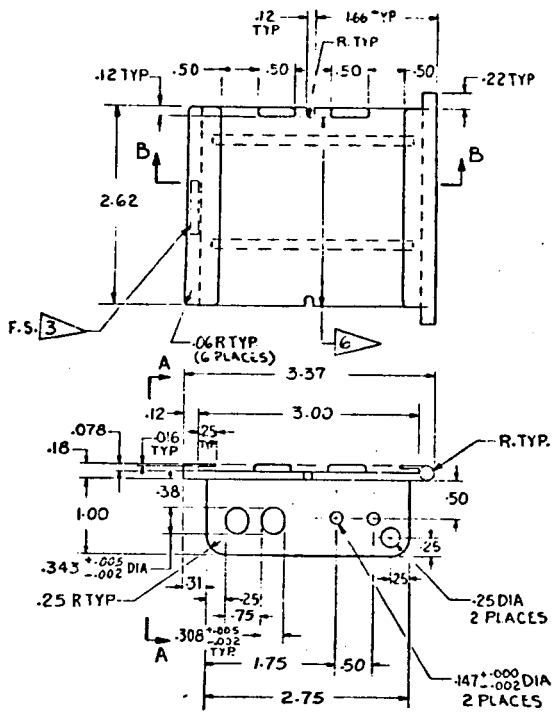

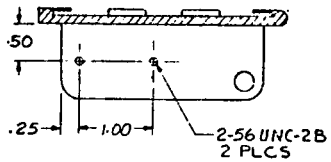

SECTION B-B

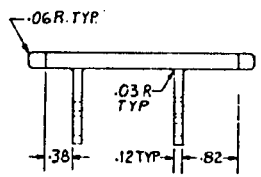

VIEW A-A

NOTES:

1. IBM SPEC 6009008 APPLIES.
2. INTERPRET DIMENSIONS PER MIL-STD-100
3. IDENTIFY PER MIL-STD-130.
4. MIL-S-7742 APPLIES.
5. FINISH PER MIL-81706 CLASS IA FORM & METHOD OPTIONAL APPLY PER MIL-C-5541.
6. PAINT TOP & EDGES. DO NOT PAINT THIS AREA AND GROOVES APPLY PER 7916598 USE PRIMER 7916597-1 & PAINT 7922476-1

PART NO. -1 SHOWN

28	29	30	31	32	33	34	35
20	21	22	23	24	[illegible]	[illegible]	27
12	13	14	15	16	[illegible]	18	19
4	5	6	7	8	9	10	11
REV STATUS OF SHEETS				REV			
				SH	1	2	3

SPECIFICATION NUMBER AND TYPE	NOTE	ITEM NO
7916598	6	
6009008	1	

APPLICABLE IBM SPECIFICATIONS

APPLIES TO

IF "SOURCE CONTROL DRAWING" — ONLY THE ITEM DESCRIBED ON THIS DRAWING WHEN PROCURED FROM THE VENDOR(S) LISTED HEREON IS APPROVED BY IBM. ☐ GAITHERSBURG, MD ☐ HUNTSVILLE, AL ☐ OWEGO, NY ☐ ____

FOR USE IN THE APPLICATION(S) SPECIFIED HEREIN. A SUBSTITUTE ITEM SHALL NOT BE USED WITHOUT PRIOR TESTING AND APPROVAL BY IBM OR BY

(GOVERNMENT PROCURING ACTIVITY)

UNLESS OTHERWISE SPECIFIED DIMENSIONS AND TOLERANCES ARE IN INCHES AND APPLY TO THE FINISHED PART.

TOLERANCE ON: 2 PLACE DEC ±.02 | 3 PLACE DEC ±.010 | ANGLES ±~

MATL AL ALY 6061-T6 PER FED-SPEC QQ-A-250/11

HAND | CASE DEPTH | SURF TREAT

CONTR NO NAS8-14000

PREPARATION DATE 6-15-72 T. Mango

DSGN CHK DATE

DRAWING CHK DATE

DESIGN APPROVAL DATE

OTHER APPROVAL (SPECIFY ACTIVITY) DATE

IBM FEDERAL SYSTEMS DIVISION ☐ GAITHERSBURG, MD ☒ HUNTSVILLE, AL ☐ OWEGO, N.Y.

TITLE HOLDER, CELL SAMPLE

SIZE	CODE IDENT NO	DWG NO
C	20234	7928789

SCALE 1/1 WT SHEET

☐ APPROVED ☐ SUGGESTED SOURCE(S) OF SUPPLY

VENDOR	VENDOR ADDRESS		

REVISIONS

	DESCRIPTION	DATE	APPROVED
+	PRE-RELEASE		

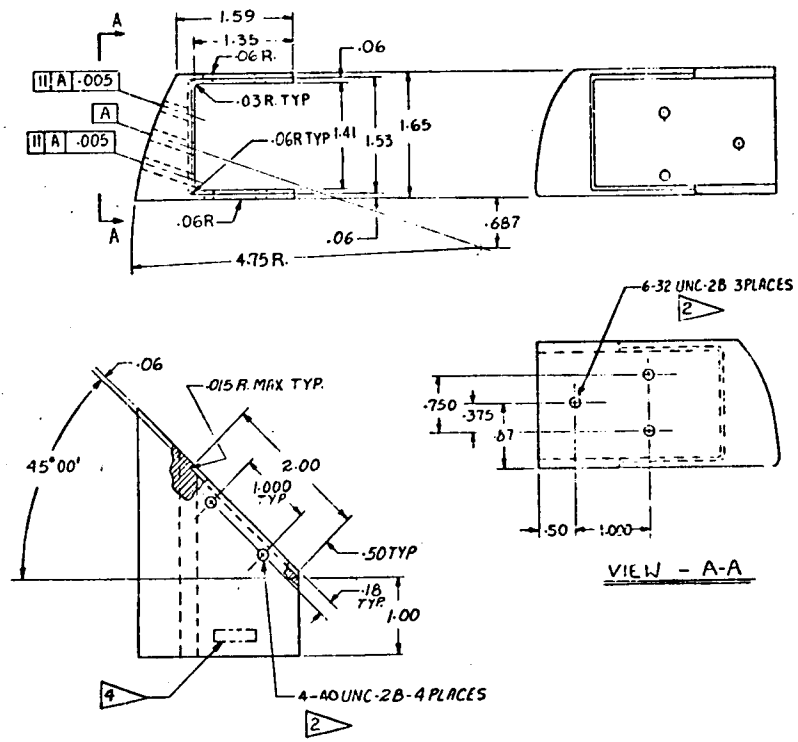

VIEW - A-A

NOTES:

1. IBM SPEC 6009008 APPLIES.
2. MIL-S-7742 APPLIES
3. INTERPRET DIMENSIONS PER MIL-STD-100
4. IDENTIFY PER MIL-STD-130.
5. FINISH PER MIL-C-81706 CLASS 1A. FORM AND METHOD OPTIONAL. APPLY PER MIL-C-5541.

PART NO. -1 SHOWN

28	29	30	31	32	33	34	35	
20	21	22	23	[illegible]	[illegible]	26	27	
12	13	14	15	[illegible]	[illegible]	18	19	
4	5	6	7	8	9	10	11	6009008
REV STATUS				REV				
OF SHEETS				SH	1	2	3	

SPECIFICATION NUMBER AND TYPE — NOTE — ITEM NO — APPLIES TO

APPLICABLE IBM SPECIFICATIONS

IF "SOURCE CONTROL DRAWING" — ONLY THE ITEM DESCRIBED ON THIS DRAWING WHEN PROCURED FROM THE VENDOR(S) LISTED HEREON IS APPROVED BY IBM ☐ GAITHERSBURG, MD ☐ HUNTSVILLE, AL ☐ OWEGO, NY ☐ _____

FOR USE IN THE APPLICATION(S) SPECIFIED HEREON. A SUBSTITUTE ITEM SHALL NOT BE USED WITHOUT PRIOR TESTING AND APPROVAL BY IBM OR BY

(GOVERNMENT PROCURING ACTIVITY)

UNLESS OTHERWISE SPECIFIED DIMENSIONS AND TOLERANCES ARE IN INCHES AND APPLY TO THE FINISHED PART.

TOLERANCE ON:

2 PLACE DEC	3 PLACE DEC	ANGLES
±.03	±.010	±0°30'

MATL AL ALY 5052-H32 FED SPEC QQ-A-225/7

HARD — CASE DEPTH — TOTAL REMOVAL

CONTR NO NASB-14000

PREPARATION — DATE 6/20/73 T. Mayo

DSGN CHK — DATE

DRAWING CHK — DATE

DESIGN APPROVAL — DATE

OTHER APPROVAL (SPECIFY ACTIVITY) — DATE

IBM FEDERAL SYSTEMS DIVISION ☐ GAITHERSBURG, MD ☐ OWEGO, N.Y. ☒ HUNTSVILLE, AL

TITLE HOLDER, SAMPLE

SIZE	CODE IDENT NO	DWG NO
C	20234	7928798

SCALE 1/1 WT SHEET

7928795

☐ APPROVED ☐ SUGGESTED SOURCE(S) OF SUPPLY

VENDOR	VENDOR ADDRESS	VENDOR CODE	VENDOR CAT. OR PN

REVISIONS

CHK	ENGRG NOTICE	LTR	DESCRIPTION	DATE	APPROVED
		+	PRE-RELEASE		

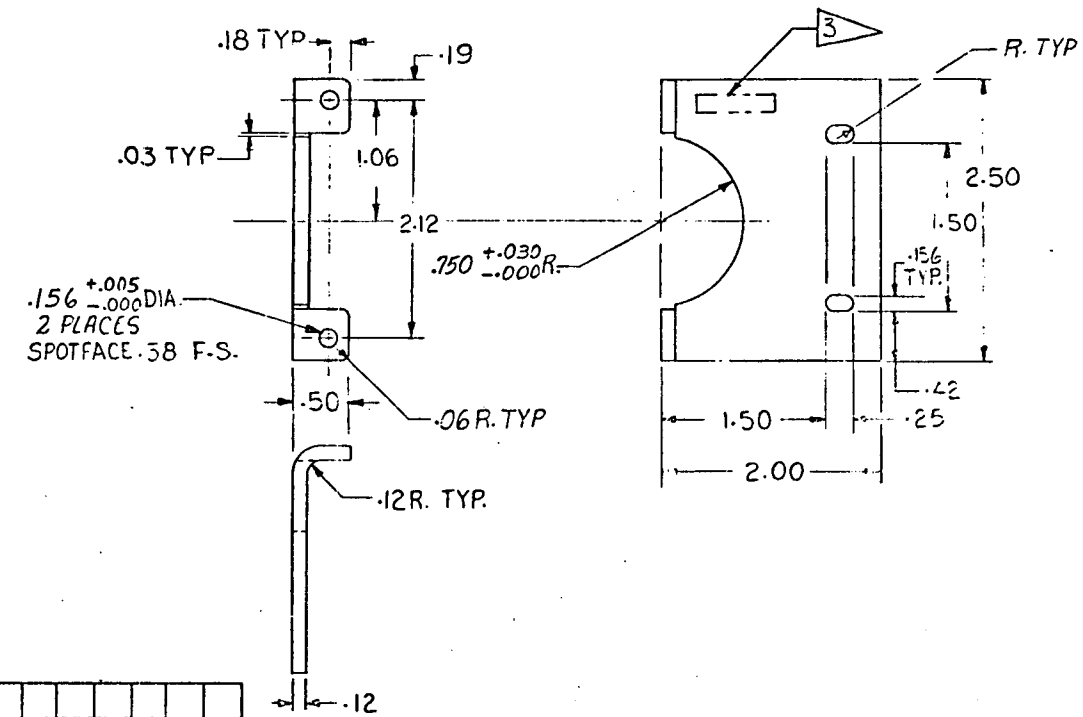

NOTES:
1. IBM SPEC 6009006 APPLIES.
2. INTERPRET DIMENSIONS PER MIL-STD-100
3. IDENTIFY PER MIL-STD-130.
4. FINISH PER MIL-C-81706 CLASS 1A, FORM AND METHOD OPTIONAL. APPLY PER MIL-C-5541.

2	3	4	5	6	7	8
REV STATUS OF SHEETS				REV SH		1

PART NO. -1 SHOWN

SPECIFICATION NUMBER AND TYPE	NOTE	ITEM NO.
6009006	1	
APPLICABLE IBM SPECIFICATIONS	APPLIES TO	

IF "SOURCE CONTROL DRAWING"— ONLY THE ITEM DESCRIBED ON THIS DRAWING WHEN PROCURED FROM THE VENDOR(S) LISTED HEREON IS APPROVED BY IBM. ☐ GAITHERSBURG, MD ☐ HUNTSVILLE, AL ☐ OWEGO, NY

FOR USE IN THE APPLICATION(S) SPECIFIED HEREON. A SUBSTITUTE ITEM SHALL NOT BE USED WITHOUT PRIOR TESTING AND APPROVAL BY IBM OR BY

(GOVERNMENT PROCURING ACTIVITY)

UNLESS OTHERWISE SPECIFIED DIMENSIONS AND TOLERANCES ARE IN INCHES AND APPLY TO THE FINISHED PART

TOLERANCE ON: 2 PLACE DEC ±.02 | 3 PLACE DEC ±.010 | ANGLES ±

MATL AL. ALY. 2061-T6 PER FED SPEC QQ-A-250/11

HARD | CASE DEPTH | SURF TREAT

CONTR NO NAS8-14000

PREPARATION T. G. 6/8/73

DSGN CHK

DWG CHK

DESIGN APPROVAL

OTHER APPROVAL (SPECIFY ACTIVITY)

IBM FEDERAL SYSTEMS DIVISION ☐ GAITHERSBURG, MD ☒ HUNTSVILLE, AL ☐ OWEGO, N.Y.

TITLE BRACKET

SIZE	CODE IDENT NO	DWG NO.
B	20234	7928795

SCALE 1/1 | WT | SHEET

ASTROCLOTH HASCO

+		7928794
ATH	ITEMS	

☐ APPROVED ☐ SUGGESTED SOURCE(S) OF SUPPLY

VENDOR	VENDOR ADDRESS	VENDOR CODE	VENDOR CAT. OR PN

REVISIONS

CHK	ENGRG NOTICE	LTR	DESCRIPTION	DATE	APPROVED
		+	PRE-RELEASE		

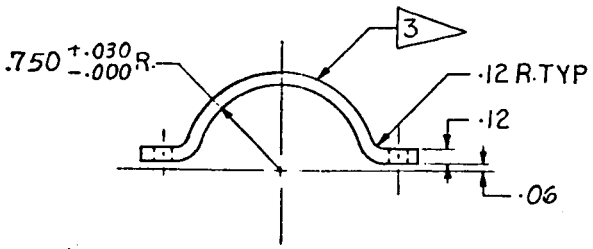

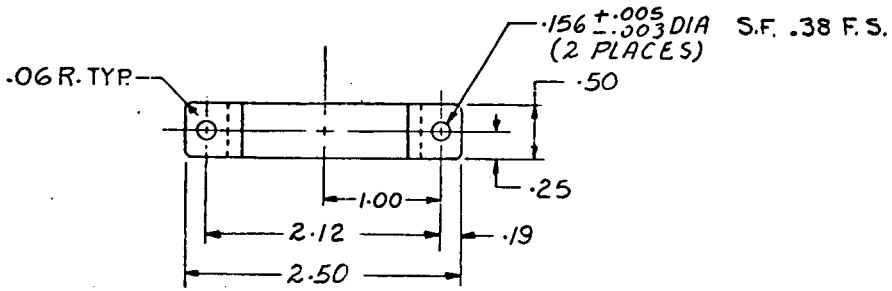

NOTES:

1. IBM SPEC 6009006 APPLIES.
2. INTERPRET DIMENSIONS PER MIL-STD-100
3. IDENTIFY PER MIL-STD-130.
4. FINISH PER MIL-C-81706 CLASS 1A FORM AND METHOD OPTIONAL. APPLY PER MIL-C-5541.

2	3	4	5	6	7	8
REV STATUS OF SHEETS				REV		
				SH	1	

PART NO. -1 SHOWN

SPECIFICATION NUMBER AND TYPE	NOTE	ITEM NO.
6009006	1	
APPLICABLE IBM SPECIFICATIONS	APPLIES TO	

IF "SOURCE CONTROL DRAWING"— ONLY THE ITEM DESCRIBED ON THIS DRAWING WHEN PROCURED FROM THE VENDOR(S) LISTED HEREON IS APPROVED BY IBM. ☐ GAITHERSBURG, MD ☐ HUNTSVILLE, AL ☐ OWEGO, NY ☐ FOR USE IN THE APPLICATION(S) SPECIFIED HEREON. A SUBSTITUTE ITEM SHALL NOT BE USED WITHOUT PRIOR TESTING AND APPROVAL BY IBM OR BY

(GOVERNMENT PROCURING ACTIVITY)

UNLESS OTHERWISE SPECIFIED DIMENSIONS AND TOLERANCES ARE IN INCHES AND APPLY TO THE FINISHED PART

TOLERANCE ON: 2 PLACE DEC ±.02 3 PLACE DEC ±.010 ANGLES ±~

MATL AL ALY 6061-T6 PER FED-SPEC QQ-A-250/11

HARD | CASE DEPTH | SURF TREAT

CONTR NO. NAS8-14000

PREPARATION T. Young 6/7/73

DSGN CHK

DWG CHK

DESIGN APPROVAL

OTHER APPROVAL (SPECIFY ACTIVITY)

IBM FEDERAL SYSTEMS DIVISION ☐ GAITHERSBURG, MD ☒ HUNTSVILLE, AL ☐ OWEGO, NY

TITLE BRACKET

SIZE	CODE IDENT NO	DWG NO.
B	20234	7928794
SCALE 1/1	WT	SHEET

+	AJN	13HS	7928799

☐ APPROVED ☐ SUGGESTED SOURCE(S) OF SUPPLY

VENDOR	VENDOR ADDRESS	VENDOR CODE	VENDOR CAT. OR PN

REVISIONS

CHK	ENGRG NOTICE	LTR	DESCRIPTION	DATE	APPROVED
		+	PRE-RELEASE		

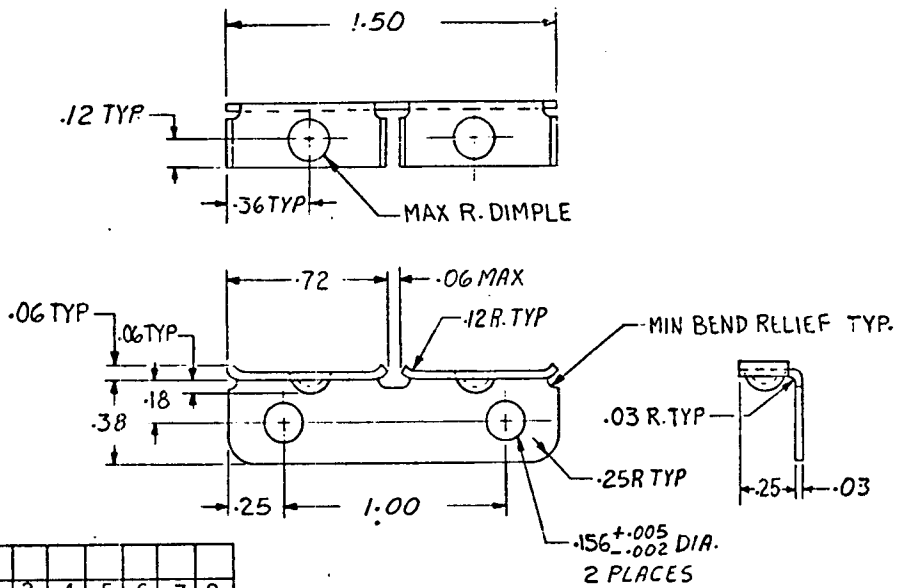

NOTES
1. IBM SPEC 6009006 APPLIES.
2. INTERPRET DIMENSIONS PER MIL-STD-100
3. IDENTIFY PER MIL-STD-130
4. PASSIVATE PER MIL-STD-171 FINISH 5.4.1

2	3	4	5	6	7	8
REV STATUS OF SHEETS				REV SH		1

PART NO. -1 SHOWN

SPECIFICATION NUMBER AND TYPE	NOTE	ITEM NO.
6009006	1	
APPLICABLE IBM SPECIFICATIONS	APPLIES TO	

IF "SOURCE CONTROL DRAWING"— ONLY THE ITEM DESCRIBED ON THIS DRAWING WHEN PROCURED FROM THE VENDOR(S) LISTED HEREON IS APPROVED BY IBM. ☐ GAITHERSBURG, MD ☐ HUNTSVILLE, AL ☐ OWEGO, NY

FOR USE IN THE APPLICATION(S) SPECIFIED HEREON. A SUBSTITUTE ITEM SHALL NOT BE USED WITHOUT PRIOR TESTING AND APPROVAL BY IBM OR BY

(GOVERNMENT PROCURING ACTIVITY)

UNLESS OTHERWISE SPECIFIED DIMENSIONS AND TOLERANCES ARE IN INCHES AND APPLY TO THE FINISHED PART

TOLERANCE ON: 2 PLACE DEC ±.02 | 3 PLACE DEC ±.010 | ANGLES ±

MAT'L CRES 301 TEMPER 1/2 HARD PER QQ-S-571

HARD | CASE DEPTH | SURF TREAT

CONTR NO NAS8 14000

PREPARATION T. Tango 6/18/73

DSGN CHK

DWG CHK

DESIGN APPROVAL

OTHER APPROVAL (SPECIFY ACTIVITY)

IBM FEDERAL SYSTEMS DIVISION ☐ GAITHERSBURG, MD ☒ HUNTSVILLE, AL ☐ OWEGO, NY

TITLE CLIP, HOLDER

SIZE	CODE IDENT NO	DWG NO.
B	20234	7928799
SCALE 2/1	WT	SHEET

ASTROCLOTH MASST

+		7928797

☐ APPROVED ☐ SUGGESTED SOURCE(S) OF SUPPLY

VENDOR	VENDOR ADDRESS	VENDOR CODE	VENDOR CAT. OR PN

REVISIONS

CHK	ENGRG NOTICE	LTR	DESCRIPTION	DATE	APPROVED
		+	PRE-RELEASE		

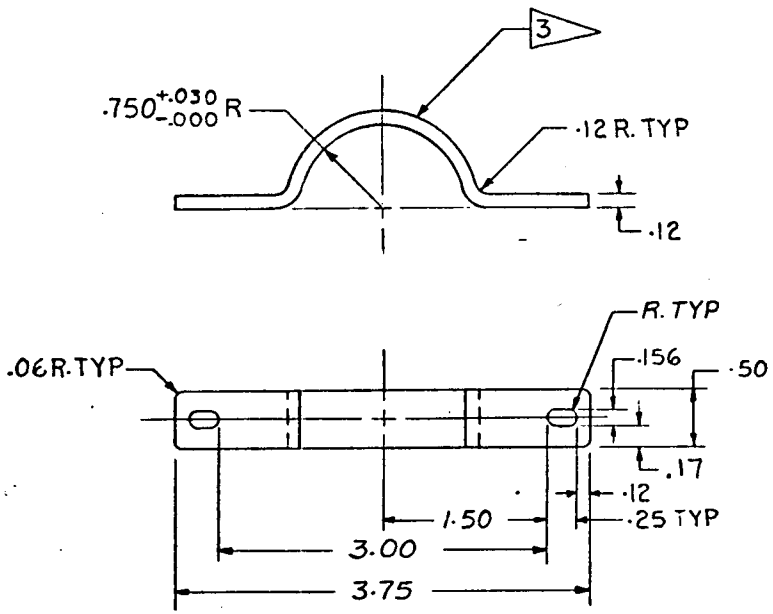

NOTES:

1. IBM SPEC 6009006 APPLIES.
2. INTERPRET DIMENSIONS PER MIL-STD-100
3. IDENTIFY PER MIL-STD-130
4. FINISH PER MIL-C-81706 CLASS 1A FORM AND METHOD OPTIONAL. APPLY PER MIL-C-5541.

2	3	4	5	6	7	8
REV STATUS OF SHEETS				REV		
				SH	1	

PART NO. -1 SHOWN

SPECIFICATION NUMBER AND TYPE	NOTE	ITEM NO.
6009006	1	
	APPLIES TO	

APPLICABLE IBM SPECIFICATIONS

IF "SOURCE CONTROL DRAWING"— ONLY THE ITEM DESCRIBED ON THIS DRAWING WHEN PROCURED FROM THE VENDOR(S) LISTED HEREON IS APPROVED BY IBM. ☐ GAITHERSBURG, MD ☐ HUNTSVILLE, AL ☐ OWEGO, NY

FOR USE IN THE APPLICATION(S) SPECIFIED HEREON. A SUBSTITUTE ITEM SHALL NOT BE USED WITHOUT PRIOR TESTING AND APPROVAL BY IBM OR BY

(GOVERNMENT PROCURING ACTIVITY)

UNLESS OTHERWISE SPECIFIED DIMENSIONS AND TOLERANCES ARE IN INCHES AND APPLY TO THE FINISHED PART

TOLERANCE ON: 2 PLACE DEC ±.02 3 PLACE DEC ±.010 ANGLES ±—

MATL AL. ALY. 6061-T6 PER FED. SPEC QQ-A-250/11

HARD | CASE DEPTH

SURF TREAT

CONTR NO. NAS8-14000

PREPARATION 6/7/73 T Mayo

DSGN CHK

DWG CHK

DESIGN APPROVAL

OTHER APPROVAL (SPECIFY ACTIVITY)

IBM FEDERAL SYSTEMS DIVISION ☐ GAITHERSBURG, MD ☒ HUNTSVILLE, AL ☐ OWEGO, NY

TITLE BRACKET

SIZE B | CODE IDENT NO 20234 | DWG NO. 7928797

SCALE 1/1 | WT | SHEET

☐ APPROVED ☐ SUGGESTED SOURCE(S) OF SUPPLY			
VENDOR	VENDOR ADDRESS	VENDOR CODE	VENDOR CAT. OR PN

REVISIONS					
CHK	ENGRG NOTICE	LTR	DESCRIPTION	DATE	APPROVED
		+	PRE-RELEASE		

7928788

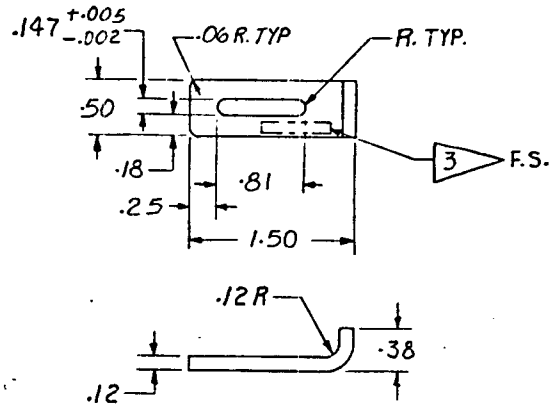

NOTES:

1. IBM SPEC 6009006 APPLIES.
2. INTERPRET DIMENSIONS PER MIL-STD-100
3. IDENTIFY PER MIL-STD-130.
4. FINISH PER MIL-C-81706, CLASS 1A FORM AND METHOD OPTIONAL. APPLY PER MIL-C-5541.
5. PAINT TOP & EDGES USING PRIMER 7916597-1 & PAINT 7922476-1. APPLY PER 7916598

2	3	4	5	6	7	8
REV STATUS OF SHEETS				REV		
				SH	1	

PART NO. -1 SHOWN

SPECIFICATION NUMBER AND TYPE	NOTE	ITEM NO.
7916598	5	
6009006	1	
	APPLIES TO	

APPLICABLE IBM SPECIFICATIONS

IF "SOURCE CONTROL DRAWING"— ONLY THE ITEM DESCRIBED ON THIS DRAWING WHEN PROCURED FROM THE VENDOR(S) LISTED HEREON IS APPROVED BY IBM. ☐ GAITHERSBURG, MD ☐ HUNTSVILLE, AL ☐ OWEGO, NY

FOR USE IN THE APPLICATION(S) SPECIFIED HEREON. A SUBSTITUTE ITEM SHALL NOT BE USED WITHOUT PRIOR TESTING AND APPROVAL BY IBM OR BY

(GOVERNMENT PROCURING ACTIVITY)

UNLESS OTHERWISE SPECIFIED DIMENSIONS AND TOLERANCES ARE IN INCHES AND APPLY TO THE FINISHED PART

TOLERANCE ON: 2 PLACE DEC ±.02 3 PLACE DEC ±.010 ANGLES ±~

MATL AL ALY 6061-T6 PER FED SPEC QQ-A-250/11

HARD | CASE DEPTH | SURF TREAT

CONTR NO NAS8-14000

PREPARATION T. Tranquilli 6/14/73

DSGN CHK

DWG CHK

DESIGN APPROVAL

OTHER APPROVAL (SPECIFY ACTIVITY)

IBM FEDERAL SYSTEMS DIVISION ☐ GAITHERSBURG, MD ☒ HUNTSVILLE, AL ☐ OWEGO, N.Y.

TITLE LATCH

SIZE	CODE IDENT NO	DWG NO.
B	20234	7928788

SCALE 1/1 | WT | SHEET

ASTROLOGY NA367

+		9628262 ON DWG

☐ APPROVED ☐ SUGGESTED SOURCE(S) OF SUPPLY

VENDOR	VENDOR ADDRESS	VENDOR CODE	VENDOR CAT. OR PN

REVISIONS

CHK	ENGRG NOTICE	LTR	DESCRIPTION	DATE	APPROVED
		+	PRE-RELEASE		

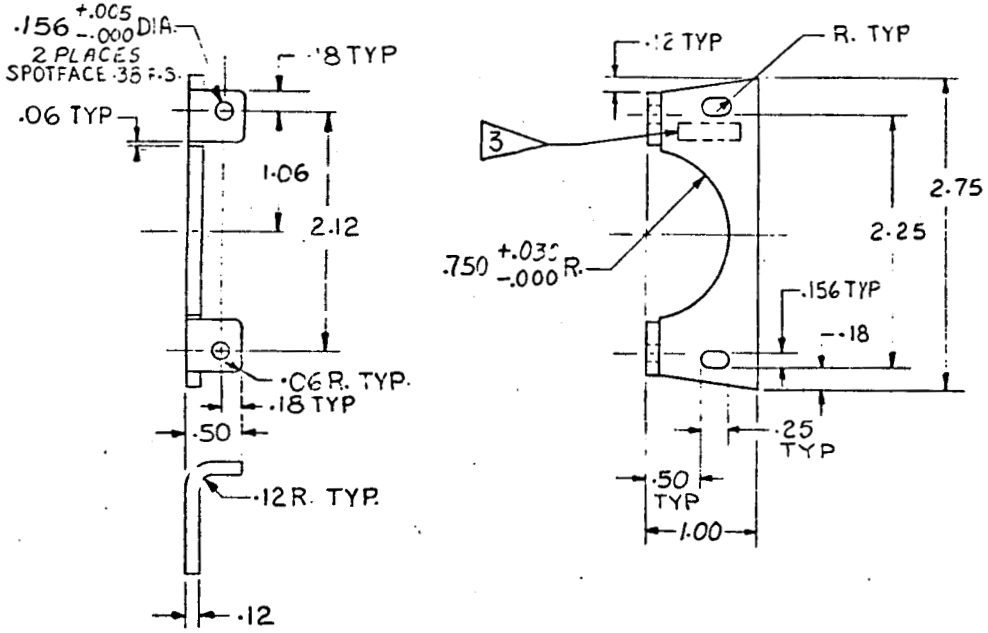

NOTES:
1. IBM SPEC 6009006 APPLIES
2. INTERPRET DIMENSIONS PER MIL-STD-100.
3. IDENTIFY PER MIL-STD-130
4. FINISH PER MIL-C-81706 CLASS 1A FORM & METHOD OPTIONAL. APPLY PER MIL-C-5541.

2	3	4	5	6	7	8
REV STATUS OF SHEETS				REV		
				SH	1	

PART NO. -1 SHOWN

SPECIFICATION NUMBER AND TYPE	NOTE	ITEM NO.
6009006	1	
	APPLIES TO	

APPLICABLE IBM SPECIFICATIONS

IF "SOURCE CONTROL DRAWING"— ONLY THE ITEM DESCRIBED ON THIS DRAWING WHEN PROCURED FROM THE VENDOR(S) LISTED HEREON IS APPROVED BY IBM. ☐ GAITHERSBURG, MD ☐ HUNTSVILLE, AL ☐ OWEGO, NY

FOR USE IN THE APPLICATION(S) SPECIFIED HEREON. A SUBSTITUTE ITEM SHALL NOT BE USED WITHOUT PRIOR TESTING AND APPROVAL BY IBM OR BY

(GOVERNMENT PROCURING ACTIVITY)

UNLESS OTHERWISE SPECIFIED DIMENSIONS AND TOLERANCES ARE IN INCHES AND APPLY TO THE FINISHED PART

TOLERANCE ON: 2 PLACE DEC ±.02 | 3 PLACE DEC ±.010 | ANGLES ±~

MATL AL-ALY 6061-T6 PER FED SPEC QQ-A-250/11

HARD | CASE DEPTH | SURF TREAT

CONTRACT NO NAS8-14000

PREPARED BY T. Tramp 6/11/73

DSGN CHK

DWG CHK

DESIGN APPROVAL

OTHER APPROVAL (SPECIFY ACTIVITY)

IBM FEDERAL SYSTEMS DIVISION ☐ GAITHERSBURG, MD ☒ HUNTSVILLE, AL ☐ OWEGO, NY

TITLE BRACKET

SIZE	CODE IDENT NO	DWG NO.
B	20234	7928796

SCALE 1/1 | WT | SHEET

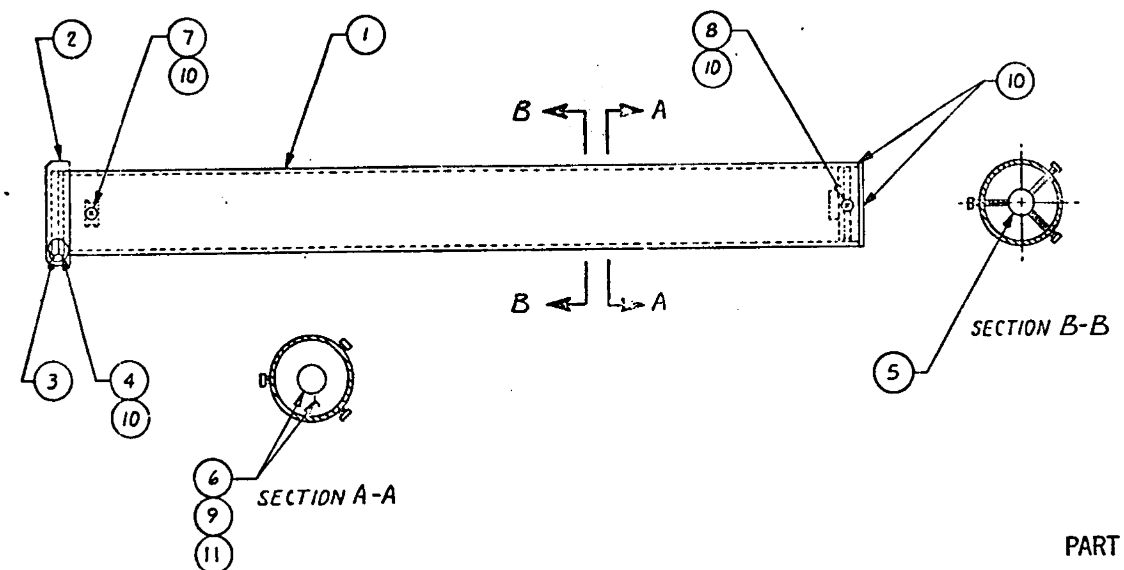

NOTES
1. IBM SPEC 6009014 APPLIES.
2. IDENTIFY PER MIL-STD-130.
3. CENTER (6) TO (9) TO .010 TRUE CENTER. USE (11)
4. APPLY (10) IN SUCH MANNER AS TO WEATHERPROOF TUBE.
5. ASSEMBLY N ONE ATMOSHPERE DRY AIR CONDITION.
6. SEE SEPARATE PARTS LIST PL 7928840-1.

PART NO. - 1 SHOWN

7928840

REVISIONS: PRE-RELEASE

☐ APPROVED ☐ SUGGESTED SOURCE(S) OF SUPPLY

IF "SOURCE CONTROL DRAWING"— ONLY THE ITEM DESCRIBED ON THIS DRAWING WHEN PROCURED FROM THE VENDOR(S) LISTED HEREON IS APPROVED BY IBM. ☐ GAITHERSBURG MD ☐ HUNTSVILLE, AL ☐ OWEGO, NY

FOR USE IN THE APPLICATION(S) SPECIFIED HEREON A SUBSTITUTE ITEM SHALL NOT BE USED WITHOUT PRIOR TESTING AND APPROVAL BY IBM OR BY (GOVERNMENT PROCURING ACTIVITY)

UNLESS OTHERWISE SPECIFIED DIMENSIONS AND TOLERANCES ARE IN INCHES AND APPLY TO THE FINISHED PART.

TOLERANCE ON: 2 PLACE DEC ± 3 PLACE DEC ± ANGLES ±

SPECIFICATION NUMBER AND TYPE	NOTE	ITEM NO
6009014	1	

APPLICABLE IBM SPECIFICATIONS

CONTR NO NAS 8-14000

IBM FEDERAL SYSTEMS DIVISION — GAITHERSBURG MD — HUNTSVILLE, AL — OWEGO, NY

TITLE: TUBE ASSEMBLY

SIZE G CODE IDENT N 20234 DWG NO 7928840

SCALE 1/1

+ ASY	LTTHG	7928846 ON DWG

☐ APPROVED ☐ SUGGESTED SOURCE(S) OF SUPPLY

VENDOR	VENDOR ADDRESS	VENDOR CODE	VENDOR CAT OR PN

REVISIONS

CHK	ENGRG NOTICE	LTR	DESCRIPTION	DATE	APPROVED
		+	PRE-RELEASE		

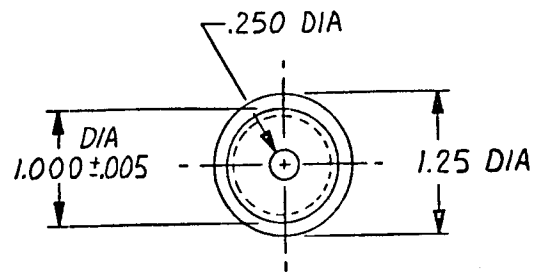

NOTES

1. REMOVE BURRS AND BREAK SHARP EDGES.
2. INTERPRET DIMENSION PER MIL-STD-100.
3. IDENTIFY PER MIL-STD-130.

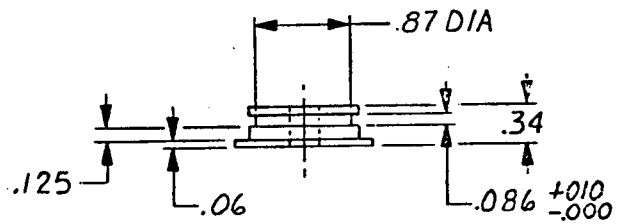

2	3	4	5	6	7	8
REV STATUS OF SHEETS				REV		
				SH	1	

PART NO. - 1 SHOWN

SPECIFICATION NUMBER AND TYPE	NOTE	ITEM NO.
	APPLIES TO	

APPLICABLE IBM SPECIFICATIONS

IF "SOURCE CONTROL DRAWING"— ONLY THE ITEM DESCRIBED ON THIS DRAWING WHEN PROCURED FROM THE VENDOR(S) LISTED HEREON IS APPROVED BY IBM, ☐ GAITHERSBURG, MD ☐ HUNTSVILLE, AL ☐ OWEGO, NY

FOR USE IN THE APPLICATION(S) SPECIFIED HEREON. A SUBSTITUTE ITEM SHALL NOT BE USED WITHOUT PRIOR TESTING AND APPROVAL BY IBM OR BY

(GOVERNMENT PROCURING ACTIVITY)

UNLESS OTHERWISE SPECIFIED DIMENSIONS AND TOLERANCES ARE IN INCHES AND APPLY TO THE FINISHED PART

TOLERANCE ON: 2 PLACE DEC ±.02 3 PLACE DEC ±.010 ANGLES ±—

MATL TYPE GEE PER MIL-P-18177

HARD | CASE DEPTH

SURF TREAT

CONTR NO NAS-8-14000

PREPARATION Tom Grade 8-11-73

DSGN CHK

DWG CHK

DESIGN APPROVAL

OTHER APPROVAL (SPECIFY ACTIVITY)

IBM FEDERAL SYSTEMS DIVISION ☐ GAITHERSBURG, MD ☒ HUNTSVILLE, AL ☐ OWEGO, NY

TITLE PLUG, TUBE

SIZE B | CODE IDENT NO 20234 | DWG NO. 7928846

SCALE 1/1 | WT | SHEET

IBM FORM NO. 093-0261-d

☐ APPROVED ☐ SUGGESTED SOURCE(S) OF SUPPLY

VENDOR	VENDOR ADDRESS	VENDOR CODE	VENDOR CAT. OR PN

CHK	ENGRG NOTICE	LTR	DESCRIPTION	DATE	APPROVED
		+	PRE-RELEASE		

REVISIONS

DWG NO. 7928842

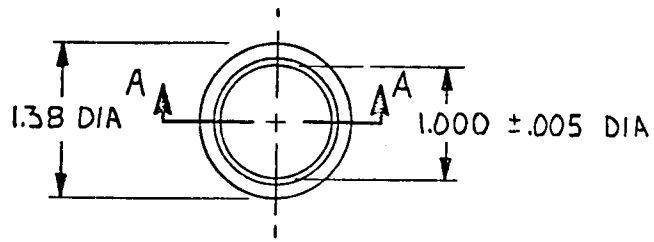

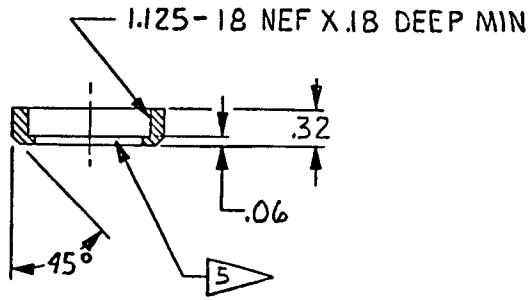

SECTION A-A

NOTES

1. IBM SPEC 6009008 APPLIES.
2. INTERPRET DIMENSIONS PER MIL-STD-100.
3. IDENTIFY PER MIL-STD-130.
4. FINISH PER MIL-C-81706 CLASS 1A FORM AND METHOD OPTIONAL. APPLY PER MIL-C-5541
5. PAINT EXTERIOR EDGES AND THIS EDGE WITH PRIMER 7916597-1 AND PAINT 7922476-1. APPLY PER 7916598.
6. MIL-S-7742 APPLIES

PART NO. -1 SHOWN

2	3	4	5	6	7	8
REV STATUS OF SHEETS				REV		
				SH	1	

SPECIFICATION NUMBER AND TYPE	NOTE	ITEM NO.
7916598	5	
6009008	1	
APPLICABLE IBM SPECIFICATIONS	APPLIES TO	

IF "SOURCE CONTROL DRAWING"— ONLY THE ITEM DESCRIBED ON THIS DRAWING WHEN PROCURED FROM THE VENDOR(S) LISTED HEREON IS APPROVED BY IBM. ☐ GAITHERSBURG, MD ☐ HUNTSVILLE, AL ☐ OWEGO, NY

FOR USE IN THE APPLICATION(S) SPECIFIED HEREON. A SUBSTITUTE ITEM SHALL NOT BE USED WITHOUT PRIOR TESTING AND APPROVAL BY IBM OR BY

(GOVERNMENT PROCURING ACTIVITY)

UNLESS OTHERWISE SPECIFIED DIMENSIONS AND TOLERANCES ARE IN INCHES AND APPLY TO THE FINISHED PART

TOLERANCE ON: 2 PLACE DEC ±.02 3 PLACE DEC ±.010 ANGLES ±2°

MATL. AL ALY 6061-T6 PER FED SPEC QQ-A-225/8

HARD | CASE DEPTH | SURF TREAT

CONTR NO. NAS 8-14000

PREPARED Tom Davis 8-11-73

ISSN CHK | LAYO CHK | DESIGN APPROVAL | OTHER APPROVAL (SPECIFY ACTIVITY)

IBM FEDERAL SYSTEMS DIVISION ☐ GAITHERSBURG, MD ☒ HUNTSVILLE, AL ☐ OWEGO, NY

TITLE CAP, TUBE

SIZE	CODE IDENT NO.	DWG NO.
B	20234	7928842

SCALE 1/1 | WT | SHEET

ASTROCLOTH #6307

☐ APPROVED ☐ SUGGESTED SOURCE(S) OF SUPPLY

VENDOR	VENDOR ADDRESS	VENDOR CODE	VENDOR CAT OR PN

REVISIONS

CHG	ENGRG NOTICE	LTR	DESCRIPTION	DATE	APPROVED
		+	PRE-RELEASE		

NOTES

1. IBM SPEC 600900B APPLIES
2. INTERPRET DIMENSIONS PER MIL-STD-100
3. IDENTIFY PER MIL-STD-130
4. PAINT INSIDE OF TUBE PER MIL-STD-171 NO 20.5 COLOR # 37038
5. PAINT EXTERIOR OF TUBE WITH PRIMER 7916597-1 AND PAINT 7922476-1 APPLY PER 7916598. DO NOT PAINT THREADS.
6. MIL-S-7742 APPLIES.

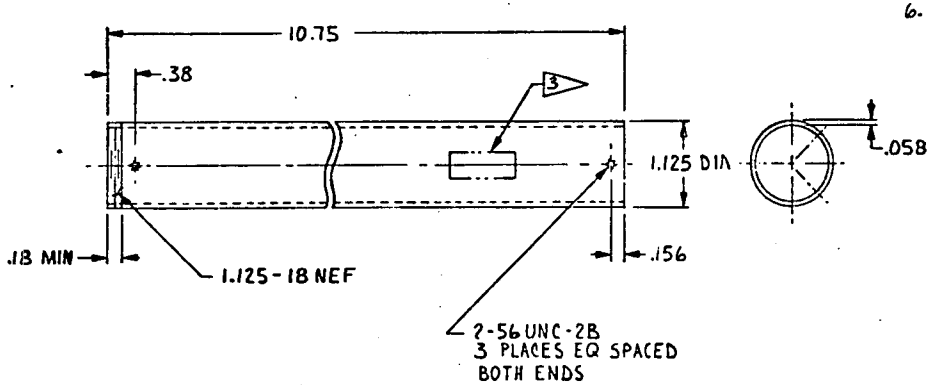

PART NO. -1 SHOWN

REV STATUS	REV			
OF SHEETS	SH	1	2	3

SPECIFICATION NUMBER AND TYPE	NOTE	ITEM NO
7916598		
600900B	1	

APPLICABLE IBM SPECIFICATIONS

IF "SOURCE CONTROL DRAWING" — ONLY THE ITEM DESCRIBED ON THIS DRAWING WHEN PROCURED FROM THE VENDOR(S) LISTED HEREON IS APPROVED BY IBM. ☐ GAITHERSBURG, MD ☐ HUNTSVILLE, AL ☐ OWEGO, NY ☐

FOR USE IN THE APPLICATION(S) SPECIFIED HEREON. A SUBSTITUTE ITEM SHALL NOT BE USED WITHOUT PRIOR TESTING AND APPROVAL BY IBM OR BY (GOVERNMENT PROCURING ACTIVITY)

UNLESS OTHERWISE SPECIFIED DIMENSIONS AND TOLERANCES ARE IN INCHES AND APPLY TO THE FINISHED PART.

TOLERANCE ON: 2 PLACE DEC ±.02 | 3 PLACE DEC ±.010 | ANGLES ±

MATL AL ALY 6061-T6 PER FED SPEC NN-T-735

HARD | CASE DEPTH | SURF TREAT

CONTR NO NAS 8-14000

PREPARATION DATE 8-11-78 Tom Dani

DESIGN CHK DATE

DRAWING CHK DATE

DESIGN APPROVAL DATE

OTHER APPROVAL (SPECIFY ACTIVITY) DATE

IBM FEDERAL SYSTEMS DIVISION ☐ GAITHERSBURG, MD ☐ OWEGO, N.Y. ☒ HUNTSVILLE, AL

TITLE TUBE

SIZE	CODE IDENT NO	DWG NO
C	20234	7928841

SCALE 1/1 WT SHEET

☐ APPROVED ☐ SUGGESTED SOURCE(S) OF SUPPLY			
VENDOR	VENDOR ADDRESS	VENDOR CODE	VENDOR CAT OR PN
SCHOTT OPTICAL GLASS CO	DURYEA, PENNA 18642		WG7

REVISIONS					
CHK	ENGRG NOTICE	LTR	DESCRIPTION	DATE	APPROVED
		+	PRE-RELEASE		

7928844

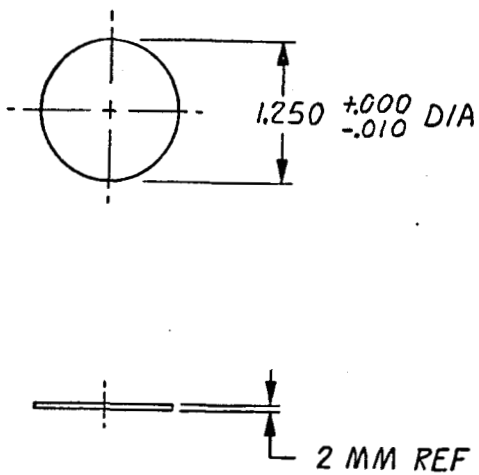

NOTES

1. ALTER IN ACCORDANCE WITH THIS DWG.
2. IDENTIFY PER MIL-STD-130.
3. INTERPRET DIMENSION PER MIL-STD-100.

2	3	4	5	6	7	8
REV STATUS OF SHEETS				REV		
				SH	1	

PART NO. -1 SHOWN

SPECIFICATION NUMBER AND TYPE	NOTE	ITEM NO.
	APPLIES TO	
APPLICABLE IBM SPECIFICATIONS		

IF "SOURCE CONTROL DRAWING" — ONLY THE ITEM DESCRIBED ON THIS DRAWING WHEN PROCURED FROM THE VENDOR(S) LISTED HEREON IS APPROVED BY IBM. ☐ GAITHERSBURG, MD ☐ HUNTSVILLE, AL ☐ OWEGO, NY ☐

FOR USE IN THE APPLICATION(S) SPECIFIED HEREON. A SUBSTITUTE ITEM SHALL NOT BE USED WITHOUT PRIOR TESTING AND APPROVAL BY IBM OR BY

(GOVERNMENT PROCURING ACTIVITY)

UNLESS OTHERWISE SPECIFIED DIMENSIONS AND TOLERANCES ARE IN INCHES AND APPLY TO THE FINISHED PART

TOLERANCE ON: 2 PLACE DEC ± 3 PLACE DEC ± ANGLES ±

MATL

HARD | CASE DEPTH

SURF TREAT

CONTR NO NAS-8-14000

PREPARATION Tom Davis 8-11-73

DSGN CHK

DWG CHK

DESIGN APPROVAL

OTHER APPROVAL (SPECIFY ACTIVITY)

IBM FEDERAL SYSTEMS DIVISION ☐ GAITHERSBURG, MD ☒ HUNTSVILLE, AL ☐ OWEGO, NY

TITLE COVER, GLASS

SIZE	CODE IDENT NO.	DWG NO.
B	20234	7928844

SCALE 1/1 WT SHEET

IBM FORM NO 992-03614

☐ APPROVED ☐ SUGGESTED SOURCE(S) OF SUPPLY

VENDOR	VENDOR ADDRESS	VENDOR CODE	VENDOR CAT. OR PN

+	ASH	LTHS	7928843 DWG NO

REVISIONS

CHK	ENGRG NOTICE	LTR	DESCRIPTION	DATE	APPROVED
		+	PRE - RELEASE		

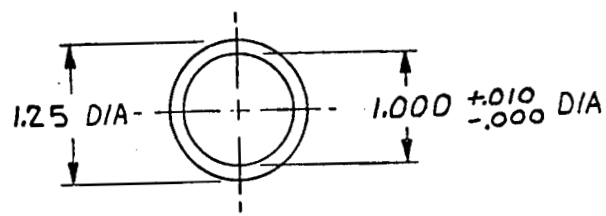

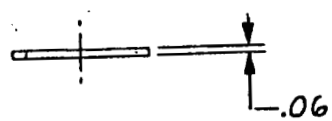

NOTES

1. INTERPRET DIMENSIONS PER MIL-STD-100.
2. IDENTIFY PER MIL-STD-130

PART NO. - 1 SHOWN

2	3	4	5	6	7	8
REV STATUS OF SHEETS				REV		
				SH	1	

SPECIFICATION NUMBER AND TYPE	NOTE	ITEM NO
	APPLIES TO	

APPLICABLE IBM SPECIFICATIONS

IF "SOURCE CONTROL DRAWING"— ONLY THE ITEM DESCRIBED ON THIS DRAWING WHEN PROCURED FROM THE VENDOR(S) LISTED HEREON IS APPROVED BY IBM. ☐ GAITHERSBURG, MD ☐ HUNTSVILLE, AL ☐ OWEGO, NY

FOR USE IN THE APPLICATION(S) SPECIFIED HEREON. A SUBSTITUTE ITEM SHALL NOT BE USED WITHOUT PRIOR TESTING AND APPROVAL BY IBM OR BY

(GOVERNMENT PROCURING ACTIVITY)

UNLESS OTHERWISE SPECIFIED DIMENSIONS AND TOLERANCES ARE IN INCHES AND APPLY TO THE FINISHED PART

TOLERANCE ON: 2 PLACE DEC ± .02 3 PLACE DEC ± — ANGLES ± —

MATL RUBBER PER MIL-R-81828 TYPE I

HARD | CASE DEPTH | SURF TREAT

CONTR NO NAS 8-14000

PREPARATION Tom Davis 8-11-73

DSGN CHK

DWG CHK

DESIGN APPROVAL

OTHER APPROVAL (SPECIFY ACTIVITY)

IBM FEDERAL SYSTEMS DIVISION ☐ GAITHERSBURG, MD ☒ HUNTSVILLE, AL ☐ OWEGO, NY

TITLE GASKET, TUBE

SIZE	CODE IDENT NO	DWG NO.
B	20234	7928843
SCALE 1/1	WT	SHEET

ASTROCLOTH #630 T

DWG NO. 7928845 | SHEET + | REV

☐ APPROVED ☐ SUGGESTED SOURCE(S) OF SUPPLY

VENDOR	VENDOR ADDRESS	VENDOR CODE	VENDOR CAT. OR PN

REVISIONS

CHK	ENGRG NOTICE	LTR	DESCRIPTION	DATE	APPROVED
		+	PRE RELEASE		

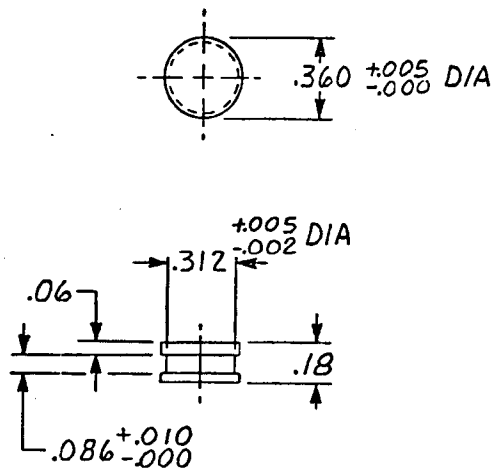

NOTES

1. IBM SPEC 6009008 APPLIES
2. INTERPRET DIMENSION PER MIL-STD-100
3. IDENTIFY PER MIL-STD-130
4. PAINT PER MIL-STD-171, FINISH NO. 20.5 COLOR # 37038.

2	3	4	5	6	7	8
REV STATUS OF SHEETS				REV		
				SH	1	

PART NO. -1 SHOWN

SPECIFICATION NUMBER AND TYPE	NOTE	ITEM NO
6009008	1	
APPLICABLE IBM SPECIFICATIONS	APPLIES TO	

IF "SOURCE CONTROL DRAWING"— ONLY THE ITEM DESCRIBED ON THIS DRAWING WHEN PROCURED FROM THE VENDOR(S) LISTED HEREON IS APPROVED BY IBM. ☐ GAITHERSBURG, MD ☐ HUNTSVILLE, AL ☐ OWEGO, NY

FOR USE IN THE APPLICATION(S) SPECIFIED HEREON. A SUBSTITUTE ITEM SHALL NOT BE USED WITHOUT PRIOR TESTING AND APPROVAL BY IBM OR BY

(GOVERNMENT PROCURING ACTIVITY)

UNLESS OTHERWISE SPECIFIED DIMENSIONS AND TOLERANCES ARE IN INCHES AND APPLY TO THE FINISHED PART

TOLERANCE ON: 2 PLACE DEC ±.02 3 PLACE DEC ±.010 ANGLES ±—

MATL AL ALY 5052-H32 PER QQ-A-225/7

HARD | CASE DEPTH | SURF TREAT

CONTR NO NAS-B-14000

PREPARED Tom Bonn 8-11-73

DSGN CHK | DWG CHK | DESIGN APPROVAL | OTHER APPROVAL (SPECIFY ACTIVITY)

IBM FEDERAL SYSTEMS DIVISION ☐ GAITHERSBURG, MD ☒ HUNTSVILLE, AL ☐ OWEGO, NY

TITLE DISK, SHADE

SIZE	CODE IDENT NO	DWG NO.
B	20234	7928845

SCALE 2/1 | WT | SHEET

ASTROCLOTH H-6301

IBM FORM NO 992-0301-4

+	ASH	133HS	7928848

☐ APPROVED ☐ SUGGESTED SOURCE(S) OF SUPPLY

VENDOR	VENDOR ADDRESS	VENDOR CODE	VENDOR CAT. OR PN

REVISIONS

CHK	ENGRG NOTICE	LTR	DESCRIPTION	DATE	APPROVED
		+	PRE-RELEASE		

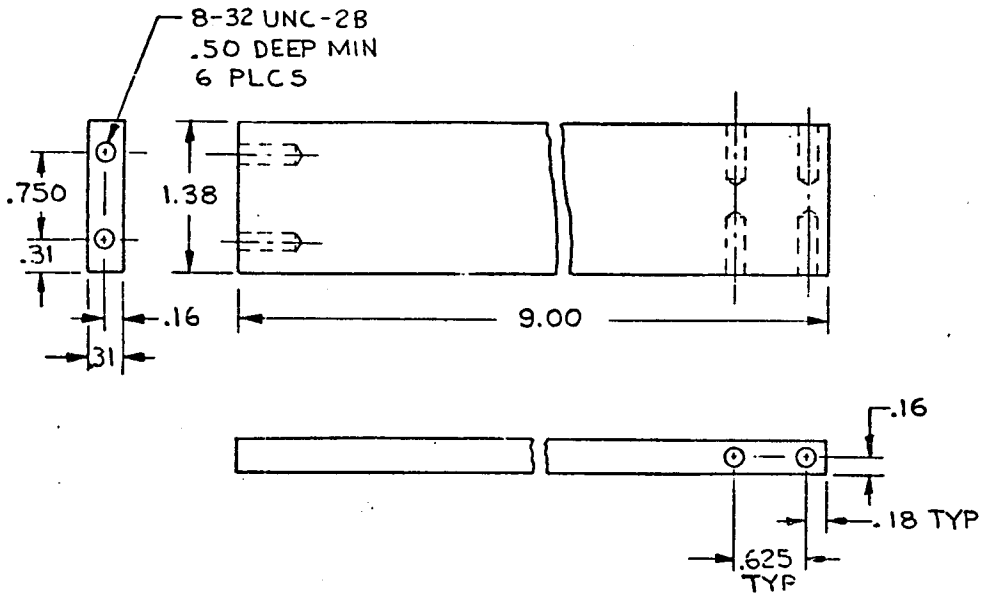

NOTES:

1. IBM SPEC 6009008 APPLIES
2. INTERPRET DIM PER MIL-STD-100
3. IDENTIFY PER MIL-STD-130
4. PAINT WITH PRIMER 7916597-1 & PAINT 7922476-1. APPLY PER 7916598
5. MIL-S-7742 APPLIES

2	3	4	5	6	7	8
REV STATUS OF SHEETS				REV		
				SH	1	

PART NO.

SPECIFICATION NUMBER AND TYPE	NOTE	ITEM NO.
7916598	4	
6009008	1	
APPLICABLE IBM SPECIFICATIONS	APPLIES TO	

IF "SOURCE CONTROL DRAWING"— ONLY THE ITEM DESCRIBED ON THIS DRAWING WHEN PROCURED FROM THE VENDOR(S) LISTED HEREON IS APPROVED BY IBM, ☐ GAITHERSBURG, MD ☐ HUNTSVILLE, AL ☐ OWEGO, NY

FOR USE IN THE APPLICATION(S) SPECIFIED HEREON. A SUBSTITUTE ITEM SHALL NOT BE USED WITHOUT PRIOR TESTING AND APPROVAL BY IBM OR BY

(GOVERNMENT PROCURING ACTIVITY)

UNLESS OTHERWISE SPECIFIED DIMENSIONS AND TOLERANCES ARE IN INCHES AND APPLY TO THE FINISHED PART

TOLERANCE ON: 2 PLACE DEC ±.02 3 PLACE DEC ±.010 ANGLES ±

MATL AL ALY 6061-T6 PER FED SPEC QQ-A-250/11

HARD | CASE DEPTH

SURF TREAT

CONTR NO NAS 8-14000

PREPARATION R.R. Wayborgh 8/15/73

DSGN CHK

DWG CHK

DESIGN APPROVAL

OTHER APPROVAL (SPECIFY ACTIVITY)

IBM FEDERAL SYSTEMS DIVISION ☐ GAITHERSBURG, MD ☒ HUNTSVILLE, AL ☐ OWEGO, N.Y.

TITLE SUPPORT

SIZE	CODE IDENT NO	DWG NO.
B	20234	7928848

SCALE 1/1 | WT | SHEET

ASTROCLOTH H 650 T

☐ APPROVED ☐ SUGGESTED SOURCE(S) OF SUPPLY

VENDOR	VENDOR ADDRESS	VENDOR CODE	VENDOR CAT. OR PN

REVISIONS

CHK	ENGRG NOTICE	LTR	DESCRIPTION	DATE	APPROVED
		+	PRE - RELEASE		

7928847

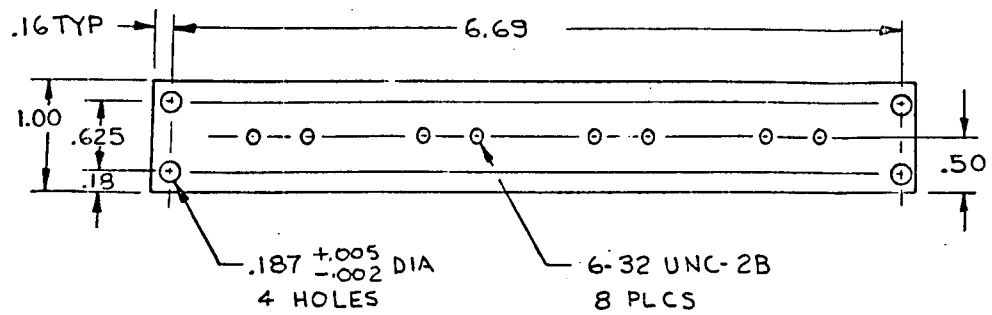

NOTES:

1. IBM SPEC 6009008 APPLIES
2. INTERPRET DIMENSIONS PER MIL-STD-100
3. IDENTIFY PER MIL-STD-130
4. PAINT WITH PRIMER 7916597-1 & PAINT 7922476-1. APPLY PER 7916598
5. MIL-S-7742 APPLIES

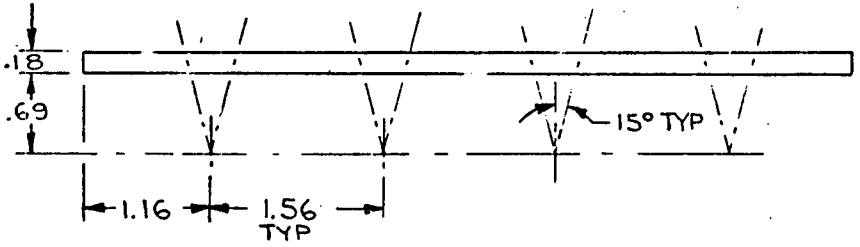

2	3	4	5	6	7	8
REV STATUS OF SHEETS				REV	SH	1

PART NO.

SPECIFICATION NUMBER AND TYPE	NOTE	ITEM NO.
7916598	4	
6009008	1	
	APPLIES TO	

APPLICABLE IBM SPECIFICATIONS

IF "SOURCE CONTROL DRAWING"— ONLY THE ITEM DESCRIBED ON THIS DRAWING WHEN PROCURED FROM THE VENDOR(S) LISTED HEREON IS APPROVED BY IBM. ☐ GAITHERSBURG, MD ☐ HUNTSVILLE, AL ☐ OWEGO, NY ☐

FOR USE IN THE APPLICATION(S) SPECIFIED HEREON. A SUBSTITUTE ITEM SHALL NOT BE USED WITHOUT PRIOR TESTING AND APPROVAL BY IBM OR BY

(GOVERNMENT PROCURING ACTIVITY)

UNLESS OTHERWISE SPECIFIED DIMENSIONS AND TOLERANCES ARE IN INCHES AND APPLY TO THE FINISHED PART

TOLERANCE ON: 2 PLACE DEC ±.02 1 PLACE DEC ±.010 ANGLES ±2°

MATL AL ALY 6061-T6 PER FED SPEC QQ-A-250/11

HARD | CASE DEPTH

SURF TREAT

CO'TR NO. NAS 8-14000

PREPARATION D.R. Wayfright 8/16/73

DSGN CHK

DWG CHK

DESIGN APPROVAL

OTHER APPROVAL (SPECIFY ACTIVITY)

IBM FEDERAL SYSTEMS DIVISION ☐ GAITHERSBURG, MD ☒ HUNTSVILLE, AL ☐ OWEGO, N.Y.

TITLE SUPPORT

SIZE	CODE IDENT NO.	DWG NO.
D	20234	7928847

SCALE 1/1 | WT | SHEET

APPROVED SUGGESTED SOURCE(S) OF SUPPLY			
VENDOR	VENDOR ADDRESS	VENDOR CODE	VENDOR CAT. OR PN

REVISIONS

CHG	ENGRG NOTICE	LTR	DESCRIPTION	DATE	APPD
		+	PRE-RELEASE		

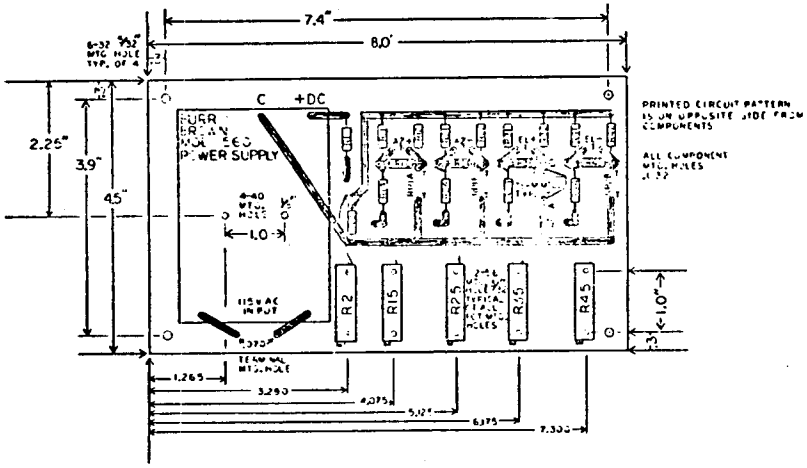

PART NO.

28	29	30	31	32	33	34	35	
20	21	22	23	24	25	26	27	
12	13	14	15	16	17	18	19	
4	5	6	7	8	9	10	11	
REV STATUS OF SHEETS				REV SH	1	2	3	

SPECIFICATION NUMBER AND TYPE — NOTE — ITEM NO. — APPLIES TO

APPLICABLE IBM SPECIFICATIONS

IF "SOURCE CONTROL DRAWING" — ONLY THE ITEM DESCRIBED ON THIS DRAWING WHEN PROCURED FROM THE VENDOR(S) LISTED HEREON IS APPROVED BY IBM.
- GAITHERSBURG MD
- HUNTSVILLE AL
- ONEGO NY

FOR USE IN THE APPLICATION(S) SPECIFIED HEREON. A SUBSTITUTE ITEM SHALL NOT BE USED WITHOUT PRIOR TESTING AND APPROVAL BY IBM OR BY (GOVERNMENT PROCURING ACTIVITY)

UNLESS OTHERWISE SPECIFIED DIMENSIONS AND TOLERANCES ARE IN INCHES AND APPLY TO THE FINISHED PART

TOLERANCE ON: 2 PLACE DEC ±, 3 PLACE DEC ±, ANGLES ±

MATL — HARD — CASE DEPTH — SURF TREAT

CONTR NO — PREPARATION — INSPN CHK — DRAWING CHK — DESIGN APPROVAL — OTHER APPROVAL (SPECIFY ACTIVITY)

IBM FEDERAL SYSTEMS DIVISION
GAITHERSBURG MD — ONEGO NY
HUNTSVILLE AL

TITLE: SOLAR TRACKER ERROR DETECTOR

SIZE: D — CODE IDENT NO — DWG NO: 79288.5

SCALE — WT — SHEET 1 OF 1

REVISIONS					
CHK	ENGRG NOTICE	LTR	DESCRIPTION	DATE	APPROVED
		+	PRE-RELEASE		

DWG NO. 7928832

MODEL: BI-7 SENSABLE WITH INTEGRAL TYPE T THERMOCOUPLE

VENDOR: HY-CAL ENGINEERING
12105 LOS NIETOS ROAD
SANTA FE SPRINGS, CALIFORNIA 90670

VENDOR CODE: 12199

NOTES:
1. IDENTIFY PER MIL-STD-130
2. ONLY THE ITEM DESCRIBED ON THIS DRAWING WHEN PROCURED FROM THE VENDOR(S) LISTED HEREON IS APPROVED BY IBM, HUNTSVILLE, AL

   FOR USE IN THE APPLICATION(S) SPECIFIED HEREON. A SUBSTITUTE ITEM SHALL NOT BE USED WITHOUT PRIOR TESTING AND APPROVAL BY IBM OR BY MSFC.

-1 SHOWN

SOURCE CONTROL DRAWING

CONTR NO. NAS 8-14000	INTERNATIONAL BUSINESS MACHINES CORP FEDERAL SYSTEMS DIVISION HUNTSVILLE, ALA. 35807
PREPARATION N. P. Bowne 2-14-73	TITLE
DESIGN CHK	SENSABLE HEAT FLOW TRANSDUCER
DWG CHK	
DESIGN APPROVAL	SIZE A / CODE IDENT NO. 20234 / DWG NO. 7928832
	SCALE / WT / SHEET

955-1635-0

☐ APPROVED ☐ SUGGESTED SOURCE(S) OF SUPPLY

VENDOR	VENDOR ADDRESS	VENDOR CODE	VENDOR CAT. OR PN

REVISIONS

CHK	ENGRG NOTICE	LTR	DESCRIPTION	DATE	APPROVED
		+	PRE-RELEASE		

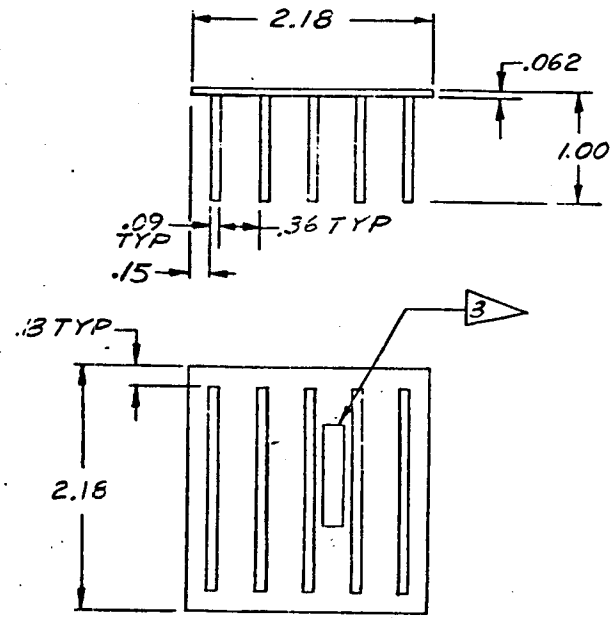

NOTES:

1. IBM SPEC 6009008 APPLIES
2. INTERPRET DIM. PER MIL-STD 100
3. IDENTIFY PER MIL-STD-130
4. FINISH PER MIL-C-81706 CLASS IA FORM & METHOD OPTIONAL. APPLY PER MIL-C-5541

2	3	4	5	6	7	8
REV STATUS OF SHEETS				REV		
				SH	1	

PART NO. -1 SHOWN

SPECIFICATION NUMBER AND TYPE	NOTE	ITEM NO.
6009008	1	
APPLICABLE IBM SPECIFICATIONS	APPLIES TO	

IF "SOURCE CONTROL DRAWING"— ONLY THE ITEM DESCRIBED ON THIS DRAWING WHEN PROCURED FROM THE VENDOR(S) LISTED HEREON IS APPROVED BY IBM, ☐ GAITHERSBURG, MD ☐ HUNTSVILLE, AL ☐ OWEGO, NY

FOR USE IN THE APPLICATION(S) SPECIFIED HEREON. A SUBSTITUTE ITEM SHALL NOT BE USED WITHOUT PRIOR TESTING AND APPROVAL BY IBM OR BY

(GOVERNMENT PROCURING ACTIVITY)

UNLESS OTHERWISE SPECIFIED DIMENSIONS AND TOLERANCES ARE IN INCHES AND APPLY TO THE FINISHED PART

TOLERANCE ON: 2 PLACE DEC ±.02 3 PLACE DEC ±.010 ANGLES ±

MATL AL ALY 5052-H32 PER FED SPEC QQ-A-250/8

HARD — CASE DEPTH —

SURF TREAT NOTE 4

CONTR NAS 8-14000

DESIGN CHK

CHG CHK

CIS OR APPROVAL

OTHER APPROVAL (SPECIFY ACTIVITY)

IBM FEDERAL SYSTEMS DIVISION ☐ GAITHERSBURG, MD ☐ HUNTSVILLE, AL ☐ OWEGO, NY

TITLE HEAT SINK

SIZE	CODE IDENT NO.	DWG NO.
D	20234	7928787

SCALE 1/1 WT SHEET

☐ APPROVED ☐ SUGGESTED SOURCE(S) OF SUPPLY

VENDOR	VENDOR ADDRESS	VENDOR CODE	VENDOR CAT. OR PN

REVISIONS

CHG	ENGRG NOTICE	LTR	DESCRIPTION	DATE	APPROVED
		+	PRE-RELEASE		

7928785

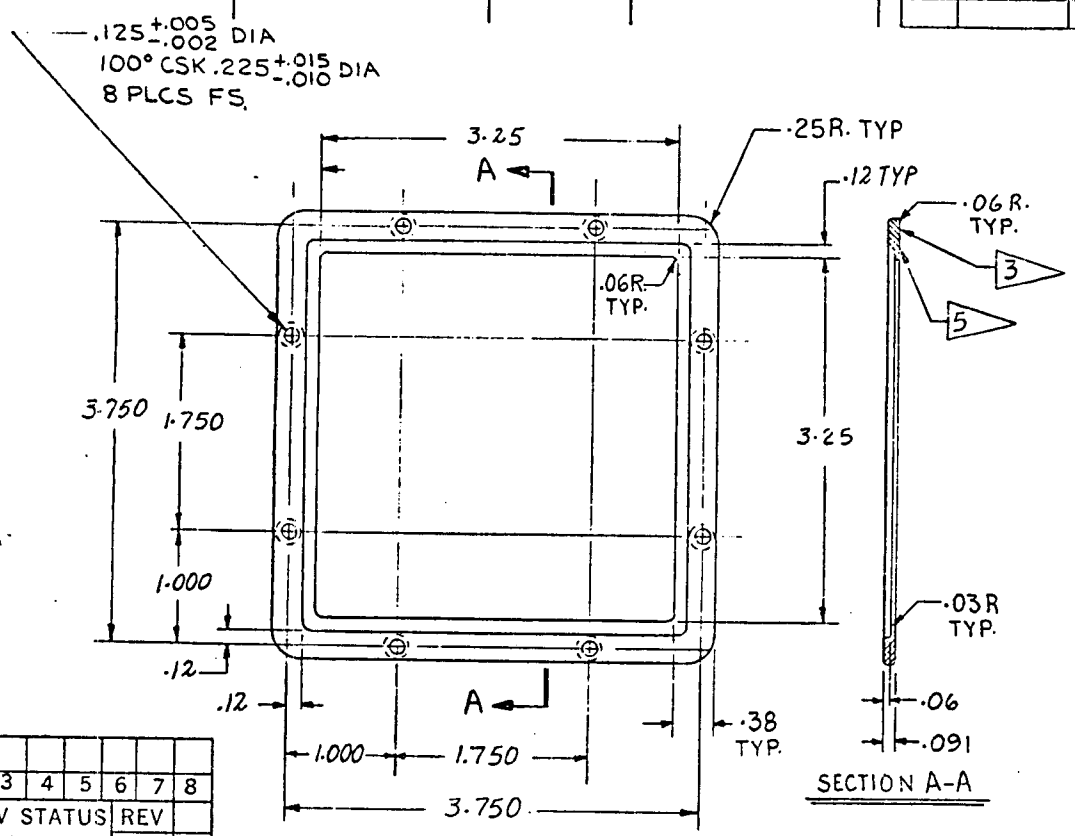

NOTES:

1. IBM SPEC 6009006 APPLIES.
2. INTERPRET DIMENSIONS PER MIL-STD-100.
3. IDENTIFY PER MIL-STD-130.
4. FINISH PER MIL-C-81706 CLASS 1A FORM & METHOD OPTIONAL APPLY PER MIL-C-5541.
5. PAINT THIS SIDE & EDGES TO FIRST SURFACE CHANGE USING PRIMER 7916597-1 & PAINT 7922476-1. APPLY PER 7916598

2	3	4	5	6	7	8
REV STATUS OF SHEETS				REV SH		1

PART NO. -1 SHOWN

SPECIFICATION NUMBER AND TYPE	NOTE	ITEM NO.
7916598	5	
6009006	1	
APPLICABLE IBM SPECIFICATIONS	APPLIES TO	

IF "SOURCE CONTROL DRAWING"— ONLY THE ITEM DESCRIBED ON THIS DRAWING WHEN PROCURED FROM THE VENDOR(S) LISTED HEREON IS APPROVED BY IBM. ☐ GAITHERSBURG, MD ☐ HUNTSVILLE, AL ☐ OWEGO, NY

FOR USE IN THE APPLICATION(S) SPECIFIED HEREON. A SUBSTITUTE ITEM SHALL NOT BE USED WITHOUT PRIOR TESTING AND APPROVAL BY IBM OR BY

(GOVERNMENT PROCURING ACTIVITY)

UNLESS OTHERWISE SPECIFIED DIMENSIONS AND TOLERANCES ARE IN INCHES AND APPLY TO THE FINISHED PART

TOLERANCE CHK: 2 PLACE DEC ±.02 3 PLACE DEC ±.010 ANGLES ±~

MATL: AL ALY 6061-T6 PER FED SPEC QQ-A-250/11

HARD | CASE DEPTH | SURF TREAT

CONTR NO: NAS 8-14000

PREPARATION: 7/9/73

ENGR CHK | DRAFT CHK | DESIGN APPROVAL | OTHER APPROVAL (SPECIFY ACTIVITY)

IBM FEDERAL SYSTEMS DIVISION ☐ GAITHERSBURG, MD ☐ OWEGO, NY ☒ HUNTSVILLE, AL

TITLE: HOLDER

SIZE	CODE IDENT NO	DWG NO.
	20234	7928785

SCALE 1/1 | WT | SHEET

☐ APPROVED ☐ SUGGESTED SOURCE(S) OF SUPPLY

VENDOR	VENDOR ADDRESS	VENDOR CODE	VENDOR CAT. OR PN

DWG NO. 7928784

REVISIONS

CHK	ENGRG NOTICE	LTR	DESCRIPTION	DATE	APPROVED
		+	PRE-RELEASE		

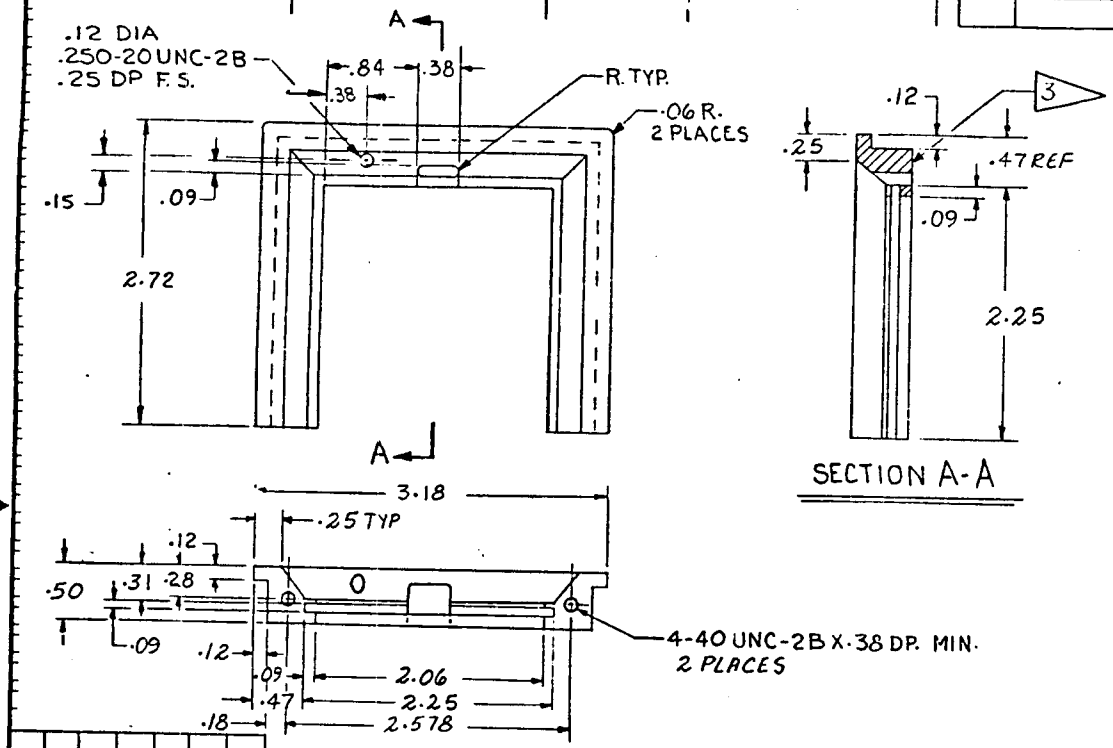

SECTION A-A

NOTES:

1. IBM SPEC 6009008 APPLIES.
2. INTERPRET DIMENSIONS PER MIL-STD-100
3. IDENTIFY PER MIL-STD-130.

2	3	4	5	6	7	8
REV STATUS OF SHEETS				REV		
				SH	1	

PART NO. -1 SHOWN

SPECIFICATION NUMBER AND TYPE	NOTE	ITEM NO.
6009008	1	
APPLICABLE IBM SPECIFICATIONS	APPLIES TO	

IF "SOURCE CONTROL DRAWING"— ONLY THE ITEM DESCRIBED ON THIS DRAWING WHEN PROCURED FROM THE VENDOR(S) LISTED HEREON IS APPROVED BY IBM, ☐ GAITHERSBURG, MD ☐ HUNTSVILLE, AL ☐ OWEGO, NY

FOR USE IN THE APPLICATION(S) SPECIFIED HEREON. A SUBSTITUTE ITEM SHALL NOT BE USED WITHOUT PRIOR TESTING AND APPROVAL BY IBM OR BY

(GOVERNMENT PROCURING ACTIVITY)

UNLESS OTHERWISE SPECIFIED DIMENSIONS AND TOLERANCES ARE IN INCHES AND APPLY TO THE FINISHED PART

TOLERANCE ON: 2 PLACE DEC ±.02 3 PLACE DEC ±.010 ANGLES ±2°

MATL NYLON PER MIL-N-18352

HARD | CASE DEPTH

SURF TREAT

CONTR NO NAS8-14000

PREPARATION T. Mazzo 7/10/73

DSGN CHK

DWG CHK

DESIGN APPROVAL

OTHER APPROVAL (SPECIFY ACTIVITY)

IBM FEDERAL SYSTEMS DIVISION ☐ GAITHERSBURG, MD ☒ HUNTSVILLE, AL ☐ OWEGO, NY

TITLE HOLDER

SIZE	CODE IDENT NO	DWG NO.
B	20234	7928784

SCALE 1/1 | WT | SHEET

ASTROCLOTH M630T

+	7928783

☐ APPROVED ☐ SUGGESTED SOURCE(S) OF SUPPLY

VENDOR	VENDOR ADDRESS	VENDOR CODE	VENDOR CAT OR PN

REVISIONS

CHK	ENGRG NOTICE	LTR	DESCRIPTION	DATE	APPROVED
		+	PRE-RELEASE		

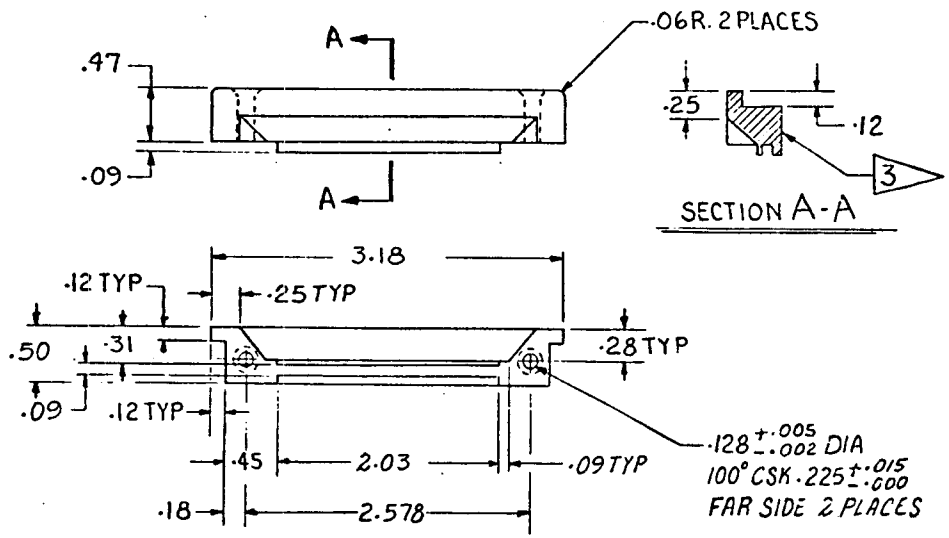

NOTES:
1. IBM SPEC 6009008 APPLIES.
2. INTERPRET DIMENSIONS PER MIL-STD-100
3. IDENTIFY PER MIL-STD-130.

2	3	4	5	6	7	8
REV STATUS OF SHEETS				REV SH		1

PART NO. -1 SHOWN

SPECIFICATION NUMBER AND TYPE	NOTE	ITEM NO.
6009008	1	
APPLICABLE IBM SPECIFICATIONS	APPLIES TO	

IF "SOURCE CONTROL DRAWING"— ONLY THE ITEM DESCRIBED ON THIS DRAWING WHEN PROCURED FROM THE VENDOR(S) LISTED HEREON IS APPROVED BY IBM. ☐ GAITHERSBURG, MD ☐ HUNTSVILLE, AL ☐ OWEGO, NY ☐

FOR USE IN THE APPLICATION(S) SPECIFIED HEREON. A SUBSTITUTE ITEM SHALL NOT BE USED WITHOUT PRIOR TESTING AND APPROVAL BY IBM OR BY

(GOVERNMENT PROCURING ACTIVITY)

UNLESS OTHERWISE SPECIFIED DIMENSIONS AND TOLERANCES ARE IN INCHES AND APPLY TO THE FINISHED PART

TOLERANCE ON: 2 PLACE DEC ±.02 | 3 PLACE DEC ±.010 | ANGLES ±~

MATL NYLON PER MIL-N-18352

HARD | CASE DEPTH

SURF TREAT

CONTR NO NAS8-14000

PREPARATION T. Mango 7/10/73

DSGN CHK

DWG CHK

DESIGN APPROVAL

OTHER APPROVAL (SPECIFY ACTIVITY)

IBM FEDERAL SYSTEMS DIVISION ☐ GAITHERSBURG, MD ☒ HUNTSVILLE, AL ☐ OWEGO, NY

TITLE HOLDER

SIZE	CODE IDENT NO	DWG NO.
B	20234	7928783

SCALE | WT | SHEET

ASTROCLOTH 14307

+		7928786

☐ APPROVED ☐ SUGGESTED SOURCE(S) OF SUPPLY

VENDOR	VENDOR ADDRESS	VENDOR CODE	VENDOR CAT OR PN

REVISIONS

CHK	ENGRG NOTICE	LTR	DESCRIPTION	DATE	APPROVED
		+	PRE-RELEASE		

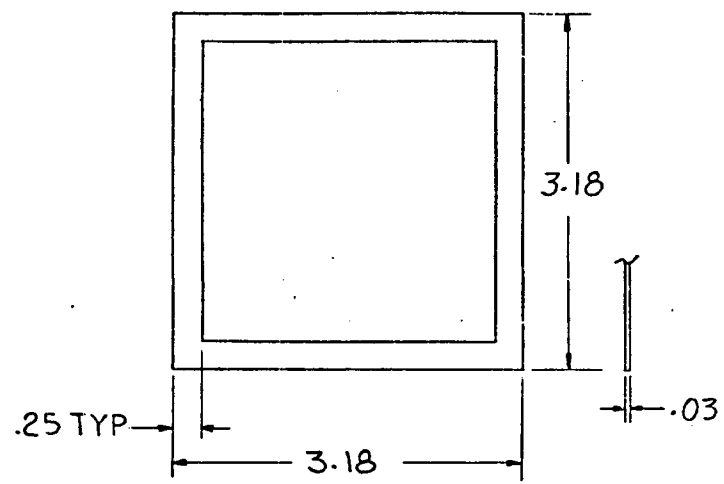

NOTES:
1. INTERPRET DIMENSIONS PER MIL-STD-100
2. IDENTIFY PER MIL-STD-130

2	3	4	5	6	7	8
REV STATUS OF SHEETS				REV SH		1

PART NO. -1 SHOWN

SPECIFICATION NUMBER AND TYPE	NOTE	ITEM NO.
	APPLIES TO	
APPLICABLE IBM SPECIFICATIONS		

IF "SOURCE CONTROL DRAWING"— ONLY THE ITEM DESCRIBED ON THIS DRAWING WHEN PROCURED FROM THE VENDOR(S) LISTED HEREON IS APPROVED BY IBM, ☐ GAITHERSBURG, MD ☐ HUNTSVILLE, AL ☐ OWEGO, NY

FOR USE IN THE APPLICATION(S) SPECIFIED HEREON. A SUBSTITUTE ITEM SHALL NOT BE USED WITHOUT PRIOR TESTING AND APPROVAL BY IBM OR BY

(GOVERNMENT PROCURING ACTIVITY)

UNLESS OTHERWISE SPECIFIED DIMENSIONS AND TOLERANCES ARE IN INCHES AND APPLY TO THE FINISHED PART

TOLERANCE ON: 2 PLACE DEC ±.02 | 3 PLACE DEC ±.010 | ANGLES ±

MATL RUBBER PER MIL-R-81828 TYPE I

HARD | CASE DEPTH | SURF TREAT

CONTR NO. NAS8-14000

PREPARATION T. Drange 7/6/73

DSGN CHK

DWG CHK

DESIGN APPROVAL

OTHER APPROVAL (SPECIFY ACTIVITY)

IBM FEDERAL SYSTEMS DIVISION ☐ GAITHERSBURG, MD ☐ OWEGO, NY ☒ HUNTSVILLE, AL

TITLE GASKET

SIZE	CODE IDENT NO	DWG NO.
B	20234	7928786
SCALE 1/1	WT	SHEET

☐ APPROVED ☐ SUGGESTED SOURCE(S) OF SUPPLY			
VENDOR	VENDOR ADDRESS	VENDOR CODE	VENDOR CAT OR PN
SCHOTT OPTICAL GLASS CO.	DURYEA PENN. 18642		WG7

REVISIONS					
CHK	ENGRG NOTICE	LTR	DESCRIPTION	DATE	APPROVED
		+	PRE-RELEASE		

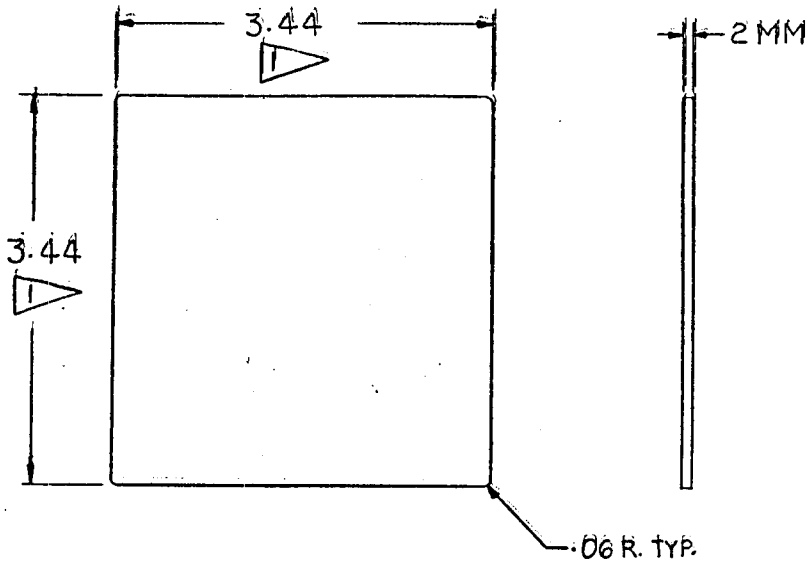

NOTES:

1. ALTER IN ACCORDANCE WITH THIS DWG.
2. IDENTIFY PER MIL-STD-130.
3. INTERPRET DIMENSIONS PER MIL-STD-100.

2	3	4	5	6	7	8
REV STATUS OF SHEETS				REV		
				SH	1	

ALTERED ITEM DWG.

PART NO. -1 SHOWN

SPECIFICATION NUMBER AND TYPE	NOTE	ITEM NO.
	APPLIES TO	
APPLICABLE IBM SPECIFICATIONS		

IF "SOURCE CONTROL DRAWING"— ONLY THE ITEM DESCRIBED ON THIS DRAWING WHEN PROCURED FROM THE VENDOR(S) LISTED HEREON IS APPROVED BY IBM. [ ] GAITHERSBURG, MD ☐ HUNTSVILLE, AL ☐ OWEGO, NY ☐ FOR USE IN THE APPLICATION(S) SPECIFIED HEREON. A SUBSTITUTE ITEM SHALL NOT BE USED WITHOUT PRIOR TESTING AND APPROVAL BY IBM OR BY (GOVERNMENT PROCURING ACTIVITY)

UNLESS OTHERWISE SPECIFIED DIMENSIONS AND TOLERANCES ARE IN INCHES AND APPLY TO THE FINISHED PART

TOLERANCE ON: 2 PLACE DEC ±.02 | 3 PLACE DEC ±.010 | ANGLES ±—

MATL —

HARD — CASE DEPTH —

SURF TREAT —

CONTR NO. NAS8-14000

PREPARATION T. Mazzo 7/25/73

DSGN CHK

DWG CHK

DESIGN APPROVAL

OTHER APPROVAL (SPECIFY ACTIVITY)

IBM FEDERAL SYSTEMS DIVISION ☐ GAITHERSBURG, MD ☒ HUNTSVILLE, AL ☐ OWEGO, NY

TITLE COVER, GLASS

SIZE	CODE IDENT NO.	DWG NO.
B	20234	7928831
SCALE 1/1	WT	SHEET

☐ APPROVED ☐ SUGGESTED SOURCE(S) OF SUPPLY

VENDOR	VENDOR ADDRESS	VENDOR CODE	VENDOR CAT OR PN

REVISIONS

CHK	ENGRG NOTICE	LTR	DESCRIPTION	DATE	APPROVED
		+	PRE-RELEASE		

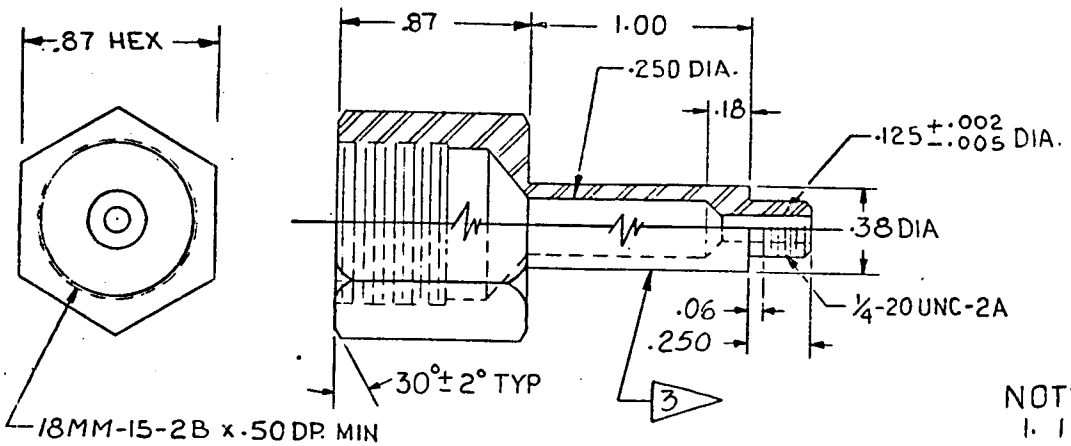

NOTES:
1. IBM SPEC 6009008 APPLIES.
2. INTERPRET DIMENSIONS PER MIL-STD-100.
3. IDENTIFY PER MIL-STD-130.
4. MIL-S-7742 APPLIES.
5. FINISH PER MIL-C-81706 CLASS 1A, FORM & METHOD OPTIONAL. APPLY PER MIL-C-5541.

2	3	4	5	6	7	8
REV STATUS				REV		
OF SHEETS				SH	1	

PART NO. -1 SHOWN

SPECIFICATION NUMBER AND TYPE	NOTE	ITEM NO.
6009008	1	
APPLICABLE IBM SPECIFICATIONS	APPLIES TO	

IF "SOURCE CONTROL DRAWING" — ONLY THE ITEM DESCRIBED ON THIS DRAWING WHEN PROCURED FROM THE VENDOR(S) LISTED HEREON IS APPROVED BY IBM. ☐ GAITHERSBURG, MD ☐ HUNTSVILLE, AL ☐ OWEGO, NY

FOR USE IN THE APPLICATION(S) SPECIFIED HEREON. A SUBSTITUTE ITEM SHALL NOT BE USED WITHOUT PRIOR TESTING AND APPROVAL BY IBM OR BY

(GOVERNMENT PROCURING ACTIVITY)

UNLESS OTHERWISE SPECIFIED DIMENSIONS AND TOLERANCES ARE IN INCHES AND APPLY TO THE FINISHED PART

TOLERANCE ON: 2 PLACE DEC ±.02 3 PLACE DEC ±.010 ANGLES ±—

MATL AL. ALY. 6061T6 PER FED-SPEC-QQ-A-225/8

HARD —— CASE DEPTH ——

SURF TREAT ——

CONTR NO NAS8-14000

PREPARATION T. Lipp 7/25/73

DSGN CHK

DWG CHK

DESIGN APPROVAL

OTHER APPROVAL (SPECIFY ACTIVITY)

IBM FEDERAL SYSTEMS DIVISION ☐ GAITHERSBURG, MD ☐ OWEGO, NY ☒ HUNTSVILLE, AL ☐

TITLE COUPLING

SIZE B CODE IDENT NO 20234 DWG NO. 7928830

SCALE 2/1 WT SHEET

APPROVED SUGGESTED SOURCE(S) OF SUPPLY

VENDOR	VENDOR ADDRESS	VENDOR CODE	VENDOR CAT OR PN

REVISIONS

CHG	DESCRIPTION	DATE	APPROVED

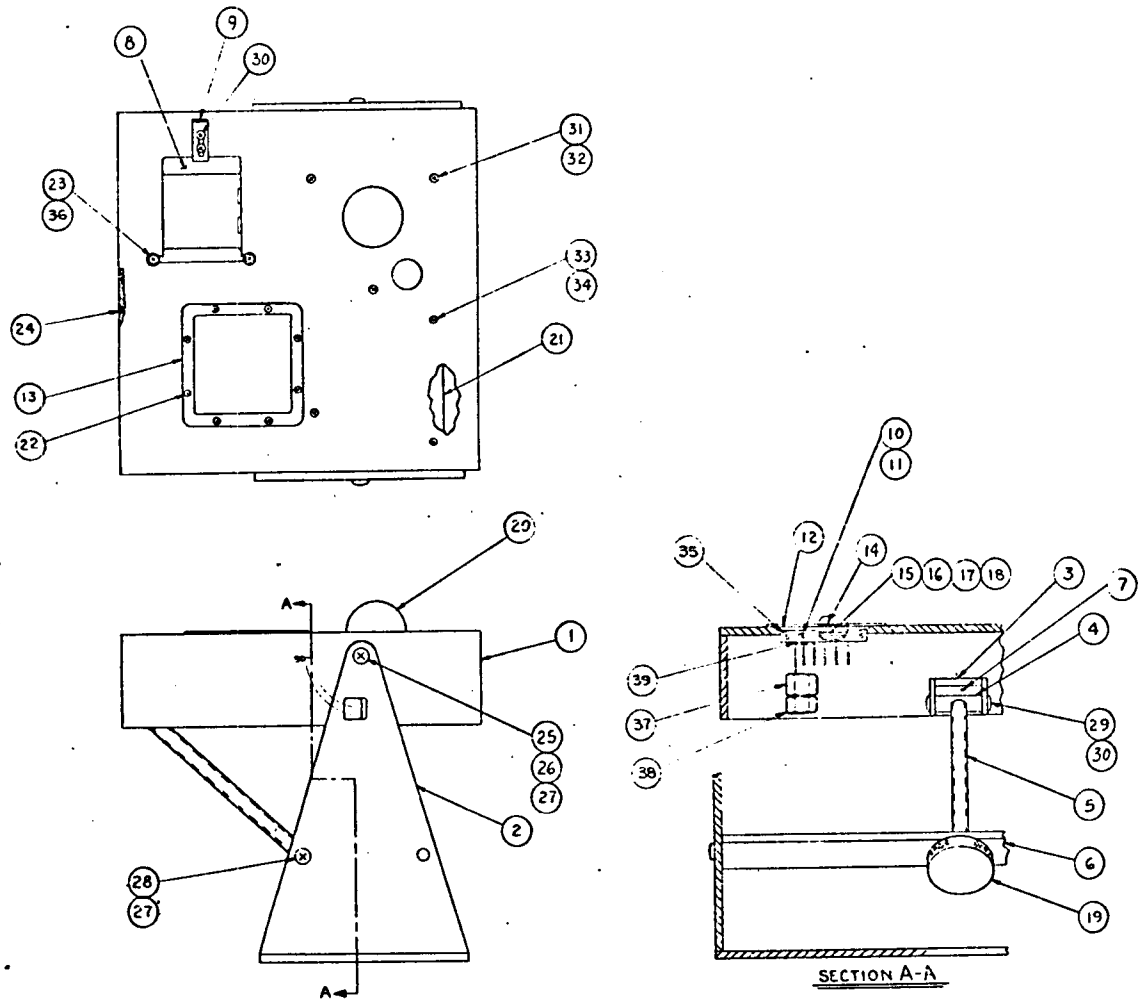

SECTION A-A

NOTES

1. IBM SPEC 6009014 APPLIES.
2. APPLY (4) TO MATING SURFACES OF (10) & (11). ALSO APPLY 40 TO GROOVES WHERE (17) INSTALLS. APPLY PER 7916546
3. APPLY (16) TO (17) USING (8) APPLY PER 7916546
4. SEE SEPARATE PARTS LIST PL 7928780-1

PART NO. - 1 SHOWN

28	29	30	31	32	33	34	35
20	21	22	23	24	25	26	27
12	13	14	15	16	17	18	19
4	5	6	7	8	9	10	11
REV STATUS OF SHEETS				REV SH	1	2	3

SPECIFICATION NUMBER AND TYPE | NOTE | ITEM NO | APPLIES TO

APPLICABLE IBM SPECIFICATIONS

IF "SOURCE CONTROL DRAWING" — ONLY THE ITEM DESCRIBED ON THIS DRAWING WHEN PROCURED FROM THE VENDOR(S) LISTED HEREON IS APPROVED BY IBM, ☐ GAITHERSBURG, MD ☐ HUNTSVILLE, AL ☐ OMEGO, NY ☐ _____

FOR USE IN THE APPLICATION(S) SPECIFIED HEREON. A SUBSTITUTE ITEM SHALL NOT BE USED WITHOUT PRIOR TESTING AND APPROVAL BY IBM OR BY (GOVERNMENT PROCURING ACTIVITY)

UNLESS OTHERWISE SPECIFIED DIMENSIONS AND TOLERANCES ARE IN INCHES AND APPLY TO THE FINISHED PART

TOLERANCE ON: 2 PLACE DEC ± — 3 PLACE DEC ± — ANGLES ±

MATL — HARD — CASE DEPTH — 1 ST TASK

CONTR NO NAS8-14000

DRAFTSMAN — DATE

DESIGN CHK — DATE

OPER NG CHK — DATE

DESIGN APPROVAL — DATE

USING APPROVAL (GOVERNMENT ACTIVITY) — DATE

IBM FEDERAL SYSTEMS DIVISION ☐ GAITHERSBURG, MD ☒ HUNTSVILLE, AL ☐ OMEGO, NY

TITLE SENSOR ASSEMBLY STATIONARY

SIZE D | CODE IDENT NO 20234 | DWG NO 7928780

SCALE 1/2 | WT | SHEET

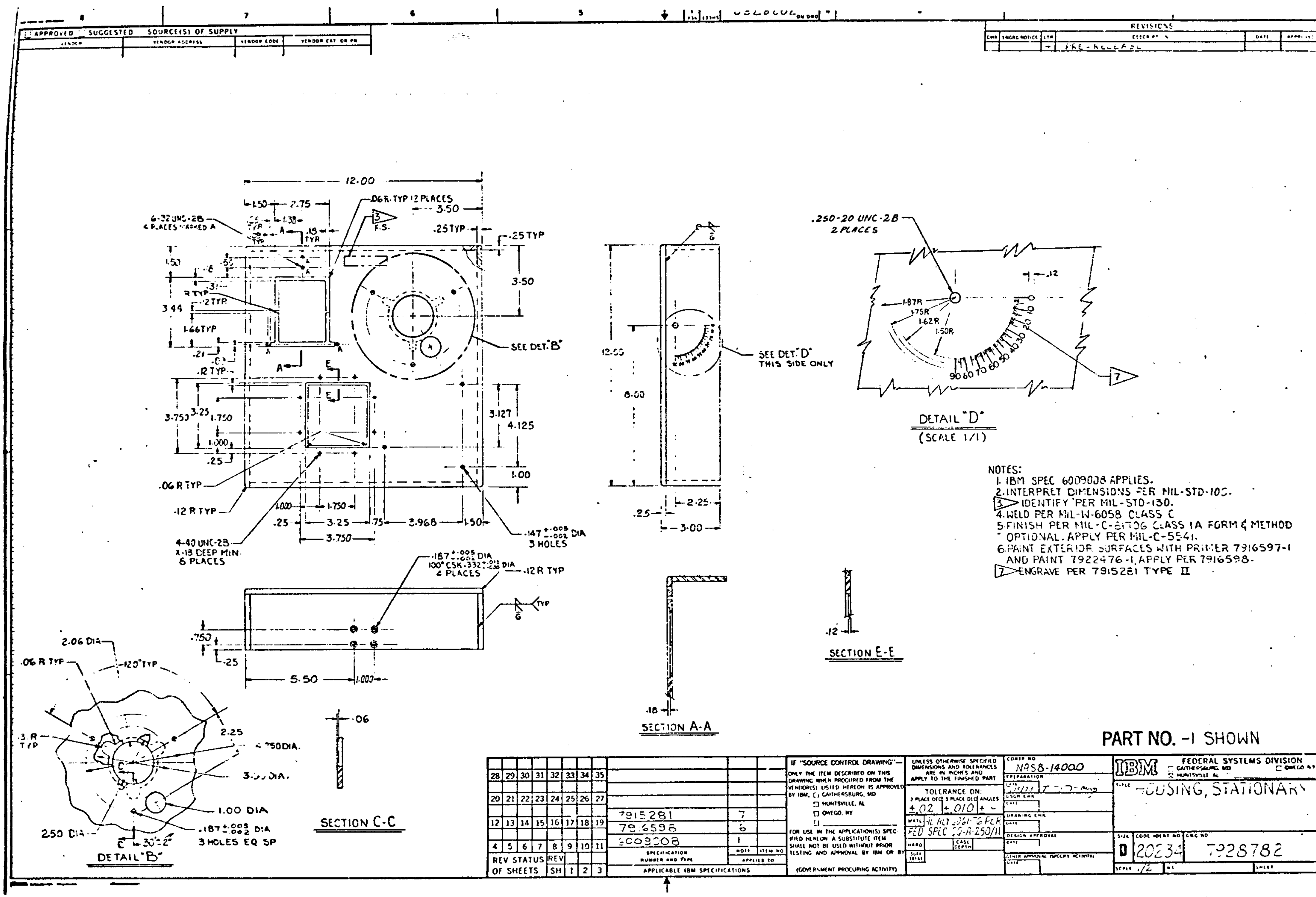
NOTES:
1. IBM SPEC 6009008 APPLIES.
2. INTERPRET DIMENSIONS PER MIL-STD-100.
3 IDENTIFY PER MIL-STD-130.
4. WELD PER MIL-W-6058 CLASS C
5. FINISH PER MIL-C-5541 CLASS 1A FORM & METHOD OPTIONAL. APPLY PER MIL-C-5541.
6. PAINT EXTERIOR SURFACES WITH PRIMER 7916597-1 AND PAINT 7922476-1, APPLY PER 7916598.
7 ENGRAVE PER 7915281 TYPE II
PART NO. -1 SHOWN
DETAIL "D"
(SCALE 1/1)
SEE DET. "D" THIS SIDE ONLY
SEE DET. "B"
DETAIL "B"
SECTION A-A
SECTION C-C
SECTION E-E
.250-20 UNC-2B 2 PLACES
6-32 UNC-2B 4 PLACES MARKED A
4-40 UNC-2B X .13 DEEP MIN. 6 PLACES
.06 R TYP 12 PLACES
.147 +.005 -.002 DIA 3 HOLES
.187 +.005 -.002 DIA 3 HOLES EQ SP
1.00 DIA
2.06 DIA
2.50 DIA
APPROVED SUGGESTED SOURCE(S) OF SUPPLY
REVISIONS
PRE-RELEASE
7915281
7916598
6009008
APPLICABLE IBM SPECIFICATIONS
REV STATUS OF SHEETS
CONTR NO NAS8-14000
TOLERANCE ON: .02 .010
IBM FEDERAL SYSTEMS DIVISION
HOUSING, STATIONARY
D 20234 7928782
SCALE 1/2

☐ APPROVED ☐ SUGGESTED SOURCE(S) OF SUPPLY

VENDOR	VENDOR ADDRESS	VENDOR CODE	VENDOR CAT. OR ITEM

REVISIONS

LTR	ENGINEERING NOTICE	LTR	DESCRIPTION	DATE	APPROVED
		+	PRE-RELEASE		

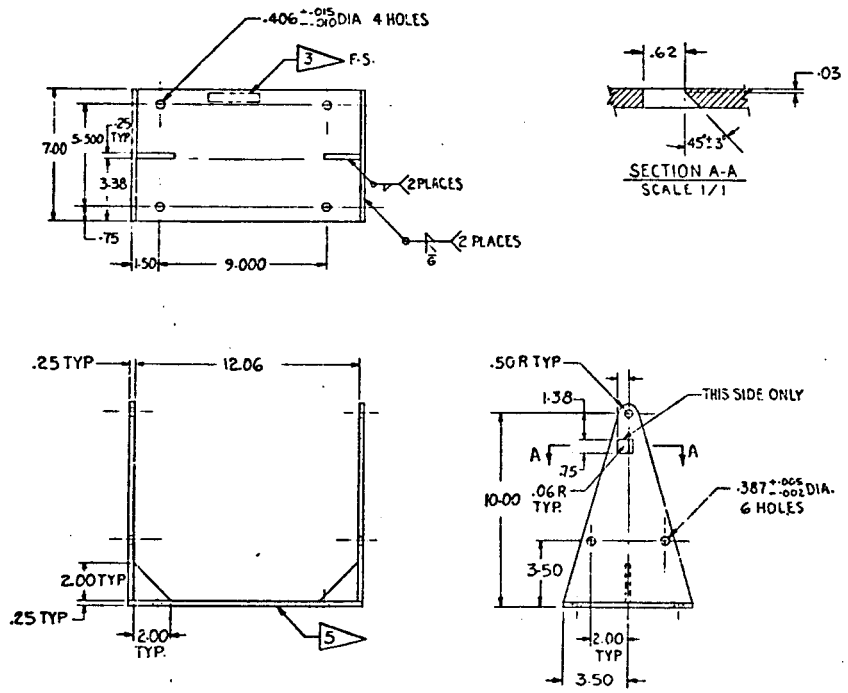

NOTES:
1. IBM SPEC 6009008 APPLIES.
2. INTERPRET DIMENSIONS PER MIL-STD-100
3. IDENTIFY PER MIL-STD-130.
4. WELD PER MIL-W-6058 CLASS C.
5. FINISH PER MIL-C-81706 CLASS 1A FORM & METHOD OPTIONAL, APPLY PER MIL-C-5541. DO NOT PAINT THIS SURFACE.
6. PAINT WITH PRIMER 7916597-1 & PAINT 7922476-1 APPLY PER 7916598

PART NO. -1 SHOWN

28	29	30	31	32	33	34	35
20	21	22	23	24	25	26	27
12	13	14	15	16	17	18	19
4	5	6	7	8	9	10	11
REV STATUS OF SHEETS				REV	SH	1	2	3

SPECIFICATION NUMBER AND TYPE	NOTE	ITEM NO
7916598	6	
6009008	1	

APPLIES TO

APPLICABLE IBM SPECIFICATIONS

IF "SOURCE CONTROL DRAWING" — ONLY THE ITEM DESCRIBED ON THIS DRAWING WHEN PROCURED FROM THE VENDOR(S) LISTED HEREON IS APPROVED BY IBM. ☐ GAITHERSBURG, MD ☐ HUNTSVILLE, AL ☐ OWEGO, NY ☐ _____

FOR USE IN THE APPLICATION(S) SPECIFIED HEREON. A SUBSTITUTE ITEM SHALL NOT BE USED WITHOUT PRIOR TESTING AND APPROVAL BY IBM OR BY

(GOVERNMENT PROCURING ACTIVITY)

UNLESS OTHERWISE SPECIFIED DIMENSIONS AND TOLERANCES ARE IN INCHES AND APPLY TO THE FINISHED PART.

TOLERANCE ON: 2 PLACE DEC ±.02 | 3 PLACE DEC ±.010 | ANGLES ± AS NOTED

MATL ALY ALY 606-T6 FED SPEC QQ-A-250/11

HARD | CASE DEPTH | CODE TEST

CONTR NO NAS8-14000

PREPARATION 2/22/73 T. Mang

DSGN CHK DATE

DRAWING CHK DATE

DESIGN APPROVAL DATE

OTHER APPROVAL (SPECIFY ACTIVITY) DATE

IBM FEDERAL SYSTEMS DIVISION ☐ GAITHERSBURG, MD ☒ HUNTSVILLE, AL ☐ OWEGO, N.Y.

TITLE BRACKET, WELDMENT

SIZE	CODE IDENT NO	DWG NO
C	20234	7928776

SCALE 1/4 | WT | SHEET

+	A/N	133HS	7928778 DWG NO

☐ APPROVED ☐ SUGGESTED SOURCE(S) OF SUPPLY

VENDOR	VENDOR ADDRESS	VENDOR CODE	VENDOR CAT. OR PN

REVISIONS

CHK	ENGRG NOTICE	LTR	DESCRIPTION	DATE	APPROVED
		+	PRE-RELEASE		

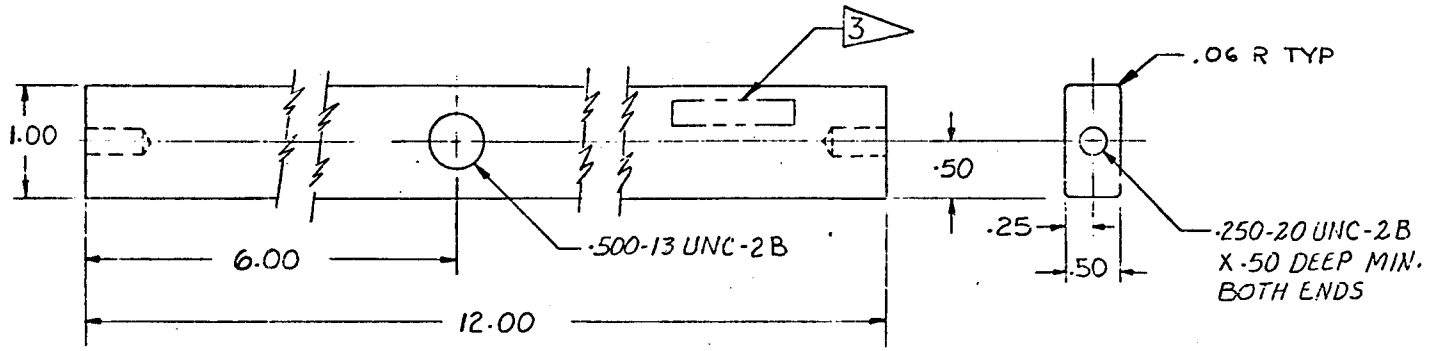

NOTES:

1. IBM SPEC 6009008 APPLIES.
2. INTERPRET DIMENSIONS PER MIL-STD-100
3. IDENTIFY PER MIL-STD-130.
4. PASSIVATE PER MIL-STD-171, FINISH 5.4.1
5. MIL-S-7742 APPLIES.

2	3	4	5	6	7	8
REV STATUS OF SHEETS				REV	SH	1

PART NO. -1 SHOWN

SPECIFICATION NUMBER AND TYPE	NOTE	ITEM NO.
6009008	1	
APPLICABLE IBM SPECIFICATIONS	APPLIES TO	

IF "SOURCE CONTROL DRAWING"— ONLY THE ITEM DESCRIBED ON THIS DRAWING WHEN PROCURED FROM THE VENDOR(S) LISTED HEREON IS APPROVED BY IBM, ☐ GAITHERSBURG, MD ☐ HUNTSVILLE, AL ☐ OWEGO, NY

FOR USE IN THE APPLICATION(S) SPECIFIED HEREON. A SUBSTITUTE ITEM SHALL NOT BE USED WITHOUT PRIOR TESTING AND APPROVAL BY IBM OR BY

(GOVERNMENT PROCURING ACTIVITY)

UNLESS OTHERWISE SPECIFIED DIMENSIONS AND TOLERANCES ARE IN INCHES AND APPLY TO THE FINISHED PART

TOLERANCE ON: 2 PLACE DEC ±.02 3 PLACE DEC ±.010 ANGLES ±~

MATL CRES TYPE 304 COND A PER QQ-S-763

HARD | CASE DEPTH | SURF TREAT

CONTR NO NAS8-14000

PREPARATION 5/20/73

ESEN CHK

DAG CHK

DESIGN APPROVAL

OTHER APPROVAL SPECIFY ACTIVITY:

IBM FEDERAL SYSTEMS DIVISION ☐ GAITHERSBURG, MD ☐ OWEGO, N.Y. ☒ HUNTSVILLE, AL ☐

TITLE BAR, ADJUSTMENT

SIZE	CODE IDENT NO.	DWG NO.
B	30234	7928778

SCALE 1/1 WT SHEET

ASTROCLOTH HA307

☐ APPROVED ☐ SUGGESTED SOURCE(S) OF SUPPLY			
VENDOR	VENDOR ADDRESS	VENDOR CODE	VENDOR CAT. OR PN

REVISIONS					
CHK	ENGRG NOTICE	LTR	DESCRIPTION	DATE	APPROVED
		+	PRE-RELEASE		

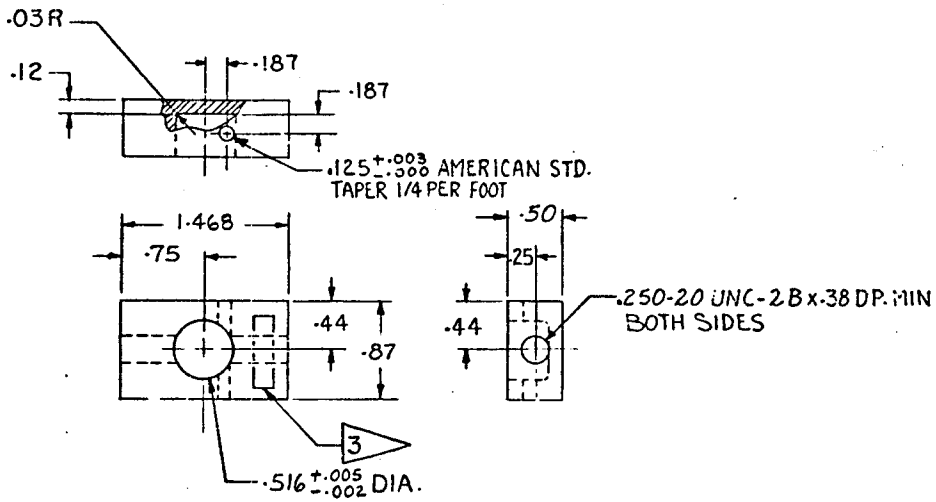

NOTES:

1. IBM SPEC 6009008 APPLIES. BREAK ALL EXTERIOR CORNERS .06R.
2. INTERPRET DIMENSIONS PER MIL-STD-100
3. IDENTIFY PER MIL-STD-130.
4. PASSIVATE PER MIL-STD-171 FINISH 5.4.1
5. MIL-S-7742 APPLIES.

2	3	4	5	6	7	8
REV STATUS OF SHEETS				REV		
				SH	1	

PART NO. -1 SHOWN

SPECIFICATION NUMBER AND TYPE	NOTE	ITEM NO.
6009008	1	
APPLICABLE IBM SPECIFICATIONS	APPLIES TO	

IF "SOURCE CONTROL DRAWING"— ONLY THE ITEM DESCRIBED ON THIS DRAWING WHEN PROCURED FROM THE VENDOR(S) LISTED HEREON IS APPROVED BY IBM. ☐ GAITHERSBURG, MD ☐ HUNTSVILLE, AL ☐ OWEGO, NY

FOR USE IN THE APPLICATION(S) SPECIFIED HEREON. A SUBSTITUTE ITEM SHALL NOT BE USED WITHOUT PRIOR TESTING AND APPROVAL BY IBM OR BY

(GOVERNMENT PROCURING ACTIVITY)

UNLESS OTHERWISE SPECIFIED DIMENSIONS AND TOLERANCES ARE IN INCHES AND APPLY TO THE FINISHED PART

TOLERANCE ON: 2 PLACE DEC ±.02 3 PLACE DEC ±.010 ANGLES ±

MATL CRES TYPE 304 COND A PER FED SPEC QQ-S-763

HARD | CASE DEPTH

SURF TREAT

CONTR NO. NAS8-14000

PREPARATION T. Mayo 6/21/73

DSGN CHK

DWG CHK

DESIGN APPROVAL

OTHER APPROVAL (SPECIFY ACTIVITY)

IBM FEDERAL SYSTEMS DIVISION ☐ GAITHERSBURG, MD ☒ HUNTSVILLE, AL ☐ OWEGO, N.Y.

TITLE BAR, SCREW STOP

SIZE B | CODE IDENT NO 20234 | DWG NO. 7928779

SCALE 1/1 | WT | SHEET 1

+	7/18	1334G	7928777 ON DWG

☐ APPROVED ☐ SUGGESTED SOURCE(S) OF SUPPLY

VENDOR	VENDOR ADDRESS	VENDOR CODE	VENDOR CAT. OR PN

REVISIONS

CHK	ENGRG NOTICE	LTR	DESCRIPTION	DATE	APPROVED
		+	PRE-RELEASE		

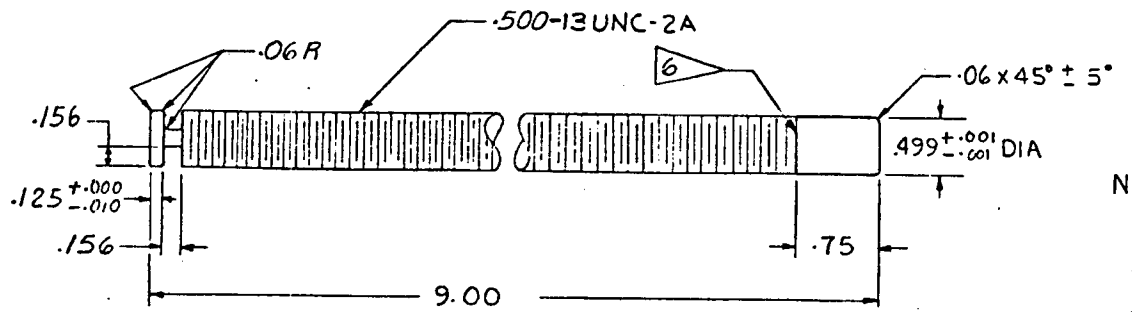

NOTES:

1. IBM SPEC 6009008 APPLIES.
2. INTERPRET DIMENSIONS PER MIL-STD-100
3. IDENTIFY PER MIL-STD-130 BY TAGGING.
4. PASSIVATE PER MIL-STD-171 FINISH 5.4.1
5. MIL-S-7742 APPLIES.
6. THREAD RELIEF OR RUNOUT ± .12 PERMISSIBLE.

2	3	4	5	6	7	8
REV STATUS OF SHEETS				REV SH	1	

PART NO. -1 SHOWN

SPECIFICATION NUMBER AND TYPE	NOTE	ITEM NO.
6009008	1	
APPLICABLE IBM SPECIFICATIONS	APPLIES TO	

IF "SOURCE CONTROL DRAWING"— ONLY THE ITEM DESCRIBED ON THIS DRAWING WHEN PROCURED FROM THE VENDOR(S) LISTED HEREON IS APPROVED BY IBM, ☐ GAITHERSBURG, MD ☐ HUNTSVILLE, AL ☐ OWEGO, NY

FOR USE IN THE APPLICATION(S) SPECIFIED HEREON. A SUBSTITUTE ITEM SHALL NOT BE USED WITHOUT PRIOR TESTING AND APPROVAL BY IBM OR BY

(GOVERNMENT PROCURING ACTIVITY)

UNLESS OTHERWISE SPECIFIED DIMENSIONS AND TOLERANCES ARE IN INCHES AND APPLY TO THE FINISHED PART

TOLERANCE ON: 2 PLACE DEC ±.02 | 3 PLACE DEC ±.010 | ANGLES ± ~

MATL CRES. CLASS 304 COND. A PER FED SPEC QQ-S-763

HARD | CASE DEPTH | SURF TREAT

CONTR NO NAS8-14000

PREPARATION 6/21/73

DSGN CHK

DWG CHK

DESIGN APPROVAL

OTHER APPROVAL (SPECIFY ACTIVITY)

IBM FEDERAL SYSTEMS DIVISION ☐ GAITHERSBURG, MD ☒ HUNTSVILLE, AL ☐ OWEGO, NY

TITLE SCREW, ADJUSTMENT

SIZE	CODE IDENT NO	DWG NO.
B	20234	7928777

SCALE 1/1 | WT | SHEET

☐ APPROVED ☐ SUGGESTED SOURCE(S) OF SUPPLY

VENDOR	VENDOR ADDRESS	VENDOR CODE	VENDOR CAT. OR PN

CHK	ENGRG NOTICE	LTR	DESCRIPTION	DATE	APPROVED
		+	PRE-RELEASE		

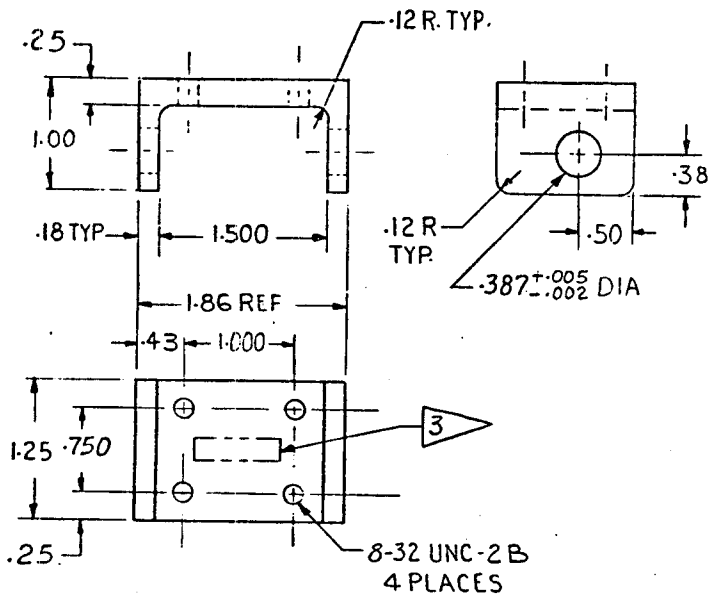

NOTES:

1. IBM SPEC 6009008 APPLIES.
2. INTERPRET DIMENSIONS PER MIL-STD-100
3. IDENTIFY PER MIL-STD-130.
4. FINISH PER MIL 81706 CLASS 1A FORM & METHOD OPTIONAL. APPLY PER MIL-C-5541
5. MIL-S-7742 APPLIES.

2	3	4	5	6	7	8
REV STATUS OF SHEETS				REV SH		1

PART NO. -1 SHOWN

SPECIFICATION NUMBER AND TYPE	NOTE	ITEM NO.
6009008	1	
APPLICABLE IBM SPECIFICATIONS	APPLIES TO	

IF "SOURCE CONTROL DRAWING"— ONLY THE ITEM DESCRIBED ON THIS DRAWING WHEN PROCURED FROM THE VENDOR(S) LISTED HEREON IS APPROVED BY IBM. ☐ GAITHERSBURG, MD ☐ HUNTSVILLE, AL ☐ OWEGO, NY

FOR USE IN THE APPLICATION(S) SPECIFIED HEREON. A SUBSTITUTE ITEM SHALL NOT BE USED WITHOUT PRIOR TESTING AND APPROVAL BY IBM OR BY

(GOVERNMENT PROCURING ACTIVITY)

UNLESS OTHERWISE SPECIFIED DIMENSIONS AND TOLERANCES ARE IN INCHES AND APPLY TO THE FINISHED PART

TOLERANCE ON: 2 PLACE DEC ±.02 3 PLACE DEC ±.010 ANGLES ±~

MATL AL ALY 6061-T6 PER FED SPEC QQ-A-250/11

HARD | CASE DEPTH | SURF TREAT

CONTR NO NAS8-14000

PREPARATION T. Mayo 6/21/73

DSGN CHK | DWG CHK | DESIGN APPROVAL | OTHER APPROVAL (SPECIFY ACTIVITY)

IBM FEDERAL SYSTEMS DIVISION ☐ GAITHERSBURG, MD ☒ HUNTSVILLE, AL ☐ OWEGO, NY

TITLE BRACKET, SCREW STOP

SIZE	CODE IDENT NO	DWG NO
B	20234	7928781

SCALE 1/1 | WT | SHEET

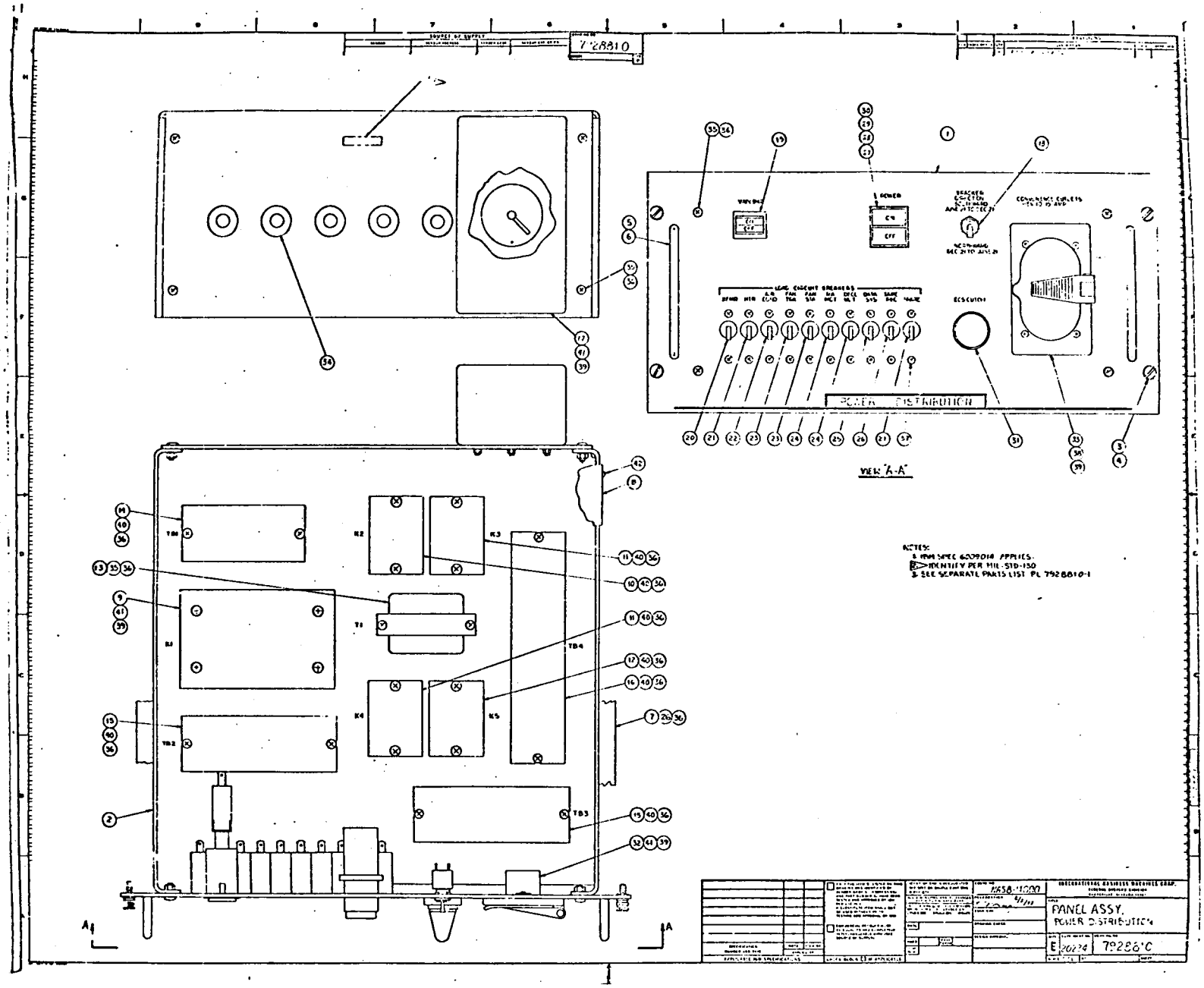
POWER DISTRIBUTION
VIEW "A-A"
NOTES:
1. MIL SPEC 6009014 APPLIES.
2. IDENTIFY PER MIL-STD-130
3. SEE SEPARATE PARTS LIST PL 7928810-1
PANEL ASSY.
POWER DISTRIBUTION
7928810

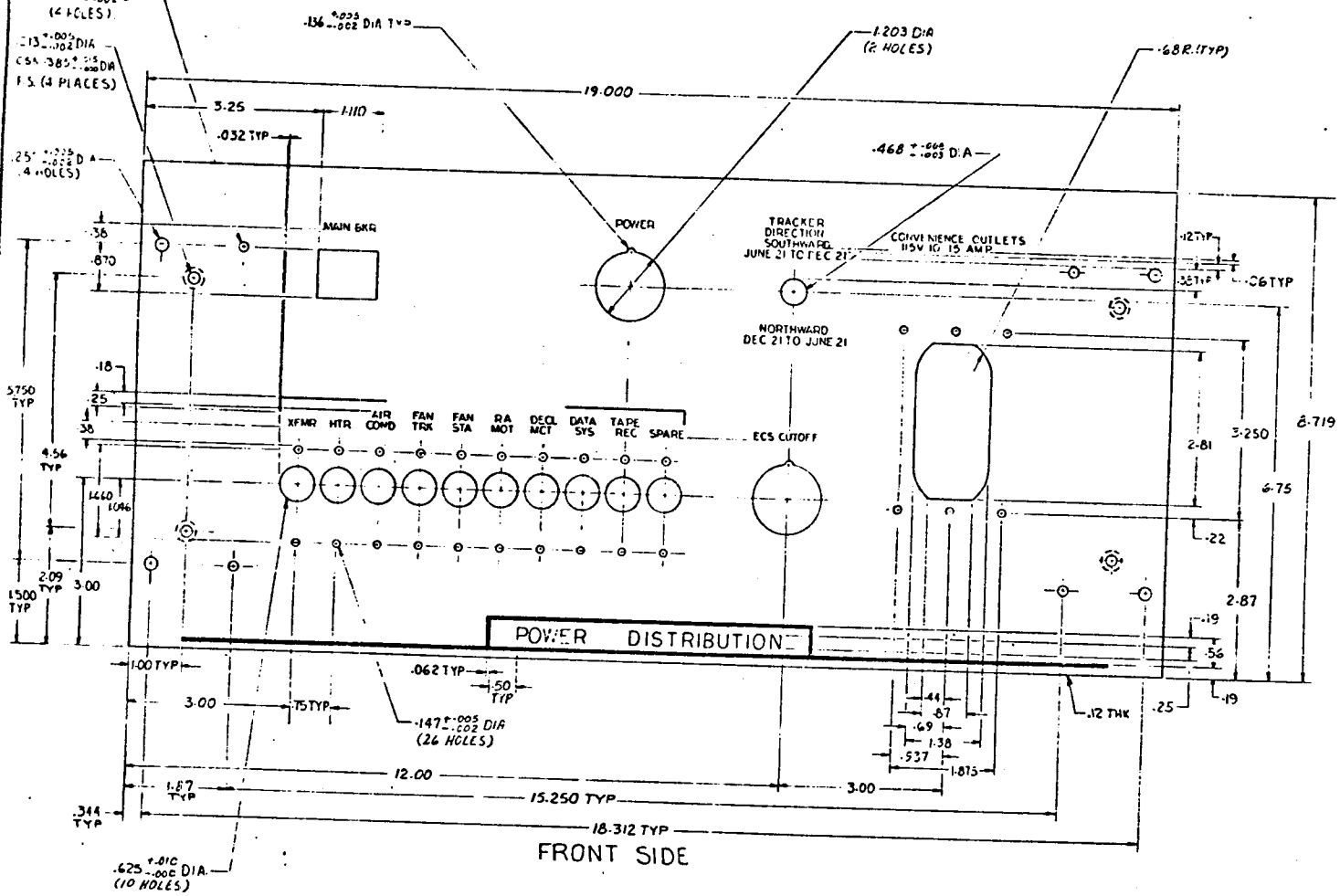

NOTES:

1. IBM SPEC 6009006 APPLIES.
2. INTERPRET DIMENSIONS PER MIL-STD 100.
3. IDENTIFY PER MIL-STD-130.
4. ENGRAVE FRONT PANEL PER 7915281 TYPE II, CLASS 1.
5. MARK REF DES PER 7915281 TYPE III CLASS 1.
6. FINISH PER MIL-C-81706 CLASS 1A FORM 2 METHOD OPTIONAL, APPLY PER MIL-C-5541.
7. PAINT FRONT & EDGES PER MIL-STD-171 FINISH NO. 20-5 COLOR NO. 36118 PER FED-STD-595.

PART NO. -1 SHOWN

7915281	4,5
6009006	1

SPECIFICATION NUMBER AND TYPE — NOTE — ITEM NO — APPLIES TO

APPLICABLE IBM SPECIFICATIONS

IF "SOURCE CONTROL DRAWING" ONLY THE ITEM DESCRIBED ON THIS DRAWING (OR A PROCURED FROM THE VENDOR(S) LISTED HEREON IS APPROVED BY IBM, GAITHERSBURG MD, HUNTSVILLE AL, OWEGO NY

FOR USE IN THE APPLICATION(S) SPEC HEREIN. A SUBSTITUTE ITEM SHALL NOT BE USED WITHOUT PRIOR TESTING AND APPROVAL BY IBM OR BY (GOVERNMENT PROCURING ACTIVITY)

UNLESS OTHERWISE SPECIFIED DIMENSIONS AND TOLERANCES ARE IN INCHES AND APPLY TO THE FINISHED PART

TOLERANCE ON: 2 PLACE DEC ±.02, 3 PLACE DEC ±.010, ANGLE ±~

MATL AL ALY 6061-T6 PER FED SPEC QQ-A-250/11

CONTR NO NAS8-14000

IBM FEDERAL SYSTEMS DIVISION GAITHERSBURG MD, HUNTSVILLE AL, OWEGO NY

TITLE PANEL, DETAIL

SIZE D — CODE IDENT NO 20234 — DWG NO 7928B.3

APPROVED SUGGESTED SOURCE(S) OF SUPPLY

REVISIONS

PRC RELEASE

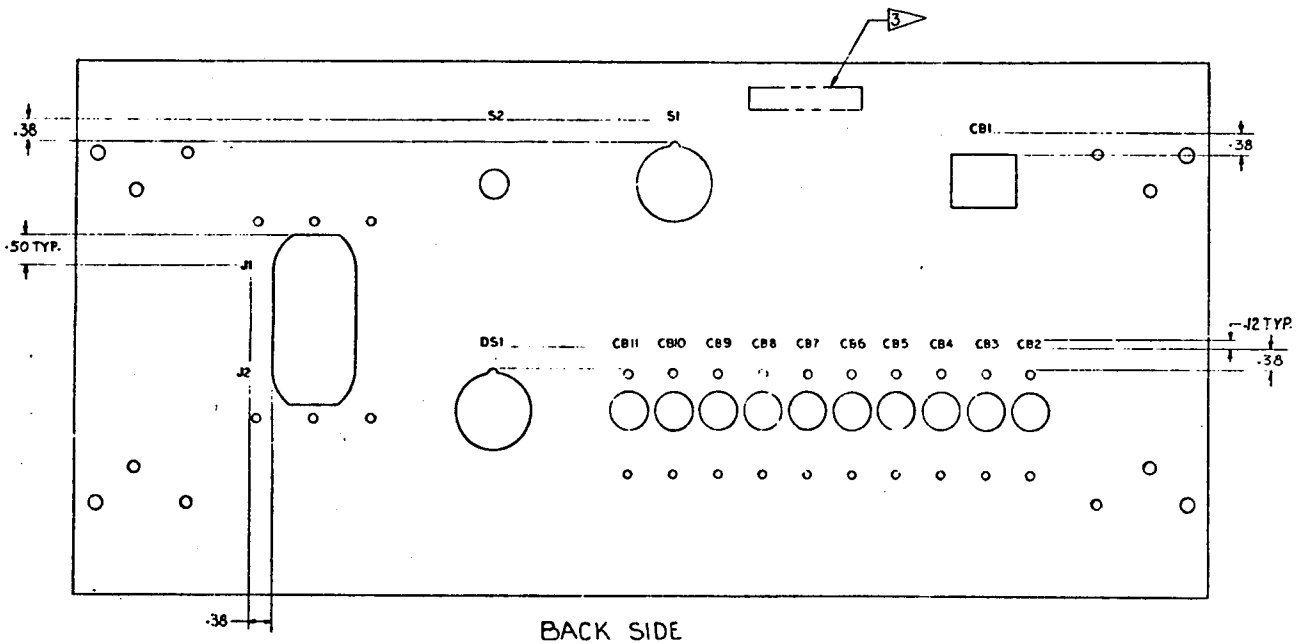

BACK SIDE

PART NO.

28	29	30	31	32	33	34	35	
20	21	22	23	24	25	26	27	
12	13	14	15	16	17	18	19	
4	5	6	7	8	9	10	11	
REV STATUS OF SHEETS				REV				
				SH	1	2	3	

SPECIFICATION NUMBER AND TYPE — NOTE — ITEM NO. — APPLIES TO

APPLICABLE IBM SPECIFICATIONS

IF "SOURCE CONTROL DRAWING" ONLY THE ITEM DESCRIBED ON THIS DRAWING WAS PROCURED FROM THE VENDOR(S) LISTED HEREON IS APPROVED BY IBM. GAITHERSBURG MD HUNTSVILLE AL OWEGO NY

FOR USE IN THE APPLICATION(S) SPECIFIED HEREON. AN INSTITUTE ITEM SHALL NOT BE USED WITHOUT PRIOR TESTING AND APPROVAL BY IBM OR BY (GOVERNMENT PROCURING ACTIVITY)

UNLESS OTHERWISE SPECIFIED DIMENSIONS AND TOLERANCES ARE IN INCHES AND APPLY TO THE FINISHED PART

TOLERANCE ON: 2 PLACE DEC. ± — 3 PLACE DEC. ± — ANGLES ±

MATL — HARD — CASE DEPTH — SURF. TR. AT

CONTR NO — FABRICATION — DATE — ISSUE CHK — DATE — STANDARD CHK — DATE — DESIGN APPROVAL — DATE — CHIEF ENGINEER (SPECIFY ACTIVITY) — DATE

IBM FEDERAL SYSTEMS DIVISION GAITHERSBURG MD HUNTSVILLE AL OWEGO NY

SIZE D — SCHEMATIC NO 20234 — DWG NO 7928813

SCALE — WT — SHEET 2

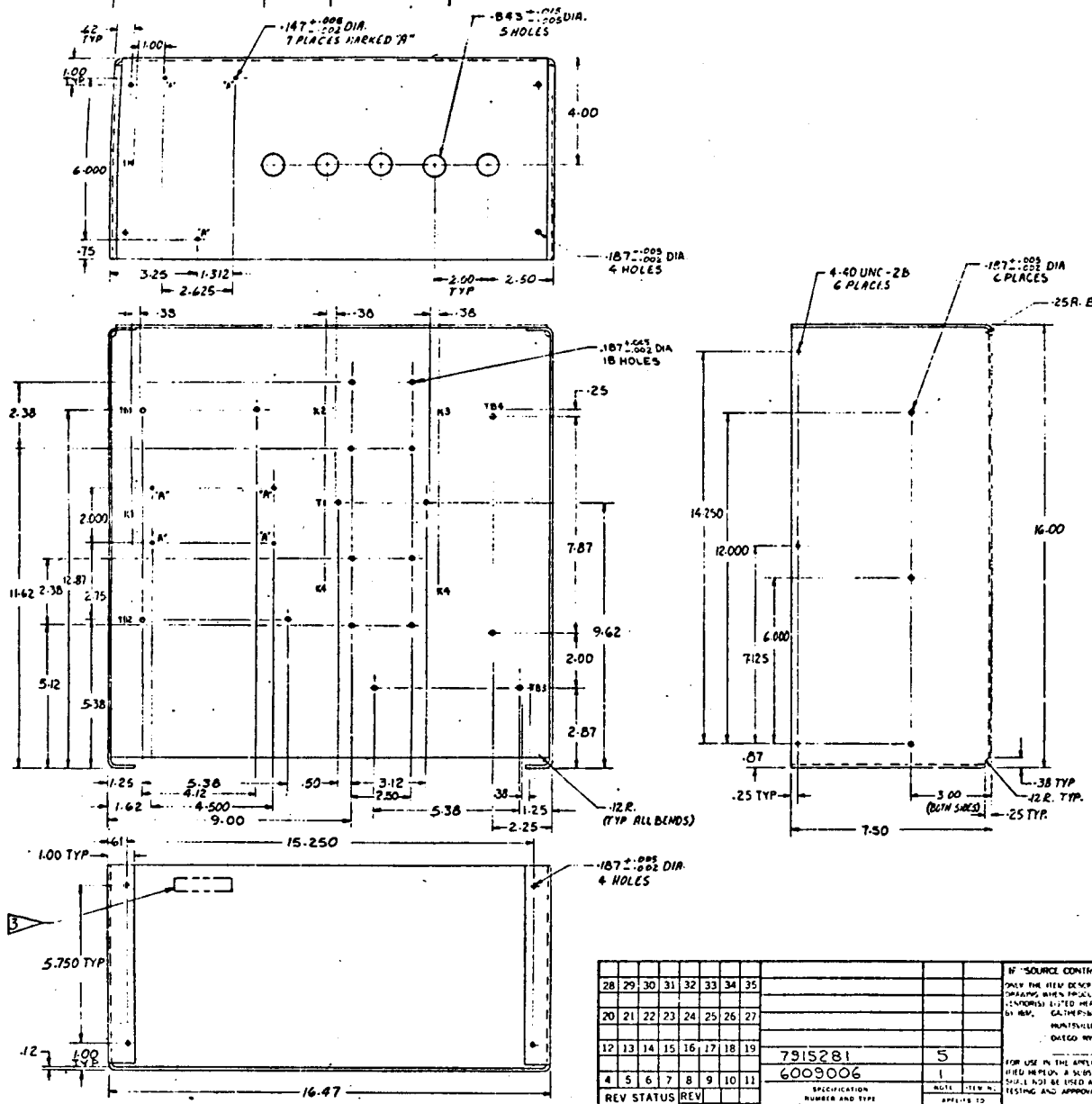

NOTES:

1. IBM SPEC 6009006 APPLIES.
2. INTERPRET DIMENSIONS PER MIL-STD-100.
3. IDENTIFY PER MIL-STD-130.
4. FINISH PER MIL-C-81706 CLASS 1A FORME METHOD OPTIONAL. APPLY PER MIL-C-5541.
5. MARK REF DES PER 7915281 TYPE, III CLASS 1.

PART NO.-1 SHOWN

28	29	30	31	32	33	34	35																
20	21	22	23	24	25	26	27																
12	13	14	15	16	17	18	19																
4	5	6	7	8	9	10	11																
REV STATUS OF SHEETS				REV																			
				SH	1	2	3																

SPECIFICATION NUMBER AND TYPE	NOTE	ITEM NO.
7915281		5
6009006		1

APPLICABLE IBM SPECIFICATIONS

APPLIES TO

IF "SOURCE CONTROL DRAWING" ONLY THE ITEM DESCRIBED ON THIS DRAWING WHEN PROCURED FROM THE VENDOR(S) LISTED HEREON IS APPROVED BY IBM, GAITHERSBURG, MD HUNTSVILLE, AL OWEGO, NY

FOR USE IN THE APPLICATION(S) SPECIFIED HEREON. A SUBSTITUTE ITEM SHALL NOT BE USED WITHOUT PROD TESTING AND APPROVAL BY IBM OR BY (GOVERNMENT PROCURING ACTIVITY)

UNLESS OTHERWISE SPECIFIED DIMENSIONS AND TOLERANCES ARE IN INCHES AND APPLY TO THE FINISHED PART

TOLERANCE ON: 2 PLACE DEC ± .02 | 3 PLACE DEC ± .010 | ANGLE ±

MATL AL ALY 5052-H32 PER FED SPEC QQ-A-250/8

CONTR NO NAS8-14000

PREPARATION 3/6/73

DESIGN CHK

DRAWING CHK

DESIGN APPROVAL

DESIGN APPROVAL INSPECTION ACTIVITY

IBM FEDERAL SYSTEMS DIVISION GAITHERSBURG, MD. HUNTSVILLE, AL

TITLE CHASSIS

SIZE D | CODE IDENT NO 20234 | DWG NO 7928811

SCALE 1/2

[ ] APPROVED [ ] SUGGESTED SOURCE(S) OF SUPPLY

VENDOR	VENDOR ADDRESS	VENDOR CODE	VENDOR CAT OR PN

REVISIONS

CHG	ENGRG NOTICE	LTR	DESCRIPTION	DATE	APPROVED
			PRE-RELEASE		

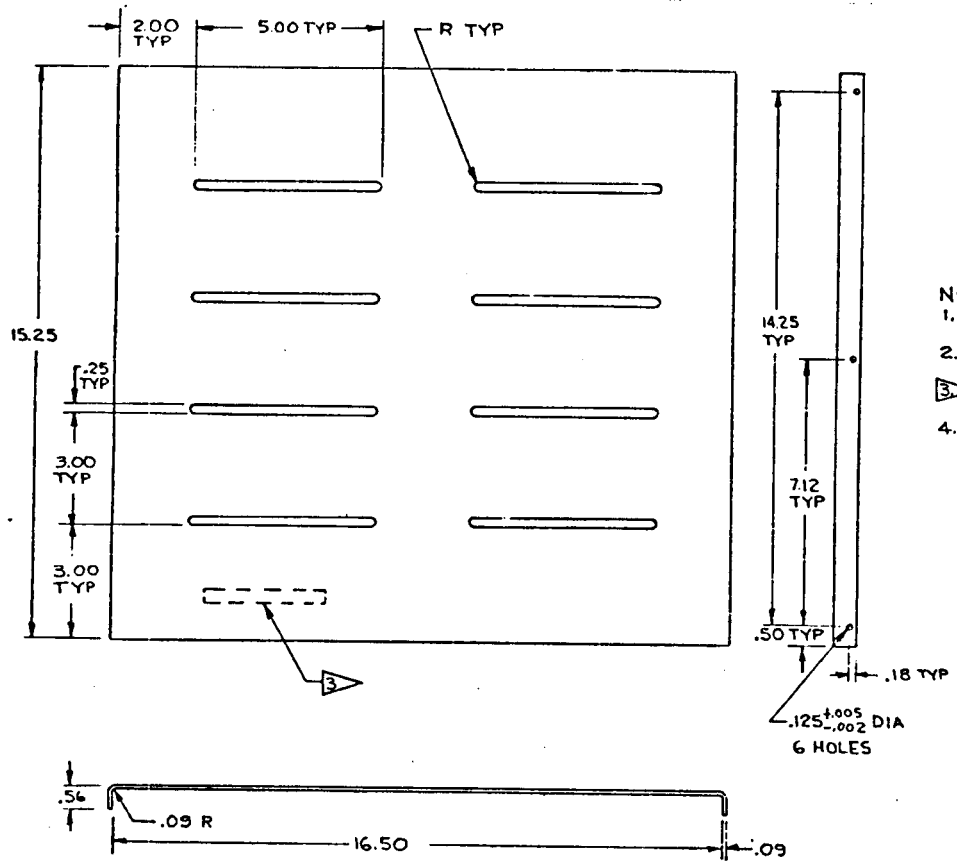

NOTES

1. IBM SPEC 6009006 APPLIES
2. INTERPRET DIMENSIONS PER MIL-STD-100
3. IDENTIFY PER MIL-STD-130
4. FINISH PER MIL-C-81706 CLASS 1A, FORM & METHOD OPTIONAL. APPLY PER MIL-C-5541

PART NO. -1 SHOWN

28	29	30	31	32	33	34	35	
20	21	22	23	[illegible]	[illegible]	[illegible]	26	27
12	13	14	15	16	[illegible]	18	19	
4	5	6	7	8	9	10	11	
REV STATUS				REV				
OF SHEETS				SH	1	2	3	

SPECIFICATION NUMBER AND TYPE	NOTE	ITEM NO
6009006	1	

APPLICABLE IBM SPECIFICATIONS

IF "SOURCE CONTROL DRAWING" — ONLY THE ITEM DESCRIBED ON THIS DRAWING WHEN PROCURED FROM THE VENDOR(S) LISTED HEREON IS APPROVED BY IBM. [ ] GAITHERSBURG, MD [ ] HUNTSVILLE, AL [ ] OWEGO, NY [ ] _____

FOR USE IN THE APPLICATION(S) SPECIFIED HEREON. A SUBSTITUTE ITEM SHALL NOT BE USED WITHOUT PRIOR TESTING AND APPROVAL BY IBM OR BY _____ (GOVERNMENT PROCURING ACTIVITY)

UNLESS OTHERWISE SPECIFIED DIMENSIONS AND TOLERANCES ARE IN INCHES AND APPLY TO THE FINISHED PART

TOLERANCE ON: 2 PLACE DEC ±.02 | 3 PLACE DEC ± | ANGLES ±

MATL ALALY 5052-H32 PER FED SPEC QQ-A-250/8

HARD | CUT LENGTH | CUT TIME

CONTR NO NAS 8-14000

PREPARATION DATE 6/16/73 Drewlight

DESIGN CHK DATE

DRAWING CHK DATE

DESIGN APPROVAL DATE

OTHER APPROVAL (SPECIFY ACTIVITY) DATE

IBM FEDERAL SYSTEMS DIVISION [ ] GAITHERSBURG, MD [X] HUNTSVILLE, AL [ ] OWEGO, NY

TITLE COVER, CHASSIS

SIZE	CODE IDENT NO	DWG NO
C	20234	7928811

SCALE 1/2 WT SHEET

APPROVED	SUGGESTED	SOURCE(S) OF SUPPLY		
VENDOR	VENDOR ADDRESS	VENDOR CODE	VENDOR CAT. OR PN	

REVISIONS					
CHG	ENGRG NOTICE	LTR	DESCRIPTION	DATE	APPR'D
		+	PRE RELEASE		

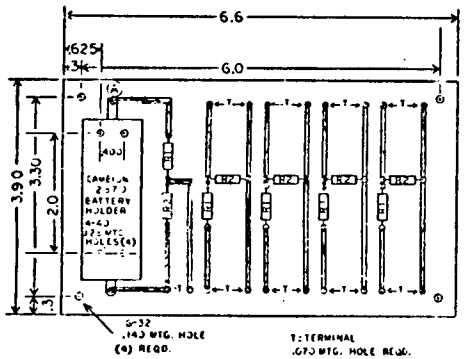

COMPONENT MTG. HOLES ARE .032

DARK LINES ARE PRINTED CIRCUIT PATTERN

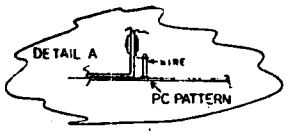

PART NO.

28	29	30	31	32	33	34	35
20	21	22	23	24	25	26	27
12	13	14	15	16	17	18	19
4	5	6	7	8	9	10	11
REV STATUS OF SHEETS				REV SH	1	2	3

SPECIFICATION NUMBER AND TYPE — NOTE — ITEM NO — APPLIES TO

APPLICABLE IBM SPECIFICATIONS

IF "SOURCE CONTROL DRAWING": ONLY THE ITEM DESCRIBED ON THIS DRAWING WHEN PROCURED FROM THE VENDOR(S) LISTED HEREON IS APPROVED BY IBM: ☐ GAITHERSBURG MD ☐ HUNTSVILLE, AL ☐ ONEGO, NY

FOR USE IN THE APPLICATION(S) SPECIFIED HEREON. A SUBSTITUTE ITEM SHALL NOT BE USED WITHOUT PRIOR TESTING AND APPROVAL BY IBM OR BY (GOVERNMENT PROCURING ACTIVITY)

UNLESS OTHERWISE SPECIFIED DIMENSIONS AND TOLERANCES ARE IN INCHES AND APPLY TO THE FINISHED PART

TOLERANCE ON: 2 PLACE DEC ± 3 PLACE DEC ± ANGLE ±

MATL — HARD — CASE DEPTH — SURF TREAT

CONTR NO — PREPARATION — DATE — DSGN CHK — DRAWING CHK — DESIGN APPROVAL — OTHER APPROVAL (SPECIFY ACTIVITY)

IBM FEDERAL SYSTEMS DIVISION — GAITHERSBURG MD — ONEGO N.Y. — HUNTSVILLE AL

TITLE CALIBRATION AND SCALING CIRCUIT

SIZE D — CODE IDENT NO — DWG NO 7928816

SCALE — WT — SHEET 2 of 1