~~CONFIDENTIAL~~

Z65·11841

Copy No. 19 Accession No. 24768

SID 63-616

DATA REPORT FOR TESTS OF APOLLO DYNAMIC STABILITY MODEL (FD-3) TO DETERMINE COMMAND MODULE STABILITY AND LAUNCH ESCAPE VEHICLE FLOW SEPARATOR EFFECTS IN THE MACH RANGE FROM 1.5 TO 10.0

NAS9-150

(U)

July 1963

CLASSIFICATION CHANGE

To UNCLASSIFIED
By authority of GDS-EO 11652
Changed by L. Shirley Date 12/31/72
Classified Document Master Control Station, NASA
Scientific and Technical Information Facility

This document contains information affecting the national defense of the United States within the meaning of the Espionage Laws. Title 18 U.S.C. Section 793 and 794. Its transmission or revelation of its contents in any manner to an unauthorized person is prohibited by law.

NORTH AMERICAN AVIATION, INC.
SPACE and INFORMATION SYSTEMS DIVISION

[redacted]

~~CONFIDENTIAL~~ [redacted] ONLY

[redacted]

FOREWORD

The FD-3 tests were conducted under NASA Apollo contract NAS9-150 26 to 30 November 1962 and 4 and 5 January 1963 in the AEDC VKF Tunnel A and 11 and 12 December 1962 in Tunnel C.

This report was prepared by C. E. Mitchell and C. L. Berthold of the Wind Tunnel Projects Group, Los Angeles Division of North American Aviation, Incorporated.

[redacted]

CONFIDENTIAL

ABSTRACT

Dynamic stability data are presented in both plotted and tabular form for wind tunnel tests of 0.059- and 0.045- scale Apollo models (FD-3) of the launch escape vehicle (LEV) and the command module (C/M) entry configuration. The majority of data were obtained at proposed flight attitudes with the oscillation center on the vehicle design center of gravity at Mach numbers 1.5 to 6.0 for the LEV model (flow separator on and off) and 2.5 to 10.0 for the C/M entry configuration. Additional data are presented for the LEV model at several Mach numbers with the oscillation center on the model axis of symmetry and for the C/M model at angles of attack from -15 degrees to +50 degrees at Mach number 10.

Tunnel operating conditions, configuration description, computation equations, and typical model and installation photographs are also included.

CONFIDENTIAL

CONTENTS

Section		Page
I	INTRODUCTION	1
II	DISCUSSION	3
III	MODEL DESCRIPTION	5
	Model Nomenclature	6
	Full-Scale Dimensions	6
IV	TEST PROCEDURE	9
	Test Nomenclature	9
	Model Installation	11
	Instrumentation	11
	Data Reduction and Constants	11
	Data Accuracy	12
V	REFERENCES	13
	APPENDIXES	
	A. PLOTTED DATA	A-1
	B. TABULATED DATA	B-1

ILLUSTRATIONS

Figure		Page
1	Model Assembly - Command Module - 0.045 Scale	15
2	Model Assembly - Launch Escape System - 0.059 Scale	17
3	Model Assembly - Calibration Body for AEDC Balance Checkout - 0.045 Scale	19
4	Launch Escape Vehicle	21
5	Escape Rocket - E_{56}	22
6	Escape Tower Structure - T_{23}	23
7	Command Module - C_{33}	24
8	Command Module - C_2	25
9	Installation - Command Module - 0.045 and 0.059 Scale	27
10	Launch Escape Configuration - $E_{55}T_{23}C_{33}$ (Disc Off)	29
11	Launch Escape Configuration - $E_{56}T_{23}C_{33}$ (Disc On)	30
12	Command Module Entry Configuration - C_2 (Six Models)	31
13	Typical Installation - Launch Escape Configuration in Tunnel A	32
14	Typical Installation - Command Module Entry Configuration in Tunnel A	33

[redacted]

I. INTRODUCTION

Dynamic stability tests were conducted on the Apollo FD-3 models in the AEDC VKF Tunnels A and C. This investigation was made to determine dynamic stability characteristics of the launch escape vehicle with flow separator disc on and off and of the command module entry configuration in the supersonic speed range.

The LEV configurations were tested at Mach numbers 1.50, 2.00, 3.00, 4.01, and 5.98 in the angle-of-attack range from -5 to +15 degrees with the oscillation center on the design center of gravity. These configurations were also tested at Mach numbers 2.00 and 5.99 in the angle-of-attack range from -4 to +10 degrees with the oscillation center on the model axis of symmetry. The C/M configuration was tested at Mach numbers 2.49, 3.00, 4.01, 5.99, and 10.18 in the angle-of-attack range from -15 to +164 degrees with the oscillation center on the design center of gravity. Reynolds numbers, based on maximum model diameter, were in the order of 1.0×10^6 to 6.0×10^6.

All derivatives were measured, for oscillations in the pitch plane only, with the AEDC flexure-mounted, amplitude-stabilized, forced-oscillation balance system having a maximum amplitude of ±3.0 degrees about the oscillation center.

This report presents basic wind tunnel data in order to make the test results available at the earliest possible date. Analysis of results will be reported later under separate cover.

II. DISCUSSION

The two objectives of this test were to obtain dynamic stability data on C/M and LEV configurations with the balance oscillation center on the design center of gravity of the full-scale vehicle and to determine the effects of a flow separator disc at the base of the escape rocket.

Several techniques are currently available for measuring dynamic stability derivatives of models in wind tunnels. This test was conducted using AEDC's small amplitude forced oscillation balance. This balance incorporates a cross-flexure pivot and an electromagnetic shaker motor which forces the model to oscillate in a single degree of freedom while measurements are made of the angular displacement and the input torque to the system. A more complete and detailed description of this system may be found in Reference 1.

Due to physical limitations involved in locating the balance so that the balance oscillation center coincides with the LEV, the apex of the C/M was modified within the confines of the tower legs (Figure 8). In a previous test, the above apex alteration was simulated and indicated negligible aerodynamic effects at these small angles of attack. The LEV configuration was also tested with an oscillation center on the model axis of symmetry to simulate a yaw oscillation condition. It was impossible to obtain usable high Reynolds number data on the LEV with the flow separator disc on, at several Mach numbers, due to an apparent unstable condition which exceeded the load capabilities of the balance. Some data were re-run through a limited angle range at low Reynolds numbers. (See data plots.)

Six C/M models were constructed for this test so that an angle of attack range of -10 to +190 degrees could be obtained. Due to unforeseen difficulties, however, tunnel test time did not permit testing of all models. Data were obtained only at angles of attack from 130 to 150 degrees for Mach numbers 2.49, 3.00, and 4.01; 130 to 164 degrees for Mach number 5.99; and -15 to 50 degrees and 100 to 150 degrees for Mach number 10.18. At Mach number 5.99, it was deemed advantageous to have data near 160 degrees angle of attack. Since there was no model constructed for this range, the 170 to 190 degree model was rolled 180 degrees about the balance axis, thus making it possible to test in the 160 to 180 degree model range.

The plotted and tabular data are presented in Appendixes A and B in the form of damping-in-pitch coefficients ($C_{m_g} + C_{m_{\dot{\alpha}}}$) for the C/M and LEV configurations. The plotted data present these coefficients as a

function of angle of attack and in one case as a function of Reynolds number. The coefficients shown on the plots are average values taken from the appropriate page or pages of tabulated data for the indicated condition.

Complete data were not obtained for all of the originally requested conditions, due to the difficulty in obtaining data on some of the unstable configurations and due to time lost while making repairs to damaged balance drive flexures.

III. MODEL DESCRIPTION

The FD-3 models consisted of six 0.045-scale command modules and one 0.059-scale module with attached launch escape system. The six command modules had identical external contours, but each had a different angle between the model axis of symmetry and centerline of balance (-5, 35, 75, 115, 135, and 175 degrees) so that an angle-of-attack range of -10 to 190 degrees could be obtained. Each module was constructed so that the oscillation center of balance was on the design center of gravity of the full-scale vehicle.

The apex of the command module for the LEV configuration was modified within the confines of the tower legs to allow the oscillation center of the balance to be correctly positioned on the design center of gravity of the full-scale vehicle. This configuration had a 10-degree balance axis to model axis angle and was capable of being rolled 180 degrees about the balance centerline so that angles of attack from -15 to +25 degrees could be obtained (Figure 9). The model was constructed so that two oscillation centers could be used; one on the model axis of symmetry and the other on the design center of gravity. A removable flow separator disc and fairing allowed disc on and off testing.

All models were constructed of Armco 17-4 PH CRES steel. Their structural integrity is investigated in Reference 5.

The model nomenclature used during these tests is presented in the following tabulation.

MODEL NOMENCLATURE

Symbol	Description	Drawing No.	Figure
E_{55}	Escape motor	7121-01075 -21, -10, -19	5
E_{56}	Escape motor, flared skirt with 65-inch diameter flow separator disc and fairing from disc to skirt	7121-01075 -25, -23, -10, -19	5
T_{23}	Tower structure	7121-01075 -9	6
C_2	Command module	7121-01074 7121-01095	7
C_{33}	Command module, apex altered to correctly position balance	7121-01075 -2, -3, -6, -7	8

FULL-SCALE DIMENSIONS

Full-scale dimensions of the components represented in the tests are given in the following listing.

Escape Motor, E_{55}

Total length	279.64 in.
Length of jettison motor	48.00 in.
Diameter	26.00 in.
Nose radius	2.00 in.
Nose included angle	30.00 deg
Skirt base diameter	52.73 in.
Skirt flare angle	35.00 deg
Diameter of ring forward of skirt	28.89 in.

[redacted]

Escape Motor, E_{56}

Same as E_{55}, with flow separator disc located 18.0 in. from base of rocket motor and an additional fairing extending from aft end of disc to flared skirt.

Flow separator disc diameter	65.00 in.
Flow separator disc thickness	1.25 in.
Fairing diameter	51.07 in.

Tower, T_{23}

Total length	114.63 in.
Diameter of longitudinal members (4 members)	3.51 in.
Diameter of cross braces (8 braces)	2.51 in.
Diameter of diagonal braces (20 braces)	2.51 in.
Circular truss:	
Diameter of material	2.51 in.
Diameter of circle	23.00 in.
Distance between attach points at command module:	
Horizontal plane	50.66 in.
Vertical plane	46.85 in.
Distance between attach points at base of rocket	36.07 in.

Command Module, C_2

Maximum diameter	154.0 in.
Radius of spherical blunt end	184.8 in.
Corner radius	7.7 in.
Nose cone semi-angle	33.0 deg
Nose cone vertex radius	9.152 in.

Command Module, C_{33}

Same as C_2 except the vertex area within the confines of the tower structure has been altered to accommodate the AEDC balance.

[redacted]

IV. TEST PROCEDURE

TEST NOMENCLATURE

The symbols used in these tests are defined as follows:

A	Reference area (base area), ft^2
C_m	Pitching-moment coefficient, pitching moment/ $q_\infty Ad^2$
$C_{m_q} + C_{m_{\dot{\alpha}}}$	Damping-in-pitch parameter, per radian
C/M	Command module entry configuration
d	Reference length (base diameter), ft
I	Model moment of inertia about the pivot axis, slug-ft^2
LEV	Launch escape vehicle configuration
M_∞	Free-stream Mach number
M_θ	Angular restoring-moment parameter, ft-lb/rad
$M_{\dot{\theta}}$	Angular viscous-damping parameter, ft-lb-sec/rad
$M'_{(\dot{\theta}/\omega)}$	Aerodynamic damping-moment parameter, ft-lb/rad $$M'_{(\dot{\theta}/\omega)} = M_{(\dot{\theta}/\omega)_W} - M_{(\dot{\theta}/\omega)_V}$$
q	Angular velocity, rad/sec
q_∞	Free-stream dynamic pressure, lb/ft^2
Re	Reynolds number based on model base diameter
T	Input torque, ft-lb

t	Time, sec
V_∞	Free-stream velocity, ft/sec
α	Angle of attack, rad or deg
$\dot{\alpha}$	Time rate of change of angle of attack, rad/sec
θ	Angular displacement, rad or deg
$\dot{\theta}$	Angular velocity, rad/sec
$\ddot{\theta}$	Angular acceleration, rad/sec^2
ω	Angular frequency, rad/sec
$\omega d/2V_\infty$	Reduced frequency parameter, rad

Subscripts

o	Maximum conditions
v	Vacuum conditions
w	Wind-on conditions

MODEL INSTALLATION

The FD-3 models were installed in tunnels A and C on the AEDC small-amplitude, forced-oscillation balance and special sting that contained a shaker motor for actuating the model (AEDC No. 3301214). This sting adapted to a horizontal angle-of-attack sector in the A tunnel and a vertical model support strut in the C tunnel. Figure 9 is the installation drawing and Figures 13 and 14 are photographs of installations typically employed in both tunnels.

INSTRUMENTATION

The AEDC small-amplitude (±3 degrees), forced-oscillation balance was used to measure angular displacement of model and input torque to the system as the model was forced to oscillate in a single degree of freedom. This balance is sting-mounted and incorporates a cross-flexure pivot.

In operation, the cross flexure pivot is forced to oscillate through a linkage by an electromagnetic shaker motor located in the aft portion of the sting. The model angular displacement is measured with a strain-gage bridge mounted on one of the cross flexures; the input torque to the system, supplied by the shaker motor, is measured with a strain-gage bridge mounted on the torque member. The system is equipped with a feedback control for testing dynamically stable and unstable configurations.

DATA REDUCTION AND CONSTANTS

All data were reduced by AEDC to damping-in-pitch coefficient form as referred to the body system of axes originating at the oscillation center. The following equations and methods were used as outlined in References 1 and 2:

The equation of motion of a forced oscillation, one-degree-of-freedom system may be expressed as

$$I\ddot{\theta} - M_{\dot{\theta}}\dot{\theta} - M_{\theta}\theta = T \cos \omega t$$

The damping-in-pitch data were obtained at the undamped natural frequency of the model balance system whereby the inertia term ($I\ddot{\theta}$) exactly balances the restoring moment term ($M_{\theta}\theta$) in the above equation. Thus, the forcing torque is precisely equal to the damping torque of the system for constant amplitude motion. The method for computing the dimensionless damping-in-pitch derivatives from the constant amplitude, forced-oscillation tests is indicated by the following expressions:

$$M_{\dot{\theta}}\,\dot{\theta} = T \cos \omega t \quad \text{(at the undamped natural frequency of the system)}$$

$$M_{\dot{\theta}}\,\theta_o\,\omega = T$$

$$M_{(\dot{\theta}/\omega)} = T/\theta_o$$

$$M'_{(\dot{\theta}/\omega)} = M_{(\dot{\theta}/\omega)_w} - M_{(\dot{\theta}/\omega)_v}$$

$$C_{m_q} + C_{m_{\dot{\alpha}}} = M'_{(\dot{\theta}/\omega)} \cdot 2V_\infty / q_\infty\, Ad^2\, \omega_w$$

The expression for obtaining the aerodynamic damping parameter $M'_{(\dot{\theta}/\omega)}$ is based on the premise that the structural damping of a flexure pivot varies inversely with the frequency of oscillation (Reference 6).

The following were constants for the test:

	C/M	LEV
d =	0.577 ft	0.757 ft
A =	0.261 ft^2	0.450 ft^2

DATA ACCURACY

Bench calibrations of the balance were made before and after each tunnel test period, and check calibrations were made before and after each run to determine if any changes in calibration factors had occurred. In addition, structural damping values were obtained at vacuum conditions before tunnel tests were made to evaluate the still-air damping contribution.

Using known displacements and moments, transducer calibration factors were obtained for the model displacement and input torque. Resulting errors in either parameter were within ±0.75 percent and ±1.0 percent of the maximum values of the range in which each parameter was calibrated for the C/M and LEV, respectively.

Considering the uncertainties in the system and the fact that the aerodynamic damping parameter is determined as a function of the difference in wind-on and vacuum conditions, the estimated maximum uncertainties in $C_{m_q} + C_{m_{\dot{\alpha}}}$ are ±0.25 for the C/M and ±0.50 for the LEV.

V. REFERENCES

1. A Forced Oscillation Balance System for the von Karman Facility 40- by 50-inch Supersonic Tunnel. AEDC-TN-61-63 (May 1961).

2. Dynamic Stability Tests of a 0.045-Scale Apollo Command Module at Mach Numbers 2.5 Through 6.0 and Mach Number 10. AEDC-TDR-63-52 (March 1963).

3. Dynamic Stability Tests of a 0.059-Scale Apollo Launch Escape Vehicle Model at Mach Numbers 1.5 Through 6.0. AEDC-TDR-63-65 (April 1963).

4. Pretest Report for Tests of Apollo FD-3 Dynamic Stability Models in the AEDC VKF Tunnels A and C. NAA S&ID, SID 63-1299 (2 November 1962).

5. Structural Analysis of the Apollo 0.045- and 0.059-Scale Dynamic Stability Models (FD-3). NAA S&ID, SID 62-139 (10 December 1962).

6. Structural Damping in Dynamic Stability Testing. AEDC-TR-59-5 (February 1959).

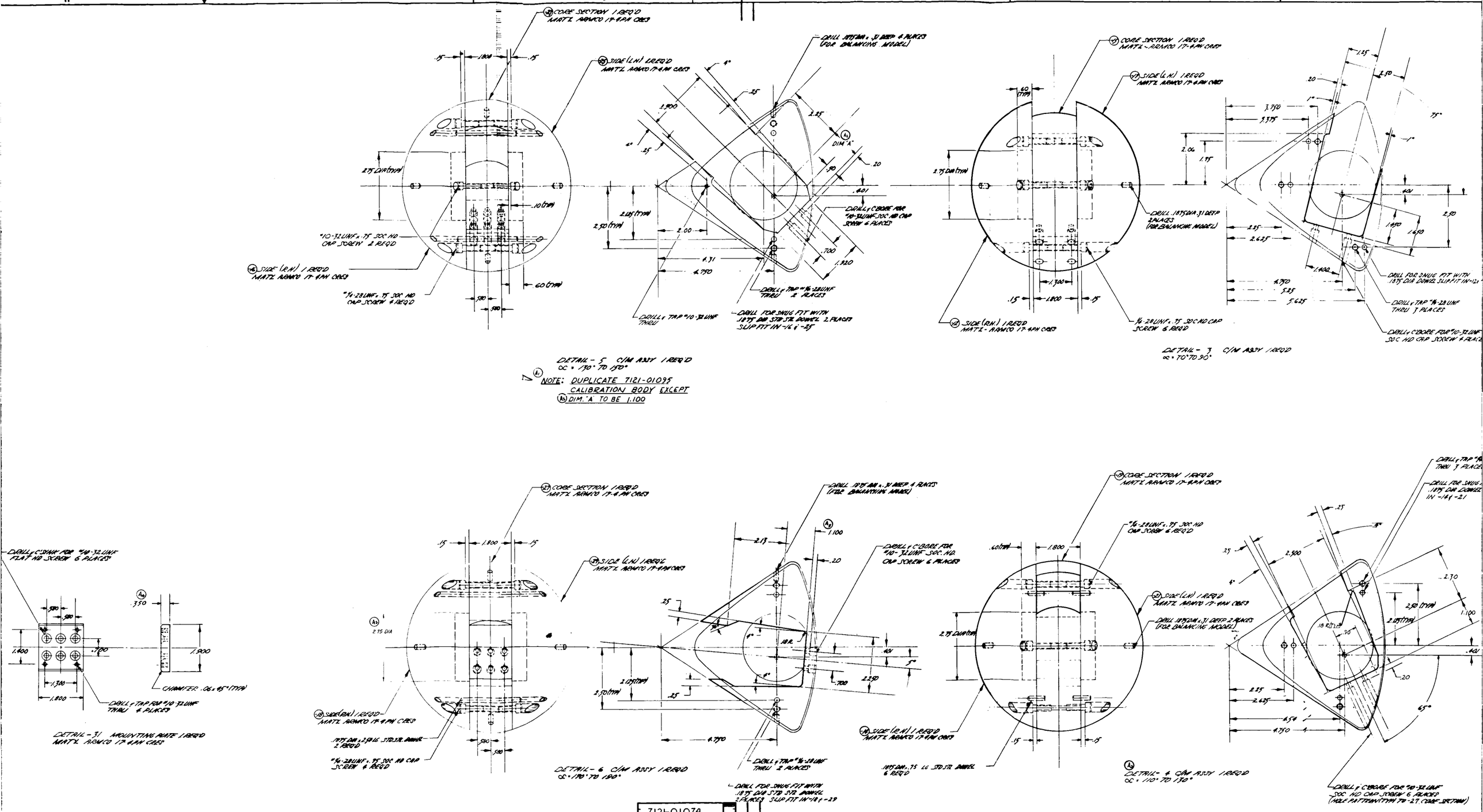

DETAIL - 5 C/M ASSY 1 REQ'D
α = 130° TO 150°
NOTE: DUPLICATE 7121-01095 CALIBRATION BODY EXCEPT DIM. "A" TO BE 1.100
DETAIL - 3 C/M ASSY 1 REQ'D
α = 70° TO 90°
DETAIL - 31 MOUNTING PLATE 1 REQ'D MAT'L ARMCO 17-4PH CRES
DETAIL - 6 C/M ASSY 1 REQ'D
α = 170° TO 190°
DETAIL - 4 C/M ASSY 1 REQ'D
α = 110° TO 130°
7121-01074

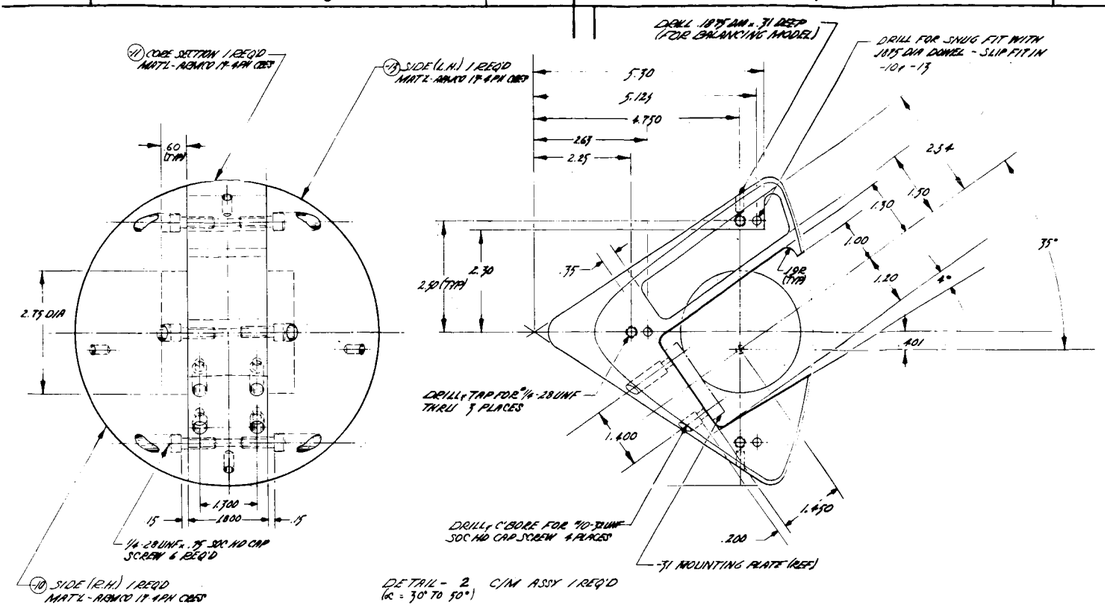

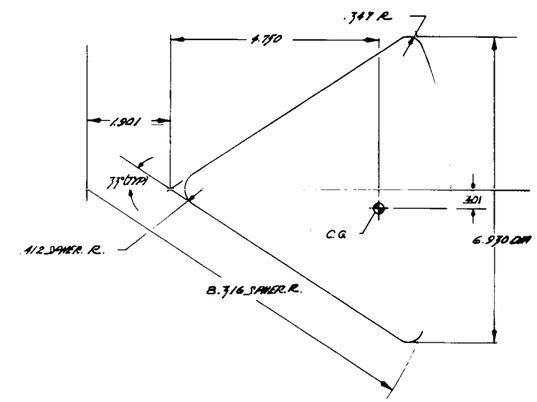

CONFIGURATION DIMENSIONS
(TYPICAL ALL MODEL)

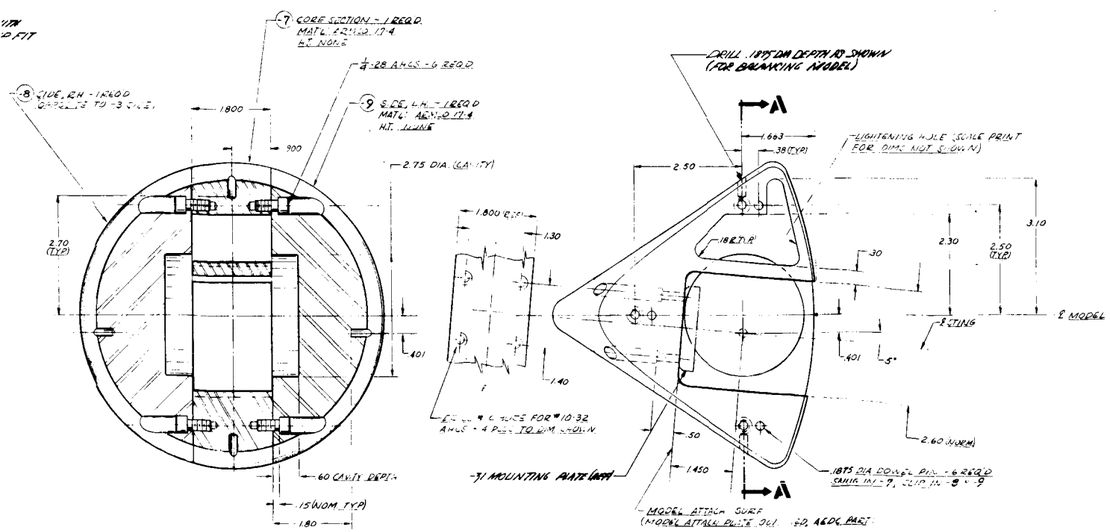

2-ALL SIDE VIEWS SHOWN WITH L.H. SIDES REMOVED FOR CLARITY.

(7) 1. DO NOT HEAT TREAT MODEL PARTS

NOTES: UNLESS OTHERWISE SPECIFIED

REVISIONS				
SYM	ZONE	DESCRIPTION (1. MAY BE REWORKED 2. CANNOT BE REWORKED 3. RECORD CHANGE 4. NOW SHOP PRACTICE 5. PARTS MADE OK)	DATE	APPROVED
A				
1	9	DELETED DETAIL & ADDED NOTE	10-10-62	F. DUNN
2	10	ADDED 2.75 DIA x .40 DEEP POCKET IN -29 & -18.		
3	4,7	CHANGED CUT-OUT & HOLE PATTERNS IN - 4 ASSY		
4	11	INCREASED THICKNESS OF -31 MNTG PLATE TO .350 (WAS .300)		
5	8	CHANGED CUT-OUT IN -27 DIM 1.100 (WAS 1.150)		

Figure 1. Model Assembly - Command Module - 0.045 Scale

QTY REQD	QTY REQD	QTY REQD	QTY REQD	QTY REQD	QTY REQD	PART OR IDENTIFYING NO.	NOMENCLATURE OR DESCRIPTION	CODE IDENT	MATERIAL	DATA: SPECIFICATION SIZES, NOTES, SUPPLIERS	ZONE	LINE NO.
												045
												044
												043
												042
												041
												040
												039
												038
												037
												036
												035
												034
												033
												032
												031
												030
												029
												028
												027
												026
												025
												024
												023
												022
												021
												020
												019
												018
												017
												016
												015
												014
												013
												012
												011
												010
												009
												008
												007
												006
												005
												004
												003
												002
												001

LIST OF MATERIAL OR PARTS LIST

ITEM	QTY	MODEL REQD PER END ITEM	7121-01071 NEXT USING DRAWING	END ITEM NO.	THRU EFFECTIVE ON

APPLICATION (USAGE) DATA

HEAT TREAT 0

FINISH

MODEL FACTOR = .045

UNLESS OTHERWISE SPECIFIED DIMENSIONS ARE IN INCHES. TOLERANCES ON: DECIMALS .XX = ± .03, .XXX = ± .010, ANGLES ± 30'. HOLES NOTED "DRILL" .013 THRU .040 +.001 -.001; .041 THRU .130 +.002 -.001; .131 THRU .229 +.003 -.001; .230 THRU .500 +.004 -.001; .501 THRU .750 +.005 -.001; .751 THRU 1.000 +.007 -.001; 1.001 THRU 2.000 +.010 -.001

DO NOT SCALE PRINT

DR. BY Arthur J. Duke 10/9/62

CHK. BY

APPROVED BY

NORTH AMERICAN AVIATION, INC.
SPACE and INFORMATION SYSTEMS DIVISION
12214 LAKEWOOD BLVD. DOWNEY, CALIFORNIA

MODEL ASSY - APOLLO FD-3 (0.045 SCALE COMMAND MODULE)
A.E.D.C. TUNNEL A & C

CODE IDENT NO. 03953 | SIZE J | 7121 01074

SCALE FULL | WEIGHT | SHEET

7121-01074

7121-01074

7121-01074

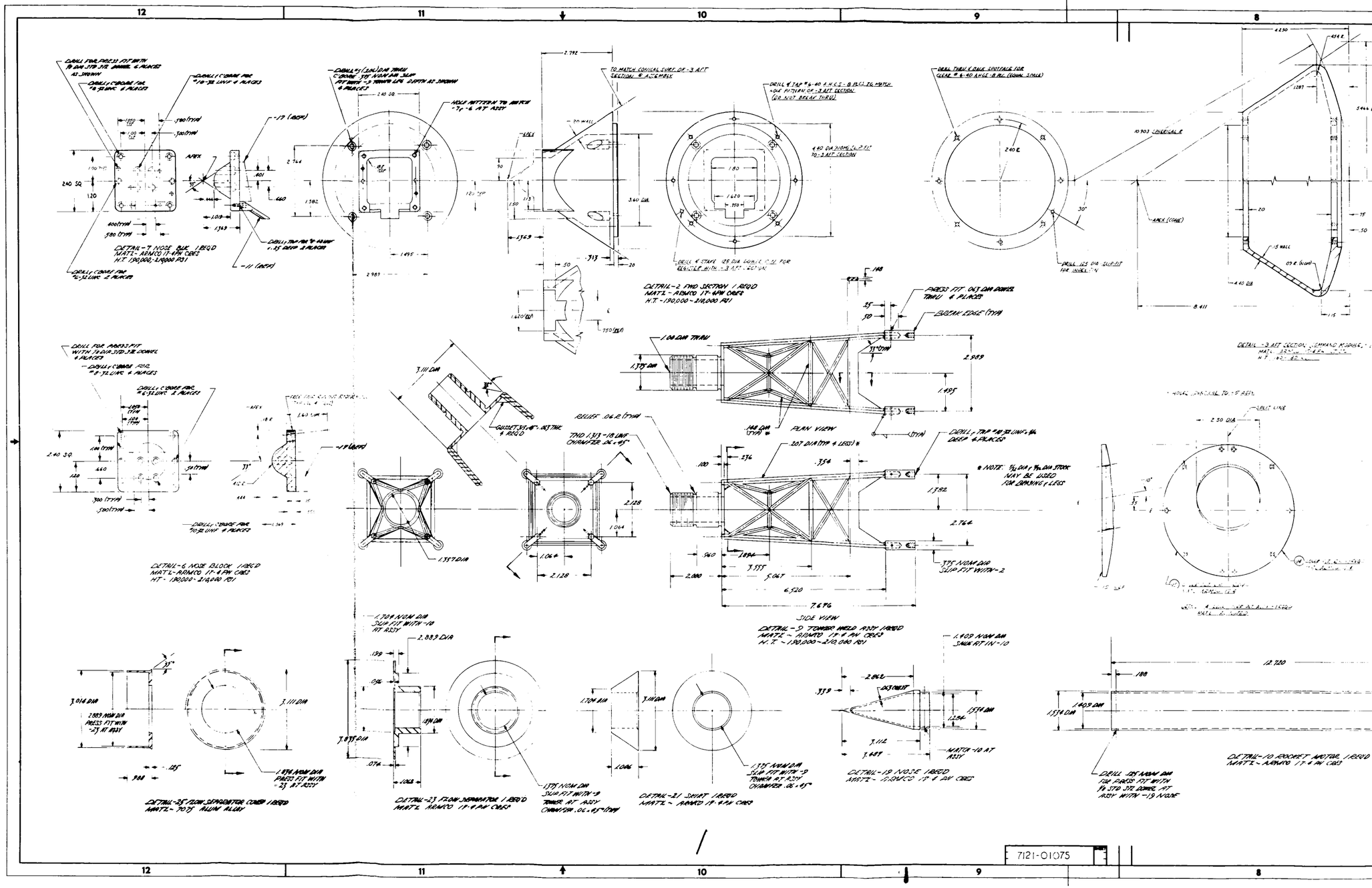
DETAIL-7 NOSE BLK 1 REQD
MAT'L - ARMCO 17-4PH CRES
H.T. 190,000-210,000 PSI
DETAIL-2 FWD SECTION 1 REQD
MAT'L - ARMCO 17-4PH CRES
H.T. -190,000-210,000 PSI
DETAIL-3 AFT SECTION
DETAIL-6 NOSE BLOCK 1 REQD
MAT'L-ARMCO 17-4PH CRES
HT - 190,000-210,000 PSI
PLAN VIEW
SIDE VIEW
DETAIL-9 TOWER WELD ASSY 1 REQD
MAT'L - ARMCO 17-4 PH CRES
H.T. - 190,000-210,000 PSI
DETAIL-25 FLOW SEPARATOR COVER 1 REQD
MAT'L- 7075 ALUM ALLOY
DETAIL-23 FLOW SEPARATOR 1 REQ'D
MAT'L ARMCO 17-4 PH CRES
DETAIL-21 SKIRT 1 REQD
MAT'L - ARMCO 17-4 PH CRES
DETAIL-19 NOSE 1 REQD
MAT'L - ARMCO 17-4 PH CRES
DETAIL-10 ROCKET MOTOR 1 REQD
MAT'L - ARMCO 17-4 PH CRES
7121-01075

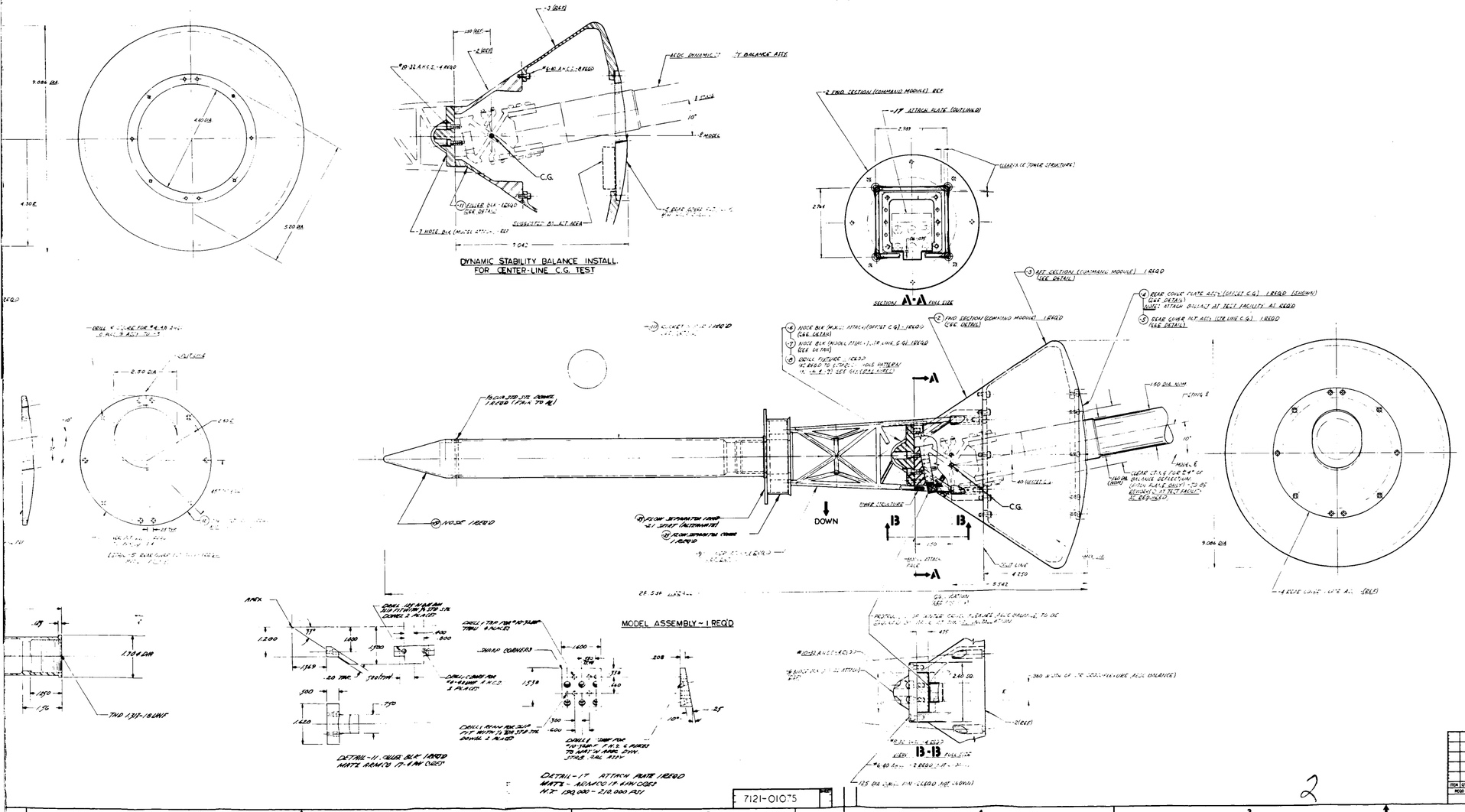

Figure 2. Model Assembly - Launch Escape System - 0.059 Scale

REVISIONS

SYM	ZONE	DESCRIPTION	DATE	APPROVED
		1. MAY BE REWORKED 2. REQUIRED CHANGE 3. CANNOT BE REWORKED 4. NOW SHOP PRACTICE 5. PARTS MADE OK		
A	B	1 DEVISED BALANCING IN-P TOWER ASSY	10-3-66	PRYOR

QTY	QTY	QTY	QTY	QTY	QTY	PART OR IDENTIFYING NO.	NOMENCLATURE OR DESCRIPTION	CODE IDENT	MATERIAL	DATA SPECIFICATION SIZES, NOTES, SUPPLIERS	ZONE	LINE NO.
									DWG NO.	7121-01075		

LIST OF MATERIAL OR PARTS LIST

ITEM	QTY	MODEL REQD PER END ITEM	NEXT USING DRAWING	END ITEM NO.	THRU EFFECTIVE ON

APPLICATION (USAGE) DATA

HEAT TREAT NOTED

FINISH

MODEL FACTOR = .059

UNLESS OTHERWISE SPECIFIED DIMENSIONS ARE IN INCHES. TOLERANCES ON: DECIMALS .XX = ±.05 .XXX = ±.030 ±30' ANGLES HOLES NOTED "DRILL" .013 THRU .040 +.001 -.000 .041 THRU .130 +.002 -.000 .131 THRU .230 +.003 -.000 .231 THRU .800 +.004 -.000 .801 THRU .750 +.005 -.000 .751 THRU 1.000 +.007 -.000 1.001 THRU 2.000 +.010 -.000

DR BY J. Curry 10-3-66
CHK BY
APPROVED BY

NORTH AMERICAN AVIATION, INC. SPACE AND INFORMATION SYSTEMS DIV. SEAL BEACH BLVD., DOWNEY, CALIFORNIA

MODEL ASSY ~ APOLLO FD-3 (.059 G. LAUNCH ESCAPE SYSTEM) A.E.D.C. TUNNEL A & C

CODE IDENT NO. 03953 | SIZE J | 7121-01075 A

SCALE FULL | SHEET 1 OF 1

7121-01075 A

SID 63-616

SYM	ZONE	REVISIONS DESCRIPTION	DATE	APPROVED
A		1. MAY BE REWORKED 2. CANNOT BE REWORKED 3. RECORD CHANGE 4. NOW SHOP PRACTICE 5. PARTS MADE OK		
1		CHANGED CUT-OUT IN -4: ⊗ DIM. 1.100 (WAS 1.130) ⊗1 DIM. 3.55 (WAS 3.60) ⊗1 DIM. 3.80 (WAS 3.85)	F. DUNN 10-10-62	

INCL CHANGE TO REFLECT 7121-01095 -5 MODEL ONLY (SEE ORIGINAL DWG 7121-01095)

Figure 3. Model Assembly - Calibration Body for AEDC Balance Checkout - 0.045 Scale

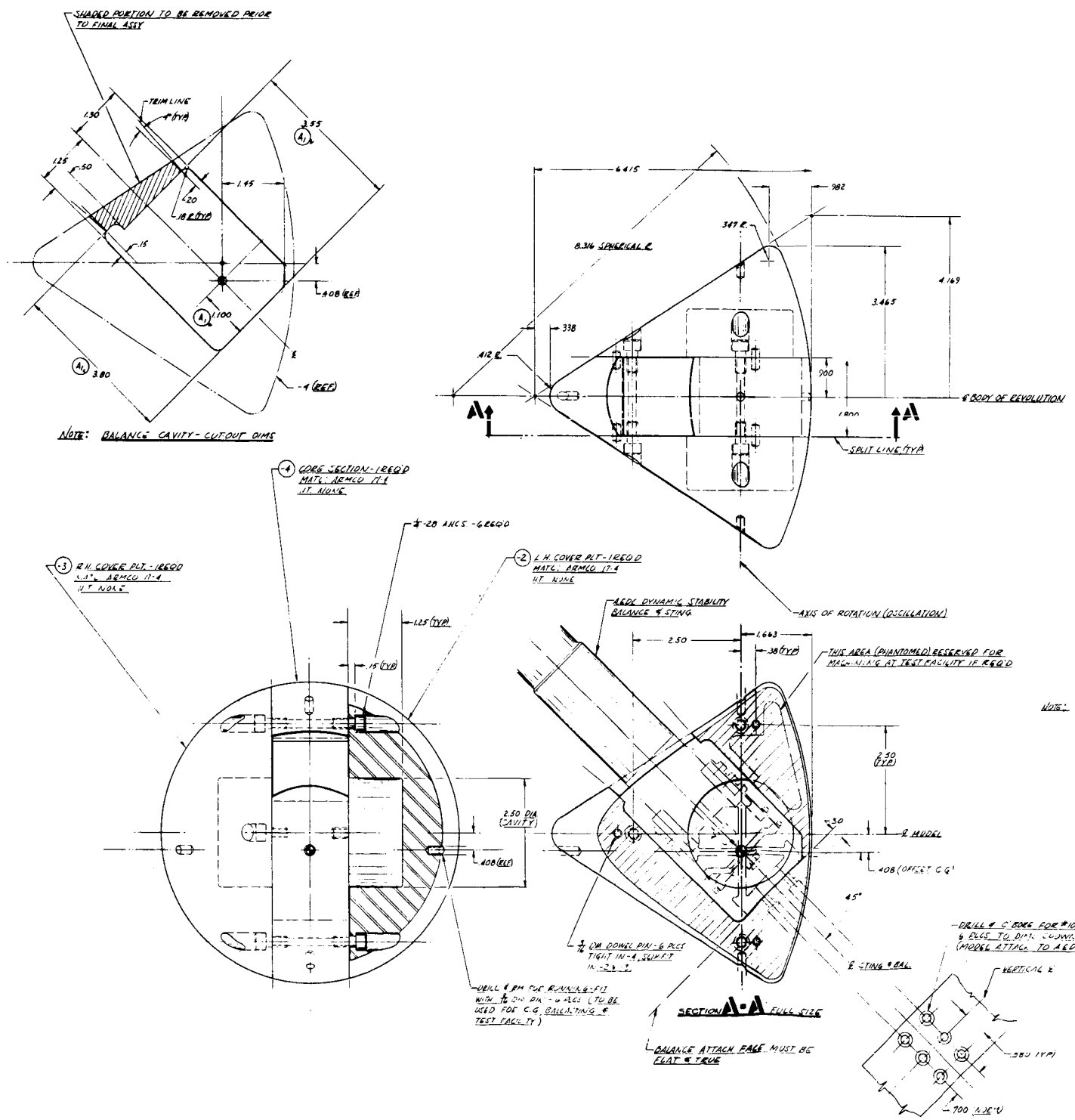

NOTE: 3-D MODEL TO BE SUPPLIED TO TEST FACILITY AT EARLIEST POSSIBLE DATE. IT IS TO BE USED DURING BALANCE CHECK-OUT AND/OR CALIBRATIONS BY AEDC

BALANCING WILL BE DONE AT AEDC

PLEASE RECORD GROSS WEIGHT OF MODEL WHEN CALIBRATED & NOTIFY DESIGNER.

QTY REQD	QTY REQD	QTY REQD	QTY REQD	QTY REQD	PART OR IDENTIFYING NO.	NOMENCLATURE OR DESCRIPTION	CODE IDENT	MATERIAL	DATA: SPECIFICATION SIZES, NOTES, VENDORS	ZONE	LINE NO.
											065
											064
											063
											062
											061
											060
											059
											058
											057
											056
											055
											054
											053
											052
											051
											050
											049
											048
											047
											046
											045
											044
											043
											042
											041
											040
											039
											038
											037
											036
											035
											034
											033
											032
											031
											030
											029
											028
											027
											026
											025
											024
											023
											022
											021
											020
											019
											018
											017
											016
											015
											014
											013
											012
											011
									7121-01095		010
											009
											008
											007
											006
											005
											004
											003
											002
											001

LIST OF MATERIAL OR PARTS LIST

ITEM	QTY	MODEL	NEXT USING DRAWING	END ITEM NO.	THRU
REQD PER END ITEM				EFFECTIVE ON	

APPLICATION (USAGE) DATA

HEAT TREAT

FINISH

UNLESS OTHERWISE SPECIFIED: DIMENSIONS ARE IN INCHES. TOLERANCES ON: DECIMALS .XX = ±.03, .XXX = ±.010; ANGLES ±30'. HOLES NOTED "DRILL" .013 THRU .060 +.001 -.001; .061 THRU .130 +.002 -.001; .131 THRU .229 +.003 -.001; .230 THRU .500 +.004 -.001; .501 THRU .750 +.006 -.001; .751 THRU 1.000 +.007 -.001; 1.001 THRU 2.000 +.010 -.001

DO NOT SCALE PRINT

DR BY A. DUNN 9/24/62

CHK BY

APPROVED BY

NORTH AMERICAN AVIATION, INC. SPACE and INFORMATION SYSTEMS DIVISION 12214 LAKEWOOD BLVD., DOWNEY, CALIFORNIA

MODEL ASSY - APOLLO FD-3 (.045 SC) CALIBRATION ONLY FOR AEDC BALANCE CHECK-OUT

CODE IDENT NO. 03953 | SIZE J | 7121-01095

SCALE .045 | SHEET

97,5

SID 63-616

CO[redacted]

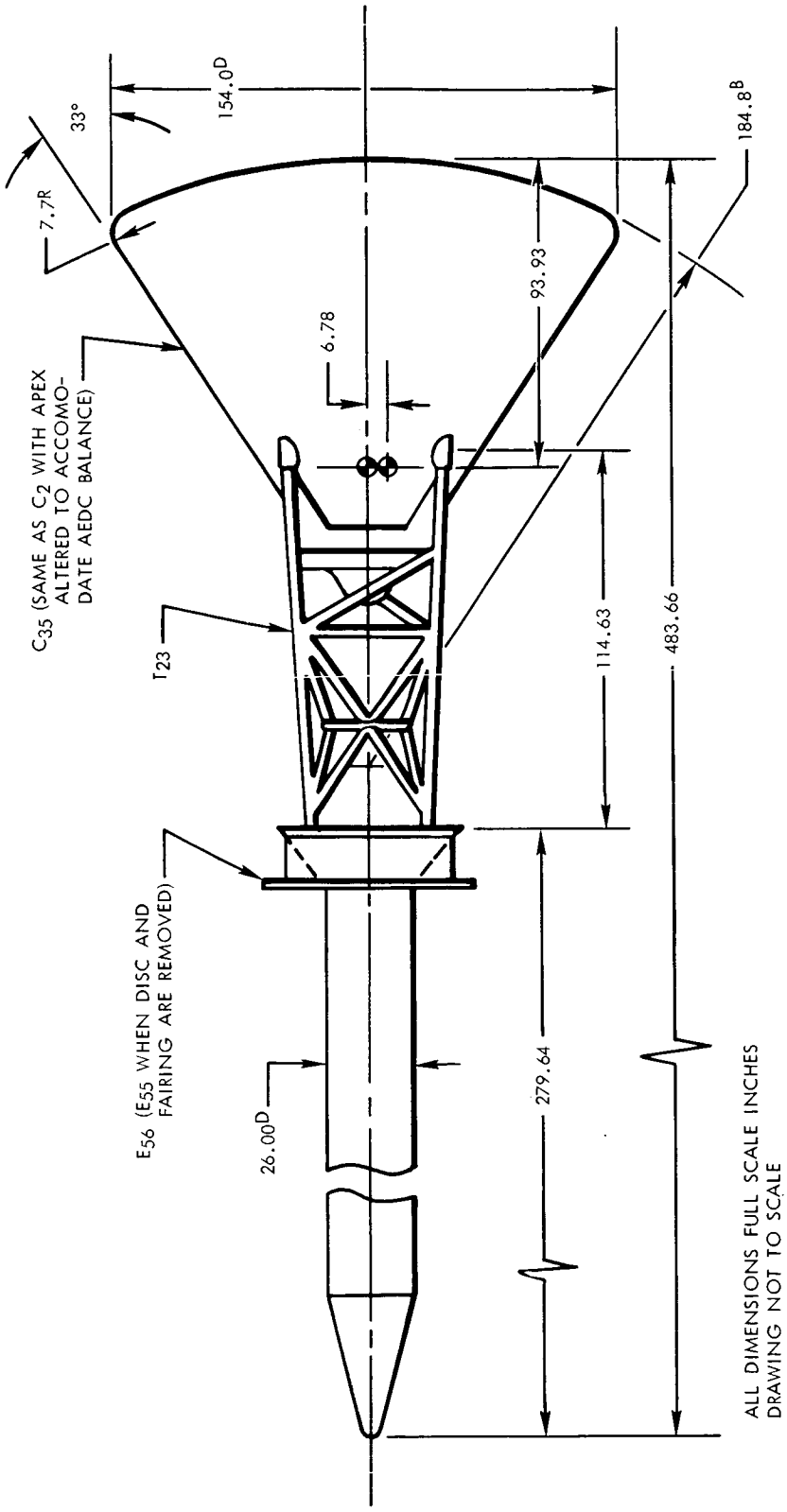

Figure 4. Launch Escape Vehicle

~~CONFIDENTIAL~~

~~CONFIDENTIAL~~

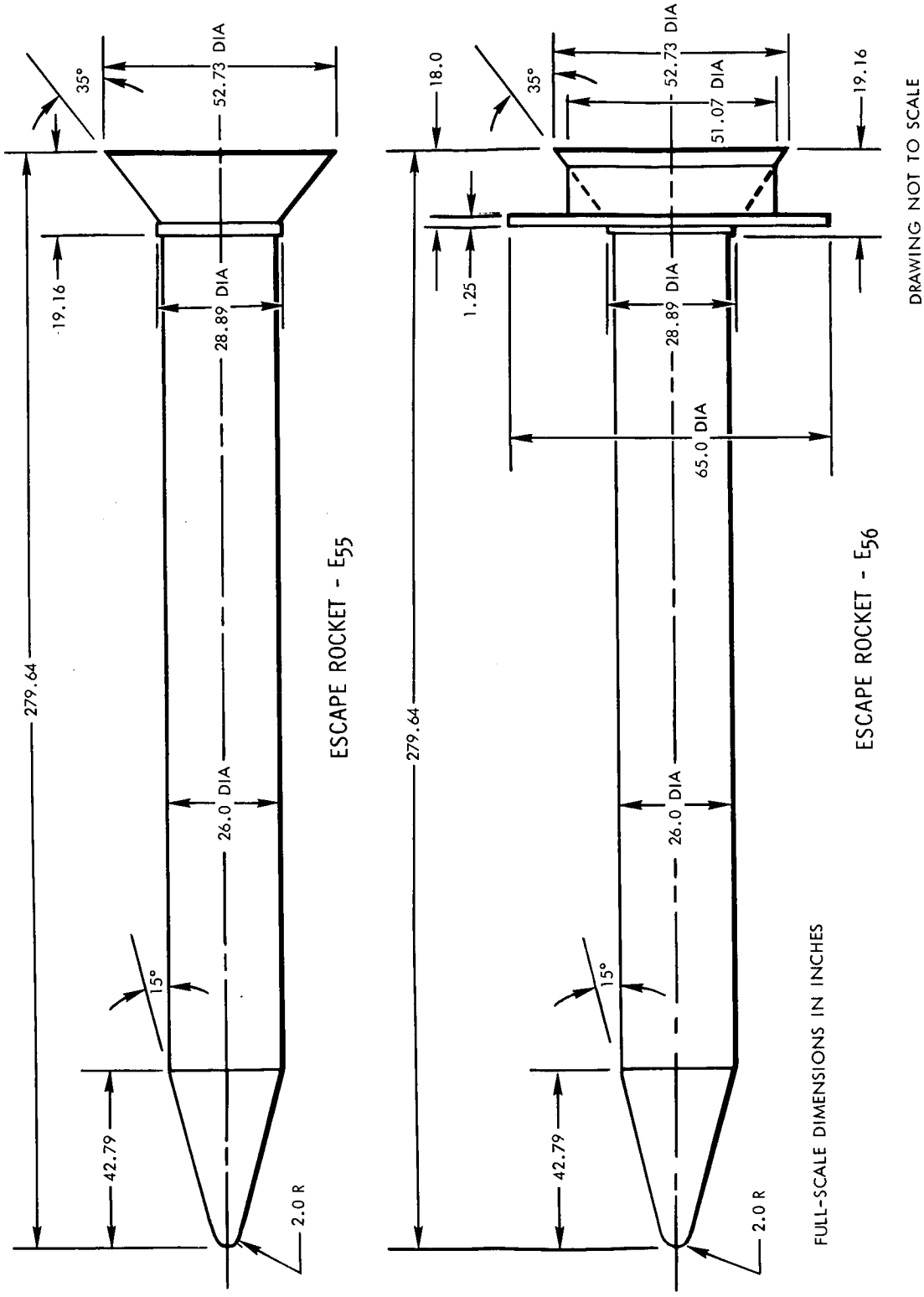

Figure 5. Escape Rocket—E_{55} and E_{56}

~~CONFIDENTIAL~~

~~CONFIDENTIAL~~

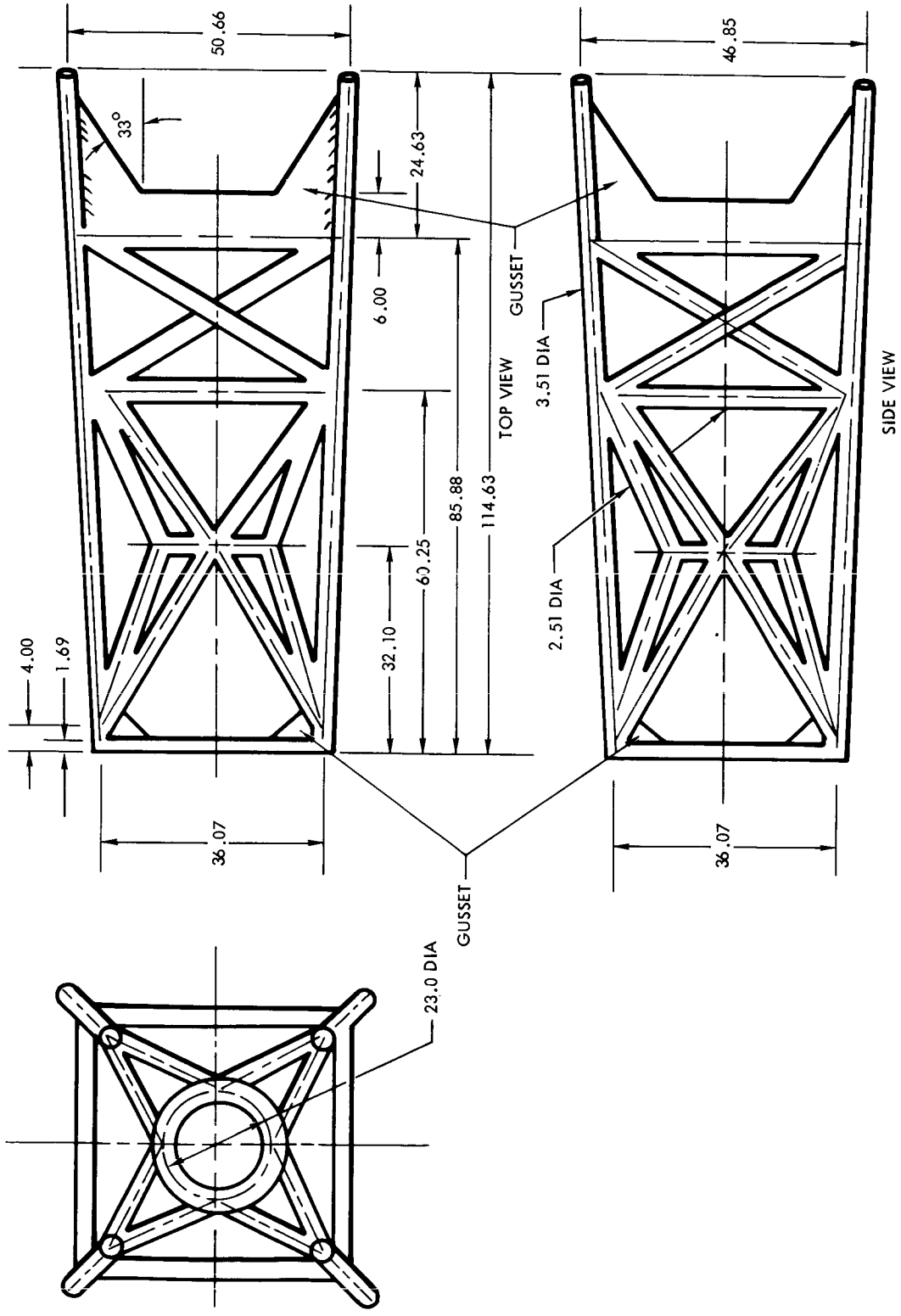

Figure 6. Escape Tower Structure—T_{23}

~~CONFIDENTIAL~~

~~CONFIDENTIAL~~

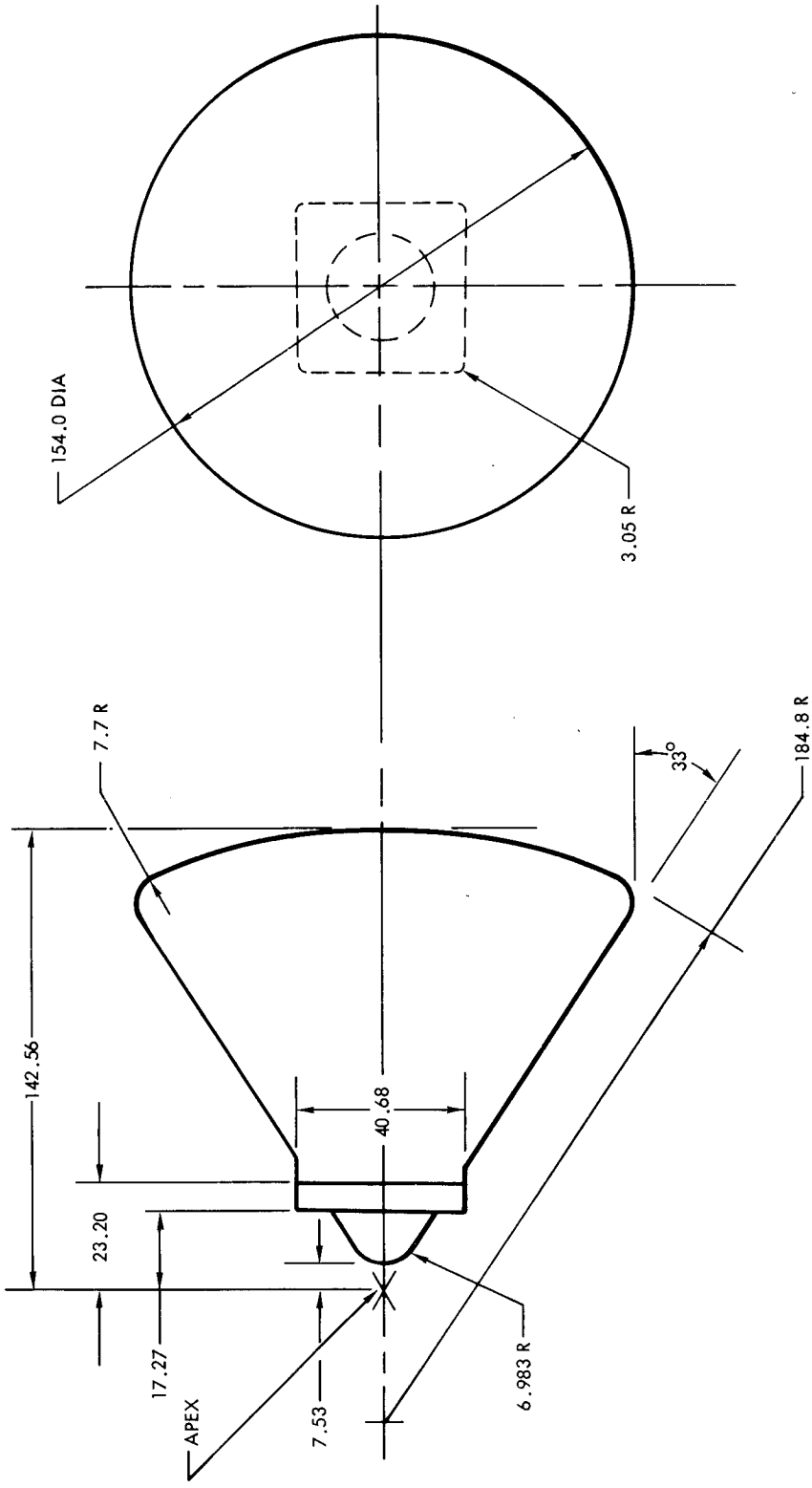

DRAWING NOT TO SCALE

FULL-SCALE DIMENSIONS IN INCHES

Figure 7. Command Module—C_{33}

~~CONFIDENTIAL~~

~~CONFIDENTIAL~~

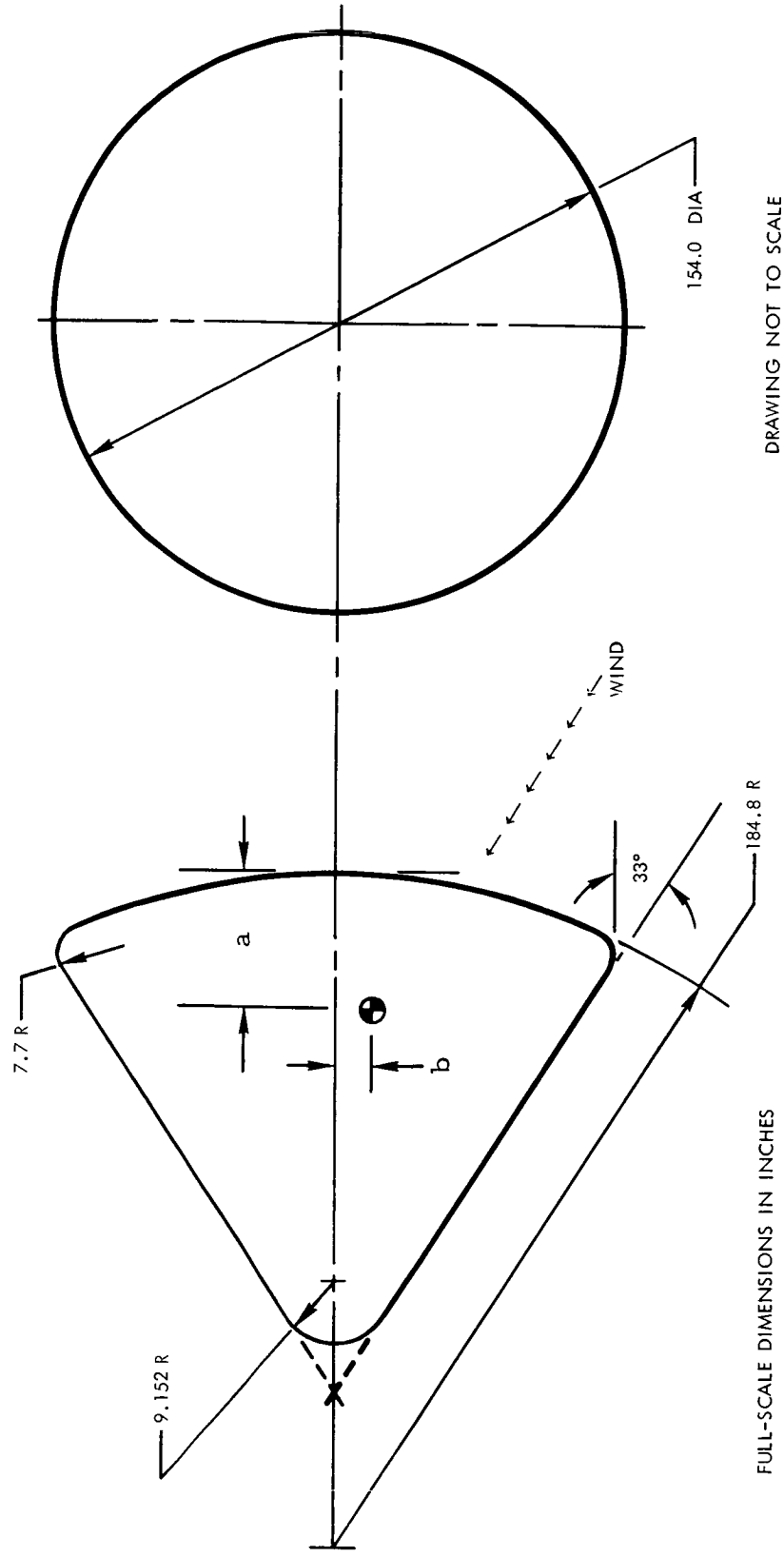

C/M NO.	C.G. LOCATIONS a	b
1	36.955	9.067
2	36.955	9.067
4	36.955	9.067
5	37.000	8.911
6	36.955	9.067

Figure 8. Command Module—C_2

~~CONFIDENTIAL~~

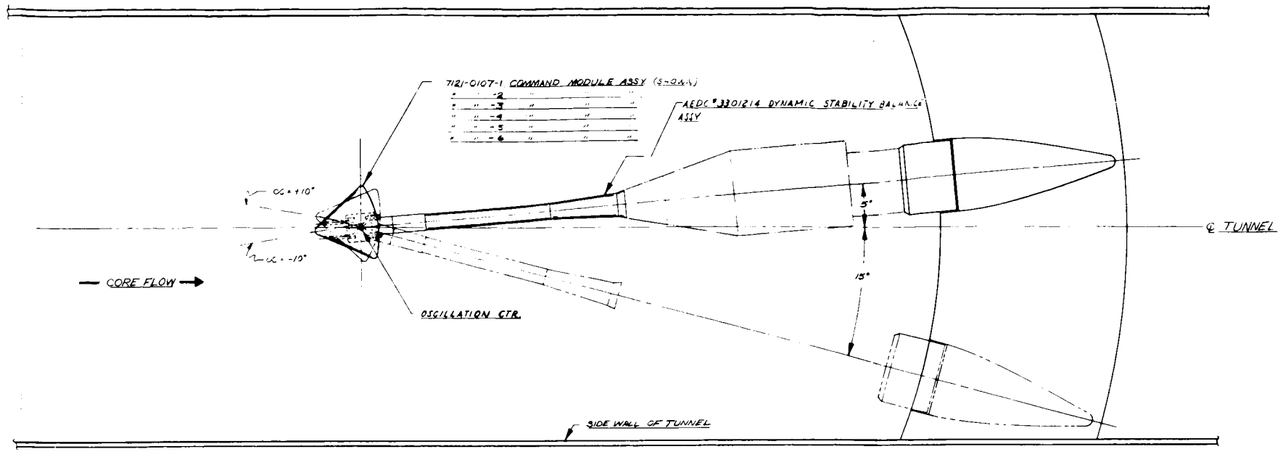

MODEL INSTALLATION
(TUNNEL "A" SHOWN)
(TYPICAL FOR TUNNEL "C")

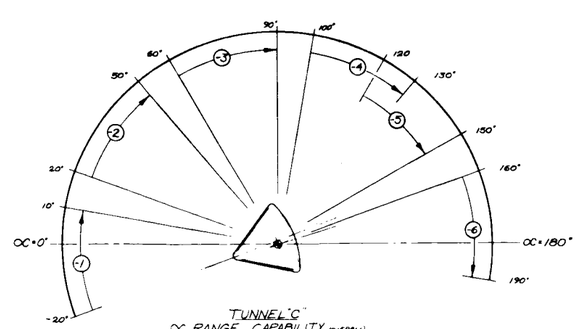

TUNNEL "C"
α RANGE CAPABILITY (OVERALL)
(SECTOR TRAVEL = ±15° to 30° TOTAL)
DASH NUMBERS INDICATE MODEL USAGE

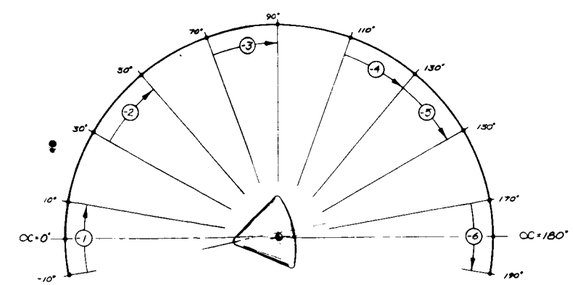

TUNNEL "A"
α RANGE CAPABILITY (OVERALL)
(SECTOR TRAVEL = -5° to +15° to 20° TOTAL)
DASH NUMBERS INDICATE MODEL USAGE

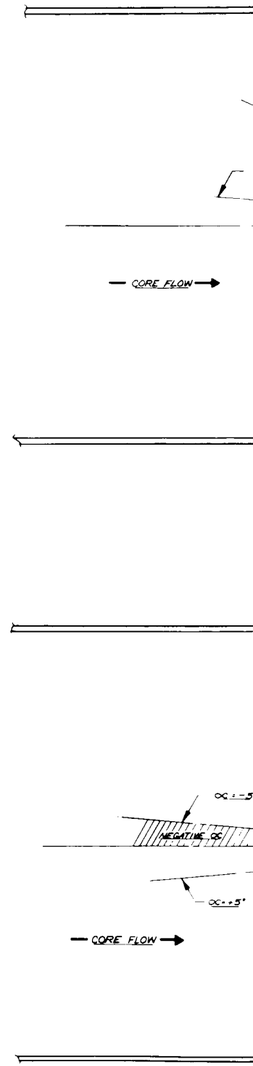

NOTES:

	MODEL CONFIG. "A" - (OFF S
1 —	INSTALL MODEL TO B
	7121-01075-17 ATTAC
	7121-01075-6 NOSE
2 —	INSTALL 7121-01075-4
	MODEL CONFIG. "B" - (ON
3 —	INSTALL MODEL TO BALA
	7121-01075-17 ATTA
	7121-01075-7 NOSE
4 —	INSTALL 7121-01075-5

5 — MODEL BALLASTING T
MODEL C.G. & OSCILL
FOR ALL TEST COND

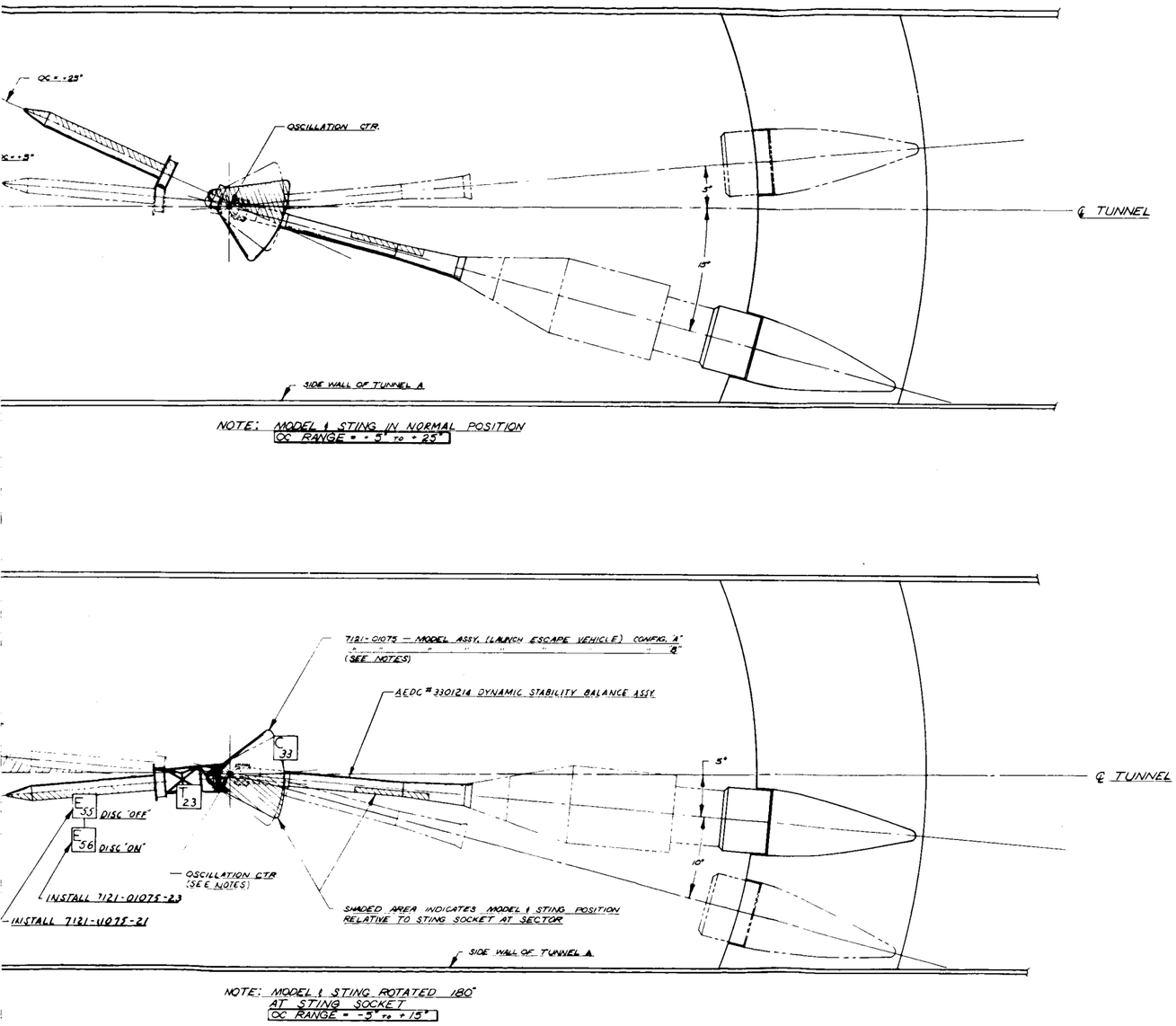

Figure 9. Installation - Command Module - 0.045 and 0.059 Scale

SYM	ZONE	REVISIONS DESCRIPTION	DATE	APPROVED
		1. MAY BE REWORKED 2. CANNOT BE REWORKED 3. RECORD CHANGE 4. NOW SHOP PRACTICE 5. PARTS WERE OK		

QTY REQD	QTY REQD	QTY REQD	QTY REQD	QTY REQD	QTY REQD	PART OR IDENTIFYING NO.	NOMENCLATURE OR DESCRIPTION	CODE IDENT	MATERIAL	DATA SPECIFICATION SIZES, NOTES, SUPPLIERS	ZONE	LINE NO.
										7121-01073		010
										7121-01073		001

LIST OF MATERIAL OR PARTS LIST

HEAT TREAT

FINISH

ITEM	QTY	MODEL	NEXT USING DRAWING	END ITEM NO.	THRU
		REQD PER END ITEM		EFFECTIVE ON	

APPLICATION (USAGE) DATA

UNLESS OTHERWISE SPECIFIED DIMENSIONS ARE IN INCHES
TOLERANCES ON
DECIMALS: .XX = ±.03, .XXX = ±.010
ANGLES: ±30'
HOLES NOTED "DRILL"
.013 THRU .040 +.001 -.001
.041 THRU .130 +.002 -.001
.131 THRU .229 +.003 -.001
.230 THRU .500 +.004 -.001
.501 THRU .750 +.005 -.001
.751 THRU 1.000 +.007 -.001
1.001 THRU 2.000 +.010 -.001

DR BY E. HAM 8-12-62
CHK BY F. DUNN 9-12-62
APPROVED BY

DO NOT SCALE PRINT

NORTH AMERICAN AVIATION, INC.
SPACE and INFORMATION SYSTEMS DIVISION
12214 LAKEWOOD BLVD. DOWNEY, CALIFORNIA

INSTALLATION ~ APOLLO FD-3
.045 SCALE COMMAND MODULE & .059 SCALE
L.E.V. ~ AEDC VKF TUNNEL A & C

CODE IDENT NO. 03953 | SIZE J | 7121-01073

SCALE 1/4 | SHEET

~~CONFIDENTIAL~~

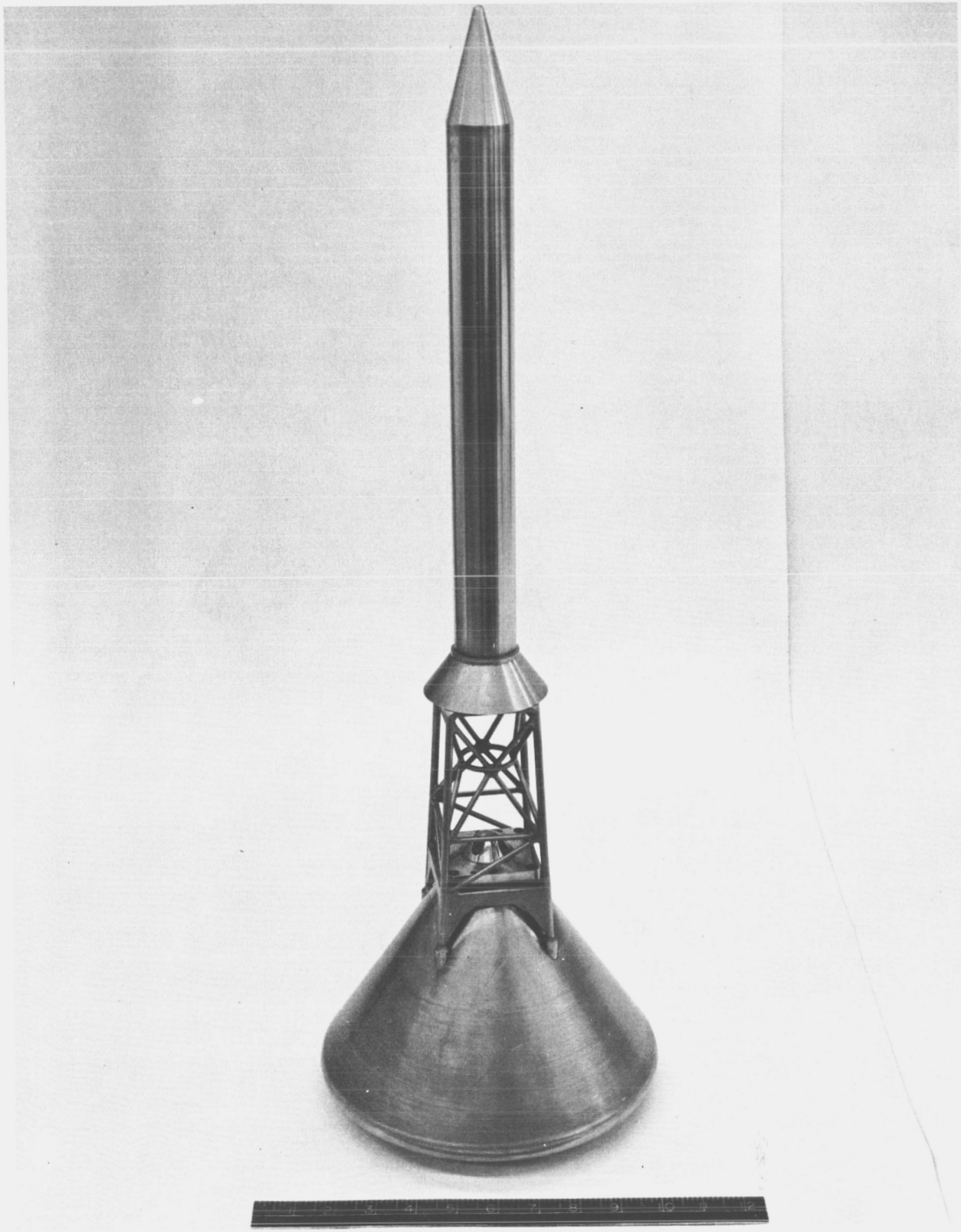

Figure 10. Launch Escape Configuration $E_{55}T_{23}C_{33}$ (Disc Off)

~~CONFIDENTIAL~~

~~CONFIDENTIAL~~

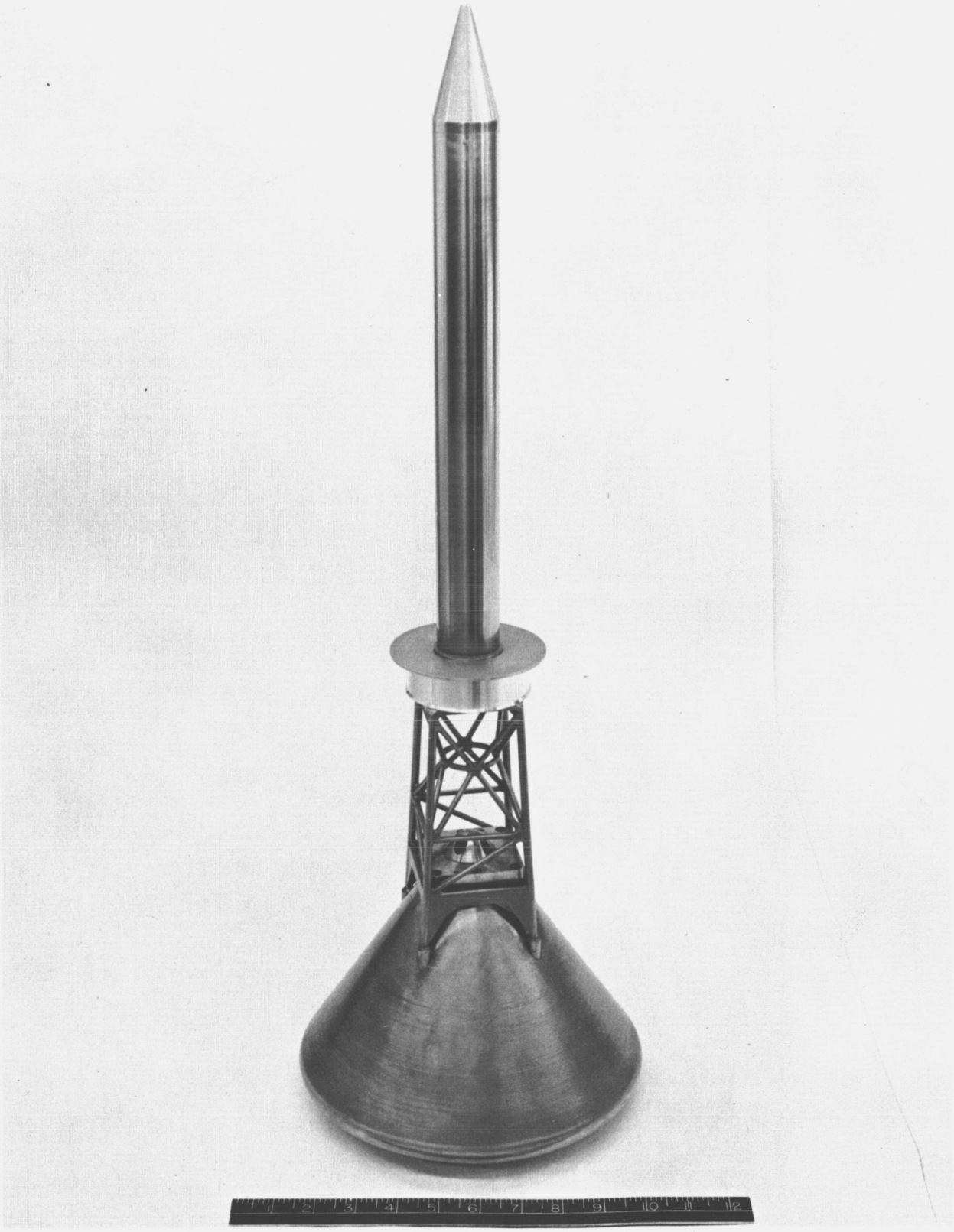

Figure 11. Launch Escape Configuration $E_{56}T_{23}C_{33}$ (Disc On)

~~CONFIDENTIAL~~

~~CONFIDENTIAL~~

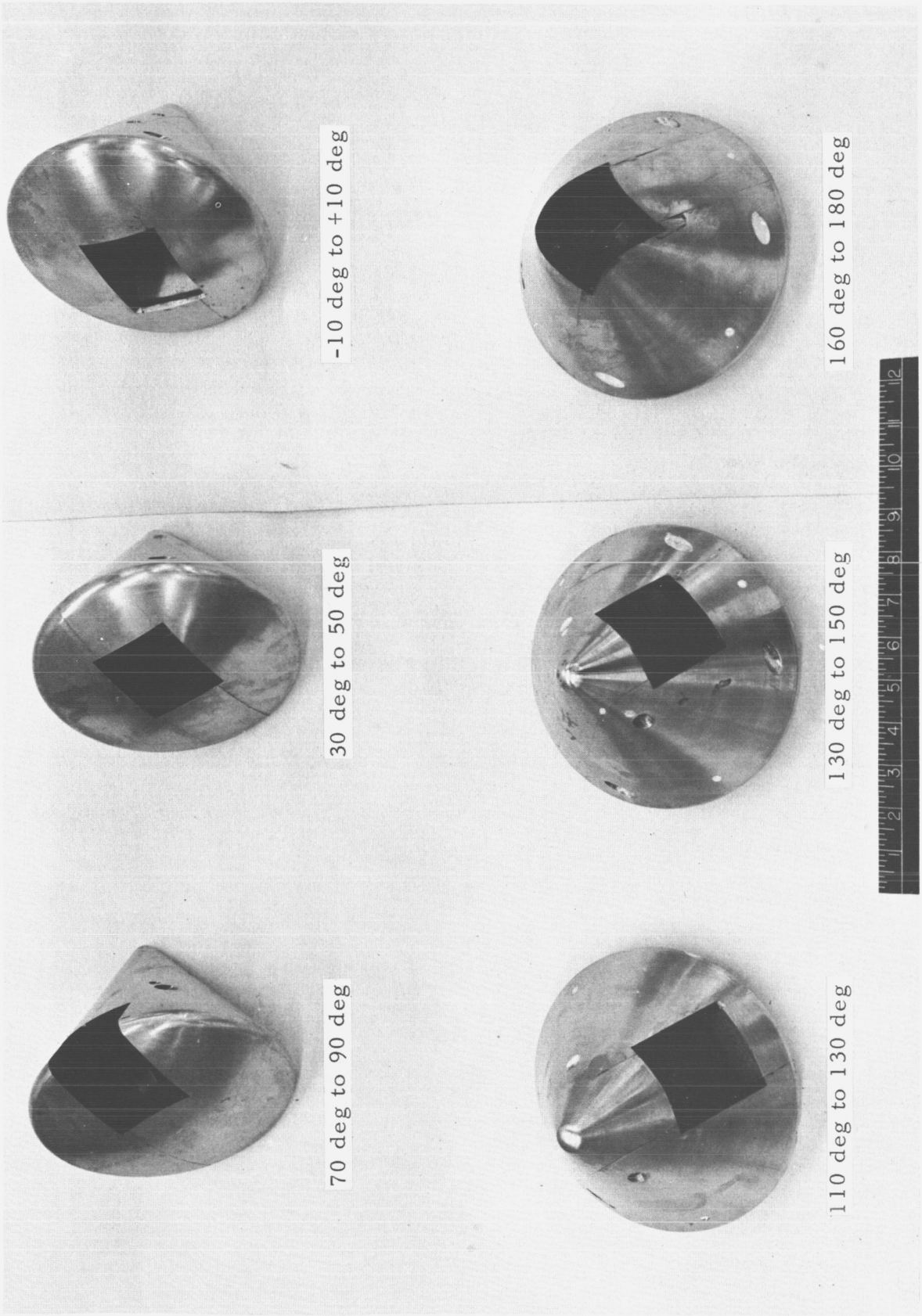

Figure 12. Command Module Entry Configuration, C_2 (Six Models)

~~CONFIDENTIAL~~

~~CONFIDENTIAL~~

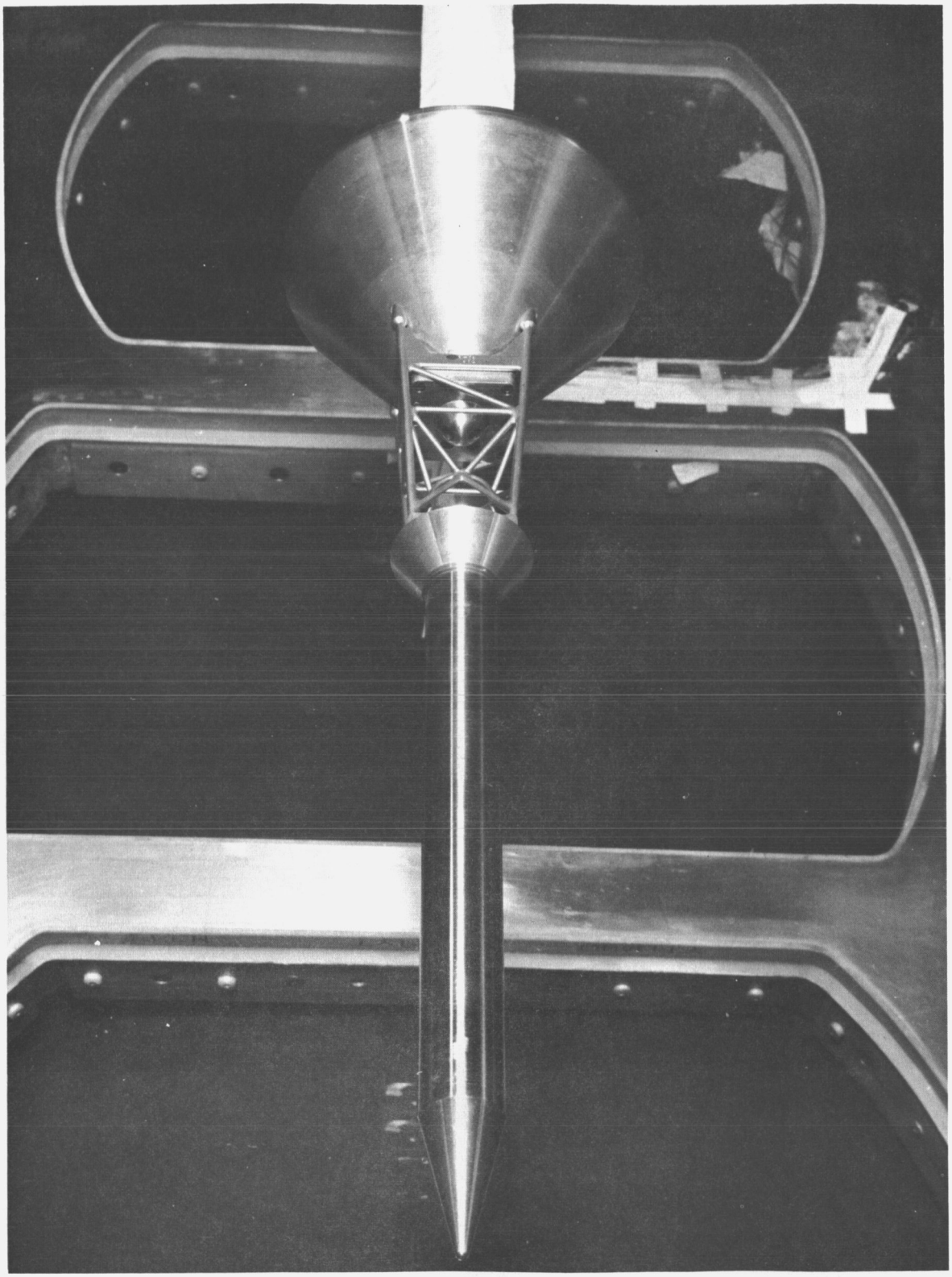

Figure 13. Typical Installation - Launch Escape Configuration in Tunnel A

~~CONFIDENTIAL~~

~~CONFIDENTIAL~~

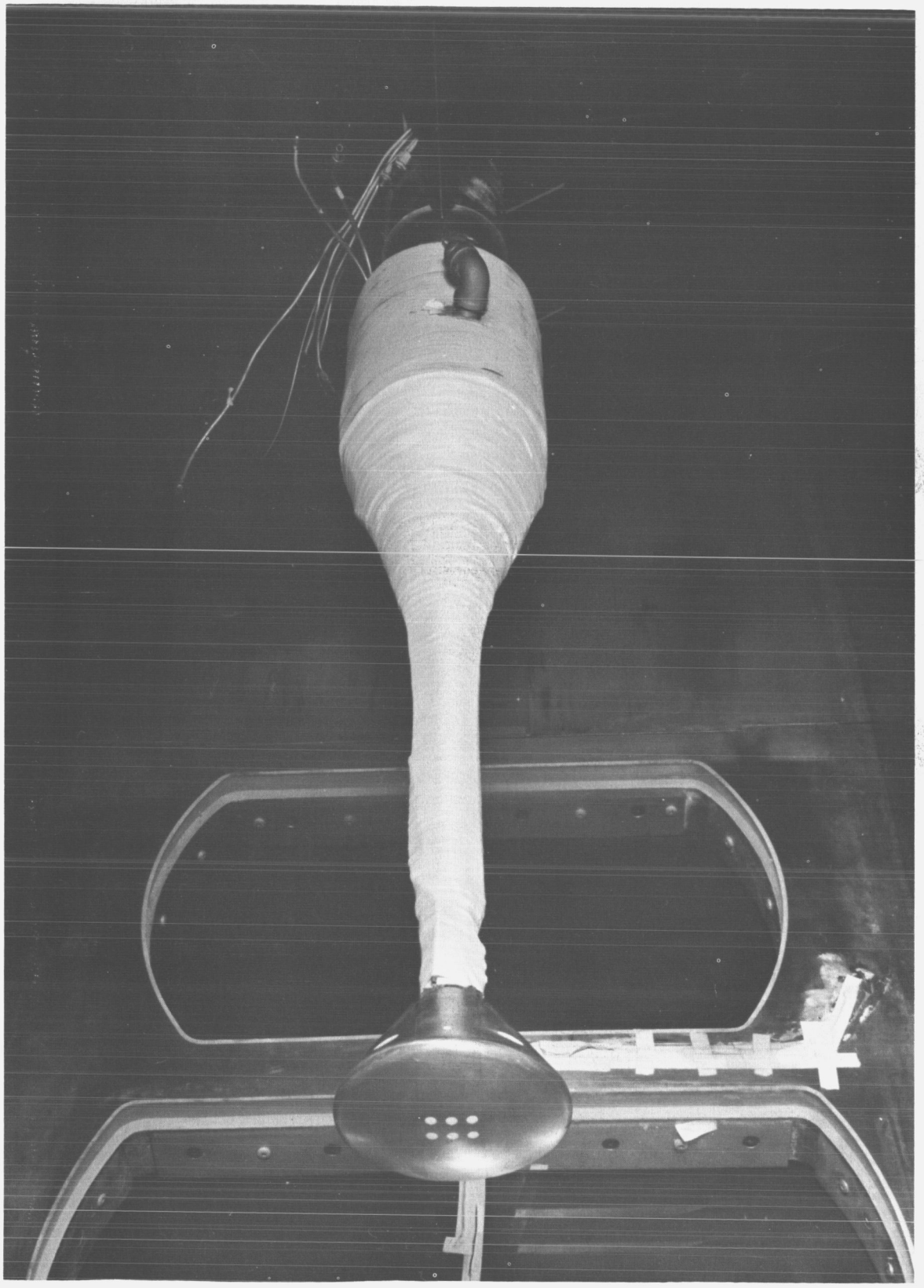

Figure 14. Typical Installation - Command Module Entry Configuration in Tunnel A

~~CONFIDENTIAL~~

APPENDIX A

PLOTTED DATA

PLOTTED DATA INDEX

Command Module Entry—Damping in Pitch Versus Angle of Attack

M = 2.49,	Re = 2.8×10^6	A-2
M = 3.00,	Re = 3.1×10^6	A-2
M = 4.01,	Re = 3.8×10^6	A-2
M = 5.99,	Re = 3.6×10^6	A-2
M = 10.18,	Re = 1.2×10^6	A-3

Launch Escape Vehicle—Damping in Pitch Versus Angle of Attack

M = 2.00,	Disc on and off	A-4
M = 3.00,	Disc on and off	A-4
M = 4.00,	Disc on and off	A-5
M = 5.98,	Disc off	A-6

Launch Escape Vehicle—Damping in Pitch Versus Reynolds Number at 0 Degrees Angle of Attack

M = 1.50,	Disc on	A-7

~~CONFIDENTIAL~~

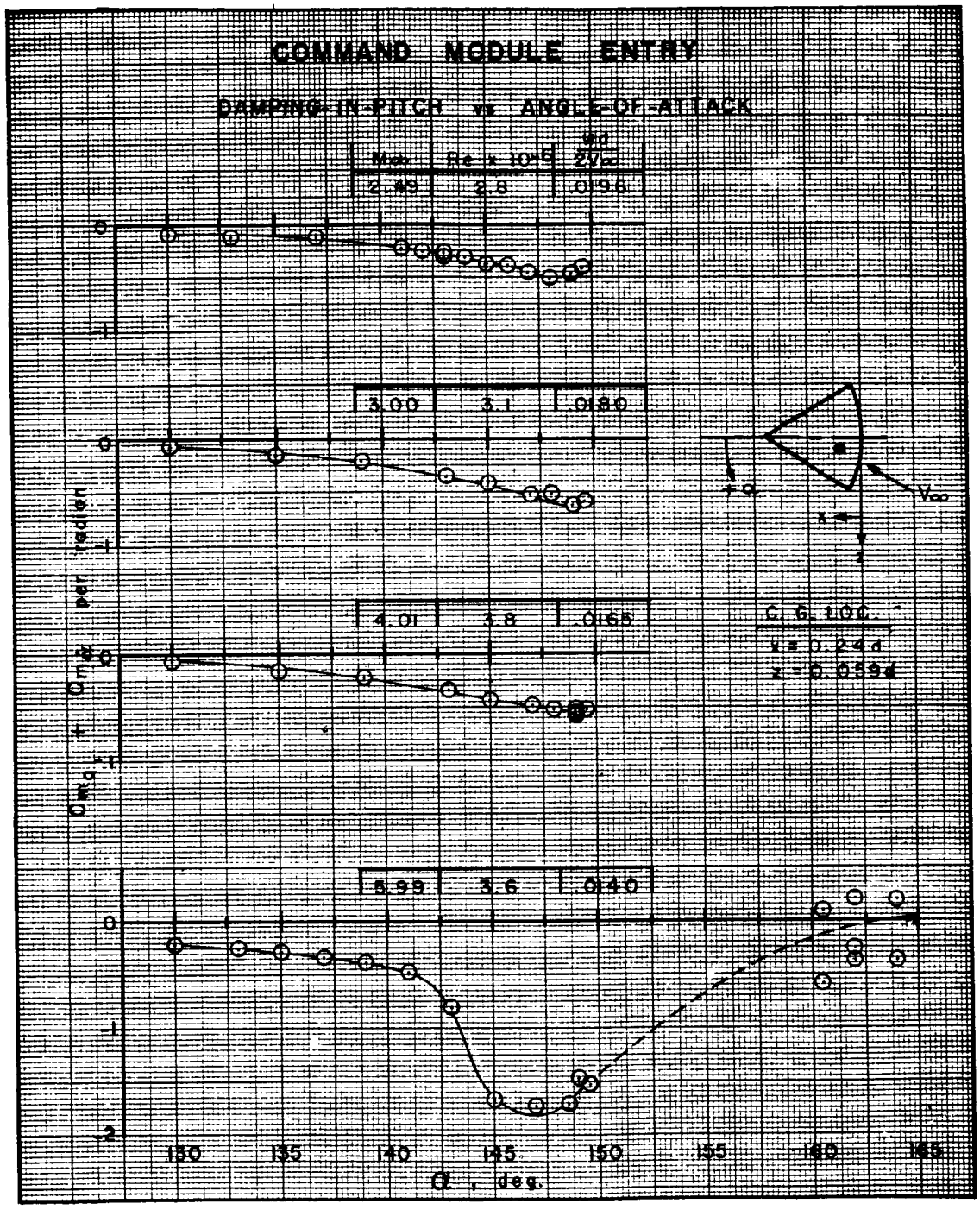

~~CONFIDENTIAL~~

CONFIDENTIAL

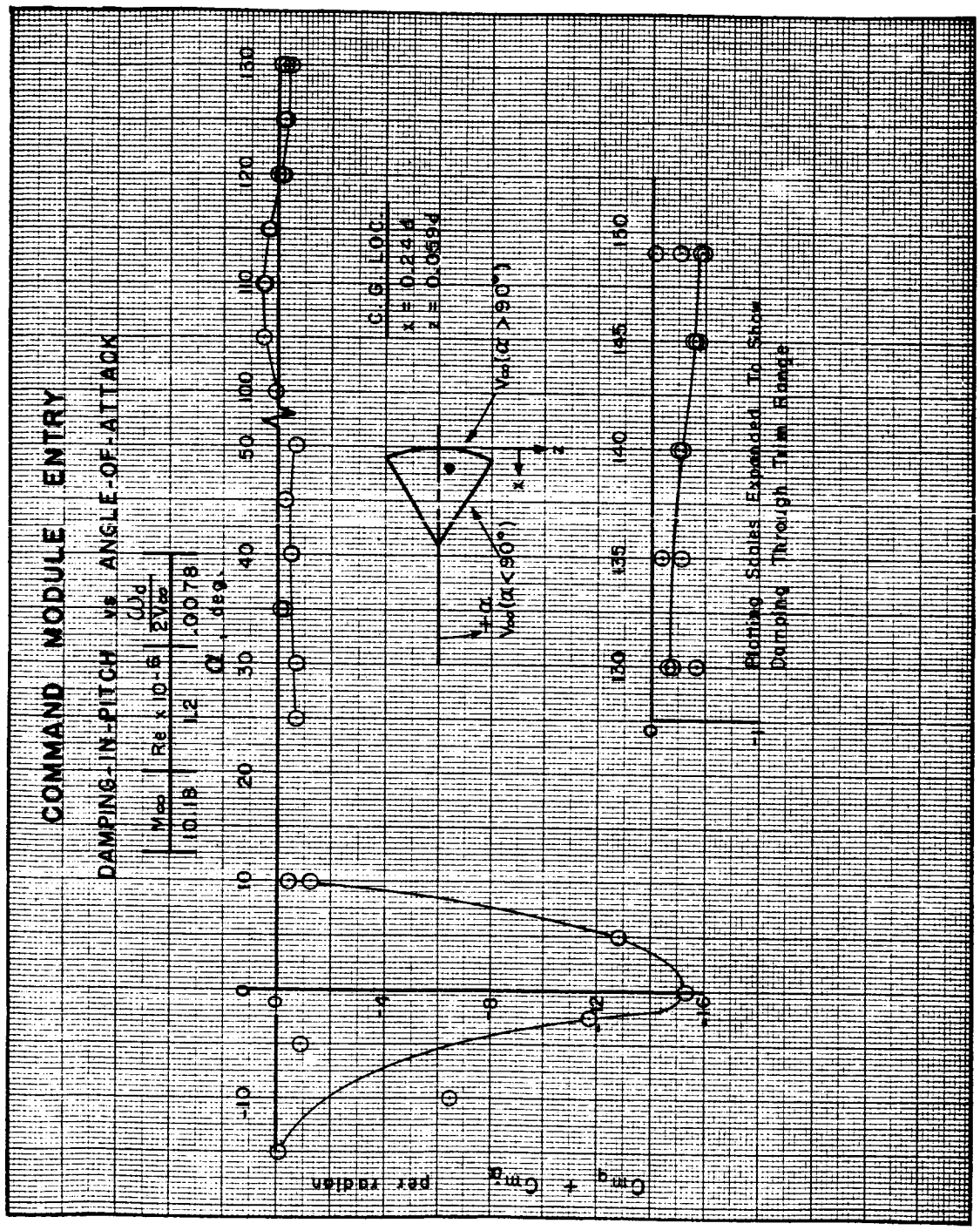

CONFIDENTIAL

~~CONFIDENTIAL~~

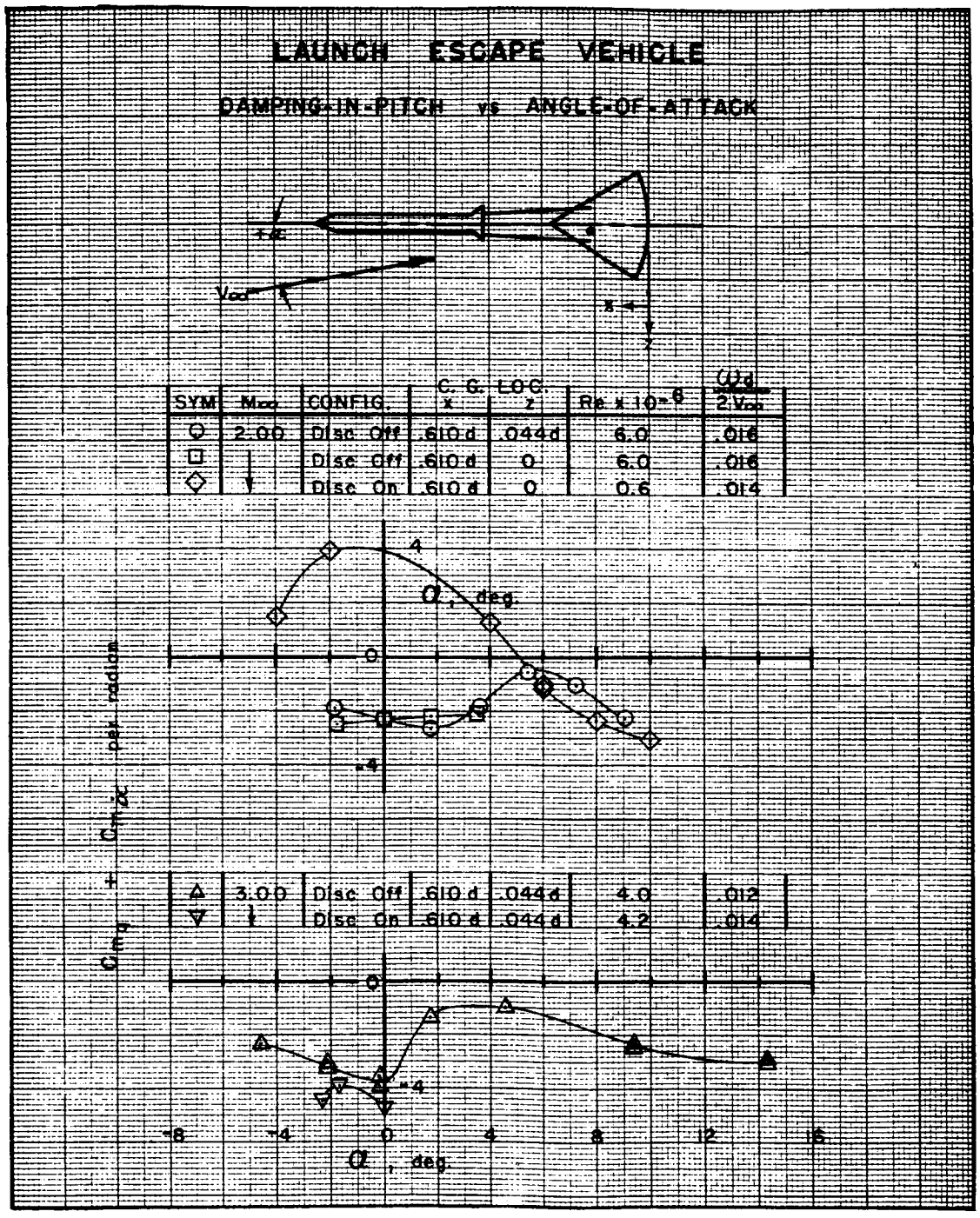

~~CONFIDENTIAL~~

CO~~NFIDENTIAL~~

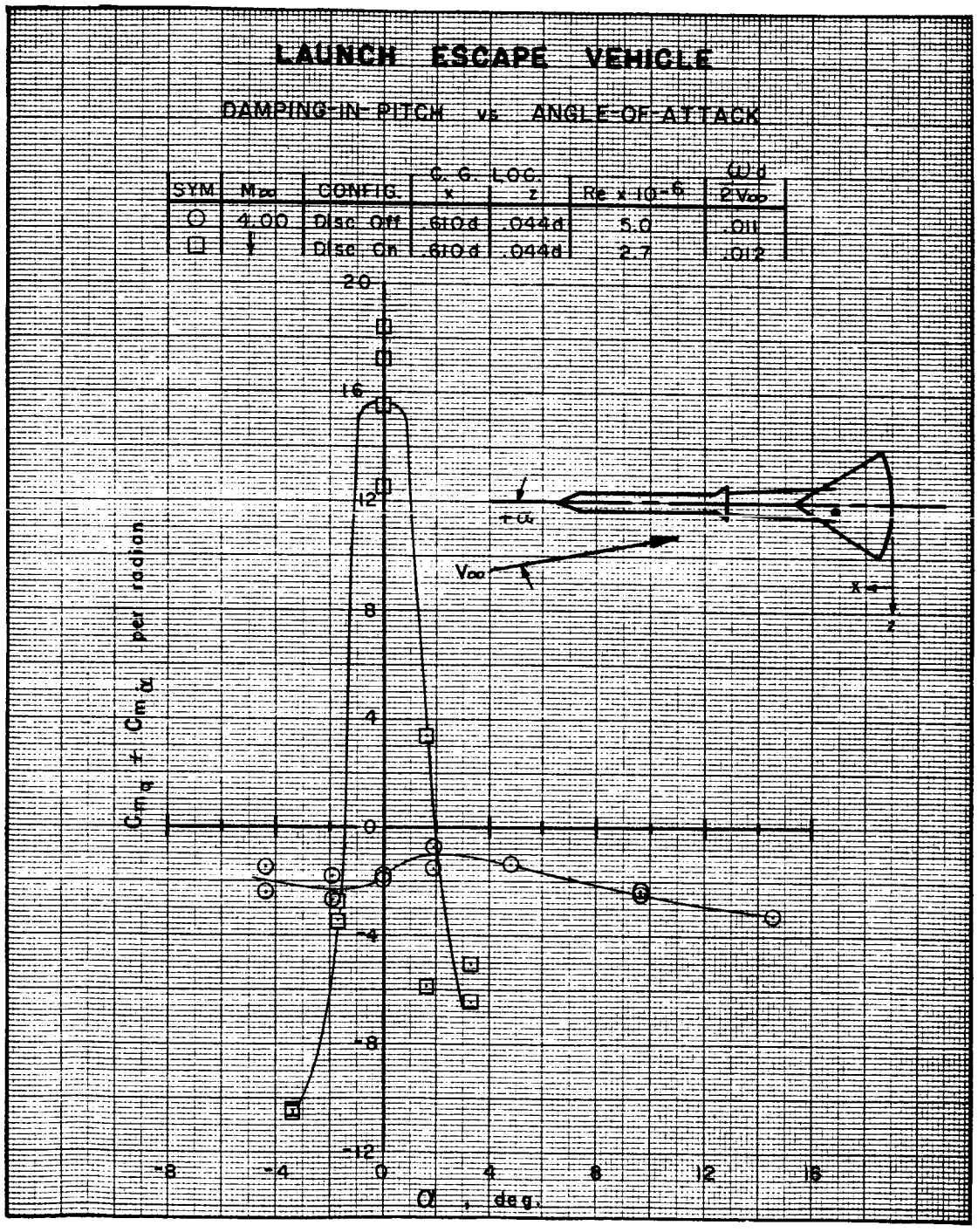

~~CONFIDENTIAL~~

~~CONFIDENTIAL~~

LAUNCH ESCAPE VEHICLE

DAMPING-IN-PITCH vs ANGLE-OF-ATTACK

SYM	M_∞	CONFIG.	C. G. LOC. x	C. G. LOC. z	$Re \times 10^{-6}$	$\frac{\omega d}{2V_\infty}$
○	5.98	Disc. Off	.610d	.044d	4.8	.0098
□	↑	Disc. Off	.610d	0	4.7	.0096

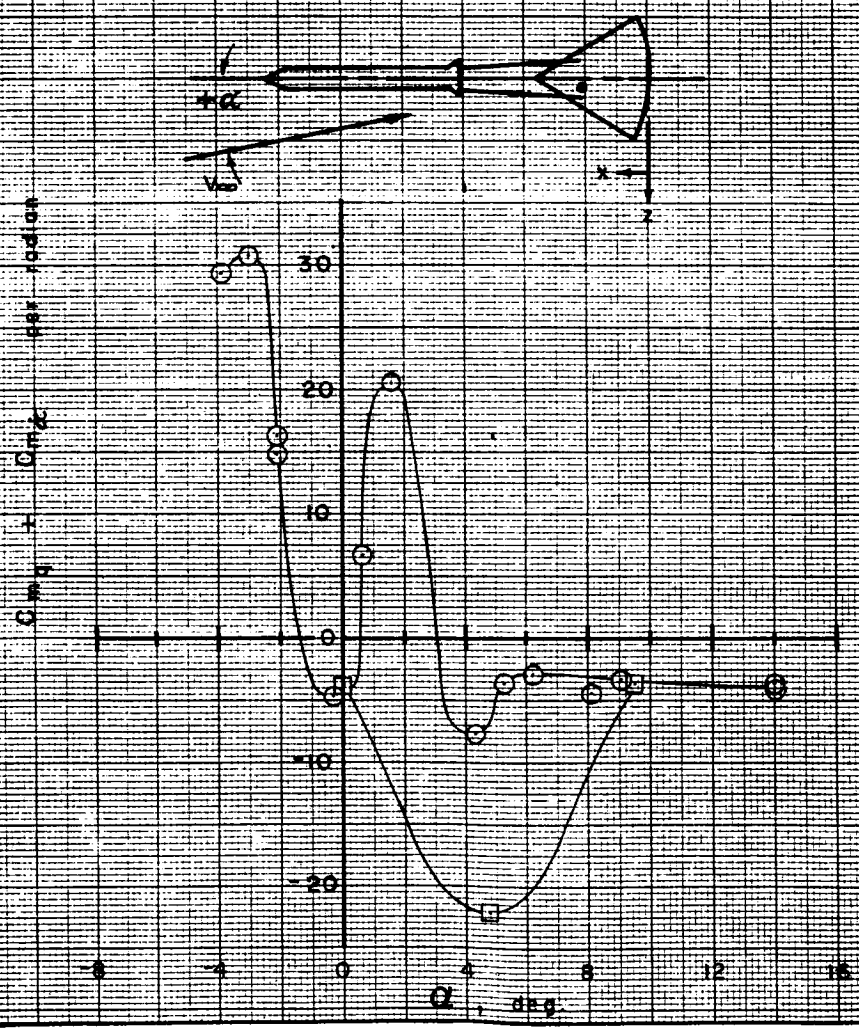

~~CONFIDENTIAL~~

C[redacted]

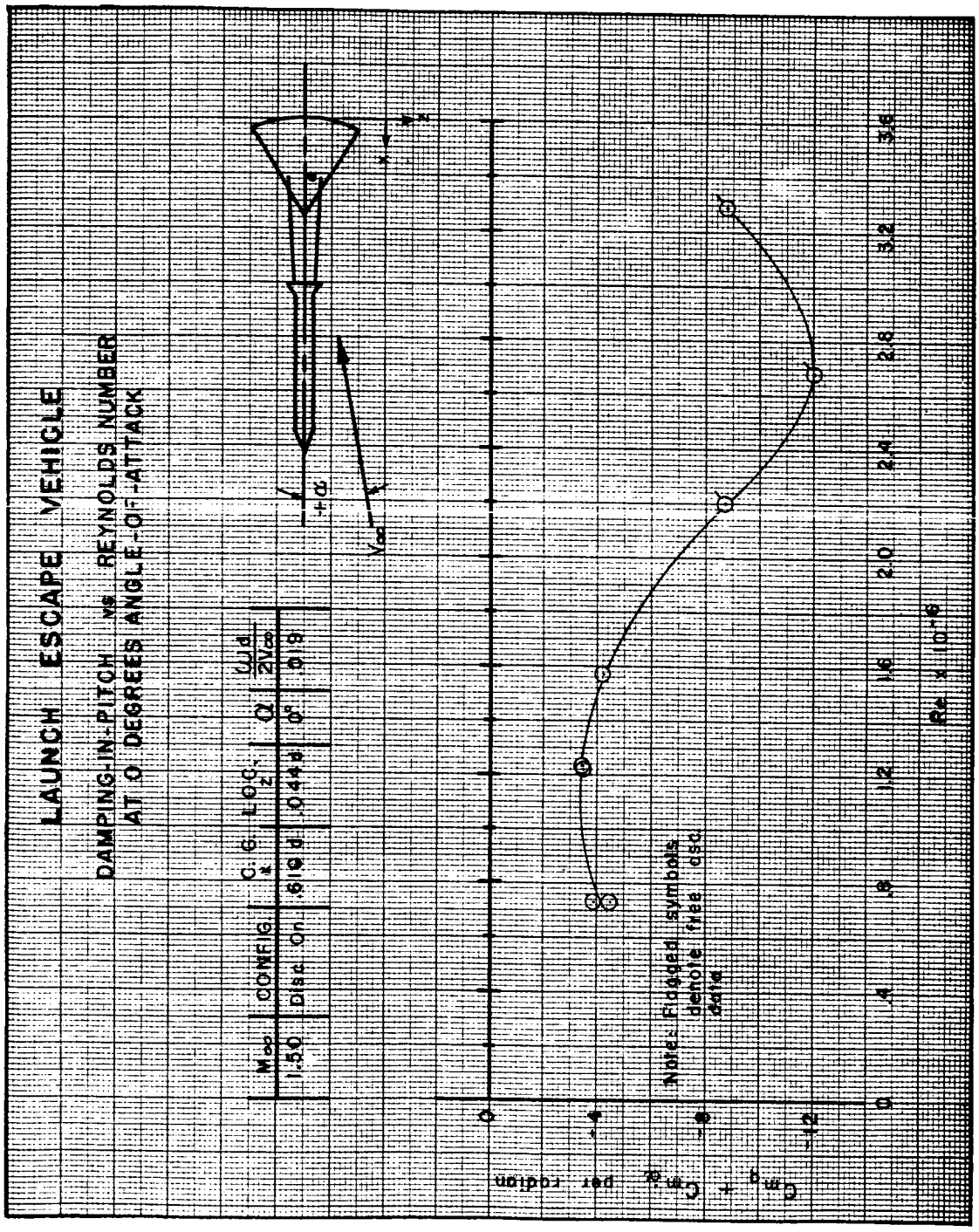

[redacted]

CONFIDENTIAL

APPENDIX B

TABULATED DATA

CONFIDENTIAL

Summary of Completed Runs

Run Number	Configuration	Mach Number	Re X 10^{-6}	$\frac{\omega d}{2V\infty}$	Angle Range (degrees)	Page
Test Period 26 - 30 November 1962 (Tunnel A)						
3	LEV, Disc Off	5.98	4.8	0.0098	-4 to +14	B9-11
5	LEV, Disc Off	3.00	4.0	0.0120	-5 to +14	B12-14
5	LEV, Disc Off	4.01	5.0	0.0113	-4 to +15	B15-17
6	LEV, Disc On	3.00	5.2	0.0143	-2 to 0	B18-19
7	LEV, Disc Off	2.00	6.0	0.0160	-2 to +9	B19-22
9	LEV, Disc Off*	2.00	6.0	0.0162	-2 to +4	B22-23
10	LEV, Disc Off*	5.98	4.7	0.0096	0 to +9	B23
12	C/M (135 deg)	5.99	3.6	0.0140	130 to 150	B24-30
13	C/M (135 deg)	3.00	3.1	0.0180	130 to 150	B30-33
13	C/M (135 deg)	4.01	3.8	0.0165	130 to 150	B33-37
15	C/M (135 deg)	2.49	2.8	0.0196	130 to 150	B37-44
18	C/M (175 deg)**	5.98	3.6	0.0149	160 to 164	B45-49
Test Period 11 - 12 December 1962 (Tunnel C)						
19 and 20	C/M (135 deg)	10.18	1.2	0.0078	120 to 149	B49-57
22 and 23	C/M (115 deg)	10.18	1.2	0.0078	100 to 120	B58-62
24 and 25	C/M (35 deg)	10.18	1.2	0.0078	25 to 50	B63-68
27 and 28	C/M (-5 deg)	10.18	1.2	0.0078	-15 to +10	B68-72
Test Period 4 - 5 January 1963 (Tunnel A)						
29	LEV, Disc On	4.00	2.7	0.0120	-3 to +3	B73-74
31 and 32	LEV, Disc On*	1.99	0.6	0.0145	-4 to +10	B73
33	LEV, Disc On	1.49	0.7-3.3	0.0190	0	B73

* Denotes runs with oscillation center on centerline center of gravity

** For this run, model was rolled 180° to change angle-of-attack range from 170-190 degrees to 160-180 degrees.

CONFIDENTIAL

DATA FORMAT

Item or Column Heading	Definition
CMQ	Damping in pitch parameter ($C_{m_q} + C_{m_{\dot{\alpha}}}$), per radian
CMT	Pitching moment due to angle of attack ($\partial C_m / \partial \alpha$)
M	Free-stream Mach number (M_∞)
OW	Model angular frequency (ω), rad/sec
PO	Stagnation pressure (p_o), psia
Q	Free-stream dynamic pressure (q_∞), psfa
RE	Unit Reynolds number (Re/ft), 1/ft
Re	Reynolds number based on model base diameter
RFP	Reduced frequency parameter $\left(\frac{\omega d}{2V_\infty}\right)$, radian
TO	Stagnation pressure (T_o), °R
V	Free-stream velocity (V_∞), ft/sec
θ	Model oscillation amplitude, deg
α	Model angle of attack, deg

Note: All other columns are used for periodic checks in the computer program and should be disregarded.

DAMPING-IN-PITCH DATA SUMMARY

The five pages immediately following (Pages B-4 through B-8) present a summary of the damping-in-pitch coefficients listed in order of run number. This summary, from which the plotted data were obtained, presents the average coefficient ($C_{m_q} + C_{m_{\dot{\alpha}}}$) from the page or pages of tabulated data for the indicated conditions.

CONFIDENTIAL

[redacted]

Data Key

CONFIDENTIAL

ARNOLD CENTER
VON KARMAN GAS DYNAMICS FACILITY
40 INCH SUPERSONIC TUNNEL
NASA-NAA APOLLO TEST -DYNAMIC STABILITY FD-3 VT1244-A00 11/29/62

RUN NO. 1203 M = 5.990 C1 =-5.4804-01 C2 = 2.2894+01 RSA = 1.0000+00 MS =-2.6482-01 OT = 1.2319+02

θ

PO	TO	V	Q	RE	D	R	MW	OW	CMQ	CMT	RFP
198.5	638.0	2.593+03	4.593+02	6.255+06	6.070+03	9.253-01	-5.071-01	1.254+02	-2.499-01	-1.249-01	1.396-02
198.5	638.0	2.593+03	4.593+02	6.255+06	5.997+03	8.850-01	-4.850-01	1.253+02	-2.271-01	-1.236-01	1.396-02
198.5	638.0	2.593+03	4.593+02	6.255+06	6.177+03	8.296-01	-4.547-01	1.252+02	-1.959-01	-1.175-01	1.394-02
198.5	638.0	2.593+03	4.593+02	6.255+06	6.164+03	8.389-01	-4.597-01	1.254+02	-2.010-01	-1.260-01	1.396-02
198.5	638.0	2.593+03	4.593+02	6.255+06	6.093+03	8.921-01	-4.889-01	1.254+02	-2.310-01	-1.256-01	1.396-02
198.5	638.0	2.593+03	4.593+02	6.255+06	6.238+03	8.419-01	-4.614-01	1.253+02	-2.028-01	-1.185-01	1.395-02
198.5	638.0	2.593+03	4.593+02	6.255+06	6.424+03	8.966-01	-4.914-01	1.254+02	-2.335-01	-1.275-01	1.396-02
198.5	638.0	2.593+03	4.593+02	6.255+06	6.615+03	8.215-01	-4.502-01	1.254+02	-1.912-01	-1.252-01	1.396-02

+2.3

130

CONFIDENTIAL

02

This page represents a typical identified data sheet.

(Some of the data, presented in preliminary form, do not have identified column headings.)

[redacted]

Damping-in-Pitch Data Summary

Run	Mach	Re x 10^{-6}	α \ θ	±1.0	±1.2	±1.3	±1.4	±1.6	±1.7	±1.8
3	5.98	4.8	-3.95	+29.42						
3	5.98	4.8	-3.02	+30.93						
3	5.98	4.8	-2.12	+16.29						+14.98
3	5.98	4.8	-0.28	-4.70						
3	5.98	4.8	+0.64	+6.61						
3	5.98	4.8	1.56	+20.49						
3	5.98	4.8	4.32	-7.66						
3	5.98	4.8	5.26							-3.57
3	5.98	4.8	6.19							-2.88
3	5.98	4.8	8.08							-4.42
3	5.98	4.8	9.05	-3.43						-3.41
3	5.98	4.8	14.01	-4.02						-3.72
5	3.00	4.0	-4.61					-2.35		
5	3.00	4.0	-2.14	-3.03				-3.23		
5	3.00	4.0	-0.22					-3.55		-3.96
5	3.00	4.0	+1.69					-1.41		
5	3.00	4.0	4.56					-1.02		
5	3.00	4.0	9.37	-2.29				-2.45		
5	3.00	4.0	14.31	-2.92				-3.05		
5										
5	4.01	5.0	-4.39		-1.49				-2.41	
5	4.01	5.0	-1.91		-2.69				-1.81	
5	4.01	5.0	0		-1.74			-1.94	-1.91	
5	4.01	5.0	+1.93		-0.78				-1.56	
5	4.01	5.0	4.81						-1.40	
5	4.01	5.0	9.65		-2.51				-2.38	
5	4.01	5.0	14.55			-3.24			-3.26	
6	3.00	4.2	-2.32				-4.44			
6	3.00	4.2	-1.72				-3.93			
6	3.00	4.2	+0.02				-4.78			

Damping-in-Pitch Data Summary (Cont)

Run	Mach	Re x 10^{-6}	α \ θ	±1.0	±1.6	±1.7	±2.3	±2.4	±2.6							
7	2.00	6.0	-1.84	-1.92												
7	2.00	6.0	-0.02	-2.28	-2.27											
7	2.00	6.0	+1.78		-2.66											
7	2.00	6.0	3.61		-1.87											
7	2.00	6.0	5.43		-0.59											
7	2.00	6.0	7.25		-1.05											
7	2.00	6.0	9.06		-2.27											
9	2.00	6.0	-1.75			-2.51										
9	2.00	6.0	0			-2.34										
9	2.00	6.0	+1.79			-2.21										
9	2.00	6.0	3.54			-2.07										
10	5.98	4.7	0		-3.71											
10	5.98	4.7	+4.76		-22.24											
10	5.98	4.7	9.47		-3.63			-3.61								
12	5.99	3.6	+130				-0.22									
12	5.99	3.6	133				-0.27									
12	5.99	3.6	135				-0.30									
12	5.99	3.6	137				-0.35									
12	5.99	3.6	139				-0.39									
12	5.99	3.6	141				-0.49									
12	5.99	3.6	143				-0.80									
12	5.99	3.6	145				-1.67									
12	5.99	3.6	147				-1.74									
12	5.99	3.6	148.6				-1.72									
12	5.99	3.6	149				-1.47									
12	5.99	3.6	149.6				-1.53									
13	3.00	3.1	+130						-0.08							
13	3.00	3.1	135						-0.16							
13	3.00	3.1	139						-0.22							
13	3.00	3.1	143						-0.36							

Damping-in-Pitch Data Summary (Cont)

Run	Mach	Re x 10^{-6}	α \ θ	±0.5	±0.6	±0.8	±0.9	±1.0	±1.1	±1.4	±1.5	±1.6	±1.7	±2.5	±2.6	±2.7
13	3.00	3.1	+145												-0.42	
13	3.00	3.1	147												-0.53	
13	3.00	3.1	148												-0.53	
13	3.00	3.1	149												-0.62	
13	3.00	3.1	149.6												-0.60	
13	4.01	3.8	+130												-0.07	
13	4.01	3.8	135												-0.17	
13	4.01	3.8	139												-0.23	
13	4.01	3.8	143												-0.35	
13	4.01	3.8	145												-0.44	
13	4.01	3.8	147												-0.49	
13	4.01	3.8	148												-0.52	
13	4.01	3.8	149				-0.56						-0.54		-0.52	
13	4.01	3.8	149.6												-0.52	
15	2.49	2.8	+130											-0.10		
15	2.49	2.8	133											-0.13		
15	2.49	2.8	137											-0.12		
15	2.49	2.8	141											-0.24		
15	2.49	2.8	142											-0.26		
15	2.49	2.8	143							-0.29				-0.31		
15	2.49	2.8	144											-0.31		
15	2.49	2.8	145											-0.38		
15	2.49	2.8	146											-0.39		
15	2.49	2.8	147											-0.46		
15	2.49	2.8	148											-0.50		
15	2.49	2.8	149											-0.48		
15	2.49	2.8	149.6											-0.42		
18	5.98	3.6	+160.5	-1.95	-1.66	-1.09		-0.58								+0.10
18	5.98	3.6	162				-0.48	-0.38			-0.25	+0.20				
18	5.98	3.6	164		-0.93				-0.37						+0.20	

[redacted]

Damping-in-Pitch Data Summary (Cont)

Run	Mach	Re x 10^{-6}	α \ θ	±2.2	±2.3	±2.4	±2.5	±2.6	±2.7	±2.8	±3.0					
19&20	10.18	1.2	+120	-0.19		-0.20			-0.17							
19&20	10.18	1.2	125.1			-0.25	-0.21									
19&20	10.18	1.2	130.1		-0.16	-0.22		-0.43								
19&20	10.18	1.2	135			-0.11		-0.29								
19&20	10.18	1.2	140			-0.25	-0.29									
19&20	10.18	1.2	145		-0.41	-0.45	-0.38									
19&20	10.18	1.2	149.1	-0.03	-0.50	-0.27	-0.48		-0.50							
22&23	10.18	1.2	+100.1				+0.04									
22&23	10.18	1.2	105.1					+0.57								
22&23	10.18	1.2	110.1			+0.56	+0.53									
22&23	10.18	1.2	115				+0.38	+0.36	+0.36							
22&23	10.18	1.2	120					+0.01								
24&25	10.18	1.2	+25.1					-0.73								
24&25	10.18	1.2	30.1						-0.72							
24&25	10.18	1.2	35					-0.23	-0.20	-0.19						
24&25	10.18	1.2	40					-0.55		-0.54						
24&25	10.18	1.2	45					-0.34								
24&25	10.18	1.2	50				-0.70									
27&28	10.18	1.2	-14.9				-0.11									
27&28	10.18	1.2	-10				-6.49									
27&28	10.18	1.2	-5						-0.92							
27&28	10.18	1.2	-3			-11.78										
27&28	10.18	1.2	0			-15.36										
27&28	10.18	1.2	+5					-12.83								
27&28	10.18	1.2	10					-0.44			-1.25					

[redacted]

~~CONFIDENTIAL~~

Damping-in-Pitch Data Summary (Cont)

Run	Mach	Re x 10^{-6}	α \ θ	±0.4	±0.6	±0.7	±0.8	±1.0	±1.5	±1.7	±1.8	±1.9				
29	4.00	2.7	-3.39		-10.59		-10.44			+14.09						
29	4.00	2.7	-1.71		-2.79		-3.45									
29	4.00	2.7	0		+18.43				+12.53		+15.49	+17.22				
29	4.00	2.7	+1.63	-5.91				+3.40								
29	4.00	2.7	3.32			-6.46		-5.04								
31&32	1.99	0.6	-4							+1.52						
31&32	1.99	0.6	-2								+3.94					
31&32	1.99	0.6	+4							+1.25						
31&32	1.99	0.6	6							-1.17	-1.02					
31&32	1.99	0.6	8									-2.37				
31&32	1.99	0.6	10							-3.05						
33	1.50	0.73	0							+4.53		+3.88				
33	1.50	1.22	0									+3.49				
33	1.50	1.23	0									+3.44				
33	1.50	1.57	0							+4.24						
33	1.50	2.20	0							+8.78						
33	1.50	2.68	0							+12.03						
33	1.50	3.29	0							+8.79						

~~CONFIDENTIAL~~

~~CONFIDENTIAL~~

RUN NO. 302 5.980 -1.4976+01 7.7480+00 1.0000+00 -1.1440+00 6.5008+01

±1.0

200.0	640.0	2.597+03	4.660+02	6.291+06	7.784+03	5.692-01	-8.524+00	6.615+01	-4.817+00	1.891-01	9.644-03	
200.0	640.0	2.597+03	4.660+02	6.291+06	7.815+03	5.674-01	-8.497+00	6.617+01	-4.798+00	1.918-01	9.646-03	-0.28
200.0	640.0	2.597+03	4.660+02	6.291+06	7.867+03	5.691-01	-8.523+00	6.617+01	-4.815+00	1.916-01	9.646-03	
200.0	640.0	2.597+03	4.660+02	6.291+06	7.691+03	5.822-01	-8.718+00	6.623+01	-4.938+00	2.023-01	9.655-03	

RUN NO. 303 5.980 -8.9854+00 7.7480+00 1.0000+00 -1.1440+00 6.5008+01

±1.0

200.0	640.0	2.597+03	4.660+02	6.291+06	7.222+03	8.754-01	-7.865+00	6.638+01	-4.372+00	2.275-01	9.677-03	
200.0	640.0	2.597+03	4.660+02	6.291+06	7.103+03	9.391-01	-8.438+00	6.637+01	-4.745+00	2.257-01	9.676-03	-0.28
200.0	640.0	2.597+03	4.660+02	6.291+06	7.171+03	8.982-01	-8.071+00	6.641+01	-4.504+00	2.312-01	9.681-03	
200.0	640.0	2.597+03	4.660+02	6.291+06	7.110+03	9.162-01	-8.233+00	6.636+01	-4.613+00	2.231-01	9.674-03	

±1.0

200.0	640.0	2.597+03	4.660+02	6.291+06	7.074+03	9.732-01	-1.457+01	7.078+01	-8.194+00	9.855-01	1.032-02	
200.0	640.0	2.597+03	4.660+02	6.291+06	7.591+03	8.982-01	-1.345+01	7.092+01	-7.493+00	1.011+00	1.034-02	
200.0	640.0	2.597+03	4.660+02	6.291+06	7.758+03	8.738-01	-1.309+01	7.082+01	-7.281+00	9.941-01	1.032-02	4.32

RUN NO. 307 5.980 2.9951+01 7.7480+00 1.0000+00 -1.1440+00 6.5008+01

±1.0

200.0	640.0	2.597+03	4.660+02	6.291+06	6.356+03	8.361-01	2.504+01	7.112+01	1.590+01	1.047+00	1.037-02	
200.0	640.0	2.597+03	4.660+02	6.291+06	6.423+03	8.593-01	2.574+01	7.104+01	1.634+01	1.033+00	1.036-02	-2.12
200.0	640.0	2.597+03	4.660+02	6.291+06	6.463+03	8.832-01	2.645+01	7.117+01	1.674+01	1.057+00	1.038-02	
200.0	640.0	2.597+03	4.660+02	6.291+06	6.294+03	8.358-01	2.503+01	7.111+01	1.590+01	1.045+00	1.037-02	
200.0	640.0	2.597+03	4.660+02	6.291+06	6.351+03	8.719-01	2.611+01	7.101+01	1.657+01	1.026+00	1.035-02	

NO. 308 5.980 2.6956+01 7.7480+00 1.0000+00 -1.1440+00 6.5008+01

±1.8

200.0	640.0	2.597+03	4.660+02	6.291+06	7.532+03	8.791-01	2.370+01	7.115+01	1.508+01	1.052+00	1.037-02	
200.0	640.0	2.597+03	4.660+02	6.291+06	7.470+03	8.580-01	2.313+01	7.113+01	1.474+01	1.048+00	1.037-02	-2.12
200.0	640.0	2.597+03	4.660+02	6.291+06	7.472+03	8.607-01	2.320+01	7.118+01	1.477+01	1.050+00	1.038-02	
200.0	640.0	2.597+03	4.660+02	6.291+06	7.514+03	8.776-01	2.366+01	7.118+01	1.504+01	1.058+00	1.038-02	
200.0	640.0	2.597+03	4.660+02	6.291+06	7.591+03	8.913-01	2.402+01	7.115+01	1.527+01	1.053+00	1.037-02	

RUN NO. 309 5.980 5.9903+01 7.7480+00 1.0000+00 -1.1440+00 6.5008+01

±1.0

200.0	640.0	2.597+03	4.660+02	6.291+06	4.824+03	8.985-01	5.382+01	7.628+01	3.112+01	2.003+00	1.112-02	
200.0	640.0	2.597+03	4.660+02	6.291+06	4.926+03	8.993-01	5.387+01	7.635+01	3.112+01	2.017+00	1.113-02	-3.02
200.0	640.0	2.597+03	4.660+02	6.291+06	4.836+03	8.829-01	5.289+01	7.638+01	3.055+01	2.023+00	1.113-02	

~~CONFIDENTIAL~~

~~CONFIDENTIAL~~

RUN NO. 310 5.980 5.9903+01 7.7480+00 1.0000+00 -1.1440+00 6.5008+01

±1.0

200.0	640.0	2.597+03	4.660+02	6.291+06	4.343+03	8.261-01	4.948+01	7.309+01	2.991+01	1.405+00	1.066-02
200.0	640.0	2.597+03	4.660+02	6.291+06	4.374+03	8.087-01	4.844+01	7.312+01	2.928+01	1.410+00	1.066-02
200.0	640.0	2.597+03	4.660+02	6.291+06	4.337+03	8.000-01	4.792+01	7.301+01	2.902+01	1.390+00	1.064-02
200.0	640.0	2.597+03	4.660+02	6.291+06	4.399+03	8.143-01	4.878+01	7.313+01	2.948+01	1.411+00	1.066-02

-3.95

RUN NO. 311 5.980 8.9854+00 7.7480+00 1.0000+00 -1.1440+00 6.5008+01

±1.0

200.0	640.0	2.597+03	4.660+02	6.291+06	6.391+03	1.030+00	9.259+00	6.891+01	6.518+00	6.581-01	1.005-02
200.0	640.0	2.597+03	4.660+02	6.291+06	6.319+03	1.063+00	9.553+00	6.882+01	6.712+00	6.414-01	1.003-02

0.64

RUN NO. 312 5.980 4.4927+01 7.7480+00 1.0000+00 -1.1440+00 6.5008+01

±1.0

200.0	640.0	2.597+03	4.660+02	6.291+06	5.927+03	7.302-01	3.281+01	7.308+01	2.006+01	1.402+00	1.065-02
200.0	640.0	2.597+03	4.660+02	6.291+06	6.302+03	7.550-01	3.392+01	7.296+01	2.075+01	1.380+00	1.064-02
200.0	640.0	2.597+03	4.660+02	6.291+06	6.284+03	7.577-01	3.404+01	7.304+01	2.080+01	1.395+00	1.065-02
200.0	640.0	2.597+03	4.660+02	6.291+06	6.246+03	7.421-01	3.334+01	7.319+01	2.034+01	1.423+00	1.067-02

+1.36

RUN NO. 313 5.980 -8.9854+00 7.7480+00 1.0000+00 -1.1440+00 6.5008+01

±1.0

200.0	640.0	2.597+03	4.660+02	6.291+06	6.974+03	7.258-01	-6.522+00	6.624+01	-3.505+00	2.039-01	9.657-03
200.0	640.0	2.597+03	4.660+02	6.291+06	6.988+03	7.059-01	-6.343+00	6.628+01	-3.387+00	2.107-01	9.663-03
200.0	640.0	2.597+03	4.660+02	6.291+06	6.981+03	7.053-01	-6.337+00	6.625+01	-3.385+00	2.056-01	9.658-03
200.0	640.0	2.597+03	4.660+02	6.291+06	6.910+03	7.399-01	-6.648+00	6.628+01	-3.586+00	2.106-01	9.663-03

+9.05

RUN NO. 314 5.980 -8.9854+00 7.7480+00 1.0000+00 -1.1440+00 6.5008+01

±1.0

200.0	640.0	2.597+03	4.660+02	6.291+06	7.002+03	7.274-01	-6.536+00	6.628+01	-3.513+00	2.106-01	9.663-03
200.0	640.0	2.597+03	4.660+02	6.291+06	6.994+03	7.161-01	-6.435+00	6.623+01	-3.449+00	2.014-01	9.655-03
200.0	640.0	2.597+03	4.660+02	6.291+06	6.998+03	7.055-01	-6.337+00	6.627+01	-3.385+00	2.078-01	9.660-03
200.0	640.0	2.597+03	4.660+02	6.291+06	6.968+03	6.856-01	-6.161+00	6.627+01	-3.269+00	2.085-01	9.661-03

+9.05

±1.3

200.0	640.0	2.597+03	4.660+02	6.291+06	6.220+03	1.185+00	-6.388+00	6.626+01	-3.417+00	2.075-01	9.660-03
200.0	640.0	2.597+03	4.660+02	6.291+06	6.211+03	1.197+00	-6.454+00	6.628+01	-3.459+00	2.108-01	9.663-03
200.0	640.0	2.597+03	4.660+02	6.291+06	6.223+03	1.177+00	-6.345+00	6.629+01	-3.387+00	2.123-01	9.664-03
200.0	640.0	2.597+03	4.660+02	6.291+06	6.181+03	1.175+00	-6.317+00	6.648+01	-3.373+00	2.437-01	9.692-03

+9.05

~~CONFIDENTIAL~~

[redacted]

RUN NO. 316 5.980 -8.9854+00 7.7480+00 1.0000+00 -1.1440+00 6.5008+01

±1.0

200.0	640.0	2.597+03	4.660+02	6.291+06	6.691+03	7.855-01	-7.058+00	6.280+01	-4.066+00	-3.547-01	9.155-03
200.0	640.0	2.597+03	4.660+02	6.291+06	6.705+03	7.797-01	-7.006+00	6.284+01	-4.028+00	-3.490-01	9.161-03
200.0	640.0	2.597+03	4.660+02	6.291+06	6.730+03	7.729-01	-6.944+00	6.279+01	-3.989+00	-3.561-01	9.154-03
200.0	640.0	2.597+03	4.660+02	6.291+06	6.697+03	7.745-01	-6.959+00	6.281+01	-3.998+00	-3.539-01	9.156-03

+14.01

RUN NO. 317 5.980 -8.9854+00 7.7480+00 1.0000+00 -1.1440+00 6.5008+01

±1.8

200.0	640.0	2.597+03	4.660+02	6.291+06	6.546+03	7.362-01	-6.615+00	6.302+01	-3.748+00	-3.261-01	9.187-03
200.0	640.0	2.597+03	4.660+02	6.291+06	6.556+03	7.321-01	-6.578+00	6.307+01	-3.720+00	-3.122-01	9.194-03
200.0	640.0	2.597+03	4.660+02	6.291+06	6.593+03	7.263-01	-6.526+00	6.302+01	-3.688+00	-3.205-01	9.187-03
200.0	640.0	2.597+03	4.660+02	6.291+06	6.554+03	7.316-01	-6.574+00	6.303+01	-3.720+00	-3.194-01	9.188-03

+14.01

±1.8

200.0	640.0	2.597+03	4.660+02	6.291+06	6.539+03	9.064-01	-8.145+00	6.707+01	-4.507+00	3.425-01	9.777-03
200.0	640.0	2.597+03	4.660+02	6.291+06	6.561+03	8.978-01	-8.067+00	6.704+01	-4.459+00	3.368-01	9.772-03
200.0	640.0	2.597+03	4.660+02	6.291+06	6.624+03	8.748-01	-7.861+00	6.708+01	-4.324+00	3.442-01	9.779-03
200.0	640.0	2.597+03	4.660+02	6.291+06	6.510+03	8.981-01	-8.069+00	6.708+01	-4.458+00	3.437-01	9.778-03

+8.08

RUN NO. 319 5.980 -8.9854+00 7.7480+00 1.0000+00 -1.1440+00 6.5008+01

±1.8

200.0	640.0	2.597+03	4.660+02	6.291+06	6.544+03	8.935-01	-8.028+00	6.704+01	-4.434+00	3.372-01	9.773-03
200.0	640.0	2.597+03	4.660+02	6.291+06	6.512+03	9.068-01	-8.148+00	5.702+01	-4.513+00	3.336-01	9.769-03
200.0	640.0	2.597+03	4.660+02	6.291+06	6.547+03	8.809-01	-7.915+00	6.708+01	-4.359+00	3.440-01	9.778-03
200.0	640.0	2.597+03	4.660+02	6.291+06	6.527+03	8.736-01	-7.850+00	6.705+01	-4.318+00	3.399-01	9.775-03

+8.08

RUN NO. 320 5.980 -8.9854+00 7.7480+00 1.0000+00 -1.1440+00 6.5008+01

±1.8

200.0	640.0	2.597+03	4.660+02	6.291+06	6.957+03	6.275-01	-5.638+00	6.896+01	-2.814+00	6.659-01	1.005-02
200.0	640.0	2.597+03	4.660+02	6.291+06	6.961+03	6.246-01	-5.613+00	6.898+01	-2.797+00	6.700-01	1.006-02
200.0	640.0	2.597+03	4.660+02	6.291+06	6.970+03	6.236-01	-5.603+00	6.895+01	-2.792+00	6.647-01	1.005-02
200.0	640.0	2.597+03	4.660+02	6.291+06	6.859+03	6.616-01	-5.945+00	6.897+01	-3.006+00	6.677-01	1.005-02
200.0	640.0	2.597+03	4.660+02	6.291+06	6.848+03	6.583-01	-5.915+00	6.897+01	-2.987+00	6.683-01	1.005-02

+6.19

RUN NO. 321 5.980 -8.9854+00 7.7480+00 1.0000+00 -1.1440+00 6.5008+01

±1.8

200.0	640.0	2.597+03	4.660+02	6.291+06	5.535+03	7.759-01	-6.972+00	6.979+01	-3.606+00	8.103-01	1.017-02
200.0	640.0	2.597+03	4.660+02	6.291+06	5.513+03	7.890-01	-7.089+00	6.978+01	-3.679+00	8.102-01	1.017-02
200.0	640.0	2.597+03	4.660+02	6.291+06	5.556+03	7.542-01	-6.777+00	6.978+01	-3.486+00	8.089-01	1.017-02
200.0	640.0	2.597+03	4.660+02	6.291+06	5.514+03	7.870-01	-7.071+00	6.974+01	-3.670+00	8.020-01	1.017-02
200.0	640.0	2.597+03	4.660+02	6.291+06	5.516+03	7.385-01	-6.635+00	6.980+01	-3.397+00	8.121-01	1.017-02

+5.26

[redacted]

~~CONFIDENTIAL~~

RUN NC. 502 3.000 -1.5230+01 7.7480+00 1.0000+00 -9.9627-01 6.4994+01

±1.3	36.8	568.0	2.094+03	9.088+02	5.310+06	6.705+03	1.047+00	-1.595+01	6.744+01	-3.959+00	2.089-01	1.219-02	-0.22
	36.8	568.0	2.094+03	9.088+02	5.310+06	6.701+03	1.052+00	-1.607+01	6.743+01	-3.977+00	2.086-01	1.219-02	
	36.8	568.0	2.094+03	9.088+02	5.310+06	6.699+03	1.050+00	-1.599+01	6.743+01	-3.969+00	2.083-01	1.219-02	
	36.8	568.0	2.094+03	9.088+02	5.310+06	6.670+03	1.038+00	-1.582+01	6.740+01	-3.925+00	2.060-01	1.219-02	

RUN NC. 503 3.000 -1.5230+01 7.7480+00 1.0000+00 -9.9627-01 6.4994+01

±1.6	36.8	568.0	2.094+03	9.088+02	5.310+06	5.180+03	9.595-01	-1.461+01	6.624+01	-3.670+00	1.052-01	1.197-02	-0.22
	36.8	568.0	2.094+03	9.088+02	5.310+06	5.171+03	9.743-01	-1.484+01	6.619+01	-3.734+00	1.015-01	1.197-02	
	36.8	568.0	2.094+03	9.088+02	5.310+06	5.194+03	9.716-01	-1.480+01	6.624+01	-3.720+00	1.058-01	1.197-02	
	36.8	568.0	2.094+03	9.088+02	5.310+06	5.229+03	9.513-01	-1.449+01	6.624+01	-3.637+00	1.055-01	1.197-02	

RUN NC. 504 3.000 -1.5230+01 7.7480+00 1.0000+00 -9.9627-01 6.4994+01

±1.6	36.8	568.0	2.094+03	9.088+02	5.310+06	6.276+03	8.871-01	-1.351+01	6.771+01	-3.300+00	2.328-01	1.224-02	-2.14
	36.8	568.0	2.094+03	9.088+02	5.310+06	6.273+03	8.855-01	-1.349+01	6.771+01	-3.294+00	2.323-01	1.224-02	
	36.8	568.0	2.094+03	9.088+02	5.310+06	6.289+03	8.693-01	-1.324+01	6.771+01	-3.228+00	2.327-01	1.224-02	
	36.8	568.0	2.094+03	9.088+02	5.310+06	6.238+03	8.746-01	-1.332+01	6.766+01	-3.252+00	2.279-01	1.223-02	

RUN NC. 505 3.000 -1.5230+01 7.7480+00 1.0000+00 -9.9627-01 6.4994+01

±1.6	36.8	568.0	2.094+03	9.088+02	5.310+06	6.255+03	8.477-01	-1.291+01	6.762+01	-3.146+00	2.252-01	1.222-02	-2.14
	36.8	568.0	2.094+03	9.088+02	5.310+06	6.241+03	8.601-01	-1.310+01	6.760+01	-3.197+00	2.228-01	1.222-02	
	36.8	568.0	2.094+03	9.088+02	5.310+06	6.230+03	8.738-01	-1.331+01	6.761+01	-3.251+00	2.238-01	1.222-02	
	36.8	568.0	2.094+03	9.088+02	5.310+06	6.202+03	8.550-01	-1.302+01	6.762+01	-3.175+00	2.248-01	1.222-02	

RUN NC. 506 3.000 -1.0661+01 7.7480+00 1.0000+00 -9.9627-01 6.4994+01

±1.0	36.8	568.0	2.094+03	9.088+02	5.310+06	5.018+03	1.183+00	-1.262+01	6.697+01	-3.098+00	1.686-01	1.211-02	-2.14
	36.8	568.0	2.094+03	9.088+02	5.310+06	5.101+03	1.161+00	-1.237+01	6.699+01	-3.032+00	1.699-01	1.211-02	
	36.8	568.0	2.094+03	9.088+02	5.310+06	5.090+03	1.150+00	-1.226+01	6.695+01	-3.003+00	1.666-01	1.210-02	
	36.8	568.0	2.094+03	9.088+02	5.310+06	5.109+03	1.146+00	-1.222+01	6.699+01	-2.991+00	1.699-01	1.211-02	

RUN NC. 507 3.000 -1.5230+01 7.7480+00 1.0000+00 -9.9627-01 6.4994+01

±1.6	36.8	568.0	2.094+03	9.088+02	5.310+06	6.267+03	8.914-01	-1.342+01	7.215+01	-3.075+00	6.338-01	1.304-02	-4.61
	36.8	568.0	2.094+03	9.088+02	5.310+06	6.280+03	8.941-01	-1.362+01	7.220+01	-3.121+00	6.382-01	1.305-02	
	36.8	568.0	2.094+03	9.088+02	5.310+06	6.288+03	8.853-01	-1.348+01	7.216+01	-3.090+00	6.343-01	1.304-02	
	36.8	568.0	2.094+03	9.088+02	5.310+06	6.250+03	9.066-01	-1.381+01	7.226+01	-3.166+00	6.438-01	1.306-02	
	36.8	568.0	2.094+03	9.088+02	5.310+06	6.246+03	8.914-01	-1.358+01	7.221+01	-3.110+00	6.395-01	1.305-02	

~~CONFIDENTIAL~~

[redacted]

RUN NC. 508 3.000 -7.6151+00 7.7480+00 1.0000+00 -9.9627-01 6.4994+01

±1.6	36.8	568.0	2.094+03	9.088+02	5.310+06	5.752+03	9.602-01	-7.312+00	7.036+01	-1.603+00	4.688-01	1.272-02
	36.8	568.0	2.094+03	9.088+02	5.310+06	5.766+03	9.723-01	-7.404+00	7.037+01	-1.626+00	4.700-01	1.272-02
	36.8	568.0	2.094+03	9.088+02	5.310+06	5.767+03	9.594-01	-7.306+00	7.037+01	-1.601+00	4.694-01	1.272-02
	36.8	568.0	2.094+03	9.088+02	5.310+06	5.742+03	9.365-01	-7.132+00	7.038+01	-1.556+00	4.705-01	1.272-02
	36.8	568.0	2.094+03	9.088+02	5.310+06	5.707+03	9.477-01	-7.217+00	7.040+01	-1.578+00	4.724-01	1.273-02

-14.61

RUN NC. 509 3.000 -1.5230+01 7.7480+00 1.0000+00 -9.9627-01 6.4994+01

±1.6	36.8	568.0	2.094+03	9.088+02	5.310+06	6.349+03	9.119-01	-1.389+01	6.661+01	-3.456+00	1.373-01	1.204-02
	36.8	568.0	2.094+03	9.088+02	5.310+06	6.354+03	8.956-01	-1.364+01	6.658+01	-3.390+00	1.347-01	1.204-02
	36.8	568.0	2.094+03	9.088+02	5.310+06	6.376+03	8.914-01	-1.358+01	6.661+01	-3.372+00	1.373-01	1.204-02
	36.8	568.0	2.094+03	9.088+02	5.310+06	6.328+03	8.969-01	-1.366+01	6.661+01	-3.394+00	1.370-01	1.204-02

-0.22

RUN NC. 510 3.000 -7.6151+00 7.7480+00 1.0000+00 -9.9627-01 6.4994+01

±1.6	36.8	568.0	2.094+03	9.088+02	5.310+06	6.208+03	8.725-01	-6.644+00	6.913+01	-1.459+00	3.585-01	1.250-02
	36.8	568.0	2.094+03	9.088+02	5.310+06	6.232+03	8.652-01	-6.588+00	6.912+01	-1.444+00	3.573-01	1.250-02
	36.8	568.0	2.094+03	9.088+02	5.310+06	6.268+03	8.504-01	-6.476+00	6.908+01	-1.416+00	3.534-01	1.249-02
	36.8	568.0	2.094+03	9.088+02	5.310+06	6.269+03	8.697-01	-6.623+00	6.911+01	-1.454+00	3.565-01	1.249-02
	36.8	568.0	2.094+03	9.088+02	5.310+06	6.249+03	8.546-01	-6.508+00	6.912+01	-1.424+00	3.574-01	1.250-02

+1.69

RUN NC. 511 3.000 -7.6151+00 7.7480+00 1.0000+00 -9.9627-01 6.4994+01

±1.6	36.8	568.0	2.094+03	9.088+02	5.310+06	5.536+03	8.362-01	-6.368+00	6.922+01	-1.385+00	3.660-01	1.251-02
	36.8	568.0	2.094+03	9.088+02	5.310+06	5.536+03	8.437-01	-6.425+00	6.918+01	-1.401+00	3.628-01	1.251-02
	36.8	568.0	2.094+03	9.088+02	5.310+06	5.630+03	8.179-01	-6.229+00	6.924+01	-1.349+00	3.679-01	1.252-02
	36.8	568.0	2.094+03	9.088+02	5.310+06	5.611+03	8.122-01	-6.185+00	6.925+01	-1.338+00	3.684-01	1.252-02

+1.69

RUN NC. 512 3.000 -7.6151+00 7.7480+00 1.0000+00 -9.9627-01 6.4994+01

±1.6	36.8	568.0	2.094+03	9.088+02	5.310+06	6.585+03	6.484-01	-4.938+00	6.935+01	-1.015+00	3.779-01	1.254-02
	36.8	568.0	2.094+03	9.088+02	5.310+06	6.572+03	6.387-01	-4.863+00	6.936+01	-9.955-01	3.783-01	1.254-02
	36.8	568.0	2.094+03	9.088+02	5.310+06	6.549+03	6.516-01	-4.962+00	6.934+01	-1.021+00	3.773-01	1.254-02
	36.8	568.0	2.094+03	9.088+02	5.310+06	6.527+03	6.477-01	-4.932+00	6.931+01	-1.014+00	3.742-01	1.253-02
	36.8	568.0	2.094+03	9.088+02	5.310+06	6.546+03	6.317-01	-4.811+00	6.934+01	-9.822-01	3.767-01	1.253-02

+4.56

RUN NC. 513 3.000 -7.6151+00 7.7480+00 1.0000+00 -9.9627-01 6.4994+01

±1.6	36.8	568.0	2.094+03	9.088+02	5.310+06	5.983+03	6.835-01	-5.205+00	6.933+01	-1.084+00	3.760-01	1.253-02
	36.8	568.0	2.094+03	9.088+02	5.310+06	6.018+03	6.700-01	-5.102+00	6.932+01	-1.058+00	3.747-01	1.253-02
	36.8	568.0	2.094+03	9.088+02	5.310+06	6.002+03	6.753-01	-5.142+00	6.935+01	-1.067+00	3.782-01	1.254-02
	36.8	568.0	2.094+03	9.088+02	5.310+06	6.011+03	6.553-01	-4.990+00	6.936+01	-1.028+00	3.786-01	1.254-02
	36.8	568.0	2.094+03	9.088+02	5.310+06	5.996+03	6.210-01	-4.729+00	6.935+01	-9.610-01	3.775-01	1.254-02

+4.56

[redacted]

~~CONFIDENTIAL~~

RUN NC. 514 3.000 -1.5230+01 7.7480+00 1.0000+00 -9.9627-01 6.4994+01

±1.6	36.8	568.0	2.094+03	9.088+02	5.310+06	6.246+03	6.701-01	-1.021+01	6.600+01	-2.491+00	8.525-02	1.193-02	+9.37
	36.8	568.0	2.094+03	9.088+02	5.310+06	6.266+03	6.682-01	-1.018+01	6.601+01	-2.483+00	8.558-02	1.193-02	
	36.8	568.0	2.094+03	9.088+02	5.310+06	6.246+03	6.693-01	-1.019+01	6.600+01	-2.488+00	8.532-02	1.193-02	
	36.8	568.0	2.094+03	9.088+02	5.310+06	6.271+03	6.537-01	-9.955+00	6.597+01	-2.425+00	8.286-02	1.193-02	

RUN NC. 515 3.000 -1.5230+01 7.7480+00 1.0000+00 -9.9627-01 6.4994+01

±1.6	36.8	568.0	2.094+03	9.088+02	5.310+06	5.403+03	6.607-01	-1.006+01	6.596+01	-2.454+00	8.147-02	1.192-02	+9.37
	36.8	568.0	2.094+03	9.088+02	5.310+06	5.423+03	6.444-01	-9.815+00	6.593+01	-2.388+00	7.913-02	1.192-02	
	36.8	568.0	2.094+03	9.088+02	5.310+06	5.413+03	6.512-01	-9.919+00	6.596+01	-2.415+00	8.128-02	1.192-02	
	36.8	568.0	2.094+03	9.088+02	5.310+06	5.376+03	6.640-01	-1.011+01	6.595+01	-2.468+00	8.068-02	1.192-02	

RUN NC. 516 3.000 -1.5230+01 7.7480+00 1.0000+00 -9.9627-01 6.4994+01

±1.6	36.8	568.0	2.094+03	9.088+02	5.310+06	6.507+03	7.858-01	-1.197+01	6.469+01	-3.028+00	-2.573-02	1.169-02	+14.31
	36.8	568.0	2.094+03	9.088+02	5.310+06	6.486+03	7.940-01	-1.209+01	6.465+01	-3.064+00	-2.847-02	1.169-02	
	36.8	568.0	2.094+03	9.088+02	5.310+06	6.483+03	7.981-01	-1.215+01	6.469+01	-3.080+00	-2.515-02	1.169-02	
	36.8	568.0	2.094+03	9.088+02	5.310+06	6.474+03	7.935-01	-1.208+01	6.465+01	-3.062+00	-2.857-02	1.169-02	

RUN NC. 517 3.000 -1.5230+01 7.7480+00 1.0000+00 -9.9627-01 6.4994+01

±1.6	36.8	568.0	2.094+03	9.088+02	5.310+06	6.494+03	7.906-01	-1.204+01	6.469+01	-3.048+00	-2.515-02	1.169-02	+14.31
	36.8	568.0	2.094+03	9.088+02	5.310+06	6.499+03	7.860-01	-1.197+01	6.468+01	-3.029+00	-2.637-02	1.169-02	
	36.8	568.0	2.094+03	9.088+02	5.310+06	6.517+03	7.865-01	-1.198+01	6.469+01	-3.031+00	-2.573-02	1.169-02	
	36.8	568.0	2.094+03	9.088+02	5.310+06	6.467+03	7.958-01	-1.212+01	6.467+01	-3.071+00	-2.713-02	1.169-02	

RUN NC. 518 3.000 -1.2692+01 7.7480+00 1.0000+00 -9.9627-01 6.4994+01

±1.0	36.8	568.0	2.094+03	9.088+02	5.310+06	5.160+03	9.084-01	-1.153+01	6.461+01	-2.911+00	-3.187-02	1.168-02	+14.31
	36.8	568.0	2.094+03	9.088+02	5.310+06	5.157+03	9.060-01	-1.150+01	6.467+01	-2.899+00	-2.686-02	1.169-02	
	36.8	568.0	2.094+03	9.088+02	5.310+06	5.133+03	9.169-01	-1.164+01	6.464+01	-2.939+00	-2.964-02	1.169-02	

RUN NC. 519 3.000 -1.2692+01 7.7480+00 1.0000+00 -9.9627-01 6.4994+01

±1.0	36.8	568.0	2.094+03	9.088+02	5.310+06	5.391+03	7.669-01	-9.733+00	6.582+01	-2.370+00	7.011-02	1.190-02	+9.37
	36.8	568.0	2.094+03	9.088+02	5.310+06	5.431+03	7.670-01	-9.735+00	6.587+01	-2.369+00	7.398-02	1.191-02	
	36.8	568.0	2.094+03	9.088+02	5.310+06	5.508+03	7.162-01	-9.090+00	6.588+01	-2.193+00	7.462-02	1.191-02	
	36.8	568.0	2.094+03	9.088+02	5.310+06	5.477+03	7.263-01	-9.218+00	6.590+01	-2.228+00	7.620-02	1.191-02	

~~CONFIDENTIAL~~

[redacted]

RUN NO. 520 4.010 -7.6151+00 7.7480+00 1.0000+00 -9.9627-01 6.4994+01

±1.6	74.0	558.0	2.261+03	7.795+02	6.599+06	6.459+03	9.155-01	-6.932+00	6.735+01	-1.994+00	2.351-01	1.128-02	0
	74.0	558.0	2.261+03	7.795+02	6.599+06	6.510+03	8.786-01	-6.690+00	6.737+01	-1.900+00	2.362-01	1.128-02	
	74.0	558.0	2.261+03	7.795+02	6.599+06	6.496+03	8.964-01	-6.826+00	6.733+01	-1.946+00	2.329-01	1.127-02	
	74.0	558.0	2.261+03	7.795+02	6.599+06	6.479+03	8.922-01	-6.794+00	6.737+01	-1.934+00	2.369-01	1.128-02	

RUN NO. 521 4.010 -7.6151+00 7.7480+00 1.0000+00 -9.9627-01 6.4994+01

±1.2	74.0	558.0	2.261+03	7.795+02	6.599+06	5.347+03	8.174-01	-6.225+00	6.741+01	-1.743+00	2.406-01	1.129-02	0
	74.0	558.0	2.261+03	7.795+02	6.599+06	5.360+03	8.097-01	-6.166+00	6.740+01	-1.724+00	2.397-01	1.128-02	
	74.0	558.0	2.261+03	7.795+02	6.599+06	5.342+03	8.129-01	-6.190+00	6.736+01	-1.733+00	2.362-01	1.128-02	
	74.0	558.0	2.261+03	7.795+02	6.599+06	5.295+03	8.232-01	-6.269+00	6.739+01	-1.758+00	2.391-01	1.128-02	

RUN NO. 522 4.010 -7.6151+00 7.7480+00 1.0000+00 -9.9627-01 6.4994+01

±1.7	74.0	558.0	2.261+03	7.795+02	6.599+06	6.345+03	8.656-01	-6.592+00	6.733+01	-1.868+00	2.332-01	1.127-02	0
	74.0	558.0	2.261+03	7.795+02	6.599+06	6.307+03	8.967-01	-6.829+00	6.735+01	-1.946+00	2.350-01	1.128-02	
	74.0	558.0	2.261+03	7.795+02	6.599+06	6.333+03	8.815-01	-6.713+00	6.736+01	-1.907+00	2.353-01	1.128-02	
	74.0	558.0	2.261+03	7.795+02	6.599+06	6.287+03	8.848-01	-6.737+00	6.733+01	-1.916+00	2.331-01	1.127-02	

RUN NO. 523 4.010 -1.0661+01 7.7480+00 1.0000+00 -9.9627-01 6.4994+01

±1.7	74.0	558.0	2.261+03	7.795+02	6.599+06	6.442+03	8.079-01	-8.613+00	7.037+01	-2.433+00	5.477-01	1.178-02	-4.39
	74.0	558.0	2.261+03	7.795+02	6.599+06	6.443+03	8.056-01	-8.589+00	7.039+01	-2.424+00	5.495-01	1.178-02	
	74.0	558.0	2.261+03	7.795+02	6.599+06	6.441+03	8.110-01	-8.646+00	7.038+01	-2.443+00	5.484-01	1.178-02	
	74.0	558.0	2.261+03	7.795+02	6.599+06	6.406+03	8.084-01	-8.619+00	7.039+01	-2.434+00	5.502-01	1.179-02	
	74.0	558.0	2.261+03	7.795+02	6.599+06	6.544+03	7.757-01	-8.270+00	7.040+01	-2.322+00	5.513-01	1.179-02	

RUN NO. 524 4.010 -7.6151+00 7.7480+00 1.0000+00 -9.9627-01 6.4994+01

±1.2	74.0	558.0	2.261+03	7.795+02	6.599+06	4.760+03	7.250-01	-5.521+00	6.910+01	-1.472+00	4.141-01	1.157-02	-4.39
	74.0	558.0	2.261+03	7.795+02	6.599+06	4.740+03	7.295-01	-5.555+00	6.907+01	-1.483+00	4.117-01	1.157-02	
	74.0	558.0	2.261+03	7.795+02	6.599+06	4.745+03	7.364-01	-5.608+00	6.906+01	-1.501+00	4.100-01	1.156-02	
	74.0	558.0	2.261+03	7.795+02	6.599+06	4.753+03	7.244-01	-5.517+00	6.909+01	-1.471+00	4.131-01	1.157-02	
	74.0	558.0	2.261+03	7.795+02	6.599+06	4.718+03	7.372-01	-5.614+00	6.909+01	-1.502+00	4.136-01	1.157-02	

RUN NO. 525 4.010 -7.6151+00 7.7480+00 1.0000+00 -9.9627-01 6.4994+01

±1.7	74.0	558.0	2.261+03	7.795+02	6.599+06	6.696+03	6.793-01	-5.173+00	6.914+01	-1.358+00	4.184-01	1.158-02	+4.31
	74.0	558.0	2.261+03	7.795+02	6.599+06	6.650+03	6.936-01	-5.282+00	6.910+01	-1.394+00	4.142-01	1.157-02	
	74.0	558.0	2.261+03	7.795+02	6.599+06	6.672+03	7.186-01	-5.473+00	6.914+01	-1.455+00	4.191-01	1.158-02	
	74.0	558.0	2.261+03	7.795+02	6.599+06	6.690+03	6.755-01	-5.144+00	6.914+01	-1.348+00	4.191-01	1.158-02	
	74.0	558.0	2.261+03	7.795+02	6.599+06	6.663+03	6.688-01	-5.093+00	6.914+01	-1.332+00	4.181-01	1.158-02	

[redacted]

~~CONFIDENTIAL~~

RUN NC. 526 4.010 -7.6151+00 7.7480+00 1.0000+00 -9.9627-01 6.4994+01

±1.7	74.0	558.0	2.261+03	7.795+02	6.599+06	6.086+03	7.035-01	-5.357+00	6.905+01	-1.420+00	4.088-01	1.156-02	+4.81
	74.0	558.0	2.261+03	7.795+02	6.599+06	6.061+03	7.111-01	-5.415+00	6.903+01	-1.439+00	4.066-01	1.156-02	
	74.0	558.0	2.261+03	7.795+02	6.599+06	6.088+03	7.208-01	-5.489+00	6.902+01	-1.463+00	4.063-01	1.156-02	
	74.0	558.0	2.261+03	7.795+02	6.599+06	6.072+03	7.092-01	-5.401+00	6.900+01	-1.435+00	4.041-01	1.155-02	

RUN NC. 527 4.010 -1.0661+01 7.7480+00 1.0000+00 -9.9627-01 6.4994+01

±1.7	74.0	558.0	2.261+03	7.795+02	6.599+06	6.551+03	7.511-01	-8.007+00	6.689+01	-2.356+00	1.887-01	1.120-02	+9.65
	74.0	558.0	2.261+03	7.795+02	6.599+06	6.551+03	7.549-01	-8.048+00	6.687+01	-2.370+00	1.863-01	1.120-02	
	74.0	558.0	2.261+03	7.795+02	6.599+06	6.546+03	7.615-01	-8.119+00	6.691+01	-2.393+00	1.898-01	1.120-02	
	74.0	558.0	2.261+03	7.795+02	6.599+06	6.520+03	7.568-01	-8.069+00	6.691+01	-2.376+00	1.901-01	1.120-02	

RUN NC. 528 4.010 -7.6151+00 7.7480+00 1.0000+00 -9.9627-01 6.4994+01

±1.2	74.0	558.0	2.261+03	7.795+02	6.599+06	4.753+03	1.098+00	-8.359+00	6.675+01	-2.479+00	1.743-01	1.118-02	+9.65
	74.0	558.0	2.261+03	7.795+02	6.599+06	4.751+03	1.120+00	-8.527+00	6.675+01	-2.536+00	1.741-01	1.118-02	
	74.0	558.0	2.261+03	7.795+02	6.599+06	4.753+03	1.120+00	-8.528+00	6.674+01	-2.536+00	1.732-01	1.117-02	
	74.0	558.0	2.261+03	7.795+02	6.599+06	4.778+03	1.105+00	-8.412+00	6.676+01	-2.497+00	1.751-01	1.118-02	

RUN NC. 529 4.010 -1.0661+01 7.7480+00 1.0000+00 -9.9627-01 6.4994+01

±1.7	74.0	558.0	2.261+03	7.795+02	6.599+06	6.474+03	7.706-01	-8.215+00	6.685+01	-2.427+00	1.839-01	1.119-02	+9.65
	74.0	558.0	2.261+03	7.795+02	6.599+06	6.535+03	7.453-01	-7.946+00	6.689+01	-2.335+00	1.882-01	1.120-02	
	74.0	558.0	2.261+03	7.795+02	6.599+06	6.523+03	7.478-01	-7.973+00	6.690+01	-2.344+00	1.889-01	1.120-02	
	74.0	558.0	2.261+03	7.795+02	6.599+06	6.465+03	7.664-01	-8.171+00	6.689+01	-2.411+00	1.887-01	1.120-02	

RUN NC. 530 4.010 -1.5230+01 7.7480+00 1.0000+00 -9.9627-01 6.4994+01

±1.7	74.0	558.0	2.261+03	7.795+02	6.599+06	6.475+03	6.754-01	-1.035+01	6.488+01	-3.239+00	-1.109-02	1.086-02	+14.55
	74.0	558.0	2.261+03	7.795+02	6.599+06	6.455+03	6.849-01	-1.043+01	6.489+01	-3.268+00	-1.061-02	1.086-02	
	74.0	558.0	2.261+03	7.795+02	6.599+06	6.440+03	6.871-01	-1.046+01	6.491+01	-3.278+00	-7.707-03	1.087-02	

RUN NC. 531 4.010 -1.0661+01 7.7480+00 1.0000+00 -9.9627-01 6.4994+01

±1.7	74.0	558.0	2.261+03	7.795+02	6.599+06	6.529+03	9.659-01	-1.034+01	6.493+01	-3.234+00	-6.237-03	1.087-02	+14.55
	74.0	558.0	2.261+03	7.795+02	6.599+06	6.512+03	9.789-01	-1.044+01	6.488+01	-3.270+00	-1.062-02	1.086-02	
	74.0	558.0	2.261+03	7.795+02	6.599+06	6.519+03	9.741-01	-1.039+01	6.492+01	-3.251+00	-7.436-03	1.087-02	
	74.0	558.0	2.261+03	7.795+02	6.599+06	6.481+03	9.805-01	-1.045+01	6.489+01	-3.276+00	-1.054-02	1.086-02	

~~CONFIDENTIAL~~

[redacted]

RUN NC. 532 4.010 -1.0661+01 7.7480+00 1.0000+00 -9.9627-01 6.4994+01

±1.3	74.0	558.0	2.261+03	7.795+02	6.599+06	5.146+03	9.626-01	-1.026+01	6.488+01	-3.210+00	-1.142-02	1.086-02	+14.55
	74.0	558.0	2.261+03	7.795+02	6.599+06	5.152+03	9.611-01	-1.025+01	6.491+01	-3.203+00	-8.110-03	1.087-02	
	74.0	558.0	2.261+03	7.795+02	6.599+06	5.126+03	9.751-01	-1.040+01	6.487+01	-3.257+00	-1.228-02	1.086-02	
	74.0	558.0	2.261+03	7.795+02	6.599+06	5.108+03	9.883-01	-1.054+01	6.490+01	-3.303+00	-8.721-03	1.087-02	

RUN NC. 533 4.010 -7.6151+00 7.7480+00 1.0000+00 -9.9627-01 6.4994+01

±1.7	74.0	558.0	2.261+03	7.795+02	6.599+06	6.389+03	7.584-01	-5.776+00	6.874+01	-1.563+00	3.771-01	1.151-02	+1.93
	74.0	558.0	2.261+03	7.795+02	6.599+06	6.362+03	7.571-01	-5.766+00	6.876+01	-1.559+00	3.796-01	1.151-02	
	74.0	558.0	2.261+03	7.795+02	6.599+06	6.342+03	7.618-01	-5.801+00	6.875+01	-1.571+00	3.782-01	1.151-02	
	74.0	558.0	2.261+03	7.795+02	6.599+06	6.321+03	7.581-01	-5.773+00	6.877+01	-1.561+00	3.802-01	1.151-02	

RUN NC. 534 4.010 -4.5691+00 7.7480+00 1.0000+00 -9.9627-01 6.4994+01

±1.2	74.0	558.0	2.261+03	7.795+02	6.599+06	4.553+03			6.936+01		4.412-01	1.161-02	+1.93
	74.0	558.0	2.261+03	7.795+02	6.599+06	4.553+03			6.936+01		4.416-01	1.161-02	
	74.0	558.0	2.261+03	7.795+02	6.599+06	4.512+03			6.937+01		4.424-01	1.161-02	
	74.0	558.0	2.261+03	7.795+02	6.599+06	4.530+03			6.937+01		4.428-01	1.162-02	
	74.0	558.0	2.261+03	7.795+02	6.599+06	4.511+03			6.938+01		4.436-01	1.162-02	

0.864 -0.776

RUN NC. 535 4.010 -7.6151+00 7.7480+00 1.0000+00 -9.9627-01 6.4994+01

±1.7	74.0	558.0	2.261+03	7.795+02	6.599+06	6.764+03	8.288-01	-6.312+00	6.804+01	-1.756+00	3.047-01	1.139-02	-1.91
	74.0	558.0	2.261+03	7.795+02	6.599+06	6.787+03	8.200-01	-6.244+00	6.805+01	-1.733+00	3.062-01	1.139-02	
	74.0	558.0	2.261+03	7.795+02	6.599+06	6.783+03	7.946-01	-6.051+00	6.806+01	-1.669+00	3.068-01	1.139-02	
	74.0	558.0	2.261+03	7.795+02	6.599+06	6.719+03	8.159-01	-6.213+00	6.804+01	-1.723+00	3.048-01	1.139-02	

RUN NC. 536 4.010 -7.6151+00 7.7480+00 1.0000+00 -9.9627-01 6.4994+01

±1.2	74.0	558.0	2.261+03	7.795+02	6.599+06	4.301+03	1.227+00	-9.345+00	6.710+01	-2.797+00	2.092-01	1.123-02	-1.91
	74.0	558.0	2.261+03	7.795+02	6.599+06	4.354+03	1.155+00	-8.798+00	6.711+01	-2.613+00	2.107-01	1.124-02	
	74.0	558.0	2.261+03	7.795+02	6.599+06	4.256+03	1.234+00	-9.395+00	6.704+01	-2.816+00	2.034-01	1.122-02	
	74.0	558.0	2.261+03	7.795+02	6.599+06	4.379+03	1.128+00	-8.587+00	6.711+01	-2.542+00	2.103-01	1.124-02	

RUN NC. 537 4.010 -7.6151+00 7.7480+00 1.0000+00 -9.9627-01 6.4994+01

±1.7	74.0	558.0	2.261+03	7.795+02	6.599+06	5.806+03	8.651-01	-6.588+00	6.771+01	-1.856+00	2.710-01	1.134-02	-1.91
	74.0	558.0	2.261+03	7.795+02	6.599+06	5.748+03	9.296-01	-7.079+00	6.774+01	-2.018+00	2.743-01	1.134-02	
	74.0	558.0	2.261+03	7.795+02	6.599+06	5.819+03	8.768-01	-6.677+00	6.776+01	-1.884+00	2.766-01	1.135-02	
	74.0	558.0	2.261+03	7.795+02	6.599+06	5.798+03	8.718-01	-6.639+00	6.774+01	-1.872+00	2.739-01	1.134-02	

[redacted]

~~CONFIDENTIAL~~

RUN NC. 602 3.000 -2.2845+01 7.7480+00 1.0000+00 -4.5388-01 6.5041+01

±1.4

37.1	560.0	2.079+03	9.162+02	5.469+06	5.977+03	7.939-01	-1.814+01	7.693+01	-4.042+00	1.080+00	1.401-02
37.1	560.0	2.079+03	9.162+02	5.469+06	5.827+03	8.896-01	-2.032+01	7.696+01	-4.540+00	1.082+00	1.401-02
37.1	560.0	2.079+03	9.162+02	5.469+06	5.851+03	8.457-01	-1.932+01	7.697+01	-4.310+00	1.083+00	1.401-02
37.1	560.0	2.079+03	9.162+02	5.469+06	5.925+03	8.350-01	-1.908+01	7.700+01	-4.253+00	1.086+00	1.402-02

+0.02

RUN NC. 603 3.000 -2.2845+01 7.7480+00 1.0000+00 -4.5388-01 6.5041+01

±1.4

37.1	560.0	2.079+03	9.162+02	5.469+06	5.671+03	8.860-01	-2.024+01	7.693+01	-4.523+00	1.079+00	1.401-02
37.1	560.0	2.079+03	9.162+02	5.469+06	5.664+03	9.095-01	-2.078+01	7.685+01	-4.651+00	1.071+00	1.399-02
37.1	560.0	2.079+03	9.162+02	5.469+06	5.772+03	9.005-01	-2.057+01	7.688+01	-4.602+00	1.074+00	1.400-02
37.1	560.0	2.079+03	9.162+02	5.469+06	5.796+03	9.009-01	-2.058+01	7.696+01	-4.599+00	1.082+00	1.401-02

+0.02

RUN NC. 605 3.000 -2.2845+01 7.7480+00 1.0000+00 -4.5388-01 6.5041+01

±1.4

37.1	560.0	2.079+03	9.162+02	5.469+06	5.917+03	7.205-01	-1.646+01	7.851+01	-3.585+00	1.236+00	1.429-02
37.1	560.0	2.079+03	9.162+02	5.469+06	5.902+03	7.573-01	-1.730+01	7.853+01	-3.772+00	1.238+00	1.430-02
37.1	560.0	2.079+03	9.162+02	5.469+06	5.869+03	7.660-01	-1.750+01	7.849+01	-3.819+00	1.234+00	1.429-02

-1.72

RUN NC. 606 3.000 -2.2845+01 7.7480+00 1.0000+00 -4.5388-01 6.5041+01

±1.4

37.1	560.0	2.079+03	9.162+02	5.469+06	5.952+03	8.191-01	-1.871+01	7.876+01	-4.077+00	1.261+00	1.434-02
37.1	560.0	2.079+03	9.162+02	5.469+06	5.985+03	7.765-01	-1.774+01	7.876+01	-3.859+00	1.262+00	1.434-02
37.1	560.0	2.079+03	9.162+02	5.469+06	5.991+03	8.441-01	-1.928+01	7.874+01	-4.205+00	1.259+00	1.434-02
37.1	560.0	2.079+03	9.162+02	5.469+06	5.847+03	8.704-01	-1.988+01	7.869+01	-4.342+00	1.254+00	1.433-02

-1.72

RUN NC. 607 3.000 -2.2845+01 7.7480+00 1.0000+00 -4.5388-01 6.5041+01

±1.4

37.1	560.0	2.079+03	9.162+02	5.469+06	5.462+03	1.038+00	-2.371+01	7.657+01	-5.141+00	1.044+00	1.394-02
37.1	560.0	2.079+03	9.162+02	5.469+06	6.077+03	9.345-01	-2.135+01	7.654+01	-4.801+00	1.040+00	1.393-02
37.1	560.0	2.079+03	9.162+02	5.469+06	5.887+03	9.754-01	-2.228+01	7.674+01	-5.002+00	1.061+00	1.397-02
37.1	560.0	2.079+03	9.162+02	5.469+06	6.217+03	9.162-01	-2.093+01	7.662+01	-4.699+00	1.049+00	1.395-02
37.1	560.0	2.079+03	9.162+02	5.469+06	5.834+03	9.771-01	-2.232+01	7.665+01	-5.017+00	1.052+00	1.396-02

+0.02

RUN NC. 608 3.000 -2.2845+01 7.7480+00 1.0000+00 -4.5388-01 6.5041+01

±1.4

37.1	560.0	2.079+03	9.162+02	5.469+06	5.617+03	1.022+00	-2.335+01	7.679+01	-5.243+00	1.065+00	1.398-02
37.1	560.0	2.079+03	9.162+02	5.469+06	5.468+03	1.049+00	-2.397+01	7.667+01	-5.394+00	1.054+00	1.396-02
37.1	560.0	2.079+03	9.162+02	5.469+06	5.624+03	1.022+00	-2.334+01	7.675+01	-5.244+00	1.062+00	1.397-02
37.1	560.0	2.079+03	9.162+02	5.469+06	5.698+03	9.935-01	-2.270+01	7.676+01	-5.096+00	1.062+00	1.397-02
37.1	560.0	2.079+03	9.162+02	5.469+06	6.064+03	9.363-01	-2.139+01	7.659+01	-4.806+00	1.046+00	1.394-02

+0.02

~~CONFIDENTIAL~~

~~CONFIDENTIAL~~

RUN NC. 609 3.000 -3.0460+01 7.7480+00 1.0000+00 -4.5388-01 6.5041+01

±1.4	37.1	560.0	2.079+03	9.162+02	5.469+06	5.923+03	7.752-01	-2.161+01	7.658+01	-5.318+00	1.045+00	1.394-02
	37.1	560.0	2.079+03	9.162+02	5.469+06	6.254+03	7.332-01	-2.233+01	7.645+01	-5.032+00	1.032+00	1.392-02
	37.1	560.0	2.079+03	9.162+02	5.469+06	6.224+03	7.366-01	-2.244+01	7.659+01	-5.047+00	1.046+00	1.394-02
	37.1	560.0	2.079+03	9.162+02	5.469+06	6.336+03	7.222-01	-2.200+01	7.646+01	-4.955+00	1.033+00	1.392-02

+0.02

RUN NC. 610 3.000 -2.2845+01 7.7480+00 1.0000+00 -4.5388-01 6.5041+01

±1.4	37.1	560.0	2.079+03	9.162+02	5.469+06	5.735+03	7.603-01	-1.737+01	7.789+01	-3.819+00	1.174+00	1.418-02
	37.1	560.0	2.079+03	9.162+02	5.469+06	5.868+03	7.337-01	-1.676+01	7.825+01	-3.665+00	1.210+00	1.425-02
	37.1	560.0	2.079+03	9.162+02	5.469+06	5.837+03	7.665-01	-1.751+01	7.795+01	-3.848+00	1.180+00	1.419-02
	37.1	560.0	2.079+03	9.162+02	5.469+06	5.537+03	8.617-01	-1.969+01	7.790+01	-4.342+00	1.175+00	1.418-02
	37.1	560.0	2.079+03	9.162+02	5.469+06	5.688+03	7.733-01	-1.767+01	7.814+01	-3.874+00	1.199+00	1.423-02

-1.72

RUN NC. 611 3.000 -2.2845+01 7.7480+00 1.0000+00 -4.5388-01 6.5041+01

±1.4	37.1	560.0	2.079+03	9.162+02	5.469+06	4.439+03	9.109-01	-2.081+01	7.655+01	-4.676+00	1.042+00	1.394-02
	37.1	560.0	2.079+03	9.162+02	5.469+06	4.559+03	8.354-01	-1.909+01	7.658+01	-4.278+00	1.045+00	1.394-02
	37.1	560.0	2.079+03	9.162+02	5.469+06	4.647+03	8.559-01	-1.955+01	7.655+01	-4.387+00	1.042+00	1.394-02
	37.1	560.0	2.079+03	9.162+02	5.469+06	4.545+03	8.288-01	-1.893+01	7.646+01	-4.250+00	1.033+00	1.392-02
	37.1	560.0	2.079+03	9.162+02	5.469+06	4.422+03	8.858-01	-2.024+01	7.633+01	-4.557+00	1.020+00	1.390-02

-2.32

RUN NC. 613 3.000 -2.2845+01 7.7480+00 1.0000+00 -4.5388-01 6.5041+01

±1.4	37.1	560.0	2.079+03	9.162+02	5.469+06	4.766+03	8.768-01	-2.003+01	7.683+01	-4.480+00	1.070+00	1.399-02
	37.1	560.0	2.079+03	9.162+02	5.469+06	4.702+03	8.359-01	-1.910+01	7.692+01	-4.262+00	1.078+00	1.400-02
	37.1	560.0	2.079+03	9.162+02	5.469+06	4.771+03	8.973-01	-2.050+01	7.680+01	-4.590+00	1.066+00	1.398-02
	37.1	560.0	2.079+03	9.162+02	5.469+06	4.779+03	8.736-01	-1.996+01	7.685+01	-4.463+00	1.071+00	1.399-02

-2.32

RUN NC. 614 3.000 -2.2845+01 7.7480+00 1.0000+00 -4.5388-01 6.5041+01

±1.4	37.1	560.0	2.079+03	9.162+02	5.469+06	4.802+03	8.640-01	-1.974+01	7.703+01	-4.403+00	1.089+00	1.402-02
	37.1	560.0	2.079+03	9.162+02	5.469+06	4.542+03	9.941-01	-2.271+01	7.710+01	-5.076+00	1.096+00	1.404-02
	37.1	560.0	2.079+03	9.162+02	5.469+06	4.979+03	7.833-01	-1.739+01	7.710+01	-3.977+00	1.096+00	1.404-02
	37.1	560.0	2.079+03	9.162+02	5.469+06	4.763+03	8.943-01	-2.043+01	7.697+01	-4.564+00	1.083+00	1.401-02
	37.1	560.0	2.079+03	9.162+02	5.469+06	4.681+03	9.144-01	-2.089+01	7.712+01	-4.660+00	1.098+00	1.404-02

+0.02

RUN NC. 702 2.000 -2.2845+01 7.7480+00 1.0000+00 -9.8342-01 6.5003+01

±1.6	32.5	560.0	1.729+03	1.675+03	7.923+06	6.529+03	7.697-01	-1.758+01	7.323+01	-1.813+00	3.982-01	1.604-02
	32.5	560.0	1.729+03	1.675+03	7.923+06	6.367+03	7.879-01	-1.800+01	7.316+01	-1.861+00	3.946-01	1.602-02
	32.5	560.0	1.729+03	1.675+03	7.923+06	6.240+03	8.040-01	-1.841+01	7.317+01	-1.905+00	3.954-01	1.602-02
	32.5	560.0	1.729+03	1.675+03	7.923+06	6.656+03	7.471-01	-1.707+01	7.316+01	-1.759+00	3.948-01	1.602-02

+3.61

~~CONFIDENTIAL~~

~~CONFIDENTIAL~~

RUN NC. 703 2.000 -2.2845+01 7.7480+00 1.0000+00 -9.8342-01 6.5003+01

±1.6	32.5	560.0	1.729+03	1.675+03	7.923+06	5.005+03	8.437-01	-1.927+01	7.318+01	-1.939+00	3.959-01	1.603-02	+3.61
	32.5	560.0	1.729+03	1.675+03	7.923+06	5.419+03	7.725-01	-1.765+01	7.313+01	-1.823+00	3.933-01	1.601-02	
	32.5	560.0	1.729+03	1.675+03	7.923+06	5.291+03	7.965-01	-1.820+01	7.323+01	-1.880+00	3.983-01	1.604-02	
	32.5	560.0	1.729+03	1.675+03	7.923+06	4.783+03	8.834-01	-2.018+01	7.322+01	-2.097+00	3.977-01	1.603-02	
	32.5	560.0	1.729+03	1.675+03	7.923+06	4.870+03	8.553-01	-1.954+01	7.318+01	-2.028+00	3.955-01	1.602-02	

RUN NC. 704 2.000 -2.2845+01 7.7480+00 1.0000+00 -9.8342-01 6.5003+01

±1.6	32.5	560.0	1.729+03	1.675+03	7.923+06	5.673+03	8.230-01	-1.880+01	7.325+01	-1.946+00	3.991-01	1.604-02	+3.61
	32.5	560.0	1.729+03	1.675+03	7.923+06	5.566+03	8.430-01	-1.926+01	7.320+01	-1.997+00	3.967-01	1.603-02	
	32.5	560.0	1.729+03	1.675+03	7.923+06	5.486+03	8.595-01	-1.964+01	7.321+01	-2.038+00	3.972-01	1.603-02	
	32.5	560.0	1.729+03	1.675+03	7.923+06	6.133+03	7.582-01	-1.732+01	7.325+01	-1.784+00	3.992-01	1.604-02	
	32.5	560.0	1.729+03	1.675+03	7.923+06	6.080+03	7.505-01	-1.714+01	7.328+01	-1.764+00	4.009-01	1.605-02	

RUN NC. 705 2.000 -2.2845+01 7.7480+00 1.0000+00 -9.8342-01 6.5003+01

±1.6	32.5	560.0	1.729+03	1.675+03	7.923+06	6.061+03	7.384-01	-1.687+01	7.326+01	-1.734+00	4.000-01	1.604-02	+3.61
	32.5	560.0	1.729+03	1.675+03	7.923+06	6.095+03	7.304-01	-1.669+01	7.328+01	-1.714+00	4.007-01	1.605-02	
	32.5	560.0	1.729+03	1.675+03	7.923+06	5.952+03	7.727-01	-1.765+01	7.321+01	-1.821+00	3.975-01	1.603-02	
	32.5	560.0	1.729+03	1.675+03	7.923+06	5.937+03	7.732-01	-1.766+01	7.328+01	-1.821+00	4.009-01	1.605-02	
	32.5	560.0	1.729+03	1.675+03	7.923+06	5.997+03	7.418-01	-1.695+01	7.330+01	-1.742+00	4.019-01	1.605-02	

RUN NC. 706 2.000 -1.0661+01 7.7480+00 1.0000+00 -9.8342-01 6.5003+01

±1.6	32.5	560.0	1.729+03	1.675+03	7.923+06	6.624+03	9.359-01	-9.978+00	7.041+01	-1.022+00	2.566-01	1.542-02	+7.25
	32.5	560.0	1.729+03	1.675+03	7.923+06	6.611+03	9.335-01	-9.952+00	7.041+01	-1.019+00	2.564-01	1.542-02	
	32.5	560.0	1.729+03	1.675+03	7.923+06	6.585+03	9.519-01	-1.015+01	7.039+01	-1.041+00	2.556-01	1.541-02	
	32.5	560.0	1.729+03	1.675+03	7.923+06	6.414+03	1.004+00	-1.071+01	7.039+01	-1.105+00	2.556-01	1.541-02	
	32.5	560.0	1.729+03	1.675+03	7.923+06	6.442+03	9.794-01	-1.044+01	7.040+01	-1.075+00	2.558-01	1.542-02	

RUN NC. 707 2.000 -1.0661+01 7.7480+00 1.0000+00 -9.8342-01 6.5003+01

±1.6	32.5	560.0	1.729+03	1.675+03	7.923+06	5.894+03	9.195-01	-9.803+00	7.048+01	-1.001+00	2.597-01	1.543-02	+7.25
	32.5	560.0	1.729+03	1.675+03	7.923+06	5.890+03	9.273-01	-9.887+00	7.048+01	-1.010+00	2.600-01	1.543-02	
	32.5	560.0	1.729+03	1.675+03	7.923+06	5.774+03	1.010+00	-1.077+01	7.048+01	-1.111+00	2.597-01	1.543-02	
	32.5	560.0	1.729+03	1.675+03	7.923+06	5.751+03	1.024+00	-1.091+01	7.048+01	-1.127+00	2.599-01	1.543-02	
	32.5	560.0	1.729+03	1.675+03	7.923+06	5.805+03	9.533-01	-1.018+01	7.047+01	-1.042+00	2.592-01	1.543-02	

RUN NC. 708 2.000 -2.2845+01 7.7480+00 1.0000+00 -9.8342-01 6.5003+01

±1.6	32.5	560.0	1.729+03	1.675+03	7.923+06	5.541+03	8.694-01	-1.908+01	6.577+01	-2.296+00	3.518-02	1.440-02	+9.06
	32.5	560.0	1.729+03	1.675+03	7.923+06	5.458+03	9.237-01	-2.110+01	6.574+01	-2.448+00	3.386-02	1.440-02	
	32.5	560.0	1.729+03	1.675+03	7.923+06	5.519+03	8.734-01	-1.995+01	6.574+01	-2.308+00	3.362-02	1.439-02	
	32.5	560.0	1.729+03	1.675+03	7.923+06	5.588+03	8.317-01	-1.900+01	6.574+01	-2.192+00	3.376-02	1.440-02	

~~CONFIDENTIAL~~

~~CONFIDENTIAL~~

RUN NC. 709 2.000 -2.2845+01 7.7480+00 1.0000+00 -9.8342-01 6.5003+01

±1.6	32.5	560.0	1.729+03	1.675+03	7.923+06	5.534+03	8.581-01	-1.960+01	6.578+01	-2.264+00	3.557-02	1.440-02	+9.06
	32.5	560.0	1.729+03	1.675+03	7.923+06	5.470+03	8.851-01	-2.022+01	6.574+01	-2.341+00	3.366-02	1.439-02	
	32.5	560.0	1.729+03	1.675+03	7.923+06	5.583+03	8.233-01	-1.881+01	6.574+01	-2.169+00	3.379-02	1.440-02	
	32.5	560.0	1.729+03	1.675+03	7.923+06	5.582+03	8.144-01	-1.860+01	6.580+01	-2.142+00	3.639-02	1.441-02	

RUN NC. 710 2.000 -7.6151+00 7.7480+00 1.0000+00 -9.8342-01 6.5003+01

±1.6	32.5	560.0	1.729+03	1.675+03	7.923+06	6.479+03	7.598-01	-5.786+00	7.271+01	-5.283-01	3.717-01	1.592-02	+5.43
	32.5	560.0	1.729+03	1.675+03	7.923+06	6.294+03	8.632-01	-6.573+00	7.275+01	-6.146-01	3.737-01	1.593-02	
	32.5	560.0	1.729+03	1.675+03	7.923+06	6.201+03	8.992-01	-6.848+00	7.280+01	-6.444-01	3.762-01	1.594-02	

RUN NC. 711 2.000 -7.6151+00 7.7480+00 1.0000+00 -9.8342-01 6.5003+01

±1.6	32.5	560.0	1.729+03	1.675+03	7.923+06	5.729+03	7.814-01	-5.950+00	7.276+01	-5.460-01	3.745-01	1.593-02	+5.43
	32.5	560.0	1.729+03	1.675+03	7.923+06	5.409+03	8.644-01	-6.533+00	7.276+01	-6.156-01	3.740-01	1.593-02	
	32.5	560.0	1.729+03	1.675+03	7.923+06	5.321+03	8.929-01	-6.749+00	7.279+01	-6.391-01	3.757-01	1.594-02	
	32.5	560.0	1.729+03	1.675+03	7.923+06	5.503+03	8.385-01	-6.335+00	7.280+01	-5.936-01	3.762-01	1.594-02	
	32.5	560.0	1.729+03	1.675+03	7.923+06	5.619+03	7.858-01	-5.934+00	7.282+01	-5.493-01	3.773-01	1.595-02	

RUN NC. 712 2.000 -3.0460+01 7.7480+00 1.0000+00 -9.8342-01 6.5003+01

±1.6	32.5	560.0	1.729+03	1.675+03	7.923+06	5.240+03	8.562-01	-2.608+01	7.306+01	-2.748+00	3.896-01	1.600-02	+1.78

RUN NC. 713 2.000 -3.0460+01 7.7480+00 1.0000+00 -9.8342-01 6.5003+01

±1.6	32.5	560.0	1.729+03	1.675+03	7.923+06	5.236+03	8.587-01	-2.616+01	7.300+01	-2.758+00	3.866-01	1.599-02	+1.78
	32.5	560.0	1.729+03	1.675+03	7.923+06	5.427+03	7.757-01	-2.363+01	7.304+01	-2.480+00	3.883-01	1.599-02	

RUN NC. 714 2.000 -3.0460+01 7.7480+00 1.0000+00 -9.8342-01 6.5003+01

±1.6	32.5	560.0	1.729+03	1.675+03	7.923+06				7.406+01				-0.02
	32.5	560.0	1.729+03	1.675+03	7.923+06				7.415+01				
	32.5	560.0	1.729+03	1.675+03	7.923+06				7.412+01				
	32.5	560.0	1.729+03	1.675+03	7.923+06				7.405+01				
	32.5	560.0	1.729+03	1.675+03	7.923+06				7.412+01				

-2.27

~~CONFIDENTIAL~~

~~CONFIDENTIAL~~

RUN NO. 715 2.000 -3.0460+01 7.7480+00 1.0000+00 -9.8342-01 6.5003+01

±1.0 -0.02

32.5	560.0	1.729+03	1.675+03	7.923+06	3.752+03	7.984-01	-2.432+01	7.416+01	-2.517+00	4.461-01	1.624-02
32.5	560.0	1.729+03	1.675+03	7.923+06	3.708+03	8.133-01	-2.477+01	7.406+01	-2.569+00	4.412-01	1.622-02
32.5	560.0	1.729+03	1.675+03	7.923+06	3.690+03	5.410-01	-1.648+01	7.411+01	-1.672+00	4.437-01	1.623-02
32.5	560.0	1.729+03	1.675+03	7.923+06	3.621+03	7.979-01	-2.430+01	7.405+01	-2.519+00	4.403-01	1.621-02
32.5	560.0	1.729+03	1.675+03	7.923+06	3.775+03	6.768-01	-2.062+01	7.405+01	-2.121+00	4.406-01	1.622-02

RUN NO. 716 2.000 -1.5230+01 7.7480+00 1.0000+00 -9.8342-01 6.5003+01

±1.0 -1.84

32.5	560.0	1.729+03	1.675+03	7.923+06	3.821+03	1.269+00	-1.933+01	7.538+01	-1.947+00	5.101-01	1.651-02
32.5	560.0	1.729+03	1.675+03	7.923+06	3.846+03	1.254+00	-1.910+01	7.553+01	-1.919+00	5.179-01	1.654-02
32.5	560.0	1.729+03	1.675+03	7.923+06	3.863+03	1.242+00	-1.891+01	7.562+01	-1.896+00	5.228-01	1.656-02
32.5	560.0	1.729+03	1.675+03	7.923+06	3.796+03	1.264+00	-1.925+01	7.537+01	-1.939+00	5.096-01	1.650-02
32.5	560.0	1.729+03	1.675+03	7.923+06	3.840+03	1.239+00	-1.887+01	7.553+01	-1.894+00	5.182-01	1.654-02

RUN NO. 902 2.000 -3.0460+01 7.7480+00 1.0000+00 -1.0893+00 6.4856+01

±1.7 0

32.4	562.0	1.732+03	1.670+03	7.860+06	6.049+03	7.205-01	-2.195+01	7.428+01	-2.257+00	4.626-01	1.624-02
32.4	562.0	1.732+03	1.670+03	7.860+06	5.983+03	7.743-01	-2.358+01	7.425+01	-2.435+00	4.613-01	1.623-02
32.4	562.0	1.732+03	1.670+03	7.860+06	6.063+03	7.634-01	-2.325+01	7.426+01	-2.399+00	4.618-01	1.623-02
32.4	562.0	1.732+03	1.670+03	7.860+06	5.996+03	7.615-01	-2.320+01	7.426+01	-2.393+00	4.619-01	1.623-02
32.4	562.0	1.732+03	1.670+03	7.860+06	6.152+03	7.068-01	-2.153+01	7.429+01	-2.212+00	4.630-01	1.624-02

RUN NO. 903 2.000 -3.0460+01 7.7480+00 1.0000+00 -1.0893+00 6.4856+01

±1.7 +3.54

32.4	562.0	1.732+03	1.670+03	7.860+06	6.678+03	6.499-01	-1.979+01	7.335+01	-2.050+00	4.143-01	1.603-02
32.4	562.0	1.732+03	1.670+03	7.860+06	6.686+03	6.797-01	-2.070+01	7.334+01	-2.150+00	4.139-01	1.603-02
32.4	562.0	1.732+03	1.670+03	7.860+06	6.702+03	6.483-01	-1.975+01	7.335+01	-2.045+00	4.141-01	1.603-02
32.4	562.0	1.732+03	1.670+03	7.860+06	6.570+03	6.440-01	-1.962+01	7.333+01	-2.031+00	4.131-01	1.603-02
32.4	562.0	1.732+03	1.670+03	7.860+06	6.560+03	6.562-01	-1.999+01	7.335+01	-2.071+00	4.143-01	1.603-02

RUN NO. 904 2.000 -3.0460+01 7.7480+00 1.0000+00 -1.0893+00 6.4856+01

±1.7 +1.79

32.4	562.0	1.732+03	1.670+03	7.860+06	6.402+03	6.968-01	-2.123+01	7.389+01	-2.190+00	4.424-01	1.615-02
32.4	562.0	1.732+03	1.670+03	7.860+06	6.371+03	7.327-01	-2.232+01	7.389+01	-2.309+00	4.422-01	1.615-02
32.4	562.0	1.732+03	1.670+03	7.860+06	6.401+03	7.242-01	-2.206+01	7.395+01	-2.279+00	4.455-01	1.616-02
32.4	562.0	1.732+03	1.670+03	7.860+06	6.406+03	6.904-01	-2.103+01	7.390+01	-2.169+00	4.430-01	1.615-02
32.4	562.0	1.732+03	1.670+03	7.860+06	6.492+03	6.703-01	-2.042+01	7.391+01	-2.102+00	4.431-01	1.615-02

RUN NO. 905 2.000 -3.0460+01 7.7480+00 1.0000+00 -1.0893+00 6.4856+01

±1.7 -1.75

32.4	562.0	1.732+03	1.670+03	7.860+06	6.366+03	8.021-01	-2.443+01	7.343+01	-2.555+00	4.184-01	1.605-02
32.4	562.0	1.732+03	1.670+03	7.860+06	6.368+03	7.777-01	-2.369+01	7.344+01	-2.473+00	4.192-01	1.605-02
32.4	562.0	1.732+03	1.670+03	7.860+06	6.439+03	7.829-01	-2.385+01	7.345+01	-2.490+00	4.196-01	1.606-02
32.4	562.0	1.732+03	1.670+03	7.860+06	6.439+03	7.572-01	-2.307+01	7.347+01	-2.404+00	4.203-01	1.606-02
32.4	562.0	1.732+03	1.670+03	7.860+06	6.266+03	8.309-01	-2.531+01	7.343+01	-2.651+00	4.182-01	1.605-02

~~CONFIDENTIAL~~

[redacted]

RUN NO. 906 2.000 -3.0460+01 7.7480+00 1.0000+00 -1.0893+00 6.4856+01

32.4	562.0	1.732+03	1.670+03	7.860+06	5.523+03	7.387-01	-2.250+01	7.429+01	-2.317+00	4.632-01	1.624-02	0
32.4	562.0	1.732+03	1.670+03	7.860+06	5.437+03	7.609-01	-2.318+01	7.430+01	-2.389+00	4.638-01	1.624-02	
32.4	562.0	1.732+03	1.670+03	7.860+06	5.475+03	7.415-01	-2.259+01	7.427+01	-2.327+00	4.623-01	1.623-02	
32.4	562.0	1.732+03	1.670+03	7.860+06	5.485+03	7.456-01	-2.271+01	7.431+01	-2.339+00	4.641-01	1.624-02	
32.4	562.0	1.732+03	1.670+03	7.860+06	5.457+03	7.373-01	-2.246+01	7.429+01	-2.312+00	4.634-01	1.624-02	

RUN NO. 1004 5.980 -7.6151+00 7.7480+00 1.0000+00 -1.0349+00 6.4969+01

195.8	640.0	2.597+03	4.562+02	6.159+06	6.080+03	9.179-01	-6.590+00	6.564+01	-4.001+00	1.130-01	9.569-03	0
195.8	640.0	2.597+03	4.562+02	6.159+06	6.227+03	8.822-01	-6.718+00	6.577+01	-3.812+00	1.345-01	9.588-03	
195.8	640.0	2.597+03	4.562+02	6.159+06	6.331+03	8.357-01	-6.564+00	6.565+01	-3.574+00	1.210-01	9.576-03	
195.8	640.0	2.597+03	4.562+02	6.159+06	6.261+03	8.330-01	-6.343+00	6.578+01	-3.560+00	1.357-01	9.559-03	

RUN NO. 1005 5.980 -7.6151+00 7.7480+00 1.0000+00 -1.0349+00 6.4969+01

195.8	640.0	2.597+03	4.562+02	6.159+06	6.002+03	8.056-01	-6.592+00	6.574+01	-3.729+00	1.289-01	9.583-03	0
195.8	640.0	2.597+03	4.562+02	6.159+06	5.830+03	8.361-01	-6.367+00	6.570+01	-3.580+00	1.226-01	9.577-03	
195.8	640.0	2.597+03	4.562+02	6.159+06	5.843+03	8.360-01	-6.518+00	6.570+01	-3.681+00	1.228-01	9.577-03	

RUN NO. 1006 5.980 -7.6151+00 7.7480+00 1.0000+00 -1.0349+00 6.4969+01

195.8	640.0	2.597+03	4.562+02	6.159+06	6.036+03	8.456-01	-6.435+00	6.632+01	-3.595+00	2.274-01	9.667-03	-9.47
195.8	640.0	2.597+03	4.562+02	6.159+06	6.028+03	8.401-01	-6.337+00	6.636+01	-3.564+00	2.354-01	9.674-03	
195.8	640.0	2.597+03	4.562+02	6.159+06	5.985+03	8.528-01	-6.474+00	6.632+01	-3.624+00	2.330-01	9.672-03	
195.8	640.0	2.597+03	4.562+02	6.159+06	5.855+03	8.710-01	-6.633+00	6.632+01	-3.723+00	2.284-01	9.668-03	

RUN NO. 1007 5.980 -7.6151+00 7.7480+00 1.0000+00 -1.0349+00 6.4969+01

195.8	640.0	2.597+03	4.562+02	6.159+06	6.146+03	8.565-01	-6.522+00	6.638+01	-3.646+00	2.377-01	9.676-03	-9.47
195.8	640.0	2.597+03	4.562+02	6.159+06	7.100+03	8.511-01	-6.431+00	6.639+01	-3.618+00	2.403-01	9.678-03	
195.8	640.0	2.597+03	4.562+02	6.159+06	6.162+03	8.493-01	-6.458+00	6.634+01	-3.712+00	2.317-01	9.671-03	
195.8	640.0	2.597+03	4.562+02	6.159+06	6.175+03	8.443-01	-6.425+00	6.639+01	-3.584+00	2.402-01	9.678-03	

RUN NO. 1009 5.980 -4.5661+01 7.7485+00 1.0000+00 -1.0349+00 6.4969+01

195.8	641.0	2.597+03	4.562+02	6.159+06	5.715+03	7.777-01	-3.522+01	6.956+01	-2.167+01	7.940-01	1.014-02	+4.76
195.8	640.0	2.597+03	4.562+02	6.159+06	5.591+03	9.053-01	-3.648+01	6.951+01	-2.281+01	7.505-01	1.013-02	

[redacted]

~~CONFIDENTIAL~~

RUN NO. 1202 M = 5.990 C1 =-2.3487+00 C2 = 2.2894+01 RSA = 1.0000+00 MS =-2.6482-01 OT = 1.2319+02

θ ±2.3 — α 148.6

PO	TO	V	Q	RE	D	R	MW	OW	CMQ	CMT	RFP
198.5	638.0	2.593+03	4.593+02	6.255+06	6.308+03	8.311-01	-1.952+00	1.255+02	-1.738+00	-1.331-01	1.397-02
198.5	638.0	2.593+03	4.593+02	6.255+06	6.376+03	8.232-01	-1.933+00	1.255+02	-1.718+00	-1.339-01	1.397-02
198.5	638.0	2.593+03	4.593+02	6.255+06	6.571+03	8.211-01	-1.929+00	1.254+02	-1.715+00	-1.258-01	1.396-02
198.5	638.0	2.593+03	4.593+02	6.255+06	6.340+03	8.414-01	-1.976+00	1.255+02	-1.762+00	-1.351-01	1.398-02
198.5	638.0	2.593+03	4.593+02	6.255+06	6.432+03	8.120-01	-1.907+00	1.256+02	-1.691+00	-1.360-01	1.398-02
198.5	638.0	2.593+03	4.593+02	6.255+06	6.537+03	8.371-01	-1.966+00	1.255+02	-1.752+00	-1.330-01	1.397-02
198.5	638.0	2.593+03	4.593+02	6.255+06	6.552+03	8.345-01	-1.960+00	1.256+02	-1.745+00	-1.380-01	1.398-02
198.5	638.0	2.593+03	4.593+02	6.255+06	6.565+03	8.608-01	-2.022+00	1.255+02	-1.809+00	-1.344-01	1.398-02

RUN NO. 1203 M = 5.990 C1 =-5.4804-01 C2 = 2.2894+01 RSA = 1.0000+00 MS =-2.6482-01 OT = 1.2319+02

θ ±2.3 — α 130

PO	TO	V	Q	RE	D	R	MW	OW	CMQ	CMT	RFP
198.5	638.0	2.593+03	4.593+02	6.255+06	6.070+03	9.253-01	-5.071-01	1.254+02	-2.499-01	-1.249-01	1.396-02
198.5	638.0	2.593+03	4.593+02	6.255+06	5.997+03	8.850-01	-4.850-01	1.253+02	-2.271-01	-1.236-01	1.396-02
198.5	638.0	2.593+03	4.593+02	6.255+06	6.177+03	8.296-01	-4.547-01	1.252+02	-1.959-01	-1.175-01	1.394-02
198.5	638.0	2.593+03	4.593+02	6.255+06	6.164+03	8.389-01	-4.597-01	1.254+02	-2.010-01	-1.260-01	1.396-02
198.5	638.0	2.593+03	4.593+02	6.255+06	6.093+03	8.921-01	-4.889-01	1.254+02	-2.310-01	-1.256-01	1.396-02
198.5	638.0	2.593+03	4.593+02	6.255+06	6.238+03	8.419-01	-4.614-01	1.253+02	-2.028-01	-1.185-01	1.395-02
198.5	638.0	2.593+03	4.593+02	6.255+06	6.424+03	8.966-01	-4.914-01	1.254+02	-2.335-01	-1.275-01	1.396-02
198.5	638.0	2.593+03	4.593+02	6.255+06	6.615+03	8.215-01	-4.502-01	1.254+02	-1.912-01	-1.252-01	1.396-02

RUN NO. 1204 M = 5.990 C1 =-5.4804-01 C2 = 2.2894+01 RSA = 1.0000+00 MS =-2.6482-01 OT = 1.2319+02

θ ±2.3 — α 130

PO	TO	V	Q	RE	D	R	MW	OW	CMQ	CMT	RFP
198.5	638.0	2.593+03	4.593+02	6.255+06	6.027+03	9.259-01	-5.074-01	1.253+02	-2.502-01	-1.236-01	1.396-02
198.5	638.0	2.593+03	4.593+02	6.255+06	6.043+03	9.331-01	-5.114-01	1.253+02	-2.543-01	-1.236-01	1.396-02
198.5	638.0	2.593+03	4.593+02	6.255+06	6.082+03	9.065-01	-4.968-01	1.253+02	-2.394-01	-1.195-01	1.395-02
198.5	638.0	2.593+03	4.593+02	6.255+06	5.987+03	8.693-01	-4.764-01	1.254+02	-2.181-01	-1.263-01	1.396-02
198.5	638.0	2.593+03	4.593+02	6.255+06	6.042+03	8.796-01	-4.821-01	1.253+02	-2.240-01	-1.239-01	1.396-02
198.5	638.0	2.593+03	4.593+02	6.255+06	7.059+03	7.627-01	-4.180-01	1.252+02	-1.582-01	-1.140-01	1.394-02

RUN NO. 1205 M = 5.990 C1 =-5.4804-01 C2 = 2.2894+01 RSA = 1.0000+00 MS =-2.6482-01 OT = 1.2319+02

θ ±2.3 — α 133

PO	TO	V	Q	RE	D	R	MW	OW	CMQ	CMT	RFP
198.5	638.0	2.593+03	4.593+02	6.255+06	6.047+03	9.097-01	-4.986-01	1.237+02	-2.444-01	-2.655-02	1.377-02
198.5	638.0	2.593+03	4.593+02	6.255+06	6.062+03	9.160-01	-5.020-01	1.242+02	-2.469-01	-5.799-02	1.383-02
198.5	638.0	2.593+03	4.593+02	6.255+06	6.050+03	9.597-01	-5.259-01	1.241+02	-2.720-01	-5.294-02	1.382-02
198.5	638.0	2.593+03	4.593+02	6.255+06	6.163+03	9.116-01	-4.996-01	1.241+02	-2.446-01	-4.994-02	1.381-02
198.5	638.0	2.593+03	4.593+02	6.255+06	6.071+03	9.678-01	-5.304-01	1.242+02	-2.764-01	-5.779-02	1.383-02
198.5	638.0	2.593+03	4.593+02	6.255+06	6.113+03	1.057+00	-5.792-01	1.242+02	-3.273-01	-5.654-02	1.383-02
198.5	638.0	2.593+03	4.593+02	6.255+06	6.014+03	9.752-01	-5.345-01	1.242+02	-2.806-01	-5.779-02	1.383-02
198.5	638.0	2.593+03	4.593+02	6.255+06	6.296+03	1.031+00	-5.649-01	1.242+02	-3.123-01	-5.930-02	1.383-02

~~CONFIDENTIAL~~

[redacted]

RUN NO. 1206 M = 5.990 C1 =-5.4804-01 C2 = 2.2894+01 RSA = 1.0000+00 MS =-2.6482-01 OT = 1.2319+02

±2.3 133

θ	PO	TO	V	Q	RE	D	R	HW	OW	CMQ	CMT	RFP	α
	198.5	638.0	2.593+03	4.593+02	6.255+06	6.457+03	9.464-01	-5.186-01	1.235+02	-2.657-01	-1.678-02	1.375-02	
	198.5	638.0	2.593+03	4.593+02	6.255+06	6.312+03	9.307-01	-5.101-01	1.236+02	-2.565-01	-2.377-02	1.376-02	
	198.5	638.0	2.593+03	4.593+02	6.255+06	6.461+03	9.164-01	-5.022-01	1.239+02	-2.476-01	-4.230-02	1.380-02	
	198.5	638.0	2.593+03	4.593+02	6.255+06	6.290+03	9.493-01	-5.203-01	1.240+02	-2.663-01	-4.657-02	1.381-02	
	198.5	638.0	2.593+03	4.593+02	6.255+06	6.396+03	9.239-01	-5.064-01	1.237+02	-2.524-01	-2.798-02	1.377-02	
	198.5	638.0	2.593+03	4.593+02	6.255+06	6.539+03	9.440-01	-5.174-01	1.234+02	-2.645-01	-1.199-02	1.374-02	

RUN NO. 1207 M = 5.990 C1 =-5.4804-01 C2 = 2.2894+01 RSA = 1.0000+00 MS =-2.6482-01 OT = 1.2319+02

±2.3 135

θ	PO	TO	V	Q	RE	D	R	HW	OW	CMQ	CMT	RFP	α
	198.5	638.0	2.593+03	4.593+02	6.255+06	6.320+03	9.729-01	-5.332-01	1.236+02	-2.806-01	-2.401-02	1.376-02	
	198.5	638.0	2.593+03	4.593+02	6.255+06	6.146+03	1.039+00	-5.692-01	1.238+02	-3.179-01	-3.353-02	1.378-02	
	198.5	638.0	2.593+03	4.593+02	6.255+06	6.329+03	1.049+00	-5.751-01	1.237+02	-3.243-01	-2.895-02	1.377-02	
	198.5	638.0	2.593+03	4.593+02	6.255+06	6.293+03	9.950-01	-5.453-01	1.243+02	-2.916-01	-6.524-02	1.384-02	
	198.5	638.0	2.593+03	4.593+02	6.255+06	6.379+03	1.044+00	-5.723-01	1.243+02	-3.198-01	-6.224-02	1.384-02	
	198.5	638.0	2.593+03	4.593+02	6.255+06	6.452+03	1.019+00	-5.582-01	1.242+02	-3.055-01	-5.540-02	1.382-02	
	198.5	638.0	2.593+03	4.593+02	6.255+06	6.497+03	1.062+00	-5.818-01	1.243+02	-3.297-01	-6.237-02	1.384-02	
	198.5	638.0	2.593+03	4.593+02	6.255+06	6.642+03	9.431-01	-5.169-01	1.241+02	-2.625-01	-5.296-02	1.382-02	

RUN NO. 1208 M = 5.990 C1 =-5.4804-01 C2 = 2.2894+01 RSA = 1.0000+00 MS =-2.6482-01 OT = 1.2319+02

±2.3 135

θ	PO	TO	V	Q	RE	D	R	HW	OW	CMQ	CMT	RFP	α
	198.5	638.0	2.593+03	4.593+02	6.255+06	6.560+03	9.944-01	-5.490-01	1.239+02	-2.924-01	-3.793-02	1.379-02	
	198.5	638.0	2.593+03	4.593+02	6.255+06	6.433+03	1.001+00	-5.485-01	1.238+02	-2.962-01	-3.528-02	1.378-02	
	198.5	638.0	2.593+03	4.593+02	6.255+06	6.715+03	9.773-01	-5.356-01	1.242+02	-2.817-01	-5.993-02	1.383-02	
	198.5	638.0	2.593+03	4.593+02	6.255+06	6.776+03	9.411-01	-5.158-01	1.235+02	-2.627-01	-1.671-02	1.375-02	

RUN NO. 1209 M = 5.990 C1 =-5.4804-01 C2 = 2.2894+01 RSA = 1.0000+00 MS =-2.6482-01 OT = 1.2319+02

±2.3 137

θ	PO	TO	V	Q	RE	D	R	HW	OW	CMQ	CMT	RFP	α
	198.5	638.0	2.593+03	4.593+02	6.255+06	6.323+03	1.113+00	-6.099-01	1.259+02	-3.542-01	-1.574-01	1.402-02	
	198.5	638.0	2.593+03	4.593+02	6.255+06	6.282+03	1.119+00	-6.131-01	1.260+02	-3.575-01	-1.601-01	1.403-02	
	198.5	638.0	2.593+03	4.593+02	6.255+06	6.206+03	1.140+00	-6.247-01	1.258+02	-3.697-01	-1.524-01	1.401-02	
	198.5	638.0	2.593+03	4.593+02	6.255+06	6.234+03	1.104+00	-6.053-01	1.259+02	-3.494-01	-1.584-01	1.402-02	
	198.5	638.0	2.593+03	4.593+02	6.255+06	6.331+03	1.136+00	-6.227-01	1.258+02	-3.677-01	-1.522-01	1.401-02	
	198.5	638.0	2.593+03	4.593+02	6.255+06	6.624+03	1.054+00	-5.778-01	1.259+02	-3.214-01	-1.542-01	1.401-02	
	198.5	638.0	2.593+03	4.593+02	6.255+06	6.906+03	1.088+00	-5.961-01	1.258+02	-3.403-01	-1.518-01	1.401-02	
	198.5	638.0	2.593+03	4.593+02	6.255+06	6.543+03	1.053+00	-5.772-01	1.258+02	-3.209-01	-1.519-01	1.401-02	

[redacted]

RUN NO. 1210 M = 5.990 C1 =-5.4804-01 C2 = 2.2894+01 RSA = 1.0000+00 MS =-2.6482-01 OT = 1.2319+02

θ	PO	TO	V	Q	RE	D	R	MW	OW	CMQ	CMT	RFP	α
	198.5	638.0	2.593+03	4.593+02	6.255+06	6.245+03	1.180+00	-6.465-01	1.240+02	-3.980-01	-4.427-02	1.380-02	
	198.5	638.0	2.593+03	4.593+02	6.255+06	6.324+03	1.114+00	-6.108-01	1.240+02	-3.608-01	-4.340-02	1.380-02	
	198.5	638.0	2.593+03	4.593+02	6.255+06	7.008+03	9.894-01	-5.423-01	1.239+02	-2.894-01	-4.267-02	1.380-02	
±2.3	198.5	638.0	2.593+03	4.593+02	6.255+06	6.467+03	1.085+00	-5.945-01	1.241+02	-3.435-01	-5.017-02	1.381-02	137
	198.5	638.0	2.593+03	4.593+02	6.255+06	6.432+03	1.129+00	-6.188-01	1.241+02	-3.686-01	-5.369-02	1.382-02	
	198.5	638.0	2.593+03	4.593+02	6.255+06	6.621+03	1.130+00	-6.196-01	1.242+02	-3.692-01	-5.866-02	1.383-02	
	198.5	638.0	2.593+03	4.593+02	6.255+06	6.646+03	1.044+00	-5.719-01	1.242+02	-3.195-01	-5.923-02	1.383-02	

RUN NO. 1211 M = 5.990 C1 =-5.4804-01 C2 = 2.2894+01 RSA = 1.0000+00 MS =-2.6482-01 OT = 1.2319+02

θ	PO	TO	V	Q	RE	D	R	MW	OW	CMQ	CMT	RFP	α
	198.5	638.0	2.593+03	4.593+02	6.255+06	6.069+03	1.117+00	-6.120-01	1.261+02	-3.560-01	-1.653-01	1.404-02	
±2.3	198.5	638.0	2.593+03	4.593+02	6.255+06	5.916+03	1.132+00	-6.206-01	1.261+02	-3.648-01	-1.655-01	1.404-02	
	198.5	638.0	2.593+03	4.593+02	6.255+06	5.839+03	1.205+00	-6.606-01	1.259+02	-4.062-01	-1.580-01	1.402-02	
	198.5	638.0	2.593+03	4.593+02	6.255+06	5.871+03	1.187+00	-6.503-01	1.261+02	-3.953-01	-1.652-01	1.403-02	139
	198.5	638.0	2.593+03	4.593+02	6.255+06	5.820+03	1.210+00	-6.629-01	1.261+02	-4.081-01	-1.662-01	1.404-02	
	198.5	638.0	2.593+03	4.593+02	6.255+06	5.927+03	1.219+00	-6.681-01	1.261+02	-4.135-01	-1.657-01	1.404-02	
	198.5	638.0	2.593+03	4.593+02	6.255+06	5.849+03	1.221+00	-6.694-01	1.260+02	-4.150-01	-1.633-01	1.403-02	

RUN NO. 1212 M = 5.990 C1 =-7.8291-01 C2 = 2.2894+01 RSA = 1.0000+00 MS =-2.6482-01 OT = 1.2319+02

θ	PO	TO	V	Q	RE	D	R	MW	OW	CMQ	CMT	RFP	α
	198.5	638.0	2.593+03	4.593+02	6.255+06	6.295+03	8.691-01	-6.804-01	1.259+02	-4.266-01	-1.580-01	1.402-02	
	198.5	638.0	2.593+03	4.593+02	6.255+06	6.272+03	8.195-01	-6.416-01	1.261+02	-3.863-01	-1.677-01	1.404-02	
	198.5	638.0	2.593+03	4.593+02	6.255+06	6.292+03	8.276-01	-6.480-01	1.261+02	-3.929-01	-1.658-01	1.404-02	
±2.3	198.5	638.0	2.593+03	4.593+02	6.255+06	6.292+03	8.233-01	-6.445-01	1.259+02	-3.899-01	-1.567-01	1.402-02	139
	198.5	638.0	2.593+03	4.593+02	6.255+06	6.161+03	8.443-01	-6.610-01	1.261+02	-4.062-01	-1.660-01	1.404-02	
	198.5	638.0	2.593+03	4.593+02	6.255+06	6.371+03	8.454-01	-6.619-01	1.261+02	-4.072-01	-1.649-01	1.403-02	
	198.5	638.0	2.593+03	4.593+02	6.255+06	6.488+03	7.687-01	-6.018-01	1.260+02	-3.459-01	-1.599-01	1.402-02	
	198.5	638.0	2.593+03	4.593+02	6.255+06	6.679+03	8.177-01	-6.402-01	1.261+02	-3.847-01	-1.692-01	1.404-02	

RUN NO. 1213 M = 5.990 C1 =-7.8291-01 C2 = 2.2894+01 RSA = 1.0000+00 MS =-2.6482-01 OT = 1.2319+02

θ	PO	TO	V	Q	RE	D	R	MW	OW	CMQ	CMT	RFP	α
	198.5	638.0	2.593+03	4.593+02	6.255+06	6.119+03	9.304-01	-7.284-01	1.248+02	-4.803-01	-8.985-02	1.389-02	
	198.5	638.0	2.593+03	4.593+02	6.255+06	6.021+03	9.522-01	-7.455-01	1.247+02	-4.984-01	-8.394-02	1.388-02	
±2.3	198.5	638.0	2.593+03	4.593+02	6.255+06	6.128+03	9.314-01	-7.292-01	1.249+02	-4.808-01	-9.582-02	1.390-02	141
	198.5	638.0	2.593+03	4.593+02	6.255+06	6.095+03	9.302-01	-7.282-01	1.247+02	-4.806-01	-8.362-02	1.388-02	
	198.5	638.0	2.593+03	4.593+02	6.255+06	6.132+03	9.404-01	-7.363-01	1.247+02	-4.889-01	-8.482-02	1.388-02	

~~CONFIDENTIAL~~

RUN NO. 1214 M = 5.990 C1 =-7.8291-01 C2 = 2.2894+01 RSA = 1.0000+00 MS =-2.6482-01 OT = 1.2319+02

±2.3 141

θ	PO	TO	V	Q	RE	D	R	HW	OW	CMQ	CMT	RFP	α
	198.5	638.0	2.593+03	4.593+02	6.255+06	6.323+03	9.471-01	-7.415-01	1.245+02	-4.949-01	-7.569-02	1.386-02	
	198.5	638.0	2.593+03	4.593+02	6.255+06	6.281+03	9.925-01	-7.770-01	1.247+02	-5.309-01	-8.692-02	1.388-02	
	198.5	638.0	2.593+03	4.593+02	6.255+06	6.240+03	9.607-01	-7.521-01	1.243+02	-5.068-01	-6.334-02	1.384-02	
	198.5	638.0	2.593+03	4.593+02	6.255+06	6.370+03	9.216-01	-7.215-01	1.247+02	-4.733-01	-8.894-02	1.389-02	
	198.5	638.0	2.593+03	4.593+02	6.255+06	6.368+03	9.040-01	-7.077-01	1.247+02	-4.591-01	-8.668-02	1.388-02	
	198.5	638.0	2.593+03	4.593+02	6.255+06	6.569+03	9.509-01	-7.445-01	1.247+02	-4.972-01	-8.733-02	1.389-02	

RUN NO. 1215 M = 5.990 C1 =-1.1744+00 C2 = 2.2894+01 RSA = 1.0000+00 MS =-2.6482-01 OT = 1.2319+02

±2.3 143

θ	PO	TO	V	Q	RE	D	R	HW	OW	CMQ	CMT	RFP	α
	198.5	638.0	2.593+03	4.593+02	6.255+06	6.457+03	9.041-01	-1.062+00	1.264+02	-8.151-01	-1.845-01	1.407-02	
	198.5	638.0	2.593+03	4.593+02	6.255+06	6.244+03	8.906-01	-1.046+00	1.264+02	-7.989-01	-1.838-01	1.407-02	
	198.5	638.0	2.593+03	4.593+02	6.255+06	6.102+03	9.017-01	-1.059+00	1.263+02	-8.130-01	-1.768-01	1.406-02	
	198.5	638.0	2.593+03	4.593+02	6.255+06	6.231+03	9.009-01	-1.058+00	1.264+02	-8.114-01	-1.834-01	1.407-02	
	198.5	638.0	2.593+03	4.593+02	6.255+06	6.207+03	9.503-01	-1.116+00	1.264+02	-8.705-01	-1.850-01	1.407-02	
	198.5	638.0	2.593+03	4.593+02	6.255+06	6.362+03	8.574-01	-1.007+00	1.264+02	-7.590-01	-1.855-01	1.407-02	
	198.5	638.0	2.593+03	4.593+02	6.255+06	6.484+03	8.661-01	-1.017+00	1.263+02	-7.699-01	-1.807-01	1.406-02	
	198.5	638.0	2.593+03	4.593+02	6.255+06	6.480+03	8.990-01	-1.056+00	1.264+02	-8.088-01	-1.865-01	1.408-02	

RUN NO. 1216 M = 5.990 C1 =-1.1744+00 C2 = 2.2894+01 RSA = 1.0000+00 MS =-2.6482-01 OT = 1.2319+02

±2.3 143

θ	PO	TO	V	Q	RE	D	R	HW	OW	CMQ	CMT	RFP	α
	198.5	638.0	2.593+03	4.593+02	6.255+06	6.518+03	8.609-01	-1.011+00	1.248+02	-7.729-01	-9.287-02	1.390-02	
	198.5	638.0	2.593+03	4.593+02	6.255+06	6.529+03	8.816-01	-1.035+00	1.248+02	-7.981-01	-9.204-02	1.389-02	
	198.5	638.0	2.593+03	4.593+02	6.255+06	6.495+03	8.957-01	-1.052+00	1.247+02	-8.158-01	-8.784-02	1.389-02	
	198.5	638.0	2.593+03	4.593+02	6.255+06	6.466+03	9.077-01	-1.066+00	1.248+02	-8.301-01	-9.006-02	1.389-02	
	198.5	638.0	2.593+03	4.593+02	6.255+06	6.463+03	8.873-01	-1.042+00	1.244+02	-8.075-01	-7.095-02	1.385-02	
	198.5	638.0	2.593+03	4.593+02	6.255+06	6.704+03	8.744-01	-1.027+00	1.246+02	-7.905-01	-8.158-02	1.387-02	
	198.5	638.0	2.593+03	4.593+02	6.255+06	6.763+03	8.724-01	-1.025+00	1.248+02	-7.870-01	-9.175-02	1.389-02	

RUN NO. 1217 M = 5.990 C1 =-2.3487+00 C2 = 2.2894+01 RSA = 1.0000+00 MS =-2.6482-01 OT = 1.2319+02

±2.3 145

θ	PO	TO	V	Q	RE	D	R	HW	OW	CMQ	CMT	RFP	α
	198.5	638.0	2.593+03	4.593+02	6.255+06	6.681+03	8.342-01	-1.959+00	1.267+02	-1.729+00	-2.039-01	1.411-02	
	198.5	638.0	2.593+03	4.593+02	6.255+06	6.704+03	8.344-01	-1.960+00	1.266+02	-1.731+00	-1.950-01	1.409-02	
	198.5	638.0	2.593+03	4.593+02	6.255+06	6.796+03	8.097-01	-1.902+00	1.267+02	-1.670+00	-2.026-01	1.411-02	
	198.5	638.0	2.593+03	4.593+02	6.255+06	6.680+03	8.318-01	-1.954+00	1.266+02	-1.724+00	-1.978-01	1.410-02	
	198.5	638.0	2.593+03	4.593+02	6.255+06	6.688+03	8.238-01	-1.935+00	1.266+02	-1.705+00	-1.992-01	1.410-02	
	198.5	638.0	2.593+03	4.593+02	6.255+06	6.824+03	8.483-01	-1.992+00	1.267+02	-1.763+00	-2.016-01	1.410-02	
	198.5	638.0	2.593+03	4.593+02	6.255+06	7.613+03	8.238-01	-1.935+00	1.267+02	-1.704+00	-2.043-01	1.411-02	

~~CONFIDENTIAL~~

RUN NO. 1218 M = 5.990 C1 =-2.3487+00 C2 = 2.2894+01 RSA = 1.0000+00 MS =-2.6482-01 OT = 1.2319+02

θ ±2.3 α 145

PO	TO	V	Q	RE	D	R	MW	OW	CMQ	CMT	RFP
198.5	638.0	2.593+03	4.593+02	6.255+06	6.641+03	7.673-01	-1.802+00	1.250+02	-1.590+00	-1.021-01	1.391-02
198.5	638.0	2.593+03	4.593+02	6.255+06	6.651+03	7.648-01	-1.796+00	1.249+02	-1.585+00	-9.683-02	1.390-02
198.5	638.0	2.593+03	4.593+02	6.255+06	6.497+03	8.028-01	-1.886+00	1.250+02	-1.676+00	-1.045-01	1.392-02
198.5	638.0	2.593+03	4.593+02	6.255+06	6.812+03	7.684-01	-1.805+00	1.251+02	-1.592+00	-1.069-01	1.392-02
198.5	638.0	2.593+03	4.593+02	6.255+06	6.659+03	7.876-01	-1.850+00	1.250+02	-1.639+00	-1.036-01	1.392-02
198.5	638.0	2.593+03	4.593+02	6.255+06	6.939+03	7.909-01	-1.858+00	1.250+02	-1.648+00	-1.023-01	1.391-02

RUN NO. 1219 M = 5.990 C1 =-2.3487+00 C2 = 2.2894+01 RSA = 1.0000+00 MS =-2.6482-01 OT = 1.2319+02

θ ±2.3 α 147

PO	TO	V	Q	RE	D	R	MW	OW	CMQ	CMT	RFP
198.5	638.0	2.593+03	4.593+02	6.255+06	6.108+03	8.741-01	-2.053+00	1.270+02	-1.821+00	-2.182-01	1.414-02
198.5	638.0	2.593+03	4.593+02	6.255+06	6.128+03	8.489-01	-1.994+00	1.268+02	-1.762+00	-2.093-01	1.412-02
198.5	638.0	2.593+03	4.593+02	6.255+06	6.141+03	8.488-01	-1.994+00	1.270+02	-1.760+00	-2.188-01	1.414-02
198.5	638.0	2.593+03	4.593+02	6.255+06	6.396+03	8.090-01	-1.900+00	1.270+02	-1.665+00	-2.191-01	1.414-02
198.5	638.0	2.593+03	4.593+02	6.255+06	6.163+03	8.289-01	-1.947+00	1.270+02	-1.713+00	-2.184-01	1.414-02
198.5	638.0	2.593+03	4.593+02	6.255+06	6.311+03	8.288-01	-1.947+00	1.270+02	-1.712+00	-2.214-01	1.414-02
198.5	638.0	2.593+03	4.593+02	6.255+06	6.297+03	8.330-01	-1.956+00	1.270+02	-1.721+00	-2.226-01	1.414-02
198.5	638.0	2.593+03	4.593+02	6.255+06	6.195+03	8.955-01	-2.103+00	1.269+02	-1.873+00	-2.154-01	1.413-02

RUN NO. 1220 M = 5.990 C1 =-2.3487+00 C2 = 2.2894+01 RSA = 1.0000+00 MS =-2.6482-01 OT = 1.2319+02

θ ±2.3 α 147

PO	TO	V	Q	RE	D	R	MW	OW	CMQ	CMT	RFP
198.5	638.0	2.593+03	4.593+02	6.255+06	6.621+03	8.359-01	-1.963+00	1.254+02	-1.751+00	-1.284-01	1.396-02
198.5	638.0	2.593+03	4.593+02	6.255+06	6.694+03	8.347-01	-1.961+00	1.255+02	-1.747+00	-1.306-01	1.397-02
198.5	638.0	2.593+03	4.593+02	6.255+06	6.677+03	8.278-01	-1.944+00	1.254+02	-1.732+00	-1.247-01	1.396-02
198.5	638.0	2.593+03	4.593+02	6.255+06	6.694+03	8.360-01	-1.964+00	1.254+02	-1.751+00	-1.296-01	1.397-02
198.5	638.0	2.593+03	4.593+02	6.255+06	6.742+03	8.315-01	-1.953+00	1.255+02	-1.739+00	-1.313-01	1.397-02
198.5	638.0	2.593+03	4.593+02	6.255+06	6.769+03	8.317-01	-1.953+00	1.254+02	-1.741+00	-1.265-01	1.396-02
198.5	638.0	2.593+03	4.593+02	6.255+06	7.122+03	8.086-01	-1.899+00	1.254+02	-1.684+00	-1.294-01	1.397-02
198.5	638.0	2.593+03	4.593+02	6.255+06	7.186+03	8.204-01	-1.927+00	1.255+02	-1.712+00	-1.322-01	1.397-02
198.5	638.0	2.593+03	4.593+02	6.255+06	7.163+03	8.066-01	-1.895+00	1.255+02	-1.679+00	-1.302-01	1.397-02

RUN NO. 1221 M = 5.990 C1 =-2.3487+00 C2 = 2.2894+01 RSA = 1.0000+00 MS =-2.6482-01 OT = 1.2319+02

θ ±2.3 α 149

PO	TO	V	Q	RE	D	R	MW	OW	CMQ	CMT	RFP
198.5	638.0	2.593+03	4.593+02	6.255+06	6.141+03	7.068-01	-1.660+00	1.272+02	-1.418+00	-2.337-01	1.417-02
198.5	638.0	2.593+03	4.593+02	6.255+06	6.146+03	7.020-01	-1.649+00	1.272+02	-1.406+00	-2.338-01	1.417-02
198.5	638.0	2.593+03	4.593+02	6.255+06	6.186+03	6.962-01	-1.635+00	1.272+02	-1.393+00	-2.296-01	1.416-02
198.5	638.0	2.593+03	4.593+02	6.255+06	6.100+03	7.137-01	-1.676+00	1.272+02	-1.435+00	-2.306-01	1.416-02
198.5	638.0	2.593+03	4.593+02	6.255+06	6.120+03	7.191-01	-1.689+00	1.272+02	-1.448+00	-2.298-01	1.416-02
198.5	638.0	2.593+03	4.593+02	6.255+06	6.180+03	7.264-01	-1.706+00	1.271+02	-1.466+00	-2.285-01	1.416-02
198.5	638.0	2.593+03	4.593+02	6.255+06	6.259+03	7.198-01	-1.691+00	1.271+02	-1.451+00	-2.240-01	1.415-02
198.5	638.0	2.593+03	4.593+02	6.255+06	6.225+03	7.514-01	-1.765+00	1.271+02	-1.525+00	-2.290-01	1.416-02

~~CONFIDENTIAL~~

RUN NO. 1222 M = 5.990 C1 =-2.3487+00 C2 = 2.2894+01 RSA = 1.0000+00 MS =-2.6482-01 OT = 1.2319+02

θ	PO	TO	V	Q	RE	D	R	MW	OW	CMQ	CMT	RFP	α
±2.3	198.5	638.0	2.593+03	4.593+02	6.255+06	6.269+03	7.220-01	-1.696+00	1.270+02	-1.457+00	-2.207-01	1.414-02	149
	198.5	638.0	2.593+03	4.593+02	6.255+06	6.323+03	7.341-01	-1.724+00	1.271+02	-1.484+00	-2.274-01	1.415-02	
	198.5	638.0	2.593+03	4.593+02	6.255+06	6.323+03	7.262-01	-1.706+00	1.271+02	-1.465+00	-2.267-01	1.415-02	
	198.5	638.0	2.593+03	4.593+02	6.255+06	6.486+03	7.089-01	-1.665+00	1.272+02	-1.423+00	-2.299-01	1.416-02	
	198.5	638.0	2.593+03	4.593+02	6.255+06	6.240+03	7.410-01	-1.740+00	1.270+02	-1.502+00	-2.209-01	1.414-02	
	198.5	638.0	2.593+03	4.593+02	6.255+06	6.313+03	7.474-01	-1.755+00	1.271+02	-1.516+00	-2.276-01	1.415-02	
	198.5	638.0	2.593+03	4.593+02	6.255+06	6.695+03	7.826-01	-1.838+00	1.271+02	-1.600+00	-2.268-01	1.415-02	

RUN NO. 1223 M = 5.990 C1 =-2.3487+00 C2 = 2.2894+01 RSA = 1.0000+00 MS =-2.6482-01 OT = 1.2319+02

θ	PO	TO	V	Q	RE	D	R	MW	OW	CMQ	CMT	RFP	α
±2.3	198.5	638.0	2.593+03	4.593+02	6.255+06	6.200+03	7.425-01	-1.744+00	1.272+02	-1.504+00	-2.298-01	1.416-02	149.65
	198.5	638.0	2.593+03	4.593+02	6.255+06	6.236+03	7.480-01	-1.757+00	1.270+02	-1.519+00	-2.214-01	1.414-02	
	198.5	638.0	2.593+03	4.593+02	6.255+06	6.236+03	7.433-01	-1.746+00	1.271+02	-1.506+00	-2.275-01	1.415-02	
	198.5	638.0	2.593+03	4.593+02	6.255+06	6.188+03	7.566-01	-1.777+00	1.269+02	-1.540+00	-2.175-01	1.413-02	
	198.5	638.0	2.593+03	4.593+02	6.255+06	6.223+03	7.420-01	-1.743+00	1.271+02	-1.503+00	-2.277-01	1.415-02	
	198.5	638.0	2.593+03	4.593+02	6.255+06	6.562+03	7.526-01	-1.768+00	1.270+02	-1.530+00	-2.182-01	1.414-02	
	198.5	638.0	2.593+03	4.593+02	6.255+06	6.854+03	7.215-01	-1.695+00	1.271+02	-1.454+00	-2.272-01	1.415-02	

RUN NO. 1224 M = 5.990 C1 =-2.3487+00 C2 = 2.2894+01 RSA = 1.0000+00 MS =-2.6482-01 OT = 1.2319+02

θ	PO	TO	V	Q	RE	D	R	MW	OW	CMQ	CMT	RFP	α
±2.3	198.5	638.0	2.593+03	4.593+02	6.255+06	6.519+03	7.420-01	-1.743+00	1.253+02	-1.524+00	-1.240-01	1.396-02	149.65
	198.5	638.0	2.593+03	4.593+02	6.255+06	6.556+03	7.665-01	-1.800+00	1.256+02	-1.581+00	-1.363-01	1.398-02	
	198.5	638.0	2.593+03	4.593+02	6.255+06	6.577+03	7.583-01	-1.781+00	1.256+02	-1.560+00	-1.402-01	1.399-02	
	198.5	638.0	2.593+03	4.593+02	6.255+06	6.536+03	7.519-01	-1.766+00	1.254+02	-1.547+00	-1.298-01	1.397-02	
	198.5	638.0	2.593+03	4.593+02	6.255+06	6.862+03	7.098-01	-1.667+00	1.255+02	-1.444+00	-1.342-01	1.398-02	
	198.5	638.0	2.593+03	4.593+02	6.255+06	6.641+03	7.583-01	-1.781+00	1.256+02	-1.561+00	-1.370-01	1.398-02	
	198.5	638.0	2.593+03	4.593+02	6.255+06	6.766+03	7.983-01	-1.875+00	1.256+02	-1.658+00	-1.372-01	1.398-02	
	198.5	638.0	2.593+03	4.593+02	6.255+06	7.047+03	7.279-01	-1.710+00	1.255+02	-1.488+00	-1.330-01	1.397-02	

RUN NO. 1225 M = 5.990 C1 =-2.3487+00 C2 = 2.2894+01 RSA = 1.0000+00 MS =-2.6482-01 OT = 1.2319+02

θ	PO	TO	V	Q	RE	D	R	MW	OW	CMQ	CMT	RFP	α
±2.3	198.5	638.0	2.593+03	4.593+02	6.255+06	6.150+03	8.092-01	-1.900+00	1.254+02	-1.686+00	-1.288-01	1.397-02	148.6
	198.5	638.0	2.593+03	4.593+02	6.255+06	6.136+03	8.135-01	-1.911+00	1.254+02	-1.696+00	-1.298-01	1.397-02	
	198.5	638.0	2.593+03	4.593+02	6.255+06	6.179+03	8.152-01	-1.915+00	1.254+02	-1.700+00	-1.294-01	1.397-02	
	198.5	638.0	2.593+03	4.593+02	6.255+06	6.093+03	8.431-01	-1.980+00	1.253+02	-1.770+00	-1.213-01	1.395-02	
	198.5	638.0	2.593+03	4.593+02	6.255+06	6.135+03	8.346-01	-1.960+00	1.255+02	-1.747+00	-1.316-01	1.397-02	
	198.5	638.0	2.593+03	4.593+02	6.255+06	6.051+03	8.561-01	-2.011+00	1.254+02	-1.799+00	-1.287-01	1.397-02	

~~CONFIDENTIAL~~

~~CONFIDENTIAL~~

RUN NO. 1226 M = 5.990 C1 =-2.3487+00 C2 = 2.2894+01 RSA = 1.0000+00 MS =-2.6482-01 OT = 1.2319+02

θ	PO	TO	V	Q	RE	D	R	MW	OW	CMQ	CMT	RFP	α
	198.5	638.0	2.593+03	4.593+02	6.255+06	6.678+03	8.091-01	-1.900+00	1.270+02	-1.664+00	-2.234-01	1.415-02	
	198.5	638.0	2.593+03	4.593+02	6.255+06	6.699+03	8.091-01	-1.900+00	1.270+02	-1.664+00	-2.221-01	1.414-02	
	198.5	638.0	2.593+03	4.593+02	6.255+06	6.584+03	8.144-01	-1.913+00	1.270+02	-1.677+00	-2.214-01	1.414-02	
±2.3	198.5	638.0	2.593+03	4.593+02	6.255+06	6.764+03	7.917-01	-1.860+00	1.270+02	-1.623+00	-2.218-01	1.414-02	148.6
	198.5	638.0	2.593+03	4.593+02	6.255+06	6.592+03	8.174-01	-1.920+00	1.270+02	-1.684+00	-2.232-01	1.415-02	
	198.5	638.0	2.593+03	4.593+02	6.255+06	6.675+03	8.155-01	-1.915+00	1.270+02	-1.680+00	-2.210-01	1.414-02	
	198.5	638.0	2.593+03	4.593+02	6.255+06	6.711+03	8.446-01	-1.984+00	1.269+02	-1.750+00	-2.171-01	1.413-02	

RUN NO. 1302 M = 3.000 C1 =-2.1691+00 C2 = 2.2894+01 RSA = 1.0000+00 MS =-3.8944-01 OT = 1.2359+02

θ	PO	TO	V	Q	RE	D	R	MW	OW	CMQ	CMT	RFP	α
	36.7	563.0	2.085+03	9.063+02	5.367+06	6.207+03	8.943-01	-1.940+00	1.288+02	-6.338-01	-1.540-01	1.784-02	
	36.7	563.0	2.085+03	9.063+02	5.367+06	6.171+03	8.954-01	-1.942+00	1.287+02	-6.353-01	-1.512-01	1.783-02	
±2.6	36.7	563.0	2.085+03	9.063+02	5.367+06	6.175+03	8.815-01	-1.912+00	1.288+02	-6.226-01	-1.529-01	1.784-02	
	36.7	563.0	2.085+03	9.063+02	5.367+06	6.129+03	8.889-01	-1.928+00	1.288+02	-6.293-01	-1.528-01	1.784-02	149
	36.7	563.0	2.085+03	9.063+02	5.367+06	6.122+03	8.735-01	-1.895+00	1.288+02	-6.157-01	-1.520-01	1.783-02	
	36.7	563.0	2.085+03	9.063+02	5.367+06	6.218+03	8.747-01	-1.897+00	1.289+02	-6.160-01	-1.570-01	1.786-02	
	36.7	563.0	2.085+03	9.063+02	5.367+06	6.350+03	9.129-01	-1.980+00	1.289+02	-6.500-01	-1.557-01	1.785-02	
	36.7	563.0	2.085+03	9.063+02	5.367+06	6.469+03	8.986-01	-1.949+00	1.288+02	-6.380-01	-1.520-01	1.783-02	

RUN NO. 1303 M = 3.000 C1 =-2.1691+00 C2 = 2.2894+01 RSA = 1.0000+00 MS =-3.8944-01 OT = 1.2359+02

θ	PO	TO	V	Q	RE	D	R	MW	OW	CMQ	CMT	RFP	α
	36.7	563.0	2.085+03	9.063+02	5.367+06	6.545+03	9.079-01	-1.969+00	1.289+02	-6.455-01	-1.561-01	1.785-02	
	36.7	563.0	2.085+03	9.063+02	5.367+06	6.782+03	8.513-01	-1.846+00	1.289+02	-5.951-01	-1.577-01	1.786-02	
	36.7	563.0	2.085+03	9.063+02	5.367+06	6.629+03	8.694-01	-1.886+00	1.290+02	-6.111-01	-1.581-01	1.786-02	
±2.6	36.7	563.0	2.085+03	9.063+02	5.367+06	6.640+03	8.740-01	-1.896+00	1.289+02	-6.153-01	-1.573-01	1.786-02	149
	36.7	563.0	2.085+03	9.063+02	5.367+06	6.678+03	9.128-01	-1.980+00	1.288+02	-6.503-01	-1.532-01	1.784-02	
	36.7	563.0	2.085+03	9.063+02	5.367+06	6.861+03	8.551-01	-1.855+00	1.288+02	-5.990-01	-1.543-01	1.784-02	

RUN NO. 1304 M = 3.000 C1 =-2.1691+00 C2 = 2.2894+01 RSA = 1.0000+00 MS =-3.8944-01 OT = 1.2359+02

θ	PO	TO	V	Q	RE	D	R	MW	OW	CMQ	CMT	RFP	α
	36.7	563.0	2.085+03	9.063+02	5.367+06	6.326+03	8.793-01	-1.907+00	1.306+02	-6.119-01	-2.091-01	1.809-02	
	36.7	563.0	2.085+03	9.063+02	5.367+06	6.352+03	8.688-01	-1.884+00	1.306+02	-6.029-01	-2.074-01	1.809-02	
	36.7	563.0	2.085+03	9.063+02	5.367+06	6.357+03	8.688-01	-1.885+00	1.305+02	-6.035-01	-2.042-01	1.807-02	
±2.6	36.7	563.0	2.085+03	9.063+02	5.367+06	6.301+03	8.738-01	-1.895+00	1.306+02	-6.071-01	-2.088-01	1.809-02	149.6
	36.7	563.0	2.085+03	9.063+02	5.367+06	6.308+03	8.690-01	-1.885+00	1.305+02	-6.034-01	-2.060-01	1.808-02	
	36.7	563.0	2.085+03	9.063+02	5.367+06	6.460+03	8.461-01	-1.835+00	1.306+02	-5.832-01	-2.068-01	1.808-02	
	36.7	563.0	2.085+03	9.063+02	5.367+06	6.520+03	8.701-01	-1.887+00	1.306+02	-6.043-01	-2.063-01	1.808-02	
	36.7	563.0	2.085+03	9.063+02	5.367+06	6.831+03	8.323-01	-1.805+00	1.305+02	-5.715-01	-2.041-01	1.807-02	
	36.7	563.0	2.085+03	9.063+02	5.367+06	6.672+03	8.720-01	-1.891+00	1.307+02	-6.054-01	-2.097-01	1.810-02	

~~CONFIDENTIAL~~

~~CONFIDENTIAL~~

RUN NO. 1305 M = 3.000 C1 =-2.1691+00 C2 = 2.2894+01 RSA = 1.0000+00 MS =-3.8944-01 OT = 1.2359+02

θ ±2.6 α 148

PO	TO	V	Q	RE	D	R	MW	OW	CMQ	CMT	RFP
36.7	563.0	2.085+03	9.063+02	5.367+06	6.210+03	7.822-01	-1.697+00	1.302+02	-5.287-01	-1.961-01	1.803-02
36.7	563.0	2.085+03	9.063+02	5.367+06	6.148+03	7.871-01	-1.707+00	1.304+02	-5.324-01	-2.005-01	1.805-02
36.7	563.0	2.085+03	9.063+02	5.367+06	6.121+03	7.965-01	-1.728+00	1.304+02	-5.404-01	-2.026-01	1.806-02
36.7	563.0	2.085+03	9.063+02	5.367+06	6.084+03	7.931-01	-1.720+00	1.304+02	-5.375-01	-2.017-01	1.806-02
36.7	563.0	2.085+03	9.063+02	5.367+06	6.108+03	7.902-01	-1.714+00	1.303+02	-5.355-01	-1.976-01	1.804-02
36.7	563.0	2.085+03	9.063+02	5.367+06	6.650+03	7.435-01	-1.613+00	1.304+02	-4.941-01	-2.010-01	1.806-02
36.7	563.0	2.085+03	9.063+02	5.367+06	6.144+03	8.103-01	-1.758+00	1.304+02	-5.526-01	-2.012-01	1.806-02
36.7	563.0	2.085+03	9.063+02	5.367+06	6.649+03	7.561-01	-1.640+00	1.304+02	-5.053-01	-2.005-01	1.805-02
36.7	563.0	2.085+03	9.063+02	5.367+06	6.634+03	7.812-01	-1.694+00	1.302+02	-5.278-01	-1.966-01	1.804-02

RUN NO. 1306 M = 3.000 C1 =-2.1691+00 C2 = 2.2894+01 RSA = 1.0000+00 MS =-3.8944-01 OT = 1.2359+02

θ ±2.6 α 148

PO	TO	V	Q	RE	D	R	MW	OW	CMQ	CMT	RFP
36.7	563.0	2.085+03	9.063+02	5.367+06	6.829+03	7.855-01	-1.704+00	1.304+02	-5.309-01	-2.010-01	1.806-02
36.7	563.0	2.085+03	9.063+02	5.367+06	6.860+03	7.914-01	-1.717+00	1.304+02	-5.361-01	-2.007-01	1.806-02
36.7	563.0	2.085+03	9.063+02	5.367+06	6.847+03	7.944-01	-1.723+00	1.302+02	-5.393-01	-1.968-01	1.804-02
36.7	563.0	2.085+03	9.063+02	5.367+06	6.913+03	8.197-01	-1.778+00	1.304+02	-5.610-01	-2.003-01	1.805-02
36.7	563.0	2.085+03	9.063+02	5.367+06	7.270+03	7.734-01	-1.678+00	1.304+02	-5.205-01	-2.004-01	1.805-02
36.7	563.0	2.085+03	9.063+02	5.367+06	7.561+03	7.589-01	-1.646+00	1.303+02	-5.078-01	-1.996-01	1.805-02
36.7	563.0	2.085+03	9.063+02	5.367+06	7.535+03	7.335-01	-1.591+00	1.303+02	-4.856-01	-1.996-01	1.805-02

RUN NO. 1307 M = 3.000 C1 =-2.1691+00 C2 = 2.2894+01 RSA = 1.0000+00 MS =-3.8944-01 OT = 1.2359+02

θ ±2.6 α 147

PO	TO	V	Q	RE	D	R	MW	OW	CMQ	CMT	RFP
36.7	563.0	2.085+03	9.063+02	5.367+06	6.271+03	7.915-01	-1.717+00	1.239+02	-5.644-01	-7.953-03	1.715-02
36.7	563.0	2.085+03	9.063+02	5.367+06	6.247+03	7.744-01	-1.680+00	1.301+02	-5.222-01	-1.931-01	1.802-02
36.7	563.0	2.085+03	9.063+02	5.367+06	6.261+03	7.732-01	-1.677+00	1.302+02	-5.210-01	-1.949-01	1.803-02
36.7	563.0	2.085+03	9.063+02	5.367+06	6.278+03	7.722-01	-1.675+00	1.302+02	-5.201-01	-1.946-01	1.803-02
36.7	563.0	2.085+03	9.063+02	5.367+06	6.231+03	7.794-01	-1.691+00	1.302+02	-5.264-01	-1.949-01	1.803-02
36.7	563.0	2.085+03	9.063+02	5.367+06	6.280+03	7.759-01	-1.683+00	1.302+02	-5.234-01	-1.949-01	1.803-02
36.7	563.0	2.085+03	9.063+02	5.367+06	6.343+03	8.314-01	-1.803+00	1.301+02	-5.723-01	-1.928-01	1.802-02

RUN NO. 1308 M = 3.000 C1 =-2.1691+00 C2 = 2.2894+01 RSA = 1.0000+00 MS =-3.8944-01 OT = 1.2359+02

θ ±2.6 α 145

PO	TO	V	Q	RE	D	R	MW	OW	CMQ	CMT	RFP
36.7	563.0	2.085+03	9.063+02	5.367+06	6.558+03	6.831-01	-1.482+00	1.299+02	-4.429-01	-1.866-01	1.799-02
36.7	563.0	2.085+03	9.063+02	5.367+06	6.566+03	6.683-01	-1.450+00	1.300+02	-4.294-01	-1.907-01	1.801-02
36.7	563.0	2.085+03	9.063+02	5.367+06	6.582+03	6.730-01	-1.460+00	1.300+02	-4.336-01	-1.896-01	1.800-02
36.7	563.0	2.085+03	9.063+02	5.367+06	6.728+03	6.258-01	-1.357+00	1.300+02	-3.922-01	-1.889-01	1.800-02
36.7	563.0	2.085+03	9.063+02	5.367+06	6.576+03	6.741-01	-1.462+00	1.299+02	-4.349-01	-1.868-01	1.799-02
36.7	563.0	2.085+03	9.063+02	5.367+06	6.895+03	6.452-01	-1.399+00	1.300+02	-4.090-01	-1.909-01	1.801-02
36.7	563.0	2.085+03	9.063+02	5.367+06	6.678+03	6.845-01	-1.485+00	1.301+02	-4.435-01	-1.918-01	1.801-02
36.7	563.0	2.085+03	9.063+02	5.367+06	7.628+03	6.192-01	-1.343+00	1.300+02	-3.864-01	-1.898-01	1.801-02

~~CONFIDENTIAL~~

~~CONFIDENTIAL~~

RUN NO. 1309 M = 3.000 C1 =-2.1691+00 C2 = 2.2894+01 RSA = 1.0000+00 MS =-3.8944-01 OT = 1.2359+02

θ ±2.6 α 143

PO	TO	V	Q	RE	D	R	MW	OW	CMQ	CMT	RFP
36.7	563.0	2.085+03	9.063+02	5.367+06	6.425+03	5.875-01	-1.274+00	1.297+02	-3.592-01	-1.817-01	1.797-02
36.7	563.0	2.085+03	9.063+02	5.367+06	6.472+03	5.958-01	-1.292+00	1.297+02	-3.666-01	-1.809-01	1.796-02
36.7	563.0	2.085+03	9.063+02	5.367+06	6.479+03	5.933-01	-1.287+00	1.297+02	-3.643-01	-1.811-01	1.797-02
36.7	563.0	2.085+03	9.063+02	5.367+06	6.499+03	5.905-01	-1.281+00	1.297+02	-3.619-01	-1.816-01	1.797-02
36.7	563.0	2.085+03	9.063+02	5.367+06	6.445+03	6.021-01	-1.306+00	1.297+02	-3.721-01	-1.816-01	1.797-02
36.7	563.0	2.085+03	9.063+02	5.367+06	6.377+03	6.057-01	-1.314+00	1.298+02	-3.751-01	-1.828-01	1.797-02
36.7	563.0	2.085+03	9.063+02	5.367+06	6.690+03	5.777-01	-1.253+00	1.296+02	-3.509-01	-1.778-01	1.795-02
36.7	563.0	2.085+03	9.063+02	5.367+06	7.337+03	5.211-01	-1.130+00	1.296+02	-3.010-01	-1.787-01	1.795-02

RUN NO. 1310 M = 3.000 C1 =-1.0846+00 C2 = 2.2894+01 RSA = 1.0000+00 MS =-3.8944-01 OT = 1.2359+02

θ ±2.6 α 139

PO	TO	V	Q	RE	D	R	MW	OW	CMQ	CMT	RFP
36.7	563.0	2.085+03	9.063+02	5.367+06	6.636+03	8.443-01	-9.157-01	1.292+02	-2.145-01	-1.653-01	1.789-02
36.7	563.0	2.085+03	9.063+02	5.367+06	6.680+03	8.192-01	-8.884-01	1.291+02	-2.036-01	-1.618-01	1.788-02
36.7	563.0	2.085+03	9.063+02	5.367+06	6.453+03	8.972-01	-9.730-01	1.293+02	-2.378-01	-1.671-01	1.790-02
36.7	563.0	2.085+03	9.063+02	5.367+06	6.585+03	8.404-01	-9.115-01	1.293+02	-2.127-01	-1.673-01	1.790-02
36.7	563.0	2.085+03	9.063+02	5.367+06	6.665+03	8.606-01	-9.334-01	1.292+02	-2.217-01	-1.655-01	1.789-02
36.7	563.0	2.085+03	9.063+02	5.367+06	6.836+03	8.296-01	-8.998-01	1.292+02	-2.080-01	-1.663-01	1.790-02
36.7	563.0	2.085+03	9.063+02	5.367+06	6.910+03	7.999-01	-8.676-01	1.292+02	-1.948-01	-1.665-01	1.790-02
36.7	563.0	2.085+03	9.063+02	5.367+06	6.818+03	8.862-01	-9.611-01	1.292+02	-2.331-01	-1.647-01	1.789-02

RUN NO. 1311 M = 3.000 C1 =-1.0846+00 C2 = 2.2894+01 RSA = 1.0000+00 MS =-3.8944-01 OT = 1.2359+02

θ ±2.6 α 135

PO	TO	V	Q	RE	D	R	MW	OW	CMQ	CMT	RFP
36.7	563.0	2.085+03	9.063+02	5.367+06	6.978+03	7.342-01	-7.962-01	1.285+02	-1.667-01	-1.451-01	1.780-02
36.7	563.0	2.085+03	9.063+02	5.367+06	6.996+03	7.421-01	-8.048-01	1.287+02	-1.700-01	-1.495-01	1.782-02
36.7	563.0	2.085+03	9.063+02	5.367+06	7.037+03	7.113-01	-7.715-01	1.286+02	-1.564-01	-1.480-01	1.781-02
36.7	563.0	2.085+03	9.063+02	5.367+06	6.990+03	7.286-01	-7.902-01	1.287+02	-1.641-01	-1.489-01	1.782-02
36.7	563.0	2.085+03	9.063+02	5.367+06	7.011+03	6.997-01	-7.589-01	1.285+02	-1.514-01	-1.452-01	1.780-02
36.7	563.0	2.085+03	9.063+02	5.367+06	7.075+03	7.455-01	-8.085-01	1.287+02	-1.716-01	-1.488-01	1.782-02

RUN NO. 1312 M = 3.000 C1 =-7.2304-01 C2 = 2.2894+01 RSA = 1.0000+00 MS =-3.8944-01 OT = 1.2359+02

θ ±2.6 α 130

PO	TO	V	Q	RE	D	R	MW	OW	CMQ	CMT	RFP
36.7	563.0	2.085+03	9.063+02	5.367+06	7.469+03	8.065-01	-5.831-01	1.278+02	-7.984-02	-1.220-01	1.769-02
36.7	563.0	2.085+03	9.063+02	5.367+06	7.410+03	8.066-01	-5.832-01	1.277+02	-7.989-02	-1.216-01	1.769-02
36.7	563.0	2.085+03	9.063+02	5.367+06	7.447+03	8.067-01	-5.833-01	1.276+02	-8.001-02	-1.179-01	1.767-02
36.7	563.0	2.085+03	9.063+02	5.367+06	8.037+03	7.978-01	-5.768-01	1.278+02	-7.722-02	-1.231-01	1.770-02
36.7	563.0	2.085+03	9.063+02	5.367+06	7.439+03	8.337-01	-6.028-01	1.278+02	-8.793-02	-1.226-01	1.770-02
36.7	563.0	2.085+03	9.063+02	5.367+06	7.655+03	8.141-01	-5.886-01	1.277+02	-8.212-02	-1.215-01	1.769-02

~~CONFIDENTIAL~~

~~CONFIDENTIAL~~

RUN NO. 1313 M = 3.000 C1 =-7.2304-01 C2 = 2.2894+01 RSA = 1.0000+00 MS =-3.8944-01 OT = 1.2359+02

θ ±2.6

PO	TO	V	Q	RE	D	R	MW	OW	CMQ	CMT	RFP
36.7	563.0	2.085+03	9.063+02	5.367+06	7.444+03	8.215-01	-5.940-01	1.260+02	-8.551-02	-6.895-02	1.744-02
36.7	563.0	2.085+03	9.063+02	5.367+06	7.382+03	8.157-01	-5.898-01	1.262+02	-8.360-02	-7.640-02	1.748-02
36.7	563.0	2.085+03	9.063+02	5.367+06	7.610+03	7.890-01	-5.705-01	1.263+02	-7.552-02	-7.832-02	1.749-02
36.7	563.0	2.085+03	9.063+02	5.367+06	7.394+03	8.137-01	-5.883-01	1.261+02	-8.306-02	-7.280-02	1.746-02
36.7	563.0	2.085+03	9.063+02	5.367+06	8.139+03	7.338-01	-5.306-01	1.263+02	-5.882-02	-8.038-02	1.750-02
36.7	563.0	2.085+03	9.063+02	5.367+06	8.149+03	7.087-01	-5.124-01	1.262+02	-5.130-02	-7.714-02	1.748-02
36.7	563.0	2.085+03	9.063+02	5.367+06	8.037+03	7.527-01	-5.442-01	1.259+02	-6.476-02	-6.627-02	1.743-02
36.7	563.0	2.085+03	9.063+02	5.367+06	7.827+03	8.693-01	-6.285-01	1.257+02	-1.002-01	-6.016-02	1.740-02
36.7	563.0	2.085+03	9.063+02	5.367+06	8.047+03	7.991-01	-5.778-01	1.265+02	-7.843-02	-8.393-02	1.751-02

α 130

RUN NO. 1314 M = 4.010 C1 =-1.4461+00 C2 = 2.2894+01 RSA = 1.0000+00 MS =-3.8944-01 OT = 1.2359+02

θ ±2.6

PO	TO	V	Q	RE	D	R	MW	OW	CMQ	CMT	RFP
73.4	555.0	2.255+03	7.732+02	6.603+06	6.150+03	9.865-01	-1.427+00	1.296+02	-5.343-01	-2.062-01	1.660-02
73.4	555.0	2.255+03	7.732+02	6.603+06	6.085+03	9.937-01	-1.437+00	1.297+02	-5.395-01	-2.100-01	1.660-02
73.4	555.0	2.255+03	7.732+02	6.603+06	6.239+03	9.761-01	-1.412+00	1.296+02	-5.267-01	-2.076-01	1.659-02
73.4	555.0	2.255+03	7.732+02	6.603+06	6.298+03	9.480-01	-1.371+00	1.296+02	-5.056-01	-2.085-01	1.660-02
73.4	555.0	2.255+03	7.732+02	6.603+06	6.245+03	9.452-01	-1.367+00	1.295+02	-5.039-01	-2.054-01	1.659-02
73.4	555.0	2.255+03	7.732+02	6.603+06	6.269+03	8.926-01	-1.291+00	1.296+02	-4.645-01	-2.072-01	1.659-02
73.4	555.0	2.255+03	7.732+02	6.603+06	7.155+03	8.207-01	-1.187+00	1.297+02	-4.106-01	-2.101-01	1.660-02
73.4	555.0	2.255+03	7.732+02	6.603+06	6.872+03	9.852-01	-1.425+00	1.295+02	-5.340-01	-2.028-01	1.658-02

α 149

RUN NO. 1315 M = 4.010 C1 =-1.4461+00 C2 = 2.2894+01 RSA = 1.0000+00 MS =-3.8944-01 OT = 1.2359+02

θ ±2.6

PO	TO	V	Q	RE	D	R	MW	OW	CMQ	CMT	RFP
73.4	555.0	2.255+03	7.732+02	6.603+06	6.293+03	9.237-01	-1.336+00	1.296+02	-4.874-01	-2.091-01	1.660-02
73.4	555.0	2.255+03	7.732+02	6.603+06	6.234+03	9.356-01	-1.353+00	1.296+02	-4.965-01	-2.076-01	1.659-02
73.4	555.0	2.255+03	7.732+02	6.603+06	6.125+03	9.746-01	-1.409+00	1.296+02	-5.255-01	-2.081-01	1.660-02
73.4	555.0	2.255+03	7.732+02	6.603+06	6.086+03	9.689-01	-1.401+00	1.297+02	-5.210-01	-2.097-01	1.660-02
73.4	555.0	2.255+03	7.732+02	6.603+06	6.226+03	9.427-01	-1.363+00	1.295+02	-5.022-01	-2.035-01	1.658-02
73.4	555.0	2.255+03	7.732+02	6.603+06	6.209+03	9.768-01	-1.412+00	1.296+02	-5.270-01	-2.088-01	1.660-02
73.4	555.0	2.255+03	7.732+02	6.603+06	7.310+03	8.093-01	-1.170+00	1.296+02	-4.024-01	-2.069-01	1.659-02
73.4	555.0	2.255+03	7.732+02	6.603+06	6.550+03	8.648-01	-1.251+00	1.296+02	-4.438-01	-2.068-01	1.659-02

α 149

RUN NO. 1316 M = 4.010 C1 =-1.4461+00 C2 = 2.2894+01 RSA = 1.0000+00 MS =-3.8944-01 OT = 1.2359+02

θ ±2.6

PO	TO	V	Q	RE	D	R	MW	OW	CMQ	CMT	RFP
73.4	555.0	2.255+03	7.732+02	6.603+06	6.502+03	9.259-01	-1.339+00	1.297+02	-4.887-01	-2.130-01	1.661-02
73.4	555.0	2.255+03	7.732+02	6.603+06	6.336+03	9.770-01	-1.413+00	1.297+02	-5.269-01	-2.117-01	1.661-02
73.4	555.0	2.255+03	7.732+02	6.603+06	6.442+03	9.369-01	-1.355+00	1.298+02	-4.968-01	-2.140-01	1.662-02
73.4	555.0	2.255+03	7.732+02	6.603+06	6.448+03	9.599-01	-1.388+00	1.298+02	-5.138-01	-2.138-01	1.662-02
73.4	555.0	2.255+03	7.732+02	6.603+06	6.550+03	9.768-01	-1.413+00	1.298+02	-5.264-01	-2.140-01	1.662-02
73.4	555.0	2.255+03	7.732+02	6.603+06	6.606+03	9.461-01	-1.368+00	1.295+02	-5.046-01	-2.049-01	1.658-02
73.4	555.0	2.255+03	7.732+02	6.603+06	6.567+03	1.050+00	-1.518+00	1.298+02	-5.807-01	-2.141-01	1.662-02

α 149.6

~~CONFIDENTIAL~~

~~CONFIDENTIAL~~

RUN NO. 1317 M = 4.010 C1 =-1.4461+00 C2 = 2.2894+01 RSA = 1.0000+00 MS =-3.8944-01 OT = 1.2359+02

θ	PO	TO	V	Q	RE	D	R	MW	OW	CMQ	CMT	RFP	α
	73.4	555.0	2.255+03	7.732+02	6.603+06	6.569+03	9.597-01	-1.388+00	1.281+02	-5.205-01	-1.541-01	1.640-02	
	73.4	555.0	2.255+03	7.732+02	6.603+06	6.771+03	9.327-01	-1.349+00	1.281+02	-5.002-01	-1.536-01	1.640-02	
	73.4	555.0	2.255+03	7.732+02	6.603+06	6.625+03	9.773-01	-1.413+00	1.281+02	-5.338-01	-1.543-01	1.640-02	
±2.6	73.4	555.0	2.255+03	7.732+02	6.603+06	6.525+03	1.007+00	-1.457+00	1.279+02	-5.571-01	-1.486-01	1.638-02	
	73.4	555.0	2.255+03	7.732+02	6.603+06	6.645+03	1.001+00	-1.448+00	1.282+02	-5.516-01	-1.571-01	1.641-02	149.6
	73.4	555.0	2.255+03	7.732+02	6.603+06	6.636+03	9.930-01	-1.436+00	1.280+02	-5.461-01	-1.508-01	1.639-02	
	73.4	555.0	2.255+03	7.732+02	6.603+06	6.880+03	9.659-01	-1.397+00	1.281+02	-5.250-01	-1.563-01	1.641-02	
	73.4	555.0	2.255+03	7.732+02	6.603+06	7.050+03	9.518-01	-1.376+00	1.281+02	-5.142-01	-1.568-01	1.641-02	
	73.4	555.0	2.255+03	7.732+02	6.603+06	7.644+03	9.103-01	-1.316+00	1.280+02	-4.836-01	-1.509-01	1.639-02	

RUN NO. 1318 M = 4.010 C1 =-1.4461+00 C2 = 2.2894+01 RSA = 1.0000+00 MS =-3.8944-01 OT = 1.2359+02

θ	PO	TO	V	Q	RE	D	R	MW	OW	CMQ	CMT	RFP	α
	73.4	555.0	2.255+03	7.732+02	6.603+06	6.181+03	9.480-01	-1.371+00	1.296+02	-5.058-01	-2.068-01	1.659-02	
	73.4	555.0	2.255+03	7.732+02	6.603+06	6.105+03	9.379-01	-1.356+00	1.294+02	-4.989-01	-2.010-01	1.657-02	
	73.4	555.0	2.255+03	7.732+02	6.603+06	6.802+03	8.718-01	-1.261+00	1.295+02	-4.492-01	-2.049-01	1.658-02	
±2.6	73.4	555.0	2.255+03	7.732+02	6.603+06	6.112+03	9.537-01	-1.379+00	1.295+02	-5.102-01	-2.056-01	1.659-02	
	73.4	555.0	2.255+03	7.732+02	6.603+06	6.173+03	9.445-01	-1.366+00	1.295+02	-5.033-01	-2.060-01	1.659-02	148
	73.4	555.0	2.255+03	7.732+02	6.603+06	6.121+03	1.104+00	-1.597+00	1.295+02	-6.224-01	-2.047-01	1.658-02	
	73.4	555.0	2.255+03	7.732+02	6.603+06	6.401+03	9.864-01	-1.426+00	1.295+02	-5.346-01	-2.052-01	1.659-02	

RUN NO. 1319 M = 4.010 C1 =-1.4461+00 C2 = 2.2894+01 RSA = 1.0000+00 MS =-3.8944-01 OT = 1.2359+02

θ	PO	TO	V	Q	RE	D	R	MW	OW	CMQ	CMT	RFP	α
	73.4	555.0	2.255+03	7.732+02	6.603+06	6.485+03	9.826-01	-1.421+00	1.279+02	-5.384-01	-1.489-01	1.638-02	
	73.4	555.0	2.255+03	7.732+02	6.603+06	6.581+03	9.479-01	-1.371+00	1.279+02	-5.123-01	-1.483-01	1.638-02	
	73.4	555.0	2.255+03	7.732+02	6.603+06	6.535+03	9.633-01	-1.393+00	1.279+02	-5.238-01	-1.491-01	1.638-02	
±2.6	73.4	555.0	2.255+03	7.732+02	6.603+06	6.449+03	9.761-01	-1.411+00	1.279+02	-5.335-01	-1.492-01	1.638-02	
	73.4	555.0	2.255+03	7.732+02	6.603+06	6.805+03	9.235-01	-1.336+00	1.279+02	-4.938-01	-1.491-01	1.638-02	148
	73.4	555.0	2.255+03	7.732+02	6.603+06	6.598+03	9.669-01	-1.398+00	1.279+02	-5.267-01	-1.481-01	1.638-02	
	73.4	555.0	2.255+03	7.732+02	6.603+06	6.680+03	9.948-01	-1.439+00	1.278+02	-5.481-01	-1.457-01	1.637-02	
	73.4	555.0	2.255+03	7.732+02	6.603+06	6.812+03	9.197-01	-1.330+00	1.279+02	-4.911-01	-1.475-01	1.638-02	

RUN NO. 1320 M = 4.010 C1 =-1.4461+00 C2 = 2.2894+01 RSA = 1.0000+00 MS =-3.8944-01 OT = 1.2359+02

θ	PO	TO	V	Q	RE	D	R	MW	OW	CMQ	CMT	RFP	α
	73.4	555.0	2.255+03	7.732+02	6.603+06	6.067+03	9.312-01	-1.347+00	1.295+02	-4.937-01	-2.027-01	1.658-02	
	73.4	555.0	2.255+03	7.732+02	6.603+06	6.188+03	9.183-01	-1.328+00	1.294+02	-4.842-01	-2.016-01	1.657-02	
	73.4	555.0	2.255+03	7.732+02	6.603+06	6.256+03	9.007-01	-1.303+00	1.294+02	-4.710-01	-2.023-01	1.657-02	
	73.4	555.0	2.255+03	7.732+02	6.603+06	6.220+03	9.152-01	-1.323+00	1.294+02	-4.821-01	-1.994-01	1.656-02	
±2.6	73.4	555.0	2.255+03	7.732+02	6.603+06	6.127+03	9.370-01	-1.355+00	1.294+02	-4.984-01	-2.000-01	1.657-02	147
	73.4	555.0	2.255+03	7.732+02	6.603+06	6.333+03	8.900-01	-1.287+00	1.293+02	-4.634-01	-1.980-01	1.656-02	
	73.4	555.0	2.255+03	7.732+02	6.603+06	6.591+03	8.951-01	-1.294+00	1.298+02	-4.656-01	-2.136-01	1.662-02	
	73.4	555.0	2.255+03	7.732+02	6.603+06	6.606+03	9.219-01	-1.333+00	1.295+02	-4.865-01	-2.053-01	1.659-02	
	73.4	555.0	2.255+03	7.732+02	6.603+06	7.231+03	8.620-01	-1.247+00	1.230+02	-4.653-01	1.969-02	1.575-02	

~~CONFIDENTIAL~~

~~CONFIDENTIAL~~

RUN NO. 1321 M = 4.010 C1 =-1.4461+00 C2 = 2.2894+01 RSA = 1.0000+00 MS =-3.8944-01 OT = 1.2359+02

θ	PO	TO	V	Q	RE	D	R	MW	OW	CMQ	CMT	RFP	α
	73.4	555.0	2.255+03	7.732+02	6.603+06	6.826+03	9.639-01	-1.394+00	1.215+02	-5.521-01	7.023-02	1.556-02	
	73.4	555.0	2.255+03	7.732+02	6.603+06	6.936+03	9.420-01	-1.362+00	1.278+02	-5.082-01	-1.456-01	1.637-02	
±2.6	73.4	555.0	2.255+03	7.732+02	6.603+06	6.894+03	9.441-01	-1.365+00	1.278+02	-5.098-01	-1.447-01	1.636-02	
	73.4	555.0	2.255+03	7.732+02	6.603+06	6.917+03	9.408-01	-1.360+00	1.277+02	-5.079-01	-1.398-01	1.635-02	147
	73.4	555.0	2.255+03	7.732+02	6.603+06	7.265+03	9.102-01	-1.316+00	1.278+02	-4.841-01	-1.460-01	1.637-02	
	73.4	555.0	2.255+03	7.732+02	6.603+06	7.624+03	9.623-01	-1.392+00	1.278+02	-5.235-01	-1.460-01	1.637-02	

RUN NO. 1322 M = 4.010 C1 =-1.4461+00 C2 = 2.2894+01 RSA = 1.0000+00 MS =-3.8944-01 OT = 1.2359+02

θ	PO	TO	V	Q	RE	D	R	MW	OW	CMQ	CMT	RFP	α
	73.4	555.0	2.255+03	7.732+02	6.603+06	6.826+03	8.342-01	-1.206+00	1.291+02	-4.224-01	-1.912-01	1.653-02	
	73.4	555.0	2.255+03	7.732+02	6.603+06	6.736+03	8.387-01	-1.213+00	1.290+02	-4.262-01	-1.872-01	1.652-02	
±2.6	73.4	555.0	2.255+03	7.732+02	6.603+06	6.664+03	8.773-01	-1.269+00	1.292+02	-4.546-01	-1.921-01	1.654-02	
	73.4	555.0	2.255+03	7.732+02	6.603+06	6.424+03	9.147-01	-1.323+00	1.292+02	-4.824-01	-1.930-01	1.654-02	145
	73.4	555.0	2.255+03	7.732+02	6.603+06	6.687+03	8.745-01	-1.265+00	1.292+02	-4.523-01	-1.932-01	1.654-02	
	73.4	555.0	2.255+03	7.732+02	6.603+06	6.777+03	8.789-01	-1.271+00	1.290+02	-4.562-01	-1.879-01	1.652-02	
	73.4	555.0	2.255+03	7.732+02	6.603+06	7.205+03	8.059-01	-1.165+00	1.292+02	-4.007-01	-1.946-01	1.655-02	
	73.4	555.0	2.255+03	7.732+02	6.603+06	6.893+03	8.616-01	-1.246+00	1.291+02	-4.429-01	-1.912-01	1.653-02	

RUN NO. 1323 M = 4.010 C1 =-1.4461+00 C2 = 2.2894+01 RSA = 1.0000+00 MS =-3.8944-01 OT = 1.2359+02

θ	PO	TO	V	Q	RE	D	R	MW	OW	CMQ	CMT	RFP	α
	73.4	555.0	2.255+03	7.732+02	6.603+06	6.842+03	6.985-01	-1.010+00	1.272+02	-3.258-01	-1.230-01	1.629-02	
	73.4	555.0	2.255+03	7.732+02	6.603+06	6.842+03	6.930-01	-1.002+00	1.272+02	-3.216-01	-1.239-01	1.629-02	
	73.4	555.0	2.255+03	7.732+02	6.603+06	6.881+03	6.956-01	-1.006+00	1.270+02	-3.241-01	-1.175-01	1.626-02	
	73.4	555.0	2.255+03	7.732+02	6.603+06	6.835+03	6.982-01	-1.010+00	1.272+02	-3.255-01	-1.242-01	1.629-02	
	73.4	555.0	2.255+03	7.732+02	6.603+06	6.844+03	7.129-01	-1.031+00	1.272+02	-3.367-01	-1.238-01	1.629-02	143
±2.6	73.4	555.0	2.255+03	7.732+02	6.603+06	6.892+03	7.027-01	-1.016+00	1.271+02	-3.291-01	-1.218-01	1.628-02	
	73.4	555.0	2.255+03	7.732+02	6.603+06	7.160+03	6.849-01	-9.904-01	1.269+02	-3.162-01	-1.131-01	1.625-02	
	73.4	555.0	2.255+03	7.732+02	6.603+06	7.218+03	9.473-01	-1.370+00	1.271+02	-5.150-01	-1.208-01	1.628-02	
	73.4	555.0	2.255+03	7.732+02	6.603+06	7.305+03	6.783-01	-9.809-01	1.211+02	-3.261-01	8.264-02	1.551-02	

RUN NO. 1324 M = 4.010 C1 =-1.0846+00 C2 = 2.2894+01 RSA = 1.0000+00 MS =-3.8944-01 OT = 1.2359+02

θ	PO	TO	V	Q	RE	D	R	MW	OW	CMQ	CMT	RFP	α
	73.4	555.0	2.255+03	7.732+02	6.603+06	6.551+03	7.505-01	-8.140-01	1.283+02	-2.209-01	-1.629-01	1.643-02	
	73.4	555.0	2.255+03	7.732+02	6.603+06	6.482+03	7.253-01	-7.866-01	1.283+02	-2.067-01	-1.631-01	1.643-02	
	73.4	555.0	2.255+03	7.732+02	6.603+06	6.529+03	7.517-01	-8.152-01	1.282+02	-2.217-01	-1.596-01	1.642-02	
±2.6													
	73.4	555.0	2.255+03	7.732+02	6.603+06	6.557+03	7.398-01	-8.024-01	1.284+02	-2.148-01	-1.651-01	1.644-02	1[illegible]
	73.4	555.0	2.255+03	7.732+02	6.603+06	6.464+03	7.711-01	-8.363-01	1.284+02	-2.324-01	-1.642-01	1.644-02	
	73.4	555.0	2.255+03	7.732+02	6.603+06	6.845+03	8.520-01	-9.241-01	1.284+02	-2.780-01	-1.662-01	1.644-02	
	73.4	555.0	2.255+03	7.732+02	6.603+06	6.930+03	8.190-01	-8.883-01	1.283+02	-2.597-01	-1.606-01	1.642-02	

~~CONFIDENTIAL~~

~~CONFIDENTIAL~~

RUN NO. 1325 M = 4.010 C1 =-1.0846+00 C2 = 2.2894+01 RSA = 1.0000+00 MS =-3.8944-01 OT = 1.2359+02

±2.6 (θ) — 135 (α)

PO	TO	V	Q	RE	D	R	MW	OW	CMQ	CMT	RFP
73.4	555.0	2.255+03	7.732+02	6.603+06	6.882+03	6.453-01	-6.999-01	1.260+02	-1.645-01	-8.328-02	1.614-02
73.4	555.0	2.255+03	7.732+02	6.603+06	6.857+03	6.534-01	-7.087-01	1.262+02	-1.690-01	-8.762-02	1.615-02
73.4	555.0	2.255+03	7.732+02	6.603+06	6.869+03	6.569-01	-7.125-01	1.261+02	-1.711-01	-8.419-02	1.614-02
73.4	555.0	2.255+03	7.732+02	6.603+06	6.925+03	6.512-01	-7.062-01	1.260+02	-1.679-01	-8.144-02	1.613-02
73.4	555.0	2.255+03	7.732+02	6.603+06	6.902+03	6.812-01	-7.388-01	1.258+02	-1.854-01	-7.615-02	1.611-02
73.4	555.0	2.255+03	7.732+02	6.603+06	7.483+03	6.816-01	-7.392-01	1.259+02	-1.854-01	-8.028-02	1.613-02

RUN NO. 1326 M = 4.010 C1 =-7.2304-01 C2 = 2.2894+01 RSA = 1.0000+00 MS =-3.8944-01 OT = 1.2359+02

±2.6 (θ) — 130 (α)

PO	TO	V	Q	RE	D	R	MW	OW	CMQ	CMT	RFP
73.4	555.0	2.255+03	7.732+02	6.603+06	7.040+03	7.058-01	-5.103-01	1.255+02	-6.431-02	-6.593-02	1.607-02
73.4	555.0	2.255+03	7.732+02	6.603+06	7.115+03	6.985-01	-5.051-01	1.255+02	-6.154-02	-6.344-02	1.606-02
73.4	555.0	2.255+03	7.732+02	6.603+06	6.887+03	6.923-01	-5.005-01	1.252+02	-5.925-02	-5.491-02	1.603-02
73.4	555.0	2.255+03	7.732+02	6.603+06	6.860+03	7.048-01	-5.096-01	1.249+02	-6.423-02	-4.514-02	1.600-02
73.4	555.0	2.255+03	7.732+02	6.603+06	6.769+03	7.728-01	-5.587-01	1.252+02	-9.030-02	-5.451-02	1.603-02
73.4	555.0	2.255+03	7.732+02	6.603+06	6.967+03	7.554-01	-5.462-01	1.254+02	-8.349-02	-6.036-02	1.605-02

RUN NO. 1327 M = 4.010 C1 =-1.8076+00 C2 = 2.2894+01 RSA = 1.0000+00 MS =-3.8944-01 OT = 1.2359+02

±0.9 (θ) — 149 (α)

PO	TO	V	Q	RE	D	R	MW	OW	CMQ	CMT	RFP
73.4	555.0	2.255+03	7.732+02	6.603+06	5.524+03	7.965-01	-1.440+00	1.278+02	-5.490-01	-1.432-01	1.636-02
73.4	555.0	2.255+03	7.732+02	6.603+06	5.574+03	8.138-01	-1.471+00	1.276+02	-5.659-01	-1.383-01	1.634-02
73.4	555.0	2.255+03	7.732+02	6.603+06	5.604+03	8.249-01	-1.491+00	1.278+02	-5.756-01	-1.445-01	1.636-02
73.4	555.0	2.255+03	7.732+02	6.603+06	5.548+03	8.122-01	-1.468+00	1.280+02	-5.626-01	-1.532-01	1.640-02
73.4	555.0	2.255+03	7.732+02	6.603+06	5.600+03	7.946-01	-1.436+00	1.280+02	-5.463-01	-1.504-01	1.639-02
73.4	555.0	2.255+03	7.732+02	6.603+06	5.646+03	8.050-01	-1.455+00	1.281+02	-5.557-01	-1.536-01	1.640-02
73.4	555.0	2.255+03	7.732+02	6.603+06	5.810+03	8.445-01	-1.526+00	1.282+02	-5.922-01	-1.592-01	1.642-02

RUN NO. 1328 M = 4.010 C1 =-1.8076+00 C2 = 2.2894+01 RSA = 1.0000+00 MS =-3.8944-01 OT = 1.2359+02

±1.7 (θ) — 149 (α)

PO	TO	V	Q	RE	D	R	MW	OW	CMQ	CMT	RFP
73.4	555.0	2.255+03	7.732+02	6.603+06	6.829+03	7.859-01	-1.421+00	1.279+02	-5.383-01	-1.489-01	1.638-02
73.4	555.0	2.255+03	7.732+02	6.603+06	6.741+03	7.887-01	-1.426+00	1.278+02	-5.416-01	-1.432-01	1.636-02
73.4	555.0	2.255+03	7.732+02	6.603+06	6.779+03	7.646-01	-1.382+00	1.279+02	-5.182-01	-1.490-01	1.638-02
73.4	555.0	2.255+03	7.732+02	6.603+06	6.736+03	7.993-01	-1.445+00	1.280+02	-5.505-01	-1.522-01	1.639-02
73.4	555.0	2.255+03	7.732+02	6.603+06	7.008+03	7.728-01	-1.397+00	1.279+02	-5.260-01	-1.479-01	1.638-02
73.4	555.0	2.255+03	7.732+02	6.603+06	6.599+03	8.347-01	-1.509+00	1.279+02	-5.846-01	-1.465-01	1.637-02
73.4	555.0	2.255+03	7.732+02	6.603+06	7.139+03	7.855-01	-1.420+00	1.279+02	-5.379-01	-1.486-01	1.638-02

~~CONFIDENTIAL~~

~~CONFIDENTIAL~~

RUN NO. 1329 M = 4.010 C1 =-1.4461+00 C2 = 2.2894+01 RSA = 1.0000+00 MS =-3.8944-01 DT = 1.2359+02

θ	PO	TO	V	Q	RE	D	R	MW	OW	CMQ	CMT	RFP	α
	73.4	555.0	2.255+03	7.732+02	6.603+06	6.098+03	9.822-01	-1.420+00	1.281+02	-5.375-01	-1.545-01	1.640-02	
	73.4	555.0	2.255+03	7.732+02	6.603+06	6.045+03	1.014+00	-1.466+00	1.280+02	-5.619-01	-1.512-01	1.639-02	
	73.4	555.0	2.255+03	7.732+02	6.603+06	6.102+03	1.010+00	-1.461+00	1.281+02	-5.583-01	-1.564-01	1.641-02	
±2.6	73.4	555.0	2.255+03	7.732+02	6.603+06	6.151+03	9.951-01	-1.439+00	1.282+02	-5.468-01	-1.573-01	1.641-02	
	73.4	555.0	2.255+03	7.732+02	6.603+06	6.107+03	9.967-01	-1.441+00	1.281+02	-5.482-01	-1.558-01	1.641-02	149
	73.4	555.0	2.255+03	7.732+02	6.603+06	6.338+03	9.739-01	-1.408+00	1.280+02	-5.313-01	-1.532-01	1.640-02	
	73.4	555.0	2.255+03	7.732+02	6.603+06	6.514+03	9.572-01	-1.384+00	1.281+02	-5.185-01	-1.554-01	1.640-02	
	73.4	555.0	2.255+03	7.732+02	6.603+06	6.569+03	1.018+00	-1.472+00	1.282+02	-5.639-01	-1.573-01	1.641-02	
	73.4	555.0	2.255+03	7.732+02	6.603+06	6.657+03	1.282+00	-1.853+00	1.282+02	-7.626-01	-1.585-01	1.642-02	

PRELIMINARY UNCHECKED DATA

ARNOLD ENGINEERING DEVELOPMENT CENTER
von KARMAN GAS DYNAMICS FACILITY
40 - INCH HYPERSONIC SS WIND TUNNEL

RUN NO. 1502 2.490 -1.4461+00 3.3053+01 1.0000+00 -4.3103-01 1.2335+02

									OW	CMQ	CMT	RFP	
	25.1	551.5	1.915+03	9.325+02	4.938+06	6.517+03	1.069+00	-1.546+00	1.305+02	-5.902-01	2.976-01	1.969-02	
	25.1	551.5	1.915+03	9.325+02	4.938+06	6.551+03	1.058+00	-1.530+00	1.305+02	-5.717-01	2.974-01	1.968-02	
	25.1	551.5	1.915+03	9.325+02	4.938+06	6.552+03	1.055+00	-1.525+00	1.303+02	-5.701-01	2.889-01	1.965-02	146
±2.5	25.1	551.5	1.915+03	9.325+02	4.938+06	6.553+03	1.048+00	-1.516+00	1.305+02	-5.642-01	2.971-01	1.967-02	
	25.1	551.5	1.915+03	9.325+02	4.938+06	6.573+03	1.060+00	-1.533+00	1.305+02	-5.735-01	2.973-01	1.968-02	
	25.1	551.5	1.915+03	9.325+02	4.938+06	6.581+03	1.048+00	-1.515+00	1.304+02	-5.640-01	2.956-01	1.967-02	
	25.1	551.5	1.915+03	9.325+02	4.938+06	6.566+03	1.045+00	-1.512+00	1.304+02	-5.623-01	2.959-01	1.967-02	
	25.1	551.5	1.915+03	9.325+02	4.938+06	6.555+03	1.050+00	-1.518+00	1.304+02	-5.659-01	2.922-01	1.966-02	
	25.1	551.5	1.915+03	9.325+02	4.938+06	6.570+03	1.062+00	-1.536+00	1.305+02	-5.751-01	2.962-01	1.967-02	

Multiply this column by 0.6926 for Runs 1502 thru 1522

Multiply this column by (-1) for Runs 1502 thru 1522

PRELIMINARY UNCHECKED DATA

ARNOLD ENGINEERING DEVELOPMENT CENTER
von KARMAN GAS DYNAMICS FACILITY
40 - INCH HYPERSONIC SS WIND TUNNEL

RUN NO. 1503 2.490 -2.1691+00 3.3053+01 1.0000+00 -4.3103-01 1.2335+02

	25.1	551.5	1.915+03	9.325+02	4.938+06	6.540+03	7.833-01	-1.699+00	1.306+02	-6.593-01	3.004-01	1.969-02	
	25.1	551.5	1.915+03	9.325+02	4.938+06	6.445+03	7.917-01	-1.717+00	1.306+02	-6.687-01	3.010-01	1.967-02	
	25.1	551.5	1.915+03	9.325+02	4.938+06	6.497+03	7.820-01	-1.696+00	1.305+02	-6.583-01	2.966-01	1.967-02	
±2.5	25.1	551.5	1.915+03	9.325+02	4.938+06	6.473+03	7.849-01	-1.702+00	1.305+02	-6.612-01	2.995-01	1.968-02	
	25.1	551.5	1.915+03	9.325+02	4.938+06	6.492+03	7.830-01	-1.698+00	1.305+02	-6.590-01	3.002-01	1.969-02	147
	25.1	551.5	1.915+03	9.325+02	4.938+06	6.465+03	7.835-01	-1.700+00	1.306+02	-6.593-01	3.019-01	1.969-02	
	25.1	551.5	1.915+03	9.325+02	4.938+06	6.480+03	7.838-01	-1.700+00	1.305+02	-6.579-01	3.000-01	1.968-02	
	25.1	551.5	1.915+03	9.325+02	4.938+06	6.531+03	7.679-01	-1.666+00	1.305+02	-6.424-01	2.963-01	1.967-02	
	25.1	551.5	1.915+03	9.325+02	4.938+06	6.490+03	7.761-01	-1.688+00	1.306+02	-6.531-01	3.030-01	1.970-02	

~~CONFIDENTIAL~~

~~CONFIDENTIAL~~

PRELIMINARY UNCHECKED DATA

ARNOLD ENGINEERING DEVELOPMENT CENTER
von KARMAN GAS DYNAMICS FACILITY
40 - INCH CONTINUOUS SS WIND TUNNEL

RUN NO. 1504 2.490 -1.4461+00 3.3053+01 1.0000+00 -4.3103-01 1.2335+02

±2.5

25.1	551.5	1.915+03	9.325+02	4.938+06	6.775+03	8.019-01	-1.304+00	1.303+02	-4.550-01	2.888-01	1.965-02
25.1	551.5	1.915+03	9.325+02	4.938+06	6.786+03	8.929-01	-1.291+00	1.303+02	-4.481-01	2.891-01	1.965-02
25.1	551.5	1.915+03	9.325+02	4.938+06	6.798+03	8.924-01	-1.291+00	1.303+02	-4.478-01	2.890-01	1.965-02
25.1	551.5	1.915+03	9.325+02	4.938+06	6.787+03	8.926-01	-1.291+00	1.303+02	-4.479-01	2.886-01	1.964-02
25.1	551.5	1.915+03	9.325+02	4.938+06	6.787+03	8.946-01	-1.294+00	1.301+02	-4.501-01	2.813-01	1.962-02
25.1	551.5	1.915+03	9.325+02	4.938+06	6.766+03	9.011-01	-1.303+00	1.302+02	-4.546-01	2.861-01	1.964-02
25.1	551.5	1.915+03	9.325+02	4.938+06	6.802+03	8.961-01	-1.296+00	1.302+02	-4.509-01	2.856-01	1.963-02
25.1	551.5	1.915+03	9.325+02	4.938+06	6.830+03	8.924-01	-1.290+00	1.303+02	-4.479-01	2.878-01	1.964-02
25.1	551.5	1.915+03	9.325+02	4.938+06	6.830+03	8.880-01	-1.284+00	1.301+02	-4.451-01	2.811-01	1.962-02

144

PRELIMINARY UNCHECKED DATA

ARNOLD ENGINEERING DEVELOPMENT CENTER
von KARMAN GAS DYNAMICS FACILITY
40 - INCH CONTINUOUS SS WIND TUNNEL

RUN NO. 1505 2.490 -1.4461+00 3.3053+01 1.0000+00 -4.3103-01 1.2335+02

±2.5

25.1	551.5	1.915+03	9.325+02	4.938+06	6.292+03	8.791-01	-1.271+00	1.301+02	-4.384-01	2.814-01	1.962-02
25.1	551.5	1.915+03	9.325+02	4.938+06	6.327+03	8.678-01	-1.255+00	1.301+02	-4.298-01	2.825-01	1.962-02
25.1	551.5	1.915+03	9.325+02	4.938+06	6.312+03	8.675-01	-1.254+00	1.301+02	-4.295-01	2.830-01	1.963-02
25.1	551.5	1.915+03	9.325+02	4.938+06	6.309+03	8.615-01	-1.246+00	1.301+02	-4.252-01	2.800-01	1.961-02
25.1	551.5	1.915+03	9.325+02	4.938+06	6.308+03	8.644-01	-1.250+00	1.301+02	-4.272-01	2.826-01	1.962-02
25.1	551.5	1.915+03	9.325+02	4.938+06	6.328+03	8.601-01	-1.244+00	1.301+02	-4.239-01	2.822-01	1.962-02
25.1	551.5	1.915+03	9.325+02	4.938+06	6.248+03	8.732-01	-1.263+00	1.301+02	-4.339-01	2.820-01	1.962-02
25.1	551.5	1.915+03	9.325+02	4.938+06	6.295+03	8.521-01	-1.232+00	1.300+02	-4.183-01	2.771-01	1.960-02
25.1	551.5	1.915+03	9.325+02	4.938+06	6.275+03	8.546-01	-1.239+00	1.301+02	-4.212-01	2.838-01	1.962-02

143

PRELIMINARY UNCHECKED DATA

ARNOLD ENGINEERING DEVELOPMENT CENTER
von KARMAN GAS DYNAMICS FACILITY
40 - INCH CONTINUOUS SS WIND TUNNEL

RUN NO. 1506 2.490 -1.4461+00 3.3053+01 1.0000+00 -4.3103-01 1.2335+02

±2.5

25.1	551.5	1.915+03	9.325+02	4.938+06	6.311+03	8.738-01	-1.264+00	1.301+02	-4.343-01	2.815-01	1.962-02
25.1	551.5	1.915+03	9.325+02	4.938+06	6.294+03	8.781-01	-1.270+00	1.301+02	-4.376-01	2.810-01	1.962-02
25.1	551.5	1.915+03	9.325+02	4.938+06	6.263+03	8.871-01	-1.283+00	1.300+02	-4.444-01	2.755-01	1.960-02
25.1	551.5	1.915+03	9.325+02	4.938+06	6.270+03	8.792-01	-1.271+00	1.301+02	-4.383-01	2.826-01	1.962-02
25.1	551.5	1.915+03	9.325+02	4.938+06	6.261+03	8.812-01	-1.274+00	1.301+02	-4.399-01	2.821-01	1.962-02
25.1	551.5	1.915+03	9.325+02	4.938+06	6.314+03	8.855-01	-1.280+00	1.301+02	-4.431-01	2.818-01	1.962-02
25.1	551.5	1.915+03	9.325+02	4.938+06	6.301+03	8.792-01	-1.271+00	1.300+02	-4.388-01	2.773-01	1.960-02
25.1	551.5	1.915+03	9.325+02	4.938+06	6.315+03	8.742-01	-1.264+00	1.301+02	-4.345-01	2.830-01	1.963-02
25.1	551.5	1.915+03	9.325+02	4.938+06	6.295+03	8.713-01	-1.260+00	1.301+02	-4.324-01	2.827-01	1.962-02

143

~~CONFIDENTIAL~~

~~CONFIDENTIAL~~

PRELIMINARY UNCHECKED DATA

ARNOLD ENGINEERING DEVELOPMENT CENTER
von KARMAN GAS DYNAMICS FACILITY
40 - INCH CONTINUOUS SS WIND TUNNEL

RUN NO. 1507 2.490 -1.4461+00 3.3053+01 1.0000+00 -4.3103-01 1.2335+02

±2.5

25.1	551.5	1.915+03	9.325+02	4.938+06	6.364+03	7.935-01	-1.147+00	1.299+02	-3.743-01	2.726-01	1.959-02
25.1	551.5	1.915+03	9.325+02	4.938+06	6.367+03	7.838-01	-1.142+00	1.299+02	-3.716-01	2.719-01	1.959-02
25.1	551.5	1.915+03	9.325+02	4.938+06	6.327+03	7.900-01	-1.142+00	1.299+02	-3.717-01	2.725-01	1.959-02
25.1	551.5	1.915+03	9.325+02	4.938+06	6.314+03	7.942-01	-1.148+00	1.299+02	-3.749-01	2.724-01	1.959-02
25.1	551.5	1.915+03	9.325+02	4.938+06	6.317+03	7.971-01	-1.153+00	1.298+02	-3.774-01	2.672-01	1.957-02
25.1	551.5	1.915+03	9.325+02	4.938+06	6.359+03	7.981-01	-1.154+00	1.299+02	-3.777-01	2.741-01	1.959-02
25.1	551.5	1.915+03	9.325+02	4.938+06	6.355+03	7.869-01	-1.138+00	1.299+02	-3.693-01	2.740-01	1.959-02
25.1	551.5	1.915+03	9.325+02	4.938+06	6.410+03	7.754-01	-1.121+00	1.299+02	-3.607-01	2.726-01	1.959-02
25.1	551.5	1.915+03	9.325+02	4.938+06	6.395+03	7.764-01	-1.123+00	1.298+02	-3.618-01	2.669-01	1.957-02

142

PRELIMINARY UNCHECKED DATA

ARNOLD ENGINEERING DEVELOPMENT CENTER
von KARMAN GAS DYNAMICS FACILITY
40 - INCH CONTINUOUS SS WIND TUNNEL

RUN NO. 1508 2.490 -1.4461+00 3.3053+01 1.0000+00 -4.3103-01 1.2335+02

±2.5

25.1	551.5	1.915+03	9.325+02	4.938+06	6.511+03	7.673-01	-1.110+00	1.297+02	-3.552-01	2.628-01	1.955-02
25.1	551.5	1.915+03	9.325+02	4.938+06	6.524+03	7.734-01	-1.118+00	1.298+02	-3.596-01	2.663-01	1.957-02
25.1	551.5	1.915+03	9.325+02	4.938+06	6.527+03	7.678-01	-1.110+00	1.298+02	-3.554-01	2.664-01	1.957-02
25.1	551.5	1.915+03	9.325+02	4.938+06	6.551+03	7.559-01	-1.093+00	1.297+02	-3.464-01	2.655-01	1.956-02
25.1	551.5	1.915+03	9.325+02	4.938+06	6.565+03	7.515-01	-1.087+00	1.296+02	-3.434-01	2.604-01	1.955-02
25.1	551.5	1.915+03	9.325+02	4.938+06	6.561+03	7.583-01	-1.097+00	1.298+02	-3.481-01	2.664-01	1.957-02
25.1	551.5	1.915+03	9.325+02	4.938+06	6.537+03	7.568-01	-1.094+00	1.298+02	-3.471-01	2.661-01	1.957-02
25.1	551.5	1.915+03	9.325+02	4.938+06	6.575+03	7.554-01	-1.092+00	1.297+02	-3.460-01	2.656-01	1.956-02
25.1	551.5	1.915+03	9.325+02	4.938+06	6.555+03	7.353-01	-1.063+00	1.296+02	-3.311-01	2.614-01	1.955-02

141

PRELIMINARY UNCHECKED DATA

ARNOLD ENGINEERING DEVELOPMENT CENTER
von KARMAN GAS DYNAMICS FACILITY
40 - INCH CONTINUOUS SS WIND TUNNEL

RUN NO. 1509 2.490 -1.4461+00 3.3053+01 1.0000+00 -4.3103-01 1.2335+02

±2.5

25.1	551.5	1.915+03	9.325+02	4.938+06	6.537+03	9.259-01	-1.339+00	1.300+02	-4.738-01	2.784-01	1.961-02
25.1	551.5	1.915+03	9.325+02	4.938+06	6.543+03	9.167-01	-1.326+00	1.301+02	-4.669-01	2.791-01	1.961-02
25.1	551.5	1.915+03	9.325+02	4.938+06	6.471+03	9.256-01	-1.339+00	1.300+02	-4.737-01	2.781-01	1.961-02
25.1	551.5	1.915+03	9.325+02	4.938+06	6.508+03	9.263-01	-1.340+00	1.300+02	-4.743-01	2.781-01	1.961-02
25.1	551.5	1.915+03	9.325+02	4.938+06	6.534+03	9.259-01	-1.339+00	1.300+02	-4.739-01	2.785-01	1.961-02
25.1	551.5	1.915+03	9.325+02	4.938+06	6.540+03	9.196-01	-1.330+00	1.300+02	-4.691-01	2.786-01	1.961-02
25.1	551.5	1.915+03	9.325+02	4.938+06	6.495+03	9.338-01	-1.350+00	1.299+02	-4.804-01	2.725-01	1.959-02
25.1	551.5	1.915+03	9.325+02	4.938+06	6.565+03	9.063-01	-1.311+00	1.301+02	-4.591-01	2.789-01	1.961-02
25.1	551.5	1.915+03	9.325+02	4.938+06	6.490+03	9.214-01	-1.332+00	1.300+02	-4.705-01	2.782-01	1.961-02

143

~~CONFIDENTIAL~~

[redacted]

ARNOLD ENGINEERING DEVELOPMENT CENTER
VON KARMAN GAS DYNAMICS FACILITY
40 - INCH CONTINUOUS SS WIND TUNNEL

PRELIMINARY UNCHECKED DATA

RUN NO. 1510 2.490 -1.0846+00 3.3053+01 1.0000+00 -4.3103-01 1.2335+02

±2.5

25.1	551.5	1.915+03	9.325+02	4.938+06	6.513+03	7.136-01	-7.740-01	1.293+02	-1.901-01	2.460-01	1.949-02
25.1	551.5	1.915+03	9.325+02	4.938+06	6.488+03	7.169-01	-7.775-01	1.292+02	-1.821-01	2.406-01	1.947-02
25.1	551.5	1.915+03	9.325+02	4.938+06	6.462+03	7.254-01	-7.868-01	1.292+02	-1.869-01	2.444-01	1.949-02
25.1	551.5	1.915+03	9.325+02	4.938+06	6.505+03	7.206-01	-7.815-01	1.293+02	-1.840-01	2.466-01	1.950-02
25.1	551.5	1.915+03	9.325+02	4.938+06	6.515+03	7.233-01	-7.845-01	1.293+02	-1.856-01	2.459-01	1.949-02
25.1	551.5	1.915+03	9.325+02	4.938+06	6.543+03	7.086-01	-7.664-01	1.291+02	-1.763-01	2.403-01	1.947-02
25.1	551.5	1.915+03	9.325+02	4.938+06	6.466+03	7.106-01	-7.707-01	1.293+02	-1.783-01	2.458-01	1.949-02
25.1	551.5	1.915+03	9.325+02	4.938+06	6.500+03	7.068-01	-7.665-01	1.293+02	-1.762-01	2.451-01	1.949-02
25.1	551.5	1.915+03	9.325+02	4.938+06	6.525+03	7.053-01	-7.649-01	1.293+02	-1.753-01	2.469-01	1.950-02

137

ARNOLD ENGINEERING DEVELOPMENT CENTER
VON KARMAN GAS DYNAMICS FACILITY
40 - INCH CONTINUOUS SS WIND TUNNEL

PRELIMINARY UNCHECKED DATA

RUN NO. 1511 2.490 -1.0846+00 3.3053+01 1.0000+00 -4.3103-01 1.2335+02

±2.5

25.1	551.5	1.915+03	9.325+02	4.938+06	6.731+03	7.238-01	-7.850-01	1.286+02	-1.867-01	2.160-01	1.939-02
25.1	551.5	1.915+03	9.325+02	4.938+06	6.743+03	7.204-01	-7.813-01	1.286+02	-1.849-01	2.169-01	1.939-02
25.1	551.5	1.915+03	9.325+02	4.938+06	6.68[illegible]+03	7.188-01	-7.796-01	1.285+02	-1.841-01	2.150-01	1.939-02
25.1	551.5	1.915+03	9.325+02	4.938+06	6.695+03	7.181-01	-7.788-01	1.285+02	-1.837-01	2.148-01	1.938-02
25.1	551.5	1.915+03	9.325+02	4.938+06	6.671+03	7.270-01	-7.885-01	1.285+02	-1.889-01	2.144-01	1.938-02
25.1	551.5	1.915+03	9.325+02	4.938+06	6.699+03	7.167-01	-7.751-01	1.285+02	-1.817-01	2.149-01	1.938-02
25.1	551.5	1.915+03	9.325+02	4.938+06	6.679+03	7.191-01	-7.799-01	1.285+02	-1.843-01	2.129-01	1.938-02
25.1	551.5	1.915+03	9.325+02	4.938+06	6.720+03	6.993-01	-7.585-01	1.286+02	-1.729-01	2.155-01	1.939-02
25.1	551.5	1.915+03	9.325+02	4.938+06	6.670+03	7.232-01	-7.843-01	1.285+02	-1.866-01	2.150-01	1.938-02

133

~~CONFIDENTIAL~~

[redacted]

PRELIMINARY UNCHECKED DATA

ARNOLD ENGINEERING DEVELOPMENT CENTER
von K[illegible] DYNAMICS FACILITY
40 - INCH [illegible] SS WIND TUNNEL

RUN NO. 1512 2.490 -1.0846+00 3.3053+01 1.0000+00 -4.3103-01 1.2335+02

								OW	CMQ	CMT	RFP
25.1	551.5	1.915+03	9.325+02	4.938+06	6.207+03	6.412-01	-6.955-01	1.280+02	-1.402-01	1.933-01	1.931-02
25.1	551.5	1.915+03	9.325+02	4.938+06	6.164+03	6.440-01	-7.028-01	1.280+02	-1.441-01	1.910-01	1.930-02
25.1	551.5	1.915+03	9.325+02	4.938+06	6.113+03	6.710-01	-7.277-01	1.279+02	-1.574-01	1.879-01	1.929-02
25.1	551.5	1.915+03	9.325+02	4.938+06	6.151+03	6.640-01	-7.202-01	1.280+02	-1.533-01	1.918-01	1.930-02
25.1	551.5	1.915+03	9.325+02	4.938+06	6.192+03	6.433-01	-6.977-01	1.280+02	-1.414-01	1.933-01	1.931-02
25.1	551.5	1.915+03	9.325+02	4.938+06	6.199+03	6.334-01	-6.870-01	1.280+02	-1.357-01	1.932-01	1.931-02
25.1	551.5	1.915+03	9.325+02	4.938+06	6.169+03	6.450-01	-6.996-01	1.280+02	-1.424-01	1.932-01	1.931-02
25.1	551.5	1.915+03	9.325+02	4.938+06	6.130+03	6.507-01	-7.057-01	1.280+02	-1.456-01	1.923-01	1.930-02

+25

130

Multiply this column by 0.69216 for Runs 1502 thru 1522

Multiply this column by (-1) for Runs 1502 thru 1522

PRELIMINARY UNCHECKED DATA

ARNOLD ENGINEERING DEVELOPMENT C[illegible]
von KARMAN GAS DY[illegible] FACILITY
40 - INCH CONTINUOUS SS WIND TUNNEL

RUN NO. 1513 2.490 -2.1691+00 3.3053+01 1.0000+00 -4.3103-01 1.2335+02

25.1	551.5	1.915+03	9.325+02	4.938+06	6.706+03	7.386-01	-1.602+00	1.308+02	-6.077-01	3.116-01	1.973-02
25.1	551.5	1.915+03	9.325+02	4.938+06	6.706+03	7.418-01	-1.609+00	1.307+02	-6.123-01	3.051-01	1.970-02
25.1	551.5	1.915+03	9.325+02	4.938+06	6.707+03	7.412-01	-1.608+00	1.308+02	-6.105-01	3.124-01	1.973-02
25.1	551.5	1.915+03	9.325+02	4.938+06	6.716+03	7.338-01	-1.592+00	1.308+02	-6.024-01	3.105-01	1.972-02
25.1	551.5	1.915+03	9.325+02	4.938+06	6.706+03	7.418-01	-1.609+00	1.308+02	-6.112-01	3.117-01	1.973-02
25.1	551.5	1.915+03	9.325+02	4.938+06	6.724+03	7.405-01	-1.606+00	1.308+02	-6.099-01	3.108-01	1.972-02
25.1	551.5	1.915+03	9.325+02	4.938+06	6.708+03	7.398-01	-1.605+00	1.308+02	-6.092-01	3.097-01	1.972-02
25.1	551.5	1.915+03	9.325+02	4.938+06	6.700+03	7.343-01	-1.593+00	1.308+02	-6.028-01	3.125-01	1.973-02

+25

147.6

[redacted]

PRELIMINARY UNCHECKED DATA

ARNOLD ENGINEERING DEVELOPMENT CENTER
VON KARMAN GAS DYNAMICS FACILITY
40 - INCH CONTINUOUS SS WIND TUNNEL

RUN NO. 1514 2.490 -2.1691+00 3.3053+01 1.0000+00 -4.3103-01 1.2335+02

±2.5 149.6

25.1	551.5	1.915+03	9.325+02	4.938+06	6.666+03	7.491-01	-1.625+00	1.308+02	-6.146-01	3.104-01	1.972-02
25.1	551.5	1.915+03	9.325+02	4.938+06	6.682+03	7.485-01	-1.624+00	1.308+02	-6.148-01	3.115-01	1.973-02
25.1	551.5	1.915+03	9.325+02	4.938+06	6.670+03	7.444-01	-1.615+00	1.308+02	-6.142-01	3.111-01	1.972-02
25.1	551.5	1.915+03	9.325+02	4.938+06	6.675+03	7.443-01	-1.614+00	1.308+02	-6.140-01	3.117-01	1.973-02
25.1	551.5	1.915+03	9.325+02	4.938+06	6.685+03	7.403-01	-1.606+00	1.307+02	-6.103-01	3.046-01	1.970-02
25.1	551.5	1.915+03	9.325+02	4.938+06	6.683+03	7.465-01	-1.619+00	1.308+02	-6.167-01	3.107-01	1.972-02
25.1	551.5	1.915+03	9.325+02	4.938+06	6.682+03	7.438-01	-1.613+00	1.308+02	-6.137-01	3.105-01	1.972-02
25.1	551.5	1.915+03	9.325+02	4.938+06	6.710+03	7.349-01	-1.594+00	1.308+02	-6.037-01	3.103-01	1.972-02
25.1	551.5	1.915+03	9.325+02	4.938+06	6.725+03	7.309-01	-1.585+00	1.308+02	-5.989-01	3.119-01	1.973-02

PRELIMINARY UNCHECKED DATA

ARNOLD ENGINEERING DEVELOPMENT CENTER
VON KARMAN GAS DYNAMICS FACILITY
40 - INCH CONTINUOUS SS WIND TUNNEL

RUN NO. 1515 2.490 -2.1691+00 3.3053+01 1.0000+00 -4.3103-01 1.2335+02

±2.5 149

25.1	551.5	1.915+03	9.325+02	4.938+06	6.340+03	7.961-01	-1.727+00	1.307+02	-6.728-01	3.091-01	1.971-02
25.1	551.5	1.915+03	9.325+02	4.938+06	6.337+03	8.022-01	-1.740+00	1.307+02	-6.797-01	3.050-01	1.971-02
25.1	551.5	1.915+03	9.325+02	4.938+06	6.337+03	7.963-01	-1.727+00	1.306+02	-6.738-01	3.015-01	1.969-02
25.1	551.5	1.915+03	9.325+02	4.938+06	6.312+03	7.945-01	-1.723+00	1.308+02	-6.709-01	3.040-01	1.972-02
25.1	551.5	1.915+03	9.325+02	4.938+06	6.246+03	7.988-01	-1.733+00	1.307+02	-6.760-01	3.067-01	1.971-02
25.1	551.5	1.915+03	9.325+02	4.938+06	6.241+03	8.001-01	-1.736+00	1.306+02	-6.772-01	3.089-01	1.972-02
25.1	551.5	1.915+03	9.325+02	4.938+06	6.231+03	8.161-01	-1.770+00	1.306+02	-6.963-01	3.006-01	1.969-02
25.1	551.5	1.915+03	9.325+02	4.938+06	6.310+03	7.947-01	-1.724+00	1.308+02	-6.710-01	3.096-01	1.972-02
25.1	551.5	1.915+03	9.325+02	4.938+06	6.320+03	7.964-01	-1.706+00	1.307+02	-6.619-01	3.077-01	1.971-02

PRELIMINARY UNCHECKED DATA

ARNOLD ENGINEERING DEVELOPMENT CENTER
VON KARMAN GAS DYNAMICS FACILITY
40 - INCH CONTINUOUS SS WIND TUNNEL

RUN NO. 1516 2.490 -2.1691+00 3.3053+01 1.0000+00 -4.3103-01 1.2335+02

±2.5 149

25.1	551.5	1.915+03	9.325+02	4.938+06	6.237+03	8.233-01	-1.786+00	1.306+02	-7.042-01	3.028-01	1.969-02
25.1	551.5	1.915+03	9.325+02	4.938+06	6.233+03	8.282-01	-1.796+00	1.307+02	-7.090-01	3.076-01	1.971-02
25.1	551.5	1.915+03	9.325+02	4.938+06	6.263+03	8.229-01	-1.785+00	1.308+02	-7.029-01	3.091-01	1.972-02
25.1	551.5	1.915+03	9.325+02	4.938+06	6.279+03	8.134-01	-1.764+00	1.308+02	-6.922-01	3.090-01	1.972-02
25.1	551.5	1.915+03	9.325+02	4.938+06	6.302+03	8.101-01	-1.757+00	1.308+02	-6.884-01	3.093-01	1.972-02
25.1	551.5	1.915+03	9.325+02	4.938+06	6.279+03	8.045-01	-1.745+00	1.306+02	-6.828-01	3.032-01	1.970-02
25.1	551.5	1.915+03	9.325+02	4.938+06	6.109+03	8.298-01	-1.800+00	1.307+02	-7.107-01	3.088-01	1.972-02
25.1	551.5	1.915+03	9.325+02	4.938+06	6.190+03	8.172-01	-1.773+00	1.308+02	-6.964-01	3.091-01	1.972-02
25.1	551.5	1.915+03	9.325+02	4.938+06	6.230+03	8.194-01	-1.777+00	1.307+02	-6.990-01	3.083-01	1.971-02

CONFIDENTIAL

PRELIMINARY UNCHECKED DATA

ARNOLD ENGINEERING DEVELOPMENT CENTER
von KARMAN GAS DYNAMICS FACILITY
40 - INCH CONTINUOUS SS WIND TUNNEL

RUN NO. 1517 2.490 -2.1691+00 3.3053+01 1.0000+00 -4.3103-01 1.2335+02

±2.5

25.1	551.5	1.915+03	9.325+02	4.938+06	6.222+03	8.261-01	-1.792+00	1.306+02	-7.071-01	3.042-01	1.970-02
25.1	551.5	1.915+03	9.325+02	4.938+06	6.192+03	8.282-01	-1.796+00	1.306+02	-7.096-01	3.027-01	1.969-02
25.1	551.5	1.915+03	9.325+02	4.938+06	6.147+03	8.360-01	-1.813+00	1.306+02	-7.185-01	3.021-01	1.969-02
25.1	551.5	1.915+03	9.325+02	4.938+06	6.150+03	8.397-01	-1.821+00	1.306+02	-7.225-01	3.029-01	1.970-02
25.1	551.5	1.915+03	9.325+02	4.938+06	6.187+03	8.291-01	-1.798+00	1.306+02	-7.107-01	3.021-01	1.969-02
25.1	551.5	1.915+03	9.325+02	4.938+06	6.207+03	8.279-01	-1.796+00	1.306+02	-7.092-01	3.038-01	1.970-02
25.1	551.5	1.915+03	9.325+02	4.938+06	6.145+03	8.256-01	-1.791+00	1.306+02	-7.066-01	3.041-01	1.970-02
25.1	551.5	1.915+03	9.325+02	4.938+06	6.120+03	8.332-01	-1.807+00	1.304+02	-7.162-01	2.949-01	1.967-02
25.1	551.5	1.915+03	9.325+02	4.938+06	6.235+03	8.138-01	-1.765+00	1.306+02	-6.933-01	3.032-01	1.970-02

143

PRELIMINARY UNCHECKED DATA

ARNOLD ENGINEERING DEVELOPMENT CENTER
von KARMAN GAS DYNAMICS FACILITY
40 - INCH CONTINUOUS SS WIND TUNNEL

RUN NO. 1518 2.490 -2.1691+00 3.3053+01 1.0000+00 -4.3103-01 1.2335+02

±2.5

25.1	551.5	1.915+03	9.325+02	4.938+06	6.139+03	8.390-01	-1.820+00	1.306+02	-7.214-01	3.027-01	1.969-02
25.1	551.5	1.915+03	9.325+02	4.938+06	6.132+03	8.493-01	-1.842+00	1.305+02	-7.341-01	2.974-01	1.968-02
25.1	551.5	1.915+03	9.325+02	4.938+06	6.107+03	8.490-01	-1.842+00	1.306+02	-7.333-01	3.012-01	1.969-02
25.1	551.5	1.915+03	9.325+02	4.938+06	6.110+03	8.484-01	-1.840+00	1.306+02	-7.324-01	3.032-01	1.970-02
25.1	551.5	1.915+03	9.325+02	4.938+06	6.130+03	8.483-01	-1.840+00	1.306+02	-7.323-01	3.022-01	1.969-02
25.1	551.5	1.915+03	9.325+02	4.938+06	6.154+03	8.434-01	-1.829+00	1.304+02	-7.277-01	2.951-01	1.967-02
25.1	551.5	1.915+03	9.325+02	4.938+06	6.140+03	8.468-01	-1.837+00	1.306+02	-7.304-01	3.044-01	1.970-02
25.1	551.5	1.915+03	9.325+02	4.938+06	6.155+03	8.363-01	-1.814+00	1.306+02	-7.187-01	3.030-01	1.970-02
25.1	551.5	1.915+03	9.325+02	4.938+06	6.120+03	8.391-01	-1.820+00	1.306+02	-7.220-01	3.013-01	1.969-02

145

PRELIMINARY UNCHECKED DATA

ARNOLD ENGINEERING DEVELOPMENT CENTER
von KARMAN GAS DYNAMICS FACILITY
40 - INCH CONTINUOUS SS WIND TUNNEL

RUN NO. 1519 2.490 -2.1691+00 3.3053+01 1.0000+00 -4.3103-01 1.2335+02

±2.5

25.1	551.5	1.915+03	9.325+02	4.938+06	6.477+03	8.047-01	-1.745+00	1.306+02	-6.834-01	3.006-01	1.969-02
25.1	551.5	1.915+03	9.325+02	4.938+06	6.493+03	7.918-01	-1.718+00	1.306+02	-6.689-01	3.007-01	1.969-02
25.1	551.5	1.915+03	9.325+02	4.938+06	6.446+03	7.990-01	-1.733+00	1.306+02	-6.769-01	3.017-01	1.969-02
25.1	551.5	1.915+03	9.325+02	4.938+06	6.456+03	7.963-01	-1.727+00	1.306+02	-6.738-01	3.017-01	1.969-02
25.1	551.5	1.915+03	9.325+02	4.938+06	6.439+03	7.969-01	-1.729+00	1.305+02	-6.751-01	2.969-01	1.967-02
25.1	551.5	1.915+03	9.325+02	4.938+06	6.459+03	7.957-01	-1.726+00	1.306+02	-6.731-01	3.015-01	1.969-02
25.1	551.5	1.915+03	9.325+02	4.938+06	6.348+03	8.103-01	-1.758+00	1.306+02	-6.896-01	3.010-01	1.969-02
25.1	551.5	1.915+03	9.325+02	4.938+06	6.445+03	8.009-01	-1.736+00	1.305+02	-6.788-01	2.993-01	1.968-02
25.1	551.5	1.915+03	9.325+02	4.938+06	6.430+03	7.924-01	-1.719+00	1.305+02	-6.700-01	2.964-01	1.967-02

147

CONFIDENTIAL

~~CONFIDENTIAL~~

PRELIMINARY UNCHECKED DATA

ARNOLD ENGINEERING DEVELOPMENT CENTER
von KARMAN GAS DYNAMICS FACILITY
40 - INCH CONTINUOUS SS WIND TUNNEL

RUN NO. 1520 2.490 -2.1691+00 3.3053+01 1.0000+00 -4.3103-01 1.2335+02

±2.5

25.1	551.5	1.915+03	9.325+02	4.938+06	6.353+03	6.823-01	-1.480+00	1.301+02	-5.472-01	2.824-01	1.962-02
25.1	551.5	1.915+03	9.325+02	4.938+06	6.353+03	6.743-01	-1.463+00	1.303+02	-5.375-01	2.840-01	1.965-02
25.1	551.5	1.915+03	9.325+02	4.938+06	6.300+03	6.817-01	-1.483+00	1.303+02	-5.461-01	2.848-01	1.965-02
25.1	551.5	1.915+03	9.325+02	4.938+06	6.310+03	6.808-01	-1.477+00	1.303+02	-5.447-01	2.905-01	1.965-02
25.1	551.5	1.915+03	9.325+02	4.938+06	6.352+03	6.747-01	-1.464+00	1.303+02	-5.377-01	2.910-01	1.965-02
25.1	551.5	1.915+03	9.325+02	4.938+06	6.303+03	6.758-01	-1.466+00	1.302+02	-5.396-01	2.847-01	1.963-02
25.1	551.5	1.915+03	9.325+02	4.938+06	6.264+03	6.821-01	-1.479+00	1.303+02	-5.462-01	2.895-01	1.965-02
25.1	551.5	1.915+03	9.325+02	4.938+06	6.317+03	6.790-01	-1.473+00	1.303+02	-5.429-01	2.881-01	1.964-02
25.1	551.5	1.915+03	9.325+02	4.938+06	6.320+03	6.756-01	-1.466+00	1.303+02	-5.389-01	2.892-01	1.965-02

145

PRELIMINARY UNCHECKED DATA

ARNOLD ENGINEERING DEVELOPMENT CENTER
von KARMAN GAS DYNAMICS FACILITY
40 - INCH CONTINUOUS SS WIND TUNNEL

RUN NO. 1521 2.490 -1.8076+00 3.3053+01 1.0000+00 -4.3103-01 1.2335+02

±1.4

25.1	551.5	1.915+03	9.325+02	4.938+06	5.911+03	6.736-01	-1.218+00	1.299+02	-4.109-01	2.742-01	1.959-02
25.1	551.5	1.915+03	9.325+02	4.938+06	5.853+03	6.915-01	-1.250+00	1.301+02	-4.274-01	2.795-01	1.961-02
25.1	551.5	1.915+03	9.325+02	4.938+06	5.846+03	7.000-01	-1.265+00	1.301+02	-4.354-01	2.795-01	1.961-02
25.1	551.5	1.915+03	9.325+02	4.938+06	5.884+03	6.989-01	-1.245+00	1.300+02	-4.250-01	2.786-01	1.961-02
25.1	551.5	1.915+03	9.325+02	4.938+06	5.935+03	6.875-01	-1.243+00	1.301+02	-4.236-01	2.797-01	1.961-02
25.1	551.5	1.915+03	9.325+02	4.938+06	5.953+03	6.748-01	-1.220+00	1.299+02	-4.121-01	2.734-01	1.959-02
25.1	551.5	1.915+03	9.325+02	4.938+06	5.978+03	6.657-01	-1.203+00	1.301+02	-4.031-01	2.796-01	1.961-02
25.1	551.5	1.915+03	9.325+02	4.938+06	5.940+03	6.589-01	-1.191+00	1.300+02	-3.967-01	2.782-01	1.961-02
25.1	551.5	1.915+03	9.325+02	4.938+06	5.970+03	6.608-01	-1.194+00	1.301+02	-3.985-01	2.791-01	1.961-02

143

PRELIMINARY UNCHECKED DATA

ARNOLD ENGINEERING DEVELOPMENT CENTER
von KARMAN GAS DYNAMICS FACILITY
40 - INCH CONTINUOUS SS WIND TUNNEL

RUN NO. 1522 2.490 -1.4461+00 3.3053+01 1.0000+00 -4.3103-01 1.2335+02

±2.5

25.1	551.5	1.915+03	9.325+02	4.938+06	6.573+03	8.698-01	-1.258+00	1.299+02	-4.320-01	2.736-01	1.959-02
25.1	551.5	1.915+03	9.325+02	4.938+06	6.572+03	8.752-01	-1.266+00	1.301+02	-4.355-01	2.801-01	1.961-02
25.1	551.5	1.915+03	9.325+02	4.938+06	6.542+03	8.789-01	-1.271+00	1.301+02	-4.383-01	2.800-01	1.961-02
25.1	551.5	1.915+03	9.325+02	4.938+06	6.535+03	8.807-01	-1.274+00	1.301+02	-4.397-01	2.793-01	1.961-02
25.1	551.5	1.915+03	9.325+02	4.938+06	6.527+03	8.833-01	-1.277+00	1.300+02	-4.417-01	2.786-01	1.961-02
25.1	551.5	1.915+03	9.325+02	4.938+06	6.533+03	8.779-01	-1.269+00	1.301+02	-4.374-01	2.818-01	1.962-02
25.1	551.5	1.915+03	9.325+02	4.938+06	6.483+03	8.817-01	-1.275+00	1.300+02	-4.406-01	2.780-01	1.961-02
25.1	551.5	1.915+03	9.325+02	4.938+06	6.525+03	8.796-01	-1.272+00	1.300+02	-4.389-01	2.768-01	1.960-02
25.1	551.5	1.915+03	9.325+02	4.938+06	6.525+03	8.912-01	-1.289+00	1.300+02	-4.478-01	2.774-01	1.961-02

143

~~CONFIDENTIAL~~

~~CONFIDENTIAL~~

PRELIMINARY UNCHECKED DATA

RUN NO. 1802 5.980 -2.5306+00 3.3055+01 1.0000+00 -2.3570-01 1.2878+02

									OW	CMQ	CMT	RFP
200.0	640.0	2.597+03	4.660+02	6.291+06	6.340+03	8.756-01	-2.216+00	1.338+02	-2.726+00	3.942-01	1.488-02	
200.0	640.0	2.597+03	4.660+02	6.291+06	6.532+03	9.106-01	-2.304+00	1.338+02	-2.848+00	3.960-01	1.488-02	
200.0	640.0	2.597+03	4.660+02	6.291+06	5.990+03	8.932-01	-2.260+00	1.338+02	-2.788+00	3.938-01	1.487-02	
200.0	640.0	2.597+03	4.660+02	6.291+06	6.370+03	8.796-01	-2.226+00	1.339+02	-2.739+00	4.018-01	1.488-02	
200.0	640.0	2.597+03	4.660+02	6.291+06	6.365+03	9.498-01	-2.404+00	1.336+02	-2.988+00	3.842-01	1.486-02	

±0.5

160.5

ARNOLD ENGINEERING DEVELOPMENT CENTER
von KARMAN GAS DYNAMICS FACILITY
40 - INCH CONTINUOUS SS WIND TUNNEL

Multiply this column by 0.6926 for Runs 1802 thru 1813

Multiply this column by (-1) for Runs 1802 thru 1813

PRELIMINARY UNCHECKED DATA

RUN NO. 1803 5.980 -2.4161+00 3.3033+01 1.0000+00 -2.3570-01 1.2878+02

200.0	640.0	2.597+03	4.660+02	6.291+06	4.816+03	8.790-01	-2.118+00	1.336+02	-2.542+00	3.986-01	1.488-02
200.0	640.0	2.597+03	4.660+02	6.291+06	4.930+03	8.278-01	-1.975+00	1.339+02	-2.421+00	4.027-01	1.489-02
200.0	640.0	2.597+03	4.660+02	6.291+06	5.047+03	8.108-01	-1.934+00	1.339+02	-2.365+00	4.026-01	1.488-02
200.0	640.0	2.597+03	4.660+02	6.291+06	5.263+03	7.986-01	-1.975+00	1.338+02	-2.324+00	4.013-01	1.488-02
200.0	640.0	2.597+03	4.660+02	6.291+06	5.263+03	8.050-01	-1.938+00	1.339+02	-2.342+00	4.028-01	1.488-02

±0.6

160.5

ARNOLD ENGINEERING DEVELOPMENT CENTER
von KARMAN GAS DYNAMICS FACILITY
40 - INCH CONTINUOUS SS WIND TUNNEL

~~CONFIDENTIAL~~

~~CONFIDENTIAL~~

PRELIMINARY UNCHECKED DATA

RUN NO. 1604 5.990 -1.6871+00 3.3053+01 1.0000+00 -2.3570-01 1.2878+02

±0.8 160.5

200.0	640.0	2.597+03	4.660+02	6.291+06	6.936+03	8.207-01	-1.365+00	1.338+02	-1.582+00	3.957-01	1.487-02
200.0	640.0	2.597+03	4.660+02	6.291+06	6.955+03	8.070-01	-1.362+00	1.339+02	-1.567+00	4.063-01	1.489-02
200.0	640.0	2.597+03	4.660+02	6.291+06	6.896+03	8.099-01	-1.366+00	1.340+02	-1.555+00	4.121-01	1.490-02
200.0	640.0	2.597+03	4.660+02	6.291+06	7.015+03	8.224-01	-1.368+00	1.340+02	-1.593+00	4.143-01	1.490-02
200.0	640.0	2.597+03	4.660+02	6.291+06	6.955+03	8.368-01	-1.417+00	1.340+02	-1.617+00	4.109-01	1.490-02
200.0	640.0	2.597+03	4.660+02	6.291+06	7.079+03	8.168-01	-1.378+00	1.340+02	-1.571+00	4.123-01	1.490-02
200.0	640.0	2.597+03	4.660+02	6.291+06	6.937+03	8.463-01	-1.438+00	1.338+02	-1.641+00	3.989-01	1.488-02
200.0	640.0	2.597+03	4.660+02	6.291+06	6.885+03	8.210-01	-1.385+00	1.339+02	-1.581+00	4.075-01	1.489-02
200.0	640.0	2.597+03	4.660+02	6.291+06	7.010+03	8.103-01	-1.367+00	1.340+02	-1.556+00	4.096-01	1.489-02

ARNOLD ENGINEERING DEVELOPMENT CENTER
von KÁRMÁN GAS DYNAMICS FACILITY
40 - INCH CONTINUOUS 55 WIND TUNNEL

PRELIMINARY UNCHECKED DATA

RUN NO. 1605 5.990 -9.0188-01 3.3053+01 1.0000+00 -2.3570-01 1.2878+02

±1.0 160.5

200.0	640.0	2.597+03	4.660+02	6.291+06	6.168+03	9.011-01	-9.154-01	1.338+02	-7.964-01	3.906-01	1.488-02
200.0	640.0	2.597+03	4.660+02	6.291+06	6.149+03	9.543-01	-8.625-01	1.340+02	-8.618-01	4.110-01	1.490-02
200.0	640.0	2.597+03	4.660+02	6.291+06	6.004+03	9.716-01	-8.751-01	1.340+02	-8.036-01	4.109-01	1.490-02
200.0	640.0	2.597+03	4.660+02	6.291+06	6.011+03	9.579-01	-8.613-01	1.339+02	-8.603-01	4.042-01	1.489-02
200.0	640.0	2.597+03	4.660+02	6.291+06	5.954+03	9.415-01	-8.509-01	1.339+02	-8.484-01	4.098-01	1.489-02
200.0	640.0	2.597+03	4.660+02	6.291+06	5.960+03	9.384-01	-8.546-01	1.338+02	-8.576-01	3.965-01	1.488-02
200.0	640.0	2.597+03	4.660+02	6.291+06	5.975+03	9.207-01	-8.321-01	1.339+02	-8.203-01	4.044-01	1.489-02
200.0	640.0	2.597+03	4.660+02	6.291+06	5.970+03	9.012-01	-8.145-01	1.339+02	-7.940-01	4.004-01	1.489-02

ARNOLD ENGINEERING DEVELOPMENT CENTER
von KÁRMÁN GAS DYNAMICS FACILITY
40 - INCH CONTINUOUS 55 WIND TUNNEL

PRELIMINARY UNCHECKED DATA

RUN NO. 1606 5.990 -1.8811-01 3.3053+01 1.0000+00 -2.3570-01 1.2878+02

±2.7 160.5

200.0	640.0	2.597+03	4.660+02	6.291+06	6.987+03	8.801-01	-1.209-01	1.338+02	1.375-01	3.993-01	1.487-02
200.0	640.0	2.597+03	4.660+02	6.291+06	6.940+03	8.775-01	-1.219-01	1.339+02	1.143-01	4.067-01	1.489-02
200.0	640.0	2.597+03	4.660+02	6.291+06	6.945+03	8.740-01	-1.140-01	1.205+02	1.279-01	4.024-02	1.424-02
200.0	640.0	2.597+03	4.660+02	6.291+06	6.927+03	8.770-01	-1.317-01	1.339+02	1.340-01	4.031-01	1.490-02
200.0	640.0	2.597+03	4.660+02	6.291+06	6.927+03	8.770-01	-1.317-01	1.339+02	1.340-01	4.031-01	1.490-02

ARNOLD ENGINEERING DEVELOPMENT CENTER
von KÁRMÁN GAS DYNAMICS FACILITY
40 - INCH CONTINUOUS 55 WIND TUNNEL

~~CONFIDENTIAL~~

~~CONFIDENTIAL~~

PRELIMINARY UNCHECKED DATA

RUN NO. 1807 5.990 -8.4355-01 3.3093+01 1.0000+00 -2.3570-01 1.2878+02

200.0	640.0	2.597+03	4.660+02	6.291+06	6.543+03	9.815-01	-1.940-01	1.341+02	-4.618-01	4.187-01	1.491-02
200.0	640.0	2.597+03	4.660+02	6.291+06	6.482+03	9.877-01	-1.911-01	1.341+02	-3.567-01	4.254-01	1.491-02
200.0	640.0	2.597+03	4.660+02	6.291+06	6.570+03	9.902-01	-1.870-01	1.341+02	-3.600-01	4.241-01	1.491-02
200.0	640.0	2.597+03	4.660+02	6.291+06	6.525+03	9.181-01	-1.214-01	1.340+02	-3.320-01	4.138-01	1.490-02

±1.5 162

WALLOP ENGINEERING DEVELOPMENT CENTER
VON KARMAN GAS DYNAMICS FACILITY
40 - INCH CONTINUOUS SS WIND TUNNEL

PRELIMINARY UNCHECKED DATA

RUN NO. 1808 5.990 -9.0360-01 3.3093+01 1.0000+00 -2.3570-01 1.2878+02

200.0	640.0	2.597+03	4.660+02	6.291+06	5.801+03	8.649-01	-7.815-01	1.340+02	-7.562-01	4.168-01	1.490-02
200.0	640.0	2.597+03	4.660+02	6.291+06	5.785+03	8.297-01	-7.499-01	1.339+02	-7.074-01	4.053-01	1.489-02
200.0	640.0	2.597+03	4.660+02	6.291+06	5.827+03	8.172-01	-7.386-01	1.341+02	-6.906-01	4.214-01	1.491-02
200.0	640.0	2.597+03	4.660+02	6.291+06	5.779+03	7.942-01	-7.178-01	1.341+02	-6.622-01	4.213-01	1.491-02
200.0	640.0	2.597+03	4.660+02	6.291+06	5.721+03	8.041-01	-7.271-01	1.341+02	-6.695-01	4.229-01	1.491-02
200.0	640.0	2.597+03	4.660+02	6.291+06	5.662+03	8.286-01	-7.489-01	1.339+02	-7.058-01	4.088-01	1.489-02
200.0	640.0	2.597+03	4.660+02	6.291+06	5.620+03	9.087-01	-7.300-01	1.341+02	-6.903-01	4.216-01	1.491-02

±0.9 162

WALLOP ENGINEERING DEVELOPMENT CENTER
VON KARMAN GAS DYNAMICS FACILITY
40 - INCH CONTINUOUS SS WIND TUNNEL

PRELIMINARY UNCHECKED DATA

RUN NO. 1809 5.990 -8.4355-01 3.3093+01 1.0000+00 -2.3570-01 1.2878+02

200.0	640.0	2.597+03	4.660+02	6.291+06	6.492+03	2.940-02	-2.523-02	1.340+02	2.643-01	4.141-01	1.490-02
200.0	640.0	2.597+03	4.660+02	6.291+06	6.559+03	1.736-02	-1.465-02	1.339+02	3.041-01	4.065-01	1.489-02
200.0	640.0	2.597+03	4.660+02	6.291+06	6.597+03	9.076-03	-8.634-03	1.337+02	3.141-01	4.071-01	1.487-02
200.0	640.0	2.597+03	4.660+02	6.291+06	6.545+03	8.018-03	-7.269-03	1.339+02	3.144-01	4.018-01	1.488-02
200.0	640.0	2.597+03	4.660+02	6.291+06	6.586+03	7.695-02	-6.491-02	1.339+02	2.950-01	4.091-01	1.489-02
200.0	640.0	2.597+03	4.660+02	6.291+06	6.442+03	5.030-02	-4.243-02	1.340+02	2.657-01	4.116-01	1.490-02
200.0	640.0	2.597+03	4.660+02	6.291+06	6.476+03	6.442-02	-5.439-02	1.338+02	2.497-01	3.953-01	1.487-02
200.0	640.0	2.597+03	4.660+02	6.291+06	6.498+03	1.894-03	-1.598-03	1.340+02	3.217-01	4.167-01	1.490-02
200.0	640.0	2.597+03	4.660+02	6.291+06	6.456+03	4.575-02	-3.859-02	1.340+02	2.709-01	4.167-01	1.490-02
200.0	640.0	2.597+03	4.660+02	6.291+06	3.510+03	2.385-02	-2.012-02	1.276+02	3.112-01	-8.960-02	1.419-02
200.0	640.0	2.597+03	4.660+02	6.291+06	6.420+03	2.427-02	-2.468-02	1.232+02	3.056-01	-1.233-01	1.414-02
200.0	640.0	2.597+03	4.660+02	6.291+06	6.442+03	3.264-02	-2.753-02	1.340+02	2.643-01	4.100-01	1.489-02
200.0	640.0	2.597+03	4.660+02	6.291+06	6.441+03	2.310-02	-1.948-02	1.338+02	2.976-01	3.909-01	1.488-02

±1.6 162

WALLOP ENGINEERING DEVELOPMENT CENTER
VON KARMAN GAS DYNAMICS FACILITY
40 - INCH CONTINUOUS SS WIND TUNNEL

~~CONFIDENTIAL~~

~~CONFIDENTIAL~~

PRELIMINARY UNCHECKED DATA

RUN NO. 1810 5.000 -9.0360-01 3.3053+01 1.0000+00 -2.3570-01 1.2878+02

±1.0 162

200.0	640.0	2.597+03	4.660+02	6.291+06	6.500+03	6.670-01	-5.704-01	1.339+02	-4.988-01	4.079-01	1.489-02
200.0	640.0	2.597+03	4.660+02	6.291+06	6.509+03	7.194+01	-6.562-01	1.340+02	-5.700-01	4.116-01	1.490-02
200.0	640.0	2.597+03	4.660+02	6.291+06	6.476+03	7.299-01	-6.687-01	1.340+02	-5.924-01	4.116-01	1.490-02
200.0	640.0	2.597+03	4.660+02	6.291+06	6.532+03	7.061-01	-6.381-01	1.339+02	-5.536-01	4.056-01	1.489-02
200.0	640.0	2.597+03	4.660+02	6.291+06	6.473+03	7.107-01	-6.423-01	1.339+02	-5.593-01	4.077-01	1.489-02
200.0	640.0	2.597+03	4.660+02	6.291+06	6.505+03	7.267-01	-6.568-01	1.339+02	-5.792-01	4.065-01	1.489-02
200.0	640.0	2.597+03	4.660+02	6.291+06	6.522+03	6.337-01	-5.727-01	1.339+02	-4.657-01	4.049-01	1.489-02

ARNOLD ENGINEERING DEVELOPMENT CENTER
VON KARMAN GAS DYNAMICS FACILITY
40 - INCH CONTINUOUS SS WIND TUNNEL

PRELIMINARY UNCHECKED DATA

RUN NO. 1811 5.000 -1.0078+00 3.3053+01 1.0000+00 -2.3570-01 1.2878+02

±0.6 164

200.0	640.0	2.597+03	4.660+02	6.291+06	7.034+03	6.845-01	-1.217+00	1.338+02	-1.379+00	3.967-01	1.488-02
200.0	640.0	2.597+03	4.660+02	6.291+06	7.034+03	6.627-01	-1.198+00	1.337+02	-1.327+00	3.874-01	1.484-02
200.0	640.0	2.597+03	4.660+02	6.291+06	7.140+03	6.847-01	-1.223+00	1.336+02	-1.359+00	4.005-01	1.488-02
200.0	640.0	2.597+03	4.660+02	6.291+06	7.244+03	6.969-01	-1.188+00	1.339+02	-1.310+00	3.973-01	1.488-02
200.0	640.0	2.597+03	4.660+02	6.291+06	7.244+03	6.725-01	-1.218+00	1.338+02	-1.349+00	3.976-01	1.488-02
200.0	640.0	2.597+03	4.660+02	6.291+06	7.092+03	6.962-01	-1.258+00	1.338+02	-1.408+00	3.962-01	1.488-02
200.0	640.0	2.597+03	4.660+02	6.291+06	7.168+03	6.490-01	-1.174+00	1.338+02	-1.298+00	3.974-01	1.488-02
200.0	640.0	2.597+03	4.660+02	6.291+06	7.229+03	6.792-01	-1.119+00	1.337+02	-1.217+00	3.900-01	1.487-02
200.0	640.0	2.597+03	4.660+02	6.291+06	7.345+03	6.804-01	-1.258+00	1.338+02	-1.391+00	3.908-01	1.488-02

ARNOLD ENGINEERING DEVELOPMENT CENTER
VON KARMAN GAS DYNAMICS FACILITY
40 - INCH CONTINUOUS SS WIND TUNNEL

PRELIMINARY UNCHECKED DATA

RUN NO. 1817 5.000 -1.0360-01 3.3053+01 1.0000+00 -2.3570-01 1.2878+02

±1.1 164

200.0	640.0	2.597+03	4.660+02	6.291+06	7.079+03	6.841-01	-6.144-01	1.339+02	-5.266-01	4.046-01	1.489-02
200.0	640.0	2.597+03	4.660+02	6.291+06	7.078+03	6.318-01	-6.614-01	1.339+02	-5.859-01	4.011-01	1.488-02
200.0	640.0	2.597+03	4.660+02	6.291+06	6.874+03	6.895-01	-6.232-01	1.339+02	-5.313-01	4.016-01	1.488-02
200.0	640.0	2.597+03	4.660+02	6.291+06	6.845+03	6.790-01	-6.056-01	1.339+02	-5.089-01	4.043-01	1.490-02
200.0	640.0	2.597+03	4.660+02	6.291+06	6.839+03	6.419-01	-5.801-01	1.339+02	-4.730-01	4.060-01	1.490-02
200.0	640.0	2.597+03	4.660+02	6.291+06	7.070+03	6.850-01	-6.288-01	1.339+02	-5.313-01	4.026-01	1.488-02
200.0	640.0	2.597+03	4.660+02	6.291+06	7.010+03	6.915-01	-6.230-01	1.339+02	-5.357-01	4.027-01	1.488-02

ARNOLD ENGINEERING DEVELOPMENT CENTER
VON KARMAN GAS DYNAMICS FACILITY
40 - INCH CONTINUOUS SS WIND TUNNEL

~~CONFIDENTIAL~~

~~CONFIDENTIAL~~

PRELIMINARY UNCHECKED DATA

RUN NO. 1813 5.980 -3.6152-01 3.3053+01 1.0000+00 -2.8470-01 1.2470+02

200.0	640.0	2.597+03	4.660+02	6.291+06	[illegible]	[illegible]	[illegible]	3.338+02	2.949-01	[illegible]	[illegible]	
200.0	640.0	2.597+03	4.660+02	6.291+06	[illegible]	[illegible]	[illegible]	[illegible]	2.868-01	4.025-01	[illegible]	
200.0	640.0	2.597+03	4.660+02	6.291+06	[illegible]	[illegible]	[illegible]	[illegible]	2.710-01	[illegible]	[illegible]	
200.0	640.0	2.597+03	4.660+02	6.291+06	[illegible]	1.075-01	[illegible]	[illegible]	2.710-01	[illegible]	[illegible]	
200.0	640.0	2.597+03	4.660+02	6.291+06	[illegible]	1.233-01	[illegible]	3.338+02	2.632-01	3.973-01	[illegible]	
200.0	640.0	2.597+03	4.660+02	6.291+06	[illegible]	[illegible]	[illegible]	[illegible]	[illegible]	[illegible]	[illegible]	
200.0	640.0	2.597+03	4.660+02	6.291+06	[illegible]	[illegible]	[illegible]	[illegible]	[illegible]	[illegible]	[illegible]	
200.0	640.0	2.597+03	4.660+02	6.291+06	5.421+04	[illegible]	[illegible]	[illegible]	[illegible]	[illegible]	[illegible]	
200.0	640.0	2.597+03	4.660+02	6.291+06	[illegible]	[illegible]	[illegible]	[illegible]	[illegible]	[illegible]	[illegible]	

±2.6 164

[illegible] DEVELOPMENT CENTER
VON KARMAN GAS DYNAMICS FACILITY
[illegible] SS WIND TUNNEL

PRELIMINARY UNCHECKED DATA

ARNOLD CENTER
VON KARMAN GAS DYNAMICS FACILITY
50 INCH MACH 10 TUNNEL
APOLLO DYNAMIC STABILITY -C- 304244-500 12/11/62 1901-2101

~~CONFIDENTIAL~~

RUN NO. 1904 M = 10.180 C1 =-5.1114-01 C2 = 3.3053+01 RSA = 1.0000+00 MS =-3.3224-01 OT = 1.2441+02

θ	PO	TO	V	Q	RE	D	R	MW	OW	CMQ	CMT	RFP	α
	1600.0	1895.0	4.655+03	3.291+02	1.968+06	1.082+04	8.734-01	-4.464-01	1.256+02	-4.249-01	1.367-01	7.792-03	
	1600.0	1895.0	4.655+03	3.291+02	1.968+06	1.085+04	8.512-01	-4.351-01	1.256+02	-3.829-01	1.319-01	7.790-03	
	1600.0	1895.0	4.655+03	3.291+02	1.968+06	1.083+04	8.505-01	-4.347-01	1.255+02	-3.817-01	1.229-01	7.785-03	
±2.6	1600.0	1895.0	4.655+03	3.291+02	1.968+06	1.077+04	9.128-01	-4.666-01	1.256+02	-5.001-01	1.309-01	7.789-03	
	1600.0	1895.0	4.655+03	3.291+02	1.968+06	1.080+04	8.651-01	-4.422-01	1.256+02	-4.091-01	1.348-01	7.791-03	135
	1600.0	1895.0	4.655+03	3.291+02	1.968+06	1.089+04	8.695-01	-4.444-01	1.254+02	-4.182-01	1.126-01	7.779-03	
	1600.0	1895.0	4.655+03	3.291+02	1.968+06	1.087+04	8.785-01	-4.490-01	1.256+02	-4.347-01	1.348-01	7.791-03	
	1600.0	1895.0	4.655+03	3.291+02	1.968+06	1.071+04	8.329-01	-4.257-01	1.256+02	-3.479-01	1.336-01	7.790-03	
	1600.0	1895.0	4.655+03	3.291+02	1.968+06	1.050+04	8.862-01	-4.530-01	1.256+02	-4.494-01	1.310-01	7.789-03	

Multiply this column by 0.6926 for Runs 1904 thru 1921

~~CONFIDENTIAL~~ Multiply this column by (-1) for Runs 1904 thru 1921

~~CONFIDENTIAL~~

~~CONFIDENTIAL~~

PRELIMINARY UNCHECKED DATA

ARNOLD CENTER
VON KARMAN GAS DYNAMICS FACILITY
50 INCH MACH 10 TUNNEL
APOLLO DYNAMIC STABILITY -C- 304244-500 12/11/62 1901-2101

~~CONFIDENTIAL~~

RUN NO. 1906 M = 10.180 C1 =-5.1114-01 C2 = 3.3053+01 RSA = 1.0000+00 MS =-3.3224-01 DT = 1.2441+02

PO	TO	V	Q	RE	D	R	MW	OW	CMQ	CMT	RFP
1600.0	1895.0	4.655+03	3.291+02	1.968+06	9.803+03	7.039-01	-3.598-01	1.256+02	-1.025-01	1.379-01	7.793-03
1600.0	1895.0	4.655+03	3.291+02	1.968+06	9.782+03	7.490-01	-3.829-01	1.256+02	-1.884-01	1.361-01	7.792-03
1600.0	1895.0	4.655+03	3.291+02	1.968+06	9.756+03	7.320-01	-3.741-01	1.254+02	-1.561-01	1.161-01	7.781-03
1600.0	1895.0	4.655+03	3.291+02	1.968+06	9.783+03	7.239-01	-3.700-01	1.256+02	-1.406-01	1.351-01	7.791-03
1600.0	1895.0	4.655+03	3.291+02	1.968+06	9.795+03	7.178-01	-3.669-01	1.254+02	-1.291-01	1.130-01	7.779-03
1600.0	1895.0	4.655+03	3.291+02	1.968+06	9.835+03	7.525-01	-3.846-01	1.255+02	-1.951-01	1.284-01	7.788-03
1600.0	1895.0	4.655+03	3.291+02	1.968+06	9.810+03	7.365-01	-3.764-01	1.256+02	-1.646-01	1.303-01	7.789-03

θ: ±2.4 α: 135

PRELIMINARY UNCHECKED DATA

ARNOLD CENTER
VON KARMAN GAS DYNAMICS FACILITY
50 INCH MACH 10 TUNNEL
APOLLO DYNAMIC STABILITY -C- 304244-500 12/11/62 1901-2101

~~CONFIDENTIAL~~

RUN NO. 1907 M = 10.180 C1 =-7.6671-01 C2 = 3.3053+01 RSA = 1.0000+00 MS =-3.3224-01 DT = 1.2441+02

PO	TO	V	Q	RE	D	R	MW	OW	CMQ	CMT	RFP
1600.0	1895.0	4.655+03	3.291+02	1.968+06	1.092+04	6.478-01	-4.966-01	1.250+02	-6.149-01	6.235-02	7.752-03
1600.0	1895.0	4.655+03	3.291+02	1.968+06	1.090+04	6.500-01	-4.984-01	1.248+02	-6.222-01	4.508-02	7.742-03
1600.0	1895.0	4.655+03	3.291+02	1.968+06	1.090+04	6.974-01	-5.347-01	1.249+02	-7.576-01	5.606-02	7.748-03
1600.0	1895.0	4.655+03	3.291+02	1.968+06	1.086+04	6.792-01	-5.207-01	1.249+02	-7.053-01	5.695-02	7.749-03
1600.0	1895.0	4.655+03	3.291+02	1.968+06	1.084+04	6.510-01	-4.991-01	1.248+02	-6.252-01	4.064-02	7.740-03
1600.0	1895.0	4.655+03	3.291+02	1.968+06	1.096+04	6.298-01	-4.828-01	1.249+02	-5.636-01	5.615-02	7.749-03
1600.0	1895.0	4.655+03	3.291+02	1.968+06	1.094+04	6.116-01	-4.689-01	1.250+02	-5.113-01	6.310-02	7.752-03
1600.0	1895.0	4.655+03	3.291+02	1.968+06	1.082+04	6.558-01	-5.028-01	1.248+02	-6.390-01	3.978-02	7.740-03
1600.0	1895.0	4.655+03	3.291+02	1.968+06	1.048+04	6.417-01	-4.920-01	1.249+02	-5.978-01	5.709-02	7.749-03

θ: ±2.6 α: 130.1

PRELIMINARY UNCHECKED DATA

ARNOLD CENTER
VON KARMAN GAS DYNAMICS FACILITY
50 INCH MACH 10 TUNNEL
APOLLO DYNAMIC STABILITY -C- 304244-500 12/11/62 1901-2101

~~CONFIDENTIAL~~

RUN NO. 1909 M = 10.180 C1 =-5.1114-01 C2 = 3.3053+01 RSA = 1.0000+00 MS =-3.3224-01 DT = 1.2441+02

PO	TO	V	Q	RE	D	R	MW	OW	CMQ	CMT	RFP
1600.0	1895.0	4.655+03	3.291+02	1.968+06	9.799+03	8.367-01	-4.277-01	1.250+02	-3.570-01	6.210-02	7.752-03
1600.0	1895.0	4.655+03	3.291+02	1.968+06	9.847+03	8.036-01	-4.108-01	1.249+02	-2.938-01	6.084-02	7.751-03
1600.0	1895.0	4.655+03	3.291+02	1.968+06	9.817+03	7.958-01	-4.068-01	1.249+02	-2.789-01	5.612-02	7.750-03
1600.0	1895.0	4.655+03	3.291+02	1.968+06	9.860+03	8.330-01	-4.258-01	1.251+02	-3.494-01	7.833-02	7.761-03
1600.0	1895.0	4.655+03	3.291+02	1.968+06	1.002+04	7.758-01	-3.965-01	1.251+02	-2.402-01	7.927-02	7.761-03
1600.0	1895.0	4.655+03	3.291+02	1.968+06	9.915+03	8.391-01	-4.289-01	1.251+02	-3.612-01	7.855-02	7.761-03

θ: ±2.4 α: 130.07

~~CONFIDENTIAL~~

[redacted]

PRELIMINARY UNCHECKED DATA

ARNOLD CENTER
VON KARMAN GAS DYNAMICS FACILITY
50 INCH MACH 10 TUNNEL
APOLLO DYNAMIC STABILITY -C- 304244-500 12/11/62 1901-2101

[redacted]

RUN NO. 1910 M = 10.180 C1 =-5.1114-01 C2 = 3.3053+01 RSA = 1.0000+00 MS =-3.3224-01 OT = 1.2441+02

θ ±2.3

PO	TO	V	Q	RE	D	R	MW	OW	CMQ	CMT	RFP	α
1600.0	1895.0	4.655+03	3.291+02	1.968+06	9.457+03	7.611-01	-3.898-01	1.249+02	-2.125-01	5.989-02	7.751-03	
1600.0	1895.0	4.655+03	3.291+02	1.968+06	9.470+03	7.766-01	-3.969-01	1.250+02	-2.418-01	7.044-02	7.756-03	130.07
1600.0	1895.0	4.655+03	3.291+02	1.968+06	9.456+03	7.756-01	-3.964-01	1.250+02	-2.400-01	6.918-02	7.756-03	
1600.0	1895.0	4.655+03	3.291+02	1.968+06	9.430+03	7.767-01	-3.970-01	1.251+02	-2.420-01	7.454-02	7.758-03	
1600.0	1895.0	4.655+03	3.291+02	1.968+06	9.490+03	7.648-01	-3.909-01	1.250+02	-2.196-01	6.213-02	7.752-03	
1600.0	1895.0	4.655+03	3.291+02	1.968+06	9.450+03	7.928-01	-4.052-01	1.251+02	-2.728-01	7.300-02	7.758-03	
1600.0	1895.0	4.655+03	3.291+02	1.968+06	9.470+03	7.765-01	-3.969-01	1.251+02	-2.415-01	7.874-02	7.761-03	
1600.0	1895.0	4.655+03	3.291+02	1.968+06	9.520+03	7.726-01	-3.949-01	1.249+02	-2.344-01	6.095-02	7.751-03	

PRELIMINARY UNCHECKED DATA

ARNOLD CENTER
VON KARMAN GAS DYNAMICS FACILITY
50 INCH MACH 10 TUNNEL
APOLLO DYNAMIC STABILITY -C- 304244-500 12/11/62 1901-2101

[redacted]

RUN NO. 1911 M = 10.180 C1 =-5.1114-01 C2 = 3.3053+01 RSA = 1.0000+00 MS =-3.3224-01 OT = 1.2441+02

θ ±2.4

PO	TO	V	Q	RE	D	R	MW	OW	CMQ	CMT	RFP	α
1600.0	1895.0	4.655+03	3.291+02	1.968+06	9.791+03	8.499-01	-4.344-01	1.242+02	-3.845-01	-2.249-02	7.706-03	
1600.0	1895.0	4.655+03	3.291+02	1.968+06	9.762+03	8.687-01	-4.440-01	1.244+02	-4.203-01	-6.279-03	7.715-03	
1600.0	1895.0	4.655+03	3.291+02	1.968+06	9.743+03	8.880-01	-4.539-01	1.243+02	-4.574-01	-1.303-02	7.711-03	
1600.0	1895.0	4.655+03	3.291+02	1.968+06	9.743+03	8.898-01	-4.548-01	1.242+02	-4.611-01	-1.985-02	7.707-03	
1600.0	1895.0	4.655+03	3.291+02	1.968+06	9.787+03	8.432-01	-4.310-01	1.243+02	-3.713-01	-1.196-02	7.711-03	125.1
1600.0	1895.0	4.655+03	3.291+02	1.968+06	9.817+03	8.078-01	-4.129-01	1.243+02	-3.032-01	-7.793-03	7.714-03	
1600.0	1895.0	4.655+03	3.291+02	1.968+06	9.845+03	8.247-01	-4.215-01	1.241+02	-3.362-01	-2.969-02	7.702-03	
1600.0	1895.0	4.655+03	3.291+02	1.968+06	9.960+03	7.818-01	-3.996-01	1.243+02	-2.533-01	-8.252-03	7.713-03	
1600.0	1895.0	4.655+03	3.291+02	1.968+06	9.950+03	8.181-01	-4.182-01	1.244+02	-3.229-01	-6.115-03	7.715-03	

Multiply this column by 0.6926 for Runs 1904 thru 1921

[redacted]

Multiply this column by (-1) for Runs 1904 thru 1921

[redacted]

[redacted]

PRELIMINARY UNCHECKED DATA

[redacted]

ARNOLD CENTER
VON KARMAN GAS DYNAMICS FACILITY
50 INCH MACH 10 TUNNEL
APOLLO DYNAMIC STABILITY -C- 304244-500 12/11/62 1901-2101

RUN NO. 1912 M = 10.180 C1 =-5.1114-01 C2 = 3.3053+01 RSA = 1.0000+00 MS =-3.3224-01 DT = 1.2441+02

θ ±2.5 α 125.1

PO	TO	V	Q	RE	D	R	MW	OW	CMQ	CMT	RFP
1600.0	1895.0	4.655+03	3.291+02	1.968+06	1.051+04	8.723-01	-4.459-01	1.245+02	-4.266-01	9.886-03	7.723-03
1600.0	1895.0	4.655+03	3.291+02	1.968+06	1.054+04	8.413-01	-4.300-01	1.246+02	-3.670-01	1.788-02	7.728-03
1600.0	1895.0	4.655+03	3.291+02	1.968+06	1.051+04	8.647-01	-4.420-01	1.246+02	-4.118-01	1.812-02	7.728-03
1600.0	1895.0	4.655+03	3.291+02	1.968+06	1.055+04	8.370-01	-4.278-01	1.246+02	-3.585-01	2.046-02	7.729-03
1600.0	1895.0	4.655+03	3.291+02	1.968+06	1.054+04	8.342-01	-4.264-01	1.246+02	-3.533-01	1.667-02	7.727-03
1600.0	1895.0	4.655+03	3.291+02	1.968+06	1.060+04	8.126-01	-4.153-01	1.246+02	-3.117-01	2.042-02	7.729-03
1600.0	1895.0	4.655+03	3.291+02	1.968+06	1.067+04	7.603-01	-3.886-01	1.246+02	-2.115-01	1.798-02	7.728-03
1600.0	1895.0	4.655+03	3.291+02	1.968+06	1.055+04	7.677-01	-3.924-01	1.244+02	-2.259-01	1.640-03	7.719-03
1600.0	1895.0	4.655+03	3.291+02	1.968+06	1.037+04	8.023-01	-4.101-01	1.245+02	-2.923-01	1.035-02	7.724-03

PRELIMINARY UNCHECKED DATA

[redacted]

ARNOLD CENTER
VON KARMAN GAS DYNAMICS FACILITY
50 INCH MACH 10 TUNNEL
APOLLO DYNAMIC STABILITY -C- 304244-500 12/11/62 1901-2101

RUN NO. 1913 M = 10.180 C1 =-5.1114-01 C2 = 3.3053+01 RSA = 1.0000+00 MS =-3.3224-01 DT = 1.2441+02

θ ±2.5 α 125.1

PO	TO	V	Q	RE	D	R	MW	OW	CMQ	CMT	RFP
1600.0	1895.0	4.655+03	3.291+02	1.968+06	1.034+04	8.052-01	-4.116-01	1.245+02	-2.979-01	5.526-03	7.721-03
1600.0	1895.0	4.655+03	3.291+02	1.968+06	1.033+04	8.075-01	-4.127-01	1.245+02	-3.022-01	1.257-02	7.725-03
1600.0	1895.0	4.655+03	3.291+02	1.968+06	1.032+04	8.169-01	-4.176-01	1.245+02	-3.204-01	1.055-02	7.724-03
1600.0	1895.0	4.655+03	3.291+02	1.968+06	1.029+04	7.959-01	-4.068-01	1.245+02	-2.799-01	1.180-02	7.724-03
1600.0	1895.0	4.655+03	3.291+02	1.968+06	1.035+04	7.916-01	-4.046-01	1.245+02	-2.718-01	4.616-03	7.720-03
1600.0	1895.0	4.655+03	3.291+02	1.968+06	1.032+04	8.059-01	-4.119-01	1.245+02	-2.992-01	8.763-03	7.723-03
1600.0	1895.0	4.655+03	3.291+02	1.968+06	1.036+04	7.763-01	-3.968-01	1.245+02	-2.423-01	7.762-03	7.722-03
1600.0	1895.0	4.655+03	3.291+02	1.968+06	1.038+04	7.842-01	-4.008-01	1.244+02	-2.578-01	-4.628-03	7.715-03
1600.0	1895.0	4.655+03	3.291+02	1.968+06	1.013+04	8.416-01	-4.302-01	1.245+02	-3.677-01	6.603-03	7.722-03

PRELIMINARY UNCHECKED DATA

[redacted]

ARNOLD CENTER
VON KARMAN GAS DYNAMICS FACILITY
50 INCH MACH 10 TUNNEL
APOLLO DYNAMIC STABILITY -C- 304244-500 12/11/62 1901-2101

RUN NO. 1914 M = 10.180 C1 =-5.1114-01 C2 = 3.3053+01 RSA = 1.0000+00 MS =-3.3224-01 DT = 1.2441+02

θ ±2.2 α 120

PO	TO	V	Q	RE	D	R	MW	OW	CMQ	CMT	RFP
1600.0	1895.0	4.655+03	3.291+02	1.968+06	9.230+03	7.436-01	-3.801-01	1.238+02	-1.805-01	-6.738-02	7.681-03
1600.0	1895.0	4.655+03	3.291+02	1.968+06	9.212+03	7.703-01	-3.937-01	1.239+02	-2.319-01	-5.500-02	7.688-03
1600.0	1895.0	4.655+03	3.291+02	1.968+06	9.213+03	8.251-01	-4.218-01	1.239+02	-3.376-01	-5.224-02	7.689-03
1600.0	1895.0	4.655+03	3.291+02	1.968+06	9.205+03	7.957-01	-4.067-01	1.238+02	-2.812-01	-6.996-02	7.680-03
1600.0	1895.0	4.655+03	3.291+02	1.968+06	9.201+03	8.366-01	-4.276-01	1.239+02	-3.598-01	-5.659-02	7.687-03
1600.0	1895.0	4.655+03	3.291+02	1.968+06	9.250+03	8.136-01	-4.159-01	1.239+02	-3.155-01	-5.673-02	7.687-03
1600.0	1895.0	4.655+03	3.291+02	1.968+06	9.304+03	7.642-01	-3.906-01	1.238+02	-2.204-01	-7.271-02	7.678-03
1600.0	1895.0	4.655+03	3.291+02	1.968+06	8.705+03	7.823-01	-3.999-01	1.270+02	-2.489-01	2.967-01	7.878-03

[redacted]

~~CONFIDENTIAL~~

PRELIMINARY UNCHECKED DATA

ARNOLD CENTER
VON KARMAN GAS DYNAMICS FACILITY
50 INCH MACH 10 TUNNEL
APOLLO DYNAMIC STABILITY -C- 304244-500 12/11/62 1901-2101

~~CONFIDENTIAL~~

RUN NO. 1915 M = 10.180 C1 =-7.6671-01 C2 = 3.3053+01 RSA = 1.0000+00 MS =-3.3224-01 DT = 1.2441+02

θ	PO	TO	V	Q	RE	D	R	MW	OW	CMQ	CMT	RFP	α
	1600.0	1895.0	4.655+03	3.291+02	1.968+06	1.101+04	4.736-01	-3.631-01	1.241+02	-1.182-01	-3.455-02	7.699-03	120
±2.7	1600.0	1895.0	4.655+03	3.291+02	1.968+06	1.102+04	4.833-01	-3.705-01	1.240+02	-1.443-01	-4.814-02	7.692-03	
	1600.0	1895.0	4.655+03	3.291+02	1.968+06	1.099+04	5.094-01	-3.906-01	1.241+02	-2.198-01	-3.372-02	7.700-03	
	1600.0	1895.0	4.655+03	3.291+02	1.968+06	1.097+04	5.444-01	-4.174-01	1.241+02	-3.207-01	-3.610-02	7.698-03	
	1600.0	1895.0	4.655+03	3.291+02	1.968+06	1.099+04	5.409-01	-4.147-01	1.240+02	-3.109-01	-5.080-02	7.690-03	
	1600.0	1895.0	4.655+03	3.291+02	1.968+06	1.085+04	5.601-01	-4.294-01	1.241+02	-3.659-01	-3.521-02	7.699-03	

PRELIMINARY UNCHECKED DATA

ARNOLD CENTER
VON KARMAN GAS DYNAMICS FACILITY
50 INCH MACH 10 TUNNEL
APOLLO DYNAMIC STABILITY -C- 304244-500 12/11/62 1901-2101

~~CONFIDENTIAL~~

RUN NO. 1916 M = 10.180 C1 =-5.1114-01 C2 = 3.3053+01 RSA = 1.0000+00 MS =-3.3224-01 DT = 1.2441+02

	PO	TO	V	Q	RE	D	R	MW	OW	CMQ	CMT	RFP	α
	1600.0	1895.0	4.655+03	3.291+02	1.968+06	1.012+04	7.769-01	-3.971-01	1.239+02	-2.448-01	-6.113-02	7.685-03	
	1600.0	1895.0	4.655+03	3.291+02	1.968+06	1.009+04	8.014-01	-4.096-01	1.240+02	-2.917-01	-4.743-02	7.692-03	
	1600.0	1895.0	4.655+03	3.291+02	1.968+06	1.012+04	8.062-01	-4.121-01	1.240+02	-3.011-01	-4.851-02	7.691-03	
±2.4	1600.0	1895.0	4.655+03	3.291+02	1.968+06	1.007+04	8.309-01	-4.247-01	1.239+02	-3.489-01	-6.288-02	7.684-03	120
	1600.0	1895.0	4.655+03	3.291+02	1.968+06	1.010+04	8.224-01	-4.203-01	1.240+02	-3.322-01	-4.938-02	7.691-03	
	1600.0	1895.0	4.655+03	3.291+02	1.968+06	1.010+04	7.758-01	-3.966-01	1.240+02	-2.425-01	-4.969-02	7.691-03	

PRELIMINARY UNCHECKED DATA

ARNOLD CENTER
VON KARMAN GAS DYNAMICS FACILITY
50 INCH MACH 10 TUNNEL
APOLLO DYNAMIC STABILITY -C- 304244-500 12/11/62 1901-2101

~~CONFIDENTIAL~~

RUN NO. 1917 M = 10.180 C1 =-5.1114-01 C2 = 3.3053+01 RSA = 1.0000+00 MS =-3.3224-01 DT = 1.2441+02

θ	PO	TO	V	Q	RE	D	R	MW	OW	CMQ	CMT	RFP	α
	1600.0	1895.0	4.655+03	3.291+02	1.968+06	9.944+03	7.792-01	-3.983-01	1.258+02	-2.452-01	1.639-01	7.807-03	
	1600.0	1895.0	4.655+03	3.291+02	1.968+06	9.964+03	7.679-01	-3.925-01	1.258+02	-2.238-01	1.633-01	7.807-03	
	1600.0	1895.0	4.655+03	3.291+02	1.968+06	9.874+03	7.753-01	-4.065-01	1.257+02	-2.762-01	1.467-01	7.798-03	
±2.4	1600.0	1895.0	4.655+03	3.291+02	1.968+06	9.937+03	7.687-01	-3.929-01	1.258+02	-2.254-01	1.608-01	7.805-03	140
	1600.0	1895.0	4.655+03	3.291+02	1.968+06	9.942+03	7.594-01	-3.882-01	1.258+02	-2.077-01	1.614-01	7.805-03	
	1600.0	1895.0	4.655+03	3.291+02	1.968+06	1.001+04	7.220-01	-3.691-01	1.257+02	-1.369-01	1.447-01	7.796-03	
	1600.0	1895.0	4.655+03	3.291+02	1.968+06	1.005+04	7.145-01	-3.652-01	1.258+02	-1.225-01	1.621-01	7.806-03	
	1600.0	1895.0	4.655+03	3.291+02	1.968+06	1.006+04	7.434-01	-3.800-01	1.258+02	-1.774-01	1.583-01	7.804-03	
	1600.0	1895.0	4.655+03	3.291+02	1.968+06	9.840+03	7.881-01	-4.028-01	1.258+02	-2.623-01	1.591-01	7.804-03	

~~CONFIDENTIAL~~

~~CONFIDENTIAL~~

PRELIMINARY UNCHECKED DATA

ARNOLD CENTER
VON KARMAN GAS DYNAMICS FACILITY
50 INCH MACH 10 TUNNEL
APOLLO DYNAMIC STABILITY -C- 304244-500 12/11/62 1901-2101

~~CONFIDENTIAL~~

RUN NO. 1918 M = 10.180 C1 =-5.1114-01 C2 = 3.3053+01 RSA = 1.0000+00 MS =-3.3224-01 DT = 1.2441+02

±2.5 α 140

PO	TO	V	Q	RE	D	R	MW	OW	CMQ	CMT	RFP
1600.0	1895.0	4.655+03	3.291+02	1.968+06	1.018+04	9.166-01	-4.685-01	1.256+02	-5.073-01	1.316-01	7.789-03
1600.0	1895.0	4.655+03	3.291+02	1.968+06	1.022+04	8.808-01	-4.502-01	1.254+02	-4.397-01	1.156-01	7.781-03
1600.0	1895.0	4.655+03	3.291+02	1.968+06	1.020+04	8.799-01	-4.497-01	1.255+02	-4.376-01	1.243-01	7.785-03
1600.0	1895.0	4.655+03	3.291+02	1.968+06	1.017+04	8.837-01	-4.517-01	1.256+02	-4.447-01	1.313-01	7.789-03
1600.0	1895.0	4.655+03	3.291+02	1.968+06	1.021+04	8.841-01	-4.519-01	1.255+02	-4.456-01	1.261-01	7.786-03
1600.0	1895.0	4.655+03	3.291+02	1.968+06	1.026+04	8.457-01	-4.323-01	1.253+02	-3.731-01	1.064-01	7.776-03
1600.0	1895.0	4.655+03	3.291+02	1.968+06	1.032+04	8.444-01	-4.316-01	1.255+02	-3.700-01	1.285-01	7.788-03
1600.0	1895.0	4.655+03	3.291+02	1.968+06	1.027+04	8.417-01	-4.302-01	1.255+02	-3.650-01	1.236-01	7.785-03
1600.0	1895.0	4.655+03	3.291+02	1.968+06	9.985+03	8.562-01	-4.376-01	1.253+02	-3.930-01	1.059-01	7.775-03

PRELIMINARY UNCHECKED DATA

ARNOLD CENTER
VON KARMAN GAS DYNAMICS FACILITY
50 INCH MACH 10 TUNNEL
APOLLO DYNAMIC STABILITY -C- 304244-500 12/11/62 1901-2101

~~CONFIDENTIAL~~

RUN NO. 1919 M = 10.180 C1 =-5.1114-01 C2 = 3.3053+01 RSA = 1.0000+00 MS =-3.3224-01 DT = 1.2441+02

θ ±2.4 α 140

PO	TO	V	Q	RE	D	R	MW	OW	CMQ	CMT	RFP
1600.0	1895.0	4.655+03	3.291+02	1.968+06	9.779+03	8.952-01	-4.575-01	1.259+02	-4.654-01	1.657-01	7.808-03
1600.0	1895.0	4.655+03	3.291+02	1.968+06	9.773+03	9.500-01	-4.856-01	1.258+02	-5.696-01	1.643-01	7.807-03
1600.0	1895.0	4.655+03	3.291+02	1.968+06	9.757+03	9.779-01	-4.998-01	1.257+02	-6.231-01	1.510-01	7.800-03
1600.0	1895.0	4.655+03	3.291+02	1.968+06	9.789+03	9.456-01	-4.833-01	1.258+02	-5.611-01	1.634-01	7.807-03
1600.0	1895.0	4.655+03	3.291+02	1.968+06	9.786+03	9.227-01	-4.716-01	1.258+02	-5.177-01	1.634-01	7.807-03
1600.0	1895.0	4.655+03	3.291+02	1.968+06	9.764+03	8.755-01	-4.577-01	1.257+02	-4.667-01	1.447-01	7.796-03
1600.0	1895.0	4.655+03	3.291+02	1.968+06	9.805+03	9.041-01	-4.621-01	1.258+02	-4.826-01	1.593-01	7.804-03
1600.0	1895.0	4.655+03	3.291+02	1.968+06	9.805+03	9.230-01	-4.718-01	1.258+02	-5.184-01	1.612-01	7.805-03
1600.0	1895.0	4.655+03	3.291+02	1.968+06	9.675+03	9.390-01	-4.800-01	1.258+02	-5.490-01	1.575-01	7.803-03

PRELIMINARY UNCHECKED DATA

ARNOLD CENTER
VON KARMAN GAS DYNAMICS FACILITY
50 INCH MACH 10 TUNNEL
APOLLO DYNAMIC STABILITY -C- 304244-500 12/11/62 1901-2101

~~CONFIDENTIAL~~

RUN NO. 1920 M = 10.180 C1 =-5.1114-01 C2 = 3.3053+01 RSA = 1.0000+00 MS =-3.3224-01 DT = 1.2441+02

θ ±2.3 α 144.78

PO	TO	V	Q	RE	D	R	MW	OW	CMQ	CMT	RFP
1600.0	1895.0	4.655+03	3.291+02	1.968+06	9.545+03	9.243-01	-4.724-01	1.262+02	-5.193-01	2.030-01	7.828-03
1600.0	1895.0	4.655+03	3.291+02	1.968+06	9.548+03	9.265-01	-4.736-01	1.263+02	-5.231-01	2.175-01	7.836-03
1600.0	1895.0	4.655+03	3.291+02	1.968+06	9.506+03	9.450-01	-4.830-01	1.263+02	-5.579-01	2.192-01	7.837-03
1600.0	1895.0	4.655+03	3.291+02	1.968+06	9.479+03	9.558-01	-4.885-01	1.262+02	-5.790-01	2.039-01	7.828-03
1600.0	1895.0	4.655+03	3.291+02	1.968+06	9.462+03	9.872-01	-5.046-01	1.263+02	-6.379-01	2.133-01	7.833-03
1600.0	1895.0	4.655+03	3.291+02	1.968+06	9.475+03	9.968-01	-5.095-01	1.263+02	-6.563-01	2.124-01	7.833-03
1600.0	1895.0	4.655+03	3.291+02	1.968+06	9.525+03	1.002+00	-5.119-01	1.262+02	-6.656-01	2.054-01	7.829-03
1600.0	1895.0	4.655+03	3.291+02	1.968+06	9.505+03	9.716-01	-4.966-01	1.263+02	-6.084-01	2.160-01	7.835-03

~~CONFIDENTIAL~~

[redacted]

PRELIMINARY UNCHECKED DATA

ARNOLD CENTER
VON KARMAN GAS DYNAMICS FACILITY
50 INCH MACH 10 TUNNEL
APOLLO DYNAMIC STABILITY -C- 304244-500 12/11/62 1901-2101

[redacted]

RUN NO. 1921 M = 10.180 C1 =-5.1114-01 C2 = 3.3053+01 RSA = 1.0000+00 MS =-3.3224-01 DT = 1.2441+02

Q	PO	TO	V	Q	RE	D	R	MW	OW	CMQ	CMT	RFP	α
	1600.0	1895.0	4.655+03	3.291+02	1.968+06	1.020+04	9.418-01	-4.814-01	1.260+02	-5.533-01	1.810-01	7.816-03	
	1600.0	1895.0	4.655+03	3.291+02	1.968+06	1.020+04	9.537-01	-4.875-01	1.261+02	-5.754-01	1.920-01	7.822-03	
	1600.0	1895.0	4.655+03	3.291+02	1.968+06	1.019+04	9.475-01	-4.843-01	1.261+02	-5.638-01	1.924-01	7.822-03	144.98
	1600.0	1895.0	4.655+03	3.291+02	1.968+06	1.023+04	9.456-01	-4.833-01	1.261+02	-5.602-01	1.909-01	7.821-03	
±2.5	1600.0	1895.0	4.655+03	3.291+02	1.968+06	1.017+04	9.499-01	-4.856-01	1.260+02	-5.687-01	1.840-01	7.818-03	
	1600.0	1895.0	4.655+03	3.291+02	1.968+06	1.024+04	9.193-01	-4.699-01	1.261+02	-5.103-01	1.883-01	7.820-03	
	1600.0	1895.0	4.655+03	3.291+02	1.968+06	1.023+04	9.125-01	-4.664-01	1.260+02	-4.976-01	1.862-01	7.819-03	
	1600.0	1895.0	4.655+03	3.291+02	1.968+06	1.021+04	9.290-01	-4.748-01	1.259+02	-5.292-01	1.760-01	7.813-03	
	1600.0	1895.0	4.655+03	3.291+02	1.968+06	1.004+04	9.567-01	-4.890-01	1.261+02	-5.812-01	1.887-01	7.820-03	

PRELIMINARY UNCHECKED DATA

ARNOLD CENTER
VON KARMAN GAS DYNAMICS FACILITY
50 INCH MACH 10 TUNNEL
APOLLO DYNAMIC STABILITY -C- 304244-500 12/11/62 1901-2101

[redacted]

RUN NO. 2002 M = 10.180 C1 =-5.1114-01 C2 = 3.3053+01 RSA = 1.0000+00 MS =-3.6240-01 DT = 1.2378+02

Q	PO	TO	V	Q	RE	D	R	MW	OW	CMQ	CMT	RFP	α
	1600.0	1895.0	4.655+03	3.291+02	1.968+06	9.495+03	1.053+00	-5.384-01	1.332+02	-6.177-01	1.117+00	8.263-03	
	1600.0	1895.0	4.655+03	3.291+02	1.968+06	9.962+03	9.873-01	-5.047-01	1.265+02	-5.257-01	3.119-01	7.846-03	
	1600.0	1895.0	4.655+03	3.291+02	1.968+06	9.835+03	1.018+00	-5.204-01	1.266+02	-5.833-01	3.248-01	7.853-03	
	1600.0	1895.0	4.655+03	3.291+02	1.968+06	9.859+03	1.053+00	-5.381-01	1.266+02	-6.488-01	3.268-01	7.854-03	
±2.4	1600.0	1895.0	4.655+03	3.291+02	1.968+06	9.833+03	1.040+00	-5.318-01	1.266+02	-6.254-01	3.226-01	7.852-03	145
	1600.0	1895.0	4.655+03	3.291+02	1.968+06	9.850+03	1.031+00	-5.270-01	1.266+02	-6.015-01	3.272-01	7.854-03	
	1600.0	1895.0	4.655+03	3.291+02	1.968+06	9.890+03	1.060+00	-5.416-01	1.266+02	-6.620-01	3.213-01	7.851-03	
	1600.0	1895.0	4.655+03	3.291+02	1.968+06	9.815+03	1.065+00	-5.442-01	1.265+02	-6.720-01	3.106-01	7.846-03	

Multiply this column by 0.6926 for Runs 2002 thru 2008.

Multiply this column by -1 for Runs 2002 thru 2008.

CONFIDENTIAL

[redacted]

~~CONFIDENTIAL~~

PRELIMINARY UNCHECKED DATA

ARNOLD CENTER
VON KARMAN GAS DYNAMICS FACILITY
50 INCH MACH 10 TUNNEL
APOLLO DYNAMIC STABILITY -C- 304244-500 12/11/62 1901-2101

~~CONFIDENTIAL~~

RUN NO. 2003 M = 10.180 C1 =-5.1114-01 C2 = 3.3053+01 RSA = 1.0000+00 MS =-3.6240-01 OT = 1.2378+02

θ	PO	TO	V	Q	RE	D	R	MW	OW	CMQ	CMT	RFP	α
	1600.0	1895.0	4.655+03	3.291+02	1.968+06	9.762+03	1.057+00	-5.403-01	1.262+02	-6.586-01	2.823-01	7.831-03	
	1600.0	1895.0	4.655+03	3.291+02	1.968+06	9.745+03	1.059+00	-5.413-01	1.261+02	-6.629-01	2.734-01	7.826-03	
	1600.0	1895.0	4.655+03	3.291+02	1.968+06	9.734+03	1.043+00	-5.330-01	1.261+02	-6.325-01	2.661-01	7.822-03	
±2.4	1600.0	1895.0	4.655+03	3.291+02	1.968+06	9.720+03	1.040+00	-5.316-01	1.262+02	-6.267-01	2.787-01	7.829-03	145
	1600.0	1895.0	4.655+03	3.291+02	1.968+06	9.692+03	1.076+00	-5.500-01	1.261+02	-6.953-01	2.730-01	7.826-03	
	1600.0	1895.0	4.655+03	3.291+02	1.968+06	9.709+03	1.083+00	-5.534-01	1.262+02	-7.072-01	2.831-01	7.831-03	
	1600.0	1895.0	4.655+03	3.291+02	1.968+06	9.745+03	1.115+00	-5.701-01	1.262+02	-7.695-01	2.769-01	7.828-03	
	1600.0	1895.0	4.655+03	3.291+02	1.968+06	9.800+03	1.062+00	-5.427-01	1.261+02	-6.683-01	2.675-01	7.823-03	

PRELIMINARY UNCHECKED DATA

ARNOLD CENTER
VON KARMAN GAS DYNAMICS FACILITY
50 INCH MACH 10 TUNNEL
APOLLO DYNAMIC STABILITY -C- 304244-500 12/11/62 1901-2101

~~CONFIDENTIAL~~

RUN NO. 2004 M = 10.180 C1 =-5.1114-01 C2 = 3.3053+01 RSA = 1.0000+00 MS =-3.6240-01 OT = 1.2378+02

θ	PO	TO	V	Q	RE	D	R	MW	OW	CMQ	CMT	RFP	α
	1600.0	1895.0	4.655+03	3.291+02	1.968+06	9.796+03	9.504-01	-4.859-01	1.267+02	-4.555-01	3.348-01	7.861-03	
	1600.0	1895.0	4.655+03	3.291+02	1.968+06	9.766+03	8.906-01	-4.552-01	1.269+02	-3.429-01	3.185-01	7.850-03	
±2.4	1600.0	1895.0	4.655+03	3.291+02	1.968+06	9.727+03	9.100-01	-4.652-01	1.265+02	-3.796-01	3.170-01	7.849-03	149.1
	1600.0	1895.0	4.655+03	3.291+02	1.968+06	9.727+03	9.310-01	-4.759-01	1.265+02	-4.192-01	3.159-01	7.848-03	
	1600.0	1895.0	4.655+03	3.291+02	1.968+06	9.700+03	9.441-01	-4.826-01	1.264+02	-4.444-01	3.031-01	7.842-03	
	1600.0	1895.0	4.655+03	3.291+02	1.968+06	9.725+03	8.967-01	-4.583-01	1.265+02	-3.544-01	3.182-01	7.850-03	
	1600.0	1895.0	4.655+03	3.291+02	1.968+06	9.830+03	8.881-01	-4.539-01	1.265+02	-3.382-01	3.149-01	7.848-03	
	1600.0	1895.0	4.655+03	3.291+02	1.968+06	9.780+03	9.254-01	-4.730-01	1.265+02	-4.088-01	3.093-01	7.845-03	

PRELIMINARY UNCHECKED DATA

ARNOLD CENTER
VON KARMAN GAS DYNAMICS FACILITY
50 INCH MACH 10 TUNNEL
APOLLO DYNAMIC STABILITY -C- 304244-500 12/11/62 1901-2101

~~CONFIDENTIAL~~

RUN NO. 2005 M = 10.180 C1 =-7.6671-01 C2 = 3.3053+01 RSA = 1.0000+00 MS =-3.6240-01 OT = 1.2378+02

θ	PO	TO	V	Q	RE	D	R	MW	OW	CMQ	CMT	RFP	α
	1600.0	1895.0	4.655+03	3.291+02	1.968+06	1.134+04	7.291-01	-5.590-01	1.263+02	-7.277-01	2.861-01	7.833-03	
	1600.0	1895.0	4.655+03	3.291+02	1.968+06	1.133+04	7.501-01	-5.751-01	1.264+02	-7.868-01	3.003-01	7.840-03	
	1600.0	1895.0	4.655+03	3.291+02	1.968+06	1.131+04	7.453-01	-5.715-01	1.264+02	-7.732-01	3.012-01	7.841-03	
±2.7	1600.0	1895.0	4.655+03	3.291+02	1.968+06	1.132+04	7.468-01	-5.725-01	1.264+02	-7.771-01	3.025-01	7.841-03	149.1
	1600.0	1895.0	4.655+03	3.291+02	1.968+06	1.133+04	7.061-01	-5.416-01	1.262+02	-6.626-01	2.865-01	7.832-03	
	1600.0	1895.0	4.655+03	3.291+02	1.968+06	1.137+04	7.132-01	-5.468-01	1.268+02	-6.794-01	3.546-01	7.869-03	
	1600.0	1895.0	4.655+03	3.291+02	1.968+06	1.109+04	7.092-01	-5.437-01	1.267+02	-6.690-01	3.376-01	7.860-03	
	1600.0	1895.0	4.655+03	3.291+02	1.968+06	1.078+04	7.381-01	-5.659-01	1.268+02	-7.503-01	3.484-01	7.866-03	

~~CONFIDENTIAL~~

~~CONFIDENTIAL~~

PRELIMINARY UNCHECKED DATA

ARNOLD CENTER
VON KARMAN GAS DYNAMICS FACILITY
50 INCH MACH 10 TUNNEL
APOLLO DYNAMIC STABILITY -C- 304244-500 12/11/62 1901-2101

~~CONFIDENTIAL~~

RUN NO. 2006 M = 10.180 C1 =-6.3892-01 C2 = 3.3053+01 RSA = 1.0000+00 MS =-3.6240-01 DT = 1.2378+02

θ	PO	TO	V	Q	RE	D	R	MW	OW	CMQ	CMT	RFP	α
	1600.0	1895.0	4.655+03	3.291+02	1.968+06	9.319+03	5.722-01	-3.656-01	1.266+02	-1.182-02	3.291-01	7.855-03	
±2.2	1600.0	1895.0	4.655+03	3.291+02	1.968+06	9.180+03	6.473-01	-4.136-01	1.266+02	-1.889-01	3.242-01	7.853-03	
	1600.0	1895.0	4.655+03	3.291+02	1.968+06	9.147+03	5.365-01	-3.428-01	1.266+02	7.254-02	3.210-01	7.851-03	149.1
	1600.0	1895.0	4.655+03	3.291+02	1.968+06	9.249+03	6.074-01	-3.881-01	1.265+02	-9.492-02	3.174-01	7.849-03	
	1600.0	1895.0	4.655+03	3.291+02	1.968+06	9.199+03	5.973-01	-3.816-01	1.265+02	-7.097-02	3.180-01	7.850-03	
	1600.0	1895.0	4.655+03	3.291+02	1.968+06	9.290+03	5.460-01	-3.488-01	1.265+02	5.014-02	3.190-01	7.850-03	
	1600.0	1895.0	4.655+03	3.291+02	1.968+06	9.320+03	6.136-01	-3.920-01	1.265+02	-1.094-01	3.176-01	7.849-03	

PRELIMINARY UNCHECKED DATA

ARNOLD CENTER
VON KARMAN GAS DYNAMICS FACILITY
50 INCH MACH 10 TUNNEL
APOLLO DYNAMIC STABILITY -C- 304244-500 12/11/62 1901-2101

~~CONFIDENTIAL~~

RUN NO. 2007 M = 10.180 C1 =-5.1114-01 C2 = 3.3053+01 RSA = 1.0000+00 MS =-3.6240-01 DT = 1.2378+02

θ	PO	TO	V	Q	RE	D	R	MW	OW	CMQ	CMT	RFP	α
	1600.0	1895.0	4.655+03	3.291+02	1.968+06	9.467+03	1.120+00	-5.723-01	1.266+02	-7.752-01	3.222-01	7.852-03	
	1600.0	1895.0	4.655+03	3.291+02	1.968+06	9.498+03	1.077+00	-5.507-01	1.266+02	-6.950-01	3.316-01	7.857-03	
±2.3	1600.0	1895.0	4.655+03	3.291+02	1.968+06	9.464+03	1.132+00	-5.787-01	1.266+02	-7.984-01	3.298-01	7.856-03	149.1
	1600.0	1895.0	4.655+03	3.291+02	1.968+06	9.418+03	1.145+00	-5.851-01	1.265+02	-8.230-01	3.106-01	7.846-03	
	1600.0	1895.0	4.655+03	3.291+02	1.968+06	9.472+03	1.099+00	-5.615-01	1.266+02	-7.350-01	3.262-01	7.854-03	
	1600.0	1895.0	4.655+03	3.291+02	1.968+06	9.513+03	1.064+00	-5.439-01	1.266+02	-6.700-01	3.289-01	7.855-03	
	1600.0	1895.0	4.655+03	3.291+02	1.968+06	9.600+03	1.034+00	-5.284-01	1.267+02	-6.128-01	3.324-01	7.857-03	
	1600.0	1895.0	4.655+03	3.291+02	1.968+06	9.670+03	1.063+00	-5.434-01	1.265+02	-6.688-01	3.126-01	7.847-03	
	1600.0	1895.0	4.655+03	3.291+02	1.968+06	9.665+03	1.086+00	-5.553-01	1.265+02	-7.126-01	3.184-01	7.850-03	

PRELIMINARY UNCHECKED DATA

ARNOLD CENTER
VON KARMAN GAS DYNAMICS FACILITY
50 INCH MACH 10 TUNNEL
APOLLO DYNAMIC STABILITY -C- 304244-500 12/11/62 1901-2101

~~CONFIDENTIAL~~

RUN NO. 2008 M = 10.180 C1 =-5.1114-01 C2 = 3.3053+01 RSA = 1.0000+00 MS =-3.6240-01 DT = 1.2378+02

θ	PO	TO	V	Q	RE	D	R	MW	OW	CMQ	CMT	RFP	α
	1600.0	1895.0	4.655+03	3.291+02	1.968+06	1.040+04	1.107+00	-5.656-01	1.270+02	-7.483-01	3.682-01	7.876-03	
±2.5	1600.0	1895.0	4.655+03	3.291+02	1.968+06	1.042+04	1.078+00	-5.498-01	1.266+02	-8.920-01	3.230-01	7.852-03	149.1
	1600.0	1895.0	4.655+03	3.291+02	1.968+06	1.046+04	1.089+00	-5.565-01	1.266+02	-7.162-01	3.314-01	7.857-03	
	1600.0	1895.0	4.655+03	3.291+02	1.968+06	1.038+04	1.074+00	-5.491-01	1.266+02	-6.892-01	3.262-01	7.854-03	
	1600.0	1895.0	4.655+03	3.291+02	1.968+06	1.044+04	1.070+00	-5.471-01	1.267+02	-6.817-01	3.328-01	7.857-03	
	1600.0	1895.0	4.655+03	3.291+02	1.968+06	1.048+04	1.061+00	-5.421-01	1.265+02	-6.641-01	3.137-01	7.847-03	
	1600.0	1895.0	4.655+03	3.291+02	1.968+06	1.041+04	1.075+00	-5.497-01	1.266+02	-6.915-01	3.262-01	7.854-03	
	1600.0	1895.0	4.655+03	3.291+02	1.968+06	1.019+04	1.036+00	-5.295-01	1.266+02	-6.167-01	3.242-01	7.855-03	

~~CONFIDENTIAL~~

[redacted]

PRELIMINARY UNCHECKED DATA

[redacted]

ARNOLD ENGINEERING DEVELOPMENT CENTER
von KARMAN GAS DYNAMICS FACILITY
50 - INCH CONTINUOUS HS WIND TUNNEL

APOLLO DYNAMIC STABILITY -C- 304244-500 12/12/62 2201-2419

RUN NO. 2206 M = 10.180 C1 =-5.1114-01 C2 = 3.3053+01 RSA = 1.0000+00 MS =-5.1906-01 DT = 1.2427+02

θ	PO	TO	V	Q	RE	D	R	MW	OW	CMQ	CMT	RFP	α
	1600.0	1885.0	4.642+03	3.295+02	1.989+06	1.037+04	6.961-01	-3.558-01	1.244+02	6.109-01	1.989-02	7.740-03	
	1600.0	1885.0	4.642+03	3.295+02	1.989+06	1.035+04	6.966-01	-3.561-01	1.245+02	6.095-01	3.061-02	7.746-03	
	1600.0	1885.0	4.642+03	3.295+02	1.989+06	1.038+04	6.932-01	-3.543-01	1.245+02	6.162-01	2.972-02	7.743-03	
±2.5	1600.0	1885.0	4.642+03	3.295+02	1.989+06	1.034+04	7.277-01	-3.720-01	1.244+02	5.508-01	1.148-02	7.736-03	115
	1600.0	1885.0	4.642+03	3.295+02	1.989+06	1.026+04	7.703-01	-3.937-01	1.245+02	4.687-01	3.043-02	7.746-03	
	1600.0	1885.0	4.642+03	3.295+02	1.989+06	1.039+04	7.311-01	-3.737-01	1.246+02	5.435-01	3.260-02	7.747-03	
	1600.0	1885.0	4.642+03	3.295+02	1.989+06	1.042+04	7.197-01	-3.679-01	1.244+02	5.660-01	1.428-02	7.737-03	
	1600.0	1885.0	4.642+03	3.295+02	1.989+06	1.046+04	7.715-01	-3.943-01	1.245+02	4.666-01	2.334-02	7.742-03	
	1600.0	1885.0	4.642+03	3.295+02	1.989+06	1.007+04	7.312-01	-3.738-01	1.245+02	5.436-01	2.330-02	7.742-03	

Multiply this column by 0.6926 for Runs 2206 thru 2214.

[redacted]

Multiply this column by (-1) for Runs 2206 thru 2214.

PRELIMINARY UNCHECKED DATA

[redacted]

ARNOLD ENGINEERING DEVELOPMENT CENTER
von KARMAN GAS DYNAMICS FACILITY
50 - INCH CONTINUOUS HS WIND TUNNEL

APOLLO DYNAMIC STABILITY -C- 304244-500 12/12/62 2201-2419

RUN NO. 2207 M = 10.180 C1 =-5.1114-01 C2 = 3.3053+01 RSA = 1.0000+00 MS =-5.1906-01 DT = 1.2427+02

θ	PO	TO	V	Q	RE	D	R	MW	OW	CMQ	CMT	RFP	α
	1600.0	1885.0	4.642+03	3.295+02	1.989+06	1.057+04	7.846-01	-4.010-01	1.242+02	4.427-01	-1.037-02	7.724-03	
	1600.0	1885.0	4.642+03	3.295+02	1.989+06	1.065+04	7.257-01	-3.710-01	1.240+02	5.561-01	-2.536-02	7.716-03	
	1600.0	1885.0	4.642+03	3.295+02	1.989+06	1.062+04	7.645-01	-3.908-01	1.241+02	4.814-01	-1.585-02	7.721-03	
±2.6	1600.0	1885.0	4.642+03	3.295+02	1.989+06	1.059+04	7.450-01	-3.808-01	1.241+02	5.186-01	-1.424-02	7.722-03	115
	1600.0	1885.0	4.642+03	3.295+02	1.989+06	1.065+04	7.051-01	-3.604-01	1.240+02	5.957-01	-2.509-02	7.716-03	
	1600.0	1885.0	4.642+03	3.295+02	1.989+06	1.072+04	7.175-01	-3.668-01	1.242+02	5.713-01	-1.269-02	7.723-03	
	1600.0	1885.0	4.642+03	3.295+02	1.989+06	1.053+04	7.436-01	-3.801-01	1.240+02	5.221-01	-3.292-02	7.711-03	

[redacted]

~~CONFIDENTIAL~~

PRELIMINARY UNCHECKED DATA

~~CONFIDENTIAL~~

ARNOLD ENGINEERING DEVELOPMENT CENTER
von KARMAN GAS DYNAMICS FACILITY
50 - INCH CONTINUOUS HS WIND TUNNEL

APOLLO DYNAMIC STABILITY -C- 304244-500 12/12/62 2201-2419

RUN NO. 2208 M = 10.180 C1 =-5.1114-01 C2 = 3.3053+01 RSA = 1.0000+00 MS =-5.1906-01 OT = 1.2427+02

θ	PO	TO	V	Q	RE	D	R	MW	OW	CMQ	CMT	RFP	α
	1600.0	1885.0	4.642+03	3.295+02	1.989+06	1.146+04	7.263-01	-3.712-01	1.245+02	5.531-01	2.394-02	7.743-03	
	1600.0	1885.0	4.642+03	3.295+02	1.989+06	1.105+04	7.409-01	-3.787-01	1.245+02	5.251-01	2.794-02	7.745-03	115
±2.7	1600.0	1885.0	4.642+03	3.295+02	1.989+06	1.101+04	7.672-01	-3.921-01	1.245+02	4.748-01	2.543-02	7.743-03	
	1600.0	1885.0	4.642+03	3.295+02	1.989+06	1.111+04	7.296-01	-3.729-01	1.244+02	5.469-01	1.946-02	7.740-03	
	1600.0	1885.0	4.642+03	3.295+02	1.989+06	1.115+04	7.407-01	-3.786-01	1.245+02	5.256-01	2.212-02	7.742-03	
	1600.0	1885.0	4.642+03	3.295+02	1.989+06	1.074+04	7.649-01	-3.910-01	1.245+02	4.793-01	3.253-02	7.742-03	

PRELIMINARY UNCHECKED DATA

~~CONFIDENTIAL~~

ARNOLD ENGINEERING DEVELOPMENT CENTER
von KARMAN GAS DYNAMICS FACILITY
50 - INCH CONTINUOUS HS WIND TUNNEL

APOLLO DYNAMIC STABILITY -C- 304244-500 12/12/62 2201-2419

RUN NO. 2209 M = 10.180 C1 =-5.1114-01 C2 = 3.3053+01 RSA = 1.0000+00 MS =-5.1906-01 OT = 1.2427+02

θ	PO	TO	V	Q	RE	D	R	MW	OW	CMQ	CMT	RFP	α
	1600.0	1885.0	4.642+03	3.295+02	1.989+06	1.055+04	6.103-01	-3.120-01	1.236+02	7.802-01	-7.265-02	7.690-03	
	1600.0	1885.0	4.642+03	3.295+02	1.989+06	1.052+04	6.092-01	-3.114-01	1.238+02	7.811-01	-5.255-02	7.701-03	
	1600.0	1885.0	4.642+03	3.295+02	1.989+06	1.053+04	6.365-01	-3.253-01	1.237+02	7.292-01	-6.095-02	7.696-03	110.1
±2.5	1600.0	1885.0	4.642+03	3.295+02	1.989+06	1.049+04	6.376-01	-3.259-01	1.237+02	7.274-01	-6.807-02	7.692-03	
	1600.0	1885.0	4.642+03	3.295+02	1.989+06	1.057+04	6.305-01	-3.223-01	1.237+02	7.407-01	-6.058-02	7.696-03	
	1600.0	1885.0	4.642+03	3.295+02	1.989+06	1.058+04	5.929-01	-3.030-01	1.240+02	8.113-01	-3.207-02	7.712-03	
	1600.0	1885.0	4.642+03	3.295+02	1.989+06	1.018+04	6.042-01	-3.098-01	1.239+02	7.864-01	-4.111-02	7.707-03	

PRELIMINARY UNCHECKED DATA

~~CONFIDENTIAL~~

ARNOLD ENGINEERING DEVELOPMENT CENTER
von KARMAN GAS DYNAMICS FACILITY
50 - INCH CONTINUOUS HS WIND TUNNEL

APOLLO DYNAMIC STABILITY -C- 304244-500 12/12/62 2201-2419

RUN NO. 2210 M = 10.180 C1 =-3.8335-01 C2 = 3.3053+01 RSA = 1.0000+00 MS =-5.1906-01 OT = 1.2427+02

θ	PO	TO	V	Q	RE	D	R	MW	OW	CMQ	CMT	RFP	α
	1600.0	1885.0	4.642+03	3.295+02	1.989+06	1.036+04	8.282-01	-3.175-01	1.238+02	7.585-01	-5.791-02	7.698-03	
	1600.0	1885.0	4.642+03	3.295+02	1.989+06	1.033+04	8.148-01	-3.124-01	1.236+02	7.785-01	-7.012-02	7.691-03	
	1600.0	1885.0	4.642+03	3.295+02	1.989+06	1.034+04	8.193-01	-3.141-01	1.238+02	7.714-01	-5.746-02	7.698-03	110.1
±2.5	1600.0	1885.0	4.642+03	3.295+02	1.989+06	1.034+04	8.302-01	-3.183-01	1.237+02	7.552-01	-6.280-02	7.695-03	
	1600.0	1885.0	4.642+03	3.295+02	1.989+06	1.033+04	8.124-01	-3.114-01	1.240+02	7.800-01	-3.214-02	7.712-03	
	1600.0	1885.0	4.642+03	3.295+02	1.989+06	1.031+04	8.477-01	-3.250-01	1.240+02	7.290-01	-3.057-02	7.713-03	
	1600.0	1885.0	4.642+03	3.295+02	1.989+06	1.020+04	8.416-01	-3.226-01	1.239+02	7.385-01	-4.467-02	7.709-03	

~~CONFIDENTIAL~~

~~CONFIDENTIAL~~

PRELIMINARY UNCHECKED DATA

APOLLO DYNAMIC STABILITY -C- 304244-500 12/12/62 2201-2419 ~~CONFIDENTIAL~~

ARNOLD ENGINEERING DEVELOPMENT CENTER
von KARMAN GAS DYNAMICS FACILITY
50 - INCH CONTINUOUS HS WIND TUNNEL

RUN NO. 2211 M = 10.180 C1 =-3.8335-01 C2 = 3.3053+01 RSA = 1.0000+00 MS =-5.1906-01 OT = 1.2427+02

± 2.4 α = 110.1

θ	PO	TO	V	Q	RE	D	R	MW	OW	CMQ	CMT	RFP
	1600.0	1885.0	4.642+03	3.295+02	1.989+06	9.934+03	8.273-01	-3.172-01	1.240+02	7.583-01	-2.919-02	7.713-03
	1600.0	1885.0	4.642+03	3.295+02	1.989+06	9.987+03	7.824-01	-2.999-01	1.239+02	8.239-01	-4.631-02	7.704-03
	1600.0	1885.0	4.642+03	3.295+02	1.989+06	9.931+03	8.190-01	-3.140-01	1.240+02	7.703-01	-3.084-02	7.713-03
	1600.0	1885.0	4.642+03	3.295+02	1.989+06	9.968+03	8.218-01	-3.150-01	1.240+02	7.664-01	-3.277-02	7.712-03
	1600.0	1885.0	4.642+03	3.295+02	1.989+06	9.909+03	7.616-01	-2.920-01	1.238+02	8.541-01	-4.764-02	7.703-03
	1600.0	1885.0	4.642+03	3.295+02	1.989+06	9.987+03	7.395-01	-2.835-01	1.239+02	8.852-01	-3.721-02	7.709-03
	1600.0	1885.0	4.642+03	3.295+02	1.989+06	9.980+03	7.418-01	-2.844-01	1.240+02	8.818-01	-3.594-02	7.710-03
	1600.0	1885.0	4.642+03	3.295+02	1.989+06	9.909+03	8.258-01	-3.166-01	1.238+02	7.616-01	-5.102-02	7.702-03

PRELIMINARY UNCHECKED DATA

APOLLO DYNAMIC STABILITY -C- 304244-500 12/12/62 2201-2419 ~~CONFIDENTIAL~~

ARNOLD ENGINEERING DEVELOPMENT CENTER
von KARMAN GAS DYNAMICS FACILITY
50 - INCH CONTINUOUS HS WIND TUNNEL

RUN NO. 2212 M = 10.180 C1 =-3.8335-01 C2 = 3.3053+01 RSA = 1.0000+00 MS =-5.1906-01 OT = 1.2427+02

± 2.6 α = 105.1

θ	PO	TO	V	Q	RE	D	R	MW	OW	CMQ	CMT	RFP
	1600.0	1885.0	4.642+03	3.295+02	1.989+06	1.054+04	7.932-01	-3.041-01	1.240+02	8.076-01	-3.247-02	7.712-03
	1600.0	1885.0	4.642+03	3.295+02	1.989+06	1.060+04	8.110-01	-3.109-01	1.240+02	7.821-01	-3.545-02	7.710-03
	1600.0	1885.0	4.642+03	3.295+02	1.989+06	1.064+04	7.408-01	-2.840-01	1.237+02	8.854-01	-6.961-02	7.691-03
	1600.0	1885.0	4.642+03	3.295+02	1.989+06	1.058+04	7.856-01	-3.012-01	1.236+02	8.208-01	-7.288-02	7.690-03
	1600.0	1885.0	4.642+03	3.295+02	1.989+06	1.055+04	8.086-01	-3.100-01	1.237+02	7.874-01	-6.826-02	7.692-03
	1600.0	1885.0	4.642+03	3.295+02	1.989+06	1.068+04	7.743-01	-2.968-01	1.236+02	8.371-01	-7.167-02	7.690-03
	1600.0	1885.0	4.642+03	3.295+02	1.989+06	1.060+04	7.872-01	-3.018-01	1.236+02	8.185-01	-7.130-02	7.690-03

PRELIMINARY UNCHECKED DATA

APOLLO DYNAMIC STABILITY -C- 304244-500 12/12/62 2201-2419 ~~CONFIDENTIAL~~

ARNOLD ENGINEERING DEVELOPMENT CENTER
von KARMAN GAS DYNAMICS FACILITY
50 - INCH CONTINUOUS HS WIND TUNNEL

RUN NO. 2213 M = 10.180 C1 =-3.8335-01 C2 = 3.3053+01 RSA = 1.0000+00 MS =-5.1906-01 OT = 1.2427+02

± 2.6 α = 105.1

θ	PO	TO	V	Q	RE	D	R	MW	OW	CMQ	CMT	RFP
	1600.0	1888.0	4.646+03	3.294+02	1.983+06	1.086+04	8.323-01	-3.191-01	1.235+02	7.550-01	-8.637-02	7.676-03
	1600.0	1888.0	4.646+03	3.294+02	1.983+06	1.086+04	7.700-01	-2.952-01	1.237+02	8.441-01	-6.898-02	7.686-03
	1600.0	1888.0	4.646+03	3.294+02	1.983+06	1.095+04	7.649-01	-2.932-01	1.236+02	8.519-01	-7.736-02	7.681-03
	1600.0	1888.0	4.646+03	3.294+02	1.983+06	1.084+04	7.769-01	-2.978-01	1.235+02	8.352-01	-8.566-02	7.676-03
	1600.0	1888.0	4.646+03	3.294+02	1.983+06	1.084+04	7.816-01	-2.996-01	1.236+02	8.278-01	-7.593-02	7.682-03
	1600.0	1888.0	4.646+03	3.294+02	1.983+06	1.083+04	8.494-01	-3.256-01	1.236+02	7.297-01	-7.669-02	7.681-03
	1600.0	1888.0	4.646+03	3.294+02	1.983+06	1.084+04	8.016-01	-3.073-01	1.235+02	7.995-01	-8.723-02	7.676-03

~~CONFIDENTIAL~~

~~CONFIDENTIAL~~

PRELIMINARY UNCHECKED DATA

~~CONFIDENTIAL~~

ARNOLD ENGINEERING DEVELOPMENT CENTER
von KARMAN GAS DYNAMICS FACILITY
50 - INCH CONTINUOUS RS WIND TUNNEL

APOLLO DYNAMIC STABILITY -C- 304244-500 12/12/62 2201-2419

RUN NO. 2214 M = 10.180 C1 =-3.8335-01 C2 = 3.3053+01 RSA = 1.0000+00 MS =-5.1906-01 DT = 1.2427+02

θ	PO	TO	V	Q	RE	D	R	MW	DW	CMQ	CMT	RFP	α
	1600.0	1888.0	4.646+03	3.294+02	1.983+06	1.061+04	7.379-01	-2.829-01	1.240+02	8.883-01	-3.454-02	7.704-03	
	1600.0	1888.0	4.646+03	3.294+02	1.983+06	1.058+04	7.665-01	-2.938-01	1.238+02	8.480-01	-5.028-02	7.696-03	
	1600.0	1888.0	4.646+03	3.294+02	1.983+06	1.055+04	7.744-01	-2.969-01	1.240+02	8.358-01	-3.601-02	7.704-03	
±2.6	1600.0	1888.0	4.646+03	3.294+02	1.983+06	1.059+04	7.573-01	-2.903-01	1.239+02	8.606-01	-3.901-02	7.702-03	105.1
	1600.0	1888.0	4.646+03	3.294+02	1.983+06	1.051+04	7.861-01	-3.014-01	1.238+02	8.197-01	-4.998-02	7.696-03	
	1600.0	1888.0	4.646+03	3.294+02	1.983+06	1.063+04	7.204-01	-2.763-01	1.239+02	9.134-01	-3.708-02	7.703-03	
	1600.0	1888.0	4.646+03	3.294+02	1.983+06	1.047+04	7.979-01	-3.058-01	1.238+02	8.175-01	-5.103-02	7.695-03	

PRELIMINARY UNCHECKED DATA

ARNOLD CENTER
VON KARMAN GAS DYNAMICS FACILITY
50 INCH MACH 10 TUNNEL

~~CONFIDENTIAL~~

APOLLO DYNAMIC STABILITY -C- 304244-500 12/12/62 2301-2419

RUN NO. 2302 M = 10.180 C1 =-5.3301-01 C2 = 3.3053+01 RSA = 1.0000+00 MS =-4.3181-01 DT = 1.2481+02

θ	PO	TO	V	Q	RE	D	R	MW	DW	CMQ	CMT	RFP	α
	1600.0	1888.0	4.646+03	3.294+02	1.983+06	1.033+04	8.220-01	-4.382-01	1.240+02	-2.383-02	-8.622-02	7.709-03	
	1600.0	1888.0	4.646+03	3.294+02	1.983+06	1.033+04	8.116-01	-4.326-01	1.239+02	-2.908-03	-9.739-02	7.703-03	
	1600.0	1888.0	4.646+03	3.294+02	1.983+06	1.030+04	8.696-01	-4.635-01	1.241+02	-1.190-01	-7.914-02	7.713-03	
±2.5	1600.0	1888.0	4.646+03	3.294+02	1.983+06	1.031+04	8.548-01	-4.556-01	1.241+02	-8.940-02	-7.712-02	7.714-03	100.11
	1600.0	1888.0	4.646+03	3.294+02	1.983+06	1.034+04	7.842-01	-4.180-01	1.240+02	5.196-02	-9.148-02	7.706-03	
	1600.0	1888.0	4.646+03	3.294+02	1.983+06	1.037+04	8.168-01	-4.353-01	1.243+02	-1.326-02	-5.436-02	7.727-03	
	1600.0	1888.0	4.646+03	3.294+02	1.983+06	1.040+04	8.115-01	-4.326-01	1.242+02	-2.790-03	-6.586-02	7.721-03	
	1600.0	1888.0	4.646+03	3.294+02	1.983+06	1.017+04	8.535-01	-4.549-01	1.244+02	-8.661-02	-4.813-02	7.730-03	

Multiply this column by 0.6926 for Runs 2302 thru 2306

~~CONFIDENTIAL~~ - Multiply this column by (-1) for Runs 2302 thru 2306

~~CONFIDENTIAL~~

~~CONFIDENTIAL~~

PRELIMINARY UNCHECKED DATA

ARNOLD CENTER
VON KARMAN GAS DYNAMICS FACILITY
50 INCH MACH 10 TUNNEL
APOLLO DYNAMIC STABILITY -C- 304244-500 12/12/62 2301-2419

~~CONFIDENTIAL~~

RUN NO. 2303 M = 10.180 C1 =-5.3301-01 C2 = 3.3053+01 RSA = 1.0000+00 MS =-4.3181-01 OT = 1.2481+02

θ	PO	TO	V	Q	RE	D	R	MW	OW	CMQ	CMT	RFP	α
	1600.0	1888.0	4.646+03	3.294+02	1.983+06	1.040+04	7.367-01	-3.926-01	1.238+02	1.475-01	-1.130-01	7.695-03	100.11
	1600.0	1888.0	4.646+03	3.294+02	1.983+06	1.043+04	7.506-01	-4.001-01	1.238+02	1.194-01	-1.120-01	7.695-03	
±2.5	1600.0	1888.0	4.646+03	3.294+02	1.983+06	1.040+04	7.804-01	-4.160-01	1.237+02	5.970-02	-1.258-01	7.688-03	
	1600.0	1888.0	4.646+03	3.294+02	1.983+06	1.035+04	7.571-01	-4.036-01	1.238+02	1.064-01	-1.140-01	7.694-03	
	1600.0	1888.0	4.646+03	3.294+02	1.983+06	1.041+04	7.238-01	-3.858-01	1.238+02	1.733-01	-1.132-01	7.694-03	
	1600.0	1888.0	4.646+03	3.294+02	1.983+06	1.046+04	7.488-01	-3.991-01	1.237+02	1.232-01	-1.287-01	7.686-03	

PRELIMINARY UNCHECKED DATA

ARNOLD CENTER
VON KARMAN GAS DYNAMICS FACILITY
50 INCH MACH 10 TUNNEL
APOLLO DYNAMIC STABILITY -C- 304244-500 12/12/62 2301-2419

~~CONFIDENTIAL~~

RUN NO. 2304 M = 10.180 C1 =-5.3301-01 C2 = 3.3053+01 RSA = 1.0000+00 MS =-4.3181-01 OT = 1.2481+02

θ	PO	TO	V	Q	RE	D	R	MW	OW	CMQ	CMT	RFP	α
	1600.0	1888.0	4.646+03	3.294+02	1.983+06	1.018+04	7.314-01	-3.898-01	1.238+02	1.581-01	-1.180-01	7.692-03	100.11
	1600.0	1888.0	4.646+03	3.294+02	1.983+06	1.015+04	7.499-01	-3.997-01	1.238+02	1.209-01	-1.175-01	7.692-03	
	1600.0	1888.0	4.646+03	3.294+02	1.983+06	1.014+04	7.282-01	-3.882-01	1.236+02	1.646-01	-1.335-01	7.683-03	
±2.5	1600.0	1888.0	4.646+03	3.294+02	1.983+06	1.016+04	7.331-01	-3.908-01	1.237+02	1.546-01	-1.200-01	7.691-03	
	1600.0	1888.0	4.646+03	3.294+02	1.983+06	1.020+04	7.602-01	-4.052-01	1.236+02	1.003-01	-1.358-01	7.682-03	
	1600.0	1888.0	4.646+03	3.294+02	1.983+06	1.024+04	7.646-01	-4.076-01	1.237+02	9.138-02	-1.221-01	7.690-03	

PRELIMINARY UNCHECKED DATA

ARNOLD CENTER
VON KARMAN GAS DYNAMICS FACILITY
50 INCH MACH 10 TUNNEL
APOLLO DYNAMIC STABILITY -C- 304244-500 12/12/62 2301-2419

~~CONFIDENTIAL~~

RUN NO. 2306 M = 10.180 C1 =-5.3301-01 C2 = 3.3053+01 RSA = 1.0000+00 MS =-4.3181-01 OT = 1.2481+02

θ	PO	TO	V	Q	RE	D	R	MW	OW	CMQ	CMT	RFP	α
	[illegible]	[illegible]	[illegible]	3.294+02	[illegible]	[illegible]	[illegible]	[illegible]	[illegible]	[illegible]	1.705-02	7.766-03	120.0
	1600.0	1888.0	4.646+03	3.294+02	1.983+06	1.073+04	8.154-01	-4.346-01	1.250+02	-1.037-02	1.637-02	7.766-03	
	1600.0	1888.0	4.646+03	3.294+02	1.983+06	1.074+04	7.998-01	-4.242-01	1.248+02	2.848-02	3.378-03	7.759-03	
±2.6	1600.0	1888.0	4.646+03	3.294+02	1.983+06	1.068+04	8.164-01	-4.352-01	1.249+02	-1.249-02	1.516-02	7.765-03	
	1600.0	1888.0	4.646+03	3.294+02	1.983+06	1.075+04	8.034-01	-4.282-01	1.249+02	1.333-02	1.630-02	7.766-03	
	1600.0	1888.0	4.646+03	3.294+02	1.983+06	1.077+04	7.901-01	-4.211-01	1.249+02	3.994-02	1.570-02	7.765-03	
	1600.0	1888.0	4.646+03	3.294+02	1.983+06	1.057+04	8.188-01	-4.364-01	1.249+02	-1.728-02	7.116-03	7.761-03	
	1600.0	1888.0	4.646+03	3.294+02	1.983+06	1.042+04	8.041-01	-4.286-01	1.249+02	1.196-02	1.520-02	7.765-03	

~~CONFIDENTIAL~~

~~CONFIDENTIAL~~

PRELIMINARY UNCHECKED DATA

ARNOLD CENTER
VON KARMAN GAS DYNAMICS FACILITY
50 INCH MACH 10 TUNNEL
APOLLO DYNAMIC STABILITY -C- 304244-500 12/12/62 2401-2419 ~~CONFIDENTIAL~~

RUN NO. 2402 M = 10.180 C1 =-1.2778+00 C2 = 3.3053+01 RSA = 1.0000+00 MS =-7.3408-01 DT = 1.2252+02

θ ±2.6

PC	TC	V	Q	RE	C	R	MW	CW	CMC	CMT	RFP	α
1600.0	1878.0	4.634+03	3.297+02	2.005+06	1.092+04	6.321-01	-8.077-01	1.231+02	-2.780-01	6.743-02	7.671-03	
1600.0	1878.0	4.634+03	3.297+02	2.005+06	1.089+04	6.415-01	-8.198-01	1.230+02	-3.238-01	5.248-02	7.663-03	
1600.0	1878.0	4.634+03	3.297+02	2.005+06	1.084+04	6.541-01	-8.358-01	1.231+02	-3.839-01	6.499-02	7.670-03	
1600.0	1878.0	4.634+03	3.297+02	2.005+06	1.085+04	6.471-01	-8.268-01	1.231+02	-3.500-01	6.717-02	7.671-03	35
1600.0	1878.0	4.634+03	3.297+02	2.005+06	1.086+04	6.438-01	-8.227-01	1.230+02	-3.348-01	5.082-02	7.662-03	
1600.0	1878.0	4.634+03	3.297+02	2.005+06	1.088+04	6.267-01	-8.008-01	1.230+02	-2.520-01	6.103-02	7.668-03	
1600.0	1878.0	4.634+03	3.297+02	2.005+06	1.072+04	6.590-01	-8.422-01	1.233+02	-4.072-01	9.100-02	7.684-03	

Multiply this column by 0.6426 for Runs 2402 thru 2414.

~~CONFIDENTIAL~~ Multiply this column by (-1) for Runs 2402 thru 2414.

PRELIMINARY UNCHECKED DATA

ARNOLD CENTER
VON KARMAN GAS DYNAMICS FACILITY
50 INCH MACH 10 TUNNEL
APOLLO DYNAMIC STABILITY -C- 304244-500 12/12/62 2401-2419 ~~CONFIDENTIAL~~

RUN NO. 2403 M = 10.180 C1 =-1.2778+00 C2 = 3.3053+01 RSA = 1.0000+00 MS =-7.3408-01 DT = 1.2252+02

θ ±2.7

PC	TC	V	Q	RE	C	R	MW	CW	CMC	CMT	RFP	α
1600.0	1878.0	4.634+03	3.297+02	2.005+06	1.123+04	6.349-01	-8.113-01	1.230+02	-2.918-01	5.444-02	7.664-03	
1600.0	1878.0	4.634+03	3.297+02	2.005+06	1.120+04	6.399-01	-8.177-01	1.229+02	-3.164-01	3.960-02	7.656-03	
1600.0	1878.0	4.634+03	3.297+02	2.005+06	1.120+04	6.344-01	-8.107-01	1.230+02	-2.893-01	5.234-02	7.663-03	
1600.0	1878.0	4.634+03	3.297+02	2.005+06	1.115+04	6.451-01	-8.243-01	1.230+02	-3.410-01	5.110-02	7.662-03	35
1600.0	1878.0	4.634+03	3.297+02	2.005+06	1.124+04	6.202-01	-7.925-01	1.228+02	-2.710-01	3.601-02	7.654-03	
1600.0	1878.0	4.634+03	3.297+02	2.005+06	1.127+04	6.186-01	-7.905-01	1.230+02	-2.130-01	5.099-02	7.662-03	
1600.0	1878.0	4.634+03	3.297+02	2.005+06	1.108+04	6.222-01	-7.951-01	1.229+02	-2.307-01	4.801-02	7.661-03	
1600.0	1878.0	4.634+03	3.297+02	2.005+06	1.096+04	6.601-01	-8.435-01	1.228+02	-4.140-01	3.575-02	7.654-03	

~~CONFIDENTIAL~~

PRELIMINARY UNCHECKED DATA

~~CONFIDENTIAL~~

ARNOLD CENTER
VON KARMAN GAS DYNAMICS FACILITY
50 INCH MACH 10 TUNNEL
APOLLO DYNAMIC STABILITY -C- 304244-500 12/12/62 2401-2419

RUN NO. 2404 P = 10.180 C1 =-1.2778+00 C2 = 3.3053+01 RSA = 1.0000+00 MS =-7.3408-01 DT = 1.2252+02

θ ±2.8

PO	TO	V	Q	RE	D	R	MW	OW	CMQ	CMT	RFP	α
1600.0	1878.0	4.634+03	3.297+02	2.005+06	1.158+04	6.432-01	-8.220-01	1.233+02	-3.311-01	9.029-02	7.683-03	
1600.0	1878.0	4.634+03	3.297+02	2.005+06	1.152+04	6.078-01	-7.702-01	1.231+02	-1.365-01	6.915-02	7.672-03	
1600.0	1878.0	4.634+03	3.297+02	2.005+06	1.153+04	6.465-01	-8.287-01	1.228+02	-3.578-01	3.549-02	7.654-03	
1600.0	1878.0	4.634+03	3.297+02	2.005+06	1.152+04	6.438-01	-8.227-01	1.229+02	-3.347-01	4.826-02	7.661-03	35
1600.0	1878.0	4.634+03	3.297+02	2.005+06	1.155+04	6.406-01	-8.186-01	1.229+02	-3.193-01	4.849-02	7.661-03	
1600.0	1878.0	4.634+03	3.297+02	2.005+06	1.160+04	6.256-01	-7.995-01	1.228+02	-2.474-01	3.407-02	7.653-03	
1600.0	1878.0	4.634+03	3.297+02	2.005+06	1.153+04	6.256-01	-7.995-01	1.229+02	-2.471-01	4.779-02	7.661-03	
1600.0	1878.0	4.634+03	3.297+02	2.005+06	1.127+04	6.300-01	-8.050-01	1.229+02	-2.681-01	4.776-02	7.661-03	

PRELIMINARY UNCHECKED DATA

ARNOLD CENTER
VON KARMAN GAS DYNAMICS FACILITY
50 INCH MACH 10 TUNNEL
APOLLO DYNAMIC STABILITY -C- 304244-500 12/12/62 2401-2419

~~CONFIDENTIAL~~

RUN NO. 2406 P = 10.180 C1 =-1.2778+00 C2 = 3.3053+01 RSA = 1.0000+00 MS =-7.3408-01 DT = 1.2252+02

θ ±2.8

PO	TO	V	Q	RE	D	R	MW	OW	CMQ	CMT	RFP	α
1600.0	1878.0	4.634+03	3.297+02	2.005+06	1.141+04	7.773-01	-9.933-01	1.231+02	-9.782-01	6.704-02	7.671-03	
1600.0	1878.0	4.634+03	3.297+02	2.005+06	1.144+04	7.621-01	-9.738-01	1.231+02	-9.050-01	6.328-02	7.669-03	
1600.0	1878.0	4.634+03	3.297+02	2.005+06	1.147+04	7.465-01	-9.539-01	1.229+02	-8.308-01	4.800-02	7.661-03	40
1600.0	1878.0	4.634+03	3.297+02	2.005+06	1.144+04	7.463-01	-9.537-01	1.230+02	-8.291-01	5.984-02	7.667-03	
1600.0	1878.0	4.634+03	3.297+02	2.005+06	1.156+04	7.338-01	-9.376-01	1.231+02	-7.684-01	6.252-02	7.669-03	
1600.0	1878.0	4.634+03	3.297+02	2.005+06	1.137+04	7.664-01	-9.793-01	1.229+02	-9.267-01	4.944-02	7.662-03	
1600.0	1878.0	4.634+03	3.297+02	2.005+06	1.111+04	7.717-01	-9.861-01	1.231+02	-9.514-01	6.544-02	7.670-03	

PRELIMINARY UNCHECKED DATA

~~CONFIDENTIAL~~

ARNOLD CENTER
VON KARMAN GAS DYNAMICS FACILITY
50 INCH MACH 10 TUNNEL
APOLLO DYNAMIC STABILITY -C- 304244-500 12/12/62 2401-2419

RUN NO. 2407 P = 10.180 C1 =-1.2778+00 C2 = 3.3053+01 RSA = 1.0000+00 MS =-7.3408-01 DT = 1.2252+02

θ ±2.8

PO	TO	V	Q	RE	D	R	MW	OW	CMQ	CMT	RFP	α
1600.0	1878.0	4.634+03	3.297+02	2.005+06	1.150+04	7.363-01	-9.409-01	1.230+02	-7.812-01	5.304-02	7.663-03	
~~1600.0~~	~~1878.0~~	~~4.634+03~~	~~3.297+02~~	~~2.005+06~~	~~1.154+04~~	~~7.260-01~~	~~-9.280+01~~	~~1.230+02~~	~~-7.026-01~~	~~5.468-02~~	~~7.664-03~~	
1600.0	1878.0	4.634+03	3.297+02	2.005+06	1.162+04	6.958-01	-8.891-01	1.233+02	-5.839-01	9.064-02	7.684-03	40
1600.0	1878.0	4.634+03	3.297+02	2.005+06	1.160+04	6.985-01	-8.926-01	1.234+02	-5.966-01	1.048-01	7.691-03	
1600.0	1878.0	4.634+03	3.297+02	2.005+06	1.164+04	6.960-01	-8.894-01	1.234+02	-5.845-01	1.050-01	7.691-03	
1600.0	1878.0	4.634+03	3.297+02	2.005+06	1.137+04	7.135-01	-9.117-01	1.233+02	-6.693-01	8.908-02	7.683-03	
1600.0	1878.0	4.634+03	3.297+02	2.005+06	1.129+04	7.245-01	-9.258-01	1.234+02	-7.219-01	1.034-01	7.691-03	

~~CONFIDENTIAL~~

PRELIMINARY UNCHECKED DATA

~~CONFIDENTIAL~~

ARNOLD CENTER
VON KARMAN GAS DYNAMICS FACILITY
50 INCH MACH 10 TUNNEL
APOLLO DYNAMIC STABILITY -C- 304244-500 12/12/62 2401-2419

RUN NO. 2408 M = 10.180 C1 =-1.2778+00 C2 = 3.3053+01 RSA = 1.0000+00 MS =-7.3408-01 OT = 1.2252+02

θ	PO	TO	V	Q	RE	D	R	MW	OW	CMQ	CMT	RFP	α
	1600.0	1878.0	4.634+03	3.297+02	2.005+06	1.063+04	7.481-01	-9.560-01	1.235+02	-8.348-01	1.143-01	7.696-03	
	1600.0	1878.0	4.634+03	3.297+02	2.005+06	1.057+04	7.657-01	-9.784-01	1.234+02	-9.201-01	1.005-01	7.689-03	
±2.6	1600.0	1878.0	4.634+03	3.297+02	2.005+06	1.061+04	7.541-01	-9.637-01	1.235+02	-8.638-01	1.117-01	7.695-03	40
	1600.0	1878.0	4.634+03	3.297+02	2.005+06	1.069+04	7.308-01	-9.339-01	1.233+02	-7.525-01	9.385-02	7.685-03	
	1600.0	1878.0	4.634+03	3.297+02	2.005+06	1.071+04	7.211-01	-9.214-01	1.234+02	-7.050-01	1.070-01	7.692-03	
	1600.0	1878.0	4.634+03	3.297+02	2.005+06	1.073+04	7.293-01	-9.319-01	1.235+02	-7.443-01	1.093-01	7.694-03	
	1600.0	1878.0	4.634+03	3.297+02	2.005+06	1.071+04	7.370-01	-9.418-01	1.233+02	-7.824-01	9.585-02	7.686-03	

Multiply this column by 0.6926 for Runs 2402 thru 2414.

~~CONFIDENTIAL~~ Multiply this column by (-1) for Runs 2402 thru 2414.

PRELIMINARY UNCHECKED DATA

~~CONFIDENTIAL~~

ARNOLD CENTER
VON KARMAN GAS DYNAMICS FACILITY
50 INCH MACH 10 TUNNEL
APOLLO DYNAMIC STABILITY -C- 304244-500 12/12/62 2401-2419

RUN NO. 2409 M = 10.180 C1 =-1.2778+00 C2 = 3.3053+01 RSA = 1.0000+00 MS =-7.3408-01 OT = 1.2252+02

θ	PO	TO	V	Q	RE	D	R	MW	OW	CMQ	CMT	RFP	α
	1600.0	1878.0	4.634+03	3.297+02	2.005+06	1.077+04	6.737-01	-8.609-01	1.237+02	-4.762-01	1.412-01	7.711-03	
±2.6	1600.0	1878.0	4.634+03	3.297+02	2.005+06	1.086+04	6.522-01	-8.334-01	1.238+02	-3.728-01	1.440-01	7.712-03	44.95
	1600.0	1878.0	4.634+03	3.297+02	2.005+06	1.085+04	6.532-01	-8.347-01	1.236+02	-3.781-01	1.269-01	7.703-03	
	1600.0	1878.0	4.634+03	3.297+02	2.005+06	1.080+04	6.542-01	-8.359-01	1.237+02	-3.824-01	1.412-01	7.711-03	
	1600.0	1878.0	4.634+03	3.297+02	2.005+06	1.085+04	6.466-01	-8.263-01	1.238+02	-3.461-01	1.434-01	7.712-03	
	1600.0	1878.0	4.634+03	3.297+02	2.005+06	1.089+04	6.541-01	-8.359-01	1.238+02	-3.821-01	1.429-01	7.712-03	
	1600.0	1878.0	4.634+03	3.297+02	2.005+06	1.072+04	6.735-01	-8.606-01	1.237+02	-4.752-01	1.395-01	7.710-03	

~~CONFIDENTIAL~~

~~CONFIDENTIAL~~

PRELIMINARY UNCHECKED DATA

ARNOLD CENTER
VON KARMAN GAS DYNAMICS FACILITY
50 INCH MACH 10 TUNNEL
APOLLO DYNAMIC STABILITY -C- 304244-500 12/12/62 2401-2419

~~CONFIDENTIAL~~

RUN NO. 2410 M = 10.180 C1 =-1.2778+00 C2 = 3.3053+01 RSA = 1.0000+00 MS =-7.3408-01 OT = 1.2252+02

θ α

PO	TO	V	Q	RE	D	R	MW	OW	CMQ	CMT	RFP
~~1600.0~~	~~1878.0~~	~~4.634+03~~	~~3.297+02~~	~~2.005+06~~	~~1.128+04~~	~~7.681-01~~	~~-9.423-01~~	~~1.232+02~~	~~-9.358-01~~	~~4.416-02~~	~~7.680-03~~
~~1600.0~~	~~1878.0~~	~~4.634+03~~	~~3.297+02~~	~~2.005+06~~	~~1.127+04~~	~~7.680-01~~	~~-9.416-01~~	~~1.229+02~~	~~-9.351-01~~	~~4.416-02~~	~~7.657-03~~
1600.0	1878.0	4.634+03	3.297+02	2.005+06	1.126+04	7.458-01	-9.430-01	1.229+02	-8.276-01	4.321-02	7.658-03
1600.0	1878.0	4.634+03	3.297+02	2.005+06	1.126+04	7.560-01	-9.660-01	1.229+02	-8.766-01	4.343-02	7.658-03
1600.0	1878.0	4.634+03	3.297+02	2.005+06	1.125+04	7.541-01	-9.636-01	1.227+02	-8.688-01	2.588-02	7.649-03
1600.0	1878.0	4.634+03	3.297+02	2.005+06	1.098+04	7.842-01	-1.002+00	1.229+02	-1.013+00	3.975-02	7.656-03

±2.7 30.1

PRELIMINARY UNCHECKED DATA

ARNOLD CENTER
VON KARMAN GAS DYNAMICS FACILITY
50 INCH MACH 10 TUNNEL
APOLLO DYNAMIC STABILITY -C- 304244-500 12/12/62 2401-2419

~~CONFIDENTIAL~~

RUN NO. 2411 M = 10.180 C1 =-1.2778+00 C2 = 3.3053+01 RSA = 1.0000+00 MS =-7.3408-01 OT = 1.2252+02

θ α

PO	TO	V	Q	RE	D	R	MW	OW	CMQ	CMT	RFP
~~1600.0~~	~~1878.0~~	~~4.634+03~~	~~3.297+02~~	~~2.005+06~~	~~1.118+04~~	~~8.015-01~~	~~-1.024+00~~	~~1.231+02~~	~~-1.095+00~~	~~7.143-02~~	~~7.673-03~~
~~1600.0~~	~~1878.0~~	~~4.634+03~~	~~3.297+02~~	~~2.005+06~~	~~1.114+04~~	~~8.083-01~~	~~-1.033+00~~	~~1.227+02~~	~~-1.131+00~~	~~2.556-02~~	~~7.649-03~~
1600.0	1878.0	4.634+03	3.297+02	2.005+06	1.112+04	8.107-01	-1.036+00	1.228+02	-1.142+00	3.063-02	7.651-03
1600.0	1878.0	4.634+03	3.297+02	2.005+06	1.120+04	7.936-01	-1.014+00	1.228+02	-1.059+00	3.224-02	7.652-03
1600.0	1878.0	4.634+03	3.297+02	2.005+06	1.111+04	8.209-01	-1.048+00	1.232+02	-1.186+00	7.451-02	7.675-03
1600.0	1878.0	4.634+03	3.297+02	2.005+06	1.095+04	8.232-01	-1.052+00	1.232+02	-1.199+00	7.427-02	7.675-03

±2.7 30.1

PRELIMINARY UNCHECKED DATA

ARNOLD CENTER
VON KARMAN GAS DYNAMICS FACILITY
50 INCH MACH 10 TUNNEL
APOLLO DYNAMIC STABILITY -C- 304244-500 12/12/62 2401-2419

~~CONFIDENTIAL~~

RUN NO. 2412 M = 10.180 C1 =-1.2778+00 C2 = 3.3053+01 RSA = 1.0000+00 MS =-7.3408-01 OT = 1.2252+02

θ α

PO	TO	V	Q	RE	D	R	MW	OW	CMQ	CMT	RFP
1600.0	1878.0	4.634+03	3.297+02	2.005+06	1.114+04	7.982-01	-1.020+00	1.232+02	-1.078+00	7.632-02	7.676-03
1600.0	1878.0	4.634+03	3.297+02	2.005+06	1.115+04	7.909-01	-1.011+00	1.230+02	-1.044+00	5.467-02	7.664-03
~~1600.0~~	~~1878.0~~	~~4.634+03~~	~~3.297+02~~	~~2.005+06~~	~~1.116+04~~	~~7.958-01~~	~~-1.013+00~~	~~1.231+02~~	~~-1.067+00~~	~~6.691-02~~	~~7.671-03~~
1600.0	1878.0	4.634+03	3.297+02	2.005+06	1.113+04	7.916-01	-1.012+00	1.230+02	-1.048+00	5.558-02	7.665-03
1600.0	1878.0	4.634+03	3.297+02	2.005+06	1.124+04	7.856-01	-1.004+00	1.231+02	-1.018+00	6.742-02	7.671-03
1600.0	1878.0	4.634+03	3.297+02	2.005+06	1.110+04	8.098-01	-1.035+00	1.231+02	-1.135+00	7.217-02	7.674-03
1600.0	1878.0	4.634+03	3.297+02	2.005+06	1.107+04	8.089-01	-1.034+00	1.230+02	-1.131+00	5.394-02	7.664-03

±2.7 30.1

~~CONFIDENTIAL~~

~~CONFIDENTIAL~~

PRELIMINARY UNCHECKED DATA

ARNOLD CENTER
VON KARMAN GAS DYNAMICS FACILITY
50 INCH MACH 10 TUNNEL
APOLLO DYNAMIC STABILITY -C- 304244-500 12/12/62 2401-2419

~~CONFIDENTIAL~~

RUN NO. 2413 M = 10.180 C1 =-1.2778+00 C2 = 3.3053+01 RSA = 1.0000+00 MS =-7.3408-01 DT = 1.2252+02

θ ±2.6

PO	TO	V	Q	RE	D	R	MW	OW	CMQ	CMT	RFP	α
1600.0	1878.0	4.634+03	3.297+02	2.005+06	1.087+04	7.961-01	-1.017+00	1.235+02	-1.065+00	1.106-01	7.694-03	
1600.0	1878.0	4.634+03	3.297+02	2.005+06	1.090+04	7.858-01	-1.004+00	1.235+02	-1.016+00	1.129-01	7.696-03	
1600.0	1878.0	4.634+03	3.297+02	2.005+06	1.087+04	7.935-01	-1.014+00	1.234+02	-1.054+00	9.922-02	7.688-03	
1600.0	1878.0	4.634+03	3.297+02	2.005+06	1.082+04	8.006-01	-1.023+00	1.235+02	-1.087+00	1.159-01	7.697-03	25.1
1600.0	1878.0	4.634+03	3.297+02	2.005+06	1.082+04	7.868-01	-1.005+00	1.235+02	-1.020+00	1.142-01	7.696-03	
1600.0	1878.0	4.634+03	3.297+02	2.005+06	1.085+04	8.003-01	-1.023+00	1.234+02	-1.086+00	1.017-01	7.690-03	
1600.0	1878.0	4.634+03	3.297+02	2.005+06	1.088+04	8.055-01	-1.029+00	1.235+02	-1.110+00	1.160-01	7.697-03	
1600.0	1878.0	4.634+03	3.297+02	2.005+06	1.066+04	8.231-01	-1.052+00	1.235+02	-1.195+00	1.167-01	7.698-03	

PRELIMINARY UNCHECKED DATA

ARNOLD CENTER
VON KARMAN GAS DYNAMICS FACILITY
50 INCH MACH 10 TUNNEL
APOLLO DYNAMIC STABILITY -C- 304244-500 12/12/62 2401-2419

~~CONFIDENTIAL~~

RUN NO. 2414 M = 10.180 C1 =-1.2778+00 C2 = 3.3053+01 RSA = 1.0000+00 MS =-7.3408-01 DT = 1.2252+02

θ ±2.6

PO	TO	V	Q	RE	D	R	MW	OW	CMQ	CMT	RFP	α
1600.0	1878.0	4.634+03	3.297+02	2.005+06	1.088+04	8.003-01	-1.023+00	1.231+02	-1.089+00	7.107-02	7.673-03	
1600.0	1878.0	4.634+03	3.297+02	2.005+06	1.091+04	7.767-01	-9.925-01	1.230+02	-9.761-01	5.438-02	7.664-03	
1600.0	1878.0	4.634+03	3.297+02	2.005+06	1.088+04	7.834-01	-1.001+00	1.231+02	-1.008+00	6.614-02	7.671-03	
1600.0	1878.0	4.634+03	3.297+02	2.005+06	1.089+04	7.826-01	-1.000+00	1.231+02	-1.004+00	6.296-02	7.669-03	25.1
1600.0	1878.0	4.634+03	3.297+02	2.005+06	1.084+04	7.870-01	-1.006+00	1.229+02	-1.022+00	4.328-02	7.654-03	
1600.0	1878.0	4.634+03	3.297+02	2.005+06	1.086+04	7.886-01	-1.008+00	1.235+02	-1.030+00	1.087-01	7.693-03	
1600.0	1878.0	4.634+03	3.297+02	2.005+06	1.082+04	7.754-01	-9.909-01	1.233+02	-9.676-01	8.803-02	7.682-03	

ARNOLD CENTER
VON KARMAN GAS DYNAMICS FACILITY
50 INCH MACH 10 TUNNEL
APOLLO DYNAMIC STABILITY -C- 304244-500 12/12/62 2501-2809

~~CONFIDENTIAL~~

RUN NO. 2502 M = 10.180 C1 =-1.2778+00 C2 = 2.2894+01 RSA = 1.0000+00 MS =-6.9770-01 DT = 1.2221+02

θ ±2.6

PO	TO	V	Q	RE	D	R	MW	OW	CMQ	CMT	RFP	α
1600.0	1878.0	4.634+03	3.297+02	2.005+06	1.066+04	6.815-01	-8.708-01	1.237+02	-4.502-01	-1.233-01	7.711-03	
1600.0	1878.0	4.634+03	3.297+02	2.005+06	1.080+04	6.898-01	-8.814-01	1.237+02	-4.778-01	-1.212-01	7.709-03	
1600.0	1878.0	4.634+03	3.297+02	2.005+06	1.074+04	6.884-01	-8.796-01	1.237+02	-4.731-01	-1.240-01	7.711-03	45.03
1600.0	1878.0	4.634+03	3.297+02	2.005+06	1.107+04	6.794-01	-8.682-01	1.235+02	-4.443-01	-1.018-01	7.694-03	

~~CONFIDENTIAL~~

~~CONFIDENTIAL~~

ARNOLD CENTER
VON KARMAN GAS DYNAMICS FACILITY
50 INCH MACH 10 TUNNEL
APOLLO DYNAMIC STABILITY -C- 304244-500 12/12/62 2501-2809

RUN NO. 2503 M = 10.180 C1 =-1.2778+00 C2 = 2.2894+01 RSA = 1.0000+00 MS =-6.9770-01 OT = 1.2221+02

θ	PO	TO	V	Q	RE	D	R	MW	OW	CMQ	CMT	RFP	α
	1600.0	1878.0	4.634+03	3.297+02	2.005+06	1.022+04	7.675-01	-9.807-01	1.238+02	-7.356-01	-1.280-01	7.714-03	
	1600.0	1878.0	4.634+03	3.297+02	2.005+06	1.052+04	7.591-01	-9.701-01	1.238+02	-7.077-01	-1.310-01	7.717-03	
±2.5	1600.0	1878.0	4.634+03	3.297+02	2.005+06	1.018+04	7.627-01	-9.746-01	1.241+02	-7.182-01	-1.495-01	7.731-03	50
	1600.0	1878.0	4.634+03	3.297+02	2.005+06	1.067+04	7.459-01	-9.532-01	1.240+02	-6.630-01	-1.441-01	7.727-03	

ARNOLD CENTER
VON KARMAN GAS DYNAMICS FACILITY
50 INCH MACH 10 TUNNEL
APOLLO DYNAMIC STABILITY -C- 304244-500 12/12/62 2501-2809

RUN NO. 2504 M = 10.180 C1 =-1.2778+00 C2 = 2.2894+01 RSA = 1.0000+00 MS =-6.9770-01 OT = 1.2221+02

θ	PO	TO	V	Q	RE	D	R	MW	OW	CMQ	CMT	RFP	α
	1600.0	1878.0	4.634+03	3.297+02	2.005+06	1.045+04	7.627-01	-9.746-01	1.225+02	-7.274-01	-2.288-02	7.633-03	
±2.5	1600.0	1878.0	4.634+03	3.297+02	2.005+06	1.029+04	7.614-01	-9.730-01	1.232+02	-7.187-01	-8.325-02	7.680-03	50
	1600.0	1878.0	4.634+03	3.297+02	2.005+06	1.050+04	7.581-01	-9.687-01	1.227+02	-7.104-01	-4.222-02	7.648-03	
	1600.0	1878.0	4.634+03	3.297+02	2.005+06	1.089+04	7.366-01	-9.412-01	1.227+02	-6.383-01	-4.314-02	7.649-03	

PRELIMINARY UNCHECKED DATA

~~CONFIDENTIAL~~

ARNOLD ENGINEERING DEVELOPMENT CENTER
von KARMAN GAS DYNAMICS FACILITY
50 - INCH CONTINUOUS [illegible]

APOLLO DYNAMIC STABILITY -C- 304244-500 12/12/62 2501-2809

RUN NO. 2702 M = 10.180 C1 =-5.1114+00 C2 = 3.3053+01 RSA = 1.0000+00 MS =-2.2823+00 OT = 1.2112+02

θ	PO	TO	V	Q	RE	D	R	MW	OW	CMQ	CMT	RFP	α
	1600.0	1900.0	4.661+03	3.290+02	1.957+06	1.208+04	5.619-01	-2.872+00	1.234+02	-2.237+00	2.741-01	7.648-03	
	1600.0	1900.0	4.661+03	3.290+02	1.957+06	1.216+04	5.473-01	-2.797+00	1.233+02	-1.957+00	2.557-01	7.638-03	
±3.0	1600.0	1900.0	4.661+03	3.290+02	1.957+06	1.215+04	5.428-01	-2.775+00	1.235+02	-1.867+00	2.750-01	7.649-03	9.98
	1600.0	1900.0	4.661+03	3.290+02	1.957+06	1.220+04	5.334-01	-2.726+00	1.234+02	-1.685+00	2.703-01	7.646-03	
	1600.0	1900.0	4.661+03	3.290+02	1.957+06	1.233+04	5.218-01	-2.667+00	1.233+02	-1.462+00	2.563-01	7.639-03	
	1600.0	1900.0	4.661+03	3.290+02	1.957+06	1.222+04	5.253-01	-2.685+00	1.234+02	-1.528+00	2.734-01	7.648-03	
	1600.0	1900.0	4.661+03	3.290+02	1.957+06	1.199+04	5.361-01	-2.740+00	1.234+02	-1.738+00	2.668-01	7.644-03	
	1600.0	1900.0	4.661+03	3.290+02	1.957+06	1.189+04	5.454-01	-2.788+00	1.234+02	-1.918+00	2.679-01	7.645-03	

Multiply this column by 0.6926 for Runs 2702 thru 2713

~~CONFIDENTIAL~~

Multiply this column by (-1) for Runs 2702 thru 2713

~~CONFIDENTIAL~~

[redacted]

PRELIMINARY UNCHECKED DATA

APOLLO DYNAMIC STABILITY -C- 304244-500 12/12/62 2501-2809

[redacted]

ARNOLD ENGINEERING DEVELOPMENT CENTER
von KARMAN GAS DYNAMICS FACILITY
50 - INCH CONTINUOUS HS WIND TUNNEL

RUN NO. 2703 M = 10.180 C1 =-3.8335+00 C2 = 3.3053+01 RSA = 1.0000+00 MS =-2.2823+00 OT = 1.2112+02

θ = ±2.6 α = 9.98

PO	TO	V	Q	RE	D	R	MW	DW	CMQ	CMT	RFP
1600.0	1900.0	4.661+03	3.290+02	1.957+06	1.058+04	6.328-01	-2.426+00	1.233+02	-5.448-01	2.623-01	7.642-03
1600.0	1900.0	4.661+03	3.290+02	1.957+06	1.055+04	6.376-01	-2.444+00	1.232+02	-6.149-01	2.476-01	7.634-03
1600.0	1900.0	4.661+03	3.290+02	1.957+06	1.042+04	6.543-01	-2.508+00	1.234+02	-8.578-01	2.638-01	7.643-03
1600.0	1900.0	4.661+03	3.290+02	1.957+06	1.050+04	6.433-01	-2.466+00	1.233+02	-6.986-01	2.623-01	7.642-03
1600.0	1900.0	4.661+03	3.290+02	1.957+06	1.048+04	6.446-01	-2.471+00	1.233+02	-7.178-01	2.520-01	7.637-03
1600.0	1900.0	4.661+03	3.290+02	1.957+06	1.060+04	6.224-01	-2.386+00	1.233+02	-3.939-01	2.621-01	7.642-03
1600.0	1900.0	4.661+03	3.290+02	1.957+06	1.062+04	6.268-01	-2.403+00	1.234+02	-4.577-01	2.670-01	7.644-03
1600.0	1900.0	4.661+03	3.290+02	1.957+06	1.053+04	6.425-01	-2.463+00	1.232+02	-6.862-01	2.498-01	7.635-03

PRELIMINARY UNCHECKED DATA

APOLLO DYNAMIC STABILITY -C- 304244-500 12/12/62 2501-2809

[redacted]

ARNOLD ENGINEERING DEVELOPMENT CENTER
von KARMAN GAS DYNAMICS FACILITY
50 - INCH CONTINUOUS HS WIND TUNNEL

RUN NO. 2704 M = 10.180 C1 =-3.8335+00 C2 = 3.3053+01 RSA = 1.0000+00 MS =-2.2823+00 OT = 1.2112+02

θ = ±2.6 α = 9.98

PO	TO	V	Q	RE	D	R	MW	DW	CMQ	CMT	RFP
1600.0	1900.0	4.661+03	3.290+02	1.957+06	1.035+04	6.480-01	-2.484+00	1.234+02	-7.658-01	2.686-01	7.645-03
1600.0	1900.0	4.661+03	3.290+02	1.957+06	1.040+04	6.409-01	-2.457+00	1.234+02	-6.626-01	2.654-01	7.644-03
1600.0	1900.0	4.661+03	3.290+02	1.957+06	1.039+04	6.390-01	-2.450+00	1.233+02	-6.355-01	2.563-01	7.639-03
1600.0	1900.0	4.661+03	3.290+02	1.957+06	1.042+04	6.348-01	-2.433+00	1.234+02	-5.739-01	2.672-01	7.644-03
1600.0	1900.0	4.661+03	3.290+02	1.957+06	1.041+04	6.391-01	-2.450+00	1.234+02	-6.363-01	2.688-01	7.645-03
1600.0	1900.0	4.661+03	3.290+02	1.957+06	1.034+04	6.404-01	-2.455+00	1.233+02	-6.555-01	2.579-01	7.640-03
1600.0	1900.0	4.661+03	3.290+02	1.957+06	1.047+04	6.321-01	-2.423+00	1.234+02	-5.342-01	2.674-01	7.645-03
1600.0	1900.0	4.661+03	3.290+02	1.957+06	1.033+04	6.416-01	-2.460+00	1.234+02	-6.738-01	2.647-01	7.643-03

PRELIMINARY UNCHECKED DATA

APOLLO DYNAMIC STABILITY -C- 304244-500 12/12/62 2501-2809

[redacted]

ARNOLD ENGINEERING DEVELOPMENT CENTER
von KARMAN GAS DYNAMICS FACILITY
50 - INCH CONTINUOUS HS WIND TUNNEL

RUN NO. 2705 M = 10.180 C1 =-3.8335+00 C2 = 3.3053+01 RSA = 1.0000+00 MS =-2.2823+00 OT = 1.2112+02

θ = ±2.7 α = -5

PO	TO	V	Q	RE	D	R	MW	DW	CMQ	CMT	RFP
1600.0	1900.0	4.661+03	3.290+02	1.957+06	1.095+04	7.079-01	-2.693+00	1.230+02	-1.569+00	2.258-01	7.623-03
1600.0	1900.0	4.661+03	3.290+02	1.957+06	1.097+04	7.038-01	-2.698+00	1.232+02	-1.561+00	2.395-01	7.630-03
1600.0	1900.0	4.661+03	3.290+02	1.957+06	1.101+04	7.013-01	-2.689+00	1.231+02	-1.549+00	2.345-01	7.627-03
1600.0	1900.0	4.661+03	3.290+02	1.957+06	1.090+04	7.016-01	-2.690+00	1.230+02	-1.551+00	2.236-01	7.622-03
1600.0	1900.0	4.661+03	3.290+02	1.957+06	1.110+04	6.756-01	-2.590+00	1.232+02	-1.171+00	2.399-01	7.630-03
1600.0	1900.0	4.661+03	3.290+02	1.957+06	1.111+04	6.734-01	-2.581+00	1.232+02	-1.137+00	2.422-01	7.631-03
1600.0	1900.0	4.661+03	3.290+02	1.957+06	1.079+04	6.945-01	-2.662+00	1.231+02	-1.446+00	2.283-01	7.624-03

[redacted]

~~CONFIDENTIAL~~

PRELIMINARY UNCHECKED DATA

~~CONFIDENTIAL~~

ARNOLD ENGINEERING DEVELOPMENT CENTER
von KARMAN GAS DYNAMICS FACILITY
50 - INCH CONTINUOUS MS WIND TUNNEL

APOLLO DYNAMIC STABILITY -C- 304244-500 12/12/62 2501-2809

RUN NO. 2706 M = 10.180 C1 =-3.8335+00 C2 = 3.3053+01 RSA = 1.0000+00 MS =-2.2823+00 DT = 1.2112+02

θ ±2.7

PC	TO	V	Q	RE	D	R	MW	DW	CMQ	CMT	RFP	α
1600.0	1900.0	4.661+03	3.290+02	1.957+06	1.070+04	7.312-01	-2.803+00	1.227+02	-1.987+00	1.907-01	7.605-03	
1600.0	1900.0	4.661+03	3.290+02	1.957+06	1.079+04	7.036-01	-2.697+00	1.228+02	-1.583+00	1.955-01	7.607-03	
1600.0	1900.0	4.661+03	3.290+02	1.957+06	1.083+04	7.006-01	-2.686+00	1.228+02	-1.561+00	1.745-01	7.596-03	-5
1600.0	1900.0	4.661+03	3.290+02	1.957+06	1.091+04	7.014-01	-2.689+00	1.230+02	-1.547+00	2.261-01	7.623-03	
1600.0	1900.0	4.661+03	3.290+02	1.957+06	1.096+04	6.739-01	-2.583+00	1.229+02	-1.146+00	2.149-01	7.617-03	
1600.0	1900.0	4.661+03	3.290+02	1.957+06	1.079+04	6.835-01	-2.620+00	1.231+02	-1.286+00	2.364-01	7.628-03	
1600.0	1900.0	4.661+03	3.290+02	1.957+06	1.075+04	6.944-01	-2.662+00	1.231+02	-1.445+00	2.353-01	7.628-03	

PRELIMINARY UNCHECKED DATA

~~CONFIDENTIAL~~

ARNOLD ENGINEERING DEVELOPMENT CENTER
von KARMAN GAS DYNAMICS FACILITY
50 - INCH CONTINUOUS MS WIND TUNNEL

APOLLO DYNAMIC STABILITY -C- 304244-500 12/12/62 2501-2809

RUN NO. 2707 M = 10.180 C1 =-3.8335+00 C2 = 3.3053+01 RSA = 1.0000+00 MS =-2.2823+00 DT = 1.2112+02

θ ±2.7

PC	TO	V	Q	RE	D	R	MW	DW	CMQ	CMT	RFP	α
1600.0	1900.0	4.661+03	3.290+02	1.957+06	1.105+04	6.658-01	-2.552+00	1.226+02	-1.031+00	1.779-01	7.598-03	
1600.0	1900.0	4.661+03	3.290+02	1.957+06	1.095+04	6.718-01	-2.575+00	1.228+02	-1.118+00	1.938-01	7.606-03	
1600.0	1900.0	4.661+03	3.290+02	1.957+06	1.102+04	6.634-01	-2.543+00	1.228+02	-9.954-01	1.974-01	7.608-03	
1600.0	1900.0	4.661+03	3.290+02	1.957+06	1.097+04	6.711-01	-2.573+00	1.226+02	-1.109+00	1.723-01	7.595-03	-5
1600.0	1900.0	4.661+03	3.290+02	1.957+06	1.092+04	6.710-01	-2.572+00	1.228+02	-1.107+00	1.969-01	7.608-03	
1600.0	1900.0	4.661+03	3.290+02	1.957+06	1.105+04	6.587-01	-2.525+00	1.228+02	-9.267-01	1.937-01	7.606-03	
1600.0	1900.0	4.661+03	3.290+02	1.957+06	1.096+04	6.661-01	-2.554+00	1.227+02	-1.035+00	1.872-01	7.603-03	
1600.0	1900.0	4.661+03	3.290+02	1.957+06	1.068+04	6.831-01	-2.619+00	1.228+02	-1.282+00	1.959-01	7.607-03	

PRELIMINARY UNCHECKED DATA

~~CONFIDENTIAL~~

ARNOLD ENGINEERING DEVELOPMENT CENTER
von KARMAN GAS DYNAMICS FACILITY
50 - INCH CONTINUOUS MS WIND TUNNEL

APOLLO DYNAMIC STABILITY -C- 304244-500 12/12/62 2501-2809

RUN NO. 2709 M = 10.180 C1 =-7.6671+00 C2 = 3.3053+01 RSA = 1.0000+00 MS =-2.2823+00 DT = 1.2112+02

±2.6

PC	TO	V	Q	RE	D	R	MW	DW	CMQ	CMT	RFP	α
1600.0	1900.0	[illegible]	[illegible]	[illegible]	1.042+04	9.436-01	-7.235+00	1.235+02	-1.878+01	2.790-01	7.651-03	
1600.0	1900.0	4.661+03	3.290+02	1.957+06	1.041+04	9.423-01	-7.225+00	1.235+02	-1.874+01	2.786-01	7.650-03	
1600.0	1900.0	4.661+03	3.290+02	1.957+06	1.043+04	9.393-01	-7.202+00	1.234+02	-1.866+01	2.738-01	7.648-03	5
1600.0	1900.0	4.661+03	3.290+02	1.957+06	1.044+04	9.360-01	-7.176+00	1.235+02	-1.856+01	2.772-01	7.650-03	
1600.0	1900.0	4.661+03	3.290+02	1.957+06	1.040+04	9.423-01	-7.225+00	1.235+02	-1.874+01	2.833-01	7.653-03	
1600.0	1900.0	4.661+03	3.290+02	1.957+06	1.052+04	9.335-01	-7.157+00	1.235+02	-1.849+01	2.767-01	7.649-03	
1600.0	1900.0	4.661+03	3.290+02	1.957+06	1.042+04	9.424-01	-7.229+00	1.234+02	-1.875+01	2.715-01	7.647-03	

~~CONFIDENTIAL~~

~~CONFIDENTIAL~~

PRELIMINARY UNCHECKED DATA

APOLLO DYNAMIC STABILITY -C- 304244-500 12/12/62 2501-2809

~~CONFIDENTIAL~~

ARNOLD ENGINEERING DEVELOPMENT CENTER
von KÁRMÁN GAS DYNAMICS FACILITY
50 - INCH CONTINUOUS ES WIND TUNNEL

RUN NO. 2710 M = 10.180 C1 =-7.6671+00 C2 = 3.3053+01 RSA = 1.0000+00 MS =-2.2823+00 DT = 1.2112+02

θ ±2.4

PO	TO	V	Q	RE	D	R	MW	OW	CMQ	CMT	RFP	α
1600.0	1900.0	4.661+03	3.290+02	1.957+06	9.841+03	1.069+00	-8.198+00	1.237+02	-2.239+01	3.089-01	7.666-03	
1600.0	1900.0	4.661+03	3.290+02	1.957+06	9.854+03	1.065+00	-8.168+00	1.238+02	-2.227+01	3.122-01	7.668-03	
1600.0	1900.0	4.661+03	3.290+02	1.957+06	9.844+03	1.067+00	-8.182+00	1.237+02	-2.234+01	3.030-01	7.663-03	
1600.0	1900.0	4.661+03	3.290+02	1.957+06	9.816+03	1.068+00	-8.189+00	1.238+02	-2.234+01	3.182-01	7.671-03	-0.03
1600.0	1900.0	4.661+03	3.290+02	1.957+06	9.833+03	1.061+00	-8.138+00	1.238+02	-2.215+01	3.128-01	7.668-03	
1600.0	1900.0	4.661+03	3.290+02	1.957+06	9.900+03	1.052+00	-8.069+00	1.236+02	-2.192+01	2.941-01	7.658-03	
1600.0	1900.0	4.661+03	3.290+02	1.957+06	9.910+03	1.057+00	-8.100+00	1.237+02	-2.202+01	3.095-01	7.666-03	
1600.0	1900.0	4.661+03	3.290+02	1.957+06	9.900+03	1.060+00	-8.124+00	1.238+02	-2.210+01	3.165-01	7.670-03	
1600.0	1900.0	4.661+03	3.290+02	1.957+06	9.835+03	1.062+00	-8.143+00	1.238+02	-2.217+01	3.118-01	7.668-03	

PRELIMINARY UNCHECKED DATA

APOLLO DYNAMIC STABILITY -C- 304244-500 12/12/62 2501-2809

~~CONFIDENTIAL~~

ARNOLD ENGINEERING DEVELOPMENT CENTER
von KÁRMÁN GAS DYNAMICS FACILITY
50 - INCH CONTINUOUS ES WIND TUNNEL

RUN NO. 2711 M = 10.180 C1 =-7.6671+00 C2 = 3.3053+01 RSA = 1.0000+00 MS =-2.2823+00 DT = 1.2112+02

θ ±2.4

PO	TO	V	Q	RE	D	R	MW	OW	CMQ	CMT	RFP	α
1600.0	1900.0	4.661+03	3.290+02	1.957+06	9.869+03	1.066+00	-8.170+00	1.239+02	-2.225+01	3.301-01	7.677-03	
1600.0	1900.0	4.661+03	3.290+02	1.957+06	9.857+03	1.064+00	-8.158+00	1.238+02	-2.223+01	3.143-01	7.669-03	
1600.0	1900.0	4.661+03	3.290+02	1.957+06	9.856+03	1.063+00	-8.151+00	1.240+02	-2.217+01	3.346-01	7.679-03	
1600.0	1900.0	4.661+03	3.290+02	1.957+06	9.853+03	1.062+00	-8.143+00	1.239+02	-2.215+01	3.294-01	7.677-03	-0.03
1600.0	1900.0	4.661+03	3.290+02	1.957+06	9.785+03	1.066+00	-8.174+00	1.238+02	-2.228+01	3.183-01	7.671-03	
1600.0	1900.0	4.661+03	3.290+02	1.957+06	9.817+03	1.065+00	-8.166+00	1.239+02	-2.224+01	3.294-01	7.677-03	
1600.0	1900.0	4.661+03	3.290+02	1.957+06	9.920+03	1.054+00	-8.084+00	1.239+02	-2.193+01	3.264-01	7.675-03	
1600.0	1900.0	4.661+03	3.290+02	1.957+06	9.950+03	1.059+00	-8.122+00	1.237+02	-2.210+01	3.098-01	7.667-03	

PRELIMINARY UNCHECKED DATA

APOLLO DYNAMIC STABILITY -C- 304244-500 12/12/62 2501-2809

~~CONFIDENTIAL~~

ARNOLD ENGINEERING DEVELOPMENT CENTER
von KÁRMÁN GAS DYNAMICS FACILITY
50 - INCH CONTINUOUS ES WIND TUNNEL

RUN NO. 2713 M = 10.180 C1 =-7.6671+00 C2 = 3.3053+01 RSA = 1.0000+00 MS =-2.2823+00 DT = 1.2112+02

θ ±2.4

PO	TO	V	Q	RE	D	R	MW	OW	CMQ	CMT	RFP	α
1600.0	1900.0	4.661+03	3.290+02	1.957+06	9.791+03	8.818-01	-6.761+00	1.236+02	-1.696+01	2.976-01	7.660-03	
1600.0	1900.0	4.661+03	3.290+02	1.957+06	9.728+03	8.895-01	-6.820+00	1.235+02	-1.720+01	2.824-01	7.652-03	
1600.0	1900.0	4.661+03	3.290+02	1.957+06	9.743+03	8.860-01	-6.793+00	1.236+02	-1.709+01	2.925-01	7.658-03	-3
1600.0	1900.0	4.661+03	3.290+02	1.957+06	9.759+03	8.836-01	-6.775+00	1.236+02	-1.701+01	2.971-01	7.660-03	
1600.0	1900.0	4.661+03	3.290+02	1.957+06	9.780+03	8.789-01	-6.739+00	1.235+02	-1.690+01	2.823-01	7.652-03	
1600.0	1900.0	4.661+03	3.290+02	1.957+06	9.785+03	8.794-01	-6.742+00	1.236+02	-1.689+01	2.963-01	7.660-03	
1600.0	1900.0	4.661+03	3.290+02	1.957+06	9.815+03	8.833-01	-6.773+00	1.236+02	-1.701+01	2.868-01	7.660-03	

~~CONFIDENTIAL~~

~~CONFIDENTIAL~~

ARNOLD CENTER
VON KARMAN GAS DYNAMICS FACILITY
50 INCH MACH 10 TUNNEL
APOLLO DYNAMIC STABILITY -C- 304244-500 12/12/62 2501-2809

RUN NO. 2802 M = 10.180 C1 =-5.1114+00 C2 = 2.2894+01 RSA = 1.0000+00 MS =-2.3788+00 OT = 1.2114+02

θ	PO	TO	V	Q	RE	D	R	MW	OW	CMQ	CMT	RFP	α
	1600.0	1890.0	4.648+03	3.293+02	1.978+06	1.016+04	9.749-01	-4.983+00	1.222+02	-6.888+00	-8.482-02	7.590-03	
+2.5	1600.0	1890.0	4.648+03	3.293+02	1.978+06	1.018+04	9.596-01	-4.905+00	1.222+02	-6.683+00	-8.337-02	7.589-03	
	1600.0	1890.0	4.648+03	3.293+02	1.978+06	1.028+04	9.617-01	-4.916+00	1.220+02	-6.717+00	-7.319-02	7.581-03	
	1600.0	1890.0	4.648+03	3.293+02	1.978+06	1.002+04	9.762-01	-4.990+00	1.222+02	-6.906+00	-8.339-02	7.589-03	-9.98
	1600.0	1890.0	4.648+03	3.293+02	1.978+06	1.042+04	9.196-01	-4.700+00	1.223+02	-6.134+00	-9.524-02	7.598-03	
	1600.0	1890.0	4.648+03	3.293+02	1.978+06	1.063+04	9.237-01	-4.721+00	1.224+02	-6.187+00	-9.906-02	7.601-03	
	1600.0	1890.0	4.648+03	3.293+02	1.978+06	1.102+04	9.028-01	-4.615+00	1.225+02	-5.899+00	-1.091-01	7.608-03	

~~CONFIDENTIAL~~

ARNOLD CENTER
VON KARMAN GAS DYNAMICS FACILITY
50 INCH MACH 10 TUNNEL
APOLLO DYNAMIC STABILITY -C- 304244-500 12/12/62 2501-2809

RUN NO. 2804 M = 10.180 C1 =-2.5557+00 C2 = 2.2894+01 RSA = 1.0000+00 MS =-2.3788+00 OT = 1.2114+02

θ	PO	TO	V	Q	RE	D	R	MW	OW	CMQ	CMT	RFP	α
	1600.0	1890.0	4.648+03	3.293+02	1.978+06	9.983+03	9.506-01	-2.429+00	1.215+02	-1.347-01	-2.983-02	7.548-03	
+2.5	1600.0	1890.0	4.648+03	3.293+02	1.978+06	9.923+03	9.541-01	-2.438+00	1.215+02	-1.587-01	-2.819-02	7.547-03	
	1600.0	1890.0	4.648+03	3.293+02	1.978+06	1.003+04	9.485-01	-2.424+00	1.217+02	-1.202-01	-4.943-02	7.563-03	-14.9
	1600.0	1890.0	4.648+03	3.293+02	1.978+06	9.970+03	9.352-01	-2.390+00	1.218+02	-2.971-02	-5.349-02	7.566-03	

~~CONFIDENTIAL~~

α	V_∞	q_∞	M_∞	Re/ft	f	Cmq + Cm2	θ	$Wd/2V_\infty$	Run No.
(deg)	(ft/sec)	(lb/ft^2)		X 10^{-6}	(cyc/sec)	(1/rad)	(deg)	(rad)	
0.0	1407	191.9	1.49	0.96	10.82	+4.408	±1.7	0.01829	33
0.0	1407	191.6	1.49	0.96	10.80	+4.659	±1.7	0.01826	33
0.0	1405	192.8	1.49	0.96	10.80	+3.883	±1.9	0.01828	33
0.0	1396	316.4	1.49	1.61	11.10	+3.336	±1.9	0.01837	33
0.0	1395	318.2	1.49	1.62	11.10	+3.307	±1.9	0.01838	33
0.0	1395	317.9	1.49	1.62	11.10	+3.568	±1.9	0.01838	33
0.0	1395	316.7	1.49	1.61	11.10	+3.636	±1.9	0.01838	33
0.0	1430	434.3	1.49	2.07	11.40	+4.243	±1.7	0.01896	33
0.0	1434	745.0	1.49	3.54	12.70	+12.030	±1.7	0.02106	33
0.0	1434	917.0	1.49	4.35	13.20	+8.790	±1.7	0.02189	33
0.0	1435	615.0	1.49	2.91	12.20	+8.780	±1.7	0.02022	33
4.0	1704	159.5	1.99	0.78	10.56	+1.251	±1.7	0.01474	31 & 32
6.0	1705	160.3	1.99	0.78	10.45	-1.169	±1.7	0.01458	31 & 32
6.0	1705	161.8	1.99	0.78	10.30	-1.022	±1.8	0.01437	31 & 32
8.0	1707	162.7	1.99	0.78	10.41	-2.291	±1.9	0.01450	31 & 32
8.0	1708	162.5	1.99	0.78	10.40	-2.451	±1.9	0.01448	31 & 32
10.0	1708	161.2	1.99	0.78	10.31	-3.155	±1.7	0.01436	31 & 32
10.0	1708	161.5	1.99	0.78	10.30	-2.942	±1.7	0.01434	31 & 32
-2.0	1709	160.9	1.99	0.78	10.70	+3.937	±1.8	0.01489	31 & 32
-4.0	1709	160.1	1.99	0.78	10.60	+1.523	±1.7	0.01475	31 & 32
0.0	2255	425.9	4.00	3.5	12.30	+12.527	±1.55	0.01297	29
0.0	2257	424.0	4.00	3.5	12.20	+15.362	±1.79	0.01286	29
0.0	2257	424.2	4.00	3.5	12.20	+15.622	±1.82	0.01286	29
0.0	2259	423.2	4.00	3.5	12.15	+17.225	±1.93	0.01279	29
0.0	2261	424.8	4.00	3.5	12.95	+18.500	±0.688	0.01362	29
0.0	2261	424.7	4.00	3.5	12.95	+18.354	±0.637	0.01362	29
1.63	2261	425.8	4.00	3.5	11.70	+3.498	±1.01	0.01231	29
1.63	2261	425.7	4.00	3.5	11.70	+3.310	±0.997	0.01231	29
1.63	2263	425.0	4.00	3.5	11.90	-5.906	±0.411	0.01251	29

~~CONFIDENTIAL~~

~~CONFIDENTIAL~~

α	V_∞	q_∞	M_∞	Re/ft	f	Cmq +Cm2	θ	$Wd/2V_\infty$	Run No.
(deg)	(ft/sec)	(lb/ft^2)		X 10^{-6}	(cyc/sec)	(1/rad)	(deg)	(rad)	
3.32	2263	424.3	4.00	3.5	11.14	-6.059	±1.03	0.01171	29
3.32	2263	423.7	4.00	3.5	11.14	-4.814	±0.910	0.01171	29
3.32	2263	423.5	4.00	3.5	11.20	-4.244	±0.930	0.01177	29
3.32	2263	423.5	4.00	3.5	11.20	-5.900	±0.742	0.01177	29
3.32	2263	423.3	4.00	3.5	11.20	-7.016	±0.719	0.01177	29
-1.71	2263	422.6	4.00	3.5	11.96	-3.607	±0.830	0.01257	29
-1.71	2263	422.5	4.00	3.5	11.90	-3.291	±0.843	0.01251	29
-1.71	2263	422.4	4.00	3.5	11.93	-2.353	±0.648	0.01254	29
-1.71	2263	422.6	4.00	3.5	12.00	-3.232	±0.628	0.01261	29
-3.39	2263	421.6	4.00	3.5	11.26	-10.437	±0.843	0.01183	29
-3.39	2263	422.0	4.00	3.5	11.30	-10.583	±0.622	0.01188	29
-3.39	2263	422.0	4.00	3.5	11.30	-10.595	±0.624	0.01188	29
-3.39	2263	422.0	4.00	3.5	12.20	+14.087	±1.710	0.00987	29

~~CONFIDENTIAL~~