[redacted]

[redacted]

CLASSIFICATION CHANGE

To UNCLASSIFIED
By authority of GDS-EO 11652
Changed by C. Shirley Date 12/31/72
Classified Document Master Control Station, NASA Accession No. 63672-64
Scientific and Technical Information Facility

Copy No. 26 SID 64-1015

DATA REPORT FOR FREE OSCILLATION TESTS OF APOLLO DYNAMIC STABILITY MODELS (FD-5) TO DETERMINE STABILITY CHARACTERISTICS AND THE EFFECT OF COMMAND MODULE STRAKES IN THE MACH RANGE FROM 1.5 TO 6.0 (U)

NAS9-150

June 1964

Exhibit I, Paragraph 5.5

[redacted]

This document [redacted] Inform[redacted] affecting the national defense of the United States w[redacted] of the Espionage Laws. Title 18 U.S.C. Section 793 and [redacted] ission or revelation of its contents in any manner to an una[redacted] is prohibited by law.

NORTH AMERICAN AVIATION, INC.
SPACE and INFORMATION SYSTEMS DIVISION

[redacted]

FOREWORD

The Apollo FD-5 model tests were conducted under NASA Apollo Contract NAS9-150, Exhibit I, Paragraph 5.5, from 18 April 1963 to 25 April 1963 in the AEDC VKF Tunnel A.

This report was prepared by C. E. Mitchell and C. L. Berthold of the Wind Tunnel Projects Group, Los Angeles Division of North American Aviation.

[redacted]

ABSTRACT

Dynamic stability data are presented in both tabular and plotted form for wind tunnel tests on Apollo models (FD-5) of the launch escape vehicle (0.059-scale) and command module entry (0.050-scale) configurations at Mach numbers from 1.50 to 6.00. The data were obtained while the models were allowed to oscillate freely in the range of their respective trim angles. Each configuration was tested with command module strakes on and off and with oscillation centers located at several center of gravity positions.

Tunnel operating conditions, configuration description, computation equations, and typical model and installation photographs are also included.

[redacted]

[redacted]

CONTENTS

Section		Page
	INTRODUCTION	1
I	DISCUSSION	3
II	COMMAND MODULE AND LAUNCH ESCAPE VEHICLE MODELS	5
	Model Nomenclature	5
	Model Descriptions	5
	Full Scale Dimensions	7
	Center of Gravity Locations	8
III	TEST PROCEDURE	9
	Test Nomenclature	9
	Model Installation	10
	Instrumentation	11
	Data Reduction and Constants	11
	Data Accuracy	12
	BIBLIOGRAPHY	37
	APPENDIXES	
	A. PLOTTED DATA	39
	B. TABULATED DATA	47

[redacted]

[redacted]

ILLUSTRATIONS

Figure		Page
1	Launch Escape Vehicle Configuration	14
2	Tunnel Installation - LEV - VKF Tunnel A	15
3	Tunnel Installation - Command Module - VKF Tunnel A	16
4	LEV Assembly and Actuator Mechanism	17
5	Command Module Assembly (Exploded View)	18
6	LEV Mechanical Bearing Balance Assembly	19
7	Command Module Gas Bearing Balance Assembly	20
8	Launch Escape Vehicle	21
9	Escape Rocket	22
10	Escape Tower Structure	23
11	Command Module (C_{41} L_{28})	24
12	Command Module (C_2 L_{28})	25
13	Model Assembly, Command Module	27
14	Command Module Sting and Balance Assembly	29
15	Model Assembly, LEV	31
16	LEV Model Drive System Assembly	33
17	LEV Sting and Actuator Assembly	35

[redacted]

INTRODUCTION

Apollo FD-5 dynamic stability tests were conducted, utilizing the free oscillation technique, at the von Karman Gas Dynamics Facility (VKF) of the Arnold Engineering Development Center (AEDC) in the 40-inch supersonic tunnel A. This investigation was made to evaluate the dynamic stability characteristics, at large oscillation amplitudes (approximately ±15 degrees), of the command module entry and launch escape vehicle (LEV) configurations in the Mach number range from 1.50 to 6.00.

The configuration incorporated strakes on the command module for both the entry and launch escape vehicles, but additional investigations were made without strakes at oscillation centers other than the design center of gravity. The escape vehicle was also tested without strakes at an oscillation center on the model axis of symmetry immediately above the design center of gravity to simulate a yawing condition. These investigations were made in the region of the proposed trim angle for each configuration.

To obtain frequency effects, a majority of the configurations were run at high and low dynamic pressures for each Mach number. Reynolds numbers, based on the maximum model diameter, ranged from 0.31×10^6 to 3.56×10^6 with the 0.050-scale command module and from 0.36×10^6 to 5.28×10^6 with the 0.059-scale LEV.

I. DISCUSSION

The primary objectives of these tests were to evaluate the dynamic stability characteristics of the LEV (Figures 1 and 2) and command module (Figure 3) configurations at large oscillation amplitudes about their respective trim angles and to determine the effects of command module strakes and center of gravity position at supersonic speeds.

Several techniques are currently available for obtaining dynamic stability derivatives of models in wind tunnels. This test was conducted using the free oscillation technique in which damping-in-pitch derivatives were computed from angle of attack versus time history records of the models as they oscillated freely in pitch near proposed trim attitudes.

Two distinct large amplitude (±20 degrees) free oscillation balance systems were used in the present test program (Figures 4 and 5). Each was equipped with a displacing-releasing mechanism which allowed the model to be released at any intermediate angle of attack. The angular transducers used with each system were of the variable reluctance type which produce an analog signal proportional to the angular displacement of the model yet require no physical connection between the moving and stationary parts of the balance.

The mechanical bearing balance system (Figure 6) which was used with all LEV configurations was designed and constructed by NAA and provided a pivot consisting of two instrument-type ball bearings which were each capable of supporting a 250 pound radial load. The model displacing mechanism consisted of two automated servos to position and release the model and a third servo which was used to arrest the model motion. When the top slide plate was moved to the forward position, the bottom slide plate and associated rack gear was driven fore or aft to position the model. A model release was obtained by activating a servo to move the top slide plate to the retracted position, thus disengaging the drive gear and gear plate. The third servo, which activated the cam, was used to arrest the model should a divergent oscillation have occurred and to position the model to re-engage the gears.

The basic gas bearing balance system (Figure 7) which was used with all command module entry configurations was provided by AEDC and consisted of a cylindrical, gas journal bearing with inherent orifice compensation. The balance displacement mechanism, as provided by NAA,

consisted of a manually operated system of two flex shafts attached to push-pull rods which were retained in buckets located on the model sector. When the model was positioned at the desired angle, it was locked in place by the brake and the flex shafts were retracted. After releasing the model, the brake could be used to arrest the model and re-engage the flex shafts.

Plotted and tabulated data are presented in Appendixes A and B in the form of damping-in-pitch coefficients ($C_{m_q} + C_{m_{\dot{\alpha}}}$).

II. COMMAND MODULE AND LAUNCH ESCAPE VEHICLE MODELS

MODEL NOMENCLATURE

Symbol	Description	Drawing No.	Figure No.
E_{63}, T_{27}, C_{41}, and L_{28}	Total LEV configuration (with strakes)	7121-01121	8
E_{63}	Escape motor (length = 279.61 in., 34° flared skirt)	7121-01121	9
T_{27}	Tower structure (length = 114.63 in.)	7121-01121 7121-01075	10
C_{41}	Command module (maximum diameter = 154 in., apex altered to correctly position balance)	7121-01121	11
L_{28}	Spoiler or strake	7121-01121 7121-01122	11
C_2	Command module (maximum diameter = 154 in.)	7121-01122	12

MODEL DESCRIPTIONS

The FD-5 models consisted of a 0.050-scale command module entry vehicle and a 0.059-scale command module with attached launch escape system. These models were constructed of lightweight materials, to reduce the moment-of-inertia, whenever consistent with the structural integrity. The command modules were constructed of aluminum alloy (7075-T6), the escape tower was constructed of Armco steel (17-4PH CRES), and the escape rocket was constructed of aluminum alloy (7075-T6) and magnesium alloy (QQ-M-31). All configurations had removable command module strakes of aluminum alloy (7075-T6).

The entry model had a sting slot cutout to allow a free oscillation of ±10 degrees from its neutral position (α = 147 degrees), but this slot was enlarged at AEDC to obtain larger oscillations (approximately ±15 degrees). A cable operated manual lock-out and positioning system was incorporated in the gas-bearing mounting bracket. This system employed a brake shoe device for stopping and locking the model, and a flex-shaft push rod device for positioning the model to a predetermined angle of attack. The weight of the sector, on which the brake shoe engaged to stop and lock the model, presented model balancing problems; therefore, a new sector was constructed of magnesium alloy just prior to testing (Figures 13 and 14).

The apex of the command module for the LEV configuration was modified within the confines of the tower legs to allow the oscillation center of the balance to be correctly positioned on the different center of gravity locations. This model locked out in its neutral position at 0 degree angle of attack and the sting slot cutout allowed a free oscillation of ±20 degrees from this position. The model lock-out and positioning system was incorporated in the ball-bearing mount and bracket assembly and was actuated by drive motors located on the aft sting adapter. This system employed a rack-gear, spur-gear positioning device and a 90 degree rotation cam and guide for snubbing the model and locking it in its neutral position (Figures 15 and 16).

All configurations were dynamically balanced at AEDC. The LEV configurations were balanced for three available oscillation centers and the command module configurations were balanced for two available oscillation centers.

Model moments of inertia for the Apollo FD-5 configurations tested are listed below:

0.059-Scale Launch Escape Vehicle

Strakes	Center of Gravity	Moment of Inertia I (Slug - ft^2)
On	Design	0.0606
Off	Design	0.0640
Off	Alternate	0.0499
Off	Center-line	0.0440

0.050-Scale Command Module

Strakes	Center of Gravity	Moment of Inertia I (Slug - ft^2)
On	Design	0.0661
Off	Design	0.0705
Off	Alternate	0.0507

FULL SCALE DIMENSIONS

Escape Motor, E_{63}

Total length	279.61 in.
Diameter	26.00 in.
Nose radius	2.00 in.
Nose included angle	30.00 deg
Skirt base diameter	52.73 in.
Skirt flare angle	34.00 deg
Diameter of ring forward of skirt	29.00 in.
Rocket nozzles (4), distance apex from base	17.97 in.
Jettison nozzles (2), distance apex from nose	76.15 in.

Tower, T_{23}

Total length	114.63 in.
Diameter of longitudinal members (4)	3.51 in.
Diameter of cross braces (lower 4)	3.51 in.
Diameter of cross braces (upper 4)	2.51 in.
Diameter of diagonal braces (20)	2.51 in.
Circular truss:	
Diameter of material	2.51 in.
Diameter of circle	23.00 in.
Distance between attach points at command module:	
Horizontal plane	50.66 in.
Vertical plane	46.85 in.
Distance between attach points at base of rocket	36.07 in.

Command Module, C_2

Maximum diameter	154.00 in.
Radius of spherical blunt end	184.80 in.
Corner radius	7.70 in.

Nose cone vertex half-angle	33.00 deg
Nose cone vertex radius	9.15 in.
Frontal area	129.35 ft^2

Command Module, C_{41}

Same as C_2 except that the vertex area within the confines of the tower structure has been altered to accommodate the AEDC ball-bearing pivot.

Spoilers or Strakes, L_{28}

L.E. location, aft of command module apex	29.27 in.
T.E. location, aft of command module apex	109.24 in.
Length along module surface	95.36 in.
Maximum height above module	12.00 in.
Thickness	1.58 in.

CENTER OF GRAVITY LOCATIONS

Configuration	Design	Alternate	Centerline
Entry ($\bar{x}$)	97.36	105.60	
($\bar{z}$)	8.74	9.08	
Launch escape ($\bar{x}$)	32.05	48.63	32.05
($\bar{z}$)	5.69	6.80	0.00

Note: $\bar{x}$ = longitudinal distance from command module apex to the center of gravity, inches

$\bar{z}$ = vertical distance from command module axis to the center of gravity, inches

III. TEST PROCEDURE

TEST NOMENCLATURE

A	Reference area (based on maximum model diameter), ft^2
C_m	Pitching-moment coefficient, pitching moment/$q_\infty Ad$
C_{m_q}	$\partial C_m / \partial (qd/2V_\infty)$ — Damping-in-pitch derivatives, 1/rad
$C_{m_{\dot{\alpha}}}$	$\partial C_m / \partial (\dot{\alpha} d/2V_\infty)$ — Damping-in-pitch derivatives, 1/rad
C_{y_R}	Cycles to damp to a given amplitude ratio R, cycles
d	Reference length (maximum model diameter), ft
f	Frequency of oscillation, cycles/sec
I	Model moment of inertia about the pivot axis, slug-ft^2
ℓn	Natural logarithm
M_∞	Free-stream Mach number
M_θ	Angular restoring moment parameter, ft-lb/rad
$M_{\dot{\theta}}$	Angular viscous damping moment parameter, $\frac{\text{ft-lb sec}}{\text{rad}}$
$M_{\dot{\theta}}$	Aerodynamic angular viscous damping moment parameter, $\frac{\text{ft-lb sec}}{\text{rad}}$
q	Pitching velocity, rad/sec
q_∞	Free-stream dynamic pressure, lb/ft^2
R	Ratio of the amplitude of a damped oscillation after a given number of cycles to the initial amplitude
Re	Reynolds number based on maximum model diameter
t	Time, sec

V_∞	Free-stream velocity, ft/sec
α	Angle of attack, rad or deg
α_T	Trim angle, deg
$\dot{\alpha}$	Time rate of change of angle of attack, rad/sec
θ	Angular displacement from trim angle, rad or deg
$\dot{\theta}$	Angular velocity, rad/sec
$\ddot{\theta}$	Angular acceleration, rad/sec^2
ω	Angular frequency, rad/sec
$\omega d/2V_\infty$	Reduced frequency parameter, rad

SUBSCRIPTS

o	Maximum conditions
s	Structural conditions
w	Wind-on conditions

MODEL INSTALLATION

The command module configurations were installed on the AEDC sting-supported gas-bearing pivot incorporating an integral angular transducer. The gas-bearing mounting bracket and an intermediate sting section to accept the bracket were furnished by NAA. This sting section in turn attached to the AEDC adapter 3301525 B which was modified to accommodate the model lock-out and positioning devices.

The LEV configurations were installed on the NAA ball-bearing pivot and bracket assembly. This in turn adapted to the tunnel A sector via the above sting arrangement (Figure 17).

For the command module, cables were used to manually position, release, and lock-out the model. The LEV had an automatic lock-out and positioning system actuated via drive motors mounted on the aft sting section (AEDC adapter 3301525 B).

INSTRUMENTATION

Instrumentation consisted primarily of variable reluctance angular transducers incorporated in the gas-bearing and ball-bearing pivot mounts. These transducers gave a continuous time history of the models oscillatory motion as an analog signal. This signal was amplified (CEC carrier amplifier) and recorded on magnetic tape (Ampex 7-channel tape recorder). This signal was simultaneously fed to a direct-writing oscillograph (Visicorder) to provide a means of monitoring the motion of the model and for use as a back-up data system.

The displacing and lock-out mechanisms for the LEV model were instrumented with monitoring devices since they were remotely actuated through drive motors.

Schlieren motion pictures were taken and are on file, but because of the complexities involved in switching cameras no schlieren stills were taken.

DATA REDUCTION AND CONSTANTS

With the free oscillation technique the external restoring moment (balance tare damping) can be minimized or almost eliminated depending on the type of pivot employed. A gas bearing is particularly desireable since its tare damping can be considered negligible. This type pivot was used in the command module but could not be used in the launch escape vehicle due to the space restrictions imposed by the model at the pivot axis location.

The equation of motion for a free oscillation, one-degree-of-freedom system may be expressed as:

$$I\ddot{\theta} - M_{\dot{\theta}}\dot{\theta} - M_{\theta}\theta = 0$$

The method for computing the dimensionless damping-in-pitch derivatives from the free oscillation tests is indicated as follows:

$$\theta = \theta_o e^{-(-M_{\dot{\theta}}/2I)t} \sin \sqrt{-M_{\theta}/I}\, t$$

$$M_{\dot{\theta}} = \frac{2I f \ell_n R}{C_{y_R}}$$

$$M_{\dot{\theta}}' = M_{\dot{\theta}_w} - M_{\dot{\theta}_s}$$

$$C_{m_q} + C_{m_{\dot{\alpha}}} = M_{\dot{\theta}}' \, 2 \, V_\infty / q_\infty A d^2$$

The preceding linear theory can be applied to a non-linear system, such as the systems encountered in the present tests, when the data are reduced over an amplitude range for which the motion can be approximated as being exponentially damped and where the frequency remains approximately constant.

The test procedure was to displace the model from its trim attitude to the desired angle of attack and release it. The resulting oscillatory signal provided by the aforementioned angular transducer was recorded on a direct writing oscillograph and on magnetic tape by a high speed digital converter. Data was reduced from the magnetic tape on an IBM 7070 computer by a free-oscillation data reduction program.

The oscillograph traces which described the oscillatory motion of the command module indicated that both the motion and the damping were symmetrical about the trim attitude.

The motion of the launch escape vehicle was unsymmetrical about the trim attitude and deviated considerably from the damped motion described by the first equation. The damping coefficient ($M_{\dot{\theta}}'$) varied with frequency and the oscillation amplitude was unsymmetrical; i.e., the envelope curves of the positive and negative peaks had different variations with time. Therefore, a data reduction procedure was developed so that values of damping could be obtained from the envelope curve of the positive and negative peaks independently.

The following constants, presented in model scale, were used for the test.

Configuration	Scale	Diameter (d) ft	Area (A) ft^2
Command module	0.050	0.6417	0.3234
LEV	0.059	0.7572	0.4503

DATA ACCURACY

The angular transducers for each balance were calibrated by AEDC personnel during bench tests both before and after each tunnel test period, and check calibrations were made periodically during the runs to determine if any changes in calibration factors had occurred. Transducer calibrations were obtained through use of known displacements. Model displacements were known within ±0.5 percent of the maximum value of the range through which the parameter was calibrated.

The ball bearing balance used with the LEV model was calibrated to obtain values of ball bearing tare damping. This tare damping was found to vary with radial load, frequency of oscillation, and amplitude; therefore,

to obtain values of aerodynamic damping for the launch escape vehicle, the tare damping values were corrected to the wind-on conditions before subtracting them from the total values. It was not necessary to correct command module data for tare damping because of the negligible level of the gas bearing damping.

Considering the above uncertainties in each system, the estimated maximum uncertainties in $C_{m_q} + C_{m_{\dot{\alpha}}}$ are ±0.12 for the command module and ±0.50 for the launch escape vehicle.

CONFIDENTIAL

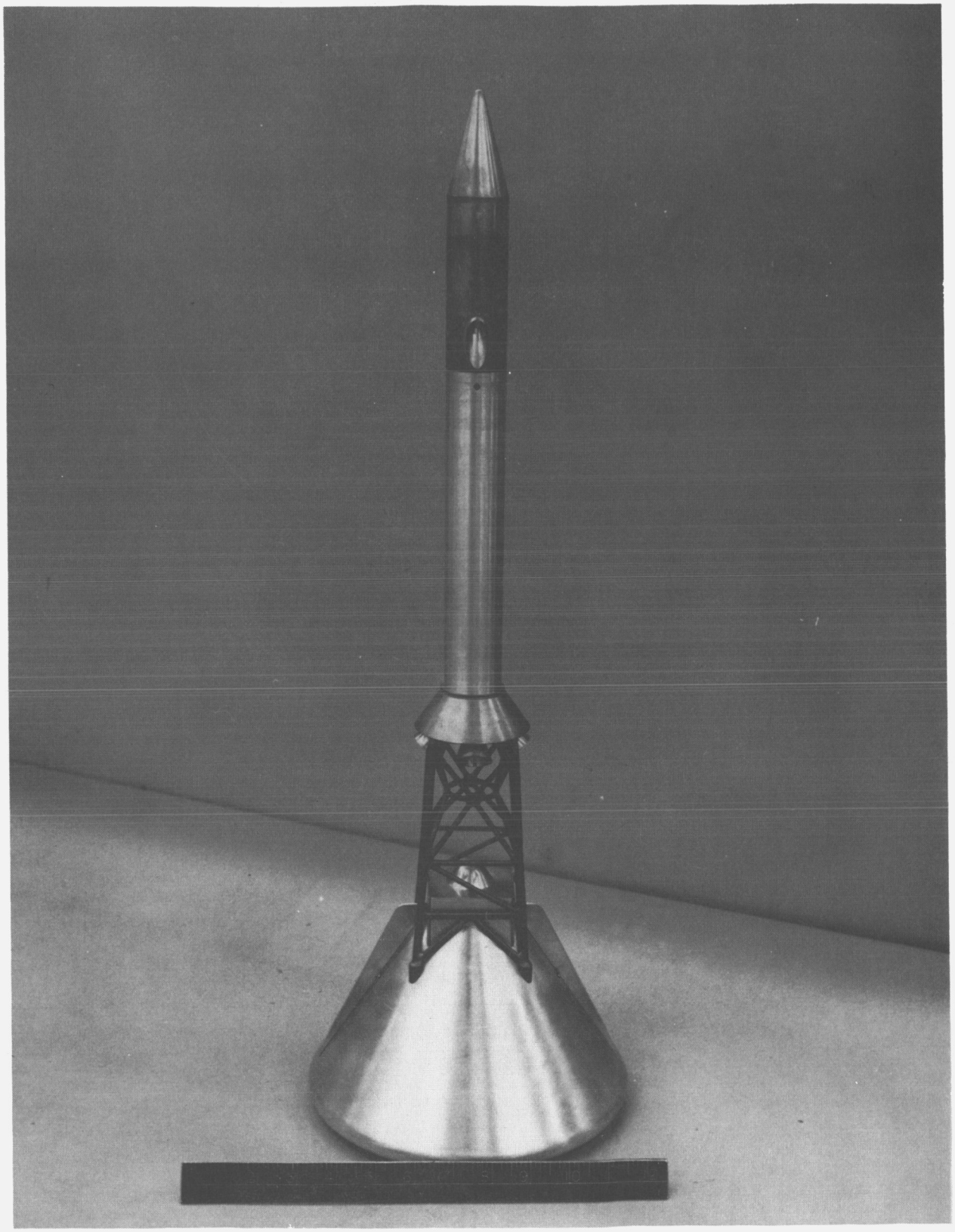

Figure 1. Launch Escape Vehicle Configuration (E63 T27 C41 L28)

CONFIDENTIAL

CONFIDENTIAL

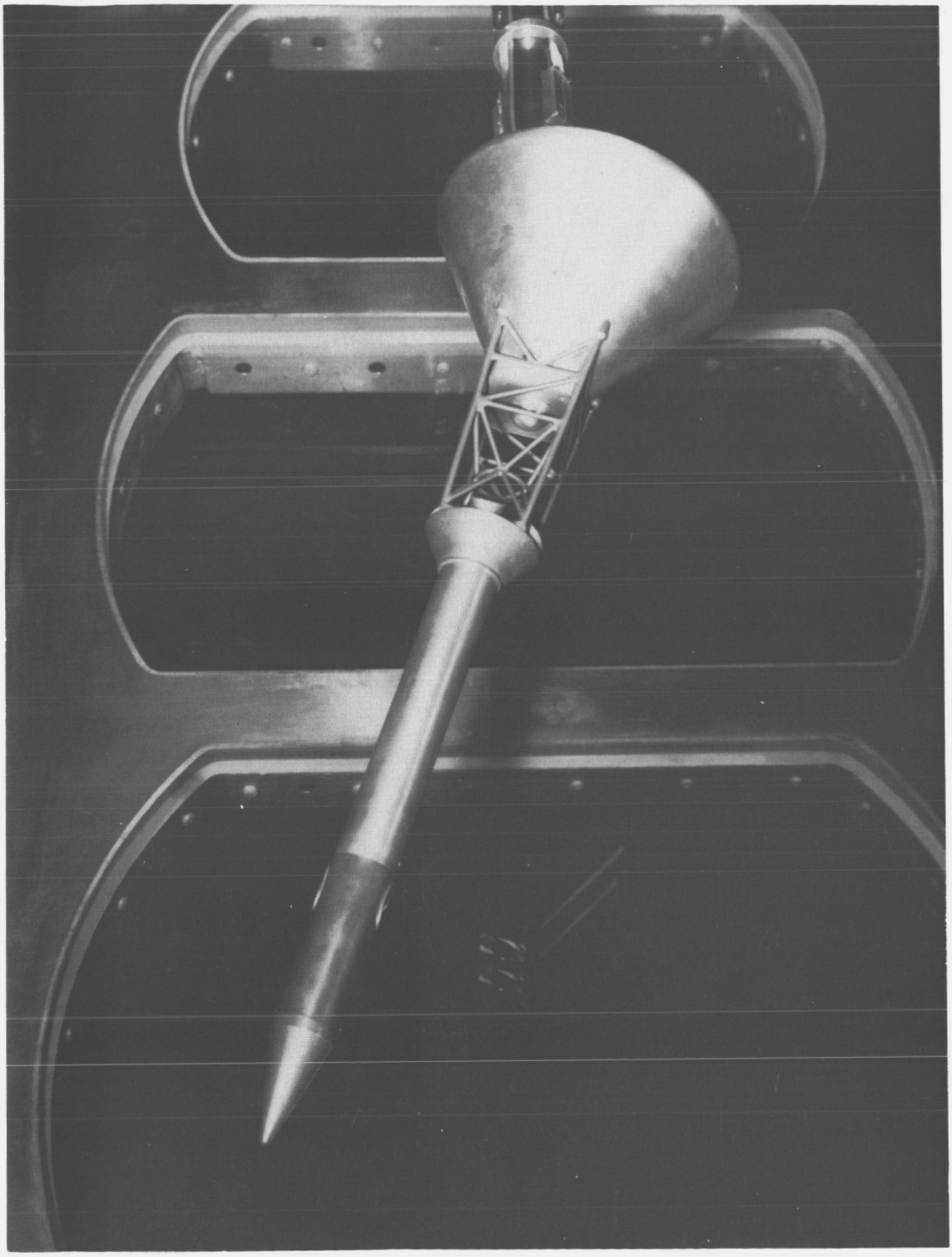

Figure 2. Tunnel Installation - LEV-VKF Tunnel A

CONFIDENTIAL

~~CONFIDENTIAL~~

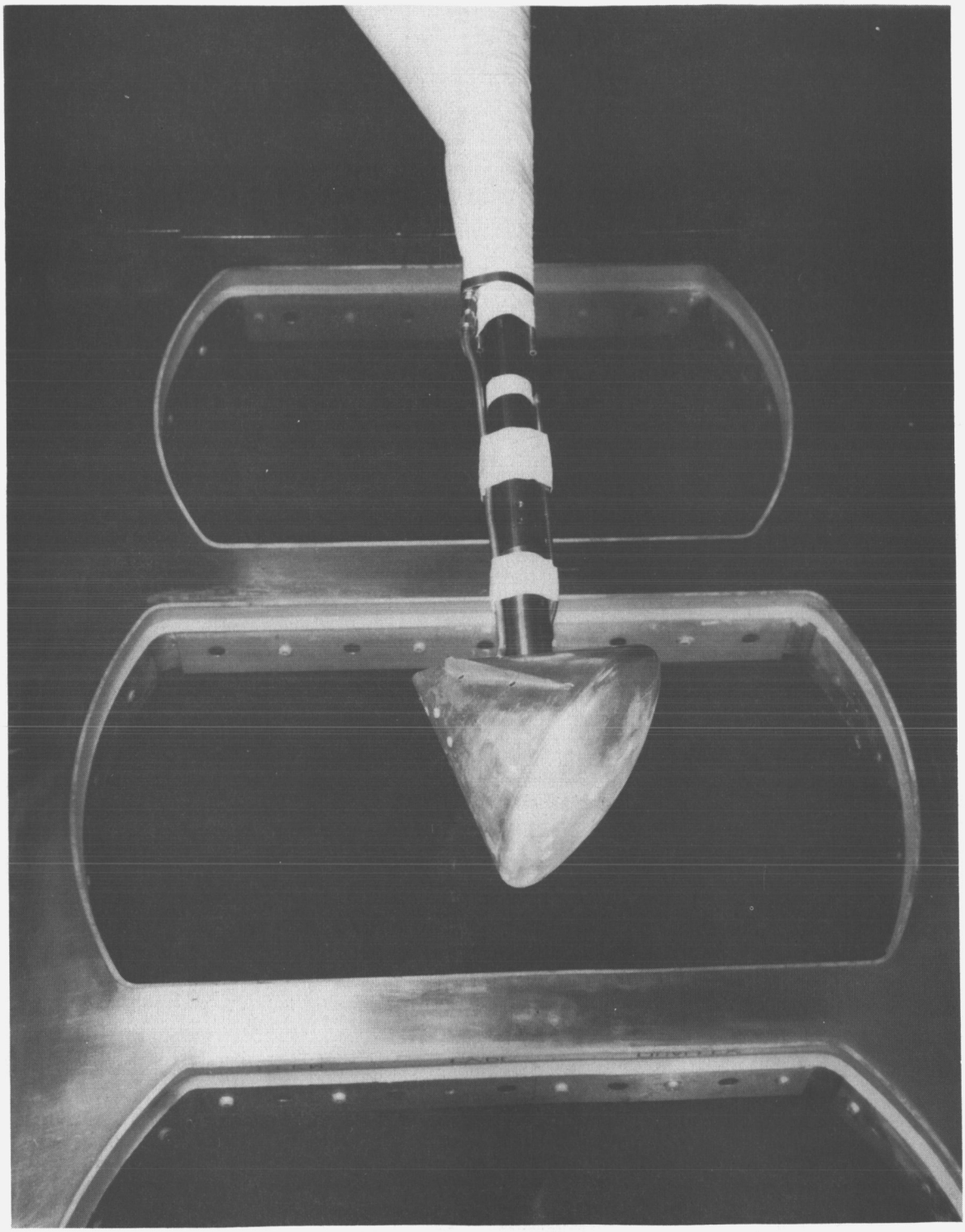

Figure 3. Tunnel Installation - Command Module - VKF Tunnel A

~~CONFIDENTIAL~~

CONFIDENTIAL

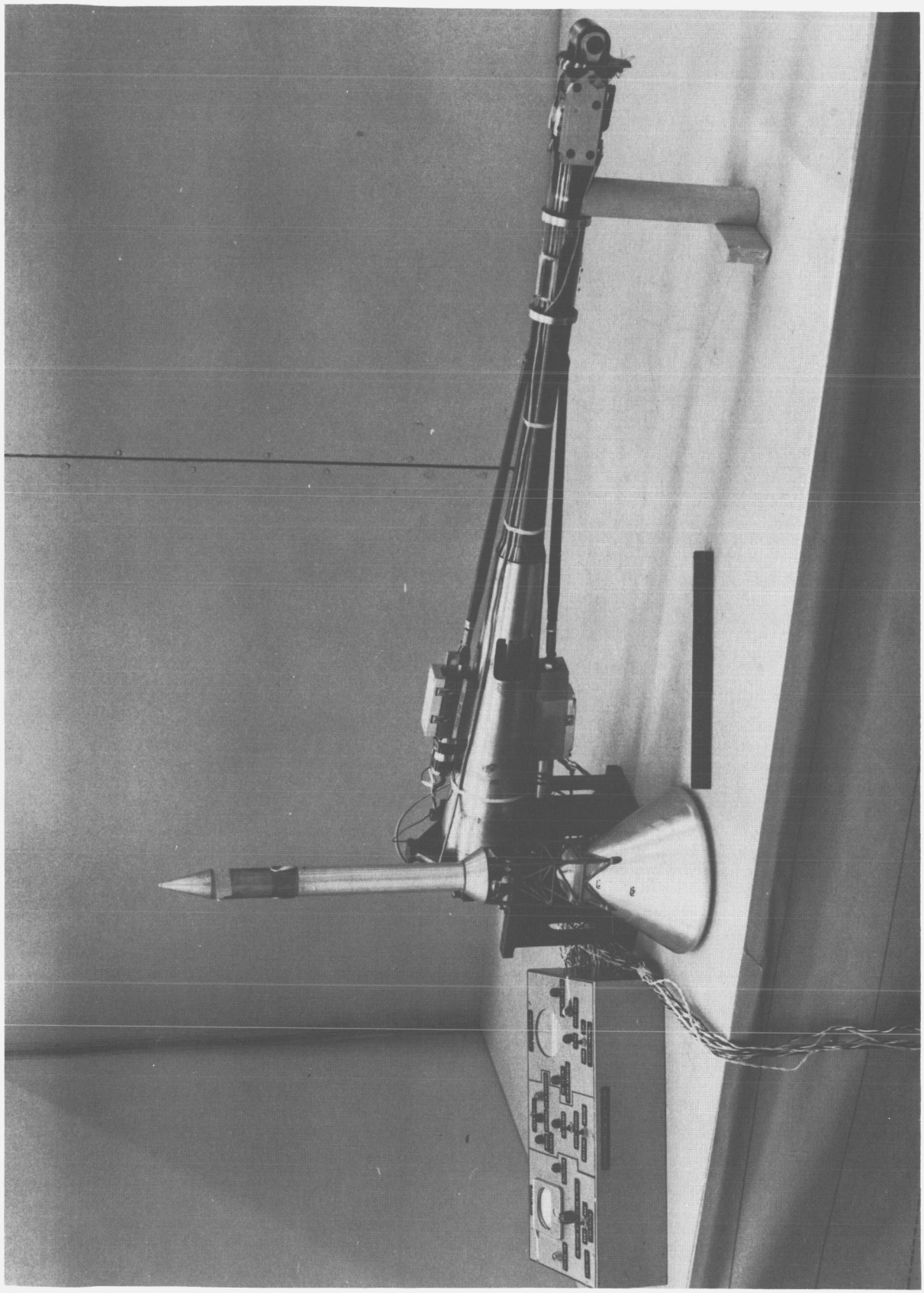

Figure 4. LEV Assembly and Actuator Mechanism

CONFIDENTIAL

CONFIDENTIAL

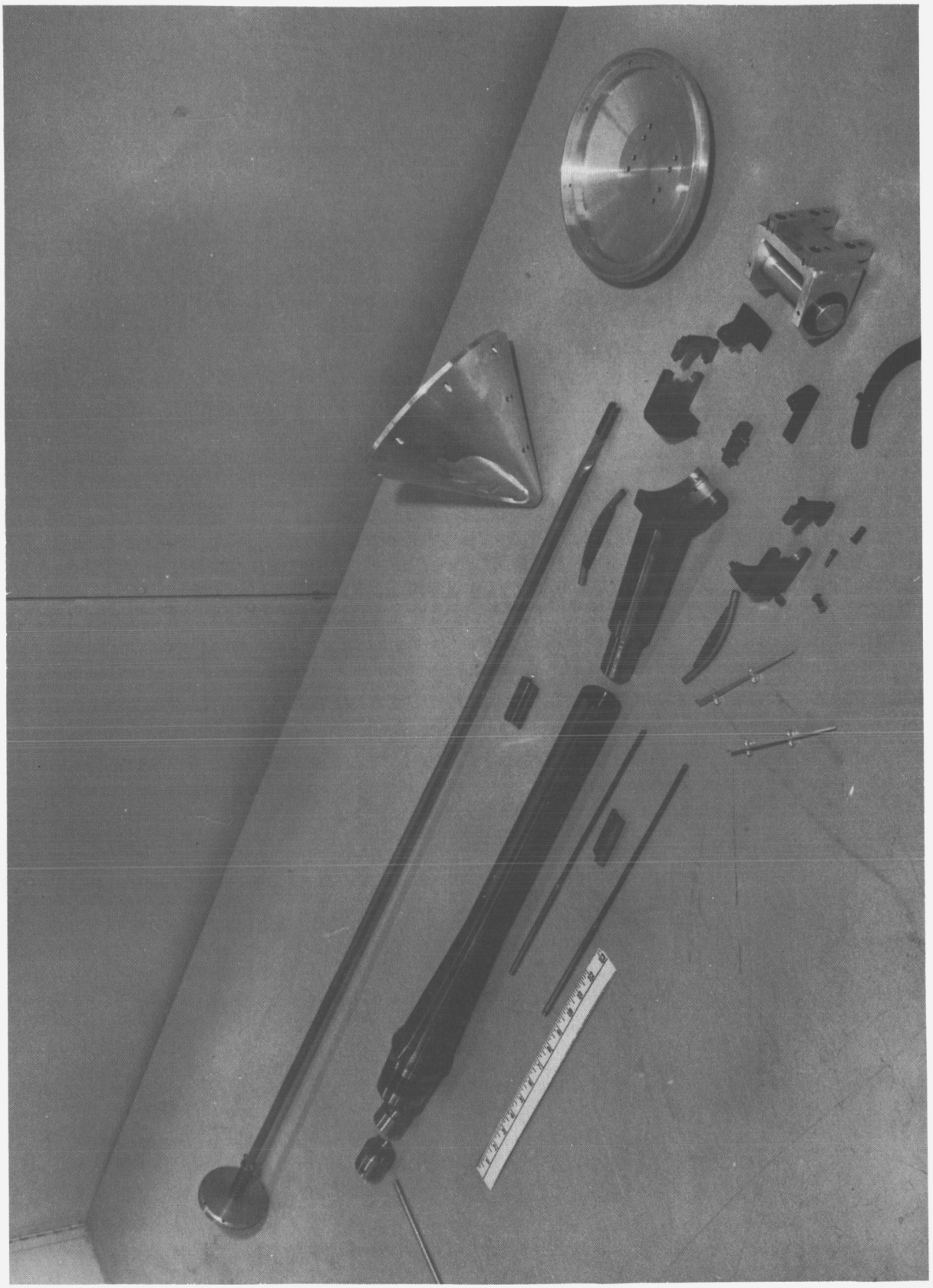

Figure 5. Command Module Assembly (Exploded View)

CONFIDENTIAL

~~CONFIDENTIAL~~

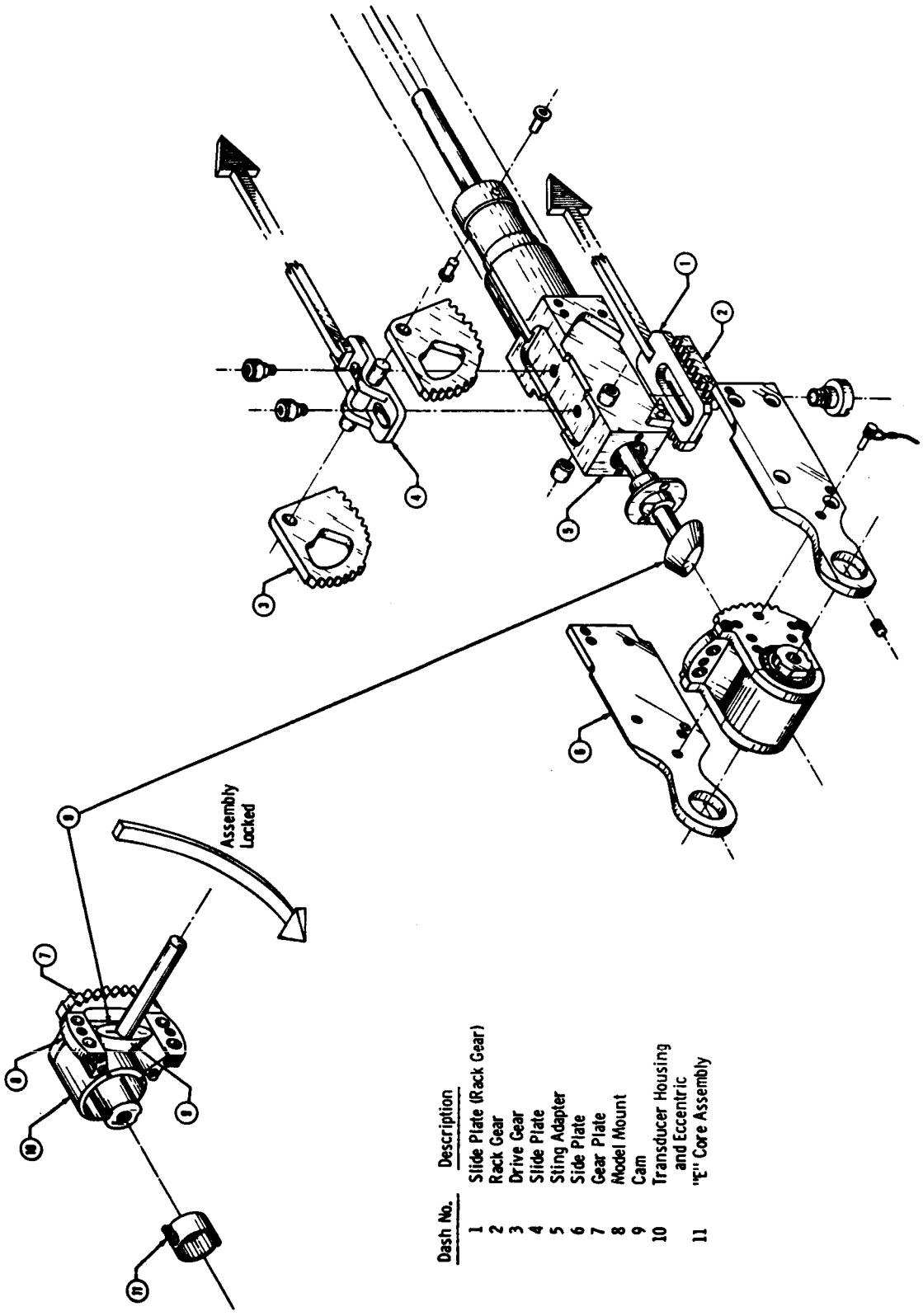

Dash No.	Description
1	Slide Plate (Rack Gear)
2	Rack Gear
3	Drive Gear
4	Slide Plate
5	Sting Adapter
6	Side Plate
7	Gear Plate
8	Model Mount
9	Cam
10	Transducer Housing and Eccentric
11	"E" Core Assembly

Figure 6. LEV Mechanical Bearing Balance Assembly

~~CONFIDENTIAL~~

~~CONFIDENTIAL~~

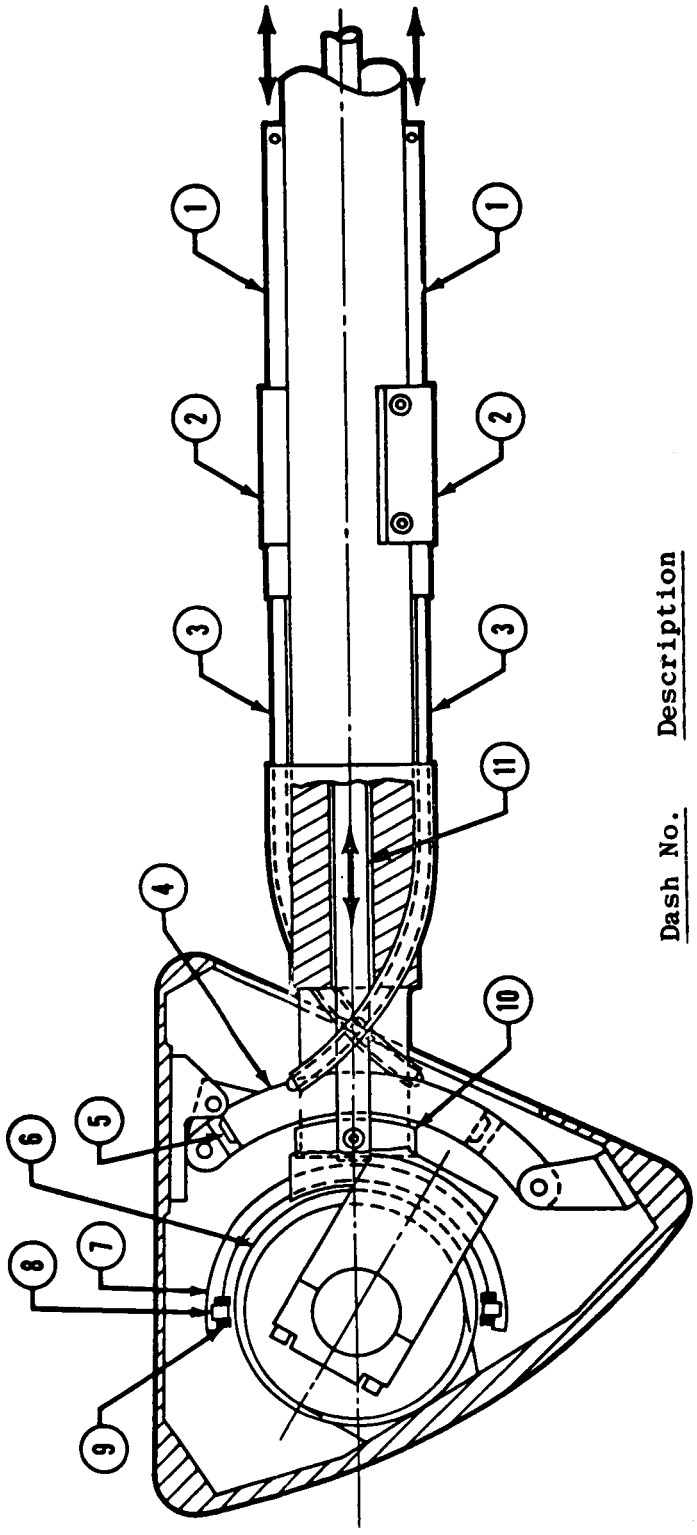

Dash No.	Description
1	Push Pull Rod
2	Rod Guide
3	Flex Shaft
4	Sector
5	Bucket
6	Eccentric
7	"E" Core Housing
8	"E" Core
9	Coil
10	Brake Shoe
11	Brake Rod

Figure 7. Command Module Gas Bearing Balance Assembly

~~CONFIDENTIAL~~

[redacted]

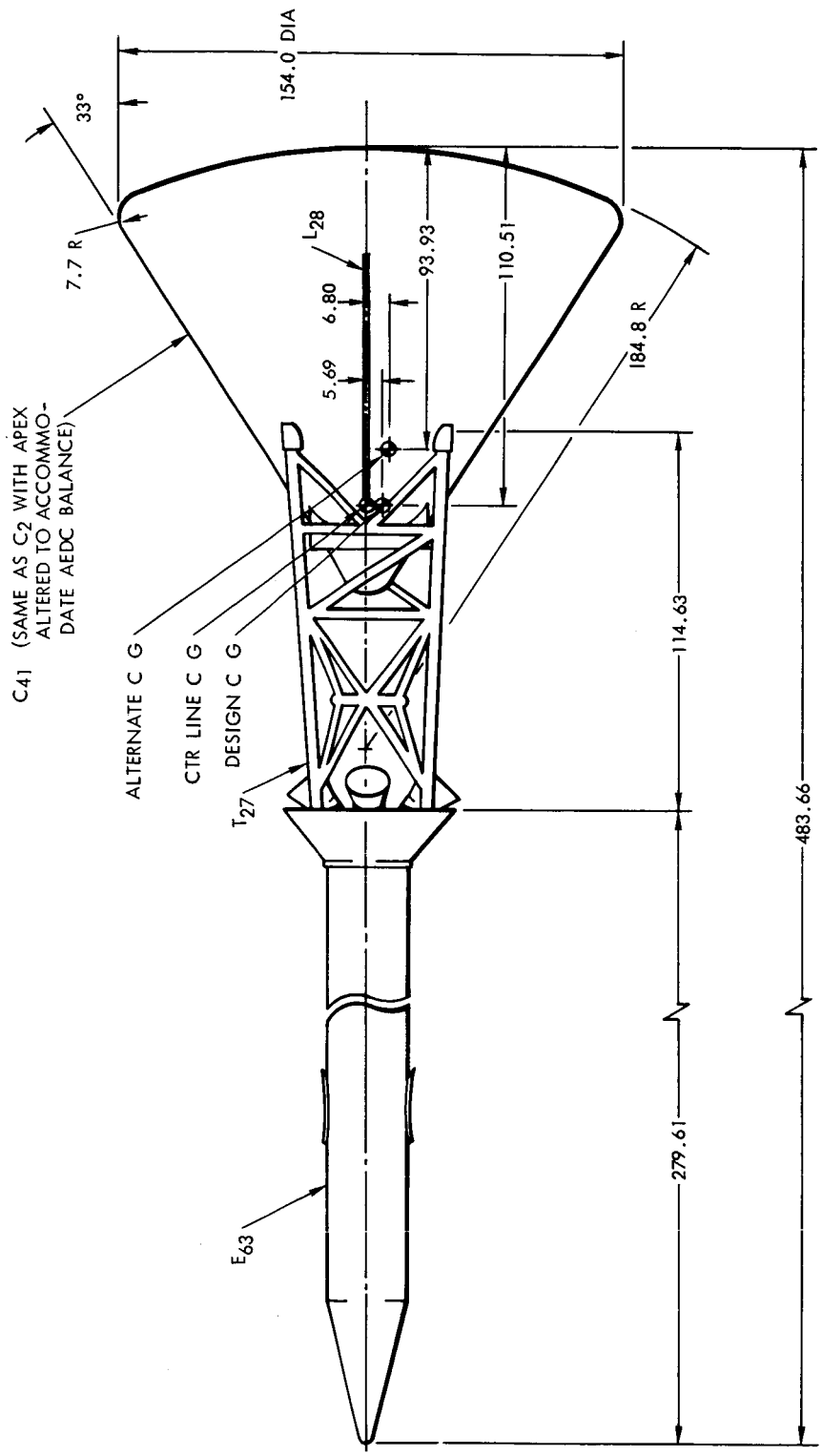

Figure 8. Launch Escape Vehicle (E_{63} T_{27} C_{41} L_{28})

[redacted]

~~CONFIDENTIAL~~

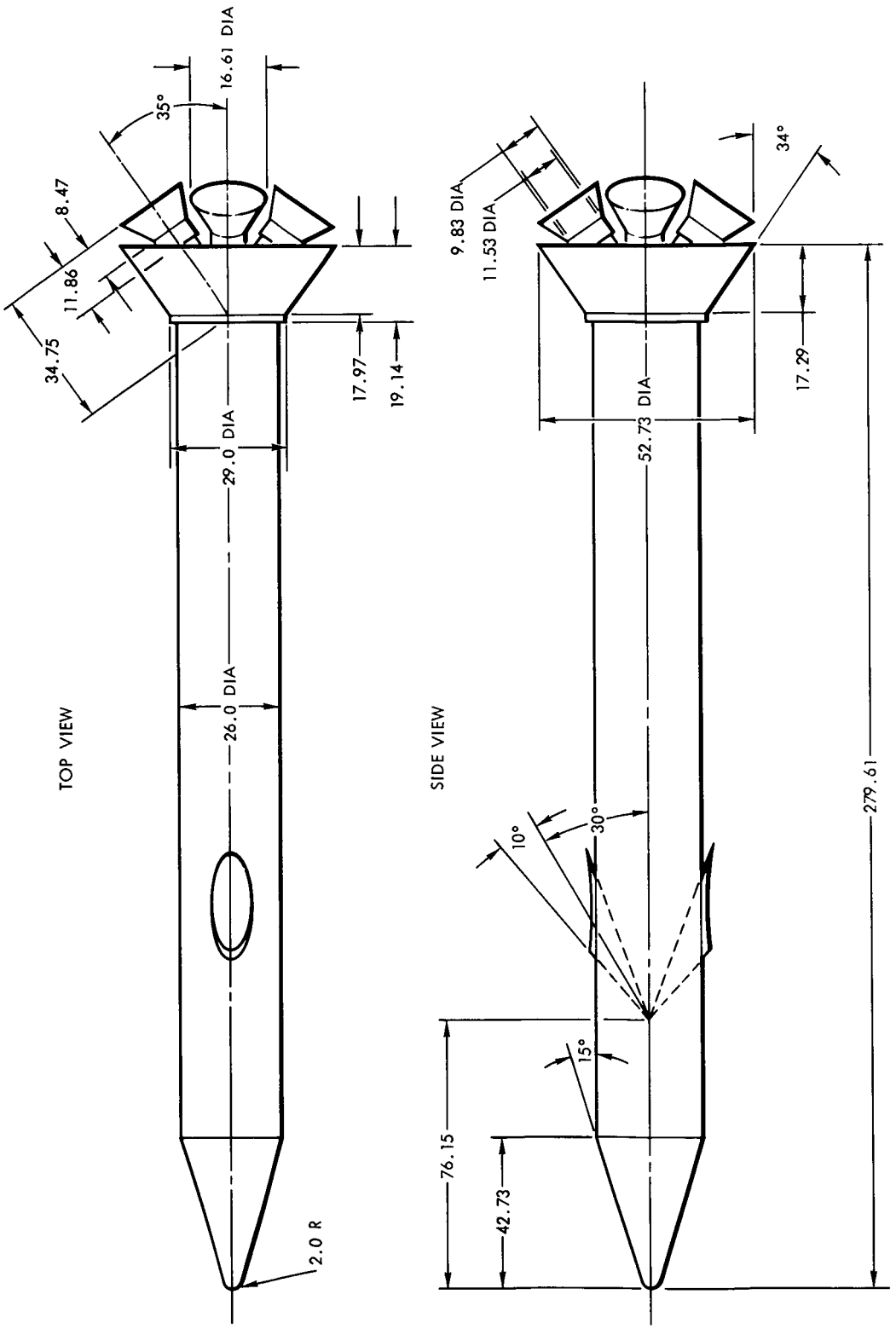

DRAWING NOT TO SCALE

FULL-SCALE DIMENSIONS IN INCHES

Figure 9. Escape Rocket (E_{63})

~~CONFIDENTIAL~~

~~CONFIDENTIAL~~

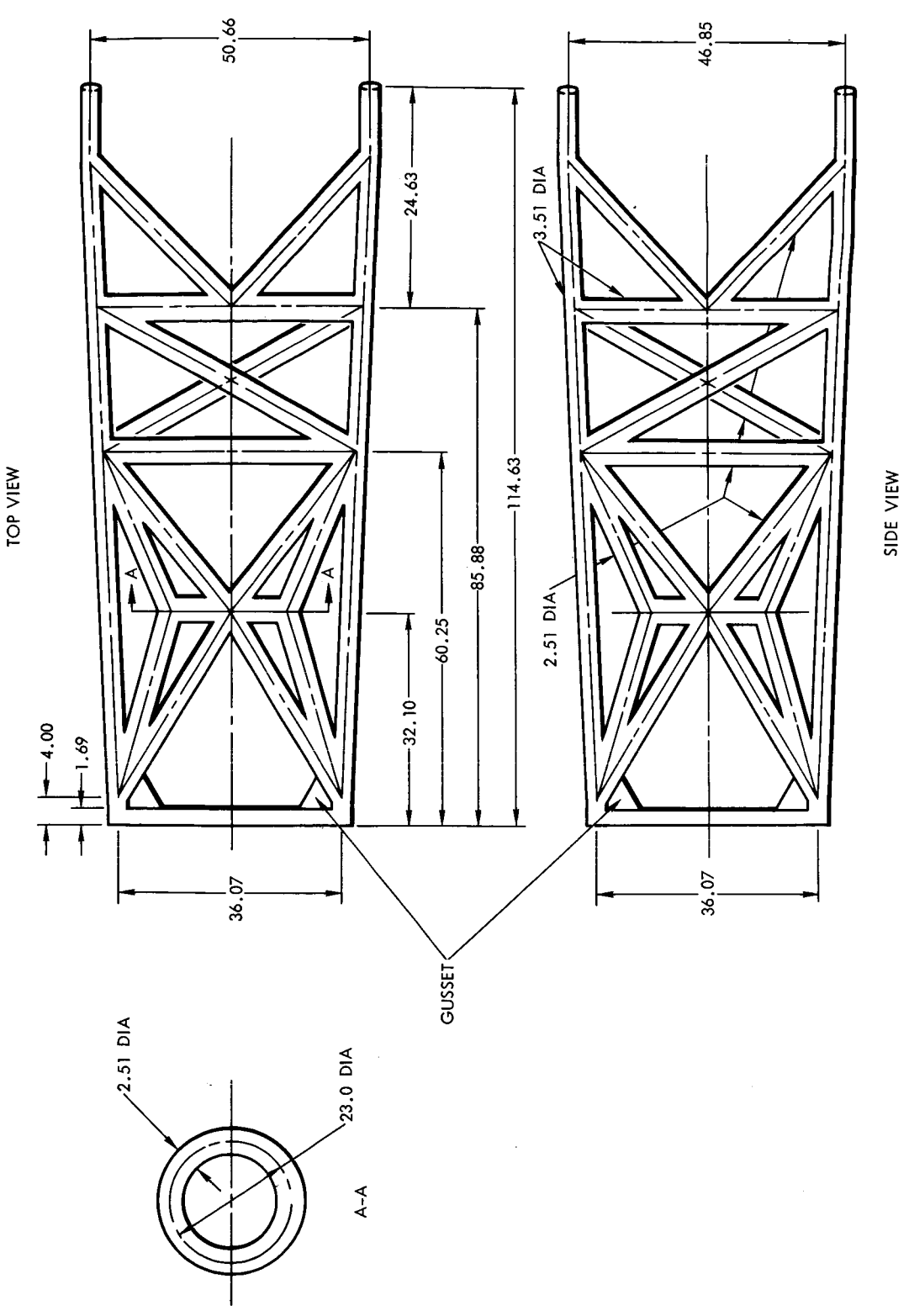

Figure 10. Escape Tower Structure (T_{27})

~~CONFIDENTIAL~~

~~CONFIDENTIAL~~

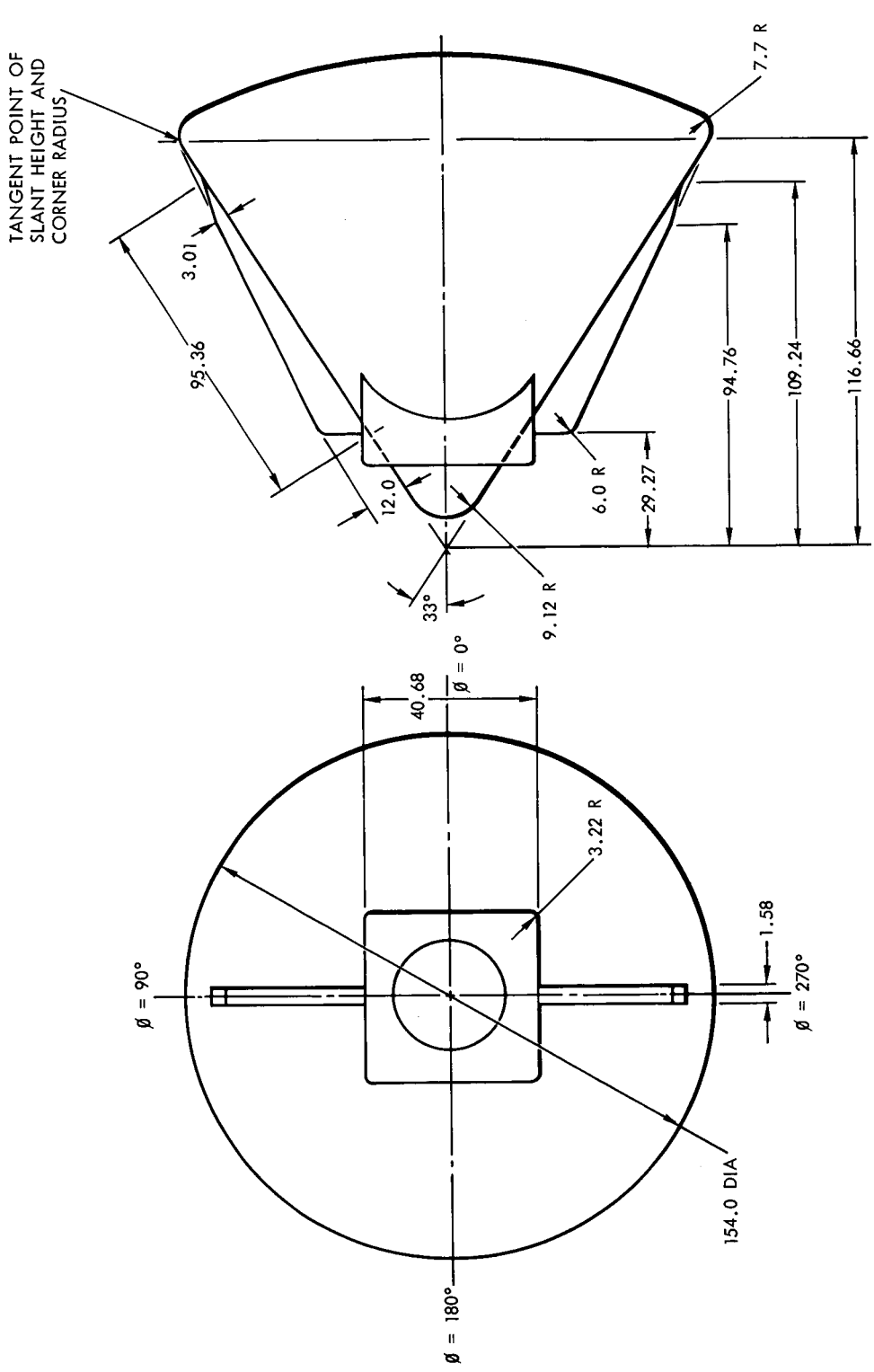

DRAWING NOT TO SCALE

FULL-SCALE DIMENSIONS IN INCHES

Figure 11. Command Module, C_{41} L_{28} (With Strakes)

~~CONFIDENTIAL~~

~~CONFIDENTIAL~~

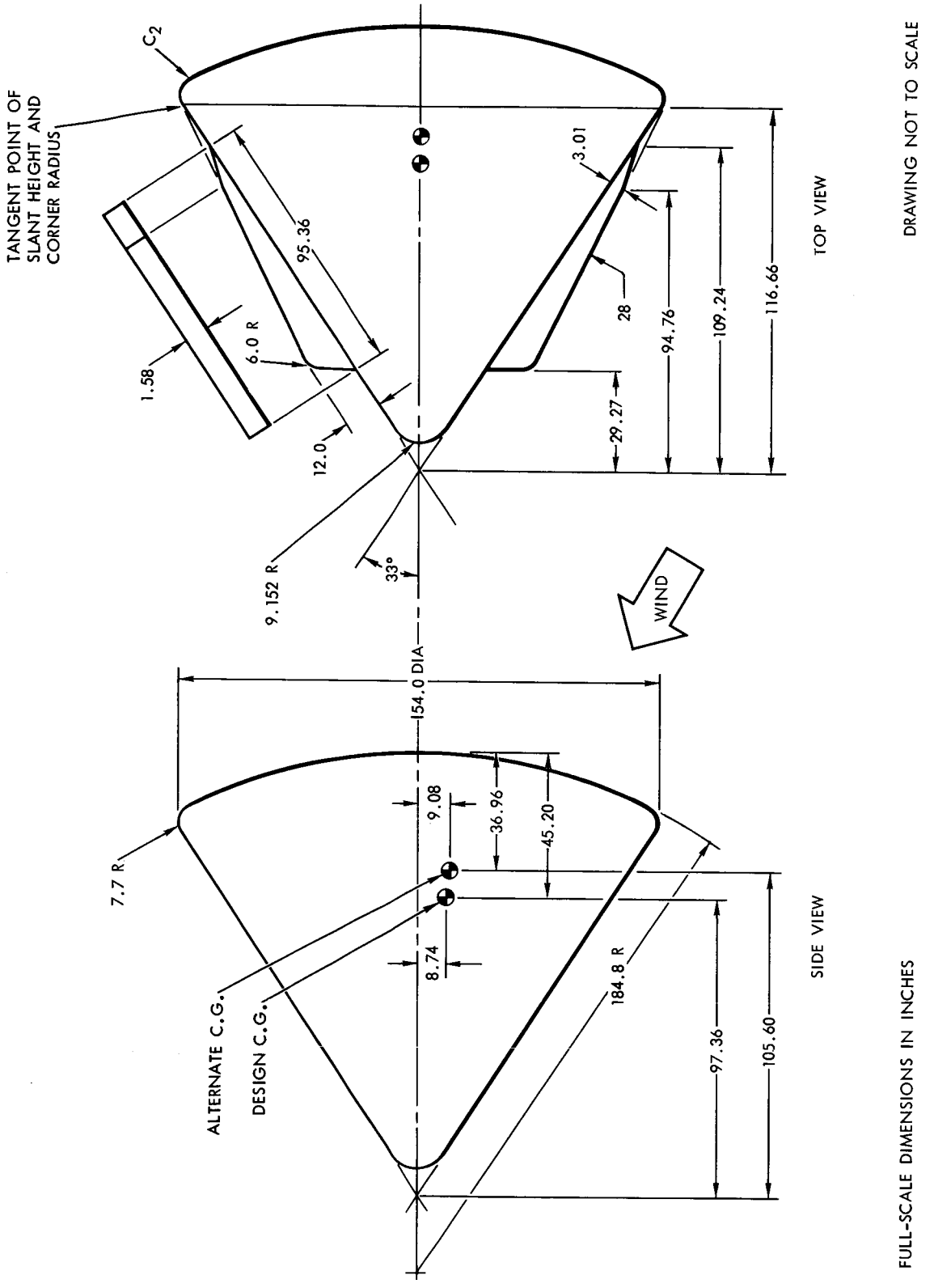

Figure 12. Command Module, C_2 L_{28} (With and Without Strakes)

~~CONFIDENTIAL~~

~~CONFIDENTIAL~~

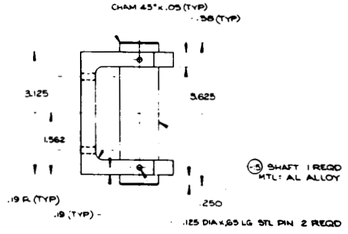

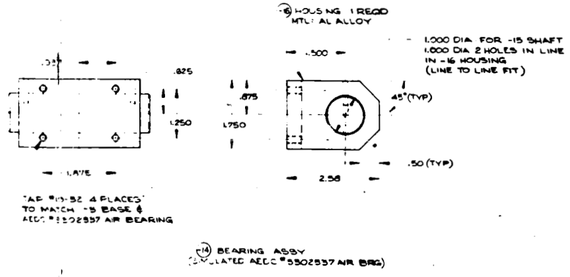

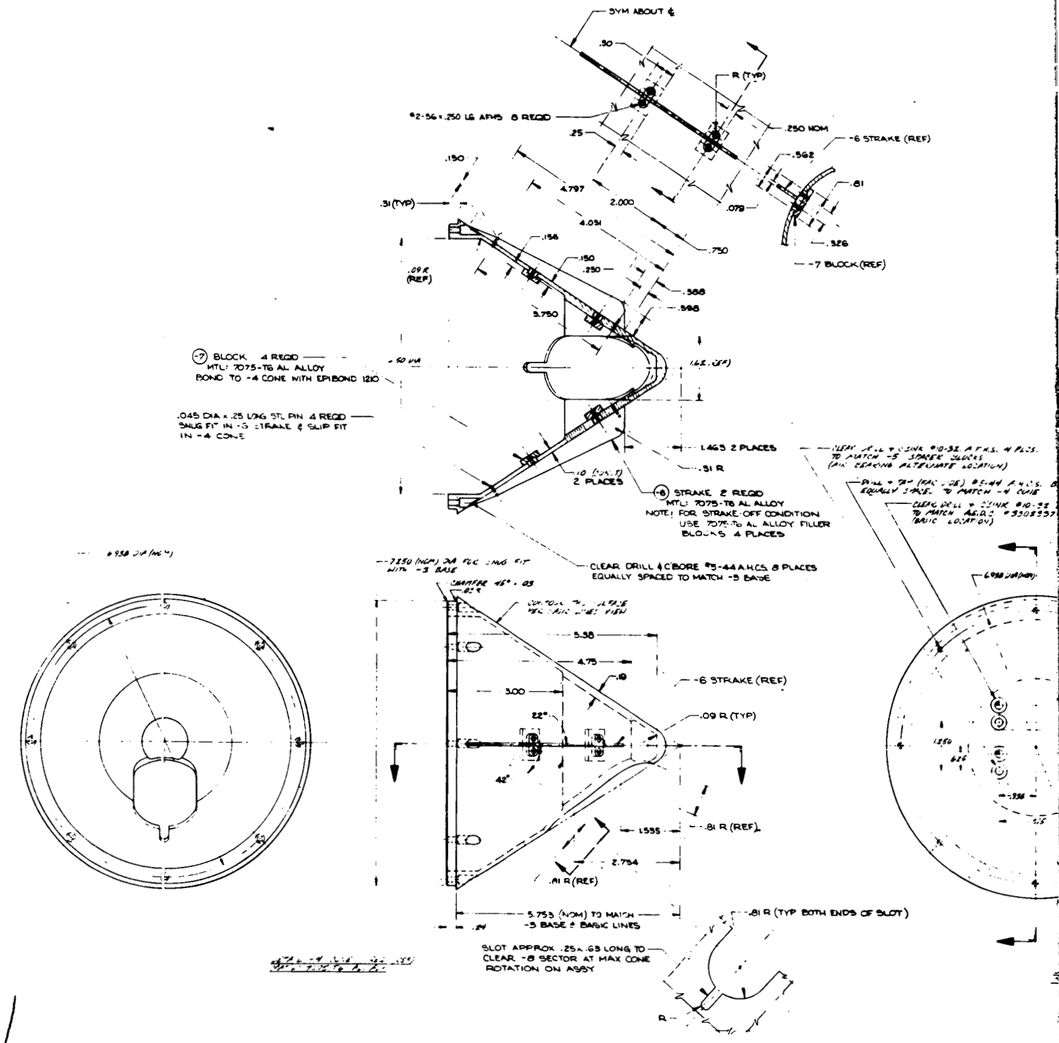

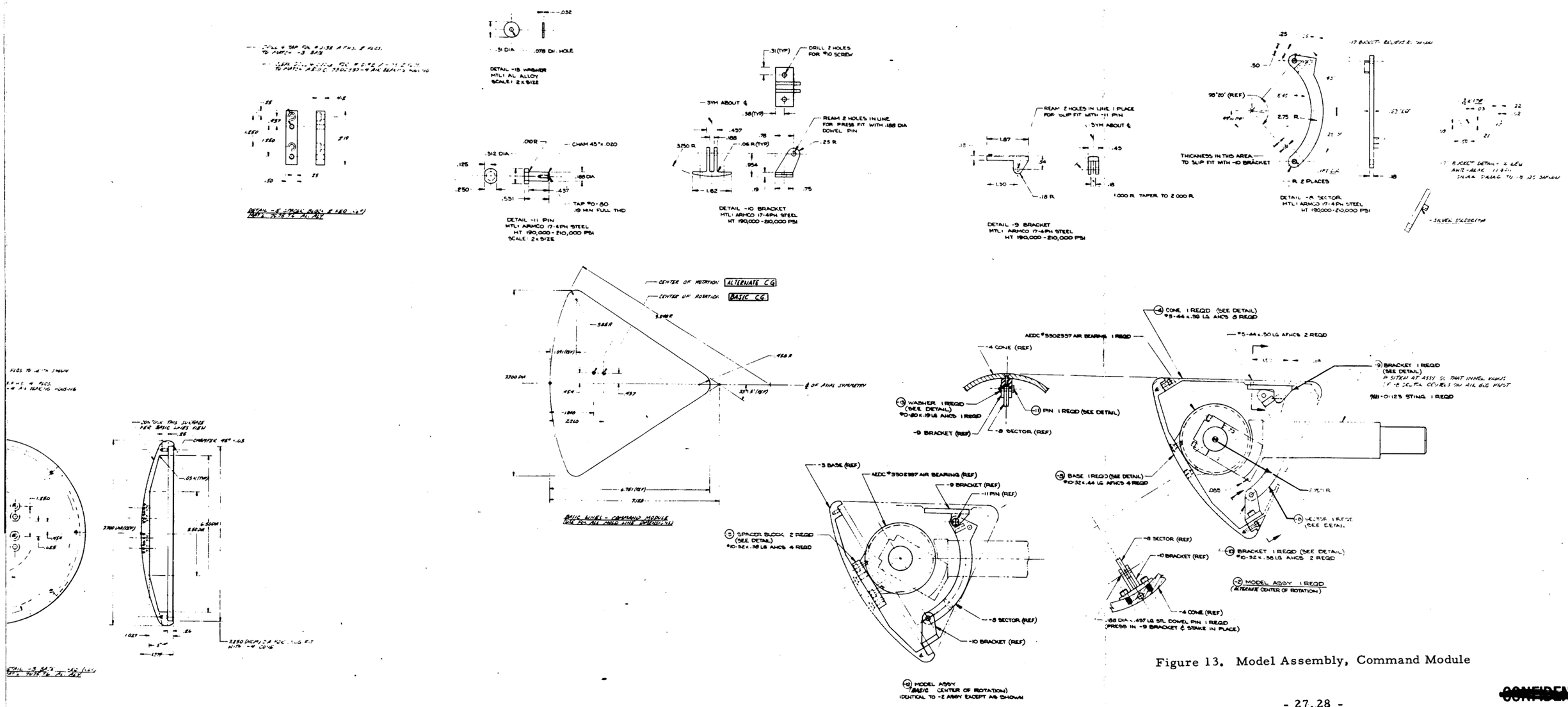

Figure 13. Model Assembly, Command Module

~~CONFIDENTIAL~~

~~CONFIDENTIAL~~

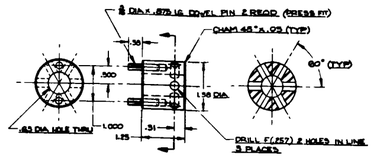

DETAIL (16) WRENCH 1 REQD
MTL: 1018 STL BAR OR EQUIV

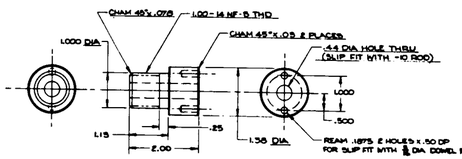

DETAIL (16) BOLT 1 REQD
MTL: 4340 STEEL BAR
HT - 125,000 - 140,000 PSI

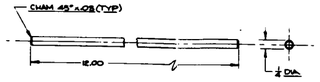

DETAIL (18) WRENCH HANDLE 1 REQD
MTL: DRILL ROD OR EQUIV

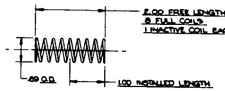

DETAIL (17) SPRING 1 REQD
MTL: .063 DIA MUSIC WIRE

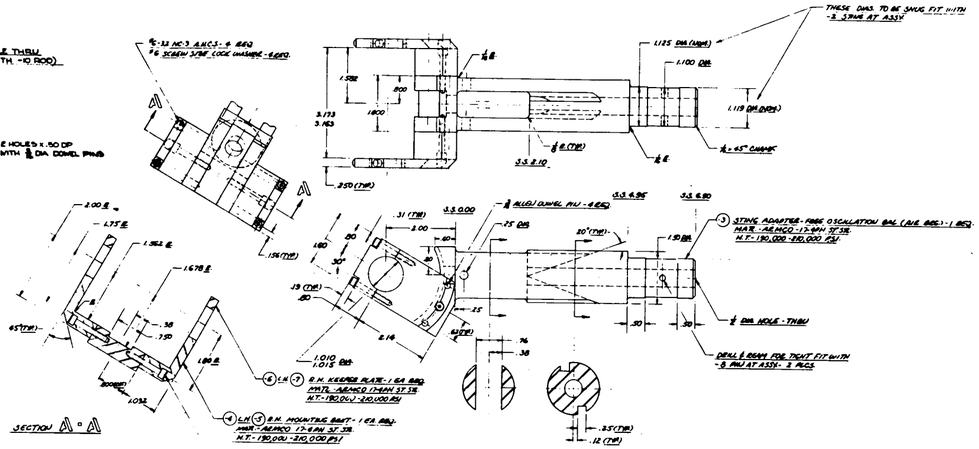

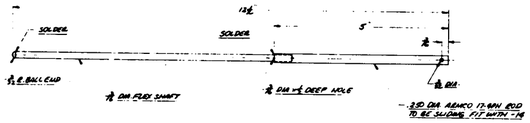

DETAIL (17) FLEX SHAFT ASSY - 2 REQ
MATL - ARMCO

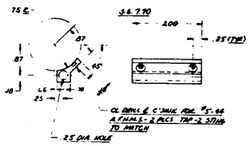

DETAIL (14) MTG. BRKT. 2 REQ
MATL - ARMCO 17-4 PH 37 STR.
H.T. - 190,000 - 210,000 PSI

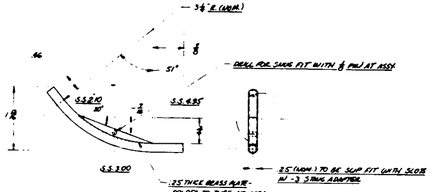

DETAIL (13) TUBE ASSY - 2 REQ
MATL - .250 O.D. - .028 WALL STEEL TUBING & MODIFIED

NOTE: TUBE WALL THICKNESS MUST ALLOW FOR FREE SLIDING OF 3/16 FLEX SHAFT AT ASSY

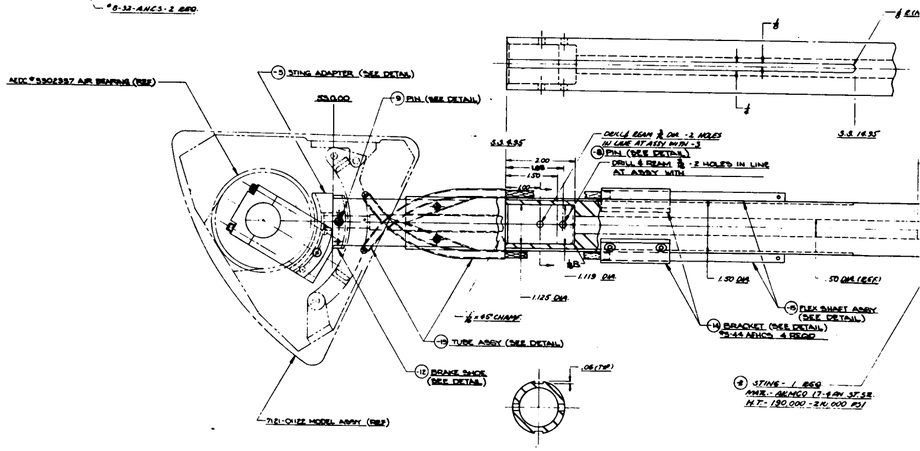

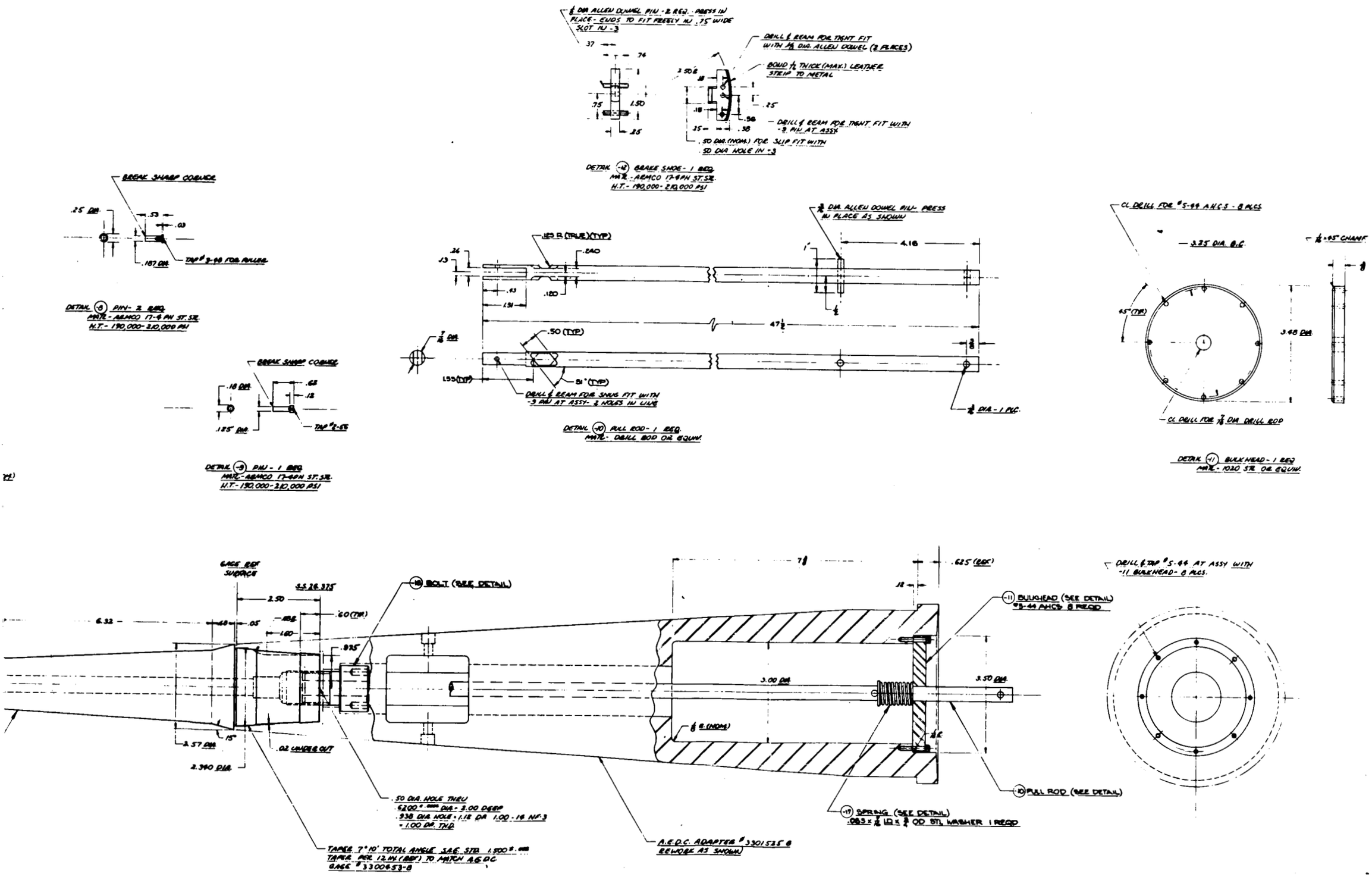

Figure 14. Command Module Sting and Balance Assembly

2

[redacted]

NORTH AMERICAN

~~CONFIDENTIAL~~

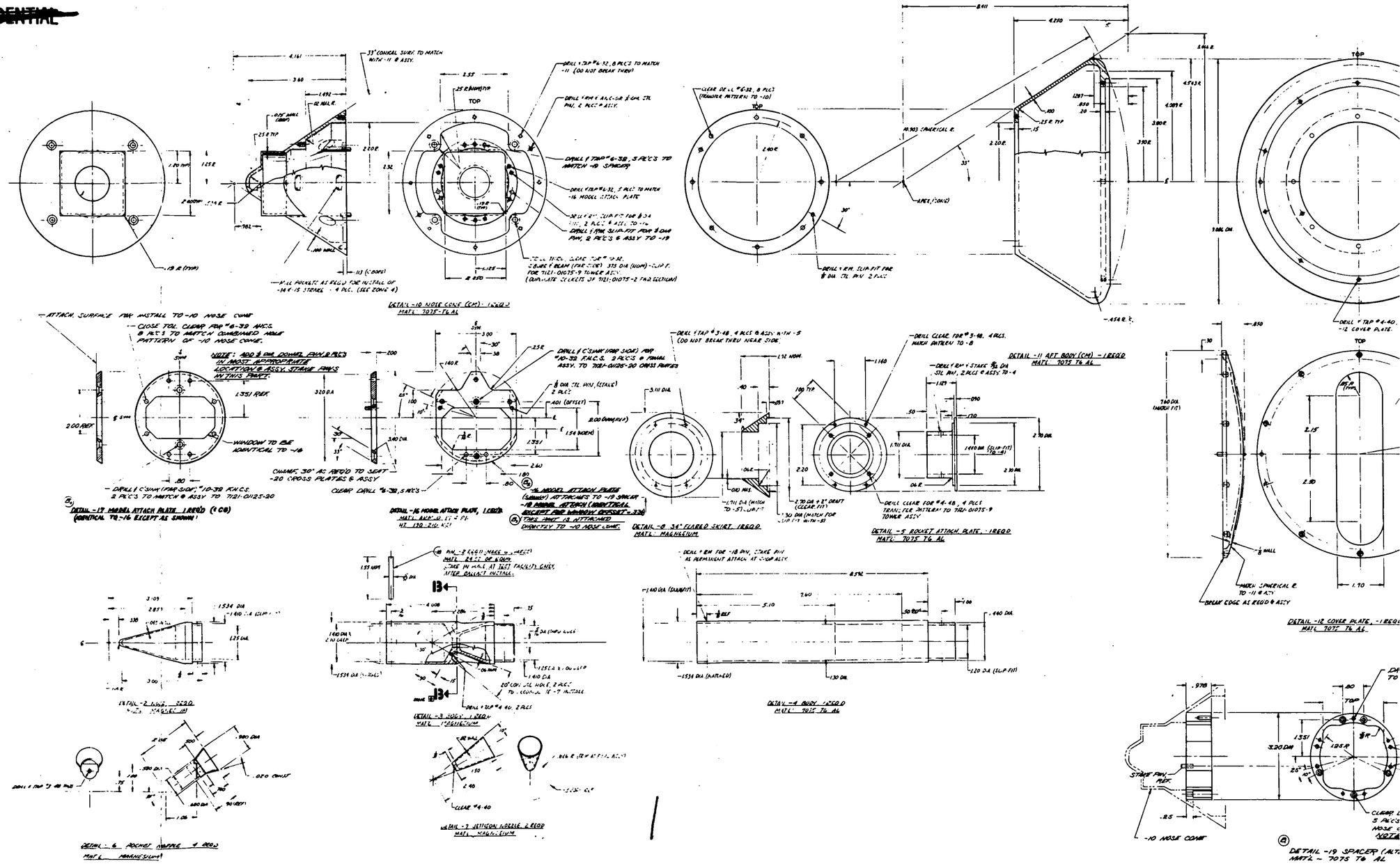

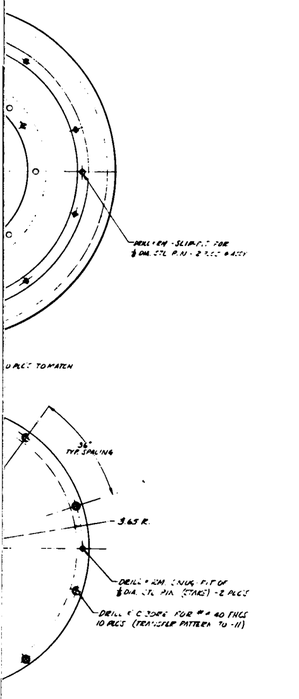

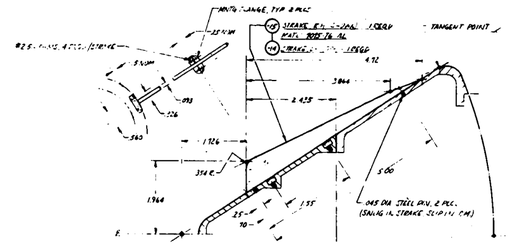

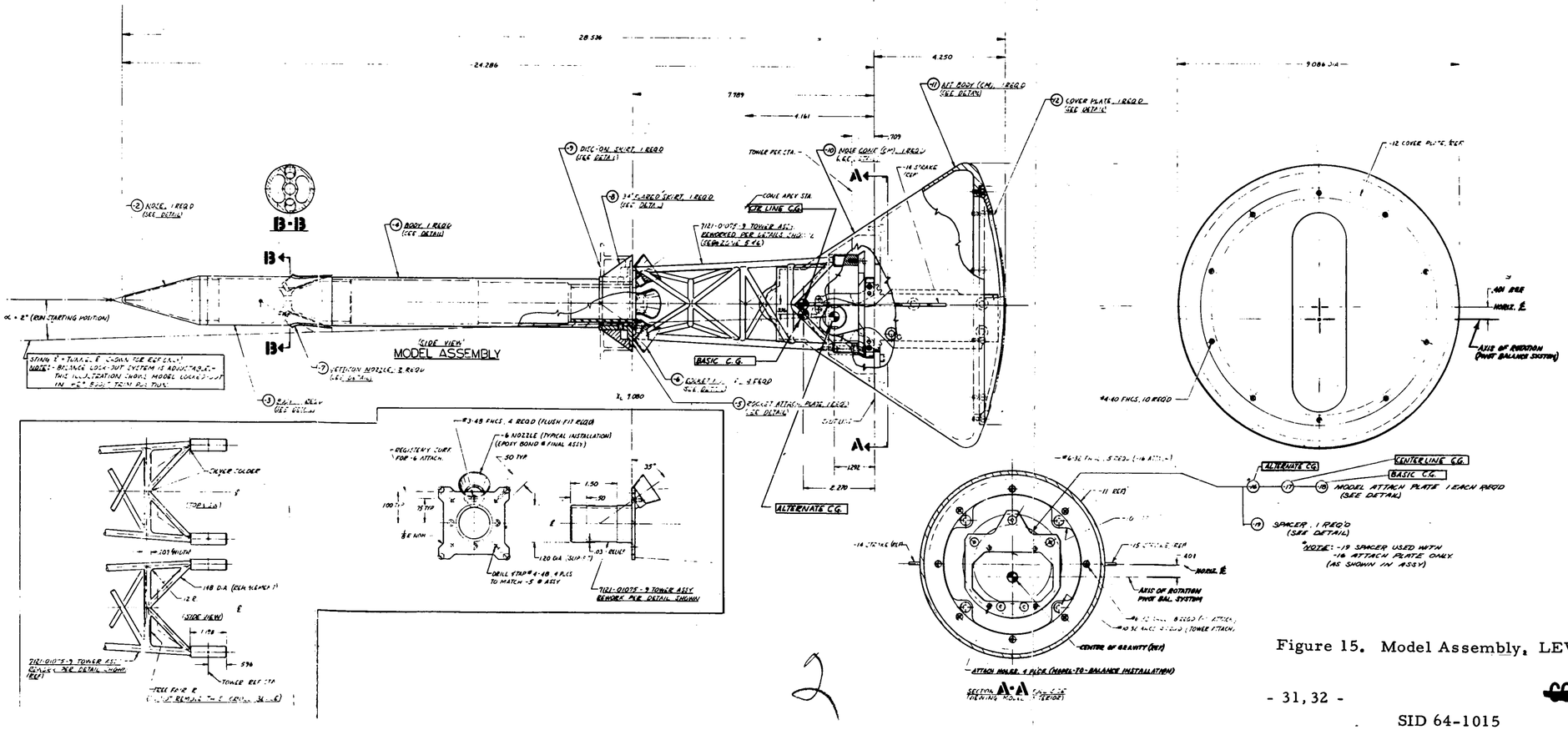

Figure 15. Model Assembly, LEV

~~CONFIDENTIAL~~

~~CONFIDENTIAL~~

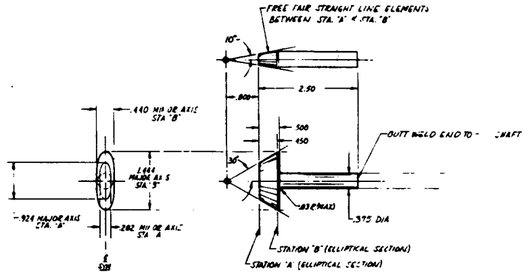

DETAIL -18 CAM 1 REQ'D
MATL: 4130 STEEL OR BETTER
-7 NONE REQ'D.

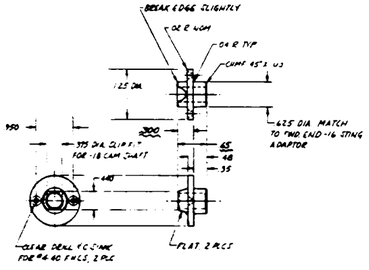

DETAIL -19 END PLATE BUSHING 1 REQ'D
MATL ARMCO 17-4 PH ST STL
H.T. 190-210 KSI

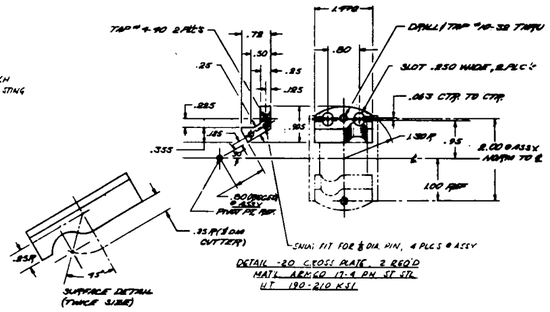

DETAIL -20 CROSS PLATE 2 REQ'D
MATL ARMCO 17-4 PH ST STL
H.T. 190-210 KSI

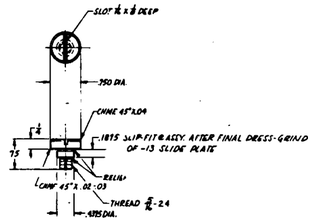

DETAIL -14 SHOULDER SCREW 1 REQ'D
MATL ARMCO 17-4 PH ST STL
H.T. 190-210 KSI

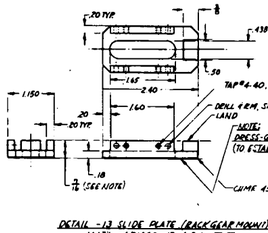

DETAIL -13 SLIDE PLATE (RACK GEAR MOUNT)
MATL ARMCO 17-4 PH ST STL
H.T. 190-210 KSI

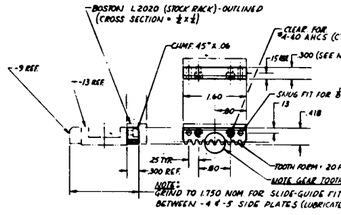

DETAIL -10 RACK GEAR, L.H. (SHOWN) -1
MAKE FROM, BOSTON, L2020 STEEL
DETAIL -9 RACK GEAR, R.H. (OPP) -

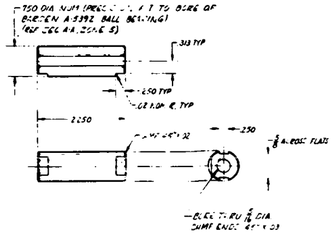

DETAIL -3 SHAFT, 1 REQ'D
MATL 4240, 2 [illegible]
H.T. [illegible]

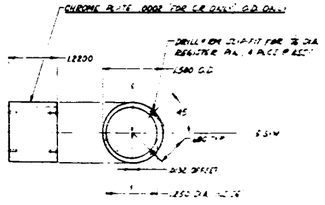

DETAIL -2 TRANSDUCER HOUSING 1 REQ'D
MATL 1020 STEEL
H.T. NONE
THIS MATERIAL [illegible]

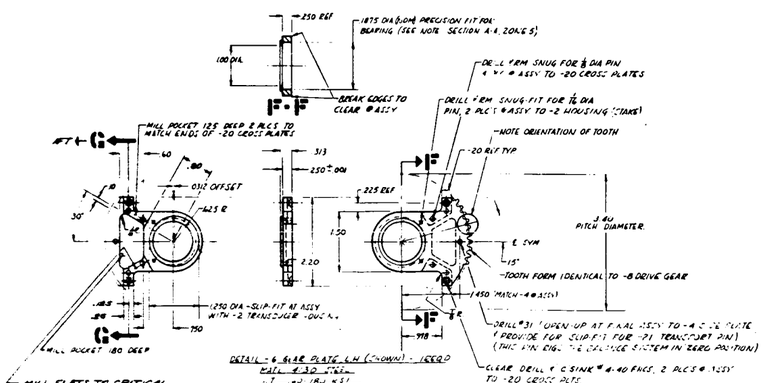

MILL FLATS TO CRITICAL DIMS. SHOWN, TO ACCOMODATE DESIGN CHANGE OF -20 CROSS PLATES (ALSO AFFECTS -7 GEAR PLT.)

DETAIL - 6 GEAR PLATE L.H. (SHOWN) - 1 REQ'D
MATL 4130 STEEL
H.T. 160-180 KSI
DETAIL -7 GEAR PLATE R.H. (OPP) - 1 REQ'D

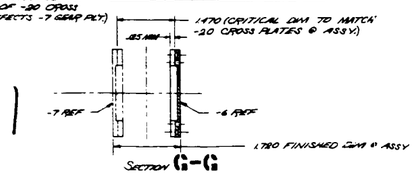

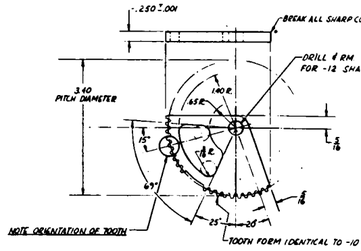

DETAIL -8 DRIVE GEAR 2 REQ'D
MATL 4130 STEEL
H.T. 160-180 KSI

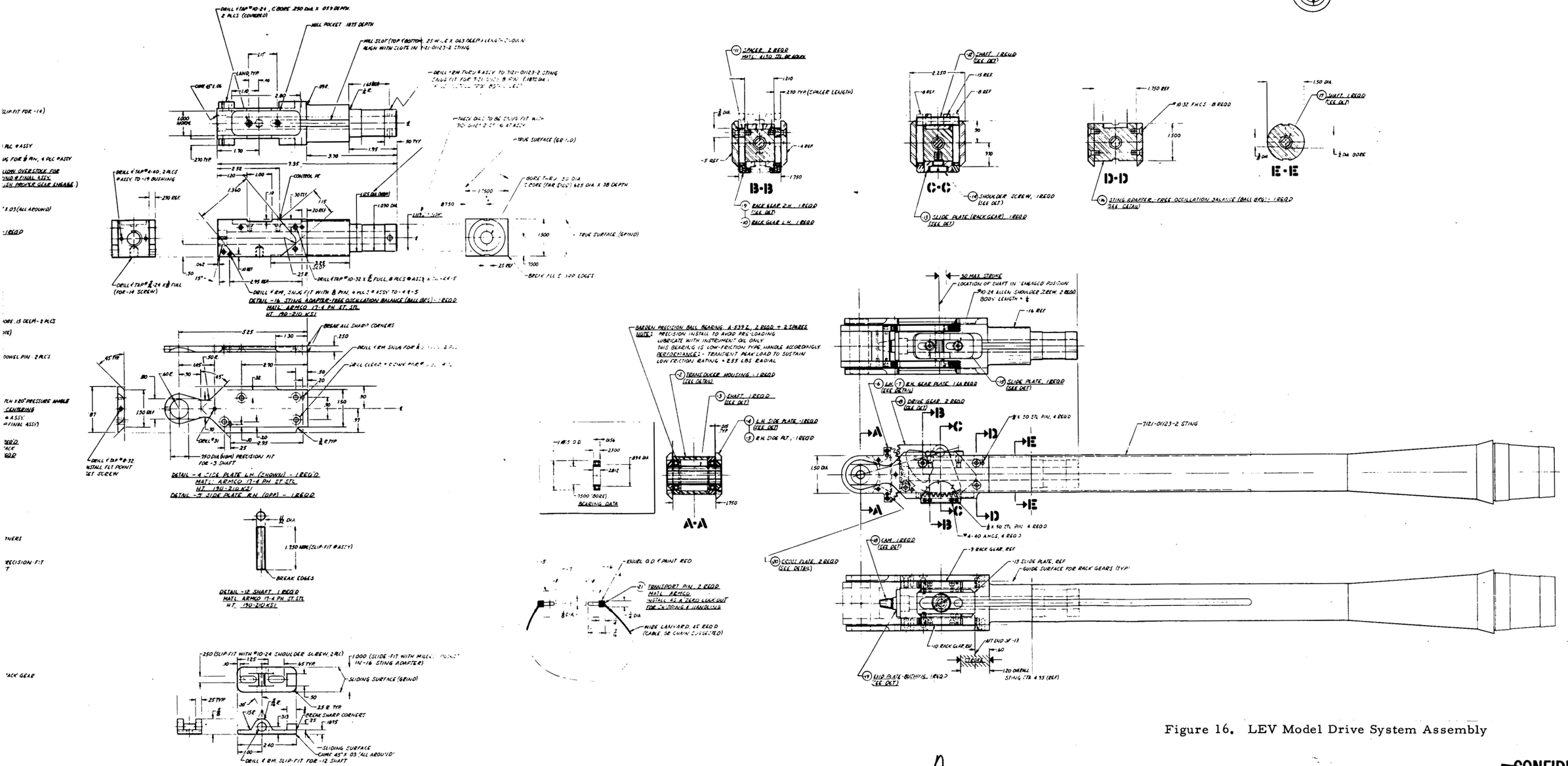

Figure 16. LEV Model Drive System Assembly

~~CONFIDENTIAL~~

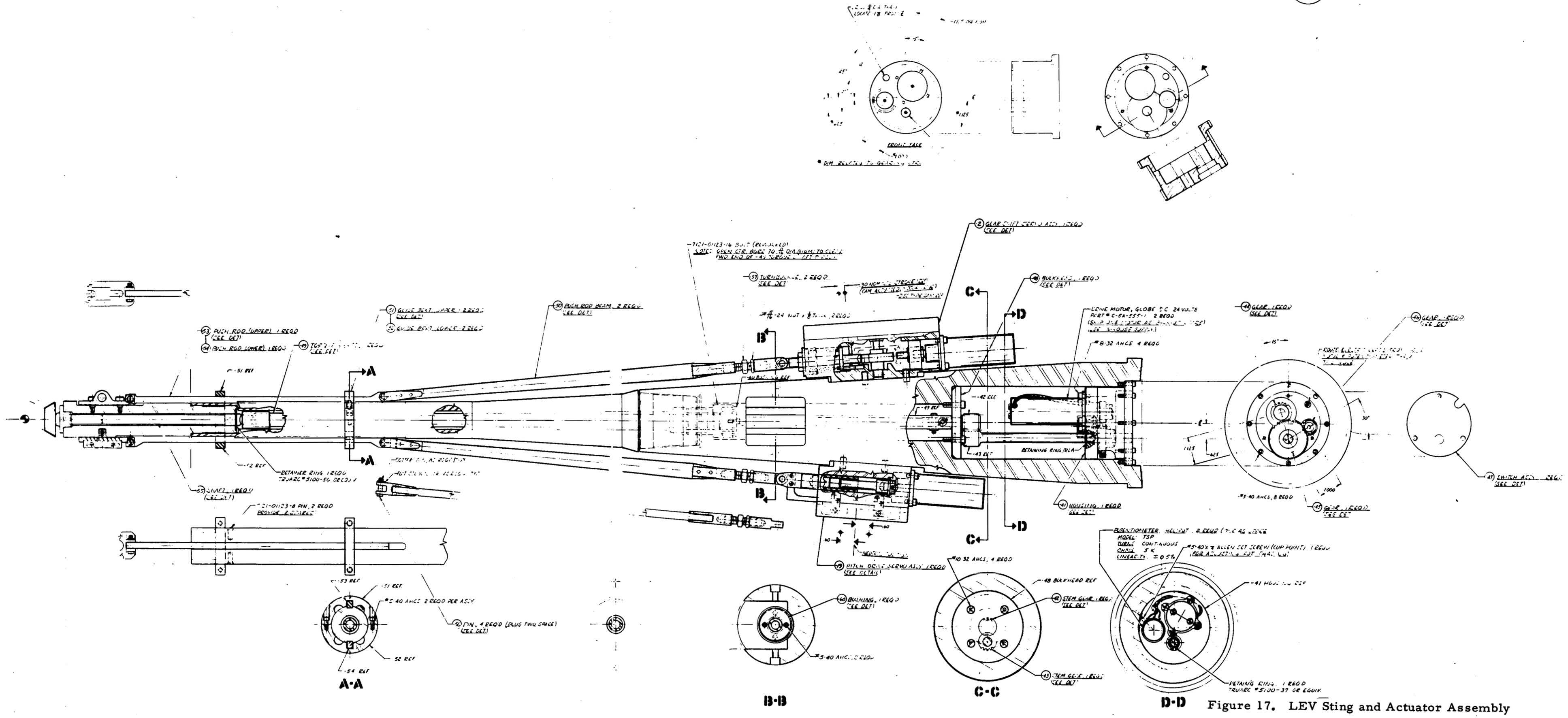

Figure 17. LEV Sting and Actuator Assembly

BIBLIOGRAPHY

Pretest Report for Tests of Apollo FD-5 Free Oscillation, Dynamic Stability Models in the AEDC VKF Tunnel A. NAA, S&ID, SID 63-316 (April 1963).

Structural Analysis of the 0.050 and 0.059-scale Apollo FD-5 Dynamic Stability Models. NAA, S&ID, SID 63-317 (July 1963).

Data Report for Tests of Apollo Dynamic Stability Model (FD-3) to Determine Command Module Stability and Launch Escape Vehicle Flow Separator Effects in the Mach Range from 1.5 to 10.0. NAA, S&ID, SID 63-616.

Evaluation of a Gas Bearing Pivot for a High Amplitude Dynamic Stability Balance. AEDC-TDR-62-221 (December 1962).

Damping Measurements with a Sting-Supported Bearing-Pivot Dynamic Balance. AEDC-TN-61-52 (May 1961).

Dynamic Stability Tests in Hypersonic Tunnels and at Large Model Amplitudes. AEDC-TR-59-24 (December 1959).

[redacted]

APPENDIX A
PLOTTED DATA

Damping-in-pitch versus amplitude of oscillation

$(C_{m_q} + C_{m_{\dot{\alpha}}}$ vs $\theta)$

COMMAND MODULE ENTRY CHARACTERISTICS

Design center of gravity, strakes on (M = 1.5, 2.0, 3.0, 4.0, 6.0)

Design center of gravity, strakes off (M = 1.5, 2.0)

Alternate center of gravity, strakes off (M = 3.0)

LAUNCH ESCAPE VEHICLE CHARACTERISTICS

Design center of gravity, strakes on (M = 1.5, 2.0, 3.0, 4.0)

Design center of gravity, strakes off (M = 1.5, 2.0, 3.0)

Alternate center of gravity, strakes off (M = 2.0, 3.0, 4.0)

Center-line center of gravity, strakes off (M = 1.5, 2.0, 3.0)

[redacted]

~~CONFIDENTIAL~~

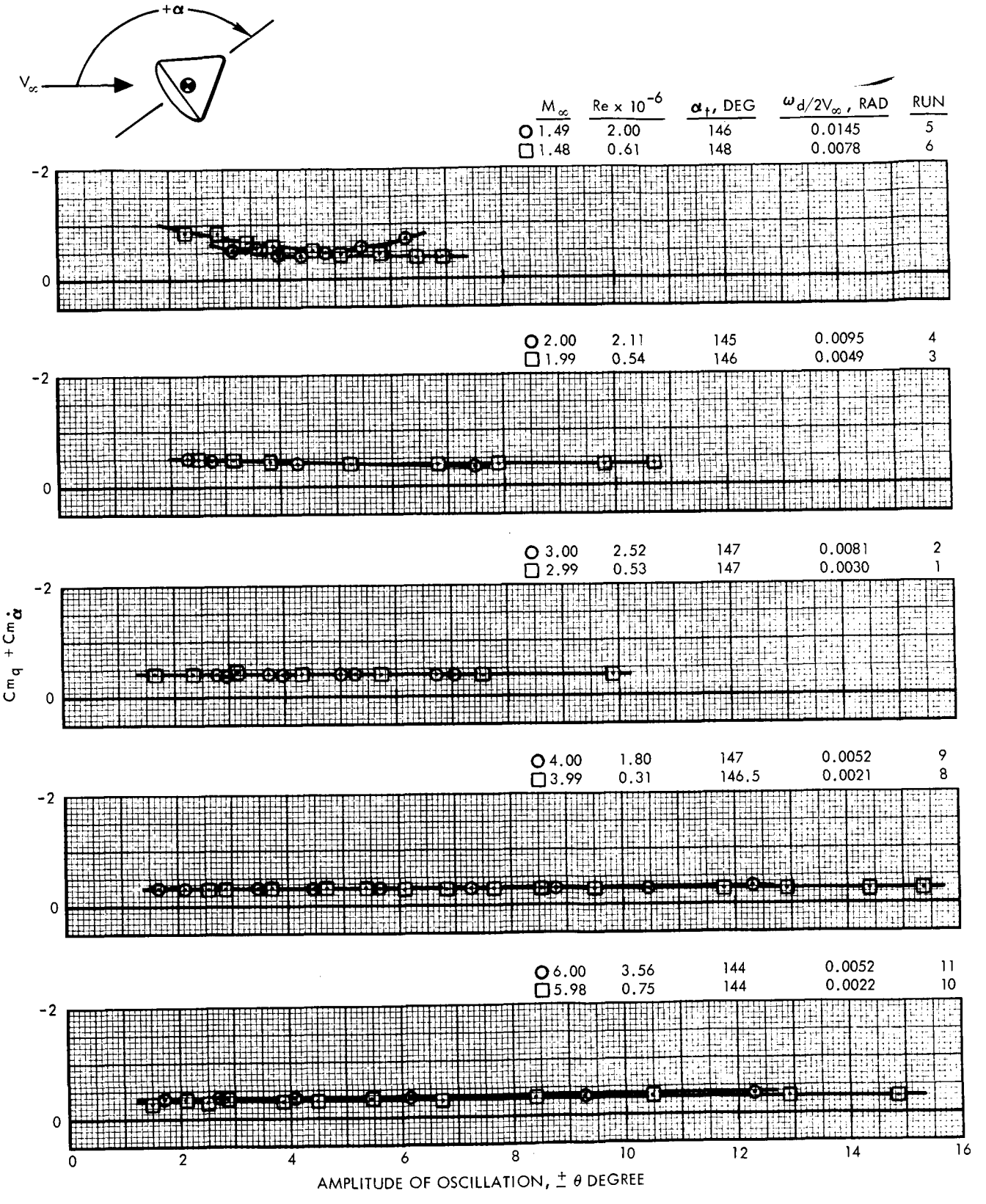

Command Module Design Center of Gravity, With Strakes

~~CONFIDENTIAL~~

[redacted]

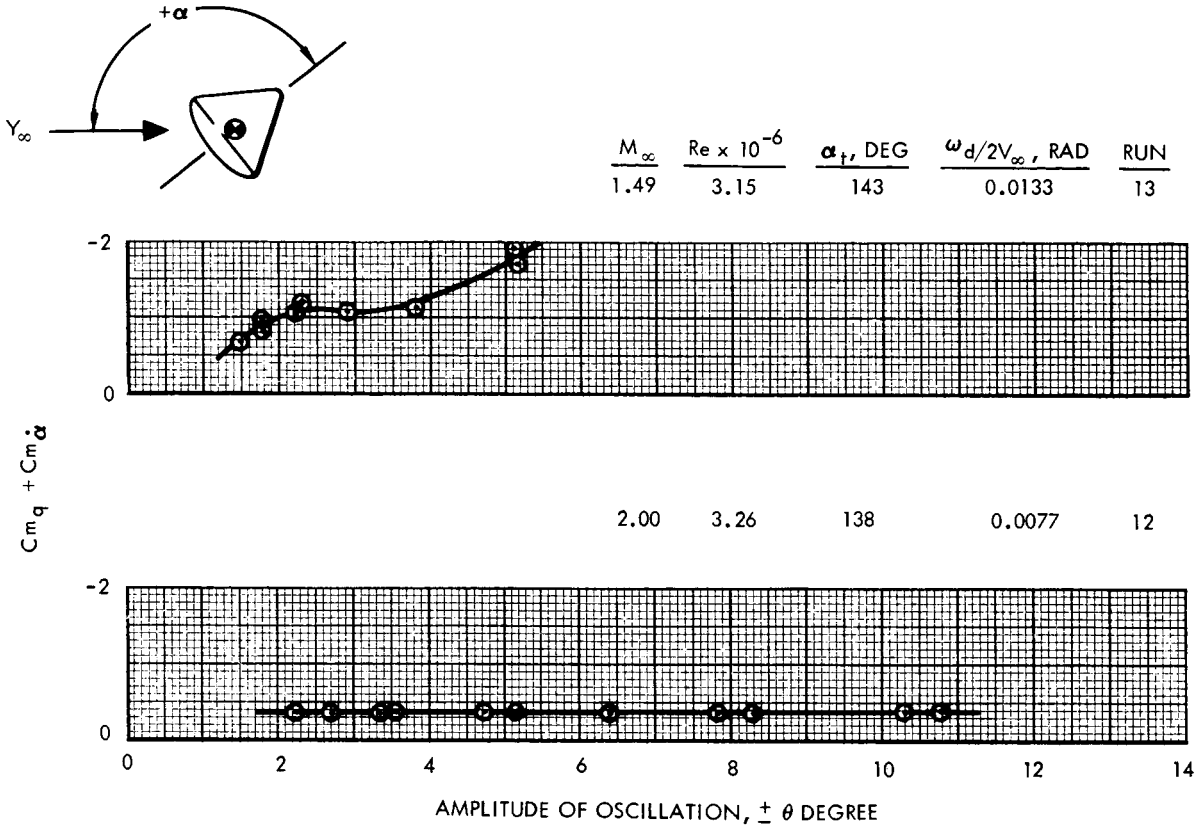

Command Module Design Center of Gravity, Without Strakes

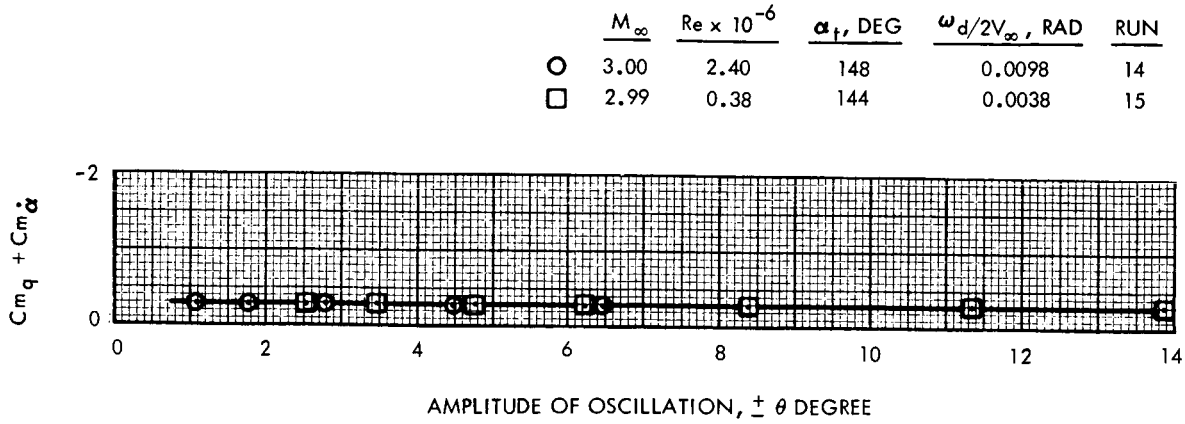

Command Module Alternate Center of Gravity, Without Strakes

[redacted]

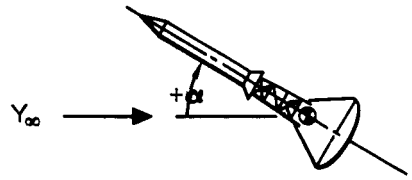

	M_∞	$Re \times 10^{-6}$	α_t, DEG	$\omega d/2V_\infty$, RAD	RUN
○	1.50	3.32	2.49	0.0157	21
□	1.49	0.55	1.87	0.0056	20

$Cm_q + Cm_{\dot{\alpha}}$

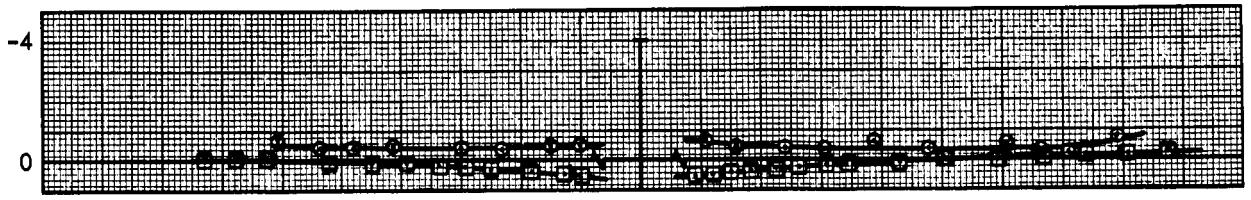

○	2.00	3.49	1.70	0.0130	18
□	1.99	0.59	2.00	0.0053	19

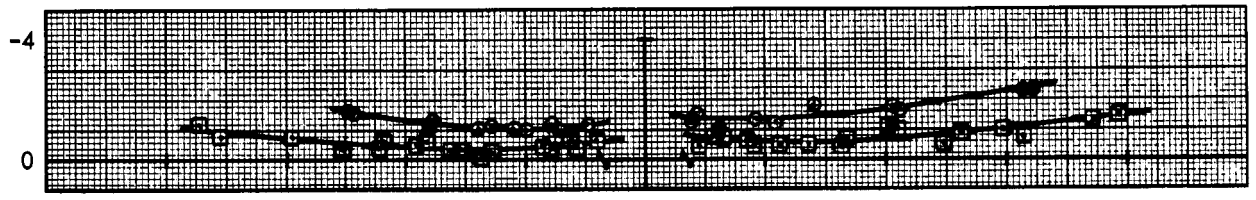

○	3.00	5.19	3.53	0.0100	17
□	2.99	0.46	4.84	0.0030	16

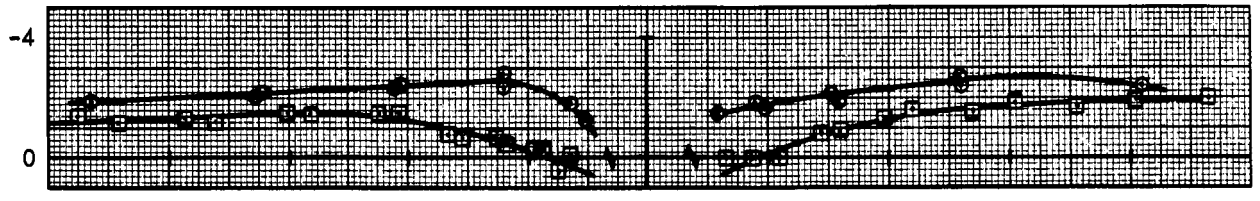

○	4.00	4.97	3.63	0.0084	23
□	3.99	0.36	3.77	0.0022	22

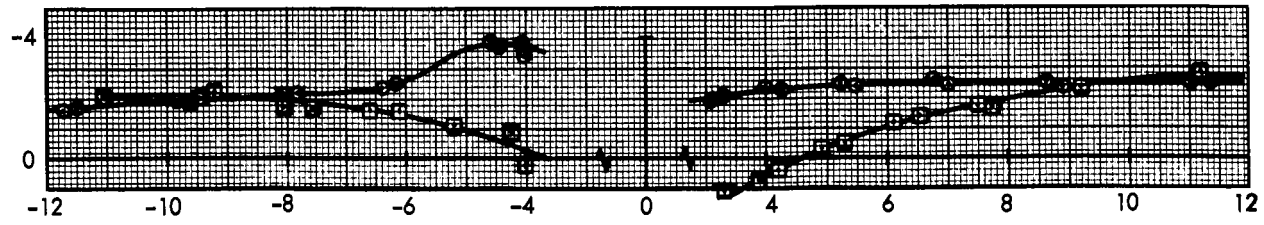

LEV Design Center of Gravity, With Strakes

[redacted]

~~CONFIDENTIAL~~

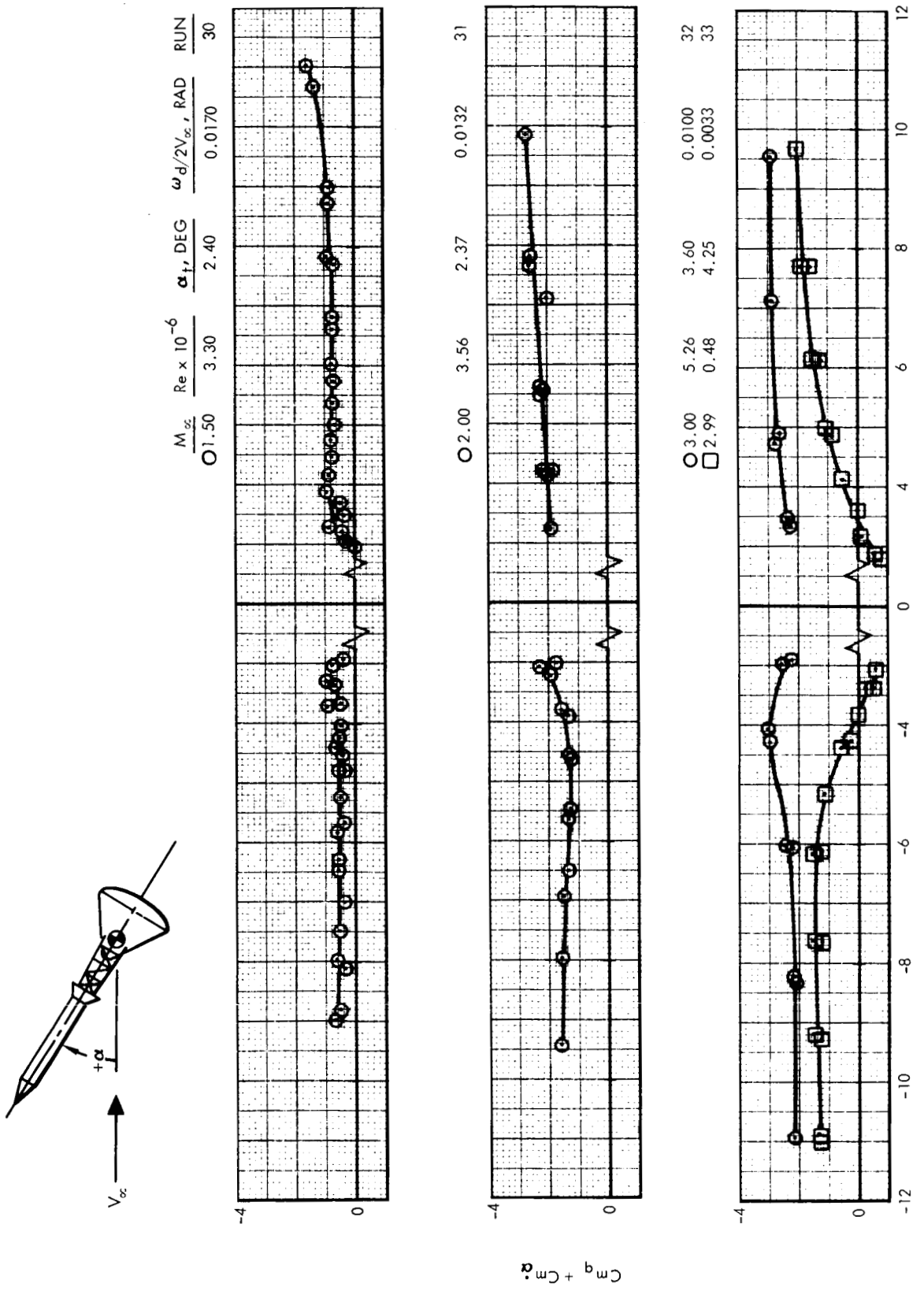

LEV Design Center of Gravity, Without Strakes

~~CONFIDENTIAL~~

~~CONFIDENTIAL~~

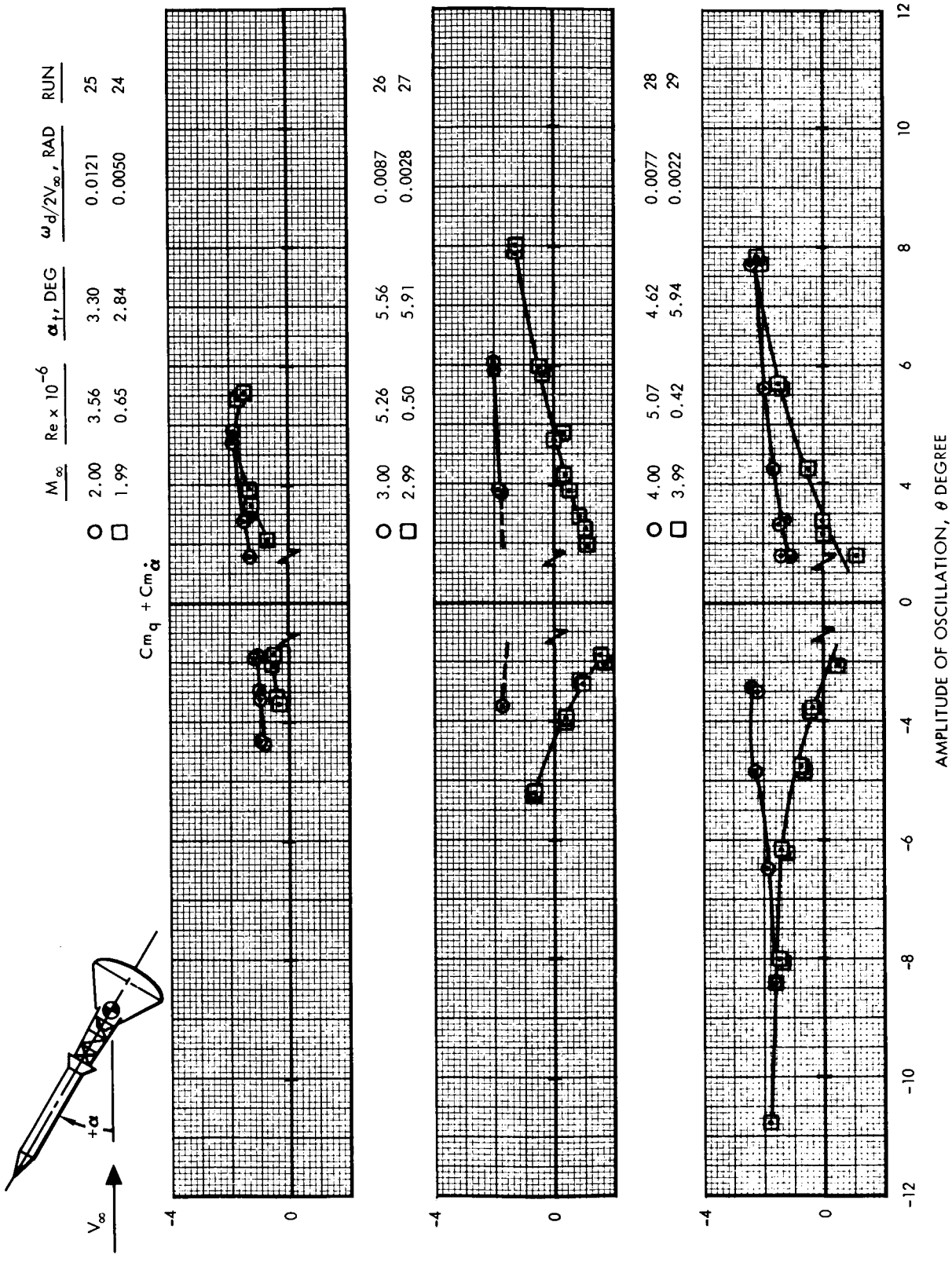

LEV Alternate Center of Gravity, Without Strakes

~~CONFIDENTIAL~~

~~CONFIDENTIAL~~

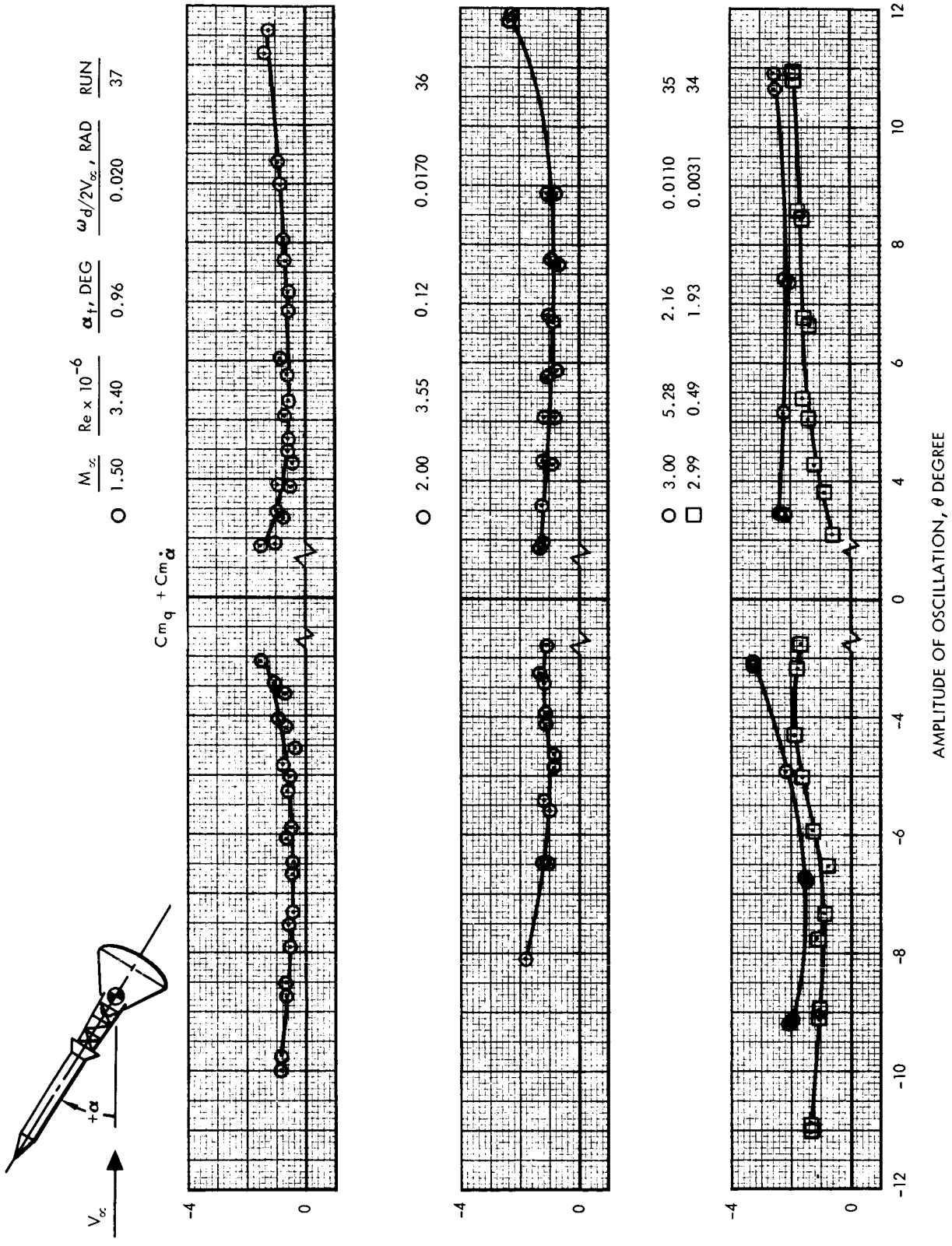

LEV Center-line Center of Gravity, Without Strakes

~~CONFIDENTIAL~~

~~CONFIDENTIAL~~

APPENDIX B
TABULATED DATA

RUN INDEX

Run No.	Configuration	Strakes	Center of Gravity	Mach Number	$R_e \times 10^{-6}$	Page
1	Command module	On	Design	2.99	0.53	49
2				3.00	2.52	49
3				1.99	0.54	49
4				2.00	2.11	49
5				1.49	2.00	50
6				1.48	0.61	50
8				3.99	0.31	50
9				4.00	1.80	51
10				5.98	0.75	52
11				6.00	3.56	52
12	Command module	Off	Design	2.00	3.26	54
13				1.49	3.15	54
14	Command module	Off	Alternate	3.00	2.40	55
15				2.99	0.38	55
16	LEV	On	Design	2.99	0.46	56
17				3.00	5.19	56
18				2.00	3.49	57
19				1.99	0.59	58
20				1.49	0.55	59
21				1.50	3.32	60
22				3.99	0.36	62
23				4.00	4.97	63
24	LEV	Off	Alternate	1.99	0.65	65
25				2.00	3.56	65
26				3.00	5.26	65
27				2.99	0.50	65
28				4.00	5.07	66
29				3.99	0.42	66
30	LEV	Off	Design	1.50	3.30	68
31				2.00	3.56	69
32				3.00	5.26	70
33				2.99	0.48	70
34	LEV	Off	Center Line	2.99	0.49	73
35				3.00	5.28	74
36				2.00	3.55	74
37				1.50	3.40	75

~~CONFIDENTIAL~~

DATA FORMAT

Item or Column Heading	Definition
$C_{m_q} + C_{m_{\dot{\alpha}}}$	$\partial C_m / \partial (qd/2V_\infty) + \partial C_m / \partial (\dot{\alpha} d/2V_\infty)$
C_m	Pitching moment/$q_\infty Sd$
d	Model reference length (base diameter), ft
f	Frequency of oscillation, cyc/sec
M_∞	Free-stream Mach number
q	Pitching velocity, ft/sec
q_∞	Free-stream dynamic pressure, lb/ft^2
Re/ft	Unit Reynolds number, 1/ft
S	Base area, ft^2
V_∞	Free-stream velocity, ft/sec
α_T	Model trim angle, degree
$\dot{\alpha}$	Time rate of change of angle of attack, rad/sec
θ	Model oscillation amplitude about the trim angle, degree
ω	Model angular frequency, rad/sec
$\omega d/2V_\infty$	Reduced frequency parameter, rad

BASE DIAMETER (d, feet)

Launch escape system	0.7572
Command module	0.6417

~~CONFIDENTIAL~~

Command Module, Design Center of Gravity, With Strakes

Run	V_∞	q_∞	M_∞	Re/ft $x10^{-6}$	f	$Cmq + Cm\dot{\alpha}$ x(-1)	θ	$\omega d/2V_\infty$	αt
	ft/sec	lb/ft^2		Unit Reynolds Number	cyc/sec	1/rad	± deg	rad	deg
1	2036.2	99.590	2.99	0.829	3.04	0.402	9.91	0.00300	147
					3.03	0.381	9.88	0.00299	
					3.03	0.387	7.57	0.00299	
					3.04	0.399	7.54	0.00300	
					3.03	0.393	5.77	0.00299	
					3.04	0.396	5.69	0.00300	
					3.03	0.418	4.32	0.00299	
					3.04	0.384	4.32	0.00300	
					3.04	0.412	3.25	0.00300	
					3.03	0.448	3.17	0.00299	
					3.04	0.436	2.39	0.00300	
					3.03	0.433	2.31	0.00299	
					3.03	0.433	1.67	0.00299	
2	2030.76	610.20	3.00	3.918	8.190	0.3839	7.05	0.00813	147
					8.205	0.3929	6.73	0.00814	
					8.190	0.3749	5.30	0.00813	
					8.205	0.3954	5.04	0.00814	
					8.190	0.3959	4.00	0.00813	
					8.205	0.3859	3.77	0.00814	
					8.190	0.3809	3.01	0.00813	
					8.205	0.3899	2.81	0.00814	
3	1682.35	168.38	1.99	0.853	4.16	0.402	10.72	0.00498	146
					4.18	0.426	9.74	0.00500	
					4.14	0.401	7.95	0.00496	
					4.14	0.422	7.10	0.00496	
					4.10	0.401	5.88	0.00491	
					4.08	0.413	5.20	0.00488	
					4.04	0.414	4.31	0.00484	
					4.08	0.429	3.77	0.00488	
					4.04	0.470	3.23	0.00484	
					4.07	0.472	2.68	0.00487	
					4.05	0.518	2.51	0.00485	
4	1685.50	646.80	2.00	3.29	8.08	0.371	7.56	0.00966	145
					8.04	0.369	7.51	0.00961	
					7.96	0.409	4.34	0.00952	
					7.98	0.411	4.31	0.00943	

Command Module, Design Center of Gravity, With Strakes (Cont)

Run	V_∞	q_∞	M_∞	Re/ft $x10^{-6}$	f	$C_{mq} + C_{m\dot{\alpha}} x(-1)$	θ	$\omega d/2V_\infty$	αt
	ft/sec	lb/ft^2		Unit Reynolds Number	cyc/sec	1/rad	± deg	rad	deg
4	1685.50	646.80	2.00	3.29	7.81	0.450	2.77	0.00934	145
					7.65	0.503	2.35	0.00914	
5	1401.93	618.48	1.49	3.11	10.01	0.719	6.321	0.01439	146
					10.03	0.543	6.034	0.01442	
					10.02	0.598	5.484	0.01441	
					10.05	0.470	4.859	0.01445	
					10.08	0.513	4.761	0.01449	
					10.13	0.622	4.436	0.01456	
					10.09	0.427	4.412	0.01451	
					10.11	0.478	4.030	0.01453	
					10.17	0.539	4.014	0.01462	
					10.13	0.566	3.586	0.01456	
					10.20	0.590	3.559	0.01466	
					10.14	0.496	3.169	0.01458	
					10.21	0.668	3.096	0.01468	
					10.16	0.315	2.904	0.01461	
6	1394.12	187.57	1.48	0.949	5.41	0.371	6.988	0.00782	148
					5.41	0.399	6.500	0.00782	
					5.42	0.454	6.151	0.00783	
					5.42	0.491	5.818	0.00783	
					5.42	0.428	5.460	0.00783	
					5.42	0.452	5.168	0.00783	
					5.42	0.480	4.875	0.00783	
					5.41	0.509	4.583	0.00782	
					5.40	0.608	4.258	0.00780	
					5.39	0.592	3.933	0.00779	
					5.38	0.639	3.640	0.00777	
					5.37	0.633	3.356	0.00776	
					5.36	0.699	3.076	0.00774	
					5.35	0.860	2.800	0.00773	
						0.840	2.527		
						0.847	2.260		
						0.865	2.036		
8	2224.07	54.089	3.99	0.478	2.32	0.290	15.38	0.00210	146.5
						0.253	15.35		
						0.253	14.36		

Command Module, Design Center of Gravity, With Strakes (Cont)

Run	V_∞	q_∞	M_∞	Re/ft $x10^{-6}$	f	$Cmq + Cm\dot{\alpha}$ x(-1)	θ	$\omega d/2V_\infty$	αt
	ft/sec	lb/ft^2		Unit Reynolds Number	cyc/sec	1/rad	± deg	rad	deg
8	2224.07	54.089	3.99	0.478	2.32	0.272	14.34	0.00210	146.5
						0.290	13.16		
						0.278	12.89		
						0.278	11.80		
						0.290	11.77		
					2.352	0.247	10.64	0.00212	
						0.272	10.55		
						0.278	9.59		
						0.259	9.50		
						0.259	8.62		
						0.266	8.55		
						0.303	7.71		
						0.290	7.65		
						0.284	6.87		
						0.272	6.83		
						0.309	6.10		
						0.284	6.10		
						0.315	5.41		
						0.303	5.40		
						0.309	4.77		
						0.290	4.71		
						0.327	4.22		
						0.309	4.21		
						0.296	3.70		
						0.296	3.70		
						0.284	3.27		
						0.303	3.26		
						0.290	2.88		
						0.284	2.86		
						0.253	2.58		
						0.296	2.51		
						0.266	2.22		
9	2233.56	319.71	4.00	2.80	5.78	0.326	12.29	0.00521	147
						0.320	12.20		
						0.320	10.72		
						0.328	10.43		

~~CONFIDENTIAL~~

Command Module, Design Center of Gravity, With Strakes (Cont)

Run	V_∞	q_∞	M_∞	Re/ft $x10^{-6}$	f	$Cmq + Cm\dot{\alpha}$ x(-1)	θ	$\omega d/2V_\infty$	αt
	ft/sec	lb/ft^2		Unit Reynolds Number	cyc/sec	1/rad	± deg	rad	deg
9	2233.56	319.71	4.00	2.80	5.78	0.326	8.86	0.00521	147
						0.323	8.70		
						0.323	7.26		
						0.323	6.83		
						0.327	5.69		
						0.323	5.36		
						0.330	4.45		
						0.326	4.20		
						0.323	3.47		
						0.327	3.29		
						0.330	2.72		
						0.319	2.58		
						0.326	2.13		
						0.327	2.03		
10	2434.21	69.898	5.98	1.182	2.675	0.277	14.869	0.00222	144
	2423.40			1.201	2.675	0.255	13.43	0.00222	
	2434.21			1.182	2.71	0.303	12.92	0.00224	
	2423.40			1.201	2.714	0.249	11.09	0.00225	
	2434.21			1.182	2.73	0.303	10.43	0.00226	
	2423.40			1.201	2.736	0.265	9.13	0.00227	
	2434.21			1.182	2.74	0.293	8.39	0.00227	
	2423.40			1.201	2.766	0.260	7.47	0.00229	
	2434.21			1.182	2.75	0.272	6.73	0.00228	
	2423.40			1.201	2.764	0.244	6.14	0.00229	
	2434.21			1.182	2.76	0.298	5.46	0.00229	
	2423.40			1.201	2.754	0.280	5.01	0.00228	
	2434.21			1.182	2.77	0.293	4.51	0.00229	
	2423.40			1.201	2.754	0.286	4.01	0.00228	
	2434.21			1.182	2.77	0.282	3.88	0.00229	
	2423.40			1.201	2.778	0.296	3.18	0.00230	
	2434.21			1.182	2.77	0.312	2.88	0.00229	
	2434.21			1.182	2.77	0,272	2.46	0.00229	
	2434.21			1.182	2.77	0.282	2.09	0.00229	
11	2605.02	411.38	6.00	5.555	6.71	0.346	12.30	0.00519	144
					6.73	0.231	11.78	0.00520	
					6.75	0.342	9.26	0.00522	
					6.76	0.352	9.23	0.00523	

Command Module, Design Center of Gravity, With Strakes (Cont)

Run	V_∞	q_∞	M_∞	Re/ft $x10^{-6}$	f	$Cmq + Cm\dot{\alpha}$ x(-1)	θ	$\omega d/2V_\infty$	αt
	ft/sec	lb/ft^2		Unit Reynolds Number	cyc/sec	1/rad	± deg	rad	deg
11	2605.02	411.38	6.00	5.555	6.78	0.334	6.71	0.00524	144
					6.83	0.353	6.13	0.00528	
					6.80	0.344	4.68	0.00526	
					6.79	0.340	4.08	0.00525	
					6.80	0.345	3.15	0.00526	
					6.83	0.363	2.70	0.00528	
					6.82	0.346	2.08	0.00512	

Command Module, Design Center of Gravity, Without Strakes

Run	V_∞	q_∞	M_∞	Re/ft $x10^{-6}$	f	$C_{mq} + C_{m\dot{\alpha}}$ x(-1)	θ	$\omega d/2V_\infty$	αt
	ft/sec	lb/ft^2		Unit Reynolds Number	cyc/sec	1/rad	± deg	rad	deg
12	1688.74	644.22	2.00	3.262	6.26	0.413	10.73	0.00747	138
					6.30	0.385	10.24	0.00752	
					6.32	0.364	8.24	0.00754	
					6.29	0.372	7.81	0.00751	
					6.43	0.360	6.40	0.00767	
					6.55	0.387	5.09	0.00782	
					6.50	0.363	4.73	0.00775	
					6.53	0.345	3.52	0.00779	
					6.55	0.374	3.34	0.00782	
					6.53	0.326	2.66	0.00779	
					6.62	0.372	2.22	0.00790	
13	1401.93	624.66	1.49	3.148	9.24	1.713	5.192	0.01328	143
						1.770	5.151		
						1.990	5.103		
						1.166	3.798		
						1.089	2.906		
						1.078	2.279		
						1.493	2.207		
						0.861	1.801		
						0.992	1.753		
						0.683	1.480		

Command Module, Alternate Center of Gravity, Without Strakes

Run	V_∞	q_∞	M_∞	Re/ft $x10^{-6}$	f	$Cmq + Cm_{\dot{\alpha}}$ $x(-1)$	θ	$\omega d/2V_\infty$	αt
	ft/sec	lb/ft^2		Unit Reynolds Number	cyc/sec	1/rad	± deg	rad	deg
14	2060.91	610.20	3.00	3.743	10.00	0.3038	9.16	0.00978	148
						0.3064	6.44		
						0.3009	6.44		
						0.3032	4.52		
						0.3016	4.00		
						0.3026	2.83		
						0.3036	2.48		
15	2053.13	96.104	2.99	0.593	3.80	0.295	13.943	0.00373	144
					3.80	0.292	13.715	0.00373	
					3.78	0.305	12.708	0.00391	
					3.83	0.295	11.408	0.00376	
					3.82	0.273	11.310	0.00375	
					3.87	0.263	10.465	0.00380	
					3.84	0.279	8.515	0.00377	
					3.87	0.295	8.458	0.00380	
					3.87	0.282	7.800	0.00380	
					3.86	0.266	6.403	0.00379	
					3.89	0.289	6.240	0.00382	
					3.87	0.279	5.801	0.00380	
					3.88	0.279	4.794	0.00381	
					3.89	0.289	4.631	0.00382	
					3.87	0.273	4.339	0.00380	
					3.90	0.269	3.608	0.00383	
					3.91	0.285	3.422	0.00384	
					3.87	0.276	3.227	0.00380	
					3.91	0.266	2.688	0.00384	
					3.91	0.276	2.525	0.00384	
					3.87	0.266	2.519	0.00380	

[redacted]

Launch Escape Vehicle, Design Center of Gravity,
With Strakes

Run	V_∞	q_∞	M_∞	Re/ft $x10^{-6}$	f	$Cmq + Cm\dot{\alpha}$	θ	$\omega d/2V_\infty$	αt
	ft/sec	lb/ft^2		Unit Reynolds Number	cyc/sec	1/rad	deg	rad	deg
16	2035.8	97.125	2.99	0.6140	2.51	-1.377	-13.68	0.002929	4.843
					2.52	-1.366	-12.72	0.002946	
					2.54	-1.392	-11.57	0.002966	
					2.53	-1.180	-10.82	0.002961	
					2.53	-1.372	-9.71	0.002959	
					2.51	-1.233	-9.17	0.002938	
					2.50	-1.555	-8.00	0.002920	
					2.49	-1.490	-7.59	0.002911	
					2.53	-1.540	-6.46	0.002953	
					2.55	-1.566	-6.12	0.002976	
					2.63	-0.835	-5.31	0.003072	
					2.65	-0.680	-5.04	0.003098	
					2.73	-0.668	-4.49	0.003184	
					2.75	-0.491	-4.31	0.003209	
					2.82	-0.282	-3.86	0.003297	
					2.83	-0.288	-3.73	0.003311	
					2.87	+0.432	-3.44	0.003357	
					2.91	-0.120	-3.26	0.003400	
					2.51	-1.995	12.62	0.002937	
					2.52	-1.982	11.33	0.002948	
					2.54	-1.994	10.11	0.002968	
					2.54	-1.717	9.12	0.002964	
					2.53	-1.790	8.07	0.002952	
					2.51	-1.580	7.37	0.002932	
					2.49	-1.625	6.43	0.002914	
					2.49	-1.320	5.96	0.002909	
					2.54	-0.874	5.23	0.002971	
					2.56	-0.807	4.90	0.002994	
					2.66	+0.035	4.22	0.003109	
					2.76	+0.012	3.76	0.003222	
					2.83	+0.323	3.51	0.003305	
					2.84	+0.006	3.33	0.003324	
17	2042	1086.7	3.00	6.853	8.45	-1.924	-11.30	0.009844	3.527
					8.49	-1.878	-11.27	0.009892	
					8.49	-2.051	-8.52	0.009890	
					8.51	-2.179	-8.44	0.009909	

~~CONFIDENTIAL~~

Launch Escape Vehicle, Design Center of Gravity, With Strakes (Cont)

Run	V_∞	q_∞	M_∞	Re/ft $x10^{-6}$	f	$Cmq + Cm\dot{\alpha}$	θ	$\omega d/2V_\infty$	αt
	ft/sec	lb/ft^2		Unit Reynolds Number	cyc/sec	1/rad	deg	rad	deg
17	2042	1086.7	3.00	6.853	8.51	-2.362	-6.22	0.009915	3.527
					8.51	-2.438	-6.08	0.009914	
					9.05	-2.804	-4.36	0.01054	
					8.94	-2.307	-4.33	0.01042	
					9.58	-1.859	-3.23	0.01116	
					9.73	-1.255	-3.00	0.01134	
					8.51	-2.355	10.17	0.009909	
					8.47	-2.326	10.12	0.009863	
					8.50	-2.503	7.19	0.009897	
					8.47	-2.645	7.16	0.009872	
					8.55	-1.899	5.20	0.009954	
					8.57	-2.102	5.06	0.009980	
					9.14	-1.669	4.00	0.01065	
					9.27	-1.811	3.81	0.01080	
					9.66	-1.499	3.19	0.01126	
18	1694.8	919.8	2.00	4.604	7.98	-1.628	-6.96	0.01120	1.696
					8.02	-1.547	-6.90	0.01125	
					8.82	-1.110	-5.62	0.01238	
					8.86	-1.258	-5.55	0.01243	
					9.12	-1.004	-4.80	0.01280	
					9.19	-1.158	-4.65	0.01290	
					9.35	-1.003	-4.14	0.01313	
					9.41	-0.974	-3.98	0.01320	
					9.39	-1.187	-3.54	0.01317	
					9.42	-0.993	-3.44	0.01322	
					9.38	-1.242	-2.97	0.01317	
					9.43	-1.172	-2.94	0.01324	
					8.23	-2.304	8.40	0.01155	
					8.26	-2.361	8.30	0.01159	
					8.93	-1.728	6.23	0.01253	
					8.96	-1.758	6.12	0.01258	
					9.22	-1.630	4.93	0.01294	
					9.23	-1.771	4.80	0.01296	
					9.42	-1.350	3.85	0.01322	
					9.44	-1.058	3.23	0.01325	
					9.43	-1.182	3.18	0.01323	

~~CONFIDENTIAL~~

Launch Escape Vehicle, Design Center of Gravity,
With Strakes (Cont)

Run	V_∞	q_∞	M_∞	Re/ft $x10^{-6}$	f	$Cmq + Cm\dot{\alpha}$	θ	$\omega d/2V_\infty$	αt
	ft/sec	lb/ft^2		Unit Reynolds Number	cyc/sec	1/rad	deg	rad	deg
18	1694.8	919.8	2.00	4.604	9.40	-1.433	2.80	0.01320	1.696
					9.42	-1.271	2.74	0.01322	
19	1686.9	155.4	1.99	0.781	3.11	-1.178	-9.43	0.00439	1.999
					3.21	-0.778	-9.08	0.00452	
					3.52	-0.800	-7.93	0.00497	
					3.53	-0.733	-7.89	0.00497	
					3.69	-0.315	-7.07	0.00521	
					3.67	-0.336	-7.05	0.00518	
					3.78	-0.368	-6.46	0.00533	
					3.77	-0.613	-6.36	0.00531	
					3.83	-0.550	-5.82	0.00541	
					3.82	-0.605	-5.64	0.00539	
					3.87	-0.349	-5.23	0.00546	
					3.87	-0.375	-5.03	0.00546	
					3.91	-0.151	-4.77	0.00551	
					3.91	-0.230	-4.56	0.00552	
					3.95	-0.275	-4.14	0.00557	
					3.96	-0.209	-3.95	0.00559	
					3.97	-0.517	-3.70	0.00560	
					3.99	-0.415	-3.55	0.00562	
					3.99	-0.689	-3.23	0.00563	
					4.00	-0.407	-3.15	0.00564	
					3.99	-0.607	-2.79	0.00563	
					4.00	-1.027	-2.71	0.00564	
					3.15	-2.055	12.87	0.00444	
					3.17	-2.354	12.50	0.00447	
					3.50	-1.504	9.85	0.00493	
					3.56	-1.354	9.45	0.00501	
					3.66	-0.705	8.28	0.00517	
					3.71	-0.961	7.94	0.00523	
					3.75	-0.934	7.24	0.00529	
					3.78	-0.556	6.96	0.00534	
					3.82	-1.056	6.19	0.00538	
					3.84	-1.086	6.06	0.00542	
					3.87	-0.642	5.33	0.00545	
					3.87	-0.452	5.26	0.00546	

Launch Escape Vehicle, Design Center of Gravity,
With Strakes (Cont)

Run	V_∞	q_∞	M_∞	Re/ft $\times 10^{-6}$	f	$C_{mq} + C_{m\dot{\alpha}}$	θ	$\omega d/2V_\infty$	αt
	ft/sec	lb/ft^2		Unit Reynolds Number	cyc/sec	1/rad	deg	rad	deg
19	1686.9	155.4	1.99	0.781	3.91	-0.500	4.72	0.00551	1.999
					3.91	-0.484	4.70	0.00551	
					3.95	-0.515	4.24	0.00557	
					3.94	-0.500	4.18	0.00556	
					3.97	-0.520	3.80	0.00559	
					3.96	-0.636	3.67	0.00559	
					3.98	-0.734	3.31	0.00562	
					3.99	-0.700	3.18	0.00562	
					4.00	-0.499	2.87	0.00564	
					3.99	-0.632	2.74	0.00563	
20	1407.5	173.2	1.49	0.863	3.88	-0.046	-9.30	0.00655	1.872
					4.00	-0.037	-8.74	0.00676	
					4.08	-0.016	-8.25	0.00689	
					4.18	+0.066	-7.19	0.00706	
					4.26	+0.079	-6.49	0.00720	
					4.30	+0.096	-5.91	0.00726	
					4.30	+0.220	-5.35	0.00726	
					4.36	+0.269	-4.91	0.00737	
					4.41	+0.340	-4.53	0.00745	
					4.45	+0.417	-3.83	0.00751	
					4.51	+0.486	-3.25	0.00762	
					4.48	+0.539	-2.98	0.00757	
					3.88	-0.281	10.76	0.00655	
					4.00	-0.177	10.12	0.00676	
					4.08	-0.184	9.36	0.00689	
					4.10	-0.107	8.72	0.00693	
					4.18	-0.056	7.95	0.00706	
					4.26	-0.032	7.08	0.00720	
					4.30	+0.059	6.32	0.00726	
					4.30	+0.134	5.38	0.00726	
					4.36	+0.208	5.12	0.00737	
					4.41	+0.267	4.65	0.00745	
					4.43	+0.314	4.24	0.00749	
					4.45	+0.376	3.86	0.00751	
					4.46	+0.413	3.51	0.00754	
					4.51	+0.442	3.22	0.00762	

~~CONFIDENTIAL~~

Launch Escape Vehicle, Design Center of Gravity, With Strakes (Cont)

Run	V_∞	q_∞	M_∞	Re/ft $x10^{-6}$	f	$Cmq + Cm\dot{\alpha}$	θ	$\omega d/2V_\infty$	αt
	ft/sec	lb/ft^2		Unit Reynolds Number	cyc/sec	1/rad	deg	rad	deg
20	1407.5	173.2	1.49	0.863	4.40	+0.499	2.91	0.00757	1.872
21	1416.2	883.5	1.50	4.381	8.50	-0.668	-8.09	0.01427	2.486
					9.04	-0.391	-7.35	0.01518	
					9.27	-0.382	-6.80	0.01557	
					7.90	-0.601	-6.51	0.01327	
					9.47	-0.344	-6.36	0.01591	
					8.50	-0.458	-6.14	0.01428	
					9.50	-0.272	-6.00	0.01596	
					8.73	-0.444	-5.88	0.01467	
					9.60	-0.126	-5.75	0.01613	
					9.03	-0.352	-5.68	0.01516	
					9.06	-0.330	-5.45	0.01522	
					9.64	-0.750	-5.33	0.01619	
					9.19	-0.292	-5.32	0.01544	
					9.23	-0.188	-5.16	0.01551	
					9.31	-0.385	-4.98	0.01564	
					9.40	-0.326	-4.89	0.01579	
					9.70	-0.334	-4.86	0.01630	
					9.49	-0.382	-4.64	0.01594	
					9.73	-0.233	-4.60	0.01635	
					9.46	-0.366	-4.57	0.01588	
					9.58	-0.113	-4.34	0.01609	
					9.55	-0.341	-4.33	0.01604	
					9.73	-0.685	-4.24	0.01635	
					9.59	-0.258	-4.15	0.01611	
					9.64	-0.192	-4.09	0.01620	
					9.85	-0.364	-3.87	0.01654	
					9.68	-0.525	-3.86	0.01625	
					9.73	-0.572	-3.81	0.01635	
					9.71	+0.004	-3.64	0.01631	
					9.82	-0.446	-3.59	0.01649	
					9.73	-0.103	-3.54	0.01635	
					9.75	-0.474	-3.47	0.01638	
					9.79	-0.273	-3.38	0.01644	
					9.98	-0.776	-3.24	0.01676	
					9.80	-0.270	-3.23	0.01646	

~~CONFIDENTIAL~~

Launch Escape Vehicle, Design Center of Gravity,
With Strakes (Cont)

Run	V_∞	q_∞	M_∞	Re/ft $x10^{-6}$	f	$Cmq + Cm\dot{\alpha}$	θ	$\omega d/2V_\infty$	αt
	ft/sec	lb/ft^2		Unit Reynolds Number	cyc/sec	1/rad	deg	rad	deg
21	1416.2	883.5	1.50	4.381	9.83	-0.210	-3.20	0.01651	2.486
					9.80	-0.309	-3.02	0.01646	
					9.85	-0.493	-3.00	0.01654	
					9.94	-0.225	-2.96	0.01669	
					9.87	-0.134	-2.87	0.01658	
					8.17	-1.413	12.05	0.01372	
					8.91	-0.744	9.95	0.01497	
					9.15	-0.193	9.13	0.01536	
					8.18	-1.298	9.07	0.01373	
					9.25	-0.315	8.69	0.01554	
					9.42	-0.491	8.10	0.01583	
					8.81	-0.533	7.68	0.01480	
					9.49	-0.115	7.65	0.01594	
					9.59	-0.470	7.25	0.01611	
					9.11	-0.458	7.03	0.01531	
					9.16	-0.353	6.82	0.01539	
					9.62	-0.582	6.65	0.01615	
					9.29	-0.596	6.43	0.01561	
					9.29	-0.363	6.39	0.01560	
					9.69	-0.292	6.17	0.01627	
					9.40	-0.146	6.00	0.01578	
					9.45	-0.541	5.90	0.01587	
					9.72	-0.289	5.84	0.01633	
					9.50	-0.503	5.65	0.01595	
					9.75	-0.485	5.46	0.01638	
					9.54	-0.485	5.44	0.01602	
					9.57	-0.126	5.31	0.01608	
					9.61	-0.362	5.08	0.01614	
					9.81	-0.391	5.06	0.01648	
					9.61	-0.447	5.02	0.01615	
					9.70	-0.408	4.74	0.01630	
					9.81	-0.348	4.73	0.01648	
					9.70	-0.234	4.71	0.01629	
					9.70	-0.137	4.51	0.01629	
					9.75	-0.383	4.41	0.01638	
					9.92	-0.700	4.34	0.01666	

~~CONFIDENTIAL~~

Launch Escape Vehicle, Design Center of Gravity, With Strakes (Cont)

Run	V_∞	q_∞	M_∞	Re/ft $x10^{-6}$	f	$Cmq + Cm\dot{\alpha}$	θ	$\omega d/2V_\infty$	αt
	ft/sec	lb/ft^2		Unit Reynolds Number	cyc/sec	1/rad	deg	rad	deg
21	1416.2	883.5	1.50	4.381	9.74	-0.151	4.34	0.01636	2.486
					9.80	-0.189	4.16	0.01646	
					9.79	-0.404	4.10	0.01645	
					9.96	-0.059	4.04	0.01672	
					9.84	-0.268	3.96	0.01653	
					9.85	-0.251	3.85	0.01654	
					9.99	-0.455	3.83	0.01678	
					9.80	-0.162	3.77	0.01647	
					9.87	-0.427	3.62	0.01657	
					9.88	-0.154	3.61	0.01659	
					10.06	-0.289	3.58	0.01691	
					9.90	-0.221	3.45	0.01663	
					9.88	-0.405	3.38	0.01659	
					10.10	-0.475	3.33	0.01697	
					9.90	-0.074	3.31	0.01663	
					10.21	-0.015	3.14	0.01715	
					9.98	-0.207	3.14	0.01677	
					9.93	-0.604	3.09	0.01668	
					10.19	-0.049	3.03	0.01712	
					10.18	+0.342	3.02	0.01709	
					10.25	+0.057	3.03	0.01721	
					10.23	+0.105	3.00	0.01718	
					9.98	-0.682	2.86	0.01677	
22	2220.7	52.9	3.99	0.470	2.08	-1.854	-15.16	0.00223	3.773
					2.08	-1.786	-15.09	0.00223	
					2.08	-1.832	-15.08	0.00223	
					2.09	-1.935	-13.02	0.00224	
					2.09	-1.836	-13.02	0.00224	
					2.09	-1.922	-12.96	0.00224	
					2.07	-1.894	-11.14	0.00222	
					2.07	-2.044	-11.07	0.00222	
					2.07	-1.994	-11.03	0.00222	
					2.04	-2.046	-9.48	0.00218	
					2.04	-2.171	-9.34	0.00218	
					2.03	-2.268	-9.20	0.00218	
					2.01	-1.750	-8.06	0.00215	

Launch Escape Vehicle, Design Center of Gravity, With Strakes (Cont)

Run	V_∞	q_∞	M_∞	Re/ft $\times 10^{-6}$	f	$Cmq + Cm\dot{\alpha}$	θ	$\omega d/2V_\infty$	αt
	ft/sec	lb/ft^2		Unit Reynolds Number	cyc/sec	1/rad	deg	rad	deg
22	2220.7	52.9	3.99	0.470	2.00	-1.643	-7.71	0.00214	3.773
					2.00	-1.668	-7.56	0.00214	
					1.98	-1.652	-6.57	0.00212	
					1.98	-1.859	-6.21	0.00212	
					1.97	-1.606	-6.09	0.00212	
					1.97	-1.169	-5.17	0.00212	
					1.97	-0.933	-4.82	0.00211	
					1.98	-0.883	-4.75	0.00212	
					1.95	+0.236	-4.02	0.00209	
					1.95	-0.149	-3.80	0.00209	
					2.08	-2.855	13.73	0.00223	
					2.08	-2.756	13.68	0.00223	
					2.08	-2.712	13.62	0.00223	
					2.09	-2.518	11.29	0.00224	
					2.09	-2.684	11.26	0.00224	
					2.09	-2.744	11.19	0.00224	
					2.07	-2.315	9.31	0.00222	
					2.07	-2.352	9.23	0.00221	
					2.07	-2.302	9.17	0.00221	
					2.03	-1.695	7.77	0.00218	
					2.03	-1.705	7.67	0.00218	
					2.03	-1.745	7.52	0.00217	
					2.00	-1.372	6.53	0.00214	
					2.00	-1.240	6.27	0.00214	
					2.00	-1.196	6.12	0.00214	
					1.98	-0.506	5.28	0.00212	
					1.98	-0.685	5.01	0.00212	
					1.97	-0.364	4.91	0.00211	
					1.97	+0.393	4.22	0.00212	
					1.97	+0.655	3.96	0.00211	
					1.97	+0.672	3.90	0.00212	
					1.95	+1.054	3.30	0.00209	
					1.94	+1.057	3.20	0.00208	
23	2269.9	789.2	4.00	6.566	8.07	-1.869	-13.95	0.00846	3.626
					8.09	-1.723	-13.66	0.00847	
					8.18	-1.613	-11.73	0.00857	

Launch Escape Vehicle, Design Center of Gravity, With Strakes (Cont)

Run	V_∞	q_∞	M_∞	Re/ft $x10^{-6}$	f	$Cmq + Cm\dot{\alpha}$	θ	$\omega d/2V_\infty$	αt
	ft/sec	lb/ft^2		Unit Reynolds Number	cyc/sec	1/rad	deg	rad	deg
23	2269.9	789.2	4.00	6.566	8.16	-1.741	-11.50	0.00855	3.626
					8.06	-1.779	-10.40	0.00845	
					8.12	-1.935	-9.86	0.00850	
					8.08	-1.930	-9.60	0.00847	
					8.15	-1.608	-8.78	0.00854	
					7.93	-2.125	-8.06	0.00831	
					7.89	-2.181	-7.82	0.00827	
					8.10	-1.899	-7.37	0.00849	
					7.58	-2.251	-6.42	0.00794	
					7.48	-2.520	-6.13	0.00784	
					7.89	-2.007	-6.03	0.00827	
					7.53	-2.360	-4.79	0.00789	
					7.25	-3.932	-4.66	0.00760	
					7.26	-3.727	-4.41	0.00761	
					7.22	-3.528	-3.49	0.00756	
					7.86	-3.896	-3.07	0.00824	
					7.91	-3.452	-3.00	0.00829	
					8.10	-2.571	11.36	0.00848	
					8.11	-2.504	11.05	0.00850	
					8.17	-2.417	8.92	0.00857	
					8.17	-2.552	8.66	0.00856	
					8.09	-2.511	8.49	0.00848	
					8.07	-2.505	7.02	0.00846	
					8.04	-2.645	6.74	0.00842	
					8.16	-2.514	6.63	0.00855	
					7.88	-2.412	5.47	0.00825	
					7.82	-2.509	5.21	0.00819	
					8.05	-2.498	5.17	0.00843	
					7.45	-2.319	4.24	0.00780	
					7.84	-2.466	4.01	0.00822	
					7.34	-2.390	4.00	0.00769	
					7.30	-2.172	3.28	0.00765	
					7.36	-1.938	3.11	0.00772	
					7.39	-2.387	3.07	0.00774	

~~CONFIDENTIAL~~

Launch Escape Vehicle, Alternate Center of Gravity, Without Strakes

Run	V_∞	q_∞	M_∞	Re/ft $\times 10^{-6}$	f	$C_{mq} + C_{m\dot{\alpha}}$	θ	$\omega d/2V_\infty$	αt
	ft/sec	lb/ft^2		Unit Reynolds Number	cyc/sec	1/rad	deg	rad	deg
24	1671.1	165.8	1.99	0.855	2.99	-0.267	-3.75	0.00426	2.837
					2.98	-0.363	-3.67	0.00425	
					3.31	-0.599	-3.04	0.00472	
					3.37	-0.506	-2.88	0.00480	
					3.07	-1.581	5.54	0.00437	
					3.05	-1.777	5.42	0.00434	
					3.34	-1.351	3.96	0.00476	
					3.41	-1.235	3.67	0.00485	
					3.54	-0.651	3.05	0.00504	
25	1686.9	927.5	2.00	4.704	7.53	-0.776	-4.45	0.01062	3.305
					7.59	-0.888	-4.37	0.01070	
					8.53	-0.933	-3.65	0.01203	
					8.54	-0.985	-3.53	0.01204	
					8.82	-1.191	-2.93	0.01244	
					8.82	-1.082	-2.84	0.01243	
					7.82	-1.937	4.90	0.01103	
					7.82	-1.925	4.78	0.01103	
					8.64	-1.268	3.50	0.01218	
					8.63	-1.569	3.34	0.01217	
					8.84	-1.312	2.70	0.01247	
26	2034.5	1089.2	3.00	6.946	6.71	-1.752	-3.75	0.00785	5.557
					6.75	-1.751	-3.73	0.00789	
					6.97	-2.016	6.08	0.00815	
					7.00	-2.045	5.95	0.00819	
					7.51	-1.889	3.92	0.00878	
					7.52	-1.713	3.88	0.00880	
27	2024.4	102.1	2.99	0.656	1.92	-0.674	-5.31	0.00226	5.907
					1.91	-0.674	-5.23	0.00224	
					2.15	+0.388	-4.03	0.00253	
					2.18	+0.367	-3.96	0.00256	
					2.31	+0.965	-3.34	0.00271	
					2.31	+0.759	-3.30	0.00271	
					2.38	+1.678	-2.99	0.00280	
					2.41	+1.591	-2.83	0.00283	
					1.94	-1.305	8.09	0.00228	
					1.95	-1.388	7.95	0.00229	

~~CONFIDENTIAL~~

Launch Escape Vehicle, Alternate Center of Gravity, Without Strakes (Cont)

Run	V_∞	q_∞	M_∞	Re/ft $x10^{-6}$	f	$Cmq + Cm\dot{\alpha}$	θ	$\omega d/2V_\infty$	αt
	ft/sec	lb/ft^2		Unit Reynolds Number	cyc/sec	1/rad	deg	rad	deg
27	2024.4	102.1	2.99	0.656	2.18	-0.467	6.01	0.00256	5.907
					2.20	-0.444	5.87	0.00259	
					2.32	+0.254	4.86	0.00273	
					2.32	-0.072	4.78	0.00272	
					2.39	+0.347	4.15	0.00281	
					2.41	+0.443	3.90	0.00284	
					2.46	+0.858	3.48	0.00289	
					2.46	+1.009	3.29	0.00289	
					2.50	+0.986	2.96	0.00294	
28	2259.8	794.0	4.00	6.700	6.65	-1.561	-8.43	0.00700	4.621
					6.66	-1.660	-8.41	0.00702	
					6.90	-1.857	-6.54	0.00726	
					6.89	-1.892	-6.47	0.00726	
					7.01	-2.286	-4.86	0.00738	
					7.02	-2.321	-4.79	0.00739	
					7.41	-2.200	-3.53	0.00780	
					7.44	-2.462	-3.42	0.00783	
					6.73	-2.338	7.72	0.00708	
					6.73	-2.344	7.67	0.00708	
					6.91	-1.900	5.63	0.00727	
					6.91	-1.967	5.57	0.00728	
					7.01	-1.689	4.30	0.00738	
					7.02	-1.700	4.23	0.00739	
					7.61	-1.367	3.41	0.00801	
					7.64	-1.444	3.34	0.00804	
					8.00	-1.442	2.79	0.00842	
					8.02	-1.100	2.77	0.00844	
29	2244.3	65.1	3.99	0.558	1.84	-1.936	-10.07	0.00195	5.937
					1.87	-1.424	-8.03	0.00198	
					1.87	-1.502	-8.00	0.00198	
					1.99	-1.339	-6.20	0.00211	
					2.00	-1.499	-6.12	0.00212	
					2.14	-0.745	-4.84	0.00227	
					2.15	-0.793	-4.72	0.00227	
					2.27	-0.544	-3.84	0.00241	
					2.29	-0.397	-3.75	0.00243	

Launch Escape Vehicle, Alternate Center of Gravity, Without Strakes (Cont)

Run	V_∞	q_∞	M_∞	Re/ft $\times 10^{-6}$	f	$C_{m_q} + C_{m_{\dot{\alpha}}}$	θ	$\omega d/2V_\infty$	αt
	ft/sec	lb/ft^2		Unit Reynolds Number	cyc/sec	1/rad	deg	rad	deg
29	2244.3	65.1	3.99	0.558	2.39	+0.522	-3.12	0.00254	5.937
					2.40	+0.613	-3.08	0.00255	
					1.85	-2.391	7.87	0.00196	
					1.84	-2.185	7.68	0.00195	
					1.88	-1.562	5.68	0.00199	
					1.88	-1.396	5.62	0.00199	
					2.02	-0.485	4.30	0.00214	
					2.01	-0.476	4.27	0.00213	
					2.16	-0.073	3.40	0.00229	
					2.15	-0.062	3.38	0.00228	
					2.31	+1.127	2.81	0.00245	
					2.29	+1.211	2.80	0.00243	

~~CONFIDENTIAL~~

Launch Escape Vehicle, Design Center of Gravity, Without Strakes

Run	V_∞	q_∞	M_∞	Re/ft $\times 10^{-6}$	f	$C_{m_q} + C_{m_{\dot{\alpha}}}$	θ	$\omega d/2V_\infty$	αt
	ft/sec	lb/ft^2		Unit Reynolds Number	cyc/sec	1/rad	deg	rad	deg
30	1409.6	868.0	1.50	4.359	7.94	-0.758	-9.00	0.01341	2.398
					7.96	-0.586	-8.88	0.01343	
					8.74	-0.417	-8.08	0.01475	
					8.73	-0.735	-7.92	0.01474	
					9.05	-0.500	-7.45	0.01528	
					9.29	-0.243	-6.96	0.01569	
					9.31	-0.347	-6.95	0.01571	
					9.54	-0.645	-6.45	0.01609	
					9.51	-0.606	-6.27	0.01605	
					9.69	-0.725	-5.80	0.01636	
					9.74	-0.415	-5.61	0.01644	
					9.76	-0.496	-5.25	0.01647	
					9.82	-0.486	-5.19	0.01658	
					9.85	-0.317	-4.83	0.01662	
					9.96	-0.596	-4.80	0.01681	
					9.99	-0.481	-4.49	0.01686	
					9.96	-0.616	-4.36	0.01681	
					10.01	-0.468	-4.14	0.01688	
					10.09	-0.456	-3.98	0.01702	
					10.09	-0.862	-3.72	0.01702	
					10.23	-0.467	-3.67	0.01726	
					10.19	-0.684	-3.34	0.01720	
					10.14	-0.973	-3.24	0.01711	
					10.37	-0.698	-2.99	0.01750	
					10.29	-0.263	-2.92	0.01737	
					8.18	-1.600	11.03	0.01381	
					8.17	-1.431	10.67	0.01379	
					8.79	-0.828	9.02	0.01483	
					8.80	-0.887	8.81	0.01485	
					9.19	-0.929	7.87	0.01552	
					9.15	-0.738	7.73	0.01545	
					9.35	-0.779	6.87	0.01578	
					9.51	-0.824	6.61	0.01605	
					9.52	-0.789	6.08	0.01607	
					9.69	-0.667	5.74	0.01635	
					9.76	-0.761	5.39	0.01647	

Launch Escape Vehicle, Design Center of Gravity, Without Strakes (Cont)

Run	V_∞	q_∞	M_∞	Re/ft $x10^{-6}$	f	$Cmq + Cm\dot{\alpha}$	θ	$\omega d/2V_\infty$	αt
	ft/sec	lb/ft^2		Unit Reynolds Number	cyc/sec	1/rad	deg	rad	deg
30	1409.6	868.0	1.50	4.359	9.85	-0.707	5.01	0.01662	2.398
					9.78	-0.892	4.76	0.01651	
					9.95	-0.799	4.46	0.01679	
					9.99	-0.924	4.15	0.01685	
					10.06	-0.975	3.91	0.01698	
					9.99	-0.523	3.69	0.01686	
					10.13	-0.394	3.50	0.01710	
					10.13	-0.817	3.32	0.01710	
					10.23	-0.408	3.24	0.01727	
					10.25	-0.018	3.07	0.01730	
					10.20	-0.285	3.02	0.01721	
					10.40	-1.123	2.80	0.01755	
31	1686.9	927.5	2.00	4.704	8.16	-1.657	-9.47	0.01150	2.369
					8.98	-1.174	-7.71	0.01266	
					8.16	-1.619	-6.94	0.01150	
					8.12	-1.616	-6.89	0.01145	
					9.32	-1.321	-6.51	0.01315	
					8.94	-1.338	-5.58	0.01260	
					8.93	-1.401	-5.52	0.01260	
					9.51	-1.336	-5.46	0.01341	
					9.35	-1.198	-4.67	0.01319	
					9.48	-1.264	-4.58	0.01336	
					9.33	-1.351	-4.56	0.01316	
					9.50	-1.330	-3.92	0.01339	
					9.56	-1.655	-3.73	0.01349	
					9.52	-1.860	-3.18	0.01342	
					9.23	-2.332	-3.06	0.01301	
					9.52	-1.690	-2.98	0.01343	
					8.39	-2.598	9.85	0.01183	
					8.39	-2.679	7.84	0.01183	
					8.38	-2.663	7.70	0.01182	
					9.08	-2.017	7.16	0.01280	
					9.05	-2.190	5.59	0.01277	
					9.05	-2.131	5.51	0.01276	
					9.41	-2.270	5.43	0.01327	
					9.41	-1.864	4.22	0.01327	

~~CONFIDENTIAL~~

Launch Escape Vehicle, Design Center of Gravity, Without Strakes (Cont)

Run	V_∞	q_∞	M_∞	Re/ft $x10^{-6}$	f	$Cmq + Cm\dot{\alpha}$	θ	$\omega d/2V_\infty$	αt
	ft/sec	lb/ft^2		Unit Reynolds Number	cyc/sec	1/rad	deg	rad	deg
31	1686.9	927.5	2.00	4.704	9.41	-2.144	4.20	0.01328	2.369
					9.50	-1.970	4.13	0.01340	
					9.51	-1.973	3.28	0.01341	
					9.55	-1.933	3.22	0.01347	
32	2032.6	1086.7	3.00	6.950	8.27	-2.138	-8.38	0.00968	3.597
					8.29	-2.183	-8.29	0.00970	
					8.40	-2.242	-6.07	0.00983	
					8.40	-2.527	-6.06	0.00983	
					8.63	-2.969	-4.26	0.01010	
					8.62	-3.052	-4.15	0.01009	
					9.39	-2.572	-2.94	0.01099	
					9.40	-2.154	-2.90	0.01101	
					8.33	-2.818	7.20	0.00975	
					8.32	-2.913	7.14	0.00974	
					8.42	-2.642	4.91	0.00985	
					8.39	-2.785	4.79	0.00981	
					8.76	-2.383	3.45	0.01025	
					8.79	-2.324	3.34	0.01029	
33	2025.4	99.6	2.99	0.639	2.50	-1.397	-13.00	0.00294	4.246
					2.50	-1.371	-12.98	0.00293	
					2.49	-1.316	-12.91	0.00292	
					2.55	-1.353	-11.00	0.00300	
					2.54	-1.343	-11.00	0.00299	
					2.54	-1.369	-10.95	0.00298	
					2.56	-1.323	-9.31	0.00300	
					2.55	-1.366	-9.29	0.00299	
					2.54	-1.446	-9.21	0.00299	
					2.55	-1.681	-7.67	0.00299	
					2.56	-1.331	-7.64	0.00300	
					2.54	-1.521	-7.61	0.00299	
					2.61	-1.341	-6.26	0.00306	
					2.62	-1.568	-6.20	0.00307	
					2.63	-1.313	-6.18	0.00309	
					2.72	-1.117	-5.18	0.00320	
					2.75	-1.037	-5.13	0.00324	
					2.74	-1.161	-5.07	0.00322	

~~CONFIDENTIAL~~

Launch Escape Vehicle, Design Center of Gravity,
Without Strakes (Cont)

Run	V_∞	q_∞	M_∞	Re/ft $\times 10^{-6}$	f	$C_{mq} + C_{m\dot{\alpha}}$	θ	$\omega d/2V_\infty$	αt
	ft/sec	lb/ft^2		Unit Reynolds Number	cyc/sec	1/rad	deg	rad	deg
33	2025.4	99.6	2.99	0.639	2.84	-0.526	-4.38	0.00334	4.246
					2.87	-0.554	-4.36	0.00338	
					2.86	-0.335	-4.31	0.00336	
					2.93	+0.231	-3.87	0.00344	
					2.95	-0.128	-3.81	0.00347	
					2.93	+0.004	-3.81	0.00345	
					2.98	+0.436	-3.52	0.00350	
					2.99	+0.282	-3.41	0.00351	
					3.02	+0.520	-3.39	0.00355	
					3.03	+0.347	-3.20	0.00356	
					3.04	+0.693	-3.12	0.00357	
					3.06	+0.624	-3.08	0.00359	
					2.50	-2.081	12.19	0.00293	
					2.51	-2.256	12.18	0.00295	
					2.50	-2.125	12.10	0.00294	
					2.54	-2.101	9.72	0.00299	
					2.56	-2.090	9.65	0.00300	
					2.55	-2.178	9.60	0.00299	
					2.55	-1.709	7.74	0.00300	
					2.54	-1.962	7.71	0.00299	
					2.55	-1.856	7.62	0.00299	
					2.55	-1.544	6.15	0.00299	
					2.56	-1.389	6.14	0.00301	
					2.55	-1.689	6.08	0.00299	
					2.63	-1.094	5.01	0.00309	
					2.62	-0.840	4.96	0.00308	
					2.64	-0.930	4.93	0.00310	
					2.76	-0.637	4.20	0.00324	
					2.74	-0.590	4.19	0.00322	
					2.77	-0.591	4.16	0.00325	
					2.87	+0.004	3.64	0.00337	
					2.86	-0.264	3.61	0.00336	
					2.89	-0.119	3.60	0.00339	
					2.94	+0.081	3.23	0.00346	
					2.94	+0.596	3.22	0.00345	
					2.96	+0.021	3.17	0.00348	

~~CONFIDENTIAL~~

Launch Escape Vehicle, Design Center of Gravity,
Without Strakes (Cont)

Run	V_∞	q_∞	M_∞	Re/ft $x10^{-6}$	f	$Cmq + Cm\dot{\alpha}$	θ	$\omega d/2V_\infty$	αt
	ft/sec	lb/ft^2		Unit Reynolds Number	cyc/sec	1/rad	deg	rad	deg
33	2025.4	99.6	2.99	0.639	2.99	+0.455	2.93	0.00351	4.246
					3.00	+0.622	2.90	0.00352	
					3.03	+0.776	2.83	0.00355	

~~CONFIDENTIAL~~

Launch Escape Vehicle, Center Line of Gravity,
Without Strakes

Run	V_∞	q_∞	M_∞	Re/ft $x10^{-6}$	f	$Cmq + Cm\dot{\alpha}$ x(-1)	θ	$\omega d/2V_\infty$	αt
	ft/sec	lb/ft^2		Unit Reynolds Number	cyc/sec	1/rad	± deg	rad	deg
34	2018.7	99.6	2.99	0.646	2.91	-1.954	-16.76	0.00343	1.930
					2.93	-1.943	-16.61	0.00346	
					2.93	-1.983	-16.43	0.00345	
					3.03	-1.618	-13.43	0.00357	
					3.05	-1.620	-13.34	0.00360	
					3.04	-1.670	-13.12	0.00358	
					3.08	-1.401	-10.99	0.00363	
					3.10	-1.403	-10.92	0.00366	
					3.10	-1.363	-10.72	0.00365	
					3.11	-1.070	-9.10	0.00366	
					3.08	-1.066	-8.97	0.00363	
					3.09	-0.909	-8.85	0.00364	
					3.06	-1.096	-7.80	0.00361	
					2.98	-0.974	-7.34	0.00351	
					2.99	-0.909	-7.34	0.00352	
					2.89	-0.801	-6.54	0.00340	
					2.77	-1.217	-5.96	0.00326	
					2.73	-1.621	-5.66	0.00321	
					2.62	-1.683	-4.99	0.00308	
					2.50	-1.810	-4.38	0.00294	
					2.44	-1.948	-3.75	0.00287	
					2.42	-1.846	-3.16	0.00285	
					2.39	-1.730	-2.77	0.00281	
					2.92	-2.249	14.35	0.00344	
					2.95	-2.287	14.14	0.00348	
					2.94	-2.263	14.07	0.00347	
					3.04	-1.979	11.03	0.00358	
					3.06	-1.968	10.86	0.00361	
					3.05	-2.014	10.79	0.00359	
					3.09	-1.783	8.62	0.00364	
					3.11	-1.756	8.51	0.00366	
					3.10	-1.747	8.43	0.00365	
					3.11	-1.487	6.73	0.00366	
					3.08	-1.386	6.66	0.00363	
					3.08	-1.287	6.56	0.00364	
					3.05	-1.606	5.42	0.00359	

CONF[redacted]

Launch Escape Vehicle, Center Line of Gravity,
Without Strakes (Cont)

Run	V_∞	q_∞	M_∞	Re/ft $x10^{-6}$	f	$Cmq + Cm\dot{\alpha}$ x(-1)	θ	$\omega d/2V_\infty$	αt
	ft/sec	lb/ft^2		Unit Reynolds Number	cyc/sec	1/rad	± deg	rad	deg
34	2018.7	99.6	2.99	0.646	2.96	-1.404	5.07	0.00349	1.930
					2.97	-1.352	5.03	0.00350	
					2.86	-1.211	4.26	0.00337	
					2.73	-0.860	3.82	0.00322	
					2.69	-0.961	3.62	0.00317	
					2.58	-0.567	3.09	0.00304	
					2.47	-0.238	2.75	0.00291	
35	2030.7	1086.7	3.00	6.969	9.96	-2.216	-13.15	0.01167	2.164
					10.04	-2.249	-12.95	0.01176	
					10.43	-2.158	-9.21	0.01222	
					10.42	-2.010	-9.14	0.01221	
					10.35	-1.514	-6.81	0.01212	
					10.36	-1.613	-6.73	0.01213	
					9.61	-2.251	-4.95	0.01126	
					9.71	-1.967	-4.95	0.01138	
					8.50	-3.382	-3.08	0.00996	
					8.47	-3.365	-2.99	0.00992	
					10.16	-2.572	11.00	0.01190	
					10.12	-2.558	10.73	0.01185	
					10.47	-2.190	7.45	0.01226	
					10.52	-2.063	7.33	0.01232	
					10.30	-2.250	5.18	0.01206	
					10.23	-2.334	5.13	0.01199	
					9.36	-2.433	3.45	0.01097	
					9.29	-2.262	3.42	0.01088	
36	1688.4	927.5	2.00	4.691	9.59	-2.905	-12.26	0.01351	-0.117
					9.65	-2.872	-12.19	0.01360	
					11.15	-1.747	-8.15	0.01571	
					11.19	-1.822	-8.12	0.01577	
					11.87	-1.203	-6.49	0.01672	
					11.95	-1.076	-6.48	0.01684	
					12.12	-1.000	-5.54	0.01707	
					12.03	-1.236	-5.41	0.01695	
					12.13	-0.909	-4.78	0.01708	
					12.20	-0.926	-4.59	0.01719	
					12.13	-1.145	-4.08	0.01708	

[redacted]

Launch Escape Vehicle, Center Line of Gravity,
Without Strakes (Cont)

Run	V_∞	q_∞	M_∞	Re/ft $x10^{-6}$	f	$Cmq + Cm\dot{\alpha}$ x(-1)	θ	$\omega d/2V_\infty$	αt
	ft/sec	lb/ft^2		Unit Reynolds Number	cyc/sec	1/rad	± deg	rad	deg
36	1688.4	927.5	2.00	4.691	12.12	-1.096	-3.92	0.01707	-0.117
					11.96	-1.389	-3.37	0.01685	
					11.85	-1.333	-3.26	0.01670	
					11.88	-1.118	-2.76	0.01673	
					10.10	-2.278	12.04	0.01422	
					10.16	-2.408	11.89	0.01431	
					11.39	-1.254	8.94	0.01605	
					11.50	-0.968	8.90	0.01620	
					11.88	-0.754	7.78	0.01673	
					11.99	-0.696	7.67	0.01689	
					12.22	-0.991	6.82	0.01721	
					12.08	-0.912	6.79	0.01702	
					12.19	-0.832	5.95	0.01718	
					12.09	-1.076	5.85	0.01703	
					12.03	-1.241	5.10	0.01695	
					12.18	-0.705	5.09	0.01716	
					11.94	-1.321	4.37	0.01682	
					11.92	-0.967	4.29	0.01680	
					11.90	-1.323	3.60	0.01677	
					11.79	-1.379	3.55	0.01661	
					11.77	-1.192	2.95	0.01658	
					11.71	-1.299	2.88	0.01650	
37	1410.9	895.8	1.50	4.487	9.54	-1.192	-12.30	0.01608	0.965
					9.60	-1.346	-12.14	0.01618	
					10.70	-0.778	-10.03	0.01804	
					10.78	-0.754	-9.77	0.01817	
					11.26	-0.605	-8.78	0.01898	
					11.30	-0.724	-8.50	0.01906	
					11.59	-0.467	-7.92	0.01953	
					11.80	-0.562	-7.53	0.01989	
					11.94	-0.411	-7.27	0.02013	
					12.02	-0.291	-6.93	0.02027	
					12.10	-0.394	-6.72	0.02040	
					12.09	-0.407	-6.47	0.02039	
					12.29	-0.757	-6.06	0.02072	
					12.30	-0.605	-5.89	0.02074	

[redacted]

~~CONFIDENTIAL~~

Launch Escape Vehicle, Center Line of Gravity,
Without Strakes (Cont)

Run	V_∞	q_∞	M_∞	Re/ft $x10^{-6}$	f	$Cmq + Cm\dot{\alpha}$ x(-1)	θ	$\omega d/2V_\infty$	αt
	ft/sec	lb/ft^2		Unit Reynolds Number	cyc/sec	1/rad	± deg	rad	deg
37	1410.9	895.8	1.50	4.487	12.42	-0.595	-5.29	0.02094	0.965
					12.44	-0.554	-4.98	0.02097	
					12.39	-0.738	-4.70	0.02089	
					12.43	-0.372	-4.55	0.02095	
					12.44	-0.705	-4.13	0.02098	
					12.48	-0.930	-4.05	0.02103	
					12.30	-0.637	-3.65	0.02074	
					12.25	-1.001	-3.43	0.02066	
					11.81	-1.582	-3.02	0.01991	
					9.83	-1.273	11.69	0.01658	
					10.00	-1.428	11.29	0.01686	
					10.88	-0.909	9.40	0.01834	
					10.92	-0.816	9.03	0.01841	
					11.38	-0.776	8.09	0.01919	
					11.44	-0.772	7.79	0.01929	
					11.69	-0.541	7.22	0.01971	
					11.89	-0.594	6.86	0.02005	
					12.16	-0.876	6.12	0.02050	
					12.18	-0.656	5.82	0.02053	
					12.31	-0.612	5.36	0.02075	
					12.31	-0.778	5.13	0.02076	
					12.50	-0.507	4.71	0.02108	
					12.43	-0.587	4.54	0.02095	
					12.38	-0.439	4.30	0.02088	
					12.39	-0.945	3.97	0.02089	
					12.44	-0.489	3.93	0.02098	
					12.45	-0.798	3.49	0.02099	
					12.45	-0.787	3.40	0.02099	
					12.18	-0.979	2.91	0.02054	
					12.16	-1.553	2.87	0.02050	