(NASA-CR-101595) APOLLO APPLICATIONS PROGRAM CONDENSED SUMMARY (North American Aviation, Inc.) 33 p

N79-76143

Unclas
00/12 11104

[redacted]

~~CONFIDENTIAL~~

This document contains information [redacted] United States [redacted] Section [redacted] its [redacted] of its contents in any [redacted] person is [redacted]

CLASSIFICATION CHANGE

TO = UNCLASSIFIED ~~CONFIDENTIAL~~

By authority of ~~T.D. No.~~ GDS Gp 4

~~Changed by~~ AM Hubbard Date 11/75

Contract NAS 9-5017

SID 65-1517

# APOLLO APPLICATIONS PROGRAM

## CONDENSED SUMMARY
(U)

31 October 1966

Prepared by

J. Bates for
H.P. Burns
Program Development Manager

LIBRARY COPY
APR 8 1969
LEWIS LIBRARY, NASA
CLEVELAND, OHIO

NORTH AMERICAN AVIATION, INC.
SPACE and INFORMATION SYSTEMS DIVISION

Downgraded at 3-year intervals: declassified after 12 years; DOD DIR 5200.10.

~~CONFIDENTIAL~~

~~CONFIDENTIAL~~

SID 65-1517

79

# APOLLO APPLICATIONS PROGRAM

## CONDENSED SUMMARY

NORTH AMERICAN AVIATION, INC.
SPACE and INFORMATION SYSTEMS DIVISION

~~CONFIDENTIAL~~

CONTENTS

| | Page |
|---|---|
| INTRODUCTION | 1 |
| OBJECTIVES | 4 |
| RELATIONSHIP TO OTHER NASA EFFORTS | 4 |
| METHOD OF APPROACH AND PRINCIPAL ASSUMPTIONS | 4 |
| BASIC DATA GENERATED AND SPECIFIC RESULTS | 6 |
| Program Analysis Activities | 7 |
| Technical Activities | 9 |
| STUDY LIMITATIONS | 24 |
| IMPLICATIONS FOR RESEARCH | 26 |
| SUGGESTED ADDITIONAL EFFORT | 27 |
| BIBLIOGRAPHY | 29 |

## ILLUSTRATIONS


| Figure | | Page |
|---|---|---|
| 1 | CSM/SSESM Configurations | 4 |
| 2 | ML 65-L Schedule | 7 |
| 3 | AES Development Operations Phase— Master Development Schedule 11-1 | 10 |
| 4 | AES Development Operations Phase— Master Development Schedule 11-2 | 11 |
| 5 | Earth Polar Orbit Boost | 12 |
| 6 | Ascent Ground Track | 12 |
| 7 | Deorbit Ground Track | 12 |
| 8 | Synchronous Orbit Trajectory Characteristics | 12 |
| 9 | Synchronous Orbit Ground Track | 13 |
| 10 | Typical Biomedical Experiments | 14 |
| 11 | G&C Operating Times | 16 |
| 12 | RCS Propellant Requirements | 16 |
| 13 | SM RCS Tankage Arrangements | 17 |
| 14 | Atmosphere Composition | 17 |
| 15 | $CO_2$ Removal Comparison | 18 |
| 16 | Environmental Control Unit | 18 |
| 17 | Electrical Power System | 19 |
| 18 | Cryogenic Gas Storage Systems | 19 |
| 19 | Electrical Power Comparison | 20 |
| 20 | Sector 1 Cryogenic Kit | 20 |
| 21 | AES Command Module | 23 |
| 22 | Block II Service Module | 24 |
| 23 | AAP Service Module | 24 |
| 24 | Artificial Gravity Configurations | 25 |
| 25 | Base-Mounted Installation (Configuration I) | 26 |
| 26 | Riser-Mounted Installation (Configuration IV) | 27 |


## TABLES


| Table | | Page |
|---|---|---|
| 1 | Mission and Flight Summary | 2 |
| 2 | Candidate Phase II Configurations | 3 |
| 3 | Reference Missions Summary | 5 |
| 4 | Phase I Flight Objectives Summary | 7 |
| 5 | Program Element Status | 8 |
| 6 | Phase I Flight Summary | 13 |
| 7 | Experiment Characteristics Summary | 15 |
| 8 | AAP Subsystems Summary | 22 |
| 9 | Command Module Weights | 23 |
| 10 | Service Module Weights | 25 |
| 11 | Land Landing System Concepts Comparison | 26 |

# INTRODUCTION

The nation has a significant investment in the Apollo lunar landing program. As a result, it appears propitious that full use be made of the hardware and skills developed for the Apollo program in a manner consistent with the national interest and importance of manned space flight. NASA's Manned Spacecraft Center (MSC) has for several years examined the feasibility of using hardware developed for the basic Apollo mission for extended lunar surface exploration, lunar orbital survey, and extended earth-orbital missions. Previous studies established mission feasibility, and command and service module (CSM) design concepts were identified for use in Apollo Applications Program (AAP) missions.

Completion of the feasibility concept studies indicated that the missions and CSM preliminary designs must be defined more completely. NASA defined a two-phase AAP (formerly Apollo Extension System-AES) flight program to provide a logical sequence for developmental growth. The "Phase I missions," which subsequently became referred to as "Alternate Missions," were focused around use of essentially unmodified Block II Apollo CSM's. Phase I had been established to assure effective, and nationally beneficial, application of Apollo spacecraft currently under development which might not be required to accomplish the lunar landing goal. Phase II flights, or "Follow-on Missions," require spacecraft capable of increased mission duration, which will be obtained primarily by extension of subsystems operating life. Phase I and II missions and their objectives, as defined at the outset of this contract by NASA, are summarized in Table 1.

CSM designs evaluated for use in Phase II missions ranged from a concept which contained all consumables and equipment needed to sustain its own operation (at minimum) throughout a 45-day mission to one drawing electrical power and oxygen from a LEM laboratory for approximately the last 30 days of the 45-day mission. The characteristics of the concepts evaluated in this study are summarized in Table 2. Concept O, the basic Block II configuration, is suitable for AAP earth-orbital missions of nominally 14 days or less; this concept provides the baseline against which the other concepts could be compared.

Initial activities carried out under Contract NAS9-5017 consisted of the principal elements of a formal Preliminary Definition Phase. Subsequent revisions to contract activities were, however, directed toward detailed examinations of alternate mission assignments for Block II CSM's. Engineering and program analyses were accomplished to provide NASA with data relative to the implementation of various flight concepts.

Of the alternate missions examined, the use of the CSM in conjunction with an S-IVB spent stage as an orbital workshop received particular emphasis. A number of configurational approaches to flight implementation of the spent stage experiment which were examined are schematically depicted in Figure 1. The "Reference Configuration" shown in Figure 1 is similar in rationale to Concept II defined in Table 2. In the Reference Configuration, extra reactants are stowed on the spent stage experiment support module (SSESM) and supplied to the CSM's electrical power generation system via an external umbilical. The fuel cells in the SM are then used to supply electrical power to the SSESM by using an external electrical harness. Both the harness and the reactant umbilical would be attached to the SM by astronaut extravehicular activity (EVA). In alternate A, additional reactants are installed in the empty SM Sector I instead of on the SSESM. The external reactant umbilical is, therefore, deleted, and internal plumbing is used to interconnect the tanks installed in Sector I with the existing Sector IV tanks. In Alternate B, the CSM is similar to the Reference Configuration, but provides for atmosphere control of the SSESM/S-IVB exclusive of the initial pressurization. Alternate $C_1$ combines the features of Alternates A and B, while $C_2$ and $C_3$ eliminate all external devices.

Table 1. Mission and Flight Summary

| Flight | Orbit N. Mi. /Incl. | Duration (Days) | Research Sector | Experiments or Tests |
|---|---|---|---|---|
| Phase I | | | | |
| 209 | 200/high | ≤14 | Space operations/ technology | Maneuvering, EVA earth sensors |
| 211 | 200/28.5° | ≤14 | Space operations/ technology | Lunar survey system qualification |
| 507 | 200/90° | ≤14 | Earth-oriented applications | Maneuvering, qualification of earth sensors |
| 509 | 19350/0° | ≤14 | Space operations/ technology | Maneuvering, subsystem development |
| 215 | 200/50° | ≤14 | Earth-oriented applications | Preliminary observation of earth |
| 216 | 200/50° | ≤14 | Biomedical, behavioral | Rendezvous & resupply 215, continue observation |
| 511 | 80/10° lunar | 14 | Lunar exploration | Lunar survey, probe delivery |
| Phase II | | | | |
| 513 | 200/83° retrograde | 45 | Earth-oriented applications | Biomedical, behavioral geophysical observation meteorology |
| 514 | 80/0° lunar landing | 8 | Lunar exploration (LEM shelter) | Deliver shelter for 515 |
| 515 | 80/0° lunar landing | 23 | Lunar exploration (LEM taxi) | Extended lunar surface operations, surface rendezvous |
| 221 | 200/28.5° | 45 | Space operations/ technology | Maneuvering, subsystems development |
| 516 | 19350/0° | 45 | Astronomy | Preliminary astronomical observations |
| 517 | 80/90° lunar | 35 | Lunar exploration | Lunar survey, probe delivery |
| 518 | 200/28.5° | 45 | Earth-oriented applications | Meteorology oceanography |
| 224 | 200/28.5° | 45 | Biomedical, behavioral | Rendezvous & supply 518 |
| 519 | 80/low lunar landing | 8 | Lunar exploration (LEM shelter) | Deliver LEM shelter for 520 |
| 520 | 80/low lunar landing | 23 | Lunar exploration (LEM taxi) | Extended lunar surface operations, surface rendezvous 519 |
| 521 | 200/90° | 45 | Earth-oriented applications | Meteorology, oceanography, agriculture observation |
| 522 | 80/90° lunar | 35 | Lunar exploration | Lunar survey, probe delivery |
| 523 | 200/28.5° | 45 | Astronomy | Extraterrestial observation |
| 229 | 200/28.5° | 45 | Astronomy | Rendezvous & resupply 523, continue observation |
| 230 | 200/28.5 | 45 | Biomedical, behavioral | Rendezvous & resupply 229, continue experiments |
| 524 | 80/low lunar landing | 8 | Lunar exploration (LEM taxi) | Deliver LEM shelter for 525 |
| | 80/low lunar landing | 23 | Lunar exploration (LEM taxi) | Extended lunar surface observation surface rendezvous 524 |

The basic requirement for life extension can be established with respect to post-lunar landing objectives of complete lunar mapping and survey. The moon's rotational period fixes at approximately 28 days the minimum time required, under proper lighting conditions, to photograph completely the lunar surface. The addition of transit times to and from the moon implies that a spacecraft capable of at least 35-day missions is needed to satisfy immediate lunar exploration objectives. Similarly, a spacecraft capable of 35-day lunar missions probably will be capable of 45-day earth orbits due to the lesser requirements for abort. Thus, a spacecraft designed to satisfy relatively modest post-lunar landing objectives will offer the nation's scientific and technological community a system capable of major contributions to a wide variety of research and development programs.

This volume presents a very brief summary of the investigations of CSM utilization for AAP and related program activities. In addition, specific studies conducted in support of NASA's mission planning and evaluation activities are summarized. Reference should be made to the reports listed in the Bibliography of this document for additional detail.

Table 2. Candidate Phase II Configurations

| Concept | Definition | Rationale |
|---|---|---|
| 0 | Block II CSM - 14-day maximum | Study basepoint |
| I | Block II plus provisions to receive consumables and electric power from lab after 14 days up to 30 days | Probable minimum change |
| II | Modified for 45-day CSM housekeeping. G&N used for transit. Life support provisions mission dependent. | Probable minimum change for extended lunar missions |
| III | Modified to maximize electrical power available from the service module while using volume in sectors I & IV. Lab receives oxygen, nitrogen, & EPS from CSM. | Increases mission flexibility & decreases cost of experiments |
| IV | Same as II but uses CSM guidance & control, telecommunications, and data processing systems. | Reduces specs on experiments & uses systems to their capacity |
| V | Combines features of III & IV | Most flexible configuration |

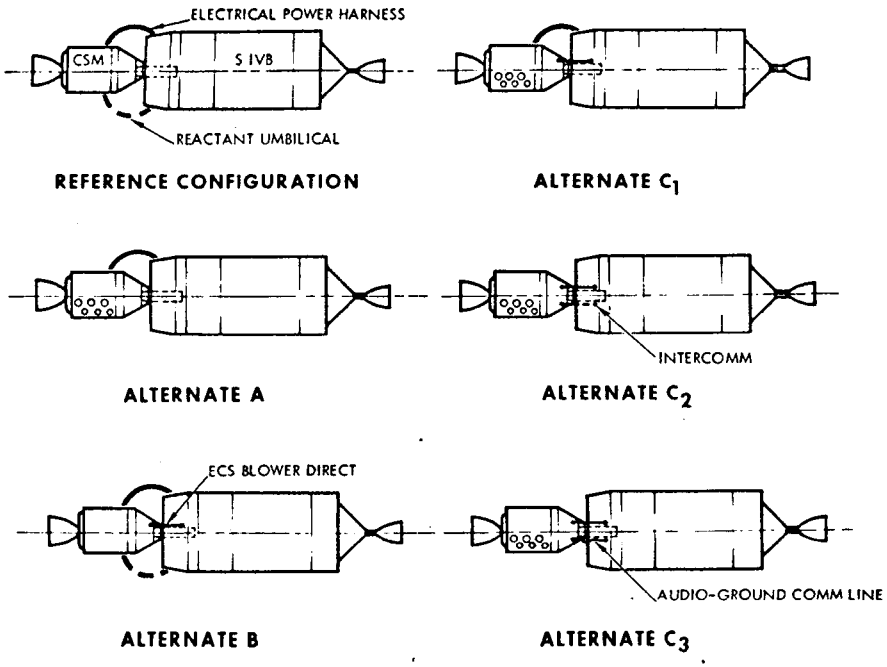


Figure 1. CSM/SSESM Configurations

## OBJECTIVES

The principal objective of this contract activity was to provide NASA with sufficiently detailed comparative analyses of the CSM for AAP Phase II of Apollo Follow-on Missions to provide a firm basis for system selection. These data include information relative to spacecraft configurations, selected major subsystems, and program cost and schedule factors. Additional objectives were development of Phase I mission plans, preparation of a Phase I experimenter's design guide, evaluation of the applicability of Allis-Chalmers fuel cells, and investigation of candidate land-landing systems. During the latter time period of the contract, studies were made to define the CSM interfaces with a spent S-IVB stage and the SSESM. Several other investigations were conducted during this period with objectives of establishing estimates of the program impact of various subsystem changes and test activities. The results of these studies are reported in the references listed in the Bibliography contained herein.

## RELATIONSHIP TO OTHER NASA EFFORTS

The study of the CSM Utilization for AES is related to NASA contracts with Grumman Aircraft Engineering Corporation to evaluate use of the LEM in the AES missions. Similarly, NASA funded studies to conduct preliminary design investigations of an experiment pallet for sector I of the SM and investigated lunar mapping and survey equipment to be flown with the CSM. Other related activities include investigations and tests of subsystems that could be applicable to the AAP. NASA MSFC is sponsoring several contracts related to AAP experiments integration, and effort is continuing at many NASA centers to define specific experiments for AAP missions. Douglas has investigated use of its S-IV stage as an orbital experimental facility, and McDonnell was recently selected to develop an airlock module for use with the CSM and S-IVB stage.

## METHOD OF APPROACH AND PRINCIPAL ASSUMPTIONS

In the initial contract phase, overall study emphasis was placed upon definition of subsystem characteristics with significant impact on CSM design. Subsystem design concepts were constrained to those that would not result in major structural modifications of the Block II Apollo. The system concepts to be evaluated were provided by NASA

and/or were defined in previous Apollo X studies. The objective was to determine those subsystems and operational modes that would result in a standard CSM for the designated AAP missions. Additional study constraints, with respect to design selection, were derived from the requirement for compatibility with booster schedules provided by NASA. Subsequent alternate mission investigations were constrained to definition of kit-type methods of implementing flights, and in-line production changes were ruled out.

A number of generalized requirements were identified for analytical purposes. These include (1) minimum spacecraft modifications, (2) minimum GSE and support operations modifications, (3) consider only housekeeping and transit functions, and (4) changes to subsystems should be justified only on the basis of a required increase in performance or capacity to perform transit or housekeeping functions. In addition to the basic ground rules, there were other implicit constraints in the technical studies. For example, it was necessary to consider the interfaces with the LEM in Phase I flights and the LEM laboratory in Phase II flights. However, the specific experimental interfaces were to be examined only to the extent needed to define the subsystems and operational CSM capacity in excess of housekeeping and transit functions. These analyses could include use of representative experiment characteristics data derived from related NASA studies.

The specific study approach involved the reduction of the Phase II missions (summarized in Table 1) into four reference missions that would be the basis for specific determination of the ability of the subsystems to operate in the AAP flight regime. The reference missions thus defined are summarized in Table 3 and represent worst-case missions. The Block II CSM was applied to these reference missions, and the minimum modifications required of individual subsystems to complete the defined missions were determined. Although certain variations were apparent for individual reference missions, it was possible to define a standard spacecraft concept with the sum of the needed capabilities. A number of subsystems would be designed in such a way that the entire spacecraft is not necessarily optimum for any given mission but must

Table 3. Reference Missions Summary

| REF MISS | OBJECTIVE | ORBIT | TOT MISS DAYS | DAYS IN ORBIT | LEM | THERMAL ENVIRON | COMM | ANY-TIME ABORT | MAJOR DESIGN IMPACT |
|---|---|---|---|---|---|---|---|---|---|
| 1 | EXTEND KNOWLEDGE OF MAN, ATMOS, & EARTH SURFACE | EARTH POLAR (200NM) | 45 | 44+ | LAB | PROXIM TO TERMIN - LIKE CISLUNAR (I.E. COLD) | NO HIGH GAIN ANTENNA OR REND RADAR XPONDER | NO SPS PENALTY | MAX ATT HOLD & COMM CYCLES |
| 2 | EXTEND KNOWLEDGE OF MAN, PHYSICS OF SPACE & SUBSYS OPN | SYNCH EQUATORIAL (19,500 NM) | 45 | 42+ | LAB | LIKE CISLUNAR | HIGH GAIN ANTENNA REQD NO REND RADAR XPONDER | NO PHYSICAL BAR MISSION RELATIVELY OPEN ENDED | MAX ECS THERMAL CONT & TOTAL ELEC ENERGY |
| 3 | OBTAIN COMPLETE MAP OF LUNAR SURFACE | LUNAR POLAR (80 NM) | 34 | 28 | LAB | PROXIM TO TERMIN - ECS RAD REQMT EASED BY PART OF MISS REMOTE FROM SUBSOLAR POINT | SAME AS 2 | ORBIT INCL AFFECTS TEI ΔV REQD LOI WITH LDS CONSIDERED | MAX AVG & PEAK POWER LOADS MAX G&N REQD (ACTIVE PLUS STANDBY) SPS ULLAGE |
| 4 | LEM TAXI ESCORT | LUNAR LOW INCL (80NM) | 20 | 14 | TAXI | SAME AS APOLLO | HIGH GAIN ANTENNA & REND RADAR REQD | SAME AS APOLLO | MAX SPS REQMTS |

include a certain minimal penalty to accomplish each of the missions without modification. However, the developmental advantages and operational flexibility afforded by a multimission capability undoubtedly outweigh any specific mission performance penalties. In certain cases, specific investigations of subsystems' capability to perform a given mission were based on only one of the reference missions since prior studies indicated that these were worst cases for the particular unit. For example, the G&N system was evaluated for only a transearth return trajectory from lunar polar orbit. In other cases, such as the SM RCS and the SPS, it was necessary to determine the propellant quantities involved in each of the missions defined by NASA, and reference missions were not used as the means of deriving subsystem requirements. However, in the case of the SPS, a substantial portion of the initial effort was devoted to determination of the operational requirements for the reference missions. Factors such as ΔV requirements, communications encounter-events and durations, crew

activities, passive thermal control, spacecraft RCS usage, and other operational functions related to housekeeping and transit were determined. Given these data, along with housekeeping and transit requirements, the various subsystems were evaluated and the required changes defined. In certain cases, a number of possible changes to a subsystem were defined, any of which could satisfy mission requirements. In these cases, emphasis was placed on costs, schedule compatibility, and potential risk as selection criteria. The analytic data generated by the mission evaluations were presented to NASA at a midterm review, and subsequently specific concepts were selected by NASA for detail design and vehicle integration studies.

As mentioned, a number of alternate concepts were identified in several areas that could satisfy mission requirements. To provide a sound basis for design recommendations, it was necessary to establish preliminary developmental and test schedules for the system. Estimates of the developmental capability of alternate concepts were used to assist in the evaluation of the designs. Factors such as production, production continuity, delivery, and acceptance flows, and related factors were used to determine first-article delivery schedules for each of the items to be produced in support of follow-on flights. Manufacturing and test requirements studies were included to provide additional bases for selection. As more detail was developed with respect to the required design changes, design studies of CSM installation and integration were initiated. The design studies provided for further definition of potential problem areas and test requirements, and information thus developed provided additional selection criteria.

Phase I mission planning studies were initiated by NASA-MSC in September of 1965 to more fully establish flight and ground operations requirements. S&ID and Grumman participated as associate contractors in support of NASA's mission planning task force. In these activities, S&ID was responsible for coordinating and establishing mission plans for each flight, including CSM operations and all trajectory analyses. Grumman investigated LEM laboratory functions and operations for applicable flights.

Vehicle assignments and flight profile characteristics defined for Phase I flights were somewhat modified for use in the mission planning effort. Table 4 presents the basic assignments and mission objectives as provided by NASA for mission planning purposes. It may be contrasted with Table 1, which was provided at the outset of the basic contract activity. Experiment integration studies were conducted by Grumman for the LEM laboratory and S&ID for the CSM. S&ID utilized this guideline: experiments that could not be accommodated by the CSM were to be identified to Grumman for incorporation into the LEM laboratory. A primary ground rule relative to experiment integration studies was that experiments and compatibility equipment installation occur after shipment of the spacecraft to the Kennedy Spaceflight Center; thus only minor umbilical and bracketry additions were allowable. This ground rule has also been applicable to studies conducted after completion of the mission planning effort.

Experiment requirements, generated by S&ID and Grumman integration studies, were used in ground operations planning and as inputs to the S&ID MASCOT spacecraft activity scheduling computer program to evolve a flight mission/operations schedule. Spacecraft crew and subsystem operating constraints were also input to the MASCOT program to assure production of a feasible flight schedule for each Phase I mission.

## BASIC DATA GENERATED AND SIGNIFICANT RESULTS

The principal objective of defining a single CSM capable of multimission application has been accomplished. Additionally, technical descriptions of Phase I missions have been completed, and analyses have been made of the use of land landing systems and Allis-Chalmers fuel cells. The following paragraphs describe major results in various areas and summarize data upon which recommendations are based. In addition, it was shown that only minor kit-type changes are needed to support the S-IVB Spent Stage Mission.

Table 4. Phase I Flight Objectives Summary

| Flight No. | Config | Orbit N. Mi./Incl. | Duration (Days) | Prime Purpose | Vehicles | Launch Date | Remarks |
|---|---|---|---|---|---|---|---|
| 211 | CSM | 200 E/90° | 14 | Flt ops/ technology | SC 106 | Sept '68 | SM pallet, biomedical |
| 507 | CSM/ LEM | 200 E/90° | 14 | Earth sensing/ lunar survey sys checkout | SC 107 | Nov '68 | Lunar survey system, bio-medical |
| 509 | CSM/ LEM | 19350 E/0° | 14 | Astronomy | SC 109 | April '69 | Astronomical orientation system |
| 214 | LEM | 200 E/28.5° | -- | -- | LEM | June '69 | Unmanned LEM launch |
| 215 | CSM | 200 E/28.5° | 14 | -- | SC 111 | July '69 | Rendezvous with 214 |
| 511 | CSM/ LEM | 30L/10° | 14 | Lunar mapping and survey | SC 113 | Aug '69 | Lunar survey system, bio-medical |
| 216 | LEM | 200 E/28.5° | -- | -- | LEM | Oct '69 | Unmanned LEM launch |
| 217 | CSM | 200 e/28.5° | 14 | -- | SC 114 | Nov '69 | Rendezvous with 216 |

PROGRAM ANALYSIS ACTIVITIES. Contract NAS9-5017 program analysis activities were oriented toward conformance with the Phased Project Planning guidelines set forth by NASA Policy Directive NPD 7121.1. Compliance with Phased Project Planning was accomplished to the extent possible within contractual obligations and limitations. The need for carefully conceived program-oriented activities was recognized early in the AES program, and many of the objectives of the formal Phased Project Planning directive were met. The overriding objective of formal planning activity is to achieve sufficient definition of the total program to permit reasonably accurate definition of funding requirements.

Certain tasks must be accomplished during the definition phase to adequately define program-funding requirements. Since the CSM for AAP is both a utilization of currently defined spacecraft and a life and performance modification of an existing spacecraft, several variations must be expected from standard guidelines. Study results reflect variations from NASA general guidelines, and total AAP activity shows an uneven level of development. The major forcing input to the assessment of program development requirements was the NASA booster utilization schedule ML65-1 shown in Figure 2. Definition of a program that is compatible with ML65-1 was a major result of this effort.

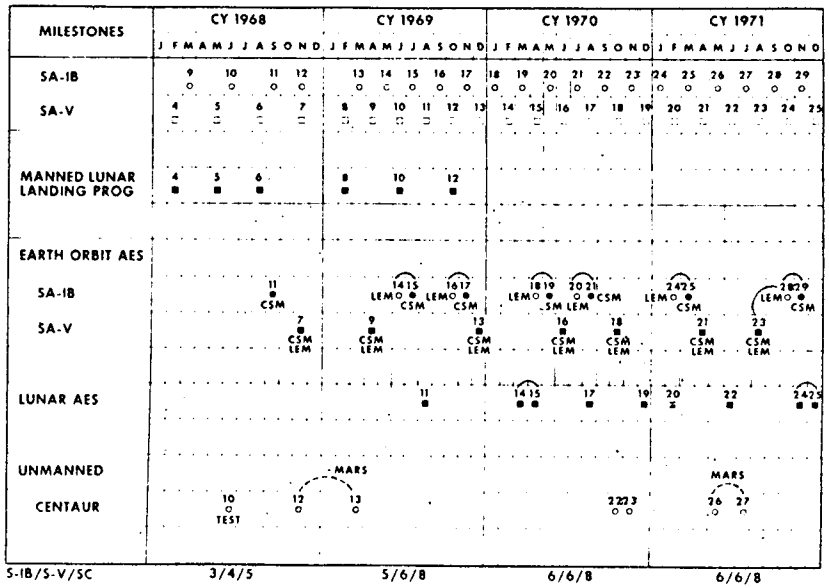


Figure 2. ML 65-L Schedule

Actual implementation of a major program requires that design and analyses be sufficiently detailed before development to permit mutual agreement between the contracting agency and the contractor of the type of contract to be executed during the development phase. However, technical confidence is only a portion of the required knowledge. Manufacturing plans, facility requirements, test requirements, and facilities, transportation flows, mission support requirements, training plans, and logistics are typical of the additional elements requiring definition. Similarly, the management tools and structure, and the industrial team needed for program implementation must also be at least partially defined. The status of major elements of the AAP is summarized in Table 5.

Table 5. Program Element Status

| | Phase I | Phase II |
|---|---|---|
| Spacecraft and GSE Design/Production | In Phase D (Block II) | CSM, LEM in Phase B, Experiments LAB, Missions in Approximately Phase A |
| Mission equipment | Gemini follow-on equip. in Phase D: new equip. (pallet, M&SS) in Phases B & C | Phase A conceptual design not complete |
| Specifications | Block II & LEM negotiated for Parts 1 & 2 - mods (per RECP required) | Requirements defined, no documentation |
| Facilities | Contractor Apollo facilities probably adequate; KSC potential problem | Modifications needed to AES launch rates, actual changes cannot be defined until mission plans developed |
| Mission plans | Preliminary plans complete | Requires configuration and experiment definition |
| Production schedules | CSM uses Block II schedule, other elements in Phase C | In Phase B, awaiting firm flight schedules and configurations |
| Extended capability subsystems | In Phase D change proposal status | In Phase B, alternatives still under evaluation |
| Production teams | Firm for CSM & LEM, Pallet 4 special equipment in selection | Partially identified, mis of subcontracted to GFE not established - Planning and pricing not complete |
| • System analysis and design | Essentially complete within current definition of mission objectives | Conceptual studies completed - needs definition of mission objectives for final definition |

Particular significance can be attached to the uneven status of the experimental and mission definition elements with respect to the design details. Further developments, which involve contractual performance incentives related to actual mission activities, would be aided by increasing emphasis on program elements at earlier stages of development.

A major body of information has been developed with respect to program implementation and planning. Preliminary documentation has been prepared which includes items such as a master program plan, a ground operational requirements plan with supplements, facilities and manufacturing plans, and general test plans in support of the AAP. Similarly, specification requirements have been identified and the characteristics of preliminary specifications defined in a number of areas critical to AAP CSM development. However, final release and publication of the required specifications is not scheduled to occur until a Phase C study is implemented. Developmental analyses in support of the forementioned ML65-1 schedule have been completed. Alternate production schedules are shown in Figures 3 and 4. The major variation in the alternate production schedules is with respect to the block change point. Variations in the block change point results in changes in the assignments of spacecraft to Phase I versus Phase II missions with attendant variations in program cost structure. Schedule 11-1 assigns no additional Block II production against the AES program, but limits the number of Block II CSM's available for Phase I application. Schedule 11-2 requires production of two additional Block II CSM's and provides the six unmodified CSM's indicated for Phase I flights. Further study will be needed to resolve the economics of block change point decisions - decisions critical to orderly maintenance of production and flight operations.

Program cost studies have been completed for the Phase II CSM and SLA development/fabrications, and mission planning, experiment payload installation and integration activities.

TECHNICAL ACTIVITIES. This section is a brief summary of the principal technical results of the contract NAS9-5017 study.

System Requirements. Systems engineering activities were focused toward identification of CSM design requirements and trade-offs, determination of flight objectives, and the AAP phasing status. Data were developed with respect to mission analyses, system requirements, functional analyses, crew operations, reliability, test requirements and plans, experiments design and integration, mission functional scheduling, specifications and documentation, and interface definition. Data and results presented herein are primarily limited to Phase II missions, and exceptions are noted as appropriate.

Mission/Operations. The major source of Phase II CSM requirements were derived through intensive analyses of the previously indicated reference missions (Table 4). Salient features of the mission trajectories are summarized in Figures 5, 6, and 7. Figure 5 identifies the earth polar orbit boost trajectory using the Saturn V booster, which has been determined to satisfy reasonable range safety constraints while permitting the highest payload performance. It can be seen by inspection of the instantaneous impact trace on Figure 5 that certain problems of range safety will require further evaluation. Figure 6 shows the ascent ground track for an earth polar orbit, and indicates tracking sites and their coverage areas during the first five orbits. The deorbit ground track is shown in Figure 7 for the final orbits. Nominal touchdown occurs in the Pacific near Guam. Payload capabilities for the earth polar orbit permits a spacecraft in orbit weight (200 n. mi.) of 27,312 pounds when launched by the uprated Saturn, and 96,308 pounds when launched by the Saturn V.

Figure 8 presents a profile of the synchronous equatorial orbit ascent. Major events limiting performance may be related to the engine burn requirements indicated by the small squares in the figure. Using Figure 8 as a reference, it is possible to identify the points above the earth at which the events shown in Figure 9 occur. The ground track shown for the synchronous orbit reference mission shows the equatorial "hover" point within the overlapping coverage of the Madrid and Goldstone ground stations. Further, recovery occurs in this case at a point in the Indian Ocean.

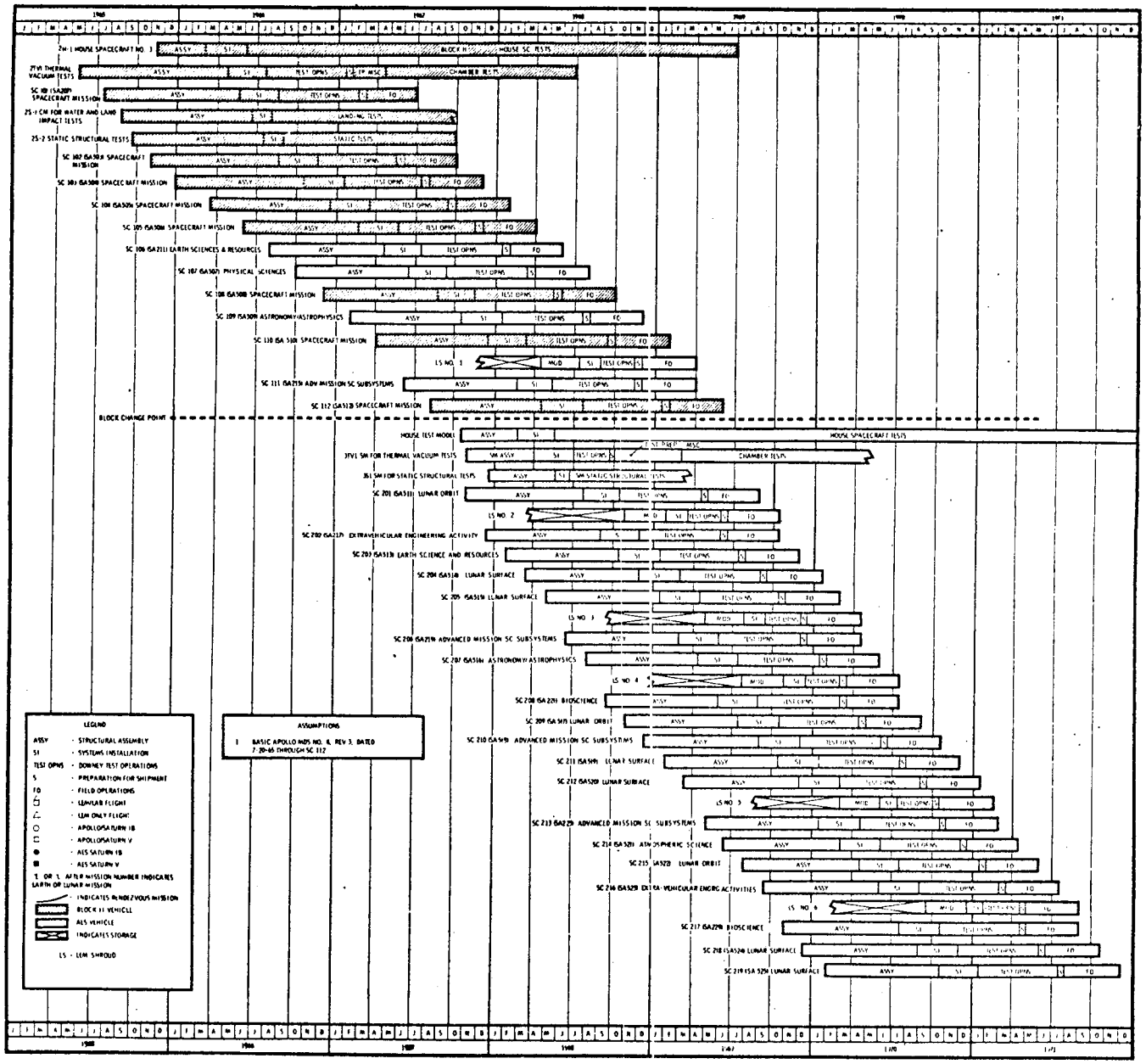


Figure 3. AES Development Operations Phase -- Master Development Schedule 11-1

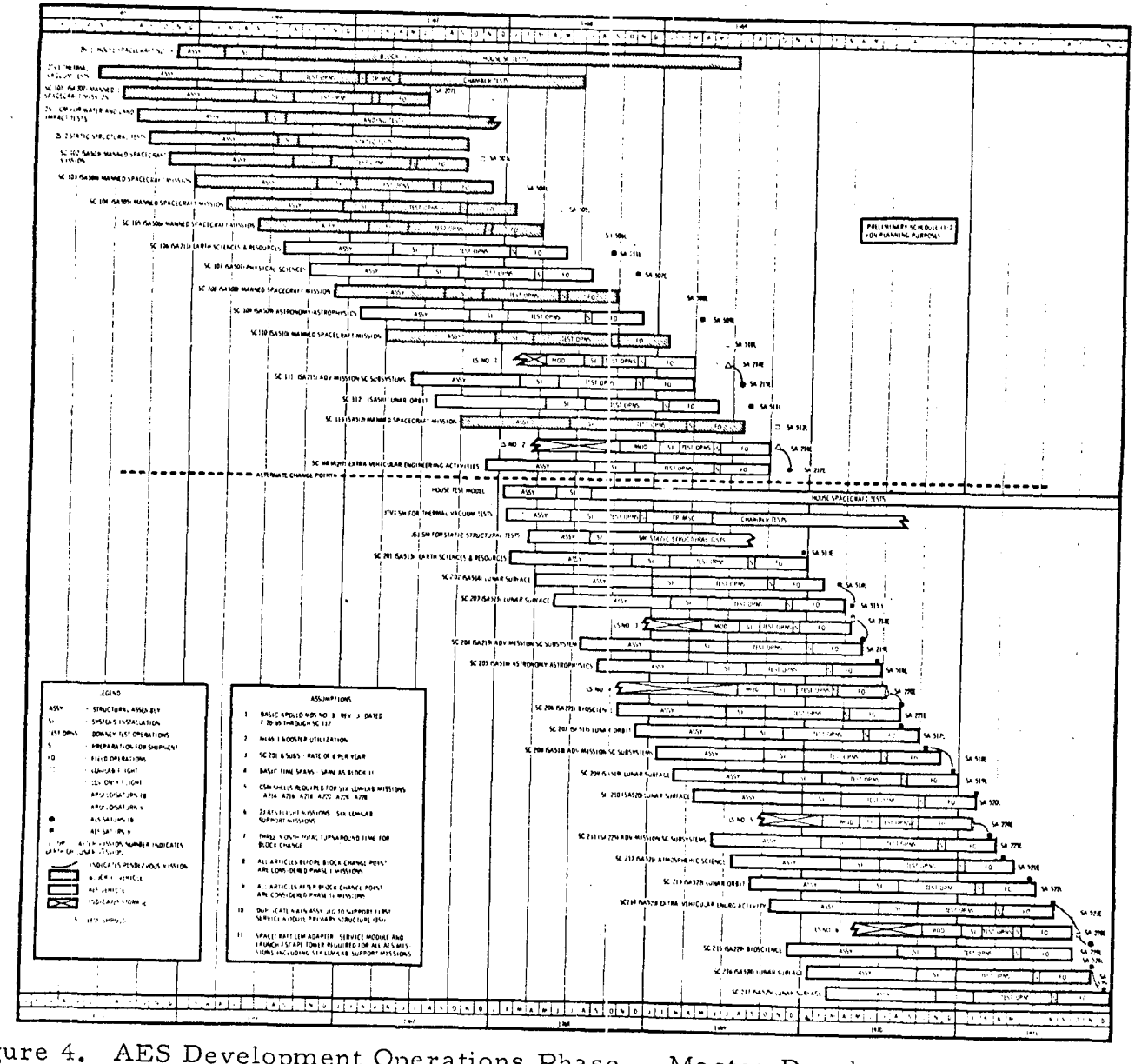


Figure 4. AES Development Operations Phase — Master Development Schedule 11-2

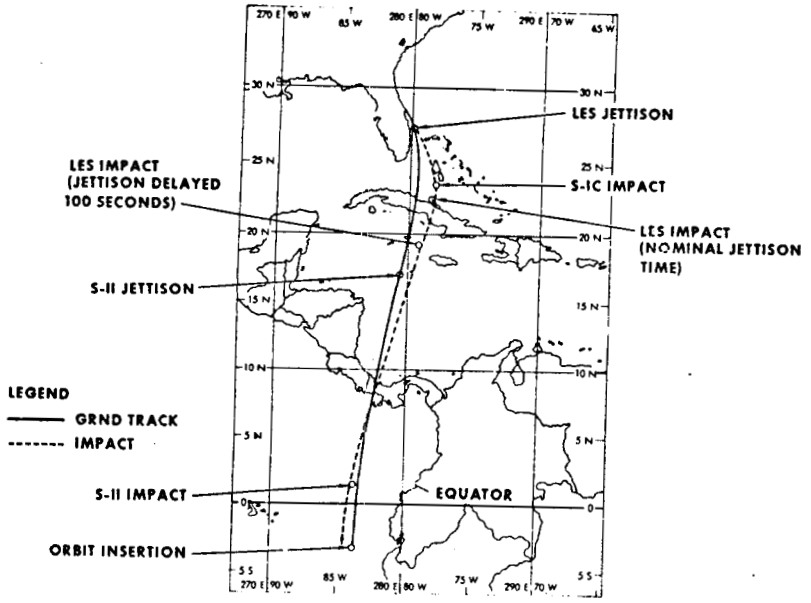


Figure 5. Earth Polar Orbit Boost

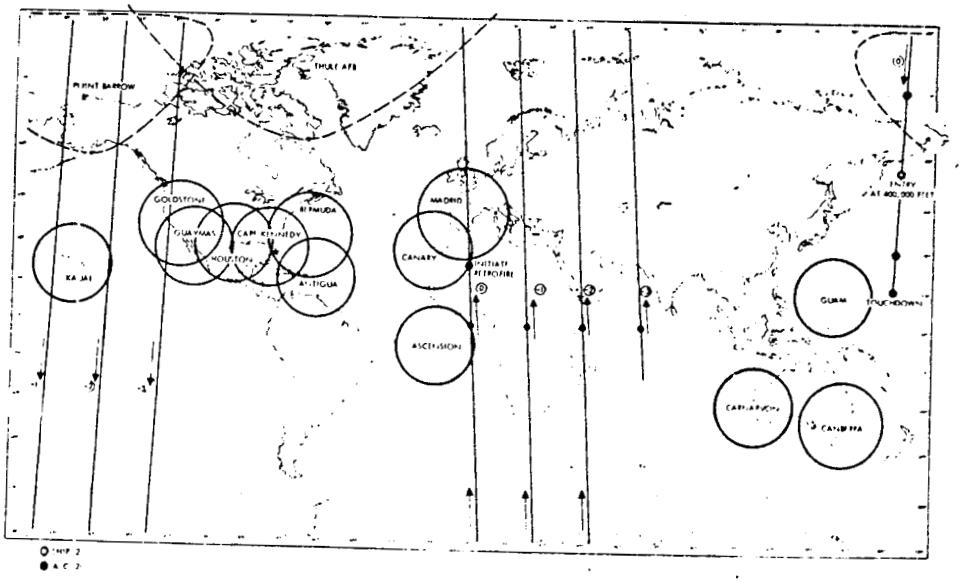


Figure 7. Deorbit Ground Track

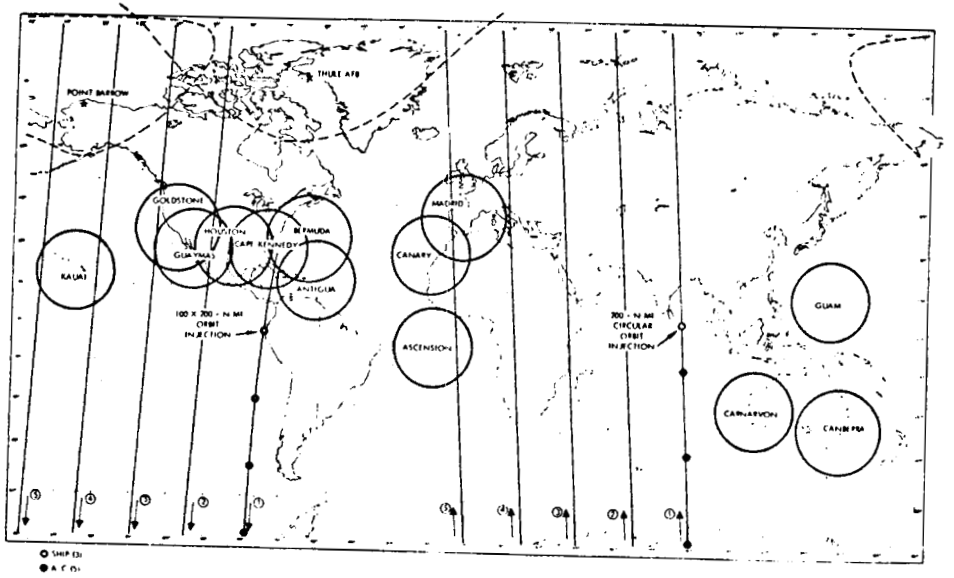


Figure 6. Ascent Ground Track

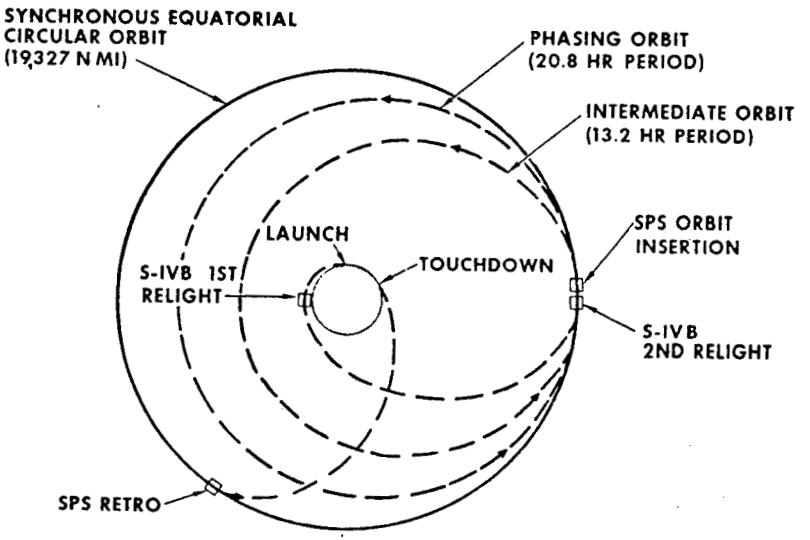


Figure 8. Synchronous Orbit Trajectory Characteristics

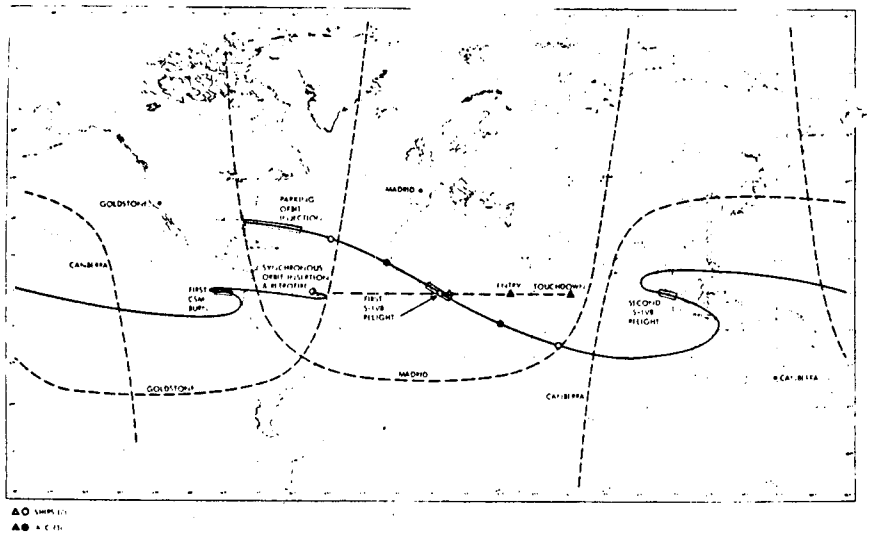


Figure 9. Synchronous Orbit Ground Track

Trajectory characteristics of the low inclination lunar orbit mission (LEM taxi escort) are very similar to that required of the lunar landing mission currently utilized in the Apollo program; these data are not presented herein. However, the weight increases attendant with the increases in both the Apollo and LEM mission durations identify the LEM taxi escort mission as a critical area for further analysis.

Phase I missions were studied in an addenda to the basic contract, and Table 6 summarizes the major characteristics of these missions. Electrical energy capacity can be seen as the most frequent constraint on mission deviation. Results of the mission planning and experiment integration studies in support of the Phase I missions are presented in S&ID reports SID 65-1723 through SID 65-1728.

Table 6. Phase I Flight Summary

| FLT | PLAN DUR (DAYS) | GROSS WT REQD* | PAY-LOAD AVAIL* | NET WT MARGIN | SPS/RCS CAP. EXCEED. | EPS (KWH) | | DAILY COMMS (MIN) | | TOTAL CREW TIME AVAIL (HR) | % CREW TIME USED | | | TOTAL EXP TASKS | | % PROG COMP | REV DUR (DAYS) |
|---|---|---|---|---|---|---|---|---|---|---|---|---|---|---|---|---|---|
| | | | | | | REQD | AVAIL | REQD | AVAIL | | C-1 | C-2 | C-3 | REQD AT PLAN DUR. | SCHED | | |
| 211 | 14 | 59,787 | 60,530 | 743 | NO | 722 | 634 | 48 | 176 | 864 | 66 | 63 | 64 | 686 | 613 | 90 | 12.3 |
| 507 | 14 | 55,585 | 110,000 | 54,415 | NO | 733 | 634 | 48 | 176 | 790 | 69 | 74 | 75 | 841 | 816 | 97 | 11.3 |
| 509 | 14 | 88,862 | 100,595 | 11,733 | NO | **581 | 637 | 1148 | 1440 | 827 | 76 | 76 | 75 | 672 | 672 | 100 | 14 |
| 511 | 14 | 96,682 | 102,200 | 5,518 | NO | 748 | 624 | 420 | 900 | 744 | 74 | 72 | 66 | 404 | 375 | 93 | 10.8 |
| 2.4 (LEM)<br>215 (CSM) | 30 | 35,924<br>37,289 | 38,826<br>45,709 | 2,902<br>8,420 | NO | 725 | 630 | 48 | 293 | 1287 | 68 | 76 | 71 | 404 | 404 | 100 | 24 |
| 2.7 (CSM)<br>216 (LEM) | 30 | 42,675<br>37,201 | 45,718<br>45,618 | 3,043<br>8,417 | NO | 976 | 632 | 172 | 293 | 2141 | 78 | 78 | 67 | 672 | 672 | 100 | 30 |

* INCLUDES SPS PROPELLANT, SLA & LES

** ACTUAL REQMT 549 KWH

The experimenter's guide is SID 65-1536; experiments are identified in SID 65-1537. The principal findings of the mission planning and experiment integration activities were related to the analytic validation of the feasibility of the Phase I flights. Mission operational flow diagrams, indicating time phasing and event sequences, were prepared for the system from arrival of the spacecraft at KSC to postflight recovery. Ground test and checkout requirements peculiar to each flight were outlined. Trajectory characteristics, from ascent to recovery, were determined, and mission, subsystem, crew, experiment, and spacecraft operating profiles were established. Evaluations of the operating characteristics of the system determined orbiting phase durations and mission success probabilities for each flight. Command and control characteristics of each flight, including communications access times and mobile site positioning requirements, were established.

Systems Engineering. A formal system engineering activity was used throughout the preliminary definition study. Study base-line experience includes only those activities directly relating to S&ID's prior participation. Data provided by NASA, with respect to other contractor and in-house activities, have been included in the technical and program analyses. The systems engineering studies provide for determination of requirements, formal documentation of requirements when identified, and conduct of the trade-offs between subsystems, subsystem functional groups, operations, and related across-technology problem areas.

Spacecraft design analyses proceeded from the Block II CSM base line used in Phase I flights of 14 or fewer days. The base-line design concept was then evaluated with respect to the reference missions to determine its ability to support the indicated operations. The development of design requirements and determination of the relationships between the designs and the reference missions have been principal activities. The basic procedure used in these analyses has been functional flow charting. Functional flows have been completed for both Phase I and Phase II missions to the second level for flight functions. Second-level flows have been completed for Phase I experiments and flight functions defined to the third level for two Phase I missions

Since test activities form a major means of verifying designs and are a major source of program costs, particular attention has been devoted to a determination of test requirements for the CSM. Analyses of the test requirements have been based upon the assumption that Apollo Block II objectives will be met, and existing Apollo test programs can be suitably modified to support similar requirements for AAP missions. SID 65-1148, General Test Plan (Preliminary), describes the results of the test analysis activities. In general, new test requirements were found to be limited to integration tests of modified subsystems using the house spacecraft. A limited number of structural and thermal vacuum tests were needed when the local induced environment showed substantial or unknown changes. A portion of Addendum IV to this contract was devoted to an investigation of a combined AAP/Apollo test program. Results of this study indicated that effective facility utilization and overall monetary savings would result from a combined test program. Findings of this effort are presented in SID 66-665.

Analyses of the flight characteristics associated with support of Phase I experiments provides a major source of detailed requirements. S&ID has investigated the impact of experiments installed in the CM and SM, and interfaces with experiments installed in the LEM laboratory or other experimental modules. Typically, biomedical experiments are conducted in the CM; a representative installation of the required equipment is shown in Figure 10. Certain of the Phase I flights involved study of an unmanned launch of the LEM laboratory and rendezvous with a manned CSM. For these missions the laboratory provides resupply with the objective of verification of rendezvous and docking procedures and increase in mission duration. Characteristics of these flights are summarized in Table 7.

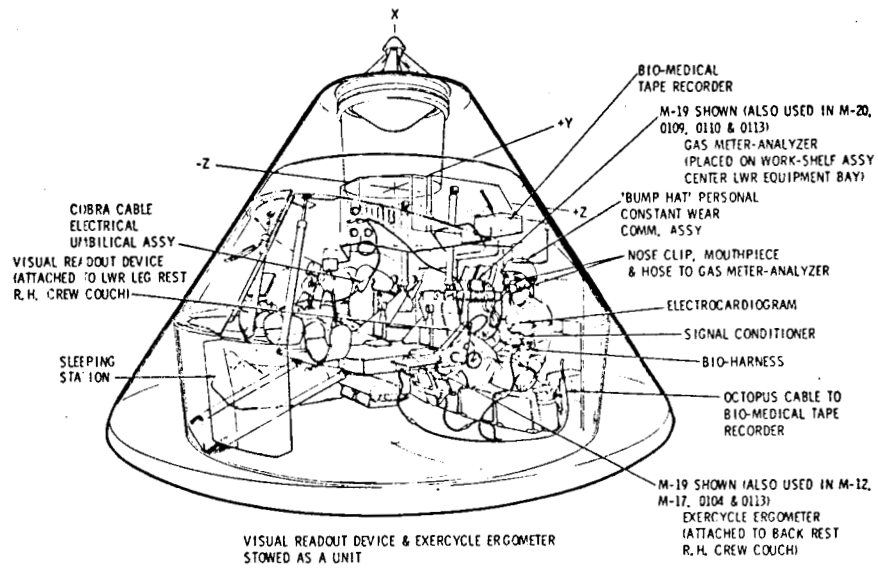


Figure 10. Typical Biomedical Experiments

An S&ID-developed computer program provides time-based analyses of experimental and housekeeping tasks and translates the task schedules into subsystem requirements profiles. Results from this program determine requirements for consumables, subsystem and experiments operating time, the workload on the crew, and periods at which either the CSM or LEM laboratory provides for mission control. Similarly, the processing of the experimental and housekeeping data by the computer assures that the results are free of error within the accuracy of the input data. Tasks are automatically rejected if there is a violation of any design or operational constraint. Through iteration and optimization of the program a workable flight plan results. The Phase I flight data presented previously in Table 6 were derived through use of the scheduling program.

Subsystems. A principal portion of this study has been devoted to evaluation of the applicability of existing Apollo subsystems to AAP Phase II missions. S&ID's approach to this study used reference missions, transit and housekeeping demands, and the Block II characteristics as the sources for subsystem design requirements. During the initial portions of this study, emphasis was placed on tradeoff studies to determine the reasonable alternatives that could be considered for detailed evaluation. These alternatives were evaluated through the tradeoff studies which also included an assessment of the extent to which Block II systems require modification, the cost and schedule impact of the alternatives, and their weight, volume, and other characteristics as installed in operational spacecraft. The results of these initial studies were presented to NASA and selections were made of subsystem concepts for more detailed consideration and integration with the CSM. Similarly, the selected concepts were evaluated for their ability to support transit and housekeeping functions in the reference missions, or in certain cases all Phase II missions. Excess capability identified in these analyses could be used for experiments. Following completion of the preliminary definition effort, a number of more detailed investigations were made of CSM subsystems as used in both alternate and follow-on AAP missions.

Table 7. Experiment Characteristics Summary

| | FLT 214 (LEM LAB) /215 (CSM) | FLT 216 (CSM) /217 (LEM LAB) |
|---|---|---|
| OBJECTIVE | • VERIFY RENDEZVOUS & DOCKING PROCEDURES<br>• CONDUCT EXPS<br>- SMALL MANEUVERING UNIT<br>- CONTROL MOMENT GYRO STAB<br>- OPTICAL NAV<br>- BIOMED/BEH | • VERIFY RENDEZVOUS & DOCKING PROCEDURES<br>• CONDUCT EXPS<br>- LOCOMOTION IN SPACE<br>- EXTENDABLE ROD<br>- EMERG RESCUE TECH<br>- CARGO TRANSFER<br>- SPACE SUIT TESTS<br>- BIOMED/BEH |
| MISSION DESCRIPTION | • UNMANNED LEM LAUNCH TO 28.5° 200 N MI ORBIT<br>• CSM LAUNCH, RENDEZVOUS & DOCK ~5 DAYS LATER<br>• LAB PROVIDES RESUPPLY<br>• DURATION~24 DAYS<br>• SM SECTOR 1 EMPTY<br>• EXTENSIVE EVA | • CSM LAUNCH TO 28.5° 200 N MI ORBIT<br>• UNMANNED LEM LAB LAUNCH, RENDEZ & DOCK ~10 DAYS LATER<br>• LAB PROVIDES RE-SUPPLY<br>• DURATION~30 DAYS<br>• SM SECTOR 1 EMPTY<br>• EXTENSIVE EVA |
| EXPERIMENTS | • 8 SEPARATIONS & RE-DOCKING OF CSM W/LEM LAB<br>• 28 HRS CONTROL MOMENT GYRO STAB CHECKOUT<br>• 40 HRS G&N SUPP FOR 40 NAV SIGHTINGS | • EXTEND ROD EXP REQ 21 HR CREW MONITORING<br>• 95 HR CREW EVA REQD |

A complete discussion of the results of the subsystem investigations cannot be presented in this document. Discussion here is limited to subsystems in which a required change results in re-design of the Block II subsystem or new installation characteristics.

AES reference missions present a significant difference from the Apollo lunar orbital rendezvous (LOR) mission to the G&N and SCS systems in terms of total operating time. The extended-mission duration has direct effect on the SCS and the lunar polar orbit poses stringent requirements to the G&C system.

Transit requirements for the two lunar missions are similar to the Apollo Block II requirements while the transit requirements for the earth-orbit missions are less severe. However, housekeeping functions impose more stringent requirements on the G&C system, primarily in the support of passive thermal control requirements. Orbit corrections in the lunar polar and earth synchronous orbits impose stringent requirements on the G&C system.

Another dissimilarity to the Apollo LOR mission occurs in the LEM escort mission due to attitude hold requirements to allow communications while the single remaining astronaut sleeps in the command module. It should be noted that the LEM remains on the lunar surface 14 days compared to less than 2 days for Apollo. Operating times of G&C components are compared with Block II in Figure 11. From a reliability standpoint it was found that the AES lunar polar orbit mission is the most severe for the SCS. Since both these systems will be designed for their most stringent mission requirements, each will have excess capability when operated in non-design missions. This excess capability may be used to support experiments.

Due to the requirement for extended attitude holds in a local vertical mode in several of the missions studied, NASA MSC directed the study of a supplementary attitude control subsystem to reduce the load on the existing SCS and G&C systems. An orbital stabilization system (OSS) was investigated to determine possible means of installation and define problems of operation. NASA defined an OSS package using an earth/moon horizon scanner for pitch/roll orientation to local vertical and a starfield sensor for yaw or three-axis inertial hold control. The study of the OSS CSM integration established the feasibility of operating the spacecraft at the specified attitude and rates using the OSS and indicated the OSS configuration and installation locations. The results of the OSS investigation are reported in SID 66-1285.

Figure 12 summarizes the requirements identified for RCS propellants. It can be seen that the Block II capacity is insufficient for even basic flight and housekeeping operations when the missions are of the duration specified for AAP flights. Figure 13 portrays some of the RCS tankage configurations evaluated. The recommended configuration uses four LEM oxidizer tanks and provides the AAP CSM configuration with 2600 pounds of propellant capacity. An important result of this study was that the RCS could be greatly increased in capacity while retaining the Block II thrust assembly, using existing tankage and requiring only minimal modifications to the SM sector panels.

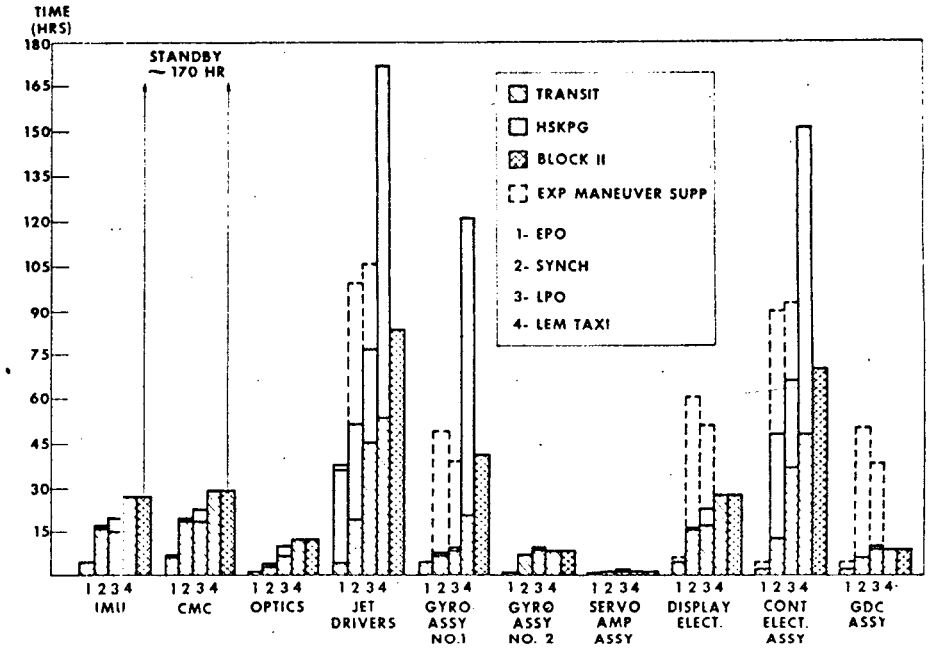


Figure 11. G&C Operating Times

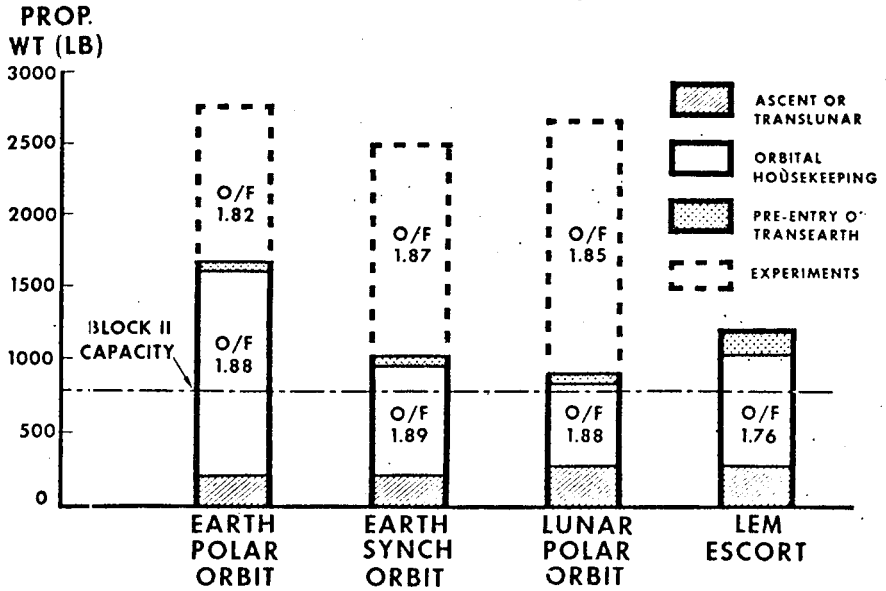


Figure 12. RCS Propellant Requirements

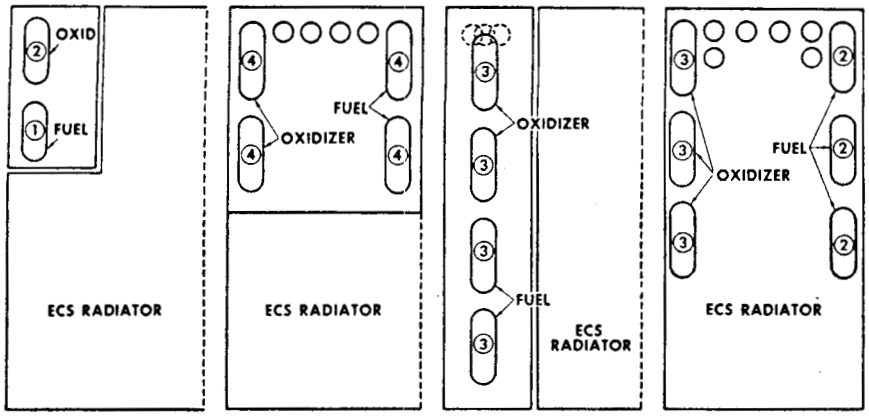


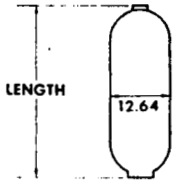


| CODE | TANK | LENGTH |
|---|---|---|
| ① | SM RCS FUEL | 23.72 |
| ② | SM RCS OXID | 28.56 |
| ③ | LEM RCS FUEL | 32.21 |
| ④ | LEM RCS OXID | 38.82 |

PROPELLANT TANK

APOLLO HELIUM BOTTLE

Figure 13. SM RCS Tankage Arrangements

The ECS study included investigation of a two-gas system for the spacecraft. The study proceeded from an initial requirement to investigate a 7-psia atmosphere composed of half oxygen and half nitrogen. This requirement was revised to a 5-psia 70% oxygen and 30% nitrogen atmosphere. Included in these analyses was an investigation of the use of helium as the diluent gas. For analytical purposes the LEM laboratory was considered as thermally independent and water was not transferred to the LEM lab. The option to operate the atmospheric control system in a pure $O_2$ or two-gas mode is shown in Figure 14 along with a plot of the time required to stabilize partial pressures. Only relatively minor changes are required to incorporate a two-gas system into the CSM ECS.

The use of a molecular sieve for $CO_2$ removal was investigated as a means of reducing the weight and volume penalties associated with use of lithium hydroxide.

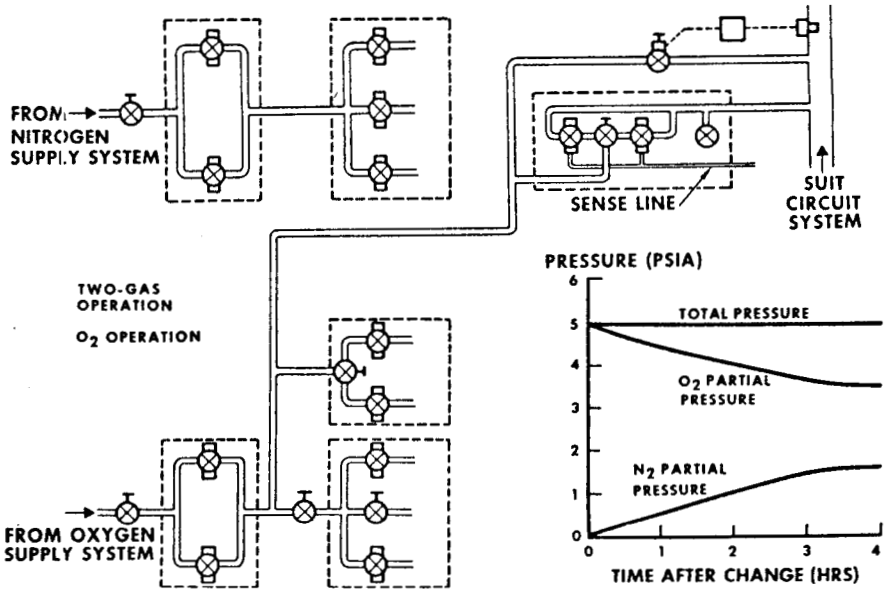


Figure 14. Atmosphere Composition

Figure 15 shows weight and volume comparisons of the integrated, alternate $CO_2$ removal components. The environmental control unit recommended for the CM is shown in Figure 16, and highlights the close similarity to Block II unit. After completion of preliminary definition activities, a more detailed study of the integration of the environmental control/life support (EC/LS) system recommended for the AAP was conducted. The results of this study, reported in SID 66-1361, confirmed the feasibility of integrating the AAP EC/LS into the CSM.

The electrical power system investigation included evaluation of use of both Pratt & Whitney and Allis-Chalmers fuel cells. The extended mission duration indicated that the electrical power system would be of particular importance in the subsystem analyses. The major changes required in electrical power system occur in the cryogenic storage area due to the requirements for increases in total energy requirements. However, changes would be necessary in the Pratt & Whitney fuel cell design if it was assumed that the existing Block II fuel cells are

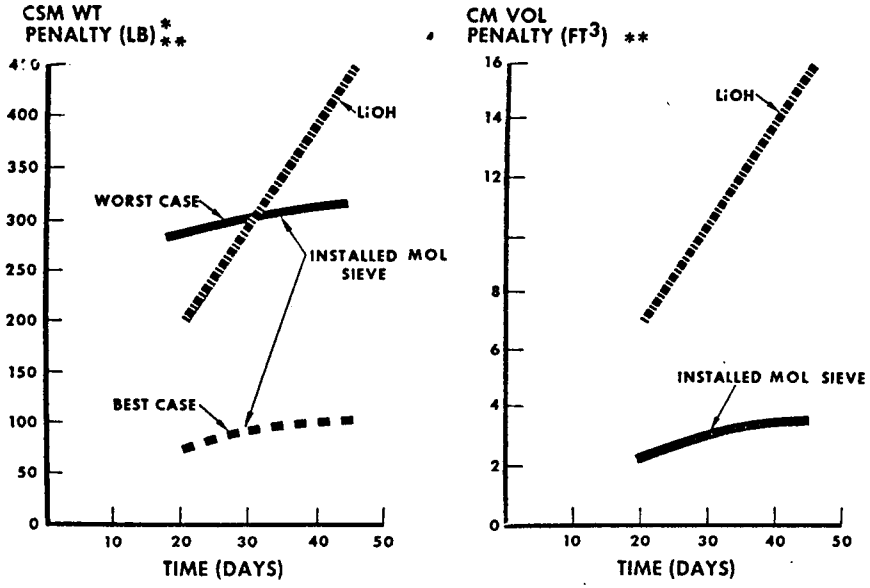


*POWER PENALTY–1.2 LB/KWH
**INCLUDE 4 DAYS LiOH FOR ALL MOL SIEVES

Figure 15. $CO_2$ Removal Comparison

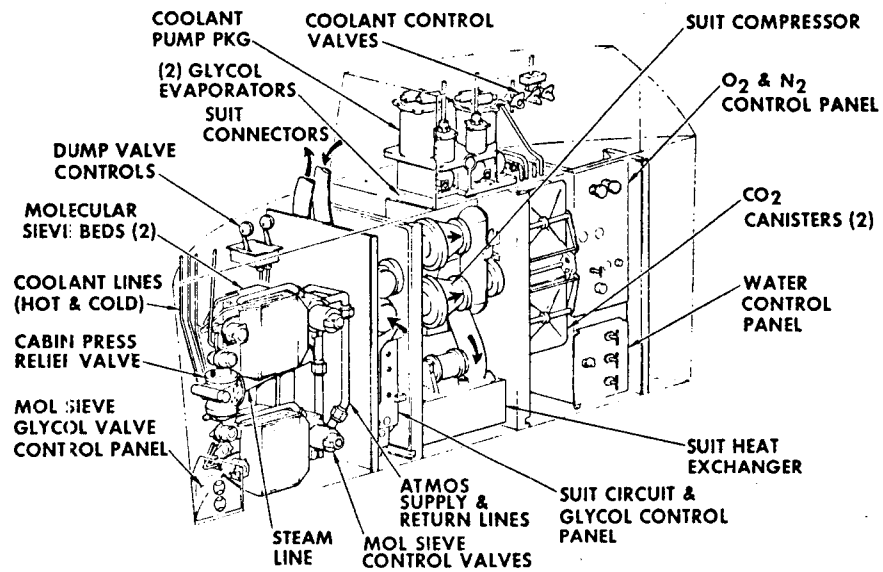


Figure 16. Environmental Control Unit

designed for 400-hour operation and AAP missions are in excess of 1000 hours. Consideration was given to the use of 400-hour fuel cells with in-space start capability as compared to improved 1200-hour power plants. It was clearly shown that the development cost of improvements to the fuel cells to achieve a 1200-hour life was easily offset by the decreased unit costs per spacecraft.

A separate study to further evaluate the use of Allis-Chalmers fuel cells was conducted as an addendum to this contract. The results of this investigation are documented in SID 65-1543. Principal findings of this study, with respect to changes needed to use an Allis-Chalmers Fuel Cell Power System, were (1) the A-C system would weigh approximately 400 pounds less than a comparable Pratt & Whitney system, (2) the A-C system offers a desirable in-space startup/shutdown capability, (3) four A-C fuel cells could be installed in Sector IV of the SM whereas only three Pratt & Whitney fuel cells could be installed in the same space; (4) Apollo changes were centered in the areas of GSE, instrumentation, and CM displays. Problems in the use of A-C fuel cells were identified principally in program schedule and qualification areas. Figure 17 shows the comparative installations of the Block II, and the alternate electrical power systems.

The study of cryogenic storage included investigations of the electrical power system reactants and environmental control system gases. Consideration was given to designs which would permit the maximum volume of storage, within the previously defined study constraints, as well as designs which would be sized solely for housekeeping and transit requirements. An additional requirement was added approximately midway through the study to investigate the problems associated with the removal of Sector I tanks for those flights where the pallet was to be installed. Makeup gases for the lab were included in the analysis of sizing requirements. Figure 18 schematically depicts the recommended cryogenic storage system for the base-line configuration and the alternate with Sector I empty. The base-line size tanks will support both the CSM and laboratory electrical and metabolic tankage requirements and supply a substantial increase in power above the Block II as far as the 45-day mission requirements are presently known. The

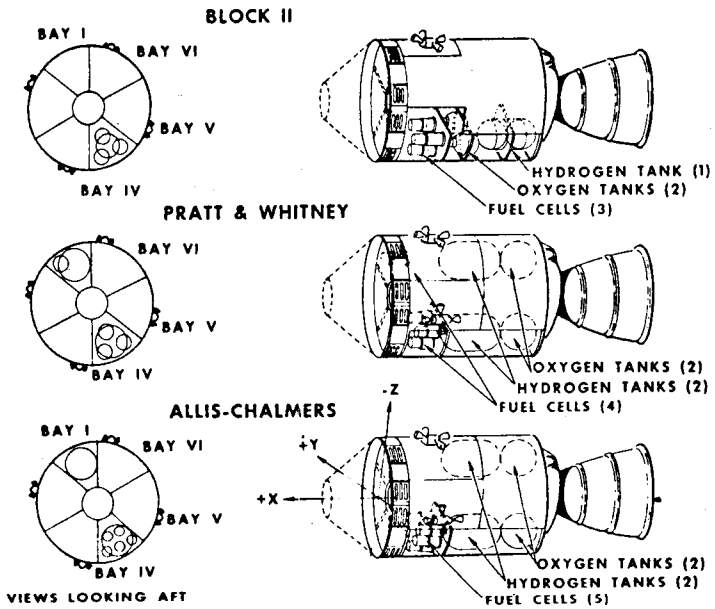


Figure 17. Electrical Power System

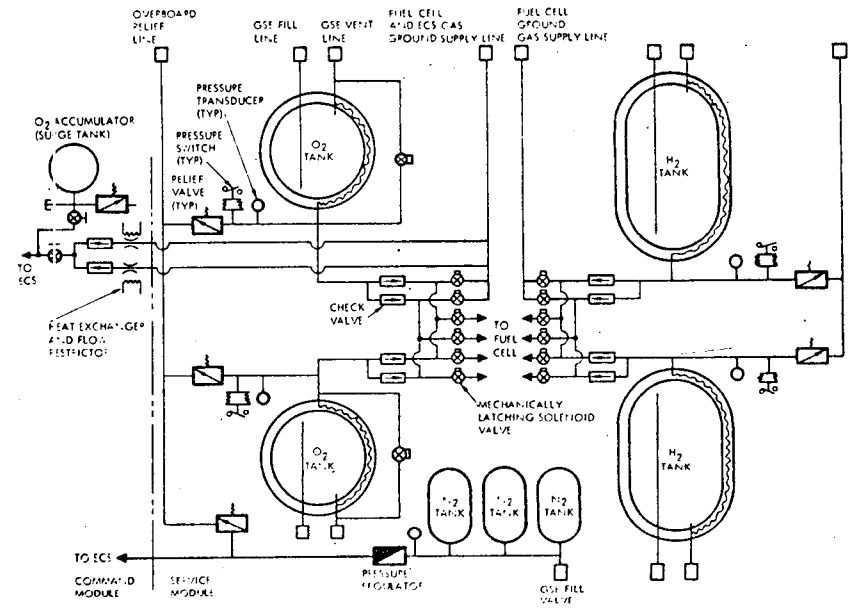


Alternate Sector I (Empty)

alternate configuration where cryogenic tankage is limited to Sector IV cannot supply all the environmental oxygen for the CSM and LEM Lab plus reactants for the two fuel cells for the 34-day lunar polar orbit mission. A possible solution would be to use an elliptical bulkhead tankage configuration and add a Block II oxygen tank in the laboratory to supply cryogenics to the SM fuel cells. This configuration would satisfy the lunar polar orbit requirements.

The modifications to the electrical power generation and cryogenic storage systems results in a substantial increase in total energy available and flexibility of use of the electrical power system. Figure 19 graphically compares the Block II and AAP electrical power capability. Possibly the item of greatest interest to the experimental community is the great increase in flexibility afforded by the permissible peak power cycles associated with the AAP design. This increase in capability is achieved both through changes in cryogenic capacity and in a change in the batteries used in support of the missions. These changes were not made to improve the characteristics of the electrical

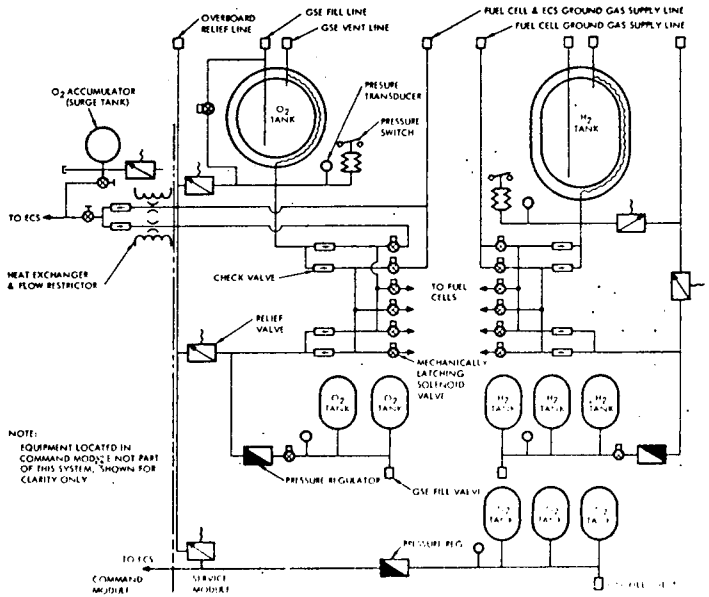


Figure 18. Cryogenic Gas Storage Systems

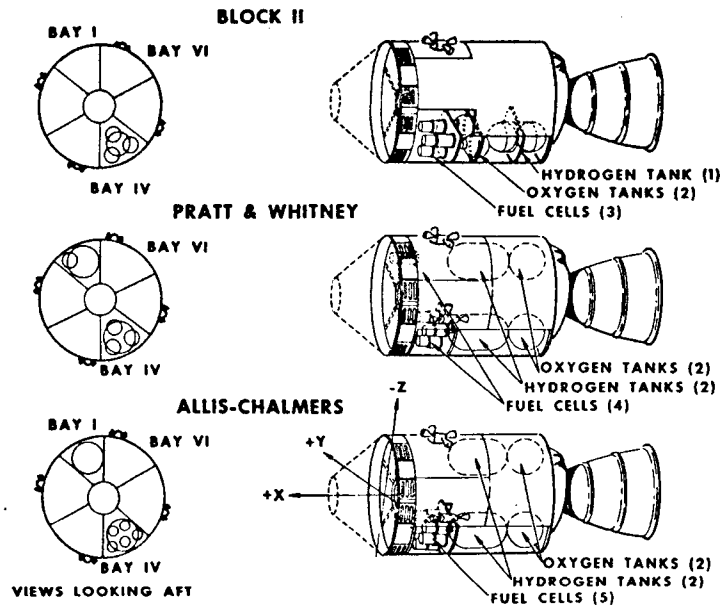


Figure 19. Electrical Power Comparison

power system but were necessary to satisfy housekeeping and transit requirements. The improved capability results from the need to satisfy worst-case requirements in each of the reference missions.

During Addendum IV to this contract, more intensive investigations were made of the methods by which mission duration could be increased using a Block II CSM in conjunction with the S-IVB spent stage. Several alternative means of providing the required increase in electrical energy were examined. Principal variations centered around the storage of reactants to power the fuel cells located in the SM. Reactants could be placed either on the air-lock module or in Sector I of the SM. S&ID's ground rule was to achieve a 60-day spent stage mission duration with one rendezvous of the CSM. Using this ground rule, it was concluded that a Sector I cryogenic kit was the preferred solution since this

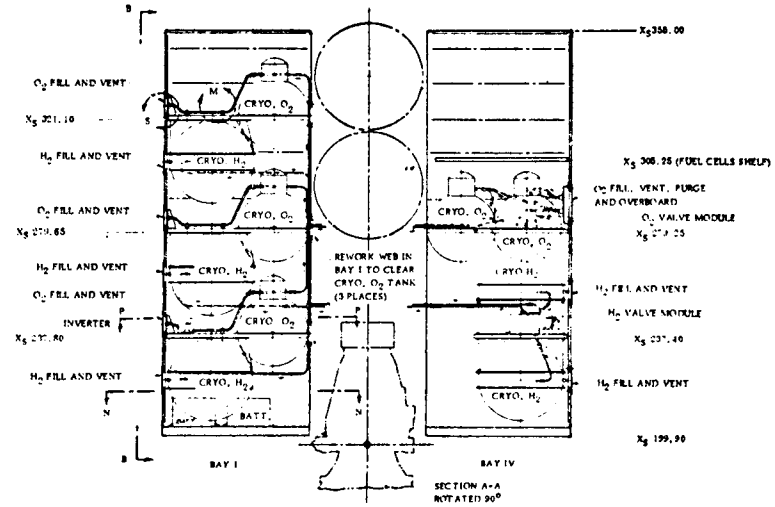


Figure 20. Sector 1 Cryogenic Kit

was the only means of achieving the 60-day duration when constrained to uprated Saturn I launch vehicles. Figure 20 is a layout of the recommended cryogenic kit.

Thermal control studies formed a basis for derivation of operational constraints and design requirements for the various subsystems. Major conclusions from these studies with respect to the reference missions are;

(1) earth polar orbit missions were analyzed for two cases. For one case the orbit plane was assumed to be near or including the subsolar point and is identical to low inclination earth orbit and is consistent with Block II design requirements. The other polar orbit case assumes the orbit

plane is near or coincident with the Terminator plane. In this orbit the CSM is always radiated by sunshine and earth emission; the optical properties of the radiator coating are such that the net absorption of energy is nearly the same for sunlight as for earth emission. In certain spacecraft attitudes, one radiator may partially face the sun while one radiator may partially face the earth. This attitude, in conjunction with a high heat rejection rate, requires water boiloff rates in excess of water production rates. This potential thermal control problem indicates that further study will be required to establish whether a full mission can be completed. The assumption of other spacecraft attitudes could require a continuously active heater in at least one RCS squad.

(2) The synchronous earth orbit is thermally equivalent to the cislunar mission plane of Apollo. Passive thermal control is achieved by rolling the spacecraft while it is aligned broadside with respect to the sun. A stationary attitude may be assumed but it requires that the RCS heaters be activated within about 50 minutes. Depending on the assumed attitude, the ECS heater may have to be activated immediately or it may not be required at all. RCS electrical heater power is budgeted for a mission on the basis of repeated sequences of a 3-hour attitude hold with heaters active followed by 15 hours of passive thermal control rolling with heaters inactive. ECS makeup heater power is budgeted on a basis of 10 hours cumulative operation. SPS operation may become a critical item in synchronous oribt and certain preferred attitudes may be required to prevent a thermal control problem.

(3) Lunar orbits present approximately the same type of thermal control problem as polar earth orbits. In those cases where one panel faces the sun and the other faces the moon, excessive water boiloff results. Radiator effectiveness can be enhanced by avoiding unfavorable attitudes by the subsolar region during lunar orbits. This attitude restriction requires that the ECS radiator edges be pointed toward the moon when the spacecraft is within 25 degrees of the subsolar point. Exceptions to this attitude could be allowed on no more than three consecutive orbits or on no more than eight total orbits in one lunar mission.

The thermal control derived attitude constraints result from preliminary evaluations based on extrapolation of internal Block II heat loads and subsystem operating characteristics. Thermal data with respect to alternate fuel cells or other subsystems is not included in these studies. Variations in the operations philosophy in the fuel cells will require changes in the EPS radiators. Similarly, variations in use rates and durations of the RCS requires that careful attention be devoted to thermal analyses.

The SPS remains an essentially unmodified Block II subsystem. However, certain minimal modifications in problem areas have been identified. Since a number of the AAP missions require substantially reduced propellant usage by the Apollo lunar mission, concepts which involve only the removal of the propellant storage tanks and related maximum changes to gauging and plumbing are recommended. This configuration has capacity for 53 percent of the maximum useable propellant load and saves 586 pounds of burned weight. However, the basic design remains an unmodified Block II SPS tankage configuration. Some overall SPS changes are required to provide for thermal protection of the propellant and oxidized transfer and feed lines, and in the pitch and yaw actuators.

Certain characteristics of the AAP SPS indicates that a number of test problem areas exist. The extended mission duration and large periods of zero-gravity coast indicate that check valve operation, tank door latches, ball valve shaft seals and other minor components must be tested before final designs can be established. Similarly, the entire SPS must be qualified for 45-day operation.

The AAP communications and data requirements can be satisfied to a large extent by unmodified Block II equipment. Communications and data requirements do not exceed Block II functional performance capability, but some Block II equipment will probably be deficient in reliability and operating life due to the extension of the mission to 45 days. However, the on-off cycling of the Communications/Data equipment, which has been suggested for AAP to reduce power demands has undetermined effects on reliability. The uncertainty of the effects of the cycling

operations indicates that a test program to evaluate the cyclic operational mode is essential. Minimum changes in the communications and data system should be made to facilitate cyclic operation and achieve more efficient use of system components. For example, the Block II PCM equipment has no ON and OFF control provisions and circuitry must be added to the PCM to permit cyclic operations. Block II data storage equipment is restricted to a playback cycle. Data storage equipment usage in the AAP exceeds the Block II specified life by a factor of 8 and the effects of cycling the equipment is not known. Modification of the equipment to include "playback in reverse" would eliminate the rewind requirements and greatly simplify the operational usage of the equipment. The addition of an audio hardline to the LEM indicated that the Block II audio center be slightly modified in terms of increases in gain of the microphone amplifiers and a warning light on the CM control panel. Changes in the Block II pre-modulation processor (PMP) are indicated to permit continuous operation of the voice detection and digital data detection functions while permitting cyclic operation of the other functions controlled by the PMP. ON-OFF controls would have to be added to the PMP for control of the other functions. Unified S-band equipment should be modified to control the transmitter and receiver functions separately. This modification will allow continuous operation of the S-band receive function and on-off cycling of the PM and FM transmitter. Reports detailing other minimum change recommendations in the communications and data systems are listed in the Bibliography of this volume.

Table 8 summarizes the subsystem changes needed to support the missions defined by NASA for Phase II, or follow-on, AAP missions. It can be seen that the very substantial gains in spacecraft flexibility and flight duration capability are achieved with only limited impact on the basic Block II design.

Spacecraft Design. Spacecraft design studies permitted an evaluation of the integration of the alternate subsystem concepts into the CSM. The design activity also included analyses of the mass properties associated with the individual missions and subsystem installations, the structural

Table 8. AAP Subsystems Summary

| SUBSYSTEM | NO CHANGE | MINOR MOD | MAJOR MOD | NEW DESIGN |
|---|---|---|---|---|
| EARTH RECOV SYS | ✓ | | | LAND LDG OPTIONAL |
| GUID & CONTROL | | ADD REDUNDANT COMPONENTS | | |
| ELEC PWR SYS | | ADD 4TH FUEL CELL W/IFS & ELECTRODE COATING | | |
| SERVICE PROP. SYS | ✓ | | | |
| REACTION CONTROLS | | | NEW TANK ARRGT | |
| COMM/DATA SYS | EFFECT OF CYCLIC OPN UNKNOWN | | | |
| ENVIRCN CONT SYS | | ADD $N_2$ SUPPLY & REGULATION | MOL SIEVE INSTALLATION | MOLECULAR SIEVE |
| CRYO STORAGE SYS | | | | LARGER TANKS |
| STRUCTURE | | SECONDARY STRUCTURE | | |

provisions required for subsystem modification and CSM experiment installation, and a study of a land landing system for the CM.

Figure 21 presents the interior arrangement of the AAP CM. It can be seen that the basic Block II crew cabin has been found adequate for AAP application and the required changes are readily accommodated in the CM. Structural modifications are limited to changes in the secondary structure associated with re-packaging of a number of components and increases in the expendables stowed in the CM. Table 9 provides a comparison of the Block II and AAP command module weights. It can be seen that the substantial increase in life extension is achieved at a gross CM weight increase of only 200 pounds.

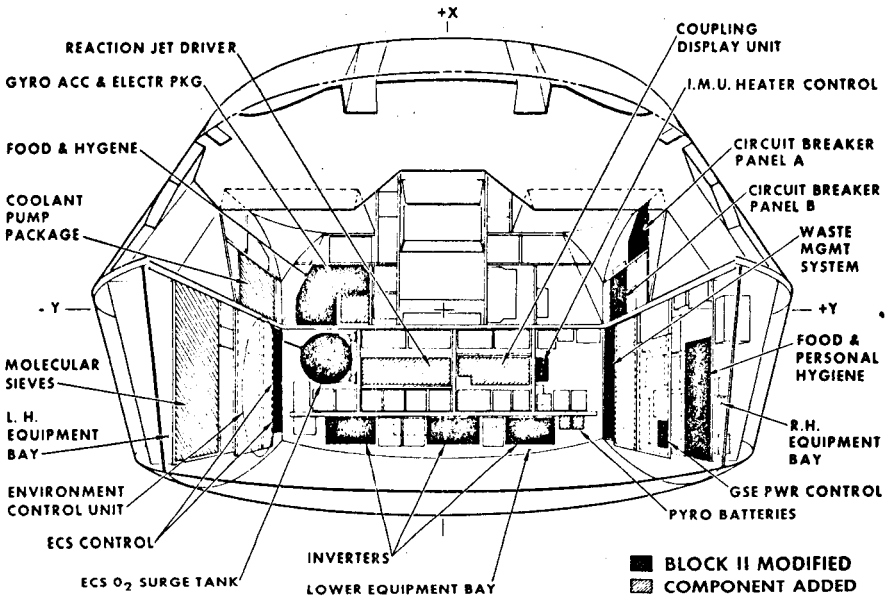


Figure 21. AES Command Module

The majority of the life extension capabilities are provided in the SM. It was previously indicated in the discussions of the individual subsystems that a number of items required modifications to provide for storage expendables. The effects of these changes can best be appreciated by comparing the Block II and AAP Service Module layouts as shown in Figures 22 and 23. The AAP SM provides for substantial increases in the cryogenic storage capacity, fuel, oxidizer, and pressurization gases for the RCS. Other minor changes were made in the SM such as alignment of the RCS quads along the ZY axes. Table 10 summarizes the service module weights as compared with the Block II vehicle.

A design study of the spent stage mission was conducted as part of an addendum to this contract. It was shown that the installation of various CSM modification kits at the KSC would be adequate to support the spent

Table 9. Command Module Weights

| | BLOCK II (1 SEPT 1965) | AES STD CONFIG |
|---|---|---|
| **WEIGHT EMPTY** | (9245) | (9551) |
| STRUCTURE | 5375 | 5402 |
| STAB & CONTROL | 188 | 226 |
| GUID & NAV | 359 | 393 |
| CREW SYSTEMS | 84 | 84 |
| ENVIRON CONT SYS | 399 | 527 |
| EARTH LANDING SYS | 617 | 617 |
| INSTRUMENTATION | 44 | 44 |
| ELEC POWER SYS | 1211 | 1290 |
| REACTION CONT SYS | 302 | 302 |
| COMMUNICATIONS | 365 | 365 |
| CONT & DISPLAYS | 301 | 301 |
| **USEFUL LOAD** | (1409) | (1304) |
| CREW SYSTEMS | 958 | 966 |
| ENVIRON CONT SYS | 101 | 68 |
| REACTION CONT SYS | 270 | 270 |
| SCIENTIFIC EQUIPMENT | 80 | 0 |
| **GROSS WT (LB)** | **10654** | **10855** |

stage mission and no in-line changes to the CSM were required. Results of these investigations are reported in SID 66-1084-1A and 1B, SID 66-1084-2, SID 66-1294, and SID 66-973. Different kits were defined which would be applicable to the different alternatives defined for the orbiting configuration.

One possible use of a spacecraft comprised of the CSM, airlock module and spent S-IVB would be an artificial gravity research facility. A variety of artificial gravity space stations have been studied in past NASA investigations and the CSM/S-IVB spent stage appears to be an attractive and early method of obtaining a large amount of experimental evidence on artificial gravity operations. As part of Addendum IV to NAS9-5017, S&ID conducted a preliminary study of an artificial gravity spacecraft using the vehicle elements defined for the SSESM mission. It was shown that very large artificial gravity space stations could be simulated by separating

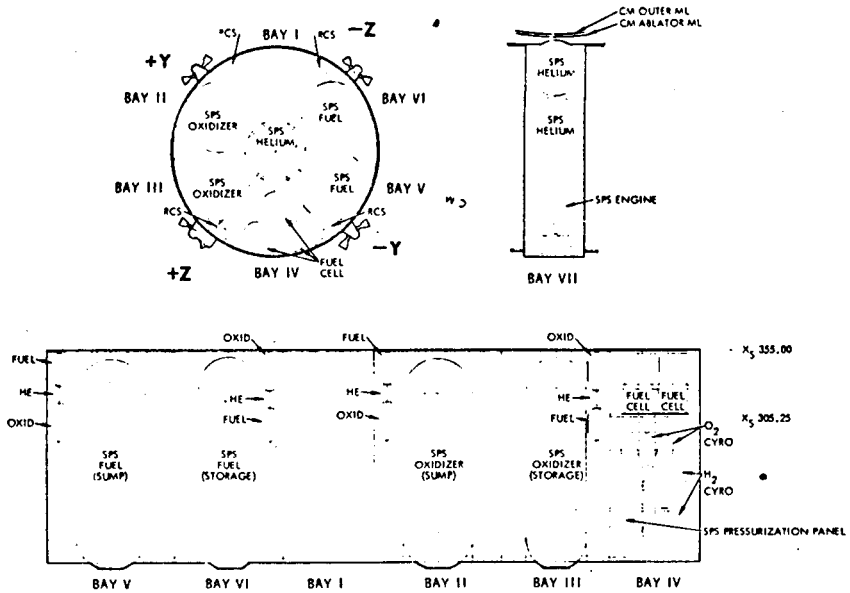


Figure 22. Block II Service Module

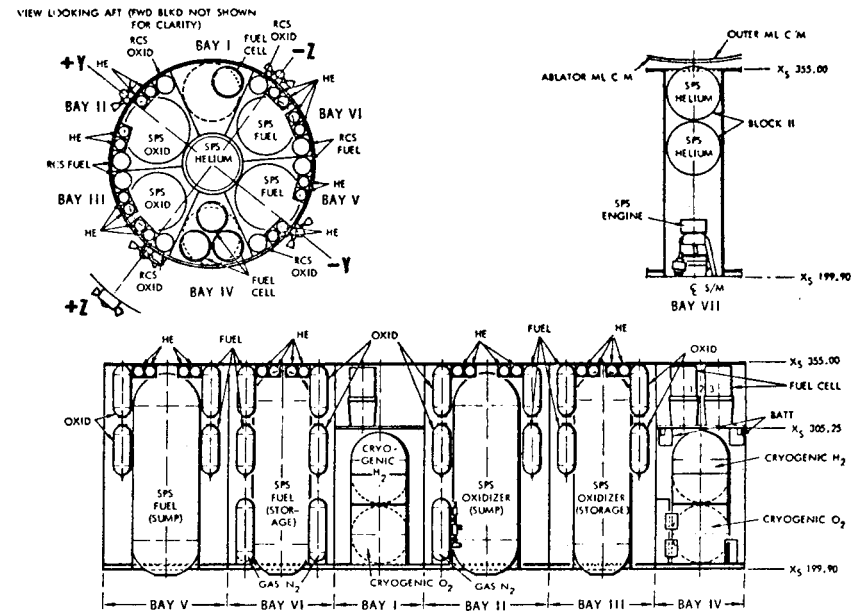


Figure 23. AAP Service Module

the CSM and S-IVB by a rigid, telescoping tube. Design variations were studied which did not use the S-IVB and these, and the alternate placements of the SSESM, are graphically depicted in Figure 24.

A study of land landing systems for the AAP CM was conducted as an addendum to the basic contract activity. A variety of land landing system concepts were compared; these are summarized in Table 11. The land landing concepts all required use of a retro rocket package. Two retro rocket installations were evaluated—base and riser-mounted. Figure 25 is a layout of a base-mounted installation, and Figure 26 shows the riser mounted installation. Use of the land landing system involves installation of a means for avoiding obstacles and consideration was given to several types of viewing systems, ground sensors, and parachute controls. Data related to these aspects of the land landing system are presented in SID 65-1544-1 and SID 65-1544-2. It was concluded that a steerable parachute system can be readily incorporated and would offer an improvement over the current system in several areas. Landing rockets not only allow land landings, but provide for additional earth return payload volume beneath the crew couches.

## STUDY LIMITATIONS

A major limitation in the preliminary definition study of CSM utilization in the AES program is the lack of clear definition of the objectives and equipment associated with Phase II missions and experiments. As mentioned previously, the development status of different elements which make up a complete program package are not equally phased. Although it is believed that the preliminary design

Table 10. Service Module Weights

| | Block II (1 Sept 1965) | AES STD Config |
|---|---|---|
| Weight Empty | (7983) | (10289) |
| Structure | 4409 | 4720 |
| Environ cont sys | 142 | 544 |
| Instrumentation | 55 | 55 |
| Elec power sys | 1654 | 2845 |
| Main propul sys | 1253 | 1253 |
| Reaction cont sys | 360 | 762 |
| Communications | 110 | 110 |
| Useful Load | (2335) | (7097) |
| Environ cont sys | 150 | 1051 |
| Elec power sys | 503 | 2543 |
| Main propul sys | 844 | 844 |
| Reaction cont sys | 838 | 2659 |
| Gross Wt (lb) | 10,318 | 17,386 |

of the CSM which resulted from this effort will prove of great value to the scientific and civil applications community, there can be little doubt that deficiencies with respect to experiment support capability will be identified as experimental requirements are more fully defined. The development of final mission plans requires a compromise between the constraints generated by range and flight safety, spacecraft design limitations, and the requirements imposed by the experimenters. Final determination of a flight configuration involves tradeoffs of what is desirable for the experimenter versus the best way to operate the spacecraft. The preliminary definition study has provided considerable detail concerning the most desirable operational modes of spacecraft systems. Final definition of the required operational capability must await a better understanding of the desired experimental program.

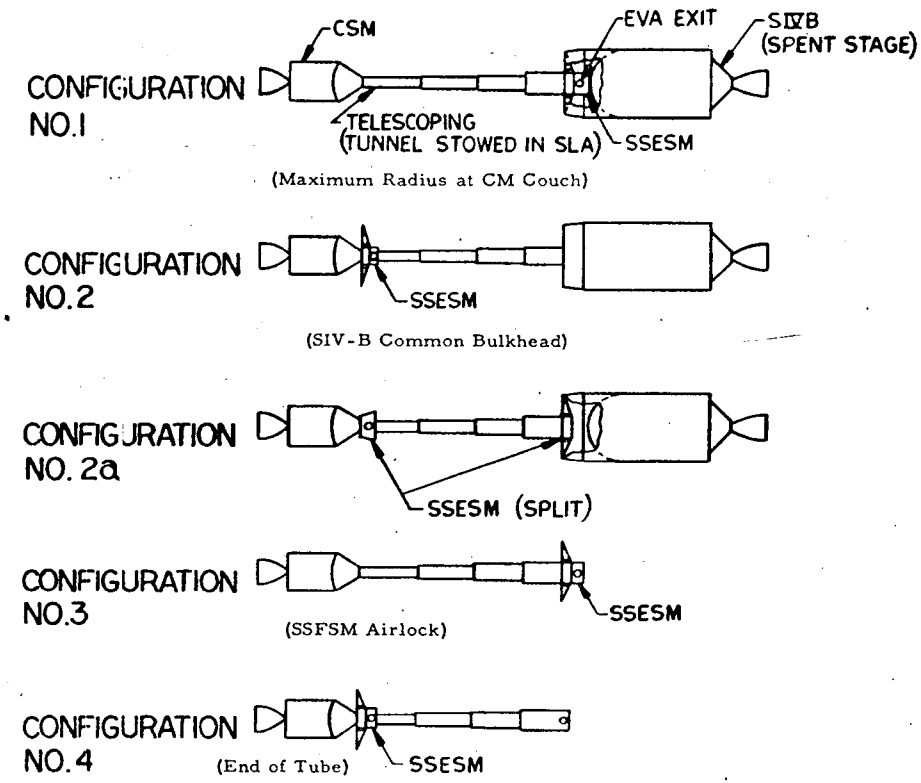


Figure 24. Artificial Gravity Configurations

The entire study effort, both in technical and developmental planning activities, was based on the existing characteristics of the Block II Apollo. Although the Block II spacecraft design is essentially fixed, a number of minimum changes, both in terms of subsystem configurations and test activities, can be expected to occur. For example, the Block II RCS tankage is now different than that used as a baseline during the initial period of this contract. The AAP study was not fully dependent upon Block II designs or test results, but should problems arise in the Block II program, corrolary changes would be required in the recommended AAP configuration and development program.

Table 11. Land Landing System Concepts Comparison

| | I SWIVEL & BASE RETROS | II PARASAIL & BASE RETROS | III CLOVERLEAF & BASE RETROS | IV CLOVERLEAF & RISER RETRO |
|---|---|---|---|---|
| GLIDE RANGE - NO WIND (MI) | NONE | 3.1 | 4.2 | 4.2 |
| $V_h$ LIMITS (FPS) | 0-51 | 0-34 | 0-18 | 0-18 |
| OBSTACLE AVOIDANCE | NO | YES | YES | YES |
| LANDING STABILITY | MARGINAL | GOOD | BETTER | BEST |
| WATER LANDING | BETTER* | BETTER* | BETTER* | GOOD |
| CREW IMPACT LIMITS | EXCEEDED | O.K. | O.K. | O.K. |
| SYSTEM WT (LB) ** | 782 | 750 | 750 | 695 |

* FOAMING ACTION SOFTENS IMPACT
** PRESENT AES ERS BASELINE = 728 LB

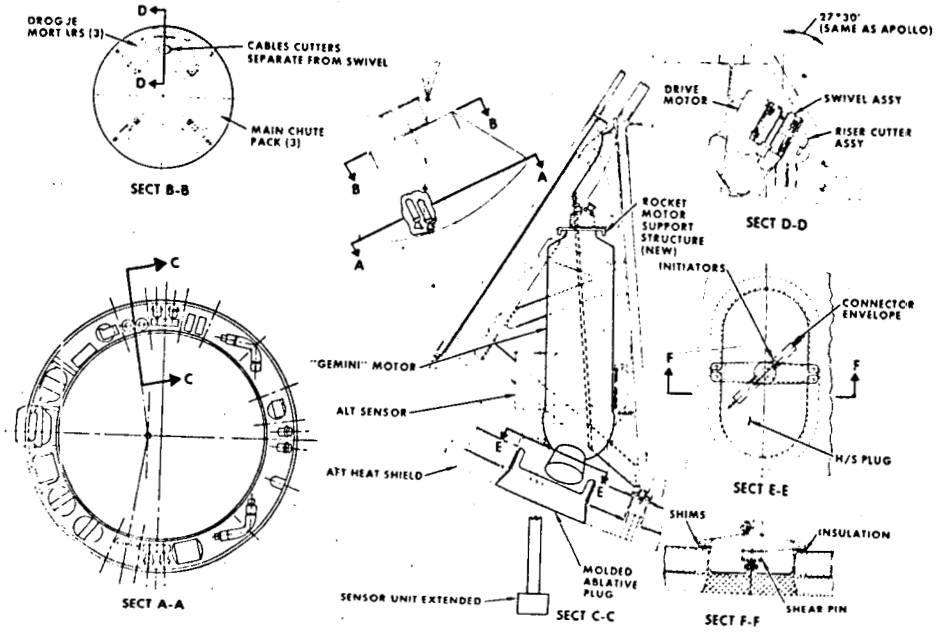


Figure 25. Base-Mounted Installation (Configuration I)

An important element of the preliminary definition study was a program analysis to determine AAP CSM developmental and operational costs. It is recognized that accurate cost estimates are essential in determining the national utility of any new endeavor. Cost data provided in this study were determined as accurately as possible within the constraints associated with lack of full subcontractor participation. Certain cost data were estimated on the basis of S&ID experience with related activities and would have been more accurate if subcontractor and vendor participation in the planning activities had been permitted. For example, the effects of increases in production rate could only be estimated in cases where this requirement was not specifically analyzed by a participating subcontractor.

## IMPLICATIONS FOR RESEARCH

Most of the research problems associated with use of the CSM in future AAP missions are related to subsystem development. It was shown that the substantial increase in mission duration which could be achieved by the CSM were achieved with only limited new developments. The most notable new development, proving of great value, was the use of new, larger cryogenic tanks for the electrical power system. New insulation concepts for the cryogenic tanks also were shown to be of value and research is needed to verify the performance of the selected tankage configuration.

Land landing of the CM, which was defined as an option for the AAP, could offer significant reductions in

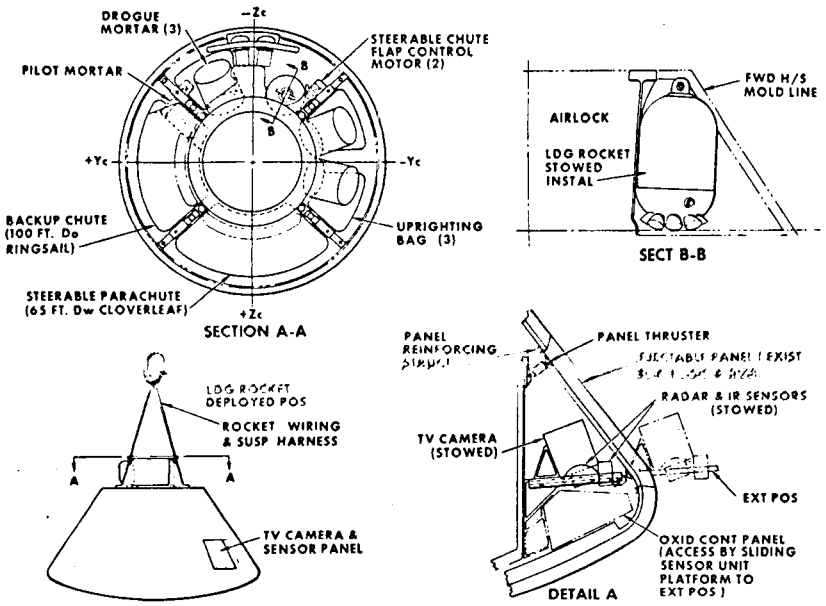


Figure 26. Riser-Mounted Installation (Configuration IV)

operational costs. Although most of the concepts investigated for land landing have been proved for application to other systems, their role in the AAP requires further research.

Before initiation of the 30- to 45-day missions, it would seem desirable to conduct in-flight experiments using the Block II CSM to define operational problems of longer duration flight. For example, cyclic operation of the communications and data system and a wide range of behavioral and biomedical experiments could receive early flight experimentation. Alternate flights of the Block II CSM should be receiving increased emphasis as being contributory to extended flights. Similarly, research to define methods of in-flight integration and control of a wide variety of tests and experiments, involving many disciplines, is needed. A fuller understanding of the requirements imposed by the experiments to be conducted in Phase II missions would aid in developing a complete set of design requirements for the AAP CSM. A number of the conceptually defined experimental requirements have been shown to incur major interfaces with the operation of the CSM. For example, extended periods of attitude hold presents a major thermal control problem and requires substantial amounts of RCS propellants. A more flexible spacecraft would result if provisions were made for orbital stabilization without reliance on the existing SCS electronics.

The possibility of using the AAP spacecraft to derive data for future large interplanetary spacecraft and permanent orbital space stations would suggest that the capability to investigate artificial gravity should be provided. Studies of the use of the CSM, LEM, and S-IVB in an artificial gravity mode should be initiated to determine the economic and operational feasibility of the concept.

Operational missions of 45 days suggest that potential problems may arise in a number of spacecraft components. A continuing effort in materials research is indicated for components requiring long durations of disuse before operation.

A closely allied problem area is associated with the lack of data concerning the particulate and energetic radiation environment at synchronous altitudes. The AAP spacecraft will be operated in many regions of space which to date have been traversed only by unmanned spacecraft of limited complexity. Effort should be initiated to gather environmental data relative to each of the potential flight profiles.

## SUGGESTED ADDITIONAL EFFORT

Completion of the preliminary definition study of the AAP CSM has provided a sound basis for development recommendations. The essential characteristics of a single spacecraft concept suitable for multi-mission operation has been defined. The next logical step in the program

would be to finalize the design concepts, prepare the necessary designs, specifications, and developmental data, and implement those activities necessary to proceed into operational phases of the program. Although a number of minor technical decisions remain to be made on specific subsystems or components, it is believed that the major technical hurdles have been passed. Forthcoming activities should provide for the limited amount of component testing required to establish sufficient design confidence in areas which remain questionable and to establish subsystem life limits and failure modes.

To provide the impetus and coordinated effort required in a program of the magnitude of the AAP, NASA should establish the appropriate goals for the program. The opportunity afforded by a block change decision will permit NASA more flexibility in the choice of experiments and subsystem improvements. The timely integration of new elements into a program requires the careful assessment of the schedule and manufacturing impact associated with new equipment.

The AAP studies have shown that significant payload and mission advantages can be gained by modifications to the S-IVB and by other booster improvements. Effort should be initiated to prepare mission requirement specifications and study guidelines to permit initiation of launch vehicle contractor studies to define cost and schedule impact.

A fundamental philosophical foundation of the AAP studies has been that the system will contribute to future developments in manned spaceflight. It is suggested that a continuing effort be made to relate the CSM designs to future technological and scientific mission requirements, including further life extensions and operations in new flight regimes. These studies can be used to maintain a utilitarian program orientation and will assure that the selected concepts provide the fullest possible support to subsequent developments.

The relatively near-term status of extended-duration flights indicates that the required training and related familiarization with experimental objectives be initiated in the very near future. Each AAP flight will represent a substantial investment by the American public. The dramatic nature of many of the experiments which have been suggested for AAP will require a continuation of the high level of personal skill and integrity shown by the astronauts. Astronaut participation in the flight and experimental operation planning should be initiated promptly.

A continued effort in detailed planning for alternate uses of the Block II CSM is essential. Schedule relationships are now such that many potentially attractive Block II applications will be constrained by lack of sufficient time rather than by cost or system capability.

# BIBLIOGRAPHY


| Report No. | Title |
|---|---|
| SID 65-1145 | Master Program Plan (Preliminary) |
| SID 65-1146 | Manufacturing Plan (Preliminary) |
| SID 65-1147 | Facilities Plan (Preliminary) |
| SID 65-1148 | General Test Plan (Preliminary) |
| SID 65-1150 | Configuration Management Plan (Preliminary) |
| SID 65-1151 | Baseline Ground Operations Requirements Plan |
| SID 65-1158-1 | Mass Properties Summary |
| SID 65-1518 | Technical Summary |
| SID 65-1519 | Subsystems Summary |
| SID 65-1520 | Guidance and Control System |
| SID 65-1521 | Communications and Data System |
| SID 65-1522 | Instrumentations, Displays, and Controls |
| SID 65-1523 | Environmental Control and Life Support Systems |
| SID 65-1524-1 and -2 | Thermal Analysis (Part 1 and Part 2) |
| SID 65-1525 | Power Generation and Distribution Systems |
| SID 65-1526 | Cryogenic Storage System |
| SID 65-1527 | Service Propulsion System |
| SID 65-1528 | Reaction Control System |
| SID 65-1529 | Spacecraft Design Summary |
| SID 65-1530 | Structural Loads and Criteria |
| SID 65-1531 | Structural Analysis |
| SID 65-1532 | Mass Properties |
| SID 65-1533 | Earth Recovery System |
| SID 65-1534-1 and -2 | Systems Analysis Summary (Part 1 and Part 2) |
| SID 65-1535 | Reliability Summary |
| SID 65-1536 | Experimenters Design Guide |
| SID 65-1537 | Experiment Identification Descriptions |
| SID 65-1537-1 | Volume 1. Biomedical Experiments |
| SID 65-1537-2 | Volume 2. Behavioral Experiments |
| SID 65-1537-3 | Volume 3. Physical Science Experiments (CSM) |
| SID 65-1537-4 | Volume 4. Physical Science Experiments, LEM Laboratory |
| SID 65-1537-5 | Volume 5. Mapping and Survey Photography |
| SID 65-1539 | Ground Support and Logistics |
| SID 65-1541 | Interface Methodology |
| SID 65-1542 | Functional Flow Diagrams - Lunar Polar Orbit Reference Mission (Volume I, II and III) |
| SID 65-1543-1 | Allis-Chalmers Fuel Cell Study - Technical Summary |
| SID 65-1543-2 | Allis-Chalmers Fuel Cell Study - Program Analysis |
| SID 65-1544-1 | Land Landing System - Technical Summary |
| SID 65-1544-2 | Land Landing System - Program Analysis |

| Report No. | Title |
|---|---|
| SID 65-1545 | Phase I Experiments Integration - Program Analysis |
| SID 65-1547 | Performance Analysis Phase II Flights |
| SID 65-1571 | Program Costs |
| SID 65-1724 | Mission Description - Flight 507 |
| SID 65-1725 | Mission Description - Flight 509 |
| SID 65-1726 | Mission Description - Flight 511 |
| SID 65-1727 | Mission Description - Flights 214/215 |
| SID 65-1728 | Mission Description - Flights 216/217 |
| SID 65-1723 | Mission Description - Flight 211 |
| SID 66-357 | Engineering Tasks Interim Summary Report |
| SID 66-358 | Mission 210 Definition Plan |
| SID 66-665 | Task 4.2.1, Addendum IV, AAP/Apollo Combined Test Program Analysis |
| SID 66-666 | Task 4.2.6, Addendum IV, Two Fuel Cell Assemblies on Alternate Earth Orbital Missions |
| SID 66-667 | Task 4.2.4, Addendum IV, Alternate Methods for SM RCS Augmentation |
| SID 66-772 | Task 4.1.6, Addendum IV, Mission Engineering Support |
| SID 66-773 | Task 4.2.2, Addendum IV, Command Module Capability |
| SID 66-872 | Task 4.2.8, Addendum IV, Effects on Crew Safety |
| SID 66-873 | Task 4.2.3, Addendum IV, System Performance and Design Analysis for Extended Duration and Rendezvous Missions |
| SID 66-973 | Task 4.1.7, Addendum IV, CSM/SSESM Interface Data |
| SID 66-1084 | Investigation of Modification for CSM/SSESM Missions Volume 1. |
| SID 66-1084-1A | Part 1. Technical Analysis |
| SID 66-1084-1B | Part 2. Supporting Studies |
| SID 66-1084-2 | Volume 2. Program Plan |
| SID 66-1285 | Preliminary Systems Studies of the Orbiting Stabilization System, Addendum IV, Task 4.2.5 |
| SID 66-1294 | Task 4.1.7, Addendum IV, Telecommunications |
| SID 66-1361 | Interim Report - Task 4.2.10, Addendum IV-Environmental Control Life Support System Integration |
| SID 66-1383 | Transient Analysis of Apollo Coldplate |
| SID 66-1554 | Thrust Vector Control |
| SID 66-1555 | AAP Engineering Tasks Final Summary Report |