[redacted]

This document contains information affecting the national defense of the United States within the meaning of the Espionage Laws, Title 18 U.S.C. Section 793 and 794, its transmission or revelation of its contents in any manner to an unauthorized person is prohibited by law.

Total Pages 87

Copy No. 5

PS 63-49

MID-TERM TECHNICAL REVIEW
EXTENDED MISSION APOLLO SYSTEM
(XMAS)

Contract NAS 9-1963
(U)

September 1963

CLASSIFICATION CHANGE
To UNCLASSIFIED
By authority of GDT Bulletin
Changed by J. Shirley Date 12/31/62
Classified Document Master Control Station, NASA
Scientific and Technical Information Facility

(NASA-CR-116702) MID-TERM TECHNICAL REVIEW EXTENDED MISSION APOLLO SYSTEM /XMAS/ (North American Rockwell Corp.) 85 p

N79-76156

Unclas
00/12 11266

[redacted]

NORTH AMERICAN AVIATION, INC.
SPACE and INFORMATION SYSTEMS DIVISION

[redacted]

FORM M158-D-7 LEDGER REV. 2-61

CONTENTS

	File No.
Extended Mission Apollo System (Xmas)	59264A
Briefing Outline	41407
Study Objectives	41432
Study Schedule	41412
Study Approach	41439
Operational Applications	59707
Basic Concepts	59267A
Resupply Growth Potential	41411
Gravity Considerations	59706
Possible Solutions	41409
Performance Analysis	41410
Initial Mission Profile	59695
Resupply Mission Profile	59696
Mission Altitude Analysis	59693
Orbit Maintenance Considerations	41404
Deboost Considerations	59684
Entry Angle Effects	59683
Recovery Envelope	41406
Entry Decelerations	59697
Configurations Analysis	41403
Basic Geometry	41400
Apollo Command Module	19259C
CM Space Distribution	59686
Apollo Service Module	41401
Solar Panel Evaluation	59704
Typical Panel Deployment	59703

	File No.
Retro Propulsion Considerations	59671
Typical Laboratory Arrangement	59705
Boost Loads	41402
Laboratory Structural Concepts	41398
Laboratory Structure	41399
Weight Summary	41441
Subsystems Analysis	59685
Major Subsystems	59691
Preliminary Power Load Profile	59692
Solar Cell System Comparison	59690
Radioisotope System	59689
Power System Concept Comparison	59688
Environmental Control System	41434
Gas Storage	41433
Thermal and Atmosphere Control	41435
Stabilization and Control Requirements	59701
Disturbance Summary	59700
Influence of Power System on SCS	59699
G&N System Approaches	41438
G&N System Comparison	41428
Rendezvous Methods	41427
Typical Rendezvous Radar Systems	41437
Propulsion System Functions	59694
Propulsion Systems Comparison	59698
Propulsion Concept Comparison	41423
Water Reclamation	41417
Waste Management	59682
Food	41422
Personal Hygiene	41421
Communication System Alternatives	41420
Antenna Locations	41419

	File No.
Communication Systems Comparison	41418
Ground Station S-Band Requirements	41413
Data System Requirements	41414
Data System Comparison	41415
Displays	41416
Major Study Areas	41436
Meteroid Penetration	59659
CM Radiation Dosage	59661
LM Radiation Dosage	59660
Total Accumulated Skin Dose	59662
Minimal Biomedical Experiments	59664
Minimal Biomedical Experiments (Cont)	59665
Additional Biomedical Experiments	59666
Minimal Behavioral Experiments	59667
Additional Behavioral Experiments	59668
Typical Engineering/Operational Experiments	59258A
Experimental Package Summary	41429
Daily Crew Activities	41431
Typical Daily Work/Rest Cycle	59670
Operational Implementation	59672
Study Areas	59673
Reliability Apportionment	59676
Logistics	59675
120 Day Supply Requirements	59678
Schedule Interface	59679
Economic Analysis	41440

[redacted]

MID-TERM TECHNICAL REVIEW

EXTENDED MISSION APOLLO SYSTEM (XMAS)

CONTRACT NAS 9-1963

NORTH AMERICAN AVIATION, INC.
SPACE AND INFORMATION SYSTEMS DIVISION

[redacted]

9-63 PS 59264A

This document contains information affecting the national defense of the United States within the meaning of the Espionage Laws, Title 18 U.S.C. Section 793 and 794. Its transmission or revelation of its contents in any manner to an unauthorized person is prohibited by law.

BRIEFING OUTLINE

- STUDY APPROACH & PHILOSOPHY
- CONFIGURATION & PERFORMANCE ANALYSIS
- SUBSYSTEMS ANALYSIS
- SYSTEM ANALYSIS & INTEGRATION
- OPERATIONAL IMPLEMENTATION
- CONCLUDING REMARKS

9-63 PS 41407

STUDY OBJECTIVES

- ESTABLISH MODIFICATIONS AND DESIGN CHARACTERISTICS FOR EXTENDED MISSION
- DEFINE CRITICAL TECHNICAL PROBLEM AREAS
- DETERMINE EXPERIMENTAL CAPABILITIES
- DERIVE DEVELOPMENT PLANNING DATA
- DEFINE "NON-INTERFERENCE" PROGRAM WITH APOLLO LUNAR PROGRAM

STUDY SCHEDULE

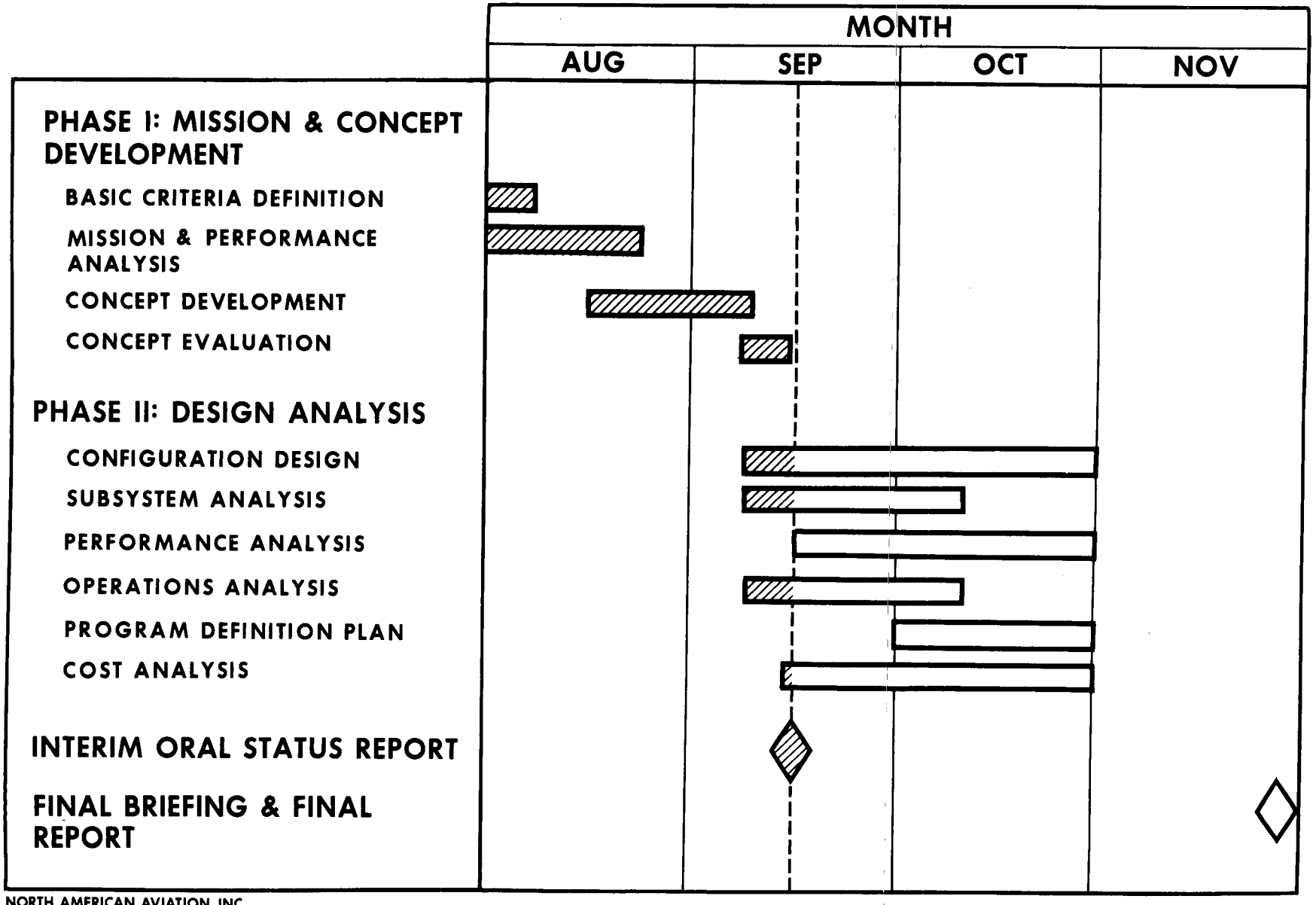

NORTH AMERICAN AVIATION, INC.
SPACE AND INFORMATION SYSTEMS DIVISION

9-63 PS41412

STUDY APPROACH

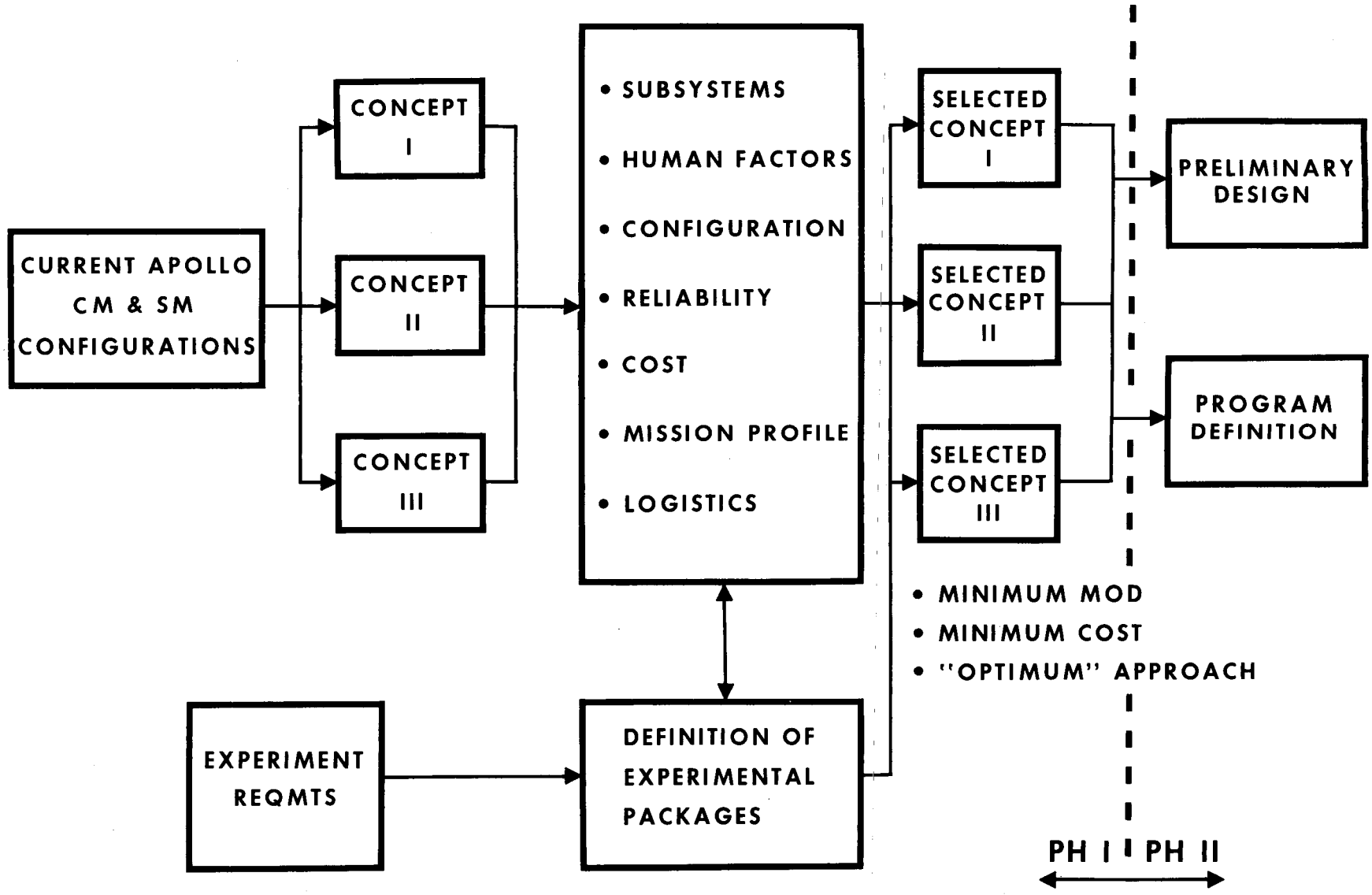

OPERATIONAL APPLICATIONS

PRIMARY

~120 DAYS

- SINGLE-LAUNCH, MAXIMUM POSSIBLE DURATION TESTS ON MAN
- EXTENDED-MISSION HUMAN INVESTIGATIONS (e.g., ASSOCIATED WITH MARS FLIGHTS)—REQUIRING $\geq$ 1 YEAR

SECONDARY

- ENGINEERING & SCIENTIFIC EXPERIMENTS
- MISSION-ORIENTED SYSTEMS & OPERATIONS DEVELOPMENT

[redacted]

BASIC CONCEPTS

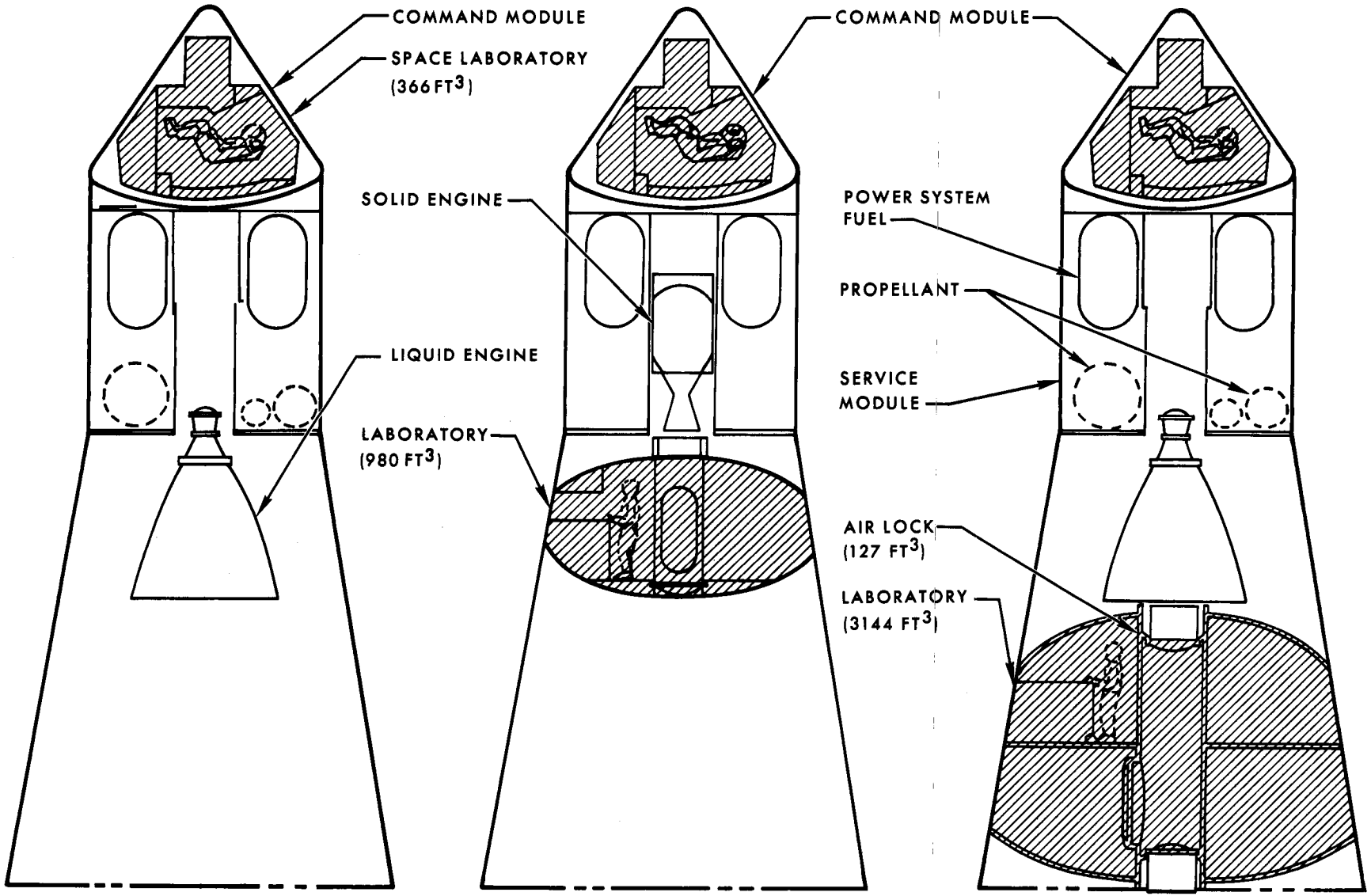

CONCEPT I

CONCEPT II

CONCEPT III

NORTH AMERICAN AVIATION, INC.
SPACE AND INFORMATION SYSTEMS DIVISION

9-63 PS 59267A

[redacted]

This document contains information affecting the national defense of the United States within the meaning of the Espionage Laws, Title 18 U.S.C. Section 793 and 794. Its transmission or revelation of its contents in any manner to an unauthorized person is prohibited by law.

~~CONFIDENTIAL~~

RESUPPLY GROWTH POTENTIAL

I

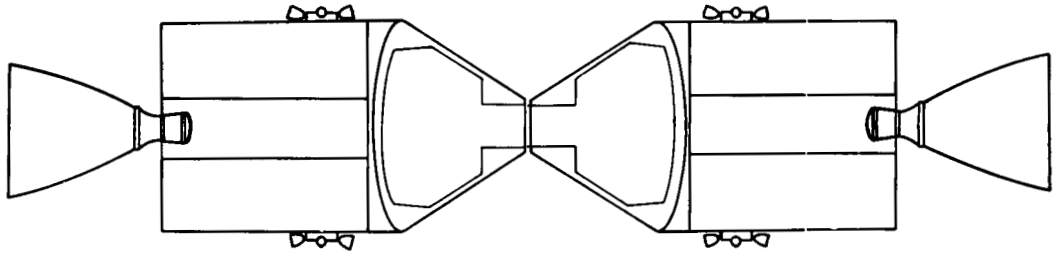

II/III

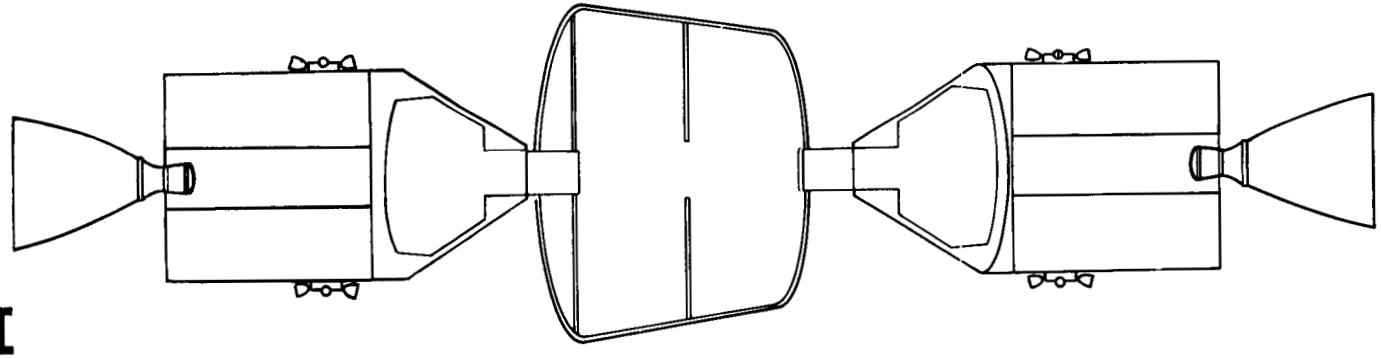

II/III

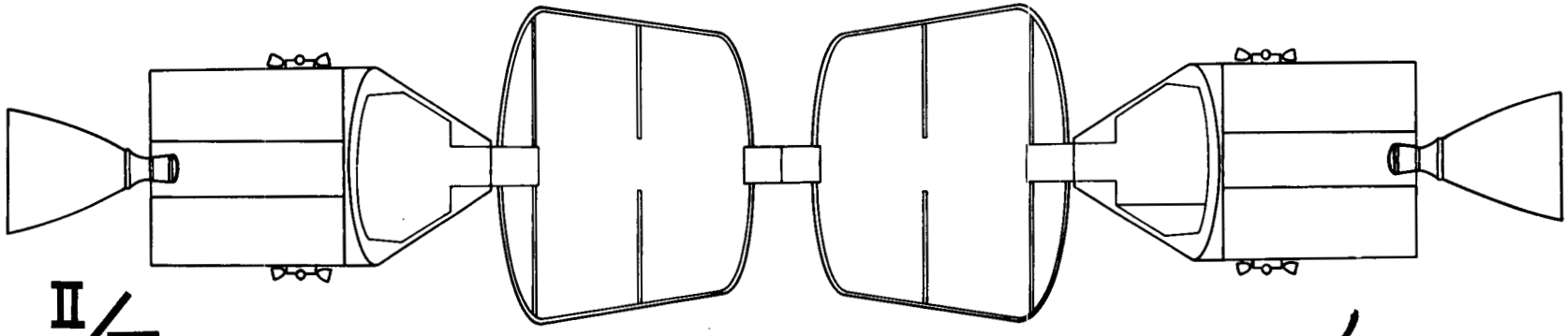

NORTH AMERICAN AVIATION, INC.
SPACE AND INFORMATION SYSTEMS DIVISION

~~CONFIDENTIAL~~

Group 4 Downgraded at 3 year intervals; declassified after 12 years

9-63 PS 41411

This document contains information affecting the national defense of the United States within the meaning of the Espionage Laws, Title 18 U.S.C. Section 793 and 794. Its transmission or revelation of its contents in any manner to an unauthorized person is prohibited by law.

GRAVITY CONSIDERATIONS

- WHAT ARE <u>REAL</u> <u>TOTAL</u> REQUIREMENTS ?

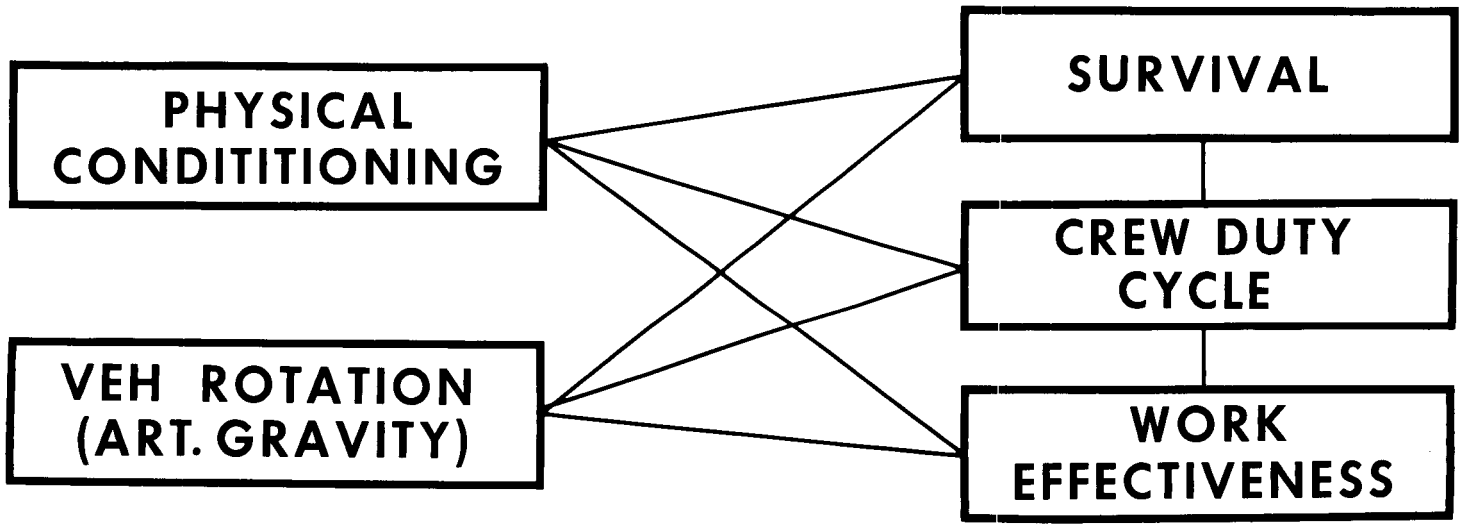

- WHAT ARE ADDED COSTS & COMPLEXITIES OF VARIOUS SOLUTIONS ?
- HOW EFFECTIVE ARE SOLUTIONS ?

[redacted]

POSSIBLE SOLUTIONS

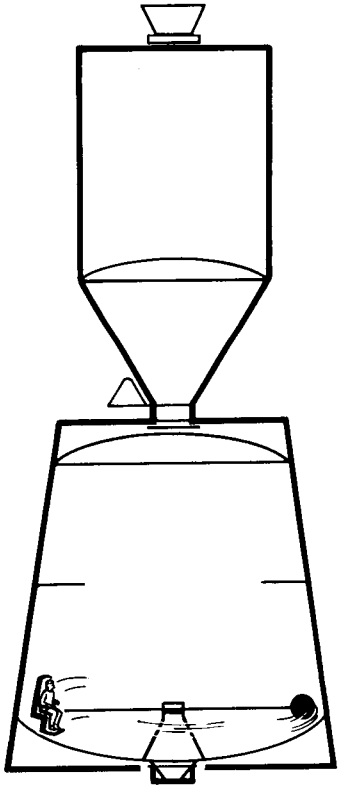

INTERNAL CENTRIFUGE

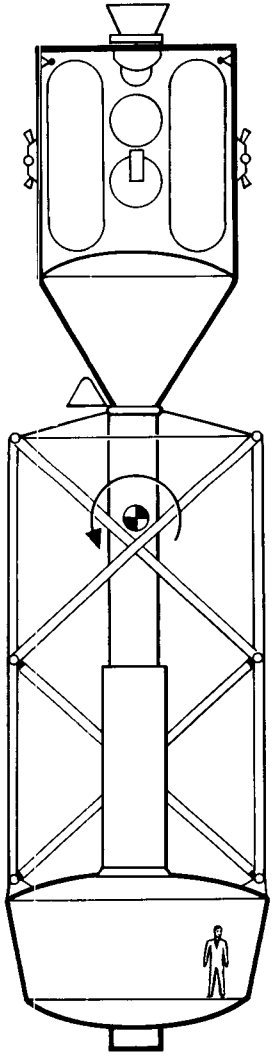

ROTATING VEHICLE

NORTH AMERICAN AVIATION, INC.
SPACE AND INFORMATION SYSTEMS DIVISION

[redacted]

Group 4 Downgraded at 3 year intervals; declassified after 12 years

This document contains information affecting the national defense of the United States within the meaning of the Espionage Laws, Title 18 U.S.C. Section 793 and 794. Its transmission or revelation of its contents in any manner to an unauthorized person is prohibited by law.

PERFORMANCE ANALYSIS

NORTH AMERICAN AVIATION, INC.
SPACE AND INFORMATION SYSTEMS DIVISION

9-63 PS 41410

INITIAL MISSION PROFILE

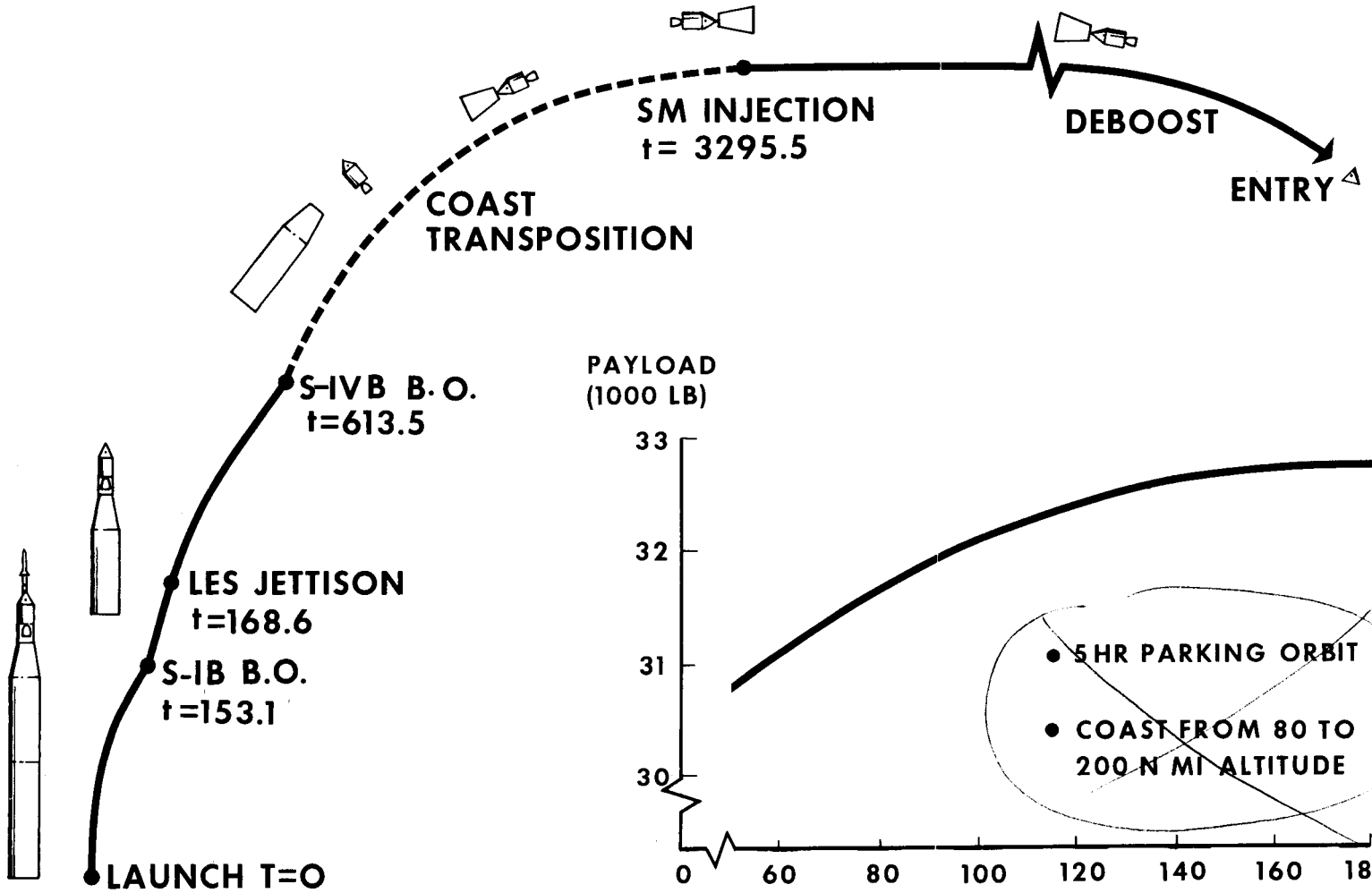

RESUPPLY MISSION PROFILE

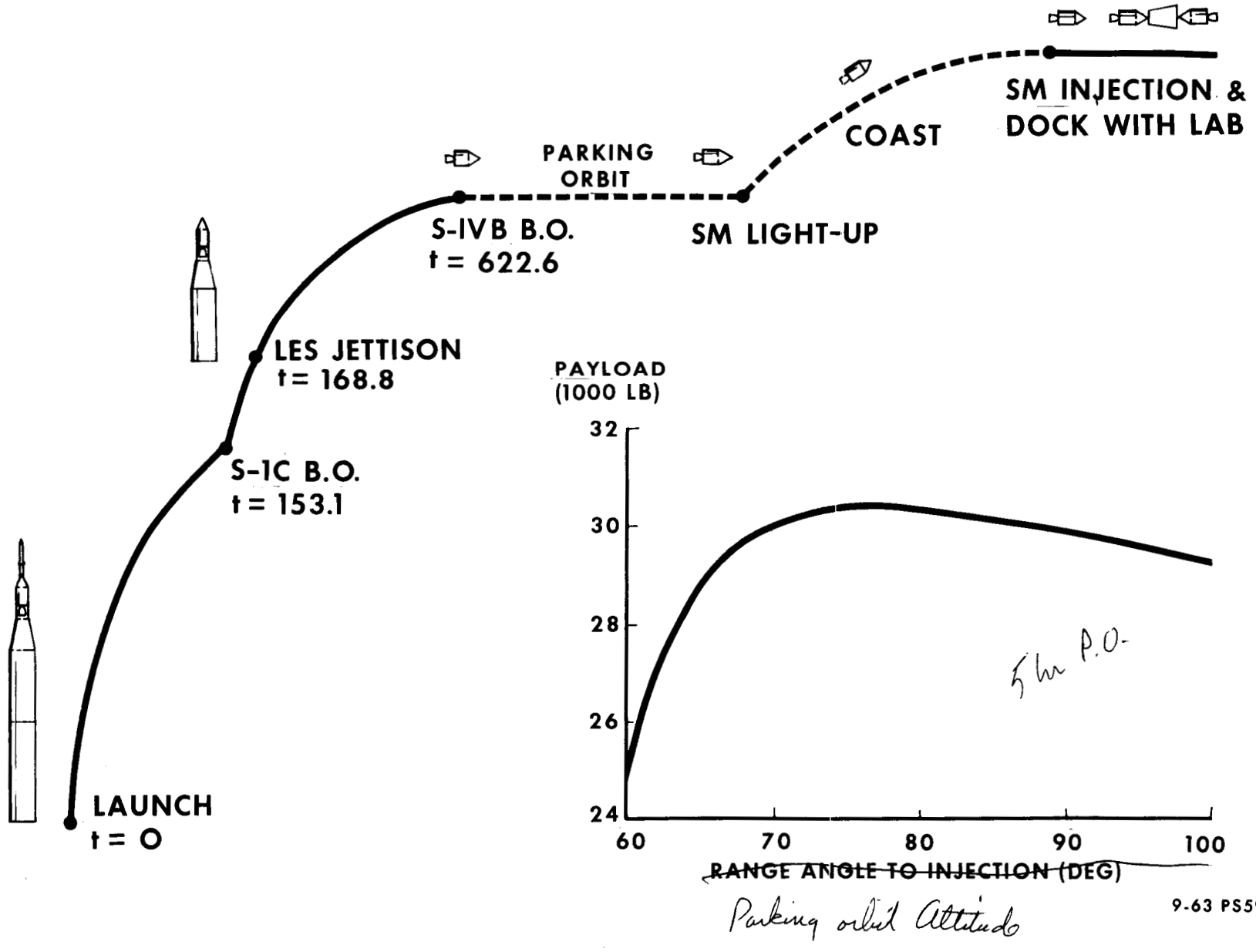

9-63 PS59696

~~CONFIDENTIAL~~

MISSION ALTITUDE ANALYSIS

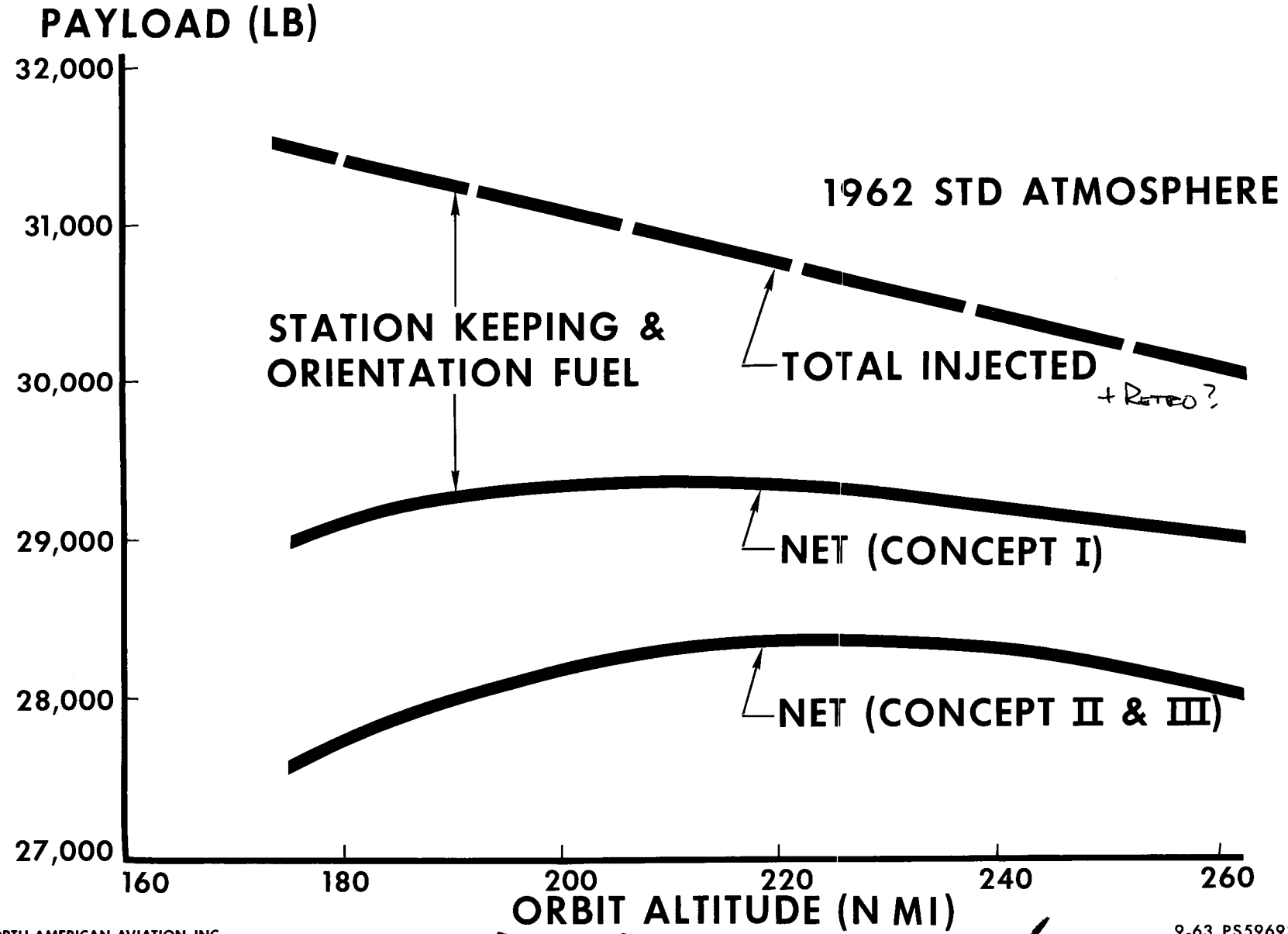

NORTH AMERICAN AVIATION, INC.
SPACE AND INFORMATION SYSTEMS DIVISION

9-63 PS59693

~~CONFIDENTIAL~~

Group 4 Downgraded at 3 year intervals; declassified after 12 years

This document contains information affecting the national defense of the United States within the meaning of the Espionage Laws, Title 18 U.S.C. Section 793 and 794. Its transmission or revelation of its contents in any manner to an unauthorized person is prohibited by law.

[redacted]

ORBIT MAINTENANCE CONSIDERATIONS

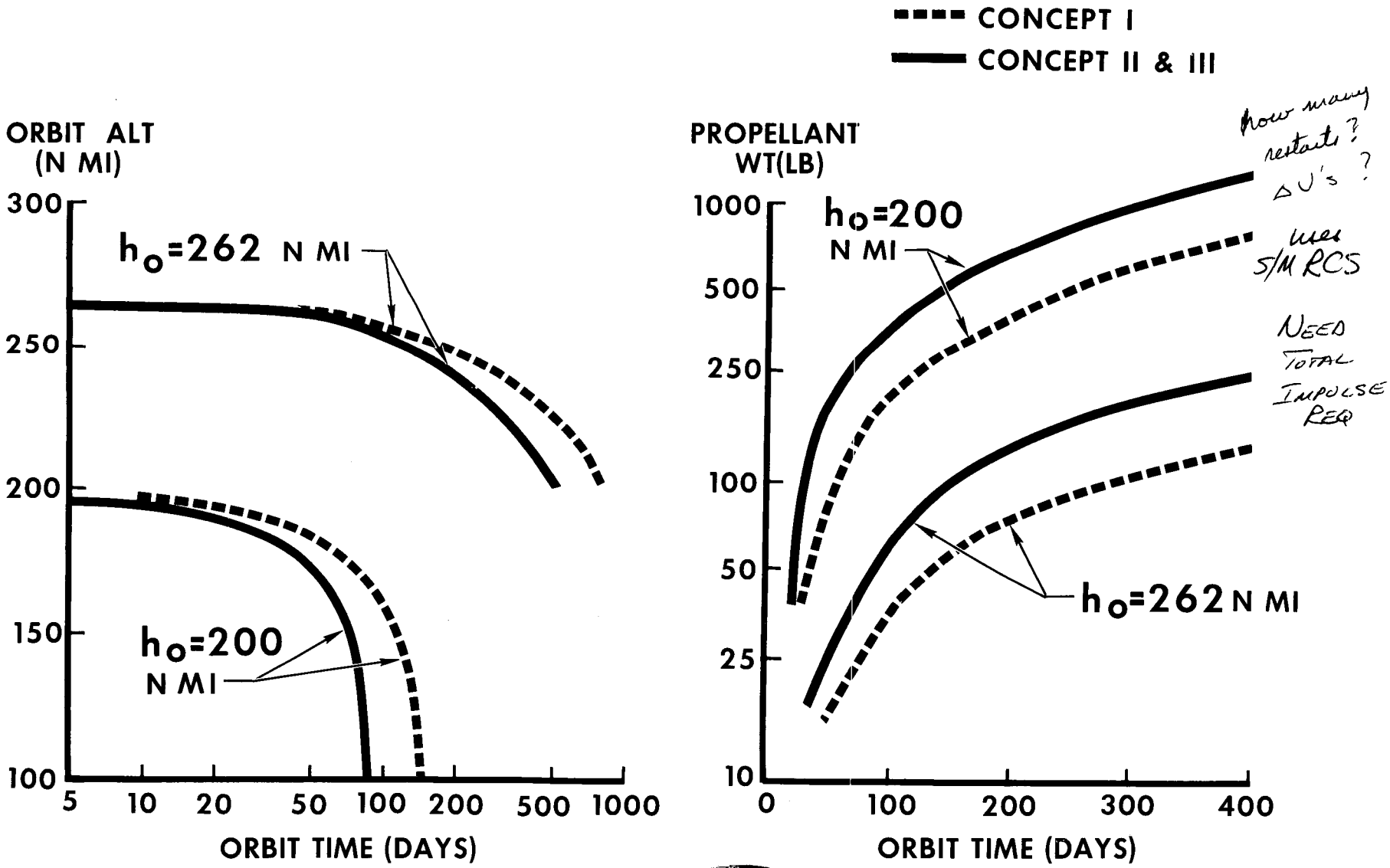

NORTH AMERICAN AVIATION, INC.
SPACE AND INFORMATION SYSTEMS DIVISION

[redacted]
Group 4 Downgraded at 3 year intervals; declassified after 12 years

9-63 PS 41404

This document contains information affecting the national defense of the United States within the meaning of the Espionage Laws, Title 18 U.S.C. Section 793 and 794. Its transmission or revelation of its contents in any manner to an unauthorized person is prohibited by law.

[redacted]

DEBOOST CONSIDERATIONS

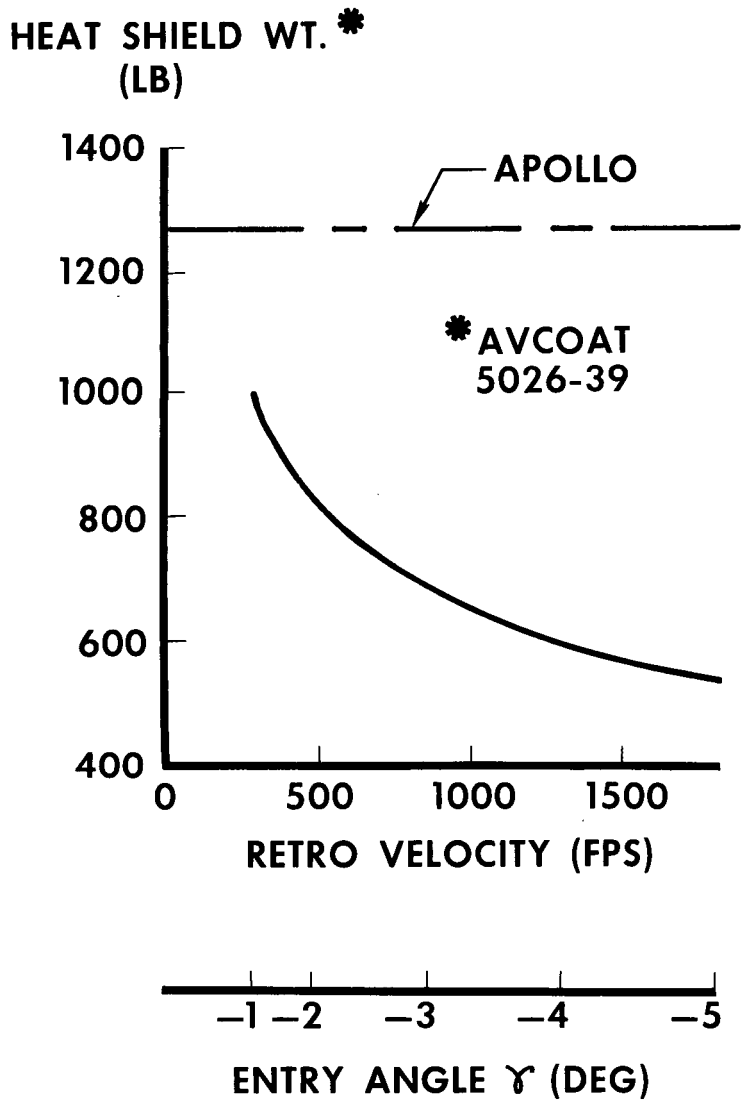

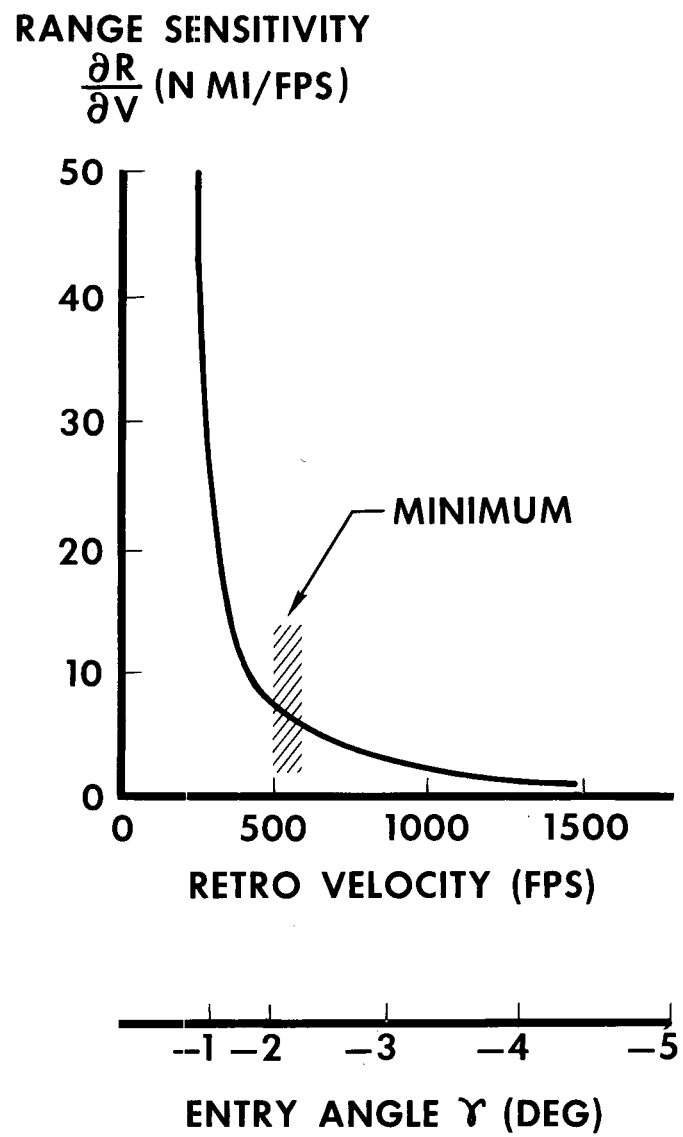

[redacted]

Group 4 Downgraded at 3 year intervals; declassified after 12 years

This document contains information affecting the national defense of the United States within the meaning of the Espionage Laws, Title 18 U.S.C. Section 793 and 794. Its transmission or revelation of its contents in any manner to an unauthorized person is prohibited by law.

[redacted]

ENTRY ANGLE EFFECTS

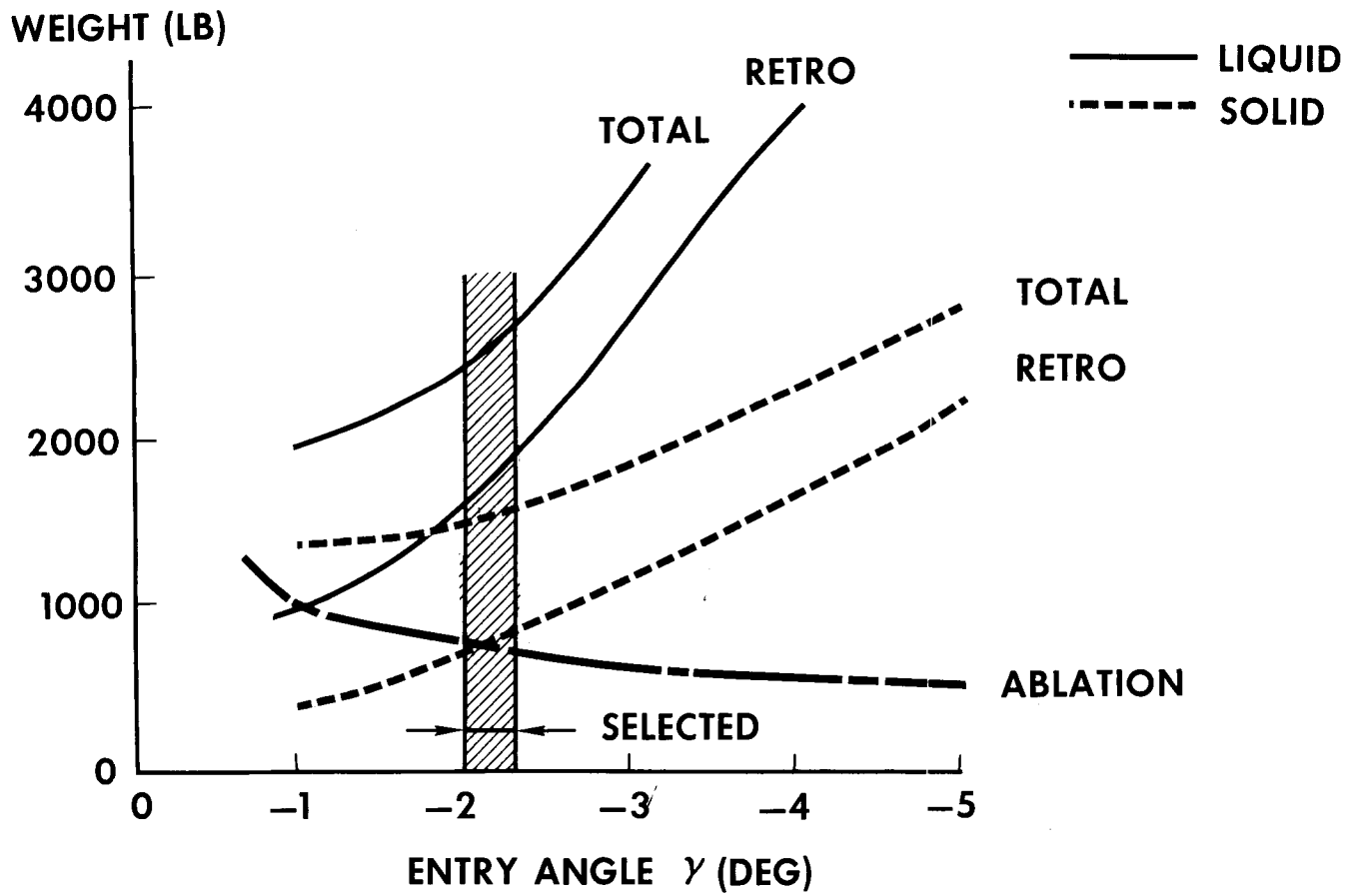

NORTH AMERICAN AVIATION, INC.
SPACE AND INFORMATION SYSTEMS DIVISION

[redacted]
Group 4 [redacted] at 3 year intervals; declassi[redacted]fter 12 years

9-63 PS59683

This docum[redacted] contains inform[redacted]on affecting the national defense of the United States w[redacted] the m[redacted]ning of the Espionage Laws, Title 18 U.S.C. Section 793 and 794. [redacted]ransmission or revelation of its contents in any manner to an unauth[redacted]zed p[redacted] is prohibited by law.

[redacted]

RECOVERY ENVELOPE

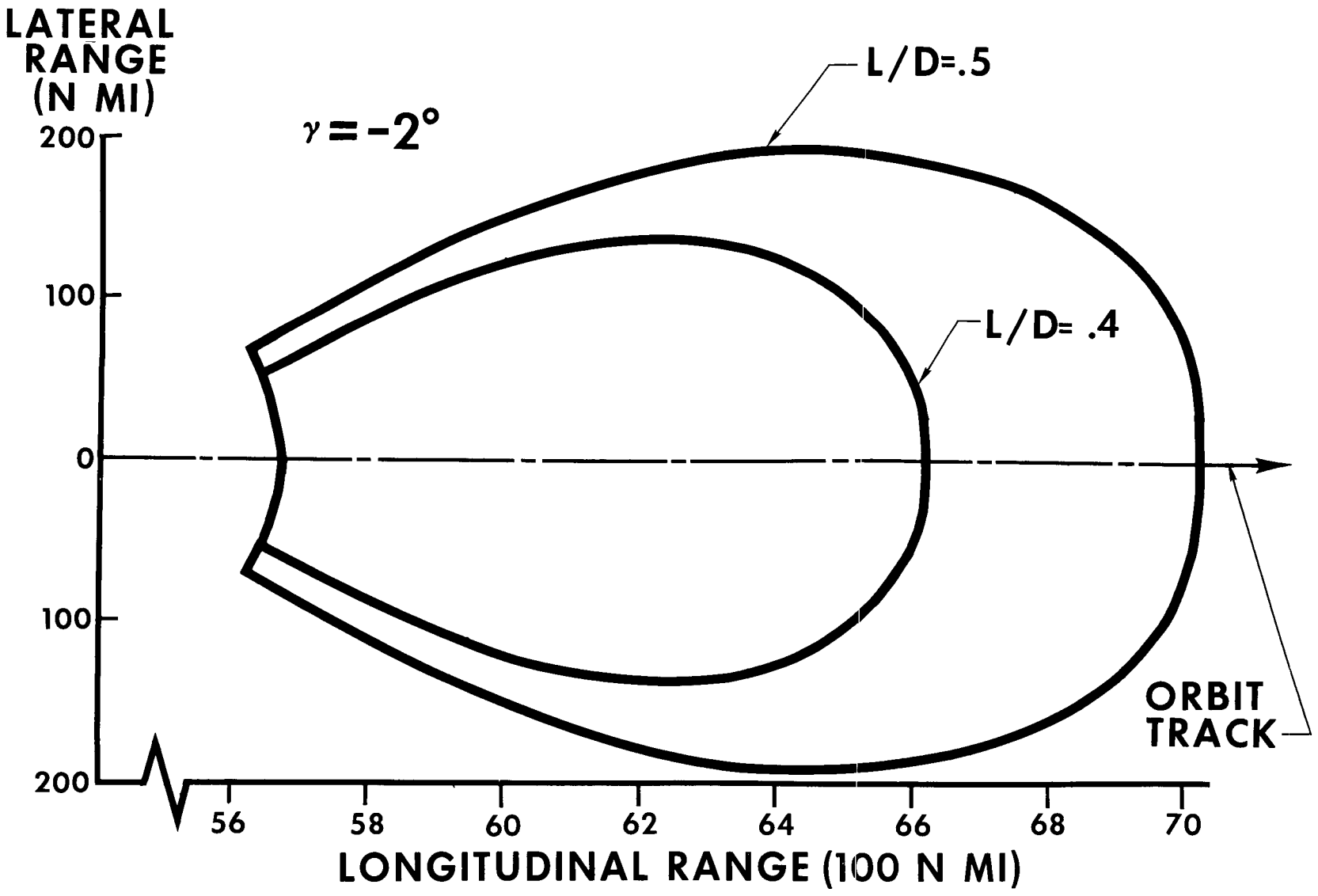

NORTH AMERICAN AVIATION, INC.
SPACE AND INFORMATION SYSTEMS DIVISION

[redacted]

Group 4 Downgraded at 3 year intervals; declassified after 12 years

9-63 PS 41406

This document contains information affecting the national defense of the United States within the meaning of the Espionage Laws, Title 18 U.S.C. Section 793 and 794. Its transmission or revelation of its contents in any manner to an unauthorized person is prohibited by law.

[redacted]

ENTRY DECELERATION

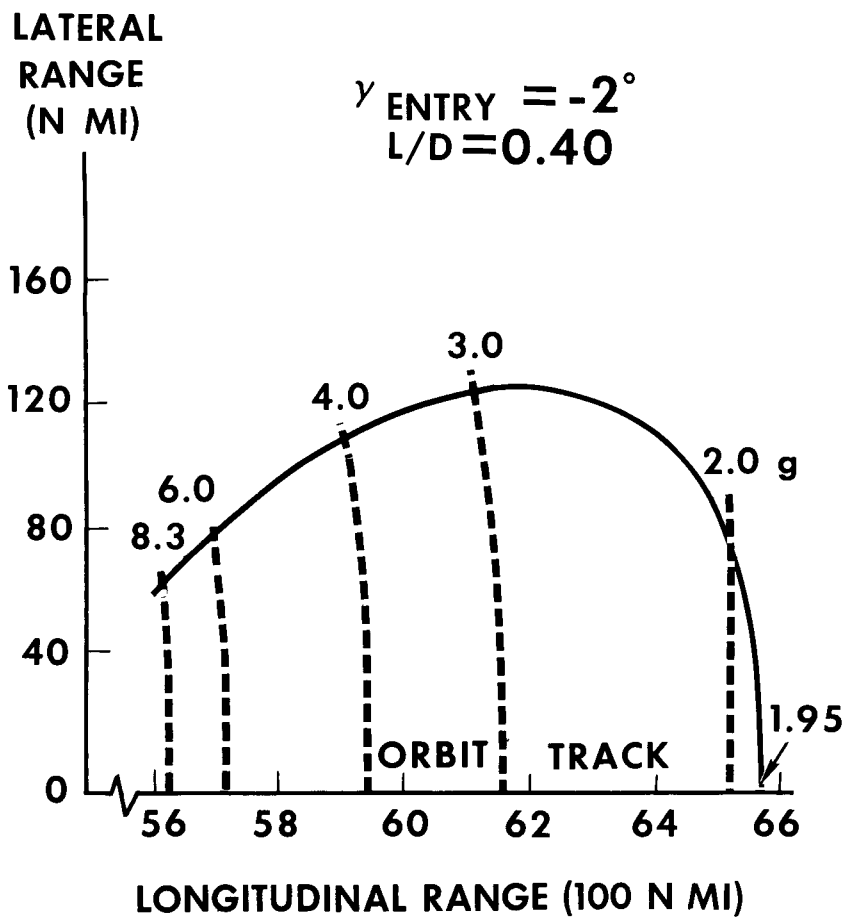

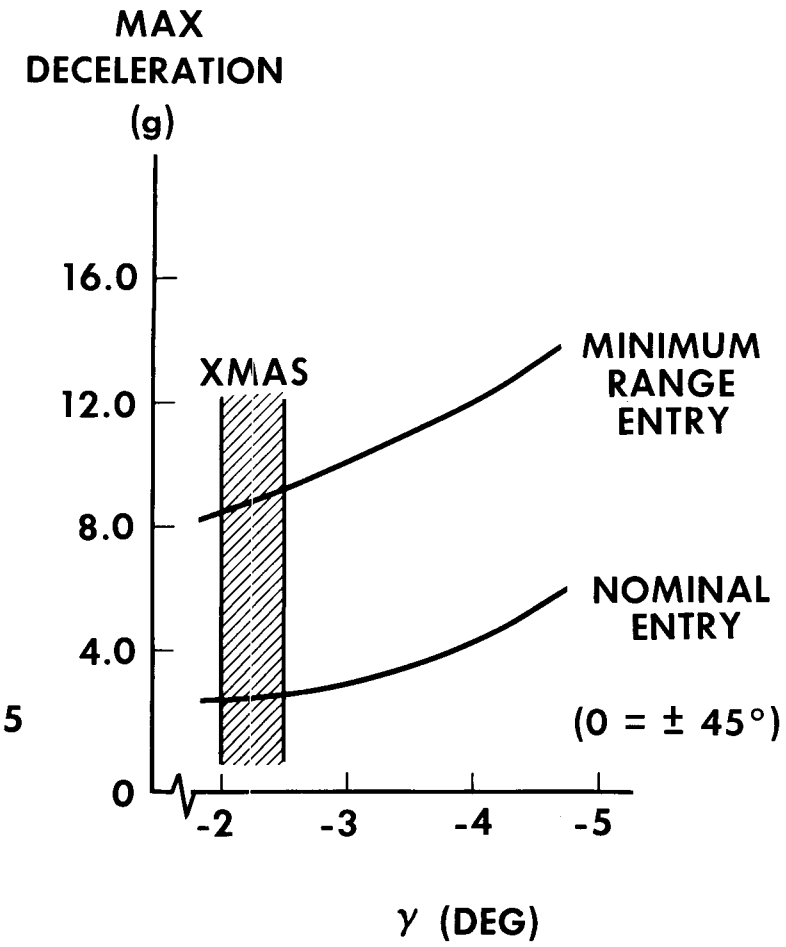

[redacted]

Group 4 Downgraded at 3 year intervals; declassified after 12 years

This document contains information affecting the national defense of the United States within the meaning of the Espionage Laws, Title 18 U.S.C. Section 793 and 794. Its transmission or revelation of its contents in any manner to an unauthorized person is prohibited by law.

CONFIGURATION ANALYSIS

NORTH AMERICAN AVIATION, INC.
SPACE AND INFORMATION SYSTEMS DIVISION

9-63 PS 41403

BASIC GEOMETRY

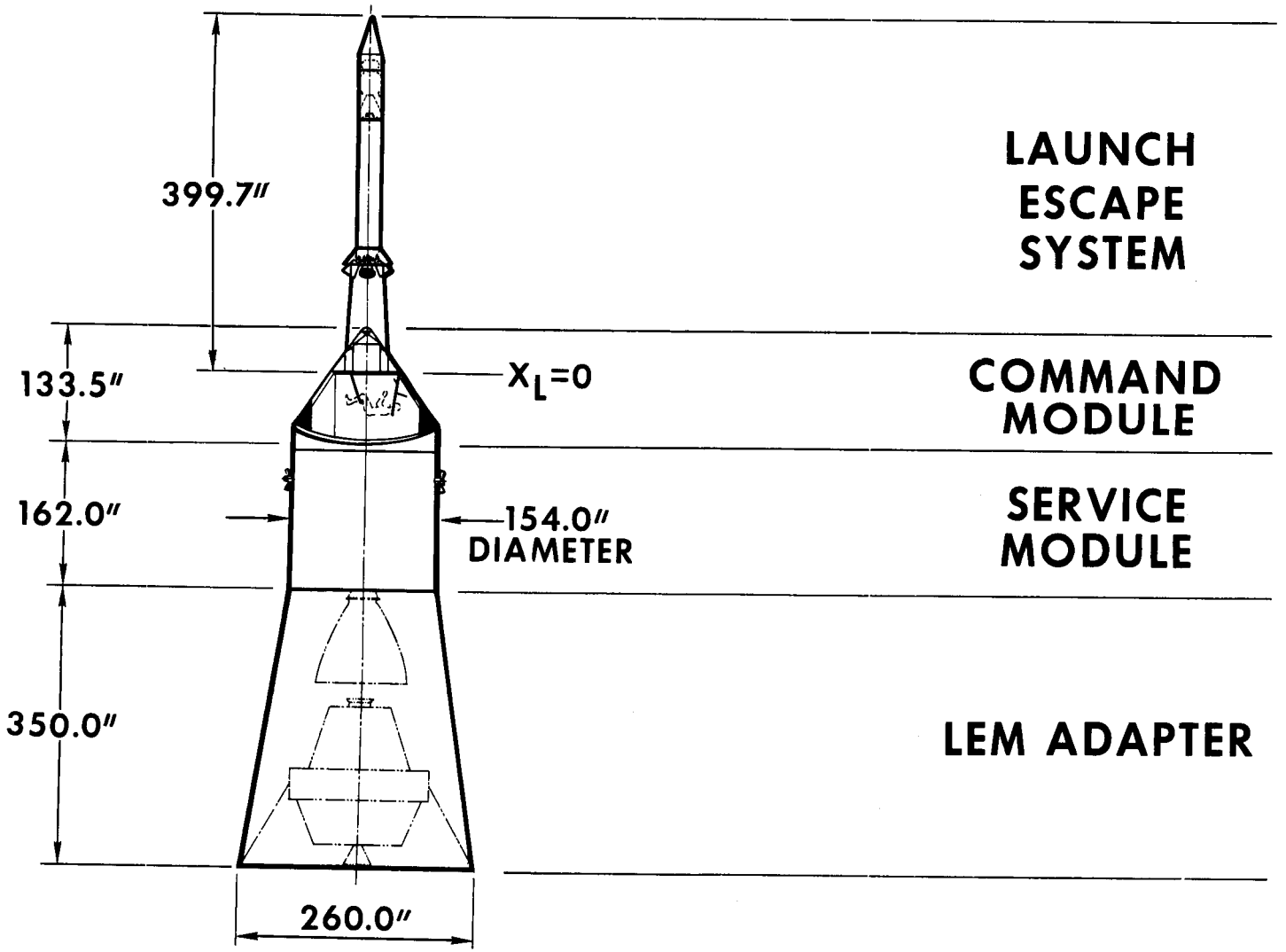

APOLLO COMMAND MODULE

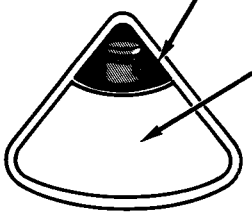

MAJOR SYSTEMS

- GUIDANCE & NAVIGATION
- STABILIZATION & CONTROL
- ENVIRONMENTAL CONTROL
- REACTION CONTROL
- TELECOMMUNICATIONS
- EARTH LANDING SYSTEM

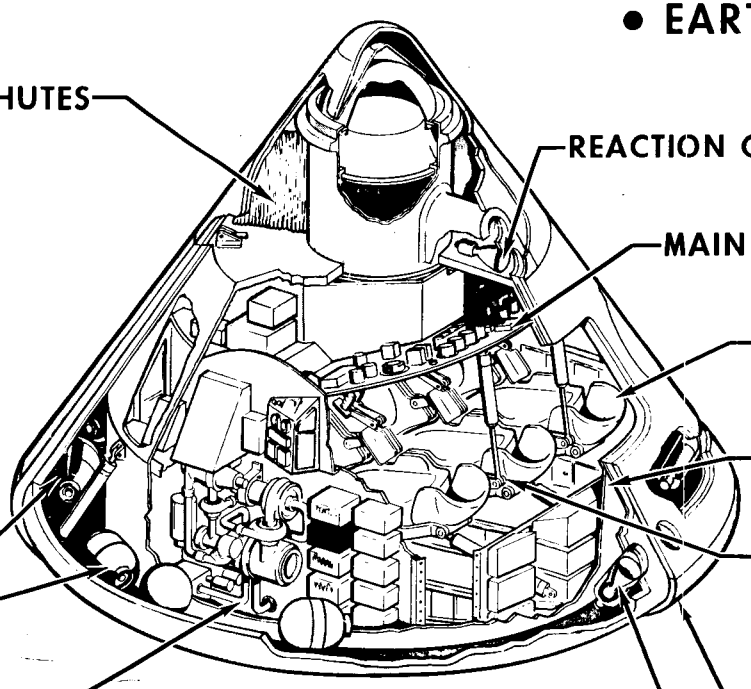

[redacted]

CM SPACE DISTRIBUTION

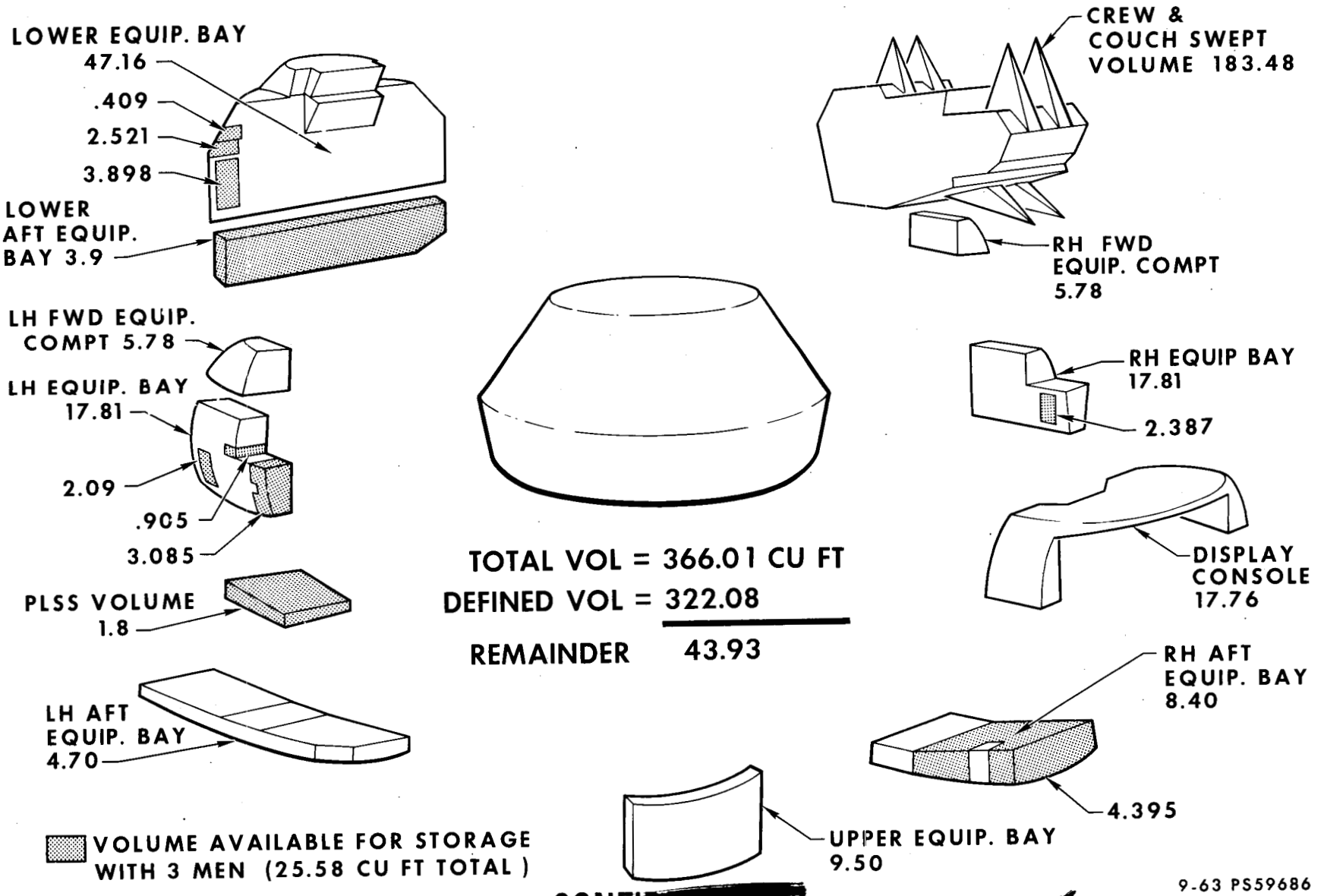

TOTAL VOL = 366.01 CU FT

DEFINED VOL = 322.08

REMAINDER 43.93

NORTH AMERICAN AVIATION, INC.
SPACE AND INFORMATION SYSTEMS DIVISION

[redacted]

9-63 PS59686

This document contains information affecting the national defense of the United States within the meaning of the Espionage Laws, Title 18 U.S.C. Section 793 and 794. Transmission or revelation of its contents in any manner to an unauthorized person is prohibited by law.

[redacted]

APOLLO SERVICE MODULE

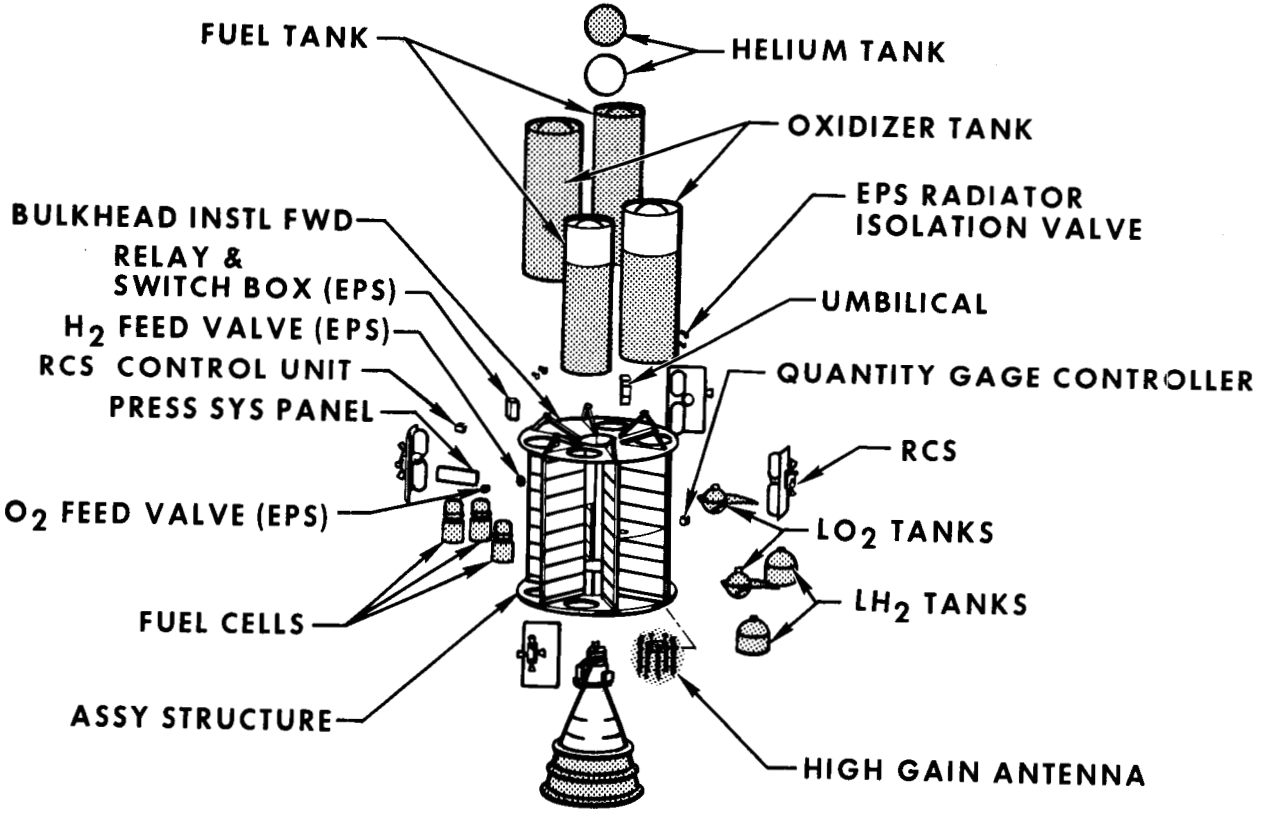

ADD

BATTERIES

SOLAR PANELS

WATER

RCS FUEL

RADIATOR

O_2, N_2

ANTENNAS

RETRO-ROCKET

NORTH AMERICAN AVIATION, INC.
SPACE AND INFORMATION SYSTEMS DIVISION

[redacted]

[redacted]

9-63 PS 41401

This document [redacted]tains informat[redacted]n affecting the national defense of the United States wi[redacted] mea[redacted]g of the Espionage Laws, Title 18 U.S.C. Section 793 and 794. [redacted]mission or revelation of its contents in any manner to an unauthori[redacted] p[redacted] prohibited by law.

SOLAR PANEL EVALUATION

CONCEPT		TOTAL SYS WT (LB)	REMARKS
1 ACCORDIAN FOLD FLAT PANEL	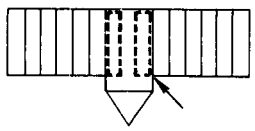 STOWED POSITION	620 (1) 700 (2)	LARGE SPAN REQUIRED STRUCTURAL STABILITY PROBLEMS DUE TO LOAD RCS MOTOR EXHAUST IMPINGEMENT ON INNER PANELS
2 WRAP-AROUND FLAT PANEL	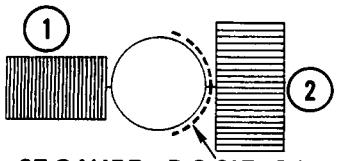 STOWED POSITION	615 (1) 700 (2)	FAILURE OF ONE PANEL TO RELEASE KEEPS WHOLE ARRAY FROM DEPLOYING (1) INTERFERENCE WITH RCS IN STOWED POSITION
3 PADDLE WHEEL FLAT PANEL	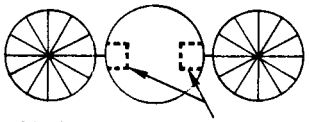 STOWED POSITION	680 (1)	DEPLOYMENT MALFUNCTION PRODUCES CRITICAL DESIGN LOADS
4 FOLD-OUT CURVED PANELS	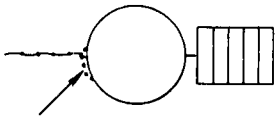 STOWED POSITION	630 (1) 700 (2)	DEPLOYMENT MALFUNCTION PRODUCES CRITICAL DESIGN LOADS
5 PETAL FLAT PANELS	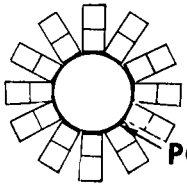 STOWED POSITION	570 (1) 700 (2)	ADDITIONAL WIRING RESULTS IN VOLTAGE DROPS VOLTAGE REGULATION

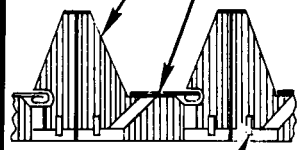

(1) WITHOUT CONCENTRATORS

(2) WITH CONCENTRATORS

9-63 PS 59704

TYPICAL PANEL DEPLOYMENT
(TYPE 1)

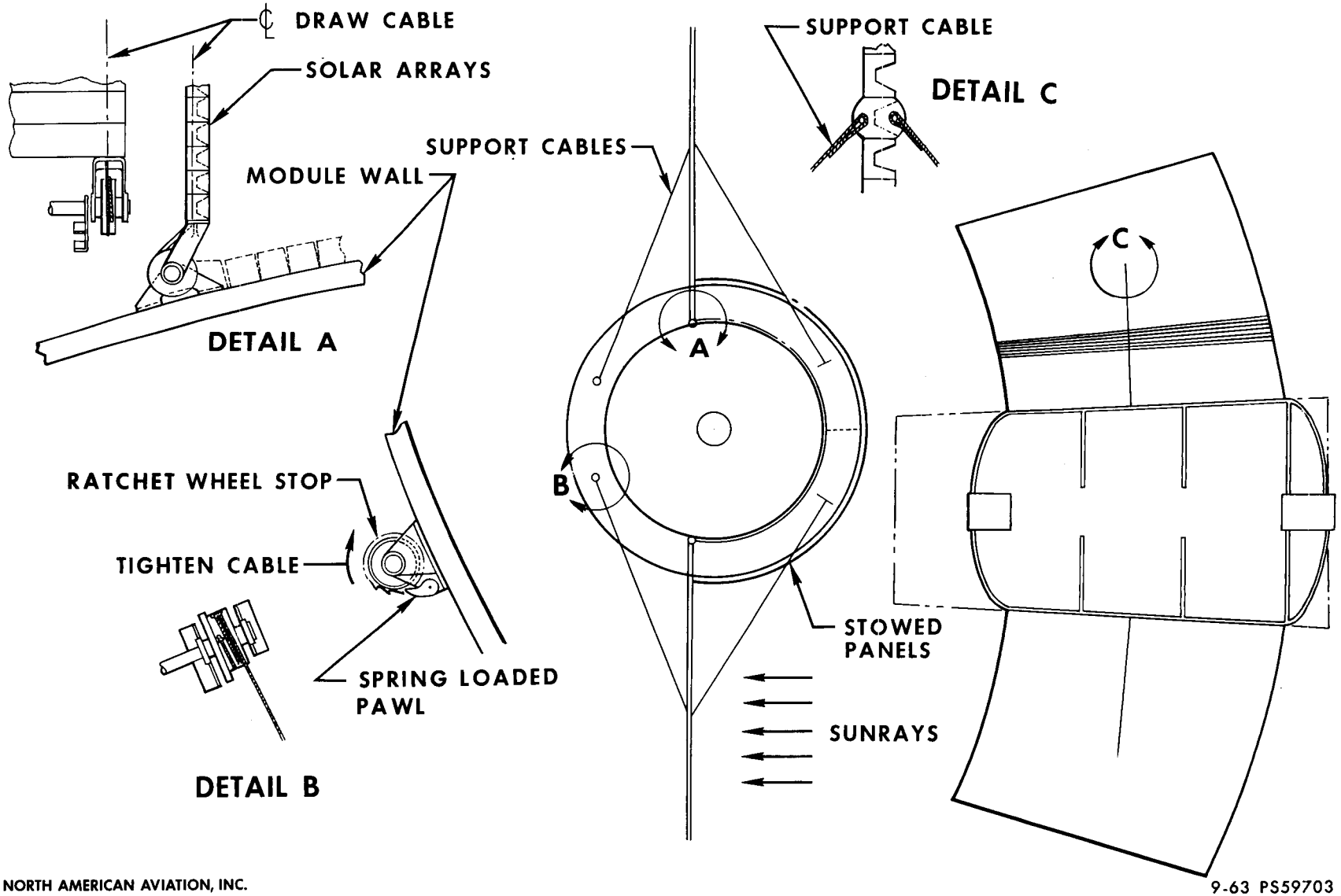

NORTH AMERICAN AVIATION, INC.
SPACE AND INFORMATION SYSTEMS DIVISION

9-63 PS59703

RETRO-PROPULSION CONSIDERATIONS

ΔV?
I_T ?
RCS capability for solid moments?

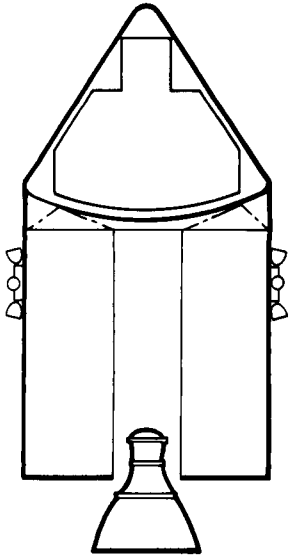

LIQUID SYSTEM

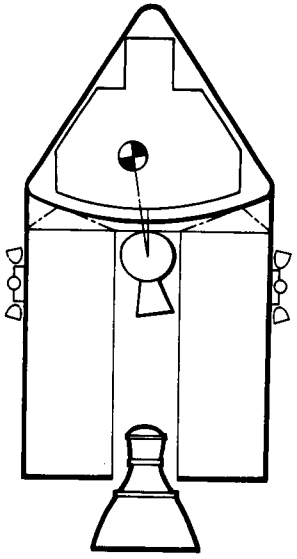

SINGLE SOLID MOTOR
(NEW DEVELOPMENT)

$2.5M DEV

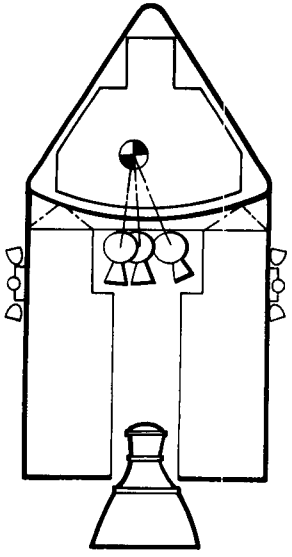

5 - HERCULES
RANGER MOTORS

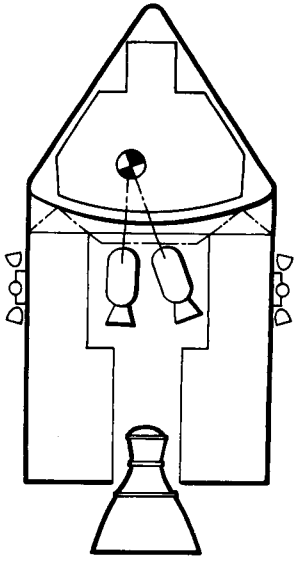

2 - HERCULES
ALTAIR MOTORS

~~CONFIDENTIAL~~

TYPICAL LABORATORY ARRANGEMENT
(CONCEPT III)

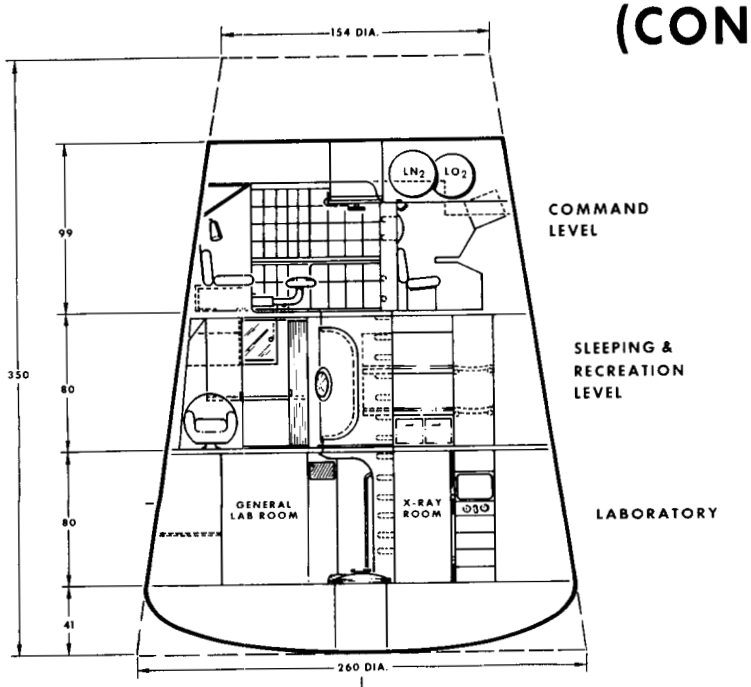

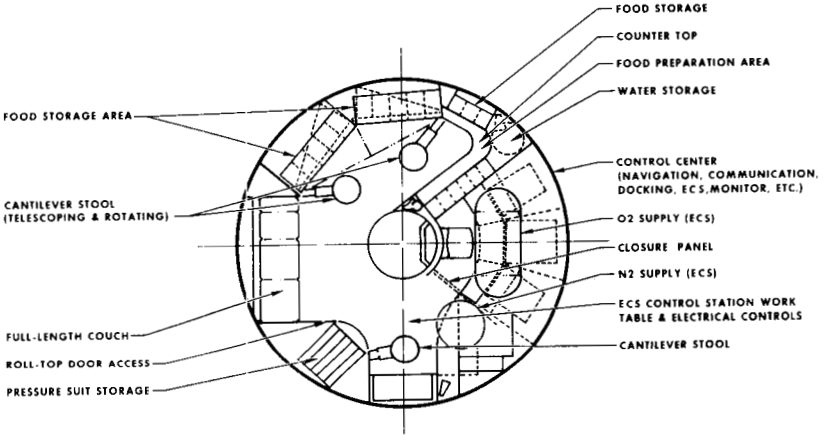

COMMAND LEVEL

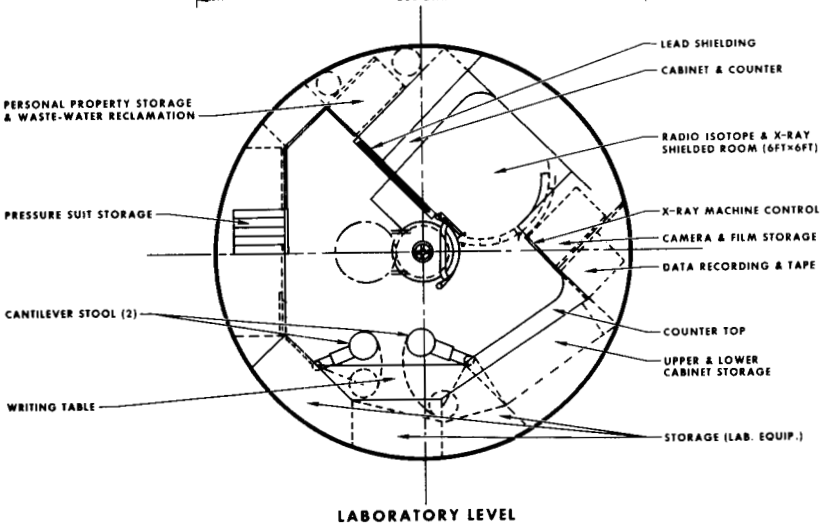

LABORATORY LEVEL

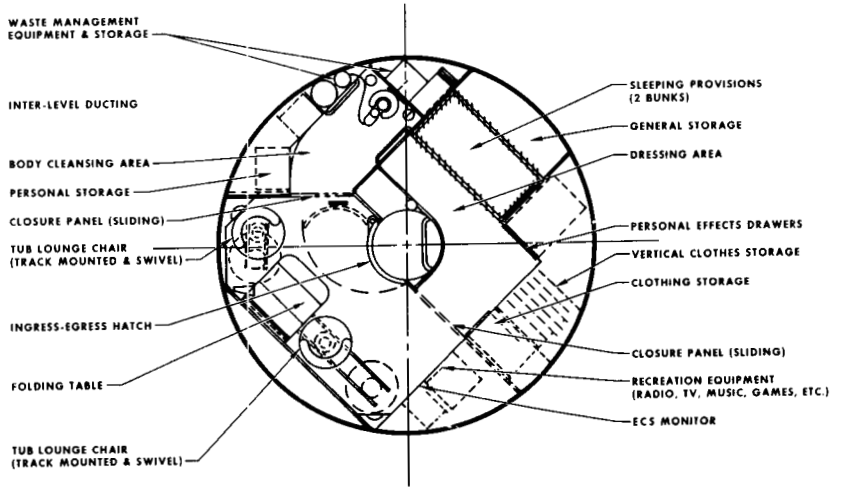

SLEEPING & RECREATION LEVEL

NORTH AMERICAN AVIATION, INC.
SPACE AND INFORMATION SYSTEMS DIVISION

~~CONFIDENTIAL~~

Group 4 Downgraded [illegible] year intervals; declassified [illegible] 12 years

9-63 PS 59705

This document contains information affecting the national defense of the United States within the meaning of the Espionage Laws, Title 18 U.S.C. Section 793 and 794. Its transmission or revelation of its contents in any manner to an unauthorized person is prohibited by law.

[redacted]

BOOST LOADS

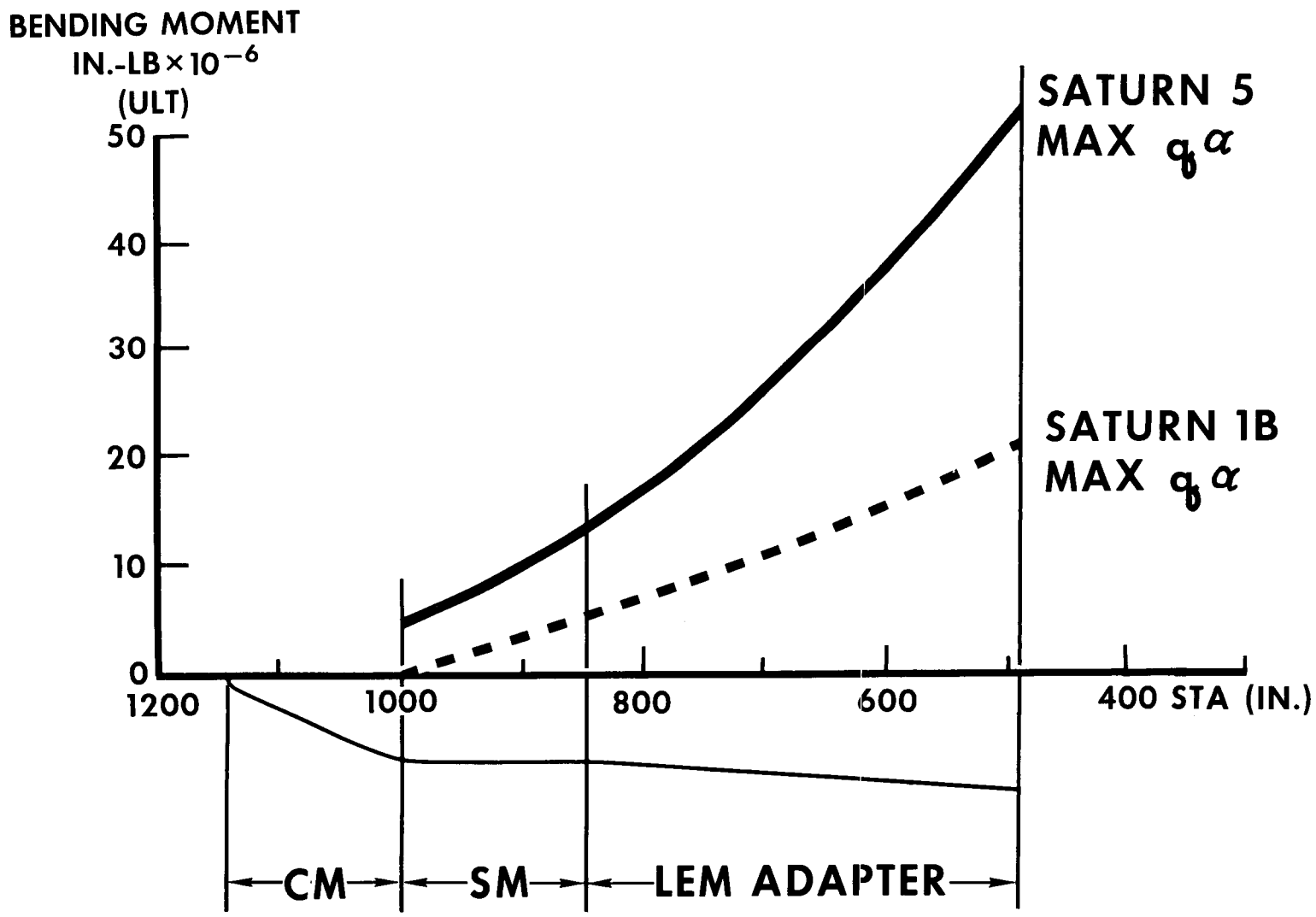

[redacted]

LABORATORY STRUCTURAL CONCEPTS

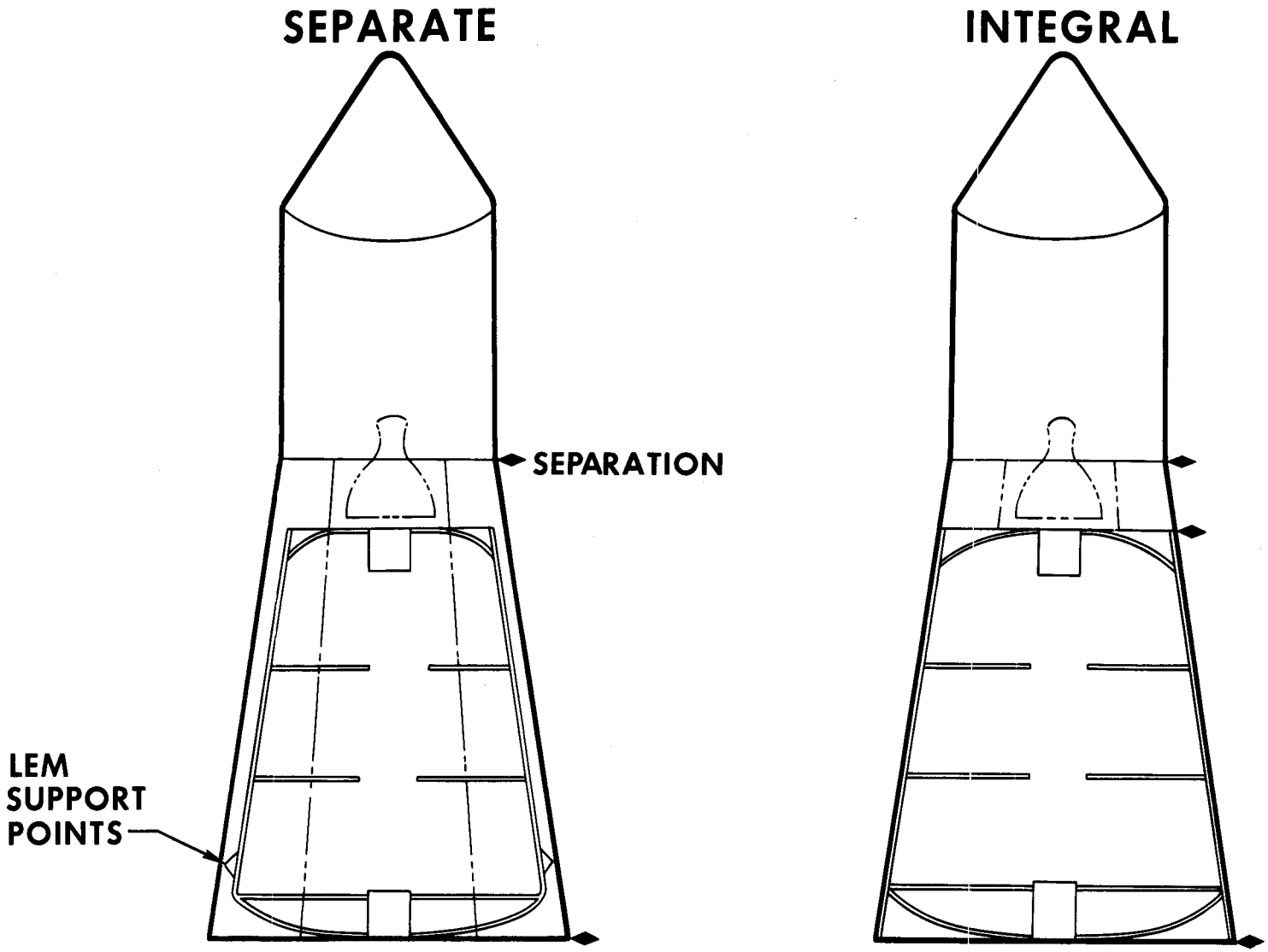

Equal
Met Prot?

STRUCT WT: 8645 LB 6125 LB

NORTH AMERICAN AVIATION, INC.
SPACE AND INFORMATION SYSTEMS DIVISION

9-63 PS 41398

[redacted]

This document contains information affecting the national defense of the United States within the meaning of the Espionage Laws, Title 18 U.S.C. Section 793 and 794. Its transmission or revelation of its contents in any manner to an unauthorized person is prohibited by law.

~~CONFIDENTIAL~~

LABORATORY STRUCTURE

- EXPOSED SURFACE AREA 1680 FT ^{2}
- 0.99 PROBABILITY OF NO MORE THAN ONE PENETRATION IN T DAYS AT 200 N MI
- BUMPER THICKNESS 0.010 IN.

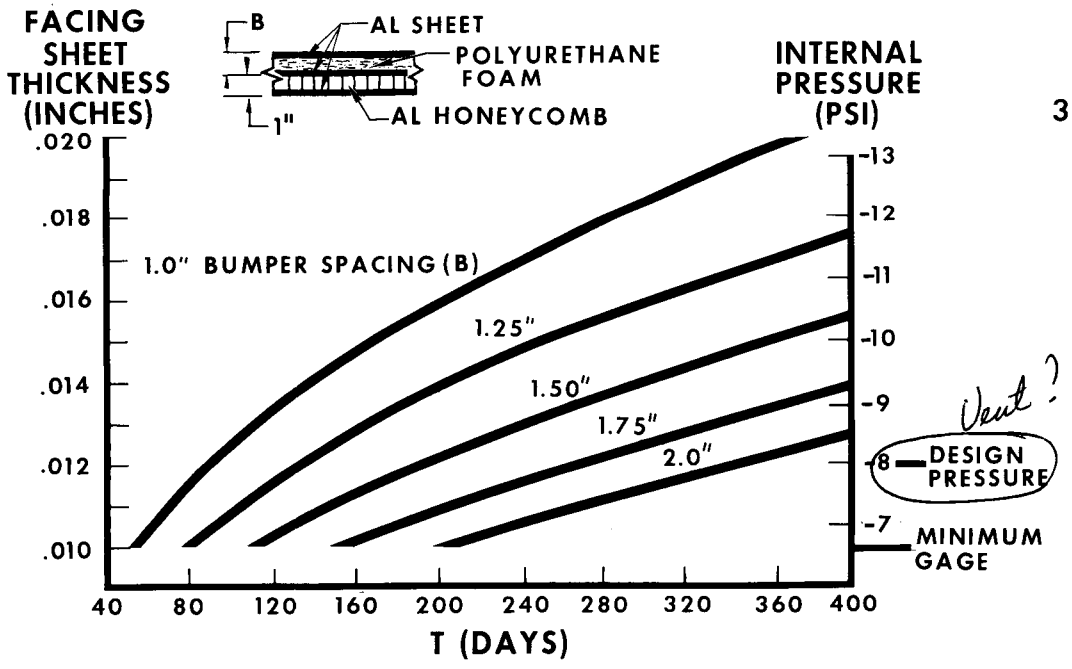

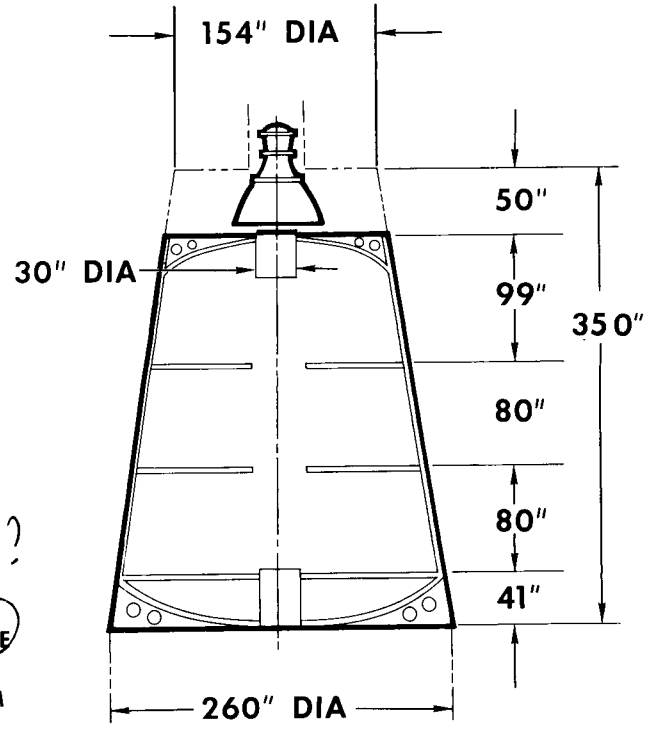

NORTH AMERICAN AVIATION, INC.
SPACE AND INFORMATION SYSTEMS DIVISION

~~CONFIDENTIAL~~

Group 4 Do[redacted] year intervals; declassi[redacted] 12 years

9-63 PS 41399

This document [redacted]ins infor[redacted]ion affecting the national defense of the United States with[redacted]ning of the Espionage Laws, Title 18 U.S.C. Section 793 and 79[redacted]mission or revelation of its contents in any manner to an un[redacted]horized p[redacted] prohibited by law.

~~CONFIDENTIAL~~

WEIGHT SUMMARY

	CONCEPT I (2-MAN)	CONCEPT II	CONCEPT III
BASE WEIGHT	59,635	59,635	59,635
APOLLO GROSS	(56,525)	———	———
LEM ADAPTER	(3,110)	———	———
CHANGES	-34,890	-28,904	-27,403
SCS (ENG & ELEC)	(+143)	(+510)	(+778)
PWR (W/CONC)	(- 325)	(- 287)	(-287)
LSS	(+196)	(+723)	(+723)
G & N (MIN SYS)	(-345)	(-345)	(-345)
ECS	(+979)	(+1197)	(+1588)
COMM/INST (GEM. RAD)	(+22)	(+ 13)	(+ 13)
PROPULSION (SOLID RETRO)	(-496)	(- 496)	(-496)
PROPELLANT (NO REND)	(-35,188)	(-34,785)	(-33,943)
EXP PKG (MIN)	(+124)*	(+ 856)	(+856)
LAB MODULE (LGE INTEG)	———	(+3,710)	(+3, 710)
XMAS G.W.**	24,745	30,731	32,232

LEM DES ENG

*ABBREVIATED PKG (VOLUME LIMITED)

**PAYLOAD=34,083 LB@ 200 N.MI, 28.5° INCL. Prior to SM Burn

NORTH AMERICAN AVIATION, INC.
SPACE AND INFORMATION SYSTEMS DIVISION

~~CONFIDENTIAL~~

Group 4 Downgraded at 3 year intervals; declassified after 12 years

9-63 PS 41441

This document contains information affecting the national defense of the United States within the meaning of the Espionage Laws, Title 18 U.S.C. Section 793 and 794. Its transmission or revelation of its contents in any manner to an unauthorized person is prohibited by law.

SUBSYSTEMS ANALYSIS

NORTH AMERICAN AVIATION, INC.
SPACE AND INFORMATION SYSTEMS DIVISION

9-63 PS59685

MAJOR SUBSYSTEMS

- POWER
- ENVIRONMENTAL CONTROL (ECS)
- STABILIZATION & CONTROL (S&C)
- GUIDANCE & NAVIGATION (G&N)
- PROPULSION
- LIFE SUPPORT (LSS)
- COMMUNICATION & DATA PROCESSING

PRELIMINARY POWER LOAD PROFILE

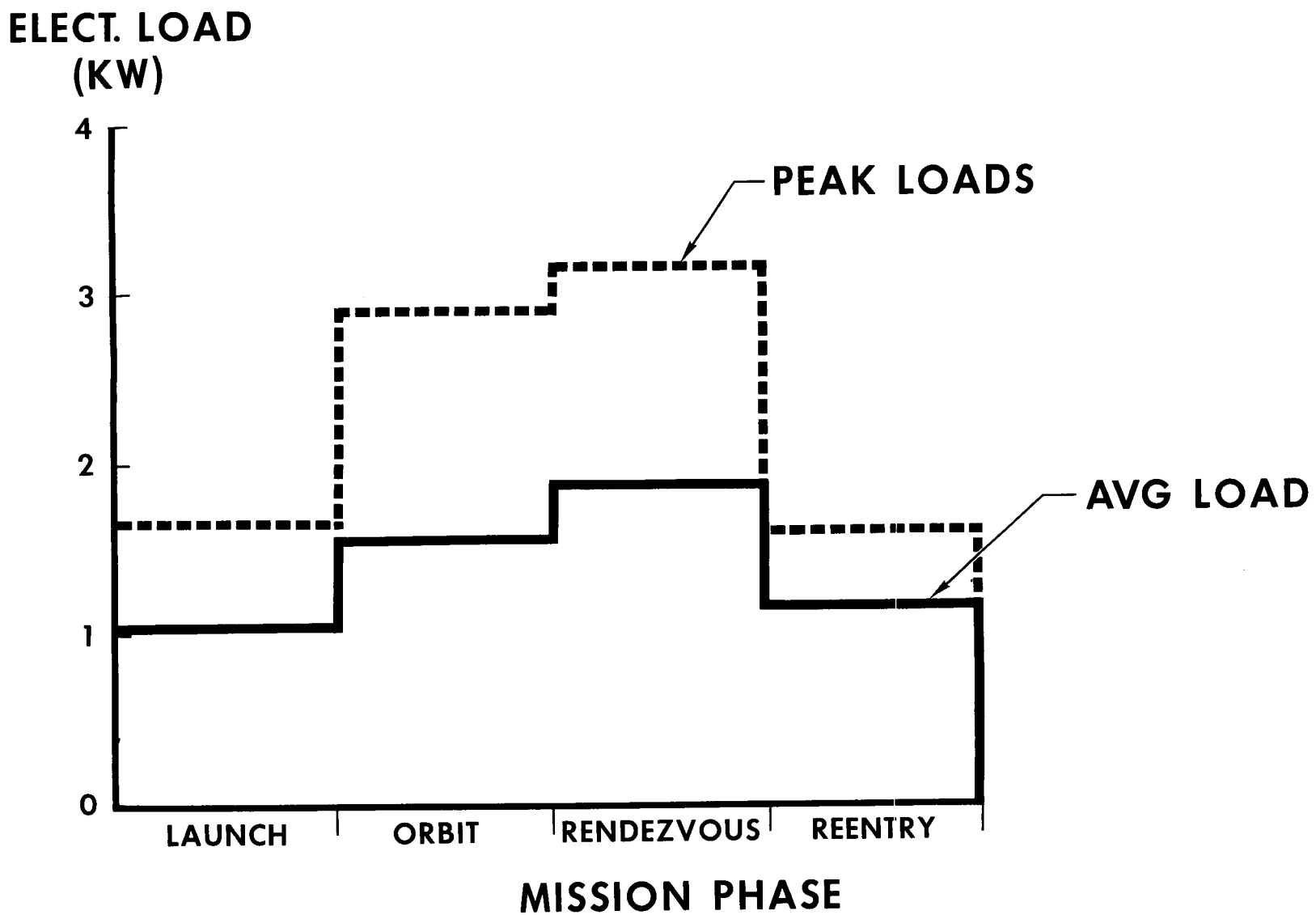

SOLAR CELL SYSTEM COMPARISON

	FLAT ARRAY		CONCENTRATOR ARRAY C. R. = 2.4	
	CONCEPT I	CONCEPT II & III	CONCEPT I	CONCEPT II & III
PANEL AREA (FT^2)	430	430	500	500
PANEL ASSY WT (LB)	609	609	640	640
NiCd BATTERY ASSY WT (LB)	140	282	140	282
POWER CONDITIONING ASSY WT (LB)	32	32	32	32
* TOTAL SYS WT (LB)	771	923	812	954
PANEL ASSY COST	$ 2.5 $\overline{M}$	2.5 $\overline{M}$	1.5 $\overline{M}$	1.5 $\overline{M}$
NiCd BATTERY COST	4300	6000	4800	6000
POWER COND COST	8000	12000	8000	12000

* DOES NOT INCLUDE WEIGHT FOR ORIENTATION

RADIOISOTOPE SYSTEM

- ISOTOPE — Sr 90 (27.7 YR HALF-LIFE)
- ENERGY CONVERSION UNIT–BRAYTON CYCLE (24% EFFICIENCY)
- SYSTEM WEIGHT

ISOTOPE & SHIELD (MARTIN CO. DATA)	2400
ENERGY CONVERSION SYSTEM	102
RADIATOR	136
TOTAL	2638 LB

- SYSTEM COST

ISOTOPE FUEL (1-1.5 KWe UNIT)	0.6
FUEL BLOCK DEVELOPMENT & SAFETY PROGRAM	2.0
ENERGY CONVERSION SYSTEM DEVELOPMENT	6.5
TOTAL	$9.1 $\overline{M}$

POWER SYSTEM CONCEPT COMPARISON

SYSTEM	MAJOR ADVANTAGES	MAJOR DISADVANTAGES	SYSTEM WT (LB)	PRIMARY PROBLEM AREAS
FUEL CELLS	• MINIMUM CHANGE FROM APOLLO	• WEIGHT • VOLUME	5200 (120 DAY)	• LIFETIME • RELIABILITY
SOLAR CELLS	• PROVEN SYSTEM	• COST • ORIENTATION	812 (I) 954 (II&III)	• DEPLOYMENT • CONCENTRATOR DEVELOPMENT
ISOTOPIC DYNAMIC	• NO DEPLOYMENT OR ORIENTATION	• WEIGHT • COST	2638	• ISOTOPE AVAILABILITY • DEVELOPMENT OF ENERGY CONVERSION EQUIPMENT • SAFETY REQUIREMENTS

ENVIRONMENTAL CONTROL

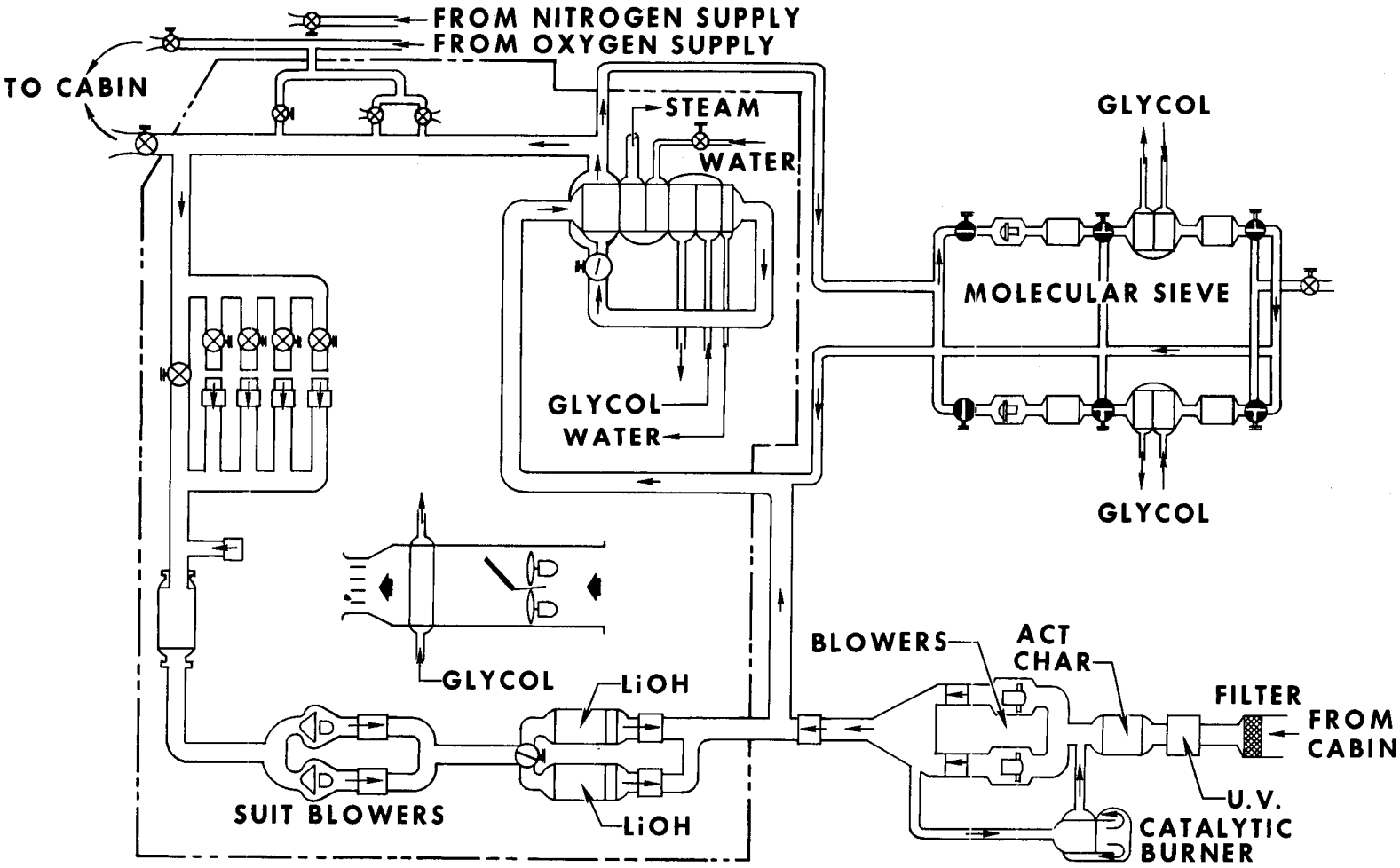

EXISTING APOLLO COMPONENTS

ADD FOR XMAS MISSION

GAS STORAGE

SYSTEM	WEIGHT	ADVANTAGES	DISADVANTAGES
HIGH PRESSURE (3500 PSIA FOR MIN. WT; 7500 PSIA FOR MIN. VOL.)	I-1478 II & III-2651	• SIMPLICITY & RELIABILITY • INDEFINITE STANDBY • RAPID REPRESSURIZATION • BACKPACK FILL CAPABILITY	• HIGH WEIGHT • GREATER HAZARD
SUPER-CRITICAL (875-900 PSIA)	I-1007 II & III- 1810	• OPERATIONAL STATUS (GEMINI & APOLLO)	• LIMITED STANDBY
SUB-CRITICAL (≤100 PSIA)	I-762 II & III-1371	• LIGHT WEIGHT • SIMPLER FILLING & TOPPING THAN SUPERCRITICAL	• MORE COMPLEX SYSTEM

THERMAL & ATMOSPHERE CONTROL

- THERMAL
  - CONCEPT I -SAME AS APOLLO
  - CONCEPTS II & III-ADD ZONE HEAT EXCHANGERS & FANS IN LM

- ATMOSPHERE

	APOLLO		XMAS	
	WT (LB)	PWR(W)	WT (LB)	PWR (W)
CO_2 REMOVAL				
• LiOH	112	0	15	0
• MOLECULAR SIEVE	—	—	75	150
TRACE CONTAMINANTS				
• ACTIVATED CHARCOAL	4	0	6	0
• CATALYTIC BURNER	—	—	1.5	8
• ULTRAVIOLET LAMPS	—	—	2	60
• AIR FILTER	—	—	1.5	0
CIRCULATION				
• MAIN BLOWERS	—	—	8	50

STABILIZATION & CONTROL REQUIREMENTS

SOURCE	ORIENTATION	ANGULAR VELOCITY	ANGULAR ACCELERATION
HUMAN FACTORS	—	0.5 DEG/SEC	2 DEG/SEC^2
POWER SYSTEM			
SOLAR PANELS	± 10 DEG	—	—
ISOTOPE	—	—	—
DOCKING	± 10 DEG	1 DEG/SEC	—
RETRO	± 3 DEG	—	—

DISTURBANCE SUMMARY

	PROPELLANT REQMTS (LB)			
	AERODYNAMIC TORQUE	GRAVITY GRADIENT	SOLAR PRESSURE	DOCKING IMPACT
CONCEPT I	25	150	5	—
CONCEPT II	110	—	—	—
CONCEPT III	360	—	15	—

NOTES: ORBIT ALT 200 NM
CONCEPT I - FIXED SOLAR PANELS (SM)
CONCEPT II - MOVABLE PANELS (SM)
CONCEPT III - MOVABLE PANELS (LAB)
120-DAY MISSION

INFLUENCE OF POWER SYSTEM ON SCS

	POWER SYS	ORIENTATION PROPELLANT WT (LBS)	ADDITIONAL EQUIP.	MOD-IFICATIONS
CONCEPT I	ISOTOPE	—	NONE	—
	FIXED PANELS	175	TWO-AXIS SUN SENSOR	MINOR
	MOVABLE PANELS	134	TWO-AXIS HORIZON SENSOR (PLUS PANEL CONTROL)	MINOR
CONCEPT II	ISOTOPE	—	NONE	—
	FIXED PANELS	658	TWO-AXIS SUN SENSOR	MINOR
	MOVABLE PANELS	185	TWO-AXIS HORIZON SENSOR (PLUS PANEL CONTROL)	MINOR
CONCEPT III	ISOTOPE	—	NONE	—
	FIXED PANELS	1103	TWO-AXIS SUN SENSOR	MINOR
	MOVABLE PANELS	445	TWO-AXIS HORIZON SENSOR (PLUS PANEL CONTROL)	MINOR

G&N SYSTEM APPROACHES

- BASIC APOLLO G&N SYSTEM
  - DELETE LUNAR MISSION ITEMS (E.G., SEXTANT)
  - ADD RENDEZVOUS SYSTEM (RESUPPLY ONLY)
- GOSS-DEPENDENT SCS (DELETE G&N)
  - "OPEN-LOOP" - PROGRAMED LIFT (ϕ) VS TIME
  - "CLOSED-LOOP" - "G" PROFILE MATCHING
  - ADD RENDEZVOUS SYSTEM (RESUPPLY ONLY)

G & N SYSTEM COMPARISON

		APOLLO G & N	GOSS-DEPENDENT SCS	
			OPEN LOOP	CLOSED LOOP
WT CHANGE (LBS) *		0	-350	-345
VOL CHANGE (FT^3) *		0	-6.3	-6.3
PWR CHANGE (WATTS) *	PEAK	0	-500	-494
	AVERAGE	0	-25	-25
COST CHANGE ($)	R & D	0	990 K	1 $\overline{M}$
	PROD	0	-1.37 $\overline{M}$	-1.36 $\overline{M}$
ENTRY ERROR (1σ-N MI)	CROSS-RANGE	$<$ 10	190	41
	DOWN-RANGE	$<$ 10	67	18
INJECTION ERRORS (1σ-N MI)	PHASE	2	16	16
	PLANE	4	6	6
	APOGEE ALT.	4	6	6

* DOES NOT INCLUDE RENDEZVOUS EQUIP.

What are
ΔV Req

RENDEZVOUS METHODS

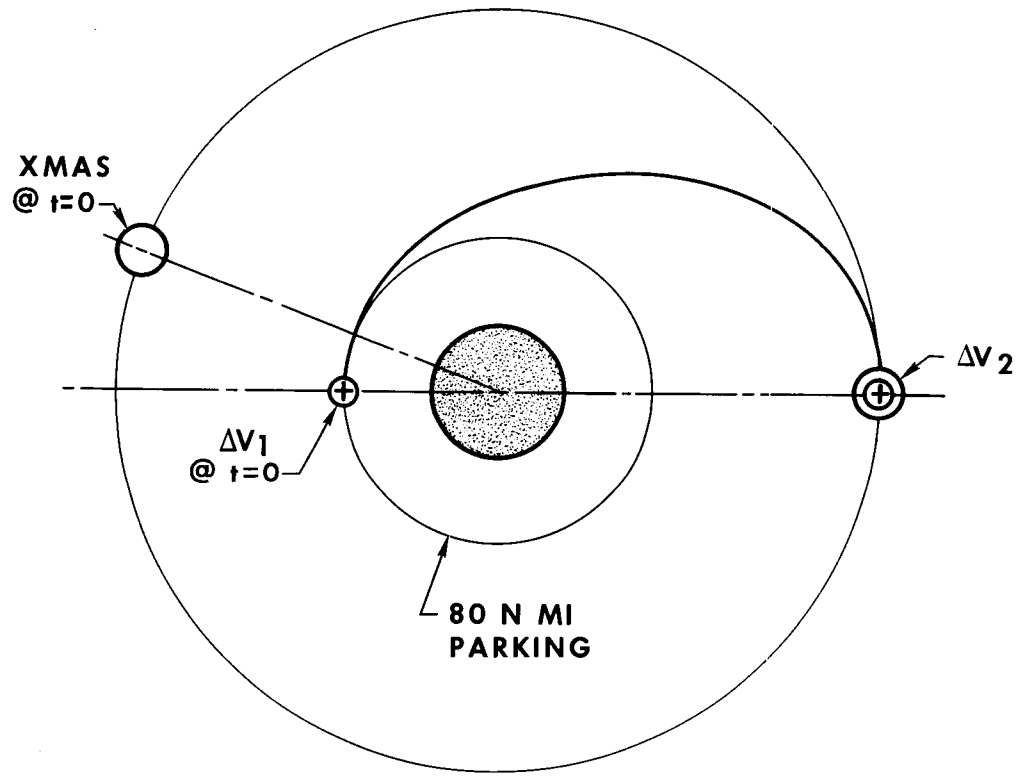

METHOD 1

- BEGIN RENDEZVOUS GUID AFTER INJECTION (ΔV2)
- SIMPLER OPN
- SHORTER RANGE (≤50 N MI) SENSOR

METHOD 2

- SEARCH & TRACK BEFORE ΔV_1
- CONTINUE TRACK & CORRECT DURING TRANSFER
- YIELDS MIN. TOTAL ΔV
- REQUIRES LONG-RANGE (200-500 N MI) SENSOR

[redacted]

TYPICAL RENDEZVOUS RADAR SYSTEMS

SYSTEM	GEMINI	ADV GEMINI	STELATRAC
MANUFACTURER	WESTINGHOUSE	WESTINGHOUSE	STL
MAX. RANGE (NM)	250	500	500
RANGE RES	1% OR ± 50 FT	1% OR ± 50 FT	0.04% OR ± 2 FT
COVERAGE	50° CONE	50° CONE	HEMISPHERE
ANGULAR RES (MR)	3	3	3
ACCURACY (FT/SEC)	1	0.1	0.1
WT (LB)	87	37	59
VOL (FT^3)	2.75	1.25	0.77
AVG PWR (W)	120	35	—
AVAILABILITY	PRODUCTION	R&D	PROTOTYPES 1 YEAR
DEV COST	0	14M	?
PROD COST	140K	200K	?

NORTH AMERICAN AVIATION, INC.
SPACE AND INFORMATION SYSTEMS DIVISION

~~CONFIDENTIAL~~
[redacted] after 12 years

9-63 PS 41437

This document co[redacted]ins infor[redacted]ation affecting the national defense of the United States within [redacted]eaning of the Espionage Laws, Title 18 U.S.C. Section 793 and 794[redacted] [redacted]ansmission or revelation of its contents in any manner to an u[redacted]thorized p[redacted]n is prohibited by law.

PROPULSION SYSTEM FUNCTIONS

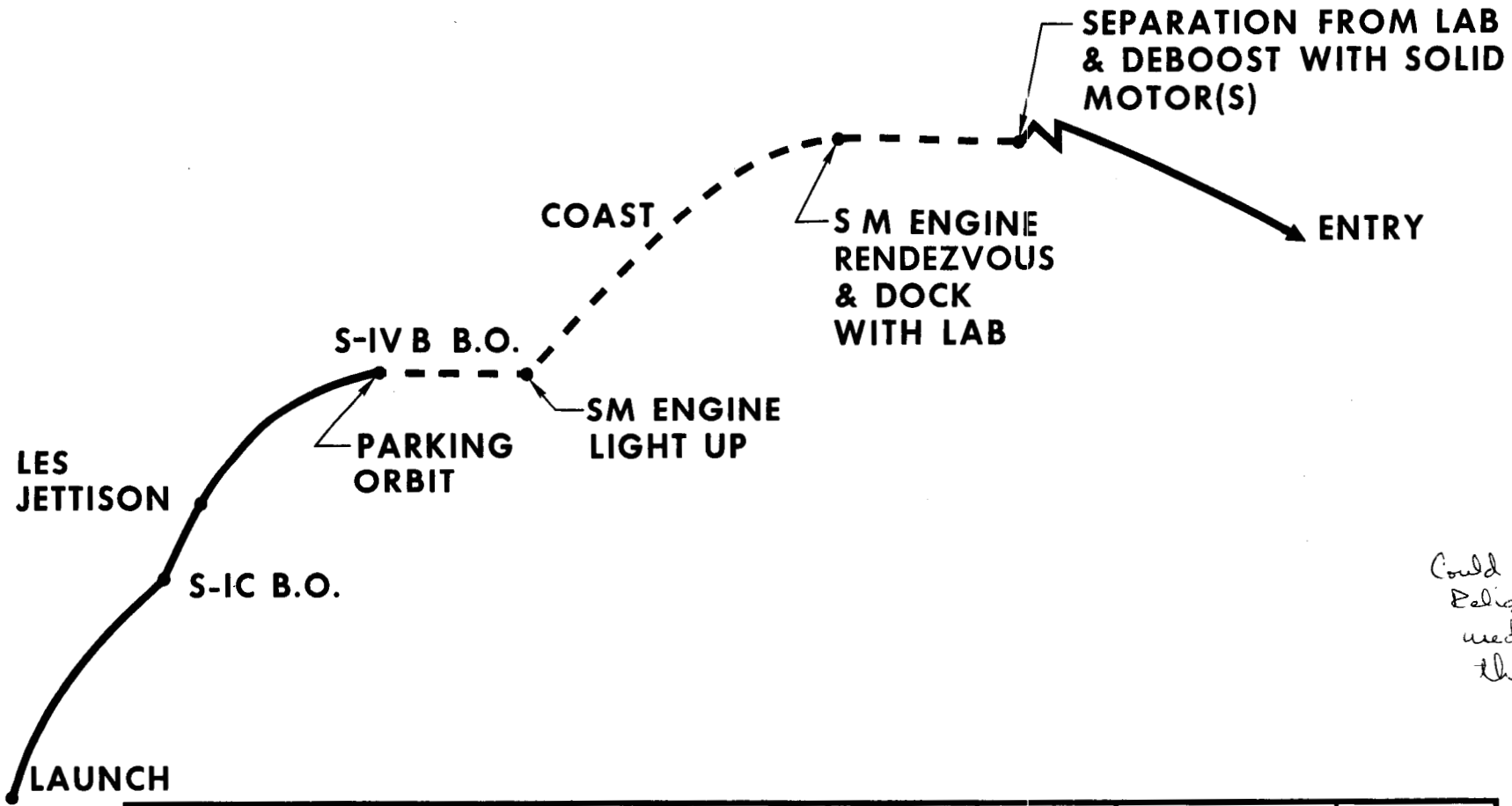

Could S10B Delight be used rather than SM?

PROPULSION SYSTEM	ULLAGE FOR SM ENG	ASCENT	INJECTION	STATION KEEPING	RENDEZ-VOUS	ATTITUDE ORIENTATION	DEBOOST
SM ENG		✓	✓		✓		
SM RCS	✓			✓	✓	✓	
SOLID MOTOR(S)							✓

[redacted]

PROPULSION SYSTEMS COMPARISON

- SOLID PROPELLANT (I_{SP} = 255 SEC)
- ΔV = 600 FT /SEC

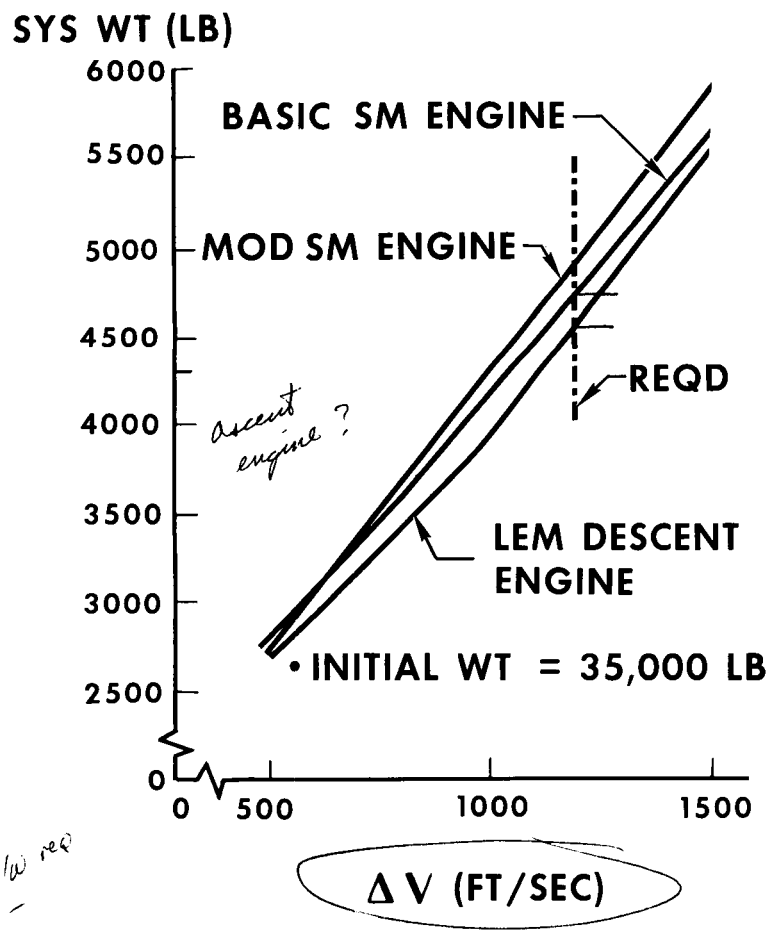

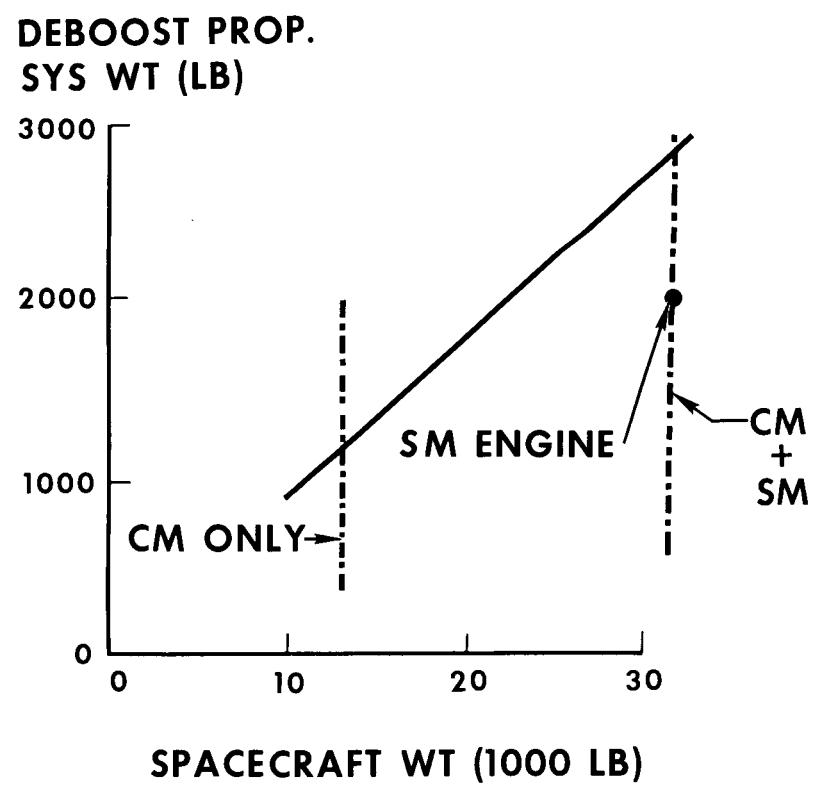

What are Duration requirements ?

F/W req ?

CV says about F/W req for guidance –

[redacted]

Group 4 Downgraded at 3 year intervals; declassified after 12 years

This document contains information affecting the national defense of the United States within the meaning of the Espionage Laws, Title 18 U.S.C. Section 793 and 794. Its transmission or revelation of its contents in any manner to an unauthorized person is prohibited by law.

[redacted]

PROPULSION CONCEPT COMPARISON

CONCEPT	SYSTEM CHARACTER-ISTICS	PROP SYS WT			ADVANTAGES	DISADVANTAGES
		LIQUID	SOLID	TOTAL		
MINIMUM MODIFICATION	STORABLE LIQUID USING 21.9K S/M ENGINE	7500 (6300)	0	7500 (6300)	• NO ENGINE OR PROPELLANT FEED SYS CHANGES • APOLLO DEBOOST PROCEDURES • BETTER TVC DURING DEBOOST	• HIGHER WT • NO THROTTLING • HIGHER POWER TO GIMBAL ENGINE
MINIMUM WEIGHT	STORABLE LIQUID USING 10.5K LEM DESCENT ENGINE FOR MANEUVER AND SOLID DEBOOST 3.5 K ?	5400 (4600)	1160 (928)	6560 (5528)	• LOWER WT • 10 TO 1 THROTTLING • HIGHER RELIABILITY • MORE VOLUME IN LEM ADAPTER FOR LAB	• CM RCS REQD DURING DEBOOST FOR C.G. TRAVEL AND THRUST MALALIGN • DUAL PLANE SEPARATION FOR DEBOOST

~~CONFIDENTIAL~~

Group 4 Downgraded at 3 year intervals; declassified after 12 years

This document contains information affecting the national defense of the United States within the meaning of the Espionage Laws, Title 18 U.S.C. Section 793 and 794. Its transmission or revelation of its contents in any manner to an unauthorized person is prohibited by law.

WATER RECLAMATION

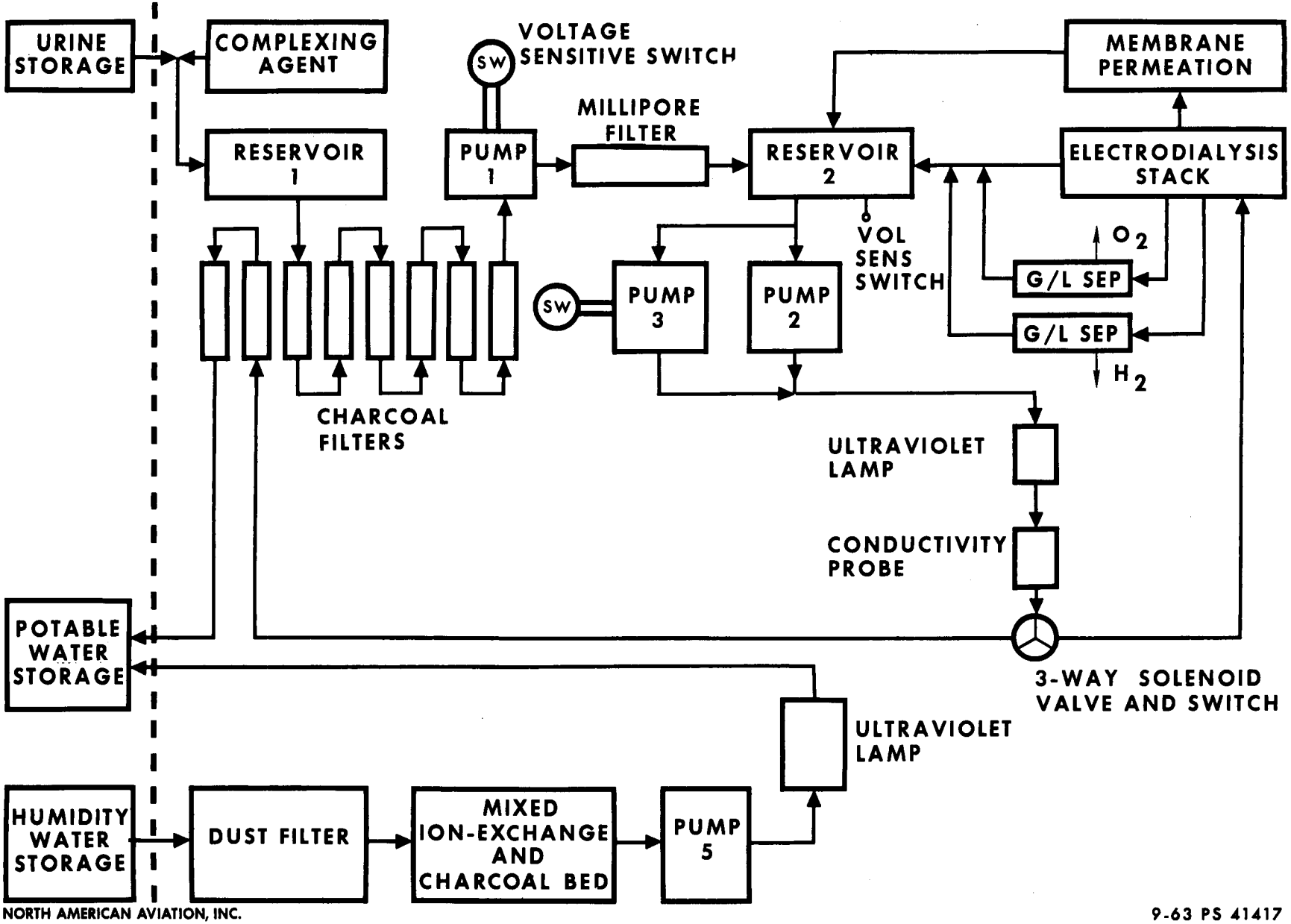

NORTH AMERICAN AVIATION, INC.
SPACE AND INFORMATION SYSTEMS DIVISION

9-63 PS 41417

WASTE MANAGEMENT SYSTEM

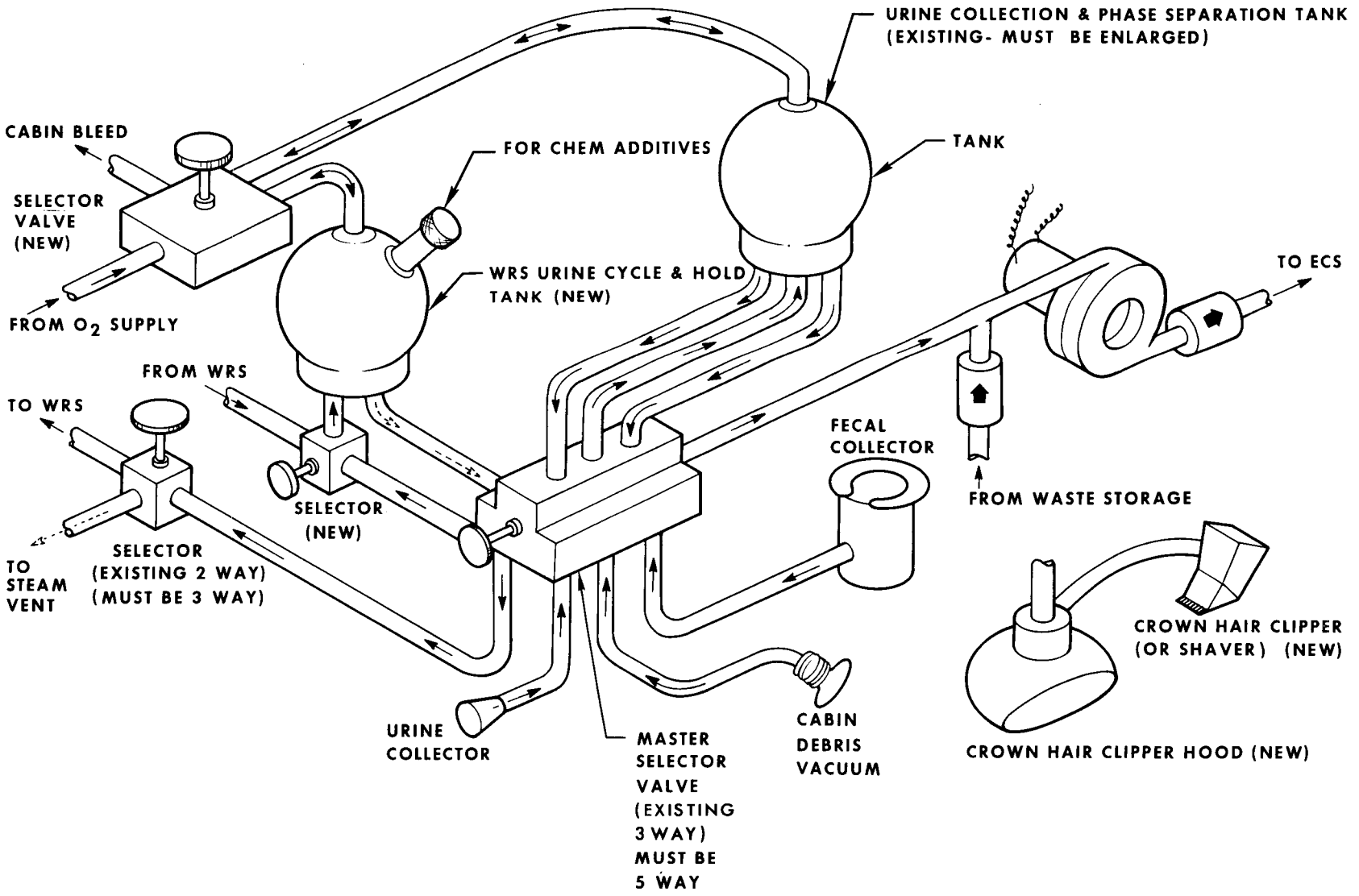

FOOD

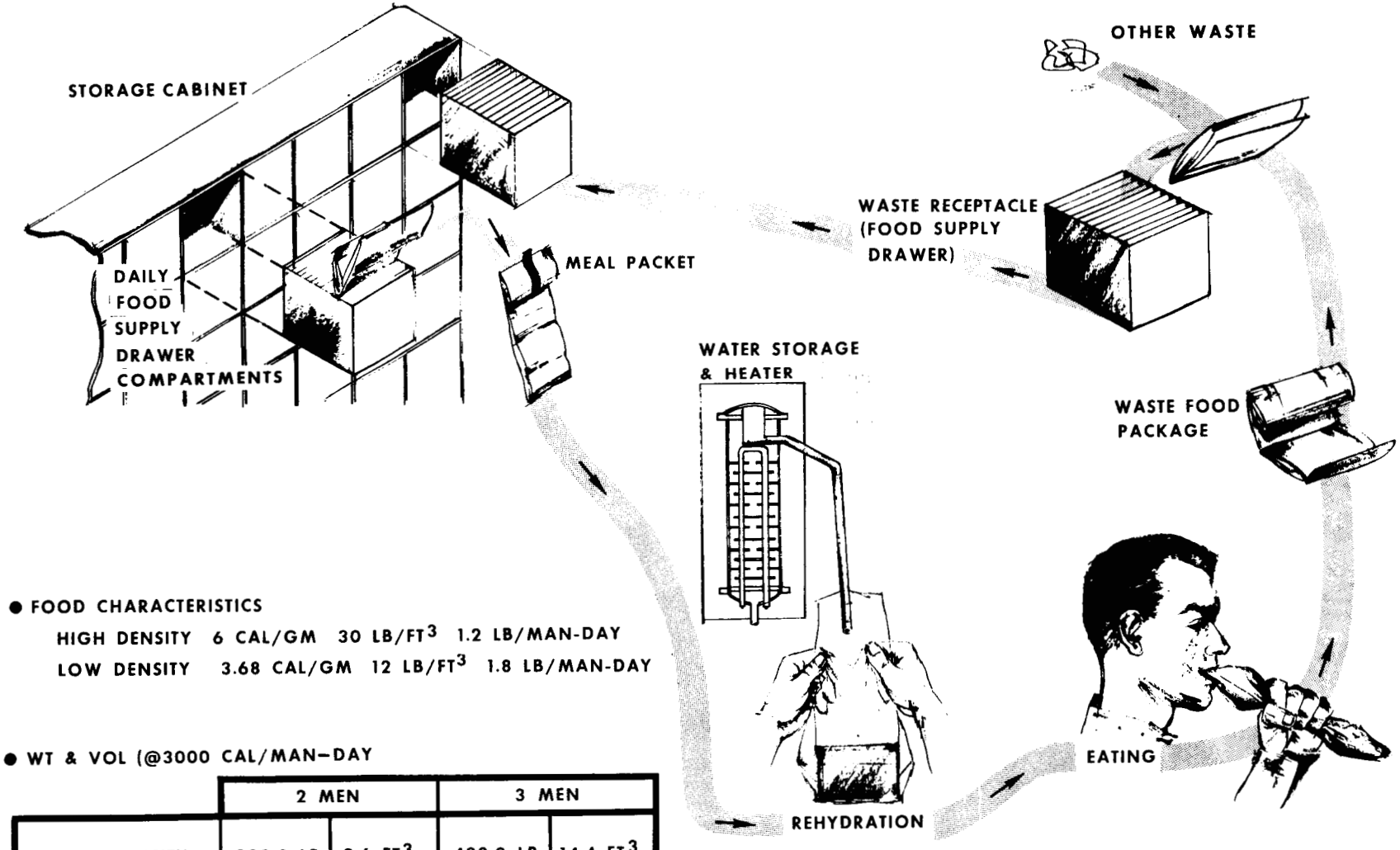

- FOOD CHARACTERISTICS

HIGH DENSITY	6 CAL/GM	30 LB/FT^3	1.2 LB/MAN-DAY
LOW DENSITY	3.68 CAL/GM	12 LB/FT^3	1.8 LB/MAN-DAY

- WT & VOL (@3000 CAL/MAN-DAY

	2 MEN		3 MEN	
HIGH DENSITY	288.0 LB	9.6 FT^3	432.0 LB	14.4 FT^3
LOW DENSITY	432.0 LB	35.0 FT^3	648.0 LB	54.0 FT^3

PERSONAL HYGIENE

- SYS EQUIP. WT 5.0 LB 0.04 FT^3
  (SHAVER, CLIPPER, HOOD, ETC)

• SUPPLIES	2 MEN	3 MEN
CLEANING TISSUES 6.0/M-D 0.03 LB INCLUDES PACKAGING	43.20 LB 0.75 FT^3	64.80 LB 1.1 FT^3
CLOTHING CHANGE EACH 4TH DAY 0.8 LB/ CHANGE	48.0 LB 2.4 FT^3	72.0 LB 3.6 FT^3

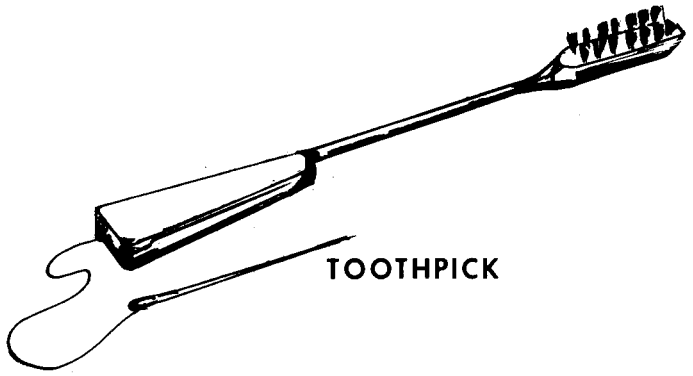

DENTAL FLOSS

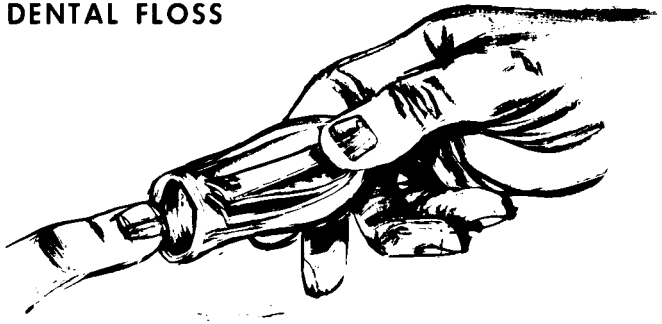

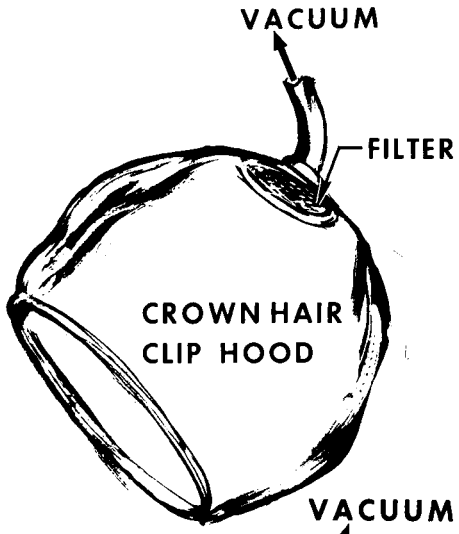

~~CONFIDENTIAL~~

COMMUNICATION SYSTEM ALTERNATIVES

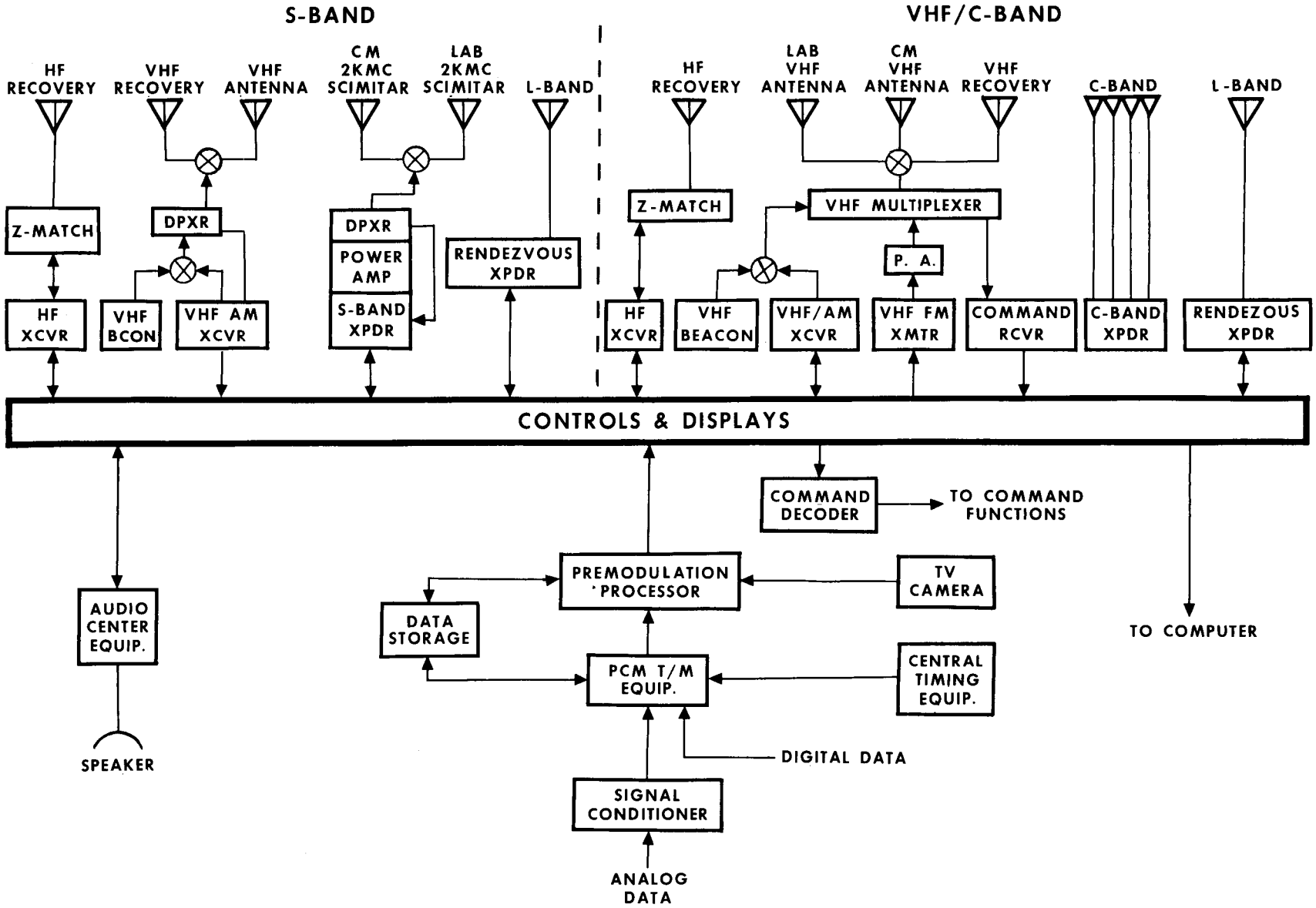

NORTH AMERICAN AVIATION, INC.
SPACE AND INFORMATION SYSTEMS DIVISION

~~CONFIDENTIAL~~

Group 4 Downgraded at 3 year intervals; declassified after 12 years

9-63 PS 41420

This document contains information affecting the national defense of the United States within the meaning of the Espionage Laws, Title 18 U.S.C. Section 793 and 794. Its transmission or revelation of its contents in any manner to an unauthorized person is prohibited by law.

ANTENNA LOCATIONS

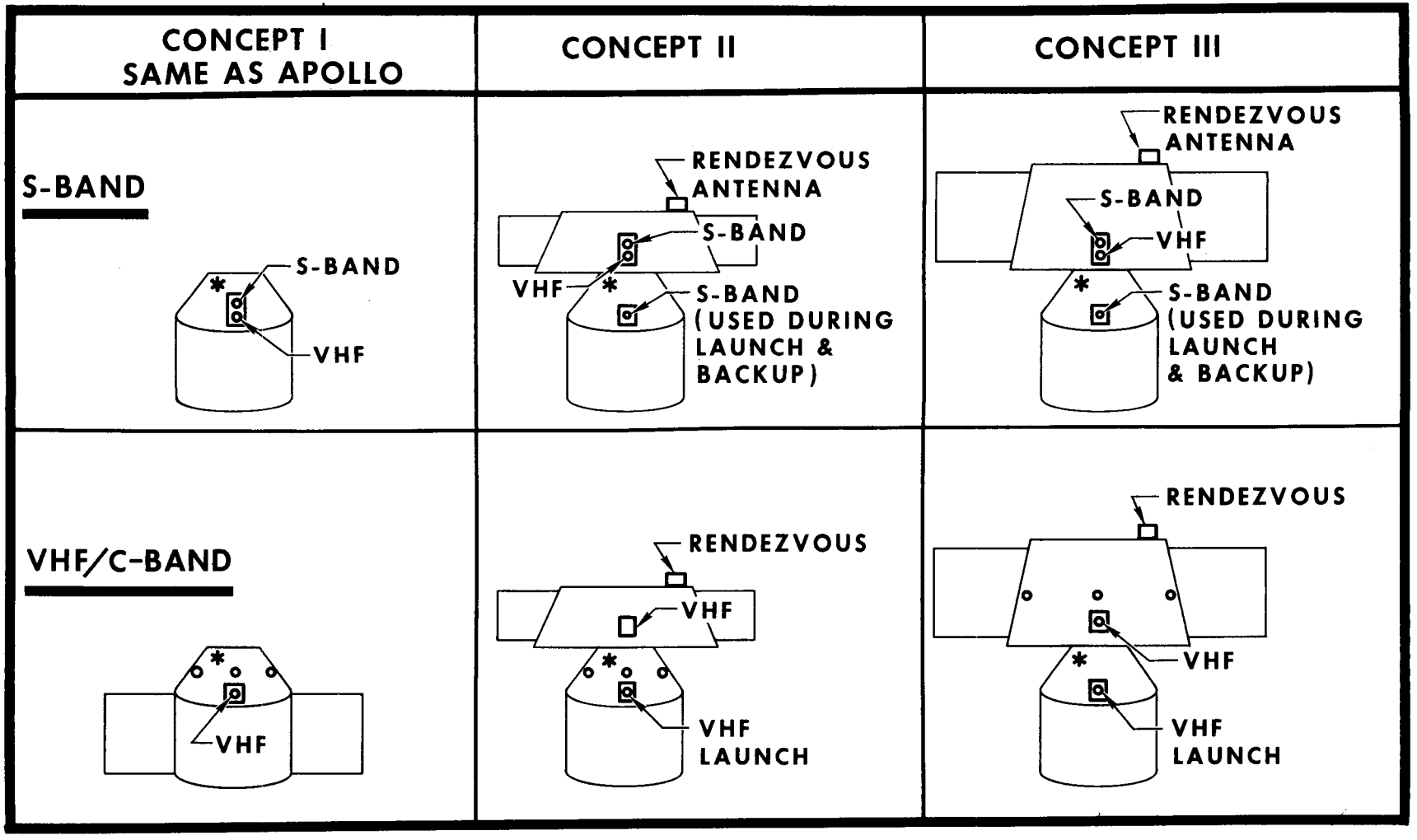

* HF & VHF RECOVERY ANTENNA

∘ C-BAND BEACON

COMMUNICATION SYSTEMS COMPARISON

	VHF/C-BAND SYSTEM	UNIFIED S-BAND SYSTEM
WT (LB)	163.8	130.3
VOL (IN^3)	5195	4623
PEAK POWER (WATTS)	184 AC 155 DC	34 AC 134 DC
DEVELOPMENT STATUS	PROVEN SYSTEM	NOT YET QUALIFIED
GROUND STATION REQMTS	COMPATIBLE WITH EXISTING GOSS	ADDITION OF S-BAND EQUIPMENT TO GOSS STATIONS REQD
SYSTEM CAPABILITY	MEETS REQMTS	LARGER BANDWIDTH

GROUND STATION S-BAND REQUIREMENTS

- S-BAND ANTENNA
- S-BAND ANTENNA DRIVE SYSTEM
- S-BAND RECEIVER
- RANGE EXTRACTION UNIT
- RANGE RATE EXTRACTION UNIT
- S-BAND TRANSMITTER
- S-BAND POWER AMPLIFIER
- DUPLEXER
- PREAMPLIFIER
- DEMODULATOR PROCESSOR

DATA SYSTEM REQUIREMENTS

	"MINIMUM" PROGRAM			"DESIRED" PROGRAM		
	USE (MIN/WK)	DATA RATE	CHANGES	USE (MIN/WK)	DATA RATE	CHANNELS
BIO-MEDICAL EXPERIMENTS						
• ANALOG	2	.05 TO 2000 CPS	2	2	.05 TO 2000 CPS	8
• PCM	10	4000 BITS/SEC	1	14	4000 BITS/SEC	1
• NUMERICAL	37	30 BITS/SEC	1	65	30 BITS/SEC	1
• OBSERVATIONAL	28	250 TO 2000 CPS	1	34	250 TO 3000 CPS	1
• TELEVISION	10	500 KCPS	1	12	500 KCPS	1
BEHAVIORAL EXPERIMENTS						
• ANALOG	—	NONE	—	—	NONE	—
• PCM	8	4000 BITS/SEC	1	8	4000 BITS/SEC	1
• NUMERICAL	9	30 BITS/SEC	1	36	30 BITS/SEC	1
• OBSERVATIONAL	50	250 TO 3000 CPS	—	73	250 TO 3000 CPS	1
• TELEVISION	—	NONE	—	—	NONE	—

DATA SYSTEM COMPARISONS

	APOLLO			CONCEPT I			CONCEPTS II & III		
	WT (LB)	VOL (FT^3)	PWR (W)	WT (LB)	VOL (FT^3)	PWR (W)	WT (LB)	VOL (FT^3)	PWR (W)
SIGNAL CONDITIONING (INCLUDES KEYBOARD)	32.8	0.52	61.0	48.0	0.72	65	68.0	1.22	85
PRE-MOD PROCESSOR	11.2	0.17	11.5	18.0	0.27	15	28.0	0.77	25
PCM	58.6	1.10	7.0	NO CHANGE			NO CHANGE		
STORAGE	25.4	0.52	33.0	NO CHANGE			50.8	1.04	33
CENTRAL TIMING	8.0	0.17	15.0	NO CHANGE			NO CHANGE		
TV CAMERA	5.0	0.07	6.8	NO CHANGE			NO CHANGE		
UP DATA LINK	35.0	1.33	15.0	NO GHANGE			NO CHANGE		
TOTAL	176.0	3.88	149.3	198	4.18	156.8	253.4	5.7	186.8

DISPLAYS

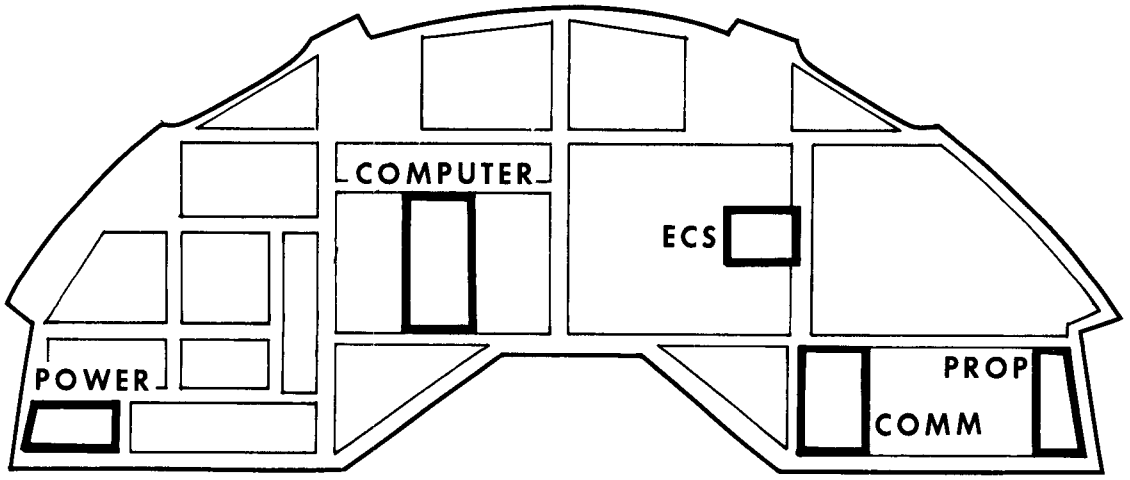

LAB - CONCEPT II

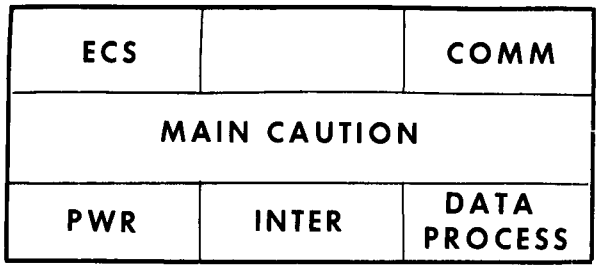

LAB - CONCEPT III

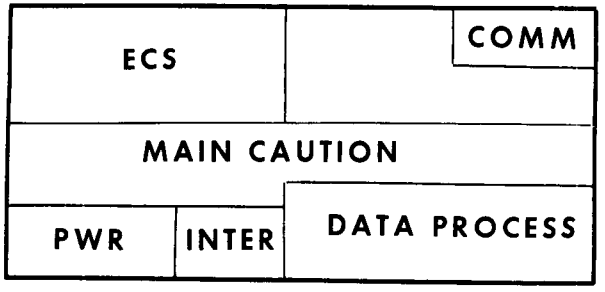

CONCEPT	CM PANEL CHANGES			LAB DISPLAYS
	AREA	WT	POWER	
I	+10%	+10%	+2%	
II	+5	+5	+2	• 1.5 FT^2 • 5 LB • 50 WATTS
III	+5	+5	+2	• 2.2 FT^2 • 6 LB • 60 WATTS

9-63 PS41416

MAJOR STUDY AREAS

SPACE ENVIRONMENT

- METEOROID
- RADIATION

EXPERIMENT DEFINITION & INTEGRATION

- BIO-MEDICAL
- BEHAVIORAL
- ENGINEERING & SCIENTIFIC

HUMAN FACTORS

- ENVIRONMENT
- NUTRITION
- LIVING SPACE
- HYGIENE
- CREW FITNESS
- CREW PERFORMANCE

CONCEPT EVALUATION

METEOROID PENETRATION
(120 DAYS)

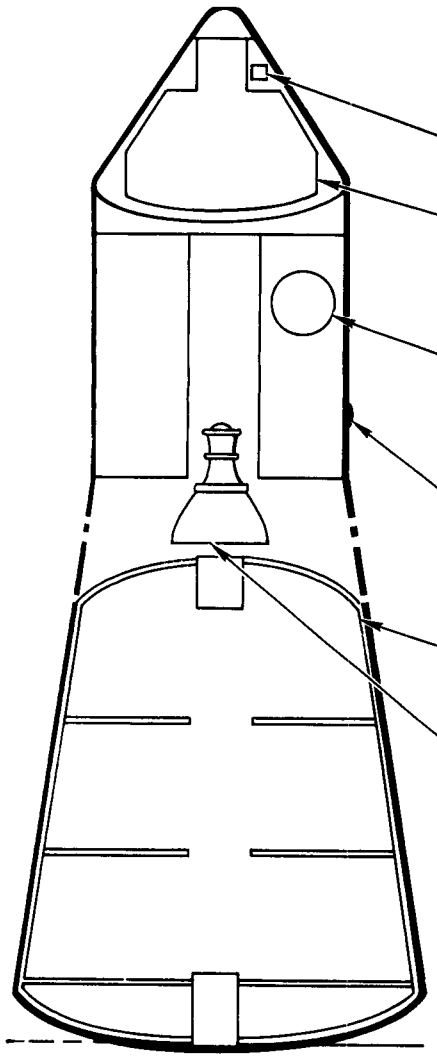

- **NO PENETRATIONS**
  - COMMAND MODULE
    - EQUIP. BOXES (UNPRESS) 0.999
    - INNER PRESS. WALL 0.997
  - SERVICE MODULE
    - TANKS (PROP., ECS, ETC.) 0.997
- **NOT MORE THAN I PENETRATION**
  - ECS RADIATORS 0.979
  - LAB INNER WALL 0.998
- **NO HOLE >0.25 INCH**
  - ENGINE NOZZLE 0.999

9-63 PS 59659

CM RADIATION DOSAGE

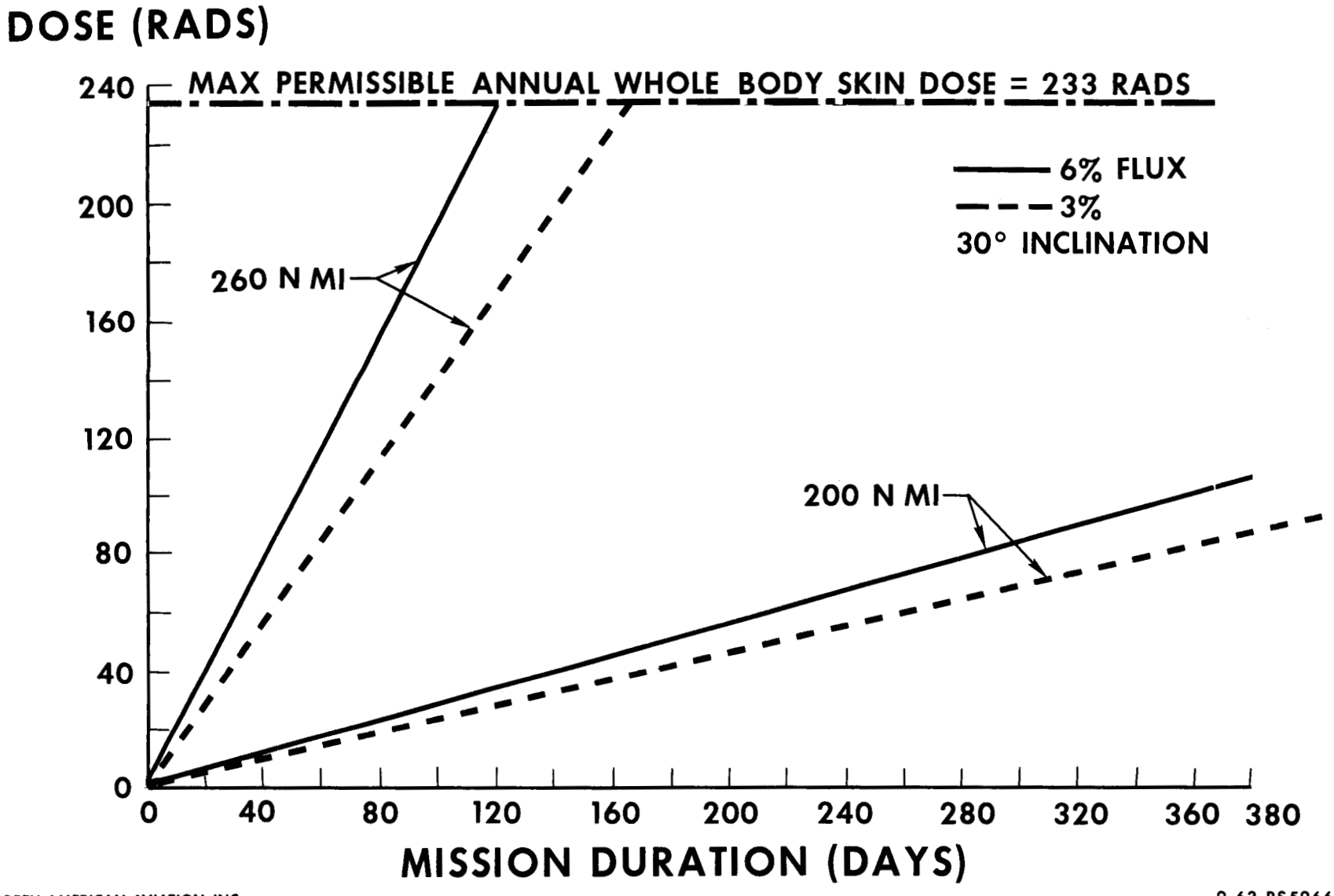

NORTH AMERICAN AVIATION, INC.
SPACE AND INFORMATION SYSTEMS DIVISION

9-63 PS59661

LM RADIATION DOSAGE

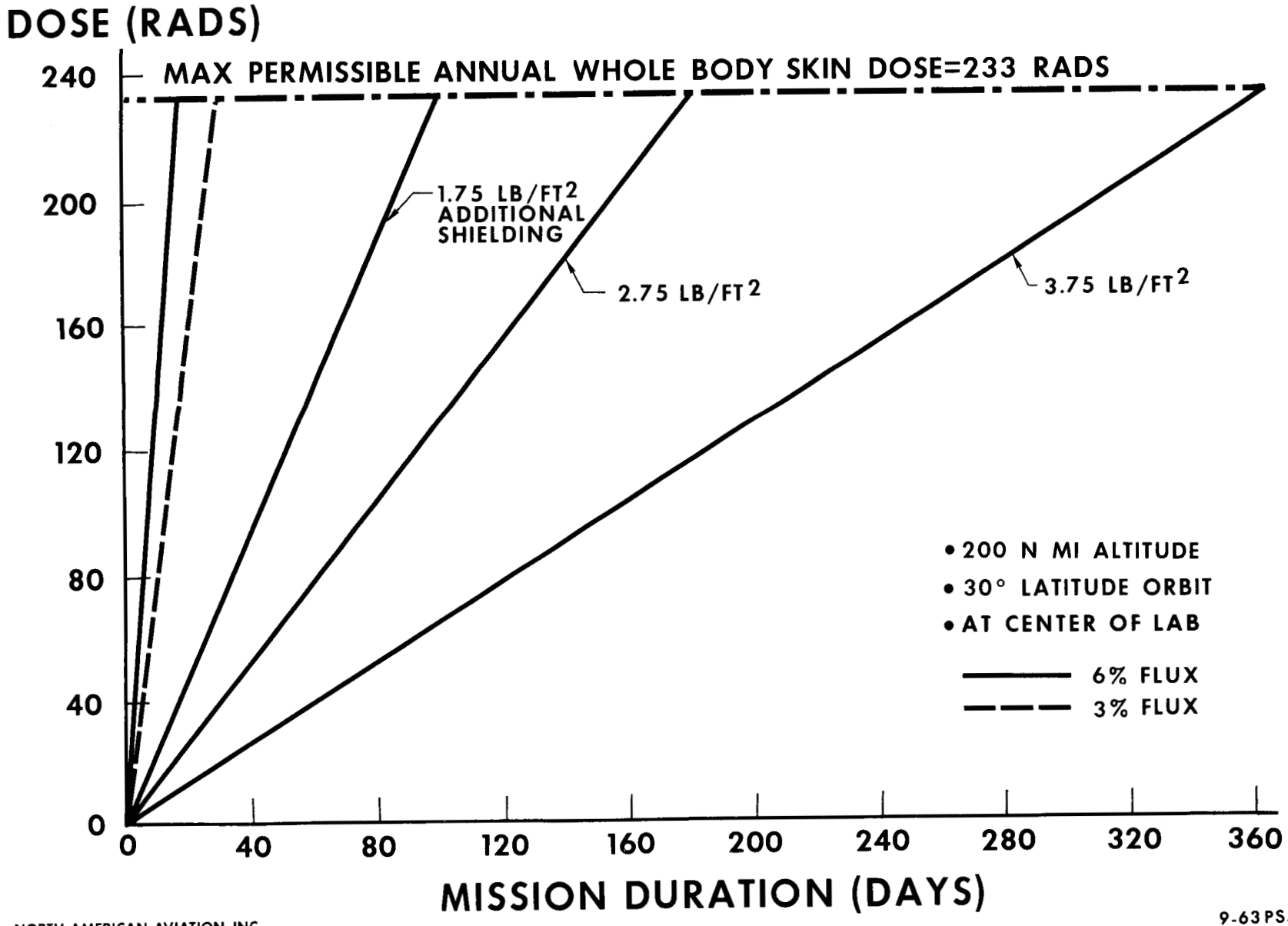

NORTH AMERICAN AVIATION, INC.
SPACE AND INFORMATION SYSTEMS DIVISION

9-63PS59660

TOTAL ACCUMULATED SKIN DOSE

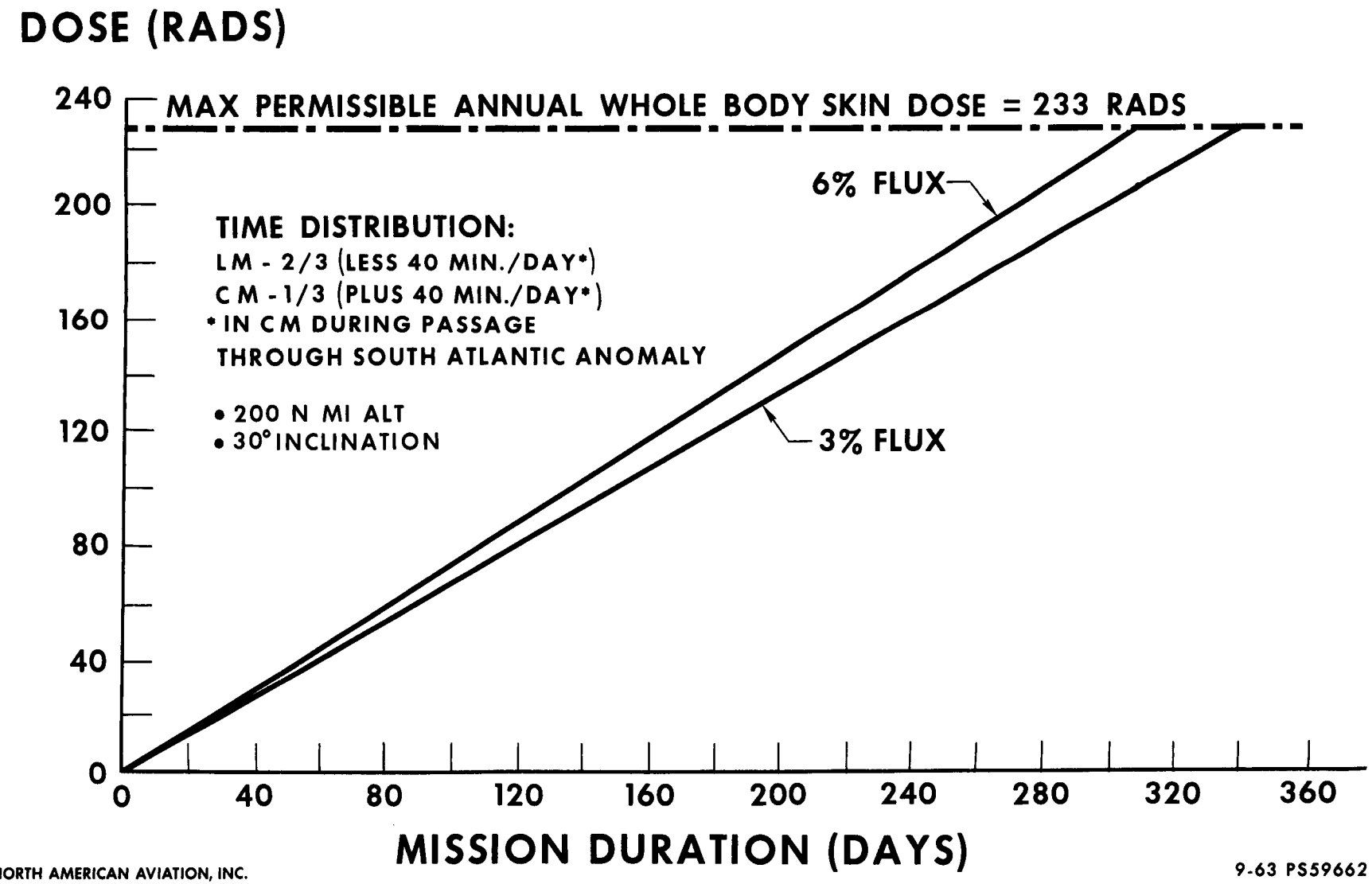

NORTH AMERICAN AVIATION, INC.
SPACE AND INFORMATION SYSTEMS DIVISION

9-63 PS59662

MINIMAL BIOMEDICAL EXPERIMENTS

	VOL (IN^3)	PWR (W)	WT (LB)
1. BLOOD PRESSURE	250.0	0	5.0
2. ELECTROCARDIOGRAM	500.0	10.0	10.0
3. URINE VOIDING	80.0	0	0.25
4. MUSCLE TONE	81.0	0	2.0
5. FOOD INTAKE & APPETITE	0	0	0
6. FLUID INTAKE & OUTPUT	0	0	0
7. BODY TEMPERATURE	0.25	0	0.25
8. BOWEL HABITS & SAMPLES	0	0	0
9. RESPIRATORY RATE & VOLUME	20.0	25.0	1.0
10. CARDIAC OUTPUT	0	0	0
11. OXYGEN UPTAKE	16.0	5.0	5.0
12. HEMOGLOBIN ANALYSIS	0.25	0	1.0
13. CARDIOVASCULAR & RESPIRATORY RESPONSE TO EXERCISE STRESS	0	0	0
14. VENOUS PRESSURE	8.0	5.0	0.5
15. CIRCULATION TIME	0	0	0
16. CALCIUM BALANCE	0	0	0
17. ALKALINE PHOSPHATASE	0	0	0
18. RESPIRATORY QUOTIENT & BASAL METABOLISM RATE	4810.0	310.0	71.0
19. BONE X-RAYS	7300.0	550.0	110.0
20. MAXIMUM BREATHING CAPACITY	0	0	0
21. GASTRO-INTESTINAL SERIES-BARIUM SWALLOW	64.0	550.0	2.0
22. KIDNEY STONE FORMATION	0	550.0	0
23. URINE CREATININE	432.0	25.0	2.0

MINIMAL BIOMEDICAL EXPERIMENTS (CONT)

	VOL (IN^3)	PWR (W)	WT (LB)
24. URINALYSIS (PROTEIN, SUGAR, BLOOD, ACETONE)	0	0	0
25. RED BLOOD COUNT (SURVIVAL TIME & MASS)	0	0	0
26. BLOOD VOLUME	7500.0	80.0	340.0
27. HEMATOCRIT	432.0	0	2.0
28. BOWEL MOTILITY	0	0	0
29. REGURGITATION & NAUSEA	0	0	0
30. CHEST X-RAY (LUNGS & HEART)	0	550.0	0
31. ELECTROMYOGRAM (MUSCLE TONE-TREMOR)	2.0	1.0	0.5
32. DEEP TENDON REFLEX	2.0	0	0.5
33. ELECTROENCEPHALOGRAM	2.0	1.0	0.5
34. RHEO-ENCEPHALOGRAM (CEREBRAL BLOOD FLOW)	1728.0	75.0	30.0
35. EASINOPHIL COUNT (BLOOD CELLULAR MATERIAL)	300.0	0	3.0
36. TOTAL BODY WATER	0	0	0
37. GASTRO-INTESTINAL ABSORPTION TESTS	0	0	0
38. TIDAL VOLUME	0	0	0
39. MINUTE VOLUME	0	0	0
40. SLEEP CYCLES & CHARACTERISTICS	0	0	0
41. VENOUS pH	0	0	0
42. VENOUS pCO_2 & pO_2	0	0	0
43. SERUM ELECTROLYTES (Na, K)	2.0	0	0.12
44. URINE ELECTROLYTES (Na, K)	2.0	0	0.12
45. PLASMA PROTEINS	2.0	0	0.12
46. SERUM OSMOLARITY	2.0	0	0.12
47. PHONO-CARDIOGRAM	20.0	10.0	2.0

ADDITIONAL BIOMEDICAL EXPERIMENTS

	VOL (IN^3)	PWR (W)	WT (LB)
48. ABDOMINAL SOUNDS	0	0	0
49. MUCOSAL INTEGRITY	0	550.0	0
50. JOINT MOTION & PAIN	0	0	0
51. ALERTNESS/DROWSINESS	0	0	0
52. SKIN THICKNESS	1.0	0	.12
53. HYPOXIA & HYPERCARBIA	0	0	0
54. BLOOD UREA NITROGEN	0	0	0
55. COMPLETE BLOOD COUNT	2.0	0	.12
56. CHEST CIRCUMFERENCE	1.0	0	.12
57. BREATH HOLDING	0	0	0
58. DISPNEA & CHEST PAIN	0	0	0
59. SERUM ATP	0	0	0
60. BLEEDING TIME	1.25	0	.25
61. LIVER SIZE	0	0	0
62. CLONUS	0	0	0
63. RETINAL EXAMINATION	3.0	0	1.0
64. URINARY 17-KGS	2.0	0	.12
65. URINARY CATECHOLAMINES	2.0	0	.12
66. SKIN COLOR-MUCOUS MEMBRANES-NAIL EXAM	0	0	0
67. RED BLOOD COUNT-UPTAKE T_3	0	0	0
68. PULSE WAVE VELOCITY	8.0	5.0	.5
69. INCIDENCE OF AEROTITUS MEDIA	2.0	10.0	.5
70. RETICULOCYTE COUNT	0	0	0
71. ARTERIAL pH	3.0	0	.25
72. ARTERIAL pO_2 pCO_2	0	0	0
73. BACTERIOLOGICAL STUDIES	0	0	0
74. BALLISTO CARDIOGRAM	40.0	10.0	2.0
75. INCIDENCE OF PERSPIRATION	0	0	0
76. INCIDENCE OF SALIVATION	0	0	0
77. CLOTTING TIME	0	0	0
78. PROTHROMBIN TIME	0	0	0
79. SEDIMENTATION RATE	0	0	0
80. URINALYSIS	0	0	0

MINIMAL BEHAVIORAL EXPERIMENTS

	VOL (IN^3)	PWR (W)	WT (LB)
1. ARM-HAND MANIPULATION	15	0	0.5
2. COMPUTATION	0	0	0
3. DOCKING (TRACKING)	5184	300	200.0
4. VISUAL ACUITY	4150	225	40.0
5. PERIPHERAL DETECTION (VISUAL)	1728	0	2.0
6. SPEECH PERCEPTION	0	50	0
7. STATIC DEPTH PERCEPTION	0	0	0
8. COMPOUND PATTERN DISCRIMINATION	0	0	0
9. RECOGNITION OF LIMB LOCATION & MOVEMENT	1728	11	2.0
10. MONITORING (SET)	0	0	0
11. DETECTION — DISCRIMINATION OF PRESSURE	200	0	2.0
12. DETECTION OF ANGULAR ACCELERATION	5184	20	20.0
13. DYNAMIC DEPTH PERCEPTION	0	0	0
14. BODY POSITIONING	64	0	0.5

ADDITIONAL BEHAVIORAL EXPERIMENTS

	VOL (IN^3)	PWR (W)	WT (LB)
15. SPEAKING	0	0	0
16. LEARNED PROCEDURE	0	0	0
17. DECISION MAKING	0	0	0
18. TRACKING	0	0	0
19. BRIGHTNESS DISCRIMINATION	0	0	0
20. COLOR DISCRIMINATION	0	0	0
21. TONE DETECTION/DISCRIMINATION	0	0	0
22. STEREOGNOSIS	20.0	0	1.0
23. DETECTION OF LINEAR ACCELERATION	0	0	0
24. DETECTION OF VIBRATION	60.0	10.0	1.5
25. HAND MANIPULATION	220.0	1.0	7.5
26. FINGER MANIPULATION	60.0	0	2.0
27. ASSOCIATION	0		0
28. DEDUCTIVE REASONING	0	0	0
29. RECORDING	0	0	0
30. GUIDED PERFORMANCE	0	0	0
31. PROBLEM SOLVING	0	0	0
32. MASS HANDLING	0	0	0
33. READING	0	0	0
34. STEREOPOSIS (CONVERGENCE)	0	0	0
35. WRITING	0	0	0
36. LEG MANIPULATION	200.0	1.0	5.0
37. TIME PERCEPTION	0	0	0
38. SOUND LOCALIZATION	2.0	0	.1
39. CUE ABSTRACTION	0	0	0
40. DETECTION OF LIGHT TOUCH	1728.0	50.0	20.0
41. TEXTURES DISCRIMINATION	6.0	0	.5
42. OLFACTION	300.0	0	3.0
43. DETECTION OF HEAT/COLD	1728.0	1.0	5.0
44. DETECTION OF PAIN	0	0	0
45. INDUCTIVE REASONING	0	0	0
46. VISUAL ESTIMATE OF SPATIAL VOLUME	0	0	0
47. TONE DURATION	0	50.0	0
48. TONE PATTERN DISCRIMINATION	0	50.0	0
49. DETECTION OF AUDITORY MOTION	0	0	0

TYPICAL ENGRG/OPERATIONAL EXPERIMENTS

EARTH SURVEILLANCE
- MAPPING RADAR
- GROUND TARGET DETECTION RADAR
- COMBINED RADAR/IR SYSTEM
- IR GROUND TARGET DETECTION - HRIR
- HI RES LONG FOCAL LENGTH CAMERA
- DAMAGE ASSESSMENT
- POST ATTACK INTELLIGENCE
- WEATHER OBSERVATION
- ARMS CONTROL SYSTEMS

SPACE SURVEILLANCE
- RANGING RADAR
- SCANNING RADAR
- TRACKING RADAR
- IR SCAN SYSTEMS
- RADIATION DETECTORS
- OPTICAL DETECTORS
- LUNAR SURVEILLANCE
- MULTIPLE TARGET DISCRIMINATION
- ENVIRONMENT MEASUREMENT

INSPECTION
- MASS DETECTOR
- RADIATION DETECTOR
- FLYBY INSPECTION MANEUVERS
- STATION KEEPING
- ULTRA VIOLET DETECTION
- TARGET DISCRIMINATION

INTERCEPTION
- RENDEZVOUS/UNCOOPERATIVE
- DOCKING
- RANGING SYSTEMS
- VISUAL ACUITY
- SPACE PERCEPTION
- ILLUMINATION TECHNIQUES
- ORBITAL TRANSFER
- MAN/MACHINE INTEGRATION

LOGISTICS
- CARGO HANDLING
- MAINTENANCE & REPAIR
- SPACE STORAGE
- SPACE RESCUE
- SPACE DISPOSAL
- RECOVERY FROM SPACE

ELECTRONIC WARFARE
- JAMMING EARTH TERMINALS
- JAMMING SPACE TERMINALS
- ELINT DATA SYSTEMS
- COMINT DATA SYSTEMS
- CHAFF LAUNCHERS
- ECCM TECHNIQUES

DEFENSIVE TECHNIQUES
- DECOYS
- ORBITAL MANEUVERS
- RADAR SIGNATURE CHANGE
- IR SIGNATURE CHANGE
- ELECTRONIC JAMMING
- RADAR REFLECTION INTERFERENCE
- WARNING SYSTEMS
- RADIATION SHIELDING

OFFENSIVE TECHNIQUES
- ELECTRONIC KILL MECHANISMS (LASERS)
- NUCLEAR MISSILES
- CHEMICAL CLOUDS
- MINE FIELD
- HYPERVELOCITY PELLET CLOUDS
- SPACE LAUNCHERS (PRECISION SEPARATION)
- PRECISION DEORBIT & EARTH DELIVERY
- NEUTRALIZATION TACTICS

COMMAND & CONTROL
- SECURE COMMUNICATIONS
- OPERATIONS BASE IN SPACE
- WORLD WIDE COMMAND LINK
- DATA PROCESSING & HANDLING
- AUXILIARY COMMAND POST
- BATTLE CONTROL
- WEAPONS CONTROL & DISPERSAL

EXTRA VEHICULAR OPERATIONS
- SPACE SUITS
- TETHERING
- SPACE TOOLS
- BACK PACKS (LIFE SUPPORT)
- MANEUVER & CONTROL SYSTEMS

PROPULSION SYSTEMS
- MANEUVERING SATELLITE ENGINES
- ION ENGINE PERFORMANCE
- FUEL STORAGE
- THROTTLABLE ENGINE
- PROPELLANT TRANSFER
- NUCLEAR PROPULSION
- EXOTIC CHEMICAL PROPULSION
- VELOCITY VECTOR CONTROL

GUIDANCE & CONTROL
- NONRADIATIVE NAVIGATION
- HIGH ALTITUDE ALTIMETER
- HIGH ALTITUDE DOPPLER VELOCITY SYSTEM
- INERTIAL PLATFORM/STELLAR MONITOR PERF.
- ZERO "G" GYRO PERF.
- STAR DISCRIMINATION

POWER SYSTEMS
- NUCLEAR REACTOR OPERATIONS (SNAP 8)
- SOLAR DYNAMIC (ASTEC) PERFORMANCE
- SPACE RADIATORS
- LIQUIDS AT ZERO "G"
- LONG LIFE/HIGH POWER SYSTEMS

ELECTRONICS
- LASER RANGING
- LASER COMMUNICATIONS
- DATA STORAGE DEVICES
- ELECTRONIC IMAGING
- ANTENNAS - STEERABLE
- SPACE-TO-SPACE COMMUNICATIONS

MATERIALS
- SPACE ASSEMBLY
- EXPANDABLE STRUCTURES
- WELDING
- LUBRICANTS
- SPUTTERING
- LEAKAGE
- COATINGS

EXPERIMENTAL PACKAGE SUMMARY

	MINIMAL	TOTAL "DESIRED"
WT (LBS) • EQUIPMENT • CONSUMABLES	856 20 876	907 50 957
VOL (FT^3) • EQUIPMENT • CONSUMABLES	24 2 26	27 5 32
POWER (WATTS) • PEAK • AVERAGE CONTINOUS	550 × 15 MIN. × 12/MONTH 8.4	550 × 15 MIN. × 15/MONTH 9.3
CREW REQMT • MINIMUM NUMBER • DAILY TIME/MAN	2 3:45	2 6:30
WORKSPACE (FT^3) • MINIMUM • DESIRED	81 (6.5 × 2.5 × 5) 294 (7 × 6 × 7)	81 (6.5 ×2.5 × 5) 294 (7 × 6 ×7)

DAILY CREW ACTIVITIES

	CONCEPT I	CONCEPT II	CONCEPT III
SLEEP	16.0	24.0	24.0
CREW STATION			
•MONITOR & CONTROL	3.46	3.50	3.50
•MAINTAIN	.55	.56	.65
PERSONAL ACTIVITIES			
•HYGINE	2.0	3.0	3.0
•FOOD	2.0	3.0	3.0
RECREATION	4.0	6.0	6.0
RADIATION CELLAR	1.3	2.0	2.0
EXPERIMENTS	12.8	19.2	19.2
UNSCHEDULED TIME	5.89	10.74	10.65
TOTAL MAN-HRS	48.0	72.0	72.0

TYPICAL DAILY WORK/REST CYCLE

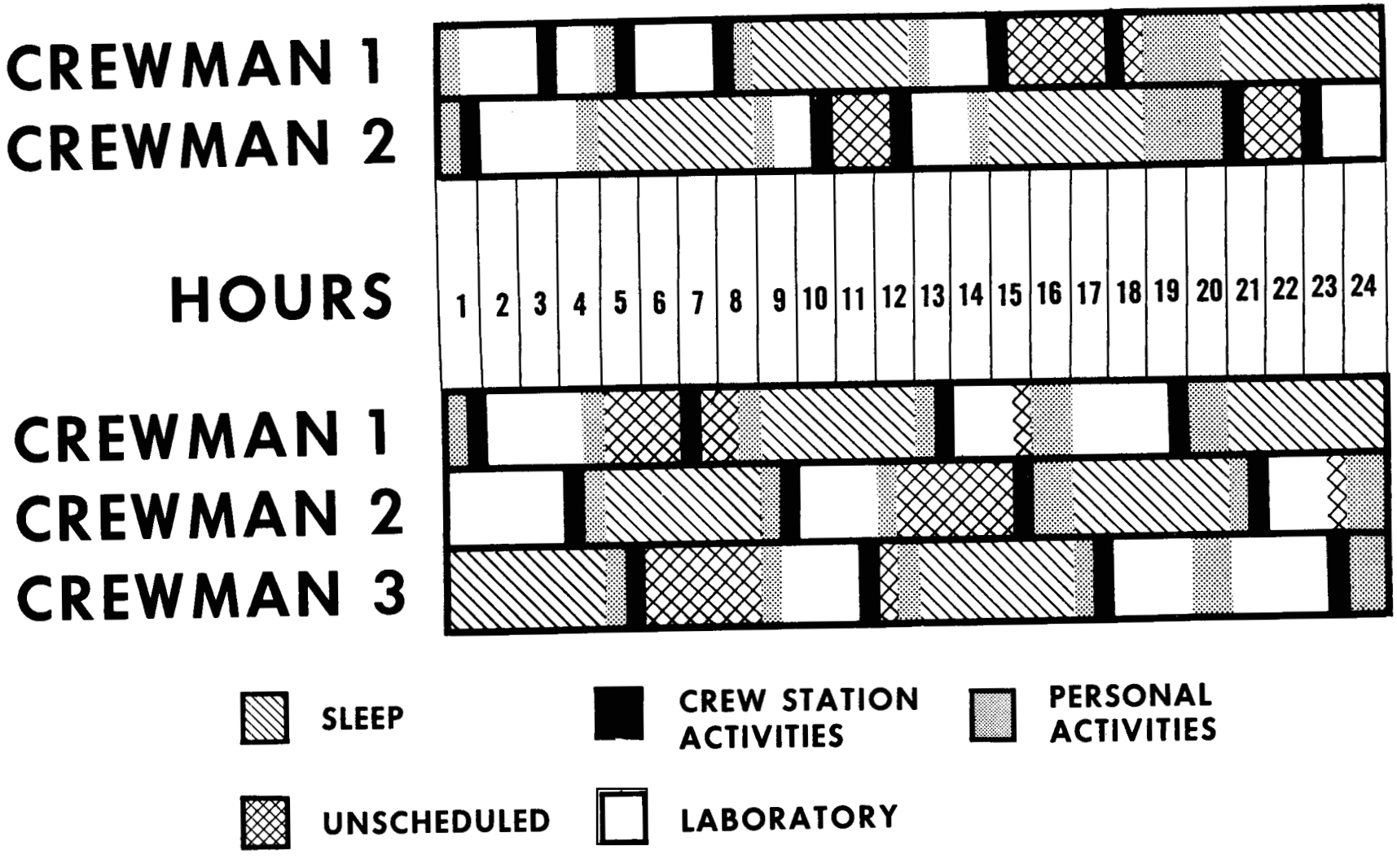

OPERATIONAL IMPLEMENTATION

9-63 PS59672

STUDY AREAS

- RELIABILITY
- LOGISTICS
- GSE
- FACILITIES
- MANUFACTURING
- TEST
- SCHEDULE
- COST

RELIABILITY APPORTIONMENT

SUBSYSTEMS

STRUCTURAL & MECHANICAL	.99410
LAUNCH ESCAPE	.99993
ELECTRICAL POWER (SOLAR)	.99756
EARTH LANDING	.99989
CRYOGENIC STORAGE	.99361
REACTION CONTROL	
SERVICE MODULE	.99959
COMMAND MODULE	.99981
ENVIRONMENTAL CONTROL	.99926
SERVICE PROPULSION	.99955
STABILIZATION & CONTROL	.99826
GUIDANCE & NAVIGATION	.99305
COMMUNICATIONS & DATA	.99503
INSTRUMENTATION	.99126
TOTAL (CM + SM)	.95598

TOTAL SYSTEM

GSE	.99993
GOSS	.99107
BOOST	.95000
CM+SM	.95598
TOTAL	.90000

? Basic Apollo has .95598 also
This list shows reapportionment

LOGISTICS

CONSTRAINTS

- NO EXTRA-VEHICULAR OPNS
- NO ACCESS TO SM EQPMT
- CM ACCESSIBILITY LIMITATIONS
- ZERO-G ENVIRONMENT
- LIMITED MALFUNCTION CORRECTION TIME

MAINTENANCE CONCEPT

- PREVENTIVE & CORRECTIVE MAINT
- MODULAR REPLACEMENT
- MINIMAL REPAIR CAPABILITY
- "SHIRT-SLEEVE" WORKING ENVIRONMENT
- INTEGRAL FAULT ISOLATION EQUIP

120 DAY SUPPLY REQUIREMENTS

	CONCEPT I				CONCEPT II		CONCEPT III	
	2 MAN		3 MAN		3 MAN		3 MAN	
	WT (LB)	VOL (CUFT)	WT (LB)	VOL (CUFT)	WT (LB)	VOL (CUFT)	WT (LB)	VOL (CUFT)
WASTE MGMT	24.90	0.36	37.35	0.53	37.35	0.53	37.35	0.53
FOOD	312.2	9.85	468.0	14.8	468.0	14.8	468.0	14.8
HYGIENE	110.2	5.50	155.8	7.05	155.8	7.05	155.8	7.05
G & N	52.0	1.3	52.0	1.3	52.0	1.3	52.0	1.3
COMM & DATA	80.0	2.0	80.0	2.0	80.0	2.0	80.0	2.0
STAB & CONTR	30.0	0.75	30.0	0.75	30.0	0.75	30.0	0.75
POWER	—	—	—	—	32.5	0.8	32.5	0.8
ENVIRON CONTR	1133.0	12.9	1443.0	15.2	1960.0	20.6	1978.0	21.5
EXPERIMENTAL	27.7	2.4	27.7	2.4	62.1	4.38	85.0	6.0
MISCELLANEOUS	4.0	0.12	4.0	0.12	5.0	0.16	5.0	0.16
CM TOTALS	641.0	22.28	854.85	28.95	823.15	26.43	805.15	26.43
SM TOTALS	1133.0	12.9	1443.0	15.2	1960.0	20.6	1960.0	20.6
LAB TOTALS	—	—	—	—	99.6	5.34	140.5	7.86
TOTALS	1774.0	35.18	2297.85	44.15	2882.75	52.37	2905.65	54.89

[redacted]

SCHEDULE INTERFACE

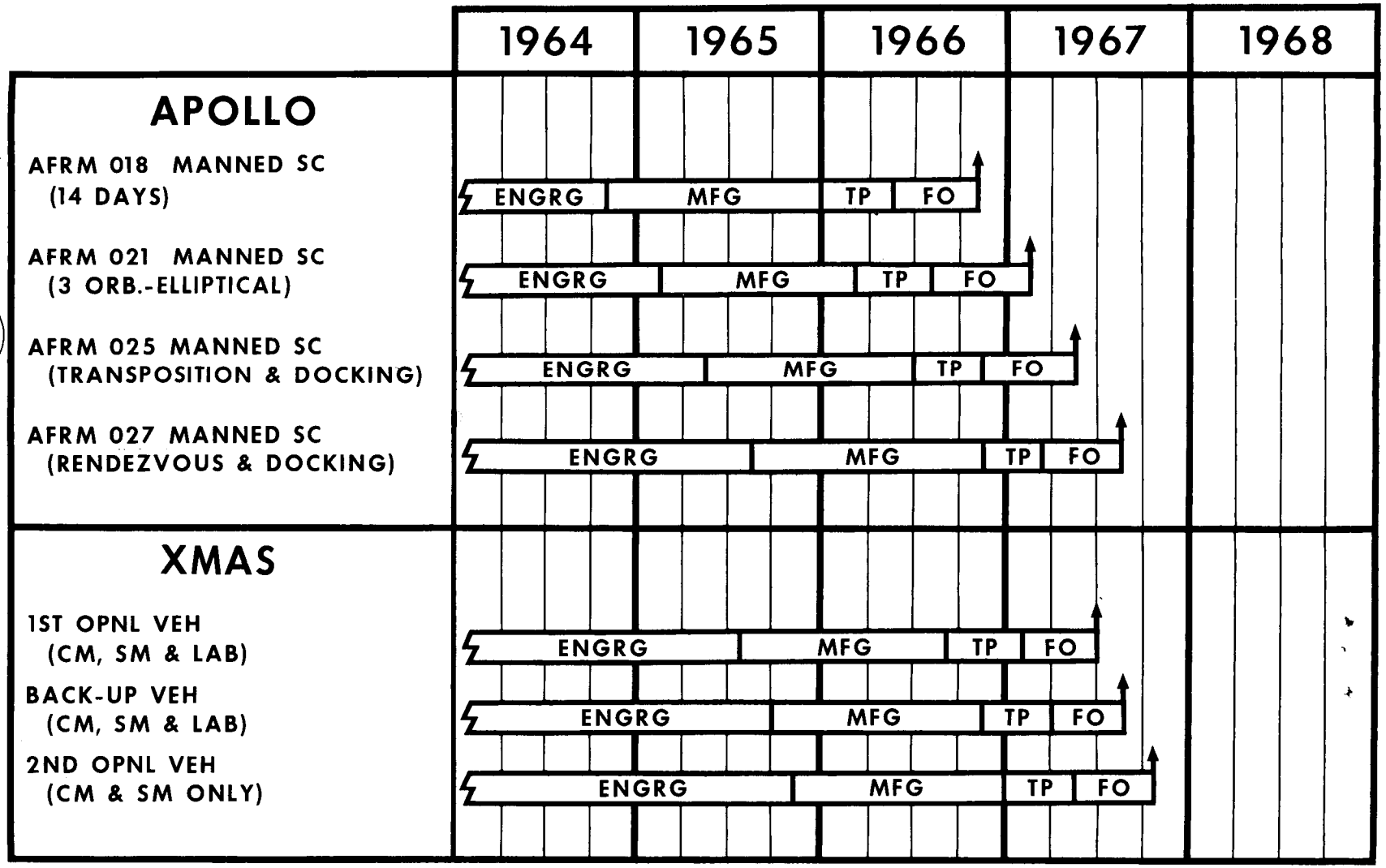

SAT IB

NORTH AMERICAN AVIATION, INC.
SPACE AND INFORMATION SYSTEMS DIVISION

[redacted]

Group 4 Downgraded at 3 year intervals; declassified after 12 years

9-63 PS 59679

This document contains information affecting the national defense of the United States within the meaning of the Espionage Laws, Title 18 U.S.C. Section 793 and 794. Its transmission or revelation of its contents in any manner to an unauthorized person is prohibited by law.