[redacted]

Grumman Design 378

APOLLO EXTENSION SYSTEM EARTH ORBIT MISSION STUDY

[U]

Final Report

Vol. 5

Cost and Schedule Analysis

N79-76182

(NASA-CR-117677) APOLLO EXTENSION SYSTEM EARTH ORBIT MISSION STUDY. VOLUME 5, ADDENDUM 1 FINAL REPORT (Grumman Aircraft Engineering Corp.) 96 p

Unclas
00/12 11497

[redacted]

[redacted]

[redacted]

~~CONFIDENTIAL~~

C65-9200

Grumman Design 378

APOLLO EXTENSION SYSTEM EARTH ORBIT MISSION STUDY [U][U]

Final Report

to

National Aeronautics and Space Administration
Manned Spacecraft Center
Advanced Spacecraft Technology Division
Houston, Texas 77058

by

Grumman Aircraft Engineering Corporation
Bethpage, New York 11714

THIS DOCUMENT CONTAINS INFORMATION AFFECTING THE NATIONAL DEFENSE OF THE UNITED STATES WITHIN THE MEANING OF THE ESPIONAGE LAWS, TITLE 18, U.S.C., SECTION 793 AND 794. THE TRANSMISSION OR THE REVELATION OF ITS CONTENTS IN ANY MANNER TO AN UNAUTHORIZED PERSON IS PROHIBITED BY LAW.

Group 4 Document
Downgraded at 3-Year Intervals
Declassified after 12 Years

CLASSIFICATION CHANGE
To UNCLASSIFIED
By authority of GDS-EO 11652 Date 12/31/72
Changed by L. Shirley
Classified Document Master Control Station, NASA
Scientific and Technical Information Facility

Contract No. NAS 9-3681
Addendum 1

ASR 378-1A

Vol. 5
10 May 1965

Copy No.

[redacted]

~~CONFIDENTIAL~~

Table of Contents

		Page
1	INTRODUCTION	1
2	COSTS	3
	Spacecraft Modifications, Design, and Development (Designated "Figure 1")	4
	Experiment Integration, Design, and Development (Designated "Figures 2")	5-25
	Description of Spacecraft Modifications (Designated "Figures 3")	26-29
	Production Phase (Designated "Figures 4")	30-50
	Retrofit Hardware Credits (Designated "Figure 4A")	51
	Alternate Cost Estimate for Production Line Modification, Flts. 1-8 (Designated "Figure 4B")	52
	Operations Phase and Additional Non-Recurring Costs (Designated "Figure 5")	53
	Cost Summary Design and Development	54
	Cost Summary Production	55
	Breakdown of Logistics Cost	56
	Breakdown of GSE Costs	57
	Costing Rationale and Methodology	59
3	LEM LAB DEVELOPMENT PROGRAM	63
4	MANUFACTURING PLAN	73
5	SUPPORT PROGRAM	88

PREFACE

This report supersedes Grumman Report No. ASR 378-1, "Supporting Data for Final Presentation", and presents the results of the study conducted by the Grumman Aircraft Engineering Corporation under Addendum 1 to the LEM Utilization Study (Contract NAS 9-3681) for the National Aeronautics and Space Administration, Manned Spacecraft Center. The following five volumes comprise the total report:

- Volume 1 - General Engineering Studies (Confidential)
- Volume 2 - Flight Mission and Configuration Descriptions for NASA Experiment Groupings (Confidential)
- Volume 3 - Flight Mission and Configuration Descriptions for Air Force MOL Experiment Groupings (Secret - Special Access Required)
- Volume 4 - Identification and Description of NASA Experiments (Unclassified-Official Use Only)
- Volume 5 - Cost and Schedule Analysis (Confidential)

The basic LEM Utilization Study is concerned with exploring the potential uses of the Lunar Excursion Module (LEM) for AES (Apollo Extension System) missions beyond the initial lunar landing. The following configurations are being investigated:

- LEM Lab - to be used in Earth or lunar orbit as a laboratory module for periods up to 45 and 28 days, respectively.
- LEM Shelter - to be used as an unmanned lunar logistics vehicle, using the LEM ascent stage as a lunar shelter and providing support for two men for periods up to 14 days.
- Extended LEM - to be used as a personnel carrier for LEM Shelter missions, and be capable of quiescent storage on the lunar surface for periods up to 14 days.
- LEM Truck - to be used as an unmanned lunar logistics vehicle, providing a more versatile payload capability than the LEM Shelter. In this configuration, the ascent stage is removed, and the subsystems required for the translunar and landing mission phases are located in the descent stage.

Addendum 1 to the basic contract was only concerned with the LEM Lab for Earth-orbit missions as integrated with the CSM in the following spacecraft configurations:

- For 14-day missions - a basic Block II CSM with a LEM Lab for total experiment mission support.
- For 30-and 45-day missions - an Apollo-X CSM (as described in the final report to Contract NAS 9-3140) with a LEM Lab for total experiment mission support. This is referred to as Configuration "C".

- For 30-and 45-day missions - a modified Block II CSM with a LEM Lab for total experiment mission support and extension of CSM life support, electric power, and attitude control beyond approximately 14 days. This is referred to as Configuration "D".

The study effort was composed of tasks within the following major areas:

- Experiment definition
- Spacecraft definition
- Cost and schedule analysis.

Conceptual designs were developed, where necessary, to adequately define the selected experiments to enable integration into the LEM Lab. This included the description of such factors as:

- Size, weight and power
- Preferred orbit, orientation, and spacecraft location
- Attitude accuracy and stability
- Set-up, calibration, and duty-cycle
- Crew skills and time
- Controls and displays
- Communications and data handling

Spacecraft configurations were then defined for the selected experiment groupings. Each mission was analyzed to establish the experiment utilization profile and associated crew schedule. This provided the functional requirements from which the supporting spacecraft subsystems were configured. The experiment package and spacecraft subsystems were then integrated into the LEM Lab to provide a spacecraft design capable of meeting the mission objectives. One configuration was developed for each 14-day mission. Two configurations, "C" and "D", were developed for each mission exceeding 14 days.

A cost and schedule analysis was also made for each LEM Lab flight. This analysis included:

- Design and development cost for the basic LEM Lab
- Additional design and development cost unique to each flight
- Production cost of each integrated Lab
- Launch support cost/year
- Program schedule

1 INTRODUCTION

This report contains the cost and development schedule data for spacecraft, spacecraft modifications, and experiment integration in accordance with the requirements of Contract NAS 9-3681 - Addendum 1 to LEM utilization Study. The budgetary estimated costs and schedules presented herein are for planning purposes only.

Cost/Schedule Data are based on following guidelines, assumptions and conditions:

- All costs are expressed in C.Y. 1965 dollars (no escalation). G. & A. overhead is included in all cost numbers but fee is excluded.
- Retrofit modification from completed LEM S/C for all flights thru NO.8 (219). Production line modifications and build-up for Flight 9 (221) and subsequent and all D.O.D. flights. Estimated costs for production line modification of flights 1-8 are also provided.
- No interference with the Apollo program.
- The AES flight schedule was used to prepare the development program and cost phasing.
- The DOD flights occur at two month intervals subsequent to the NASA AES program.
- The first AES flight will be a battery powered lab.
- The development program is directed toward meeting the general requirements of the LEM Lab for all the missions and in particular for flight 2 (211) and subsequent.
- The variations in lab configuration as a function of the CSM I, C or D configuration are not significant to warrant a separate design and development of S/C modifications for each.
- The availability of LEM test articles is based on the proposed LEM Program Schedule 33A of 3/29/65.
- Fabrication and assembly of additional test articles for the LEM Lab program were phased into the LEM program where openings now exist therefore would not interfere with the basic Apollo program.
- As required in the Thermal-Vacuum (TV) demo test programs at MCS, flight type experiment hardware will be made available for installation and integration into the laboratory.
- A thorough preliminary design and some development testing of radiators will be performed prior to the AES program. Costs of this D. & D. effort are not included herein.

- Requalification of LEM subsystem hardware used on the LEM Lab will not be required for the launch or ambient environment. Test for life endurance will be conducted.

- The cryogenic storage and feed system and the power generation section used on the CSM does not require subassembly requalification for integration into the LEM Lab.

- Violation of the pressure vessel in retrofit modifications will be verified on a test article and accepted on the flight article with a proof pressure test. No violation will affect the structural integrity of the ascent stage.

- Solution to the RCS tank bladder permeation will be solved for the LEM program and meet the requirements of the long duration LEM Lab programs.

- Utilization of the CSM inverter in the LEM Lab is compatible with the power distribution section.

- Development Spares, DMSM (Development & Support Material) for support of fabrication/testing of production articles until acceptance, have been included in the amount of two (2) sets of LEM Lab-unique articles.

- Operational Spares for support of production articles after acceptance, have been included in the amount of three (3) sets of LEM Lab-unique articles - one (1) each for E.T.R., Grumman, and Subcontractor.

- LEM subsystem equipment which is not modified for LEM Lab use will have adequate support from Apollo program.

- Logistic support (G.S.E., Spares, Publications, Training and Trainers) for the experiment packages is not included.

- Simulation equipment for subsystem (vehicle verification is not required from Grumman for experiment fabrication/testing.

- ALL LEM GSE which is common to LEM Lab will be available for use. (No conflict in schedules or quantity.

- Four (4) sets of all modified or new GSE will be required.

- On all retrofit LEM spacecraft dollar credit was taken for all reusable subsystems and subassemblies removed. A table of these credits is provided for use in the event that the assumption of such credits is invalid.

This cost analysis has been performed on an assumed program that consists of 15 NASA and 6 DOD flights. Late in the study effort, Grumman was requested to include additional technical data on one more NASA flight (flight no. 16) and several more DOD flights (nos. 7, 8, 9 & 10.) However, cost data on these flights was not requested.

2 COSTS

Figure 1

Configuration All

S/C Mods - Design & Development (Hrs. in 1,000's $ in Millions
(All costs based on C.Y. 1965 rates).

Subsystem	Current Apollo D. & D. Eng. Hrs.	Current Apollo D. & D. Total Cost (1)	Modification Costs: Engineering Hrs. (2)	Engineering Cost	Devel. Support	Major Test Item Fab. Qty.	Major Test Item Fab. Cost	Trainers Simul. & H'Books	Tooling	Total Cost
Structure*	3,676	$122.0	688	$ 6.20	$ 1.96	2	$ 4.25	$0.50	$1.74	$ 14.65
Crew System	930	15.2	75	.68	.77	-	.88	.60	.34	3.27
Environmental Control	658	30.3	250	2.53	1.26	3	.54	.60	0	4.93
Electrical Power	933	69.5	286	2.68	3.18	3	4.40	.70	.14	11.10
Stab. & Control	854	68.7	196	2.88	2.80	-	9.24	.80	0	15.72
Reaction Controls	364	33.4	180	2.72	1.30	-	1.74	.20	0	5.96
Communications	502	48.6	80	.83	.59	-	.43	.22	0	2.07
Guidance & Navigation	636	86.3	0	0	0	-	0	0	0	0
Instrumentation	1,040	31.9	80	.94	.39	-	.34	.20	.10	1.97
Propulsion	1,009	133.0	0	0	0	-	0	0	0	0
Non-Subsystem Eng**	6,050	94.5	1,650	14.84						14.84
Plng. & Mgmt.***	2,860	44.6	778	7.00						7.00
G.S.E.	4,500	145.0	310	2.79	28.75	-	0	1.80	0	33.34
Experiment Integr.	-	-	0	0	0	-	0	-	.51	.51
TOTAL	24,012	$923.0	4,573	$44.09	$41.00		$21.82	$5.62	$2.83	$115.36

(1) Includes Initial Tooling (87.0M)
(2) Includes Major Subcontractor Hours
* Includes Landing Gear, Adapter, Final Assembly and Acceptance Tests
** Includes Non-Subsystem-Related Engineering, Configuration Mgmt., Reliability Eng. and System Simulation.
*** Includes Program Planning & Management, Quality Assurance, Reproduction, and Program Coordination.

Figure 2

Experiment Integration D & D

Flight No. 1 (209)
($ in Millions)

Subsystem	Cost	Modification Description
Structure	$ .58	Additional support structure for experiments, addition of railings for extra vehicular experiment activities, additional support structure for batteries.
Crew System	.09	Integration of the experiment controls and displays.
Env. Control	.09	Integration of the experiment coolant requirements into the LEM heat transport section, and modification of the cold plate arrangements.
Elec. Power Syst.	.18	Distribution section modified due to integration of experiment electrical requirements; installation and integration of additional batteries.
Stab. & Control		
Reaction Control		
Communications		
Instrumentation		
Non-Subsystem Eng.	.74	
Progr. Plng., Mgmt., Etc.	.34	
G.S.E.	1.97	Various as Required
Publications, Trainers & Trng.	.64	Various as Required
Total	$ 4.63	

Cost Commonality: (1)
(2)
(3)

Figure 2

Flight No. 2 (211)

Experiment Integration D & D

($ in Millions)

Subsystem	Cost	Modification Description
Structure	$ 3.82	Additional support structure for large cameras. (A) New low profile descent state. (B) Modify the pressure shell for a view-finder experiment.
Crew System	.09	Integration of the experiment controls and displays.
Env. Control	.09	Integration of experiment equipment coolant requirements into the LEM heat transport section and modification of the cold plate arrangements.
Elec. Power Syst.	.09	Modification of the distribution section to integrate experiment electrical requirements.
Stab. & Control		
Reaction Control		
Communications		
Instrumentation		
Non-Subsystem Eng.	1.12	Analyses related to the alignment of the numerous cameras. (High proportion of non-subsystem related engineering required.)
Progr. Plng., Mgmt., Etc.	.23	
G.S.E.	1.97	Various as Required.
Publications, Trainers & Trng.	.64	Various as Required.
Total	$ 8.05	

Cost Commonality: (1) A = $2.66 - Low Profile Descent Stage
(2) B = $ .25 - View Finder
(3)

Figure 2
Experiment Integration D & D

Flight No. 3 (507)
($ in Millions)

Subsystem	Cost	Modification Description
Structure	$ 2.21	(B) Modify the pressure shell for a view finder experiment. (C) Additional support structure for experiments 0901, 0902, 1201, 1202 and 1405.
Crew System	.09	Integration of the experiment controls and displays.
Env. Control	.09	Integration of experiment equipment coolant requirements into the LEM heat transport section and modifications of the cold plate arrangements.
Elec. Power Syst.	.18	Distribution section modified to integrate experiment electrical requirements.
Stab. & Control		
Reaction Control		
Communications		
Instrumentation		
Non-Subsystem Eng.	1.12	Analyses related to the alignment of optical experiments. (High proportion of non-subsystem related engineering required.)
Progr. Plng., Mgmt.,	.23	
G.S.E.	1.97	Various as Required
Publications, Trainers & Trng.	.64	Various as Required
Total	$ 6.53	

Cost Commonality:
(1) B = $ .25 - View Finder
(2) C = $1.85 - Camera Support
(3)

Figure 2

Flight No. 4 (509)

Experiment Integration D & D

Subsystem	Cost	Modification Description
Structure	$ 3.20	(A) Provide a low profile descent stage for deployable structure experiments.
Crew System	.09	Integration of the experiment controls and displays.
Env. Control	.09	Integration of experiment equipment coolant requirements into the LEM heat transport section and modification of the cold plate arrangements.
Elec. Power Syst.	.18	Modifications to the distribution section for experiment electrical requirements.
Stab. & Control		
Reaction Control	.36	Addition of tanks and propellant pressurization section to the basic subsystem.
Communications	.09	Modification to allow for the long term separated unmanned condition in the docking experiment.
Instrumentation		
Non-Subsystem Eng.	1.12	Analyses related to the unmanned docking and maneuvering experiment. (High proportion of non-subsystem related engineering required.)
Progr. Plng., Mgmt., Etc.	.23	
G.S.E.	1.97	Various as Required
Publications, Trainers & Trng.	.64	Various as Required
Total	$ 7.97	

Cost Commonality: (1) A = $2.66 - Low Profile Descent Stage
(2)
(3)

Figure 2

Experiment Integration D & D

Flight No. 5 (215)
($ in Millions)

Subsystem	Cost	Modification Description
Structure	$ 2.69	(B) Modify the pressure shell for view finder experiment. (C) Modifications to the structure for camera support. Winch support for artificial gravity experiment.
Crew System	.27	Integration of the experiment controls and displays; and install and integration of waste management equipment.
Env. Control	.09	Integration of the experiment equipment coolant requirement into the LEM heat transport section and modification of the cold plate arrangements.
Elec. Power Syst.	.09	Modification of the distribution section to integrate experiment electrical requirements.
Stab. & Control		
Reaction Control		
Communications	.09	Additional cabling to allow communications between the LEM Lab. and the CSM during the artificial gravity experiment.
Instrumentation		
Non-Subsystem Eng.	1.28	Analyses related to the artificial gravity experiment. (High proportion of non-subsystem related engineering required.)
Progr. Plng., Mgmt., Etc.	.30	
G.S.E.	1.97	Various as Required
Publications, Trainers & Trng.	.64	Various as Required
Total	$ 7.42	

Cost Commonality:
(1) B = $ .25 - View Finder
(2) C = $1.85 - Camera Support
(3)

Figure 2

Experiment Integration D & D

Flight No. 6 (513)
($ in Millions)

Subsystem	Cost	Modification Description
Structure	$ 1.53	(F) Additional supports on the descent stage for the 0802 series sensor experiments. Provide external work platform.
Crew System	.09	Integration of the experiment controls and displays.
Env. Control	.09	Integration of the experiment equipment coolant requirements into the LEM heat transport section and modification of the cold plate arrangement.
Elec. Power Syst.	.09	Modification to the distribution section to integrate the experiment electrical requirements.
Stab. & Control		
Reaction Control		
Communications		
Instrumentation		
Non-Subsystem Eng.	1.12	Analyses related to the alignment of the sensors. (High proportion of non-subsystem related engineering required.)
Progr. Plng., Mgmt., Etc.	.23	
G.S.E.	1.97	Various as Required
Publications, Trainers & Trng.	.64	Various as Required
Total	$ 5.76	

Cost Commonality: (1) (F) = $1.08 - Sensors Support
(2)
(3)

Figure 2

Experiment Integration D & D

Flight No. 7 (218)
($ in Millions)

Subsystem	Cost	Modification Description
Structure	$ 1.11	Additional support structure for experiments, addition of railings for extra-vehicular experiment activities.
Crew System	.09	Integration of the experiment controls and displays.
Env. Control	.09	Integration of experiment equipment coolant requirements into the LEM heat transport section and modification of the cold plate arrangements.
Elec. Power Syst.	.27	Modification of the distribution section to integrate experiment electrical requirements
Stab. & Control		
Reaction Control	.36	Addition of tanks and propellant preassurization section to the basic subsystem.
Communications		
Instrumentation		
Non-Subsystem Eng.	1.12	Analyses related to the rendezvous with Flight 219 (High proportion of non-subsystem related engineering required.)
Progr. Plng., Mgmt.	.23	
G.S.E.	1.97	Various as Required
Publications, Trainers & Trng.	.64	Various as Required
Total	$ 5.88	

Cost Commonality: (1)
(2)
(3)

Figure 2

Experiment Integration D & D

Flight No. 8 (219)
($ in Millions)

Subsystem	Cost	Modification Description
Structure	$ 4.49	(A) Provide a low profile descent stage and (D) An interstage tunnel for the centrifuge experiment.
Crew System	.09	Integration of the experiment controls and displays.
Env. Control	.45	Addition of waste management and atmospheric revitalization for the living organisms experiments.
Elec. Power Syst.	.18	Modifications to distribution section for experiment integration and support of the centrifuge experiment.
Stab. & Control		
Reaction Control	.36	Addition of tanks and propellant pressurization section to the basic subsystem.
Communications		
Instrumentation		
Non-Subsystem Eng.	1.73	Analyses related to the centrifuge experiment. (High proportion of non-subsystem related engineering required.)
Progr. Plng., Mgmt., Etc.	.52	
G.S.E.	1.97	Various as Required
Publications, Trainers & Trng.	.64	Various as Required
Total	$10.43	

Cost Commonality: (1) A = $2.66 - Low Profile Descent Stage
(2) D = $ .90 - Interstage Tunnel
(3)

Figure 2

Experiment Integration D & D

Flight No. 9 (221)
($ in Millions)

Subsystem	Cost	Modification Description
Structure	$ .61	Additional support structure and winch support for the artificial gravity experiment.
Crew System	.27	Integration of the experiment controls and displays; installation and integration of waste management equipment.
Env. Control	.45	Provide additional oxygen support for the long term separated artifical gravity experiment.
Elec. Power Syst.	.09	Modification to the distribution section to integrate experiment electrical requirements.
Stab. & Control		
Reaction Control	.36	Addition to tanks and propellant preassurization section to the basic subsystem.
Communications		
Instrumentation		
Non-Subsystem Eng.	1.28	Analyses related to the artifical gravity experiment. (High proportion of non-subsystem related engineering required.)
Progr. Plng., Mgmt., Etc.	.30	
G.S.E.	1.97	Various as Required
Publications, Trainers & Trng.	.64	Various as Required
Total	$ 5.97	

Cost Commonality: (1)
(2)
(3)

Figure 2

Experiment Integration D & D

Flight No. 10 (516)
($ in Millions)

Subsystem	Cost	Modification Description
Structure	$ 2.96	(E & G) - Modification to pressure shell for installation of telescope.
Crew System	.27	Integration of experiment controls and displays and telescope in cabin.
Env. Control	.09	Integration of experiment equipment coolant requirements into the LEM heat transport section and modification of the cold plate arrangement.
Elec. Power Syst.	.18	Modifications to the distribution section to integrage experiment electrical requirements.
Stab. & Control		
Reaction Control		
Communications		
Instrumentation		
Non-Subsystem Eng.	1.28	Analyses related to the alignment of optical experiments. (High proportion of non-subsystem related engineering required.)
Progr. Plng., Mgmt., Etc.	.30	
G.S.E.	1.97	Various as Required
Publications, Trainers & Trng.	.64	Various as Required
Total	$ 7.69	

Cost Commonality: (1) E $.54) Support of Telescope Experiments
(2) G $.90)
(3)

Figure 2

Experiment Integration D & D

Flight No. 11(518)
($ in Millions)

Subsystem	Cost	Modification Description
Structure	$ 3.56	(B, C & F) Modify the pressure shell for view finder experiment, modifications to the structure for camera support and sensor experiments.
Crew System	.09	Integration of the experiment controls and displays.
Env. Control	.09	Integration of experiment equipment coolant requirements into the LEM heat transport section and modification of the cold plate arrangement.
Elec. Power Syst.	.27	Modifications to the distribution section for experiment electrical requirements and integration of descent stage electrical equipment bay.
Stab. & Control		
Reaction Control		
Communications		
Instrumentation		
Non-Subsystem Eng.	1.12	Analyses related to the alignment of optical experiments. (High proportion of non-subsystem related engineering required.)
Progr. Plng., Mgmt., Etc.	.23	
G.S.E.	1.97	Various as Required
Publications, Trainers & Trng.	.64	Various as Required
Total $	7.97	

Cost Commonality: (1) B = $.25 - View finder
(2) C - $1.85 - Camera Support
(3) F = $1.08 - Sensors Support

Figure 2

Flight No. 12(521)
($ in Millions)

Experiment Integration D & D

Subsystem	Cost	Modification Description
Structure	$ 4.37	(A) Provide a low profile descent stage. Provide launch platform for OGO launch experiment modify power pack truss.
Crew System	.09	Integration of the experiment controls and displays.
Env. Control	.45	Integration of the radioisotope experiment into the LEM heat transport section and modification of the cold plate arrangement.
Elec. Power Syst.	.09	Modification of the distribution section to integrate experiment electrical requirements.
Stab. & Control		
Reaction Control		
Communications		
Instrumentation		
Non-Subsystem Eng.	1.73	Analyses related to the launch of the OGO and the radioisotope experiment. (High proportion of non-subsystem related engineering required.)
Progr. Plng., Mgmt., Etc.	.52	
G.S.E.	1.97	Various as Required
Publications, Trainers & Trng.	.64	Various as Required
Total $	9.86	

Cost Commonality: (1) A = $2.66 - Low Profile Descent Stage
(2)
(3)

Figure 2

Experiment Integration D & D

Flight No. 13(523)
($ in Millions)

Subsystem	Cost	Modification Description
Structure	$ 2.08	(E & G) - Additional support structure for optical experiments modification to cabin for telescope.
Crew System	.27	Integration of experiment controls and displays and telescope in cabin.
Env. Control	.09	Integration of experiment equipment coolant requirements into the LEM heat transport section and modifications to the cold plate arrangements.
Elec. Power Syst.	.09	Modification of the distribution section to integrate experiment electrical.
Stab. & Control		
Reaction Control	.36	Addition of tanks and propellant pressurization section to the basic subsystem.
Communications		
Instrumentation		
Non-Subsystem Eng.	1.43	Analyses related to the rendezvous with Flight 229 and alignment of optical experiments. (High proportion of non-subsystem related engineering required.)
Progr. Plng., Mgmt., Etc.	.37	
G.S.E.	1.97	Various as Required
Publications, Trainers & Trng.	.64	Various as Required
Total $	7.30	

Cost Commonality: (1) E = $.54) Support of Telescope Experiments
(2) G = $.90)
(3)

Figure 2

Flight No. 14(229)

Experiment Integration D & D

($ in Millions)

Subsystem	Cost	Modification Description
Structure	$ 4.49	(A) Provide low profile descent stage and (D) an interstage tunnel.
Crew System	.09	Integration of the experiment controls and displays.
Env. Control	.45	Addition of waste management and atmospheric revitalization for the living organisms experiments.
Elec. Power Syst.		
Stab. & Control		
Reaction Control		
Communications		
Instrumentation		
Non-Subsystem Eng.	1.73	Analyses related to the centrifuge experiment. (High proportion of non-subsystem related engineering required.)
Progr. Plng., Mgmt., Etc.	.52	
G.S.E.	1.97	Various as Required
Publications, Trainers & Trng.	.64	Various as Required
Total $	9.98	

Cost Commonality: (1) A = $2.66 - Low Profile Descent Stage

(2) D = $ .90 - Interstage Tunnel

(3)

Figure 2

Flight No. 15(230)

Experiment Integration D & D

($ in Millions)

Subsystem	Cost	Modification Description
Structure	$ 3.20	Addition of pressurized passageway in center bay of descent stage.
Crew System		
Env. Control	.45	Relocation of the portions of the heat transport loop into the descent stage.
Elec. Power Syst.	.09	Modifications to the distribution system in the descent stage.
Stab. & Control		
Reaction Control		
Communications		
Instrumentation		
Non-Subsystem Eng.	.77	
Progr. Plng., Mgmt., Etc.	.36	
G.S.E.	1.97	Various as Required
Publications, Trainers & Trng.	.64	Various as Required
Total $	7.48	

Cost Commonality: (1)
(2)
(3)

Figure 2

Experiment Integration D & D

Flight No. DOD-1

($ in Millions)

Subsystem	Cost	Modification Description
Structure	$ 1.44	Modify the pressure shell for telescope experiment provide support structure for experiments.
Crew System	.27	Integration of the experiment controls and displays.
Env. Control	.09	Integration of the experiment equipment coolant requirements into the LEM heat transport section and modifications to the cold plate arrangements.
Elec. Power Syst.	.18	Modification to the distribution section to integrate experiment electrical requirements.
Stab. & Control		
Reaction Control		
Communications		
Instrumentation		
Non-Subsystem Eng.	1.12	Analyses related to alignment of optical experiments. (High proportion of non-subsystem related engineering required.)
Progr. Plng., Mgmt., Etc.	.23	
G.S.E.	1.97	Various as Required
Publications, Trainers & Trng.	.64	Various as Required
Total $	6.01	

Cost Commonality: (1)
(2)
(3)

Figure 2

Experiment Integration D & D

Flight No. DOD-2

($ in Millions)

Subsystem	Cost	Modification Description
Structure	$ 1.78	Modify pressure shell for view finder and telescope experiments provide supports for experiments.
Crew System	.27	Integration of the experiment controls and displays.
Env. Control	.09	Integration of the experiment equipment coolant requirements into the LEM heat transport section and modifications to the cold plate arrangements.
Elec. Power Syst.	.18	Modification to the distribution section to integrate experiment electrical requirements.
Stab. & Control		
Reaction Control		
Communications		
Instrumentation		
Non-Subsystem Eng.	1.12	Analyses related to alignment of optical experiments. (High proportion of non-subsystem related engineering required.)
Progr. Plng., Mgmt., Etc.	.23	
G.S.E.	1.97	Various as Required
Publications, Trainers & Trng.	.64	Various as Required
Total $	6.28	

Cost Commonality: (1)
(2)
(3)

Figure 2

Experiment Integration D & D

Flight No. DOD-3

($ in Millions)

Subsystem	Cost	Modification Description
Structure	$ 1.51	Provide additional supports for optical experiments.
Crew System	.27	Integration of the experiment controls and displays.
Env. Control	.09	Integration of the experiment equipment coolant requirements into the LEM heat transport section and modifications to the cold plate arrangements.
Elec. Power Syst.	.18	Modification to the distribution section to integrate experiment electrical requirements.
Stab. & Control		
Reaction Control		
Communications		
Instrumentation		
Non-Subsystem Eng.	1.12	Analysis related to alignment of optical experiments. (High proportion of non-subsystem related engineering required.)
Progr. Plng., Mgmt., Etc.	.23	
G.S.E.	1.97	Various as Required
Publications, Trainers & Trng.	.64	Various as Required
Total $	5.94	

Cost Commonality: (1)
(2)
(3)

Figure 2

Experiment Integration D & D

Flight No. DOD-4

($ in Millions)

Subsystem	Cost	Modification Description
Structure	$ 5.81	(A) - Provide a low profile descent stage (H) - install a new airlock.
Crew System	.09	Integrate experiment controls and display.
Env. Control	.45	Provide additional equipment for repressurization of airlock.
Elec. Power Syst.	.18	Provide additions to distribution system for airlock and integrate experiment electrical requirements.
Stab. & Control		
Reaction Control		
Communications		
Instrumentation		
Non-Subsystem Eng.	.92	
Progr. Plng., Mgmt., Etc.	.43	
G.S.E.	1.97	Various as Required
Publications, Trainers & Trng.	.64	Various as Required
Total $	10.49	

Cost Commonality: (1) A = $2.66 - Low Profile Descent Stage
(2) H = 1.50 - Ascent Stage Airlock
(3)

Figure 2

Experiment Integration D & D

Flight No. DOD-5

($ in Millions)

Subsystem	Cost	Modification Description
Structure	$ 5.81	(A) - Provide a low profile descent stage (H) - install a new airlock.
Crew System	.09	Integrate experiment controls and display.
Env. Control	.45	Provide additional equipment for repressurization of airlock.
Elec. Power Syst.	.18	Provide additions to distribution system for airlock and integrate experiment electrical requirements.
Stab. & Control		
Reaction Control		
Communications		
Instrumentation		
Non-Subsystem Eng.	.92	
Progr. Plng., Mgmt., Etc.	.43	
G.S.E.	1.97	Various as Required
Publications, Trainers & Trng.	.64	Various as Required
Total $	10.49	

Cost Commonality: (1) A = $2.66 - Low Profile Descent Stage
(2) H = 1.50 - Ascent Stage Airlock
(3)

Figure 2

Experiment Integration D & D

Flight No. DOD-6
($ in Millions)

Subsystem	Cost	Modification Description
Structure	$ 5.81	(A) - Provide a low profile descent stage (H) - install a new airlock
Crew System	.09	Integrate experiment controls and display.
Env. Control	.45	Provide additional equipment for repressurization of airlock.
Elec. Power Syst.	.18	Provide additions to distribution system for airlock and integrate experiment electrical requirements.
Stab. & Control		
Reaction Control		
Communications		
Instrumentations		
Non-Subsystem Eng.	.92	
Progr. Plng., Mgmt., Etc.	.43	
G.S.E.	1.97	Various as Required
Publications, Trainers & Trng.	.64	Various as Required
Total $	10.49	

Cost Commonality: (1) A = $2.66 - Low Profile
(2) H = 1.50 - Ascent Stage Airlock
(3)

Figure 3

Description S/C Mods

Configuration 1

Subsystem	Description
Structure	• Delete landing gear • Provide a redesigned lower deck for the descent stage • Provide a truss subassembly to support the fuel cell power generation section • Provide increased thickness micrometeroid shielding • Replace the ascent engine cover with a shorter length cover
Crew System	• Provide additional internal lighting • Provide folding seats • Provide control and display areas for experiments
ECS	• Provide a radiator in the cabin heat transport loop and for thermal control of the fuel cell power generation section • Verify extended life capabilities of the ECS subassemblies • Replace LEM water management section with the CSM subassembly • Provide H_2O and O_2 interface with the CSM • Modify air recirculation subassembly to accept CM ducted O_2 and allow for replacement of fan components

Figure 3

Description S/C Mods

Configuration 1

Subsystem	Description
EPS	• Replace LEM battery power generation section with fuel cells and cryogenic tanks developed and qualified for the CSM • Verify extended life capabilities of the power distribution section subassemblies and the PLSS battery charger • Provide a peaking battery and provide the provisions for recharging the battery • Eliminate portions of the distribution section not required because of deleted subsystems • Provide power line to support CSM in configuration D
SCS	• Provide sensor system of star trackers and horizon sensors as required for earth pointing and inertial attitude requirements, and coupling of these sensors to the SCS • Demonstrate extended life capabilities of the ATCA and RGA subassemblies • Integrate the output of the sensors with the input requirements of the LEM ATCA sub-assembly
RCS	• Verify the extended life capabilities of the pressurization, propellant storage and feed subassemblies • Requalify valves for long duration missions.
Communications	• Demonstrate capability of required subassemblies to operate for extended duration missions • Provide TV system for monitoring of extra vehicular astronaut activities • Modify audio center to provide warning from the CSM master caution and warning system

Figure 3

Description S/C Mods

Configuration 1 (Cont)

Subsystem	Description
G & N	• Delete subsystem
Instrumentation	• Demonstrate extended life capability of the caution and warning, PCMTE and signal conditioning unit • Delete one SCU • Provide and integrate CSM data storage subassembly into the LEM Instrumentation Subsystem • Provide interface between LEM PCMTE and CSM communications subsystem
Propulsion	• Delete subsystem

Figure 3

Description S/C Mods

Configuration 1

Table 2-1 lists the dry weight of the (1) present LEM, (2) the basic LEM Lab, (3) those portions of the LEM Lab identical to the existing LEM 94) those portions of the LEM Lab which are modifications of the present LEM, and (5) those portions of the LEM Lab which are new.

Table 2-1

Weight Breakdown Basic LEM Lab

Subsystem	1. Present LEM*	2. Total Lab	3. LEM Existing	4. LEM Modified	5. New
Structure	2943	2042	1487	505	50
Crew System	548	145	45	100	-
Environmental Control	324	371	164	55	152
Electrical Power	1448	1969	415	214	1340
Stab. & Control	89	163	43	-	120
Reaction Controls	349	349	349	-	-
Communications	123	32	2	-	24
Guidance & Navigation	321	-	-	-	-
Instrumentation	196	115	84	-	31
Propulsion	1619	-	-	-	-
Total Dry Weight	7960	5186	2589	880	1717

*Based on LEM Mass Property Report LED 490-18 modified by EPS internal memo covering battery change.

Retrofit Basis (X)
Prod. Line Mod. ( )

Figure 4

Production Phase

Configuration 1
Flight No. 1 (209)

($ in Millions)
(All Costs Based on CY 1965 Rates)

Subsystem	Current Apollo LEM-7(A)	Production - (Δ Cost for Retrofit Basis) (Total Cost for Prod. Line Mod.)					
		Manufacturing Costs					Spares
		Grumman	Maj. Subs.	Matl./Min. Subs.	Subtl.(B)	(A)+(B)	
Structure **	$ 2.70	$ .39	$ 0	$ .10	$ .49	$ 3.19	
Crew System	1.59	.06	- .46	-.30	- .70	.89	.60(2)
Envmtl. Contl.	.65	.01	0	0	.01	.66	
Electrical Pwr.	1.48	.08	- .35	0	- .27	1.21	
Stab. & Control	1.85	.03	- .57	-.04	- .58	1.27	
Reaction Controls	.74	.01	0	0	.01	.75	
Communications	.97	.01	- .40	0	- .39	.58	.25(2)
Guidance & Nav. (1)	1.07	.00	- .78	0	- .78	.29	
Instrumentation	.68	.06	- .04	-.01	.01	.69	.60(2)
Propulsion	2.90	.00	-1.99	-.10	-2.09	.81	
Non-Subsystem Eng.**	.95	.12	0	0	.12	1.07	
Prog. Plng. & Mgmt.**	.44	.06	0	0	.06	.50	
Experiment Integr.	--	.04	0	0	.04	.04	
TOTAL	$16.02	$ .87	$ -4.59	$ -.35	$ -4.07	$11.95	1.45(2)

(1) Does not include GFE N/G System ($2.30M Cost)

** See Figure 1 Notes

(2) Spares cost shared by all other flights

Retrofit Basis (X)
Prod. Line Mod. ( )

Figure 4

Production Phase

Configuration C and D*
Flight No. 2(211)

($ in Millions)
(All Costs Based on CY 1965 Rates)

Subsystem	Current Apollo LEM-7(A)	Production - (Δ Cost for Retrofit Basis) (Total Cost for Prod. Line Mod.)					
		Manufacturing Costs					Spares
		Grumman	Maj. Subs.	Matl./Min. Subs.	Subtl.(B)	(A)+(B)	
Structure**	$ 2.70	$ .92	$ 0	$ .20	$ 1.12	$ 3.82	
Crew System	1.59	.06	- .46	-.30	- .70	.89	
Envmtl. Control	.65	.03	.03	0	.06	.71	.50(3)
Electrical Pwr.	1.48	.06	.26 (.79)*	0	.32 (.53)*	1.80 (2.33)*	10.50(3)
Stab. & Control	1.85	.06	- .52	-.04	- .50	1.35	4.00(2)
Reaction Controls	.74	.01	- .51	0	- .50	.24	
Communications	.97	.01	- .40	0	- .39	.58	
Guidance & Nav.(1)	1.07	0	- .78	0	- .78	.29	
Instrumentation	.68	.06	- .04	-.01	.01	.69	
Propulsion	2.90	0	-1.99	-.10	-2.09	.81	
Non-Subsystem Eng.**	.95	.22	0	0	.22	1.17	
Prog. Plng.& Mgmt.**	.44	.10	0	0	.10	.54	
Experiment Integr.	--	.21	0	0	.21	.21	
TOTAL	$16.02	$1.74	$-4.41 (-3.88)*	$-.25	$-2.92 (-2.39)*	$13.10 (13.63)*	15.00(2)(3)

(1) Does not include GFE N/G System ($2.30M Cost)

** See Figure 1 Notes
(2) Spare cost shared by flights 507, 215, 513, 518, DOD 2, 3, 4, 5, 6
(3) Spare cost shared by all flights except 209.

Retrofit Basis (X)
Prod. Line Mod.( )

Figure 4

Production Phase

Configuration 1
Flight No. 3 (507)

($ in Millions)
(All Costs Based on CY 1965 Rates)

Subsystem	Current Apollo LEM-7(A)	Production - (ΔCost for Retrofit Basis) (Total Cost for Prod. Line Mod.)					
		Manufacturing Costs					Spares
		Grumman	Maj. Subs.	Matl./Min. Subs.	Subtl.(B)	(A)+(B)	
Structure**	$ 2.70	$ .51	$ 0	$ .10	$ .61	$ 3.31	
Crew System	1.59	.06	-.46	-.30	-.70	.89	
Envmtl. Contl.	.65	.03	.03	0	.06	.71	
Electrical Pwr.	1.48	.06	.36	0	.42	1.90	
Stab. & Control	1.85	.06	-.52	-.04	-.50	1.35	
Reaction Controls	.74	.01	-.51	0	-.50	.24	
Communications	.97	.01	-.40	0	-.39	.58	
Guidance & Nav. (1)	1.07	0	-.78	0	-.78	.29	
Instrumentation	.68	.06	-.04	-.01	.01	.69	
Propulsion	2.90	0	-1.99	-.10	-2.09	.81	
Non-Subsystem Eng.**	.95	.16	0	0	.16	1.11	
Prog. Plmg. & Mgmt.**	.44	.07	0	0	.07	.51	
Experiment Integr.	--	.19	0	0	.19	.19	
TOTAL	$16.02	$1.22	$-4.31	$-.35	$-3.44	$12.58	

(1) Does not include GFE N/G System ($2.30M Cost)

** See Figure 1 Notes

Retrofit Basis (X)
Prod. Line Mod.( )

Figure 4

Production Phase

Configuration 1
Flight No. 4 (509)

($ in Millions)
(All Costs Based on CY 1965 Rates)

Subsystem	Current Apollo LEM-7(A)	Production - (Δ Cost for Retrofit Basis) (Total Cost for Prod. Line Mod.)					
		Manufacturing Costs					Spares
		Grumman	Maj. Subs.	Matl./Min. Subs.	Subtl.(B)	(A)+(B)	
Structure**	$ 2.70	$ .97	$ 0	$ .20	$ 1.17	$3.87	
Crew System	1.59	.06	- .46	-.30	- .70	.89	
Envmtl. Contl.	.65	.03	.03	0	.06	.71	
Electrical Pwr.	1.48	.06	.18	0	.24	1.72	
Stab. & Control	1.85	.03	- .92	-.05	- .94	.91	
Reaction Controls	.74	.01	0	0	.01	.75	
Communications	.97	.01	- .05	0	- .04	.93	
Guidance & Nav.(1)	1.07	0	- .78	0	- .78	.29	
Instrumentation	.68	.06	- .04	-.01	.01	.69	
Propulsion	2.90	0	-1.99	-.10	-2.09	.81	
Non-Subsystem Eng.**	.95	.07	0	0	.07	1.02	
Prog.Plng. & Mgmt.**	.44	.03	0	0	.03	.47	
Experiment Integr.	--	.10	0	0	.10	.10	
TOTAL	$16.02	$ 1.43	$ -4.03	$ -.26	$ -2.86	$13.16	

(1) Does not include GFE N/G System ($2.30M Cost)

** See Figure 1 Notes

Retrofit Basis (X)
Prod. Line Mod.( )

Figure 4

Production Phase

Configuration 1
Flight No. 5(215)

($ in Millions)
(All Costs Based on CY 1965 Rates)

Subsystem	Current Apollo LEM-7(A)	Production - (Δ Cost for Retrofit Basis) (Total Cost for Prod. Line Mod.)					
		Manufacturing Costs					Spares
		Grumman	Maj. Subs.	Matl./Min. Subs.	Subtl.(B)	(A)+(B)	
Structure**	$ 2.70	$ .54	$ 0	$ .10	$ .64	$ 3.34	
Crew System	1.59	.06	- .46	-.30	- .70	.89	
Envmtl. Contl.	.65	.03	.03	0	.06	.71	
Electrical Pwr.	1.48	.06	.28	0	.34	1.82	
Stab. & Control	1.85	.03	.12	0	.15	2.00	
Reaction Controls	.74	.01	0	0	.01	.75	
Communications	.97	.01	- .40	0	- .39	.58	
Guidance & Nav.(1)	1.07	0	- .78	0	- .78	.29	
Instrumentation	.68	.06	- .04	-.01	.01	.69	
Propulsion	2.90	0	-1.99	-.10	-2.09	.81	
Non-Subsystem Eng.**	.95	.08	0	0	.08	1.03	
Prog. Plng. & Mgmt.**	.44	.04	0	0	.04	.48	
Experiment Integr.	--	.19	0	0	.19	.19	
TOTAL	$ 16.02	$ 1.11	$ -3.24	$ -.31	$ -2.44	$13.58	

(1) Does not include GFE N/G System ($2.30M Cost)

** See Figure 1 Notes

Retrofit Basis (X)
Prod. Line Mod.( )

Figure 4

Configuration 1
Flight No. 6(513)

Production Phase

($ in Millions)
(All Costs Based on CY 1965 Rates)

Subsystem	Current Apollo LEM-7(A)	Production - (Δ Cost for Retrofit Basis) (Total Cost for Prod. Line Mod.)					
		Manufacturing Costs					Spares
		Grumman	Maj. Subs.	Matl./Min. Subs.	Subtl.(B)	(A)+(B)	
Structure**	$ 2.70	$ .52	$ 0	$ .10	$ .62	$ 3.32	
Crew System	1.59	.06	- .46	-.30	- .70	.89	
Envmtl. Contl.	.65	.03	.03	0	.06	.71	
Electrical Pwr.	1.48	.06	.36	0	.42	1.90	
Stab. & Control	1.85	.06	- .52	-.04	- .50	1.35	
Reaction Controls	.74	.01	- .51	0	- .50	.24	
Communications	.97	.01	- .40	0	- .39	.58	
Guidance & Nav.(1)	1.07	0	- .78	0	- .78	.29	
Instrumentation	.68	.06	- .04	-.01	.01	.69	
Propulsion	2.90	0	-1.99	-.10	-2.09	.81	
Non-Subsystem Eng.**	.95	.08	0	0	.08	1.03	
Prog. Plng. & Mgmt.**	.44	.04	0	0	.04	.48	
Experiment Integr.	--	.19	0	0	.19	.19	
TOTAL	$ 16.02	$ 1.12	$ -4.31	$ -.35	$ -3.54	$ 12.48	

(1) Does not include GFE N/G System ($2.30M Cost)

** See Figure 1 Notes

Retrofit Basis (X)
Prod. Line Mod.( )

Figure 4

Production Phase

Configuration C and D*
Flight No. 7(218)

($ in Millions)
(All Costs Based on CY 1965 Rates)

Subsystem	Current Apollo LEM-7(A)	Production - (Δ Cost for Retrofit Basis) (Total Cost for Prod. Line Mod.)					
		Manufacturing Costs					Spares
		Grumman	Maj. Subs.	Matl./Min. Subs.	Subtl.(B)	(A)+(B)	
Structure**	$ 2.70	$ .55	$ 0	$ .10	$ .65	$ 3.35	
Crew System	1.59	.06	- .46	-.30	- .70	.89	
Envmtl. Contl.	.65	.03	.03	0	.06	.71	
Electrical Pwr.	1.48	.06	.26 (.84)*	0	.32 (.90)*	1.80 (2.38)*	
Stab. & Control	1.85	.03	- .71	0	- .68	1.17	
Reaction Controls	.74	.01	0 (.10)*	0	.01 (.11)*	.75 (.85)*	
Communications	.97	.01	- .28	0	- .27	.70	
Guidance & Nav. (1)	1.07	0	- .78	0	- .78	.29	
Instrumentation	.68	.06	- .04	-.01	.01	.69	
Propulsion	2.90	0	-1.99	-.10	-2.09	.81	
Non-Subsystem Eng.**	.95	.08	0	0	.08	1.03	
Prog. Plng. & Mgmt.**	.44	.04	0	0	.04	.48	
Experiment Integr.	--	.07	0	0	.07	.07	
TOTAL	$ 16.02	$ 1.00	$ -3.97 (-3.29)*	$ -.31	$ -3.28 (-2.60)*	$12.74 (13.42)*	

(1) Does not include GFE N/G System ($2.30M Cost)
** See Figure 1 Notes

Retrofit Basis (X)
Prod. Line Mod.( )

Figure 4

Production Phase

Configuration C and D*
Flight No. 8(219)

($ in Millions)
(All Costs Based on CY 1965 Rates)

Subsystem	Current Apollo LEM-7(A)	Production - (Δ Cost for Retrofit Basis) (Total Cost for Prod. Line Mod.)					
		Manufacturing Costs					Spares
		Grumman	Maj. Subs.	Matl./Min. Subs.	Subtl.(B)	(A)+(B)	
Structure**	$ 2.70	$ .95	$ 0	$ .20	$ 1.15	$ 3.85	
Crew System	1.59	.06	- .46	-.30	- .70	.89	
Envmtl. Contl.	.65	.03	.03	0	.06	.71	
Electrical Pwr.	1.48	.06	.33 (.99)*	0	.39	1.87 (2.53)*	
Stab. & Control	1.85	.03	-1.32	-.05	-1.34	.51	
Reaction Controls	.74	.01	- .51	0	- .50	.24	
Communications	.97	.01	- .40	0	- .39	.58	
Guidance & Nav.(1)	1.07	0	- .78	0	- .78	.29	
Instrumentation	.68	.06	- .04	-.01	.01	.69	
Propulsion	2.90	0	-1.99	-.10	-2.09	.81	
Non-Subsystem Eng.**	.95	.22	0	0	.22	1.17	
Prog. Plng. & Mgmt.**	.44	.10	0	0	.10	.54	
Experiment Integr.	--	.08	0	0	.08	.08	
TOTAL	$ 16.02	$ 1.61	$-5.14 (-4.48)*	$ -.26	$-3.79	$12.23 (12.89)*	

(1) Does not include GFE N/G System ($2.30M Cost)
** See Figure 1 Notes

Retrofit Basis ( )
Prod. Line Mod.(X)

Figure 4

Production Phase

Configuration C and D*
Flight No. 9(221)
($ in Millions)
(All Costs Based on CY 1965 Rates)

Subsystem	Current Appollo LEM-7	Production - (Δ Cost for Retrofit Basis) (Total Cost for Prod. Line Mod.)				
		Manufacturing Costs				Spares
		Grumman	Maj. Subs.	Matl./Min. Subs.	Total	
Structure**	$ 2.70	$ 1.78	$ 0	$ .89	$ 2.67	
Crew System	1.59	.11	.40	.30	.81	
Envmtl. Contl.	.65	.21	.36	.05	.62	
Electrical Pwr.	1.48	.35	1.15 (1.73)*	.06 (.07)*	1.56 (2.15)*	
Stab. & Control	1.85	.11	.61	.02	.74	
Reaction Controls	.74	.14	.66	.06	.86	
Communications	.97	.05	.25	.01	.31	
Guidance & Nav.(1)	1.07	0	0	0	0	
Instrumentation	.68	.21	.28	.01	.50	
Propulsion	2.90	0	0	0	0	
Non-Subsystem Eng.**	.95	.50	0	0	.50	
Prog. Plng. & Mgmt.	.44	.23	0	0	.23	
Experiment Integr.	--	.07	0	0	.07	
TOTAL	$ 16.02	$ 3.76	$ 3.71 (4.29)*	$ 1.40 (1.41)*	$ 8.87 (9.46)*	

(1) Does not include GFE N/G System ($2.30M Cost)
** See Figure 1 Notes

Retroifit Basis ( )
Prod. Line Mod. (X)

Figure 4

Production Phase

Configuration C and D*
Flight No. 10(516)

($ in Millions)
(All Costs Based on CY 1965 Rates)

Subsystem	Current Apollo LEM-7	Production - (ΔCost for Retrofit Basis) (Total Cost for Prod. Line Mod.)				
		Manufacturing Costs				Spares
		Grumman	Maj. Subs.	Matl./Min. Subs.	Total	
Structures**	$ 2.70	$ 1.67	$ 0	$ .89	$ 2.56	
Crew System	1.59	.11	.40	.30	.81	
Envmtl. Contl.	.65	.21	.36	.05	.62	
Electrical Pwr.	1.48	.35	1.15 (2.06)*	.06 (.07)*	1.56 (2.48)*	2.90(2)
Stab. & Control	1.85	.17	1.78 (2.20)*	.09 (.10)*	2.04 (2.47)*	
Reaction Controls	.74	0 (.14)*	0 (.66)*	0 (.06)*	0 (.86)*	
Communications	.97	.05	.25	.01	.31	
Guidance & Nav. (1)	1.07	.00	.00	0	0	
Instrumentation	.68	.21	.28	.01	.50	
Propulsion	2.90	0	0	0	0	
Non-Subsystem Eng.**	.95	.48	0	0	.48	
Prog. Plng. & Mgmt.**	.44	.22	0	0	.22	
Experiment Integr.	--	.13	0	0	.13	
TOTAL	$ 16.02	$ 3.60 (3.74)*	$ 4.22 (6.21)*	$ 1.41 (1.49)*	$ 9.23 (11.44)*	2.90(2)

(1) Does not include GFE N/G System ($2.30M Cost)
** See Figure 1 Notes
(2) Spare cost shared by flights 521, 523, DOD 1

Retrofit Basis ( )
Prod. Line Mod. (X)

Figure 4

Configuration C and D*
Flight No. 11 (518)

Production Phase

($ in Millions)
(All Costs Based on CY 1965 Rates)

Subsystem	Current Apollo LEM-7	Production - Δ Cost for Retrofit Basis) (Total Cost for Prod. Line Mod.)				
		Manufacturing Costs				Spares
		Grumman	Maj. Subs.	Matl./Min. Subs.	Total	
Structure	$ 2.70	$ 1.72	$ 0	$ .89	$ 2.61	
Crew System	1.59	.11	.40	.30	.81	
Envmtl. Contl.	.65	.21	.36	.05	.62	
Electrical Pwr.	1.48	.22	1.76 (1.69)*	.07 (.08)*	1.85 (1.99)*	
Stab. & Control	1.85	.15	1.02 (1.44)*	.06 (.07)*	1.23 (1.66)*	
Reaction Controls	.74	0 (.12)*	0 (.56)*	0 (.06)*	0 (.74)*	
Communications	.97	.05	.25	.01	.31	
Guidance & Nav.(1)	1.07	0	0	0	0	
Instrumentation	.68	.21	.28	.01	.50	
Propulsion	2.90	0	0	0	0	
Non-Subsystem Eng.**	.95	.50	0	0	.50	
Prog. Plng. & Mgmt.**	.44	.23	0	0	.23	
Experiment Integr.	--	.16	0	0	.16	
TOTAL	$16.02	$ 3.56 (3.68)*	$ 3.87 (4.98)*	$ 1.39 (1.47)*	$ 8.82 (10.13)*	

(1) Does not include GFE N/G System ($2.30M Cost)

** See Figure 1 Notes

Retrofit Basis ( )
Prod. Line Mod. (X)

Figure 4

Configuration C and D*
Flight No. 12 (521)

Production Phase

($ in Millions)
(All Costs Based on CY 1965 Rates)

Subsystem	Current Apollo LEM-7	Production - (Δ Cost for Retrofit Basis) (Total Cost for Prod. Line Mod.)				
		Manufacturing Costs				Spares
		Grumman	Maj. Subs.	Matl./Min. Subs.	Total	
Structure**	$ 2.70	$ 1.64	$ 0	$ .72	$ 2.36	
Crew System	1.59	.11	.40	.30	.81	
Envmtl. Contl.	.65	.21	.36	.05	.62	
Electrical Pwr.	1.48	.35	1.15 (1.73)*	.06 (.07)*	1.56 (2.15)*	
Stab. & Control	1.85	.17	1.77	.08	2.02	
Reaction Controls	.74	0	0	0	0	
Communications	.97	.05	.25	.01	.31	
Guidance & Nav.(1)	1.07	0	0	0	0	
Instrumentation	.68	.21	.28	.01	.50	
Propulsion	2.90	0	0	0	0	
Non-Subsystem Eng.**	.95	.48	0	0	.48	
Prog. Plng. & Mgmt.**	.44	.22	0	0	.22	
Experiment Integr.	--	.06	0	0	.06	
TOTAL	$16.02	$ 3.50	$ 4.21 (4.79)*	$ 1.23 (1.24)*	$ 8.94 (9.53)*	

(1) Does not include GFE N/G System ($2.30M Cost)

** See Figure 1 Notes

Retrofit Basis ( )
Prod. Line Mod. (X)

Figure 4

Production Phase

Configuration C and D*
Flight No. 13(523)

($ in Millions)
(All Costs Based on CY 1965 Rates)

Subsystem	Current Apollo LEM-7	Production - (Δ Cost for Retrofit Basis) (Total Cost for Prod. Line Mod.)				
		Manufacturing Costs				Spares
		Grumman	Maj. Subs.	Matl./Min. Subs.	Total	
Structure**	$ 2.70	$ 1.76	$ 0	$ .89	$ 2.65	
Crew System	1.59	.11	.40	.30	.81	
Envmtl. Contl.	.65	.21	.36	.05	.62	
Electrical Pwr.	1.48	.35	1.18 (1.54)*	.06 (.07)*	1.59 (1.96)*	
Stab. & Control	1.85	.17	2.19	.12	2.48	
Reaction Controls	.74	.08 (.20)*	.76 (.96)*	.02 (.10)*	.86 (1.26)*	
Communications	.97	.06	.37	.01	.44	
Guidance & Nav.(1)	1.07	0	0	0	0	
Instrumentation	.68	.21	.28	.01	.50	
Propulsion	2.90	0	0	0	0	
Non-Subsystem Eng.**	.95	.50	0	0	.50	
Prog. Plng. & Mgmt.**	.44	.23	0	0	.23	
Experiment Integr.	--	.10	0	0	.10	
TOTAL	$16.02	$ 3.78 (3.90)*	$ 5.54 (6.10)*	$ 1.46 (1.55)*	$10.78 (11.55)*	

(1) Does Not include GFE N/G System ($2.30M Cost)

** See Figure 1 Notes

Retrofit Basis ( )
Prod. Line Mod. (X)

Figure 4

Production Phase

Configuration C and D*
Flight No. 14(229)

($ in Millions)
(All Costs Based on CY 1965 Rates)

Subsystem	Current Apollo LEM-7	Production - (Δ Cost for Retrofit Basis) (Total Cost for Prod. Line Mod.)				
		Manufacturing Costs				Spares
		Grumman	Maj. Subs.	Matl./Min. Subs.	Total	
Structure**	$ 2.70	$ 2.05	$ 0	$ .72	$ 2.77	
Crew System	1.59	.11	.40	.30	.81	
Envmtl. Contl.	.65	.21	.36	.05	.62	
Electrical Pwr.	1.48	.35	1.15 (1.73)*	.05 (.06)*	1.55 (2.14)*	
Stab. & Control	1.85	0	0 (.60)*	0	0 (.60)*	
Reaction Controls	.74	.14 (.16)*	.66 (.84)*	.06 (.06)*	.86 (1.06)*	
Communications	.97	.05	.25	.01	.31	
Guidance & Nav.(1)	1.07	0	0	0	0	
Instrumentation	.68	.21	.28	.01	.50	
Propulsion	2.90	0	0	0	0	
Non-Subsystem Eng.**	.95	.52	0	0	.52	
Prog. Plng. & Mgmt.**	.44	.24	0	0	.24	
Experiment Integr.	--	.07	0	0	.07	
TOTAL	$ 16.02	$ 3.95 (3.97)*	$ 3.10 (4.46)*	$ 1.20 (1.21)*	$ 8.25 (9.64)*	

(1) Does not include GFE N/G System ($2.30M Cost)

** See Figure 1 Notes

Retrofit Basis ( )
Prod. Line Mod. (X)

Figure 4

Configuration C and D*
Flight No. 15(230)

Production Phase

($ in Millions)
(All Costs Based on CY 1965 Rates)

Subsystem	Current Apollo LEM-7	Production - (Δ Cost for Retrofit Basis) (Total Cost for Prod. Line Mod.)				
		Manufacturing Costs				Spares
		Grumman	Maj. Subs.	Matl./Min. Subs.	Total	
Structure**	$ 2.70	$ .73	$ 0	$ .36	$ 1.09	
Crew System	1.59	0	0	0	0	
Envmtl. Contl.	.65	.04	16	.02	.22	
Electrical Pwr.	1.48	.35	1.13 (1.72)*	.05 (.06)*	1.53 (2.13)*	
Stab. & Control	1.85	0	0	0	0	
Reaction Controls	.74	0	0	0	0	
Communications	.97	.05	.25	.01	.31	
Guidance & Nav.(1)	1.07	0	0	0	0	
Instrumentation	.68	.21	.28	.01	.50	
Propulsion	2.90	0	0	0	0	
Non-Subsystem Eng.**	.95	.29	0	0	.29	
Prog. Plng. & Mgmt.**	.44	.14	0	0	.14	
Experiment Integr.	--	.02	0	0	.02	
TOTAL	$ 16.02	$ 1.83	$ 1.82 (2.41)*	$ .45 (.46)*	$ 4.10 (4.70)*	

(1) Does not include GFE N/G System ($2.30M Cost)

** See Figure 1 Notes

Retrofit Basis ( )
Prod. Line Mod. (X)

Figure 4

Production Phase

Configuration C and D*
Flight No. DOD 1

($ in Millions)
(All Costs Based on CY 1965 Rates)

Subsystem	Current Apollo LEM-7	Production - (ΔCost for Retrofit Basis) (Total Cost for Prod. Line Mod.)				
		Manufacturing Costs				Spares
		Grumman	Maj. Subs.	Matl./Min. Subs.	Total	
Structure**	$ 2.70	$ 1.57	$ 0	$ .89	$ 2.46	
Crew System	1.59	.11	.40	.30	.81	
Envmtl. Contl.	.65	.21	.36	.05	.62	
Electrical Pwr.	1.48	.35	1.18 (1.57)*	.05	1.58 (1.97)*	
Stab. & Control	1.85	.17	1.77	.08	2.02	
Reaction Controls	.74	0	.00	0	0	
Communications	.97	.05	.25	.01	.31	
Guidance & Nav.(1)	1.07	0	0	0	0	
Instrumentation	.68	.21	.28	.01	.50	
Propulsion	2.90	0	0	0	0	
Non-Subsystem Eng.**	.95	.39	0	0	.39	
Prog. Plng. & Mgmt.**	.44	.18	0	0	.18	
Experiment Integr.	--	.08	0	0	.08	
TOTAL	$ 16.02	$ 3.32	$ 4.24 (4.63)*	$ 1.39	$ 8.95 (9.34)*	

(1) Does not include GFE N/G System ($2.30M Cost)

** See Figure 1 Notes

Retrofit Basis ( )
Prod. Line Mod. (X)

Figure 4

Production Phase

Configuration C and D*
Flight No. DOD-2

($ in Millions)
(All Costs Based on CY 1965 Rates)

Subsystem	Current Apollo LEM-7	Production - (Δ Cost for Retrofit Basis) (Total Cost for Prod. Line Mod.)				
		Manufacturing Costs				Spares
		Grumman	Maj. Subs.	Matl./Min. Subs.	Total	
Structure**	$ 2.70	$ 1.57	$ 0	$ .89	$ 2.46	
Crew System	1.59	.11	.40	.30	.81	
Envmtl. Contl.	.65	.21	36	.05	.62	
Electrical Pwr.	1.48	.23 (.33)*	1.36 (1.86)*	.07	1.66 (2.26)*	
Stab. & Control	1.85	.12	.80	.04	.96	
Reaction Controls	.74	0	0	0	0	
Communications	.97	.05	.25	.01	.31	
Guidance & Nav.(1)	1.07	0	0	0	0	
Instrumentation	.68	.21	.28	.01	.50	
Propulsion	2.90	0	0	0	0	
Non-Subsystem Eng.**	.95	.39	0	0	.39	
Prog. Plng. & Mgmt.**	.44	.18	0	0	.18	
Experiment Integr.	--	.08	0	0	.08	
TOTAL	$ 16.02	$ 3.15 (3.25)*	$ 3.45 (3.95)*	$ 1.37	$ 7.97 (8.57)*	

(1) Does not include GFE N/G System ($2.30M Cost)

** See Figure 1 Notes

Retrofit Basis ( )
Prod. Line Mod. (X)

Figure 4

Production Phase

Configuration C and D*
Flight No. DOD-3

($ in Millions)
(All Costs Based on CY 1965 Rates)

Subsystem	Current Apollo LEM-7	Production - (Δ Cost for Retrofit Basis) (Total Cost for Prod. Line Mod.)				
		Manufacturing Costs				Spares
		Grumman	Maj. Subs.	Matl./Min. Subs.	Total	
Structure**	$ 2.70	$ 1.57	$ 0	$ .89	$ 2.46	
Crew System	1.59	.11	.40	.30	.81	
Envmtl. Contl.	.65	.21	.36	.05	.62	
Electrical Pwr.	1.48	.35	1.23 (1.56)*	.05	1.63 (1.96)*	
Stab. & Control	1.85	.12	.80	.04	.96	
Reaction Controls	.74	0	0	0	0	
Communications	.97	.05	.25	.01	.31	
Guidance & Nav.(1)	1.07	0	0	0	0	
Instrumentation	.68	.21	.28	.01	.50	
Propulsion	2.90	.00	0	0	0	
Non-Subsystem Eng.**	.95	.39	0	0	.39	
Prog. Plng. & Mgmt.**	.44	.18	0	0	.18	
Experiment Integr.	--	.08	0	0	.08	
TOTAL	$ 16.02	$ 3.27	$ 3.32 (3.65)*	$ 1.35	$ 7.94 (8.27)*	

(1) Does not include GFE N/G System ($2.30M Cost)

** See Figure 1 Notes

Retrofit Basis ( )
Prod. Line Mod. (X)

Figure 4

Production Phase

Configuration 1
Flight No. DOD-4

($ in Millions)
(All Costs Based on CY 1965 Rates)

Subsystem	Current Apollo LEM-7	Production - (Δ Cost for Retrofit Basis) (Total Cost for Prod. Line Mod.)				
		Manufacturing Costs				Spares
		Grumman	Maj. Subs.	Matl./Min. Subs.	Total	
Structure**	$ 2.70	$ 1.44	$ 0	$ .72	$ 2.16	
Crew System	1.59	.11	.40	.30	.81	
Envmtl. Contl.	.65	.21	.36	.05	.62	
Electrical Pwr.	1.48	.34	1.07	.05	1.46	
Stab. & Control	1.85	.12	.80	.04	.96	
Reaction Controls	.74	0	0	0	0	
Communications	.97	.05	.25	.01	.31	
Guidance & Nav.(1)	1.07	0	0	0	0	
Instrumentation	.68	.21	.28	.01	.50	
Propulsion	2.90	0	.00	0	0	
Non-Subsystem Eng.**	.95	.35	0	0	.35	
Prog. Plng. & Mgmt.**	.44	.16	0	0	.16	
Experiment Integr.	--	.04	0	0	.04	
TOTAL	$ 16.02	$ 3.03	$ 3.16	$ 1.18	$ 7.37	

(1) Does not include GFE N/G System ($2.30M Cost)

** See Figure 1 Notes

Retrofit Basis ( )
Prod. Line Mod. (X)

Figure 4

Configuration 1
Flight No. DOD-5

Production Phase

($ in Millions)
(All Costs Based on CY 1965 Rates)

Subsystem	Current Apollo LEM-7	Production - (ΔCost for Retrofit Basis) (Total Cost for Prod. Line Mod.)				
		Manufacturing Costs				Spares
		Grumman	Maj. Subs.	Matl./Min. Subs.	Total	
Structure**	$ 2.70	$ 1.44	$ 0	$ .72	$ 2.16	
Crew System	1.59	.11	.40	.30	.81	
Envmtl. Contl.	.65	.21	.36	.05	.62	
Electrical Pwr.	1.48	.34	1.07	.05	1.46	
Stab. & Control	1.85	.12	.80	.04	.96	
Reaction Controls	.74	.00	.00	0	0	
Communications	.97	.05	.25	.01	.31	
Guidance & Nav.(1)	1.07	0	0	0	0	
Instrumentation	.68	.21	.28	.01	.50	
Propulsion	2.90	0	0	0	0	
Non-Subsystem Eng.**	.95	.35	0	0	.35	
Prog. Plng. & Mgmt.**	.44	.16	0	0	.16	
Experiment Integr.	--	.04	0	0	.04	
TOTAL	$ 16.02	$ 3.03	$ 3.16	$ 1.18	$ 7.37	

(1) Does not include GFE N/G System ($2.30M Cost)

** See Figure 1 Notes

Retrofit Basis ( )
Prod. Line Mod. (X)

Figure 4

Production Phase

Configuration 1
Flight No. DOD-6

($ in Millions)
(All Costs Based on CY 1965 Rates)

Subsystem	Current Apollo LEM-7	Production - (Δ Cost for Retrofit Basis) (Total Cost for Prod. Line Mod.)				
		Manufacturing Costs				Spares
		Grumman	Maj. Subs.	Matl./Min. Subs.	Total	
Structure**	$ 2.70	$ 1.44	$ 0	$ .72	$ 2.16	
Crew System	1.59	.11	.40	.30	.81	
Envmtl. Contl.	.65	.21	.36	.05	.62	
Electrical Pwr.	1.48	.23	1.70	.08	2.01	
Stab. & Control	1.85	.12	.80	.04	.96	
Reaction Controls	.74	0	0	0	0	
Communications	.97	.05	.25	.01	.31	
Guidance & Nav.(1)	1.07	0	0	0	0	
Instrumentation	.68	.21	.28	.01	.50	
Propulsion	2.90	0	0	0	0	
Non-Subsystem Eng.**	.95	.38	0	0	.38	
Prog. Plng. & Mgmt.**	.44	.18	0	0	.18	
Experiment Integr.	--	.04	0	0	.04	
TOTAL	$ 16.02	$ 2.97	$ 3.79	$ 1.21	$ 7.97	

(1) Does not include GFE N/G System ($2.30M Cost)

** See Figure 1 Notes

Figure 4A

Retrofit Hardware Credits

($ in Millions)

(Assuming no salvage value of equipment removed during retrofit modification the following amounts must be added to total cost, "C" or "D" Config.)

Subsystem \ Flights	1(209)	2(211, C/D)	3(507)	4(509)	5(215)	6(513)	7(218, /D)	8(219, C/D)
Structure	$ 0	0	0	0	0	0	0	0
Crew System	.76	.76	.76	.76	.76	.76	.76	.76
ECS	0	.06	.06	.06	.06	.06	.06	.06
EPS	.50	0	0	0	0	0	0	0
S & C	.71	1.32	1.32	.92	.71	1.32	.71	1.32
RCS	0	.52	.52	0	0	.52	0	.52
Communications	.40	.40	.40	.40	.40	.40	.40	.40
G. & N.	.78	.78	.78	.78	.78	.78	.78	.78
Instrumentation	.08	.08	.08	.08	.08	.08	.08	.08
Propulsion	2.09	2.09	2.09	2.09	2.09	2.09	2.09	2.09
TOTALS	$ 5.32	6.01	6.01	5.09	4.88	6.01	4.88	6.01

TOTAL $ 44.21

Figure 4B

($ in Millions)

Alternate Cost Estimate for Production Line Modification
(in Lieu of Retrofit)

Subsystem \ Flights	1(209)	2(211, C/D*)	3(507)	4(509)	5(215)	6(513)	7(218, C/D*)	8(219, C/D*)
Structure**	$ 2.65	2.56	2.77	2.65	2.67	2.75	2.65	2.77
Crew System	.81	.81	.81	.81	.81	.81	.81	.81
ECS	.62	.62	.62	.62	.62	.62	.62	.62
EPS	.90	1.58 (2.22)*	1.65	1.46	1.58	1.66	1.55 (1.99)*	1.63 (2.27)*
S & C	.74	.96 (.96)*	.96	.38	1.70	.96	.74 (.74)*	0 (0)*
RCS	.74	0 (0)*	0	.84	.74	0	.74 (.84)*	.00 (.00)*
Communications	.31	.31	.31	.66	.31	.31	.43	.31
G. & N.	0	0	0	0	0	0	0	0
Instrumentation	.50	.50	.50	.50	.50	.50	.50	.50
Propulsion	0	0	0	0	0	0	0	0
Non-Subsystem Eng.**	.34	.50	.50	.54	.50	.50	.50	.52
Progr. Plng. & Mgmt.**	.16	.23	.23	.26	.23	.23	.23	.24
Experiment Integr.	.04	.21	.19	.10	.07	.19	.10	.07
TOTALS	$ 7.81	8.28 (8.92)*	8.54	8.82	9.73	8.53	8.87 (9.41)*	7.47 (8.11)*

* "D" Configuration Cost

** For Definition, See Fig. 1 Notes

Figure 5

Operations Phase ($ in Millions)

Launch Rate Per Year	Average Cost/Launch	
	LEM	Avg. AES Vehicle
3	$4.23	$3.59
4	3.87	3.29
5	3.43	2.92
6	3.15	2.68
7	2.92	2.48
8	2.79	2.39
9	2.68	2.28
10	2.60	2.21
11	2.58	2.19
12	2.57	2.18
13	2.63	2.23
14	2.64	2.24

Notes: (1) The above launch costs are higher than those submitted in supporting data for final presentation due to an arithmetic error in the original work-sheets.

(2) The above costs include field expense, relocation, and travel costs.

(3) The AES Vehicle Launch costs are based on no overlap with LEM launches. If the latter occurs the LEM rate applies until the inter-mix of launches is completed.

Additional Non-Recurring Costs
(14 LEM's/yr)

To achieve a production rate of 14 LEM's/year the following additional non-recurring costs would be required:

Tooling:	Grumman	$ 0.3M		Break Points:
	Subcontractors	15.4M		
			15.7	12/yr.
G.S.E. (Incl. STE)	At Grumman	$32.7M		Straight Line
	At E.T.R.	1.0M		Increase 6-12/yr.
			$33.7M	No incr. 12-14/yr.
Add'l. Trainer			$ 5.0M	10/yr.
		Total	$54.4	

Plus (1) additional GFE ACE Station (cost not known) 10/yr.

Facilities - No Govt.-Funded additional facilities would be required.

LEM Lab Cost Summary
Design & Development

($ in Millions)

S/C Modifications (Fig. 1):

Engineering, Development Support, & Major Test Item Fab	$75.37
G.S.E.	31.54
Trainers, Training, & Publications.	5.62
Tooling	2.83
Total	$115.36

Experiment Integration (Fig. 2):

	Cost	Commomality Codes
Flight No. 1 (209)	$ 4.63	
2 (211-C/D)	8.05	A, B
3 (507)	6.53	B, C
4 (509)	7.97	A
5 (215)	7.42	B, C
6 (513)	5.76	F
7 (218-C/D)	5.88	
8 (219-C/D)	10.43	A, D
9 (221-C/D)	5.97	
10 (516-C/D)	7.69	E, G
11 (518-C/D)	7.97	B, C, F
12 (521-C/D)	9.86	A
13 (523-C/D)	7.30	E, G
14 (229-C/D)	9.89	A, D
15 (230-C/D)	7.48	
DOD-1, C/I	5.94	
DOD-2, C/D	6.28	
DOD-3, G/D	6.01	
DOD-4	10.49	A, H
DOD-5	10.49	A, H
DOD-6	10.49	A, H
Totals	$162.53	
Non-Add Costs	29.49	
Net Total	$133.04	

	Commomality Cost	No.Duplic (-) 1	Non-Add Cost
A	$2.66	x 7 =	$18.62
B	.25	3	.75
C	1.85	2	3.70
D	.90	1	.90
E	.54	1	.54
F	1.08	1	1.08
G	.90	1	.90
H	1.50	2	3.00
		Total	$29.49

Fig. 1 Total	$115.36
Fig. 2 Total	133.04
Combined Total	$248.40

Time Phasing of D & D - Yrs. After Go-Ahead.

	1	2	3	4	5	6	Total
Fig. 1	$28.9	46.2	17.3	11.5	7.5	4.0	$115.4
Fig. 2	14.1	28.2	30.8	24.5	21.2	14.2	133.0
Total	$43.0	74.4	48.1	36.0	28.7	18.2	248.4

LEM Lab Cost Summary ($ in Millions)

Production

Flight No.	Production Costs (Fig. 4)			Retrofit H'ware Salvage Credits Taken(Fig. 4A)	Alternate Prod. Line Mod-Costs (Fig. 4B)	
	1 & C	D	Spares*		1 & C	D
1 (209)	$11.95(r)		1.45*	$ 5.32	$7.81	
2 (211,C/D)	13.10(r)	13.63(r)	15.00*	6.01	8.28	8.92
3 (507)	12.58(r)			6.01	8.54	
4 (509)	13.16(r)			5.09	8.82	
5 (215)	13.58(r)			4.88	9.73	
6 (513)	12.48(r)			6.01	8.53	
7 (218,C/D)	12.74(r)	13.42(r)		4.83	8.87	9.41
8 (219,C/D)	12.23(r)	12.89(r)		6.01	7.47	8.11
9 (221,C/D)	8.87	9.46		$44.21		
10 (516,C/D)	9.23	11.44	2.90*			
11 (518,C/D)	8.82	10.13				
12 (521,C/D)	8.94	9.53				
13 (523,C/D)	10.78	11.55				
14 (229,C/D)	8.25	9.64				
15 (230,C/D)	4.10	4.70				
DOD-1, C/D	8.95	9.34				
DOD-2, C/D	7.97	8.57				
DOD-3, C/D	7.94	8.27				
DOD-4	7.37					
DOD-5	7.37					
DOD-6	7.97					
Total	$208.38		$19.35*			
Spares	19.35					
Comb. Total	$227.73					

* See Fig. 4 for Spares cost sharing by other flights.

(r) = Retrofit of a completed LEM.

BREAKDOWN OF LOGISTICS COST

SPARES (5 Sets of New & Modified Equipment - 2 Developmental, 3 Operational)

EPS	3 FCA	$1.05		SCS	2 Horiz. Scanners	$.25	
	3 ECA	.10			1 Star Trackers	.50	
	3 Inverters	.06			1 Data Proc.	.05	.80x5 = $4.00
	2 Tank Sets	.75			1 Star Tracker	.50	
	1 Cryo Feed	.05			1 Data Proc.	.05	
	Battery	.02			1 Display	.03	.58x5 = 2.90
	Misc.	.07		Instrum.	1 Data Storage	.05	
		$2.10x5 =	$10.50		1 TV Syst.	.05	
Crew Syst. Misc.		.12x5 =	.60		1 Data Contr Panel	.02	.12x5 = .60
Communicat. 1 Audio Center		.05x5 =	.25	ECS	1 Water Mgmt.	.10	.10x5 = .50
		Subtotal	$11.35			Subtotal	$8.00

Total Spares $19.35

Trainers, Training, & Publications

Fig. 1, D. & D.

$5.00 for add'l. trainer (mission simulator) configured for General S/C Training Requirements. (This trainer is Non-add to trainer cited on Fig. 5 for 14 LEM's (yr.))
.17 General Revision of Training Courses
.45 Publication Revisions covering the General LEM Lab configuration.
$5.62 Total

Fig. 2, D. & D. (each)

$ .26 For modifying Trainer & Training courses
.38 For Revising and Producing Handbooks in support of individual flights.
$0.64 Each Flight x (21) = $13.44 Total

The Training and Publications Estimates have been applied as an average to Fig. 2 sheets as the effort associated with individual flights is assumed to be relatively invariant.

BREAKDOWN OF G.S.E. COSTS

The G.S.E. estimate is based on developing and fabricating (4) sets of G.S.E. required for new or modified subsystems. These will be allocated: (2) GAEC, (1) MSC, (1) ETR.

Fig. 1: All software and hardware common to (3) or more flights. (90% of all hardware is common to all flights.)

Fig. 2: All software requirements for each flight plus an average (evenly pro-rated) cost of all hardware peculiar to (1) or (2) flights. Of the Fig. 2 average cost 85% is for software and 15% is for development and fabrication of equipment. (Software pertains mainly to monitoring and assisting in the testing and integration of the experiment package to the S/C interface.)

The principal areas of G.S.E. effort are:

Electrical:

(a) Power distribution subsystem, (b) Data management, (c) Factory test and pre-launch checkout. ACE carry-on equipment will have to be new or LEM-modified to accept the required stimuli controls from ACE and to route them to the proper subsystem for checkout.

Fluids:

New G.S.E. is required because of the change from battery power generation section to fuel cells.

Mechanical:

LEM equipment will be modified for common LEM/LEM Lab usage where possible, otherwise new equipment will be provided:

(a) New slings and fixtures due to C.G. displacement.

(b) New handling/transportation equipment to accommodate LEM Lab vehicles with externally mounted experimental equipment of odd sizes and protrusions.

(c) New work platforms to accommodate modified ascent/descent stage structures, with externally mounted hardware.

(d) Handling/transportation equipment for fuel cell requirements (SOX, SH_2, etc.), cryogenic adapters and fixtures, cryogenic tank slings, etc.

		Electrical	Fluids	Hdlg./Trspt.	Total
Fig. 1 D.&D. Gen'l S/C Mods.	Structure	0	0	$ 4.40 (17)	$ 4.40 (17)
	Crew Syst.	$ .95 (8)	0	0	.95 (8)
	ECS	1.57 (5)	$ 1.42 (3)	0	2.99 (8)
	EPS	8.04 (24)	10.57 (34)	1.26 (3)	19.87 (61)
	Communic.	.02 (1)	0	0	.02 (1)
	Instrum.	.47 (3)	0	0	.47 (3)
	Exper. Integ.	2.52 (14)	0	.32 (2)	2.84 (16)
	Total	$13.57 (55)	$11.99 (37)	$ 5.98 (22)	$31.54 (114)
Fig. 2, D.&D. Flt. Peculiar Software	Structure	0	0	$ 9.94	$ 9.94
	Crew Syst.	$ 2.07	0	0	2.07
	ECS	.83	.83	.63	2.29
	Instrum.	4.14	0	0	4.14
	Exper. Integr.	13.70	1.24	1.86	16.80
	Total	$20.74	$ 2.07	$12.43	$35.24

Fig. 2, D.&D. Hardware	Structure (Approx. 20 items)	$ 2.03	
	Exper. Integ. (Approx. 40 items)	4.10	
	Subtotal		$ 6.13
		Total Fig. 2	$41.37

( ) = Nos. of Equipment Items.

($1.97 x 21 flts. = $41.37)

LEM LAB COST ESTIMATE

COSTING RATIONALE & METHODOLOGY

The following explanation of the approach taken by Grumman in preparing the LEM/Lab cost estimate is supplemental to the guidelines, assumptions, and conditions outlined in the Introduction and to the explanatory material concerning the costing of G.S.E., Spares, Training, and Publications.

GENERAL:

Standard Grumman estimating procedures were used except that the extremely limited time available for costing, subsequent to definition of vehicle configurations, necessitated minimal and abbreviated substantiation of estimates. Considerable use was made of the known levels of effort (both experienced and estimated in detail) for similar scopes of work on the APOLLO/LEM program. Although, as a derivative, the LEM/Lab program will naturally benefit from prior LEM experience, Grumman has been realistically conservative in estimating this effort required for developing and building the LEM Lab configurations.

ENGINEERING:

The engineering manhour estimates include the following categories:

Labor type 10 -- Design Engineering
Labor type 11 -- Flight Test Engineering
Labor type 12 -- Service and Publications Labor
Labor type 13 -- G.S.E. Engineering Labor
Labor type 40 -- Manufacturing Engineering Labor

The latter (4) categories are principally associated with Launch Operations, Training, Publications, G.S.E. (including Special Test Equipment) and Tooling. The preponderant effort is in Design Engineering, consisting of Subsystem Design, Stress/Major Structure Test, Subsystem Qualification, Drafting, Design Support, and Documentation.

The Design Engineering estimate was prepared by the Engineering Planning and Controls Section, responsible for the establishment and monitoring of company-wide engineering budgets. The estimate was made by consultation with the LEM subsystem engineering sections subsequent to individual briefings by the Advanced Space Systems Section as to the general and flight-peculiar S/C modifications required for the LEM Lab missions. Major subcontractor engineering for qualification-testing for extended life was estimated with consideration of typical test preparation effort, test staffing and duration. Non-subsystem engineering (Stress/Major Structure Test, System Simulation and Analysis, Reliability, etc.) estimate was based upon the same general proportions of non-subsystem effort as required on the LEM Program. The estimate of the level of effort required for major test work was based on the Program Plan Rationale.

MANUFACTURING:

The manufacturing manhour estimates include the following categories:

Labor type 20 -- Production Labor
Labor type 23 -- G.S.E. Fab. Labor
Labor type 30 -- Q.C. - Inspection Labor
Labor type 60 -- Shipping Labor
Labor type 74 -- Mfg. Eng. Fab. Labor

The production manhour estimates were prepared by the Production Analysis Estimating Section of the Manufacturing Dept. in close liaison with Mfg. Eng. Personnel assigned to the Advanced Space Systems Section and with the cognizant manufacuting representatives of the LEM Program organization. Detailed LEM Mfg. Flow Charts, with budget hours allocated for specific functions, were used to estimate the effort for corresponding applicable LEM Lab work. Some of these functions are: fabrication of ascent and descent stage structure, rotate and clean, install applicable subsystems, D.E.I., vibration, weigh and C.G de-mated and mated, alignment, E.M.I., experiment installation, pack and ship. For the retrofit cases, disassembly of the LEM stages was estimated on the "easiest way" basis (cut lines, cables, etc. if permissible)--the maximum disassembly effort per vehicle does not exceed 1,600 hours.

G.S.E. and tooling estimates were made by estimating sections of the cognizant depts. and were based upon corresponding LEM work as applicable. Independent estimates of Q. C. - Inspection effort were not made because of time restrictions. Inspection manhours were included at 15% of production hours as this is the average experienced and projected, on the LEM Program.

Learning Curves (cost improvement) were not used in estimating LEM Lab production costs because the guidelines specified that "These costs will be computed by configuration to reflect the delta from current APOLLO for first unit of modified hardware". Because of the varying configurations of the various flights the application of a production learning curve would be inappropriate except to basic structure manufacture on a production line modification basis. This amounts to about 70% of the cost of the "Structure" subystem. The learning curve adjustment could be applied to this portion of the production costs using the percentages previously submitted to NASA H.Q. with Base LEM Data. These percentages range from 95% (at 6/yr.) to 89% (at 12/yr.).

PROCUREMENT:

Costing of major subcontract items common to LEM were based on current estimates of LEM items, firm prices for many of which have not yet been established. Individual portions or subsystems, where not used in their entirety as in LEM, were estimated based upon established, quoted, or estimated prices of Spares for the LEM Program.

Estimates of new equipments were made on the basis of the best information at hand. Star tracker and horizon sensor costs were based on OAO prices plus a nominal provision for adaptations expected to be required for integration into the LEM Lab configuration. Estimated costs of APOLLO X fuel cells were based on information received from N.A.A. via MSC project personnel.

Estimates of other procurements for modified displays and controls, instrumentation, stabilization and controls, etc., were based on costs of similar equipments on LEM.

LEM LAB COST ESTIMATE ($ in millions)

Incorporated in this final report are the following changes that have been made in the Cost and Schedule Report of 16 April 1965, Vol. 5 of Supporting Data for the Final Presentation.

Cost Changes:

Fig.	Pg.	Flt. No.	Change	Net Cost Change
1	4	--	Changed $.51 Exper. Integr. from Dev. Suppt. to Tooling	None
2	3	2 (211)	Added "B" Commonality. Chg. "B" Non-add cost to $.75	Increase of $0.25
2	23	DOD-4	Decreased cost from $18.93 to $10.49 each. (Simpler Arrangment for installing new air lock) Decreased "H" Commonality from $9.94 to $1.50	Decrease of $8.44
2	24	DOD-5		
2	25	DOD-6		
2	54	1 (209)	Increase from $4.61 to 4.63 (typo.error)	Increase of $0.02
2	54	total	Total net decrease from $141.21 to $133.04	Decrease of $8.17
4	38	9 (221)	Increase RCS by .09 & Instrum. by .01	C & D: (+) $0.10
4	39	10 (516)	On "D" increase RCS by .18, EPS by .46	D: (+) 0.64
4	40	11 (518)	On "D" increase RCS by .16	D: (+) 0.16
4	42	13 (523)	"C" Incr. RCS .20; "D" Incr. RCS .40, Decr. EPS .20	C (+) .20 D (+).20
4	43	14 (229)	"C" Incr. RCS .86; "D" Incr. RCS by .46	C (+) .86 D (+).46
4	44	15 (230)	Decr. Crew Syst. by .81, Decr. ECS by .40	C & D: (-) 1.21
4	45-47	DOD 1-3	Increase structure by .17 each Total for (3)	C & D: (+) 0.51
4	46	DOD-2	"D" Incr. EPS by .45	D: (+) .45
4	39/55	10 (516)	Reduce Spares (Star-Trackers) from $7.90 to $2.90	Spares Total Red. to $19.35
4	55	total	Increase total (1 & c) from $207.38 to $208.38	Net increase (+) $0.46
4	55	Comb. Tot.	Reduce from $232.27 to $227.73	Net change (-)$4.59
5	53	--	Average Costs/Launch (3-14/VR) increased.	(Correction of Calculation)
5	53	--	GAEC Tooling decreased from $2.00 to $0.30	Change of (-) $1.70

Cost Changes (Cont)

Fig.	Pg.	Flt. No.	Other Changes
1-4		--	Replaced stub item Program Mgmt. & Eng. with: "Non-sub-system Eng." and "Progr. Plng. and Mgmt."
4	41	12 (521)	Added Config. "D" Costs ($9.53)
4A	51	1-8	Added table of Retrofit Hardware Credits
4B	52	1-8	Added table of Alternate Cost Estimates for Prod. Line Mod. (in lieu of retrofit)
5	53	--	Added Rate/Yr. Break Points for Additional Non-Recurring Costs (to 14/yr.)
1-2	54	all	New D. & D. cost summary (was previously on page 47)
4	55	all	New Prod. cost summary (was previously on page 47)
--	56	--	Added page - Breakdown of Logistics Costs
--	57	--	Added page - Breakdown of G.S.E. Costs
--	59	--	Added pages - Costing Rationals and Methodology

3 LEM Lab Development Program

3.1 General

The LEM Lab development program has been formulated using the following guidelines:

- No interference with the Apollo Lunar Landing Program.
- Updated versions of existing LEM LTA's, TM's and system rigs will be used to provide an economical use of available resources. This procedure will not interfere with the Lunar Landing program since the LEM test articles considered will have completed their respective tasks prior to use in the LEM Lab program. The LEM Test Articles considered are: (Reference LEM Schedule 33A, 3-29-65)

1.	LTA-2	Available Jan. 1967
2.	TM-2	Available July 1966
3.	HSC-1 Ph. 1	Available April 1966
4.	HSC-1 Ph. 2	Available November 1967

- New test articles will be fabricated for qualification testing of the basic LEM Lab. These test articles will be used to relieve constraints on launch for the first LEM Lab mission (209) and as necessary for subsequent missions or mission types.
- The experimenter will qualify his experiment as a subsystem normally 18 months prior to flight date.
- Installation and integration of the experiment into the spacecraft will be accomplished at the spacecraft contractor's facilities.
- The manufacturing checkout sequence will include an acceptance level vibration and system test for each flight article with the experiment equipment installed.
- DOD flights occur, for cost phasing, at two month intervals upon completion of NASA flights.
- All missions flown up to flight 221 use LEM spacecraft which have been retro-fitted. Flight 221 and subsequent are production line build-ups of the flight configuration.
- The fuel cell assemblies and cryogenic tanks are developed and qualified hardware from the CSM.

The following constraints on using the LEM as a Lab were assumed to have been relieved by the Apollo Lunar Landing Program.

- LEM ascent stage man-rated for space flight

- Structural qualification of the ascent stage
- Compatibility of the LEM and the SLA
- LEM/CSM compatibility
- LEM/S-IB and S-V compatibility
- LEM/launch complex and ETR test facility compatibility
- LEM subsystems qualified for launch and ambient orbital environment.

3.2 LEM Lab Development

The LEM Lab system development program shown in Figure 3-1 is divided into four major areas: Configuration Management, Structural Integrity, System Integration and Thermal Vacuum Qualification.

3.2.1 Configuration Management

The development schedule shows mockup support beginning at program "go ahead" and continuing through the DOD mission configurations. This support will include interior and exterior lab and experiment arrangements and any special crew-experiment-subsystem compatibility study that may be required. Each mission requires a different experiment and Lab configuration, therefore some means must be provided to control and mechanically integrate all the different pieces of hardware. This task is best accomplished with a soft mockup (wood-cardboard) that can be manufactured cheaply and modified from configuration to configuration with relative ease.

3.2.2 Structural Integrity

The LEM Lab concept is a direct derivative of the basic LEM structure and pressure shell, therefore the crew area or ascent stage does not require basic structural testing. The equipment carrying descent stages, both low profile and standard depth will require static and dynamic structural testing since the former is a new development and the latter is modified from the LEM configuration. Two types of test articles are required to fulfill this requirement. The low profile descent stage is required early in the program for dynamic and static structural tests in support of Mission 211. This mission is the first flight utilizing a low profile descent stage, therefore, the structural integrity constraint must be relieved prior to launch. In the low profile descent stage development schedule shown (Fig. 3-2), preliminary design is started in advance of go-ahead in order to meet the requirements for supplying hardware for static and vibration tests as well as system integration and verification prior to factory assembly of the 211 vehicle.

The standard descent stage test article, is required for static and dynamic structural tests of the reconfigured Lab descent stage in support of mission 507 and subsequent. This is the first mission to use this modified stage and the Design Engineering Inspection of mission 507 flight article was selected as a completion date for structural testing of the test article in order to provide sufficient lead time for updating the flight hardware if required. The DSTA-1 is used as a Grumman structural test article in support of the various experiment installations.

Wherever primary or secondary structural modifications are incurred as a function of the experiments the structure must be requalified for both the dynamics of launch and pressure shell integrity where modifications to the pressure shell are involved. This is best accomplished in the following manner. Structural modifications will be incorporated in the structural test articles and given proof type static and vibration tests. At the same time, these modifications will be made in the flight article and final qualification type modal and pressure tests on the flight article will be made during factory assembly and checkout prior to shipment to ETR. This procedure will permit the minor modifications to be accomplished in a judicious and economical manner, in support of the various missions.

To accomplish the modal vibration tests on the two new descent stages, an ascent stage structure or simulator is required. The LEM dynamic test article LTA-2, shown in Figure 3-3 is available for this purpose. Its ascent stage has the approximate weight and inertial values of the LEM Lab, has propellant tank ballast that can be removed, and can be easily modified since it is a boilerplate structure.

3.2.3 System Integration

The task of integrating the subsystems and various experiment equipment into a functional spacecraft has been assigned, in this study, to a two-phase House Spacecraft as in the LEM Program. The same Rig and Test Article, namely the ESI Rig and LTA-1, used on LEM are available for system integration for the LEM Lab missions. Figure 3-4 shows the LEM ESI rig prior to equipment installation. As can be seen from this picture the ESI rig is more than a bench installation and is an accessible representation of the LEM Lab. The ESI rig is available well in advance of LEM Lab requirements and LTA-1 can be phased in for testing the mission 509 configuration. This procedure will avoid building an entirely new HSC.

System integration testing in these Lab House Spacecraft (LHSC) has been laid out to first integrate the basic LEM Lab subsystems, ECS, EPS, FCS, Instrumentation and Communication and then add experiment hardware in a continuous buildup process until all experiment/spacecraft configurations are covered. Testing will include design support, GSE and ACE evaluation and operations, Electronic Systems Integration (ESI) and Electromagnetic Interference (EMI). The buildup concept of experiment integration requires the minimum amount of reconfiguration time since many experiments and groups of experiments repeat on later missions. The experimenter is expected to provide functional hardware, preferably flight weight, for this testing along with the necessary experiment ground support equipment.

System integration testing is scheduled to be completed prior to the start of factory assembly and checkout of the flight article.

3.2.4 Thermal-Vacuum Qualifications

The thermal vacuum test program includes both an engineering design verification program at Grumman and a thermal vacuum demonstration program in the man-rated chambers at MSC. The first phase of this testing is conducted using another piece of LEM program hardware; namely, the thermal vacuum test model, TM-2. This test article is available for modification and testing of the mission 209 configuration at program go-ahead and may be updated easily to the mission 507 configuration. TM-2 uses thermal simulation techniques for subsystem inputs and this same method may be used for experiment inputs. After verification of the first few missions

the same philosophy adopted for the House Spacecraft in experiment buildup to the various "thermal" missions will be followed. Experiment hardware is not required for these tests, but the experimenter should provide a thermal simulation model or sufficient data to permit the correct thermal inputs to the Lab.

For verification of the mission 211 configuration a new low profile descent stage, designated LPDSTA-2, will be required for support of the test program.

Thermal vacuum demonstration consists of an exercise of the subsystems under varying mission duty cycles and external thermal-vacuum environments as affected by orbital plane and vehicle attitude, with nominal or off-nominal experiment thermal inputs. Again, the same philosophy is applied in this phase of testing at MSC that was used for the House Spacecraft and thermal-vacuum verification, i. e., the various "thermal" missions will be demonstrated rather than individual flights. The demonstrations also include manned T/V and mated CSM/LEM Lab tests as required to relieve CSM/LEM Lab interface constraints developed as a function of missions.

In order to accomplish this an entirely new test article will be required, designated LLTA-1 (LEM Lab Test Article) and includes ascent stage, low profile descent stage (LPDSTA-3) and standard depth descent stage. Fabrication begins at program "go-ahead." An all systems operating vibration test is conducted prior to shipment of this article to NASA-MSC. This vibration test relieves the final structural/system integrity constraint for the 211 mission.

3.3 Experiment/Spacecraft Integration

Integration of the experiments into the LEM Lab spacecraft is a three phase effort; design and development, system verification, and final assembly and acceptance.

The design and development phase is primarily concerned with defining the structural, mechanical, electrical interfaces between the experiments and the spacecraft and, the interior arrangement and astronaut utilization of the experiment controls and displays. Two mockups of the spacecraft have been proposed and appropriate experiment mockups should be provided by the experimenters to support this effort.

System verification is concerned with the structural dynamic response of the LEM Lab with experiments installed, thermal control of the experiments utilizing the spacecraft heat transport section and electronic system integration. Dynamic, thermal and house-spacecraft test articles have been proposed to support this effort and appropriate dynamic and thermal simulators should be provided by the experimenter.

Selected thermal vacuum demonstration tests are sheduled to be performed in the space simulation chambers at MSC. In support of these tests the experimenter should provide prototype experiments. Selection of missions for which such tests are warranted appears to be dependent upon the variation in the thermal mission as a result of the different flight profiles, i. e., low inclination, polar, synchronous, and those experiments which provide significant inputs to the thermal control systems, or the experiment is sensitive to the thermal control provided by the spacecraft ECS.

The electronic system integration effort requires functional experiment equipment to verify the acceptability of the integration of the experiments into the spacecraft and EMI, ACE and GSE compatibility checks of the LEM Lab.

Final assembly and acceptance is accomplished in the LEM Lab final assembly and checkout area. The completed laboratory is checked out completely during this phase prior to shipment to the ETR. System checks, vibration tests, EMI, weight and C. G. checks are conducted at this time with the spacecraft systems supported by appropriate GSE and utilizing the ACE. The experimenter should provide sufficient GSE and recording equipment to monitor the performance of the experiment equipment throughout this phase of final assembly and acceptance.

3.4 Prelaunch Operations

Prelaunch operations performed at the Eastern Test Range (ETR) will consist of checkout of the LEM subsystems and the experiments, and verification that the integrated laboratory is ready for flight.

Two representative checkout flow diagrams are shown in Figure 3-5 which describe the requirements of all LEM Lab missions. The basic difference between these two flows is the need for using the hypergolic test facility for those Lab configurations having Reaction Control Systems (RCS). Star tracker and horizon sensor checkout is accomplished in the Manned Spacecraft Operations Building (MSOB) in place of the normal LEM Navigation and Guidance checkout. Each mission configuration was examined to determine the impact of experiment hardware on prelaunch checkout with the result that additional checkout times are required in the MSOB and the Radio Frequency Test Facility (RFTF).

The LEM Lab flows were established using the following assumptions:

- Each week consists of 5 working days, 2 shifts per day
- VAB Flow is 15 working days (ref a)
- Launch Pad flow is 14 working days (ref b)
- ACE-S/C is used for basic lab subsystems
- Large and/or complex externally mounted experiments, i. e., satellites, cameras, telescopes, will be checked out in parallel with the Lab and installed in the Lab at the RF facility with final checkout in the MSOB.

The total flow times of 50 and 60 working days for the two representative Lab configurations are less than the estimated 99 working days for a basic LEM and reflects a saving in time through the deletion of LEM subsystems, primarily propulsion.

- - - - - -

a. GAEC LMO 6AO-58, Launch Complex 39, CSM/LEM Integrated Flow, 11-11-64

b. GAEC LED 5AO-12, AMPTF Volume II Preflight Sequence of Events, 10-30-64

[redacted]

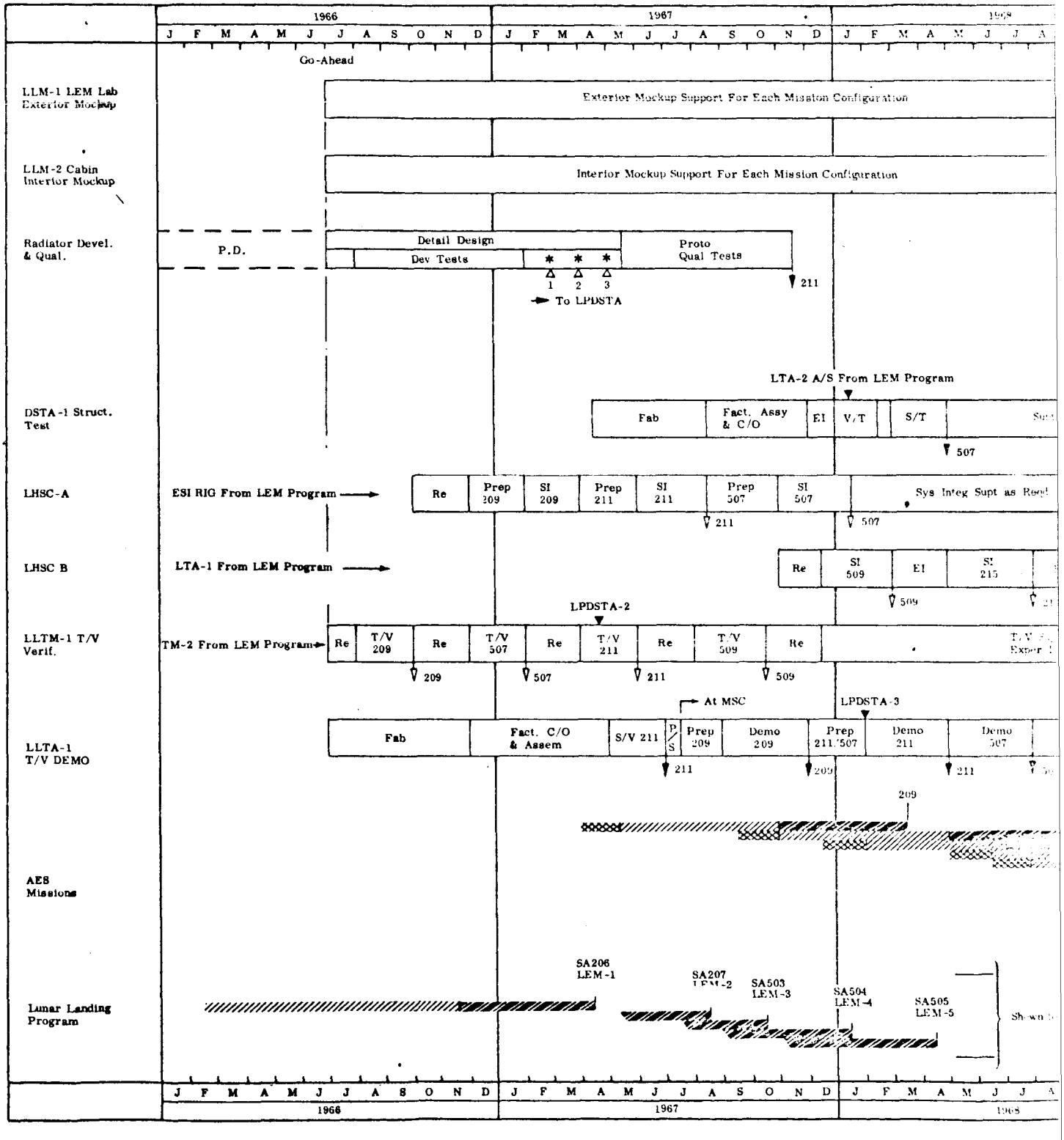

[redacted]

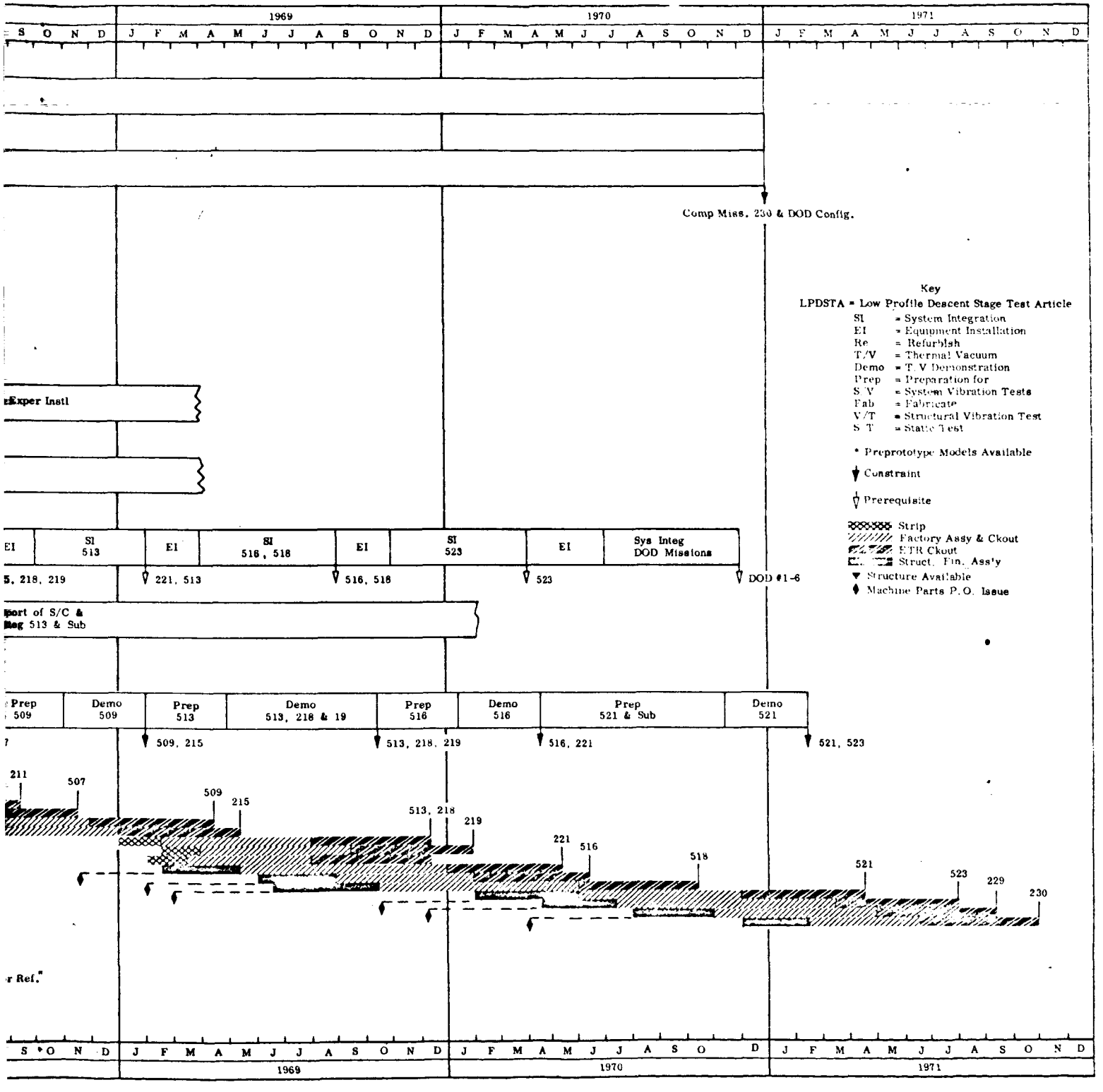

Fig. 3-1 Program Development Schedule

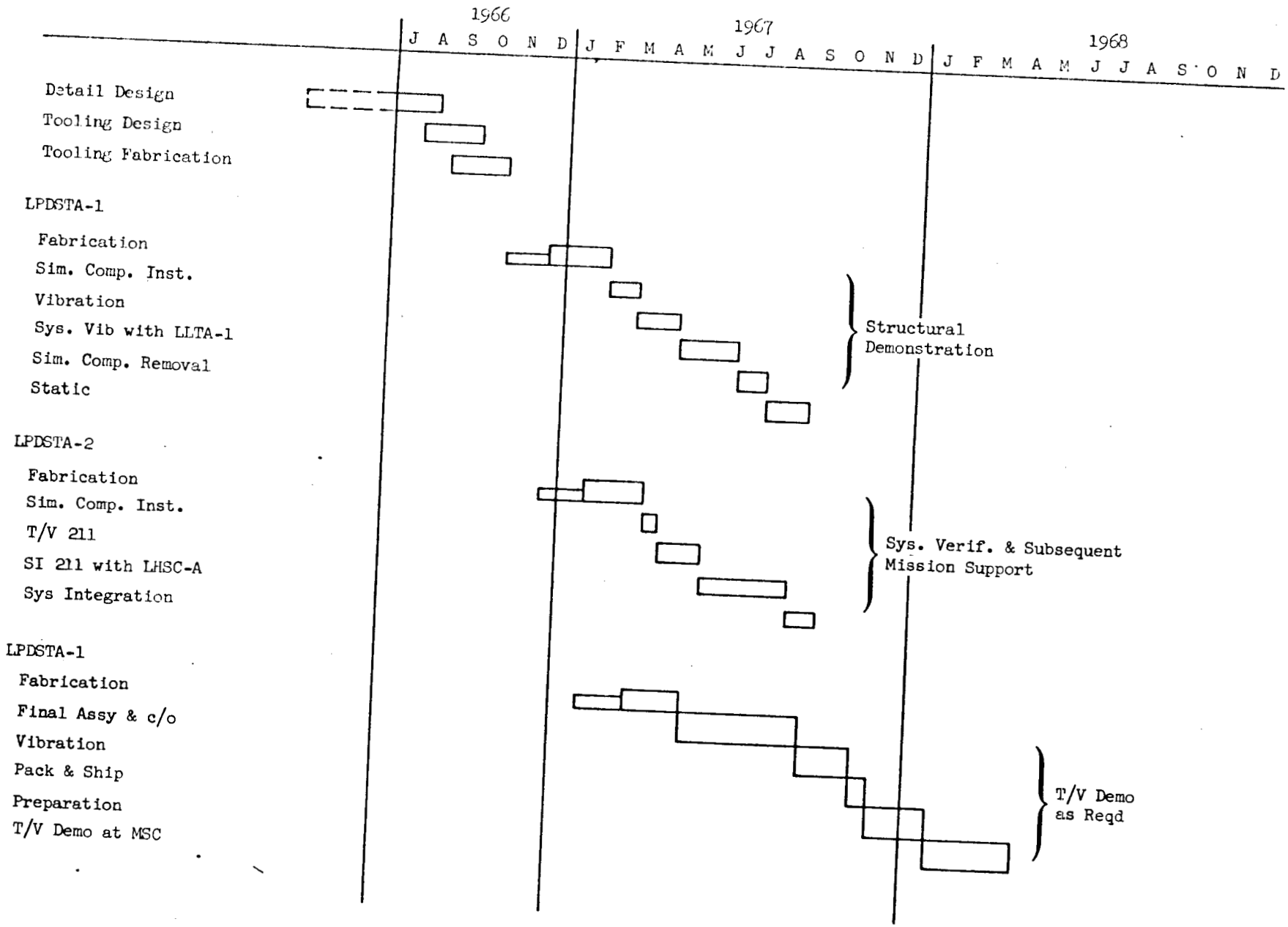

Fig. 3-2 Low Profile Descent Stage Development Schedule

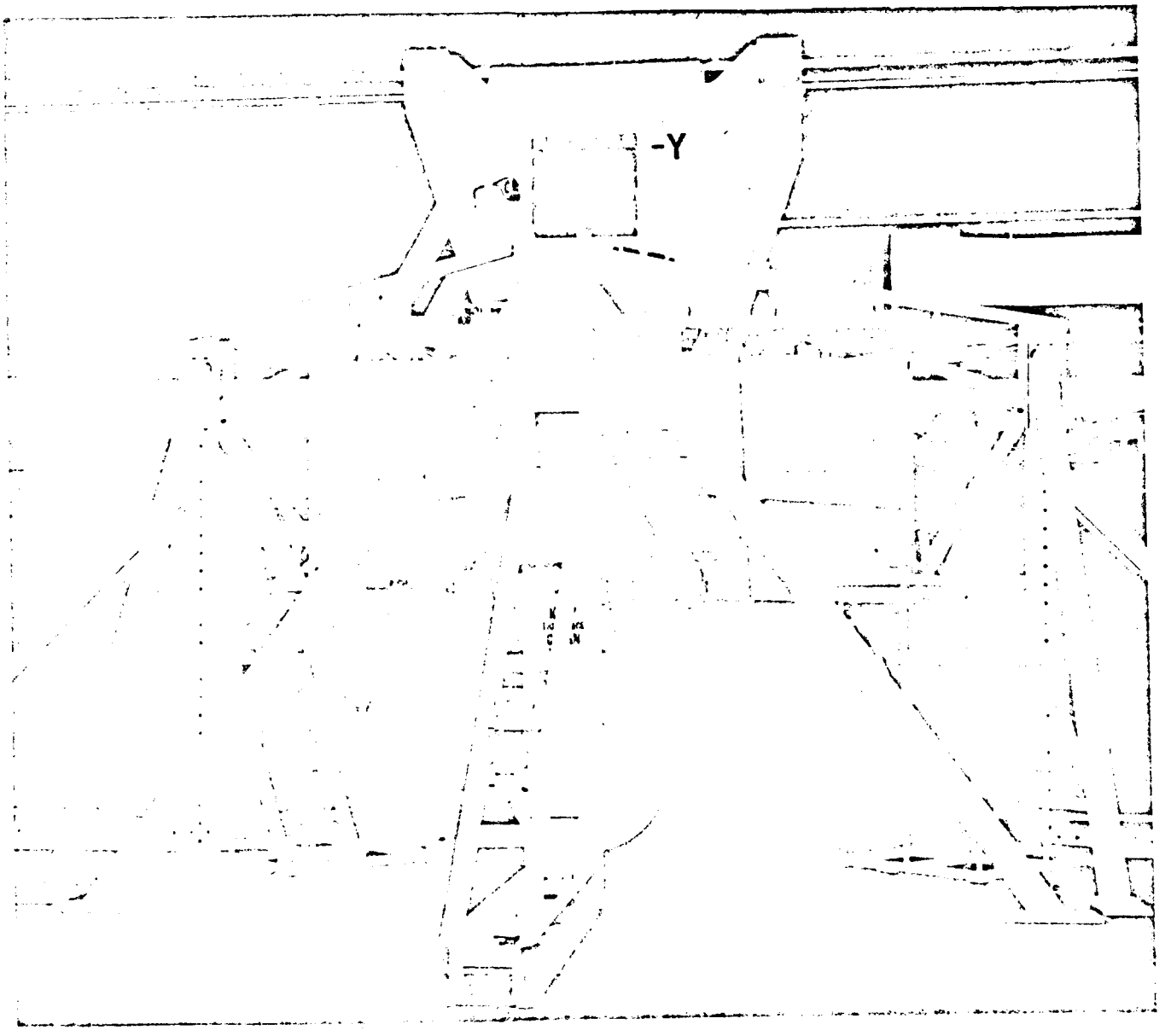

Fig. 3-3 LTA 2 with Dynamic Simulator of Ascent Stage

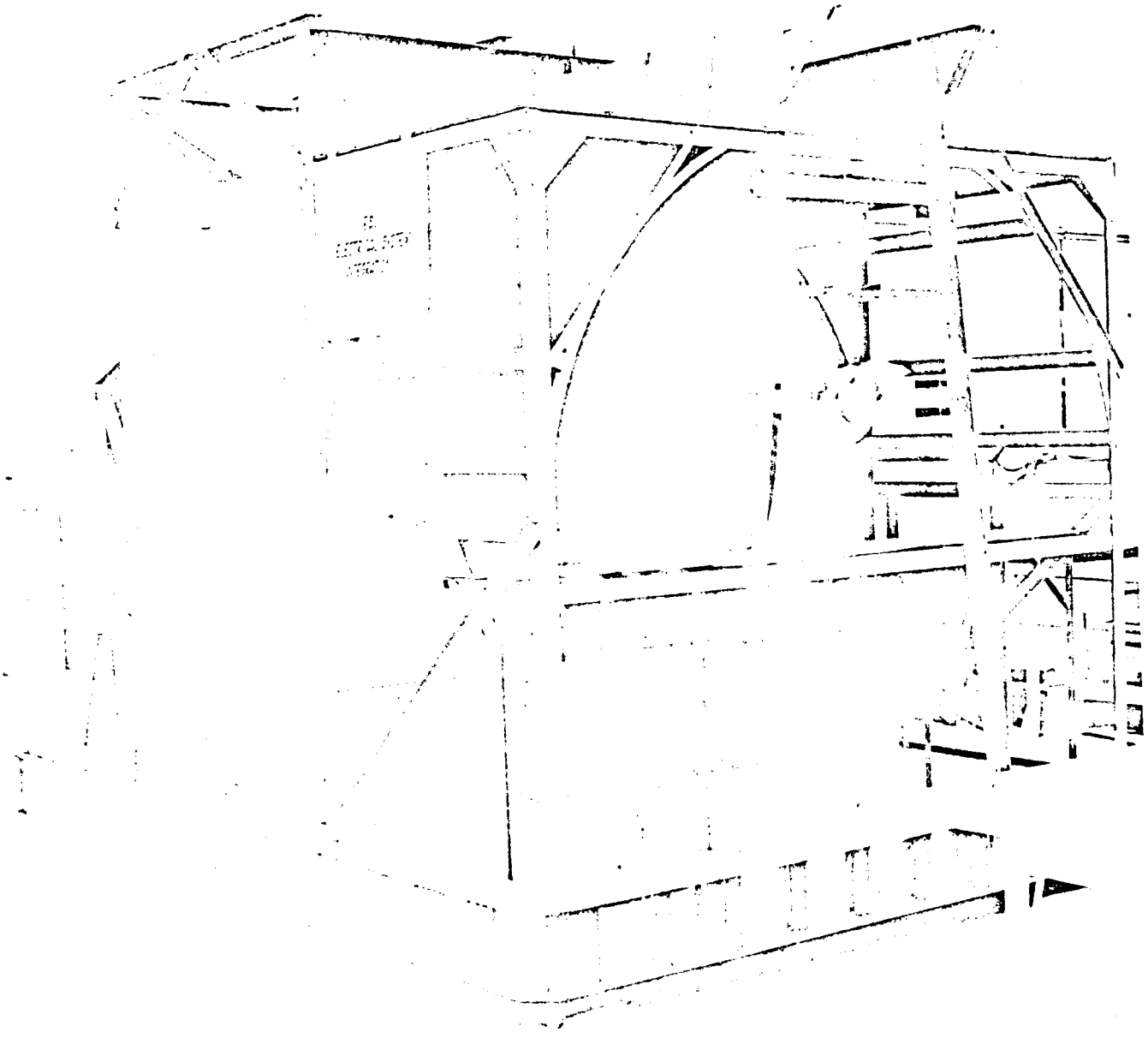

Fig. 3-4 ESI Rig Prior to Installation of Electronic Equipment

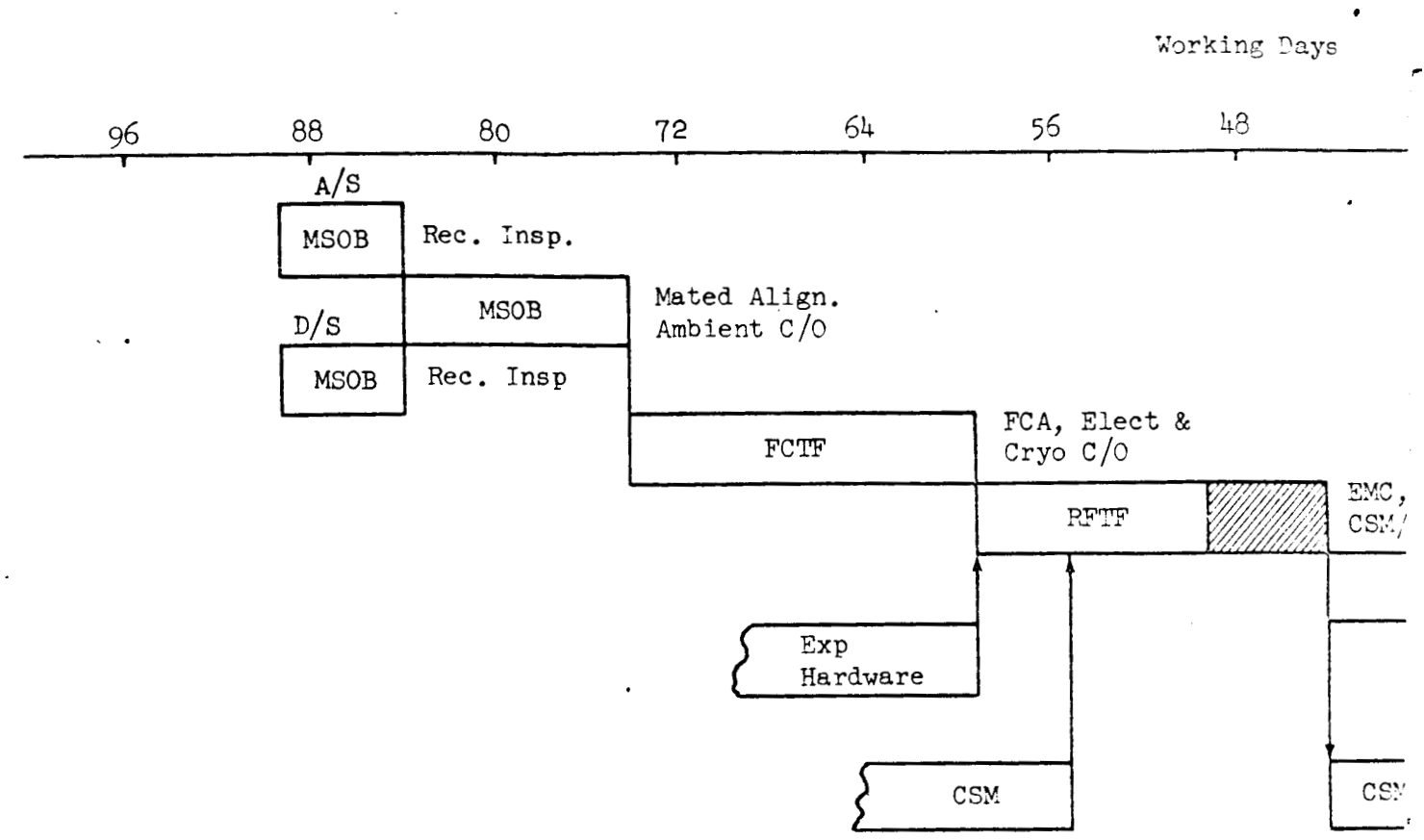

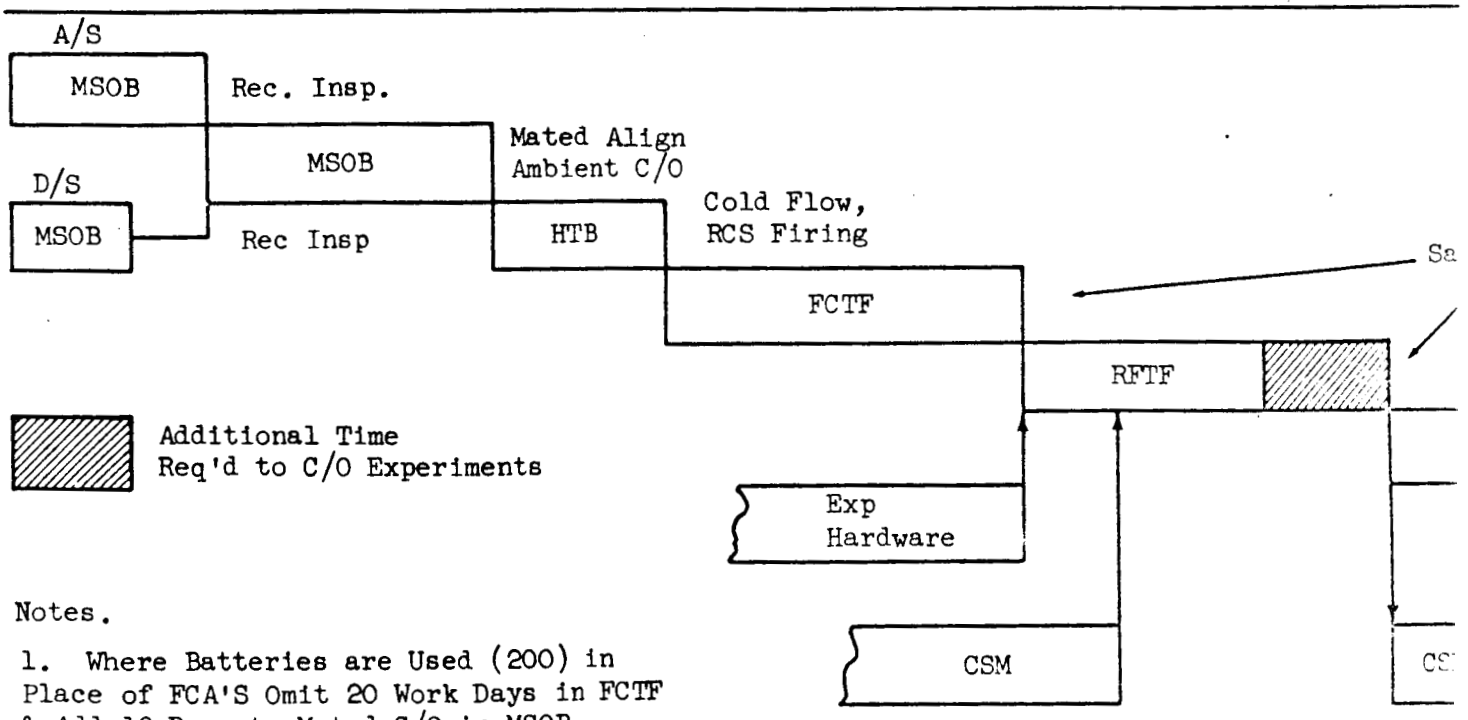

Notes.

1. Where Batteries are Used (200) in Place of FCA'S Omit 20 Work Days in FCTF & Add 10 Days to Mated C/O in MSOB

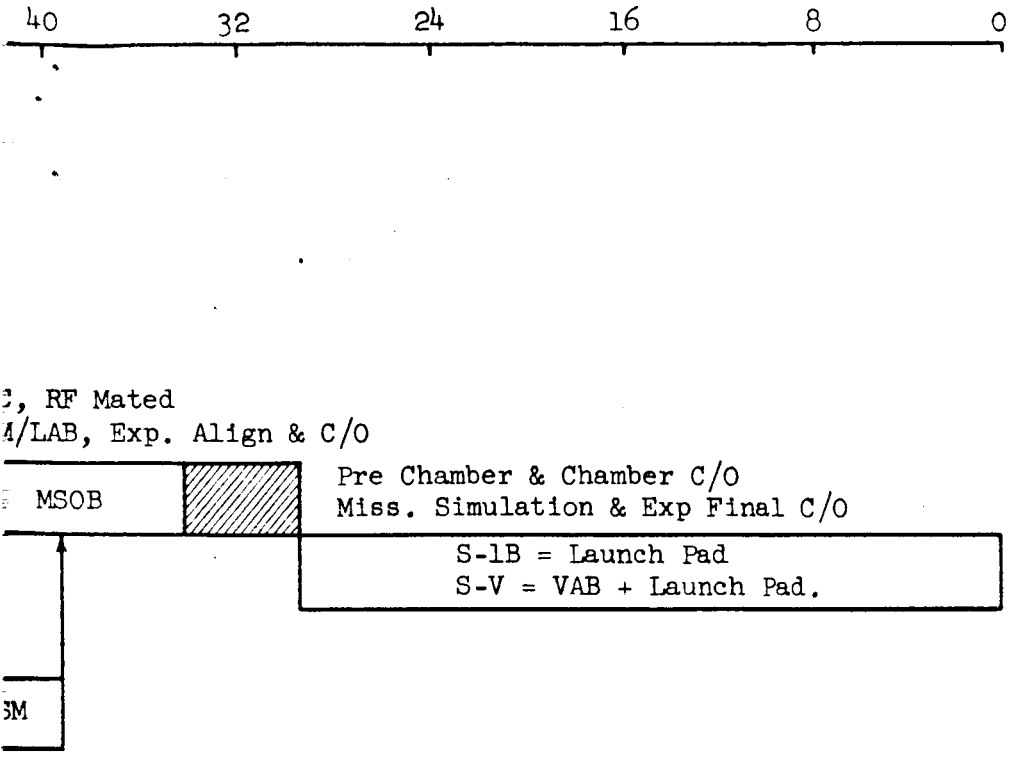

Lab Configuration
Subsystem

1. Structure - A/S & D/S
2. ECS - ASC & DESC + Rad.
3. Crew Provisions
4. Mech. Systems
5. Instru. - Incl. Star Track.
6. EPS - Power Pack + Rad
7. Comm. CM/LEM Intercom
8. Controls & Displays - Exp.
9. Experiment - Mech & Elect.

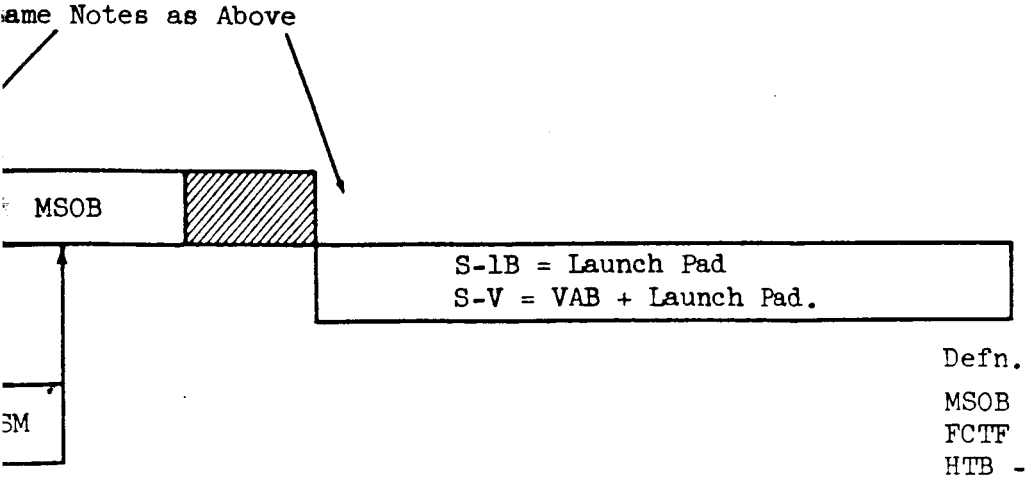

Lab Configuration
Subsystem

1.
2.
3.
4.
5.
6.
7.
8.
9.
} Same as Above

10. RCS -
11. SCS - ATCA & RGA

Defn.

MSOB - Manned Spacecraft Opn. Bldg
FCTF - Fuel Cell Test Facility
HTB - Hypergolic Test Facility
RFTF - Radio Frequency Test Facility

Fig. 3-5 ETR Checkout Flow

4 Manufacturing Plan

4.1 Introduction

The manufacturing tasks associated with this study were the development of manufacturing schedules, task definitions, and costs, within the following guidelines.

- Maximum utilization of LEM technology, hardware, tooling, equipment, and facilities without interfering with, or affecting, the LEM program schedule or costs.
- All missions up to and including flight #219 will start with a completed LEM vehicle (LEM 4 is the baseline) and will require stripping the spacecraft to its basic structure and retrofitting it to the required flight configuration.
- Flight #221 and subsequent will be production line modifications.
- LEM Hardware components should be retained in their original locations whenever possible.
- Additional holes in the Ascent Stage Pressure Vessel will be permitted only when demanded by experiments.
- Design effort should standardize locations of experiments, electrical power supply, and additional environmental control system computer.

4.2 Tooling

One of the basic guidelines of this study assumes that all LEM tooling and facilities will be available. This eliminates the need of a facility loading study. Tooling is required only due to configuration change. No rate tooling is required.

The Low-Profile Descent Stage will require an "adapter" to the present LEM descent stage structure jig to enable final assembly. The same type of "adapter" would permit the utilization of the subassembly tooling. A docking ring adapter section will be added to the low-profile descent stage on certain flights. The docking ring and tunnel will be built in subassembly fixtures and installed in the descent stage while it is in the work stand. The need for vertical clearance dictates this method. Tooling adapters should not affect the ability of the present LEM tooling to produce Lunar Landing Vehicles.

Due to the increased time in orbit, thermal and micrometeoroid shielding has insufficient thickness. The anticipated thickness requirements will be approximately double, thus the "Drape" method of installation may be affected. No heat shielding for engine exhaust will be required on the bottom of the descent stages (30" or 68") and a new single plane thermal micrometeoroid shield will be utilized.

All experiments will be supplied to Grumman for installation and therefore, the tooling required will be limited to interfacing and installation.

4.3 Production

The Manufacturing Tasks associated with the production of the LEM Lab Spacecraft are similar in many respects for each flight. The following tasks are required for each flight configuration, either retrofit or line modification classification.

All Retrofit Vehicles will utilize as their basic structural assembly, completed LEM Spacecraft stripped of unnecessary hardware. The strip-down will remove subsystem hardware from the structure in such a way that neither the structure nor the equipment will be damaged, (Figs. 4-1, 2, 3, 4). In general, all subsystem hardware will be returned to inventory for future use. Items such as propulsion lines, electrical harnesses, coolant loops, and thermal shielding will not be salvaged.

After the strip-down is completed, both stages will be cleaned prior to entry into the Final Assembly area. The Ascent Stage will then be leak tested at 5 + psi to check for leaks introduced during the stripping operation. Both stages will then be ready for final assembly, (Fig. 4-5).

The "Line Modification" Vehicles will not require any stripping as the Basic Structural Assembly will be modified as required during buildup, Figs. 4-6, 7, 8, 9 and 10. Systems not required will be eliminated from the schedule. The "Line Modification" manufacturing tasks will be similar to those of the LEM Spacecraft. Structural items not required, such as navigation base, propellant tank skirts, etc., can be eliminated and replaced with less expensive load-bearing members.

4.4 Final Assembly and Acceptance

The Final Assembly sequence will be identical for both the retrofit and line modification type vehicles, (Figs. 4-11 and 12). The Final Assembly Cycle will be shorter for the retrofit due to fewer system installations. The assembly and installation sequence is as follows:

- Rotate and Clean
- Install EPS, ECS, RCS, as Required
- Cold Flow Installed Systems
- Rotate and Clean
- Install Remaining Systems and Experiments
- Mate both Stages and Vibrate - Demate
- Conduct Design Engineering Inspection (DEI)
- Install Thermal and Micrometeoroid Shielding
- Weigh each Stage and Determine Center of Gravity
- Mate both Stages and Determine Combined Center of Gravity

- Optically Align Systems and Experiments as Required
- Conduct Electro-Magnetic Interference (EMI) Tests
- Conduct Factory and ACE Checkout
- Prepare, Pack and Ship

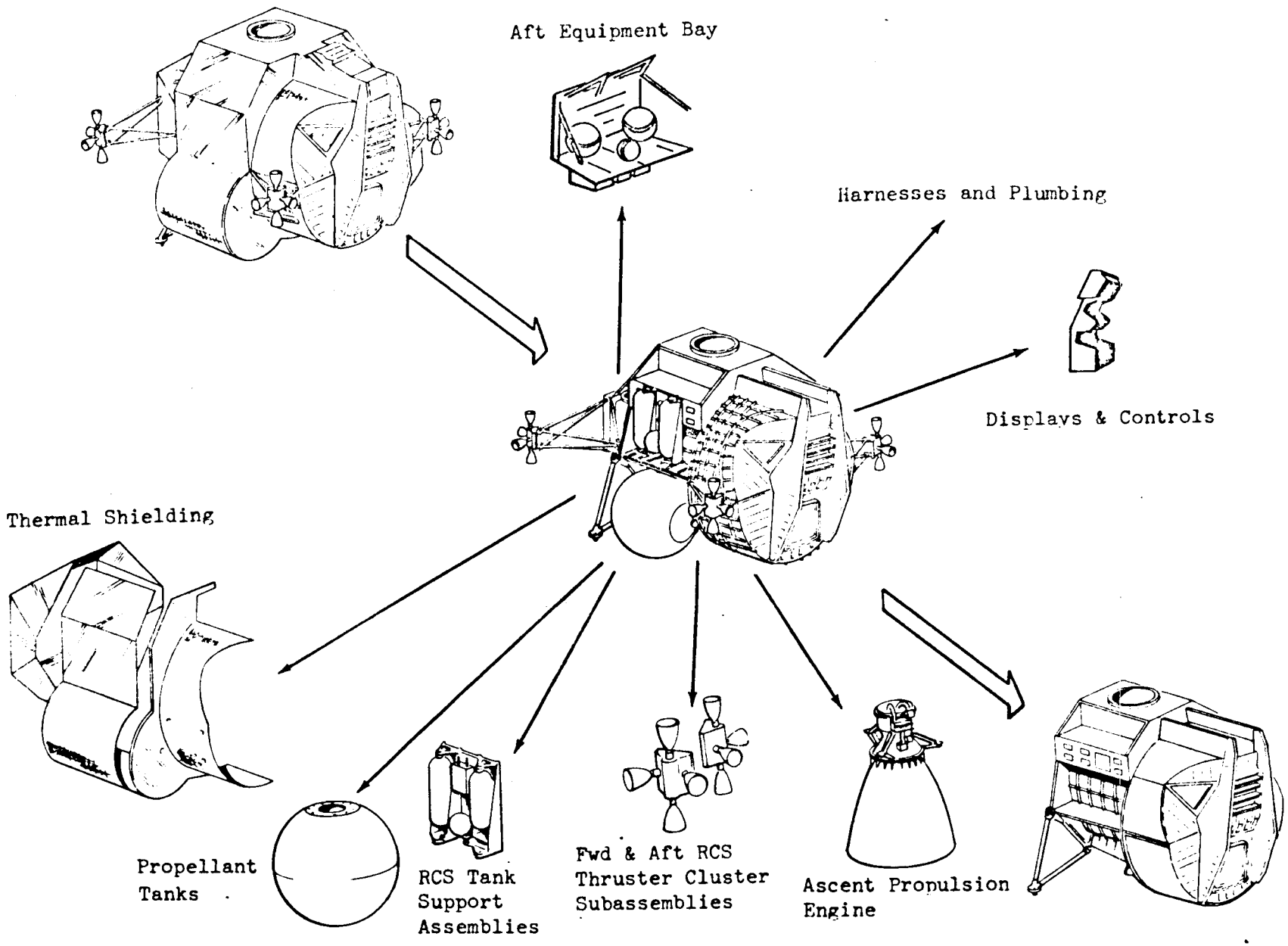

Figure 4-1 Typical Ascent Stage Disassembly - Retrofit Articles

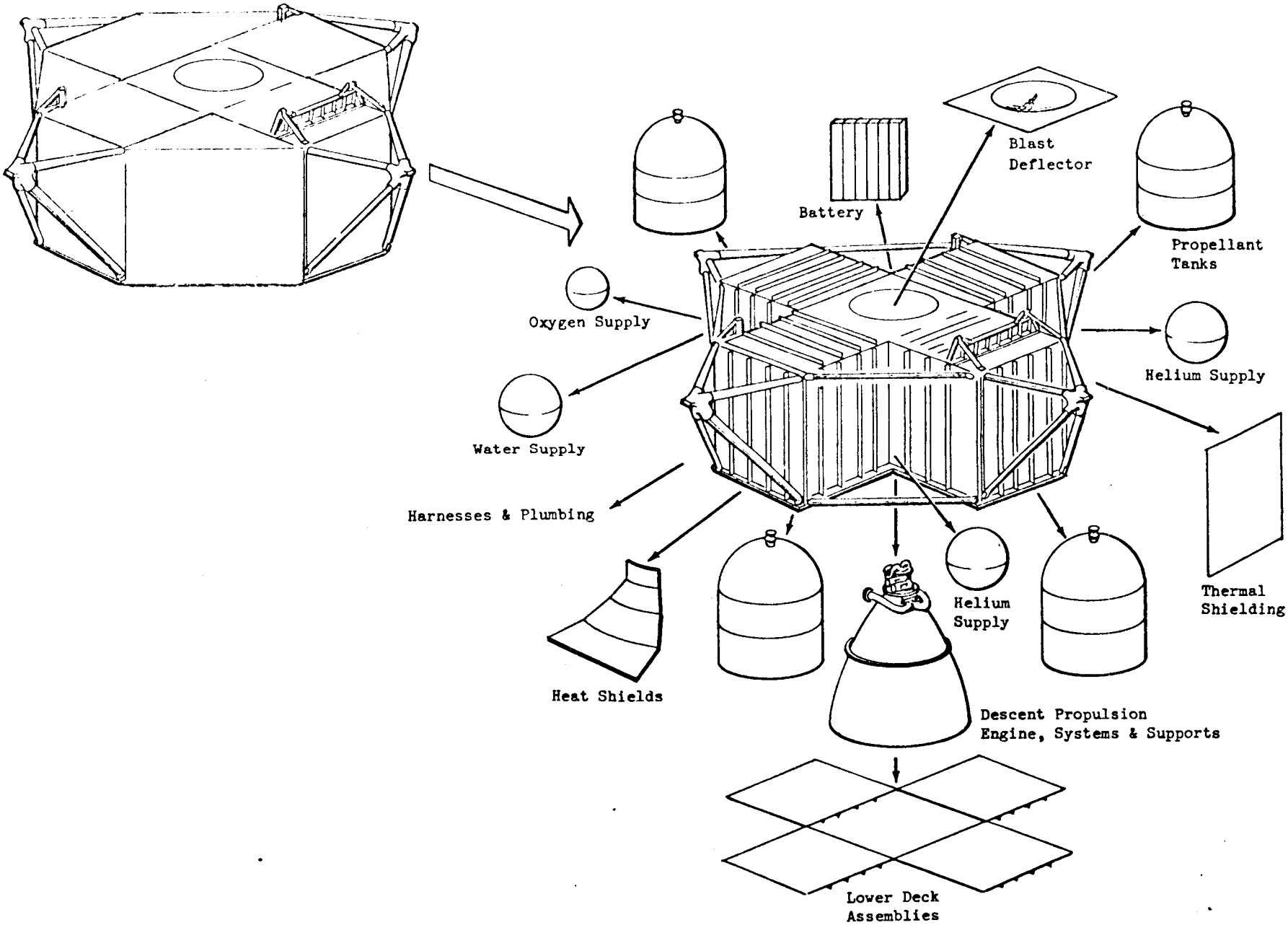

Fig. 4-2 Typical Descent Stage Disassembly - Retrofit Articles

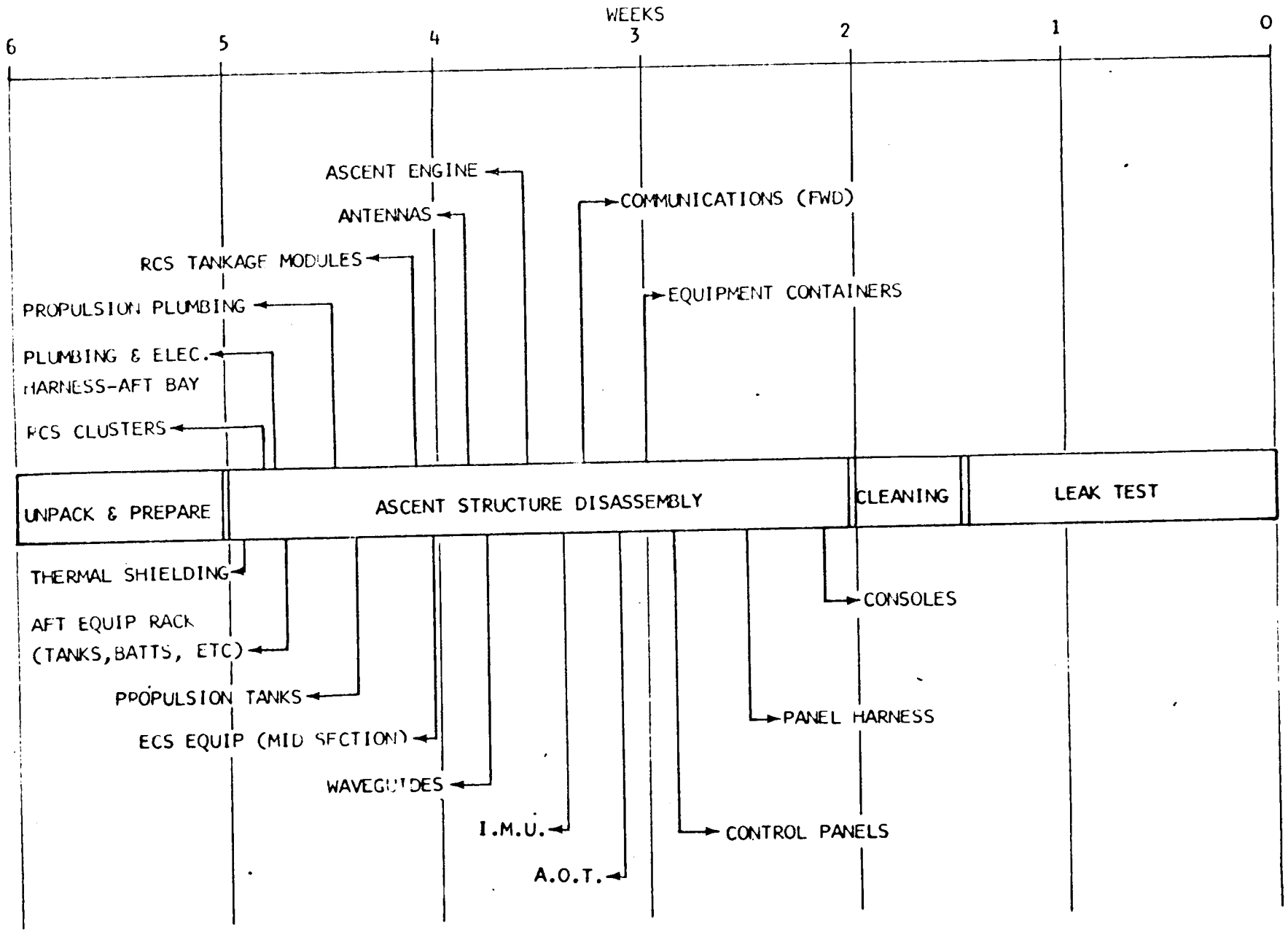

Fig. 4-3 Ascent Stage Disassembly Schedule - Retrofit Articles

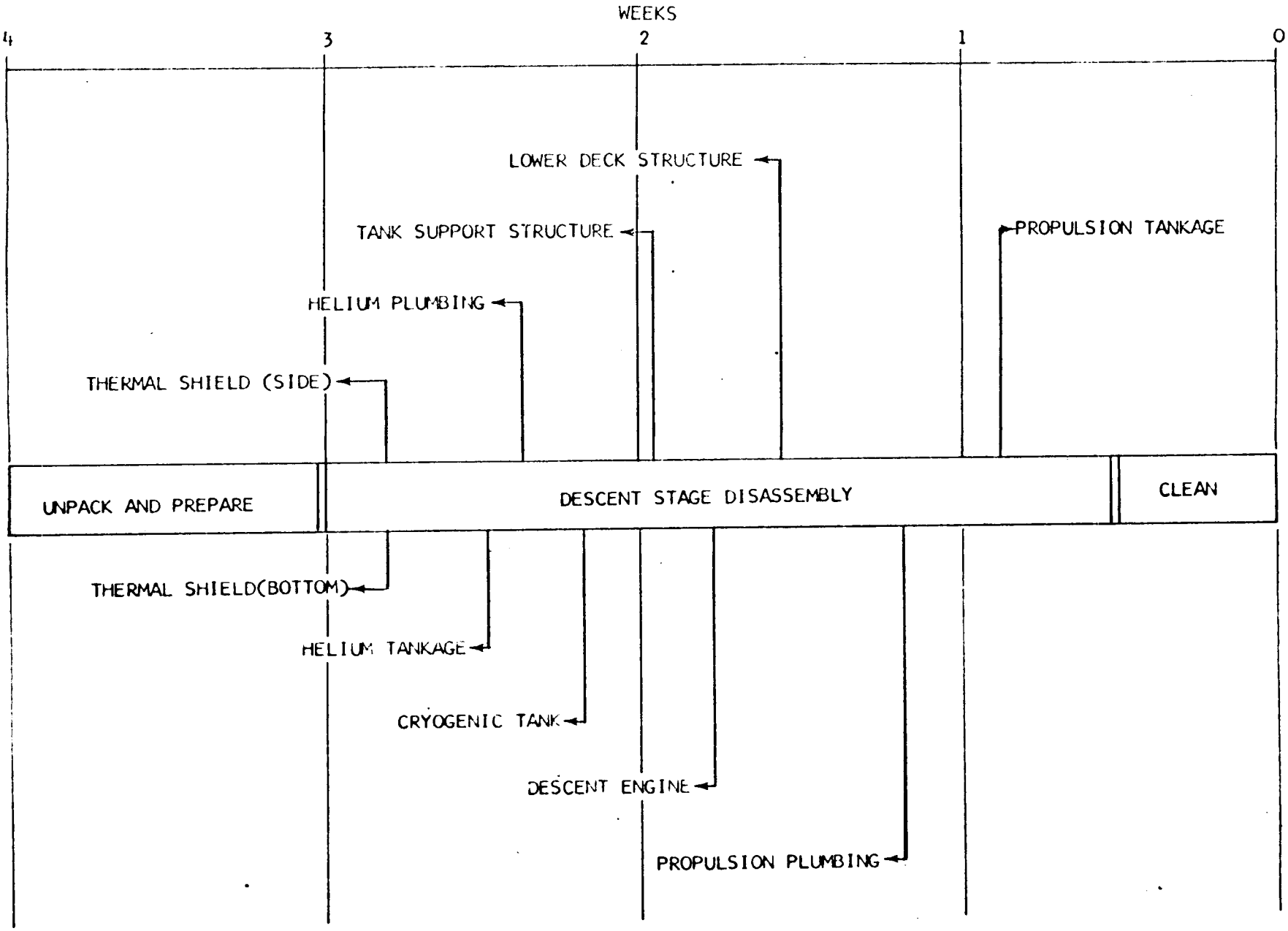

Fig. 4-4 Descent Stage Disassembly Schedule - Retrofit Articles

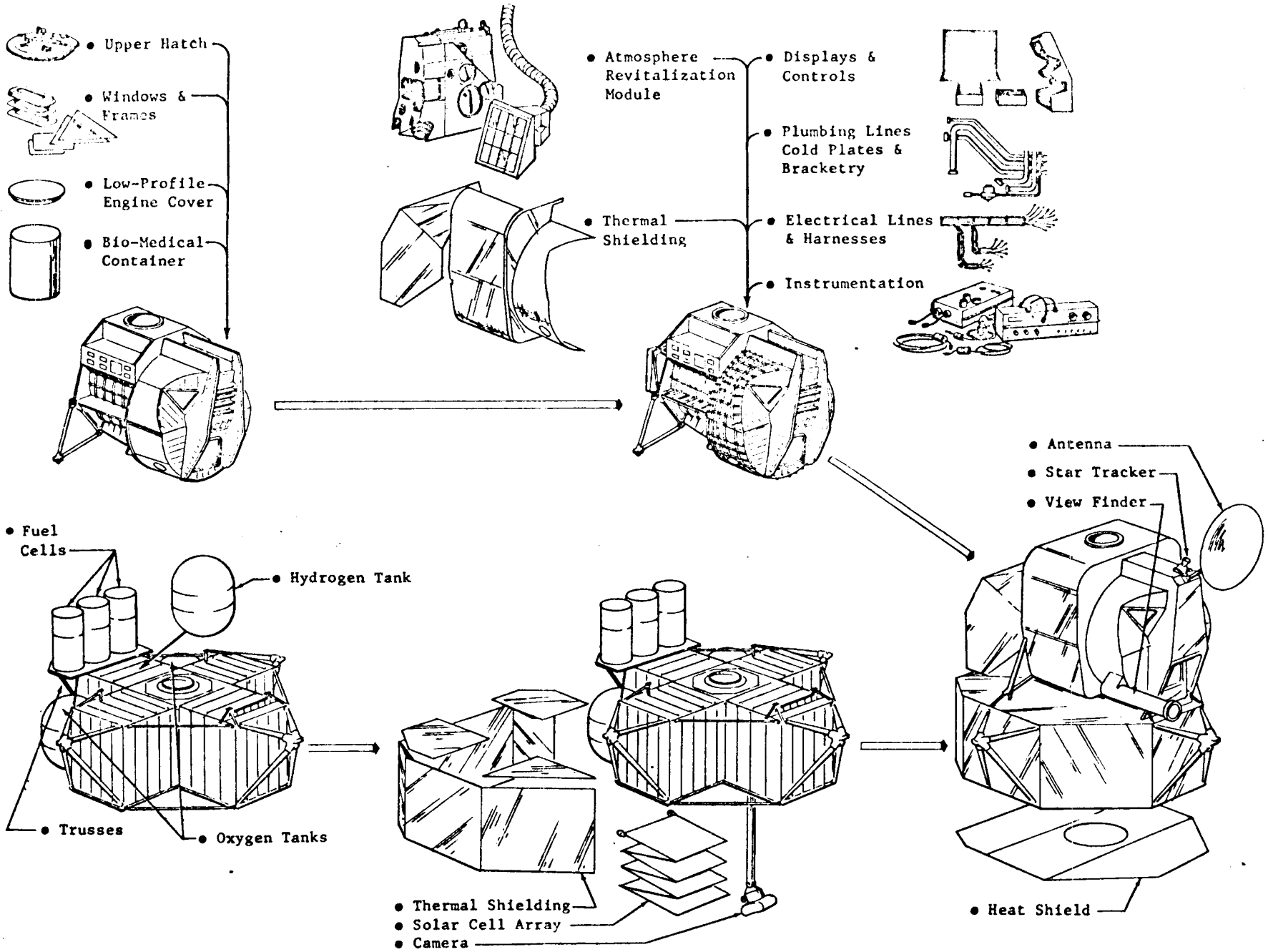

Fig. 4-5 Typical Final Assembly Flow - All Articles

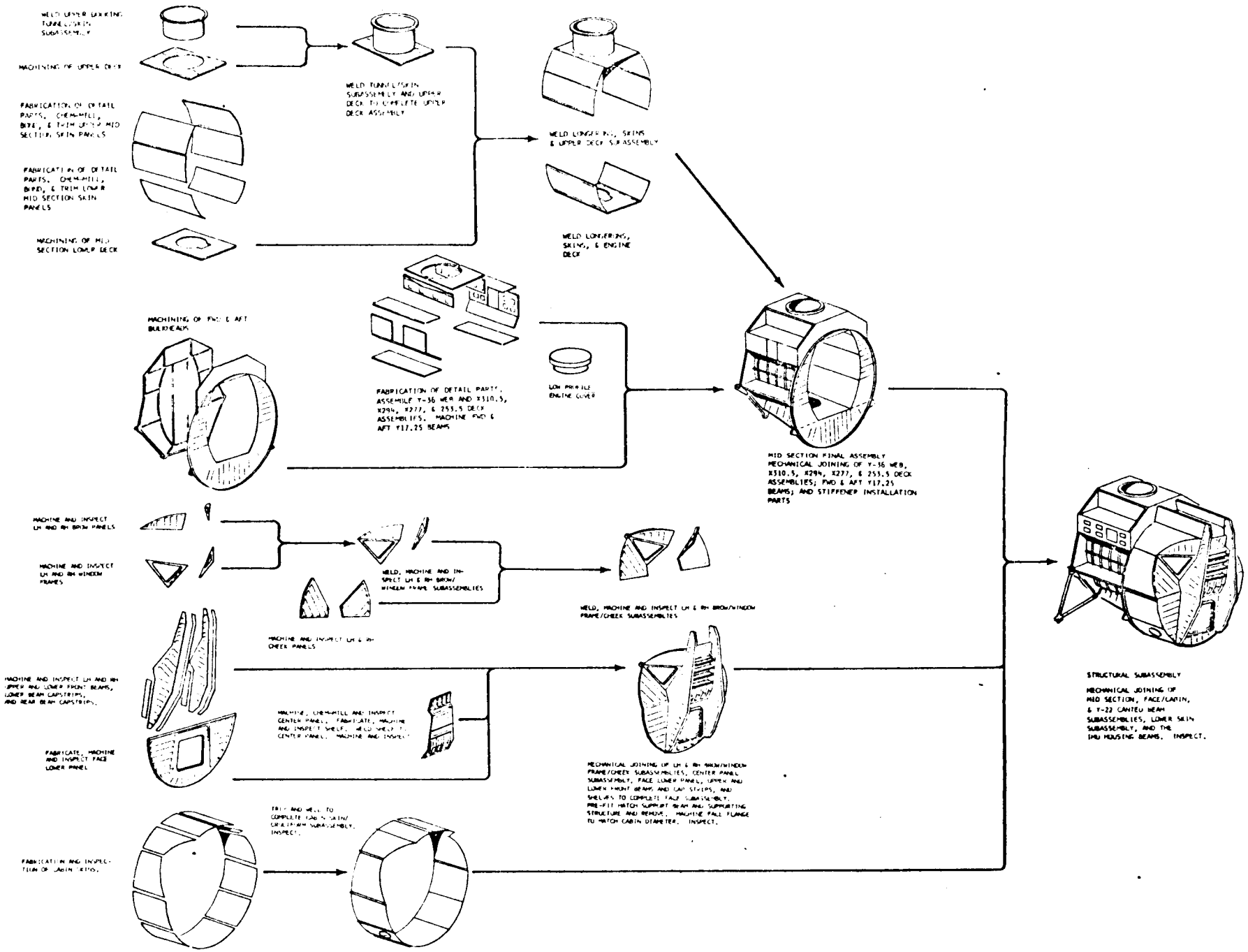

Fig. 4-6 Ascent Structure Manufacturing Flow - Modification Articles

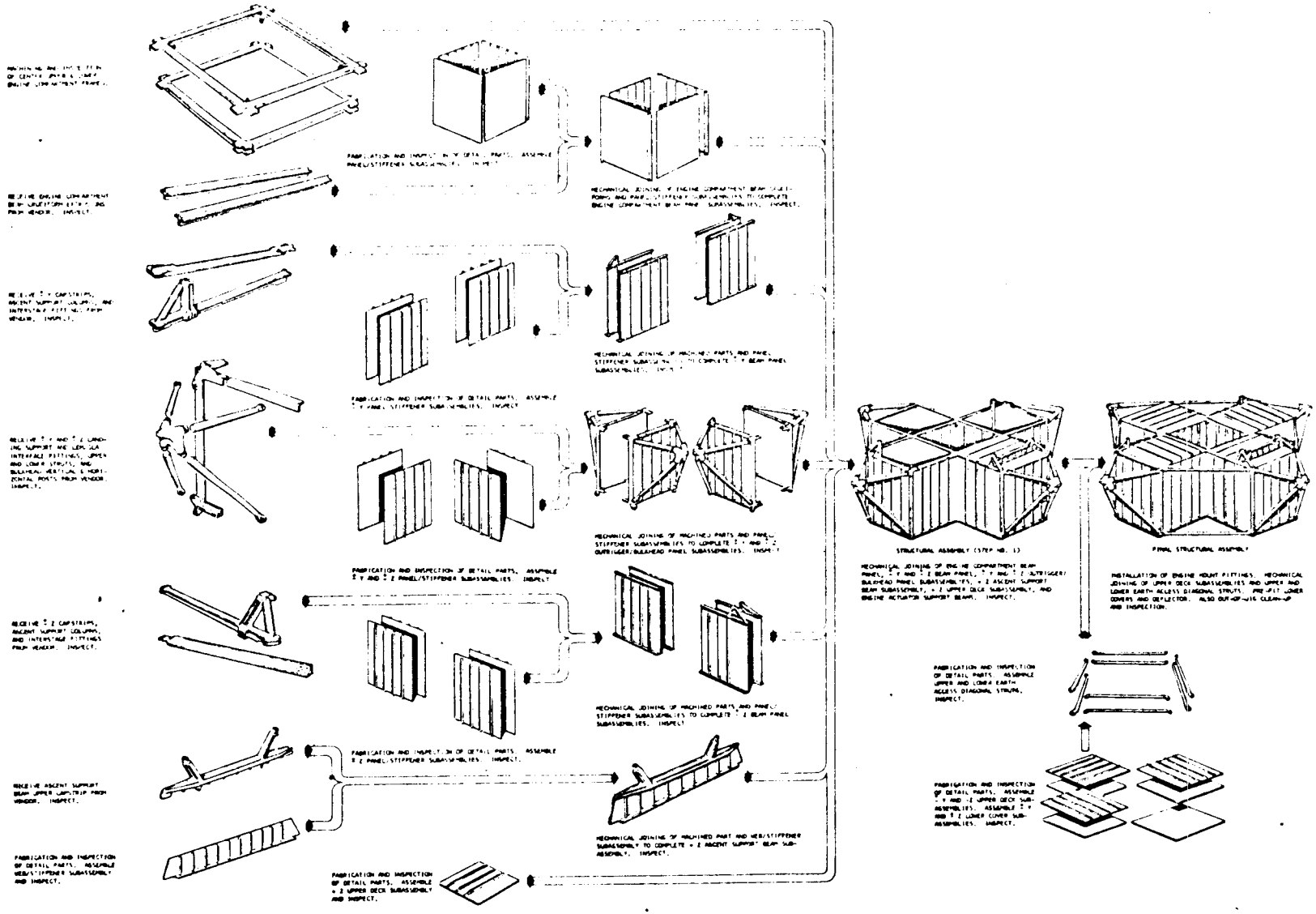

Fig. 4-7 68-Inch Descent Structure Manufacturing Flow - Modification Articles

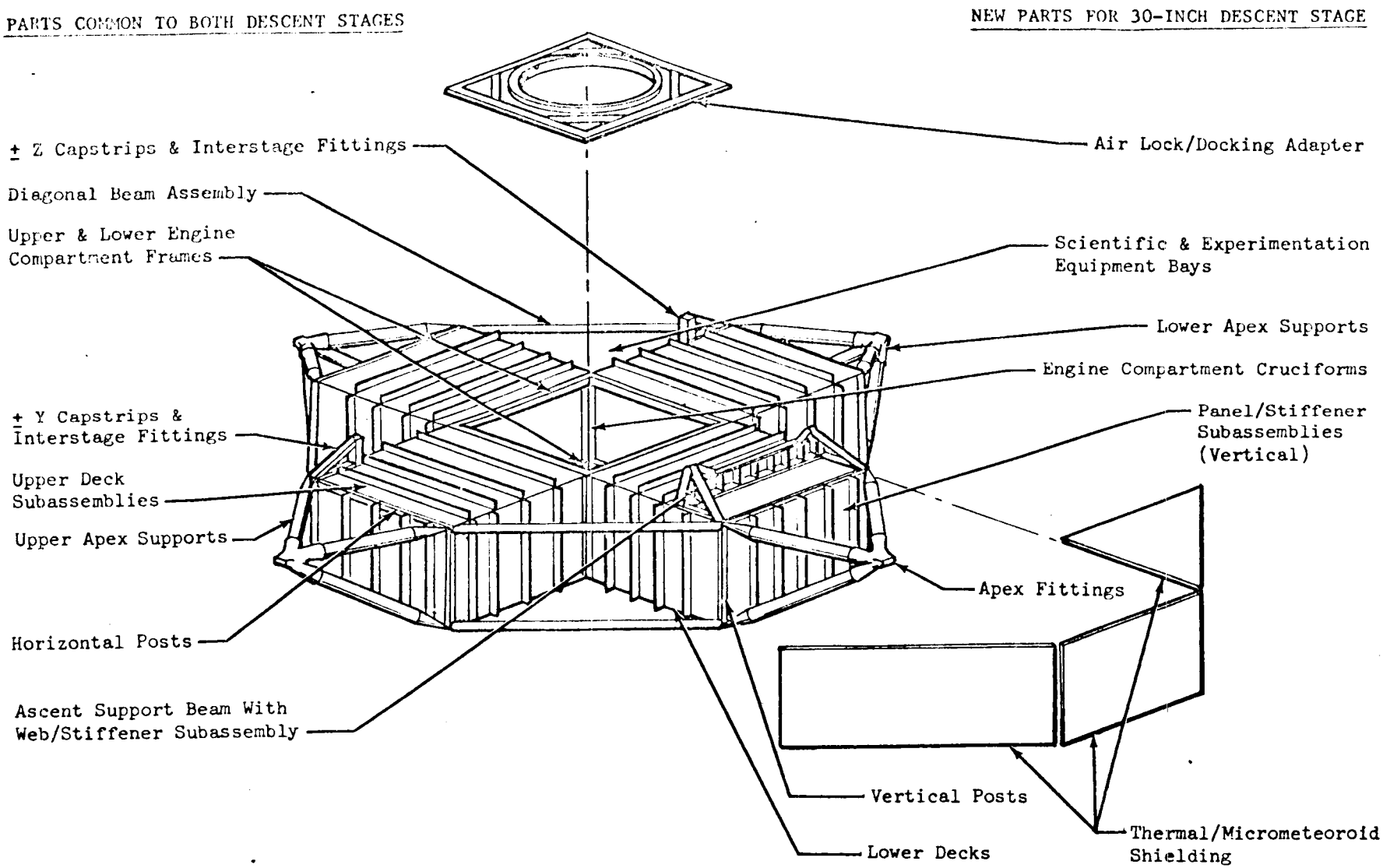

Fig. 4-8 30-Inch Descent Structure - Manufacturing Flow

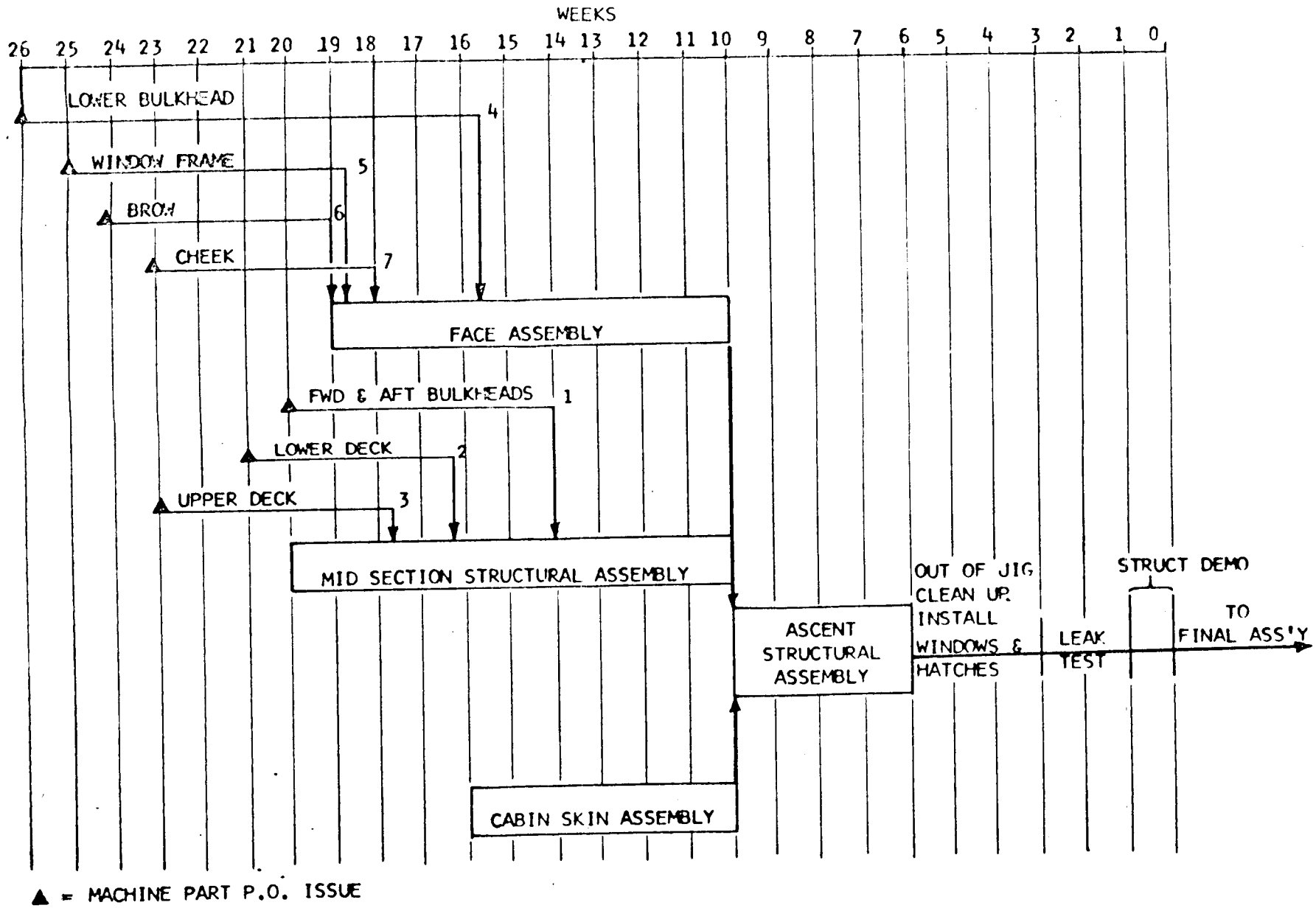

Fig. 4-9 Ascent Structure Buildup Schedule - Modification Articles

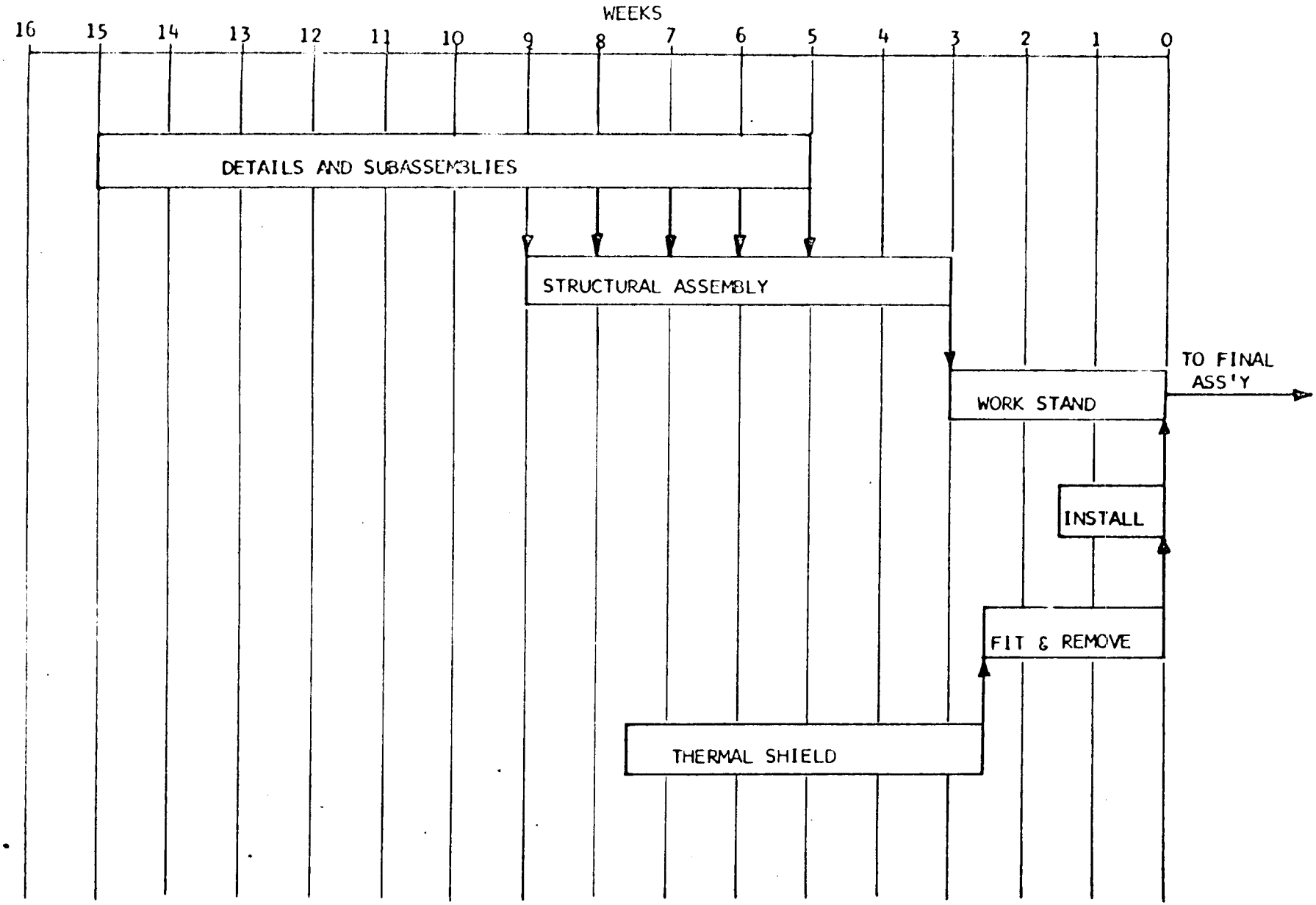

Fig. 4-10 Descent Structure Buildup Schedule - Modification Articles

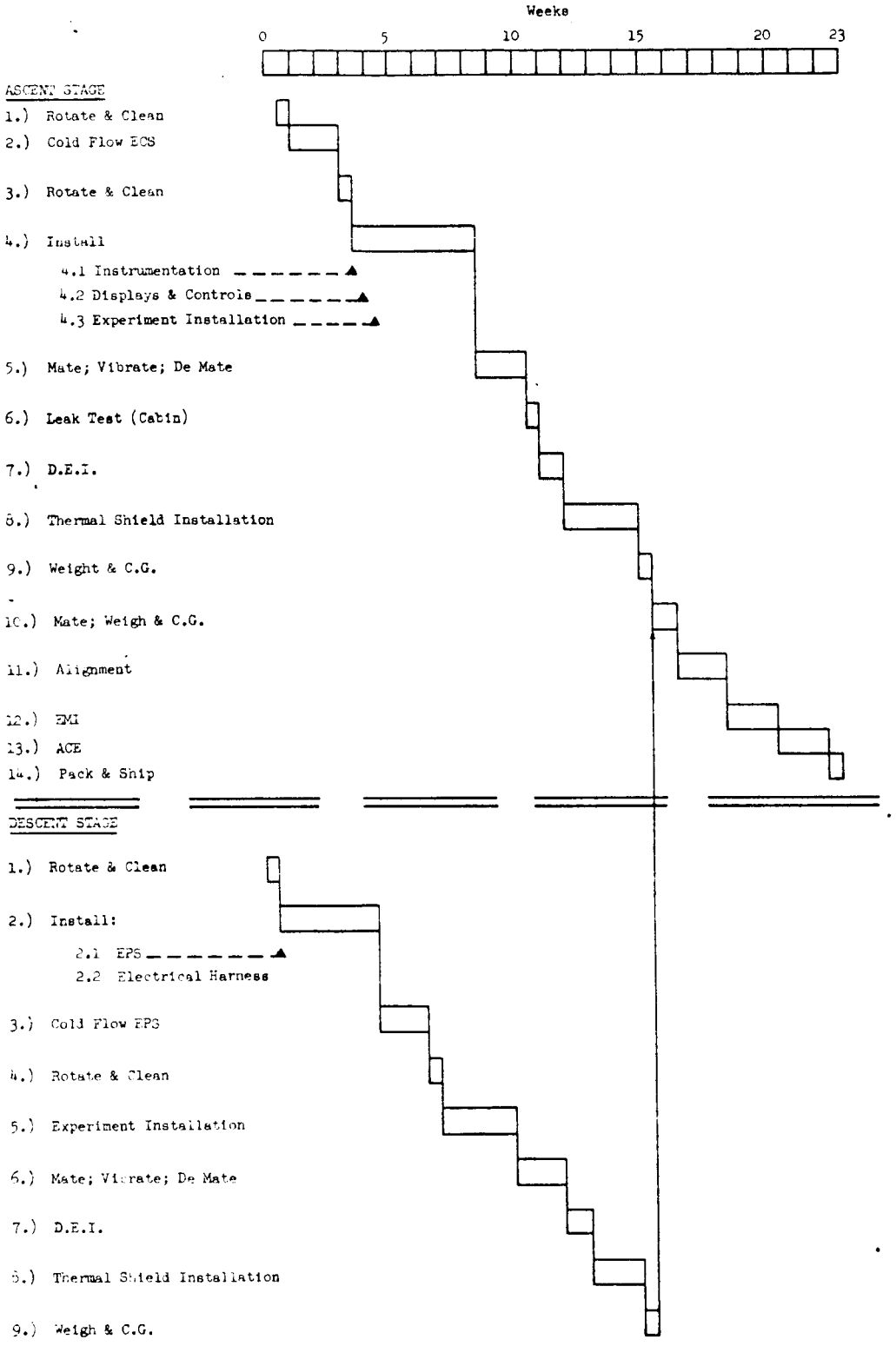

Fig. 4-11 Final Assembly Schedules - Ascent & Descent Stages - Retrofit Articles

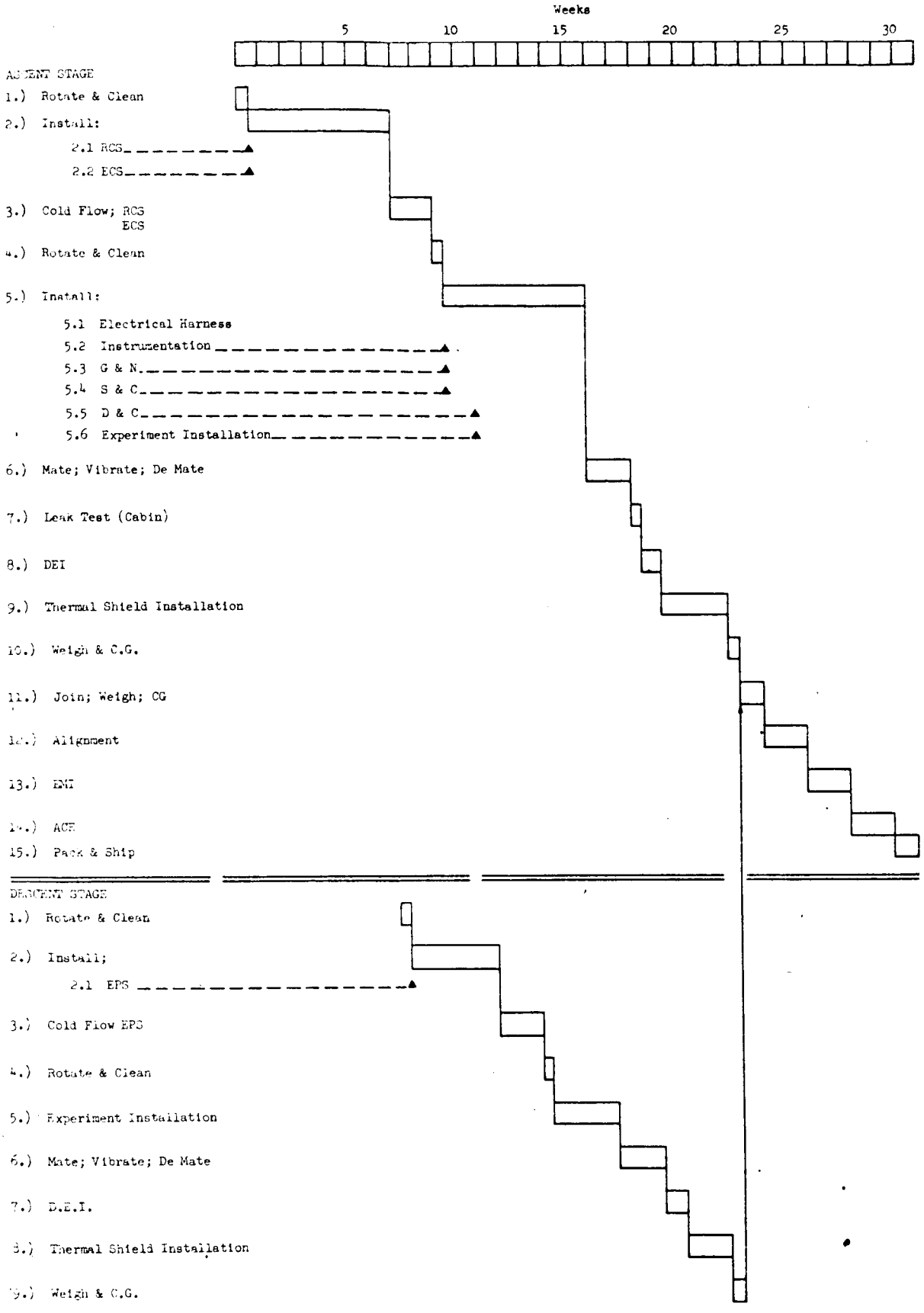

Fig. 4-12 Final Assembly Schedules - Ascent & Descent Stages - Modification Articles

5. Support Program

5.1 Introduction

The Support Program is also based upon maximum use of LEM technology, equipment, and facilities. Support comprises Ground Support Equipment (GSE), Special Test Equipment (STE), Automatic Checkout Equipment (ACE), training, publications, trainers and simulators, spares provisioning, and site activation.

5.2 Support Plans

Support plans will be prepared to accomplish and control the support program. The purpose of the plans is to state the problem and show the solution and schedule of events which comprise this solution. The following plans have been projected for the LEM Lab support phase:

- Development support equipment plan
- Documentation plan
- Spare parts plan
- GSE/STE modification plan
- Site activation plan
- GSE/STE provisioning plan
- Training plan
- GSE delivery schedule

5.3 Ground Support Equipment

The concept of employing a modified LEM as an orbiting laboratory necessitated an analysis of existing LEM GSE to determine its availability, adaptability and applicability to this program. In order to keep costs to a minimum an effort was made to either utilize existing LEM GSE or, if feasible, make minor modifications, where the modification would not interfere with the present program. The only new GSE envisioned, is that necessitated by a new configuration (vehicle or system).

The following assumptions were established in analyzing the LEM GSE and STE:

- All LEM GSE applicable to the LEM Lab will be available, and no conflict in scheduling or quantities exists.
- Modifications to LEM GSE will not interfere with the existing LEM program.
- ACE will be used to checkout the LEM Lab at both Grumman and ETR.

- ACE will not be used to checkout the experiments.
- Existing LEM facilities (at Grumman and elsewhere) are adequate for the LEM Lab.
- GSE and STE for the fuel cells are a new procurement.
- The experimenter will be responsible for all applicable astronaut training, experiment simulators and GSE required to checkout the experiment.
- For all new GSE or adapter assemblies to existing LEM GSE four (4) sets will be required:

  2 sets Grumman (one - development, one-final checkout)

  1 set MSC

  1 set ETR.

5.3.1 Electronic GSE

The greatest impact on the electronic support equipment lies in the electrical power generation and distribution, and data management subsystems. These subsystems will require new or modified GSE, while the remaining subsystems will be compatible with existing equipments.

The subsystem and system checkout of the LEM Lab will be accomplished utilizing ACE. This applies to the development testing, final and pre-launch checkout. Therefore, new ACE programs, adapter cables, and carry-on equipment will be required for those subsystems peculiar to the LEM Lab. The programming task is performed by the General Electric Co. Therefore, consideration was only given to the quantity, type and format of the programming data which Grumman must supply to GE.

Support of the fuel cell assemblies is a new task. The support equipment required, for the fuel cells, consists of equipment capable of monitoring reactant temperatures, pressures flow rates, as well as solenoid valves to purge, fill and detank the cryogenic storage system. In addition certain fuel cell power supplies, simulators and maintenance bench test equipments will be required for the development and final checkout phase.

5.3.2 Mechanical GSE

Mechanical support includes fluid test, assembly, handling, transporting, servicing and alignment equipment. In general, a preliminary review of the mechanical GSE indicates that there is a high degree of commonality between the LEM Lab and the existing LEM program. New or modified servicing, handling and transporting equipment will be necessary due to the various new vehicle configurations. Conventional "bolt on" type modification kits will be used where feasible in order to minimize the scope of the modifications, and not destroy its usefulness to the LEM Program. Protrusions due to hardware associated with the experiments will require new environmental covers and some minor modifications to LEM transporters. There is an increase in the quantity of fluid test equipment required due to the addition of CSM fuel cells on the LEM Lab.

5.4.3 Spares

The spares program for the LEM Lab shall be separated into two categories; Development and Operational. Development spares are defined as those which support the fabrication and testing of production articles until the date of acceptance. Operational spares are defined as those required to support the production articles from the date of acceptance through flight date.

All electronic equipment will be spared at site on a removal and replacement basis. Bit and piece support will be maintained at vendor or contractor facilities in a bonded area. There will be no on site repair.

Electro-mechanical and mechanical equipment will be replaced as a unit. Repair will be accomplished on site if the capabilities exist, or returned to the vendor or contractor.

Ground support equipment/special test equipment will be maintained at the lowest replaceable level dependent upon site capabilities.

5.4.4 Site Support

The contractor will provide the required number of qualified personnel to maintain the spacecraft and ground support equipment utilizing the established operational procedures at the various sites. The contractor will manage and coordinate the program, including vendor personnel as appropriate. Grumman will activate, substain and maintain all Grumman provided ground support equipment and spacecraft at ETR, MSC and Grumman.