ABSTRACT

An examination of the maneuvers to be made by a S-IV-B vehicle in an earth parking orbit of altitude (100) miles is presented.

The pertinent characteristics of the S-IV-B vehicle are listed, together with an outline of the procedure for six possible navigation maneuvers.

A discussion of the horizon photometer is made, along with derivations of its required alignment accuracies; expected views of the earth at various distances are presented. The time available to make the star-horizon measurements is derived as a function of the star's elevation from the vehicle orbital plane.

TABLE OF CONTENTS

	Page
SATURN S-IV-B CHARACTERISTICS	1
S-IV-B ULLAGE MANEUVER	1
S-IV-B MANEUVER FOR PARKING ORBIT NAVIGATION	2
MINIMUM IMPULSE RATES WITH S-IV-B	6
SUMMARY OF ORBIT DETERMINATION SIGHTS WITH S-IV-B	6
HORIZON PHOTOMETER	7
HORIZON-PHOTOMETER MEASUREMENTS AND POINT ACCURACIES	8
APPENDIX A (CALCULATED APPEARANCE OF PLANET IN SCANNING TELESCOPE)	34

EARTH PARKING ORBIT
GUIDANCE AND NAVIGATION MEASUREMENTS

At an early point in the Apollo program, as soon as the Saturn S-IV-B launch vehicle is available, manned Apollo vehicles will be launched into earth parking orbits (EPO) of about 100 mile altitude and returned.

One of the purposes of these EPO launches will be a checkout of the navigation and guidance equipment and procedure, by the astronauts.

A preliminary outline of the various maneuvers that are now envisioned in order to test out the navigation and guidance system and procedure is presented in the following pages.

Saturn S-IV-B Characteristics*

Approximate Weight in Parking Orbit (including Apollo)	276,600 lbm
Yaw and Pitch Moments in Inertial (including Apollo)	8×10^6 slug-ft^2
Roll Moment of Inertia (including Apollo)	8×10^4 slug-ft^2
Attitude Thrusters used in pairs of 150 lbf units	
Angular Acceleration, Pitch and Yaw,	0.02° sec^{-2}
Angular Acceleration, Roll	2° sec^{-2}
Minimum Burst	0.05 sec

S-IV-B Ullage Maneuver

Purpose: to vent off excess gas in oxidizer tanks.

Event Sequence:

1) Start two 150-lbf thrusters on tank pressure signal. Burn 30 seconds (Ullage).
2) Open vent, shut down thrusters (vents provided about 300 lbf).
3) Shut vents on tank pressure signal (vents open for about 80 seconds).

Vent Cycle: about every 14 minutes during the first orbit: about every 22 minutes during the third orbit. The acceleration during this sequence is about 0.001 g.

*This information has been gathered at informal meetings with MSC and Marshall Space Flight Center and is not to be considered official. It is listed here for the benefit of MIT/IL personnel.

S-IV-B Ullage Maneuver (Cont'd)

Re-ignite Cycle:

Two 150-lbf thrusters for 300 sec at 0.001 g.

Hydrogen flow for chill down, 20 sec at 0.01 g.

Starts after this 320-sec cycle.

Total time for cycle controlled by clock.

Gravity torque, at its max. with attitude of 45°, 6 lbf-ft

(gravity gradient torque predominates).

Saturn Launch Azimuth: 70° to 110° from N to E; variable with Launch Delay.

S-IV-B Maneuvers for Parking Orbit Navigation

Attitudes for the following objectives will be defined:

1) Standard Attitude
2) Landmark Tracking
3) Horizon Photometry
4) Star Refraction
5) Alignment
6) Checkout

1) Standard Attitude

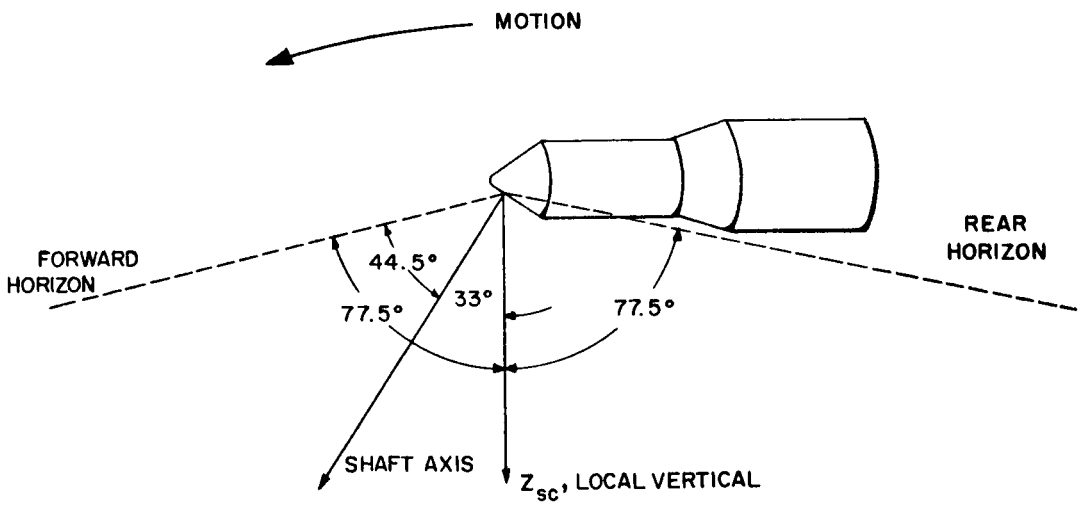

Vehicle rotating at orbit rate about pitch axes.

2) Landmark Tracking

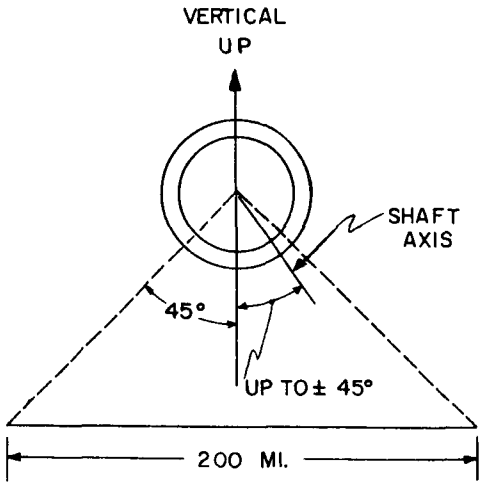

Minimum angular velocity in roll of 6'/sec is satisfactory. Pitch and yaw rates of 1'/sec (relative to vertical) would also be acceptable.

Allowing about 27 seconds to acquire the landmark, the vehicle must begin the maneuver from standard attitude when about 170 miles from the target. The return to standard attitude after the landmark acquisition and tracking will be allowed 90 sec. Assume 50% of the landmarks are within a $\pm 30^{\circ}$ roll, the other 50% within $\pm 30^{\circ}$ and $\pm 45^{\circ}$ roll.

Then, 50% between $\pm 30^{\circ}$	average 15°
50% between $\pm 30^{\circ}$ and $\pm 45^{\circ}$	average $37\ 1/2^{\circ}$
Average maneuver	$26\ 1/4^{\circ}$
Therefore, the average angular velocity is	1°/sec
Average return angular velocity is	$1/4^{\circ}$/sec
	$1\ 1/4^{\circ}$/sec
Multiply by 2 because vehicle roll rate must be stopped	$\times 2$
Total roll angular velocity that must be generated	$2\ 1/2^{\circ}$/sec

The above is equivalent to approximately 1 lbm of attitude fuel per landmark attitude and 2 degrees of scanning.

Note: An alternate method using the standard telescope freedom is possible. Simulation will determine easiest method to use.

3) Horizon Photometer

Procedure: 1. Roll from standard attitude by 75°. This maneuver can be allowed 150 sec; thus rates of less than $1/2^{\circ}$/sec are required. Costs of entering this mode are 2°/sec (1 lbm reactant) including return to standard attitude.

2. A star having an azimuth relative to the orbit plane of less than 57° is acquired and tracked.

3. Slope is judged as presented on page 33.* During the time that the horizon slope is right, several small roll impulses are given to achieve one or more crossings of the horizon.

4) Star Refraction

1. Start before nightfall in standard attitude. Time 0

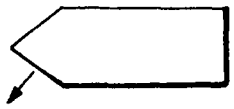

2. Apply 0.2°/sec impulses in pitch. Result will be 80° maneuver about orbital plane in 400 sec. Apply 0.6°/sec ± 25% impulse in roll. Result will be $180^{\circ} \pm 45^{\circ}$ in 400 sec plus 2° ± 25% off vertical attitude. Propellent required for above; 10 lbm pitch; 0.6 lbm roll.

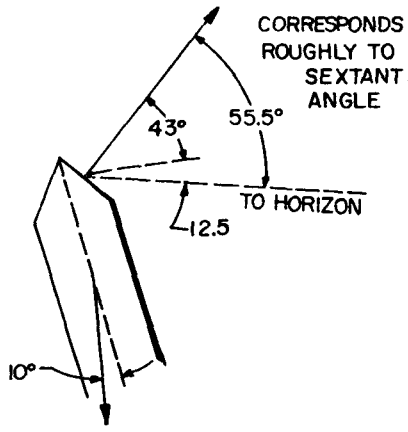

3. Arrest motion by applying 0.26°/sec in pitch and 0.006°/sec in yaw. Propellent consumed 14 lbm.
Time 410 sec.
Result: Star acquired along shaft axis and brought to rest. Shaft axis about 55° above horizon.

4. With no further changes in attitude, acquire low stars and measure refraction as they set, during next 45° of orbital travel (675 sec). This should be good for 2 or 3 stars.
Time 1085 sec
Gravity gradient torque necessary to maintain star within ± 3 mils of center of field corresponds to 0.015°/sec or 1 lbm of propellent.

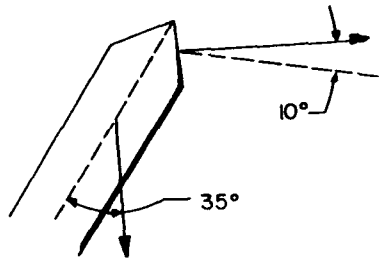

*Appendix A gives the derivation of the appearance of the planet in the scanning telescope.

5. The vehicle is inactive in pitch for the next 69° of orbital motion. This interval is 1035 sec. A slow roll of up to 180° acquires new star. Roll rate 0.2°/sec requires 0.5 lbm propellant to start and stop.
   Gravity gradient torque from 76° to 104° averages to zero. Gravity gradient torque from 35° to 76° is 0.03°/sec or 2 lbm.
   Time 2120 sec

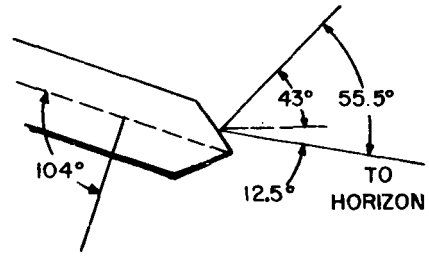

6. Step 4 repeated (675 sec)
   Time 2795 sec
   Gravity gradient torque corresponds to 0.03°/sec or 2 lbm.

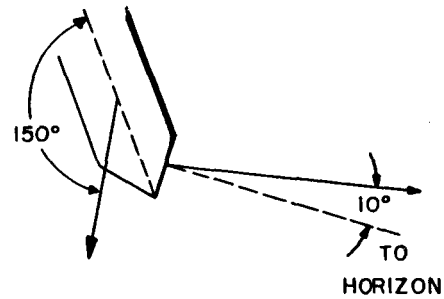

7. Return to standard orientation 120° pitch required. Apply 0.14°/sec impulse. Maneuver requires 600 sec. Requires 7 lbm propellant.

8. Arrest motion relative to earth. Requires 0.2°/sec to impulse. 10 lbm propellant.
   Time 3395 sec
   Approximately 700 sec more than half an orbit. Therefore maneuver starts and ends 6 minutes before and after night.

Step	Propellant Summary
2	10.6 lbm.
3	14.0
4	1.0
5	2.5
6	2.0
7	7.0
8	10.0
	47.1 lbm.

Because of large amount of propellant required, the complexity of the maneuver, and the fact that ullage maneuvers are not increasing energy, the star refraction method is not desirable with the S-IV-B. Probably it will not be used. It would be well, however, if one such sequence were budgeted for the three-orbit park.

5) Alignment

The requirement is simply to see several widely separated stars. A roll of 120° from the standard attitude appears more than adequate.

Using a roll rate of 1°/sec, this maneuver requires 2 min and 1 lbm of propellant each to roll and return. Approximate attitude would be maintained for 5 to 10 minutes.

Plan on two alignments per 3-orbit park.

6) Checkout

The requirement is simply to check the angles between several pairs of stars. This objective is easily accomplished as part of the star refraction measurement routine. Also, an extra 10 minutes added to the alignment maneuver enables this checkout with the addition of 0.2°/sec of pitch maneuver (10 lbm propellant). Could be deleted if necessary.

Minimum Impulse Rates With S-IV-B

Present plans allow attitude bursts no shorter than 0.050 second from S-IV-B rockets. This corresponds to 12' arc/sec minimum impulse in roll. For all operations envisioned this appears adequately small except for star refraction measurements and sextant checkout.

Should smaller rates than this be desirable, some service module fuel could be used. The factor of two difference in moment arm and factor of 2/3 in size indicates that a 0.15 sec burst of service module roll torque would be necessary to overcome the 12' arc/sec residual roll rate. This corresponds to approximately 0.1 lbm of service module fuel each time the roll angular velocity is so reduced.

Until such procedures as IMU alignment are simulated it is desirable to provide the means of trimming roll rates, using the service module. Total would probably not require more than 2 lbm of service module fuel.

Summary of Orbit Determination Sights*

During Daytime

4 Landmark Sights Per Orbit

or

6 Horizon Photometer Sights Per Orbit

*No star refraction or sextant checkout maneuvers are planned with S-IV-B vehicle.

During Night Time

2 Alignment and 1 sextant checkout

or

1 Star Refraction Maneuver (including 1 alignment and 1 checkout) plus 1 alignment.

Horizon Photometer

The horizon photometer is an instrument which can be inserted in place of the sextant eyepiece. Its purpose is to measure the angle between a star and the closest point on a planet's luminous edge. A second application is the measurement of the attenuation of a star due to scattering and differential refraction.

To measure the brightness of the luminous edge of a planet, the bodyfixed (landmark) line of sight is maneuvered across the horizon using spacecraft roll motion. Simultaneously, the mobile line of sight is used to automatically track a star. To obtain the closest point on the edge to the star, the scanning telescope is used to visually judge if the horizon is parallel to the trunnion axis cross hair. The IMU can be used to perform this function if simulations indicate a requirement to simplify the task.

If the star does not stand above the measured horizon point,the astronaut can: a) move the shaft axis along the horizon by vehicle motion; b) wait until the star crosses the horizon point in its apparent trajectory about the orbit pole. Views such as shown in Fig. 3 et seq., can be used for this alignment. This requires a mode of operation in which the scanning telescope can be driven off from the sextant body line in trunnion angle.

The accuracy objectives for bright horizon measurement arise from two sources: 1) operational use, and 2) research value for making high accuracy measurements. The operation requirement is 10" arc or 1/2 mile in horizon elevation, whichever is the larger error. For additional research value the 1/2 mile should be reduced to 250 feet. The following characteristics can be deduced. They are not necessarily compatible with the signal-to-noise problems with the sextant operating.

1. Track star with accuracy of 2-5 sec arc. Field stop of 1° would be helpful for acquisition. A 10-cps bandwidth would allow this accuracy during occasional minimum impulses.

2. Measure brightness of horizon through 20-sec-arc-diameter field stop. Accuracy must be somewhat better than 10% to achieve operational accuracy goals and better than 1% for research goals. The presence of angular velocities of the order of 2 min arc/sec requires a bandwidth of 20-cps.

3. Optics Hand Controller used to bias scanning telescope line of sight by $\pm 15^{\circ}$ in trunnion angle relative to landmark line.

4. Mark circuit generates signal when horizon or star light equals meter setting. Brightness can be controlled over a range of 50 to 1. Mark should be good to 50 milliseconds and 10% or 1% respectively, for operational or research goals.

5. One channel of light display in the scanning telescope is used to indicate if brightness is above or below meter setting.

Horizon - Photometer Measurements and Point Accuracies

With the horizon photometer it is desired to measure the angle between a star, $\bar{s}$ (unit vector)*, and the closest point on a planet's edge, $\bar{e}$. However, due to a visual alignment error in pointing, the horizon photometer will, in general, point at an edge point, $\bar{e}'$, having an azimuth error of θ. (See Fig. 1)

We will express the error in the star-planet edge angle, $\psi - \phi$, in three different ways.

1) In terms of the ground azimuth error, θ. (rotation angle of $\bar{e}'$ from $\bar{e}$ about the $\bar{k}$ axis)

2) In terms of the pointing error, λ; defined as

$$\cos \lambda = \bar{e} \cdot \bar{e}'$$

3) In terms of the slant error of the horizon, s; defined as

$$\cos s = (\bar{e}' \times \bar{k})_{unit} \cdot (\bar{e}' \times \bar{s})_{unit}$$

where it is easily verified that for the true edge point

$$(\bar{e} \times \bar{k})_{unit} \cdot (\bar{e} \times \bar{s})_{unit} = 1$$

The coordinate system used has an origin at the space ship;

the $\bar{k}$ axis points to the center of the planet;

the $\bar{i}$ axis points such that the $(\bar{i}, \bar{k})$ plane contains the star unit vector, $\bar{s}$;

the $\bar{j}$ axis points in the direction perpendicular to the $(\bar{i}, \bar{k})$ plane;

ψ = angle between the planet center and star

ϕ = planet's semi subtended angle.

Thus, $\psi - \phi$ is the desired star-horizon elevation angle

*In this presentation, all vectors are unit vectors.

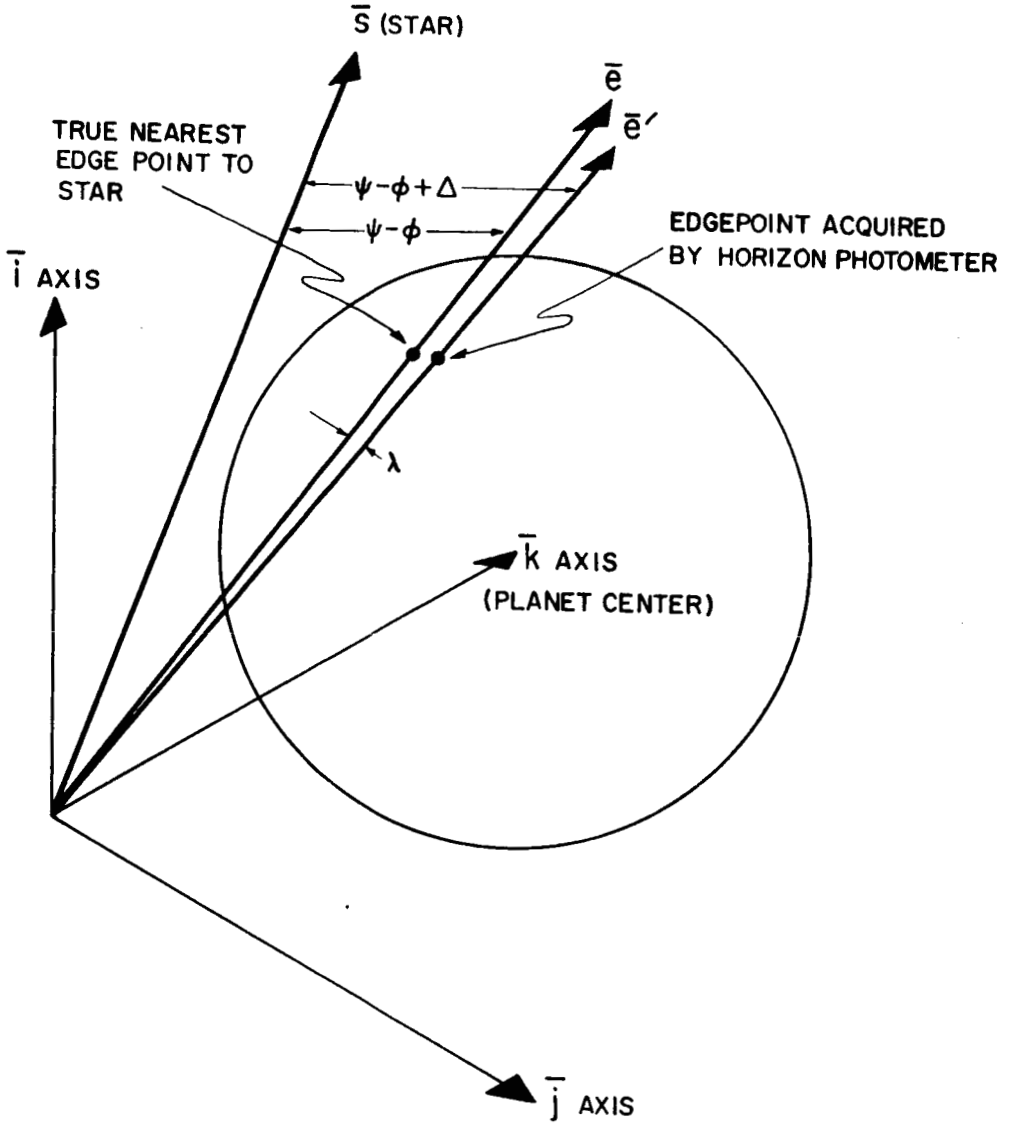

NOTE: $\bar{e}$ AND $\bar{s}$ LIE IN THE $\bar{i}, \bar{k}$ PLANE; $\bar{e}'$ WILL, IN GENERAL, LIE SLIGHTLY OUT OF THE $\bar{i}, \bar{k}$ PLANE

Fig. 1 Visual Alignment Error In Horizon Photometer

Therefore, the various unit vectors in this coordinate system take the form;

$$\bar{s} = \bar{i} \sin \psi - \bar{k} \cos \psi$$

$$\bar{e} = \bar{i} \sin \phi - \bar{k} \cos \phi$$

$$\bar{e}' = \bar{i} \sin \phi \cos \theta + \bar{j} \sin \phi \sin \theta - \bar{k} \cos \phi$$

and letting Δ be the error in the $\psi - \phi$

$$\cos (\psi - \phi + \Delta) = \bar{e}' \cdot \bar{s} = \sin \phi \sin \psi \cos \theta + \cos \phi \cos \psi$$

but also

$$\cos (\psi - \phi + \Delta) = \cos (\psi - \phi) \cos \Delta - \sin (\psi - \phi) \sin \Delta$$

Therefore

$$\cos (\psi - \phi) \cos \Delta - \sin (\psi - \phi) \sin \Delta = \sin \phi \sin \psi \cos \theta + \cos \phi \cos \psi$$

$$= \cos (\psi - \phi) - (1 - \cos \theta) \sin \phi \sin \psi$$

so

$$(1 - \cos \theta) = \frac{1}{\sin \phi \sin \psi} \left[(1 - \cos \Delta) \cos (\psi - \phi) + \sin (\psi - \phi) \sin \Delta \right]$$

To our desired accuracy, and noting that $\Delta \leqq 10^{-3}$ for useful cases, we can neglect $(1 - \cos \Delta)$ and set $\sin \Delta = \Delta$. Therefore, we arrive at the expression:

$$1 - \cos \theta \cong \frac{\sin (\psi - \phi)}{\sin \phi \sin \psi} \quad \Delta \cong \frac{\theta^2}{2}$$

or

$$\Delta = \frac{\sin \phi \sin \psi}{2 \sin (\psi - \phi)} \quad \theta^2$$

thus, expressing the elevation error as a function of the azimuth error. Note that the elevation error is proportional to the square of the azimuth error, and therefore for small θ, Δ is especially small

Now consider the pointing error, λ

$$\cos \lambda = \bar{e} \cdot \bar{e}' = \cos^2 \phi + \sin^2 \phi \cos \theta = 1 - \sin^2 \phi (1 - \cos \theta)$$

or

$$\cos \lambda = 1 - \sin^2 \phi \left[\frac{\sin (\psi - \phi)}{\sin \phi \sin \psi} \right] \Delta$$

Using

$$\cos \lambda \cong 1 - \frac{\lambda^2}{2}$$

we arrive at the second expression:

$$\Delta = \frac{1}{2} \quad \frac{\sin \psi}{\sin \phi} \quad \frac{1}{\sin (\psi - \phi)} \quad \lambda^2$$

The slant of the horizon as seen in the scanning telescope is a last parameter of interest.

When pointing toward the horizon at $\bar{e}'$, level is observed to be

$$(\bar{e}' \times \bar{k})_{unit} = \sin \theta \, \bar{i} - \cos \theta \, \bar{j}$$

However, the "horizontal" reticule line will be pointed in the direction

$$(\bar{e}' \times \bar{s})_{unit} = \frac{- \bar{i} \cos \psi \sin \phi \sin \theta + \bar{j} (\cos \psi \sin \phi \cos \theta - \cos \phi \sin \psi) - \bar{k} \sin \psi \sin \phi \sin \theta}{\sin (\psi - \phi) + \Delta \cos (\psi - \phi)}$$

neglecting terms of higher order than Δ in the normalization. Therefore, the slant angle is given by

$$\cos s \cong 1 - \frac{s^2}{2} = (\bar{e}' \times \bar{k})_{unit} \cdot (\bar{e}' \times \bar{s})_{unit}$$

$$\cong - \frac{(\sin^2 \theta \cos \psi \sin \phi + \cos \theta \left[\cos \psi \sin \phi \cos \theta - \cos \phi \sin \psi \right])}{\sin (\psi - \phi) + \Delta \cos (\psi - \phi)}$$

$$\cong \frac{\sin (\psi - \phi) - (1 - \cos \theta) \cos \phi \sin \psi}{\sin (\psi - \phi) + \Delta \cos (\psi - \phi)}$$

$$\cong 1 - \frac{\theta^2}{2} \quad \frac{\cos \phi \sin \psi}{\sin (\psi - \phi)} - \Delta \quad \frac{\cos (\psi - \phi)}{\sin (\psi - \phi)}$$

Eliminating θ^2 in terms of Δ

$$\frac{s^2}{2} = \left[\frac{\cos \phi . \sin \psi}{\sin \phi \sin \psi} + \frac{\cos (\psi - \phi)}{\sin (\psi - \phi)} \right] \Delta$$

or

$$\Delta = \frac{1}{\operatorname{ctn} (\psi - \phi) + \operatorname{ctn} \phi} \quad \frac{s^2}{2}$$

Summarizing the three relations then, we have:

$$\theta^2 = \frac{2\Delta \sin(\psi - \phi)}{\sin\phi \sin\psi}$$

$$\lambda^2 = \frac{2\Delta \sin(\psi - \phi) \sin\phi}{\sin\psi}$$

$$s^2 = 2\Delta\left[\operatorname{ctn}(\psi - \phi) + \operatorname{ctn}\phi\right]$$

These relations are plotted for various distances from the earth in the figures at the end of this report.

According to the discussion in a previous section, the procedure for acquiring a star will be to roll the spacecraft 75° until the sextant shaft axis points to the earth horizon. Then one waits for a star to pass over this particular acquired point on the horizon. A critical question, then, is how long does a star remain over a particular point on the horizon, plus or minus θ_{max}, the maximum allowable aximuth deviation? This time, then, must be the maximum operational time in which to make the horizon measurement. It is convenient to change coordinate systems at this point. Let

$\bar{k}$ point toward the center of the planet;
$\bar{i}$ point along the direction of motion of the spacecraft in its circular orbit;
$\bar{j}$ point along the spacecraft orbital pole.

Also let

α = elevation of the star relative to the orbit plane
γ = longitude of star.

Then the apparent star position has the following time dependence.

$$\bar{s}(t) = \bar{i}\cos\alpha\cos(\gamma_o + \omega t) + \bar{j}\sin\alpha + \bar{k}\cos\alpha\sin(\gamma_o + \omega t)$$

where

$$\omega = \frac{2\pi}{T}, \quad T = \text{period of circular spacecraft orbit.}$$

The shaft axis has acquired the horizon at

$$\bar{e} = \sin 33^\circ\,\bar{i} + \cos 33^\circ \sin r\,\bar{j} + \cos 33^\circ \cos r\,\bar{k}$$

where r is the roll angle.

To be aiming at the horizon

$$\bar{e} \cdot \bar{k} = \cos\phi = \cos r \cos 33^{o}$$

The horizon vector is obtained

$$\bar{h} = (\bar{k} \times \bar{e})_{unit} = \frac{\sin 33^{o}\,\bar{j} - \cos 33^{o} \sin r\,\bar{i}}{\sqrt{\sin^2 33^{o} + \cos^2 33^{o} \sin^2 r}}$$

The azimuth error is

$$\bar{s}(t) \cdot \bar{h} = \frac{\sin\alpha \sin 33^{o} - \cos 33^{o} \sin r \cos\alpha \cos(\gamma_o + \omega t)}{\sqrt{\sin^2 33^{o} + \cos^2 33^{o} \sin^2 r}}$$

At $t = 0$,

$$\bar{s}(t) \cdot \bar{h} = 0$$

if

$$\cos\gamma_o = \frac{\tan\alpha \tan 33^{o}}{\sin r}$$

Then the total time for which the star remains within θ of being over the point on the horizon is given by*

$$\bar{s}(t) \cdot \bar{h} = \theta(\psi - \phi)$$

or

$$\cos\gamma_o - \cos(\gamma_o + \omega t) = \frac{\sqrt{\sin^2 33^{o} + \cos^2 33^{o} \sin^2 r}}{\cos\alpha \cos 33^{o} \sin r}\,\theta(\psi - \phi)$$

At the time of measurement

$$\bar{s}(t) \cdot \bar{k} = \cos\psi = \cos\alpha \sin\gamma_o$$

so

$$\cos^2\psi = \cos^2\alpha\left[\frac{1 - \tan^2\alpha \tan^2 33^{o}}{\sin^2 r}\right]$$

$$\cos^2\psi = \cos^2\alpha - \left[\frac{\tan^2 33^{o}}{\sin^2 r}\right]\sin^2\alpha$$

---

* When we plot the time in the graph we multiply t by 2, as we want time between $-\theta$ and $+\theta$.

allowing one to translate declination angle of a star into star-earth center angle, (see Fig. 19).

Figure 20 gives the allowed time for making a star-horizon angle measurement for stars of various elevation angles. If the sextant's maximum angle is about 55° we see that we are limited to the use of stars with an elevation angle α between 36° and 56°.

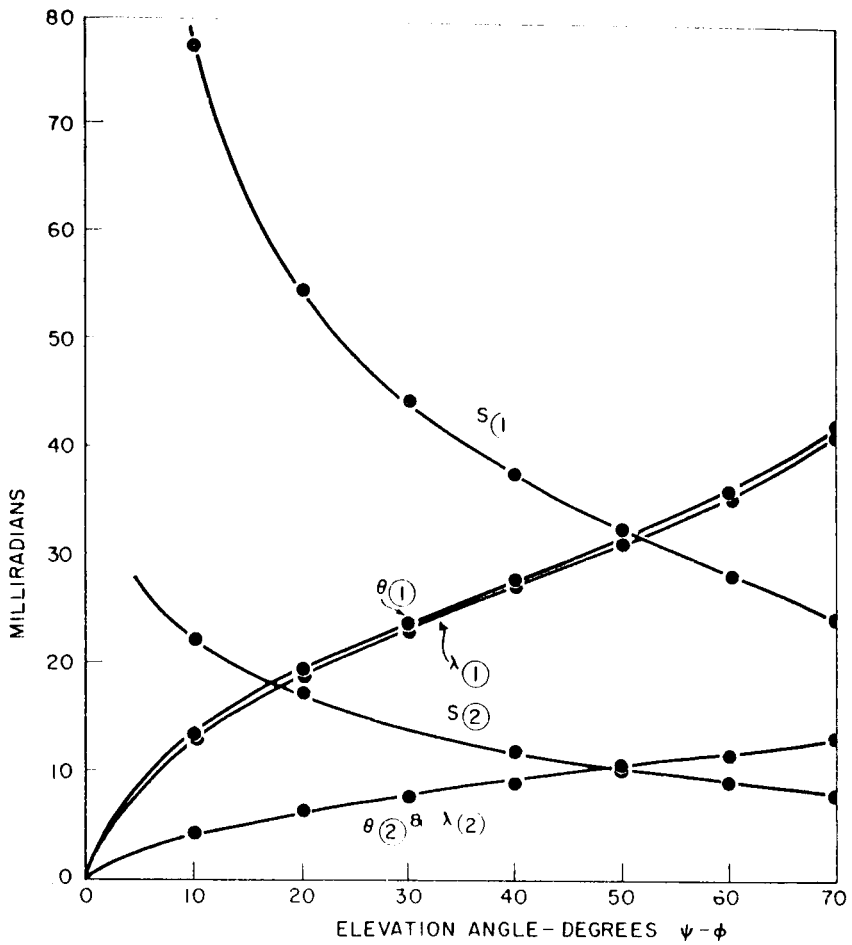

DISTANCE 1.025 RADII
SEMI-SUBTENSE $\phi = 77.5°$
EARTH 100 MI ORBIT
MOON 25 MI ORBIT

(1) ALLOWABLE MEASUREMENT ERROR Δ
OPERATIONAL GOAL-EARTH
1/2 mi IN HORIZON 800-1000 mi DISTANT GIVES 0.0005 RAD ≈ 100 in ARC

(2) RESEARCH GOAL EARTH
250 ft IN HORIZON 800-1000 mi DISTANT GIVES 0.00005 RAD ≈ 10" ARC

(3) OPERATIONAL/RESEARCH GOAL-MOON
500 ft IN HORIZON 200-250 mi DISTANT GIVES 0.0005 RAD ≈ 100" ARC

NOTE: (θ, λ, S DEFINED IN TEXT, PAGE 8)

Fig. 2 Horizon Photometer Tracking Accuracy - Earth Parking Orbit

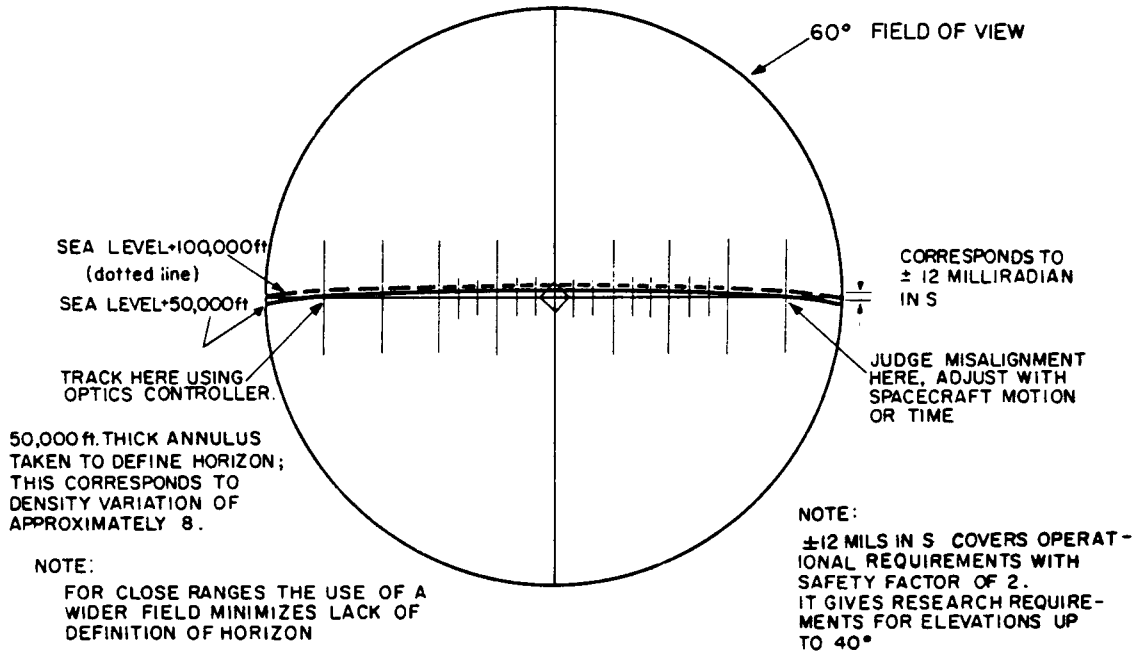

Fig. 3 Earth Parking Orbit - 60° Field

CONFIDENTIAL

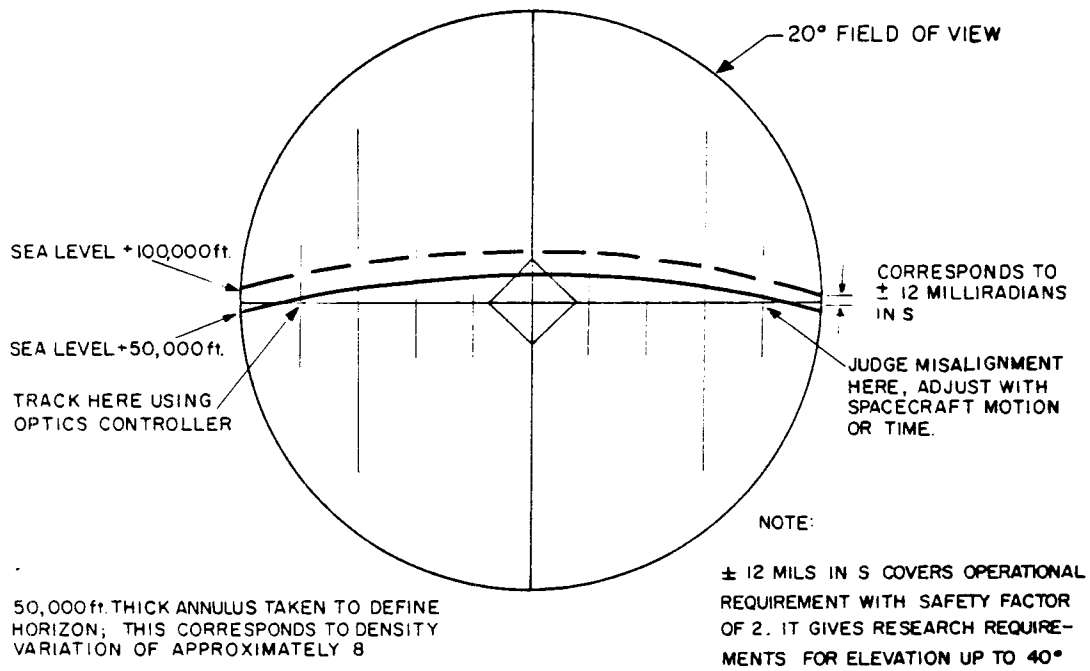

Fig. 4 Earth Parking Orbit - 20° Field

CONFIDENTIAL

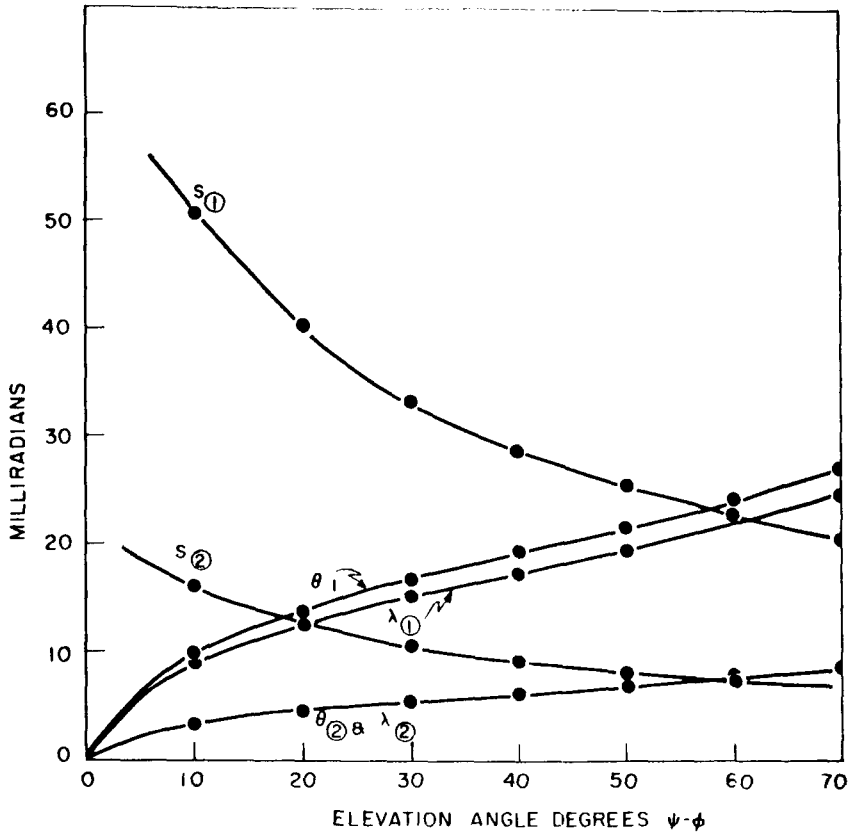

DISTANCE 1.102 RADII
SEMI SUBTENSE ϕ =65°
EARTH 400 mi ALTITUDE
MOON 100 mi ORBIT

① ALLOWABLE MEASUREMENT ERROR Δ
OPERATIONAL GOAL-EARTH
1/2 mi IN HORIZON DISTANCE OF 1800-2000mi GIVES 0.00025 RAD ≈ 50" ARC

② RESEARCH GOAL-EARTH
250ft IN HORIZON DISTANCE OF 1800-2000 mi GIVES 0.000025 RAD ≈ 5" ARC

③ OPERATIONAL / RESEARCH GOAL MOON
600 ft. IN HORIZON DISTANCE OF 450-500 mi GIVES 0.00025 RAD ≈ 50" ARC.

NOTE: (θ, λ, S DEFINED IN TEXT, PAGE 8)

Fig. 5 Horizon Photometer Tracking Accuracy
Moon Parking Orbit

CONFIDENTIAL

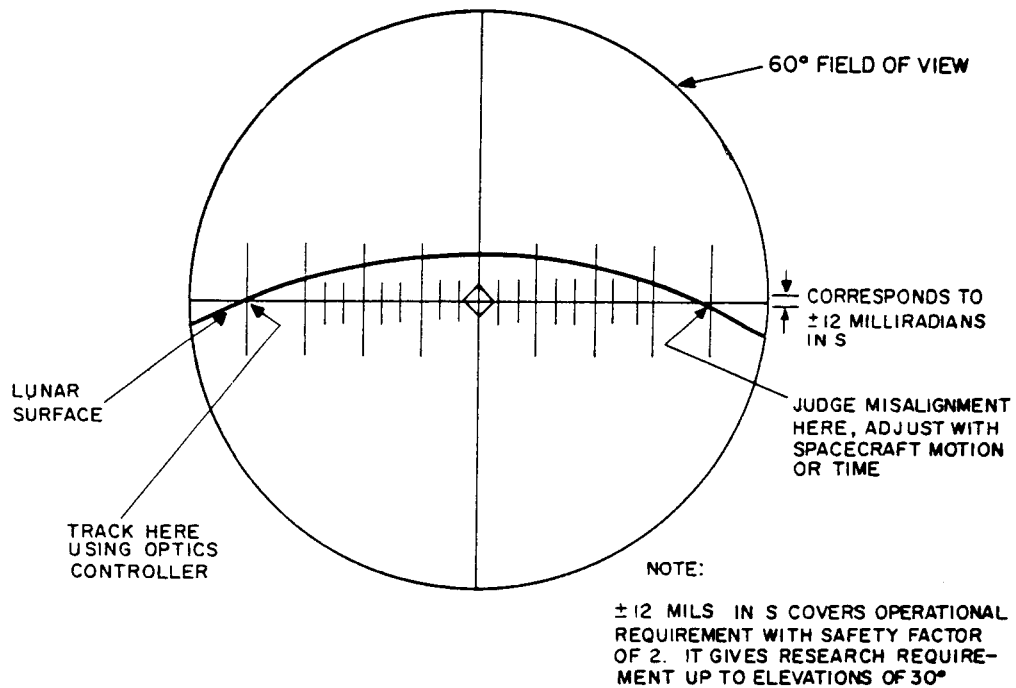

Fig. 6 Moon Parking Orbit - 60° Field

CONFIDENTIAL

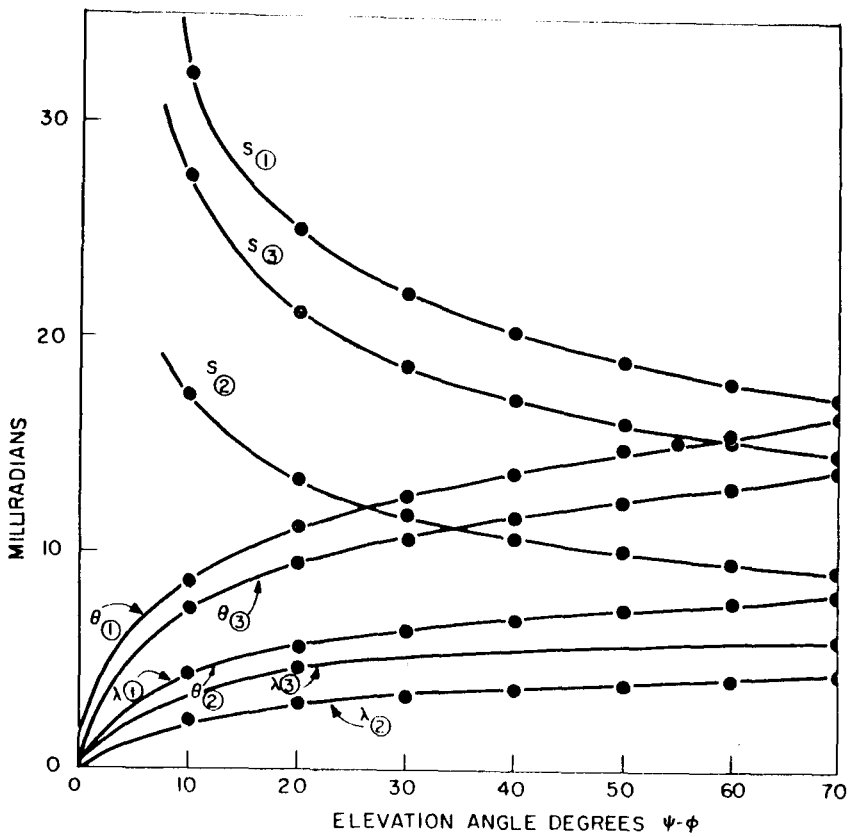

DISTANCE 2.0 RADII
SEMI SUBSTENCE $\phi = 30°$
EARTH ALTITUDE 4000 mi
MOON ALTITUDE 1000 mi

① ALLOWABLE MEASUREMENT ERROR Δ OPERATIONAL GOAL - EARTH.
1/2 mi IN HORIZON DISTANCE OF 7000 mi GIVES 0.00007 RAD ≈ 15" ARC

② BEST TO BE EXPECTED - EARTH
4" ARC ≈ 0.00002 RAD. OR 700 ft IN HORIZON

③ OPERATIONAL/RESEARCH GOAL - MOON
500 ft. IN HORIZON DISTANCE OF 2000 mi GIVES 0.00005 RAD. ≈ 10" ARC

NOTE: (θ, λ, S DEFINED IN TEXT, PAGE 8)

Fig. 7 Horizon Photometer Tracking Accuracy - 2 Radii

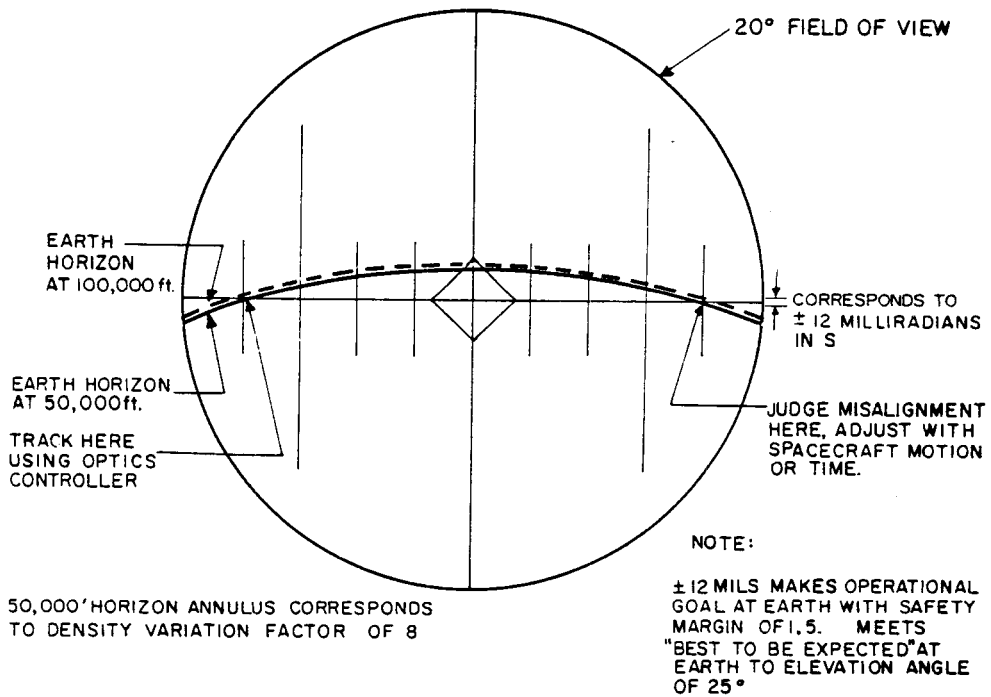

Fig. 8 2 Planetary Radii

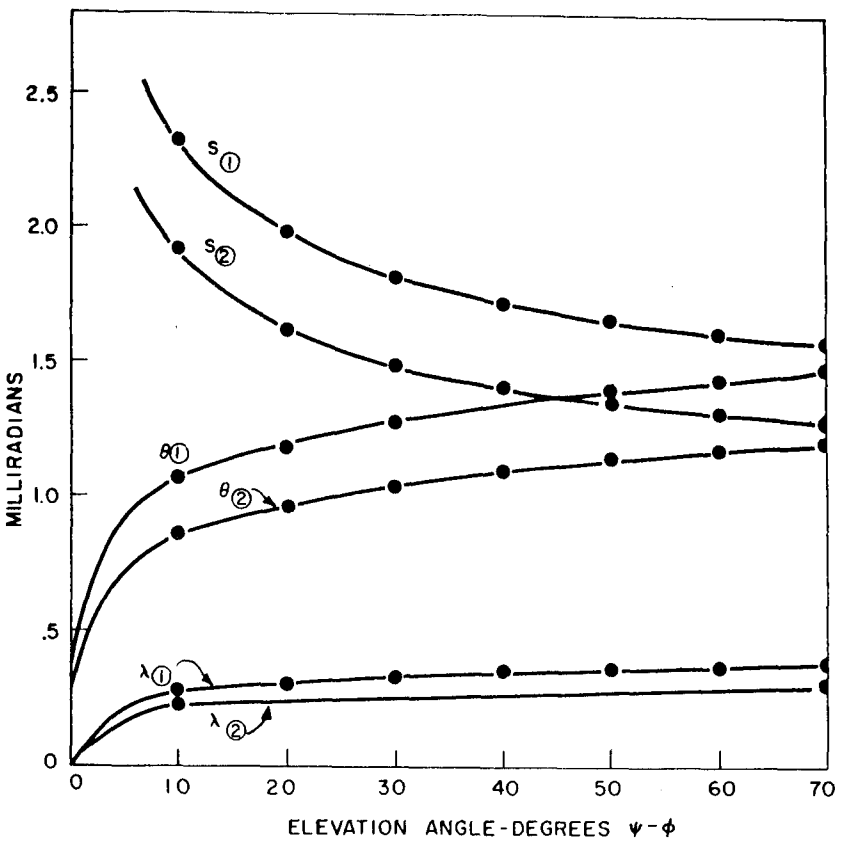

DISTANCE 3.86 RADII
SEMI-SUBTENSE $\phi = 15°$
EARTH CENTER 15,450 mi
MOON CENTER 3,860 mi

① ALLOWABLE MEASUREMENT ERROR Δ
OPERATIONAL GOAL-EARTH
1/2 mi IN HORIZON DISTANCE OF 15000 mi GIVES 0.00003 RAD. OR 6" ARC.

② OPERATIONAL GOAL-MOON
4" ARC ≈ 0.00002 RAD. OR 400 ft.

NOTE: (θ, λ, S DEFINED IN TEXT, PAGE 8.)

Fig. 9 Horizon Photometer Tracking Accuracy - 4 Radii

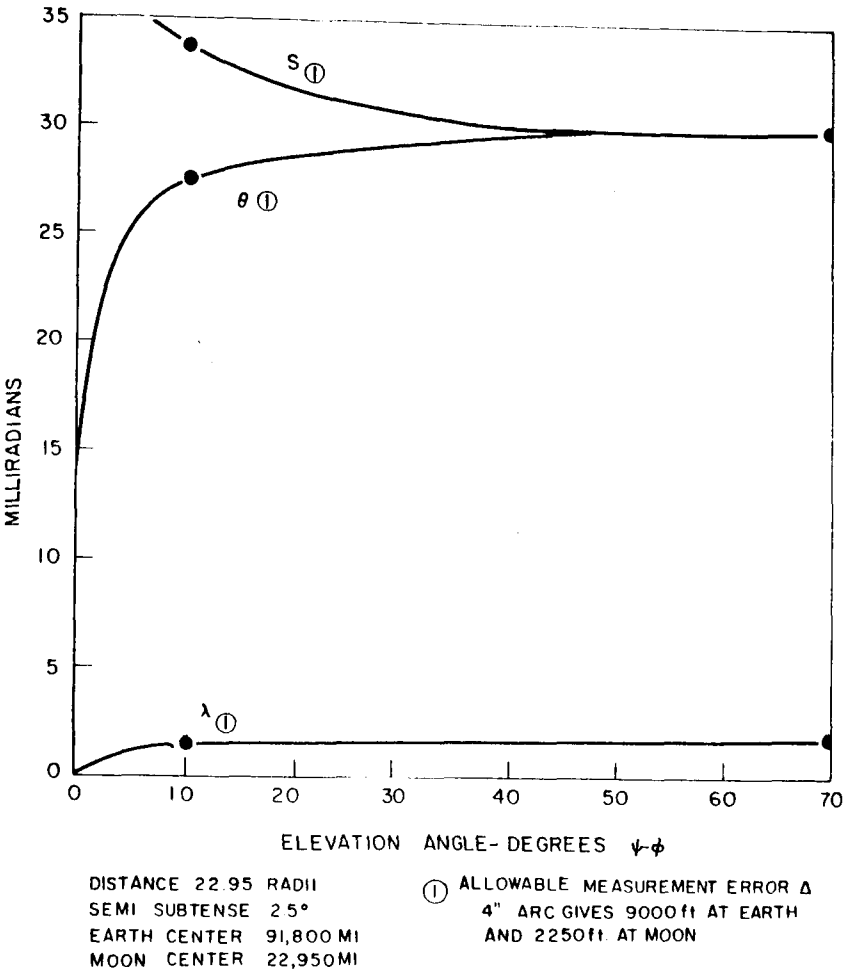

Fig. 13 Horizon Photometer Tracking Accuracy - 23 Radii

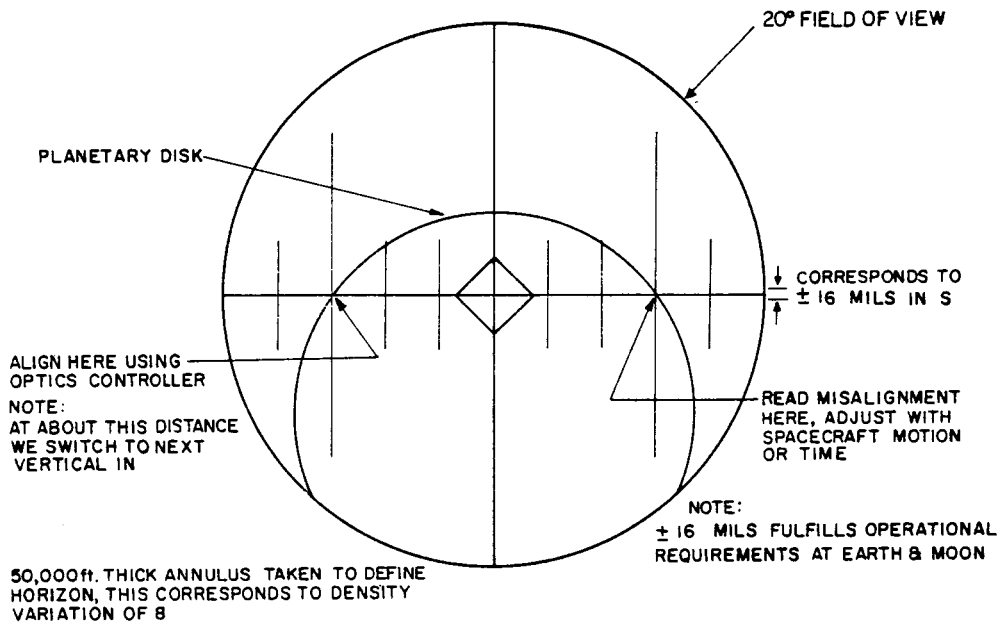

Fig. 12 7.7 Planetary Radii

[redacted]

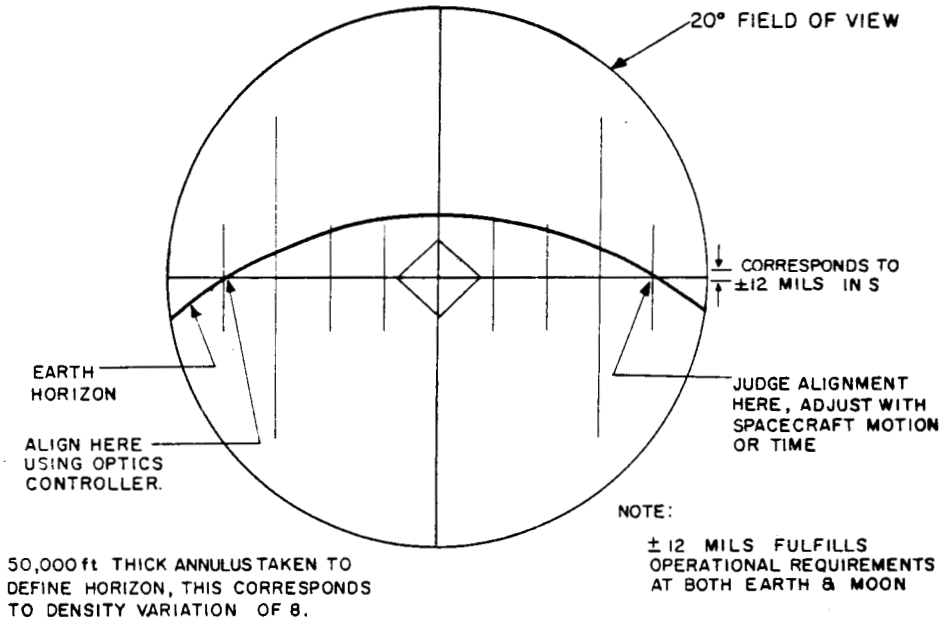

Fig. 10 4 Planetary Radii

[redacted]

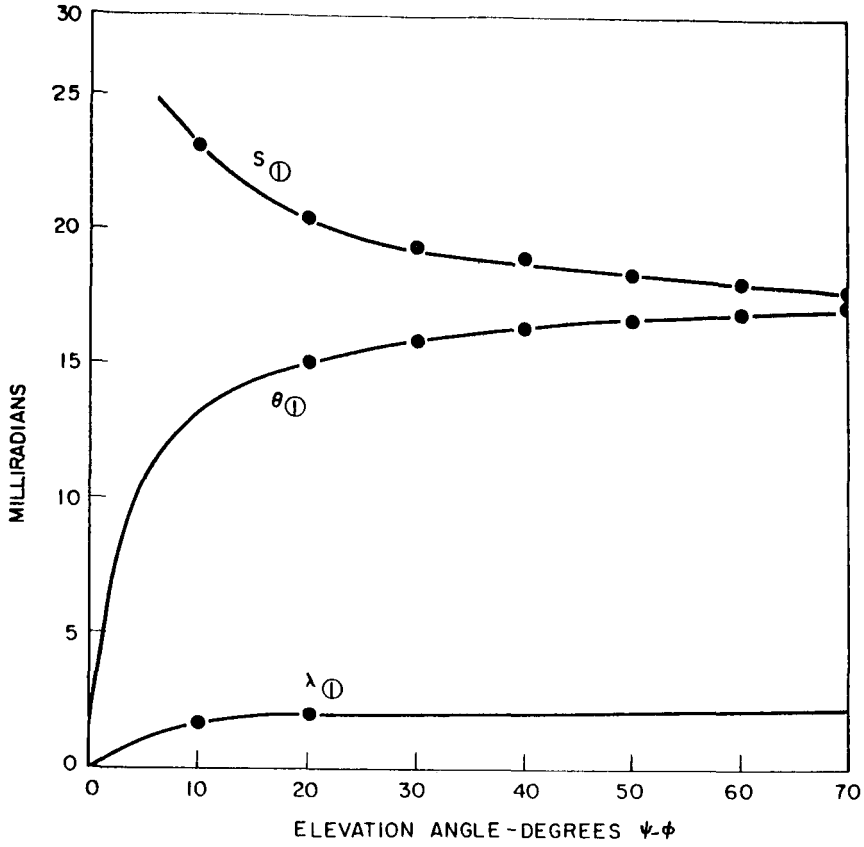

DISTANCE 7.67 RADII.
SEMI SUBTENSE 7.5°
EARTH CENTER 30,600 mi
MOON CENTER 7670 mi

① ALLOWABLE MEASUREMENT ERROR Δ
OPERATIONAL GOAL-EARTH
4" ARC ≈ 0.00002 RAD. IN 30,000 mi
IS 3000 ft.

① OPERATIONAL GOAL-MOON
4" ARC ≈ 0.00002 RAD IN 8000 mi
IS 800 ft.

NOTE: (θ, λ, S DEFINED IN TEXT, PAGE 8)

Fig. 11 Horizon Photometer Tracking Accuracy - 8 Radii

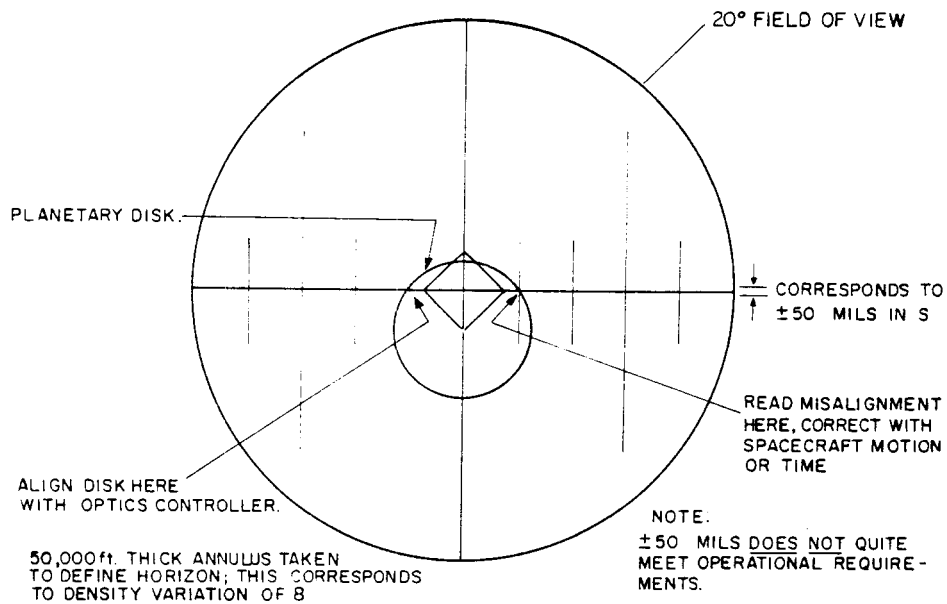

Fig. 14 23 Planetary Radii

$S = \theta \cong 49$ MILLIRADIAN

$\lambda = \cong 0.84$ MILLIRADIAN

(THESE CONSTANT VALUES ARE GOOD DOWN TO $\psi - \phi = 2°$)

DISTANCE 57.5 RADII
SEMI SUBTENSE 1°
EARTH CENTER 230,000 mi
MOON CENTER 57,500 mi

(1) ALLOWABLE MEASUREMENT ERROR Δ 4" ARC GIVES 23,000 ft. AT EARTH AND 6000 ft. AT MOON

NOTE: (θ, λ, S DEFINED IN TEXT, PAGE 8)

Fig. 15 Horizon Photometer Tracking Accuracy
Earth From Moon/60 Radii

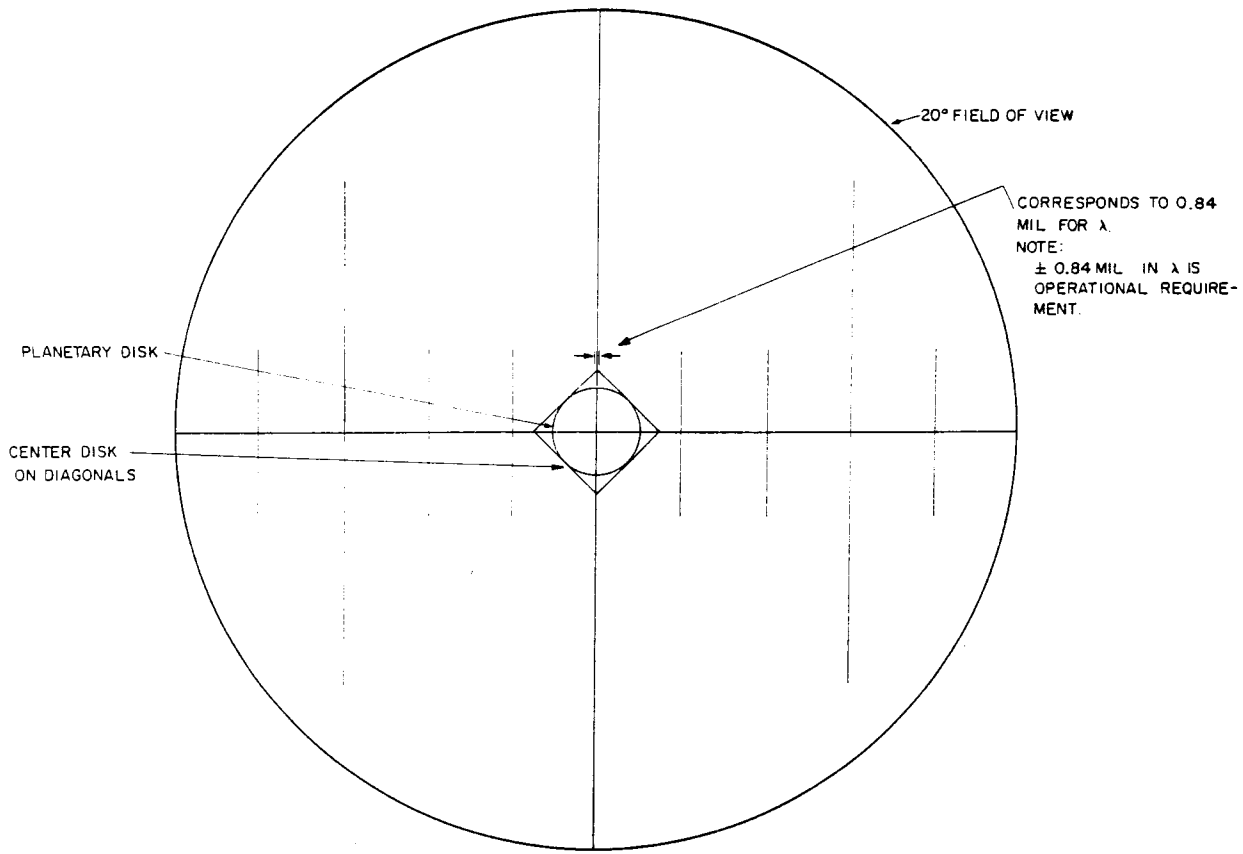

Fig. 16 60 Planetary Radii

$S = \theta = 98$ MILLIRADIAN

$\lambda = 0.4$ MILLIRADIAN

[THESE CONSTANT VALUES ARE GOOD DOWN TO $(\psi - \phi) = \frac{1}{2}^\circ$]

DISTANCE 230 RADII
SEMI SUBTENSE $\frac{1}{4}^\circ$
MOON CENTER 230,000 mi

(1) ALLOWABLE MEASUREMENT ERROR Δ
4" ARC GIVES 23,000 ft.

NOTE: (θ, λ, S, DEFINED IN TEXT, PAGE 8)

Fig. 17 Horizon Photometer Tracking Accuracy
Moon From Earth

[redacted]

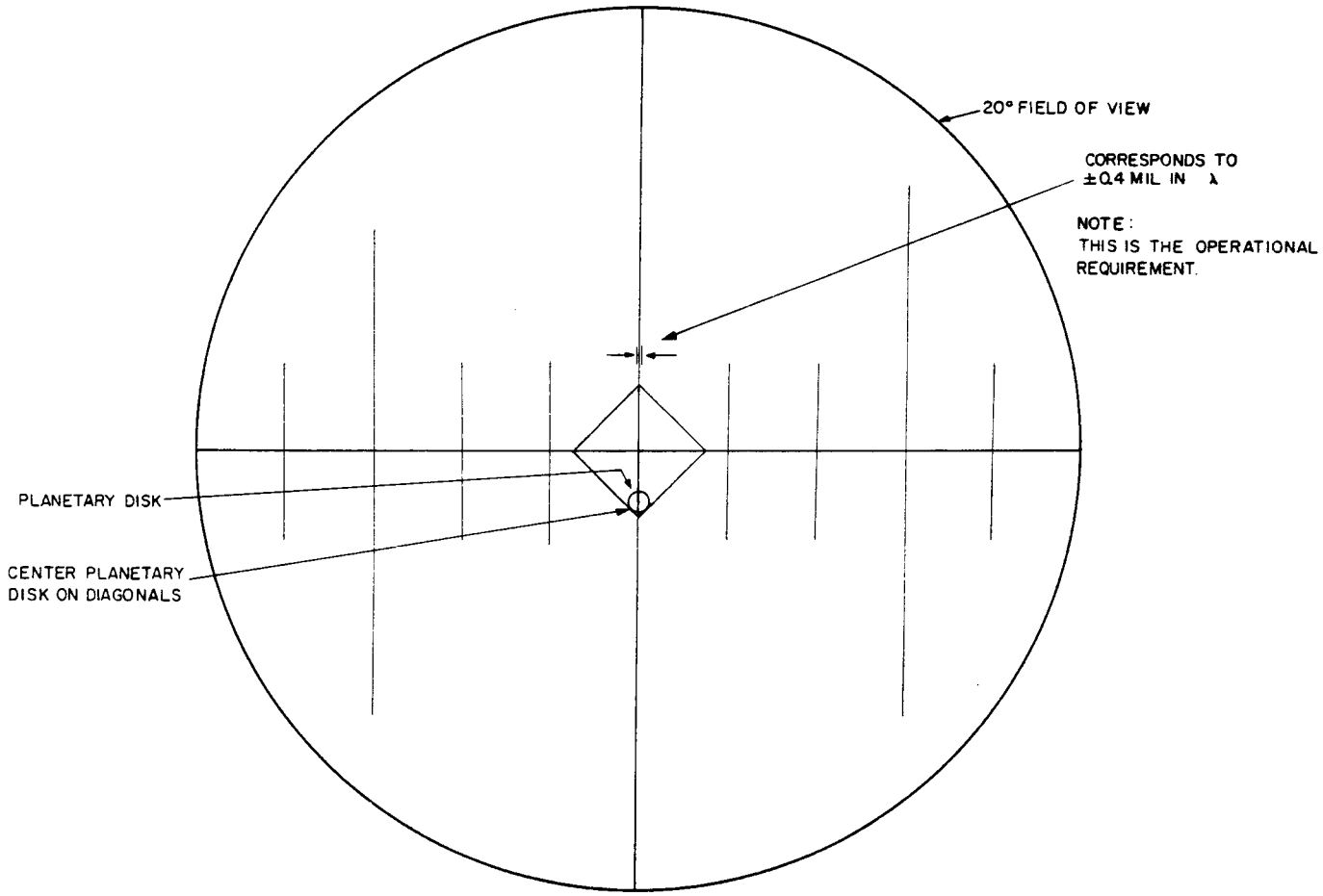

Fig. 18 230 Planetary Radii

[redacted]

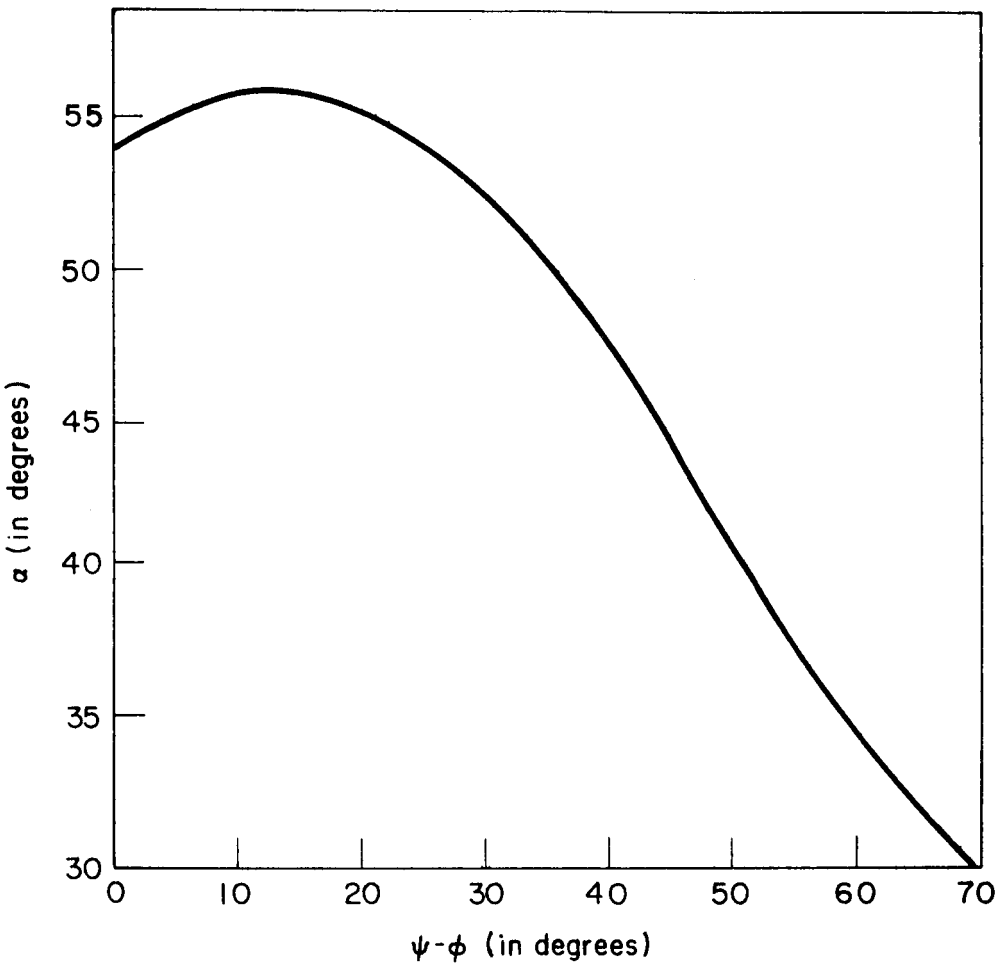

Fig. 19 (ψ - ϕ) At Time Of Measurement For Stars Of Elevation α(α = 90° For Polar Star)

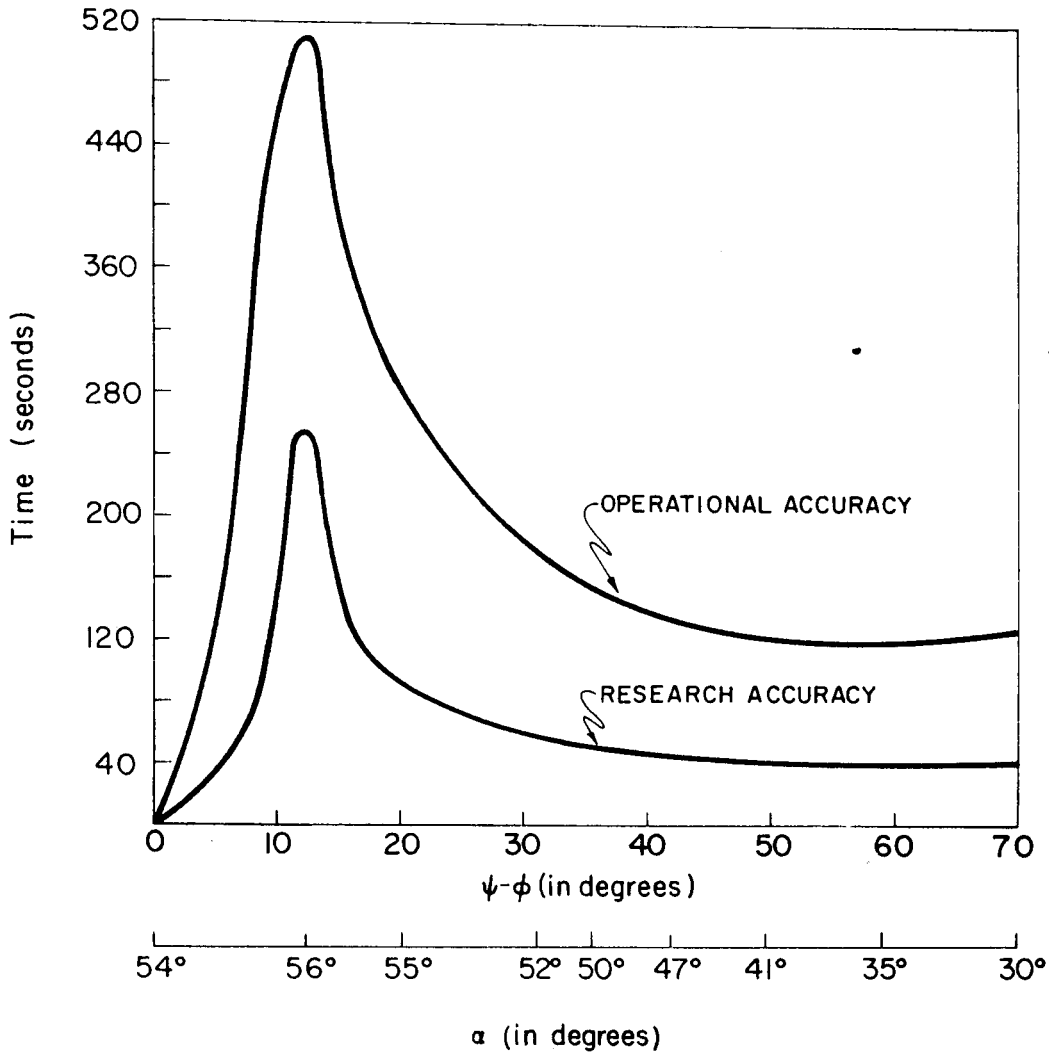

Fig. 20 Total Time During Which A Star Remains Within $\theta(\psi - \phi)$ Of Being Over Horizon

APPENDIX A

CALCULATED APPEARANCE OF PLANET IN SCANNING TELESCOPE

$$\bar{E}(\theta) = -\bar{k}\cos\phi + \sin\phi\,(\bar{j}\cos\theta + \bar{i}\sin\theta)$$

where the vector $\bar{E}(\theta)$ sweeps out the rim of the earth as θ goes from 0 to 2π.

$$\bar{\tau} = -\bar{k}\cos(\phi - \alpha) = \bar{j}\sin(\phi - \alpha)$$

is the axis of the scanning telescope where α is the angle by which we are aiming low, i. e. below the horizon.

$\bar{i}$ has direction of horizontal cross hair
$\bar{i} \times \bar{s}$ has direction of vertical cross hair.

In order for the horizon to intersect the horizontal cross hair at β field of view to the left or right we must satisfy two simultaneous equations for (θ, α)

$$\sin\beta = \bar{i} \cdot \bar{E} = \sin\phi\sin\theta$$
$$0 = \bar{i} \times \bar{\tau} \cdot \bar{E} = \sin\phi\cos\theta\cos(\phi - \alpha) - \cos\phi\sin(\phi - \alpha)$$

$$\tan(\phi - \alpha) = \frac{\sin\beta}{\cos\phi}\ \mathrm{ctn}\,\theta \text{ and } \sin\theta = \frac{\sin\beta}{\sin\phi}$$

giving θ and α.

E-1353

DISTRIBUTION LIST

Internal

R. Alonso
J. Arnow (Lincoln)
R. Bairnsfather
D. Baker
R. Battin
W. Bean
E. Berk
L. Berman
P. Bowditch
A. Boyce
R. Boyd
L. Brock
R. Brown
P. Bryant
R. Byers
G. Cherry
G. Cook
E. Copps
B. Crawford
W. Crocker
G. Cushman
J. Dahlen
J. Deyst
M. Drougas
E. Duggan
J. Dunbar
K. Dunipace (MIT/AMR)
R. Euvrard
P. Felleman
S. Felix (MIT/S & ID)
R. Fitzgerald
J. Flanders
J. Fleming
L. Gediman
R. Goss
F. Grant
Eldon Hall
I. Halzel
D. Hanley
W. Heintz
E. Hickey
D. Hoag
A. Hopkins
F. Houston
E. Hume
M. Johnston
B. Katz
A. Kosmala
A. Koso
M. Kramer
W. Kupfer
A. Laats
D. Ladd
T. Lawton
G. Levine
D. Lickly
H.F. Little
R. Magee
W. Marscher
F. Martin
G. Mayo
R. McKern
J. McNeil
James Miller
John Miller
P. Mimmo
R. Morth
C. Muntz
J. Nevins
G. Nielson
K. Nordtvedt
J. Nugent
E. Olsson
C. Parker
R. Phaneuf
P. Philliou
J. Potter
M. Richter
K. Samuelian
P. Sarmanian
R. Scholten
J. Sciegienny
N. Sears
D. Shansky
T. Shuck
Hugh Blair Smith
B. Sokkappa
W. Stameris
E. Stirling
M. Sullivan
J. Suomala
R. Therrien
W. Toth
M. Trageser
R. Warren
R. Weatherbee
R. White
W. Widnall
L. Wilk
R. Woodbury
W. Wrigley
B. Young
Apollo Library (2)
MIT/IL Library (6)

External

(ref. APCAN; 2 July 1963)

P. Ebersole (NASA/MSC)		(2)
W. Rhine (NASA/RASPO)		(1)
S. Gregorek (NAA S & ID/MIT)		(1)
T. Hevermann (GAEC/MIT)		(1)
AC Spark Plug		(10)
Kollsman		(10)
Raytheon		(10)
WESCO		(2)
Captain W. Delaney (AFSC/MIT)		(1)
NAA RASPO:	National Aeronautics and Space Administration Resident Apollo Spacecraft Project Officer North American, Inc. Space and Information Systems Division 12214 Lakewood Boulevard Downey, California	(1)
CAPE:	National Aeronautics and Space Administration Atlantic Missile Range Operations Port Canaveral, Florida Attn: Mr. B. P. Brown	(3)
HDQ:	NASA Headquarters 1520 H Street Washington, D. C. Attn: Mr. G. M. Low, MD(P)	(6)
AMES:	National Aeronautics and Space Administration Ames Research Center Moffett Field, California Attn: Mr. Matthews	(2)
LEWIS:	National Aeronautics and Space Administration Lewis Research Center Cleveland, Ohio	(2)
FRC:	National Aeronautics and Space Administration Flight Research Center Edwards AFB, California	(2)
JPL:	National Aeronautics and Space Administration Jet Propulsion Laboratory Pasadena, California Attn: Mr. H. R. Lawrence	(2)
LRC:	National Aeronautics and Space Administration Langley Research Center Langley AFB, Virginia Attn: Mr. A. T. Mattson	(2)

GSFC:	National Aeronautics and Space Administration Goddard Space Flight Center Greenbelt, Maryland	(2)
MSFC:	National Aeronautics and Space Administration George C. Marshall Space Flight Center Huntsville, Alabama Attn: Dr. Kuettner	(2)
GAEC:	Grumman Aircraft Engineering Corporation Bethpage, Long Island New York Attn: Mr. A. Whitaker	(1)
NAA:	North American Aviation, Inc. Space and Information Systems Division 12214 Lakewood Boulevard Downey, California Attn: Mr. R. Berry	(1)
GAEC RASPO:	National Aeronautics and Space Administration Resident Apollo Spacecraft Project Officer Grumman Aircraft Engineering Corporation Bethpage, L. I., New York Attn: Mr. Jack Small	(1)
WSMR:	National Aeronautics and Space Administration Post Office Drawer D White Sands Missile Range White Sands, New Mexico	(2)
MSC:	National Aeronautics and Space Administration Manned Spacecraft Center Apollo Document Control Group (SDG) Houston 1, Texas	(45)