[redacted]

A Reproduced Copy

OF

(NASA-CR-101251) APOLLO DESIGN REVIEW BOARD (North American Aviation, Inc.) 252 p

N79-76312

Unclas

00/18 11100

CLASSIFICATION CHANGE

TO - UNCLASSIFIED ~~CONFIDENTIAL~~

By authority of ~~T.D. No.~~ GDS-Gp 4

Changed by ABM Hubbard Date 11/6/75

Reproduced for NASA

by the

Scientific and Technical Information Facility

[redacted]

[redacted]

~~CONFIDENTIAL~~

C69-1583

This document contains information affecting the national defense of the United States [redacted] Section 793 and 794, its transmission or revelation of its [redacted] manner to [redacted] by law.

[redacted]

Total Pages 246

Copy No. 4

AP 63-61

APOLLO DESIGN REVIEW BOARD [U]

September 1963

[redacted]

(ACCESSION NUMBER)	(THRU)
252	None
(PAGES)	(CODE)
CR-111551	
(NASA CR OR TMX OR AD NUMBER)	(CATEGORY)

FF No. 602(A)

[redacted]

LIBRARY COPY
OCT 1 0 1963
LANGLEY RESEARCH CENTER
LIBRARY, NASA
LANGLEY STATION
HAMPTON, VIRGINIA

~~GROUP [illegible] at 3 years
Downgraded at 3 years
intervals [illegible] classified
after [illegible] years~~

NORTH AMERICAN AVIATION, INC.
SPACE and INFORMATION SYSTEMS DIVISION

[redacted]

CONTENTS

	File No.
The Apollo Mission	22810
Apollo Spacecraft	33946
Launch Geometry	22816
Geographic Window	22817
Launch Windows	22818A
Launch Escape System	22819A
Pad Abort Trajectories	27570
Ascent Trajectory	22820A
Transposition & Docking	27558A
Characteristic Velocities (V)	22821
Typical Variation of Circular Orbit Injection Requirements	22027
Typical Attitude Sequence	56330
Communications	34083
Principle Considerations	56331
SC Attitude Orientation Influences	56496
Equal Period Orbits	22822A
Nominal Mission Profile	34084
Comparison Results	34082
Typical Ascent of LEM to CSM	34085
Typical Variation of Transearth Injection Requirements	22026
Separation	33962
Entry Corridors	22824
Back-up Entry Instrument	10214
Entry Monitor System	34086
Geometry of Lunar Orbital, Earth Equatorial, & Eliptic Planes	26575

	File No.
Transearth Entry LOCI	33947
Apollo Structural Design	34071
Apollo Spacecraft	33611A
Command Module Structure	34072
CM Primary Structure	34037
Heat Shield Structure	33612
Heat Shield Perturbations	58960
Heat Shield Perturbations	34040
Entry Heat Load Distribution & Ablator Thickness	58963
Entry Heating Rates	58965
CM Inner Structure	33639A
CM Inner Structure - Inner Shell	34003A
Crew Access Hatch	59547
Earth Landing & Impact System	34075
Earth Landing System Equipment	33606
Earth Landing System Normal	23315C
Earth Impact System	34076
Crew Couches	33608A
Service Module & Adapter Structure	34073
SM & Adapter External Configuration	58937
SM Structure	33600A
SM & Adapter, Internal Equipment	58959
Service Propulsion Tanks	58969
SM RCS Package	56819A
SM - Insulation Installation	58958A
Service Module Adapter - C1	33601A
LEM Adapter	58964
Launch Escape System Structure	34074
Launch Escape System Structure	58966A
Launch Abort Modes	34038
LES Tower Explosive Bolt	34039
Apollo Service Propulsion System	33734

	File No.
SPS Schematic Diagram	33735
SPS Engine Requirements	33737'
SPS Pressure & Capacity	33738A
Injector & Thrust Chamber Design Problems	33739
Candidate Injector	33740
Ablative Thrust Chamber	33741
Radiation Cooled Nozzle	33742
Propellant Behavior	33743A
Tank Feedout & Baffle Design	33744
SPS Program Phasing	33745B
Test Fixture F-3	33757
Apollo Reaction Control System	33747
CM Reaction Control System	33748
CM RCS Configuration	33952
Service Module RCS	33749A
RCS Performance	33750
CM & SM RCS Pressures	33839
Thrust Chamber Design Requirements	33751
CM RCS Engine	33752
Service Module RCS Engine	33753
Reaction Control System Propellant Tank	33754
RCS Engine Valves	33755
RCS Program Phasing	33756A
CM Breadboard	33758
SM Breadboard	33746
Apollo Launch Escape System Propulsion	33759
LES Structure	58966
Rocket Motor Design Characteristics	23760
Thrust Performance	33761
Thrust Vector Angles	33762
Reliability Considerations	33763
Development Problems	33764

	File No.
Nozzle Design	33765
Ignition System Redevelopment	33766
LES Schedules	33767A
Environmental Control System	33773
ESC Requirements	33774
ECS Requirements	33775
ECS Schematic	33780A
ECS Installation	56808B
Finished Roll-Bond Radiator Panel	33782
Finished Double Surfaced Coldplate	33783
Critical Problems	33787A
Critical Problems (Cont)	33789A
ECS Program Phasing	33813A
Cryogenic Gas Storage System	33768
Design Requirements	33769A
System Schematic	33770
System Installation	33803
Typical Cryogenic Storage Tank	59546
Problem Areas	33771
Fuel Cell System	33804
System Requirements	33805
Design Characteristics	33806
Fuel Cell System Schematic	33808
Fuel Cell Schematic	33807A
Fuel Cell Installation	33809
Problem Areas	33810A
P&WA Testing	33811A
Electrical Power Distribution System	33790
System Requirements	33791
System Requirements (Cont)	33792

	File No.
System Requirements (Cont)	33793
Design Characteristics	33794
Design Characteristics (Cont)	33795
DC Bus Structure	33798
AC Bus Structure	33799
Apollo CM Floodlighting	33802
Entry Battery	33801
Problem Areas	33796A
No Title	33797
Electronic Systems	34047
Function of Stabilization & Control Subsystem	33817A
SCS Block Diagram	33818
SCS Modes	34048
Command Module Stabilization & Control System	34049A
Current Problems	33819A
Apollo SCS Displays & Controls	56815
SCS Sensors	33821
SCS Electronics	33869
Communications Systems	59526
Design Criteria	33826
Communication System	33827
Communications LEB Installation	33828A
Communications System	33838
Communications System	33837
Apollo Antennas - Command Module	33829
Apollo Antennas - SM 2KMC High Gain	33830
Current Design Problems	33832A
Instrumentation Systems	59524
Instrumentation Systems	59525
AFRM 011 Instrumentation System	33822

	File No.
Displays & Controls	33870
Crew Stations	33971
(Main Display Console)	7005-83-36E
(Main Display Console - Left Side)	7005-83-36C
(Main Display Console - Right Side)	7005-83-36A
(Main Display Console - Center)	7005-83-36D
(Left Side Console)	7005-83-36B
(Rotational Controller)	7005-90-32I
D&C System - Future Development Outlook	33880
Inflight Test System	34113
In-Flight Test System	33883
Apollo Training Equipment	59527
Definition	59528
Trainer Critical Parameters	33852
General Approach	33853
APTT Objectives	33848
Proposed Installation APTT	33847
APTT Design Characteristics	33849
Apollo Part Task Trainer Instructor's Console	33851
AMS Objectives	33843
Proposed Installation—AMS	33842
AMS Design Characteristics	33844
Apollo Engineering Simulation	33855
Apollo Design Process	33856A
Simulation Program Criteria	33945
Objectives	33859
Equipment	33862
Complex	33863
Study Categories	33944
Studies in Progress	33943

	File No.
Apollo GSE	33709
Apollo GSE	33712
Checkout	33713
Handling	33714A
Servicing	33716
GSE Supports	33717
Test Vehicles Supported	33718
GSE Checkout Concepts	33719A
Bench Maintenance Equipment	33720
Special Test Unit	33721
SC Prelaunch Automatic C/O Equipment	33722
Spacecraft Sling	34078
Jettison Motor Support	34080
Test Conductor Group	34079
Pyrotechnics Initiators Substitute Set	34077
GSE Model & Configuration Status	33725A
Apollo Docking System	34088
Contents	34089
Apollo Docking Philosophy	34090
Apollo Docking Phases	34091
Transposition Docking Time Line	59517
Transposition Docking	27558A
Docking System Design Considerations	34092
Principle Factors Affecting Docking Requirements	34093
Crew Function During Docking Maneuver	34094
Typical Data	34098
Simulation Results—Backup Mode	34995
Mechanical System Design Requirements	34096
Extendable Device Docking Concepts	59518
Inflatable Probe Concept	34043A
Stem Docking Concept	34042

	File No.
Stem & Cable Concept	34044
Extendable Tunnel Concept	34041
CSM—LEM Docking Development Plan	34097
	7005-86-36A
Apollo Weight Status Report	33885
CM—SM With Propellant	34087
CM—SM Burnout	59519
Command Module	33886
Command Module Status	33890A
CM System Weight Change	33893
Service Module	33887
Service Module Status	33891A
SM System Weight Change	33894
Launch Escape System Weight Status	33889
Electrical Power Status	33964
Electrical Energy Status	33966
Energy Utilization	33965A
Average Power	33969
Electrical Energy Requirements	33967A
Test Vehicle Summary	33897
Mockups	59530
Mockup Status	33898A
Boilerplate Test Vehicles	59522
Boilerplate Test Vehicle Status	33899
Boilerplate Test Vehicle Status (Cont)	33900
Simulators, Evaluators & Trainers	33902
Spacecraft Test Vehicle	59523
Spacecraft Test Vehicles	33901A

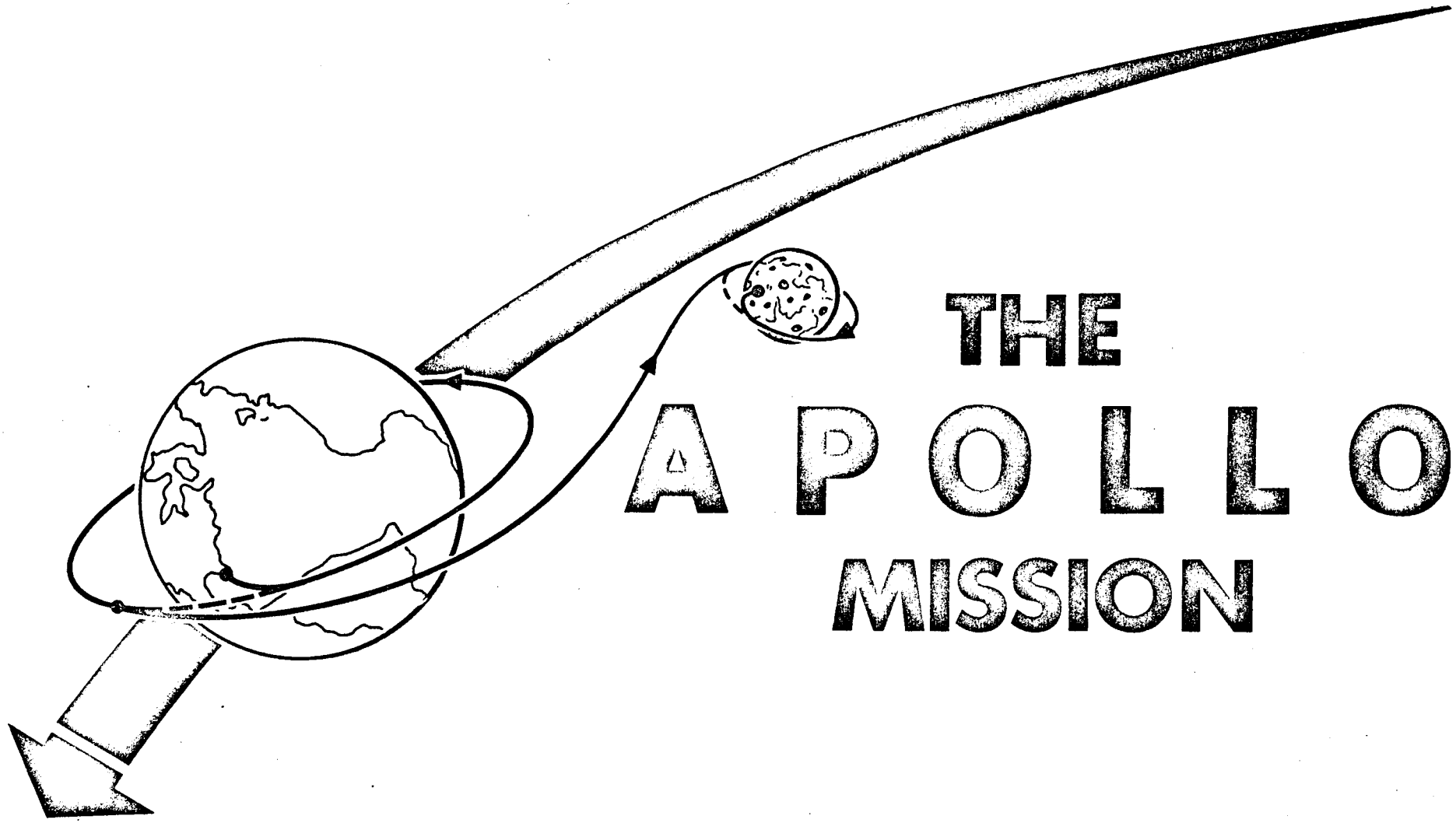

THE APOLLO MISSION

NORTH AMERICAN AVIATION, INC.
SPACE AND INFORMATION SYSTEMS DIVISION

11-62 AP 22810

APOLLO SPACECRAFT

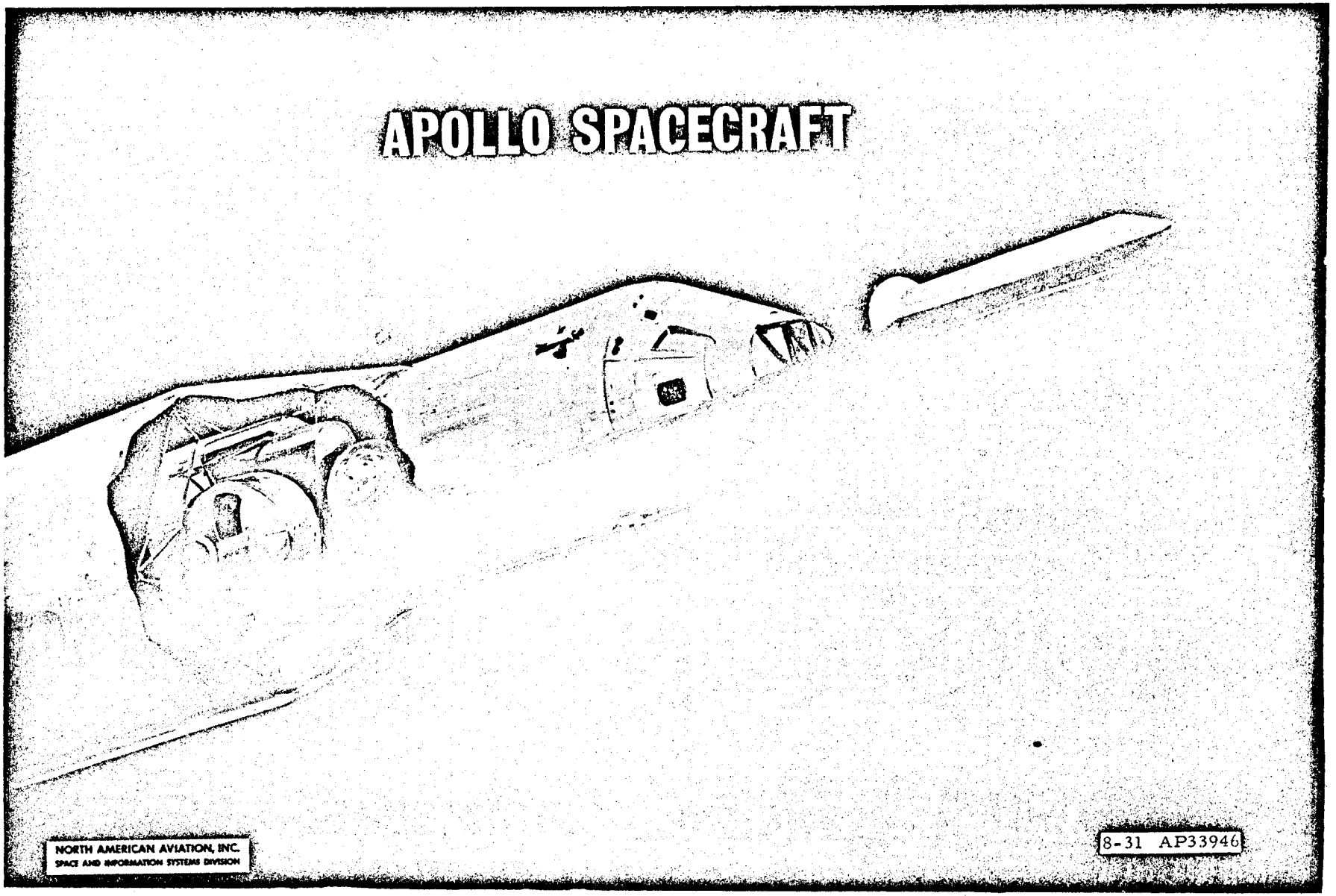

NORTH AMERICAN AVIATION, INC.
SPACE AND INFORMATION SYSTEMS DIVISION

8-31 AP33946

LAUNCH GEOMETRY

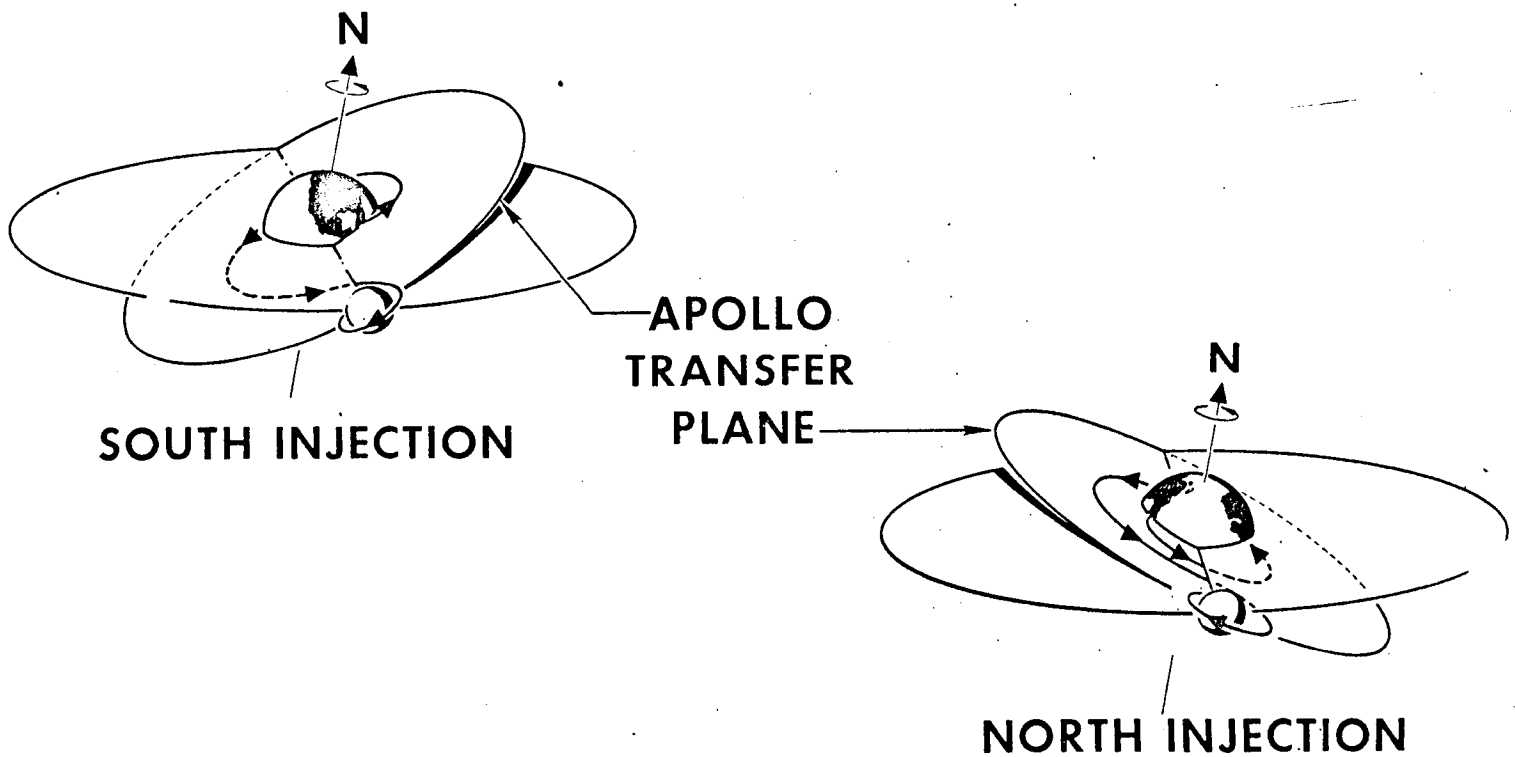

GEOGRAPHIC WINDOW

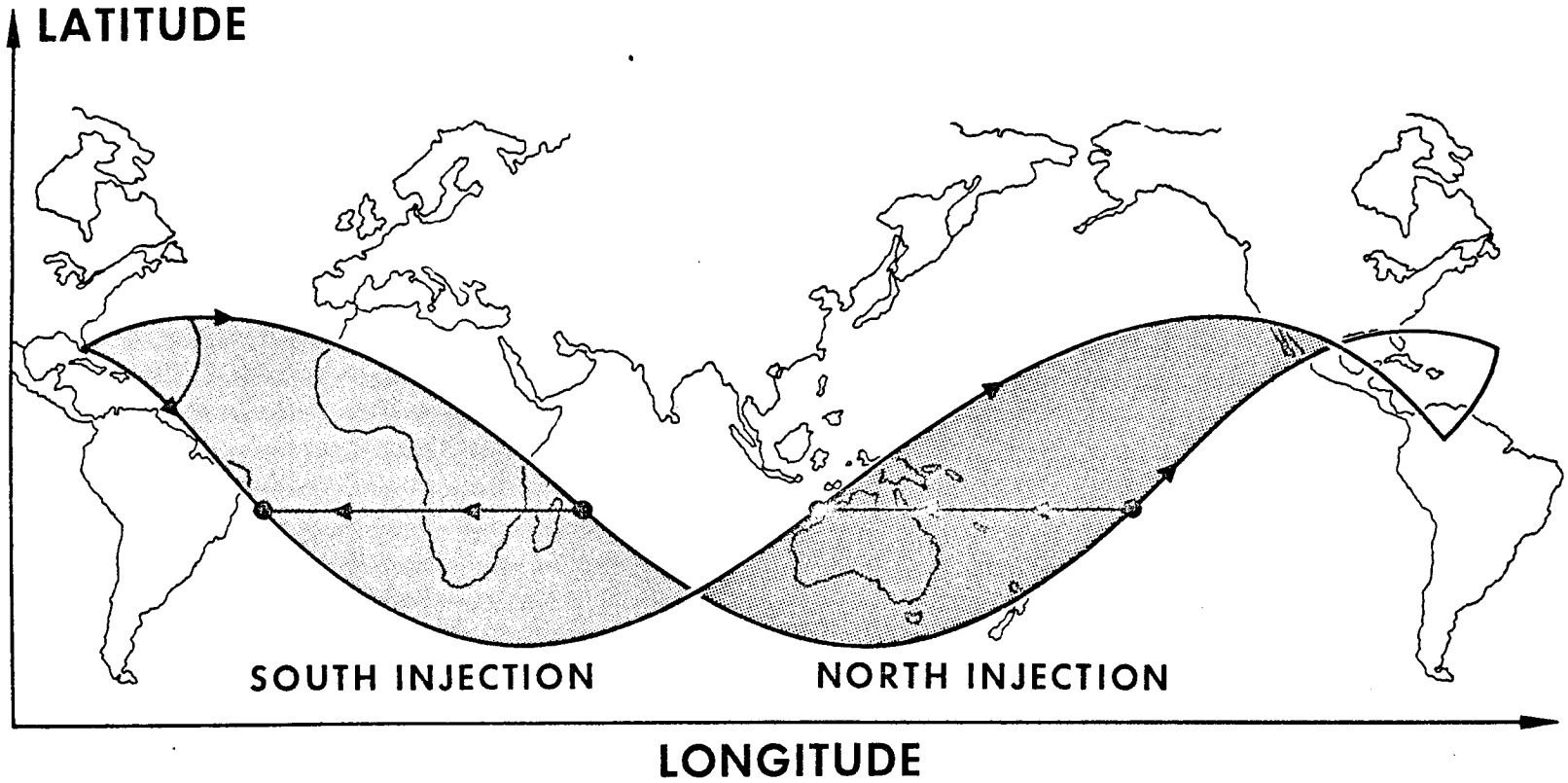

NORTH AMERICAN AVIATION, INC.
SPACE AND INFORMATION SYSTEMS DIVISION

11-62 AP 22817

LAUNCH WINDOWS

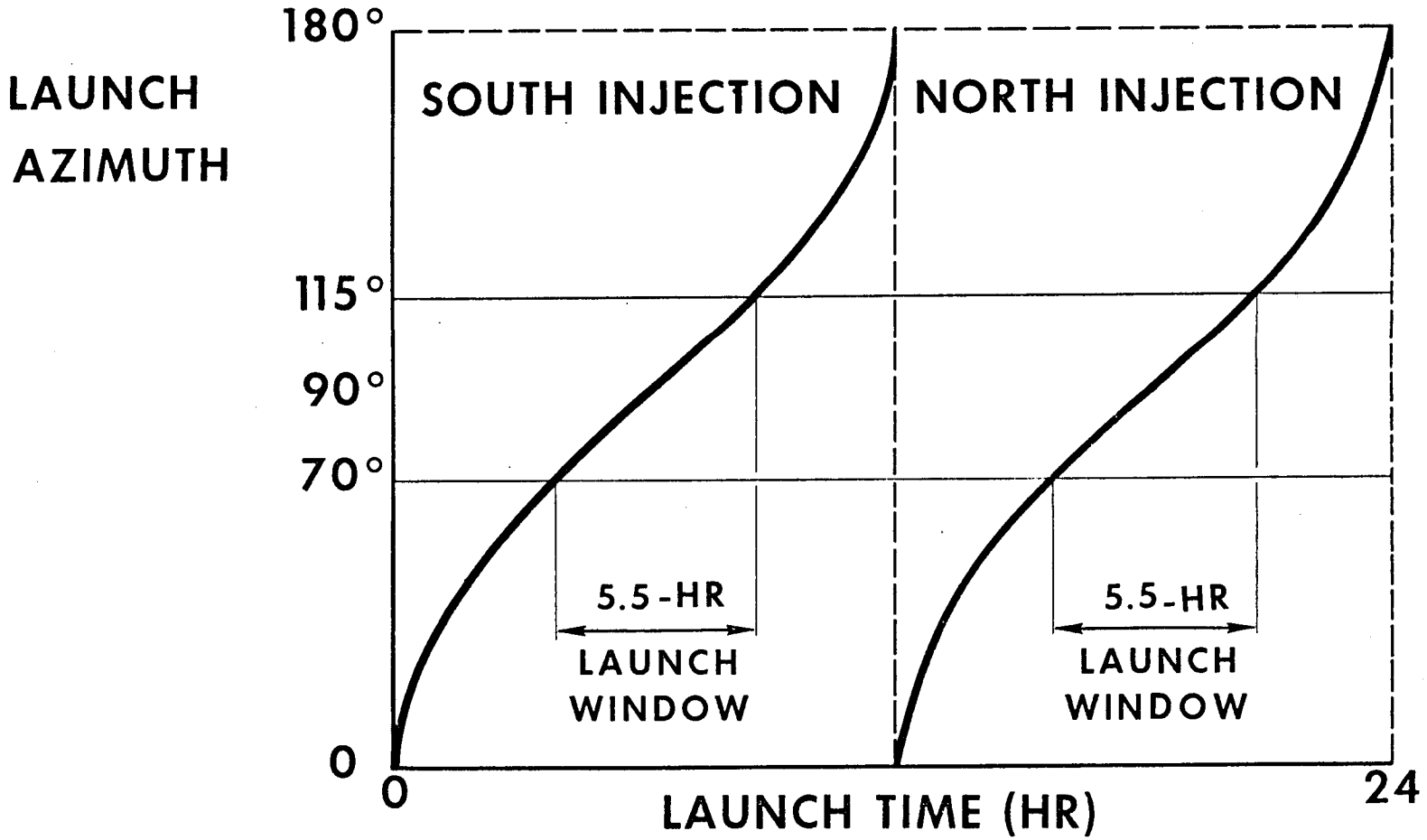

NORTH AMERICAN AVIATION, INC.
SPACE AND INFORMATION SYSTEMS DIVISION

11-62 AP 22818A

LAUNCH ESCAPE SYSTEM

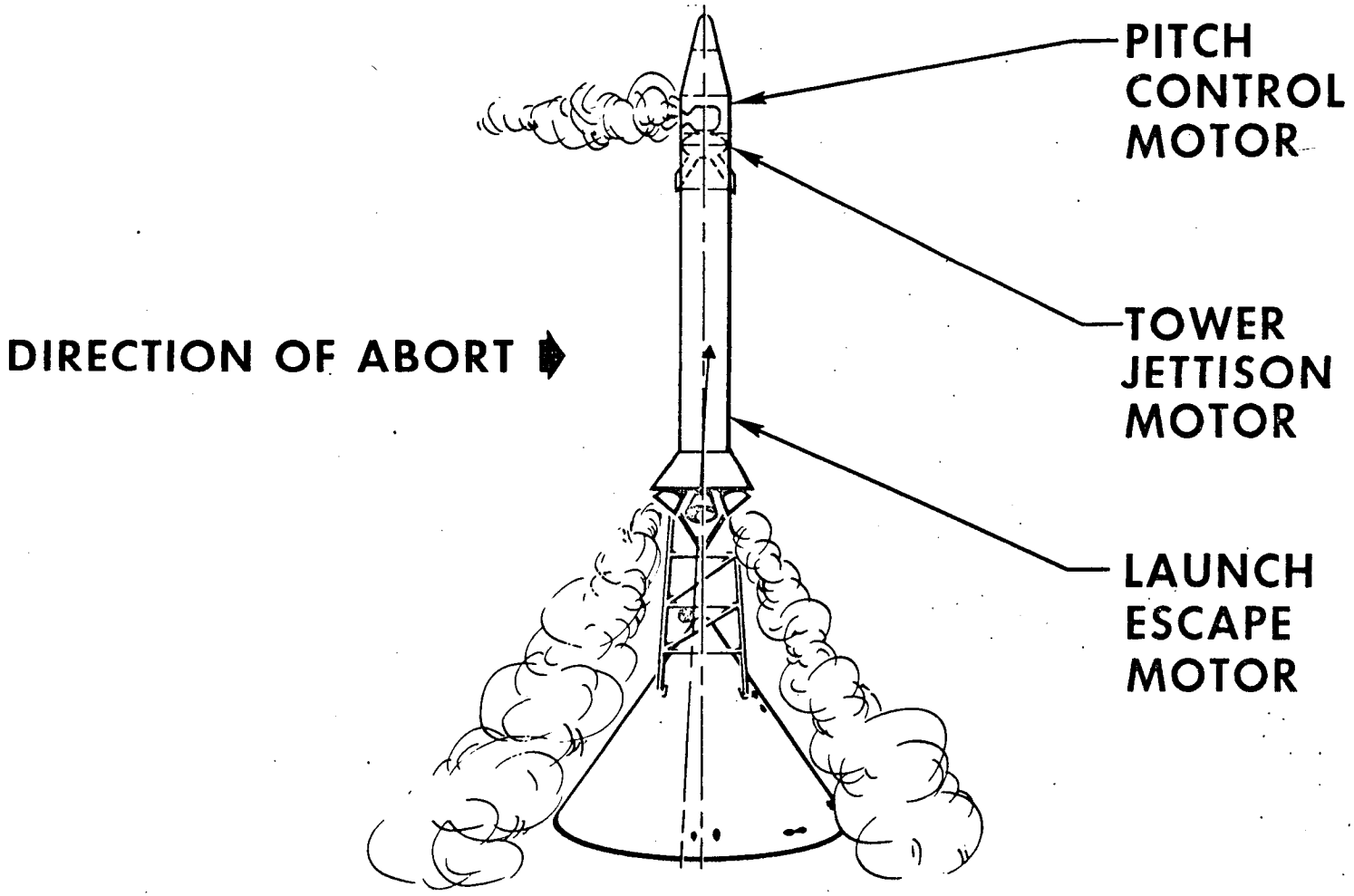

PAD ABORT TRAJECTORIES

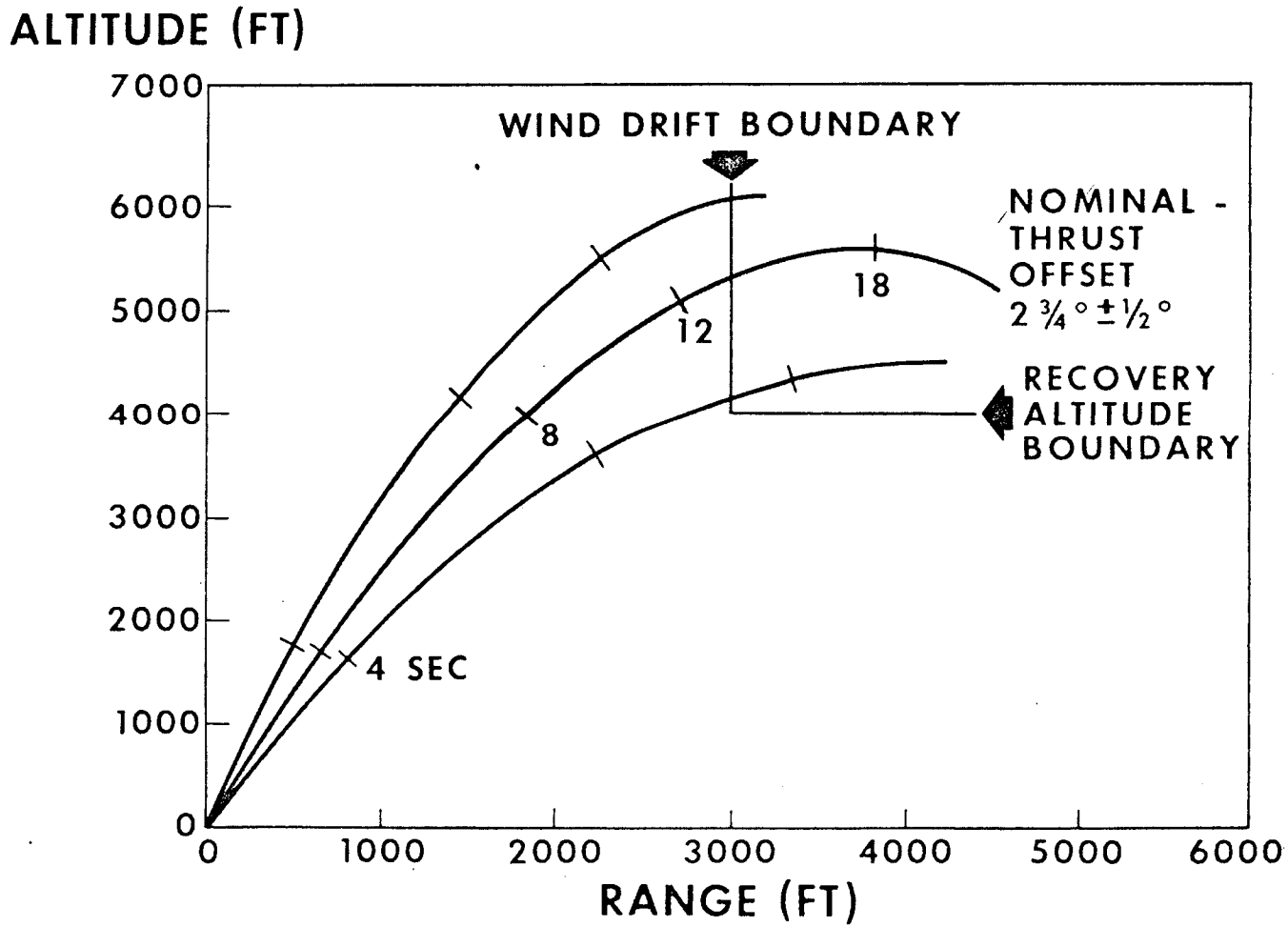

NORTH AMERICAN AVIATION, INC.
SPACE AND INFORMATION SYSTEMS DIVISION

4-63 AP 27570

ASCENT TRAJECTORY

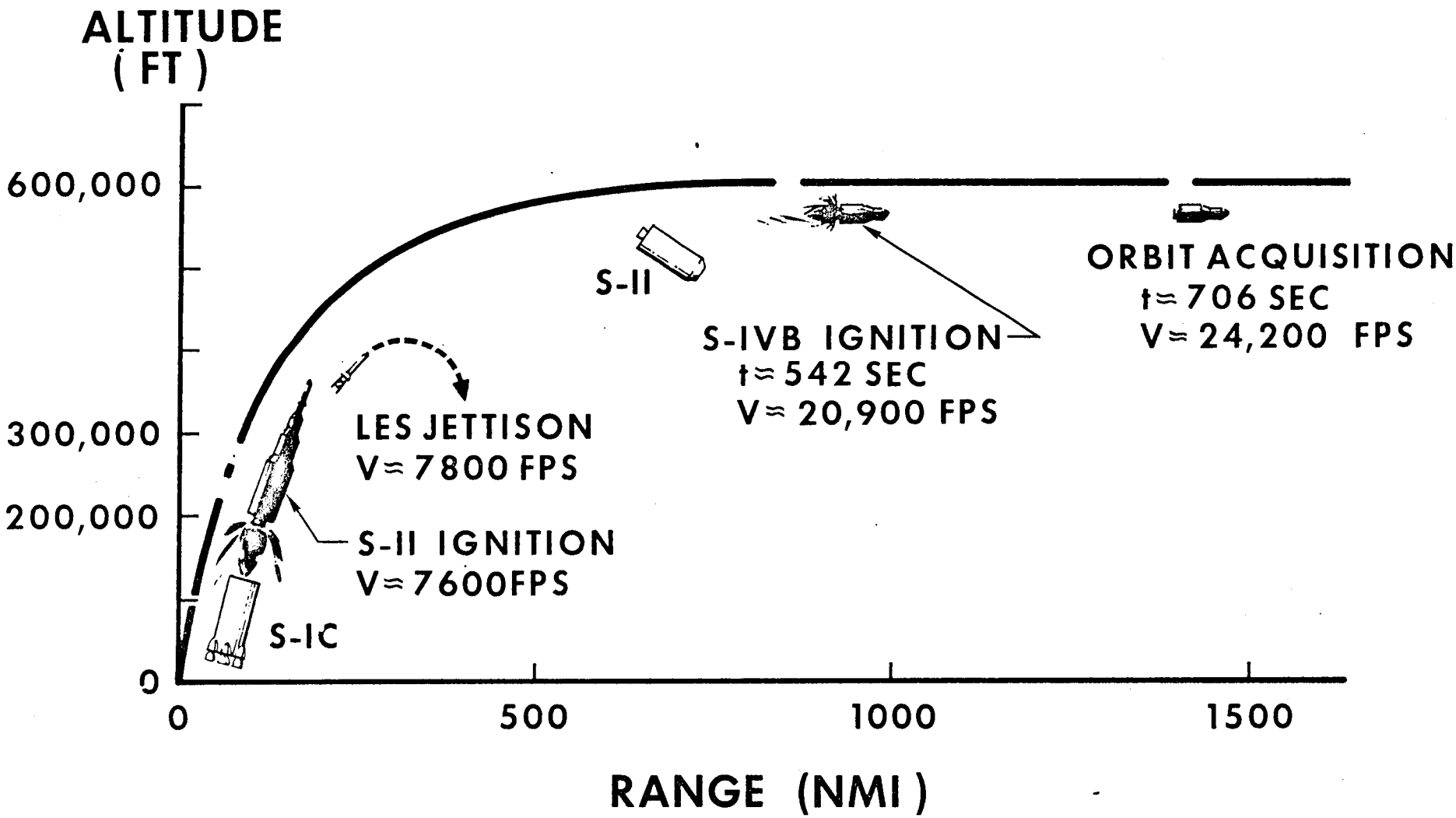

TRANSPOSITION & DOCKING

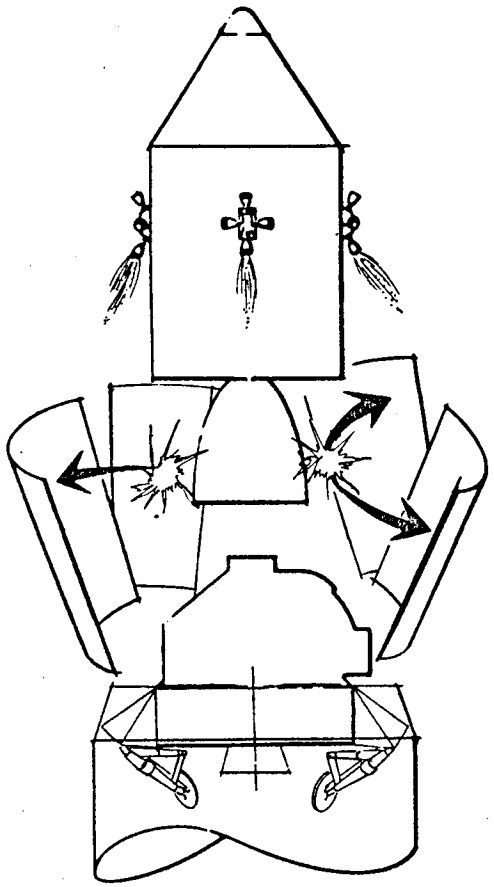

ADAPTER SEPARATION

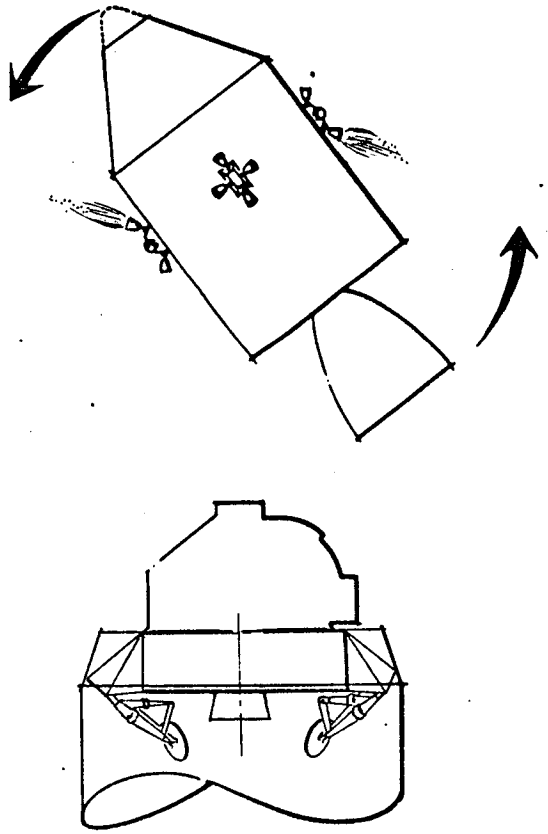

FREE FLY-AROUND

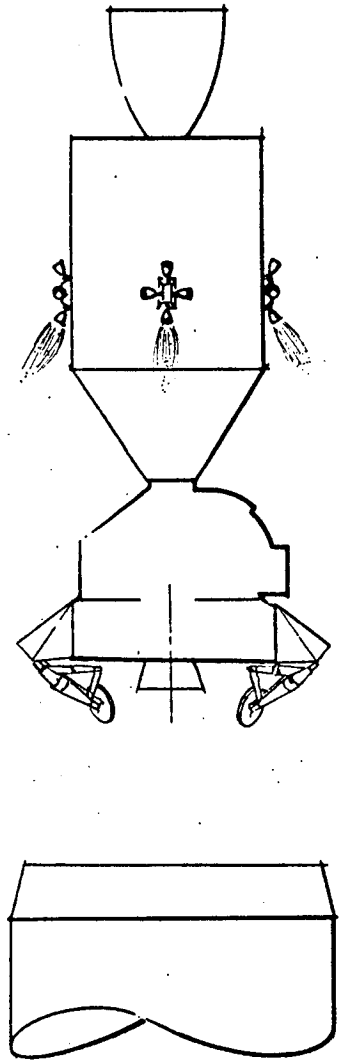

DOCKING

CHARACTERISTIC VELOCITIES (ΔV)

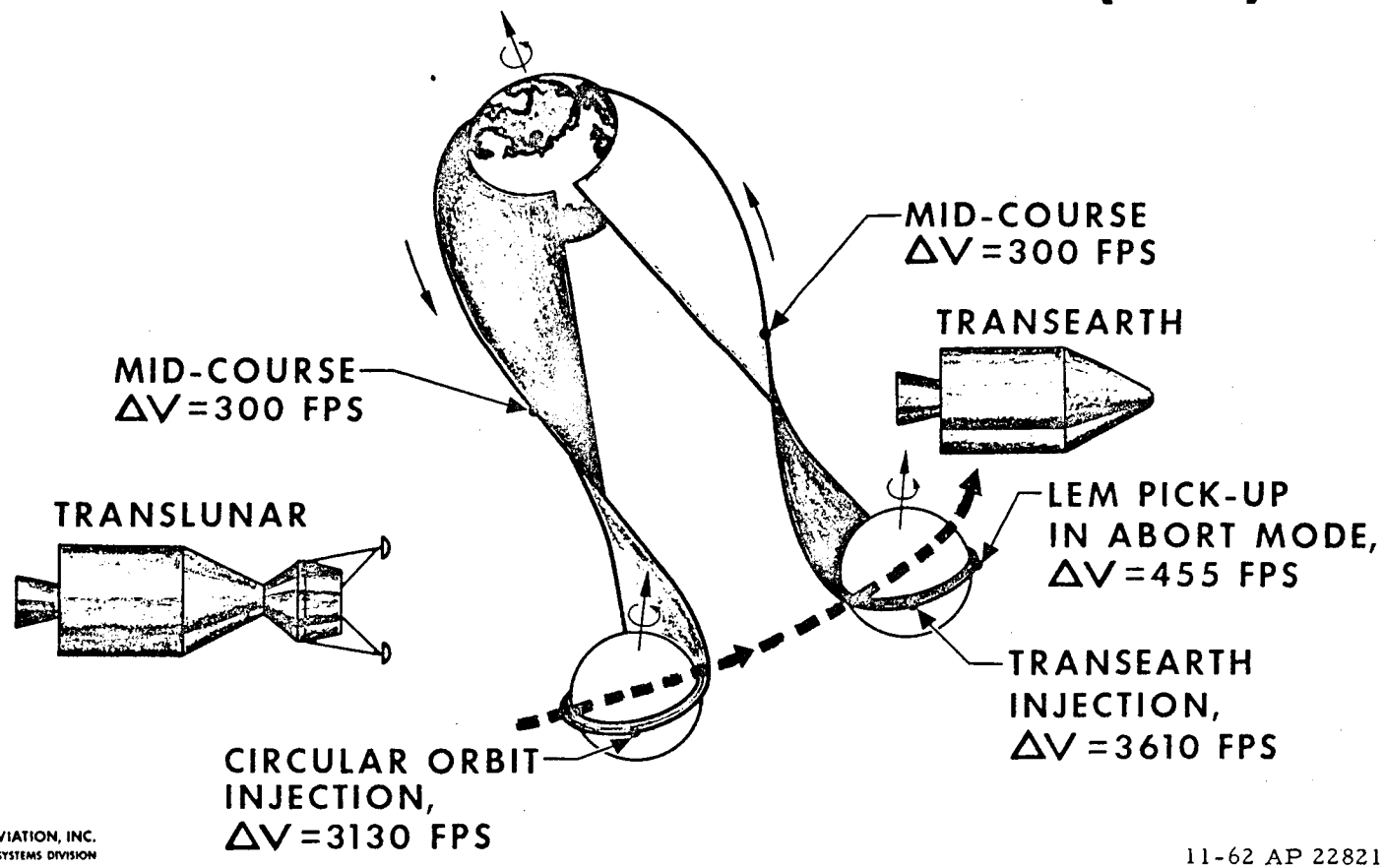

NORTH AMERICAN AVIATION, INC.
SPACE AND INFORMATION SYSTEMS DIVISION

11-62 AP 22821

TYPICAL VARIATION OF CIRCULAR ORBIT INJECTION REQUIREMENTS

1. JANUARY 1967
2. FREE RETURN
3. NO PLANE CHANGE
4. LANDING AT SEA OF TRANQUILITY

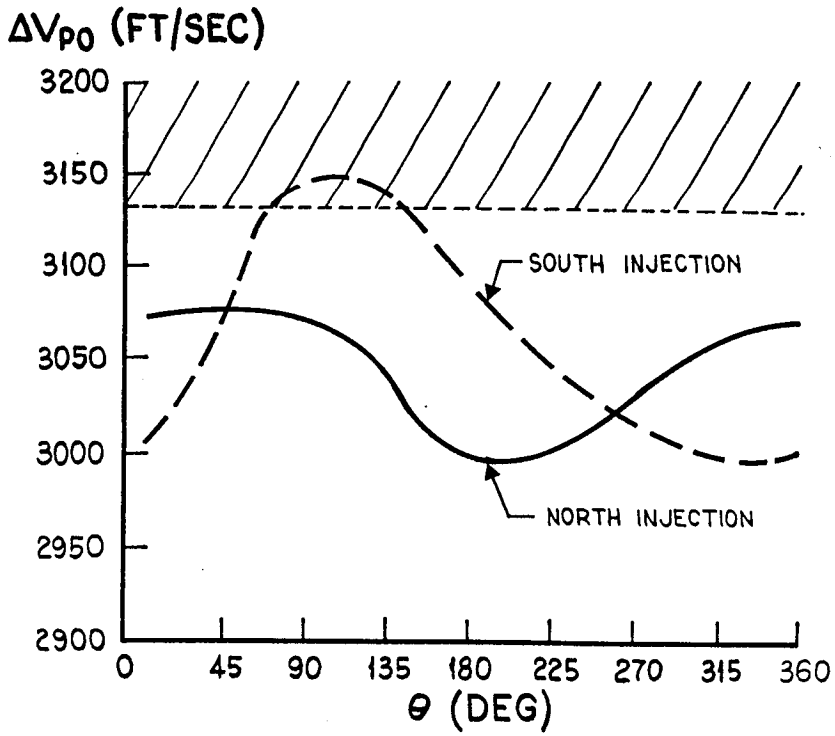

10-62 AP22027

TYPICAL ATTITUDE SEQUENCE
TRANSLUNAR PHASE

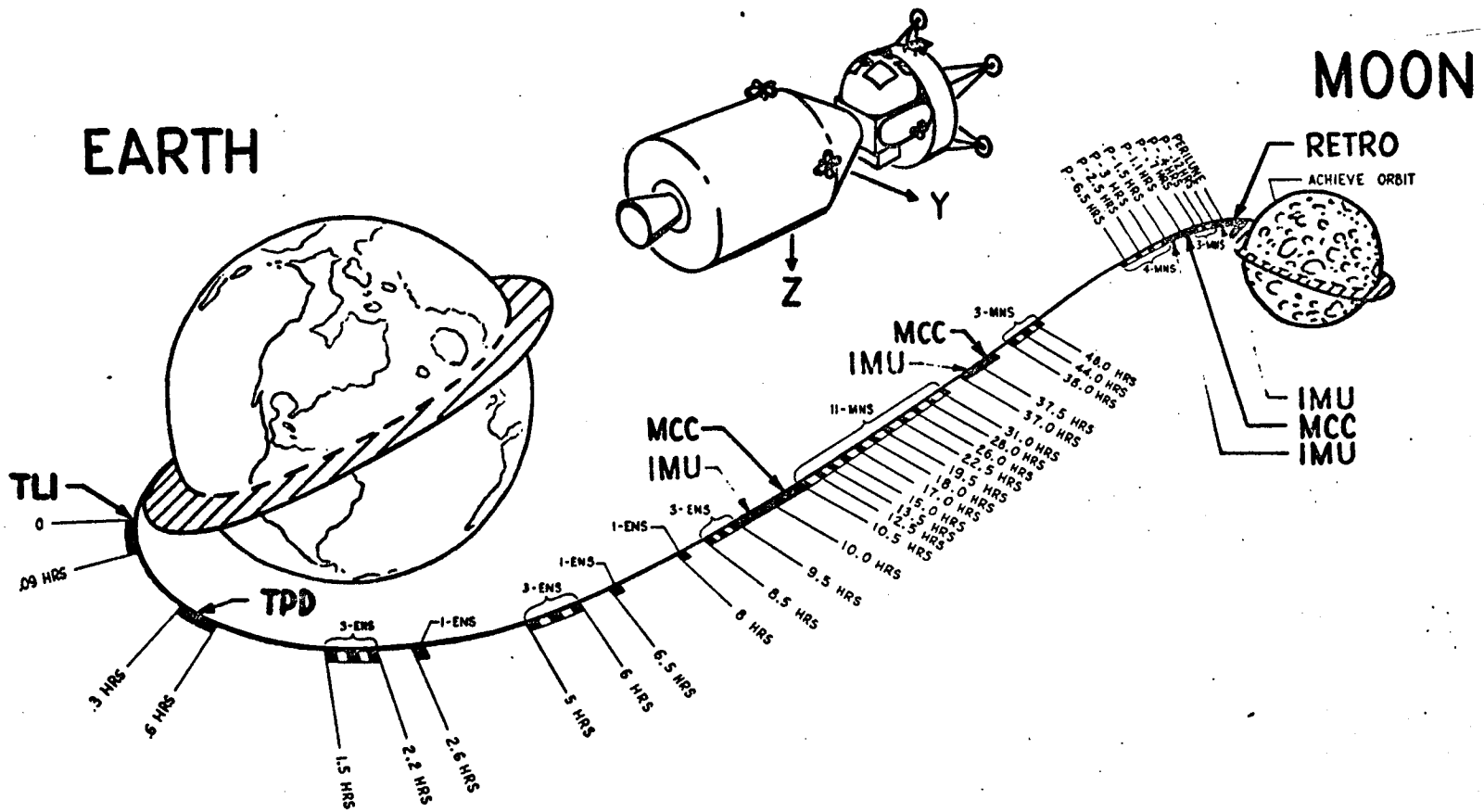

4-63 AP 56330

COMMUNICATIONS

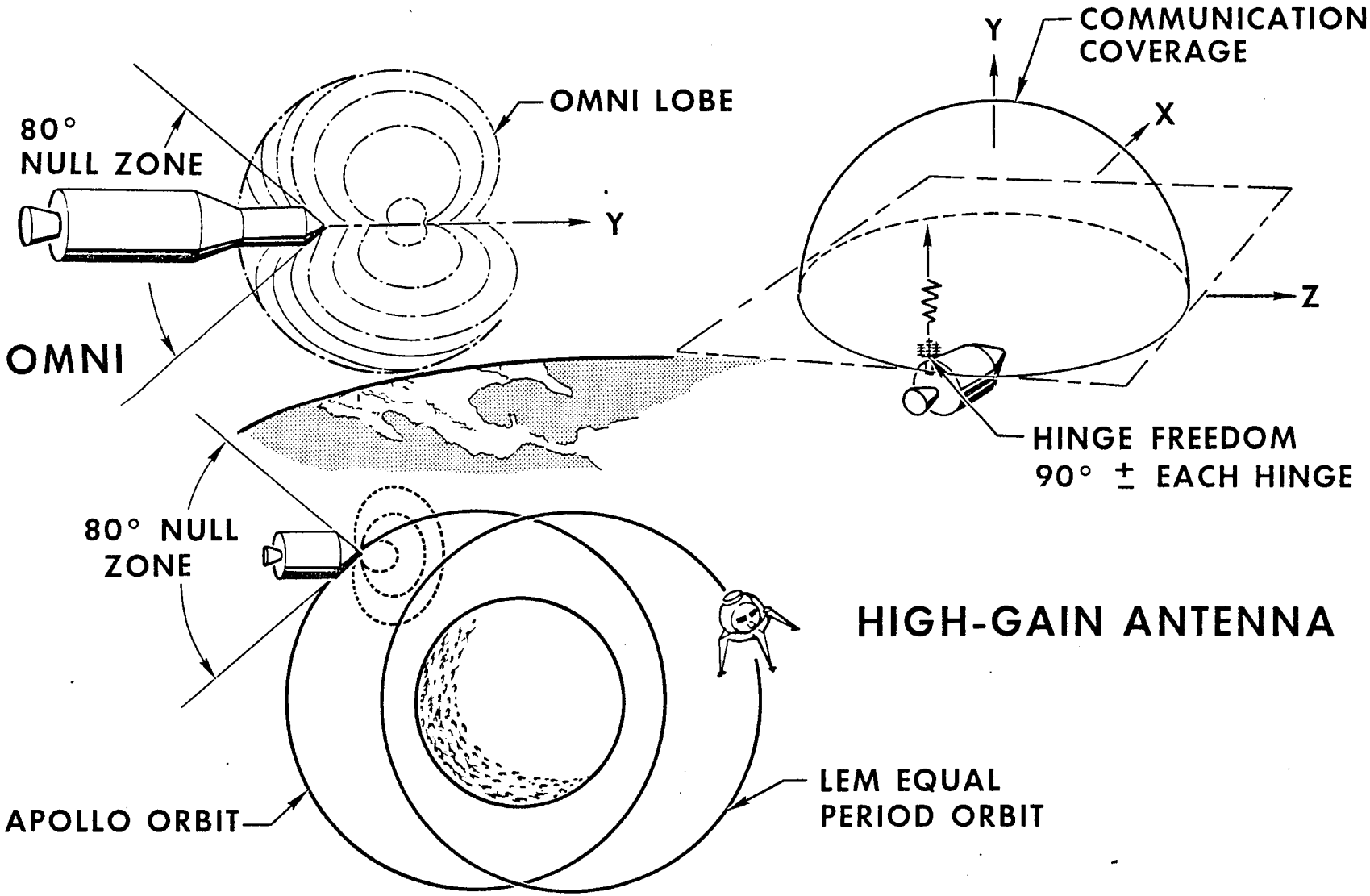

LUNAR ORBIT

PRINCIPAL CONSIDERATIONS

1. OPTICAL NAVIGATION & COMMUNICATION

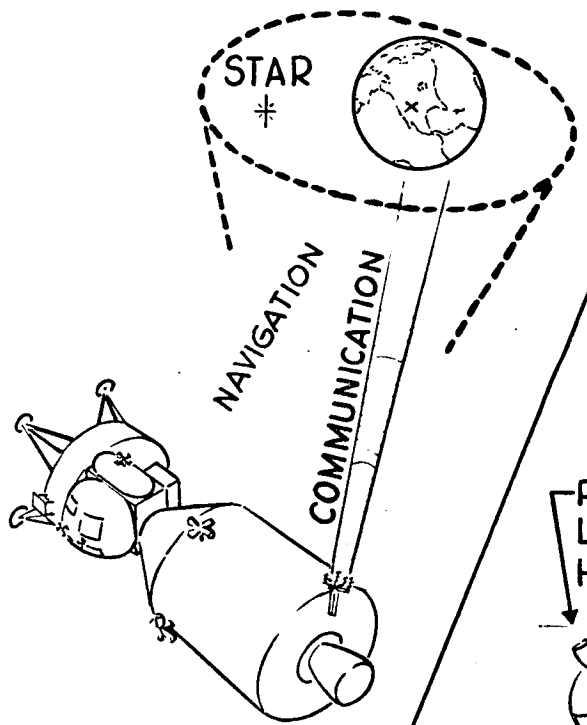

2. ILLUMINATION-VISIBILITY & COMMUNICATIONS FOR LEM TRANSPOSITION

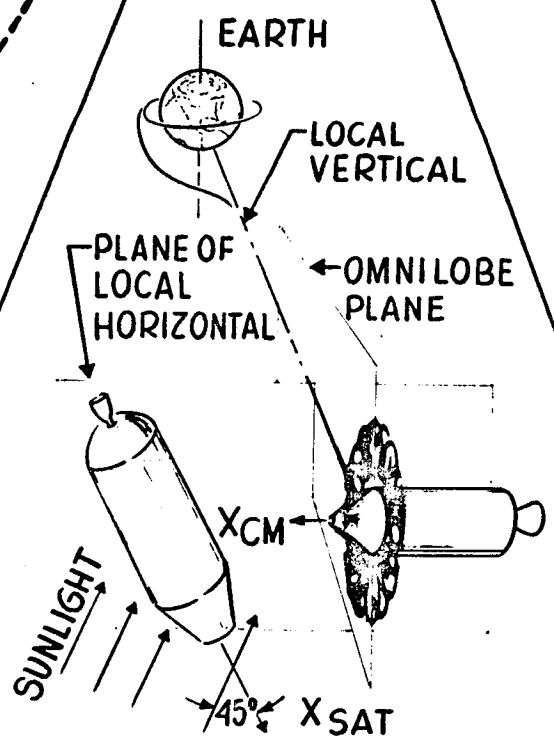

3. COMMUNICATIONS & STRUCTURE

(180° ROLL OSCILLIATION)

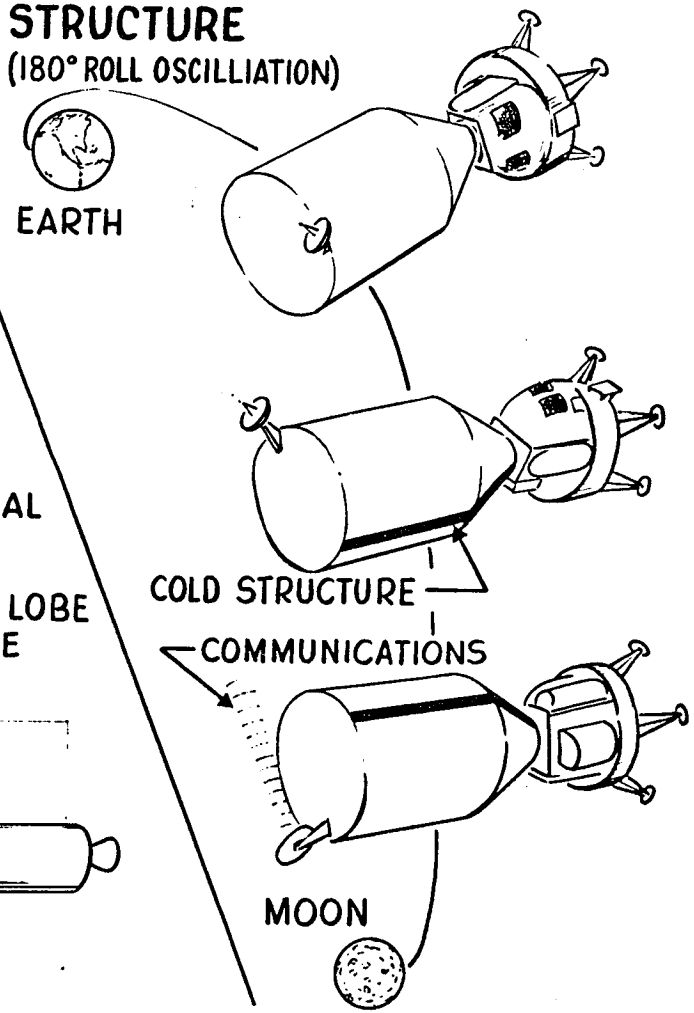

4-63 AP 56331

S/C ATTITUDE ORIENTATION INFLUENCES

SYSTEM OR INFLUENCE \ FLIGHT PHASE	BOOST	PARKING ORBIT	TLI	TRANSPOSITION & DOCKING	TL COAST	MID-COURSE CORRECTION	LOI	LO	LEM DESCENT	LEM ASCENT	LO RENDEZVOUS	TEI	TE COAST	MID-COURSE CORRECTION	ENTRY
COMMUNICATION	X	X	X	X	X	X		X	X	X	X		X	X	X
GUIDANCE THRUST & AERO PHASES	X		X	X		X	X					X		X	X
OPTICAL NAVIGATION		X			X			X	X	X	X		X		
NUCLEAR RADIATION					X			X					X		
STRUCTURE					X								X		X
S-IVB		X		X	X										
ECS/EPS RADIATORS					X			X	X	X	X				

4-63 AP 56496

EQUAL PERIOD ORBITS

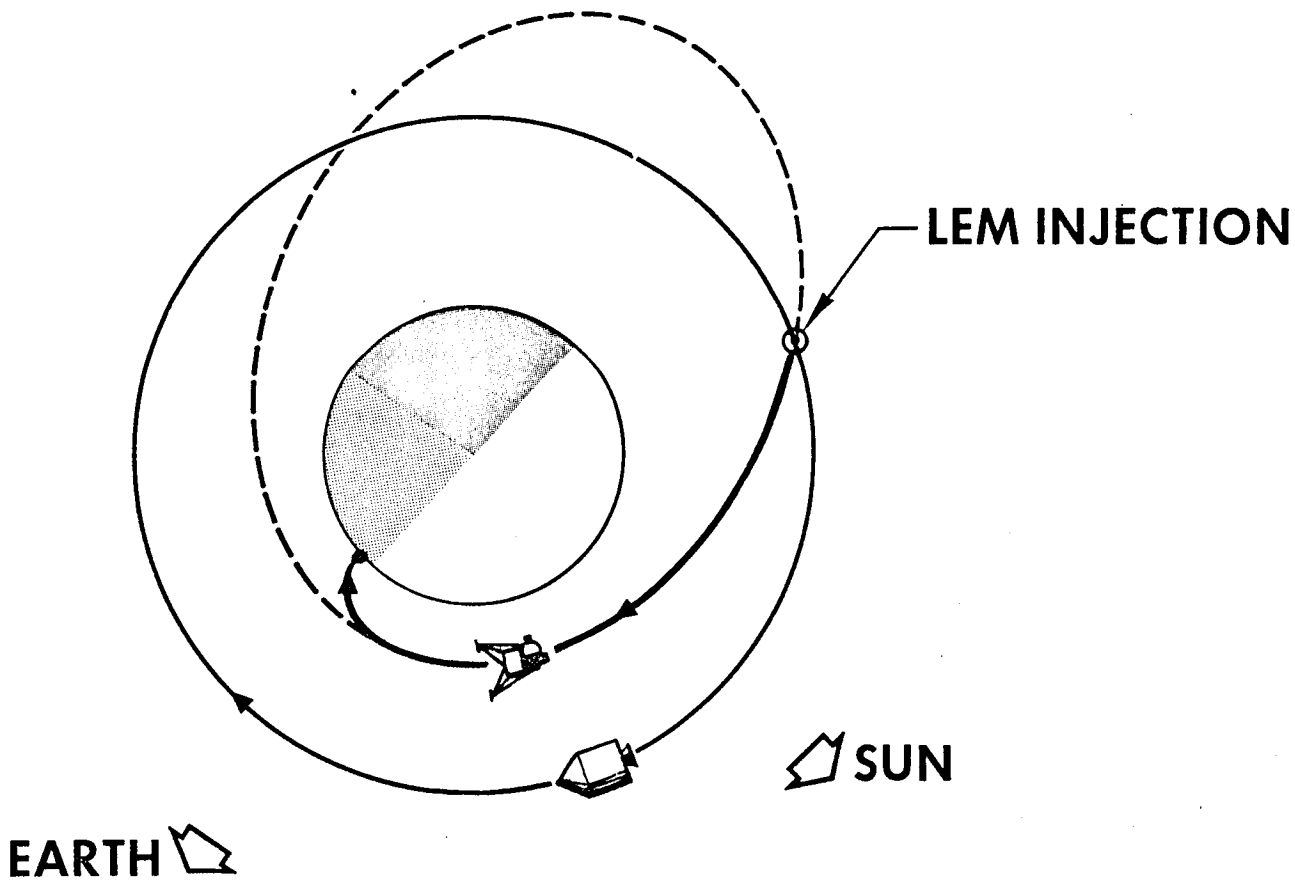

NOMINAL MISSION PROFILES

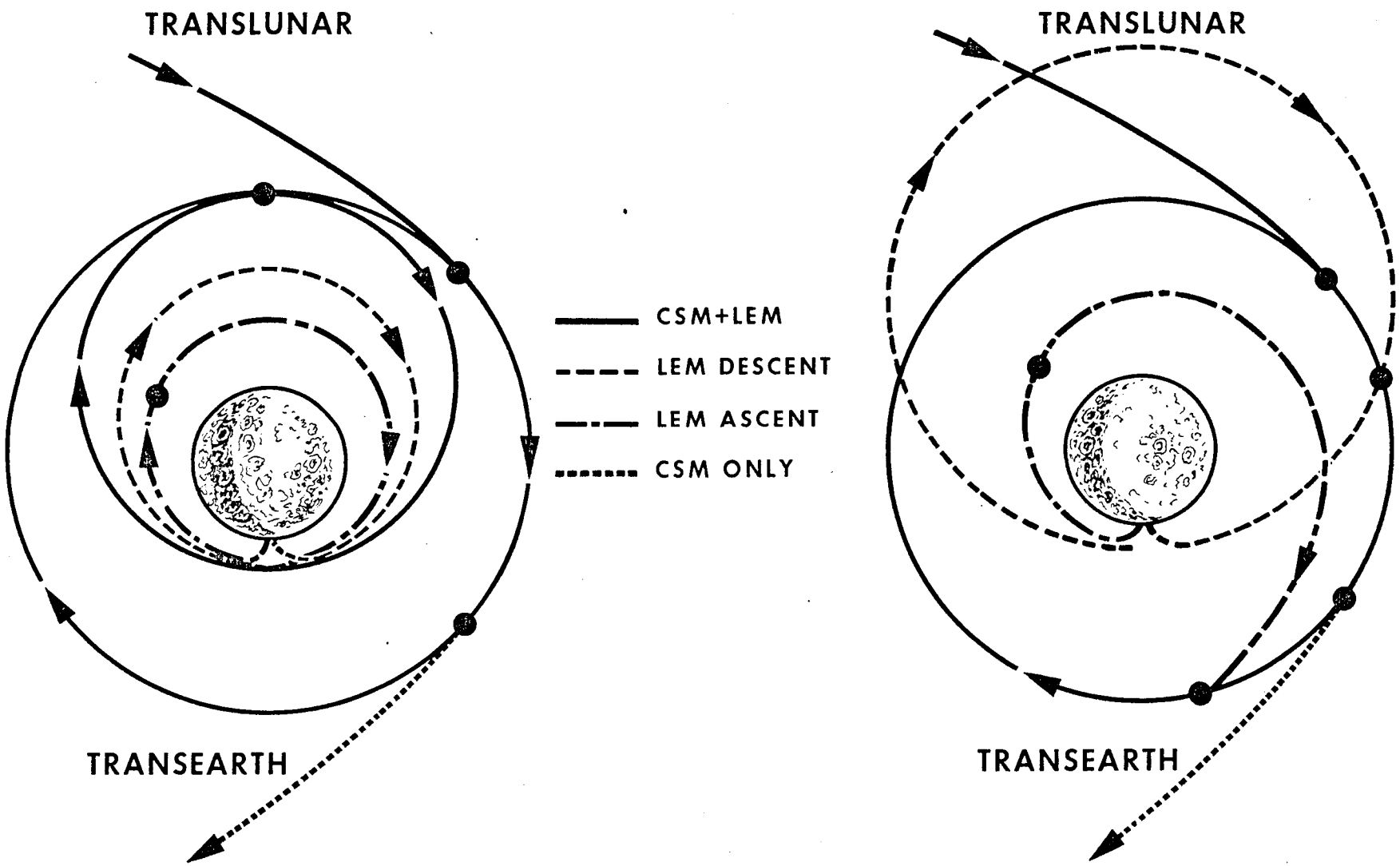

COMBINED DESCENT

EQUAL PERIOD ORBIT DESCENT

NORTH AMERICAN AVIATION, INC.
SPACE AND INFORMATION SYSTEMS DIVISION

9-63 AP 34084

COMPARISON RESULTS

CRITERIA	EPO	CD
LINE OF SIGHT (MIN)		
DESCENT	14.0	8.9
SURFACE	15.6	4.8
ENGINE STARTS		
CSM	2	4
LEM	6	6
TOTAL	8	10
POSSIBLE ABORT MANEUVERS	4	4
BURN-OUT WEIGHT (LB)	18,580	19,550

TYPICAL ASCENT OF LEM TO CSM

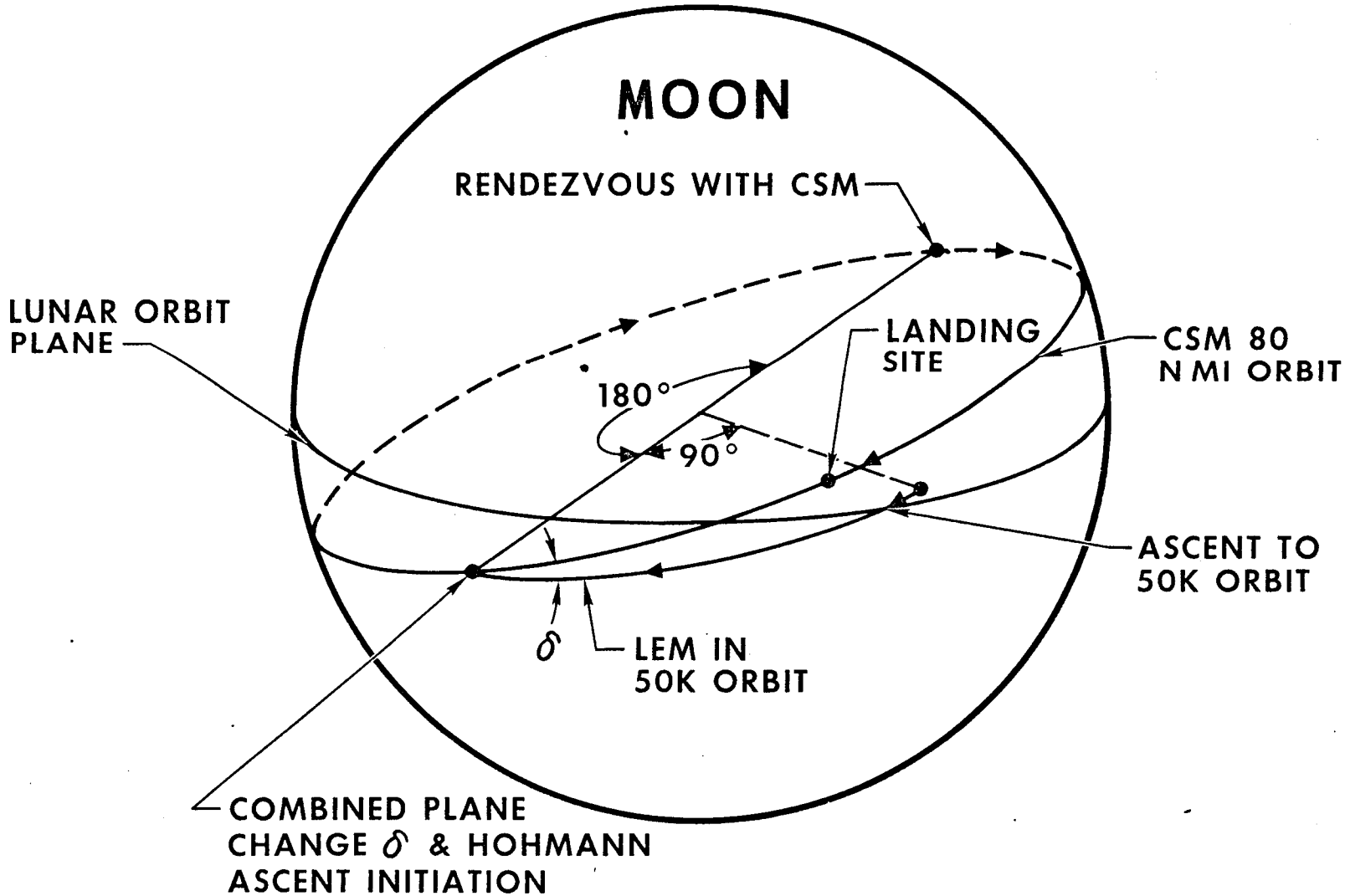

TYPICAL VARIATION OF TRANSEARTH INJECTION REQUIREMENTS

NOTE: 1. JAN 1967
2. MAX OF TWO DAYS IN LUNAR ORBIT
3. TRANSEARTH TIME = 60 HRS
4. RETURN ALONG GOSS TRACK

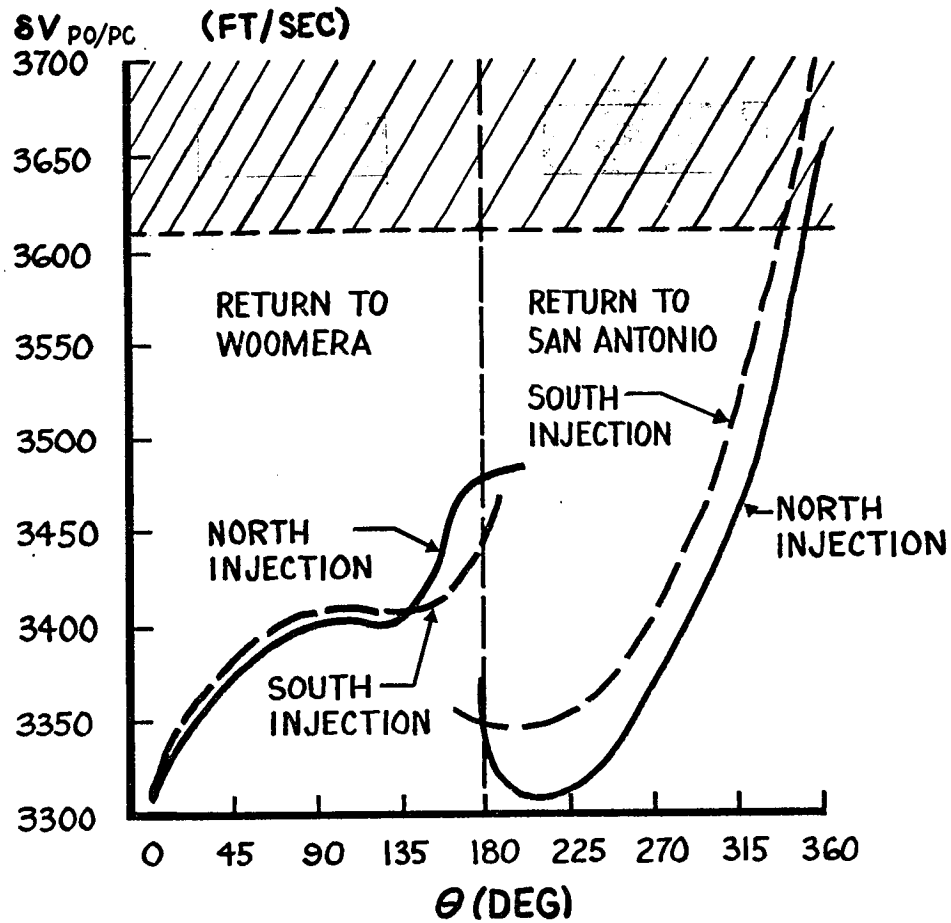

10-62-AP22026

SEPARATION

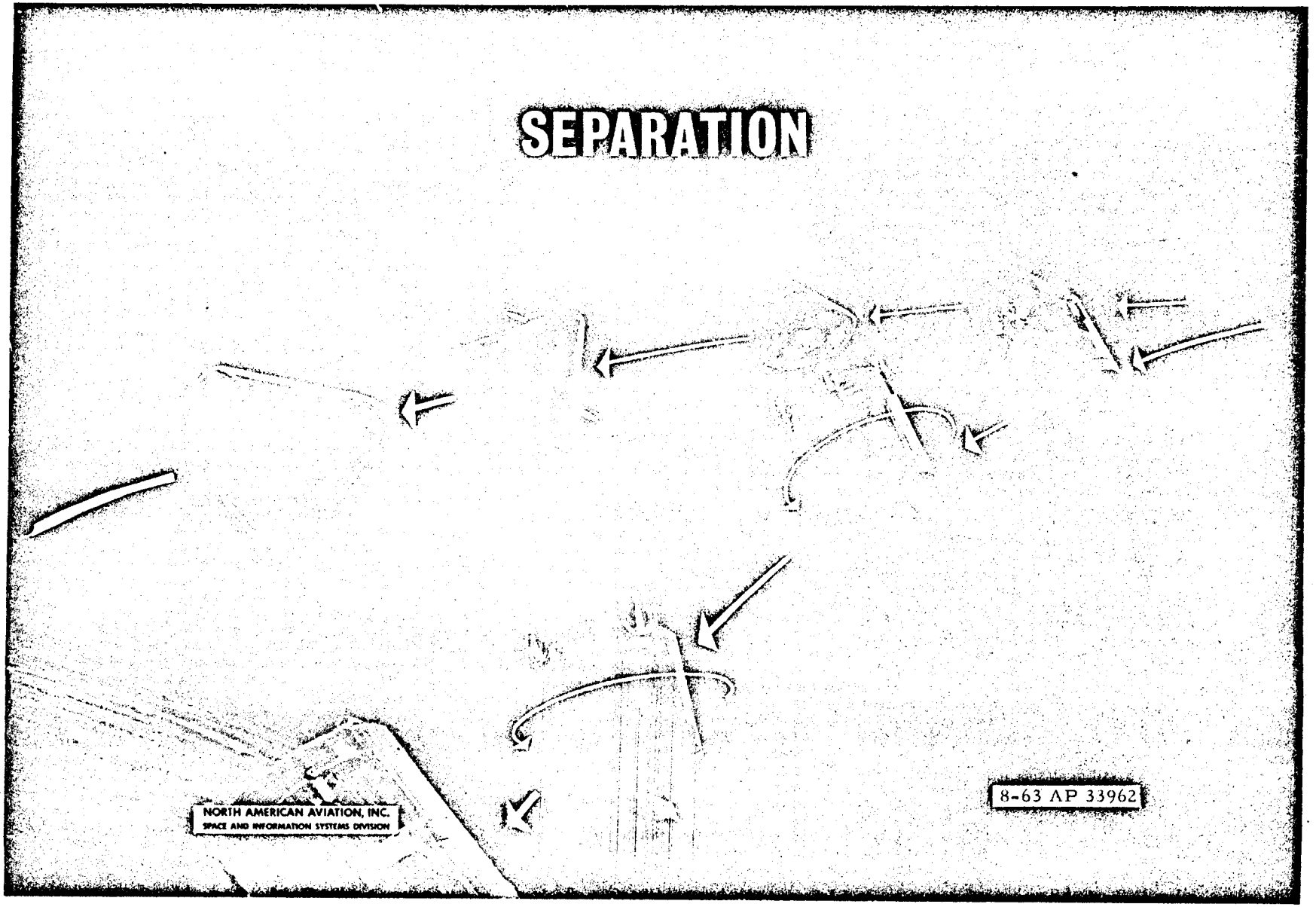
NORTH AMERICAN AVIATION, INC.
SPACE AND INFORMATION SYSTEMS DIVISION
8-63 AP 33962

ENTRY CORRIDORS

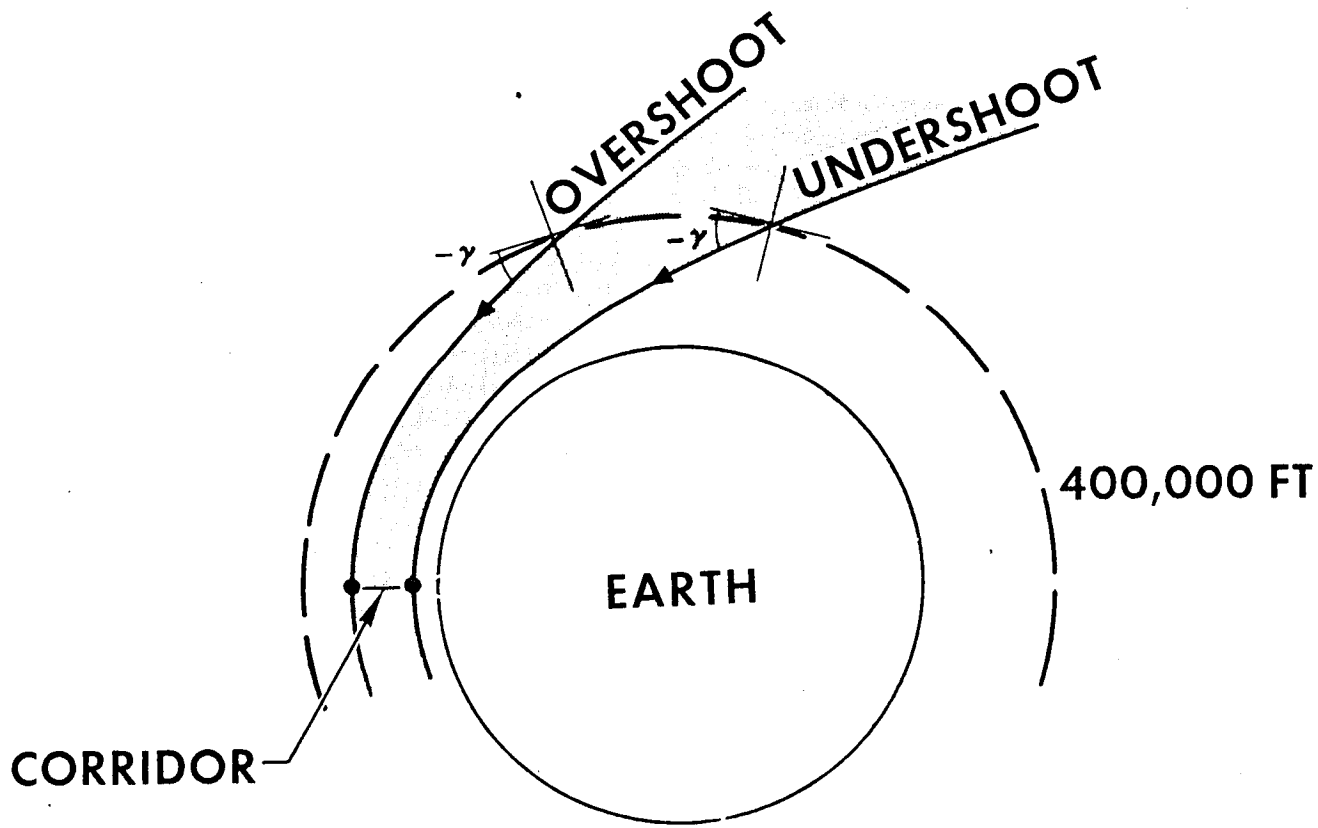

"BACK-UP" ENTRY INSTRUMENT

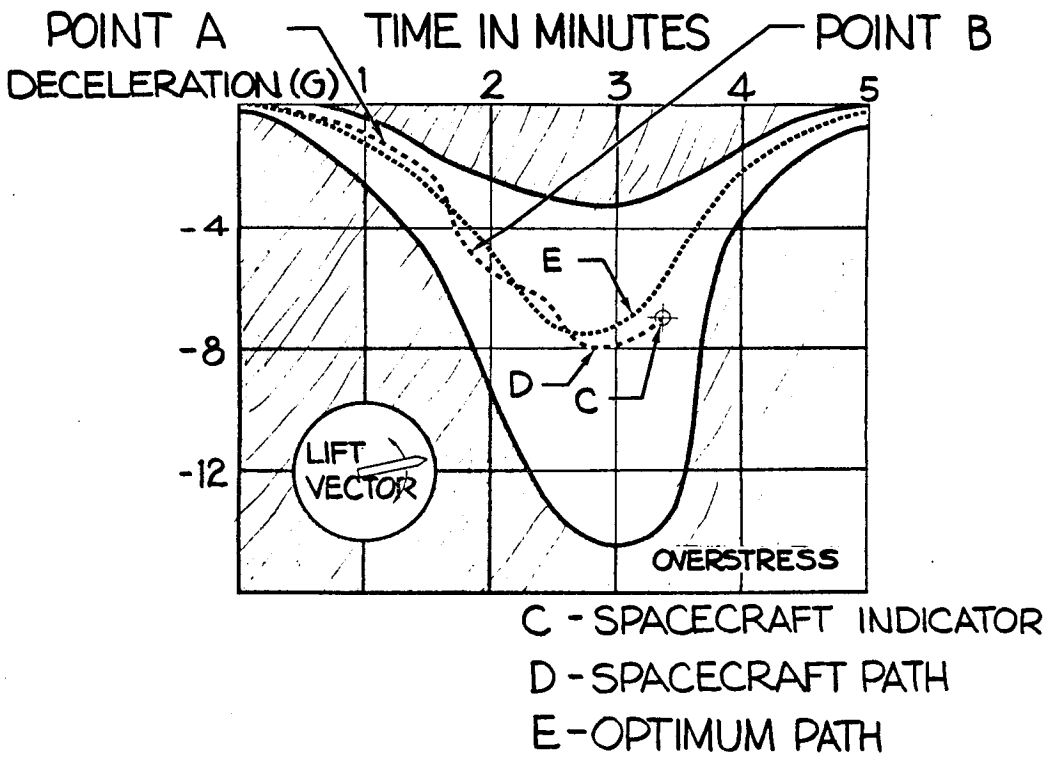

2-62 AP 10212

ENTRY MONITOR SYSTEM

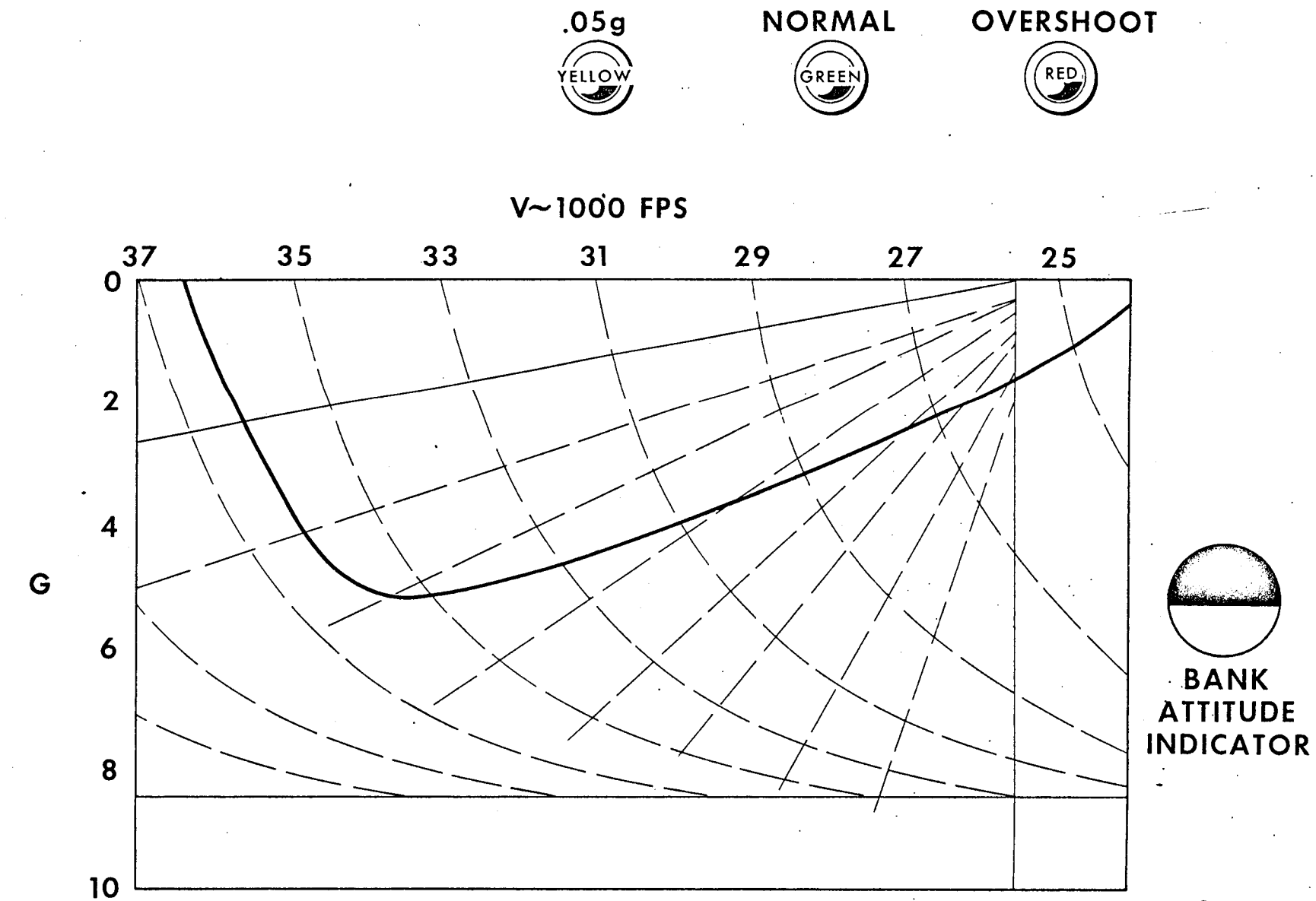

GEOMETRY OF LUNAR ORBITAL, EARTH EQUATORIAL & ECLIPTIC PLANES

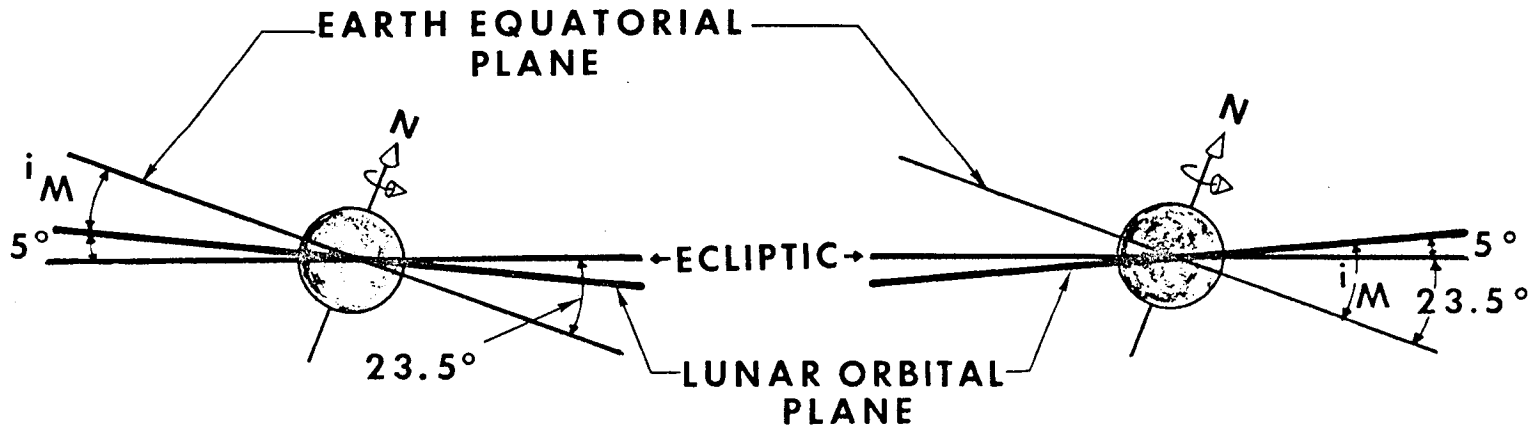

DEC 1959 & JUL 1978 (i_M=18.5) APR 1969 (i_M=28.5°)

TRANSEARTH ENTRY LOCI

NOTE: INCLINATION TO EQUATORIAL PLANE = 34 DEG

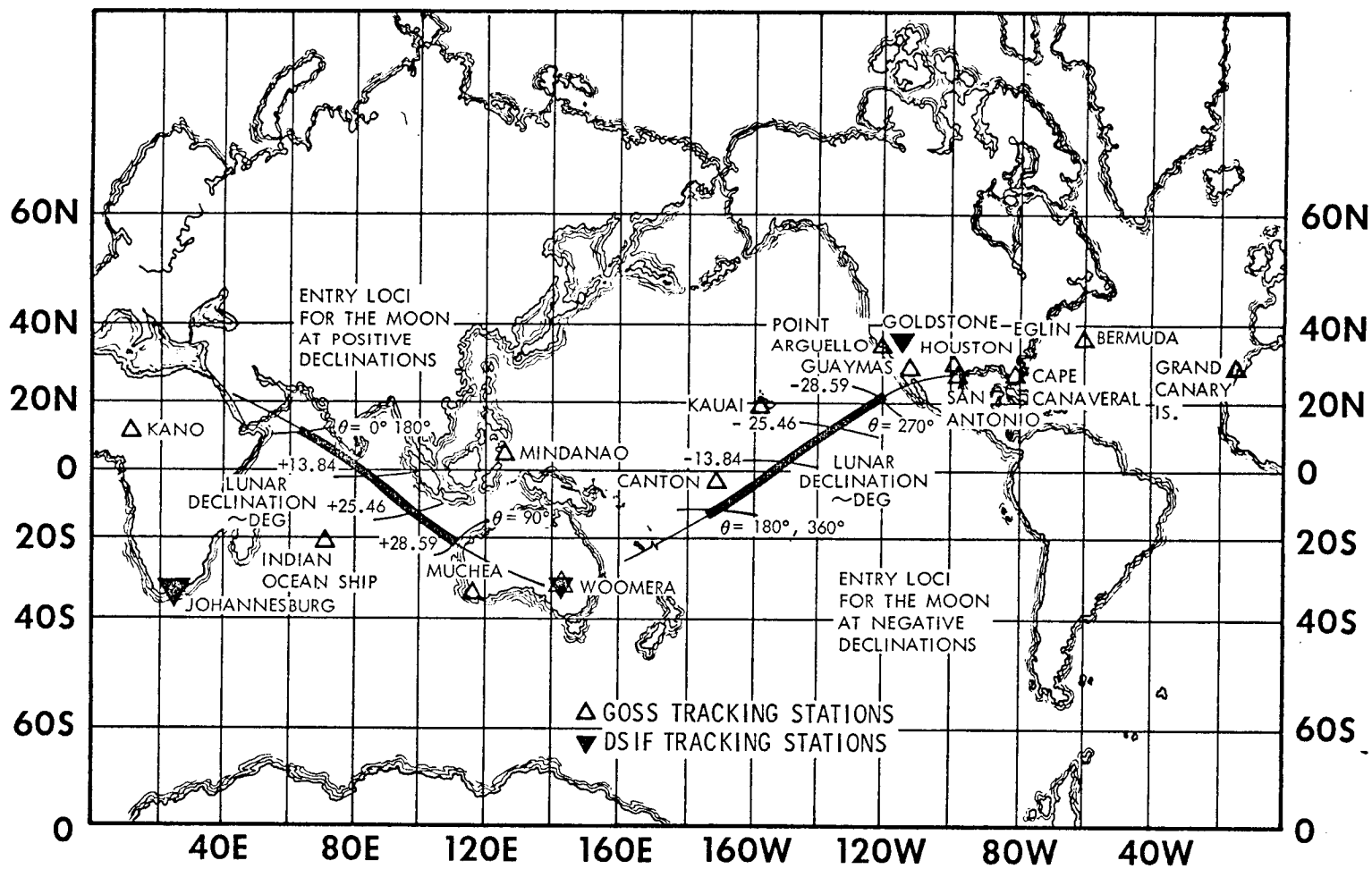

APOLLO STRUCTURAL DESIGN

NORTH AMERICAN AVIATION, INC.
SPACE AND INFORMATION SYSTEMS DIVISION

9-63 AP34071

APOLLO SPACECRAFT

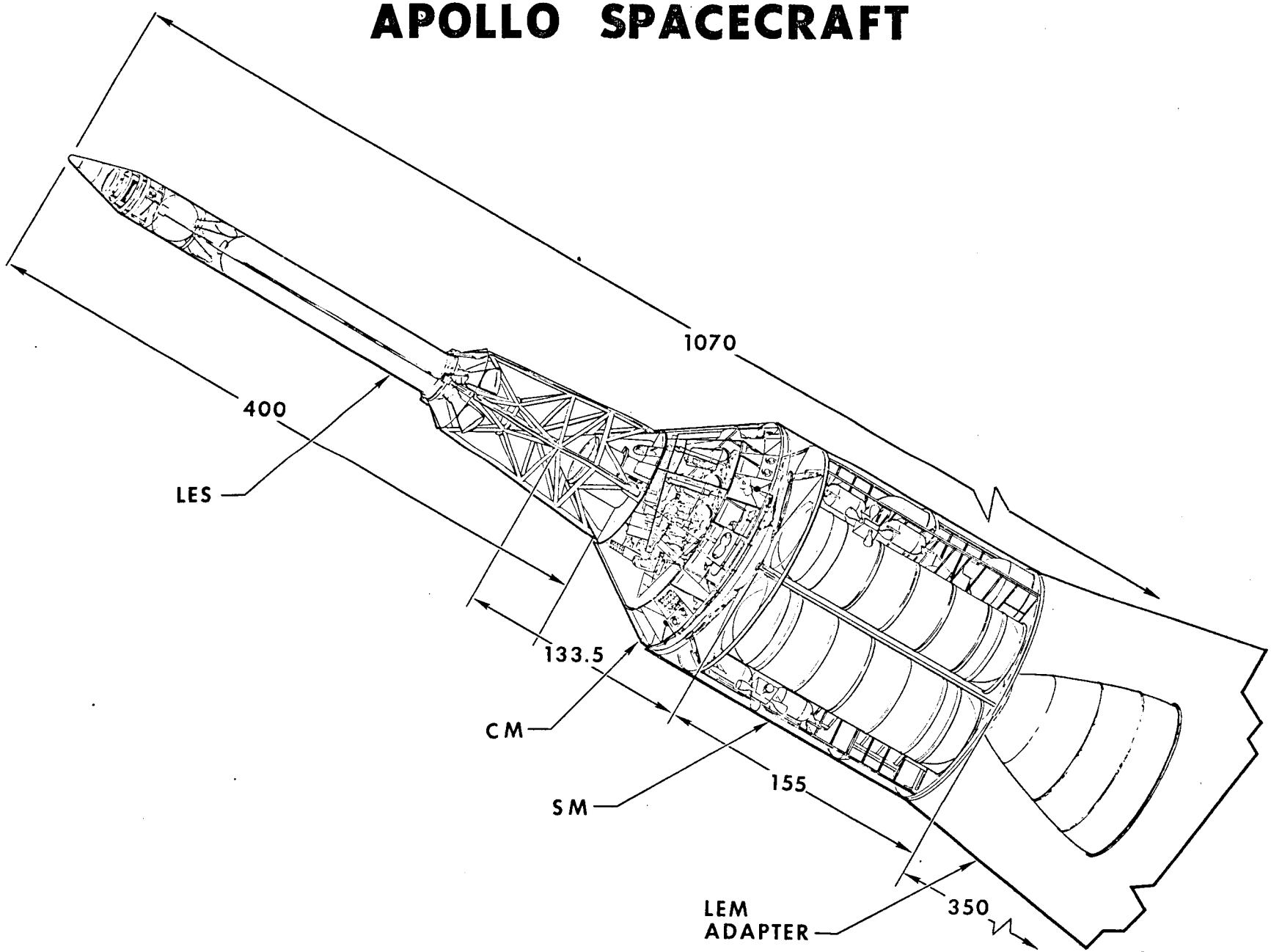

NORTH AMERICAN AVIATION, INC.
SPACE AND INFORMATION SYSTEMS DIVISION

9-63 AP33611A

COMMAND MODULE STRUCTURE

NORTH AMERICAN AVIATION, INC.
SPACE AND INFORMATION SYSTEMS DIVISION

9-63 AP34072

CM PRIMARY STRUCTURE

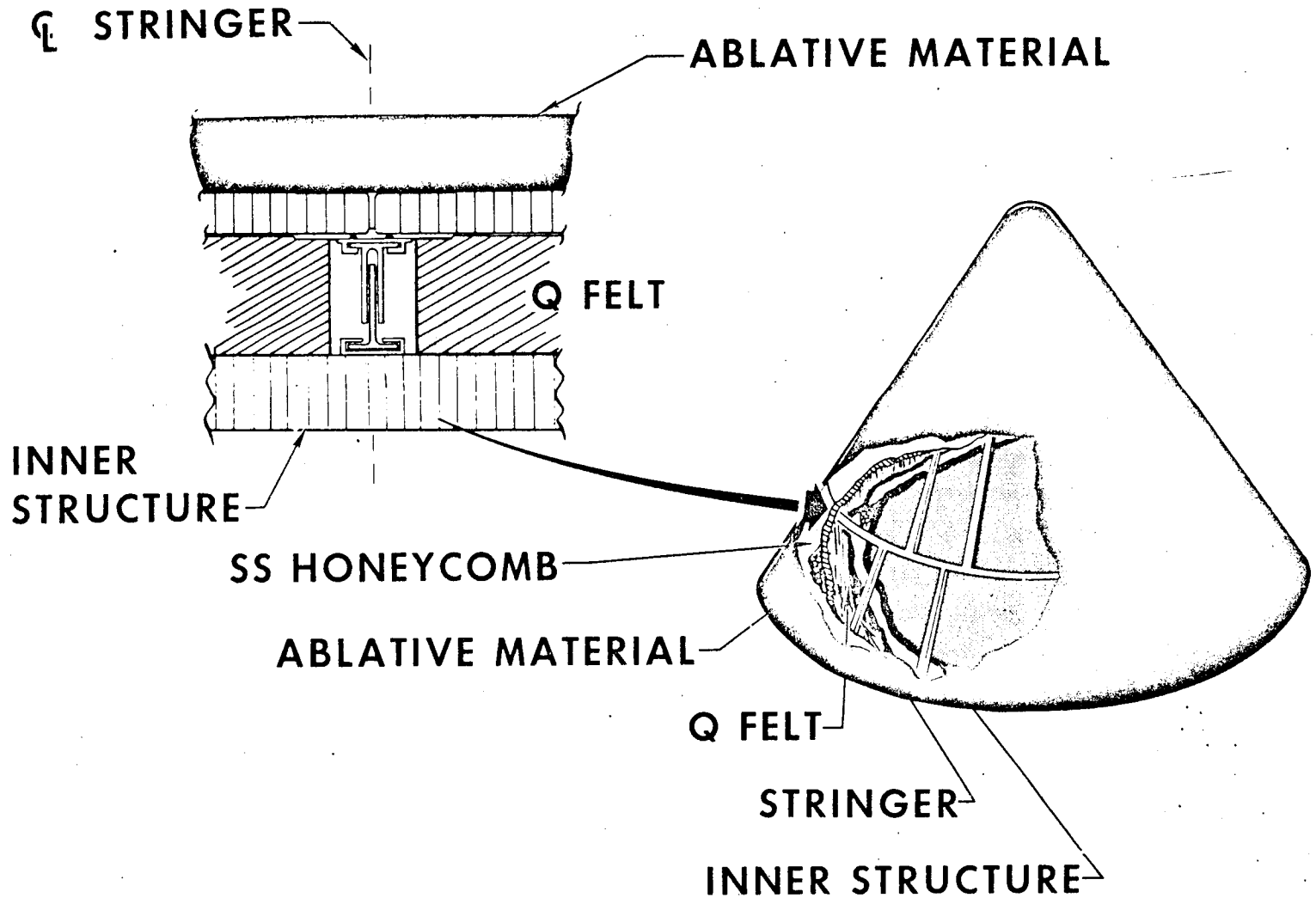

HEAT SHIELD STRUCTURE

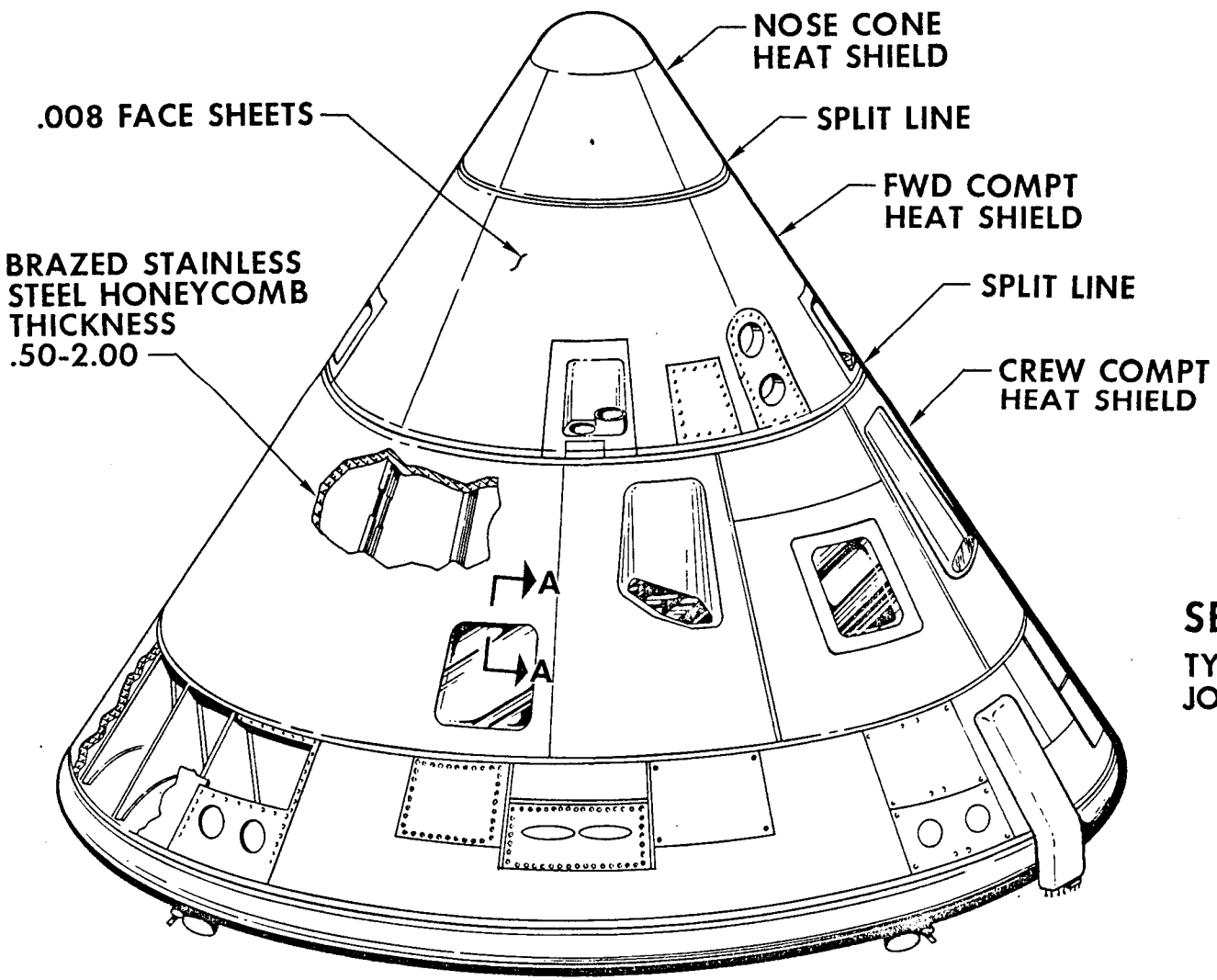

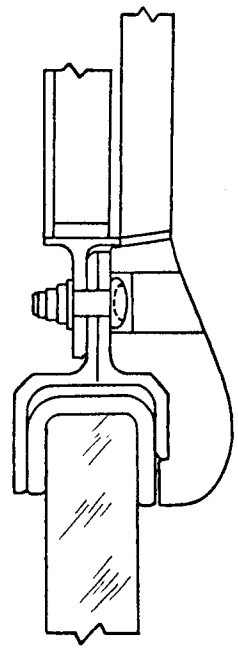

SECTION A-A

TYPICAL WINDOW JOINT

HEAT SHIELD PERTURBATIONS
LES TOWER TO INNER STRUCTURE ATTACHMENT

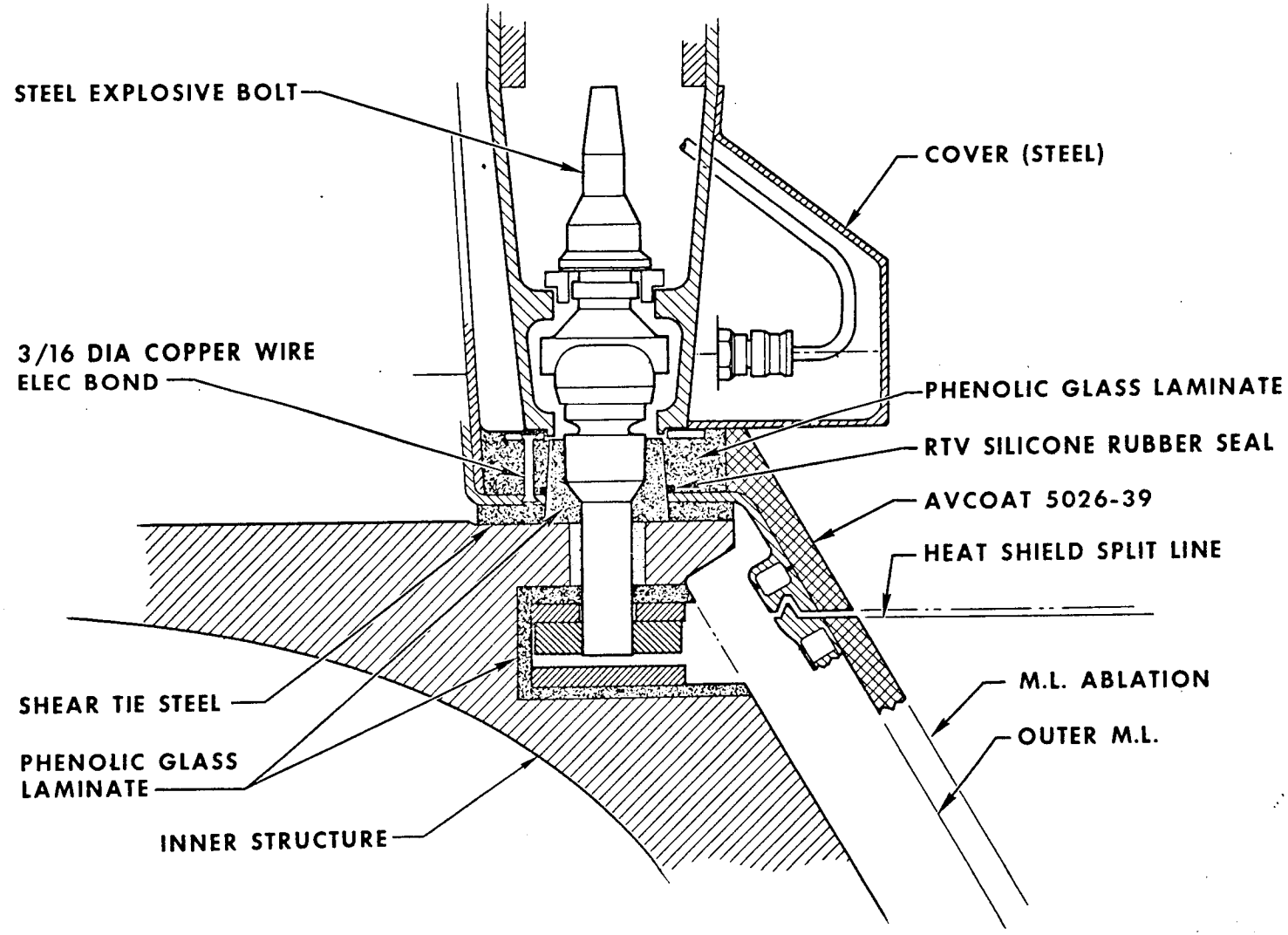

HEAT SHIELD PERTURBATIONS

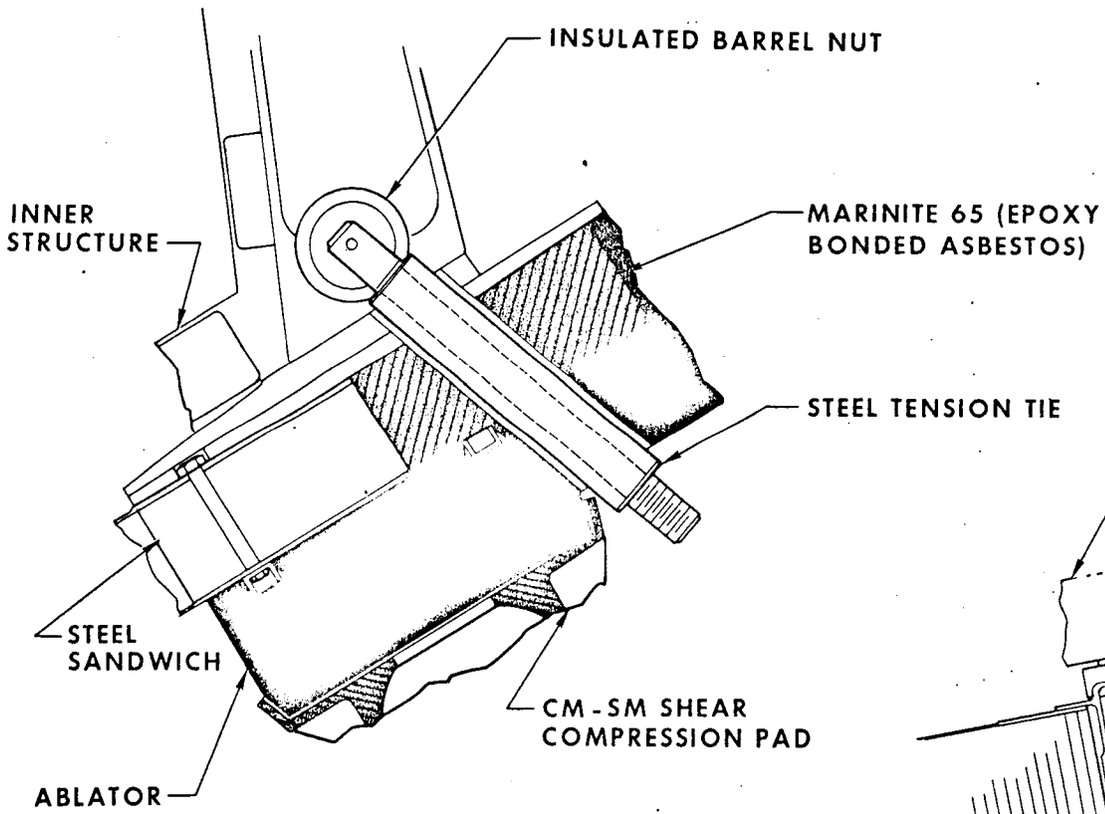

TENSION TIE

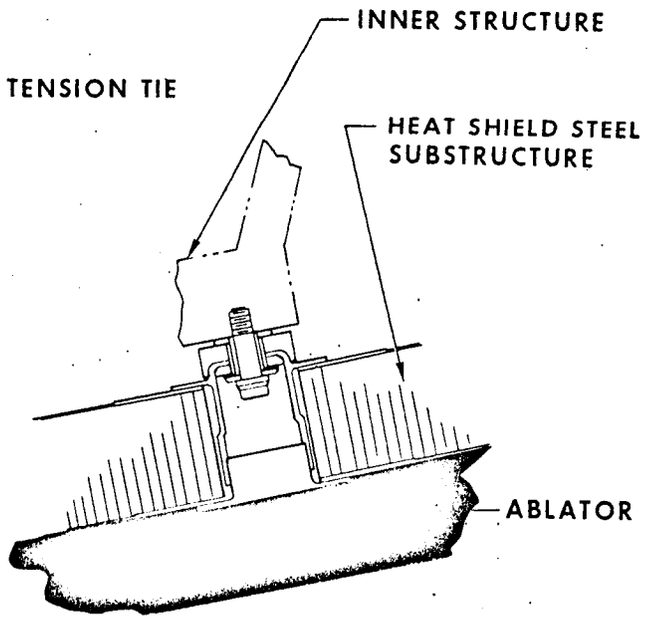

AFT HEAT SHIELD ATTACH

ENTRY HEAT LOAD DISTRIBUTION & ABLATOR THICKNESS

JAN 24, 1963 HEATING RATES

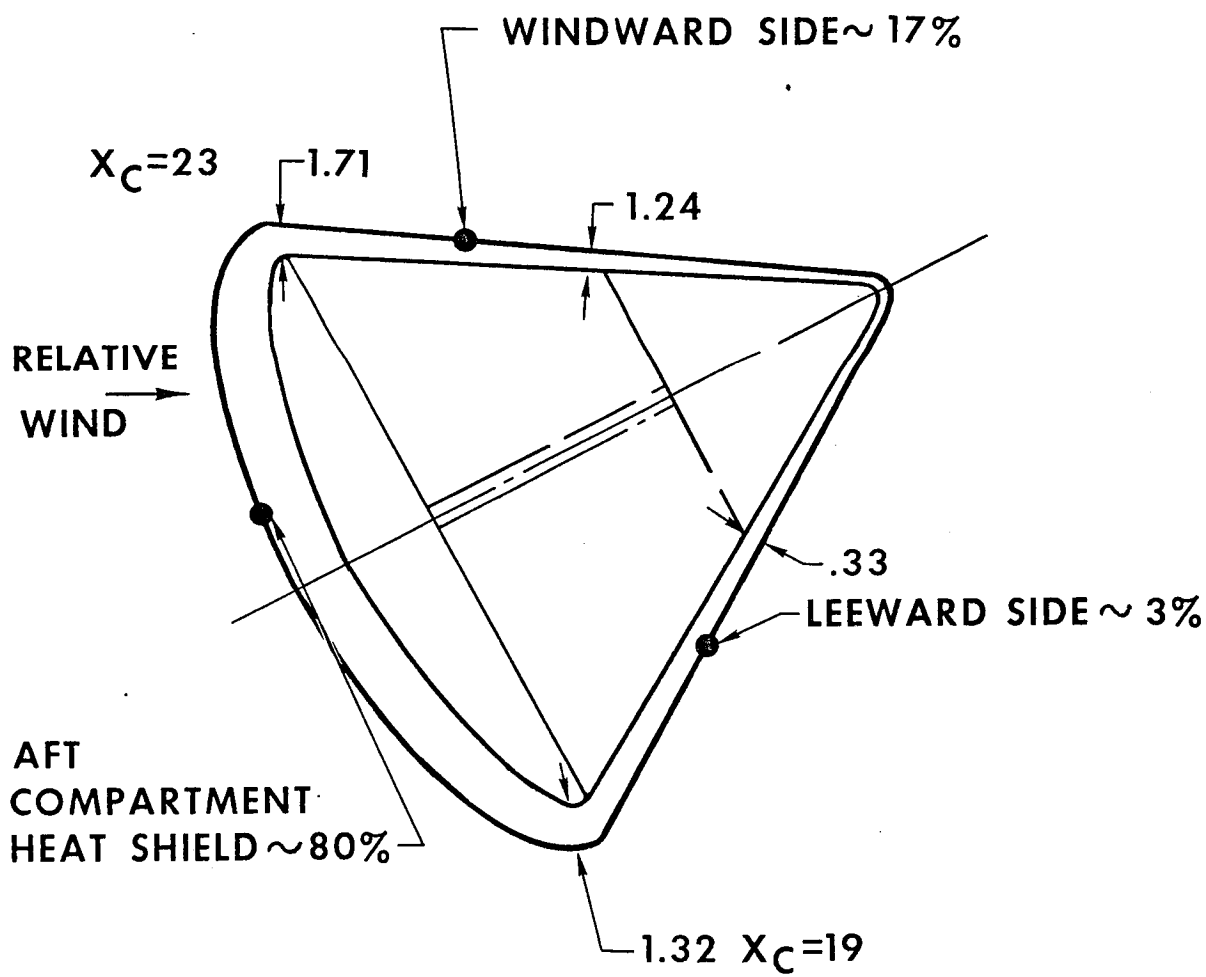

THICKNESS BASED ON AVCOAT 5026-39

- 35 LB/FT^3
- EPOXY RESIN
- GLASS FIBERS
- SILICA FIBERS
- PHENOLIC MICROBALLOON

ENTRY HEATING RATES

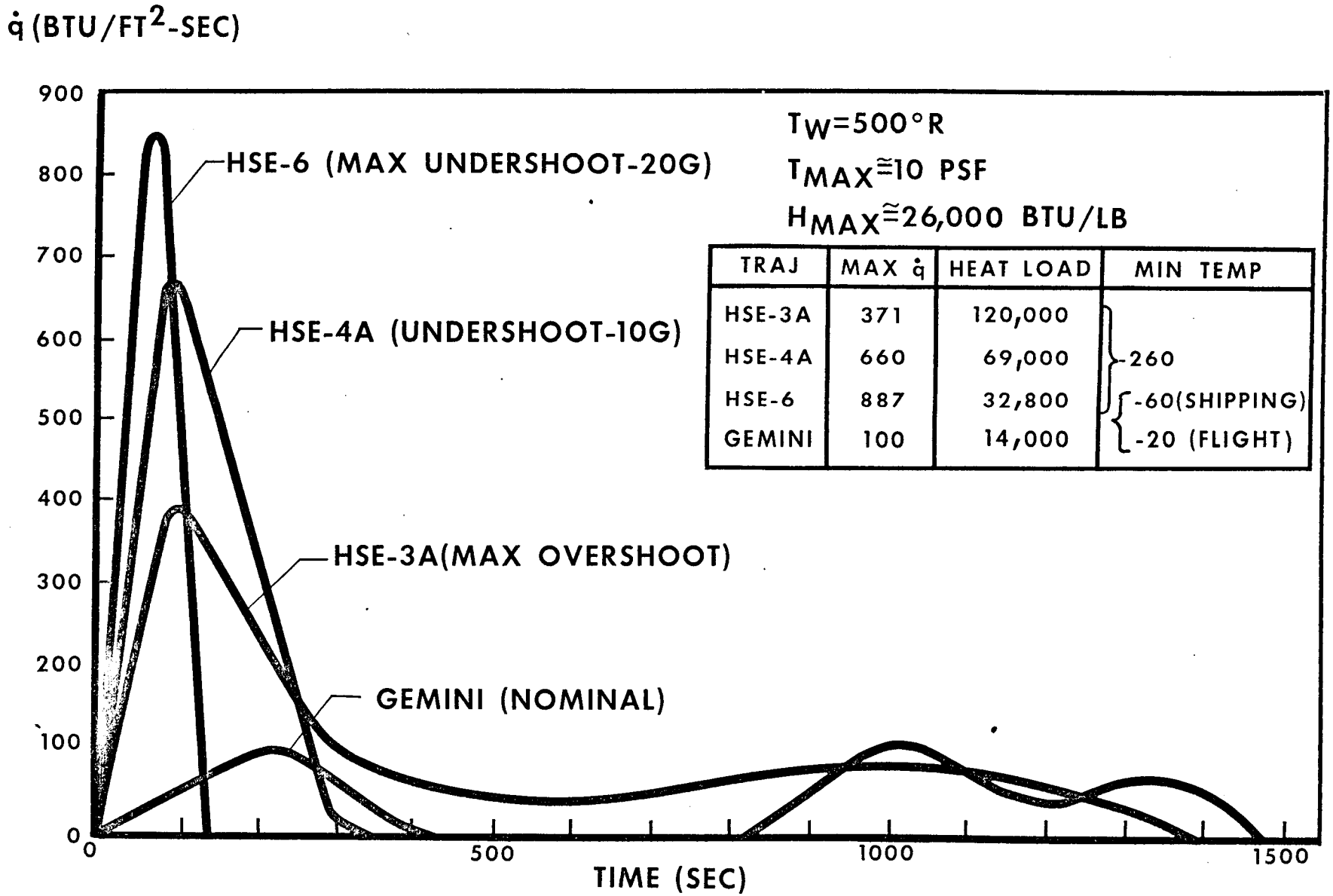

TRAJ	MAX q̇	HEAT LOAD	MIN TEMP
HSE-3A	371	120,000	
HSE-4A	660	69,000	-260
HSE-6	887	32,800	-60(SHIPPING)
GEMINI	100	14,000	-20 (FLIGHT)

CM INNER STRUCTURE

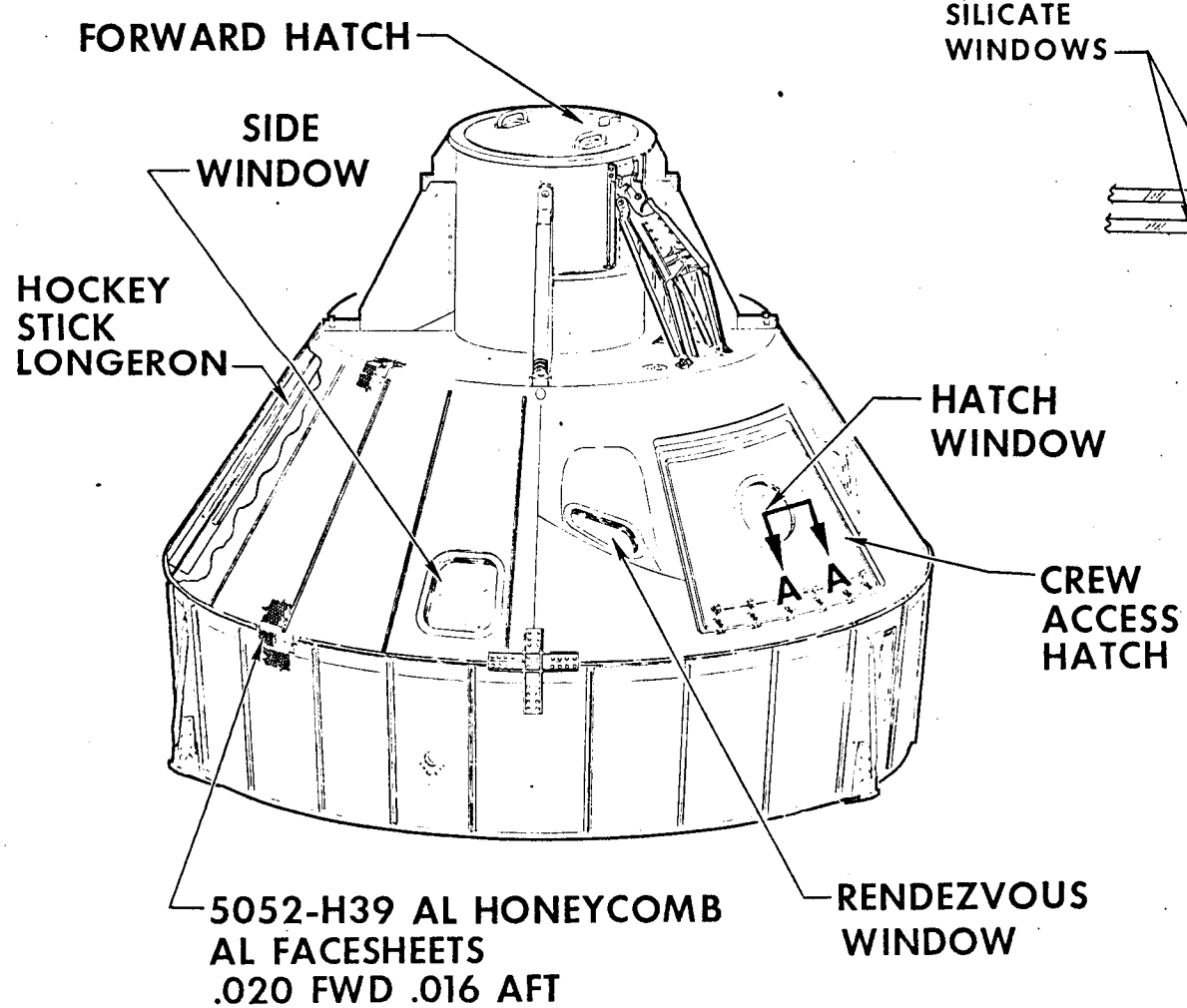

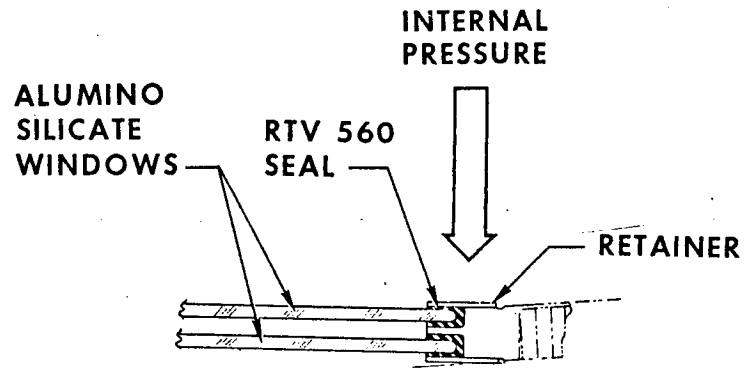

SEC A-A

INTERIOR TEMP 0° TO 200°

ALLOW LEAKAGE .2 LB/HR

NORMAL	5 PSI
ULTIMATE	9 PSI
CRUSHING	-1 PSI

C M INNER STRUCTURE-INNER SHELL

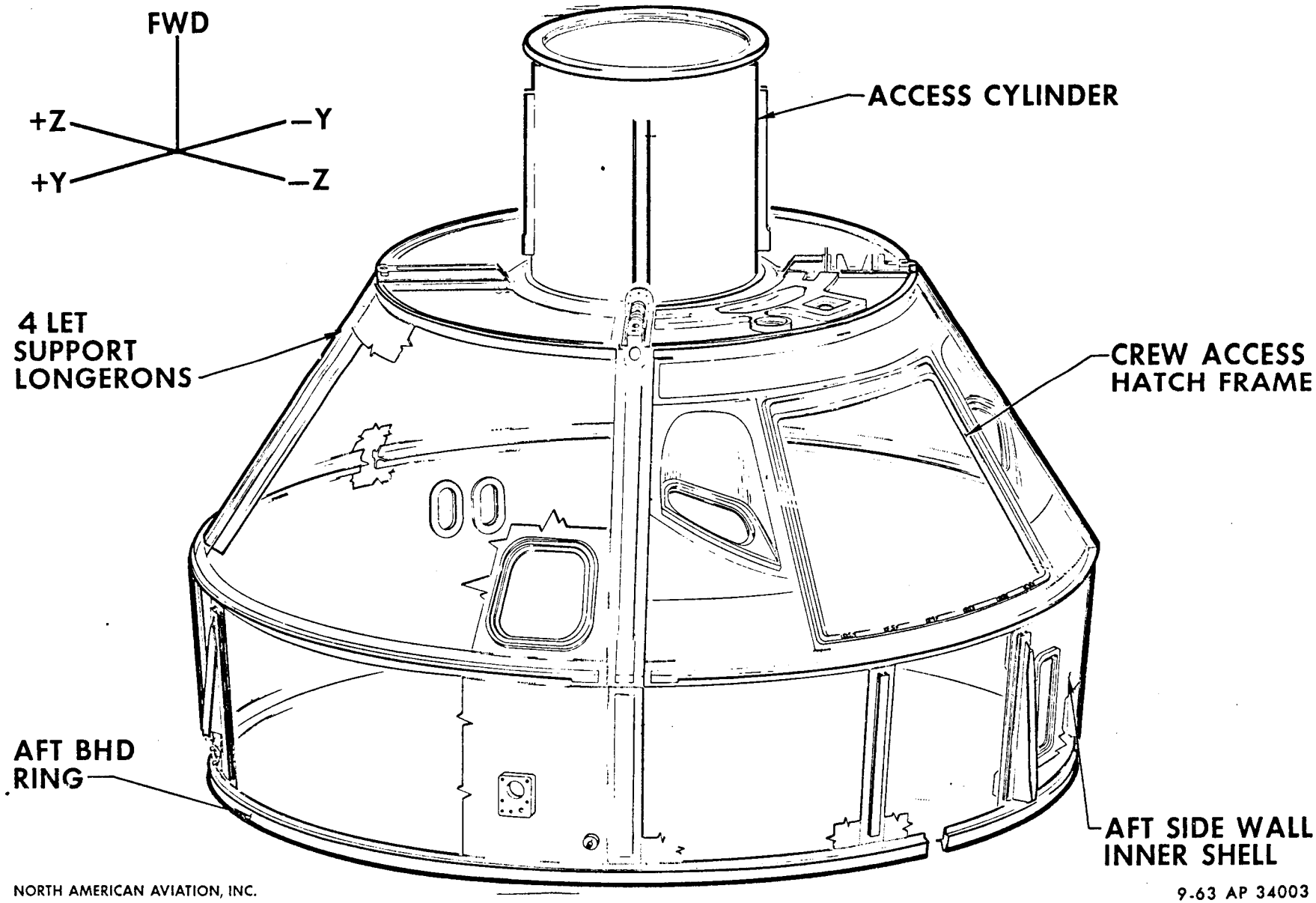

NORTH AMERICAN AVIATION, INC.
SPACE AND INFORMATION SYSTEMS DIVISION

9-63 AP 34003 A

CREW ACCESS HATCH

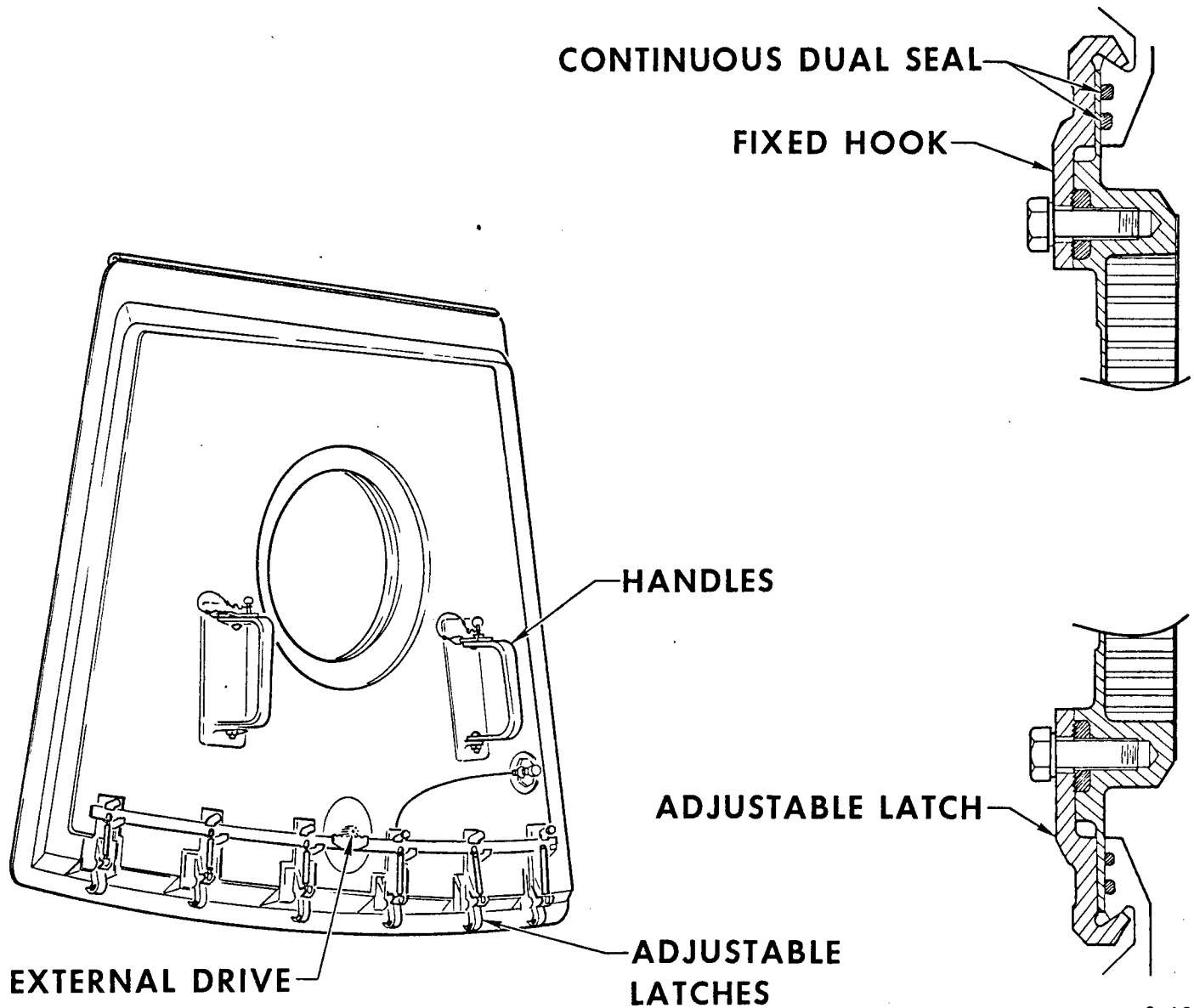

NORTH AMERICAN AVIATION, INC.
SPACE AND INFORMATION SYSTEMS DIVISION

9-63 AP 59547

EARTH LANDING & IMPACT SYSTEM

NORTH AMERICAN AVIATION, INC.
SPACE AND INFORMATION SYSTEMS DIVISION

9-63 AP34075

ELS EQUIPMENT

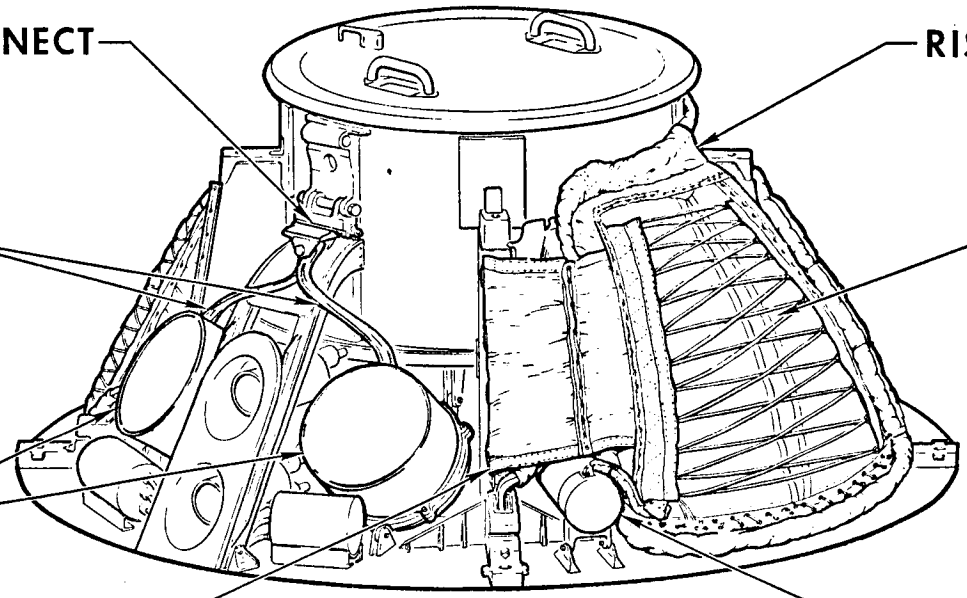

COMPARTMENT TEMPERATURE:
−65° + 250°F

CHUTE DIA

MAIN	88 FT
DROGUE	13.7 FT
PILOT	10 FT
EQUIP VOL	15.45 CU FT

EARTH LANDING SYSTEM-NORMAL

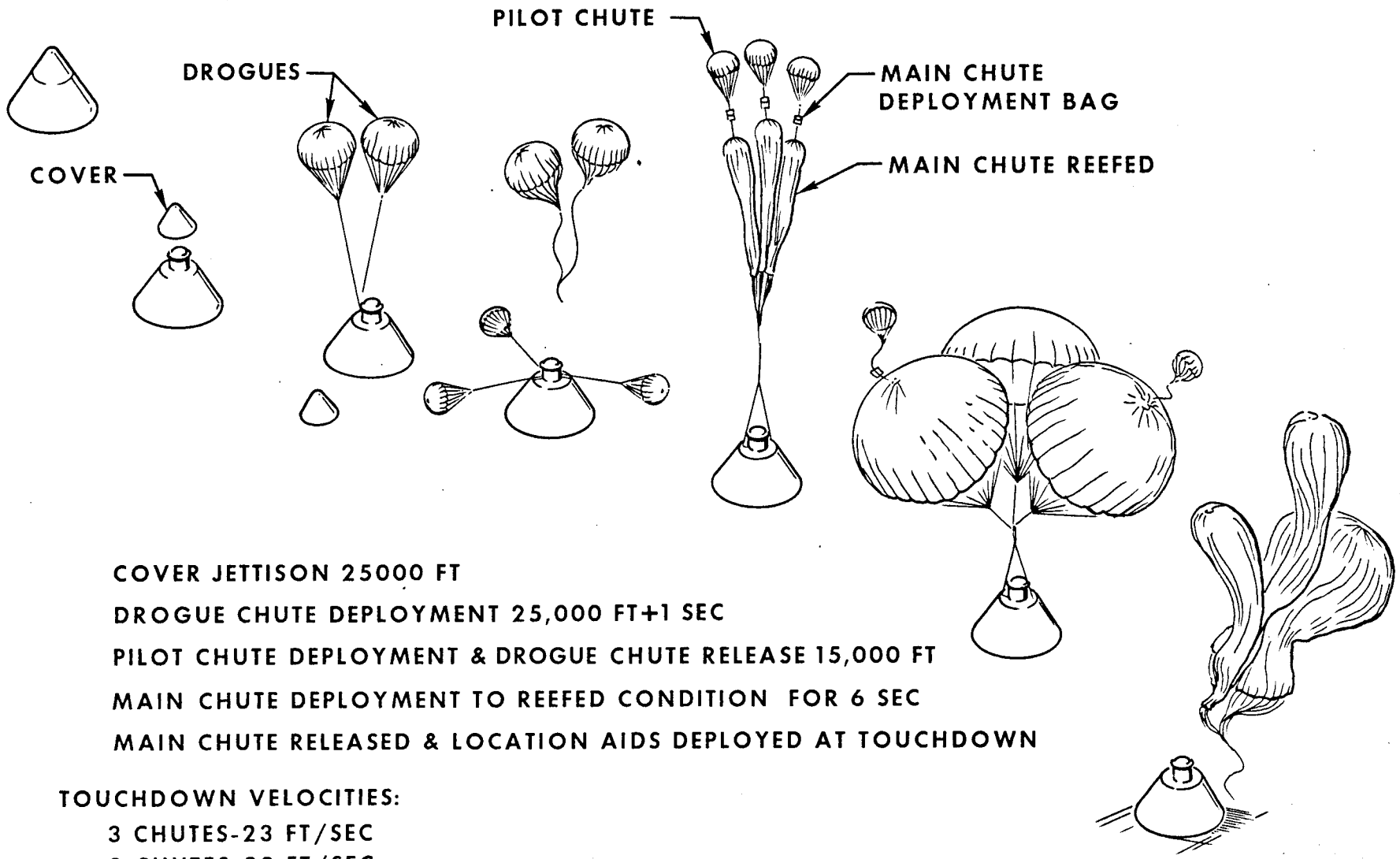

COVER JETTISON 25000 FT

DROGUE CHUTE DEPLOYMENT 25,000 FT+1 SEC

PILOT CHUTE DEPLOYMENT & DROGUE CHUTE RELEASE 15,000 FT

MAIN CHUTE DEPLOYMENT TO REEFED CONDITION FOR 6 SEC

MAIN CHUTE RELEASED & LOCATION AIDS DEPLOYED AT TOUCHDOWN

TOUCHDOWN VELOCITIES:

3 CHUTES-23 FT/SEC

2 CHUTES-30 FT/SEC

EARTH IMPACT SYSTEM

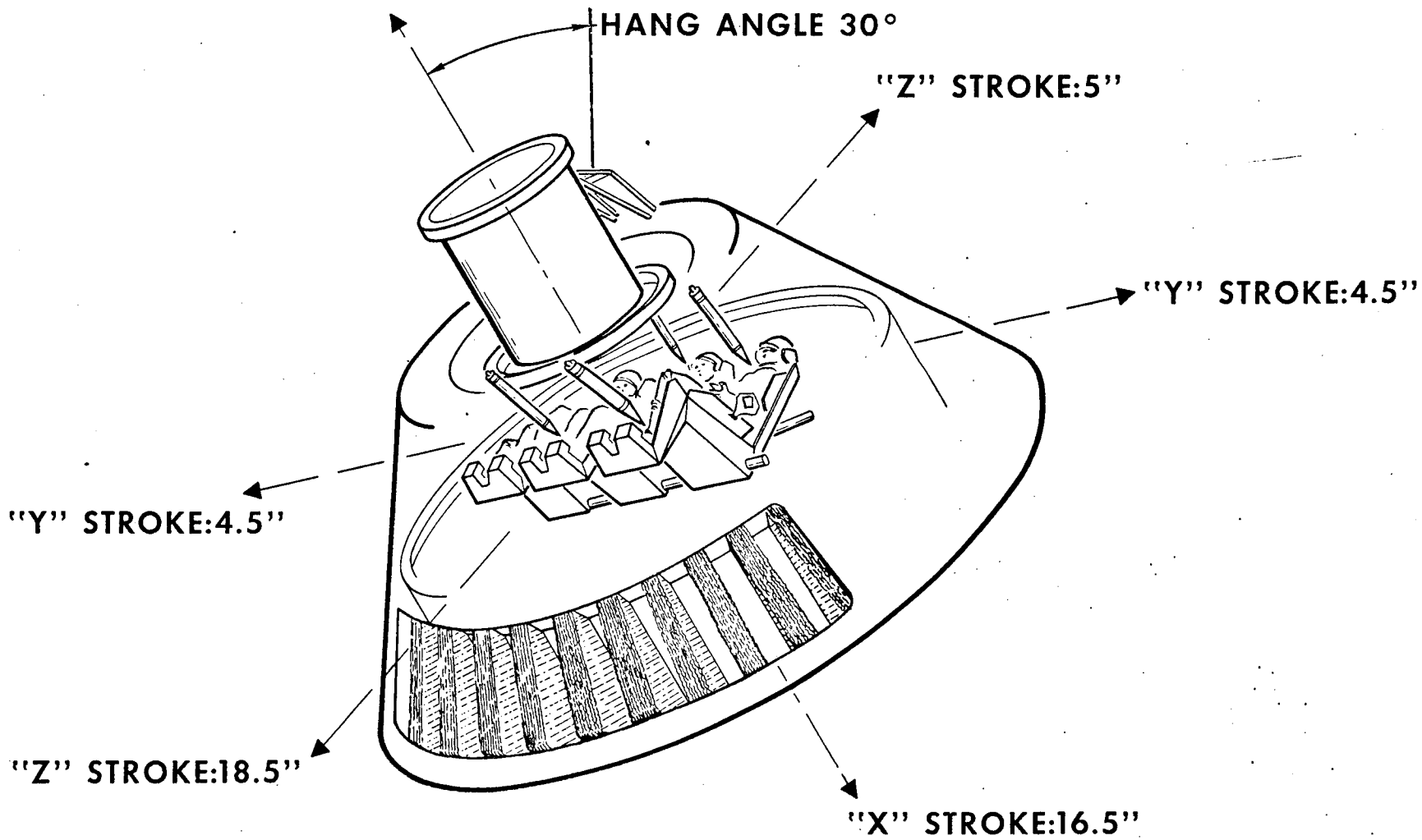

CREW COUCHES

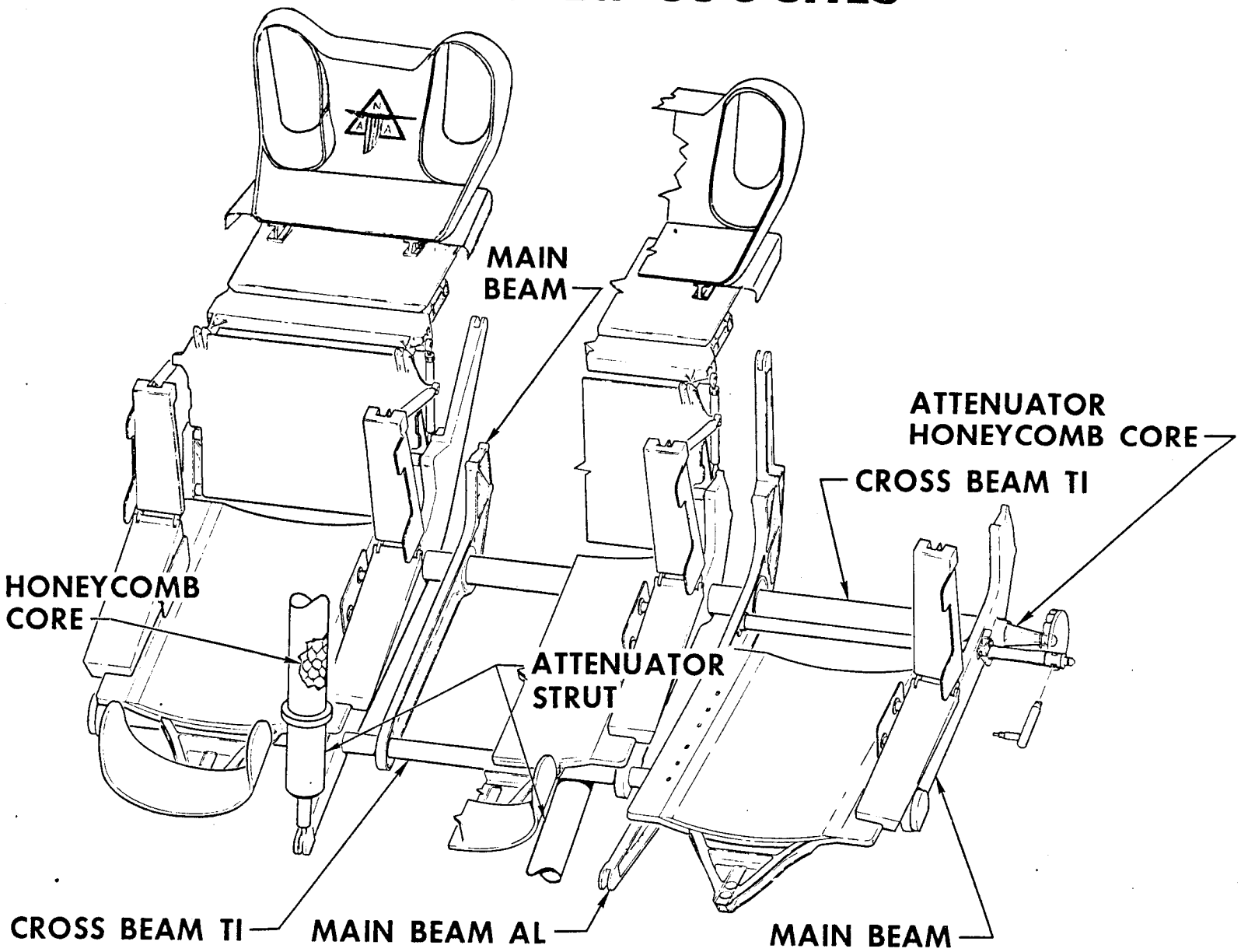

SERVICE MODULE & ADAPTER STRUCTURE

NORTH AMERICAN AVIATION, INC.
SPACE AND INFORMATION SYSTEMS DIVISION

9-63 AP34073

SM STRUCTURE

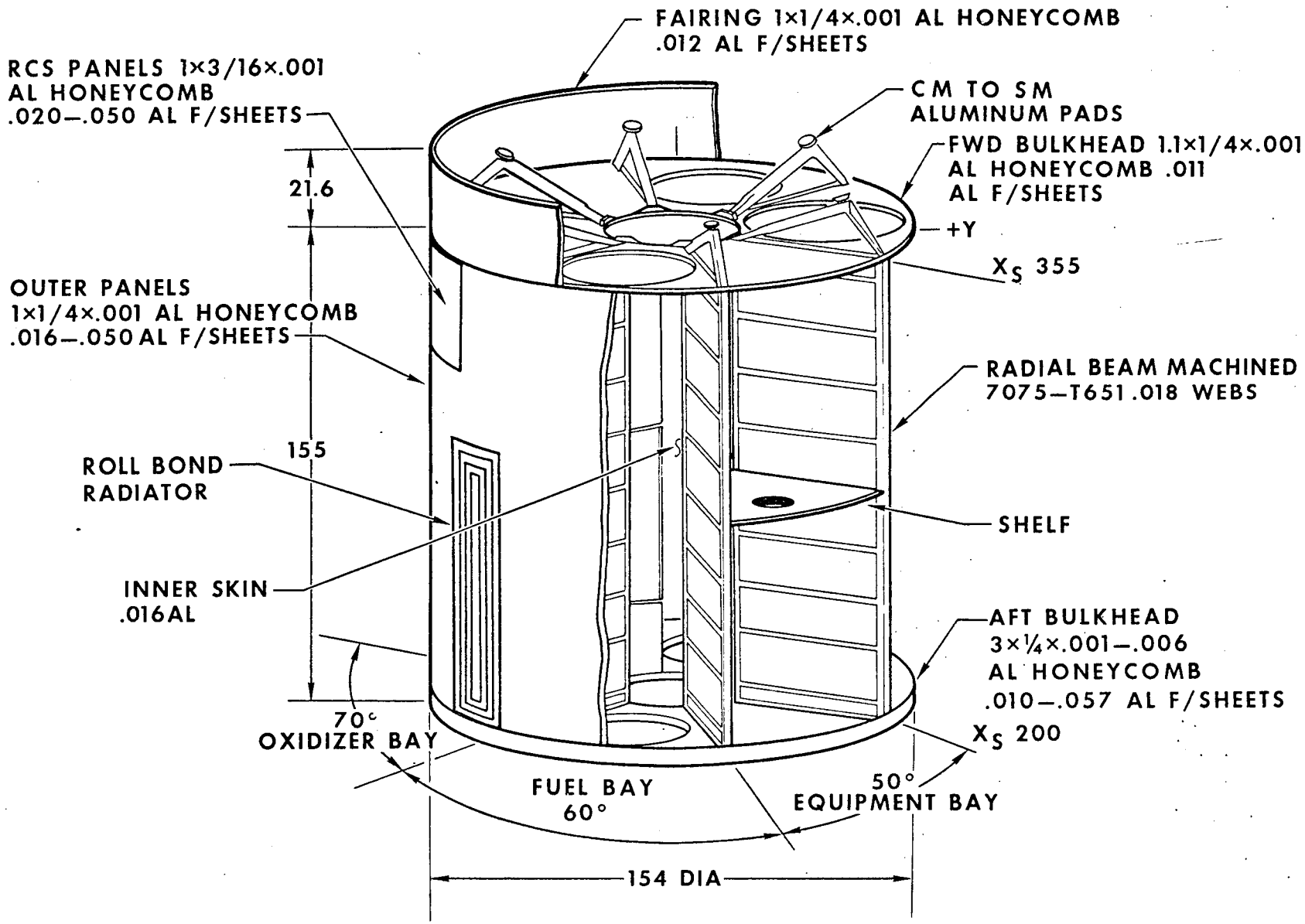

S/M & ADAPTER
INTERIOR EQUIPMENT ARRANGEMENT

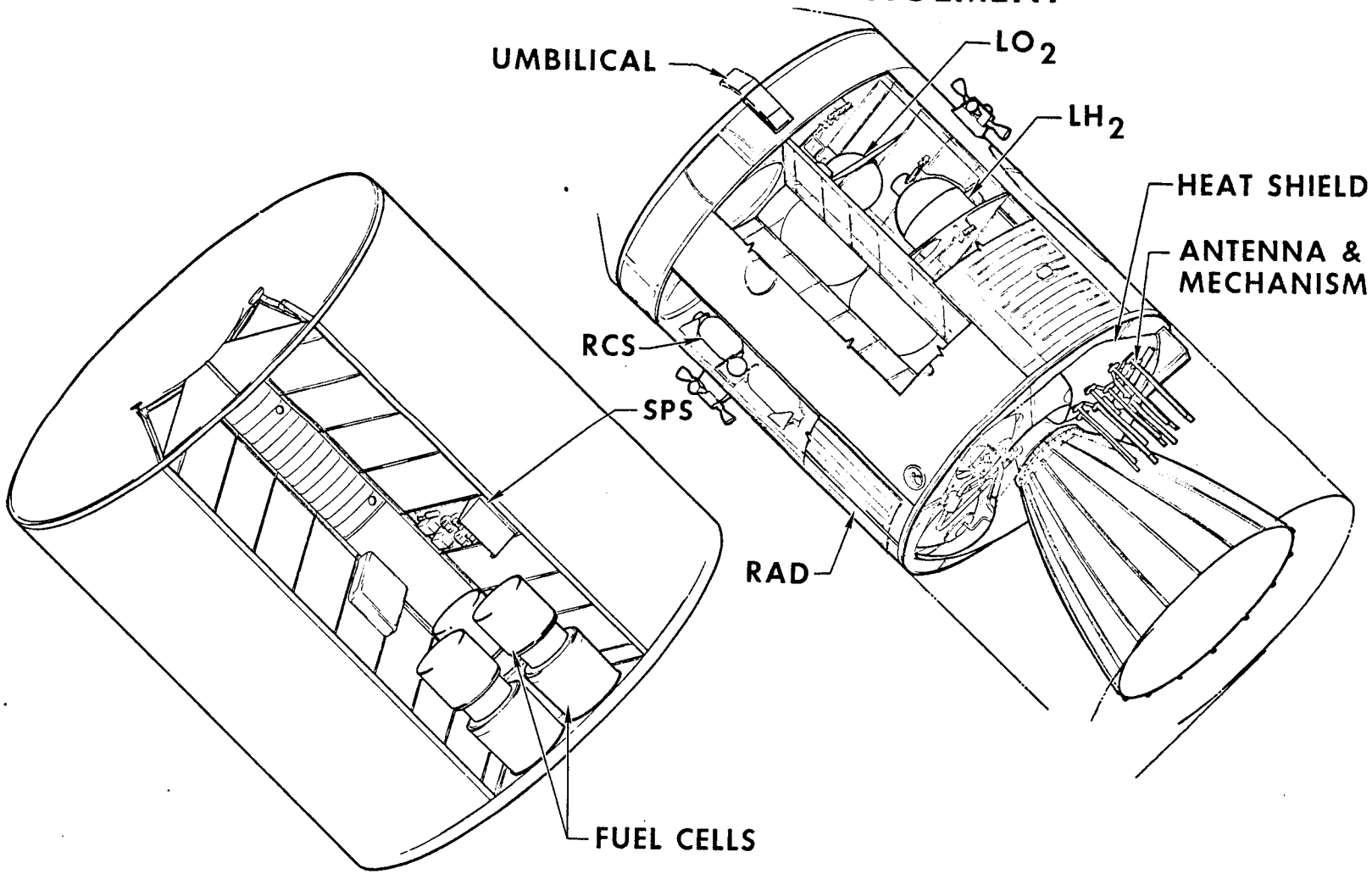

SERVICE PROPULSION TANKS

TANK SIZED FOR 45,000 LB OF PROPELLANT

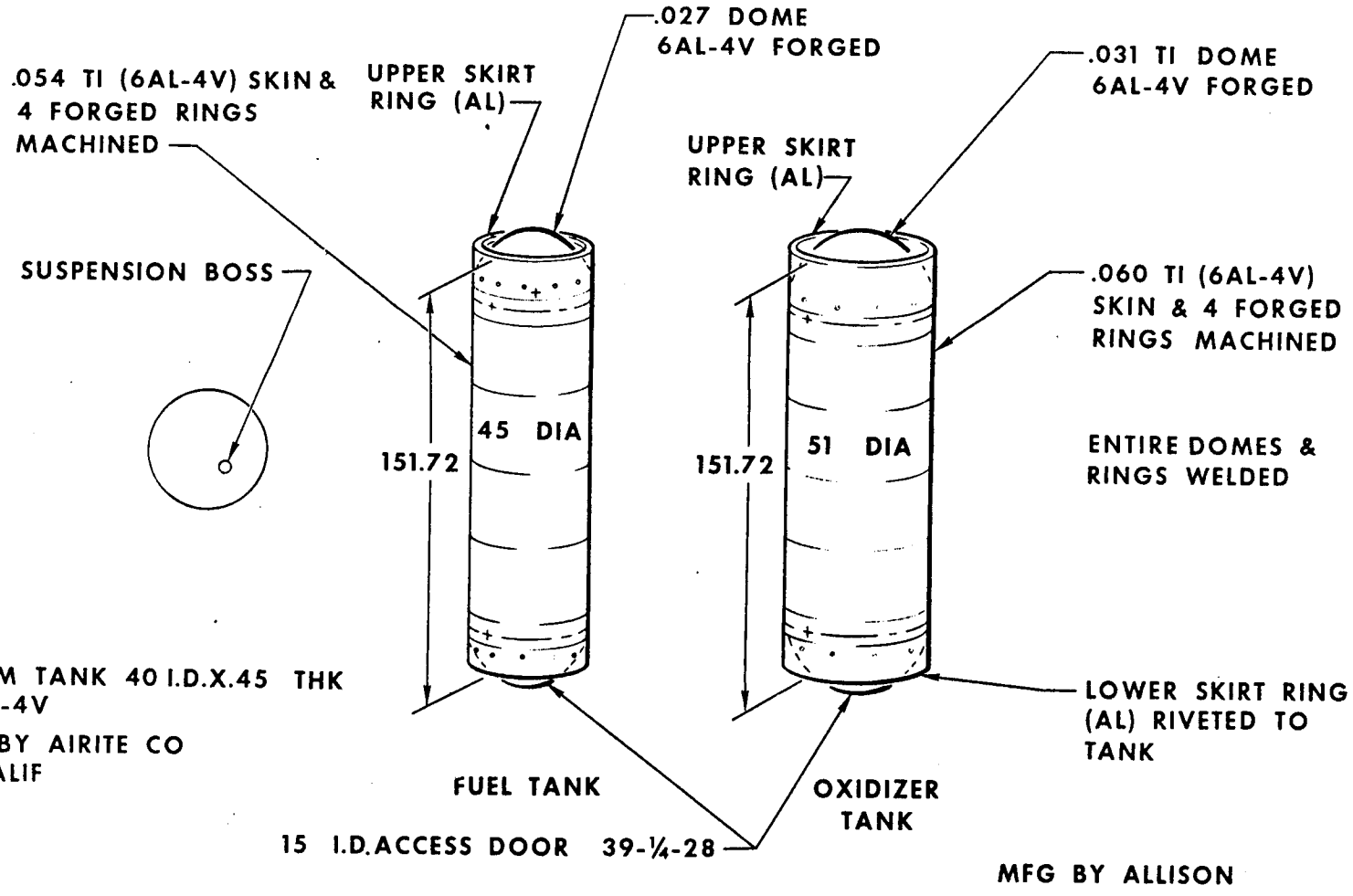

[redacted]

SM RCS PACKAGE

SPACECRAFT ATTITUDE CONTROL

MARQUARDT – 100-LB THRUST
RADIATION COOLED
MINIMUM IMPULSE 0.6 LB-SEC
AREA RATIO 40:1
CHAMBER PRESS 94 PSI

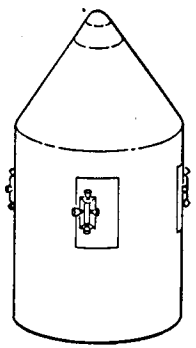

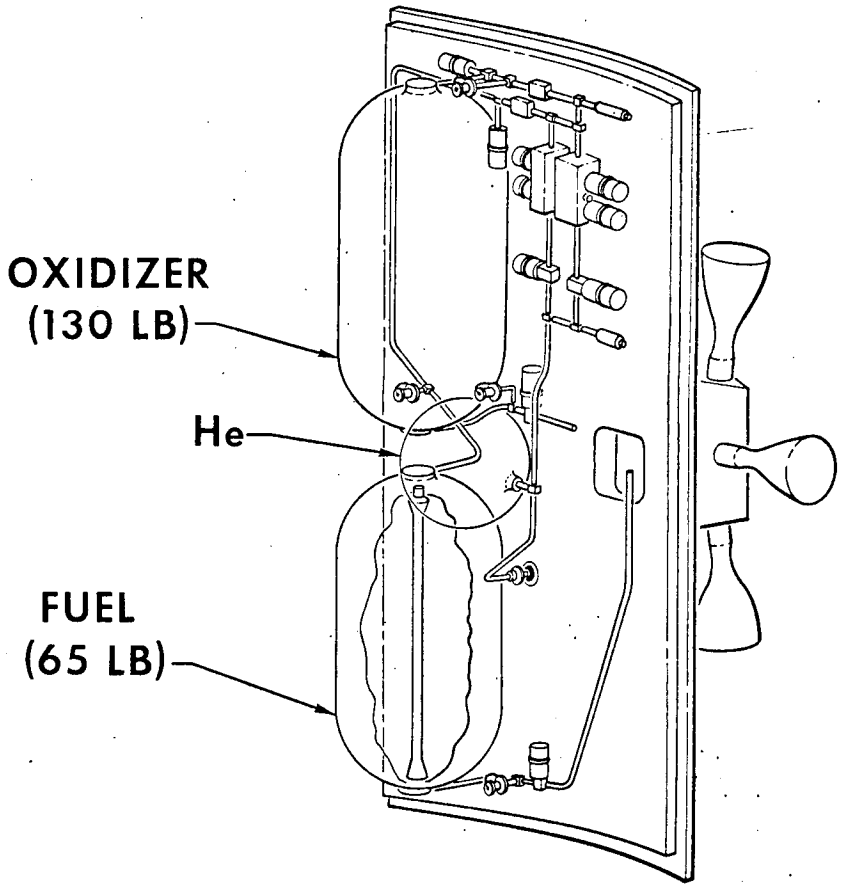

5-63 AP 56819 A

[redacted]

NORTH AMERICAN AVIATION, INC.
SPACE AND INFORMATION SYSTEMS DIVISION

[redacted]

SM – INSULATION INSTALLATION

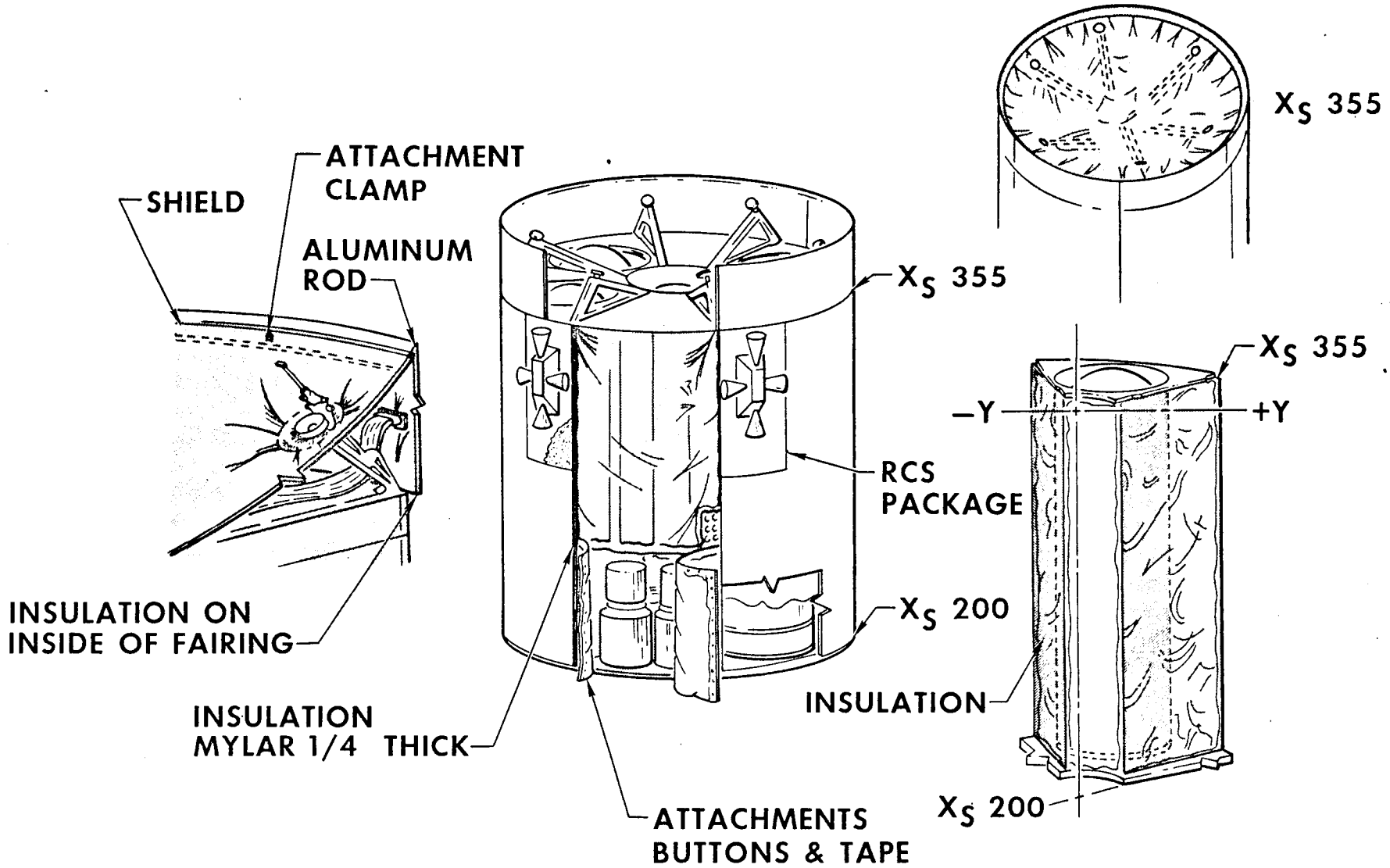

SERVICE MODULE ADAPTER-C1

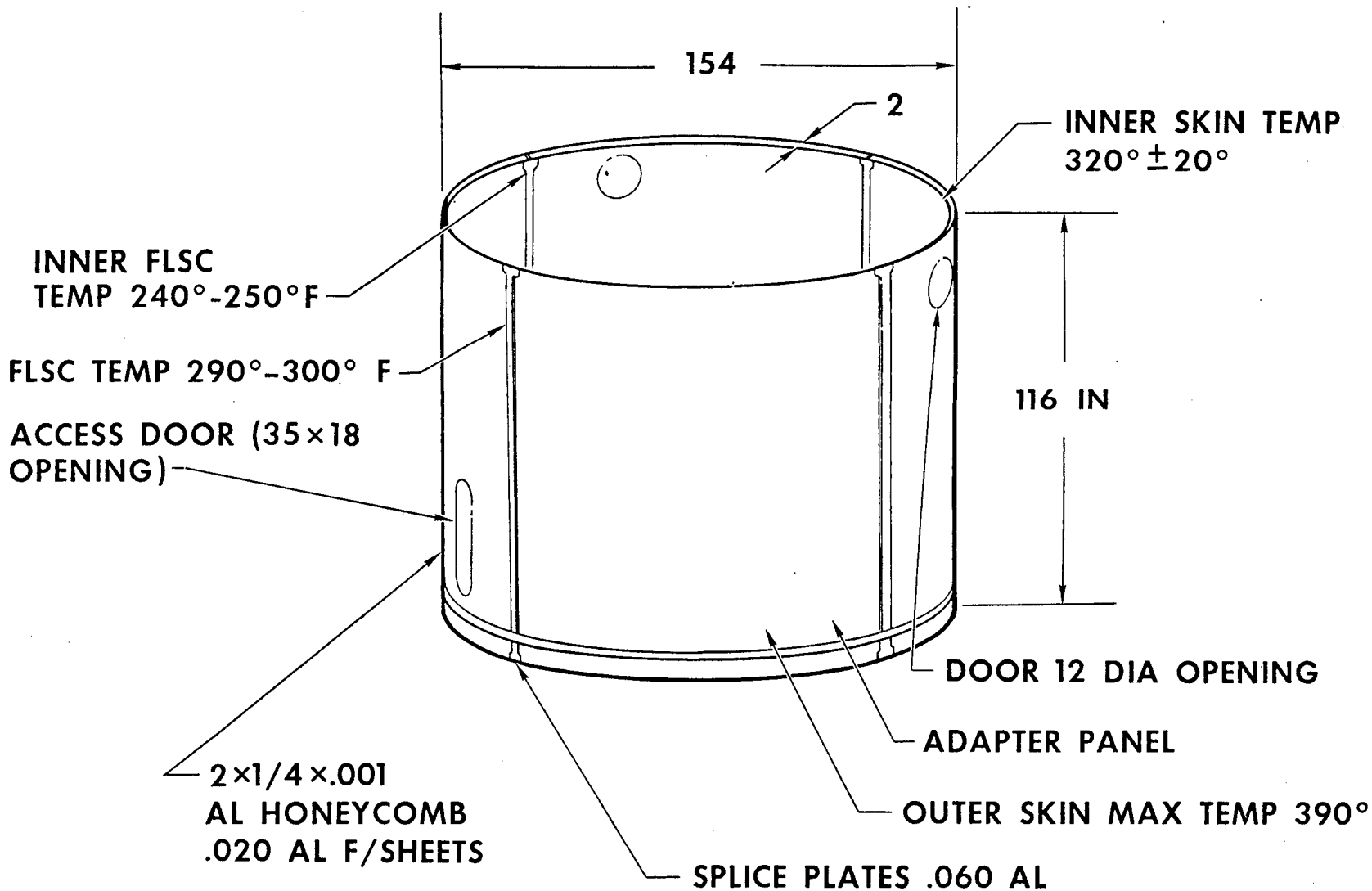

LEM ADAPTER

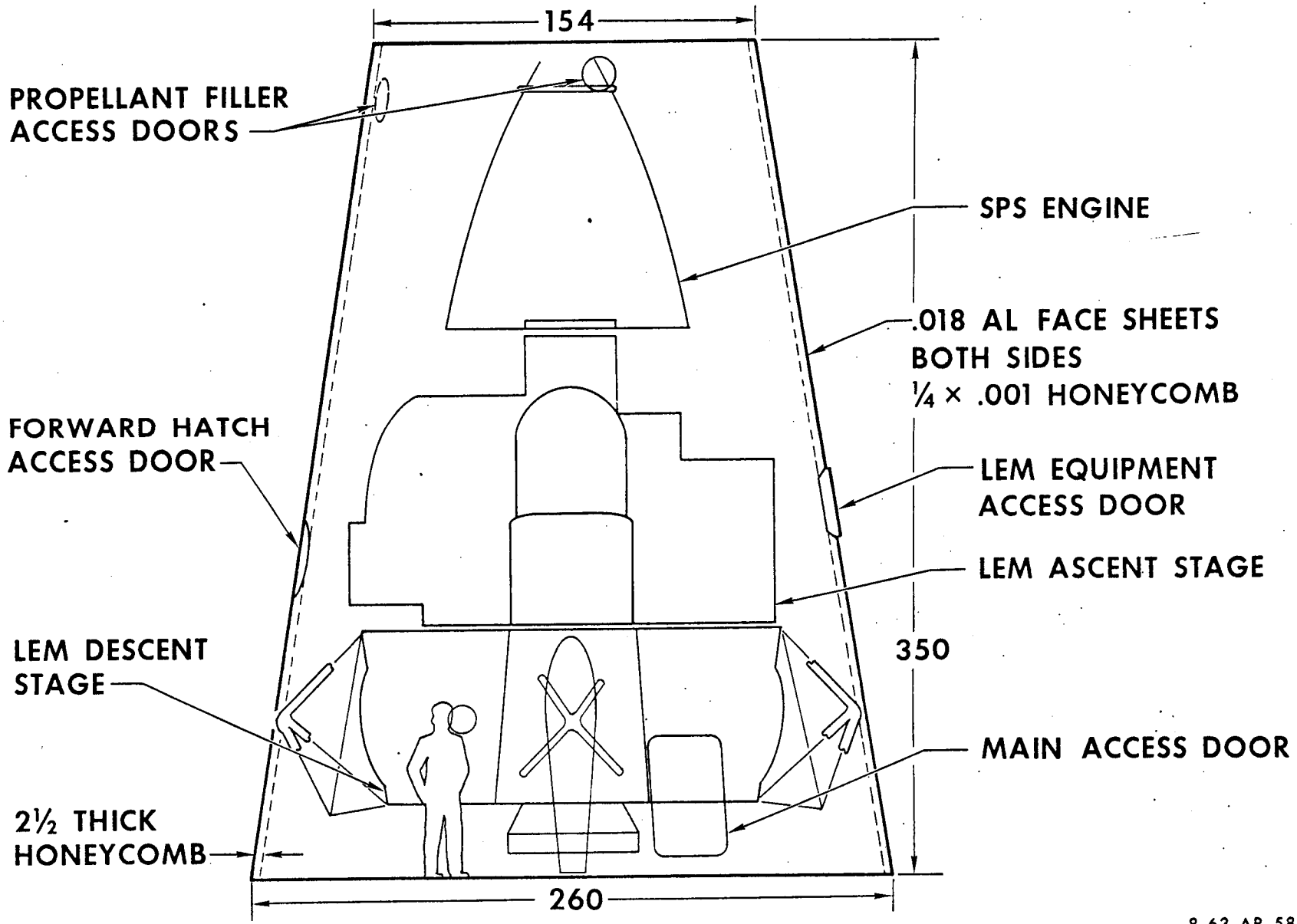

NORTH AMERICAN AVIATION, INC.
SPACE AND INFORMATION SYSTEMS DIVISION

8-63 AP 58964

LAUNCH ESCAPE SYSTEM STRUCTURE

LAUNCH ESCAPE SYSTEM STRUCTURE

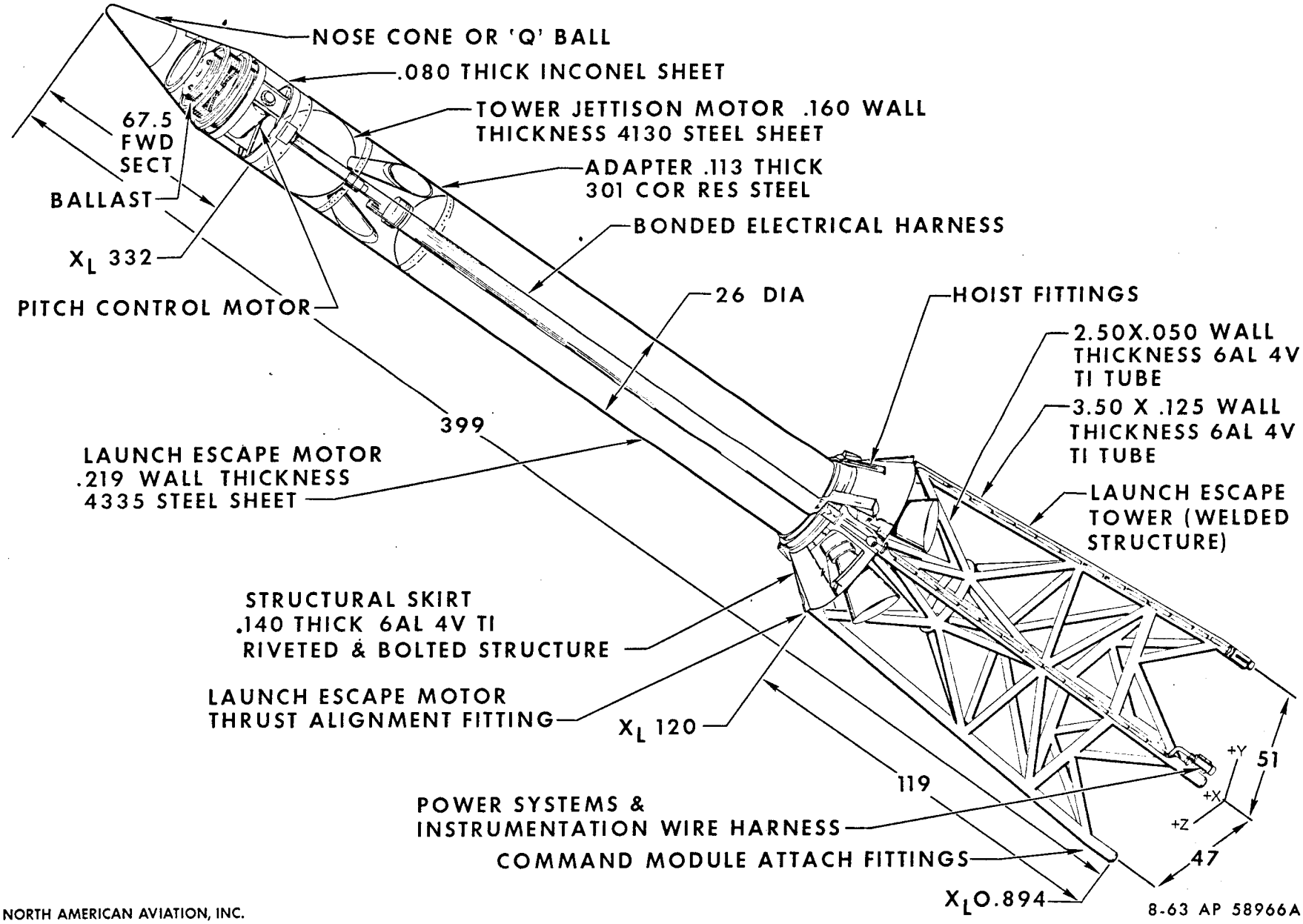

8-63 AP 58966A

NORTH AMERICAN AVIATION, INC.
SPACE AND INFORMATION SYSTEMS DIVISION

LAUNCH ABORT MODES

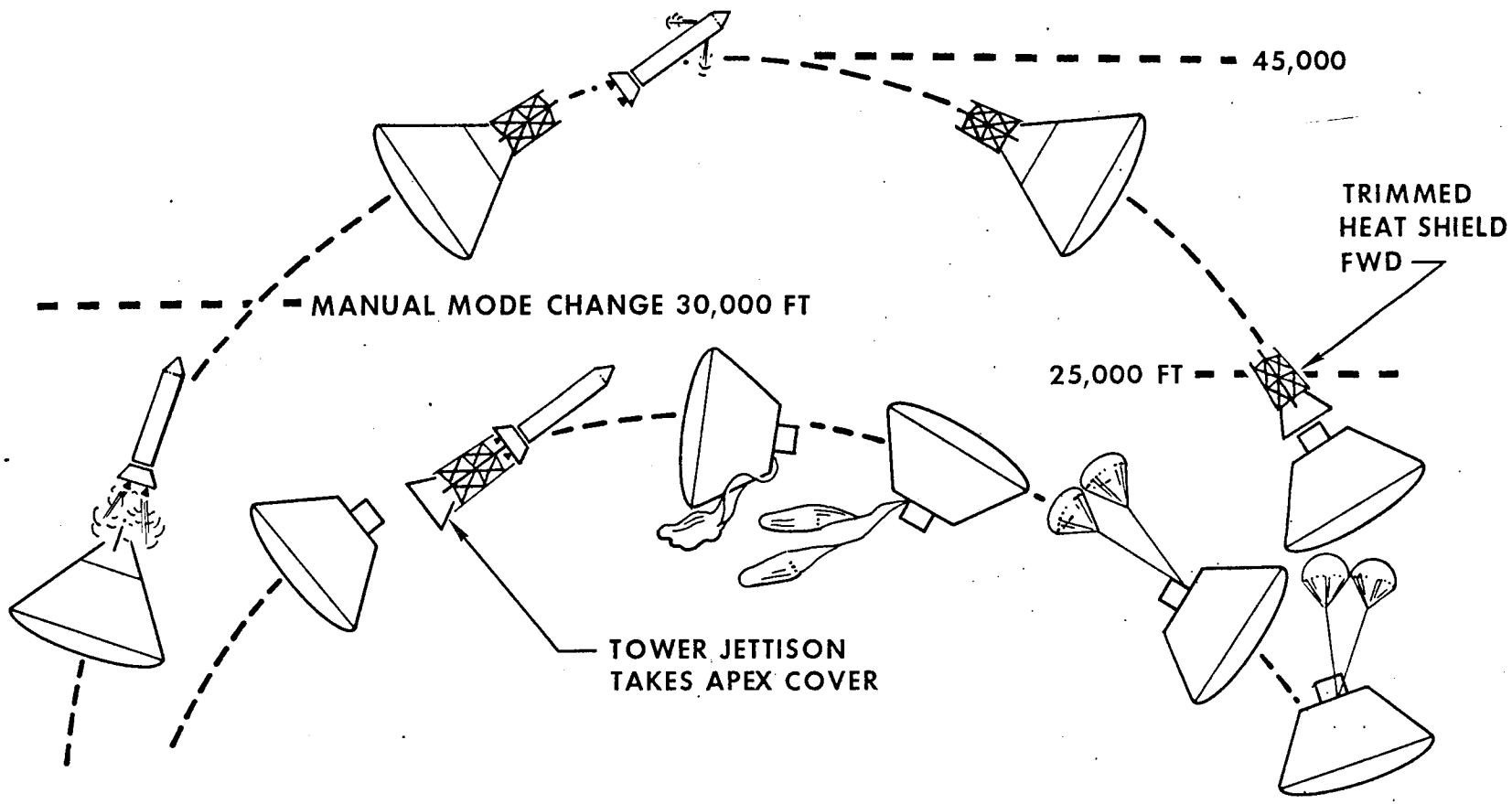

LES TOWER EXPLOSIVE BOLT

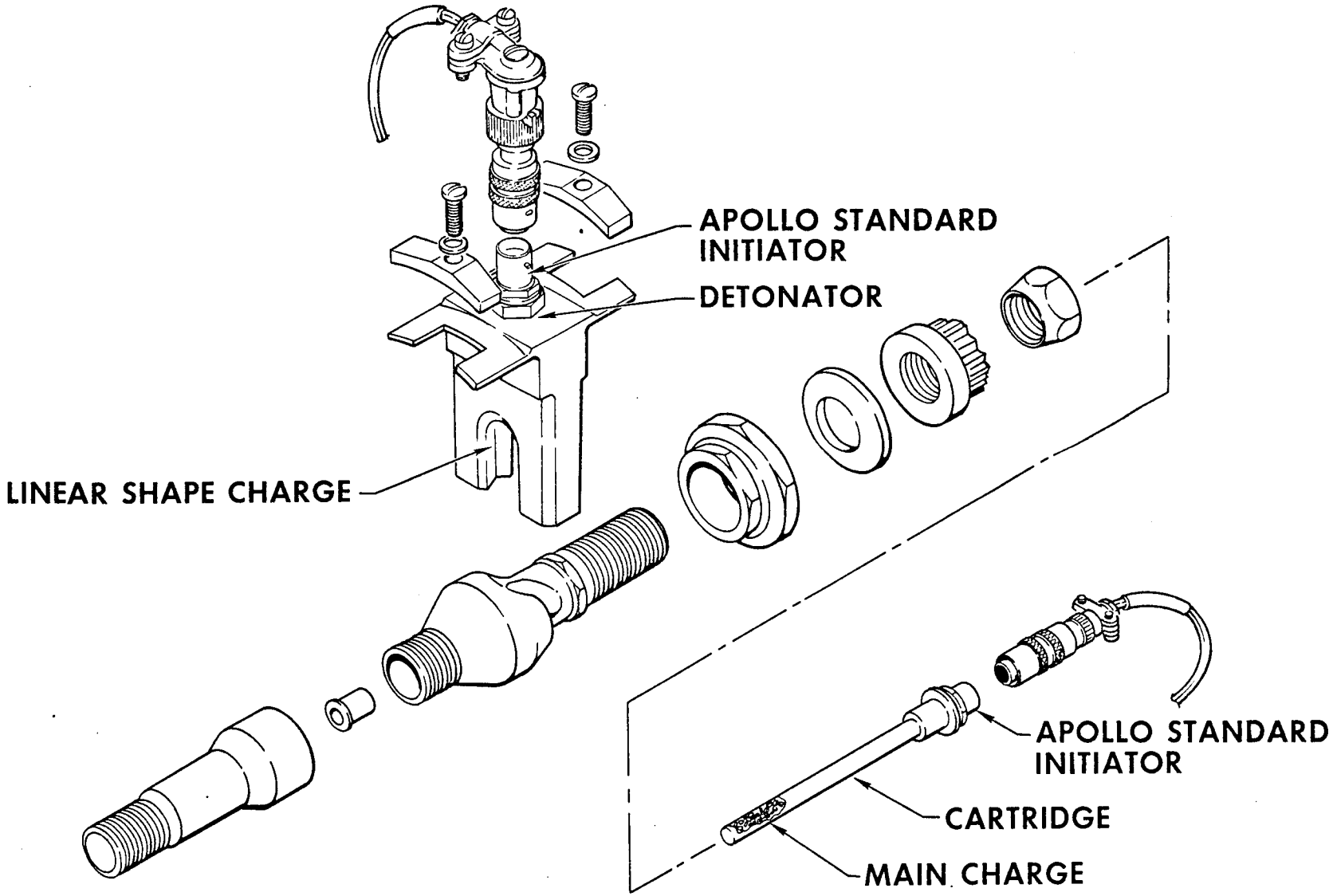

APOLLO SERVICE PROPULSION SYSTEM

NORTH AMERICAN AVIATION, INC.
SPACE AND INFORMATION SYSTEMS DIVISION

6-63 AP33734

SPS SCHEMATIC DIAGRAM

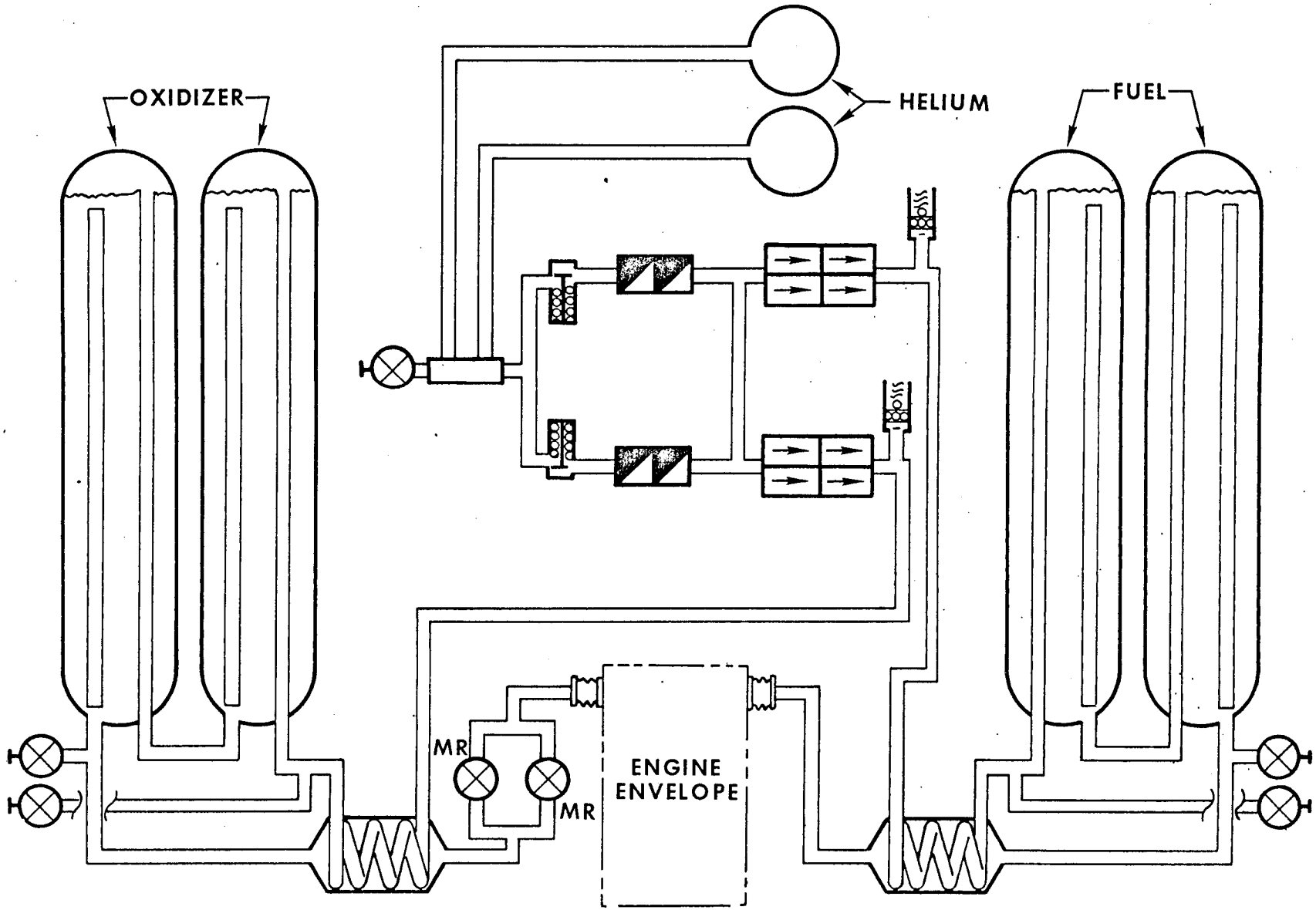

NORTH AMERICAN AVIATION, INC.
SPACE AND INFORMATION SYSTEMS DIVISION

9-63 AP33735

SPS ENGINE REQUIREMENTS

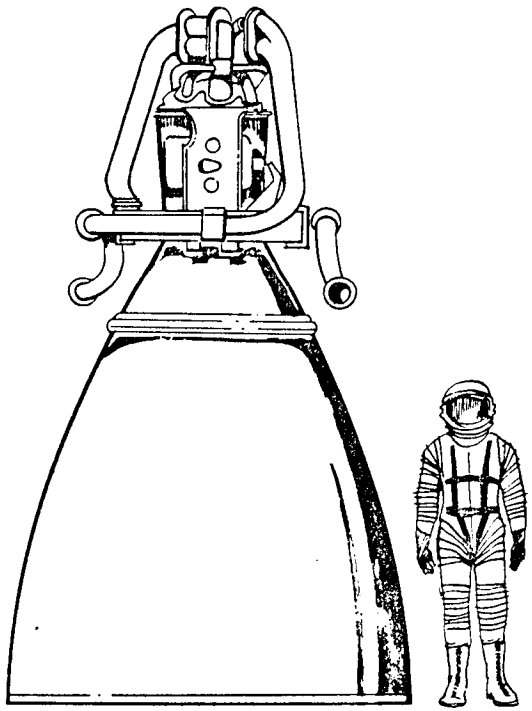

THRUST (NOMINAL)	21,900 LB
I_{SP} (MINIMUM 3σ AT 750 SEC)	318.7 SEC
C_F REQUIRED	1.898 (96%)
C^* REQUIRED	5480 FT/SEC (98%)
AREA RATIO	60:1
PROPELLANTS- N_2O_4/AEROZINE 50	
CHAMBER PRESSURE	100 PSIA
SERVICE LIFE	750 SEC
DRY WEIGHT	642 LB

SPS PRESSURES & CAPACITY

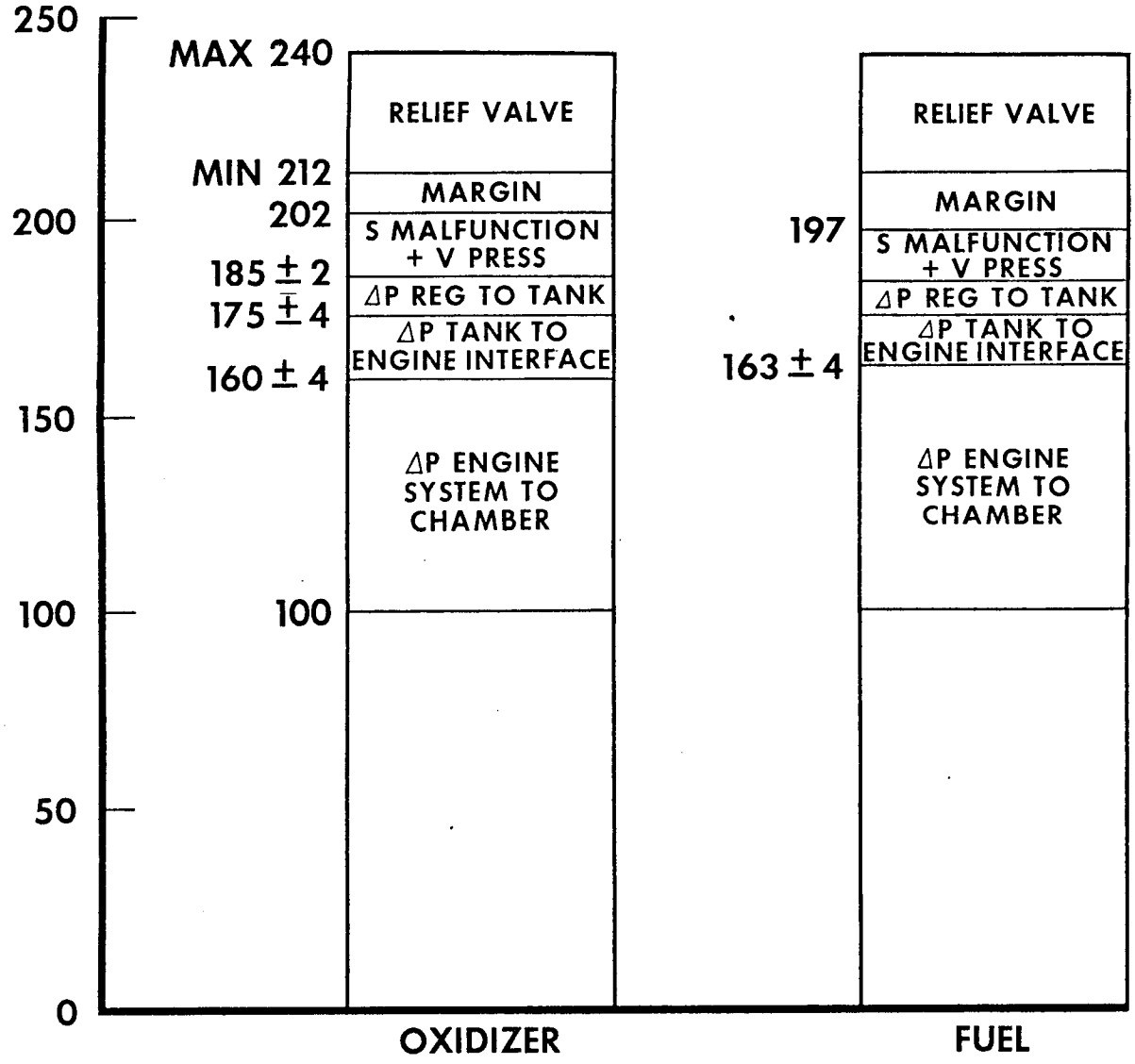

OXIDIZER CAPACITY
351 CU FT
30,625 LB

FUEL CAPACITY
279 CU FT
15,300 LB

HELIUM CAPACITY
38.8 CU FT

HELIUM PRESSURE
4,000 PSIA AT 70°F

PRESSURE BUDGET

INJECTOR & THRUST CHAMBER DESIGN PROBLEMS

- HIGH COMBUSTION EFFICIENCY
  - 98%C* IS TARGET
- HIGH STABILITY INDEX
  - RECOVERY FROM COMBUSTION OSCILLATION
- COMPATABILITY WITH THRUST CHAMBER
  - MINIMUM & UNIFORM WALL HEATING
- UNIFORM ABLATION
  - NO "STREAKING", SLOW CHAR REGRESSION
- DIMENSIONALLY STABLE
  - NO "GLASSING", DENSE TOUGH CHAR
- MINIMUM THROAT GROWTH
  - <10% IN 750 SEC
- STRUCTURALLY ADEQUATE
  - METAL END FITTINGS RIGIDITY

CANDIDATE INJECTOR

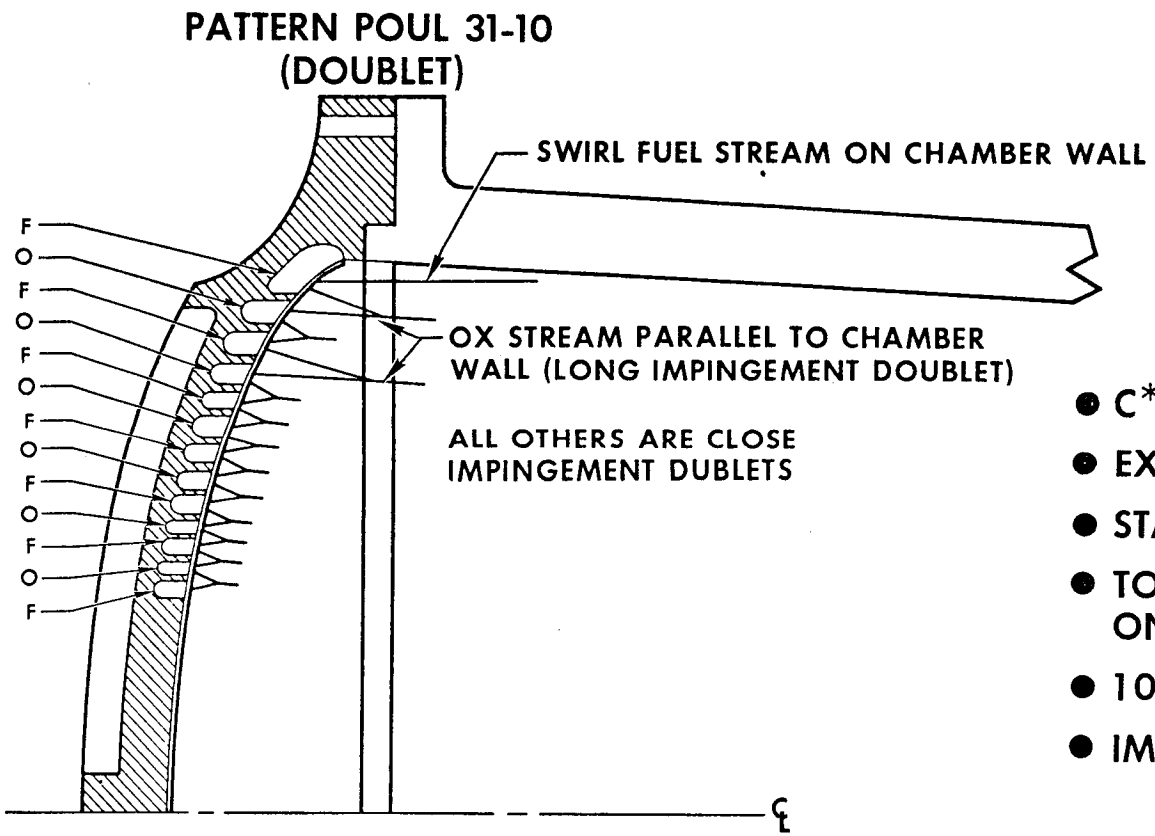

- $C^* = 96.35\%$
- EXCELLENT COMPATIBILITY
- STABLE IN 165 RUNS
- TOTAL TIME TO DATE 2085 SEC ON FIRST UNIT
- 10 UNITS IN TEST
- IMPROVED C^* ATTAINABLE

ABLATIVE THRUST CHAMBER

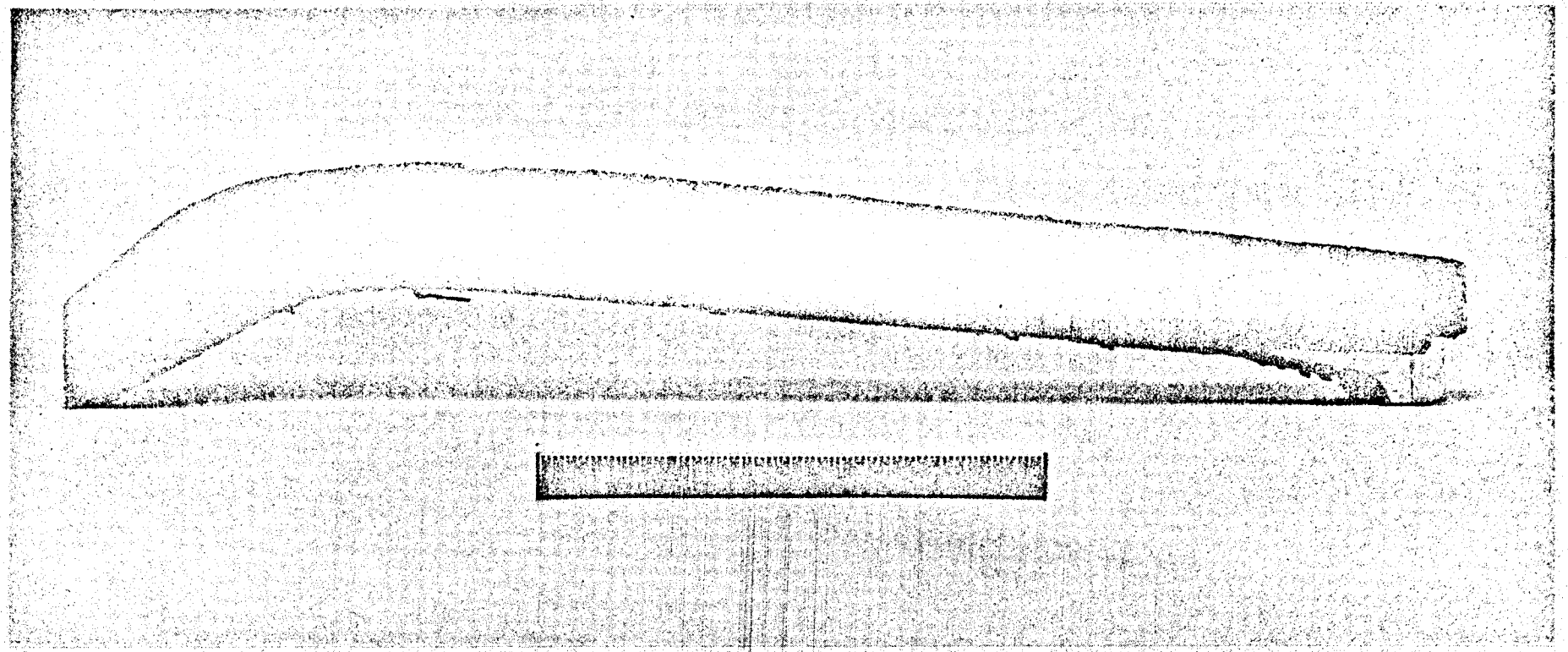

NORTH AMERICAN AVIATION, INC.
SPACE AND INFORMATION SYSTEMS DIVISION

9-63 AP 33741

RADIATION COOLED NOZZLE

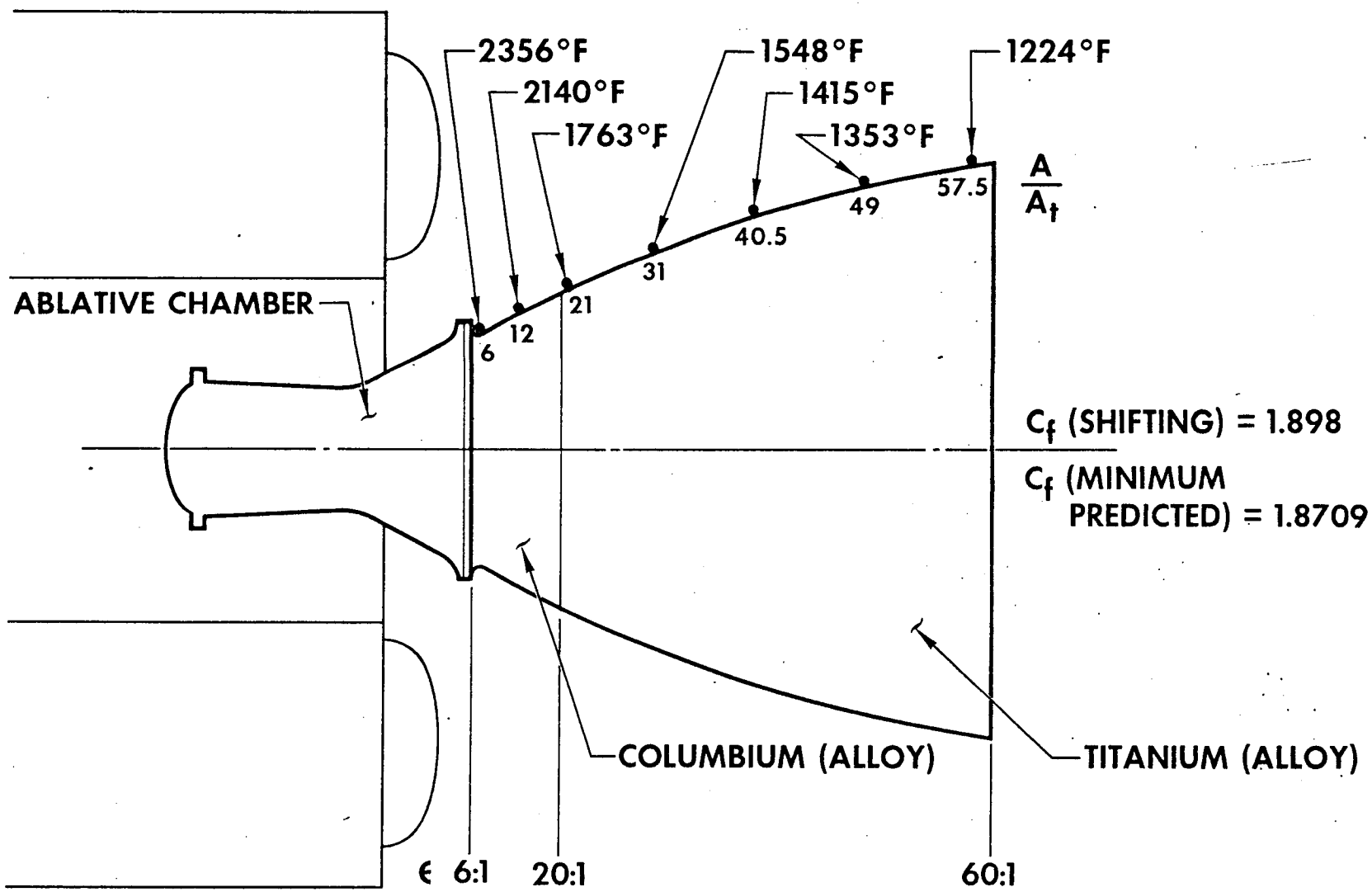

PROPELLANT BEHAVIOR

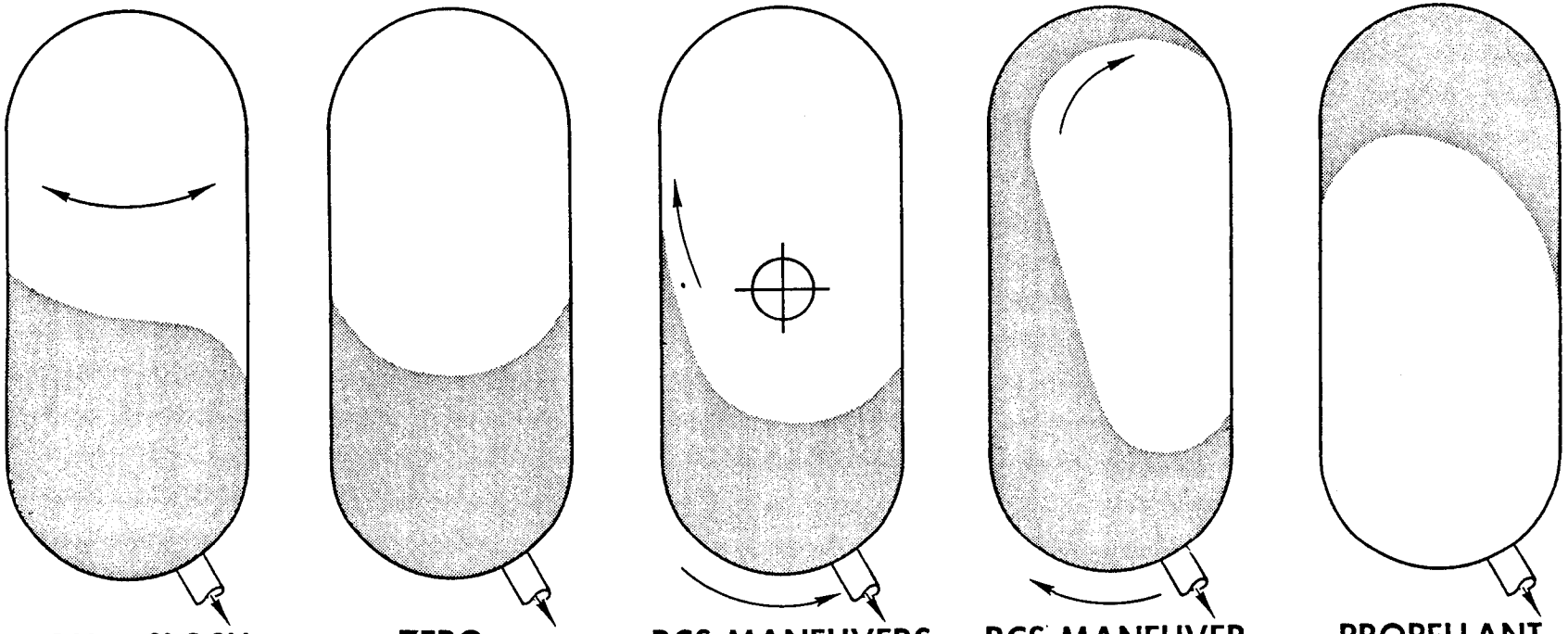

HIGH-g SLOSH | ZERO-g UNDISTURBED | RCS MANEUVERS LOW-g | RCS MANEUVER FREQUENCY COUPLING | PROPELLANT DISLOCATION

PROBLEMS:

- SLOSH SUPPRESSION
- LIQUID FEEDOUT
- MINIMIZE LOADS & CONTROL DISTURBANCES
- MINIMIZE RCS DUTY FOR ULLAGE MANEUVERS

TANK FEEDOUT & BAFFLE DESIGN

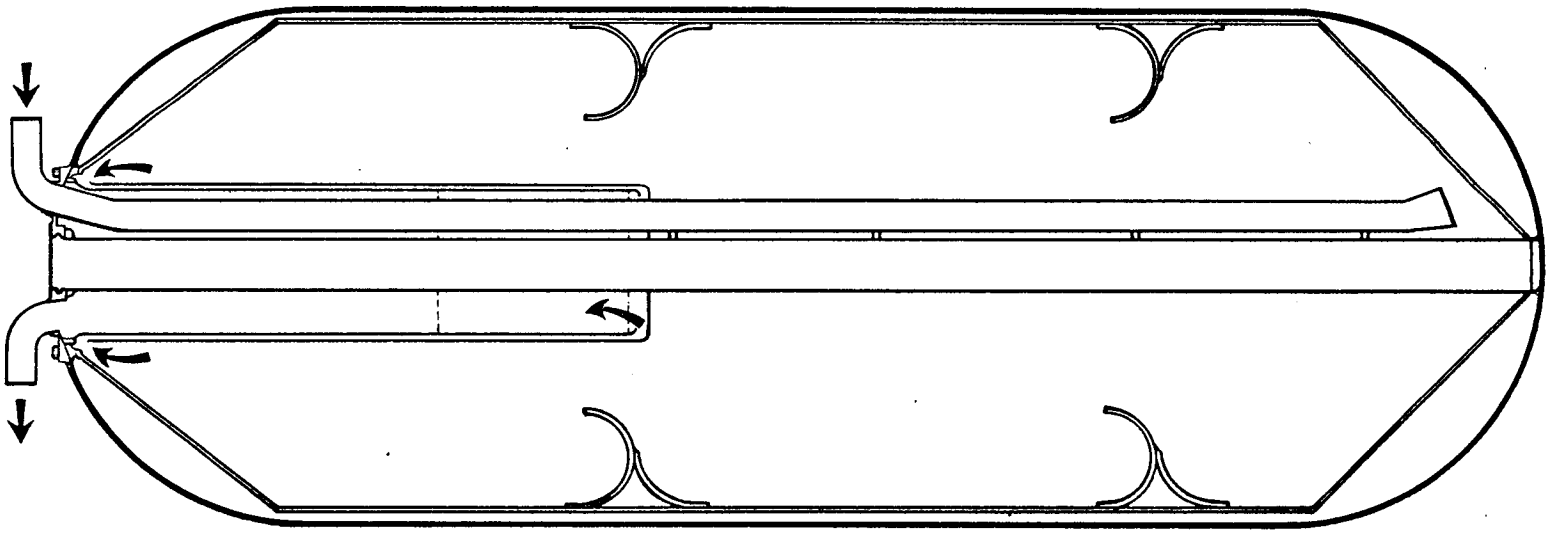

SPS PROGRAM PHASING

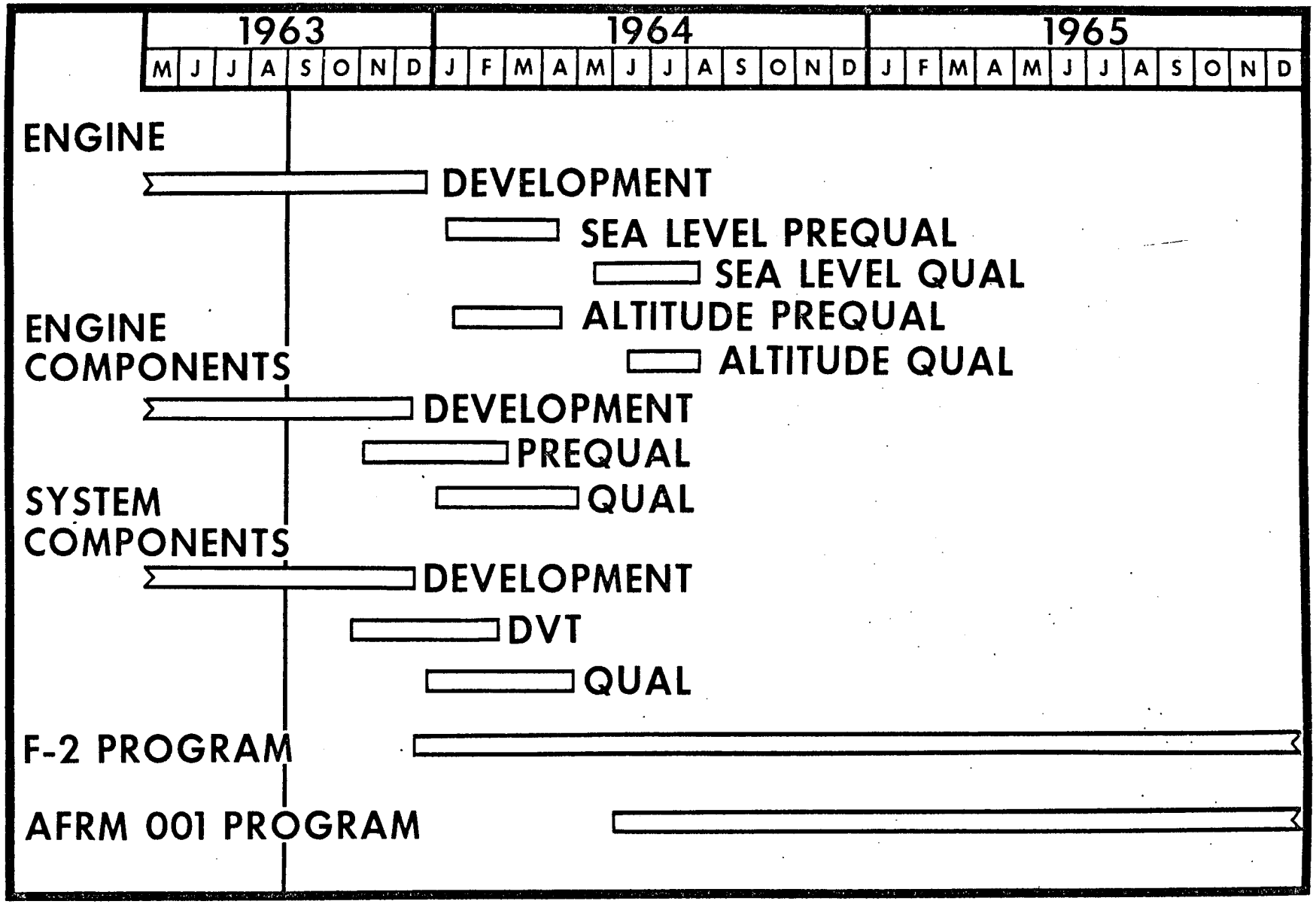

NORTH AMERICAN AVIATION, INC.
SPACE AND INFORMATION SYSTEMS DIVISION

9-63 AP33745 B

TEST FIXTURE F-3

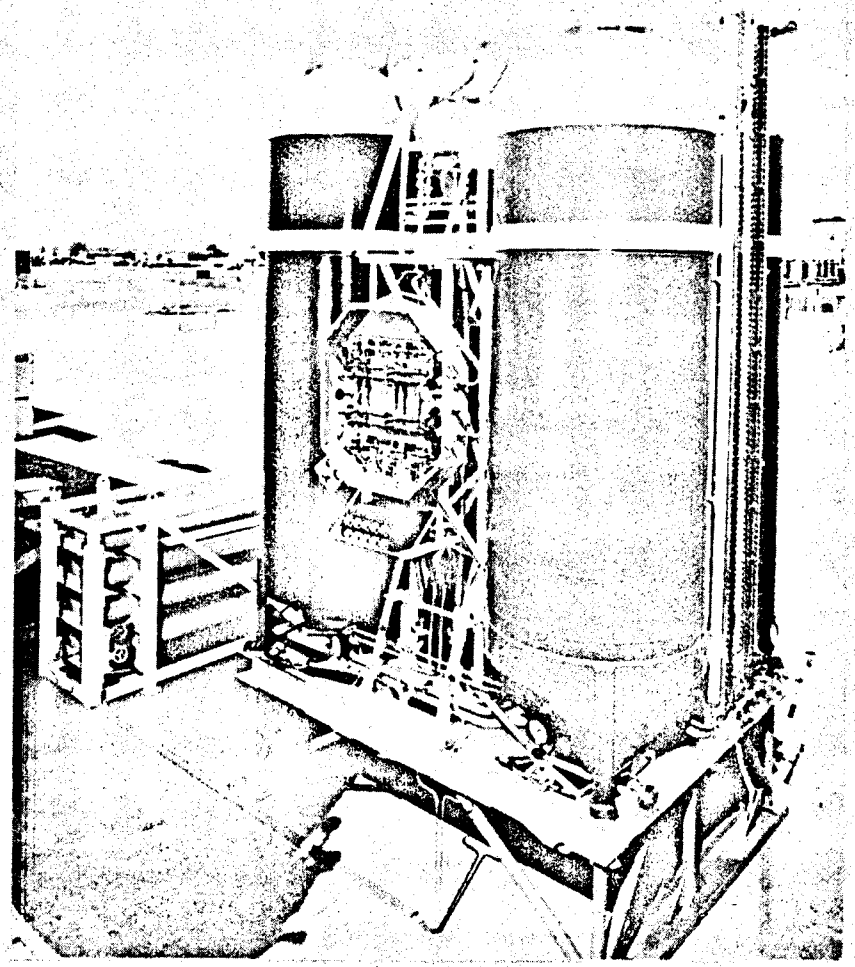

NORTH AMERICAN AVIATION, INC.
SPACE AND INFORMATION SYSTEMS DIVISION

9-63 AP 33757

APOLLO

REACTION CONTROL

SYSTEMS

NORTH AMERICAN AVIATION, INC.
SPACE AND INFORMATION SYSTEMS DIVISION

9-63 AP33747

CM REACTION CONTROL SYSTEM

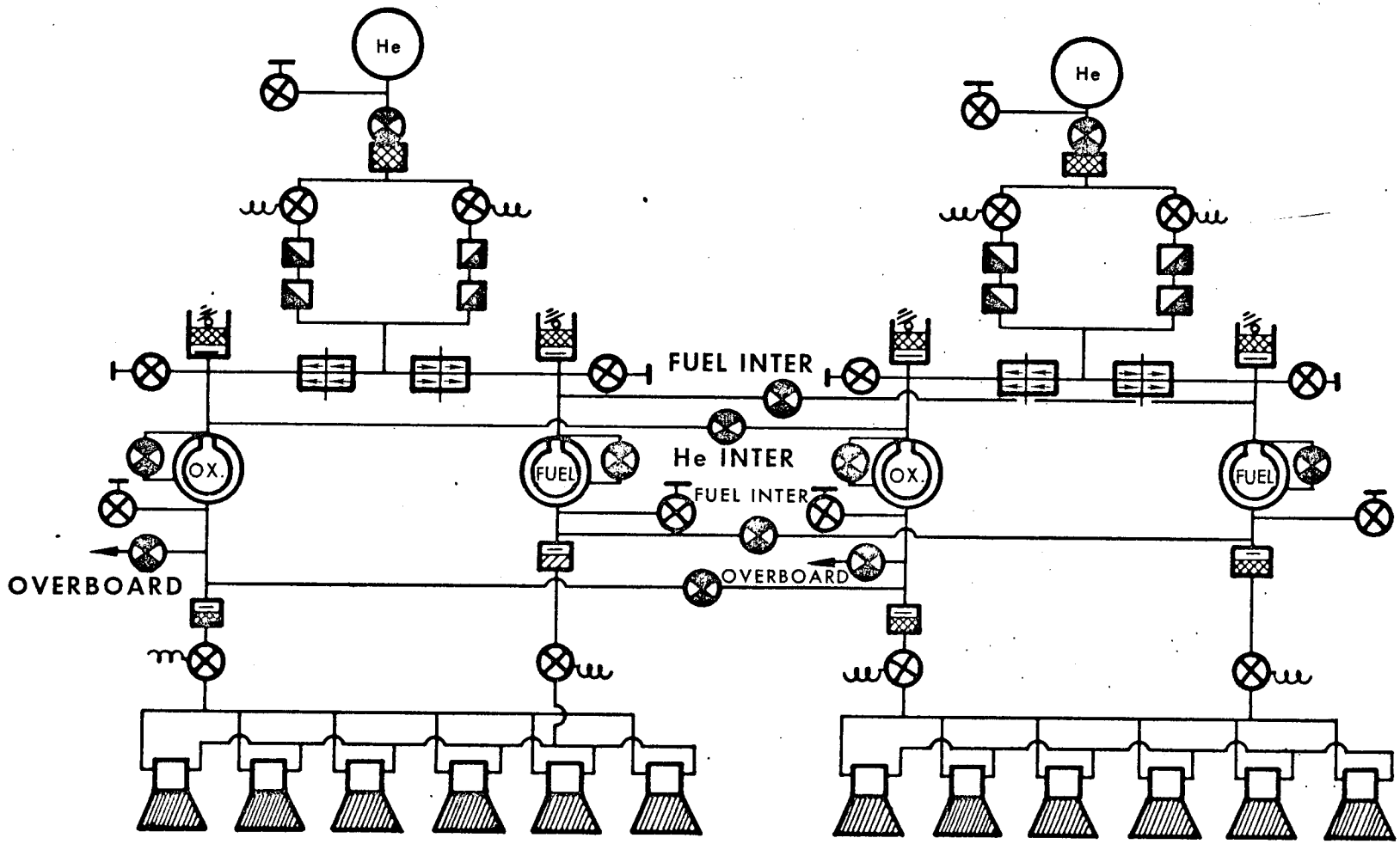

9-63 AP 33748

NORTH AMERICAN AVIATION, INC.
SPACE AND INFORMATION SYSTEMS DIVISION

C/M RCS CONFIGURATION

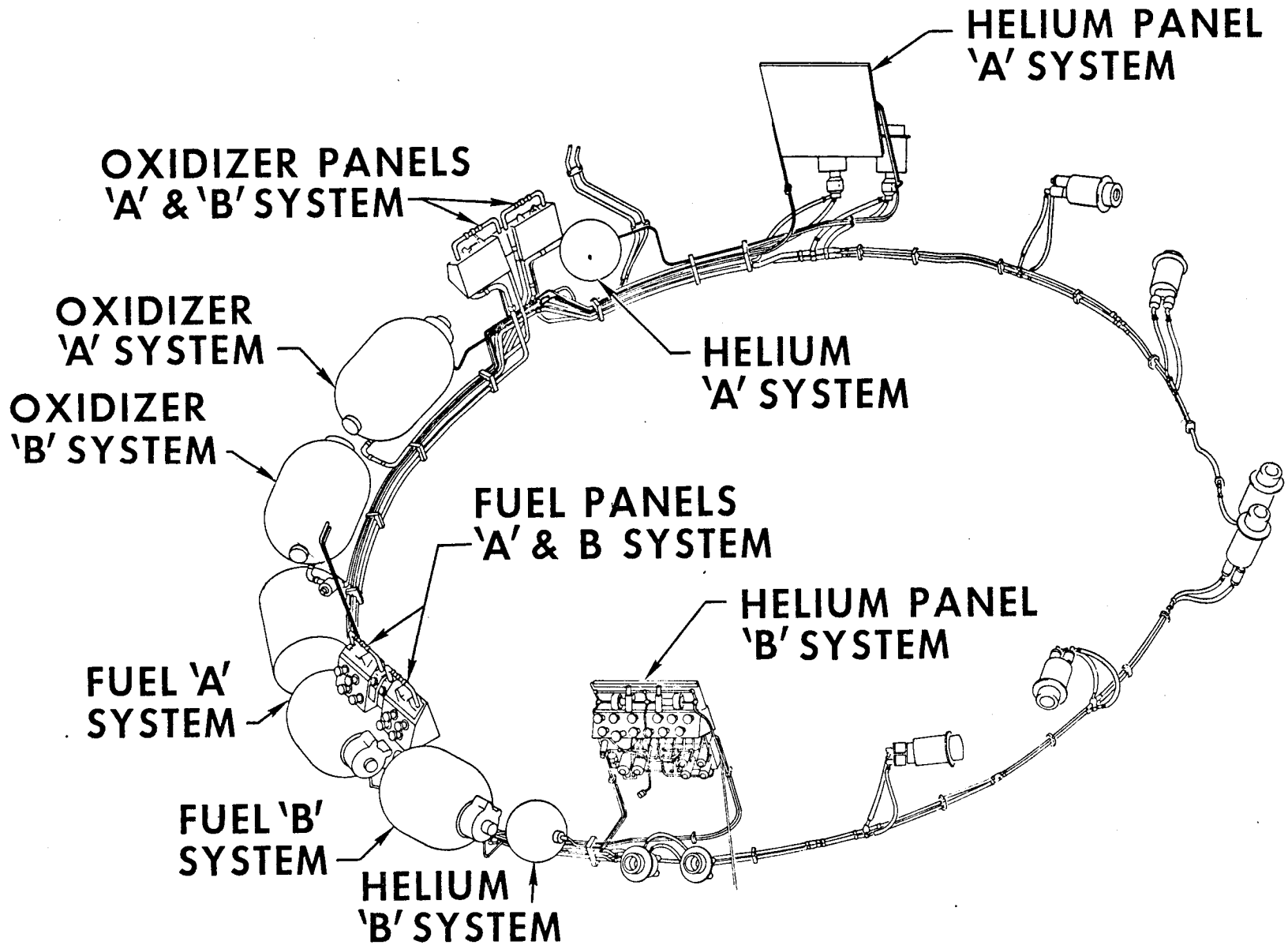

NORTH AMERICAN AVIATION, INC.
SPACE AND INFORMATION SYSTEMS DIVISION

9-63 AP 33952

SERVICE MODULE RCS

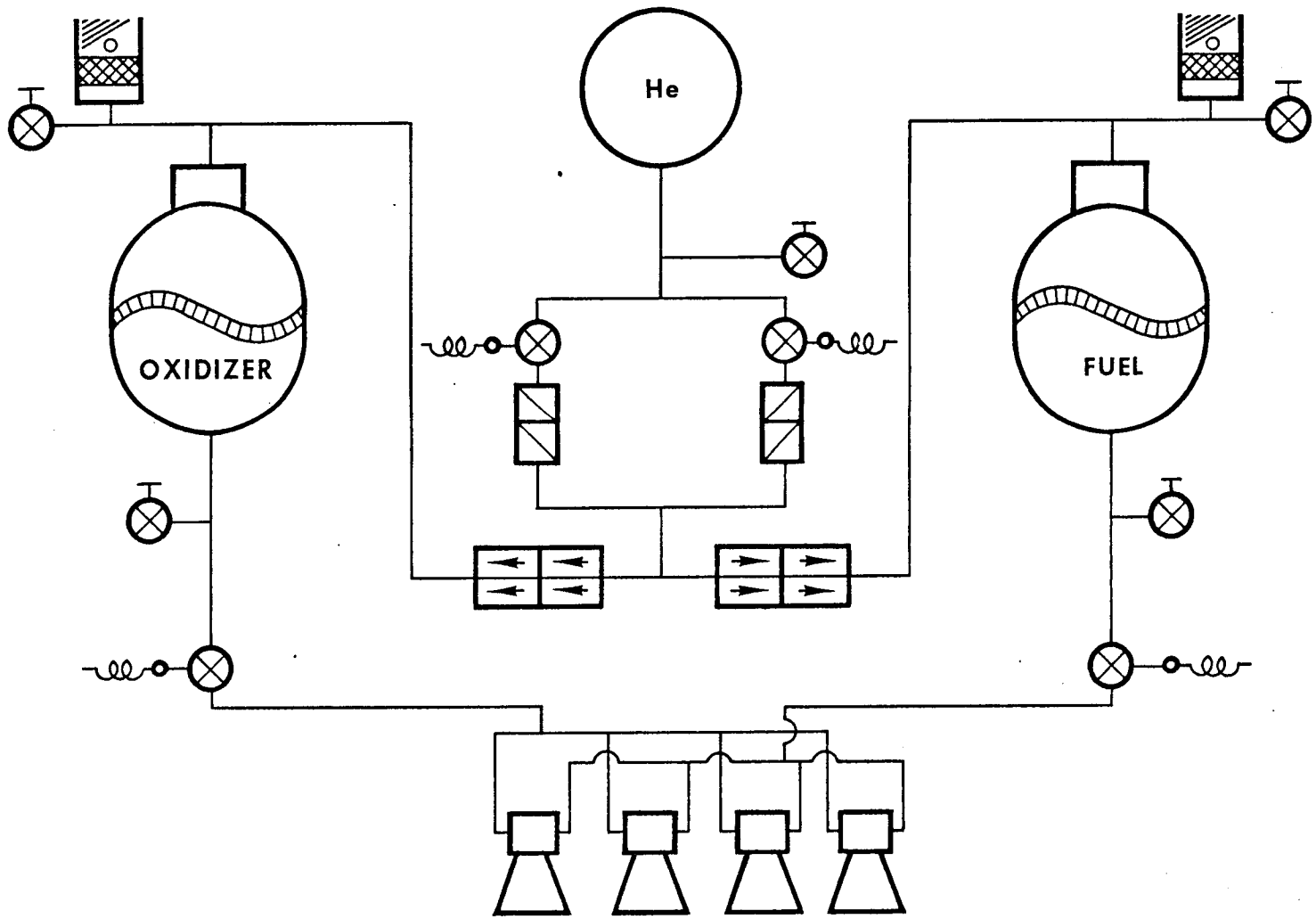

RCS PERFORMANCE

	CM	SM
ENGINE THRUST	91 LB	100 LB
MIXTURE RATIO, °/F	2.0	2.0
OPERATION	PULSE MODE	PULSE & STEADY
RUN TIME	30 SEC, MAX PULSE 100 SEC TOTAL *	500 SEC, MAX STEADY 1000 SEC, TOTAL
COOLING	ABLATIVE	RADIATION
I_{sp}	270 SEC	300 SEC
MINIMUM PULSE	2 LB-SEC	0.6 LB-SEC
FLUID CAPACITY PER SYSTEM	89.2 LB OXIDIZER 45.2 LB FUEL	138.1 LB OXIDIZER 69.7 LB FUEL
HELIUM CAPACITY PER SYSTEM	0.209 CU FT AT 4150 PSIG	0.209 CU FT AT 4150 PSIG
PROPELLANT	N_2O_4 MMH	N_2O_4 50% N_2H_4-50% UDMH
TANKS	TITANIUM, POSITIVE EXPULSION	

* AFTER ALL ACCEPTANCE TESTING

CM & SM RCS PRESSURES

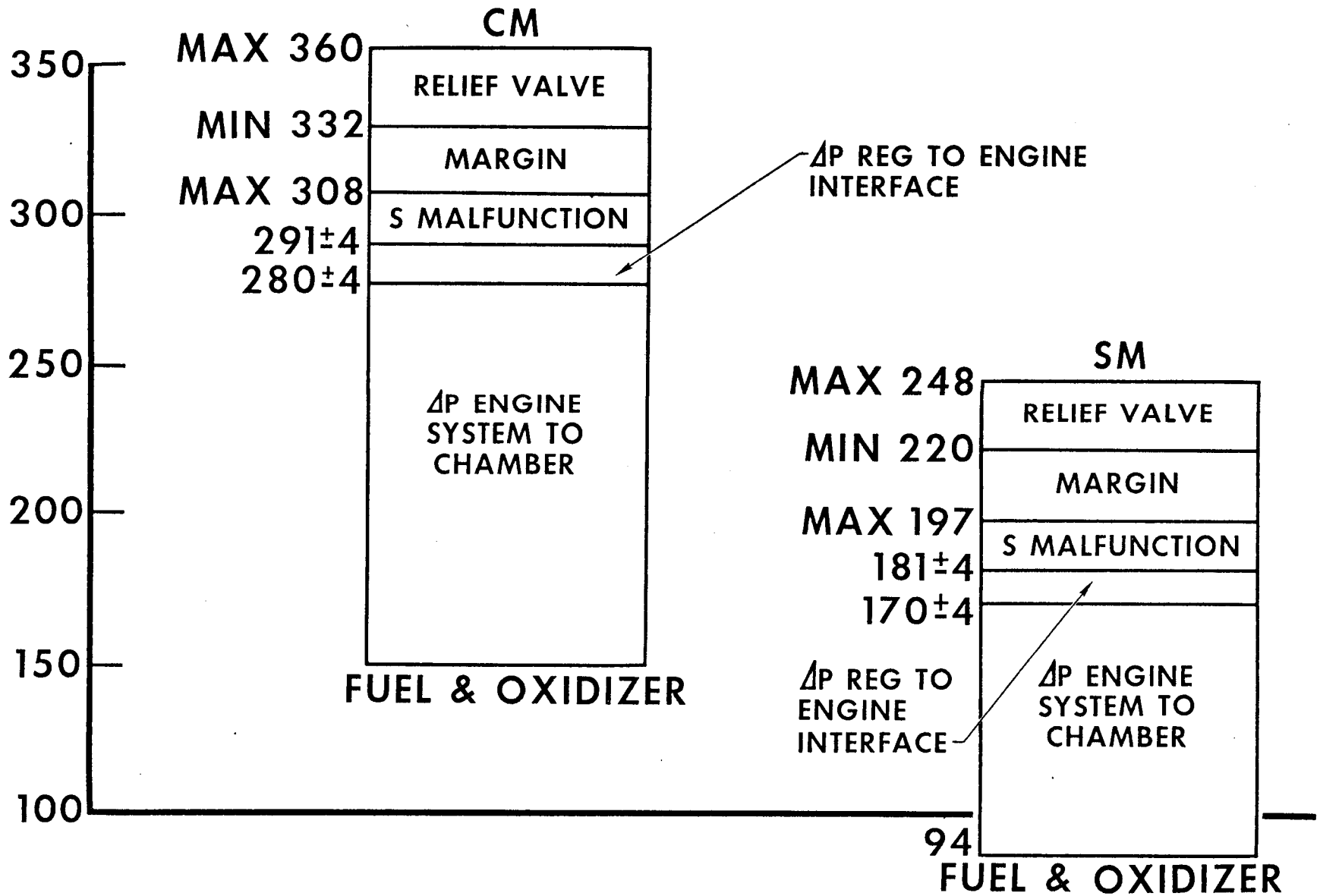

NORTH AMERICAN AVIATION, INC.
SPACE AND INFORMATION SYSTEMS DIVISION

9-63 AP33839

THRUST CHAMBER DESIGN REQUIREMENTS

	CM ENGINE	SM ENGINE
CONSTRUCTION	ABLATIVE WITH NONERODING THROAT	RADIATION COOLED
C^*	5220	5330
C_F	1.66	1.81
EXPANSION RATIO	9:1 PLUS ADAPTER	40:1
MINIMUM IMPULSE BIT	2 LB-SEC	0.6 LB-SEC
MAX PULSING RATE	30 CPS	25 CPS

CM RCS ENGINE
$\epsilon = 9:1$ - PROTOTYPE CONFIGURATION

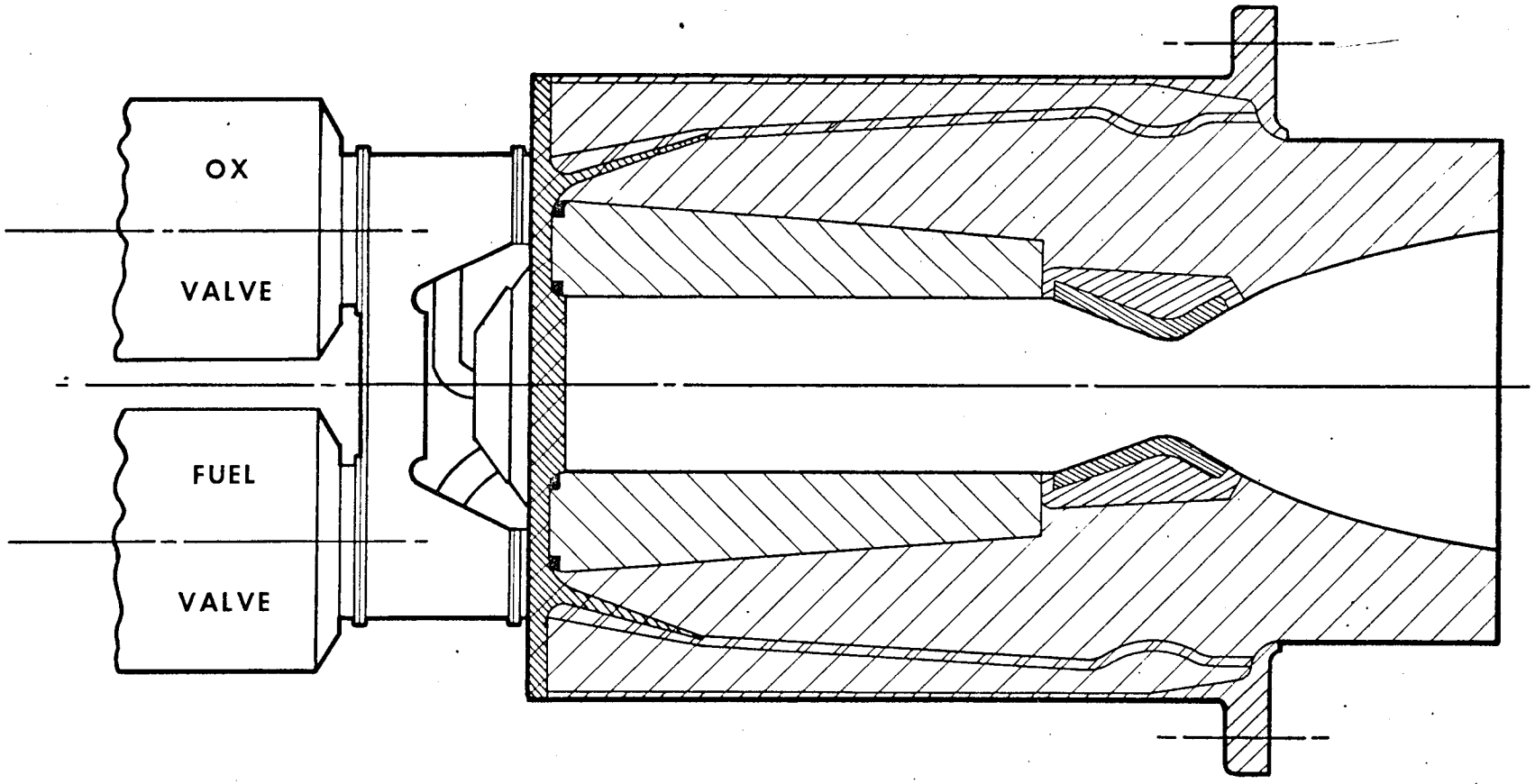

SERVICE MODULE RCS ENGINE

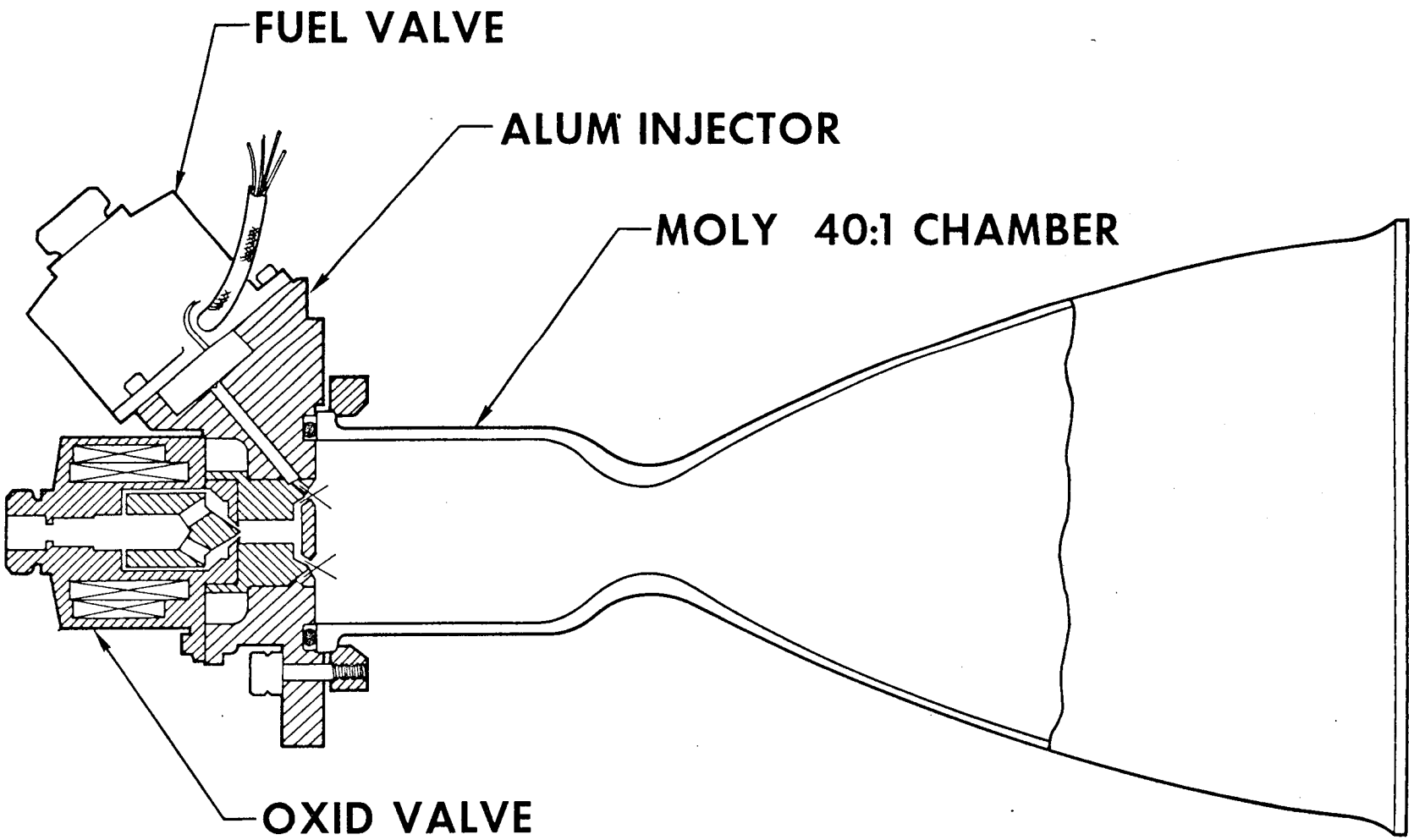

REACTION CONTROL SYSTEM PROPELLANT TANK

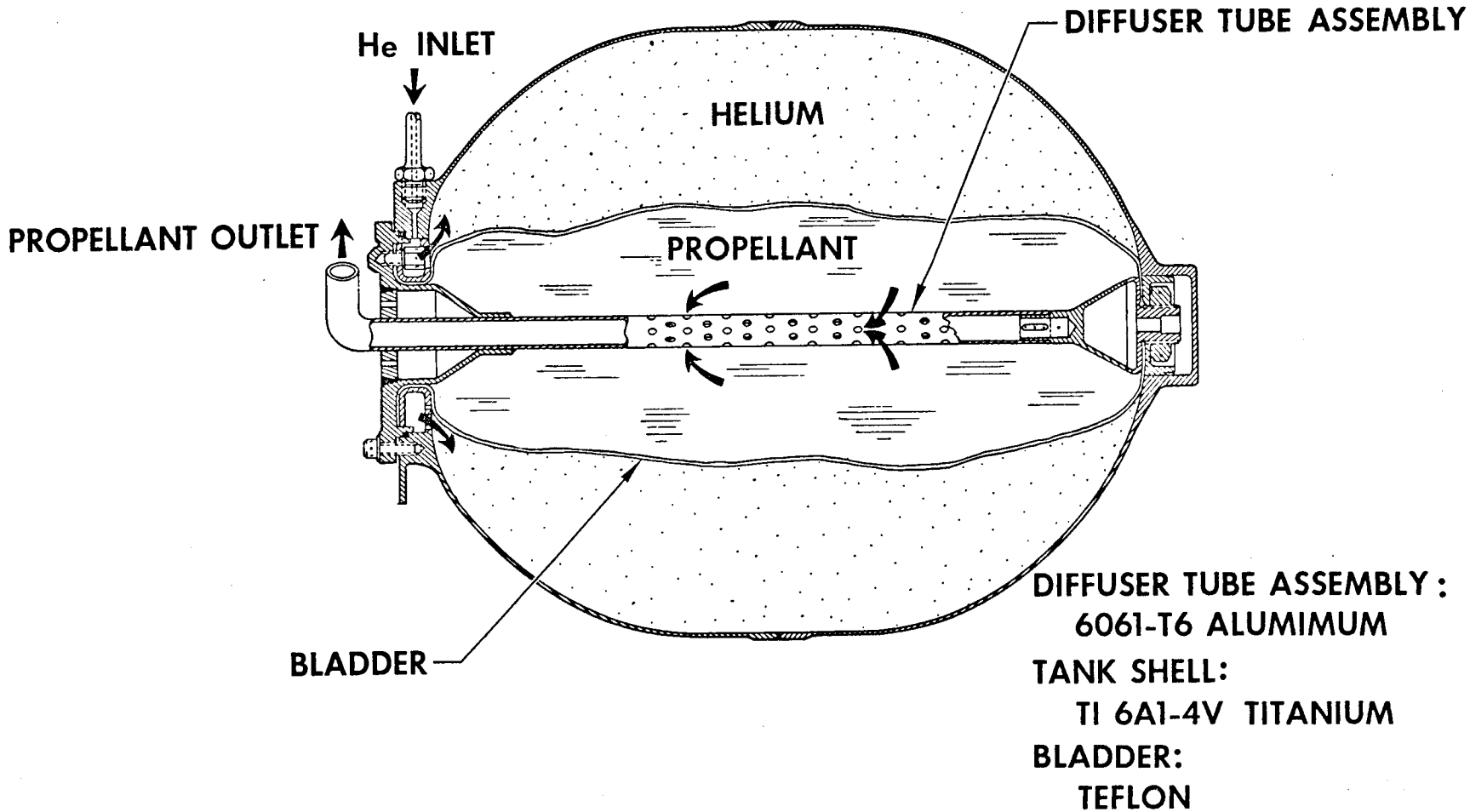

RCS ENGINE VALVES

REQUIREMENTS

	SM	CM
OPEN TIME	7.5 MS	8 MS
CLOSE TIME	5.5 MS	6 MS
CURRENT	2.0 AMP	2.0 AMP
VOLTAGE		
NORMAL	28 V	28 VDC
LIMITING	21-32 V	21-32 VDC
SEAT LEAKAGE	5CC/HR N_2	5CC/HR N_2
CURRENT	0.5 AMPS	1 AMP(MAX) AT 28 VDC

SM PROTOTYPE DESIGN

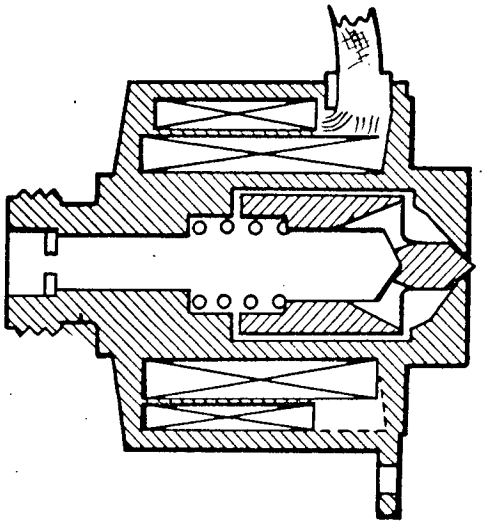

CM PROTOTYPE DESIGN

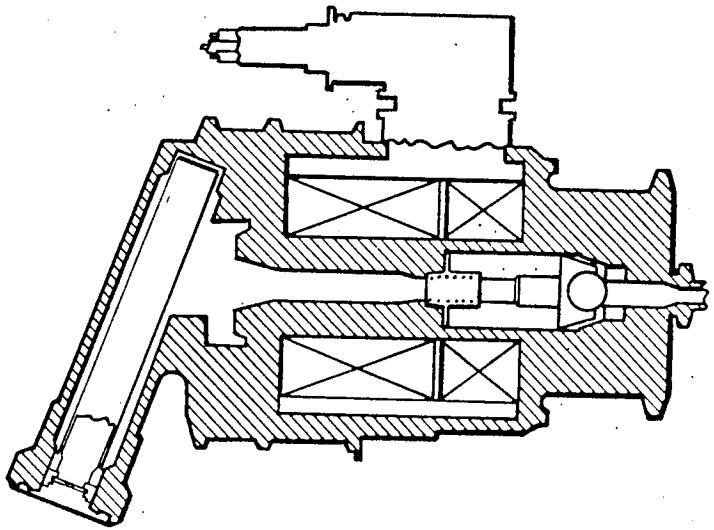

RCS PROGRAM PHASING

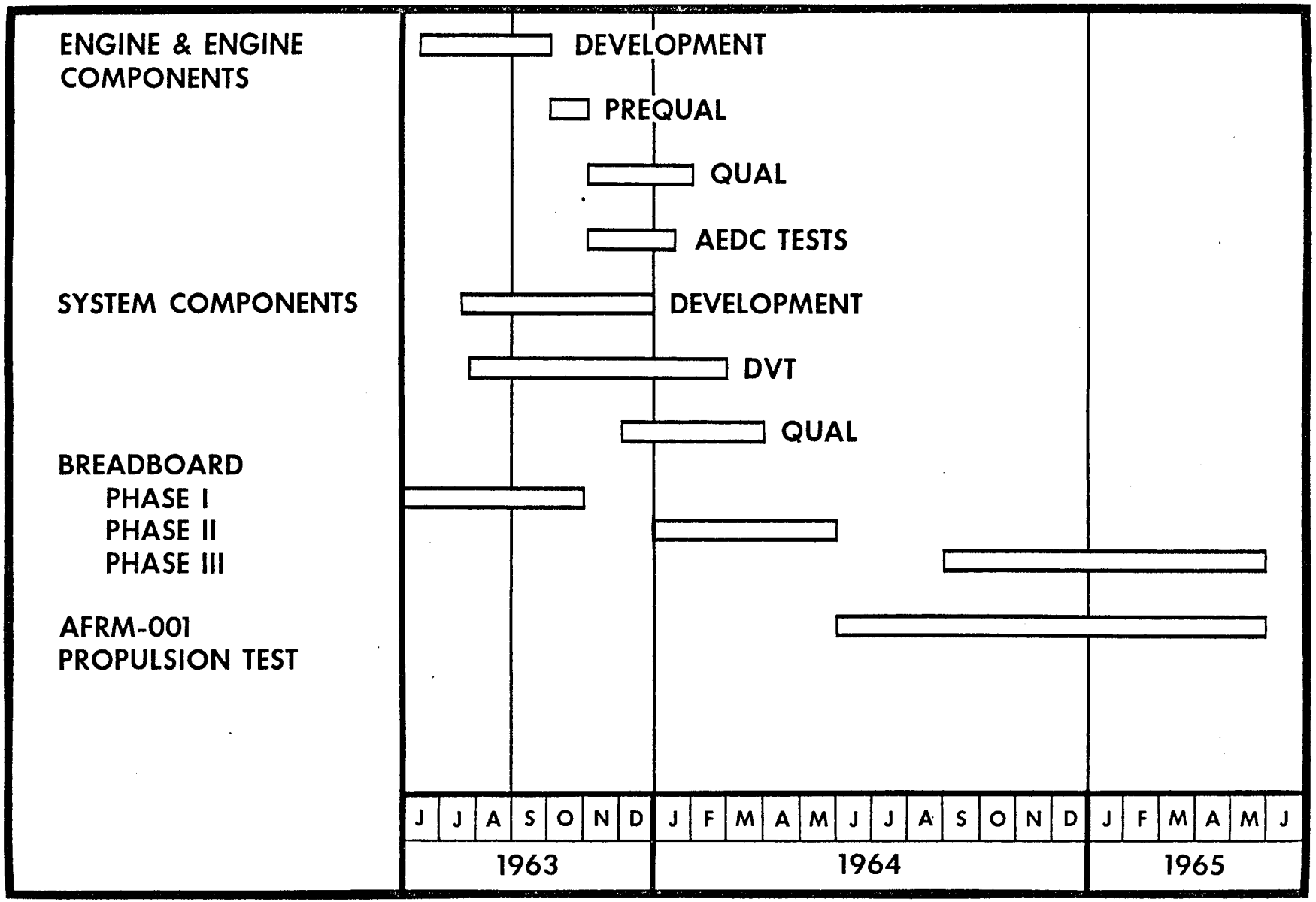

CM BREADBOARD

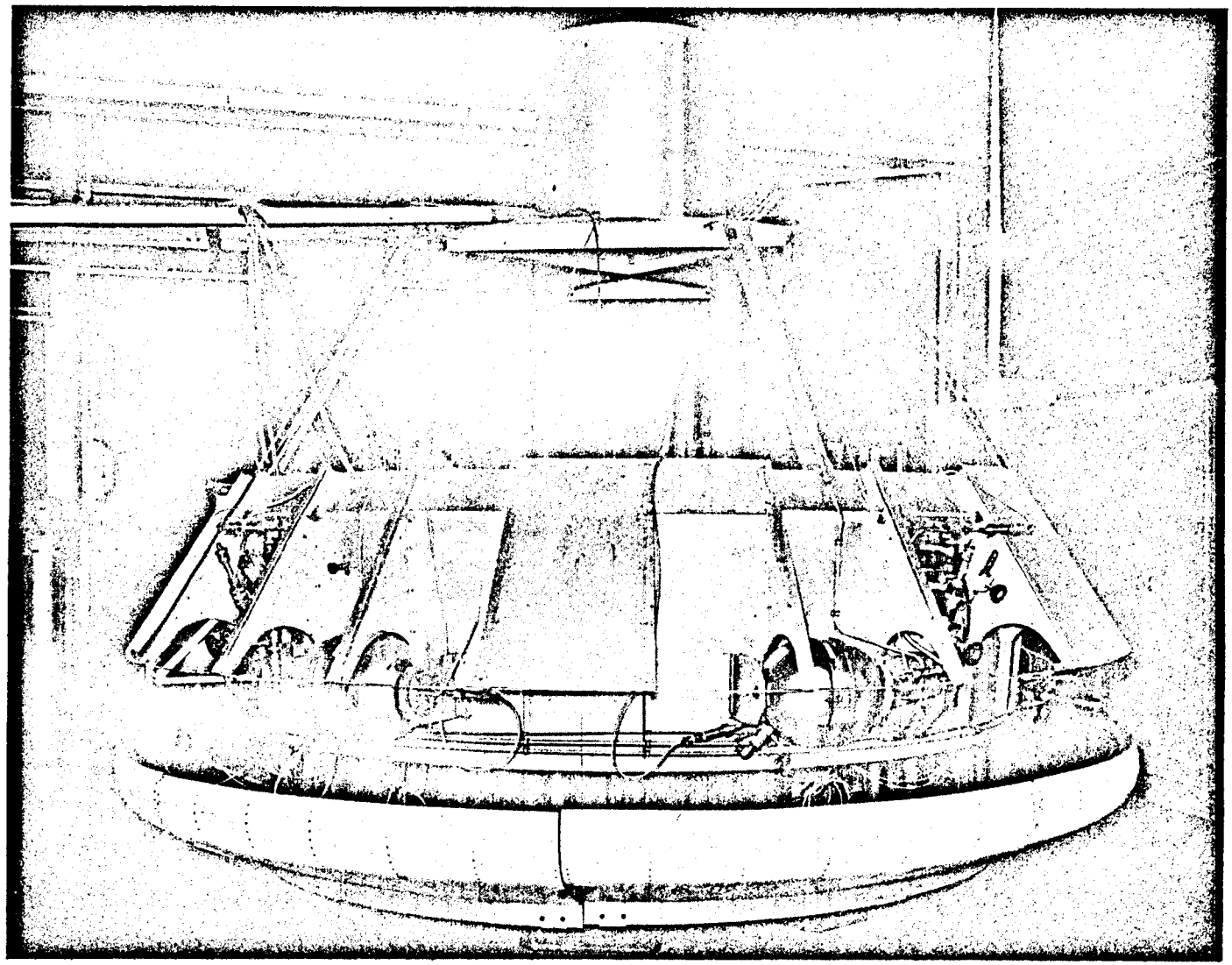

SM BREADBOARD

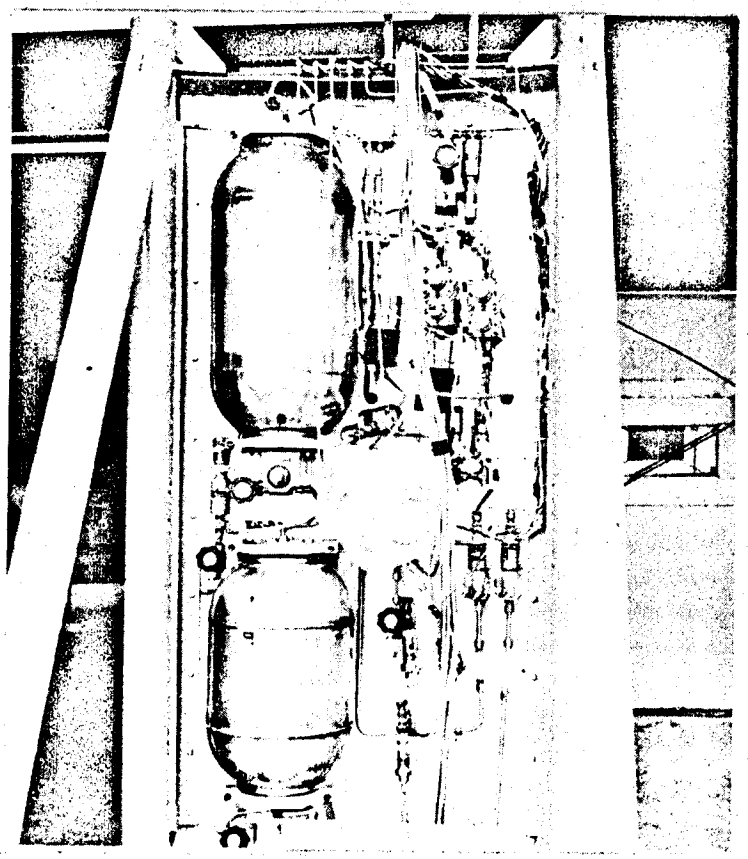

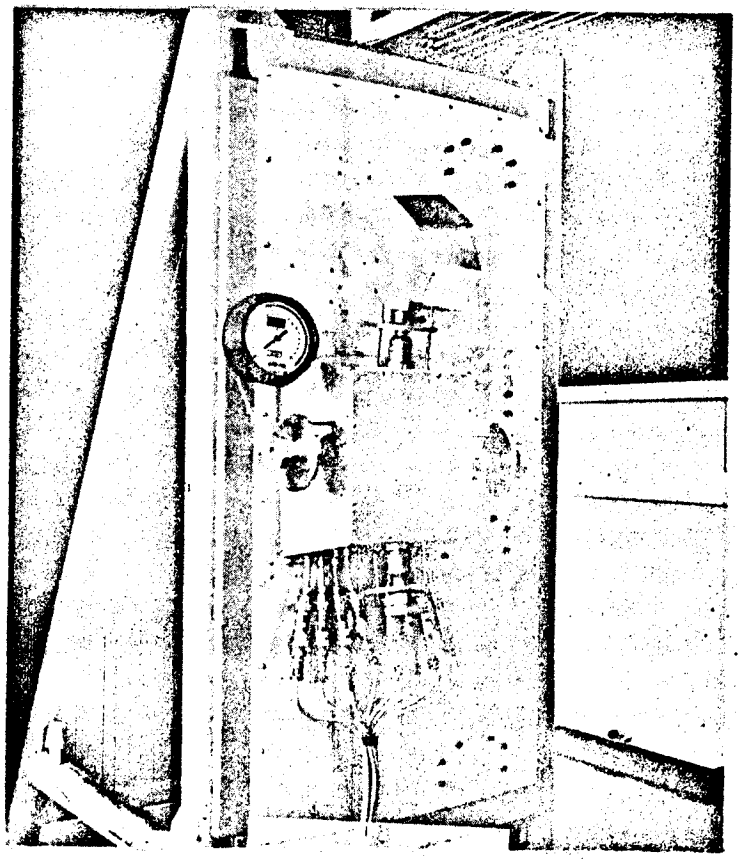

NORTH AMERICAN AVIATION, INC.
SPACE AND INFORMATION SYSTEMS DIVISION

9-63 AP 33746

APOLLO

LAUNCH ESCAPE SYSTEM

PROPULSION

NORTH AMERICAN AVIATION, INC.
SPACE AND INFORMATION SYSTEMS DIVISION

9-63 AP33759

LAUNCH ESCAPE SYSTEM STRUCTURE

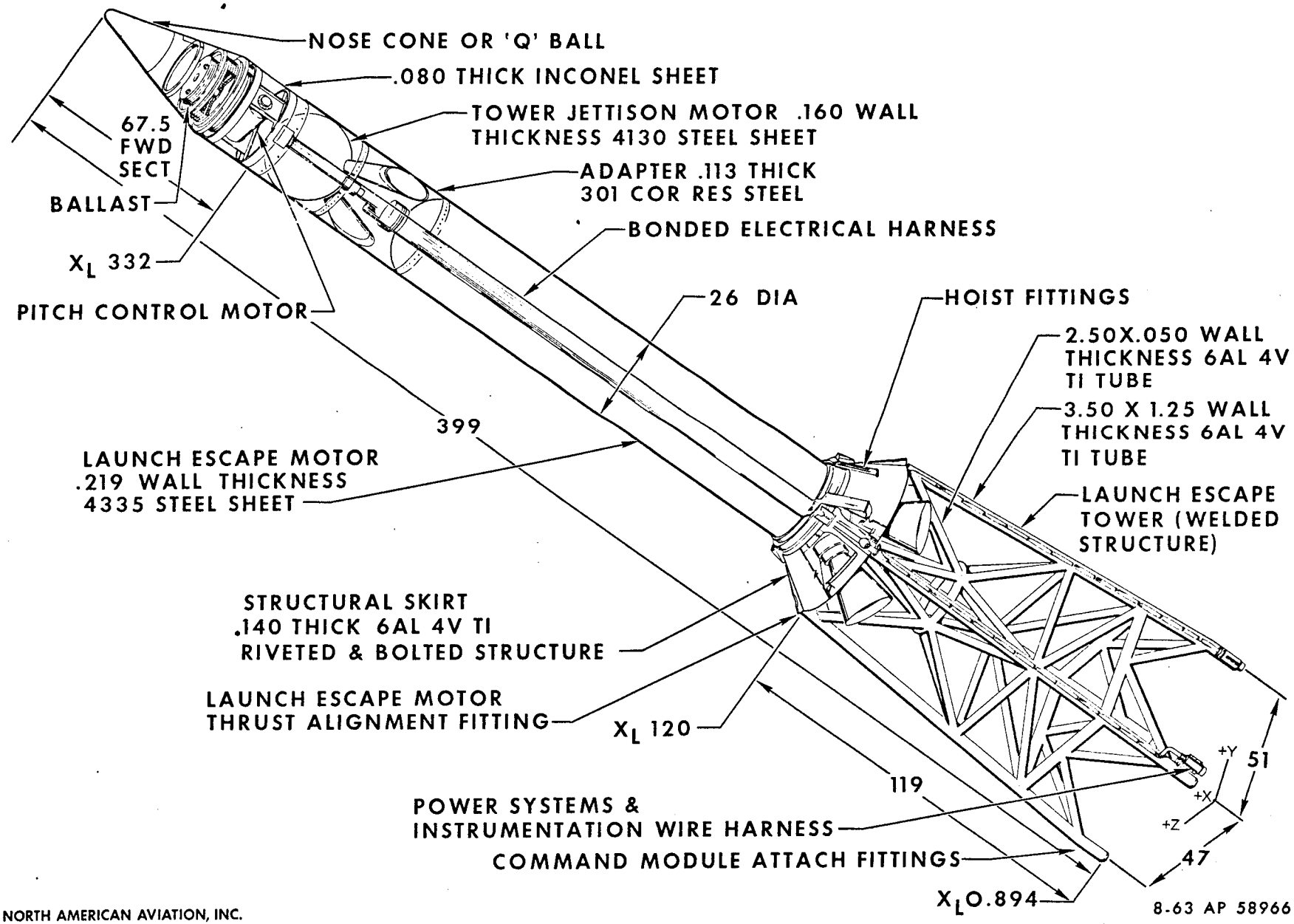

[redacted]

ROCKET MOTOR DESIGN CHARACTERISTICS
SEA LEVEL 70°F

	LAUNCH ESCAPE MOTOR	TOWER JETTISON MOTOR	PITCH CONTROL MOTOR
THRUST: MAX	151,700 LB	33,363 LB	2550 LB
AVERAGE	139,400 LB	33,000 LB	2170 LB
BURNING TIME	3.23 SEC	1.12 SEC	0.6215 SEC
WT LOADED	4826 LB	535 LB	48.5 LB
WT OF PROPELLANT	3160 LB	204	8.87 LB
NOZZLES	4	2	1
TEMPERATURE	+20 TO +140 OPERATIONS	+20 TO +140 OPERATING	OPERATING +20 TO +140
	-20TO +140 STORAGE	OPERATING -20 TO +140	OPERATING -20 TO +140

[redacted]

Group 4 Downgraded at 3 year intervals; declassified after 12 years

9-63 AP33760

This document con[redacted] information affecting the national defense of the United States with[redacted] meaning of the Espionage Laws, Title 18 U.S.C. Section 793 and 794. Its transmission or revelation of its contents in any manner to an unauthorized person is prohibited by law.

[redacted]

THRUST PERFORMANCE

SEA LEVEL

LAUNCH ESCAPE MOTOR

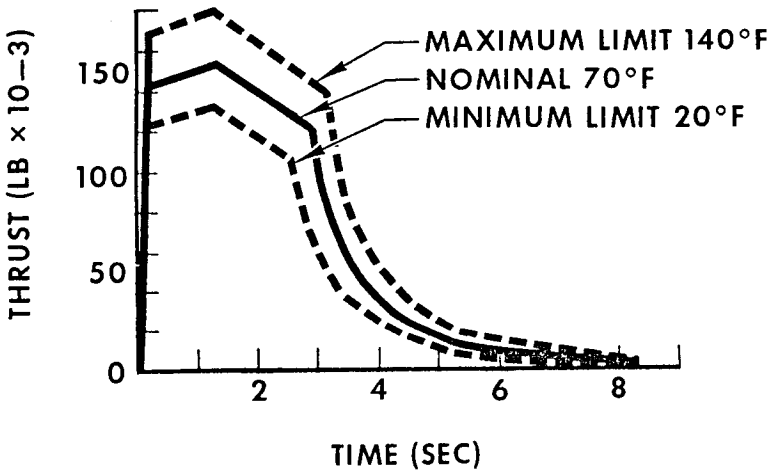

PITCH CONTROL MOTOR

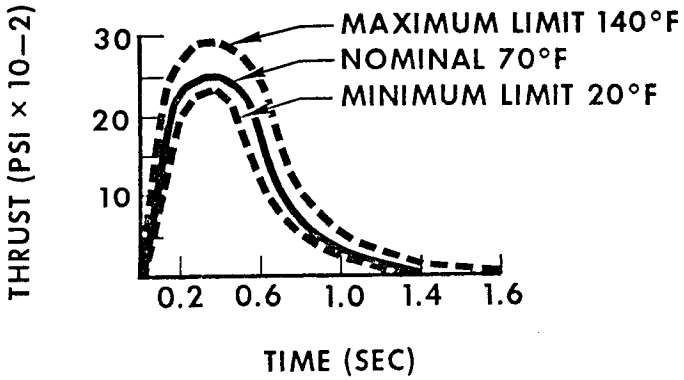

TOWER JETTISON MOTOR

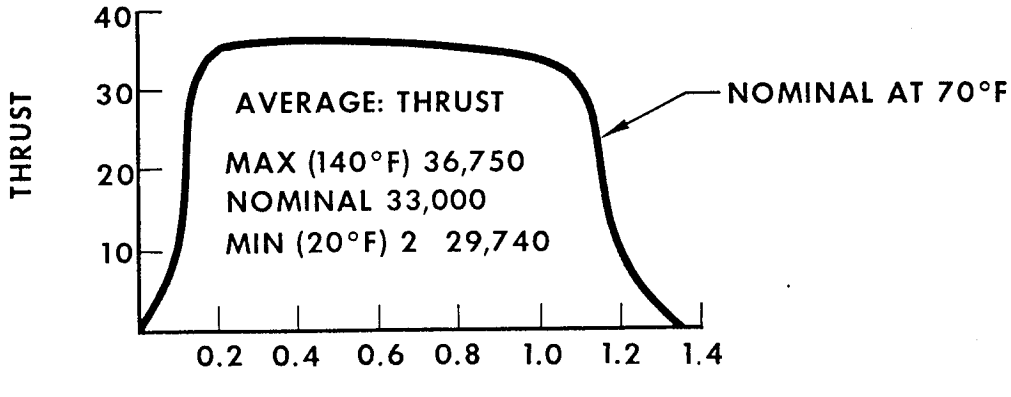

p 4 Downgraded at 3 year intervals; declassified after 12 years

This document contains information affecting the national defense of the United S[redacted] within the meaning of the Espionage Laws, Title 18 U.S.C. Section [redacted]nd 794. Its transmission or revelation of its contents in any manner to an unauthorized person is prohibited by law.

THRUST VECTOR ANGLES

LAUNCH ESCAPE MOTOR

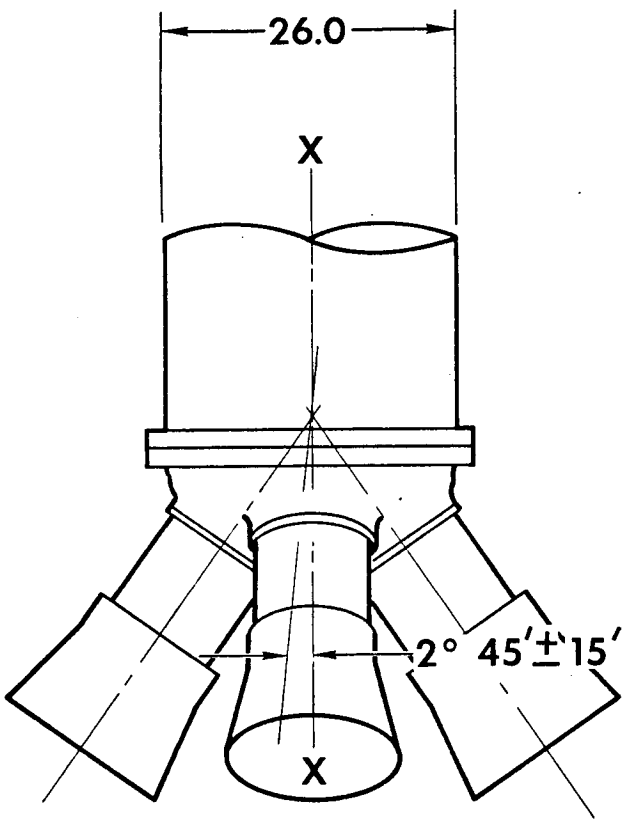

TOWER JETTISON MOTOR

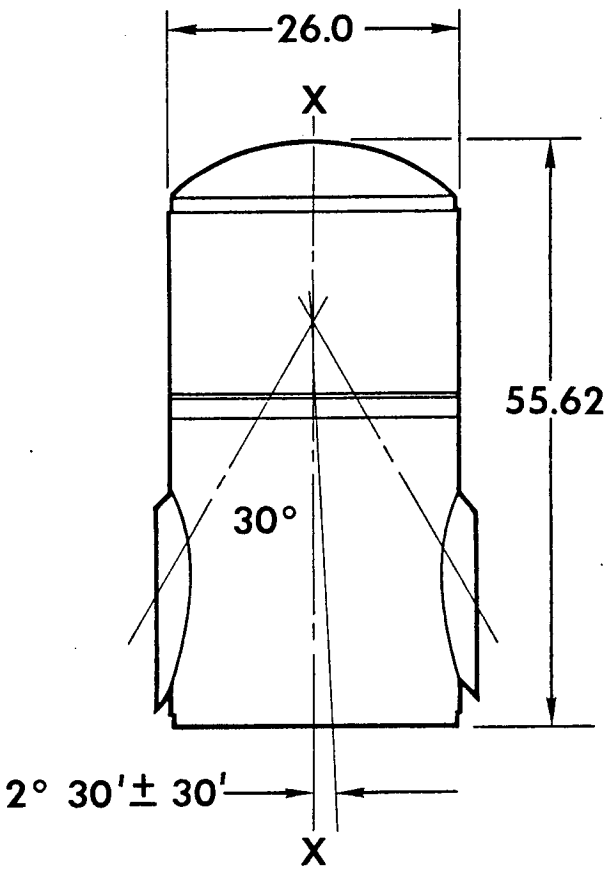

[redacted]

RELIABILITY CONSIDERATIONS

DESIGN REQUIREMENT	L.E.MOTOR	TJM	PCM
	0.998	0.99995	0.999

- MOTORS NOT REDUNDANT
- HIGH DESIGN MARGIN
- CONSERVATIVE DESIGN, DERATED
- IGNITION REDUNDANCY

This do[redacted] defense of the [redacted] S.C. Section 793 and 794. Its transmission or revelation [redacted] manner to an unauthorized person is prohibited by law.

DEVELOPMENT PROBLEMS

- BALANCE BETWEEN BALLISTIC REQUIREMENTS & GRAIN STRUCTURAL INTEGRITY

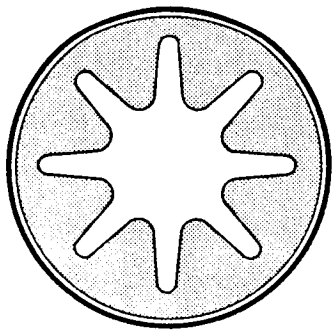

LAUNCH ESCAPE MOTOR

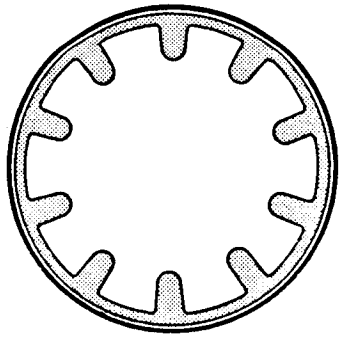

TOWER JETTISON MOTOR

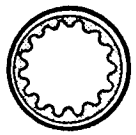

PITCH CONTROL MOTOR

Thi[redacted] the United States within the [redacted] U.S.C. Section 793 and 794. Its transmission or revelation of its contents in any manner to an unauthorized person is prohibited by law.

NOZZLE DESIGN

LAUNCH
ESCAPE MOTOR

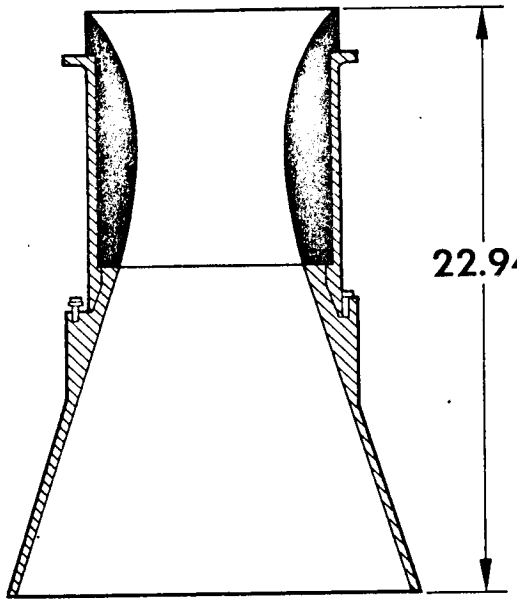

TOWER
JETTISON MOTOR

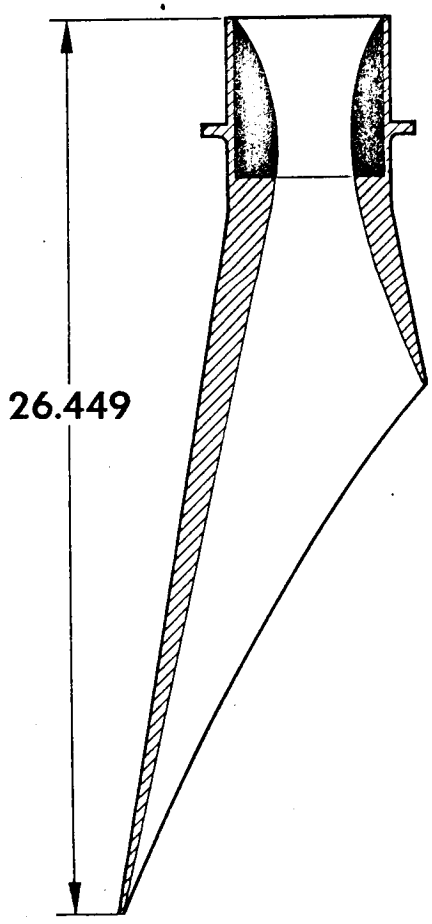

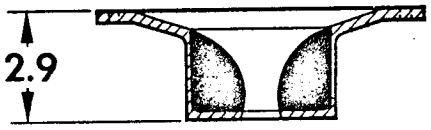

PITCH
CONTROL MOTOR

IGNITION SYSTEM REDEVELOPMENT

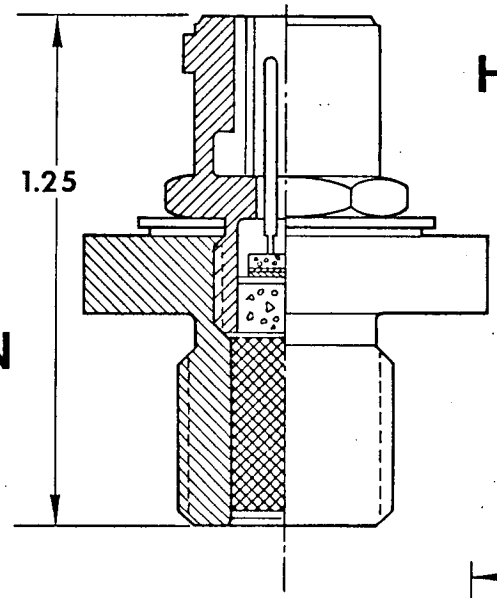

HOTWIRE IGNITER CARTRIDGE

TOWER JETTISON MOTOR PYROGEN

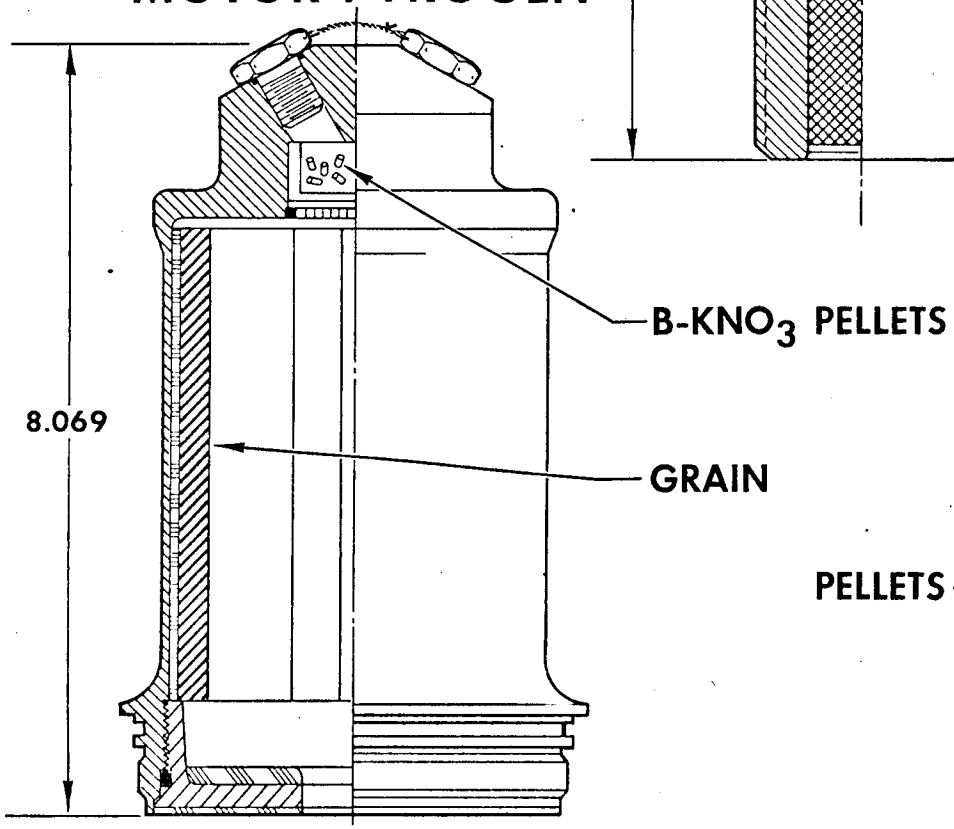

PITCH CONTROL MOTOR IGNITER

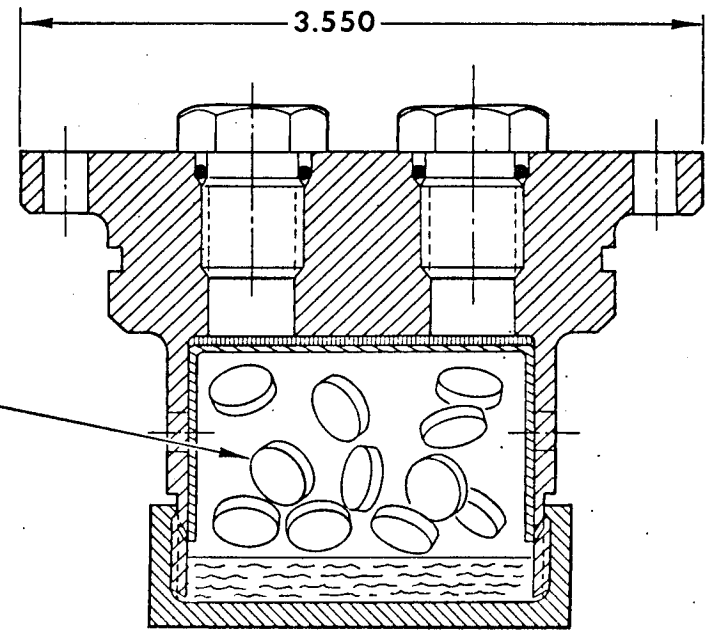

[redacted]

LES SCHEDULES

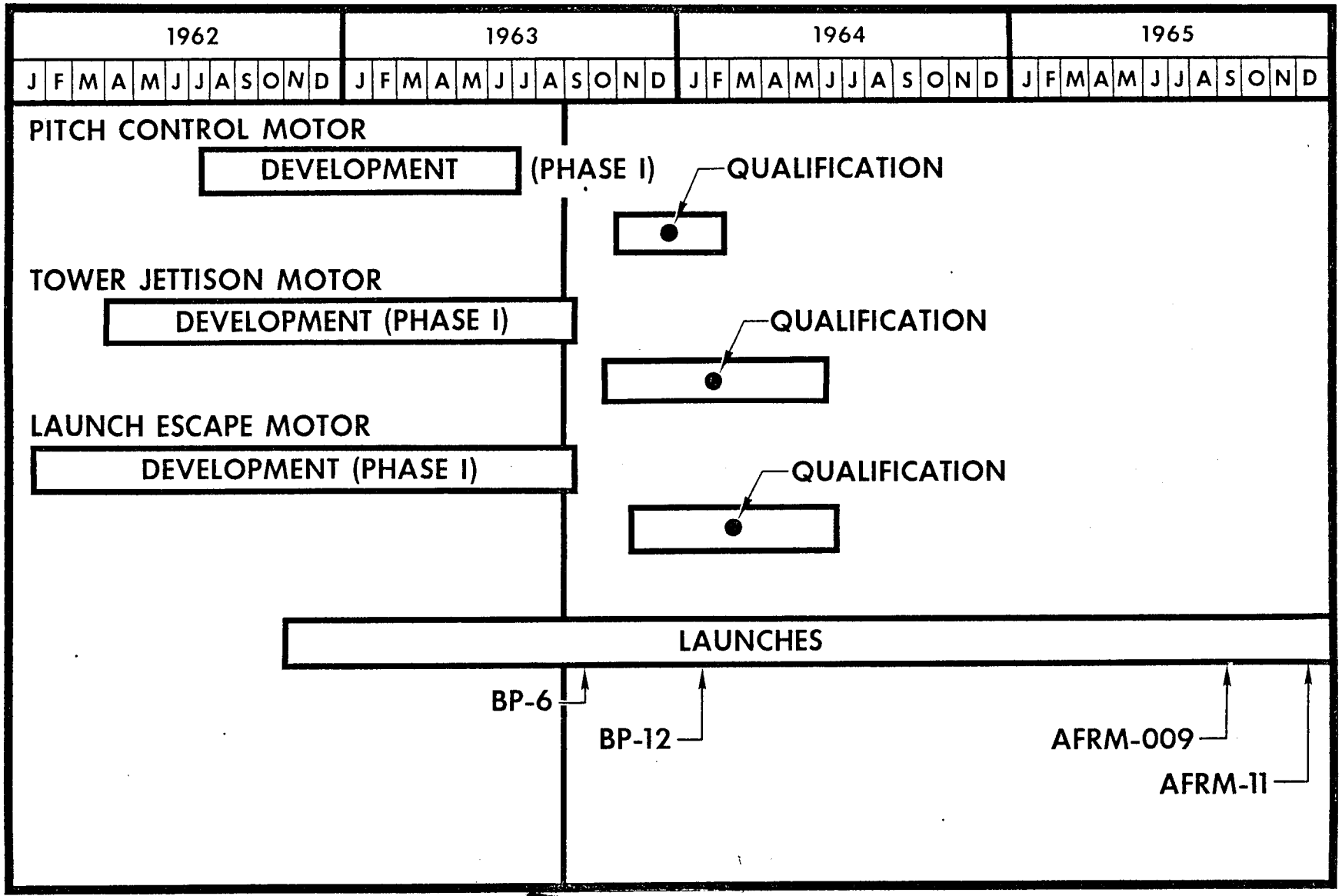

NORTH AMERICAN AVIATION, INC.
SPACE AND INFORMATION SYSTEMS DIVISION

[redacted]
Group 4 [redacted] intervals;
declassified after 12 years

9-63 AP33767 A

[redacted] of the [redacted]
Section 793 and 794. Its transmission or revelation of its contents in any manner to an unauthorized person is prohibited by law.

ENVIRONMENTAL CONTROL SYSTEM

NORTH AMERICAN AVIATION, INC.
SPACE AND INFORMATION SYSTEMS DIVISION

9-63 AP33773

ECS REQUIREMENTS

CABIN PRESSURE

- NOMINAL — 5.0 ± 0.2 PSI
- EMERGENCY — 3.5 PSI MIN

METABOLIC REQUIREMENTS, O_2 1.8 LB/MAN-DAY

- PLSS CHARGING
- REENTRY SUPPLY

AIR PROCESSING

- CONTROL NOXIOUS & TOXIC CONTAMINATION
- MAX PCO_2 — 7.6 MM Hg
- PRODUCTION RATE — 2.3 LB/MAN-DAY

ECS REQUIREMENTS (CONT)

CABIN TEMPERATURE	75 ± 5° F
TEMPERATURE CONTROL ELEC & ELECTRONIC EQUIPMENT RELATIVE HUMIDITY	40-70 %
RELIABILITY APPORTIONMENT	.9935
CREW SAFETY	.9997

ENVIRONMENTAL CONTROL SYSTEM

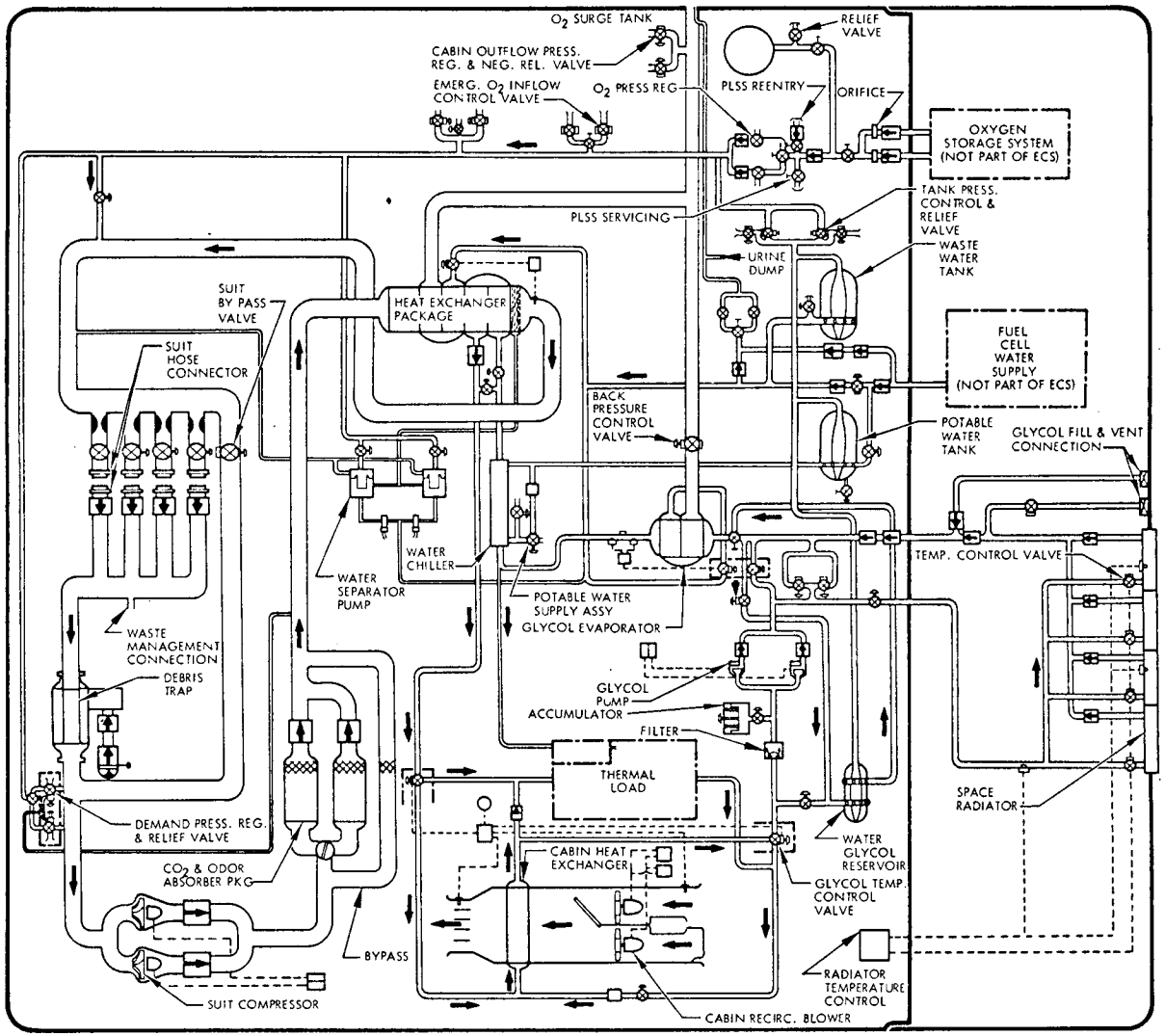

ECS INSTALLATION

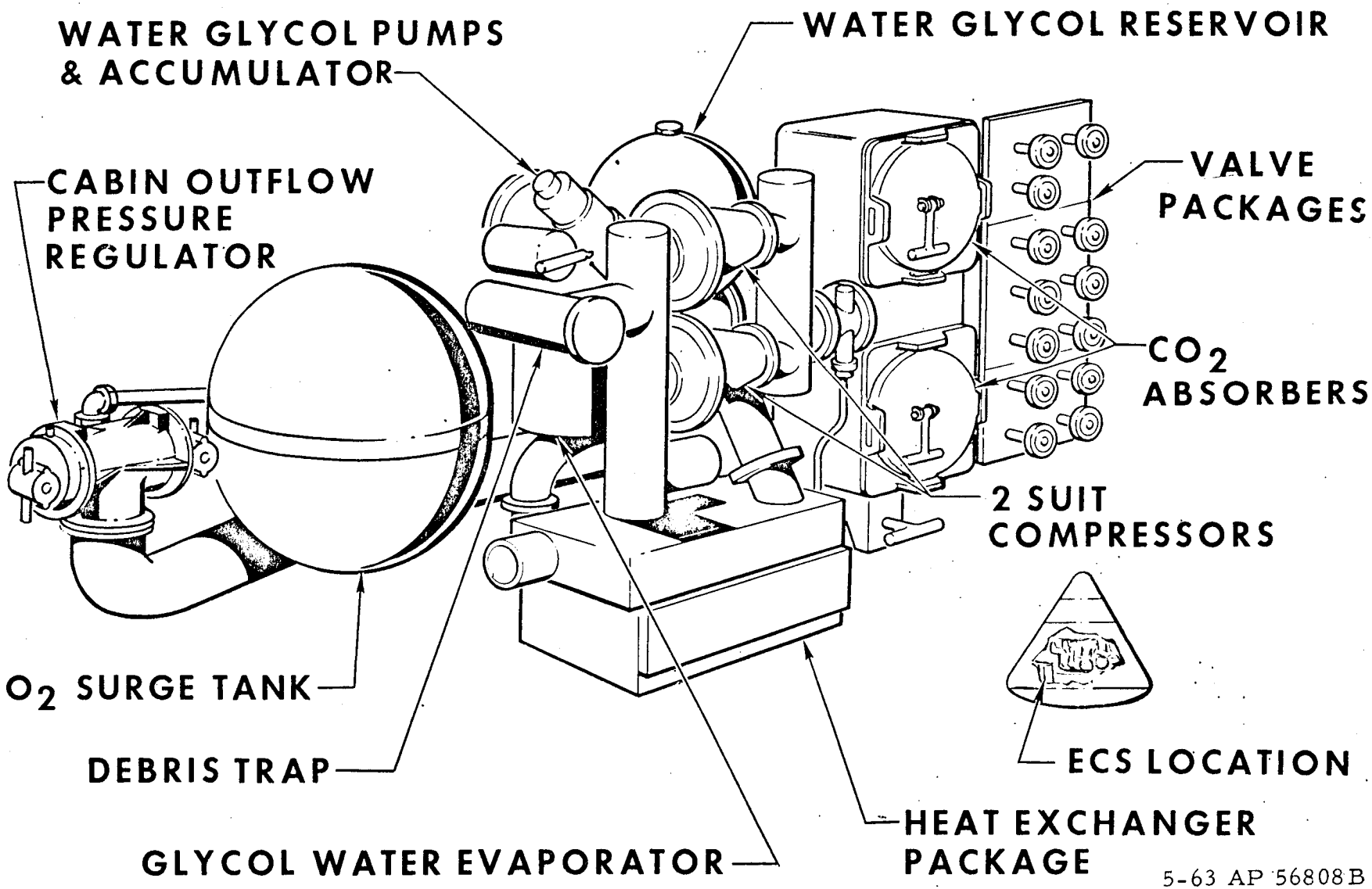

5-63 AP 56808B

NORTH AMERICAN AVIATION, INC.
SPACE AND INFORMATION SYSTEMS DIVISION

FINISHED ROLL-BOND RADIATOR PANEL

FINISHED DOUBLE SURFACED COLDPLATE

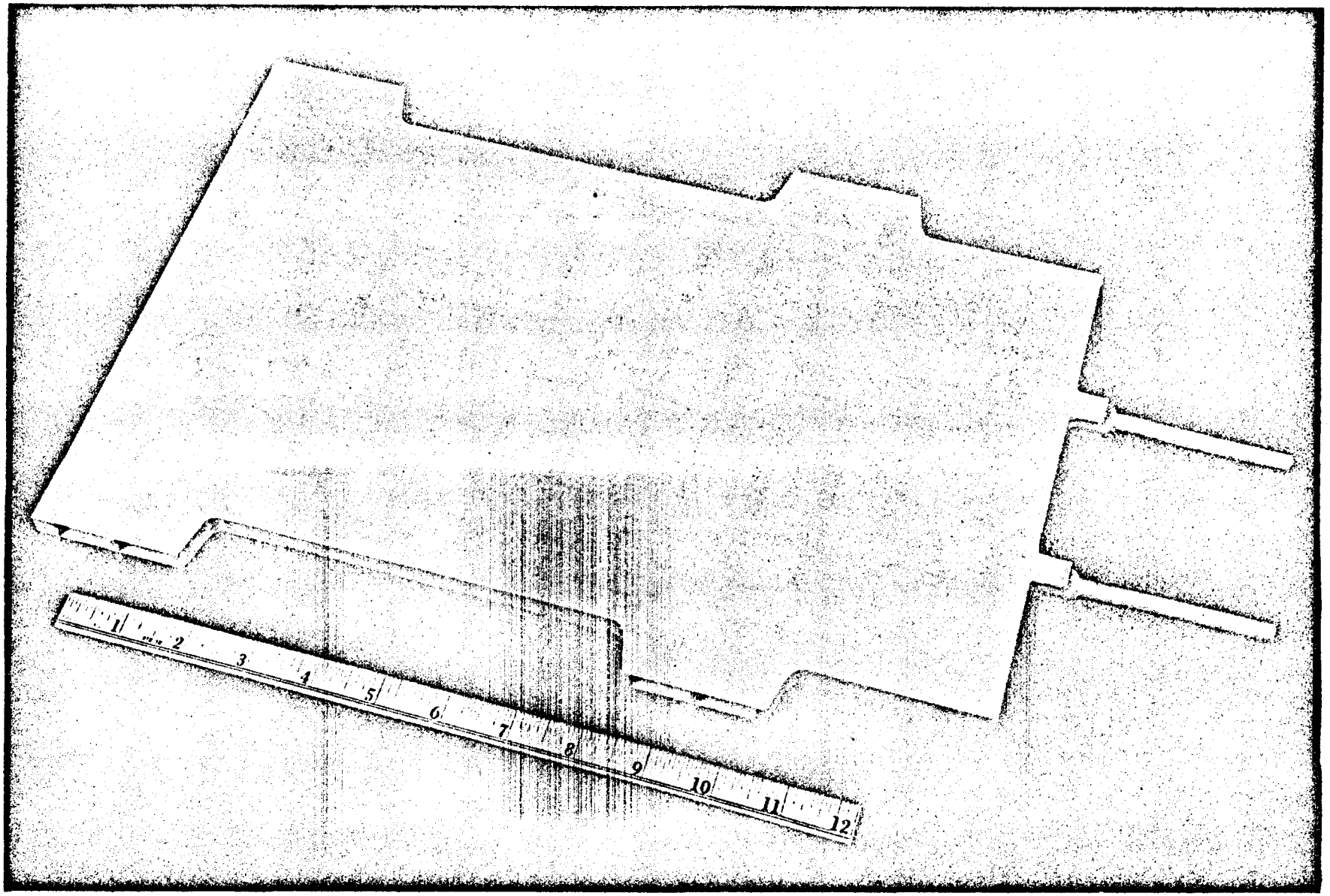

DEVELOPMENT PROBLEMS

WATER/GLYCOL LEAKAGE CONTROL

- COMPONENT REPACKAGING-REDUCED THREADED JOINTS TO METALLURGICAL JOINTS

SLOW COOLING RESPONSE IN WATER BOILER

- PROVIDE BACK PRESSURE CONTROL
- SENSE FREE MOISTURE-SAVES WATER

STEAM VENT ICING

- DISCHARGE NOZZLE DESIGN

DEVELOPMENT PROBLEMS (CONT)

RADIATOR TEMPERATURE CONTROL

- ONE MAN-LUNAR ORBIT SLEEPING PHASE
- AUTOMATIC TEMPERATURE CONTROL

RADIATOR COATINGS

- ϵ=.85 STATE OF ART
- DEVELOP ϵ=.93

ECS PROGRAM PHASING

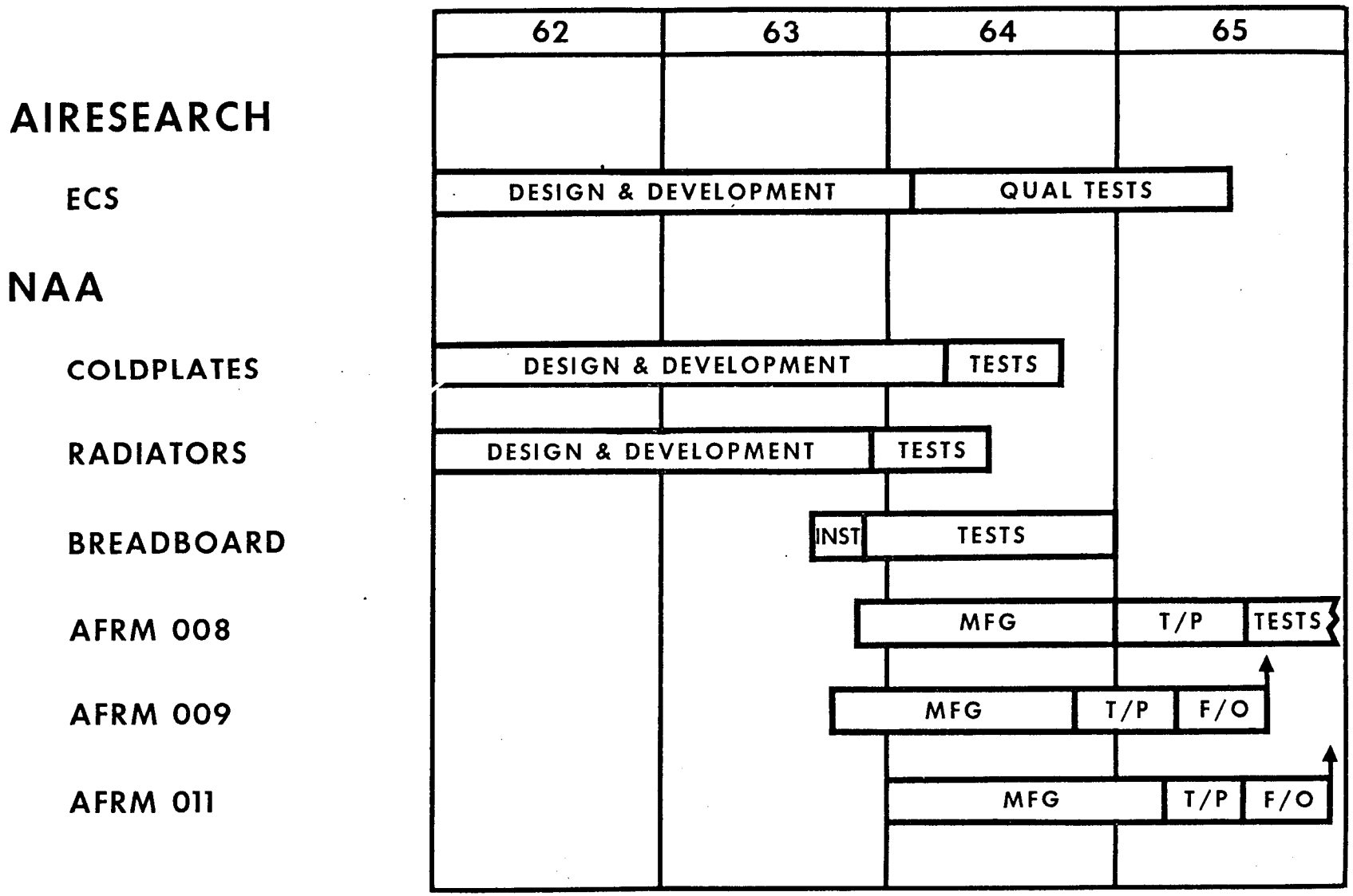

CRYOGENIC GAS STORAGE SYSTEM

NORTH AMERICAN AVIATION, INC.
SPACE AND INFORMATION SYSTEMS DIVISION

9-63 AP33768

DESIGN REQUIREMENTS

- ECS-O_2-0.425 LB/HR METABOLIC & CM LEAKAGE
- PROVIDE 2 CM REPRESSURIZATIONS
- EPS-O_2 & H_2 FUEL CELL AT PURITY OF 0.999
- SYSTEM EMPTY WEIGHT - 285 LB
- MISSION SUCCESS - .99890
- CREW SAFETY - .99999
- SAFE RETURN AFTER LOSS OF ONE H_2 OR O_2 TANK
- BACK PACK CHARGING
- CM PUNCTURE EMERGENCY FLOW
- MAX HEAT LEAK H_2 TANK = 6.2 BTU/HR/TANK
- MAX HEAT LEAK O_2 TANK = 16.0 BTU/HR/TANK
- QUANTITY BALANCE - $\pm$7.5 LB O_2, $\pm$1.0 LB H_2

CRYOGENIC STORAGE SYSTEM

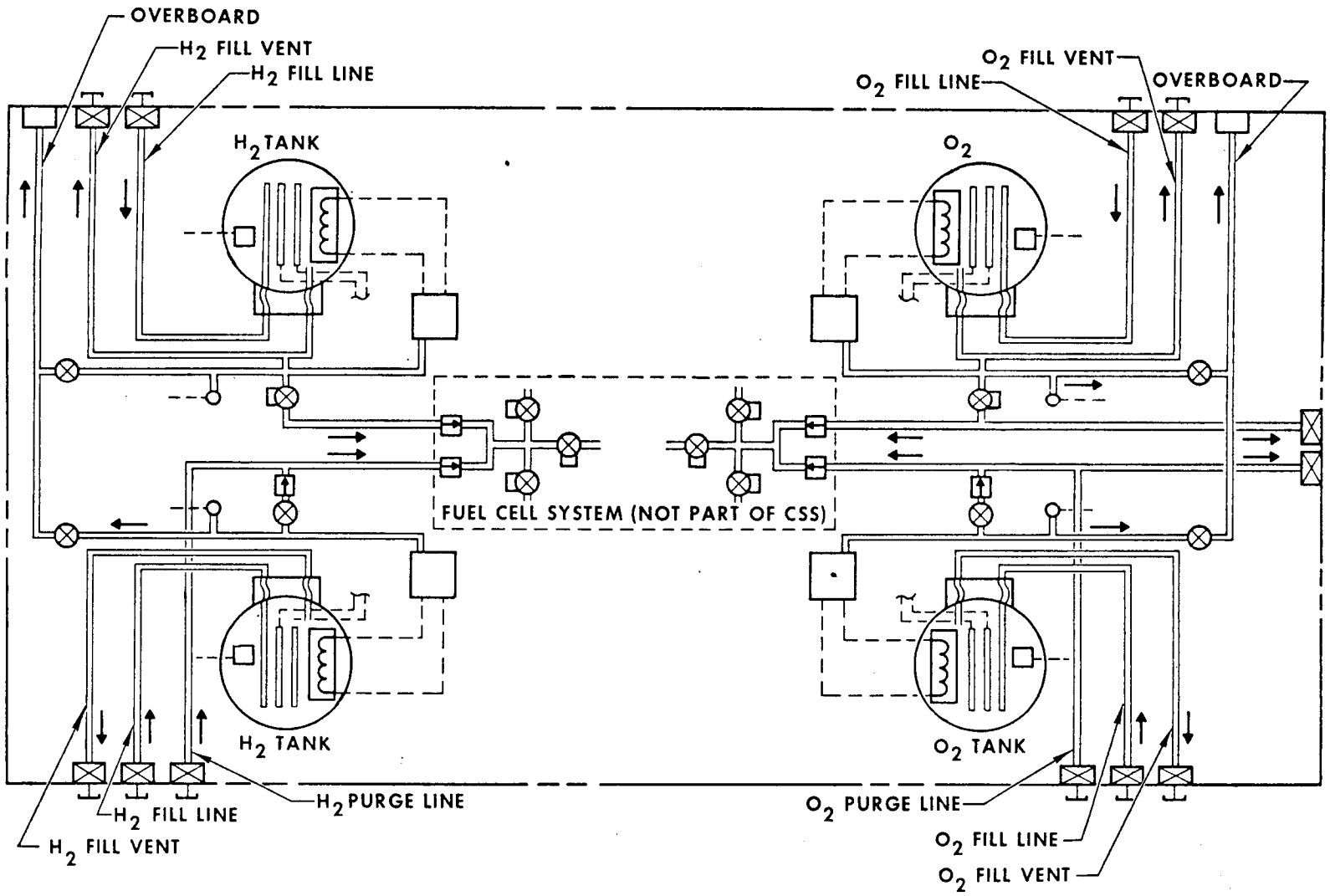

NORTH AMERICAN AVIATION, INC.
SPACE AND INFORMATION SYSTEMS DIVISION

9-63 AP 33770

CRYOGENIC STORAGE SUBSYSTEM INSTALLATION

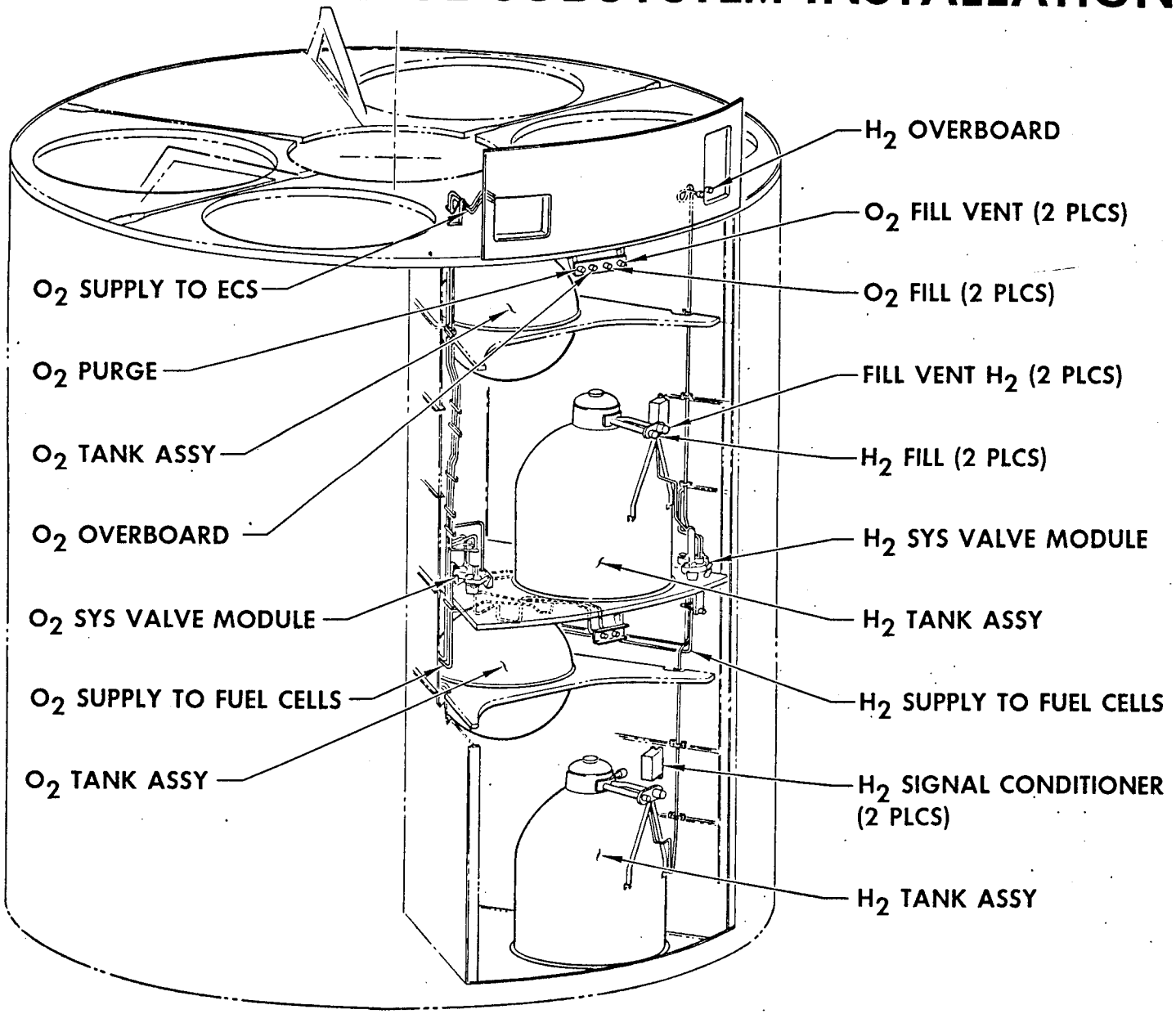

TYPICAL CRYOGENIC STORAGE TANK

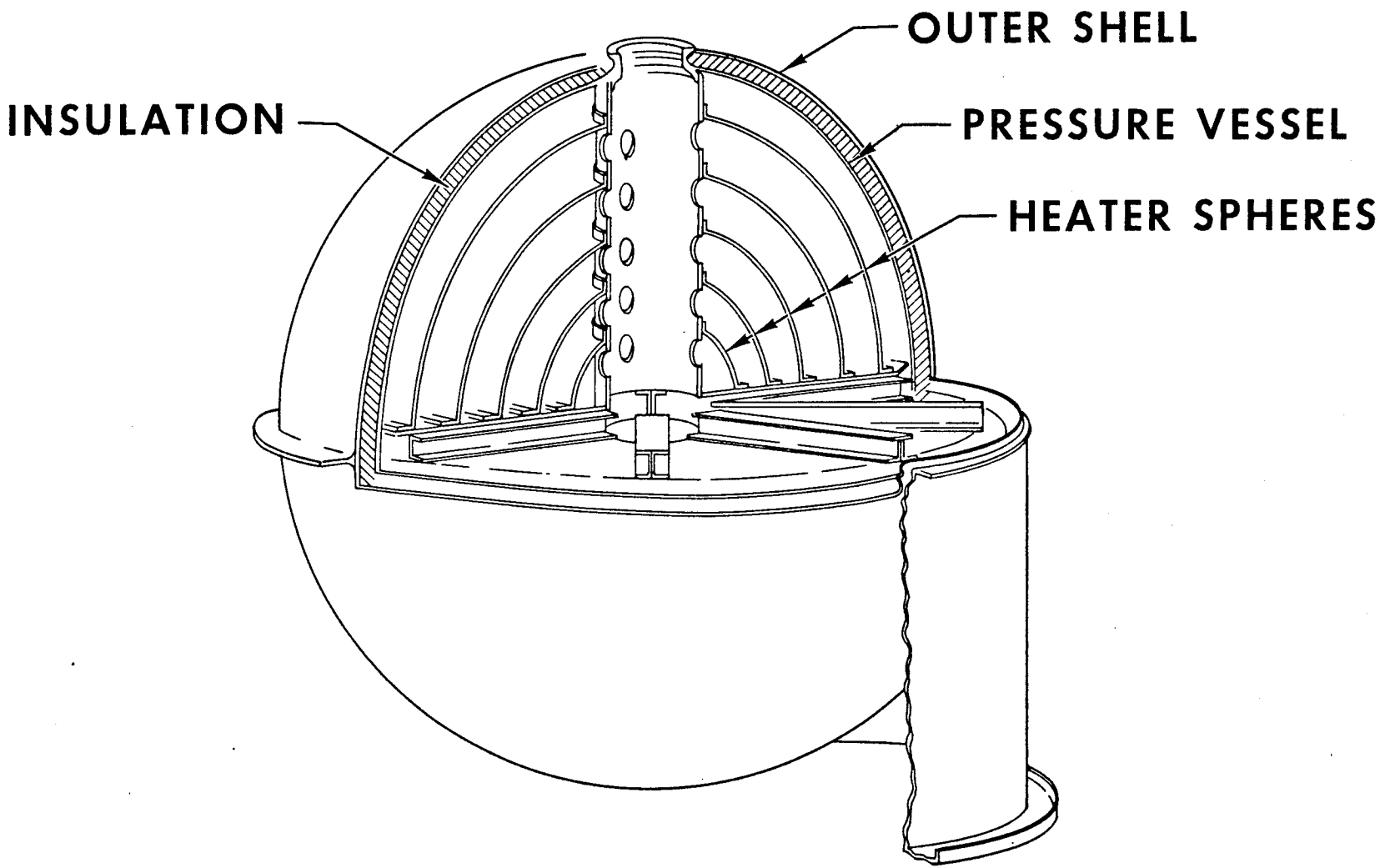

PROBLEM AREAS

- TITANIUM PRESSURE VESSEL
  - FORGINGS
  - WELD CONTAMINATION
  - MACHINING
- INSULATION
- SYSTEM WEIGHT

FUEL CELL SYSTEM

NORTH AMERICAN AVIATION, INC.
SPACE AND INFORMATION SYSTEMS DIVISION

9-63 AP33804

SYSTEM REQUIREMENTS

- PROVIDE ALL MISSION ELECTRIC POWER UP TO REENTRY AT 27 TO 31 VOLTS & 1.5 TO 3.0KW NOMINAL
- PROVIDE POTABLE WATER FOR COMMAND MODULE
- HYDROGEN & OXYGEN REACTANTS
- RADIATORS FOR WASTE HEAT REJECTION
- 64 HR PREFLIGHT TEST & 336 HR MAXIMUM MISSION DURATION
- MISSION RELIABILITY
  - CREW SAFETY .99999 - ONE MODULE OPERATION
  - MISSION SUCCESS .9977-TWO OR THREE MODULE
- MODULE RELIABILITY .971

DESIGN CHARACTERISTICS

- THREE MODULES - 44×22 IN. DIA - WT 219LB MODULE

- TWO RADIATORS IN 3 SECTIONS EACH - TOTAL AREA IS 48 FT^2 AREA CAN BE CONTROLLED TO 40, 32, 24, 16, 0 FT^2 AS NEEDED

- RADIATOR COATING OPTICAL PROPERTIES
  $\alpha = 0.27$ $\epsilon = 0.85$

- TOTAL SYSTEM WT 800LB

APOLLO FUEL CELL SYSTEM SCHEMATIC

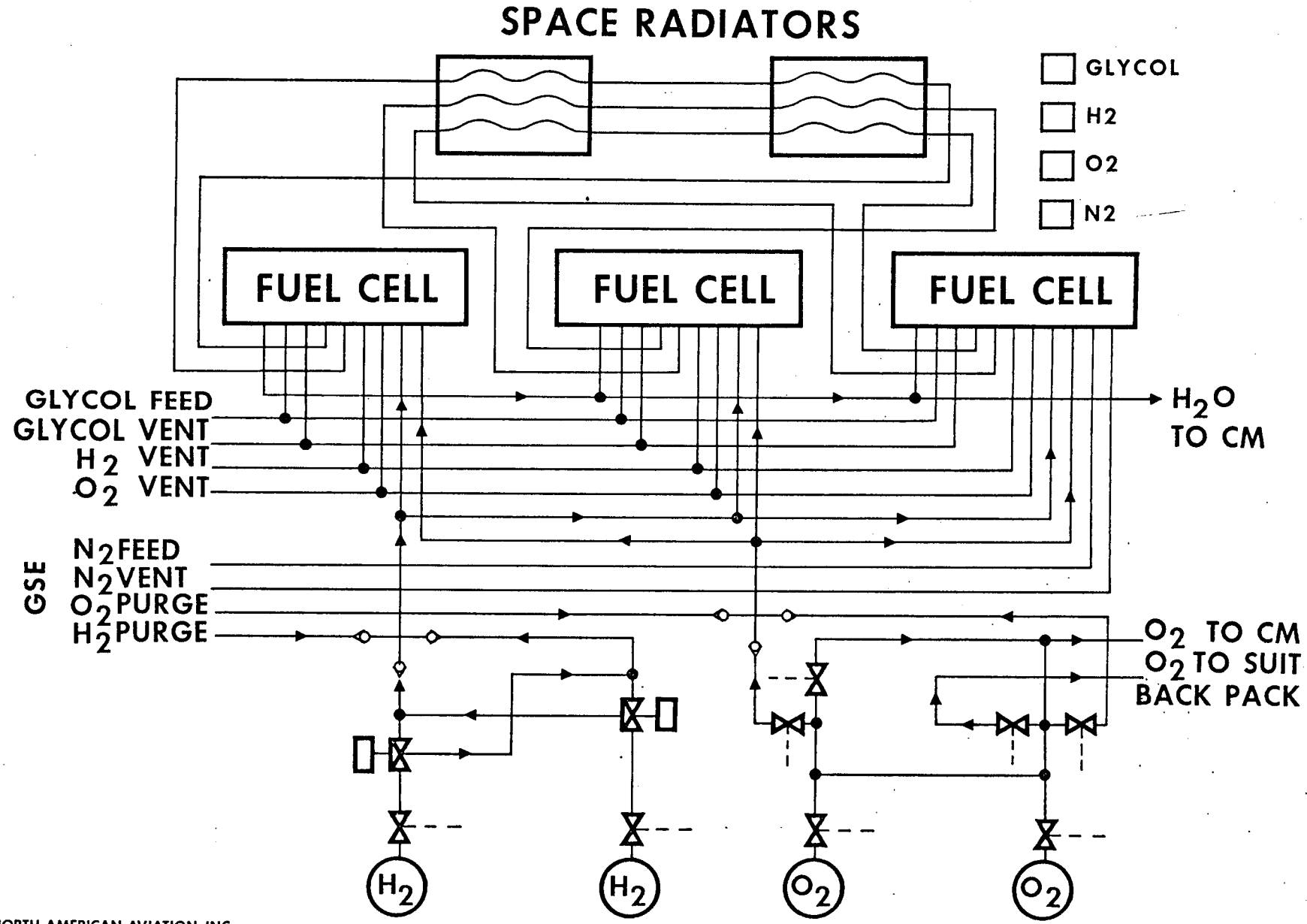

NORTH AMERICAN AVIATION, INC.
SPACE AND INFORMATION SYSTEMS DIVISION

9-63 AP33808

APOLLO FUEL CELL SCHEMATIC

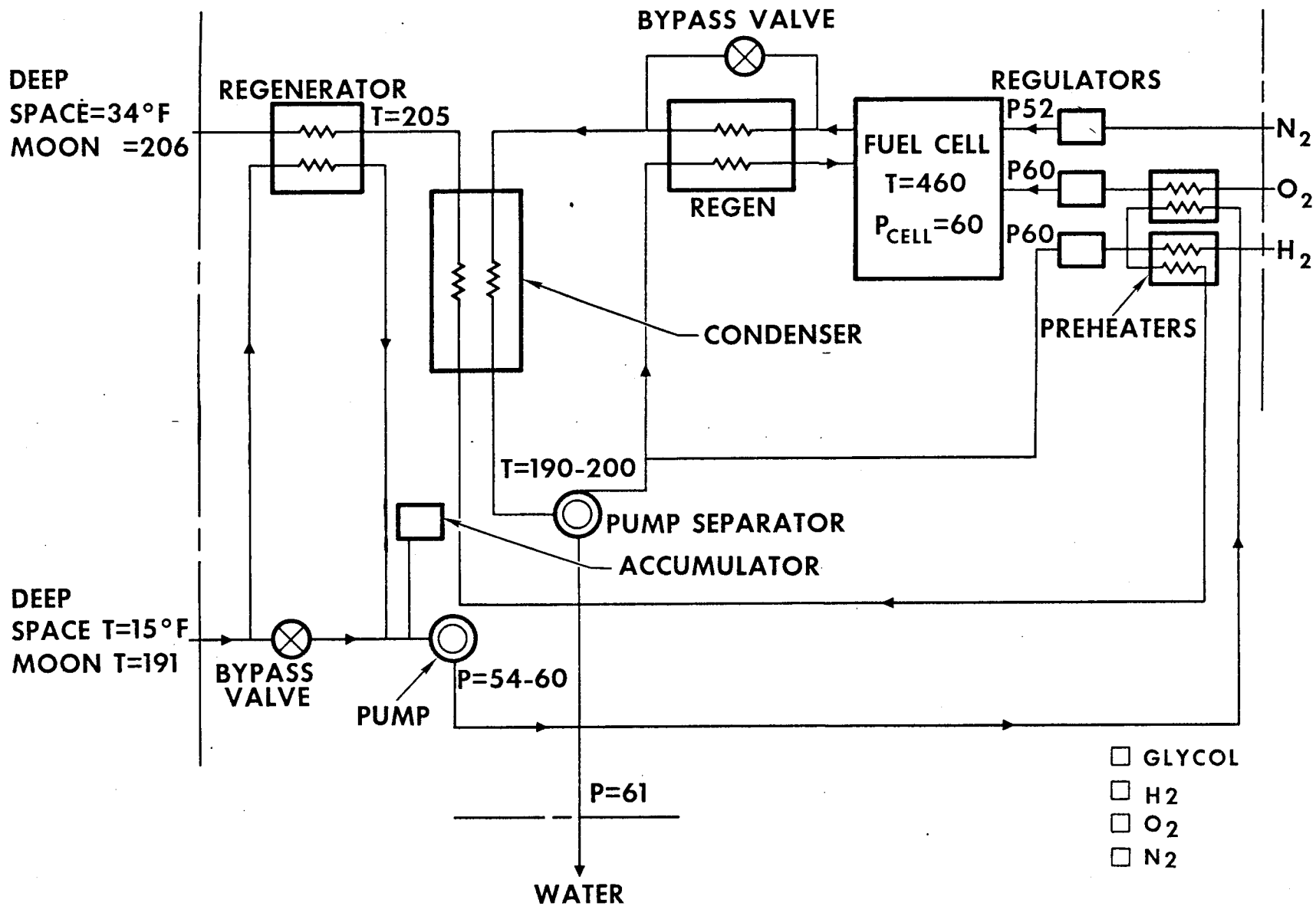

NORTH AMERICAN AVIATION, INC.
SPACE AND INFORMATION SYSTEMS DIVISION

9-63 AP 33807 A

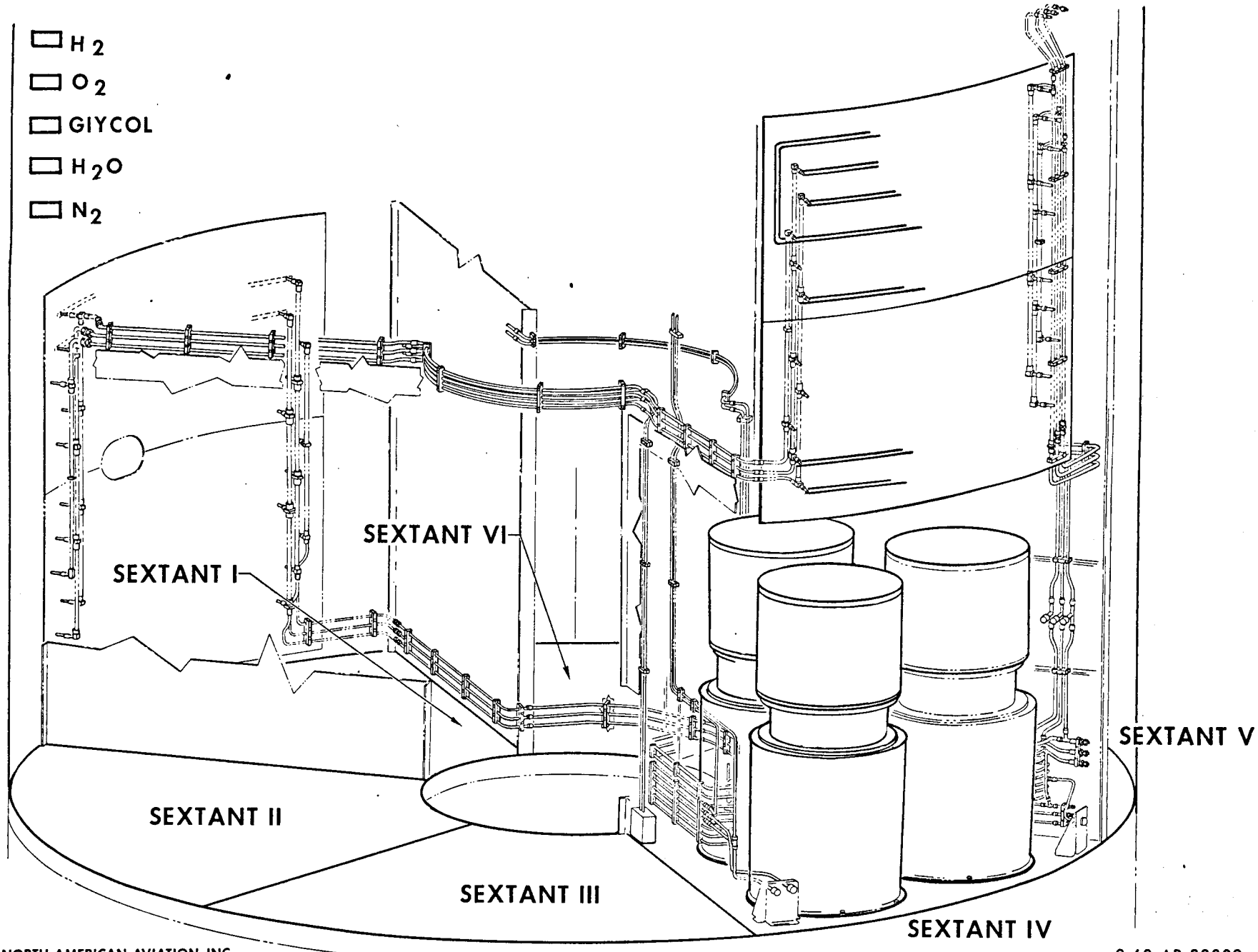

NORTH AMERICAN AVIATION, INC.
SPACE AND INFORMATION SYSTEMS DIVISION

9-63 AP 33809

PROBLEM AREAS

- DEPENDABLE MODULE OPERATION NOT YET DEMONSTRATED
- KOH CONTAMINATION OF FUEL CELL WATER

  SOLUTION: ELECTRODE DESIGN CHANGES
  PUMP SEPARATOR MODIFICATIONS

- LOAD SHARING - UNEQUAL DIVISION OF LOADS BETWEEN MODULES

  SOLUTION: ADD INTERNAL MODULE HEATERS

- EXTENSIVE PREFLIGHT TESTING UTILIZES BEST PORTION OF FUEL CELL OPERATING LIFE

  SOLUTION: PREFLIGHT TESTING MUST BE CONTROLLED - LIFE INCREASE IMPRACTICAL

P&WA TESTING

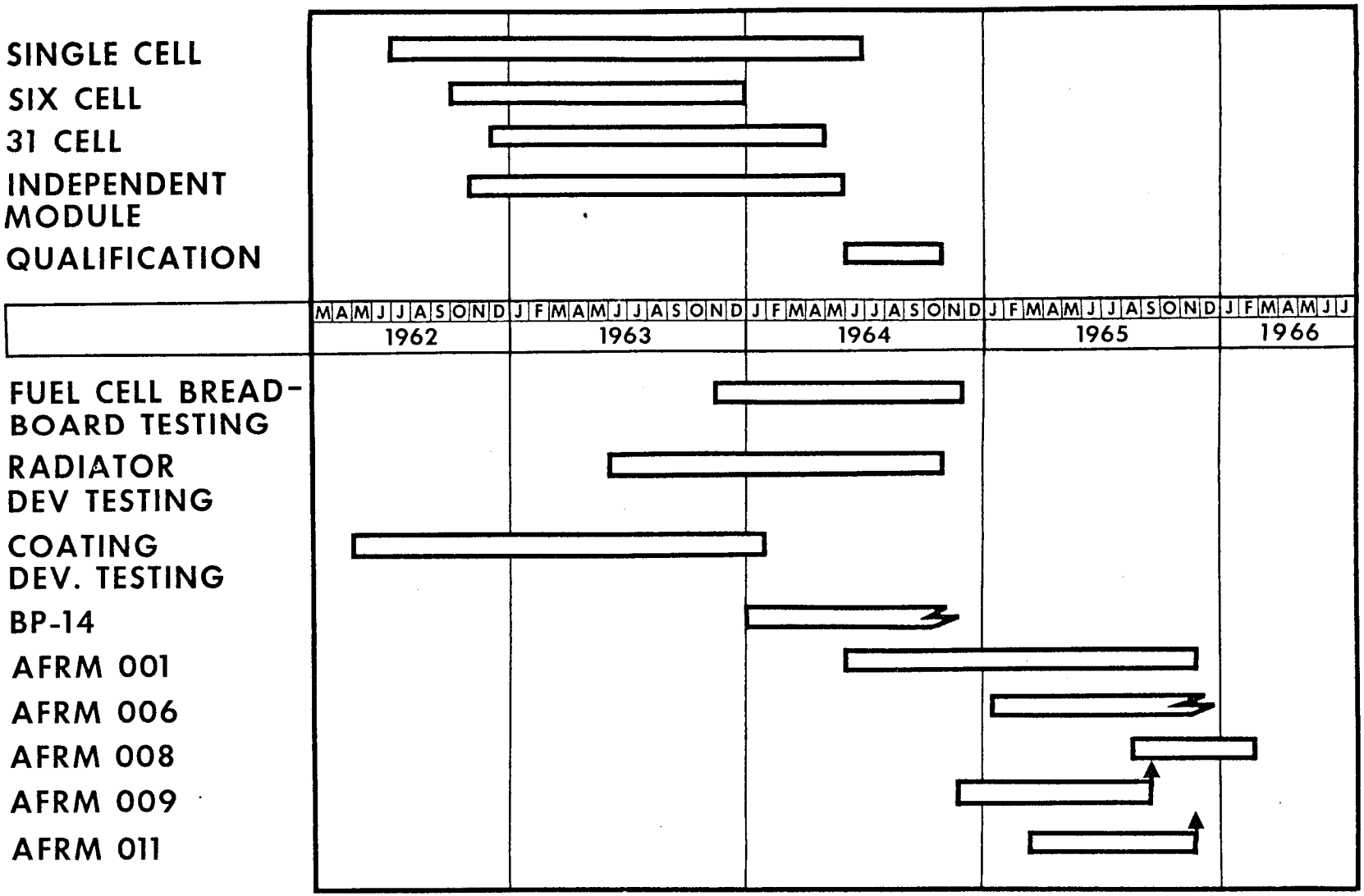

NAA TESTING

ELECTRICAL POWER DISTRIBUTION SYSTEM

NORTH AMERICAN AVIATION, INC.
SPACE AND INFORMATION SYSTEMS DIVISION

9-63 AP33790

SYSTEM REQUIREMENTS

- **POWER SYSTEM**

  DISTRIBUTE FUEL CELL DC POWER

  LOAD VOLTAGE—25 TO 30 VOLTS

  SUPPLY & DISTRIBUTE BATTERY DC POWER

  ENTRY-45 MIN-960 WATT-HOURS

  POSTLAND-72 HR-1014 WATT-HOURS

  PYRO-INTERMITTENT-<0.1 WATT-HOURS

  INVERT DC POWER TO AC POWER & DISTRIBUTE

  3Ø-115/200 VOLTS-400 CPS

  238 TO 1082 WATTS

  RECHARGE BATTERIES FROM FUEL CELL ENERGY

SYSTEM REQUIREMENTS (CONT)

- FLOODLIGHTING SYSTEM
  - 28 VOLT DC POWER
  - DIMMING CAPABILITIES
  - 0 TO 100 FOOTCANDLES
- SEQUENCING SYSTEM
  - CONTROLS INITIATION OF PYRO DEVICES
  - CONTROLS SEQUENTIAL EVENTS
    - LAUNCH ESCAPE SYSTEM
    - MODULE SEPARATION
    - EARTH LANDING SYSTEM

SYSTEM REQUIREMENTS (CONT)

- RELIABILITY APPORTIONMENT

	MISSION SUCCESS	CREW SAFETY
POWER SYSTEM	0.9975	0.99997
SEQUENCE SYSTEM	0.999999	0.999999

DESIGN CHARACTERISTICS

• POWER SYSTEM

DUAL REDUNDANT BUS NETWORK

DUAL FEEDERS TO ESSENTIAL LOADS

DUAL ENTRY BATTERIES

TRIPLE INVERTERS

FAULT PROTECTION

- CIRCUIT BREAKER TO LOADS
- CURRENT LIMIT & OVERVOLTAGE TRIP OF INVERTER OUTPUT
- CURRENT & VOLTAGE LIMIT OF CHARGER OUTPUT
- BLOCKING DIODES BETWEEN BATTERIES
- OVERLOAD & REVERSE CURRENT TRIP OF FUEL CELL OUTPUT

DESIGN CHARACTERISTICS (CONT)

- SEQUENCING SYSTEM
  - DUAL REDUNDANT & INDEPENDENT CIRCUITRY
  - TRANSIENT VOLTAGE PROTECTION
  - MINIMUM LOGIC POWER
  - SEPARATE LOGIC & PYRO POWER SOURCES

- FLOODLIGHTING SYSTEM
  - 25 WATTS PER LAMP
  - DUAL LAMPS EACH AREA
  - 0 TO 100 FOOTCANDLE DIMMING RANGE

DC BUS STRUCTURE

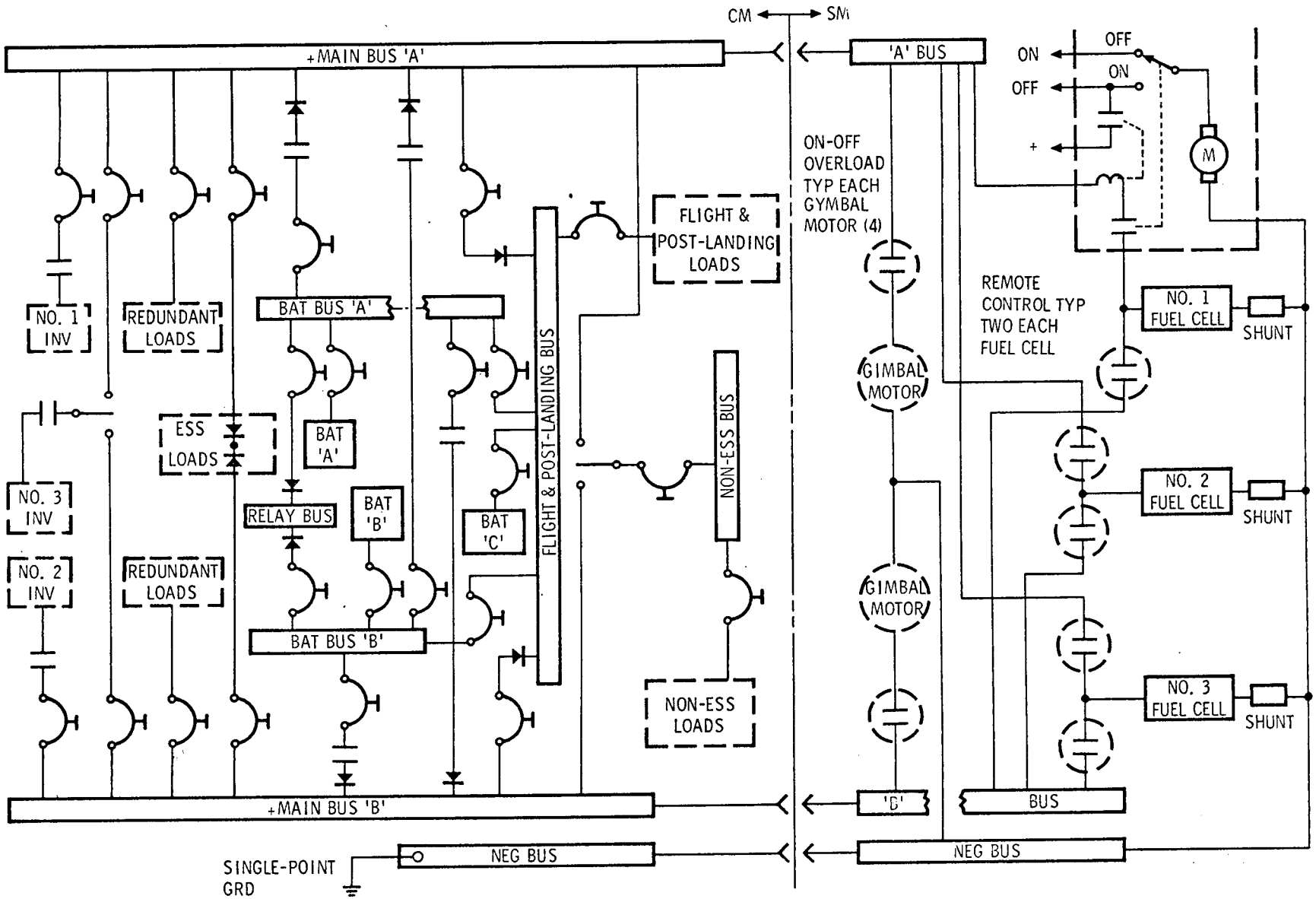

NORTH AMERICAN AVIATION, INC.
SPACE AND INFORMATION SYSTEMS DIVISION

9-63 AP 33798

AC BUS STRUCTURE

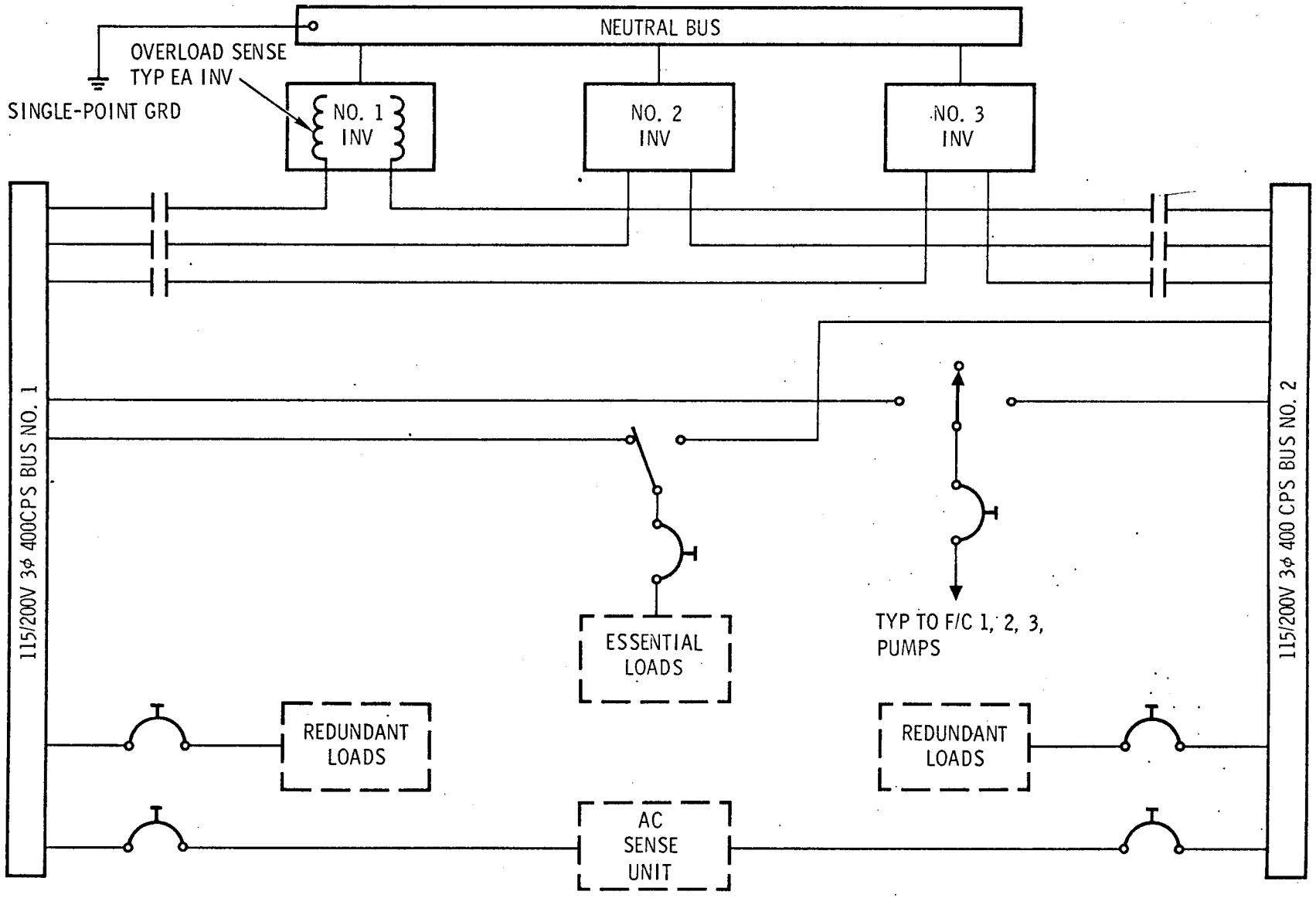

APOLLO CM FLOODLIGHTING

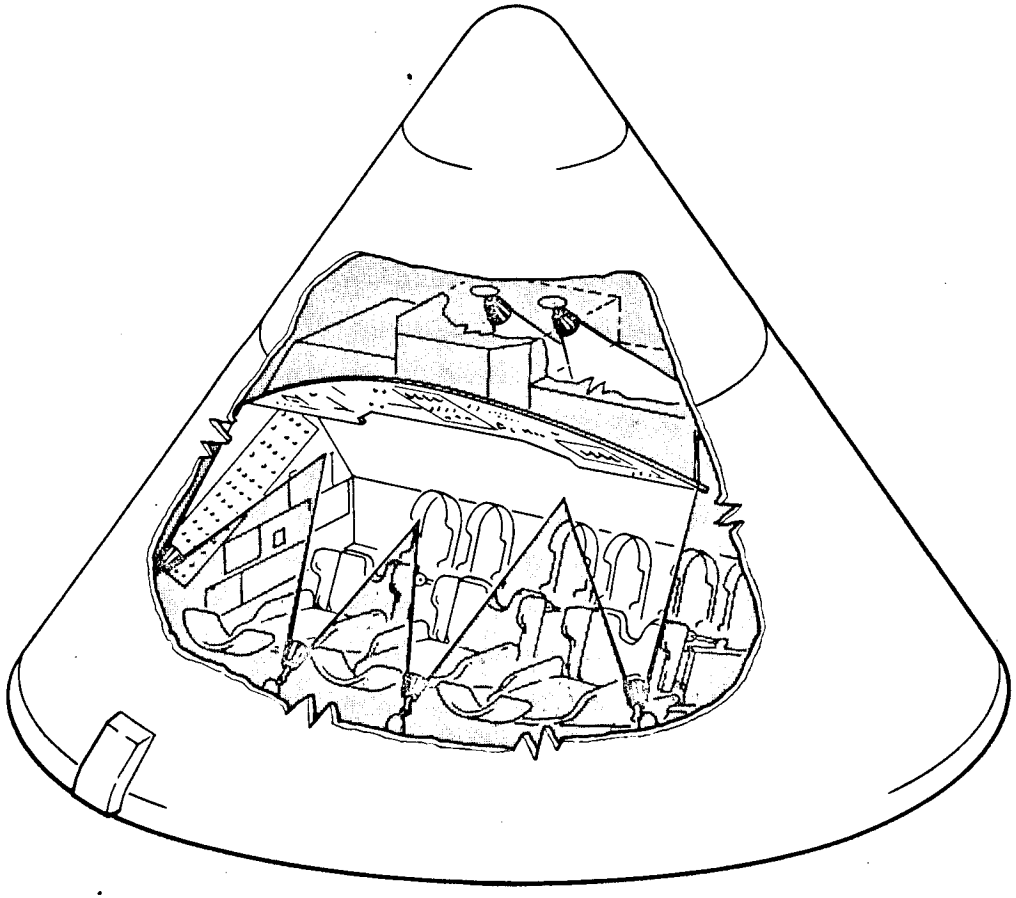

ENTRY BATTERY

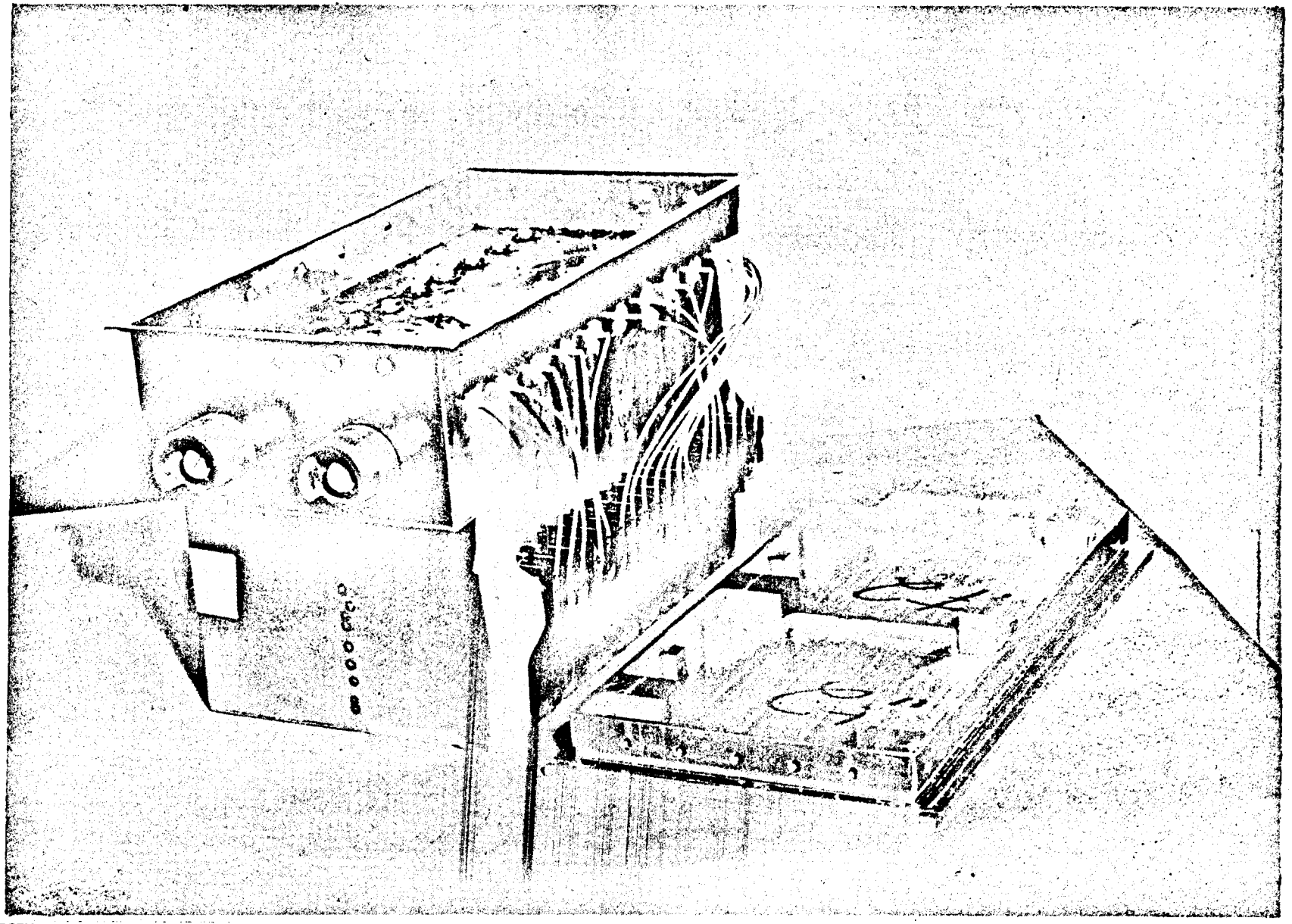

PROBLEM AREAS

- LOW INVERTER EFFICIENCY - 77.5%
- DC BUS RIPPLE VOLTAGE LIMITS WILL PROBABLY EXCEED SPECIFICATION
- 14-DAY MISSION ELECTRICAL ENERGY REQUIRES REACTANTS IN EXCESS OF CGSS CAPACITY

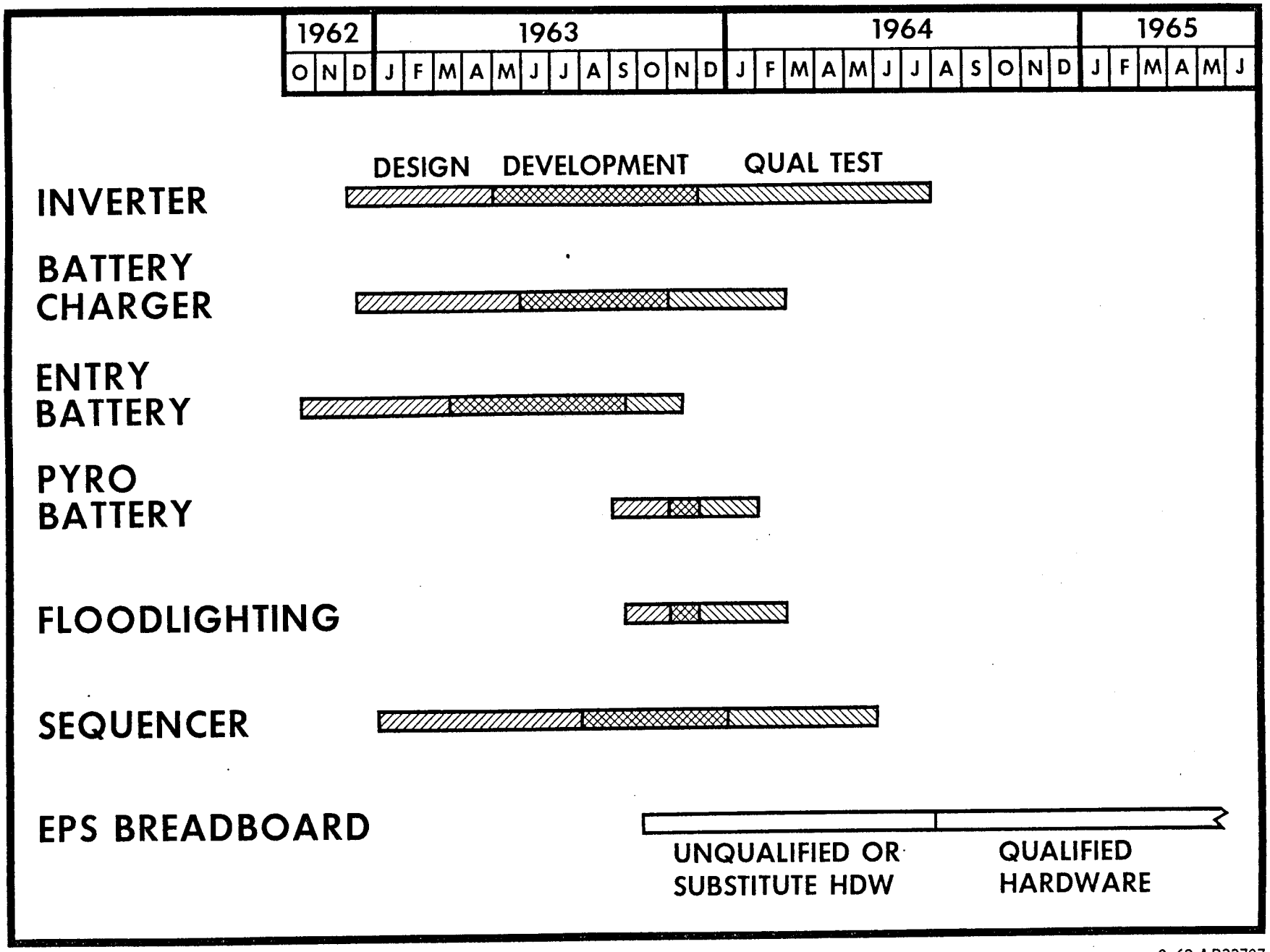
1962
1963
1964
1965
O N D J F M A M J J A S O N D J F M A M J J A S O N D J F M A M J
DESIGN
DEVELOPMENT
QUAL TEST
INVERTER
BATTERY CHARGER
ENTRY BATTERY
PYRO BATTERY
FLOODLIGHTING
SEQUENCER
EPS BREADBOARD
UNQUALIFIED OR SUBSTITUTE HDW
QUALIFIED HARDWARE

ELECTRONIC SYSTEMS

NORTH AMERICAN AVIATION, INC.
SPACE AND INFORMATION SYSTEMS DIVISION

9-63 AP34047

FUNCTIONS OF STABILIZATION & CONTROL SUBSYSTEM

RATE DAMPING FOR LAUNCH ABORT & ENTRY

ANGULAR ORIENTATION & STABILIZATION OF SPACECRAFT

TRANSLATIONAL & ROTATIONAL CONTROL DURING RENDEZVOUS DOCKING

THRUST VECTOR CONTROL DURING MIDCOURSE CORRECTIONS & LUNAR INJECTIONS

STABILIZATION & CONTROL CREW DISPLAYS

SCS BLOCK DIAGRAM

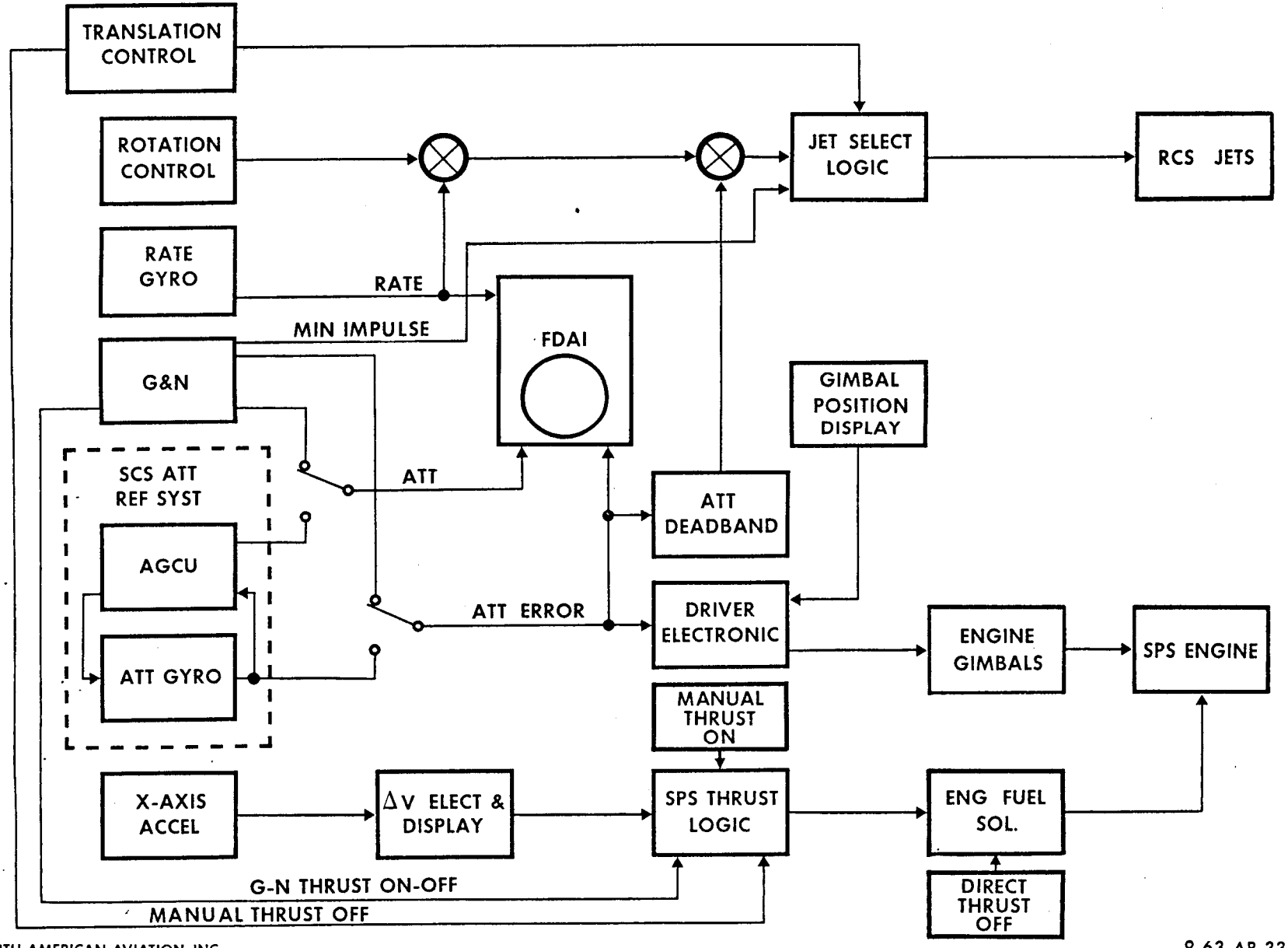

NORTH AMERICAN AVIATION, INC.
SPACE AND INFORMATION SYSTEMS DIVISION

9-63 AP 33818

SCS MODES

MODE	FUNCTION	MISSION PHASE
MONITOR	BOOST VEHICLE MONITORING	EARTH ORBIT INJECTION EARTH ORBIT TRANSLUNAR INJECTION
G&N ATTITUDE CONTROL	MAINTAIN VEHICLE ATTITUDE	TRANSLUNAR LUNAR ORBIT TRANSEARTH
SCS ATTITUDE CONTROL	MAINTAIN VEHICLE ATTITUDE (G&N OFF)	TRANSLUNAR LUNAR ORBIT TRANSEARTH
G&N ΔV	PERFORM VELOCITY CHANGES (PRIMARY MODE)	MIDCOURSE CORRECTIONS LUNAR ORBIT INJECTION LUNAR ORBITAL & PARAMETER CHANGES TRANSEARTH INJECTION
SCS ΔV	PERFORM VELOCITY CHANGES (BACK-UP MODE)	MIDCOURSE CORRECTIONS LUNAR ORBIT INJECTION LUNAR ORBITAL PARAMETER CHANGES TRANSEARTH INJECTION
SCS LOCAL VERTICAL	CREW TASK RELIEF	LUNAR ORBIT
G&N ENTRY	MAINTAIN PROPER ENTRY TRAJECTORY (PRIMARY MODE)	PREENTRY ENTRY
SCS ENTRY	MAINTAIN PROPER ENTRY TRAJECTORY (BACK-UP MODE)	PREENTRY ENTRY

COMMAND MODULE
STABILIZATION & CONTROL SYSTEM

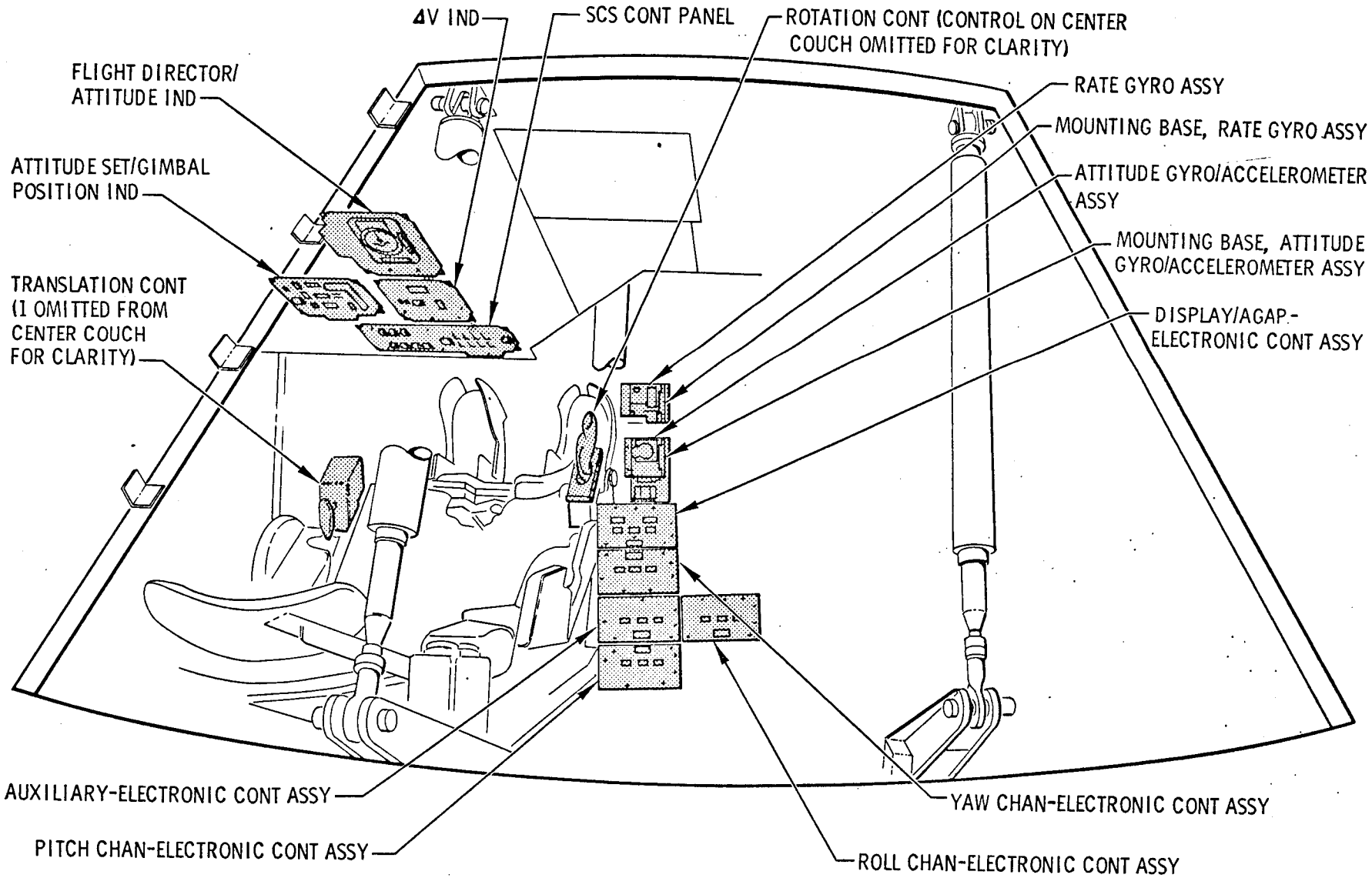

NORTH AMERICAN AVIATION, INC.
SPACE AND INFORMATION SYSTEMS DIVISION

9-63 AP 34049A

CURRENT PROBLEMS

PROBLEM	POSSIBLE SOLUTION
• AGCU ACCURACY REPEATABILITY	RELIEVE ACCURACY REQUIREMENTS (IMPOSED BY LUNAR MISSION) FOR EARLY VEHICLES
• HAND CONTROLLER REDIRECTION	USE CURRENT T-HANDLE ON NON-FLYABLE VEHICLES & RETROFIT
• SUBMINIATURE CONNECTORS QUALIFICATION SCHEDULE	USE UNQUALIFIED CONNECTORS ON EARLY SYSTEMS

APOLLO SCS DISPLAYS & CONTROLS

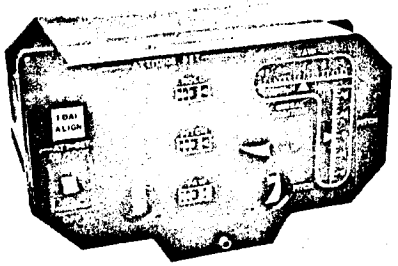

GIMBAL POSITION INDICATOR

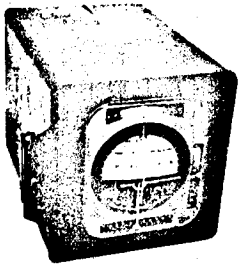

FLIGHT DIRECTOR ATTITUDE INDICATOR

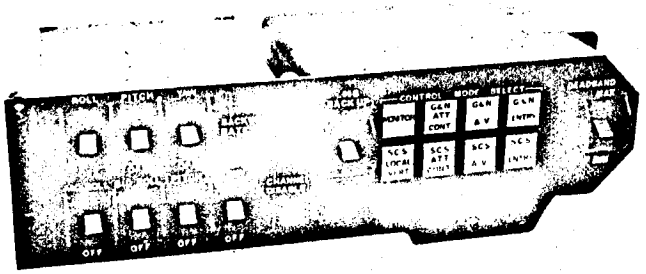

SCS CONTROL PANEL

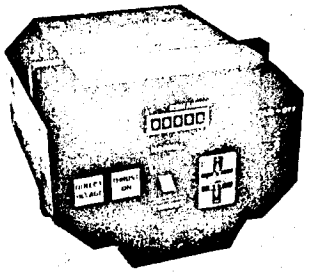

ΔV DISPLAY

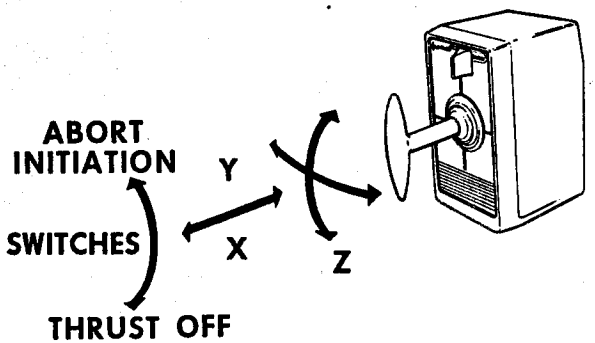

TRANSLATIONAL/THRUST CONTROL

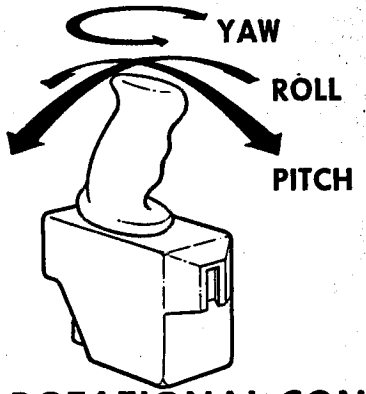

3-AXIS ROTATIONAL CONTROL

NORTH AMERICAN AVIATION, INC.
SPACE AND INFORMATION SYSTEMS DIVISION

5-63 AP 56815

SCS SENSORS

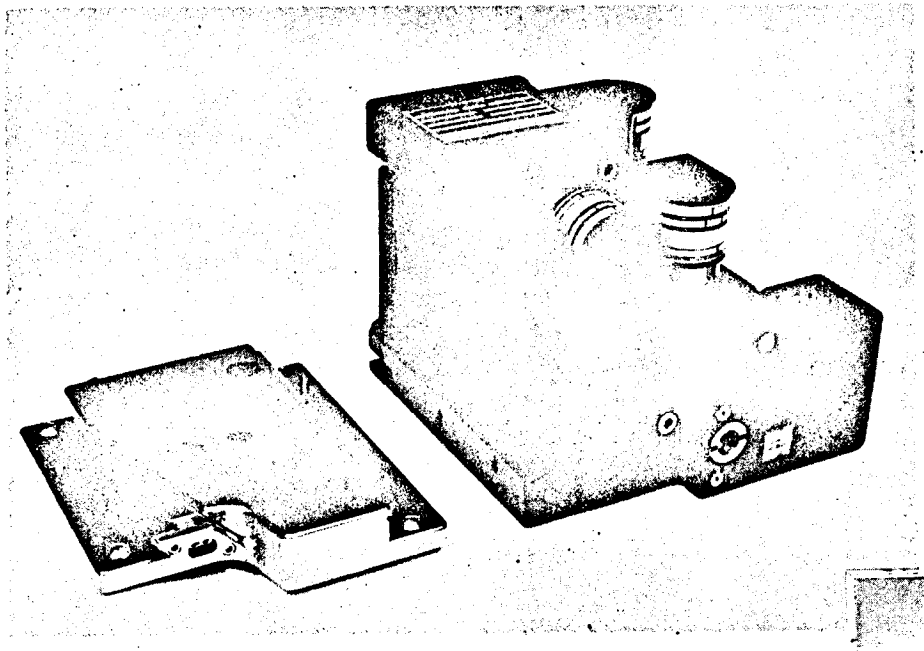

RATE GYRO
PACKAGE

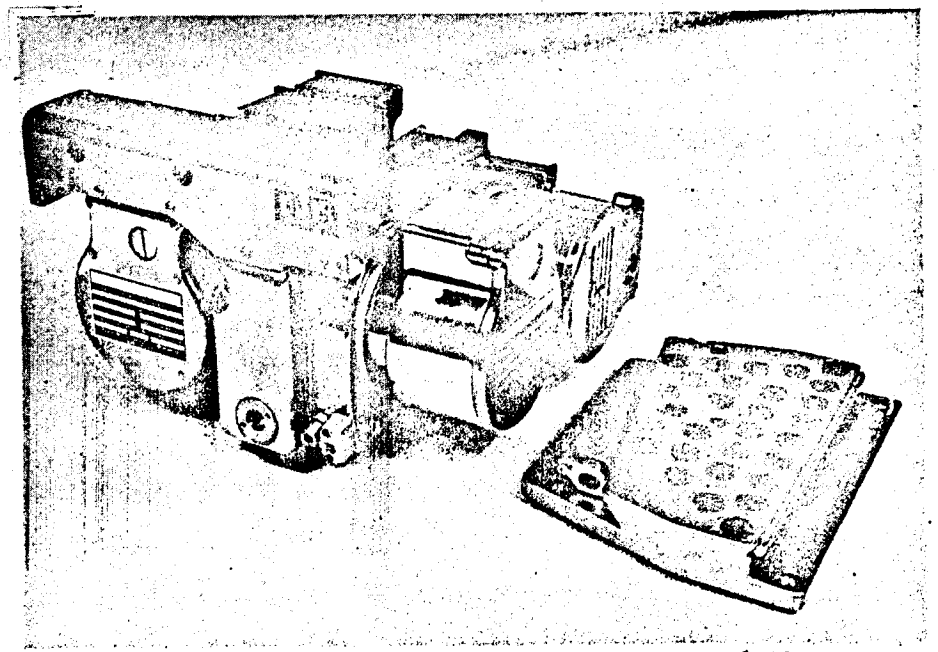

ATTITUDE GYRO
ACCEL PKG

SCS ELECTRONICS

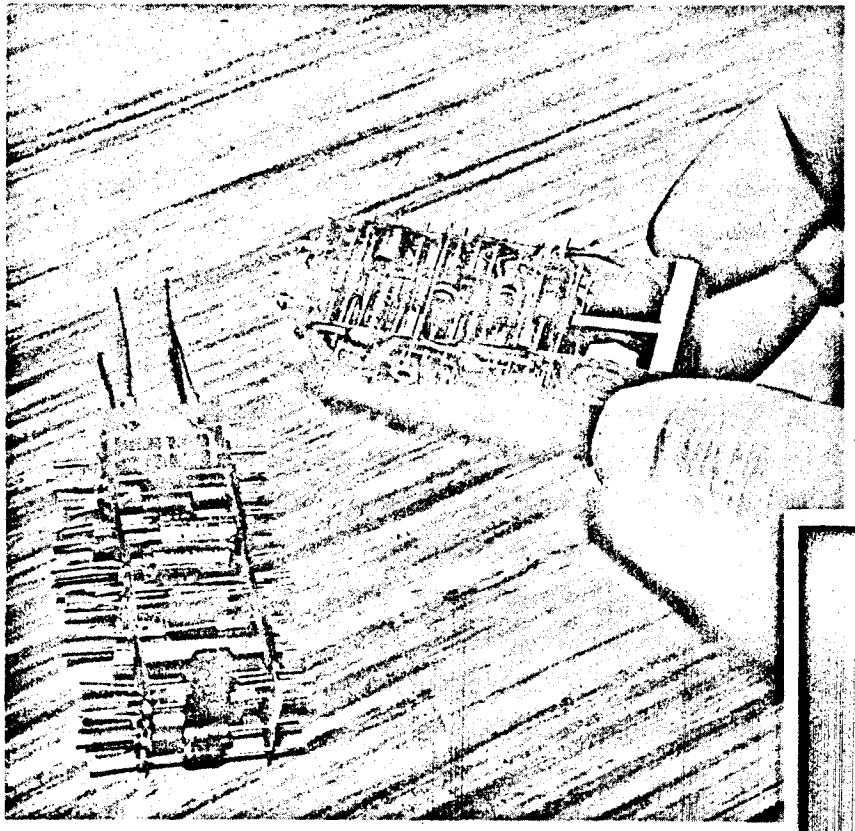

TYPICAL MODULE CONSTRUCTION

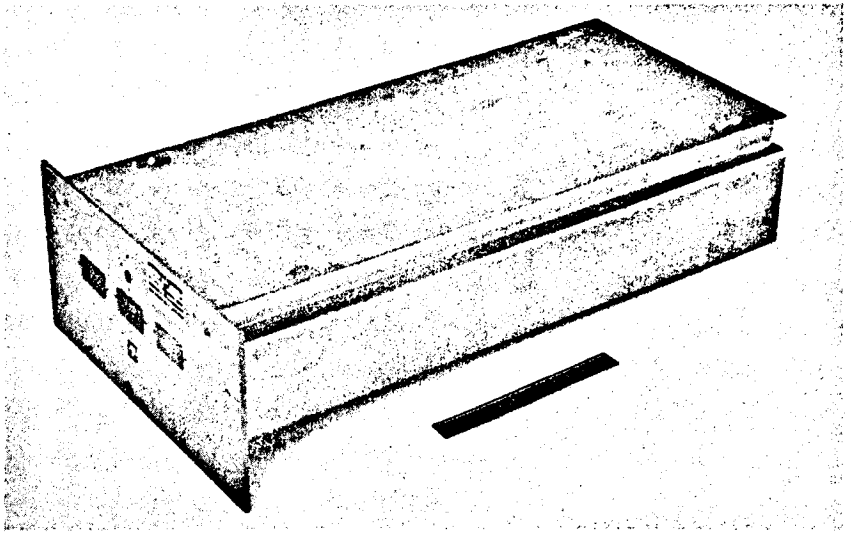

TYPICAL ECA

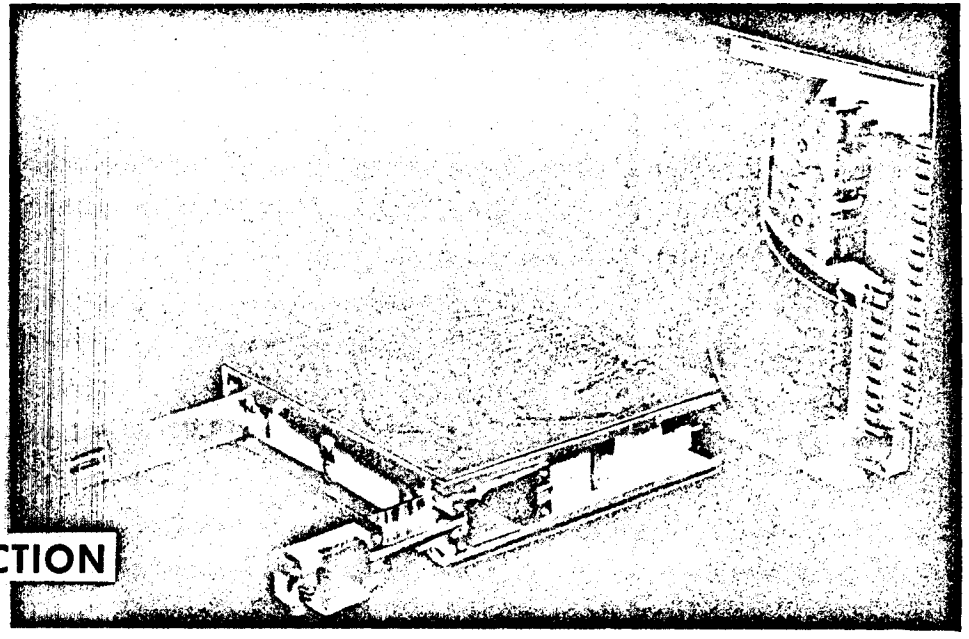

TYPICAL CARD CONSTRUCTION

COMMUNICATIONS SYSTEM

NORTH AMERICAN AVIATION, INC.
SPACE AND INFORMATION SYSTEMS DIVISION

9-63 AP59526

DESIGN CRITERIA

FUNCTIONAL CAPABILITIES

- VOICE COMMUNICATION BETWEEN SC-GOSS, CSM-LEM
- TELEMETRY SC-GOSS
- RESPOND TO GROUND RADAR TRACKING SIGNALS
- TELEVISION TRANSMISSION TO SELECTED GOSS STATIONS
- RADIO RECOVERY AIDS
- DATA STORAGE & PLAYBACK
- SYSTEMS & DATA TIME CORRELATION
- UP-DATA RECEPTION & DECODING
- EVSP TELEMETRY RECEPTION
- INTERCOMMUNICATIONS

APOLLO SPACECRAFT COMMUNICATION SYSTEM

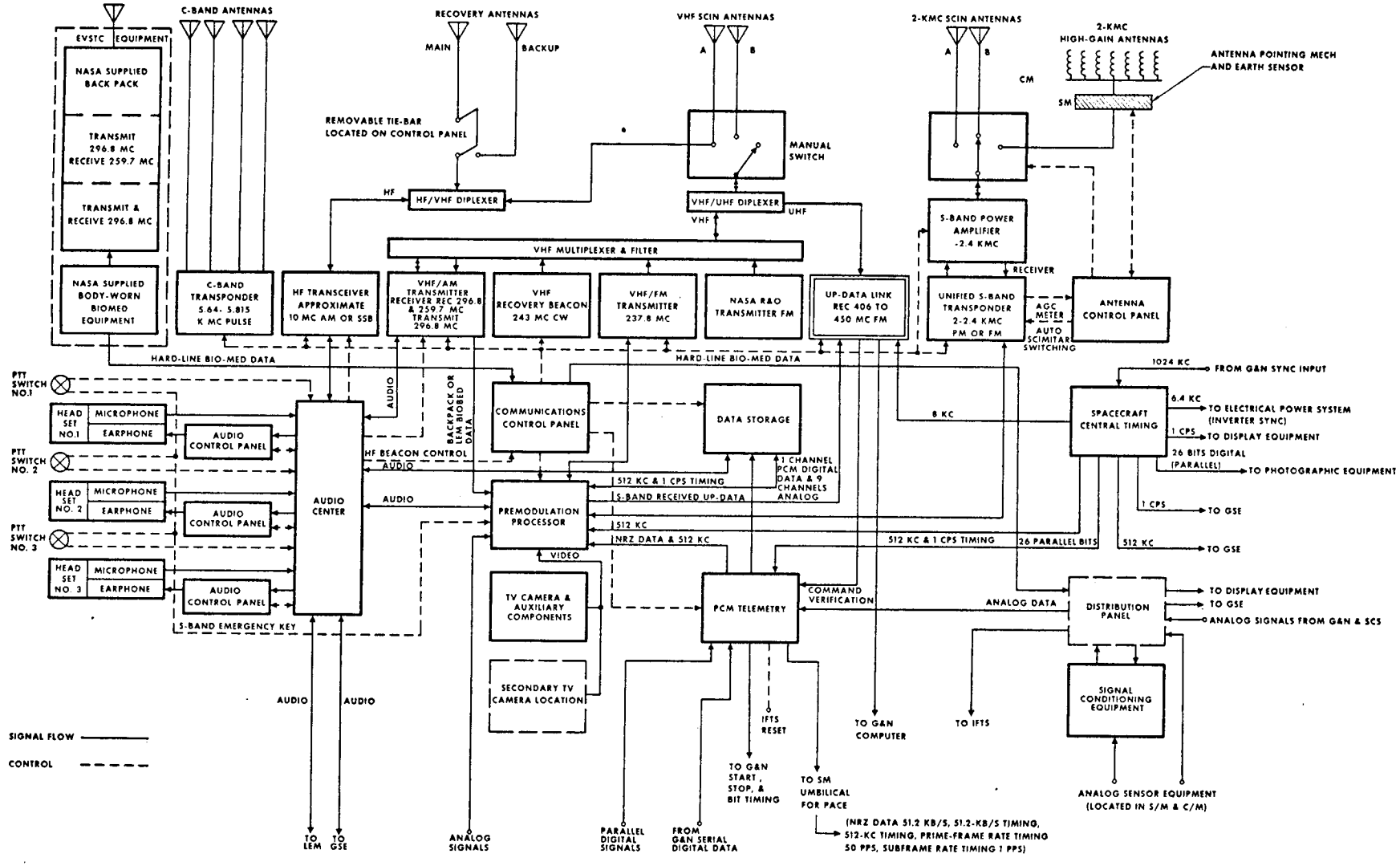

NORTH AMERICAN AVIATION, INC.
SPACE AND INFORMATION SYSTEMS DIVISION

9-63 AP 33827

COMMUNICATIONS LEB INSTALLATION

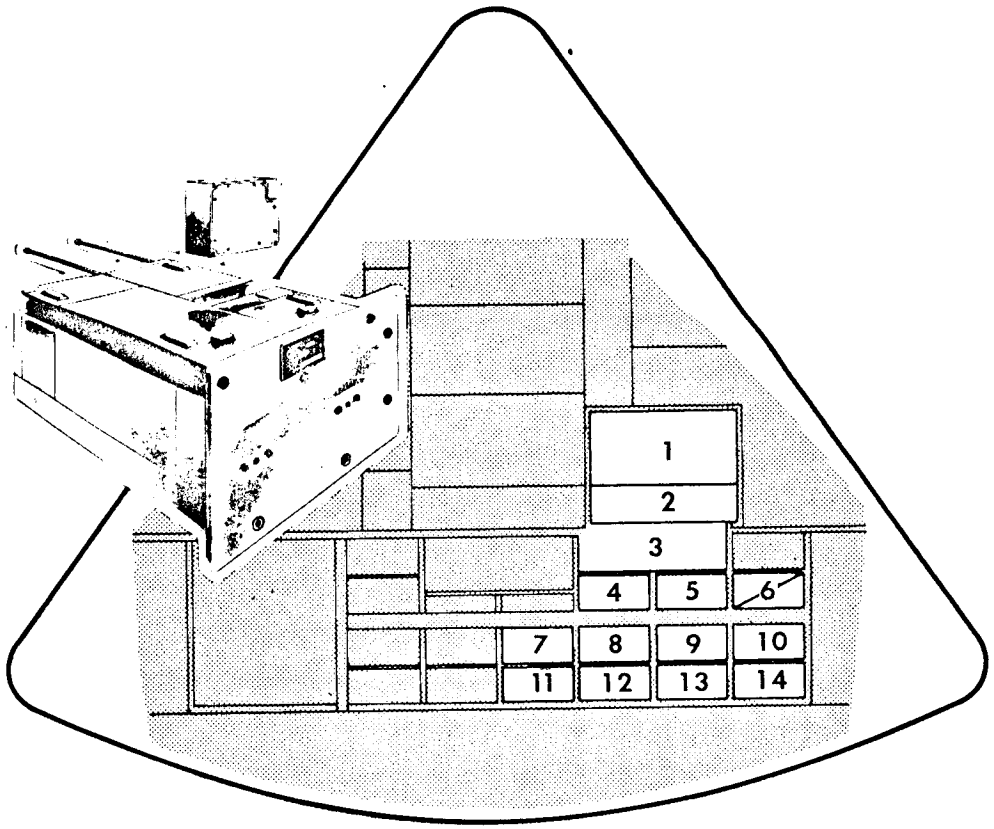

1. DATA STORAGE EQUIP.
2. SIGNAL COND. EQUIP.
3. PCM UNITS
4. FQ TELEMETRY
5. VHF MULTIPLEXER
6. PREMOD PROCESSOR
7. UNIFIED S-BAND EQUIP. SPARES
8. S-BAND POWER AMP
9. VHF/AM TRANSCEIVER / VHF/RECOVERY BEACON
10. AUDIO CENTER
11. UP-DATA LINK
12. C-BAND TRANSPONDER
13. VHF/FM TRANSMITTER / HF TRANSCEIVER
14. CENTRAL TIMING EQUIP.

COMMUNICATIONS SYSTEM

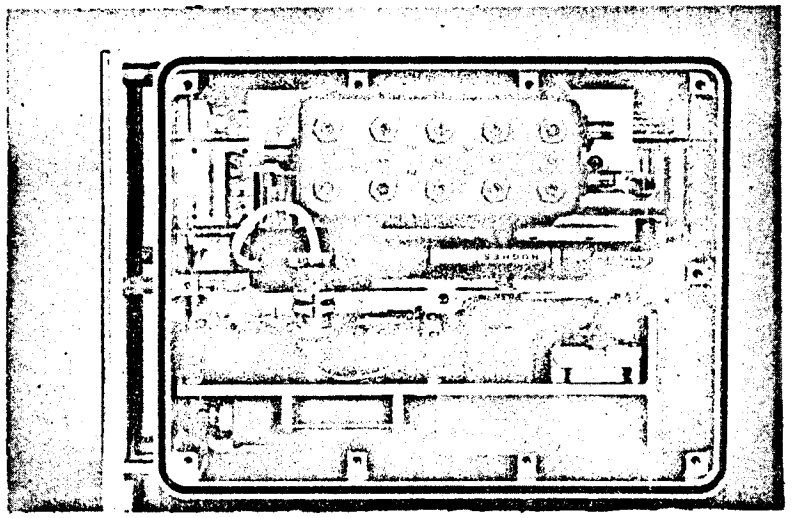

S-BAND POWER AMPLIFIER
BRASSBOARD

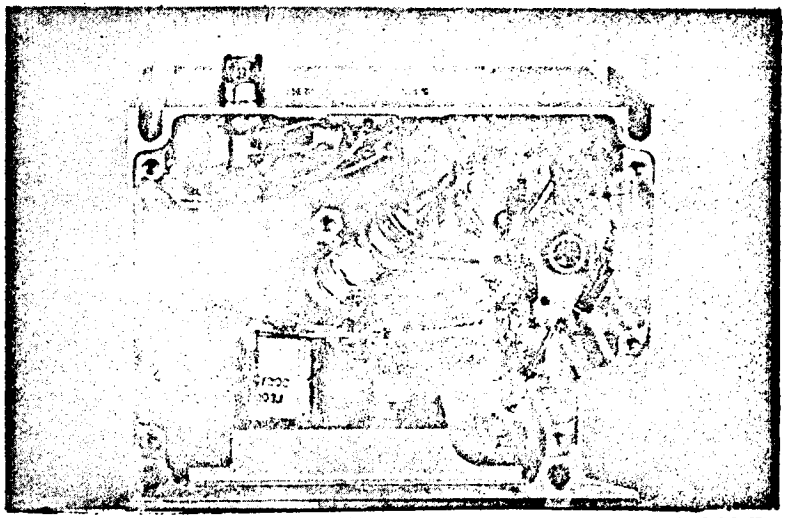

HF XCVR - POWER AMPLIFIER MODULE
BRASSBOARD

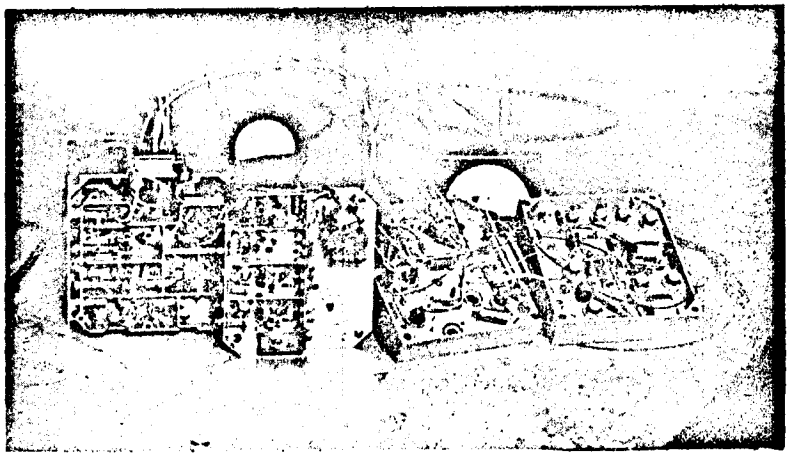

VHF AM TRANSMITTER - RECEIVER
PRELIMINARY MODEL

COMMUNICATIONS SYSTEM

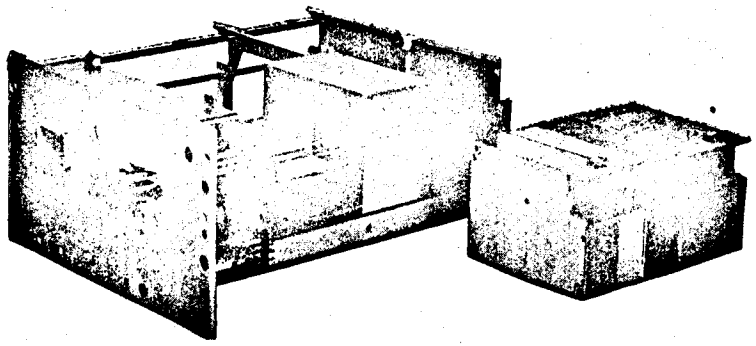

VHF/FM XMTR-HF XCVR UNIT
HF XCVR MODULES BEING
PLACED IN BRASSBOARD CHASSIS

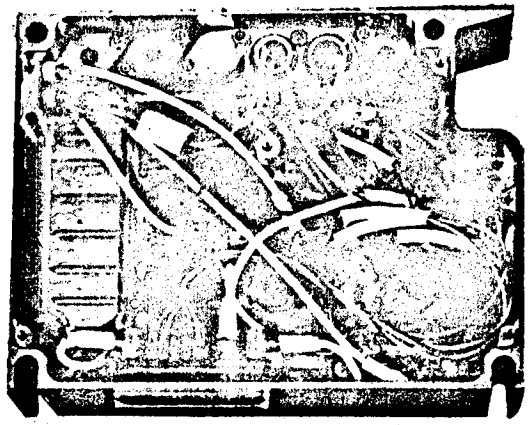

HF XCVR-RECEIVER MODULE
BRASSBOARD

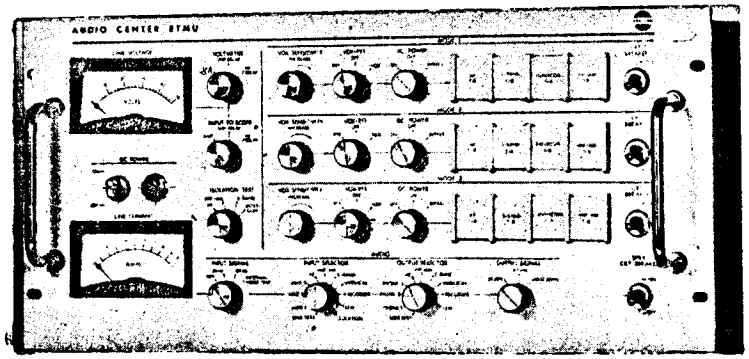

AUDIO CENTER STMU

APOLLO ANTENNAS - COMMAND MODULE

HF/VHF RECOVERY ANTENNAS

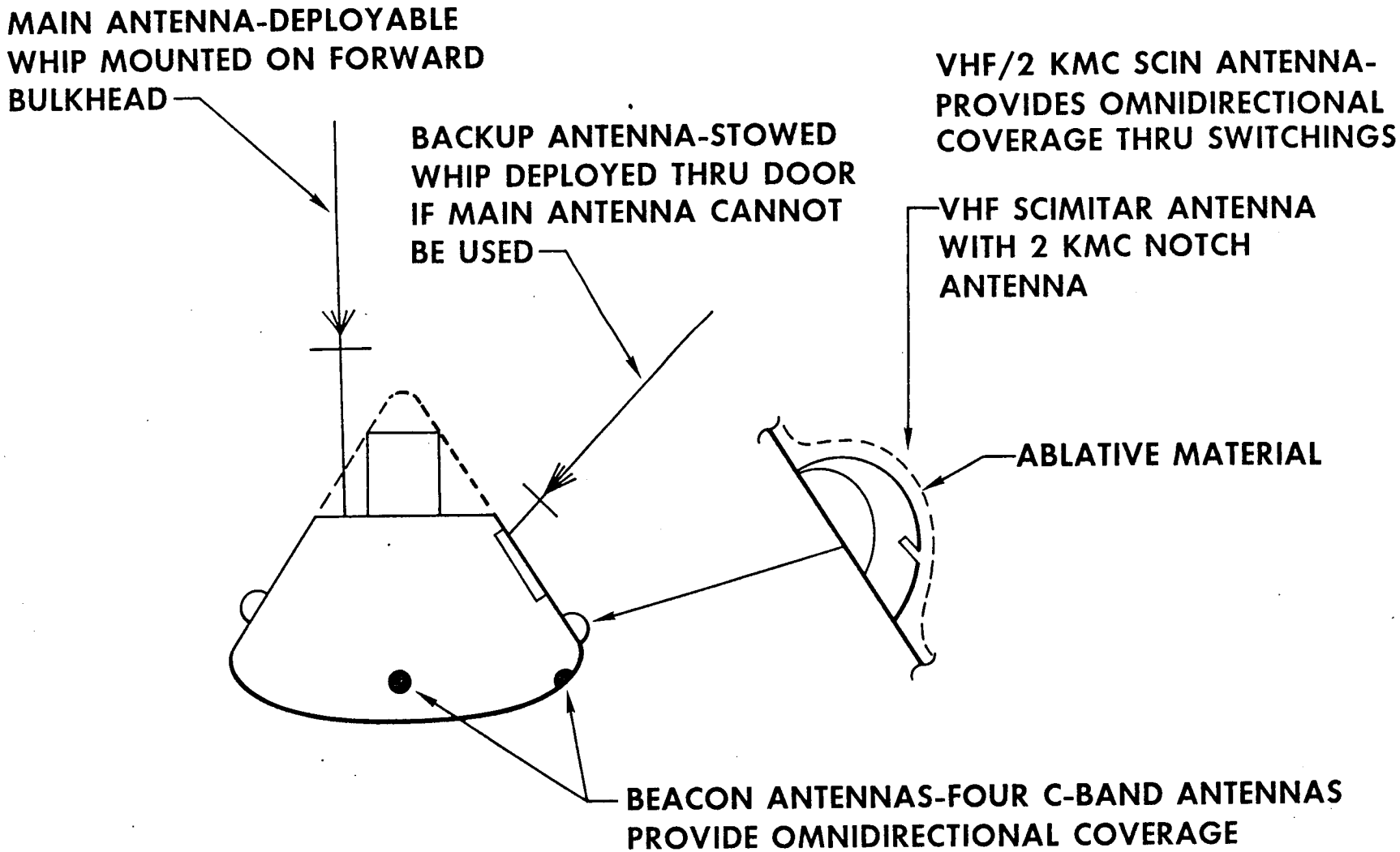

APOLLO ANTENNAS - SERVICE MODULE
2KMC HIGH GAIN ANTENNA

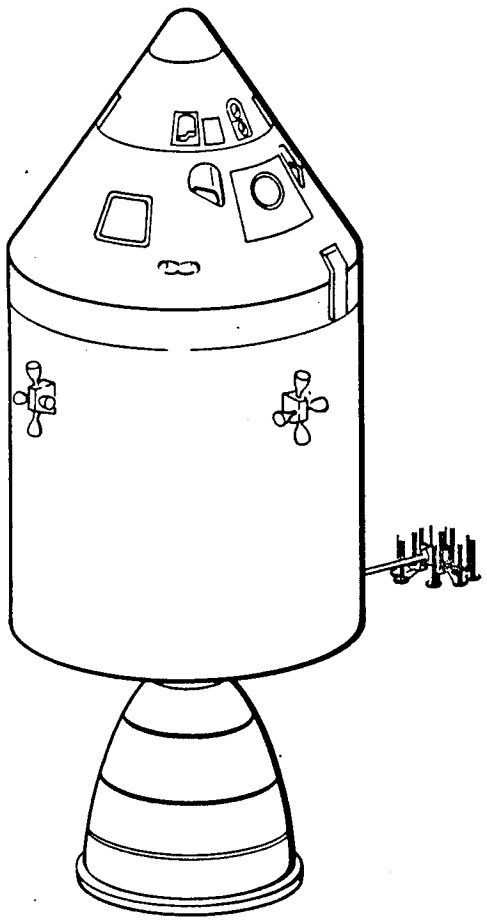

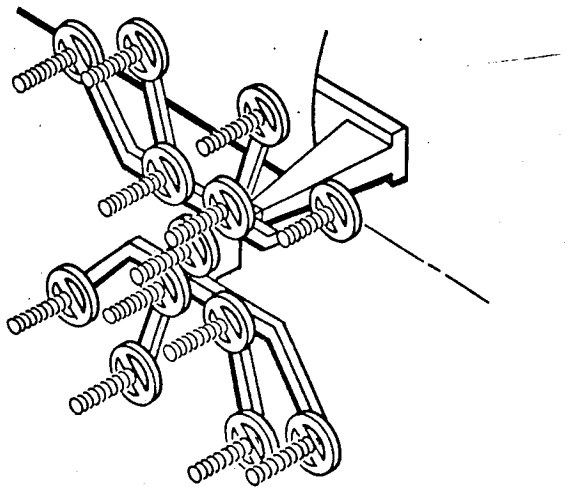

- END FIRE ARRAY
- VARIABLE BEAMWIDTH
- 27 DB MAX GAIN
- IR EARTH SEEKER WITH MANUAL OVERRIDE

CURRENT DESIGN PROBLEMS

- HIGH-GAIN ANTENNA HEATING - INCREASED HEAT LOADS
- RECOVERY ELECTRONICS HEATING - DUTY CYCLE OPTIMIZATION
- S-BAND POWER AMPLIFIER - BACKUP TUBE DEVELOPMENT PROGRAM
- VHF COVERAGE DURING TRANSLUNAR INJECTION - BETTER DEFINITION OF REQUIREMENTS OR INCREASE S-BAND COVERAGE
- CM SCIN ANTENNAS - POSSIBLE SM INSTALLATION

INSTRUMENTATION SYSTEMS

NORTH AMERICAN AVIATION, INC.
SPACE AND INFORMATION SYSTEMS DIVISION

9-63 AP59524

INSTRUMENTATION SYSTEMS

CONSIST OF:

1. SENSORS - CONDITIONED TO STANDARD OUTPUTS
2. SIGNAL CONDITIONERS
   INTEGRAL WITH SENSOR-IF POSSIBLE
3. DATA DISTRIBUTION PANEL

STANDARD OUTPTS

1. 0 TO 5 VOLTS DC
2. 0 TO .040 VOLTS DC

AFRM 011 INSTRUMENTATION SYSTEM

FROM: 22 AUG 63 TAB RUN

MEASUREMENT TYPE	MEASUREMENT BREAKDOWN					SYSTEMS MEASURED
	TOTAL	T/M	DISPLAYED	RECORDED	IFTS	
ABLATION	12			12		STRUCTURES
ACCELERATION	6	6				FLIGHT TECH
ACOUSTIC	2			2		FLIGHT TECH
CALORIMETER	36			36		STRUCTURES
CHAR	9			9		STRUCTURES
CURRENT	15	12	8		5	EPS, ECS, G&N
EVENT	240	110	80		60	VIRTUALLY ALL
FREQUENCY	9	4	6		2	EPS, IFTS, C&I
FLOW	7	7	7			EPS, ECS
HEAT FLUX	9			9		STRUCTURES
QUANTITY	17	13	12			ECS, SPS, RCS
P h (WATER CONDITION)	3	3	3			EPS
POSITION	24	15	10			G&N, S&CS, FLT TECH, SPS
PRESSURE	64	64	39		10	STRUCTURES, EPS, ELS, ECS LIFE, SPS, RCS, CREW SAFETY
TEMPERATURE	118	110	33		13	STRUCTURES, EPS, ECS, G&N LIFE, SPS, RCS, C&I
THERMOCOUPLE	97			97		STRUCTURES
STRAIN	100	40		60		STRUCTURES
VIBRATION	12			12		FLT TECH, G&N
VOLTAGE	172	60	40		40	EPS, LES, ELS, G&N, S&CS, LIFE, CREW SAFETY, C&I
MISC	5					RADIATION, GAS ANALYSIS
GRAND TOTAL	957	444	238	237	130	

DISPLAYS AND CONTROLS

NORTH AMERICAN AVIATION, INC.
SPACE AND INFORMATION SYSTEMS DIVISION

AP33870

CREW STATIONS

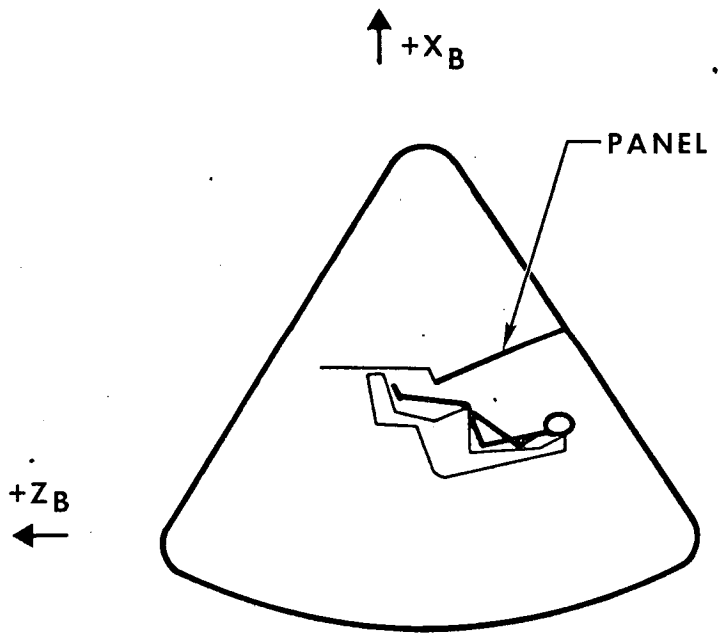

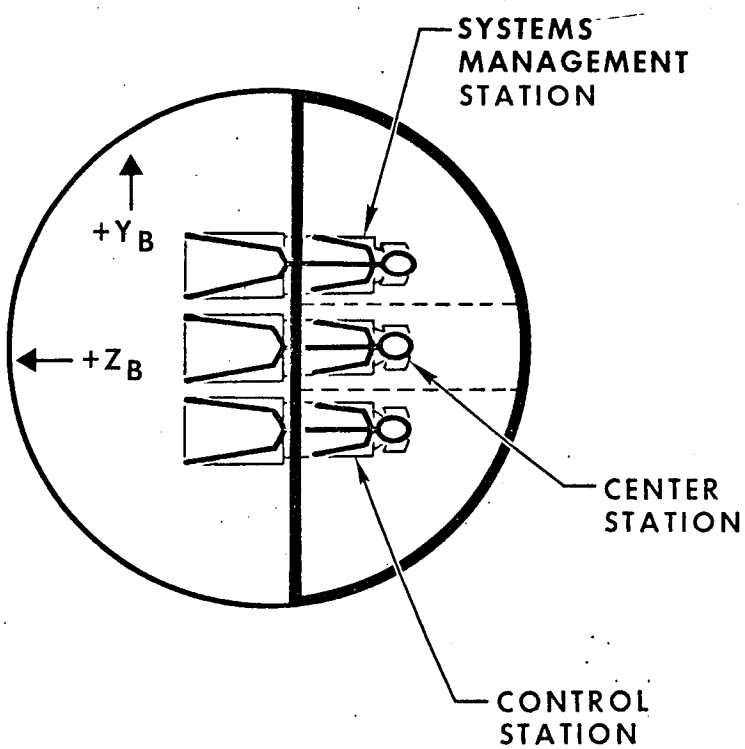

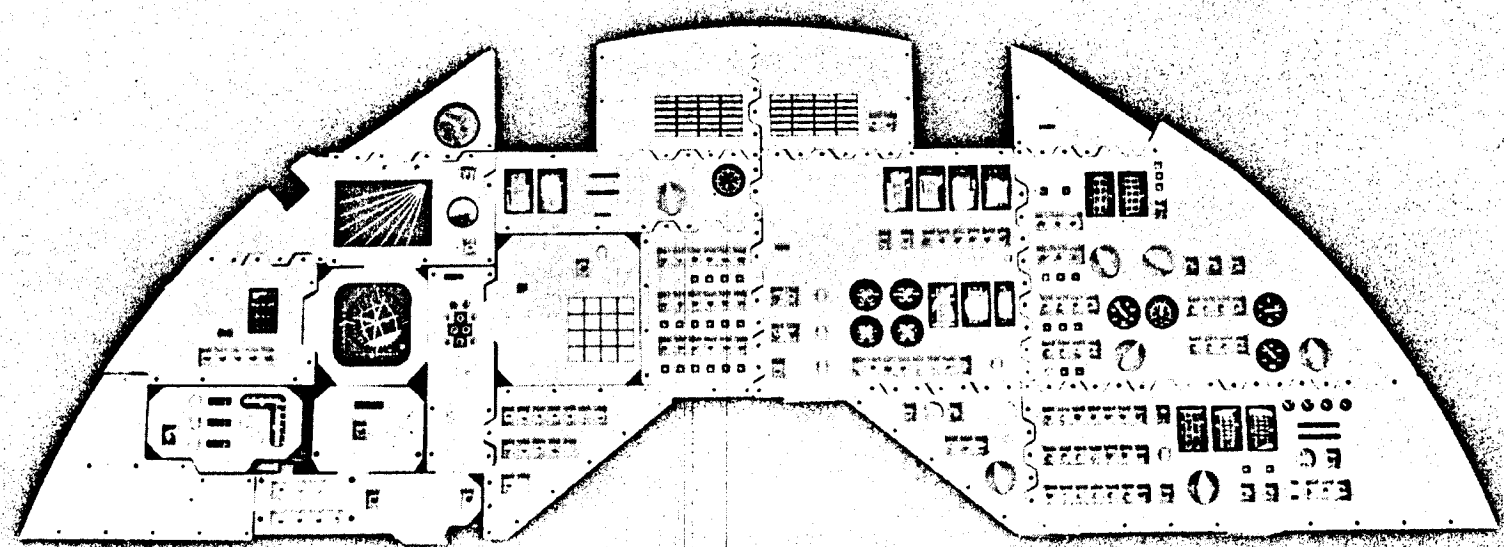

9-3-63

7005-83-36 E

23044

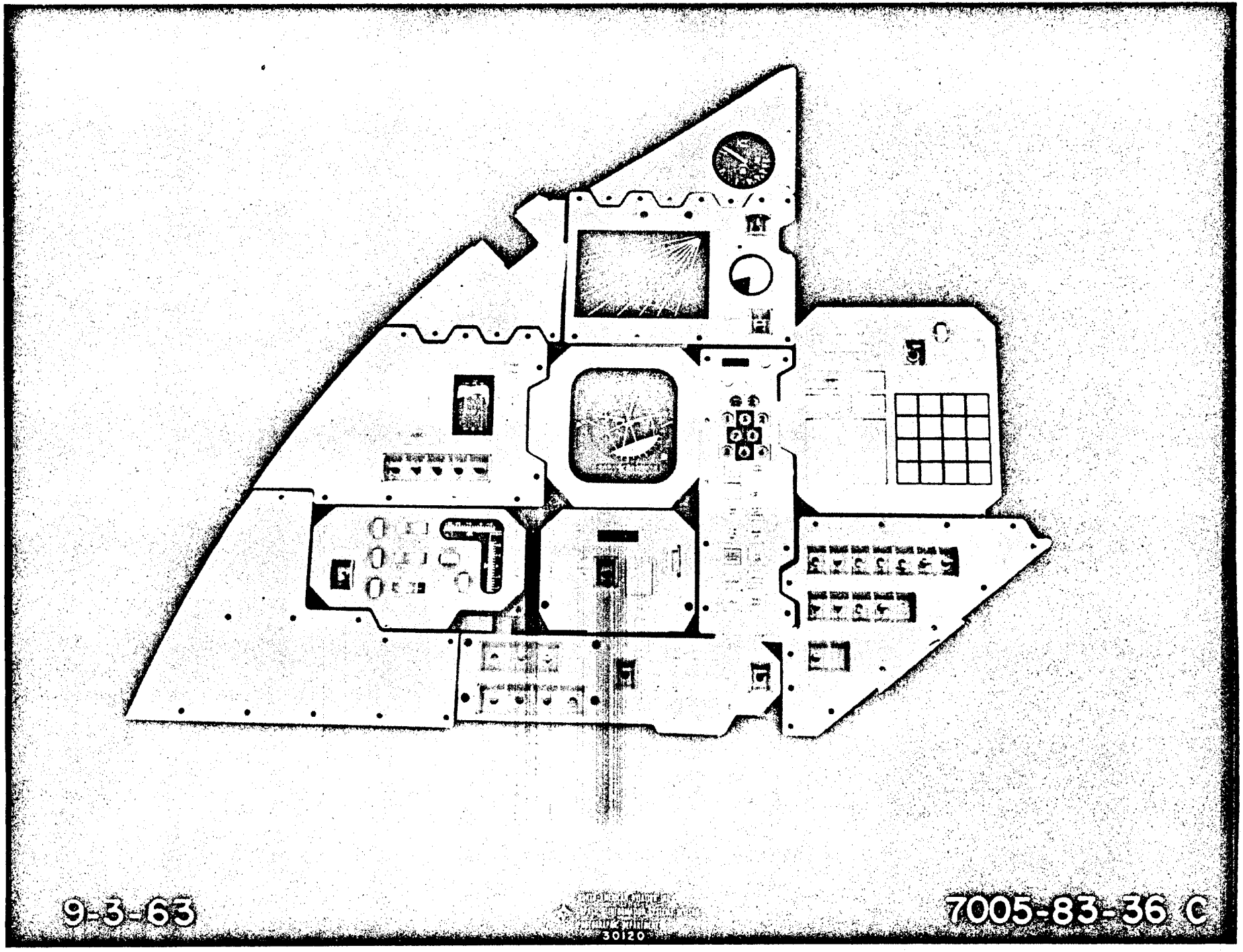
9-3-63
7005-83-36 C
30120

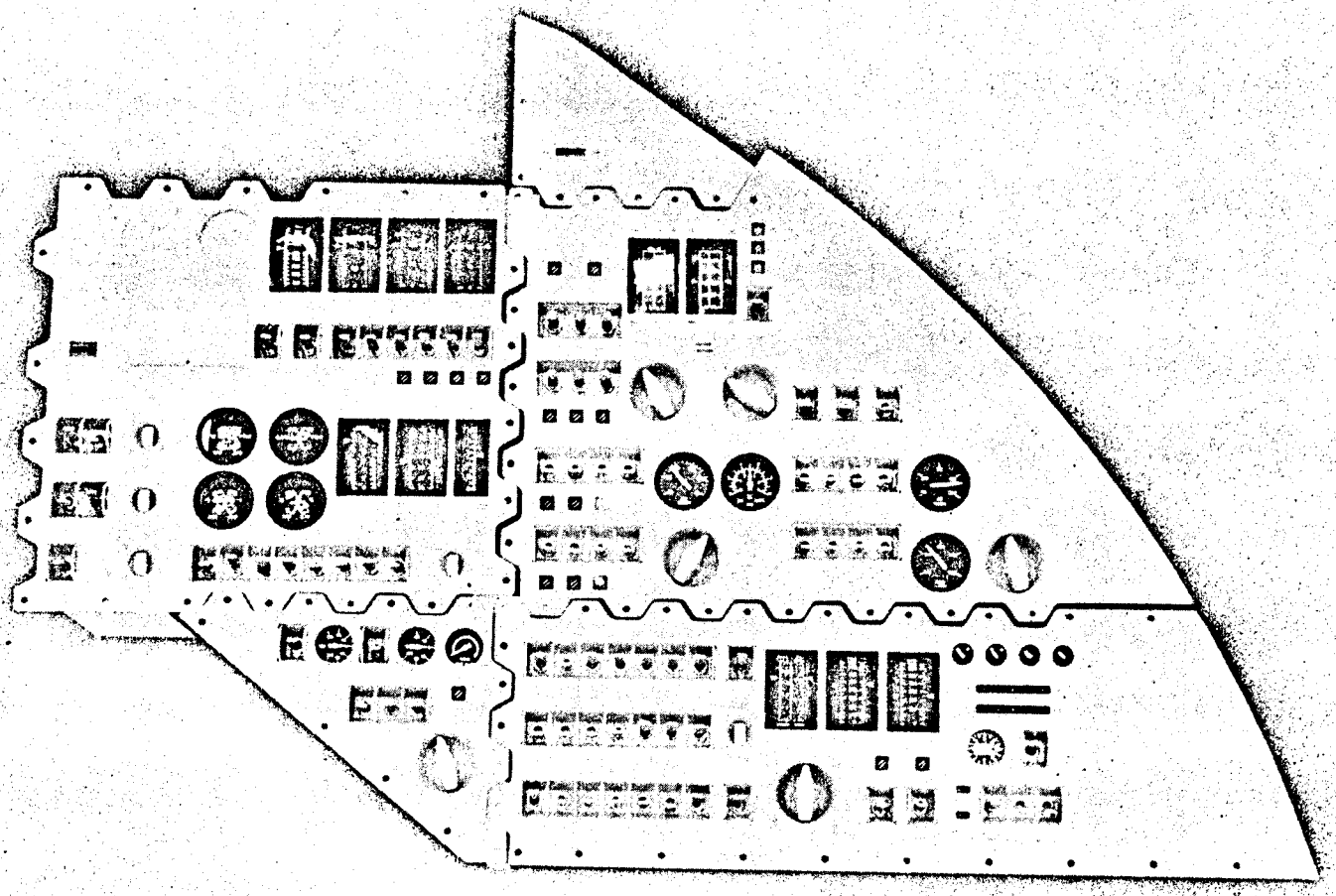

9-3-63

7005-83-36 A

30120

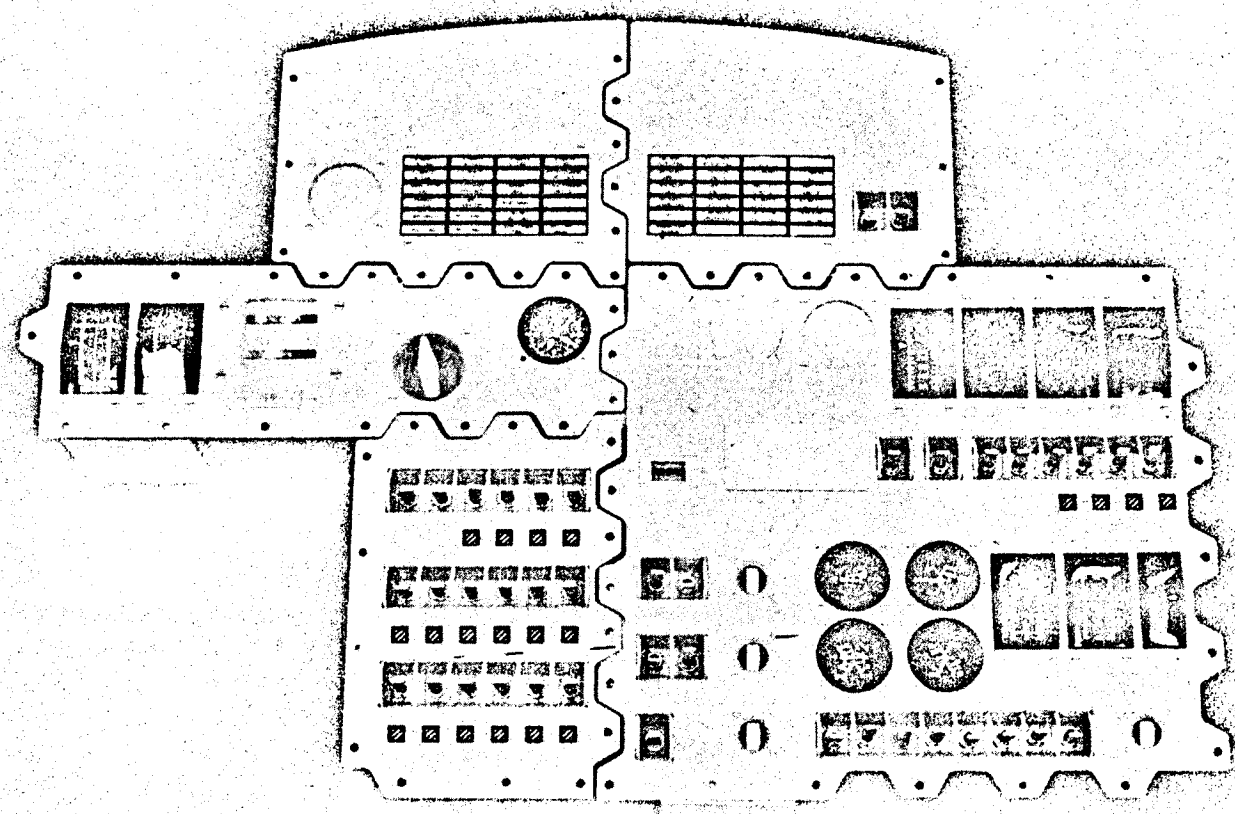

9-3-63

7005-83 36 D

23044

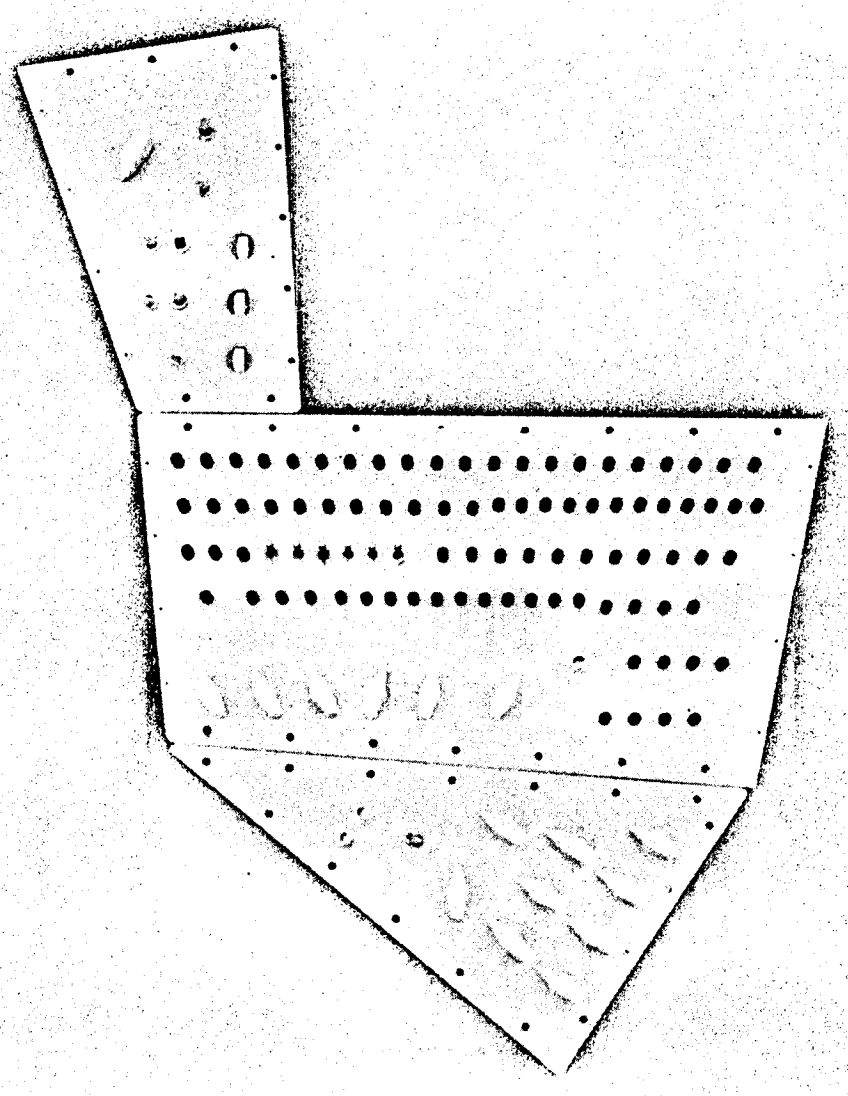

9-3-63

30120

7005-83-36 B

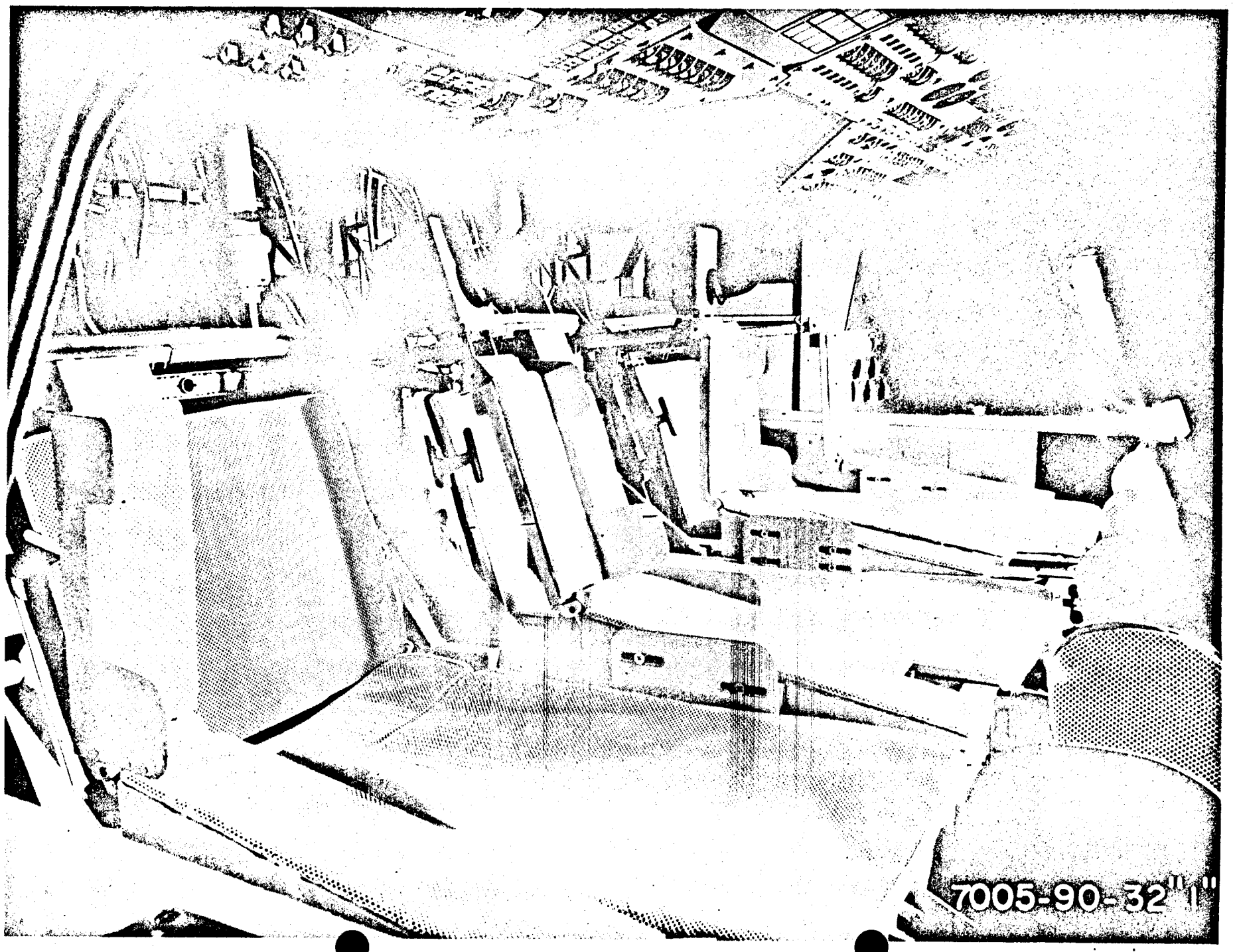
7005-90-32"1"

D&C SYSTEM - FUTURE DEVELOPMENT OUTLOOK

- EXTENSION OF EDS & SEQUENCE CONTROLS TO ACCOMMODATE SATURN - IB & V LV
- INCORPORATION OF FUNCTIONS PECULIAR TO LUNAR MISSION/DEEP SPACE FLIGHTS
  - LEM CONDITION MONITORING INSTRUMENTS
  - LUNAR ORBIT RENDEZVOUS/RESCUE AIDS
  - RADIATION INSTRUMENTATION READOUT DEVICES

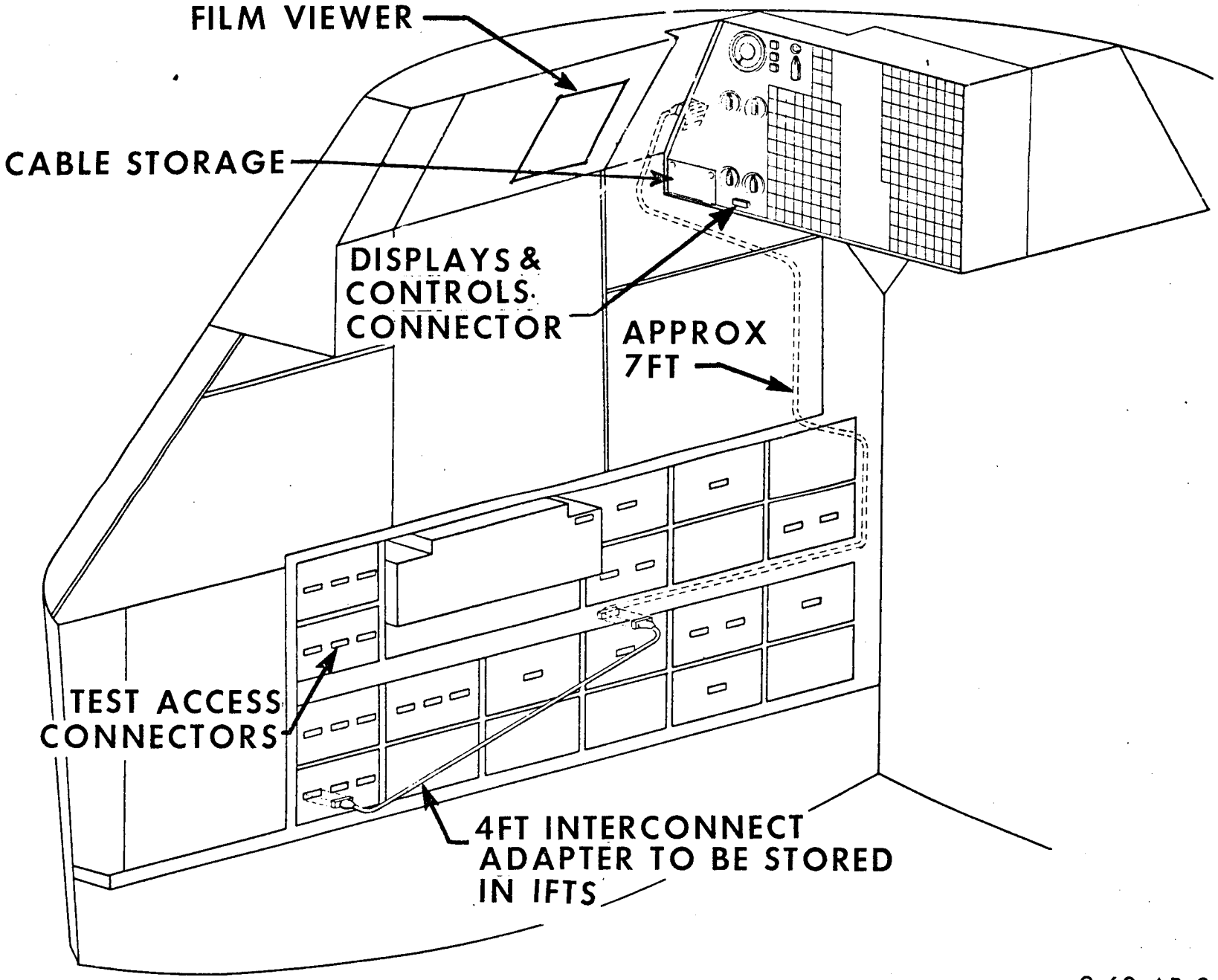

NORTH AMERICAN AVIATION, INC.
SPACE AND INFORMATION SYSTEMS DIVISION

9-63 AP 34113

IN-FLIGHT TEST SYSTEM

OPERATIONAL USAGE:

- COMPARATOR INDICATOR UNIT SENSES MALFUNCTION
- REFER TO MAINTENANCE FILM VIEWER
- MEASURE COMPARATOR INPUTS
- CONNECT VOLTMETER TO LEB TEST CONNECTORS
- ISOLATE MALFUNCTION

APOLLO TRAINING EQUIPMENT

NORTH AMERICAN AVIATION, INC.
SPACE AND INFORMATION SYSTEMS DIVISION

9-63 AP59527

DEFINITION

- ASSURE MISSION SUCCESS

  SYSTEM FAMILIARIZATION

  PROCEDURAL PRACTICE

  SPECIFIC MISSION REHEARSAL

- USING

  APOLLO MISSION SIMULATOR -2 (AMS)

  APOLLO PART TASK TRAINER -1 (APTT)

  APOLLO SYSTEMS TRAINERS -5

TRAINER CRITICAL PARAMETERS

- EASE OF MODIFICATION TO SUCCESSIVE AFRM CONFIGURATIONS
- FAITHFUL REPRESENTATION OF ALL SPACECRAFT DISPLAYS & CONTROL RESPONSES
- INCLUSION OF ALL CRITICAL MALFUNCTIONS
- EASE OF PROGRAM MODIFICATION TO SIMULATE ACTUAL FLIGHT EXPERIENCES
- OPERATING PERIODS & EQUIPMENT LIFE

GENERAL APPROACH

- DESIGN FOR EASY COMPONENT REPLACEMENT
- MODULARIZE MAIN EQUIPMENT ITEMS
- USE OFF-THE-SHELF AND/OR QUALIFIED HARDWARE
- USE COMMERCIAL PROVEN COMPUTERS COMMON TO ALL TRAINERS
- PROVIDE ADEQUATE ACCESS TO ALL COMPONENTS
- AUTOMATIC DIAGNOSTIC & CHECKOUT ROUTINES

APTT OBJECTIVES

- PRACTICE & GAIN PROFICIENCY IN EXECUTION OF DISCRETE TASKS
- PRACTICE RECOGNITION & RESPONSES TO MALFUNCTION SITUATIONS
- PRACTICE , CHECK, & REFINE DISCRETE OPERATING PROCEDURES

PROPOSED INSTALLATION APTT

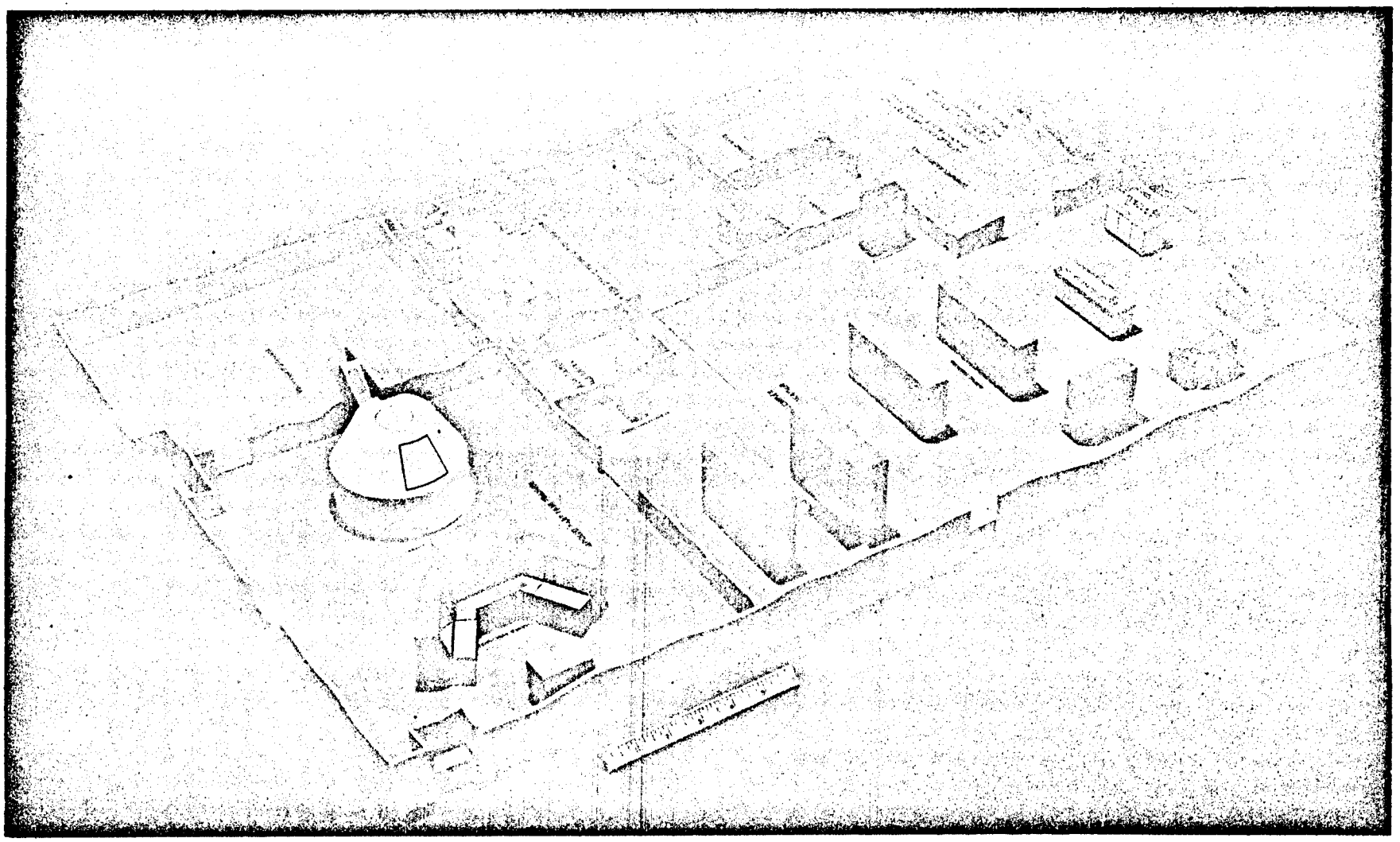

APTT DESIGN CHARACTERISTICS

- CANNED LAUNCH & ABORT TRAJECTORIES
- CLOSED LOOP ORBITAL, & CIS-LUNAR TRAJECTORIES
- CLOSED LOOP ATTITUDE CONTROL
- SIMULATION OF SPACECRAFT SYSTEMS
- AURAL CUE SIMULATION
- VISUAL SIMULATION

  SEXTANT

  TELESCOPE

- FIXED BASE CM
- MALFUNCTION INSERTION RANDOMLY SELECTABLE BY OPERATOR
- MONITORING & RECORDING FACILITIES FOR ALL ACTIVITIES & SEQUENCES

APOLLO PART TASK TRAINER INSTRUCTORS' CONSOLE

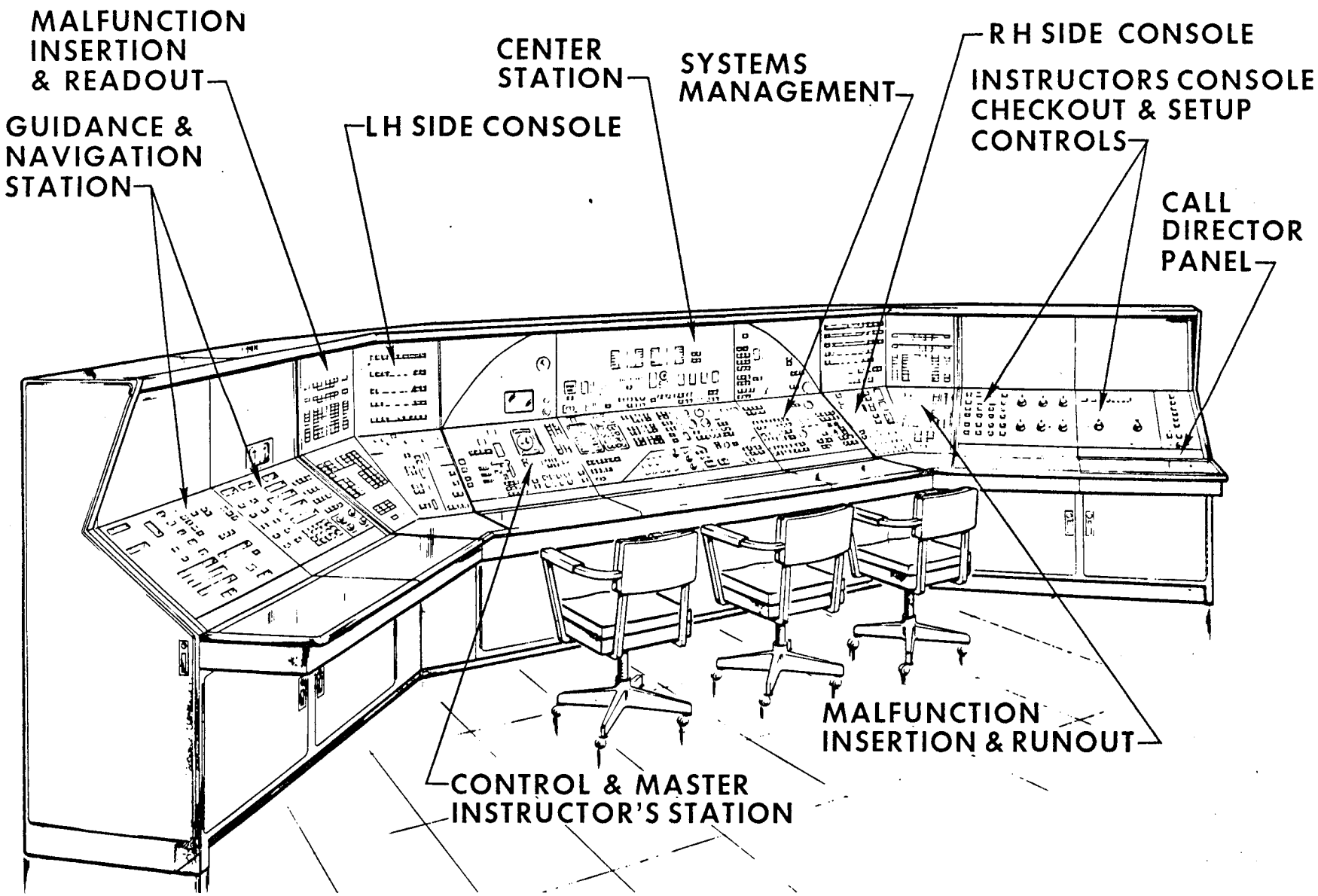

NORTH AMERICAN AVIATION, INC.
SPACE AND INFORMATION SYSTEMS DIVISION

9-63 AP 33851

AMS OBJECTIVES

- DUPLICATION OF MISSION PHASES & FULL MISSIONS PRIOR TO ACTUAL LAUNCH
- PRACTICE & ASSESS IMPORT OF MALFUNCTION SITUATIONS & USE OF ALTERNATIVE PROCEDURES
- PRACTICE & ASSESS INTERRELATED EFFECTS OF PERFORMING VARIOUS DISCRETE TASKS IN THEIR CORRECT PHASE RELATIONSHIPS
- PRACTICE, CHECK, & REFINE MISSION OPERATIONAL PROCEDURES
- PROVIDE SIMULATION OF SPACECRAFT FOR SIMULATION OF A COMPLETE FLIGHT OPERATION IN CONJUNCTION WITH IMCC

PROPOSED INSTALLATION-AMS

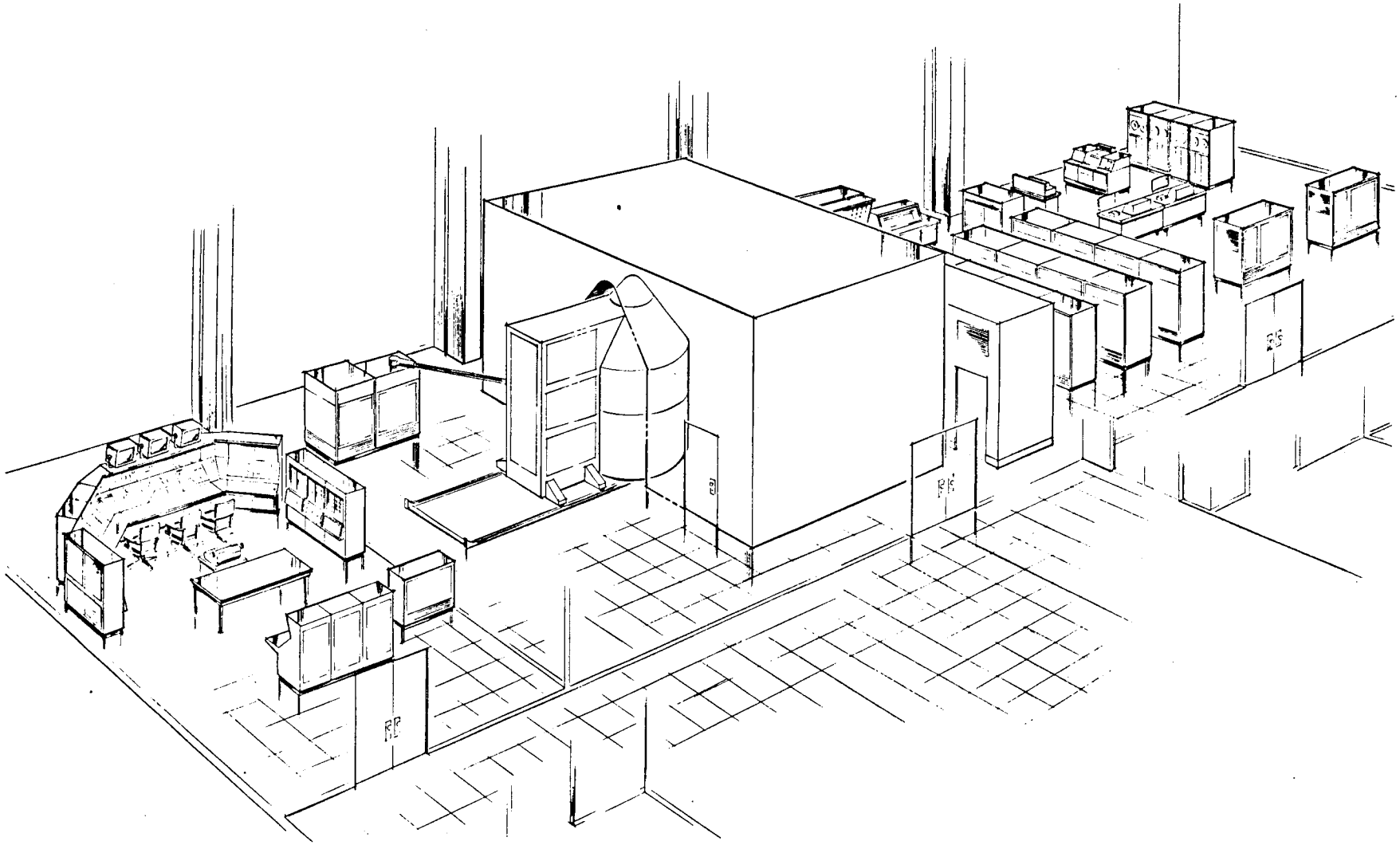

AMS DESIGN CHARACTERISTICS

- CONTROLLABLE CLOSED LOOP MOTION & TRAJECTORY MECHANIZATIONS
- SIMULATION OF SPACECRAFT SYSTEMS
- AURAL CUE SIMULATION
- VISUAL CUE SIMULATION
  - SEXTANT
  - TELESCOPE
  - ALL WINDOWS
- FIXED BASE CM
- WASTE DISPOSAL & FOOD STORAGE
- MALFUNCTION INSERTION RANDOMLY SELECTABLE BY OPERATOR
- MONITORING & RECORDING FACILITIES FOR ALL ACTIVITIES & SEQUENCES

APOLLO ENGINEERING SIMULATION

NORTH AMERICAN AVIATION, INC.
SPACE AND INFORMATION SYSTEMS DIVISION

9-63 AP33855

APOLLO DESIGN PROCESS

- SUBSYSTEM & SYSTEM DESIGN
  - CONCEPTUAL*
  - EVALUATION*
- FABRICATION & PROCUREMENT
- SYSTEM INTEGRATION
  - ACCEPTANCE TESTING*
  - ENVIRONMENTAL TESTING*
  - STATIC VERIFICATION
  - DYNAMIC VERIFICATION*
- FLIGHT TESTING
  - PREFLIGHT*
  - MISSION OPERATION
  - POSTFLIGHT DATA EVALUATION*

* REQUIRES SIMULATION

SIMULATION PROGRAM CRITERIA

- FIXED BASE
- ROOM ENVIRONMENT
- PROGRAM DESIGN MILESTONES
- FLIGHT DATES

OBJECTIVES

- CONCEPTUAL DESIGN
- DESIGN EVALUATION
- DESIGN INTEGRATION
- HARDWARE VERIFICATION
- PREFLIGHT MISSION VERIFICATION
- POSTFLIGHT DATA EVALUATION
- UPDATING TRAINER DESIGN

EQUIPMENT

- THREE EVALUATORS
- TWO SIMULATORS
- THIRTEEN HUNDRED IN-HOUSE ANALOG AMPLIFIERS
- THREE MEDIUM-SIZED DIGITAL COMPUTERS
- CONTROLS & DISPLAYS
- PROTOTYPE HARDWARE
- EXTERNAL VISUAL DISPLAYS
- DATA ACQUISITION SYSTEM
- INTERFACE GEAR
- FLIGHT TABLE
- SERVICE MODULE ENGINE SIMULATOR
- SPECIAL PURPOSE EQUIPMENT

COMPLEX

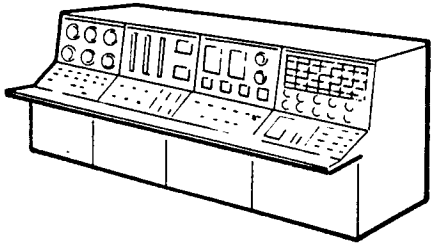

CENTRAL CONTROLS

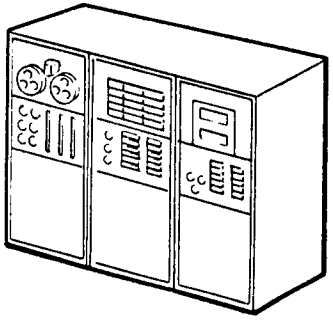

GENERAL PURPOSE COMPUTERS

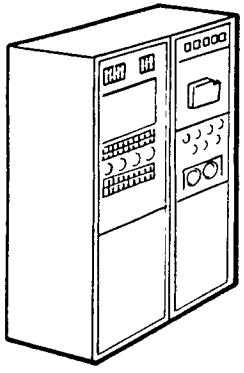

SPECIAL EQUIPMENT

- VISUAL DISPLAYS
- FLIGHT TABLE
- SM ENG SIM
- DATA ACQUISITION

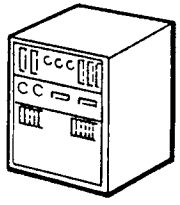

INTERFACE EQUIPMENT

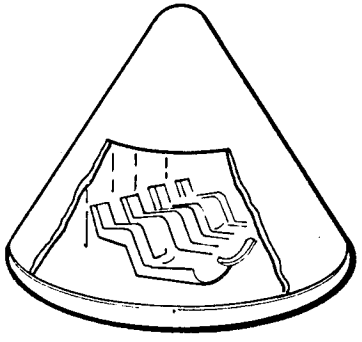

COMMAND MODULE

9-63 AP33863

STUDY CATEGORIES

FLIGHT PHASES	COMPL	PROG
ENTRY	5	11
BOOST & ABORT	2	9
RENDEZVOUS	2	7
COAST & MANEUVER	4	10
DOCKING	3	7

SYSTEM	COMPL	PROG
ATTITUDE CONTROL SYS	1	9
LIFE SYSTEMS		8
NAV SIGHTINGS		9
PROPULSION	4	9
REACTION CONTROL SYS	1	5
THRUST VECTOR CONTROL	7	15

STUDIES IN PROGRESS

• PROPULSION G	120 AMP
• ATTITUDE CONTROL SYSTEM A	150 AMP
• THRUST VECTOR CONTROL A	150 AMP
• REACTION CONTROL SYSTEM A	250 AMP
• CENTRIFUGE DY-2 - CHECKOUT	110 AMP
• ENTRY 1	480 AMP
TOTAL	1260 AMP

APOLLO

GSE

NORTH AMERICAN AVIATION, INC.
SPACE AND INFORMATION SYSTEMS DIVISION

9-63 AP33709

APOLLO GSE

- CHECKS OUT
- HANDLES
- SERVICES

THE APOLLO SPACECRAFT

CHECKOUT

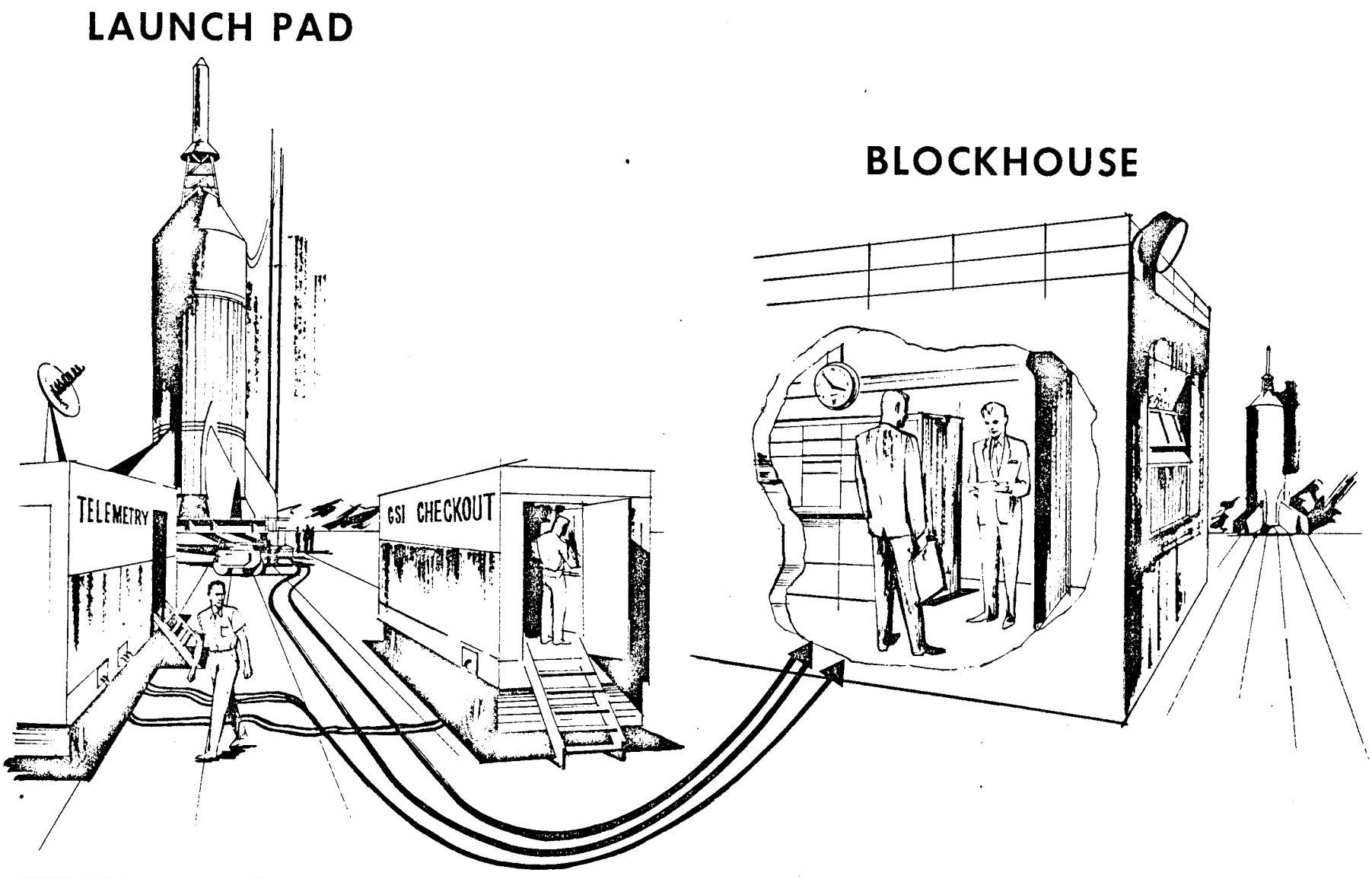

HANDLING

- HANDLING FUNCTIONS WHICH MUST BE PERFORMED, ARE

  ALIGN

  ACCESS

  PROTECT

  SUPPORT

  WEIGHT & BLANCE

  LIFTING

  TRANSPORTATION

SERVICING

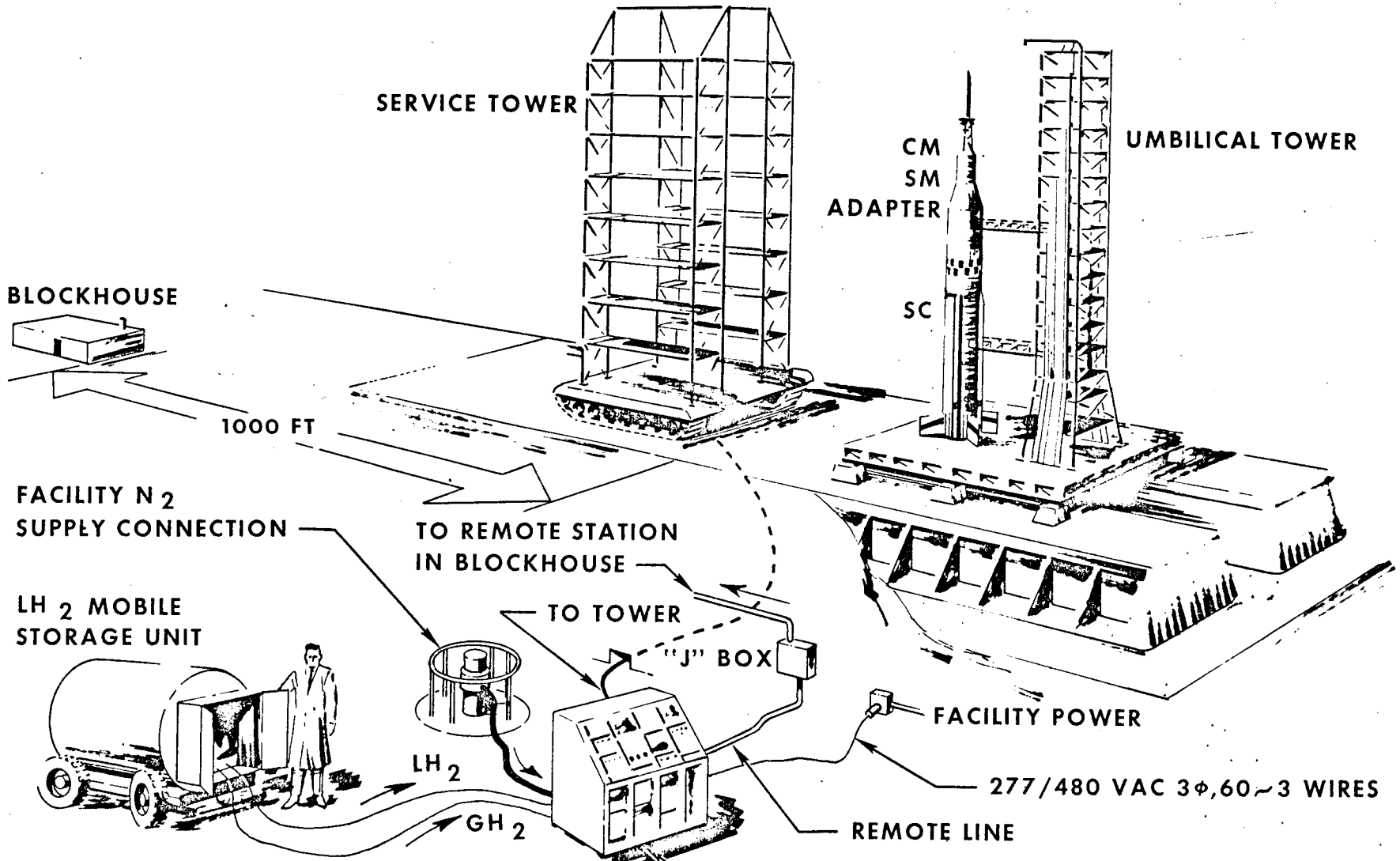

LH_2 LAYOUT SERVICING FOR SPACECRAFT
LOCATED APPROX 150 FT FROM LAUNCH PAD

AUXILIARY

- AUXILIARY EQUIPMENT IS DESIGNED TO ASSIST MAJOR EQUIPMENT IN ITS FUNCTION, TO SUPPLEMENT MAJOR EQUIPMENT, OR TO AID PERSONNEL IN UTILIZING MAJOR EQUIPMENT

EXAMPLES OF AUXILIARY EQUIPMENT

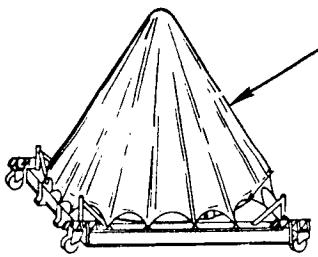

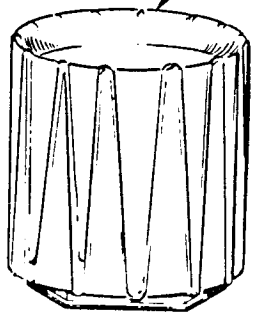

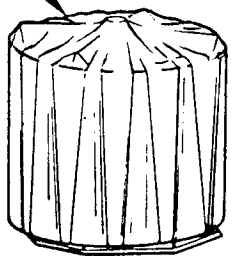

COVERS

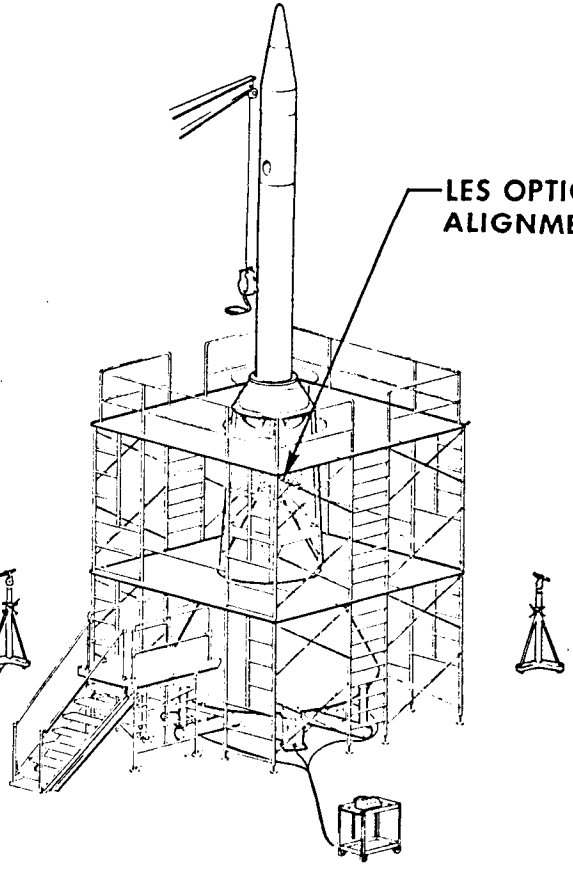

GSE SUPPORTS

- 18 BP TEST VEHICLES INCLUDING TEST FIXTURE F2
  75 MODELS PER BP

- 9 AFRM TEST VEHICLES
  172 MODELS PER AFRM

- GSE SUPPORTING FUNCTIONS REQUIRED AT FIVE DIFFERENT TEST LOCATIONS

TEST VEHICLES SUPPORTED

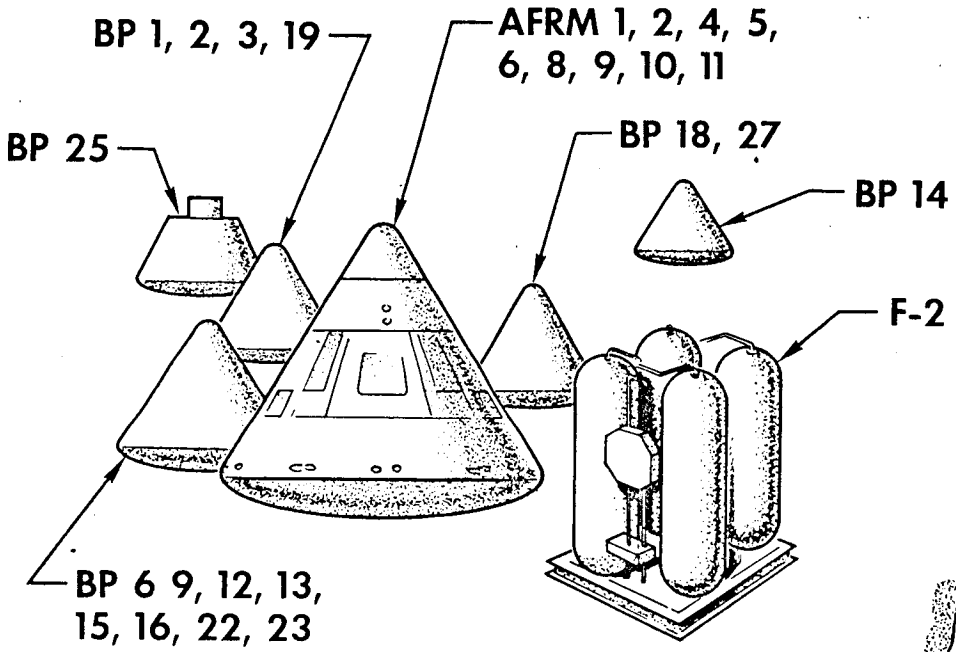

TEST SITE LOCATIONS

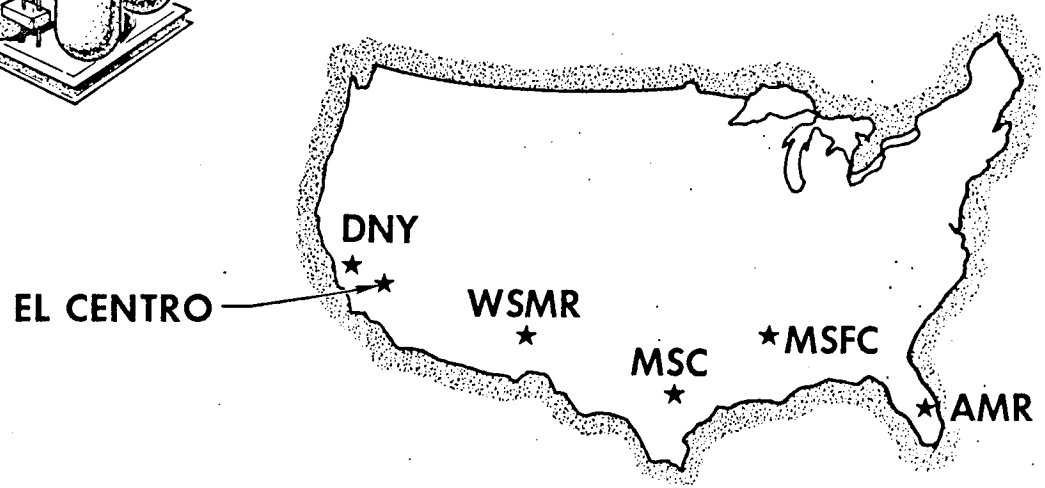

GSE CHECKOUT CONCEPT

- SYSTEMS ACCEPTANCE TESTS WITH BENCH MAINTENANCE EQUIPMENT (BME) AT SUBCONTRACTOR FACILITY & OTHER TEST SITES

- POST-INSTALLATION SYSTEMS TESTS & SPECIAL TESTS (STATIC FIRINGS) WITH MANUAL/LOCAL SPECIAL TESTS UNITS (STU) IN FACTORY & VARIOUS TEST SITES

- COMBINED & INTEGRATED SYSTEMS TESTS ON LATER AIRFRAMES WITH REMOTE/SEMIAUTOMATIC CHECKOUT SYSTEM (O PACE-SC)

BENCH MAINTENANCE EQUIPMENT
(BME)

MALFUNCTION ISOLATION TO LOWEST REPLACEABLE SERIALIZED UNIT (CARD,MODULE)

STABILIZATION & CONTROL BENCH MAINT AREA (TYPICAL)

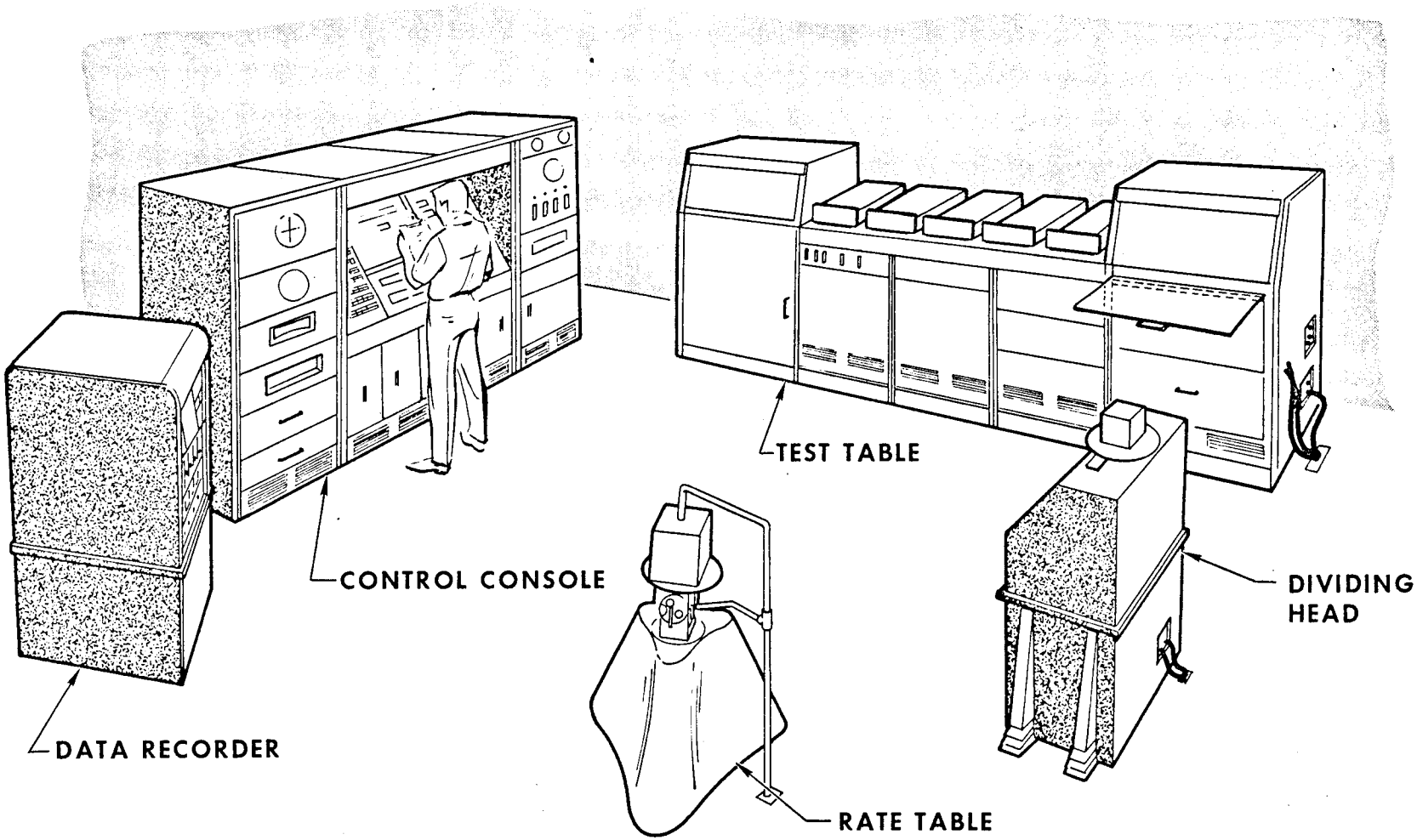

SPECIAL TEST UNIT
(STU)

MODEL	NAME	NO. BAYS
C14-600	ELEC POWER SYS	1
601	FUEL CELL HEATER SUPPORT	1
602	SERVICE PROPULSION SYS C/O & FIRING	3
603	STAB & CONTROL SYS	4
604	GUIDANCE & NAV SYS	4
605	CM RCS C/O & FIRE CONTROL	2
606	SM RCS C/O & FIRE CONTROL	3
608	FUEL CELL & CRYOGENIC SYS	4
611	COMMUNICATION & DATA SUBSYS	1
612	LAUNCH ESCAPE SYS, EARTH LANDING SYS, CREW SAFETY SYS	2
613	TEST DIRECTOR'S CONSOLE	2
614	ENVIRONMENTAL CONTROL SYS	2

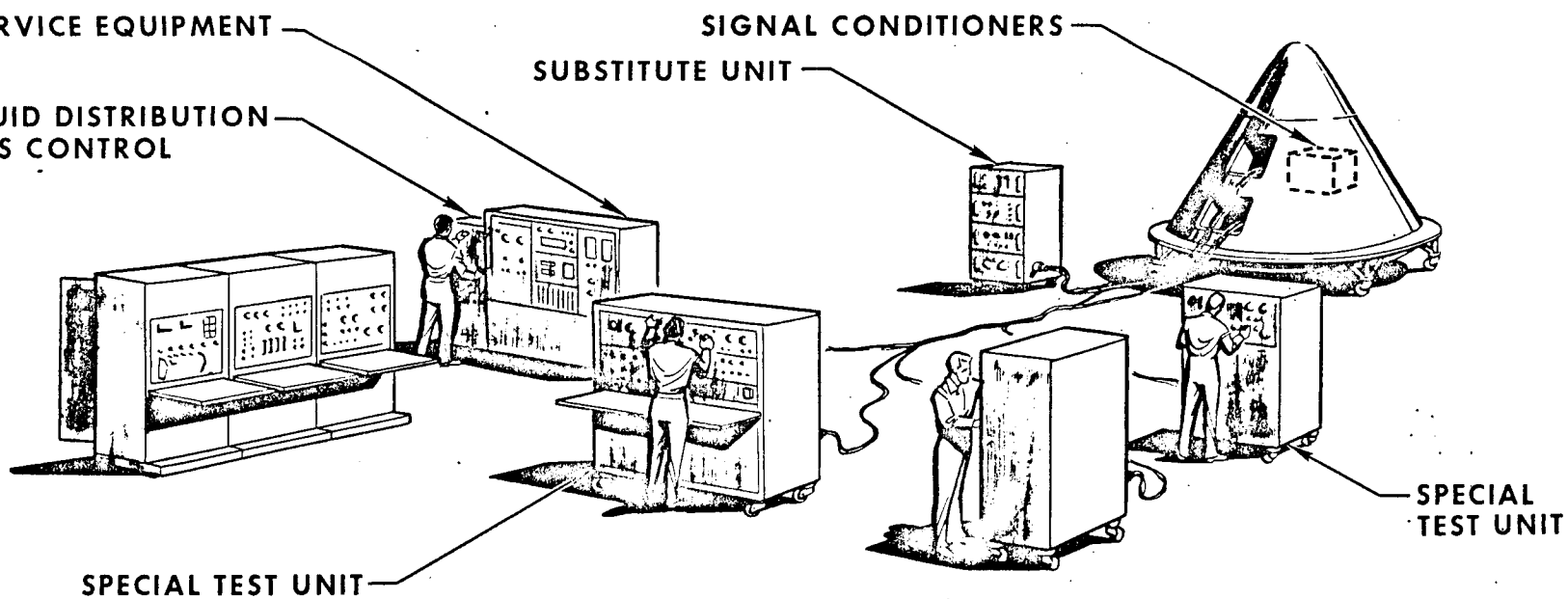

SC PRELAUNCH AUTOMATIC C/O EQUIPMENT
(PACE-SC)

MALFUNCTION ISOLATION TO REPLACEABLE SUBSYSTEM (BLACK BOX)

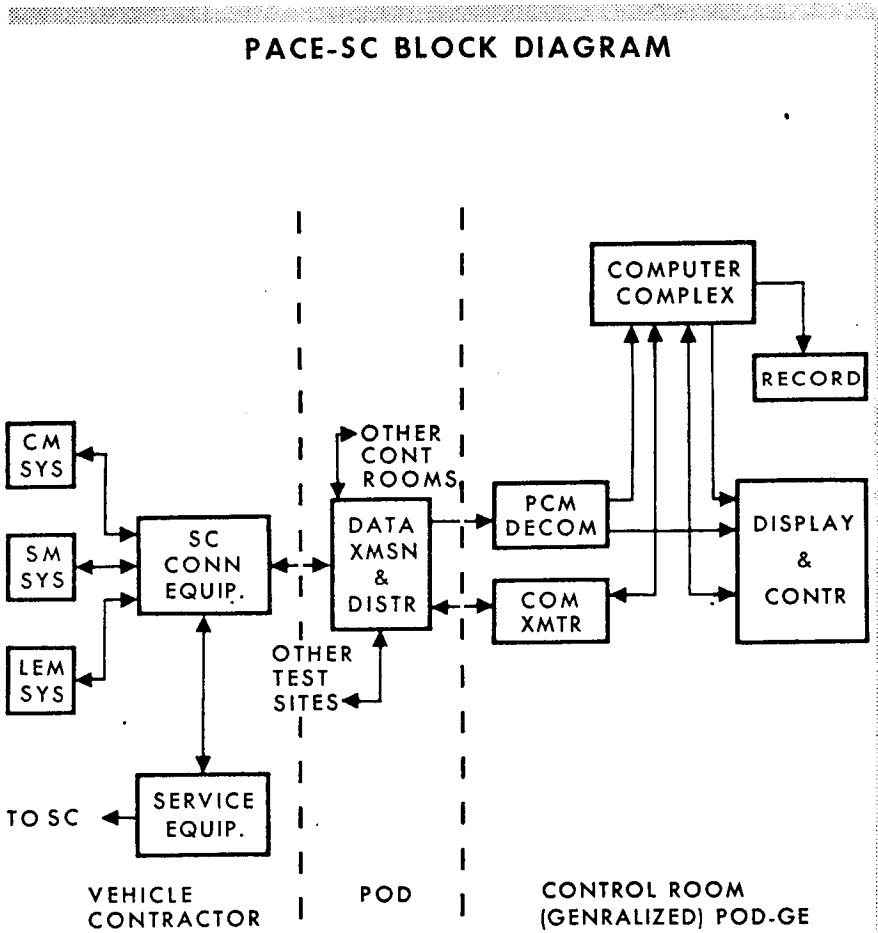

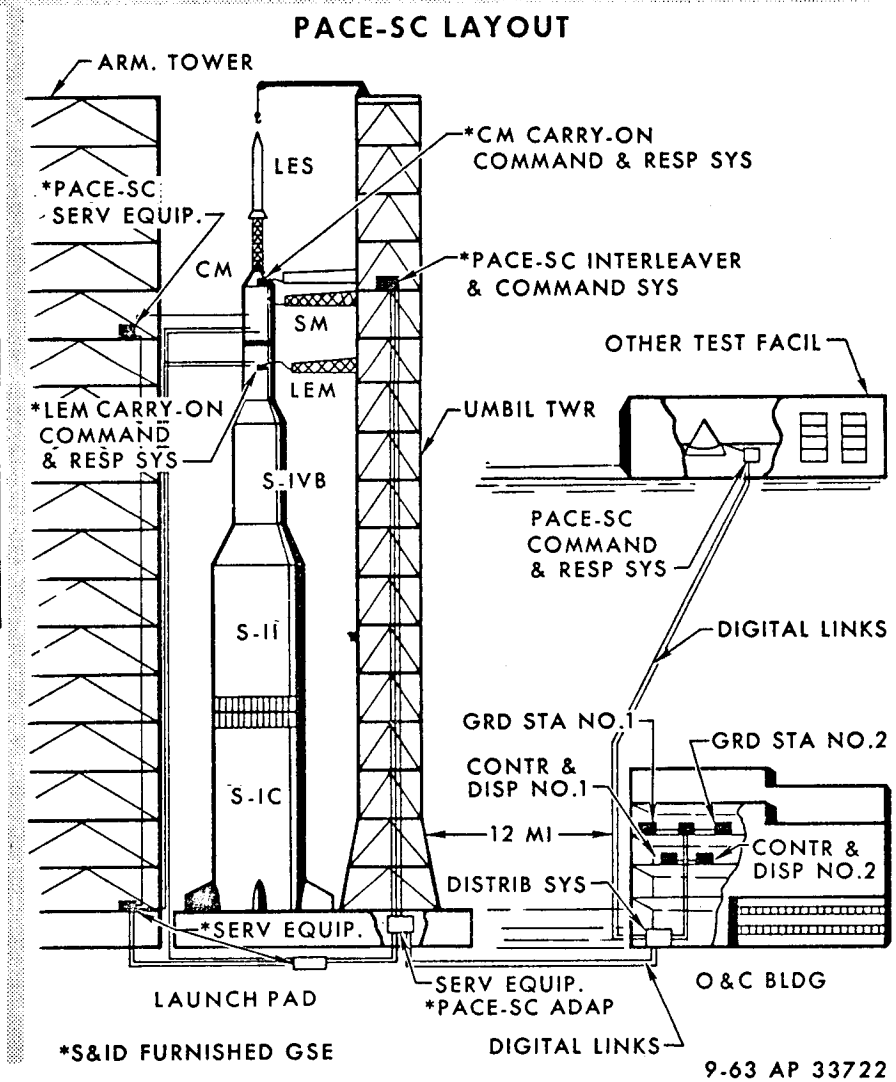

SPACECRAFT SLING

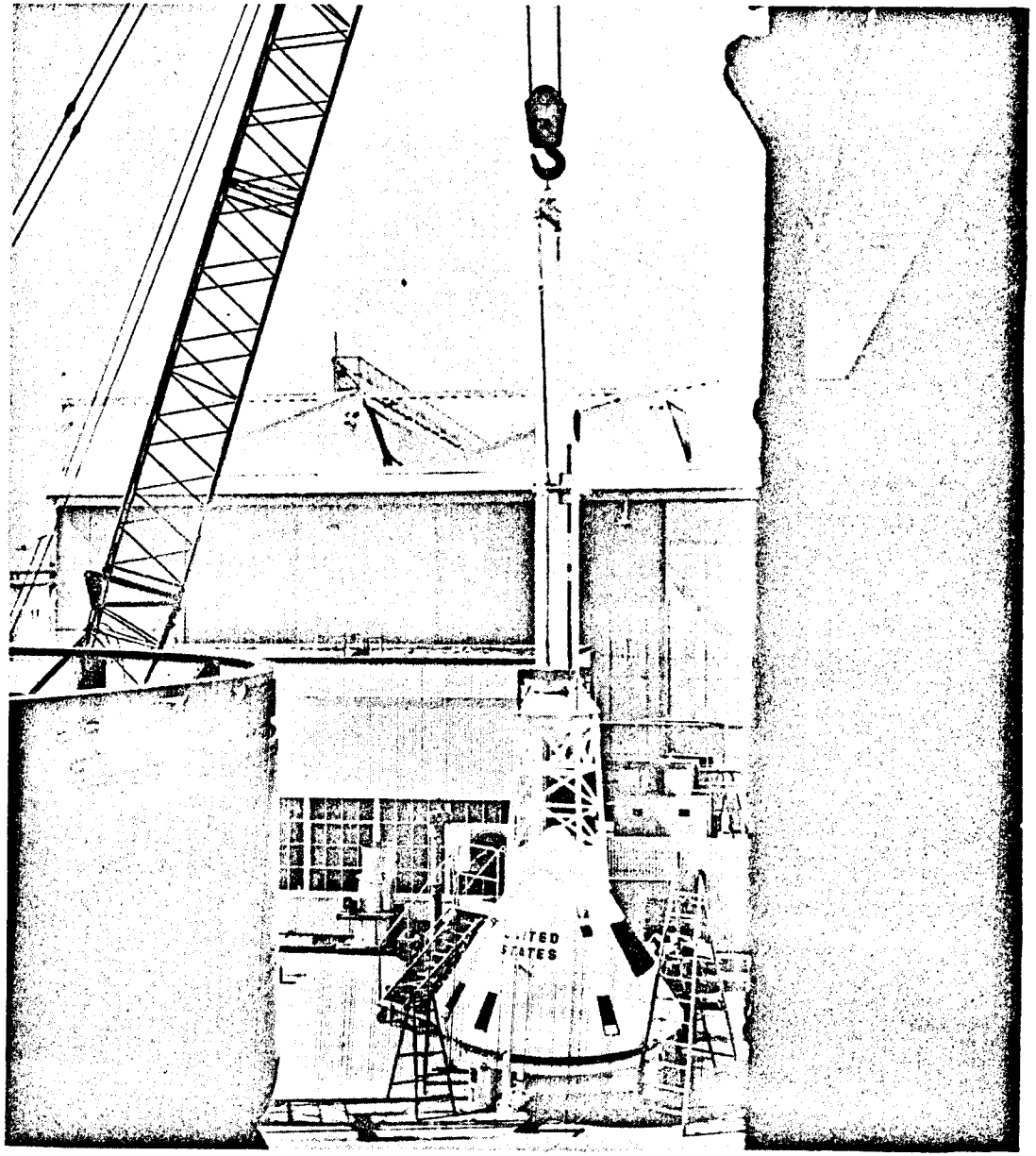

JETTISON MOTOR SUPPORT

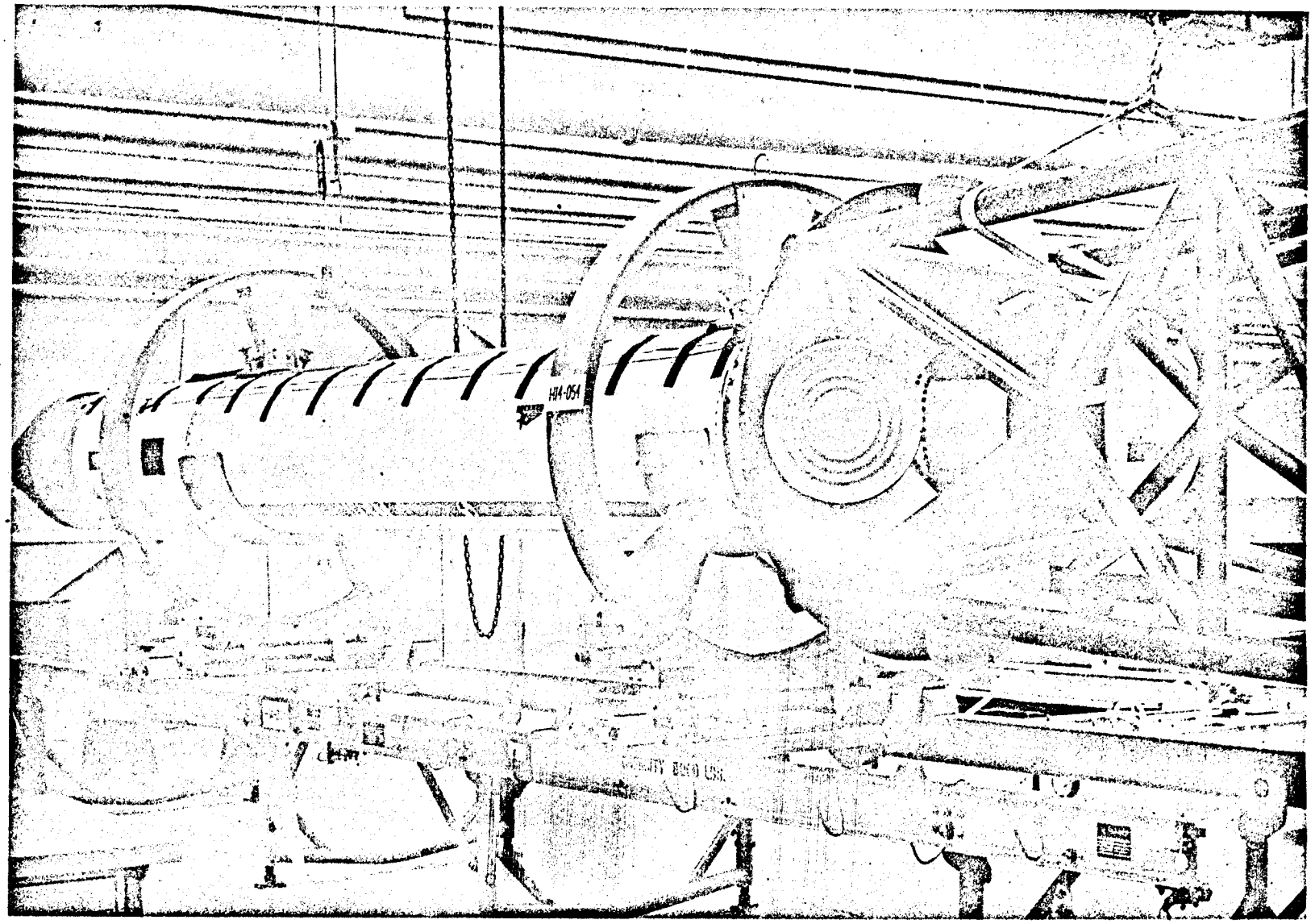

TEST CONDUCTOR GROUP

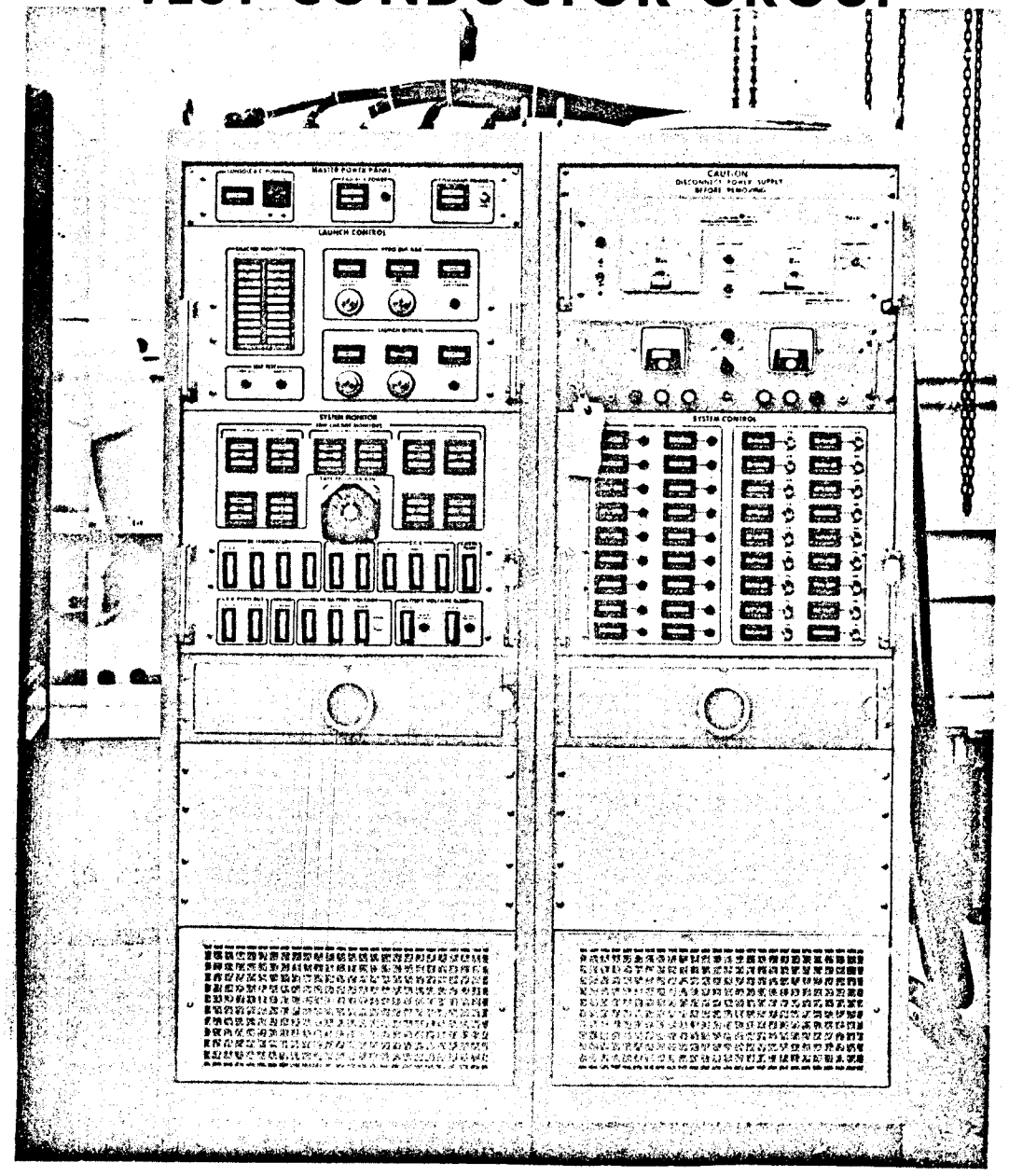

PYROTECHNICS INITIATORS SUBSTITUTE SET

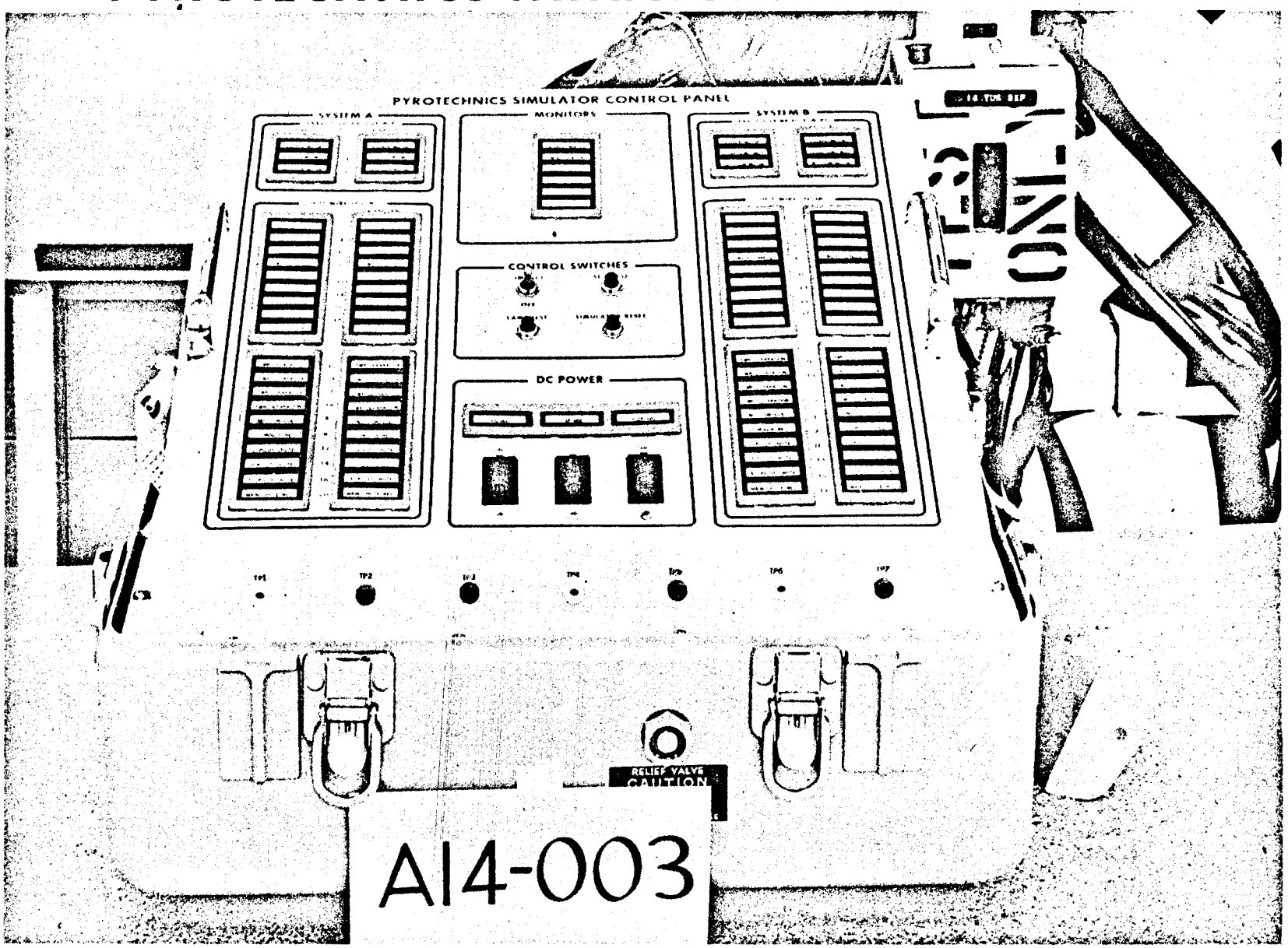

GSE MODEL & CONFIGURATION STATUS

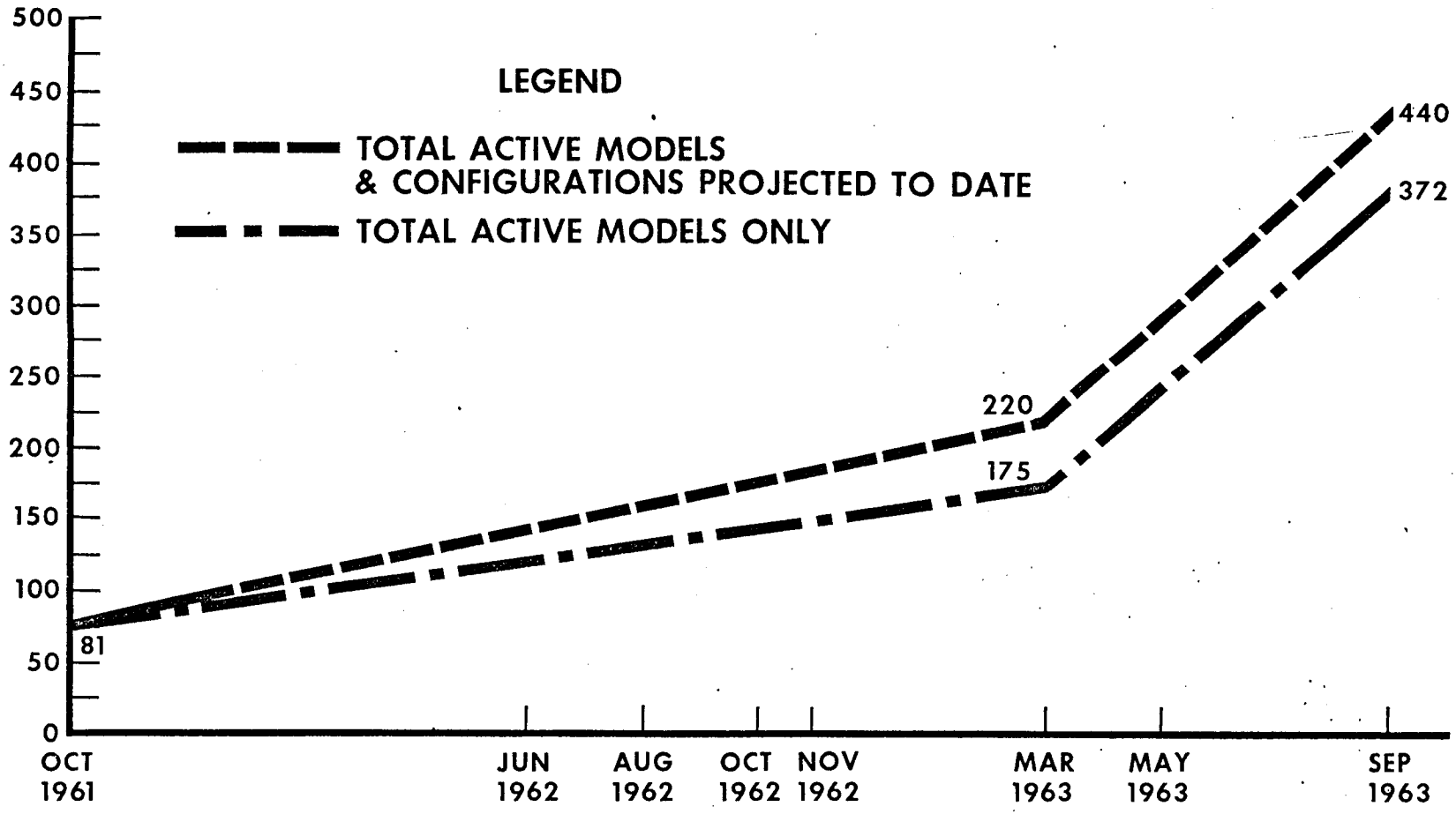

APOLLO DOCKING SYSTEM

NORTH AMERICAN AVIATION, INC.
SPACE AND INFORMATION SYSTEMS DIVISION

9-63 AP 34088

CONTENTS

DOCKING PHILOSOPHY & PHASES

DOCKING SYSTEM DESIGN CONSIDERATIONS

DESIGN REQUIREMENTS

DOCKING DESIGN CONCEPTS

DOCKING DEVELOPMENT PLAN

APOLLO DOCKING PHILOSOPHY

- PRIMARY MODE

  INITIAL LATCHING AT SAFE DISTANCE - EXTENDIBLE DEVICE

- BACKUP MODE

  FREE FLYING TO HATCH CONTACT

- EMERGENCY MODE

  CREW TRANSFER EXPOSED TO SPACE ENVIRONMENT

APOLLO DOCKING PHASES

- **TRANSPOSITION**

  PRIMARY MODE – CSM ACTIVE

  BACKUP MODE – CSM ACTIVE

  I.C.'s – ATTACHED TO S-IVB – LEM

- **LUNAR ORBITAL**

  PRIMARY MODE – LEM ACTIVE

  BACKUP MODE – CSM OR LEM ACTIVE

  I.C.'s – RELATIVE POSITION 500 ± 100 FT

  RELATIVE CLOSING VELOCITY 5 ± 1 FPS

TRANSPOSITION DOCKING TIME LINE

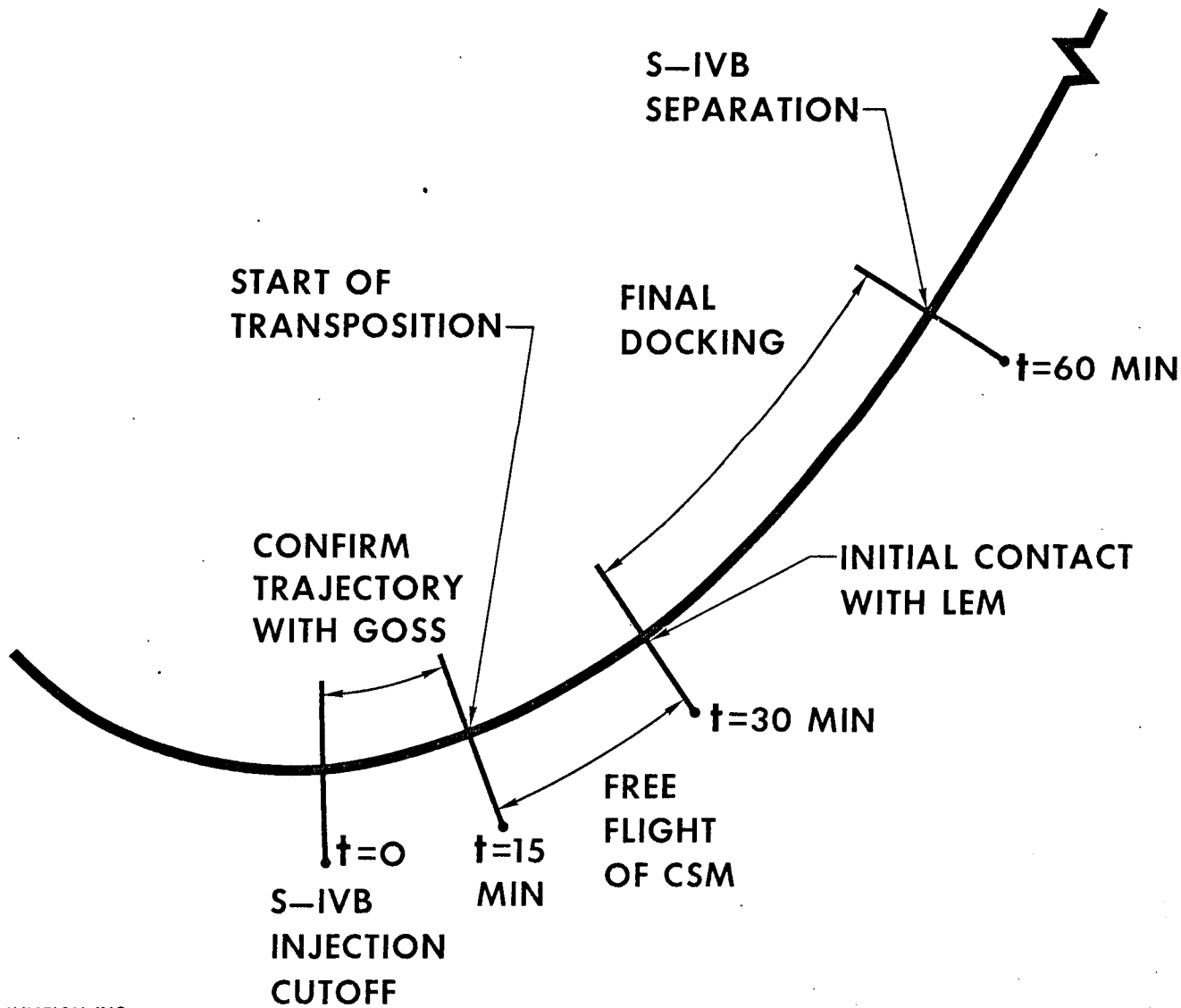

TRANSPOSITION & DOCKING

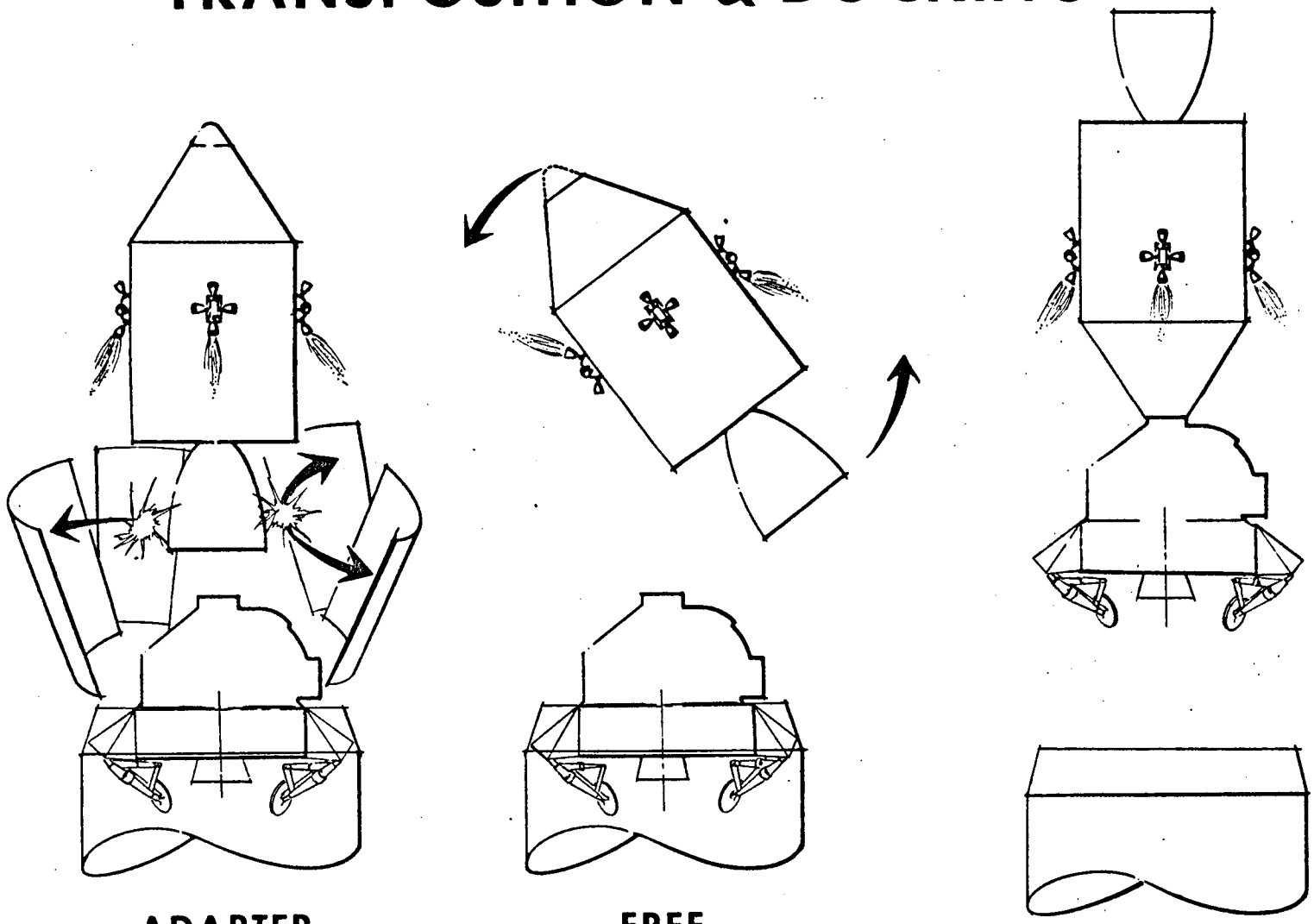

ADAPTER SEPARATION

FREE FLY-AROUND

DOCKING

DOCKING SYSTEM DESIGN CONSIDERATIONS

DOCKING SUBPHASE	SYSTEMS CONCERNED	REQUIREMENTS
FREE-FLIGHT	• SCS • SM RCS • CONTROLS & DISPLAYS • LIFE SYS • S-IVB CONTROL SYS • LEM CONTROL SYS	• FLIGHT PROCEDURE • DESIGN REQMTS (CONTACT CONDITIONS, PROPELLANT CONSUMPTION,ETC)
POST CONTACT	• DOCKING MECH SYS • LEM CONTROL SYS • SCS • SM RCS • S-IVB CONTROL SYS • LIFE SYSTEMS	• LOADS (DYNAMIC) • STABILITY
AFTER FINAL LATCHING	• SPS TVC • CSM-LEM STRUCTURAL CONNECTION	• STABILITY DURING SM OR LEM MAIN ENGINE FIRING

PRINCIPLE FACTORS AFFECTING DOCKING REQUIREMENTS

- SCS MECHANIZATION
- REACTION JET CHARACTERISTICS
- TARGET CHARACTERISTICS
- PILOT CONFIGURATION
- COCKPIT CHARACTERISTICS
- INITIAL CONDITIONS
- FAILURE MODES
- EXTENDIBLE DEVICE CHARACTERISTICS

CREW FUNCTION DURING DOCKING MANEUVER

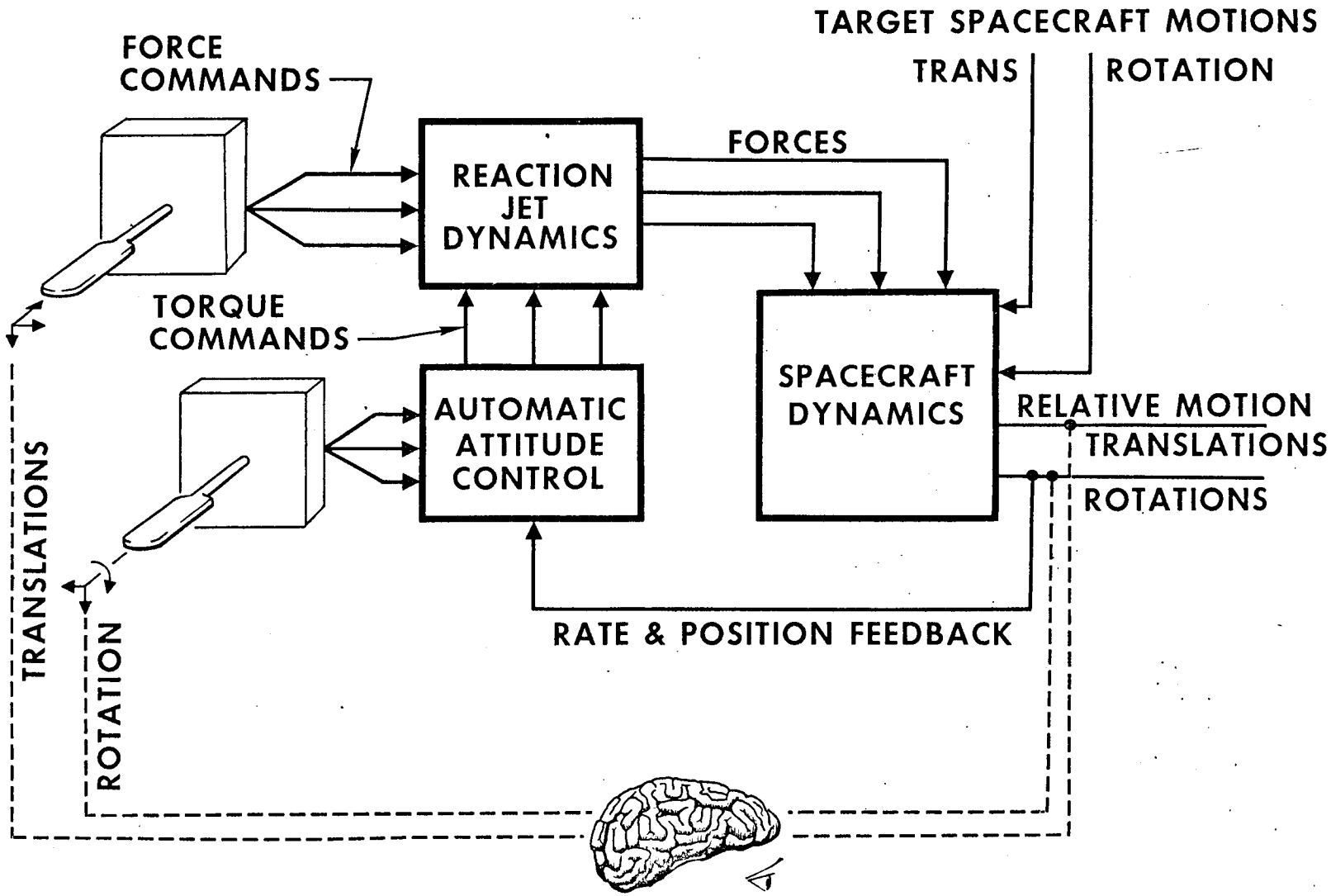

TYPICAL DATA
SHADED DATA=ASTRONAUT PERFORMANCE

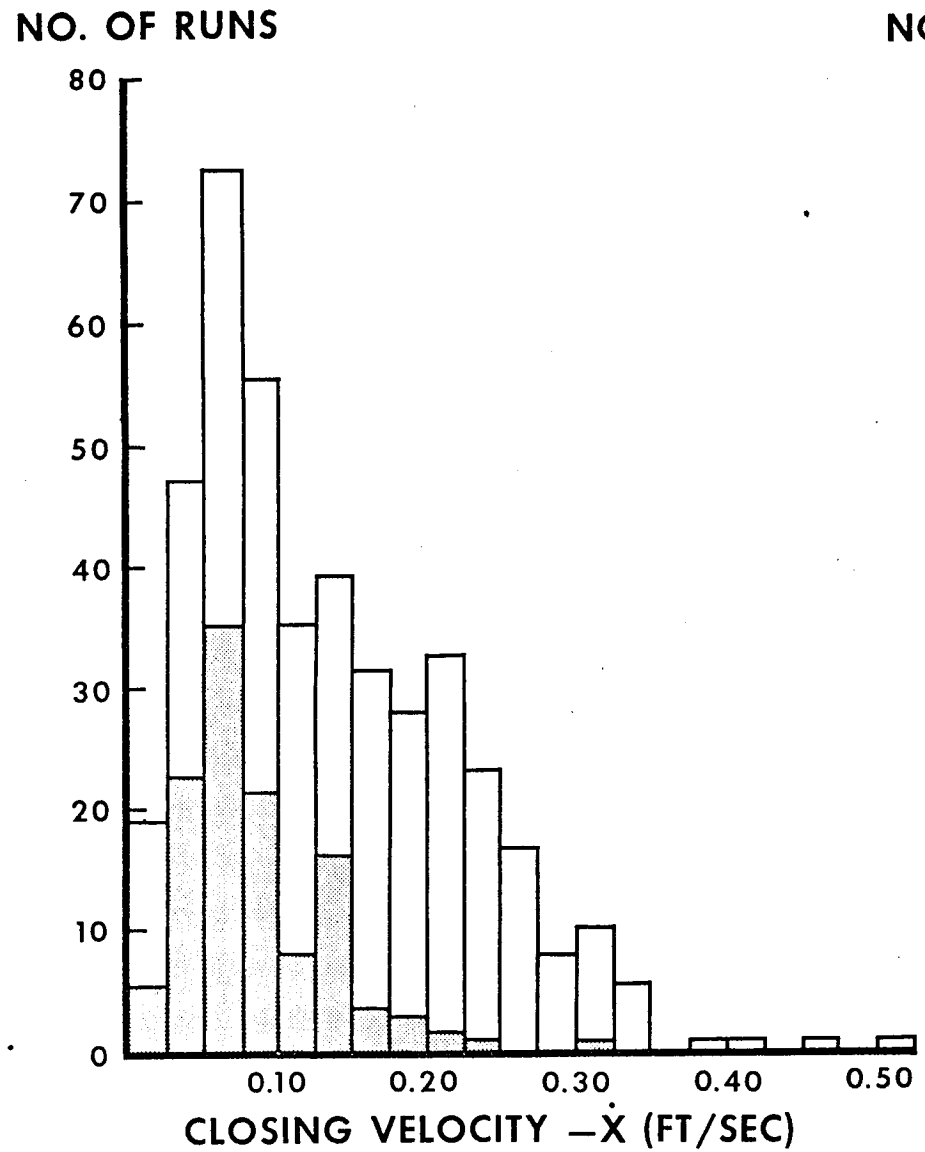

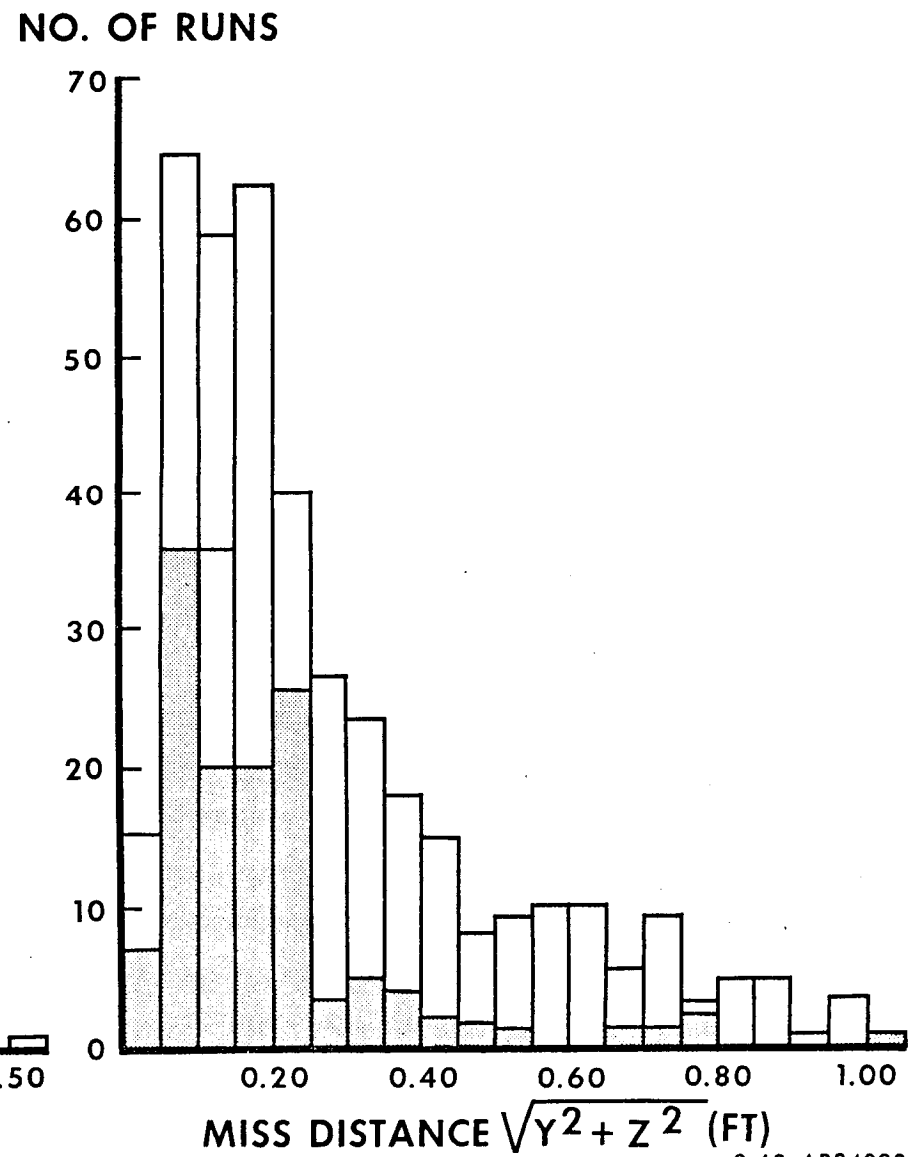

NORTH AMERICAN AVIATION, INC.
SPACE AND INFORMATION SYSTEMS DIVISION

9-63 AP34098

SIMULATION RESULTS–BACKUP MODE
NOMINAL TRANSPOSITION DOCKING

	MEAN	99.95%
CLOSING VELOCITY (FPS)	0.11	0.31
LATERAL VELOCITY (FPS)	0.05	0.15
MISS DISTANCE (FT)	0.13	0.43
PROPELLANT CONSUMPTION (LB)	29	82
ATTITUDE ERROR (DEG)		<7
TIME (MIN)	4.5	7.9

MECHANICAL SYSTEM DESIGN REQUIREMENTS

INITIAL CONTACT

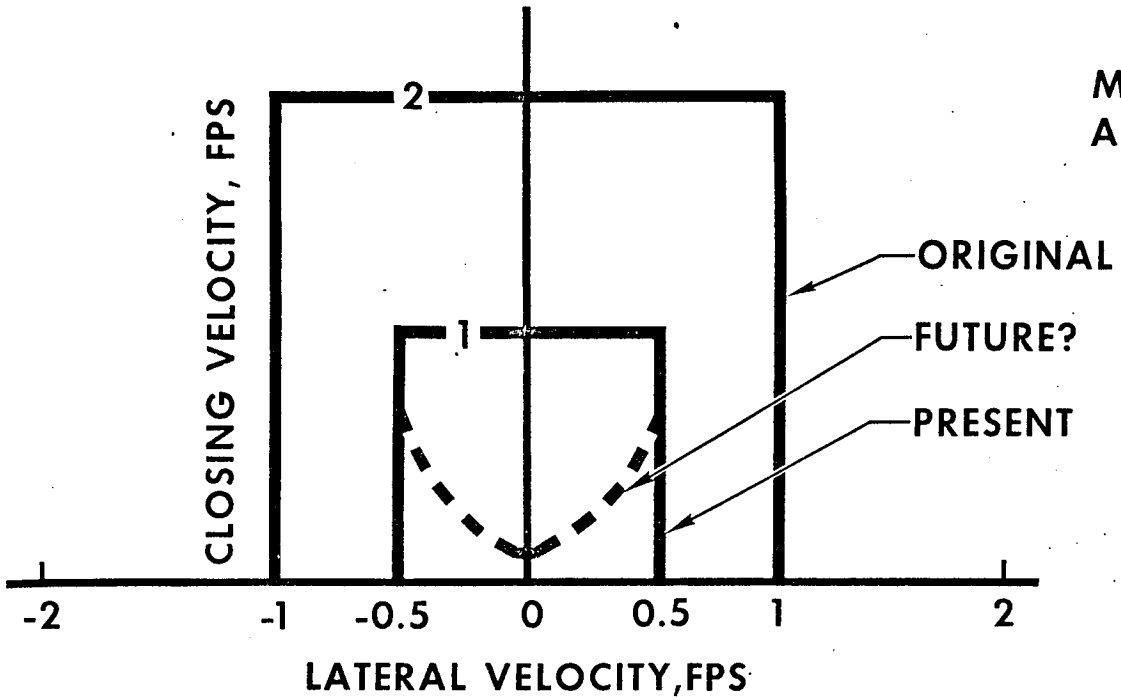

MISS DISTANCE: 1 FOOT
ATTITUDE ERROR: 10 DEG

FINAL CONTACT

CLOSING VELOCITY 2 IN/SEC

EXTENDABLE DEVICE DOCKING CONCEPTS

I	INFLATABLE PROBE	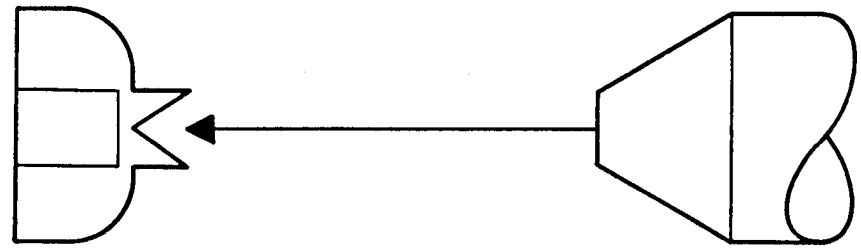
II	STEM	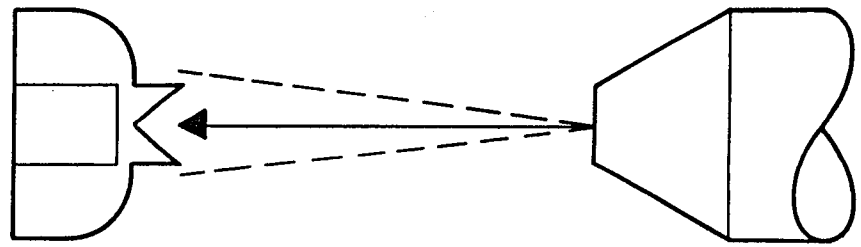
III	STEM & CABLE	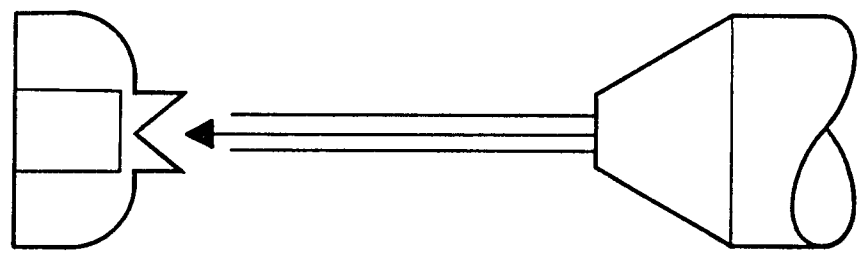
IV	TUNNEL	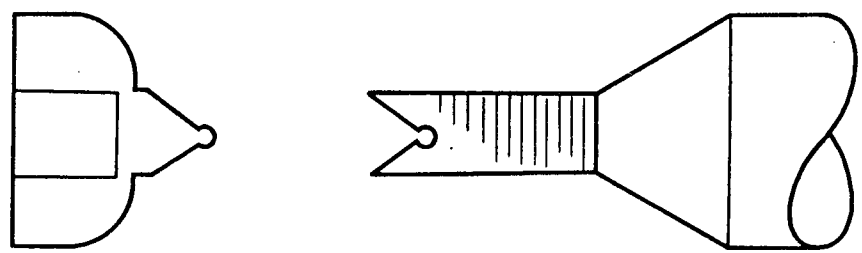

INFLATABLE PROBE CONCEPT

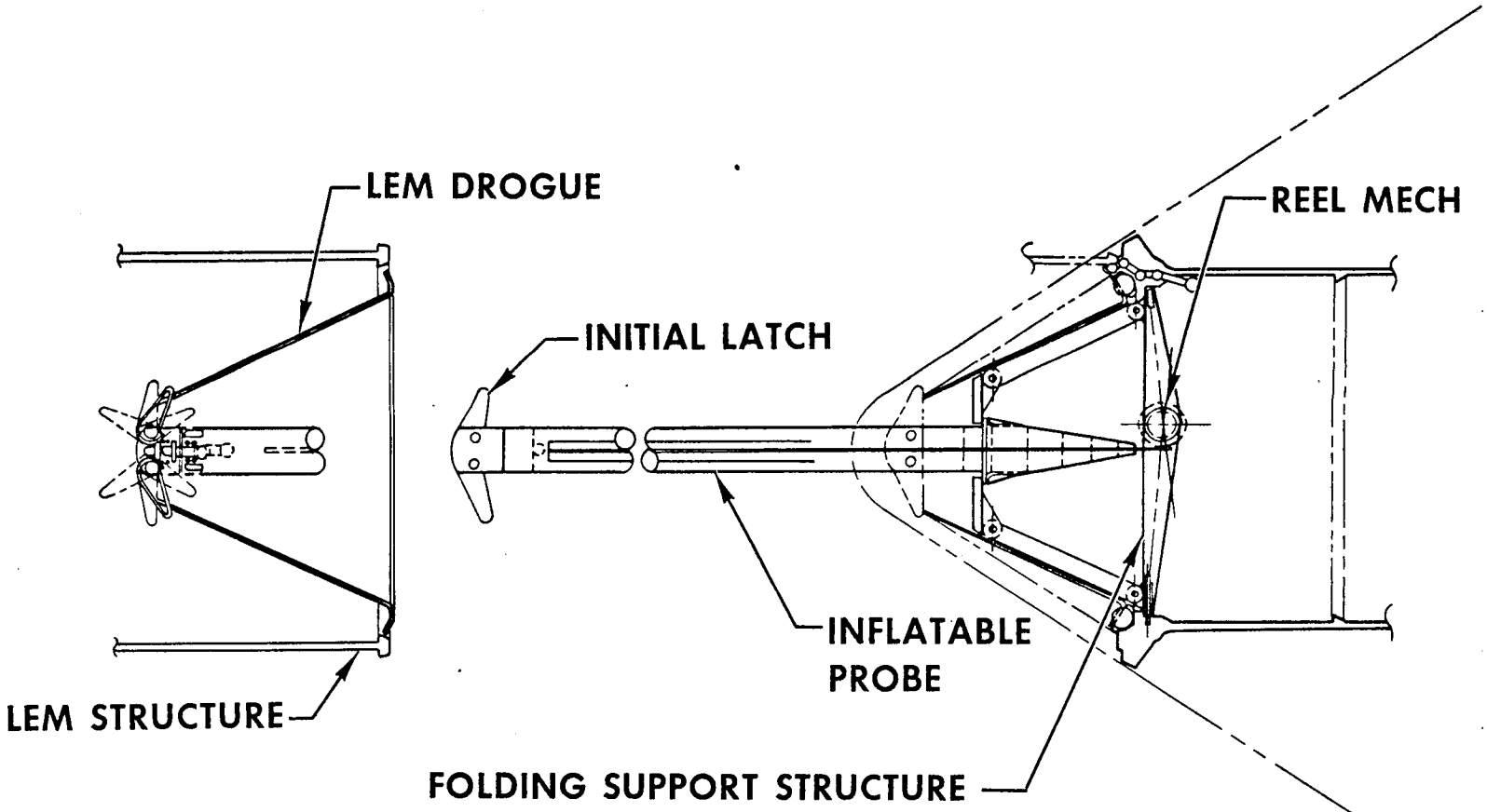

- SOFT PROBE EXTENDS
- VARI-SPEED REEL
- CM RCS AIMING OF PROBE
- NO INTER-MODULE COMPRESSION

STEM DOCKING CONCEPT

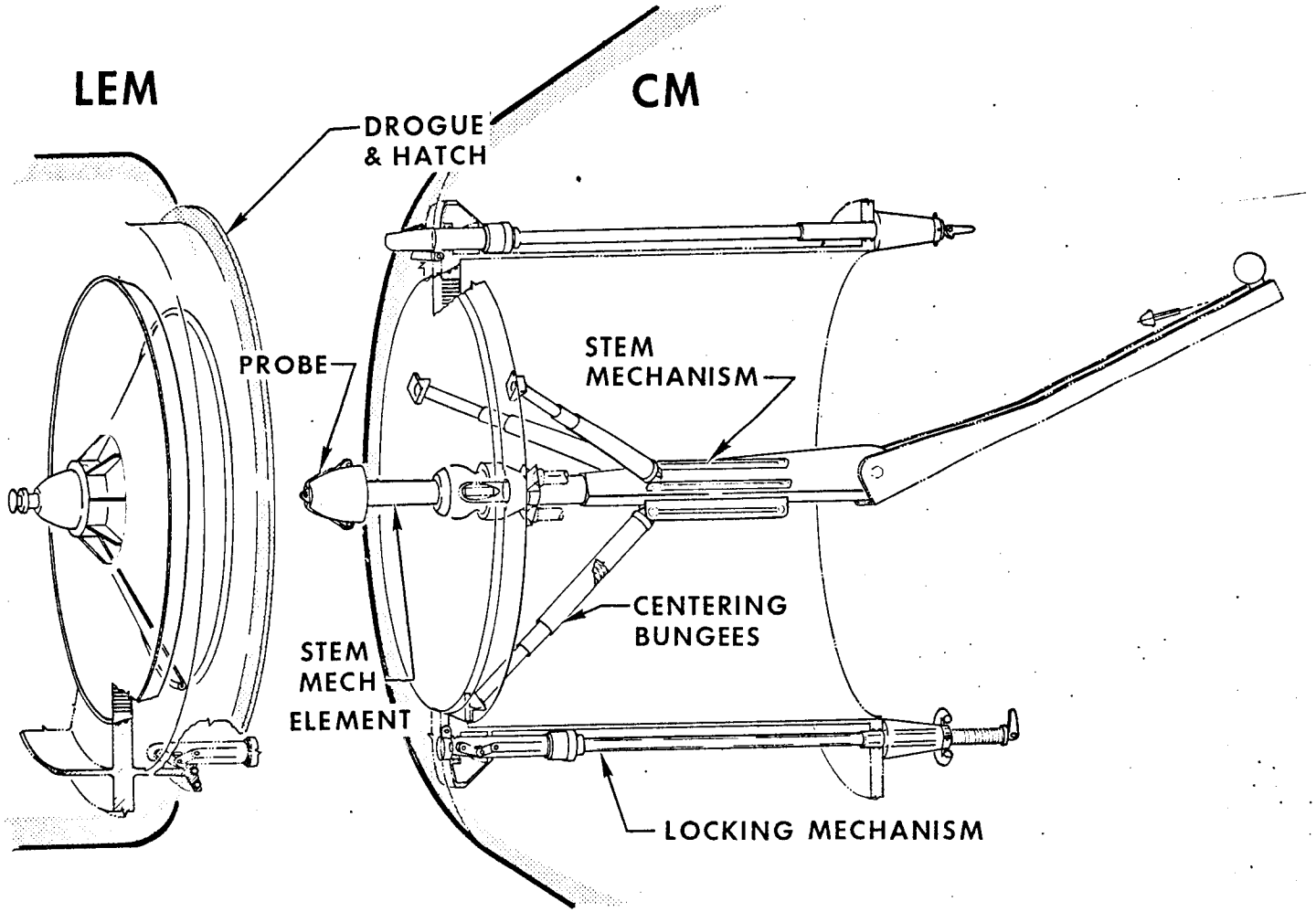

- BALL ENDED STEM EXTENDS
- PROBE MANUALLY AIMED
- VARI-SPEED REEL
- NO INTER-MODULE COMPRESSION

STEM & CABLE CONCEPT

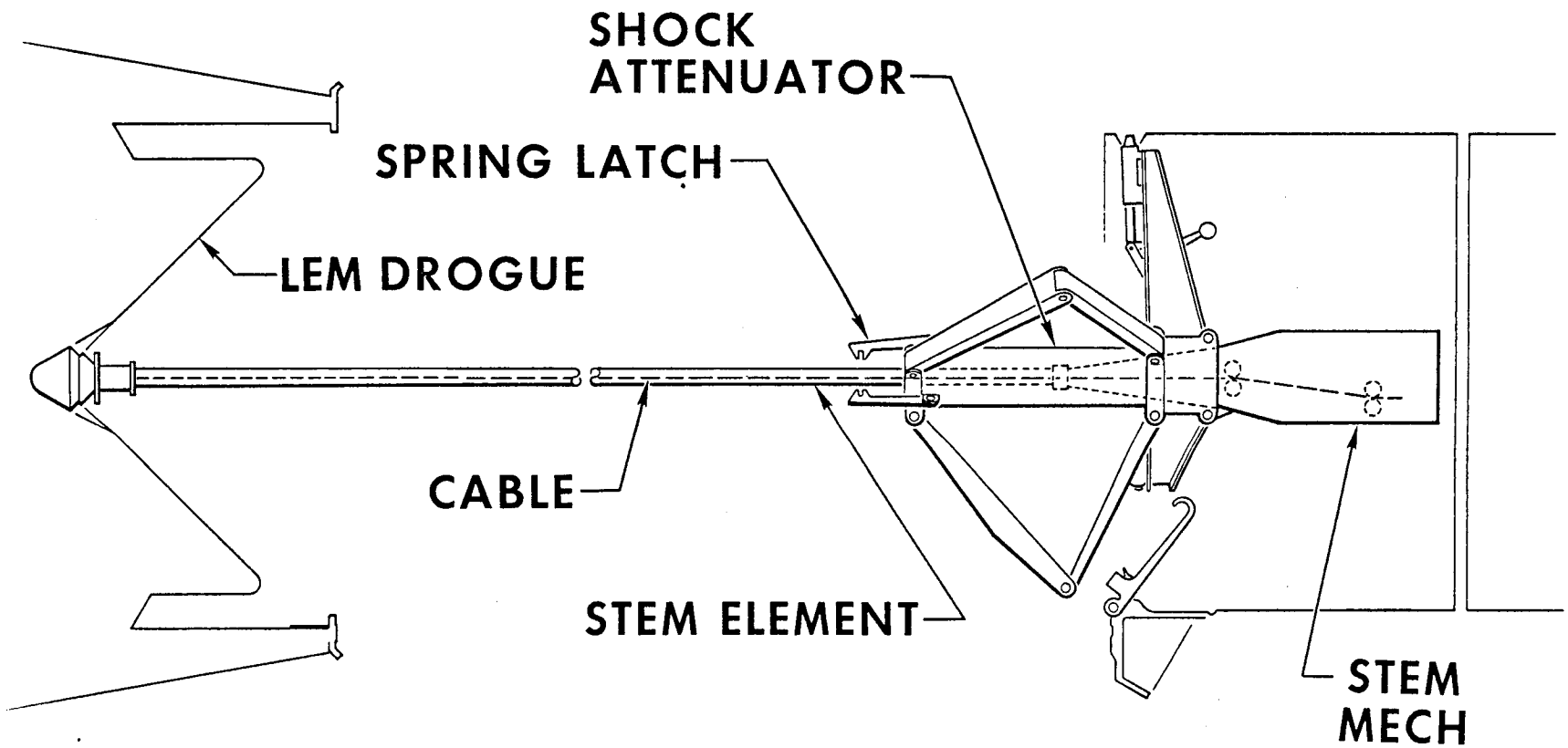

- STEM EXTENDS LATCH
- STEM RETRACTS
- CABLE TIE REMAINS
- VARI-SPEED CABLE REEL
- FIXED SPEED STEM REEL

EXTENDABLE TUNNEL CONCEPT

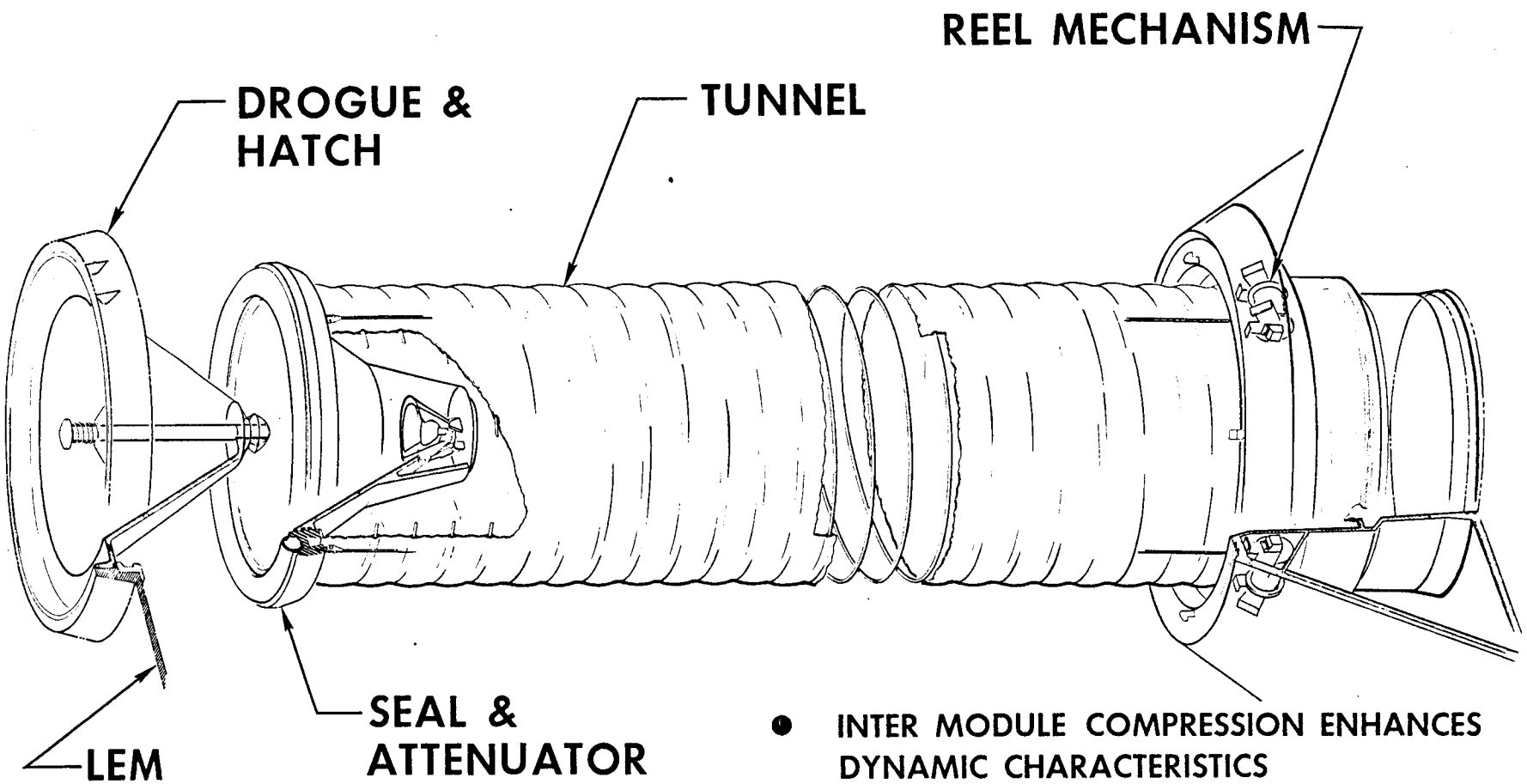

- INTER MODULE COMPRESSION ENHANCES DYNAMIC CHARACTERISTICS
- VEHICLE RCS ORIENTED TUNNEL
- CREW TRANSFER THRU TUNNEL

CSM–LEM DOCKING DEVELOPMENT PLAN

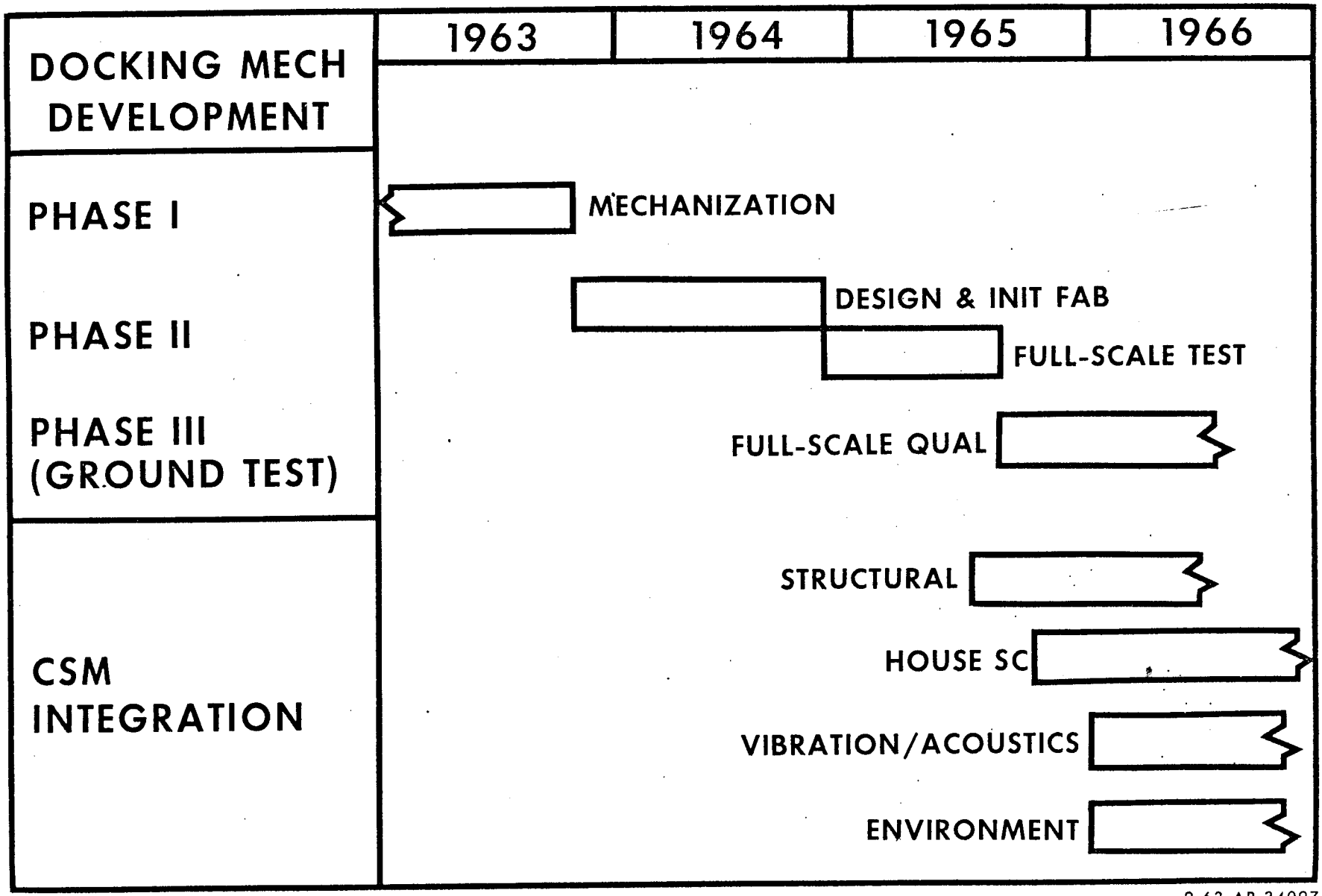

NORTH AMERICAN AVIATION, INC.
SPACE AND INFORMATION SYSTEMS DIVISION

9-63 AP 34097

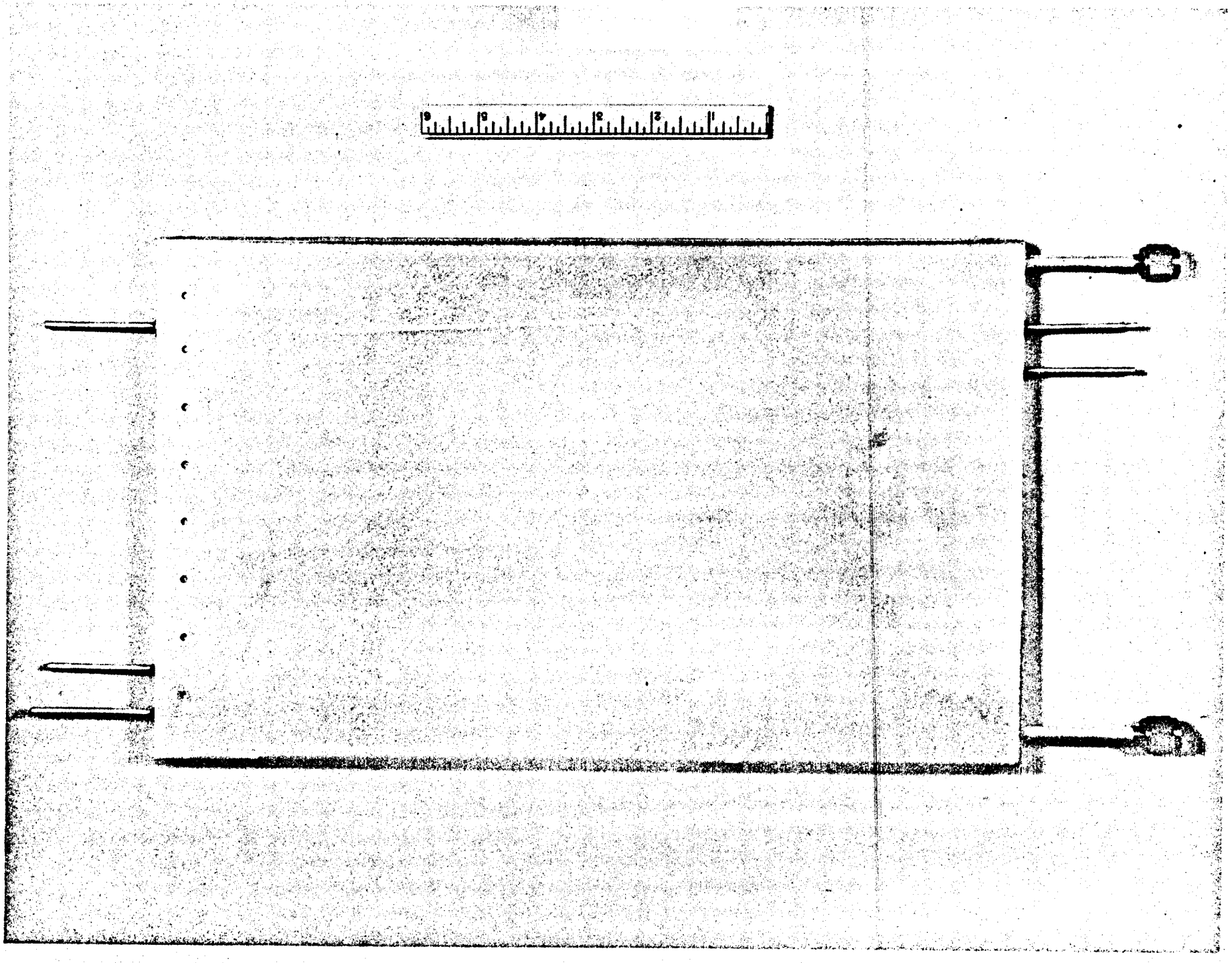

APOLLO WEIGHT STATUS REPORT

NORTH AMERICAN AVIATION, INC.
SPACE AND INFORMATION SYSTEMS DIVISION

9-63 AP 33885

[redacted]

COMMAND MODULE - SERVICE MODULE WITH PROPELLANT

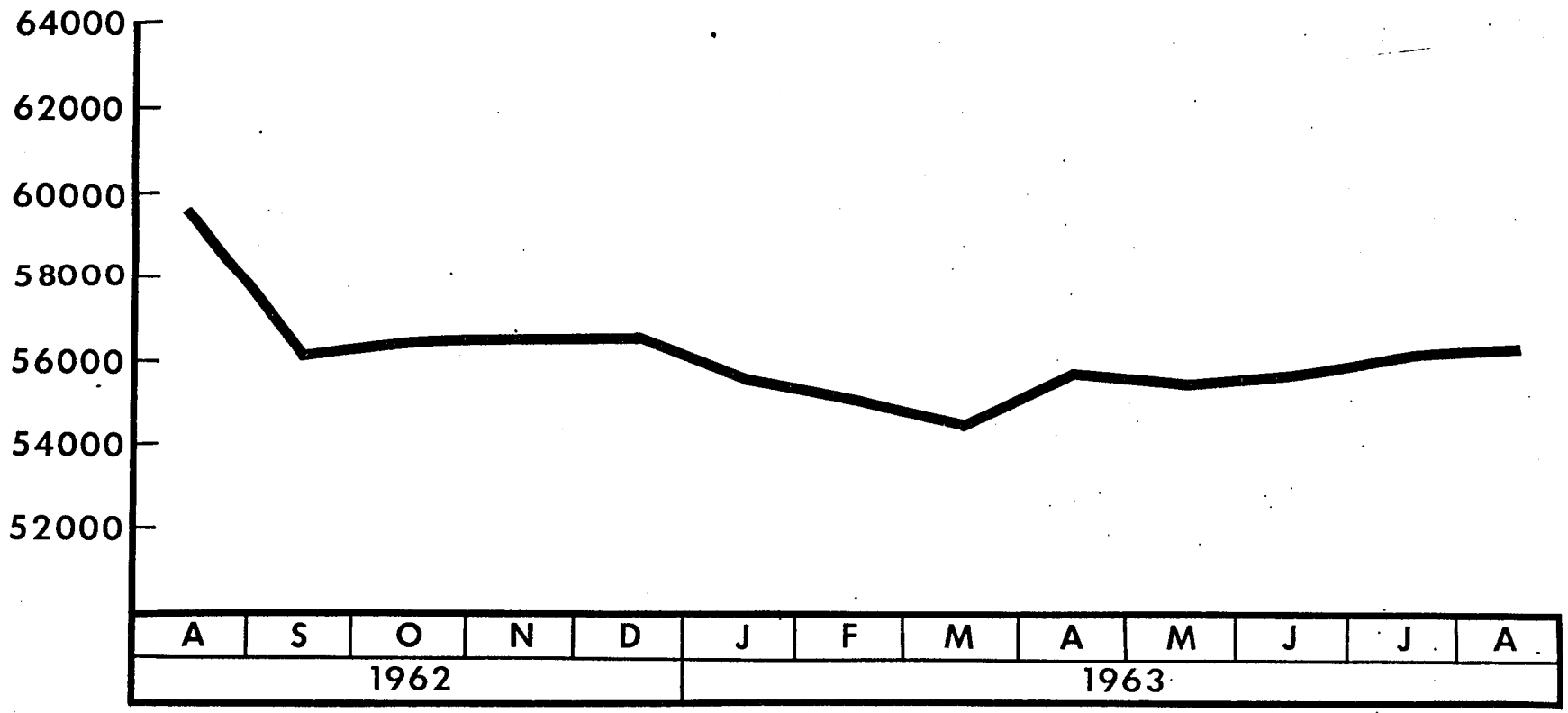

[redacted]

Group 4 Downgraded at 3 year intervals; declassified after 12 years

9-63AP 34087

[redacted]

[redacted]

CM-SM BURNOUT

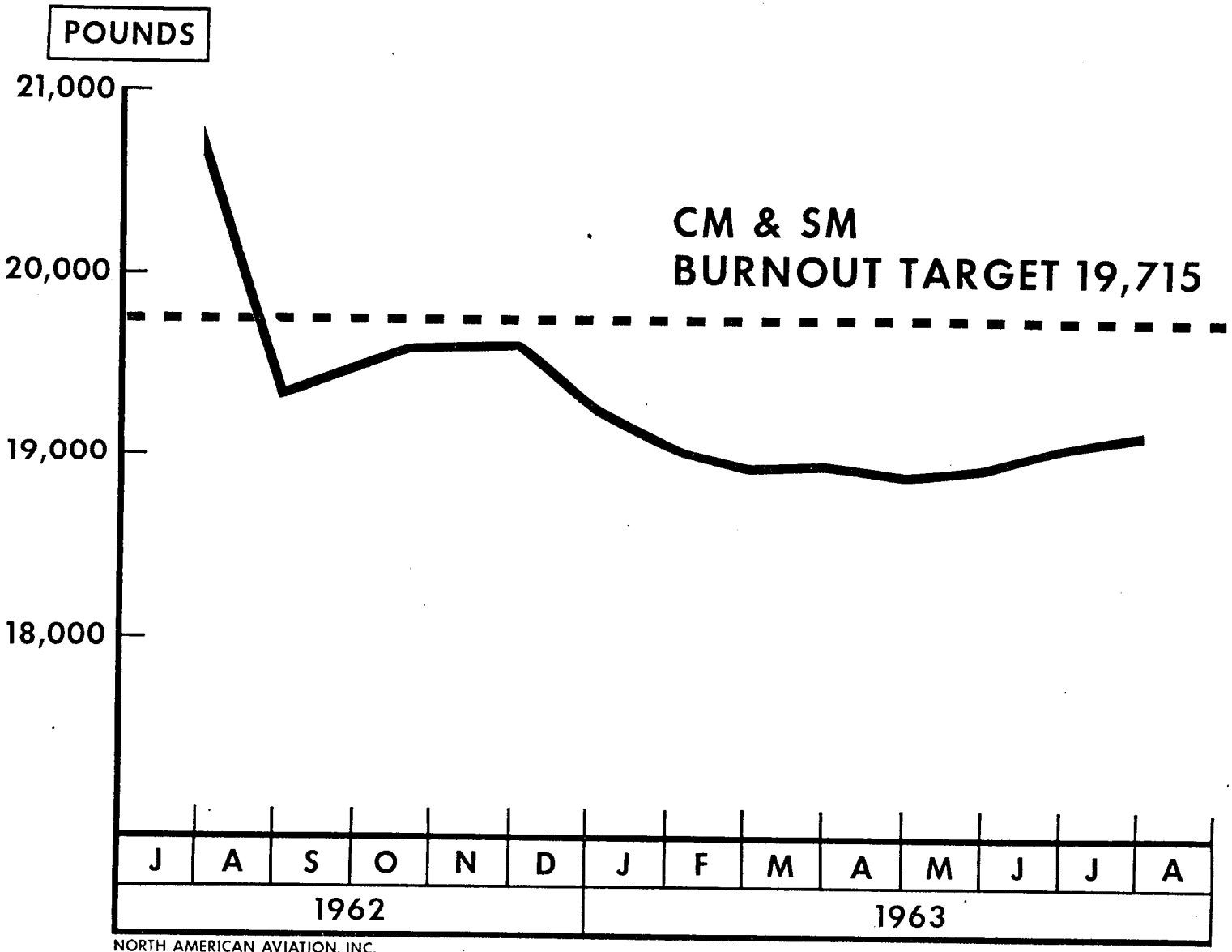

NORTH AMERICAN AVIATION, INC.
SPACE AND INFORMATION SYSTEMS DIVISION

[redacted]

9-63 AP59519

[redacted]

[redacted]

COMMAND MODULE

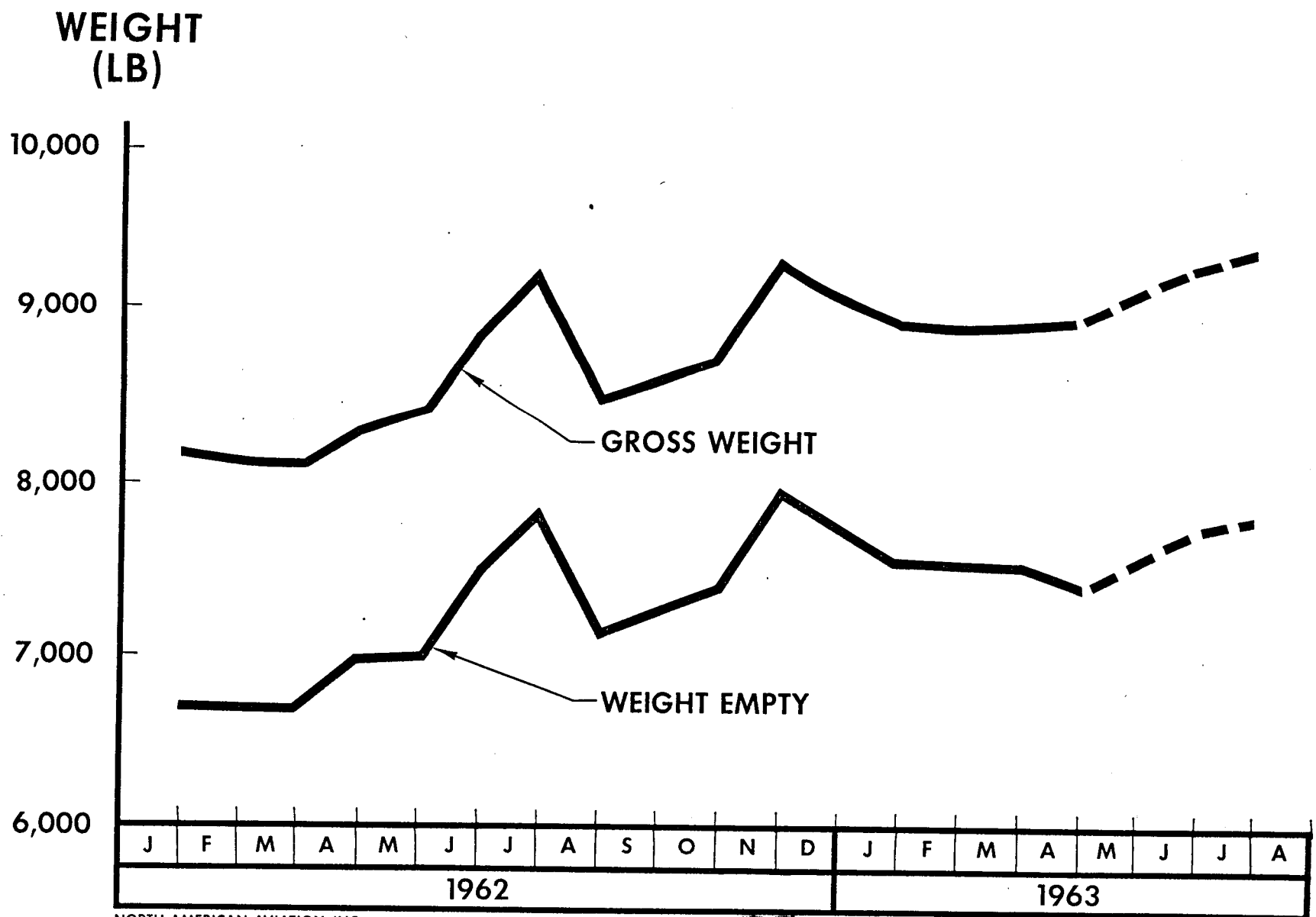

NORTH AMERICAN AVIATION, INC.
SPACE AND INFORMATION SYSTEMS DIVISION

9-63 AP 33886

[redacted]

[redacted]

Group 4 Downgraded at 3 year intervals; declassified after 12 years

COMMAND MODULE STATUS

	TARGET WEIGHT	STATUS 5-1-63	STATUS 8-1-63	BASIS FOR CURRENT		
				% EST	% CAL	% ACT.
WEIGHT EMPTY	6990 *(7205)	7419	7811	64	34	2
USEFUL LOAD	1510 *(1510)	1581	1589	40	60	
GROSS WEIGHT	8500 *(8715)	9000	9400	60	38	2

NOTE: *( ) ADJUSTED TARGET WEIGHT

This document contains information affecting the national defense of the United States within the meaning of the Espionage laws, Title 18 U.S.C. Sections 793 and 794. Its transmission or revelation of its contents in any manner to an unauthorized person is prohibited by law.

[redacted]

CM SYSTEM WEIGHT CHANGE

	STATUS 5-1-63	WEIGHT CHANGE	STATUS 8-1-63
WEIGHT EMPTY	(7,419)	(+392)	(7,811)
STRUCTURE	4,235	+246	4,481
CREW SYSTEM	329	-9	320
COMMUNICATION & INSTRUMENTATION	782	-35	747
GUIDANCE & NAVIGATION	406	+72	478
STABILIZATION & CONTROL	209		209
REACTION CONTROL	267	+23	290
ELECTRICAL POWER	381	+46	427
ENVIRONMENTAL CONTROL	258	+34	292
EARTH LANDING SYSTEM	552	+15	567
USEFUL LOAD	(1,581)	(+8)	(1,589)
CREW SYSTEM	915	+2	917
REACTION CONTROL SYSTEM	259		259
ENVIRONMENTAL CONTROL SYSTEM	157	+6	163
SCIENTIFIC EQUIPMENT	250		250
GROSS WEIGHT	9,000	+400	9,400

[redacted]

Group 4 Downgraded at 3 year intervals; declassified after 12 years

This document contains information affecting the national defense of the United States within the meaning of the Espionage Laws, Title 18 U.S.C. Section 792 and 794. Its transmission or revelation of its contents in any manner to an unauthorized person is prohibited by law.

[redacted]

SERVICE MODULE

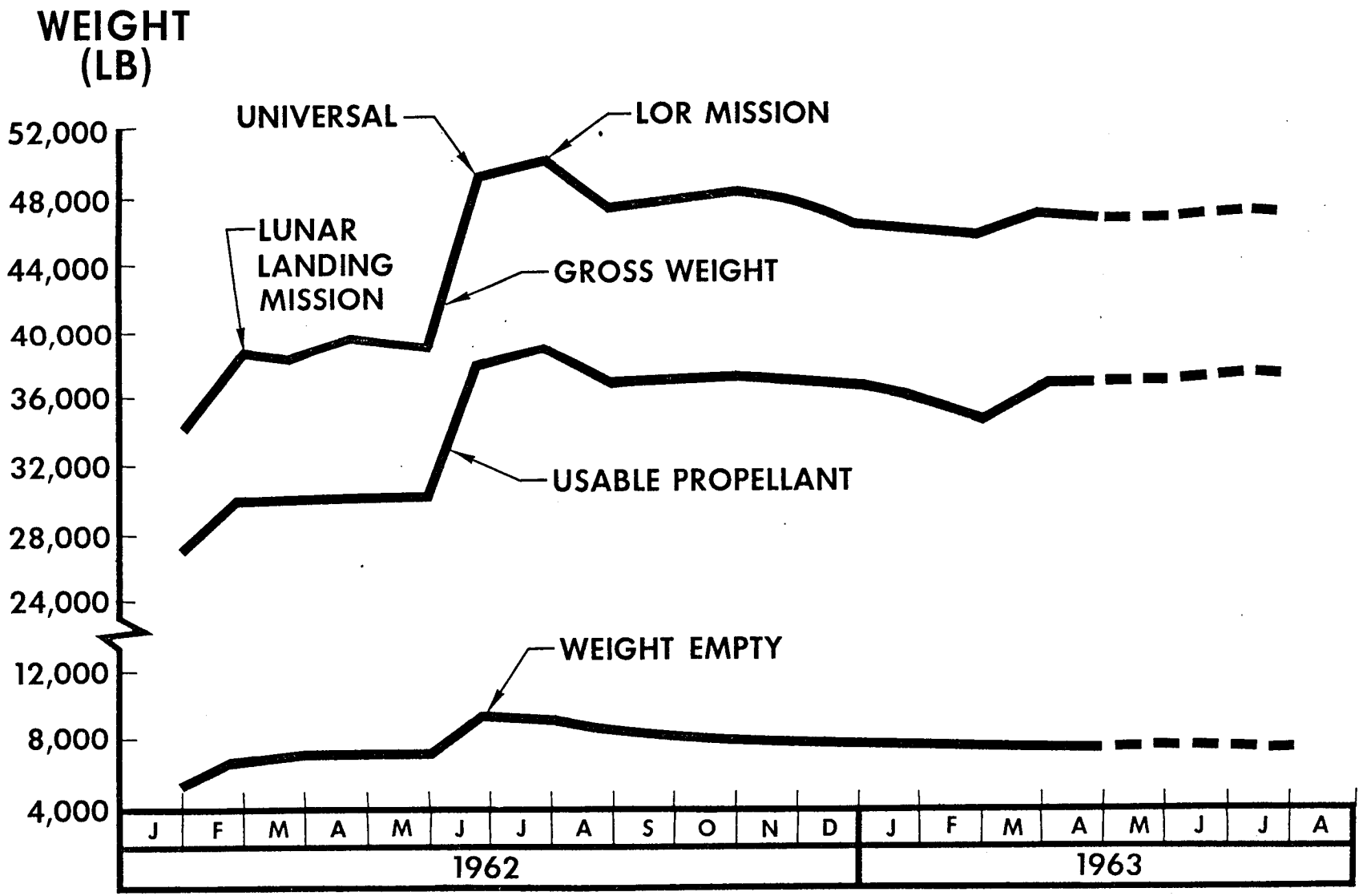

NORTH AMERICAN AVIATION, INC.
SPACE AND INFORMATION SYSTEMS DIVISION

9-63 AP 33887

[redacted]

Group 4 Downgraded at 3 year intervals; declassified after 12 years

This document contains information affecting the national defense of the United States within the meaning of the Espionage Laws, Title 18 U.S.C. Section 793 and 794. Its transmission or revelation of its contents in any manner to an unauthorized person is prohibited by law.

[redacted]

SERVICE MODULE STATUS

	TARGET WEIGHT	STATUS 5-1-63	STATUS 8-1-63	BASIS FOR CURRENT		
				% EST	% CAL	% ACT.
WEIGHT EMPTY	8,600	7,484	7,495	31	66	3
USEFUL LOAD	39,515	39,101	39,630	0	100	0
GROSS WEIGHT	48,115	46,585	47,125	5	95	0

[redacted]

Group 4 Downgraded at 3 year intervals; declassified after 12 years

This document contains information affecting the national defense of the United States within the meaning of the Espionage Laws, Title 18 U.S.C. Section 793 and 794. Its transmission or revelation of its contents in any manner to an unauthorized person is prohibited by law.

[redacted]

SM SYSTEM WEIGHT CHANGE

	STATUS 5-1-63	CHANGE	STATUS 8-1-63
WEIGHT EMPTY	(7,484)	(+11)	(7,495)
STRUCTURE	2,366	-76	2,290
ELECTRONICS	151	+26	177
REACTION CONTROL	593	-3	590
ELECTRICAL POWER	1,190	+142	1,332
ENVIRONMENTAL CONTROL	78	+21	99
PROPULSION	3,106	-99	3,007
USEFUL LOAD	(2,246)	(-16)	(2,230)
REACTION CONTROL	835	+3	838
ELECTRICAL POWER	487	+16	503
ENVIRONMENTAL CONTROL	208		208
PROPULSION	716	-35	681
BURNOUT WEIGHT	9,730	-5	9,725

This document contains information affecting the national defense of the United States within the meaning of the Espionage Laws, Title 18 U.S.C. Section 793 and 794. Its transmission or revelation of its contents in any manner to an unauthorized person is prohibited by law.

[redacted]

LAUNCH ESCAPE SYSTEM WEIGHT STATUS

	STATUS 5-1-63	CHANGE	STATUS 8-1-63
STRUCTURE	968	+135	1,103
BALLAST	87	+ 116	203
ELECTRICAL SYSTEM	36	+5	41
PROPULSION SYSTEMS			
LAUNCH ESCAPE	4,764		4,764
JETTISON	440	-6	434
PITCH CONTROL	55		55
TOTAL LAUNCH ESCAPE SYS	6,350	+250	6,600

[redacted]

Group 4 Downgraded at 3 year intervals; declassified after 12 years

This document contains information affecting the national defense of the United States within the meaning of the Espionage Laws, Title 18 U.S.C. Section 793 and 794. Its transmission or revelation of its contents in any manner to an unauthorized person is prohibited by law.

ELECTRICAL POWER STATUS

ELECTRICAL ENERGY STATUS

14-DAY LUNAR MISSION

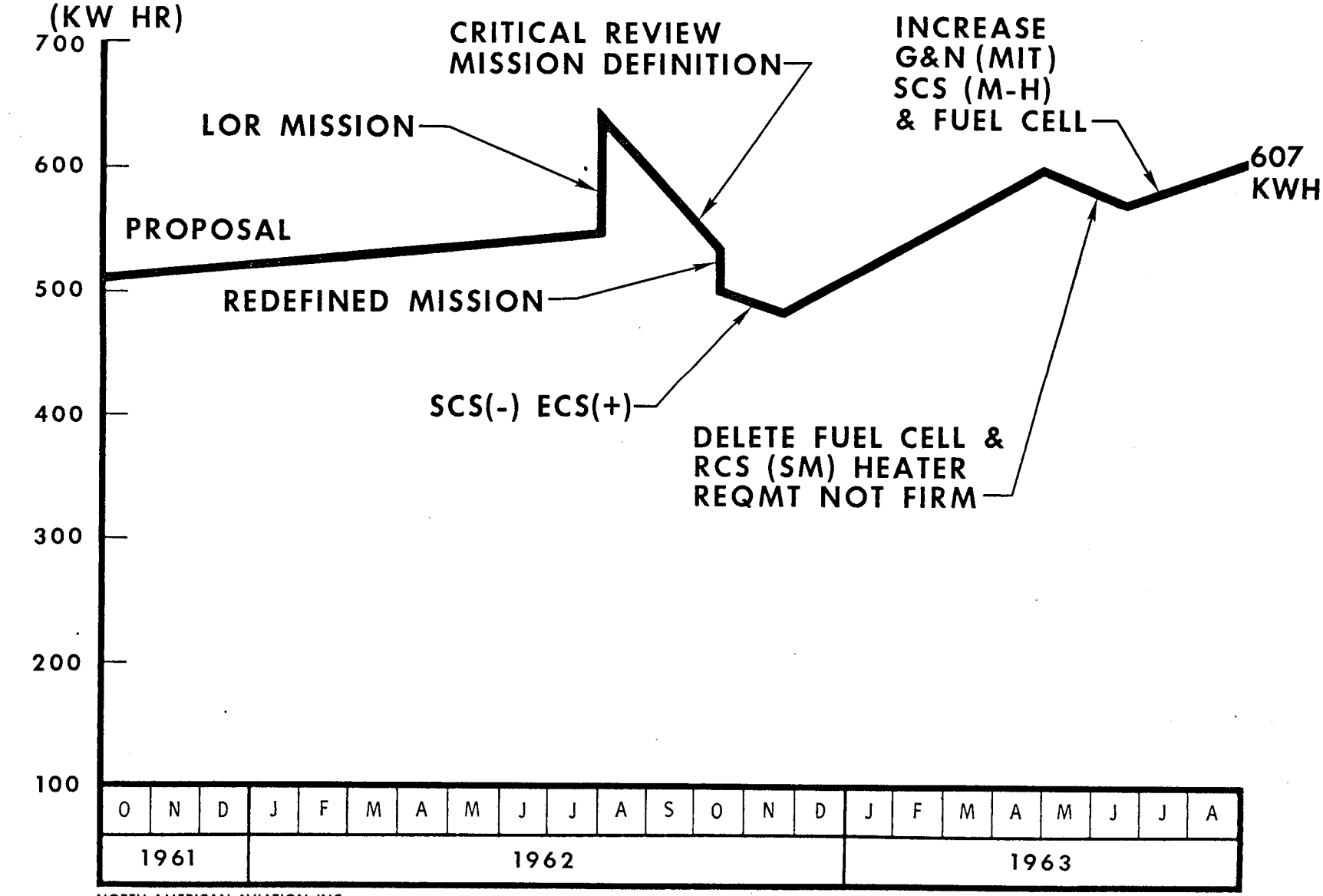

NORTH AMERICAN AVIATION, INC.
SPACE AND INFORMATION SYSTEMS DIVISION

9-63 AP 33966

ENERGY UTILIZATION
(FUEL CELL)

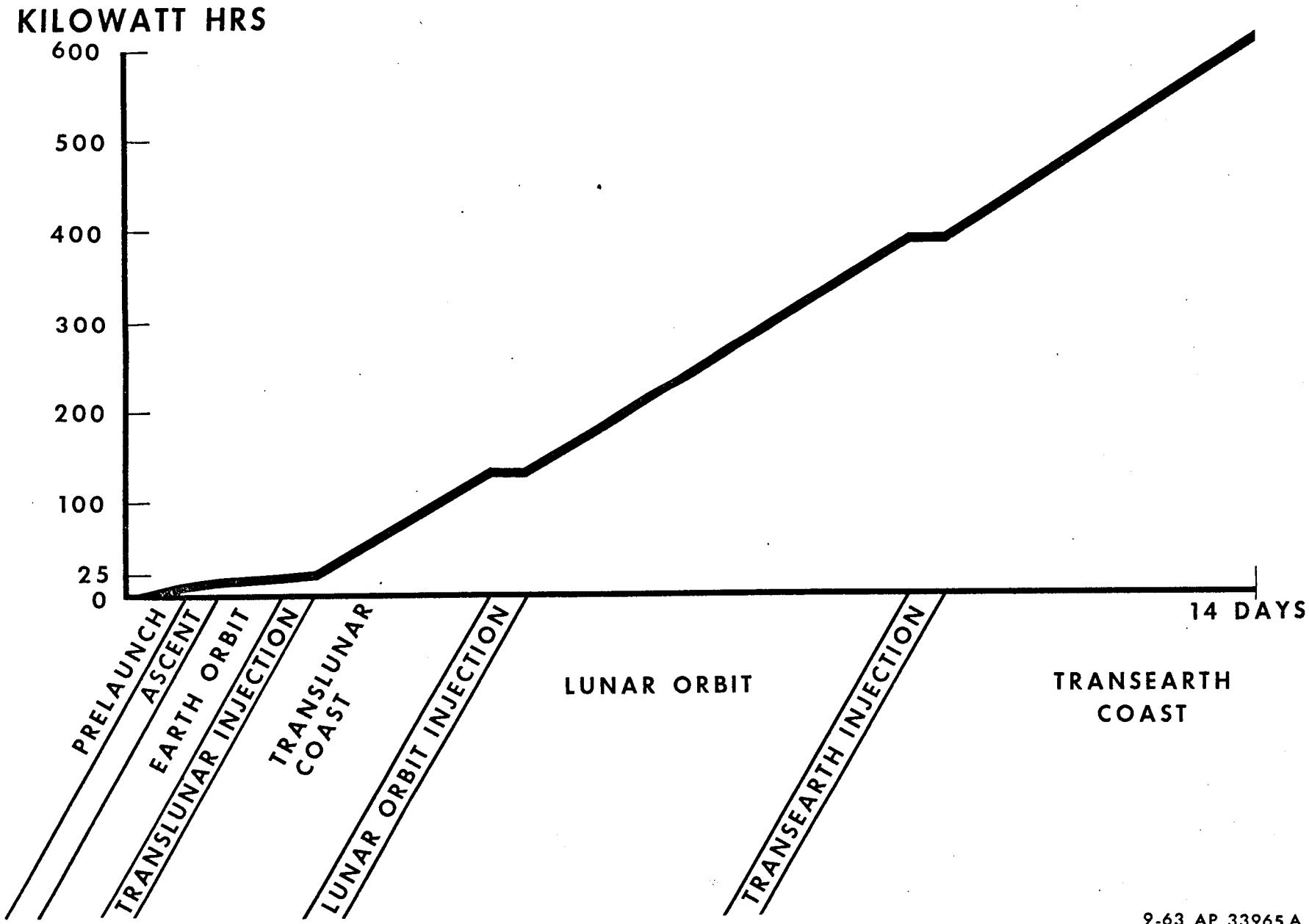

NORTH AMERICAN AVIATION, INC.
SPACE AND INFORMATION SYSTEMS DIVISION

9-63 AP 33965 A

AVERAGE POWER

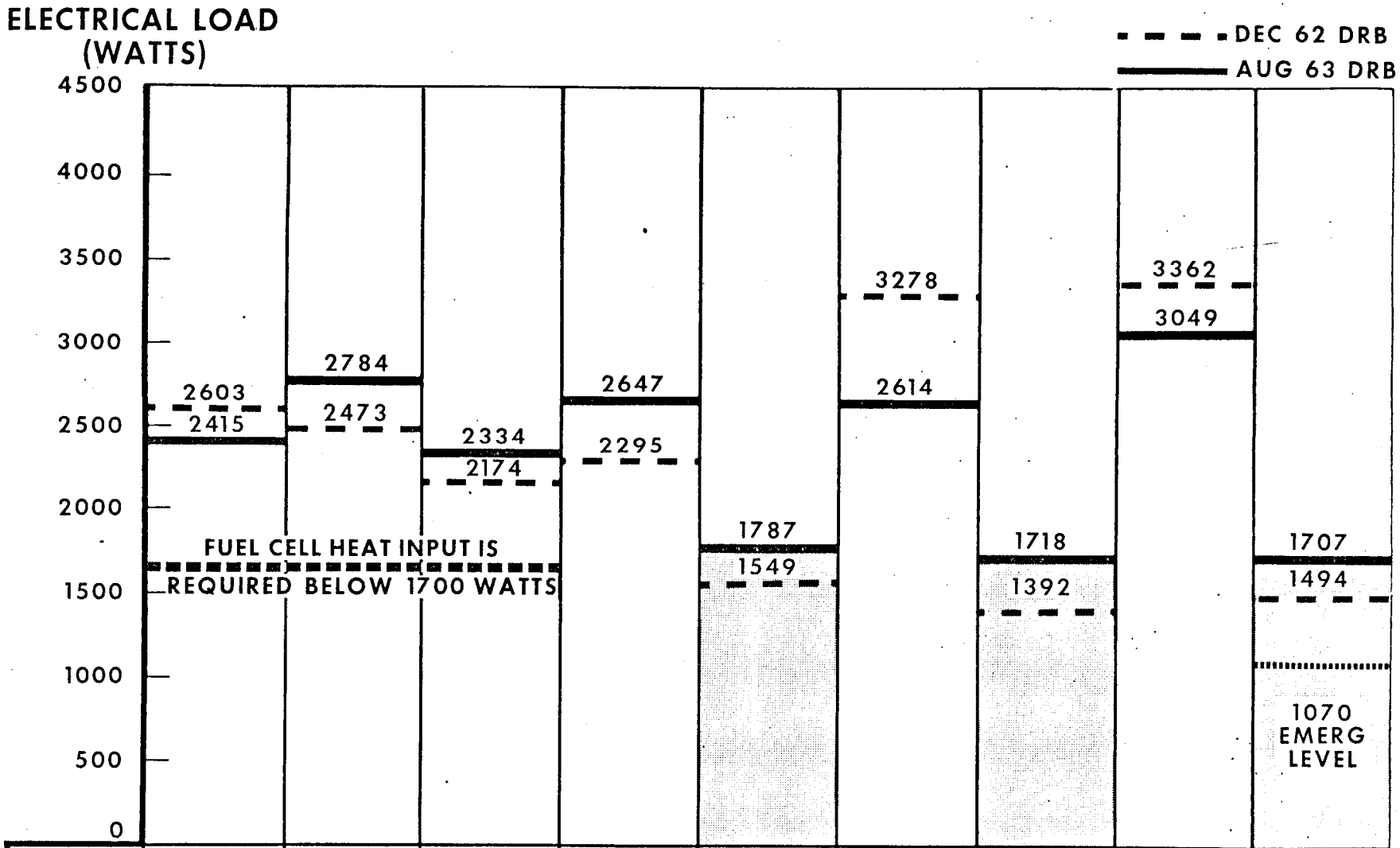

NORTH AMERICAN AVIATION, INC.
SPACE AND INFORMATION SYSTEMS DIVISION

9-63 AP 33969

ELECTRICAL ENERGY REQUIREMENTS

SYSTEM	AC/DC	ENERGY (KWH)	EFFICIENCY LOSSES	TOTAL	ΔENERGY FROM 5-63
COMMUNICATIONS	AC	31.8	11.4	43.2	−3.0
	DC	18.9	1.1	20.0	+1.0
CONTROLS & DISPLAYS	DC	16.0	1.0	17.0	−7.4
ENVIRON CONTROL	AC	65.2	23.4	88.6	+4.4
	DC	13.9	0.8	14.7	+6.4
GUIDANCE & NAVIGATION	DC	51.0	3.0	54.0	+5.6
	AC	3.0	1.0	4.0	+4.0
ILLUMINATION	DC	20.3	1.2	21.5	NC
IN-FLIGHT TEST	DC	1.4	0.1	1.5	NC
STABILIZATION & CONTROL	AC	45.1	16.3	61.4	+11.4
	DC	22.4	1.4	23.8	+12.3
MEASUREMENT SYS	DC	47.7	2.9	50.6	NC
RADAR		0.8	—	0.8	NC
PROPULSION	DC	4.7	0.2	4.9	+4.7
CRYOGENIC GAS STORAGE	AC	5.4	2.0	7.4	NC
	DC	18.2	1.1	19.3	−3.4
FUEL CELLS	AC	122.4	43.9	166.3	+13.3
	DC	7.4	0.4	7.8	+4.2
TOTAL		495	112	607	+53.5

TEST VEHICLE SUMMARY

NORTH AMERICAN AVIATION, INC.
SPACE AND INFORMATION SYSTEMS DIVISION

9-63 AP 33897

MOCK-UPS

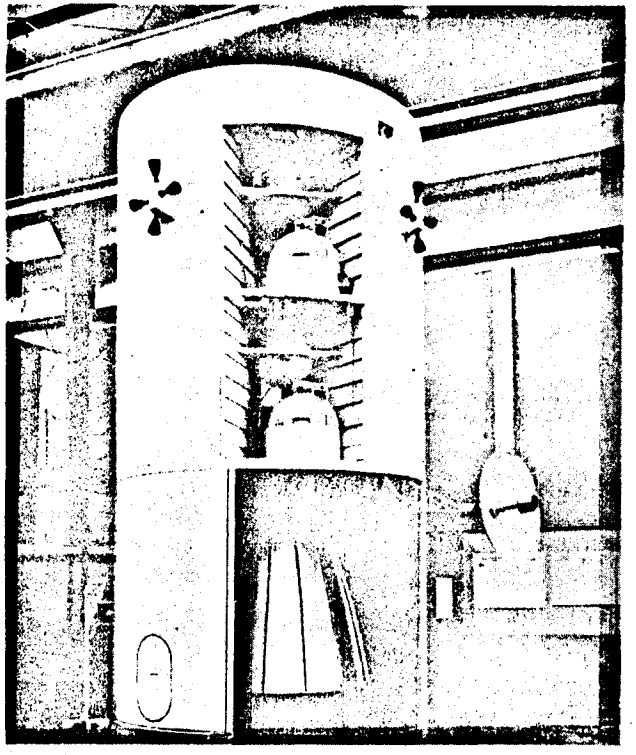

7005-04-181A

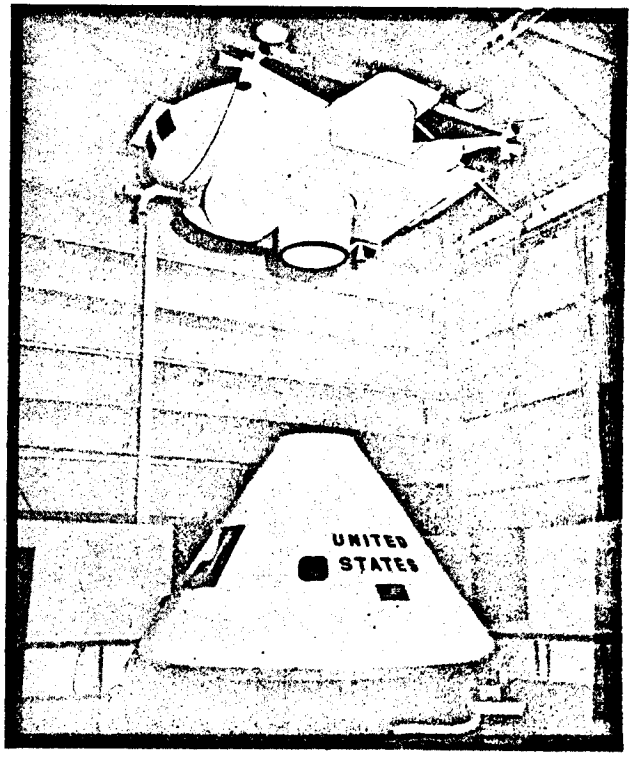

7005-04-184G

MOCKUP STATUS

NO.	MODULE	USE
M-2* M-3 M-22 M-12	CM INTERIOR	DESIGN EVALUATION MSC-HOUSTON MSC-HOUSTON CREW SYSTEMS EVAL
M-5*	CM EXTERIOR	DESIGN EVALUATION
M-7	SERVICE MODULE	DESIGN EVALUATION
M-9* M-11	CM, SM, LES & C-1 ADAPT.	HANDLING & TRANSPORTATION
M-18	CM, SM*, LES* & C-1 ADAPT.*	DESIGN EVALUATION
M-21	S-IVB ADAPTER	GAEC INTERFACE COMPATABILITY

(*) ON DISPLAY FOR MOCKUP REVIEW

BOILERPLATE TEST VEHICLES

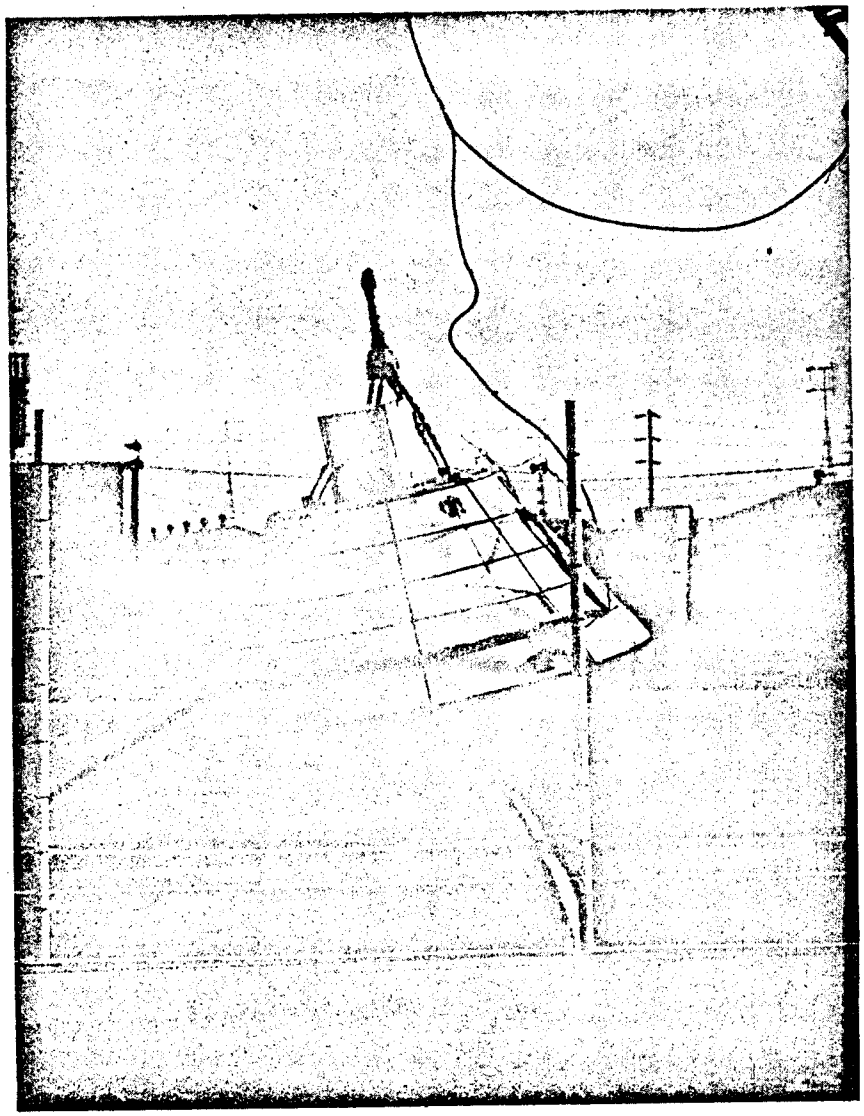

LAND DROP

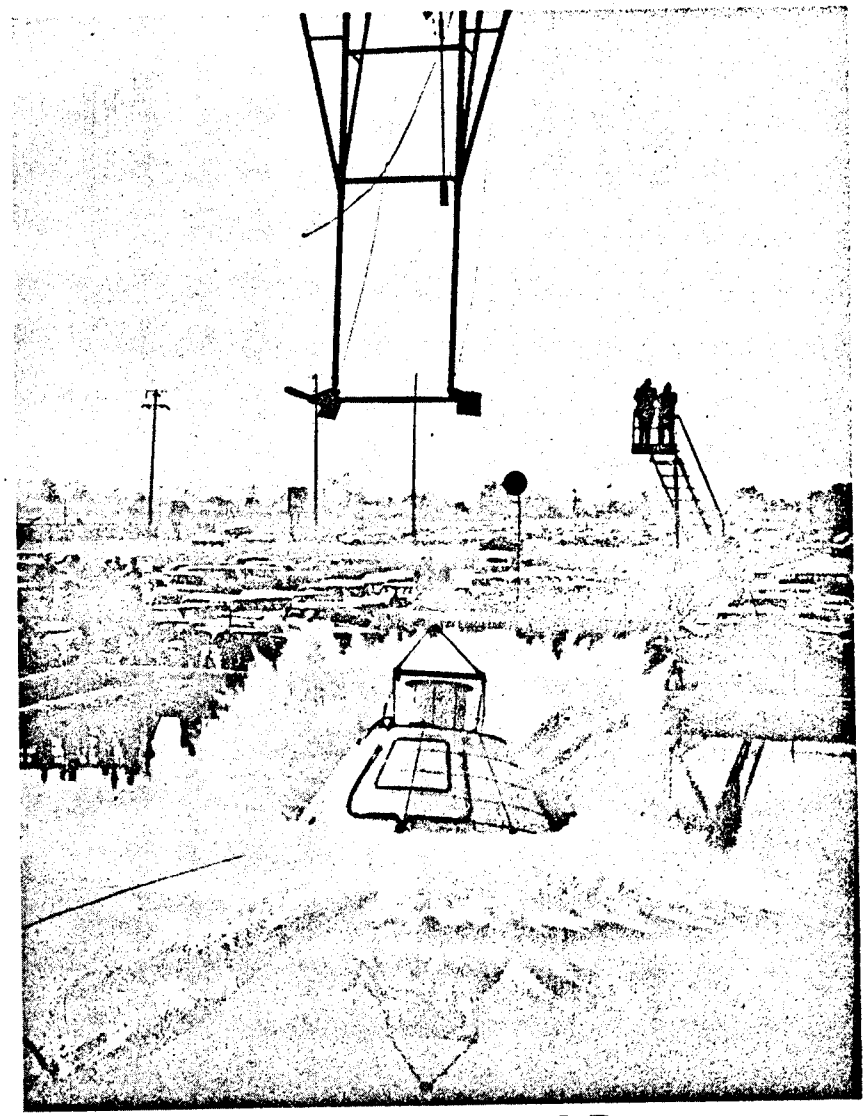

WATER DROP

BOILERPLATE TEST VEHICLE STATUS

NO.	MODULES	USE	STATUS
B-1 B-2	COMMAND MODULE	LAND & WATER IMPACT	TEST
B-3 B-19	COMMAND MODULE	PARACHUTE RECOVERY	TEST
B-6	CM, LES & GRD ADAPT.	PAD ABORT	WSMR
B-12	CM, LES & LJ-II ADAPT.	MAX Q ABORT	DOWNEY C/O
B-22	CM, LES & LJ-II ADAPT.	HIGH-ALT ABORT	MFG
B-23	CM, LES & LJ-II ADAPT.	BACKUP	MFG
B-9	CM, SM, LES & C-1 ADAPT.	STRUCTURAL DYNAMICS	MSFC TEST
B-27	CM, SM*, LES & C-1 ADAPT.*		DES & MFG

(*) SPACECRAFT STRUCTURE

BOILERPLATE TEST VEHICLE STATUS (CONT)

NO.	MODULES	USE	STATUS
B-13	CM, SM, LES & C-1 ADAPT	• ORBITAL FLIGHTS FOR LAUNCH ENVIRONMENT BOOSTER COMPATIBILITY, ETC	MFG
B-15			MFG
B-18	CM, SM,* LES & C-1 ADAPT *		MFG
B-16	CM, SM, LES & C-1 ADAPT	MICROMETEOROID EXPERIMENTS	MFG
B-26			MFG
B-14	CM, SM, LES & ADAPTERS	HOUSE SC TESTING	MFG
B-25	COMMAND MODULE	WATER RECOVERY & HANDLING	MSC TEST
B-28	CM BIRDCAGE	IMPACT TESTING	DESIGN

(*) SPACECRAFT STRUCTURE

SPACECRAFT TEST VEHICLES

NO.	MODULES	USE
001	SM & GRD ADAPTERS	PROPULSION DEVELOPMENT
002 010	CM, SM, LES & LJ-II ADAPT.	ABORT TESTS
004 005	CM, SM, & ADAPT. COMMAND MODULE	STATIC STRUCTURAL TESTING
006	CM, SM, LES & ADAPTERS	VIB & ACOUSTICS; HOUSE SC
007	COMMAND MODULE	MODAL, WATER IMPACT & FLOTATION TESTS
008	CM, SM, & ADAPT.	ENVIRONMENTAL TESTING (MSC)
009	CM, SM, LES & ADAPTER	UNMANNED SUBORBITAL FLIGHT
011	CM, SM, LES & ADAPTER	1ST MANNED ORBITAL FLIGHT

SIMULATORS, EVALUATORS & TRAINERS

NO.	ELEMENTS	USE	STATUS
S-1 S-2	BP CM + ASSOC GRD EQUIP.	ENGINEERING EVALUATION	TEST
E-1 E-2 E-5	MU CM + ASSOC GRD EQUIP.	DESIGN EVALUATION LIFE SYSTEMS TESTING	TEST
AMS-1 AMS-2	CM + ASSOC EQUIP.	NASA ASTRONAUT TRAINING	DESIGN
PTT	MU CM + ASSOC EQUIP.	NASA ASTRONAUT TRAINING	DESIGN
5 SYS TRAINERS	BREADBOARDS & CONSOLES	GRD PERSONNEL TRAINING	DESIGN & MFG

(COMM, ECS, EPS, S&C, INT SYSTEMS)

SPACECRAFT TEST VEHICLE

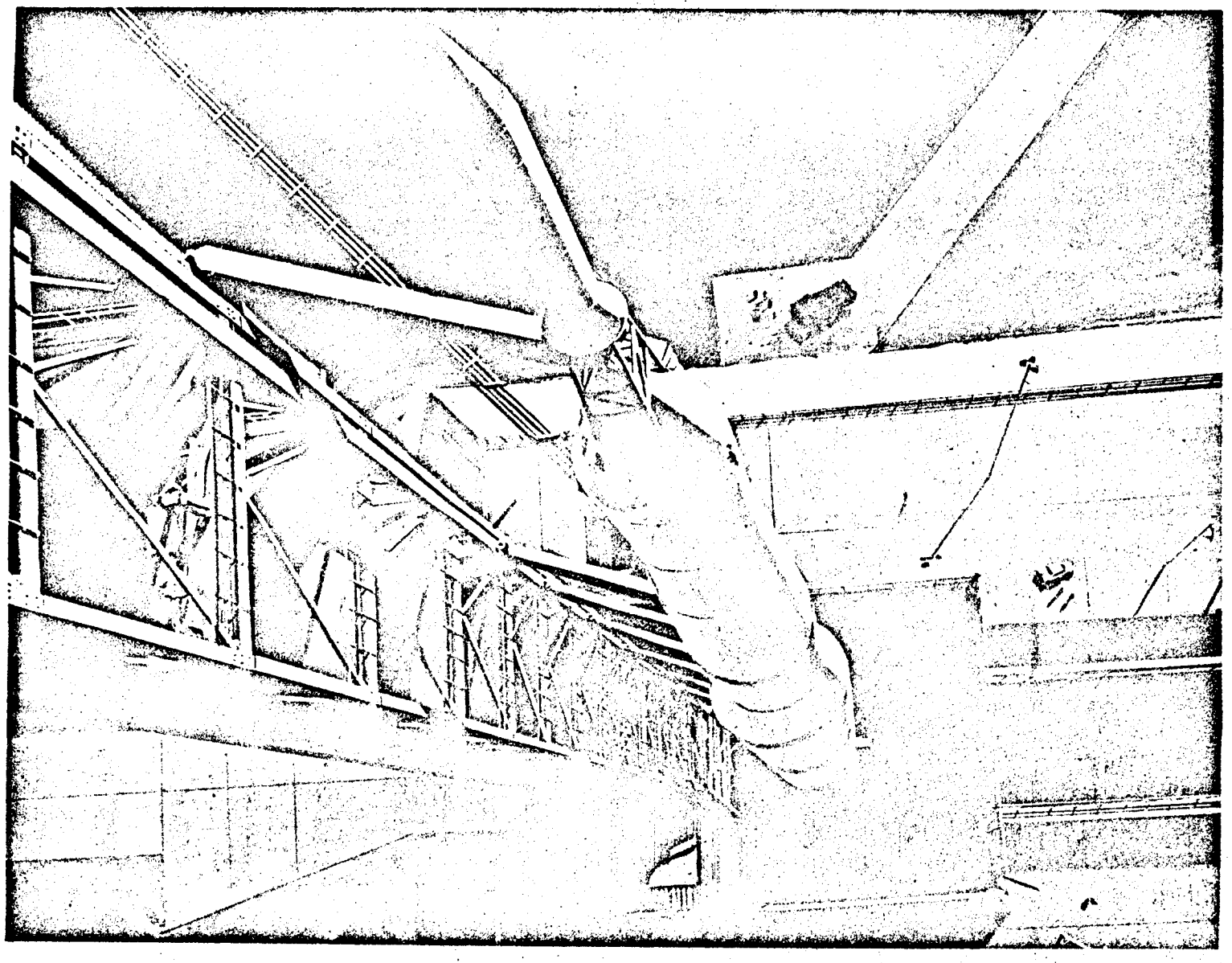

NORTH AMERICAN AVIATION, INC.
SPACE AND INFORMATION SYSTEMS DIVISION

9-63 AP59523