~~CONFIDENTIAL~~

~~Z65·11514~~

This document contains information affecting the national defense of the United States within the meaning of the Espionage Laws, Title 18 U.S.C. Section 793 and 794, its transmission or revelation of its contents in any manner to an unauthorized person is prohibited by law.

SINGLE COPY ONLY

SID 62-480

Copy 1

APOLLO DESIGN REVIEW

[U]

20 April 1962

CLASSIFICATION CHANGE

To UNCLASSIFIED
By authority of GDS-DOD 11652
Changed by L. Shirley Date 12/31/72
Classified Document Master Control Station, NASA
Scientific and Technical Information Facility

[redacted]

NORTH AMERICAN AVIATION, INC.
SPACE and INFORMATION SYSTEMS DIVISION

~~CONFIDENTIAL~~

FORM M154-D-7 LEDGER REV. 2-61

CONTENTS

	File No.	Sequence
APOLLO DESIGN REVIEW - APRIL 1962	AP 13065	1
Estimated Water Inventory.	AP 11902-1	2
Estimated Water Inventory (Cont)	AP 11902-2	3
Estimated Water Inventory (Cont)	AP 11902-3	4
Estimated Weight/Volume Urine Management Systems Breakdown	AP 11903	5
Urine Management Systems Evaluation	AP 11905-1	6
Urine Management Systems Evaluation (Cont)	AP 11905-2	7
Urine Management Systems Weight/Volume Curves	AP 11904	8
Summary of 24 Hour Collection Plan	AP 11994	9
A Proposal for Regularly Scheduled Meetings	AP 13023 R	10
Type Meetings	AP 13024 R	11
Quarterly Status Report	AP 13025 R	12
Design Review	AP 13026 R	13
Systems Meetings	AP 13027 R	14
Systems Meetings (Cont)	AP 13028 R	15
Apollo Module Configuration	AP 11824	16
Structure- Heat Protection System	AP 11921	17
Propulsion and Recovery Systems	AP 11917	18
Environmental Control System	AP 11919	19
Electrical Systems	AP 11920	20
Apollo Electronic Systems	AP 10218 A	21
General System Design Criteria	AP 11954	22
General System Design Criteria (Cont)	AP 11955	23
General System Design Criteria (Cont)	AP 11956	24
C/M Aerodynamic Parameters.	AP 11957	25
Life Systems.	AP 11958	26
Life Systems (Cont)	AP 11959	27

	File No.	Sequence
Life Systems (Cont)	AP 11960	28
Electrical Power System	AP 11961	29
Environmental Control System	AP 11962	30
Stabilization and Control	AP 11963	31
RF Systems	AP 11964	32
Antenna Systems	AP 11965	33
Master Timing Clock and Recorder	AP 11966	34
Data Systems	AP 11967	35
Cameras	AP 11968	36
Optical Systems	AP 11969	37
Launch Escape Propulsion System	AP 11970	38
Launch Escape Propulsion System (Cont)	AP 11971	39
Propulsion	AP 11972	40
Propulsion (Cont)	AP 11973	41
Propellant Systems	AP 11974	42
Propellant Systems (Cont)	AP 11975	43
Propellant Systems (Cont)	AP 11976	44
TRAJECTORIES	AP 13029 R	45
Translunar Injection Loci	AP 13030	46
Loci of Entry Conditions	AP 11930	47
Operational and Entry Requirements	AP 11931	48
Entry Range Capability	AP 12060 A	49
Entry Range Requirements	AP 12101	50
Lunar Lighting Geometry	AP 13031	51
Launch Lighting Requirements	AP 13032	52
Entry and Landing Lighting	AP 13033	53
Lunar Landing Mission Lighting Requirements	AP 13034	54
Desirable Mission Dates (1965-1966)	AP 13035	55
Translunar Geometry	AP 11928	56

	File No.	Sequence
Transearth Geometry	AP 11929	57
Transearth Transit Time	AP 13036	58
Lunar Retro Trajectory	AP 13037	59
Lunar Landing Trajectory	AP 13038	60
LEV Landing Maneuvers Basic Ground Rules	AP 13039	61
Flight Plan	AP 13040	62
ΔV Requirements	AP 13041	63
ΔV Requirements (Cont)	AP 13042	64
Lunar Landing ΔV Requirements	AP 13043 R	65
Configuration Summary	AP 13044	66
Lunar Rendezvous Capability	AP 13045 R	67
Configuration Comparison	AP 13046 R	68
Configuration Comparison (Cont)	AP 13047 R	69
APOLLO LAUNCH ESCAPE SYSTEM	AP 11906	70
Outline	AP 11907	71
Abort Missions	AP 13048 R	72
Launch Escape System	AP 13029 R	73
Typical Abort Sequence	AP 13050 R	74
Launch Escape Motor	AP 13051 R	75
Effect of Thrust Offset	AP 13052 R	76
Pad Abort Philosophy	AP 13053 R	77
Control Parameter for T. V. C.	AP 13054 R	78
Pitch Control	AP 13055 R	79
Typical Duty Cycle for T. V. C. System	AP 13056 R	80
Tower Jettison Motor	AP 13057 R	81
Launch Escape System Trajectories	AP 13058 R	82
Angle of Attack	AP 13059 R	83
Pitching Moment Coefficient Versus Angle of Attack	AP 13060 R	84
Pitching Moment Coefficient Versus Angle of Attack (Cont)	AP 13061 R	85
Launch Escape Rocket Configurations	AP 13062 R	86

	File No.	Sequence
Effect of Skirt Size on Pitching Moment Coefficient	AP 13063 R	87
Wake Effects on Stability	AP 13064 R	88
Launch Escape System Configuration	AP 11977	89
Design Characteristics	AP 11978	90
Tower-Escape Motor Interface	AP 11979	91
Release Mechanism	AP 11980	92
Design Criteria	AP 11981	93
Heat Transfer	AP 11982	94
Dynamic Characteristics	AP 11983	95
Design Features	AP 11793 A	96
Jettison Motor Performance	AP 11908	97
Launch Escape Motor Configuration	AP 11909	98
Launch Escape Motor Performance	AP 11910	99
APOLLO LAUNCH ESCAPE MOTOR TVC STUDY	AP 12105	100
TVC Methods	AP 11911	101
TVC Study Ground Rules	AP 11912	102
Secondary Injection	AP 11913	103
Fluid Injection TVC	AP 12113	104
Weights - Secondary Injection TVC	AP 12108	105
Hinged Nozzle	AP 11914	106
Swivel Nozzle TVC	AP 12112	107
Weights - Swivel Nozzle TVC	AP 12107	108
Comparison of Propellant Gas	AP 12110	109
TVC Reliability Goals	AP 12111	110
Rocket Nozzle Test Experience	AP 12109	111
TVC Selection Factors	AP 12106	112
Recommendation	AP 11915	113
APOLLO ENVIRONMENTAL CONTROL SYSTEM	AP 11945	114
ECS Schematic (Orig)	AP 11946	115

APOLLO DESIGN REVIEW

APRIL 1962

4-62 AP 13065
SID 62-480 (1)

ESTIMATED WATER INVENTORY

① URINE LOSS				
URINE COLLECTION	WEIGHT (LB)	VOLUME		
		FT^3	GAL	L
PER MAN-DAY	3.2	0.0514	0.384	1.46
PER DAY	9.6	0.154	1.15	4.38
PER MAN-MISSION	44.8	0.720	5.38	20.4
PER MISSION	134.0	2.16	16.14	61.2
② INSENSIBLE DERMAL & RESPIRATORY LOSS				
	WEIGHT (LB)	VOLUME		
		FT^3	GAL	L
PER MAN-DAY	2.21	0.0354	0.265	1.00
PER DAY	6.63	0.1062	0.795	3.00
PER MAN-MISSION	30.9	0.495	3.70	14.0
PER MISSION	92.7	1.49	11.1	42.0
③ FECES WATER LOSS				
	WEIGHT (LB)	VOLUME		
		FT^3	GAL	L
PER MAN-DAY	0.221	0.00354	0.0265	0.100
PER DAY	0.663	0.0106	0.0795	0.300
PER MAN-MISSION	3.09	0.0495	0.370	1.40
PER MISSION	9.27	0.149	1.11	4.20
④ TOTAL WATER LOSS ①+②+③				
	WEIGHT (LB)	VOLUME		
		FT^3	GAL	L
PER MAN-DAY	5.63	0.0903	0.676	2.56
PER DAY	16.89	0.271	2.03	7.68
PER MAN-MISSION	78.8	1.27	9.45	35.8
PER MISSION	236.0	3.80	28.3	107.0

ESTIMATED WATER INVENTORY

⑤ METABOLIC WATER GAIN				
	WEIGHT (LB)	VOLUME		
		FT^3	GAL	L
PER MAN-DAY	0.663	0.0111	0.0795	0.300
PER DAY	1.99	0.0319	0.239	0.900
PER MAN-MISSION	9.27	0.149	1.11	4.20
PER MISSION	27.8	0.447	3.33	12.6

⑥ FUEL CELL WATER GAIN				
	WEIGHT (LB)	VOLUME		
		FT^3	GAL	L
PER MAN- DAY	6.33	0.101	0.755	2.86
PER DAY	19.0	0.305	2.27	8.58
PER MAN-MISSION	88.7	1.42	10.6	40.1
PER MISSION	266.0	4.26	31.8	120.0

⑦ TOTAL WATER GAIN ⑤+⑥				
	WEIGHT (LB)	VOLUME		
		FT^3	GAL	L
PER MAN-DAY	6.99	0.112	0.835	3.16
PER DAY	21.0	0.337	2.51	9.48
PER MAN-MISSION	98.0	1.57	11.7	44.3
PER MISSION	294.0	4.71	35.1	133.0

ESTIMATED WATER INVENTORY

⑧ NET WATER GAIN ⑦-④				
	WEIGHT (LB)	VOLUME		
		FT^3	GAL	L
PER MAN-DAY	1.36	0.021	0.159	0.60
PER DAY	4.1	0.066	0.48	1.80
PER MAN-MISSION	19.2	0.30	2.2	8.6
PER MISSION	58.0	0.91	6.8	25.9

ESTIMATED WEIGHT/VOLUME
URINE MANAGEMENT SYSTEMS BREAKDOWN

URINE COLLECTION PERIOD	URINE		STORAGE TANK		PLUMBING		DECONTAMINATION METHOD			
							CHEMICAL		FILTRATION	
	WEIGHT (LB)	VOLUME (FT^3)	WEIGHT (LB)	VOLUME (FT^3)	WEIGHT (LB)	VOLUME (FT^3)	WEIGHT (LB)	VOLUME (FT^3)	WEIGHT (LB)	VOLUME (FT^3)
14 DAYS	134.4	2.16	16.18	2.16	12.62	0.792	17.10	0.604	10.0	0.0562
7 DAYS	67.2	1.08	10.14	1.08	12.62	0.792	9.12	0.322	10.0	0.0562
24 HOURS	9.6	0.154	2.80	0.154	12.62	0.792	2.28	0.0806	10.0	0.0562
12 HOURS	4.8	0.077	1.49	0.077	12.62	0.792	1.71	0.0605	10.0	0.0562
CONTINUOUS	—	—	—	—	12.62	0.792	—	—	10.0	0.0562

NOTE: WEIGHTS BASED ON 0.050 IN. STAINLESS STEEL

URINE MANAGEMENT SYSTEMS EVALUATION

URINE COLLECTION PERIOD	URINE WEIGHT (LB)	STORAGE & PLUMBING WEIGHT (LB)			STORAGE & PLUMBING GROSS VOLUME (FT^3)		
		WITH NO TREATMENT	WITH CHEMICAL TREATMENT	WITH FILTRATION	WITH NO TREATMENT	WITH CHEMICAL TREATMENT	WITH FILTRATION
14 DAYS	134.4	163.2	180.3	173.2	2.95	3.55	3.01
7 DAYS	67.2	89.9	99.0	99.2	1.87	2.19	1.93
24 HOURS	9.6	25.0	27.3	35.2	0.996	1.03	1.00
12 HOURS	4.8	18.9	20.6	28.9	0.896	0.930	0.925
CONTIN-UOUS	—	12.6	—	22.6	0.792	—	0.848

NOTE: WEIGHTS BASED ON 0.050 IN STAINLESS STEEL

4-62 AP 11905-1
S1062-480 ①

URINE MANAGEMENT SYSTEMS EVALUATION (CONT)

URINE COLLECTION PERIOD	PROBABILITY OF COMMAND MODULE CONTAMINATION			PROBABILITY OF SPACE CONTAMINATION		
	WITH NO TREATMENT	WITH CHEMICAL TREATMENT	WITH FILTRATION	WITH NO TREATMENT	WITH CHEMICAL TREATMENT	WITH FILTRATION
14 DAYS	VERY SLIGHT, IF MEANS ARE PROVIDED (E.G., A VACUUM) TO PREVENT URINE "DROPLETS" FROM ENTERING THE C/M INTERIOR	NEGLIGIBLE, IF MEANS ARE PROVIDED TO PREVENT URINE "DROPLETS" FROM ENTERING THE C/M INTERIOR	HIGH, DUE TO THE NECESSITY OF CHANGING & STORAGE OF USED FILTERS	AFTER 14 DAYS STORAGE THERE WILL BE HIGH BACTERIA COUNTS. UNDER CONDITIONS OF THE SPACE VACUUM OF 10^{-14} mm Hg & U-VI RADIATION, THERE IS SOME DOUBT OF BACTERIA SURVIVAL	LOW, SINCE CHEMICAL DISINFECTION WILL PROBABLY KILL ALL VEGETATIVE CELL & MOST SPORES. SOME SPORES & VIRUSES MAY SURVIVE TREATMENT BECAUSE OF POOR HOMOGENIETY OF URINE & CHEMICAL	LOW, ALL VEGETATIVE CELLS & SPORES WILL BE REMOVED, POOR CONTROL OF VIRUSES
7 DAYS	AS ABOVE	AS ABOVE	AS ABOVE	LOW, BACTERIAL COUNT WILL BE CONSIDERABLY LOWER	AS ABOVE	AS ABOVE
24 HOURS	AS ABOVE	AS ABOVE	AS ABOVE	BACTERIAL COUNT WILL BE LOWER YET. DILUTION OF BACTERIA IN SPACE MAY LOWER PROBABILITY EVEN MORE	AS ABOVE EXCEPT THERE IS A SIGNIFICANT DILUTION FACTOR & BETTER HOMOGENIETY	AS ABOVE EXCEPT THERE IS A SIGNIFICANT DILUTION FACTOR
12 HOURS	AS ABOVE	AS ABOVE	AS ABOVE	AS ABOVE	AS ABOVE	AS ABOVE
CONTINUOUS	AS ABOVE	NOT APPLICABLE	AS ABOVE	SLIGHT BACTERIAL COUNT VERY SMALL, VERY HIGH DILUTION FACTOR	NOT APPLICABLE	AS ABOVE, EXCEPT THERE IS A VERY HIGH DILUTION FACTOR

	File No.	Sequence
Pressure Suit Circuit	AP 11947	116
Entry - Oxygen Supply System	AP 11948	117
Water Supply System	AP 11949	118
Water/Glycol Subsystem	AP 11950	119
Summary of ECS Changes	AP 11951	120
ECS Electrical Power Requirements	AP 11952	121
ECS Schematic (Current)	AP 11953	122
SPACECRAFT TEMPERATURE CONTROL	AP 11932	123
Command Module Wall Heat Transfer	AP 11933	124
Heat Rejection - Lunar Day	AP 11934	125
ECS Liquid Loop-Cooling Mode (Lunar Subsolar)	AP 11935	126
ECS Liquid Loop-Heating Mode (Lunar Night)	AP 11936	127
ECS Radiator Requirements (Lunar Night)	AP 11937	128
ECS Liquid Loop-Heating Mode (Lunar Night) (Alternate)	AP 11938	129
Command Module Supplemental Heater Systems	AP 11939	130
C/M Supplemental Heater System Weight Comparison	AP 11940	131
Integrated ECS-EPS Liquid Loop-Heating Mode (Lunar Night)	AP 11941	132
Comparison of Integrated ESC and EPS Liquid Loop	AP 11942	133
S/M Temperature-Time Histories	AP 11943	134
Summary - Spacecraft Temperature Control	AP 11944	135
Electronic Systems Power Consumption	AP 13066-1R	136
Electronic Systems Power Consumption (Cont)	AP 13066-2R	137
Average Electrical Load Vs Mission Phase	AP 11993	138
Electrical Power Summary	AP 11992-1	139
Effect of Power Changes	AP 11992-2	140
Weight Control	AP 11984	141
Weight Growth Experience	AP 11996	142
Functions and Responsibilities	AP 11986	143
Weight Summary	AP 11987	144
Command Module	AP 11988	145

	File No.	Sequence
Service Module	AP 11989	146
Launch Escape System	AP 11990	147
Mercury Specification Capsule Orbit Weight History	AP 13067	148
Some of the Major Development Problem Areas	AP 13068	149
Weight Addition to Cylindrical Section	AP 13069	150
Structural and Equipment Integrity Assurance	AP 13070	151
Potential Development Areas	AP 13071	152
Annually Recurring Northern Hemisphere Meteor Streams	AP 13072	153
APOLLO S/M-B	AP 13073 R	154
Service Module Staging	AP 13074 R	155
Changes Required to Transform a S/M-A to a S/M-B Stage II Configuration	AP 13075 R	156
Service Module	AP 11991	157
S/M-B Stage One Design Ground Rules	AP 13076 R	158
S/M-B Stage Two Design Ground Rules	AP 13077 R	159
Personal Parachutes	AP 11868	160
Considerations	AP 11872	161
C/M Descent Rates	AP 11871	162
Bailout Procedure	AP 11869	163
Available Time to Use Personal Chute	AP 11870	164

URINE MANAGEMENT SYSTEMS WEIGHT/VOLUME CURVES

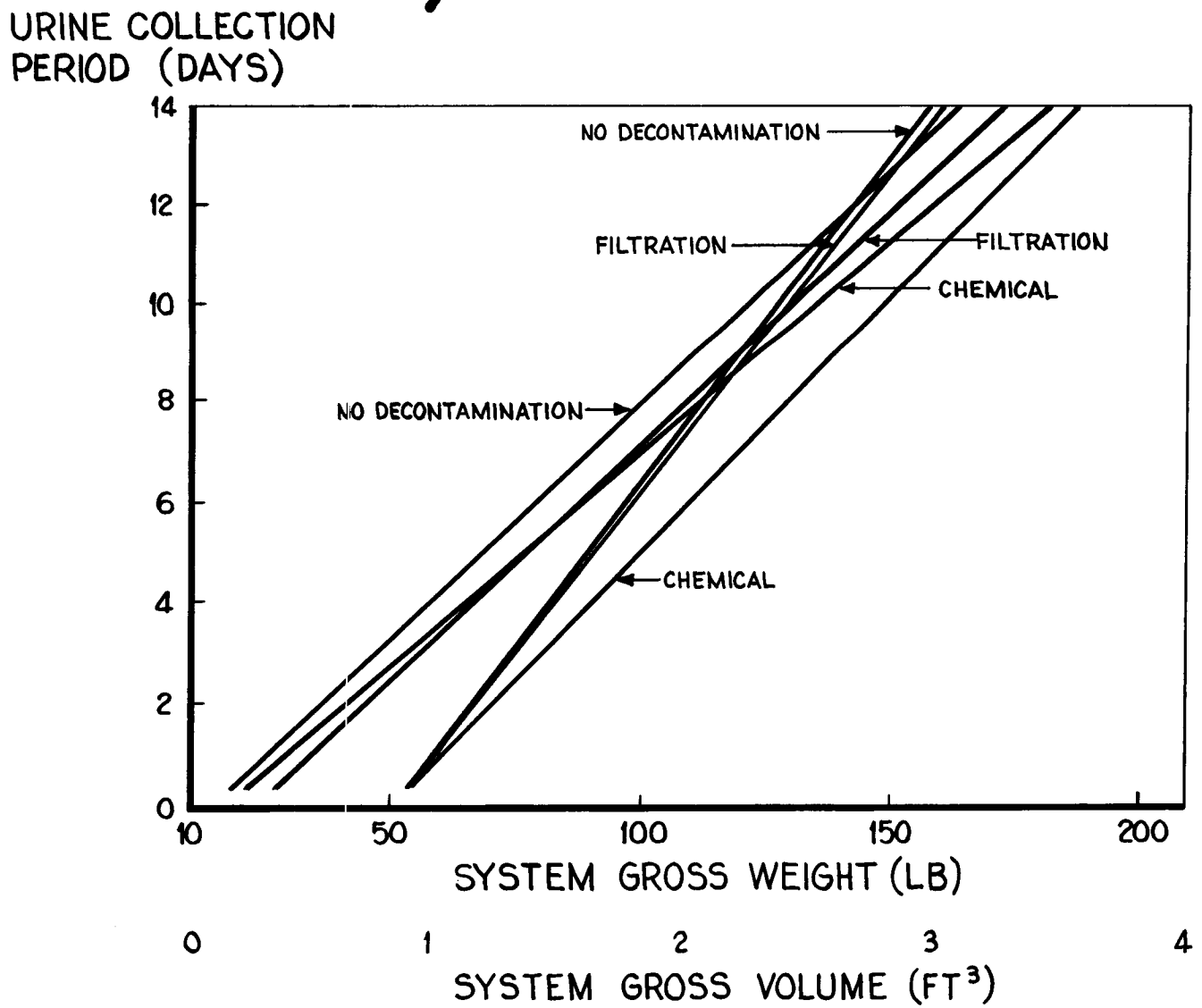

4-62 AP 11904
S1062-480

SUMMARY OF 24 HOUR COLLECTION PLAN

URINE		STORAGE TANK		PLUMBING		DECONTAMINATION METHOD			
						CHEMICAL		FILTRATION	
WT(LB)	VOL(FT^3)	WT(LB)	VOL(FT^3)	WT(LB)	VOL(FT^3)	WT(LB)	VOL(FT^3)	WT(LB)	VOL(FT^3)
9.6	0.154	2.80	0.154	12.62	0.792	2.28	0.0806	10	0.0562

URINE WT(LB)	GROSS WT(LB) STORAGE & PLUMBING			GROSS VOL(FT^3) STORAGE & PLUMBING		
	NO TREATMENT	WITH CHEMICAL TREATMENT	WITH FILTRATION	NO TREATMENT	WITH CHEMICAL TREATMENT	WITH FILTRATION
9.6	25.0	27.3	35.2	0.996	1.03	1.00

PROBABILITY OF COMMAND MODULE CONTAMINATION		PROBABILITY OF SPACE CONTAMINATION		
NO TREATMENT OR WITH CHEMICAL	WITH FILTRATION	NO TREATMENT	WITH CHEMICAL TREATMENT	WITH FILTRATION
NEGLIGIBLE, IF MEANS ARE PROVIDED TO PREVENT URINE "DROPLETS" FROM ENTERING THE C/M	HIGH, DUE TO THE POSSIBLE NECESSITY OF CHANGING & STORAGE OF USED FILTERS	BACTERIAL COUNT AT END OF EACH 24 HR PERIOD WILL BE LOWER THAN IF STORED FOR 14 DAYS. DILUTION 10^{-9} MM Hg VACUUM, U-V RADIATION WILL LOWER PROBABILITY	LOW, CHEMICALS WILL DESTROY ALL VEGETATIVE CELLS. SOME SPORES AND VIRUSES MAY SURVIVE BECAUSE OF POOR HOMOGENEITY OF URINE & CHEMICALS	LOW, ALL VEGETATIVE CELLS & VIRUSES WILL BE REMOVED, POOR VIRUS CONTROL. THERE IS A SIGNIFICANT DILUTION FACTOR.

NOTE:
MIN GROSS WEIGHT OF THE SYSTEM PLUS MAX COMPATIBLE CAPABILITY FOR PROTECTION OF CREW & SPACE FROM CONTAMINATION ARE THE REQUIREMENTS. A COMBINATION OF CHEMICAL TREATMENT & FILTRATION IN A CLOSED SYSTEM MAY OFFER A SOLUTION

4-62 AP 11994
S1D62-480 ①

A PROPOSAL FOR:

REGULARLY SCHEDULED MEETINGS BETWEEN NASA AND NAA ON APOLLO SPACECRAFT DEVELOPMENT

- TO ALLOW BROADER AND MORE EFFECTIVE PARTICIPATION AND REPORTING
- TO REDUCE TOTAL TRAVEL LOSSES
- TO IMPOSE LESS INTERFERENCE UPON CONTRACTOR'S PRODUCTIVE ACTIVITIES

4-62 AP 13023 R
S1D62-480

TYPE MEETINGS

- QUARTLY STATUS REPORT
- DESIGN REVIEW
- SYSTEMS

QUARTERLY STATUS REPORT

A FORMAL REPORT TO NASA BY NAA ON THE OVERALL STATUS OF THE SPACECRAFT DEVELOPMENT CONTRACT EMPHASIZING:

- EFFORT AND MONIES
- FACILITIES
- SUBCONTRACTOR ACTIVITIES
- MANAGEMENT

HELD AT:	MSC, HOUSTON
WHEN:	APPROXIMATELY QUARTERLY
ATTENDED BY:	NASA HEADQUARTERS, NASA CENTERS, AND ASSOCIATE CONTRACTOR REPRESENTATIVE
PROCEDURE:	BRIEFING ONLY. AGENDA PREPARED BY APO-NAA.
REPORTING:	BRIEFING DOCUMENTS AND MINUTES OF DISCUSSION DISTRIBUTED TO INVITEES

DESIGN REVIEW

SPACECRAFT AND SUPPORTING SYSTEMS DESIGN AND OPERATIONAL TECHNIQUES REVIEW BY THE SENIOR TECHNICAL STAFF OF MSC TO REVIEW THE TECHNICAL PHILOSOPHY EXHIBITED BY CURRENT DESIGNS AND TO GIVE POLICY DIRECTION TO FURTURE TECHNICAL ACTIVITY

HELD AT:	NAA, DOWNEY
WHEN:	APPROXIMATELY MONTHLY
ATTENDED BY:	APPROPRIATE SENIOR STAFF OF MSC AND NAA
PROCEDURE:	ACTION TAKEN ON AGENDA PREPARED BY APO-NAA
REPORTING:	MINUTES BY APO WITH LIMITED DISTRIBUTION TO NASA AND NAA
IMPLEMENTATION:	THROUGH APO AND CONTRACTING OFFICER

SYSTEMS MEETINGS

HELD AT A TECHNICAL SPECIALIST LEVEL TO:

- EXCHANGE TECHNICAL INFORMATION
- RECOMMEND TECHNICAL ACTIVITY
- REVIEW SYSTEMS DESIGN FEATURES

INDIVIDUAL MEETING AREAS:

- FLIGHT TECHNOLOGY
- CREW SYSTEMS
- POWER SYSTEMS
- MECHANICAL SYSTEMS
- ELECTRICAL SYSTEMS
- N & G AND S & C SYSTEMS
- GROUND SUPPORT SYSTEMS
- GROUND OPERATIONAL SUPPORT SYSTEMS

SYSTEMS MEETINGS (Contd.)

WHERE HELD:	MSC, HOUSTON
WHEN HELD:	EVERY OTHER WEEK ON A FIXED DAY
ATTENDED BY:	NAA-MAX. OF THREE REGULARLY ASSIGNED PLUS SUBCONTRACTOR IF REQUIRED MSC-ANY NUMBER AND REPRESENTATION
PROCEDURE:	ACTION REQUIRED ON AGENDA ITEMS PREPARED AND ADVERTIZED BY APO-NAA
RECORDING:	MINUTES BY APO WITH LIMITED DISTRIBUTION. ABSTRACT BY APO WITH WIDE DISTRIBUTION
IMPLEMENTATION:	THROUGH CHAIRMEN THENCE APO AND CONTRACTING OFFICES
APPEALS:	FROM MSC THROUGH CHANNELS FROM NAA THROUGH CHIEF ENGINEERS

APOLLO MODULE CONFIGURATION

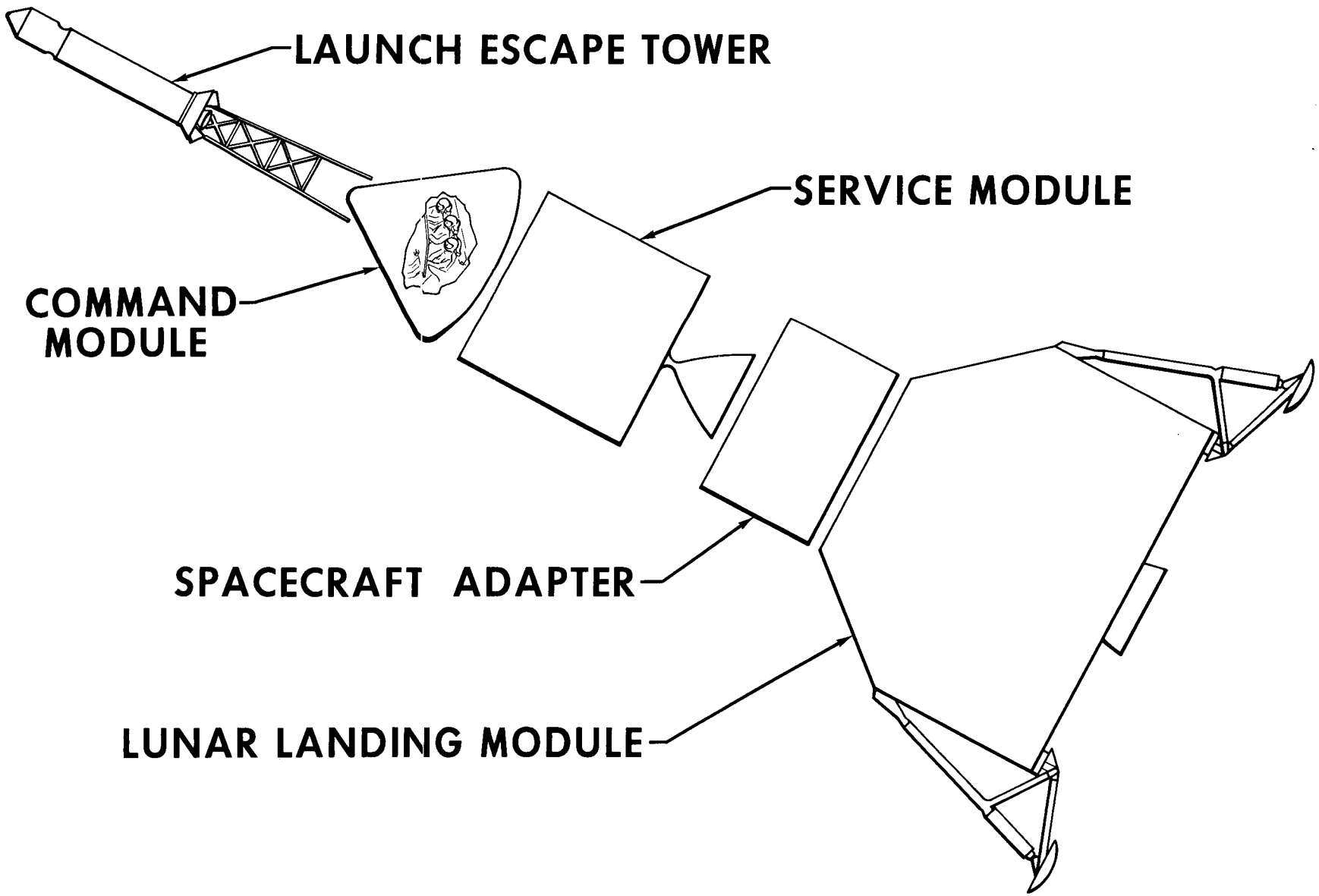

STRUCTURE-HEAT PROTECTION SYSTEM

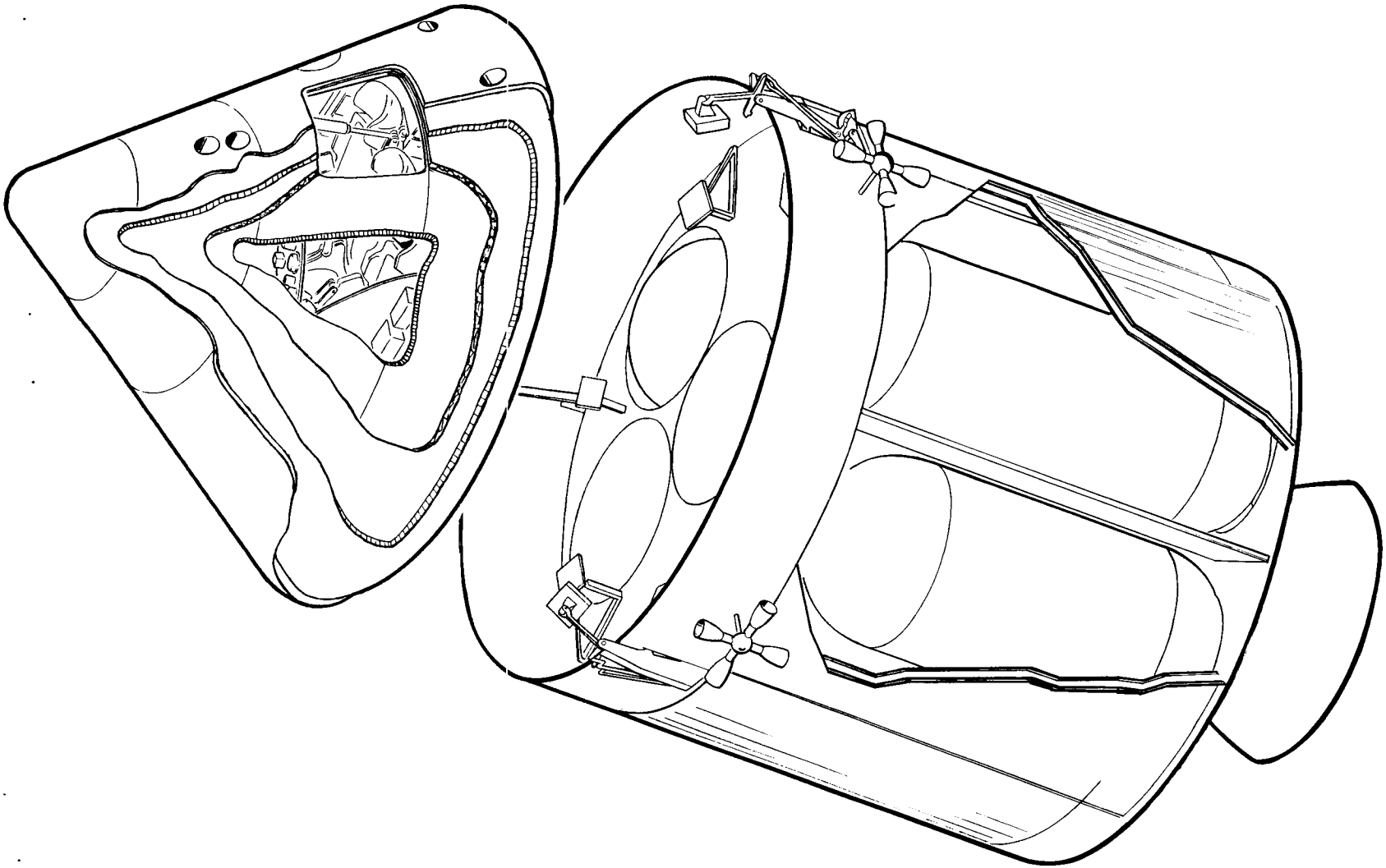

PROPULSION & RECOVERY SYSTEMS

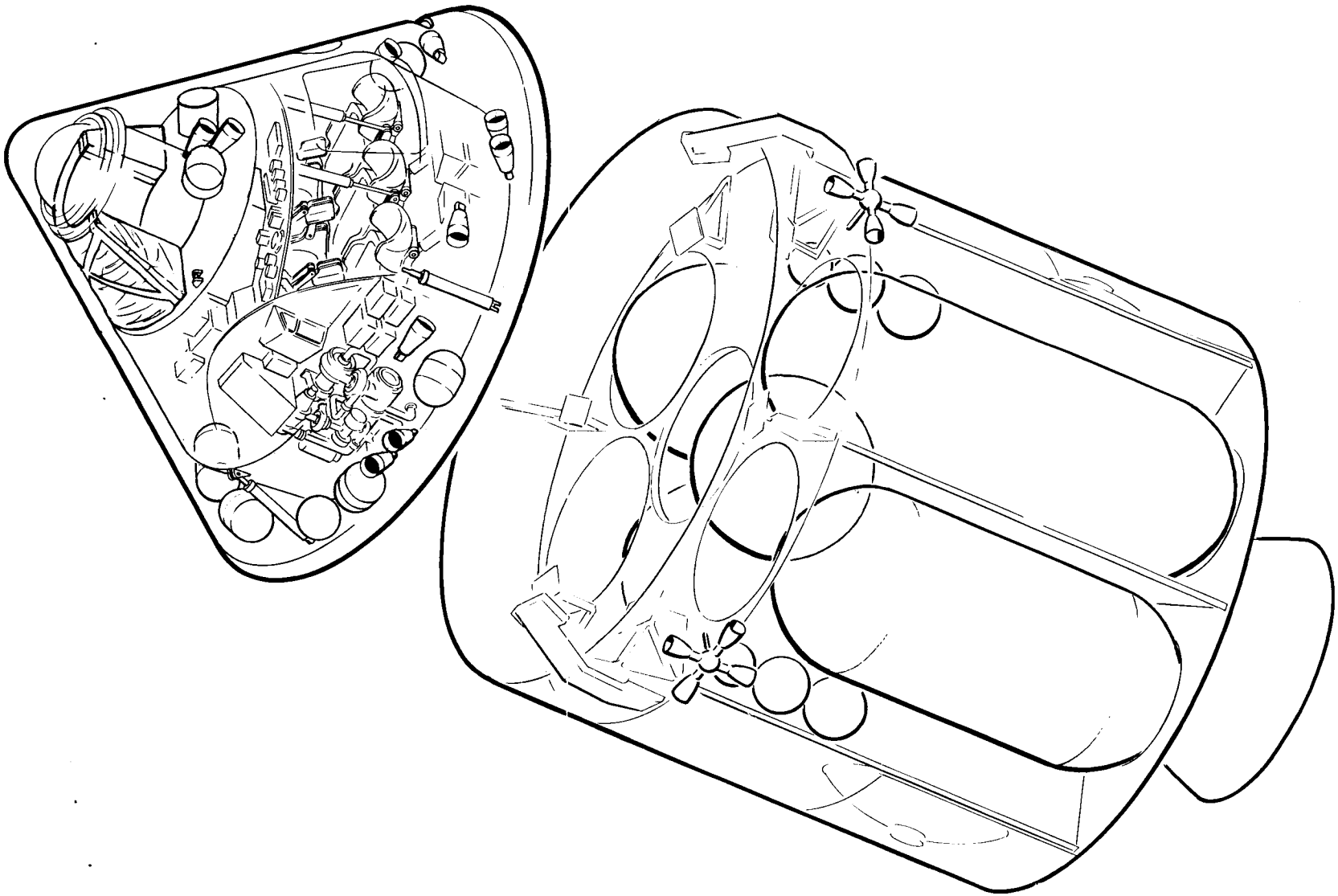

ENVIRONMENTAL CONTROL SYSTEM

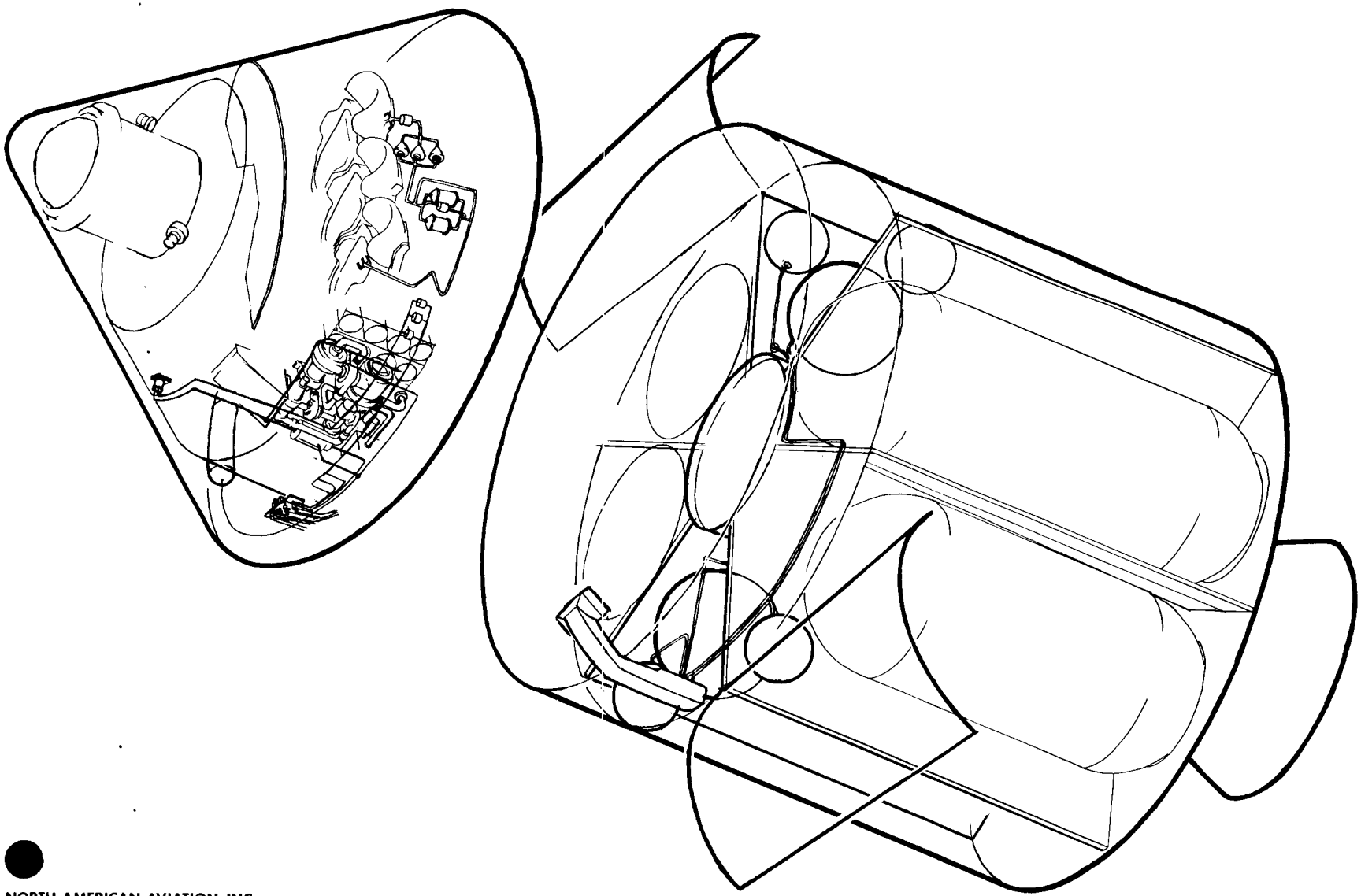

APOLLO ELECTRONIC SYSTEMS

	TOTALS		
	WT ~ LBS	VOL ~ FT³	PWR ~ WATTS
C/M	1499	36.2	2316
S/M	216	47.0	283

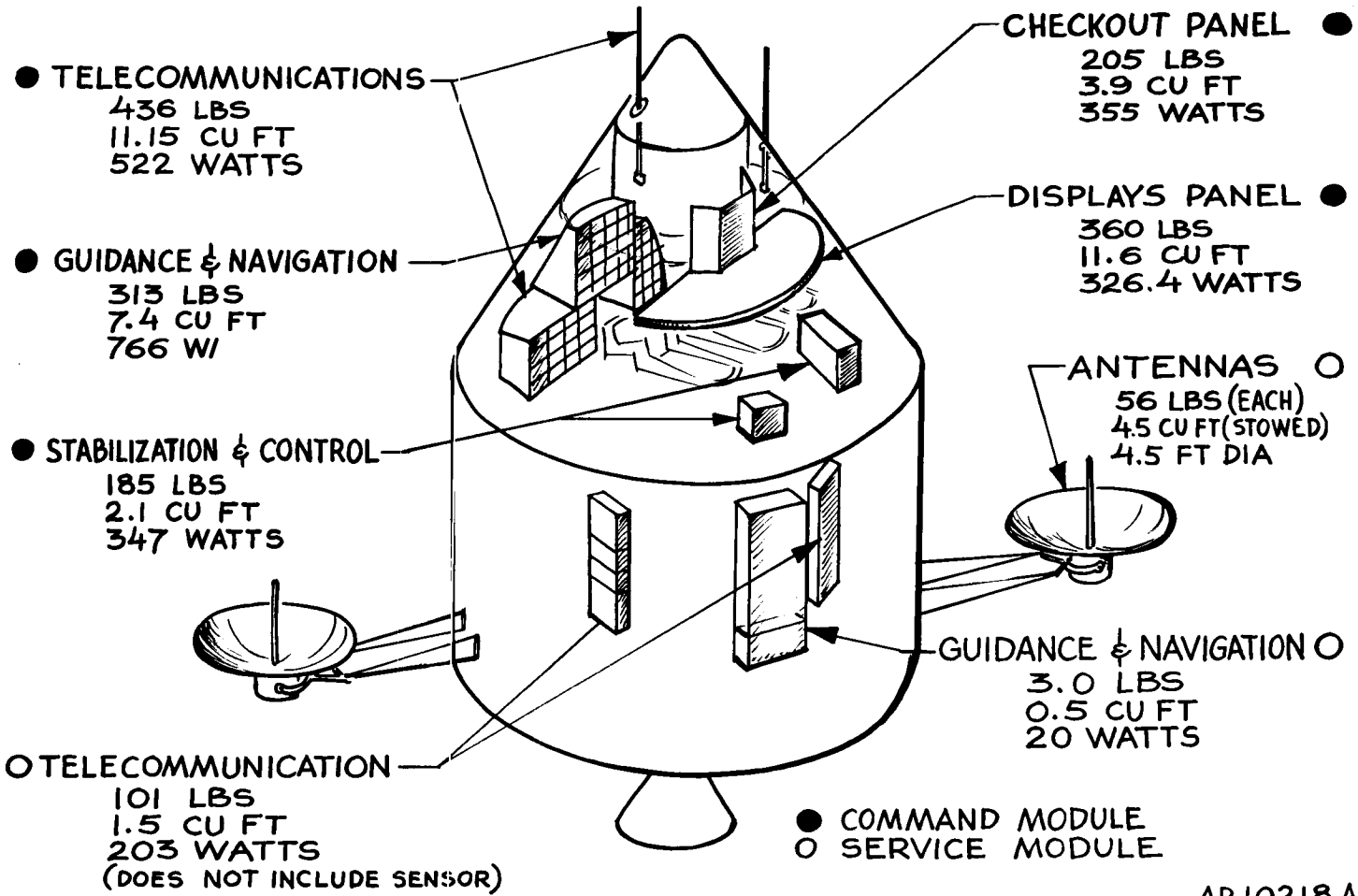

AP 10218 A
S1062-480 (21)

DESIGN PARAMETER STATUS

GENERAL SYSTEM DESIGN CRITERIA

PRIMARY-MAN CONTROL CREW	3 CREW MEN
MISSION RELIABILITY REQUIRED	0.90
CREW SAFETY REQUIRED	
NOMINAL	0.90
EMERGENCY	0.999
C/M SYSTEM VACUUM OPERATION	4 DAYS @ 7.5×10^{-10} mm Hg
S/M SYSTEM VACUUM OPERATION	7.5×10^{-10} mm Hg
MISSION	14-DAYS, 7 DAYS ON LUNAR SURFACE

DESIGN PARAMETER STATUS

GENERAL SYSTEM DESIGN CRITERIA

G'S C/M	≧ 18 LIMIT STRUCTURE ≧ 20
G'S S/M	AXIALLY = 7 NORMAL = 2
POST LANDING SURVIVABILITY & HABITABILITY	1 DAY HABITABLE FOLLOWED BY 6 DAYS SURVIVABLE
OPERATIONS OF S/C	CAPABILITY TO PERFORM MISSION INDEPENDENT OF GROUND INFORMATION

DESIGN PARAMETER STATUS

GENERAL SYSTEM DESIGN CRITERIA

COMPATIBILITY	S/C COMPOSED OF SEPARABLE MODULES - REMAIN ESSENTIALLY UNCHANGED FOR ALL MISSIONS
ELECTRO-MAGNETIC INTERFERENCE	NAA INTERFERENCE CONTROL PLAN
MAINTENANCE	IN-FLIGHT MAINTENANCE CAPABILITY

DESIGN PARAMETER STATUS

C/M AERODYNAMIC PARAMETERS

PARAMETER	OLD	PRESENT
L/D	0.5	0.5
LIFT (C_L)	0.51	0.49
DRAG (C_D)	1.02	0.98
$\frac{W}{C_D A}$ (BALLISTIC)	50	64.5

DESIGN PARAMETER STATUS

LIFE SYSTEMS

PARAMETER	OLD	PRESENT
FLIGHT CREW MAX DIMENSIONS	10TH-90TH PERCENTILE	10TH-90TH PERCENTILE
ACCELERATION TOLERANCES (5 SEC)		
LATERAL	10 G	10G
EYEBALLS IN	19G	27G
EYEBALLS OUT	12G	19G
EYEBALLS UP	NOT SPECIFIED	7G
EYEBALLS DOWN	9G	13G

DESIGN PARAMETER STATUS

LIFE SYSTEMS

PARAMETERS	OLD	PRESENT
ENTRANCE HATCH	3 REQ (ONE EACH CREW MAN)	ONE 31 X 34 PROVIDED
MAIN DISPLAY PANEL		MIN REQD AREA - 2400 SQ IN
WINDOW REQMTS	3-(ONE IN FRONT OF EACH CREWMAN)	SAME
SIDE CONSOLE PANELS	AREA IMPLIED	MIN REQD AREA-900 SQ IN

DESIGN PARAMETER STATUS

LIFE SYSTEMS

PARAMETER	OLD	PRESENT
PARACHUTE (PERSONAL)	3 REQD	UNDER CONSIDERATION
LIGHTING	IMPLIED	20-30 FOOT CANDLES ON INSTRUMENT PANEL-DIMMABLE LIGHTING
WATER TANK SIZE		
WASTE		60 LB S/M
POTABLE		64 LB C/M

DESIGN PARAMETER STATUS

ELECTRICAL POWER SYSTEM

PARAMETER	OLD	PRESENT
FUEL CELL SYSTEM		3-INDEPENDENT FUEL CELL MODULES 2-MODULES SUPPLY NORMAL LOAD 1-MODULE SUPPLIES EMERGENCY LOAD
FUEL CELL OUTPUT	EACH MODULE 1200 W	EACH MODULE 1308 W
FUEL CONSUMPTION	0.9 LB/KW-HR TOTAL O_2 & H_2	0.995 LB/KW-HR TOTAL O_2 & H_2
REGULATION	28 VOLTS ± 2 VOLTS	27 TO 31 V UNDER NORMAL LOAD 20.4 V EMERGENCY LOAD
TOTAL REACTANT WEIGHT		50.8 LB H_2-400 LB O_2 (INCLUDES 10% RESERVE)
BATTERY SYSTEM		3-28 V BATTERIES

DESIGN PARAMETER STATUS

ENVIRONMENTAL CONTROL SYSTEM

PARAMETER	
CABIN INTERIOR	
CABIN PRESSURE	7.0 ±0.2 PSI
CABIN TEMP	75° ± 5° F
O_2 PARTIAL PRESSURE	160 mm Hg MIN
CO_2 PARTIAL PRESSURE	7.6 mm Hg MAX
RELATIVE HUMIDITY	40 TO 70%
DUTY CYCLE	14-DAY MISSION (CONTINUOUS) PLUS 1 DAY ON GROUND
RESERVE	50% O_2 & N_2
CREW METABOLIC REQMTS	
O_2 CONSUMPTION	1.8 LB/MAN-DAY
CO_2 OUTPUT	2.3 LB/MAN-DAY
WATER CONSUMPTION	6.0 LB/MAN-DAY
HEAT OUTPUT	11,300 BTU/MAN-DAY
MAX TOTAL HEAT LOAD	8000-10,000 BTU/HR

DESIGN PARAMETER STATUS

STABILIZATION & CONTROL

ROLL ACCELERATION DURING ENTRY	$12\frac{1}{2}°/SEC^2$ OPTIMUM RATE WITH BOTH SYSTEMS-$6\frac{1}{4}°/SEC^2$ SYSTEM "A" OR "B" ADEQUATE- -$20°/SEC^2$ MAX ROLL RATE GYRO LIMITATION
MAX ANGULAR RATE DURING TRANSLUNAR & TRANSEARTH FIXES	2 ARC MIN/SEC
PULSE WIDTH FOR FIRING REACTION JET DURING ENTRY	.050 SECONDS OR GREATER
CONTROL	
3-AXIS RATE GYRO	PROVIDES STABILIZATION & DAMPING DURING ALL NECESSARY MISSION PHASES REQUIRED FOR A LUNAR LANDING
INERTIAL-REFERENCE	3-AXIS REFERENCE FOR ATTITUDE CONTROL

4-62 AP 11963
S1062-480 (31)

DESIGN PARAMETER STATUS

RF SYSTEMS

VHF FM TRANSMITTERS	NEAR EARTH TM DATA	225-260 MC	10 W
VHF AM TRANSCEIVER	NEAR EARTH VOICE-RESCUE AIRCRAFT	250-300 MC	10 W
DSIF TRANSPONDER			
TRANSMIT	TV, VOICE, DATA & RANGING	2290-2300 MC	20 W
RECEIVE	VOICE & RANGING	2100-2150 MC	
C BAND TRANSPONDERS	NEAR EARTH TRACKING	5400-5900 MC	2.5 KW PEAK
VHF RECOVERY BEACON	RECOVERY DIRECTION FINDING	243 MC	
HF TRANSCEIVER	LONG RANGE VOICE & DIRECTION	2-10 MC	20 W PEP
PERSONAL COMMUNICATIONS TRANSCEIVER	SPACECRAFT TO BELT PACK SETS	PER NASA SPEC	

DESIGN PARAMETER STATUS

ANTENNA SYSTEMS

EARTH ORBITAL	GAIN
UHF/VHF DISCONE	0db
DSIF/OMNI	0db
RECOVERY	+3db
C-BAND	0db

LUNAR MISSION

DSIF DIRECTIONAL	+26db

DESIGN PARAMETER STATUS

MASTER TIMING CLOCK

TO TIME ALL VEHICLE FUNCTIONS

TO SYNC ALL VEHICLE SYSTEMS

ACCURACY OVER A 14-DAY PERIOD---- 4 PARTS IN 10^7

FREQUENCY----------512 KC

RECORDER

TAPE----------2300 FT, 1" WIDE

CHANNELS----------14

SPEEDS----------7 1/2 AND 15 IN/SEC

DURATION---------- 30 MIN AT 15 IN/SEC

FREQUENCY RESPONSE---------20-50K CPS AT 15 IN/SEC

DATA----------PCM, VOICE, ANALOG

DESIGN PARAMETER STATUS

DATA SYSTEMS

PCM

ACCURACY (NOT INCLUDING TRANSDUCER)----- 0.5%

INPUT IMPEDANCE (MIN)----------1.0 MEGOHM

BIT RATE (FIXED)----------64, 96 OR 128 KC

MEASUREMENT GROWTH TOLERANCE----------30%

FORMAT (NONRETURN TO ZERO (NRZ))

WORD & BIT SYNC DERIVED AT GROUND STATION

TRANSDUCERS

SOURCE IMPEDANCE----------5K OHM (MAX)

OUTPUT RANGE----------0-5 VOLTS

MILLIVOLT CHANNELS MINIMIZED

DESIGN PARAMETER STATUS

CAMERAS

TELESCOPE CAMERA	35 MM
MAGAZINE	200 FT
RESOLUTION	1 METER AT 50 MI
PANEL MONITOR CAMERA	16 MM
MAGAZINE	500 FT
FRAME RATE	16 & 24 FRAMES/SEC
LUNAR EXPLORATION	35 MM
MAGAZINE	100 FT
SPECIAL LENSES	TELEPHOTO & WIDE ANGLE

4-62 AP 11968
S1062-480

DESIGN PARAMETER STATUS

OPTICAL SYSTEMS

TELESCOPE

FIELDS OF VIEW	15° TO 20° 2° TO 3°
DEGREES OF FREEDOM (HEMISPHERICAL)	2 DEGREES
MAGNIFICATION POWER	UNITY & 10
RESOLUTION	50 FT AT 100 MI

TELEVISION

REPETITION RATE	15 FRAMES/SEC
LINES	525 LINES/FRAME

DESIGN PARAMETER STATUS

LAUNCH ESCAPE PROPULSION SYSTEMS

LAUNCH ESCAPE MOTOR

THRUST	240,000 LB
BURNING TIME	2 SEC AT MAX THRUST TAILOFF TO ZERO IN 4 SEC
TRAJECTORY	
PAD ABORT	5000 FT ALT MIN & LATERAL DISTANCE OF 3000 FT
MAX Q ABORT	125 FT SEPARATION IN FIRST SEC
MAX ALT ABORT	SEPARATE COMMAND MODULE FROM LAUNCH VEHICLE WITHOUT EXCEEDING CREW LIMITS
THRUST VECTOR CONTROL	EITHER GIMBAL OR FLUID INJECTION
SAFETY MARGIN	ENGINE CASE MIN-BURST PRESSURE =1.4X MAX PRESSURE
FAIL SAFE	COMMAND SIGNAL LOSS RESULTS IN NOZZLES SEEKING ZERO-THRUST DEFLECTION

DESIGN PARAMETER STATUS

LAUNCH ESCAPE PROPULSION SYSTEM

TOWER JETTISON MOTOR	
THRUST	40,000 LB
BURNING TIME	1 SEC AT MAX THRUST TAILOFF TO ZERO IN 1.2 SEC
OPERATION	SEPARATE ESCAPE TOWER FROM COMMAND MODULE AFTER ESCAPE MOTOR IS FIRED DURING PAD ABORT
	SEPARATE ESCAPE TOWER FROM COMMAND MODULE DURING NORMAL MODE
SAFETY MARGIN	ENGINE CASE MIN-BURST PRESSURE=1.4X MAX PRESSURE

4-62 AP 11971
S1D62-480

DESIGN PARAMETER STATUS

PROPULSION

SERVICE PROPULSION SYSTEM	
TYPE	SINGLE LIQUID BIPROPELLANT ENGINE
PERFORMANCE	21,500 LB THRUST: VARIATION +10%-0%
THRUST VECTOR CONTROL	GIMBALED ENGINE
LOADS	30 G SHOCK 7 G ACCELERATION
ENGINE LIFE	750 SEC WITH 50-START CAPABILITY
DUTY CYCLE	1.0 SEC MIN; 500 SEC MAX
PROPELLANT CAPACITY	31,000 LB MAX
PROPELLANT USAGE	29,825 LB; 468 SEC TOTAL BURNING TIME FOR LUNAR-LANDING MISSION
C/M RCS	
NO. OF JETS	12-TOTAL: 2 SEPARATE SYSTEMS SYSTEM "A"-6 JETS SYSTEM "B"-6 JETS
PROPELLANT CAPACITY	200 LB: SYSTEM "A"-100 LB SYSTEM "B"-100 LB
OPERATING LIFE	200 SEC TOTAL; 3000 CYCLES MAX
PERFORMANCE	100-LB THRUST/JET

4-62 AP 11972
S1D62-480

DESIGN PARAMETER STATUS

PROPULSION (CONT)

S/M RCS

NO. OF JETS	16 TOTAL: 2 SEPARATE SYSTEMS SYSTEM "A"-8 JETS SYSTEM "B"-8 JETS
PROPELLANT CAPACITY	400 LB: SYSTEM "A"- 200 LB SYSTEM "B"- 200 LB
PERFORMANCE	100 LB THRUST/JET: WAS 60 LB/JET
MARGIN OF SAFETY	VALVES - 1.5:1 PROOF 3.0:1 BURST
OPERATING LIFE	1000 SEC TOTAL (BASED ON PRELIMINARY DUTY CYCLE FOR 14-DAY ORBIT MISSION)

DESIGN PARAMETER STATUS

PROPELLANT SYSTEMS

	SERVICE PROPULSION	S/M REACTION CONT	C/M REACTION CONT
TEMP CRITERIA			
SERVICING	55 ± 5°F	SAME	SAME
OPERATING	40 TO 100°F		
DESIGN PRESSURES			
ENVIRONMENT	14.7 PSIA TO 10^{-9} mmHg	SAME	SAME
HELIUM			
OPERATING	4500 PSI		
PROOF	6750 PSI	SAME	SAME
BURST	9000 PSI		
PROPELLANT DISTR SYSTEM			
OPERATING	175 PSI (NOM)	200 PSI	
RELIEF	240 PSI (MAX)	265 PSI	SAME AS S/M REACTION CONT
PROOF	300 PSI	397 PSI	
BURST	360 PSI	531 PSI	

4-62 AP 11974
S1D62-480

DESIGN PARAMETER STATUS

PROPELLANT SYSTEMS (CONT)

	SERVICE PROPULSION	S/M REACTION CONT	S/M REACTION CONT
PROPELLANTS			
FUEL	50/50 BLEND-HYDRAZINE & UNSYMMETRICAL DIMETHAL HYDRAZINE	SAME	SAME
OXIDIZER	NITROGEN TETROXIDE WITH NITROUS OXIDE	SAME	SAME
PRESSURIZATION	HELIUM GAS	SAME	SAME
TANKAGE & SUPPLY			
ENGINE START EXPULSION	LIMITED	100 %	100 %
FILL EQUIP TOLERANCE	.25 %		
FEED OUT ERROR	1.0 %		
TRAPPED PROPELLANT	1.0 %		
EXPANSION SPACE	50° F RISE	SAME	SAME
VOLUME CONSIDERED FOR EXPULSION DEVICE	YES	YES	YES

DESIGN PARAMETER STATUS

PROPELLANT SYSTEMS (CONT)

	SERVICE PROPULSION	S/M REACTION CONT	C/M REACTION CONT
MARGIN OF SAFETY			
HELIUM			
PROOF	1.5X MAX OPERATING PRESSURE	SAME	SAME
BURST	2.0X MAX OPERATING PRESSURE	SAME	SAME
PROPELLANT			
PROOF	1.3X MAX OPERATING PRESSURE	SAME	SAME
BURST	1.5X MAX OPERATING PRESSURE	SAME	SAME
MATERIAL SELECTION	REF BELL AEROSYSTEMS REPT NO. 8111-933003 TITLED TITAN II STORABLE PROPELLANT HANDBOOK	SAME	SAME

4-62 AP 11976
S1062-480

TRAJECTORIES

MISSION FLEXIBILITY

TRANSLUNAR INJECTION LOCI

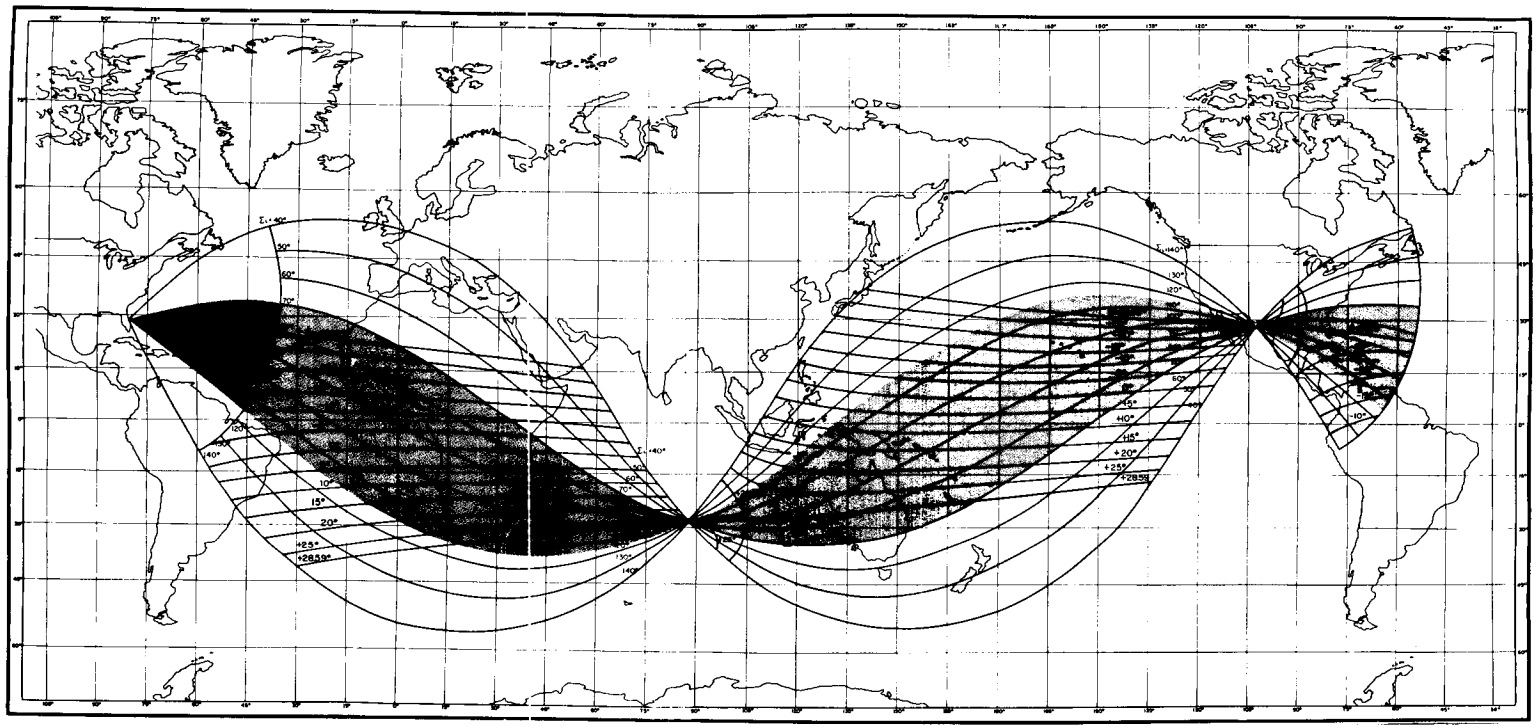

RANGE SAFETY LIMITS 70°-115°

IN PLANE ANGLE FROM INJECTION TO LUNAR ENCOUNTER = 165°

100 N MI PARKING ORBIT

Φ = LUNAR DECLINATION AT ENCOUNTER

Σ_L = LAUNCH AZIMUTH

4-62 AP 13030
SID62-480 (46)

LOCI OF ENTRY CONDITIONS

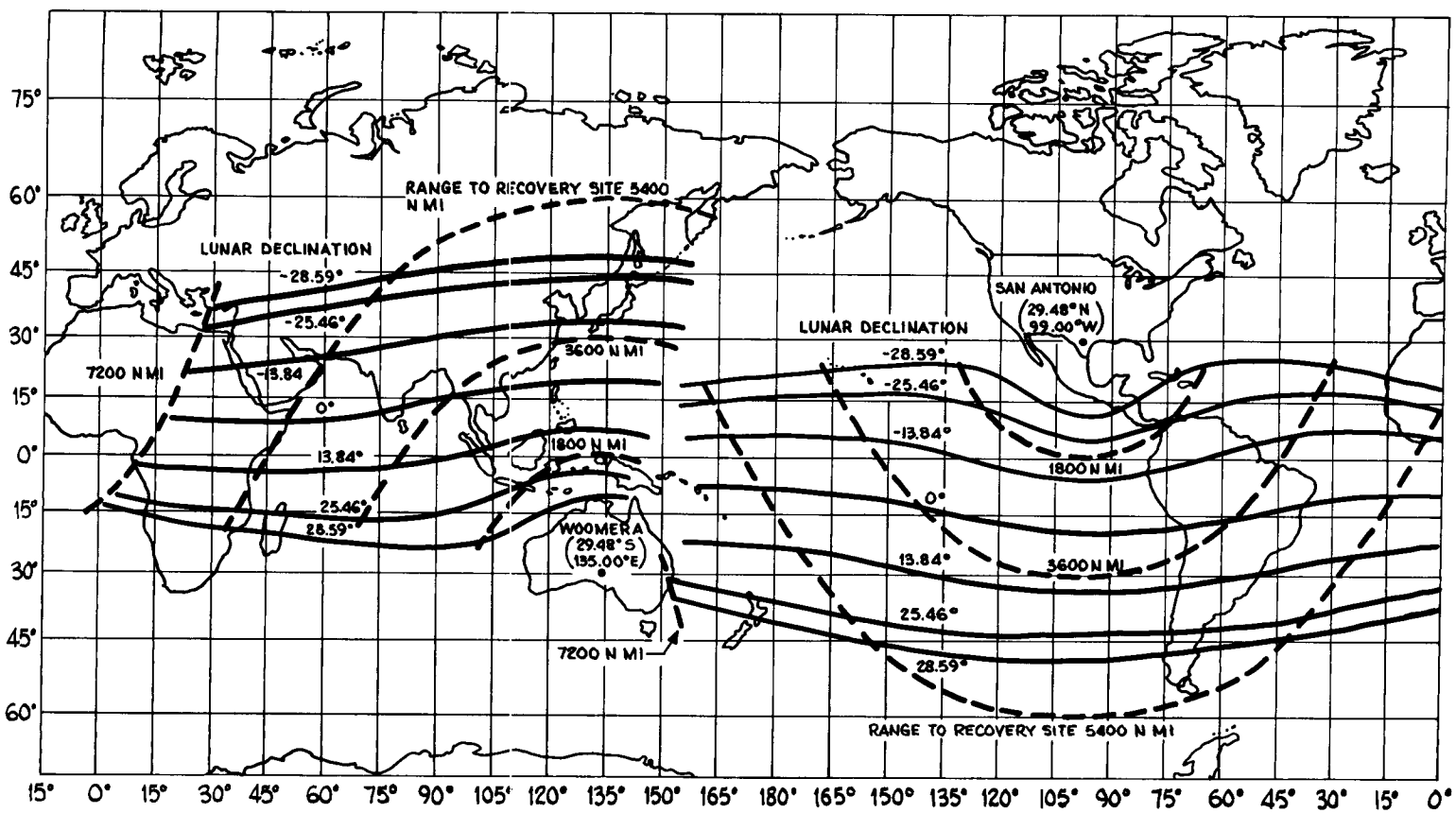

4-62 AP 11930
S1D62-480 (47)

OPERATIONAL & ENTRY REQUIREMENTS

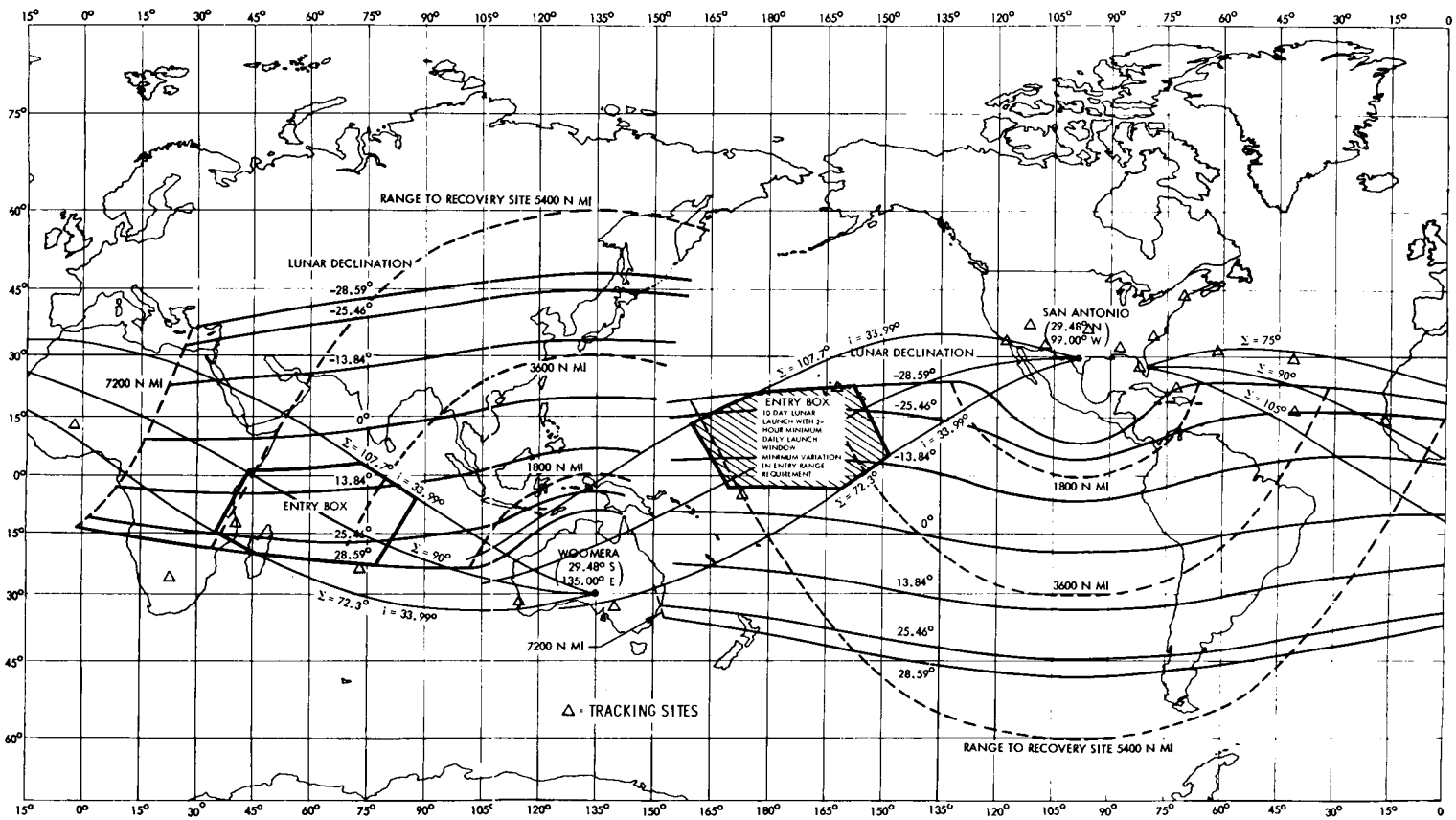

4-62 AP 11931
S1D62-480 (48)

ENTRY RANGE CAPABILITY

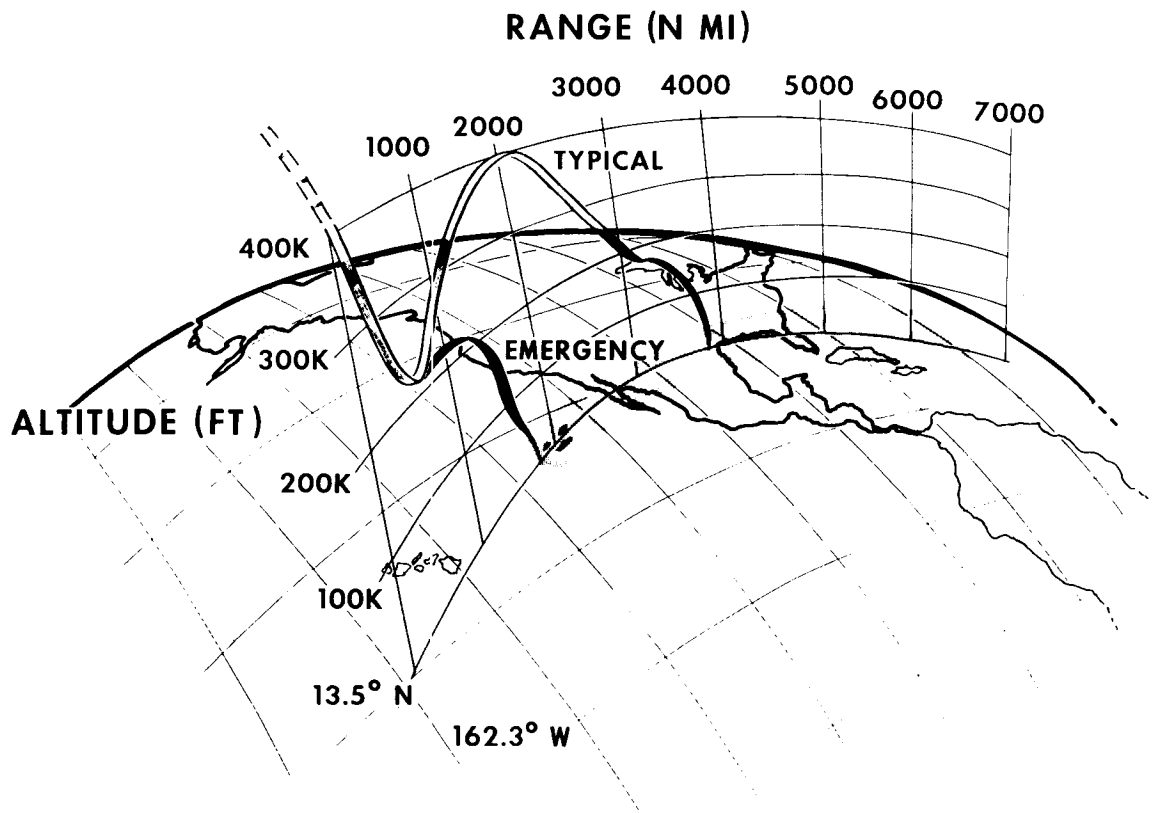

ENTRY RANGE REQUIREMENTS

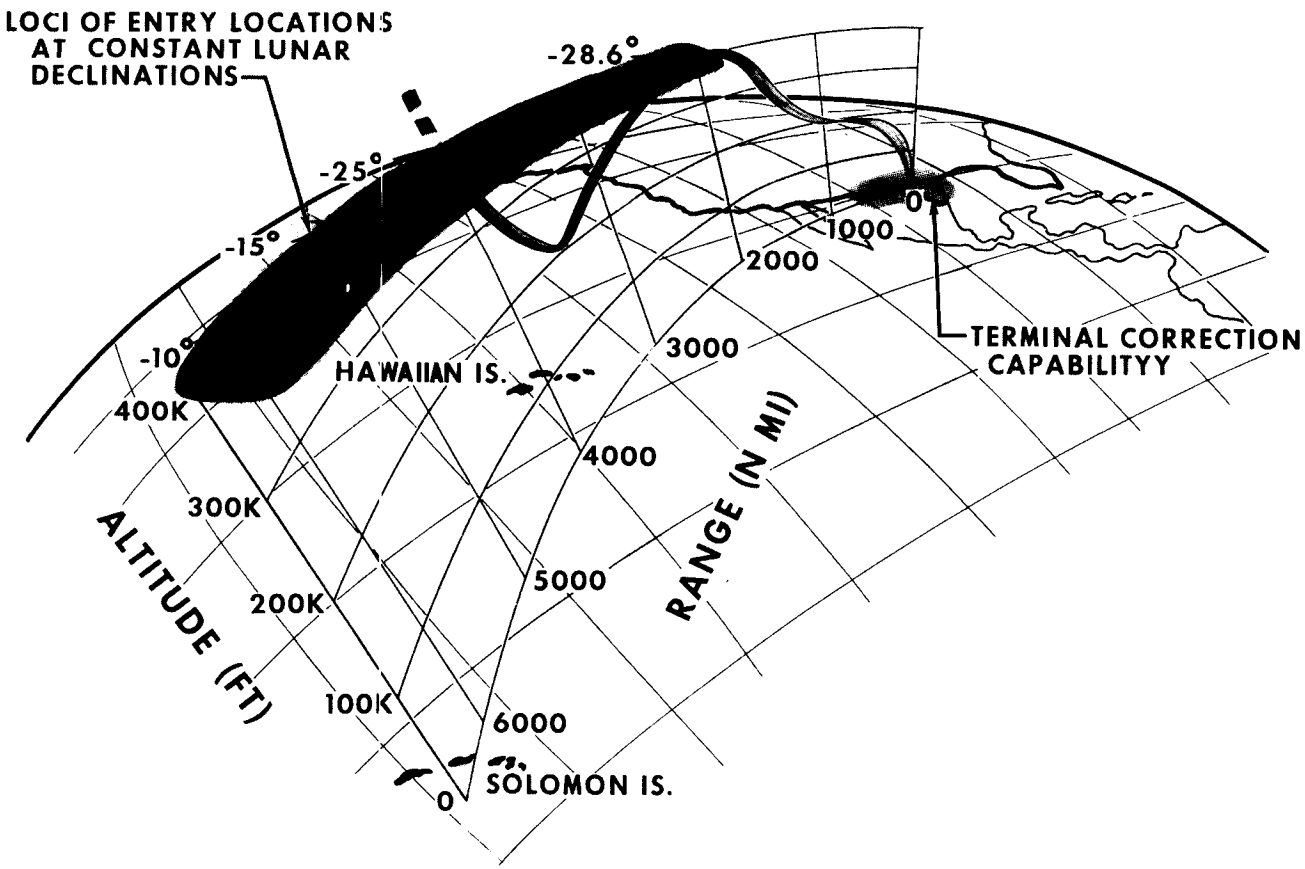

LUNAR LIGHTING GEOMETRY

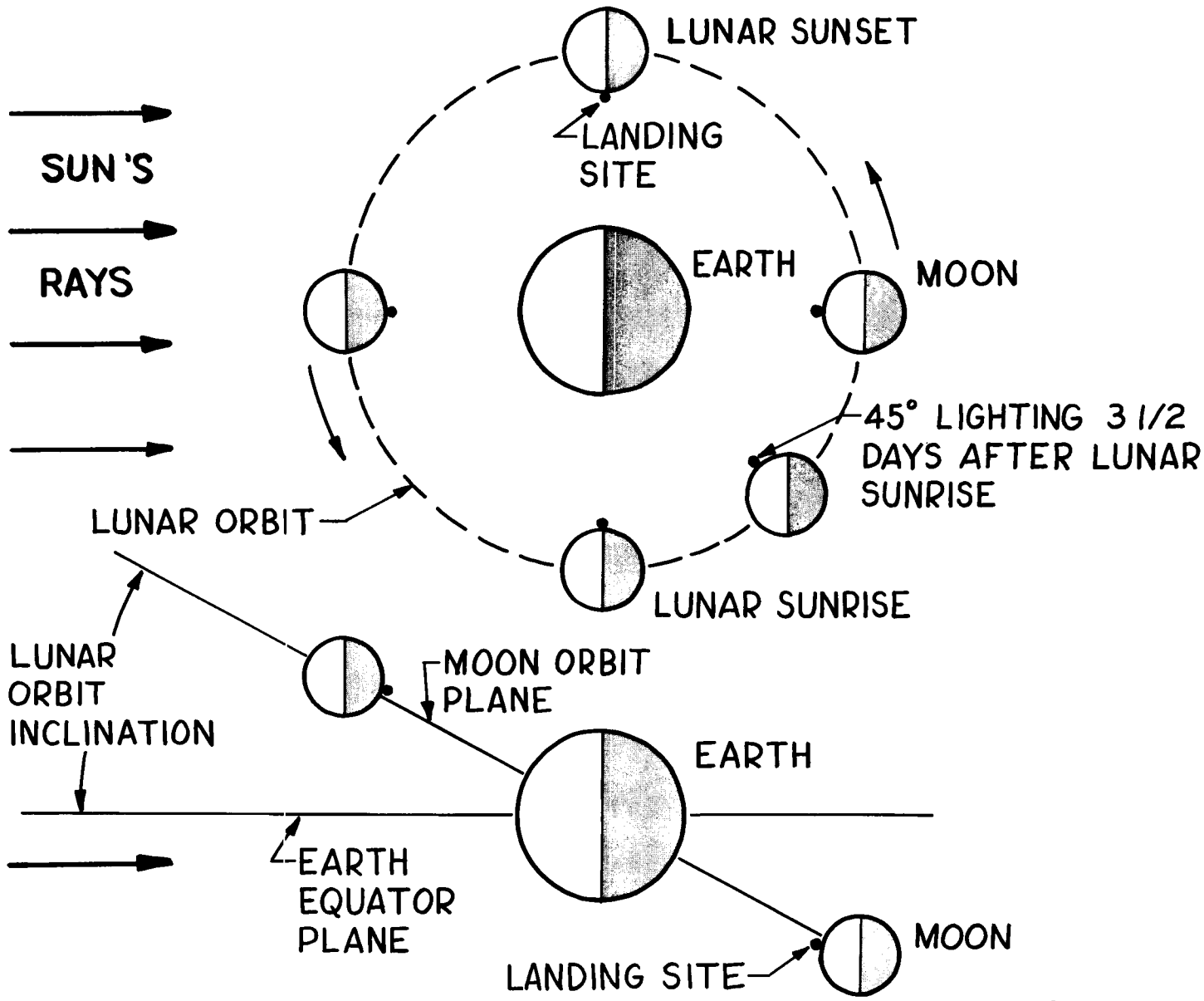

4-62 AP 13031
S1D62-480 (51)

LAUNCH LIGHTING REQUIREMENTS

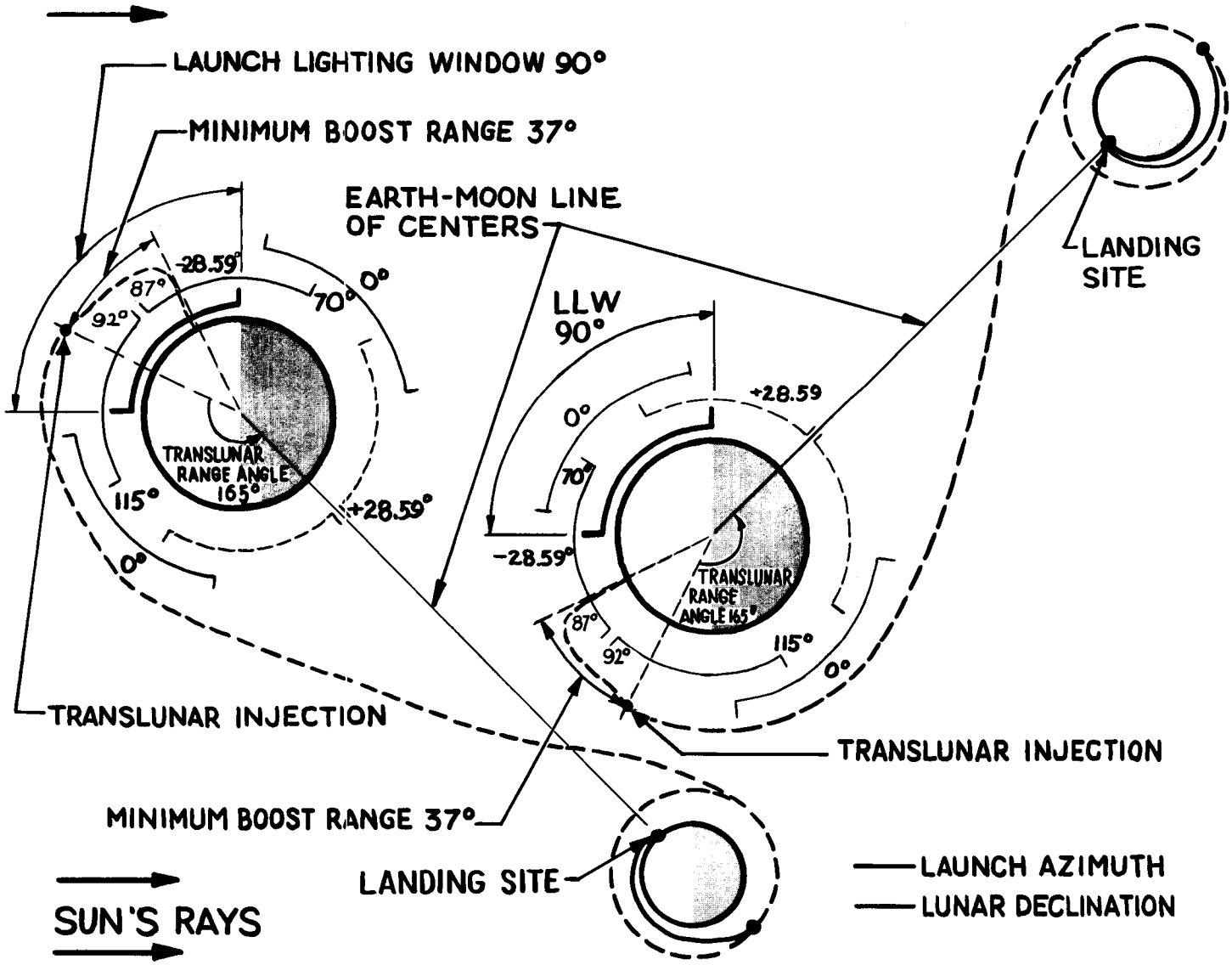

4-62 AP 13032
S1062-480 (52)

ENTRY & LANDING LIGHTING

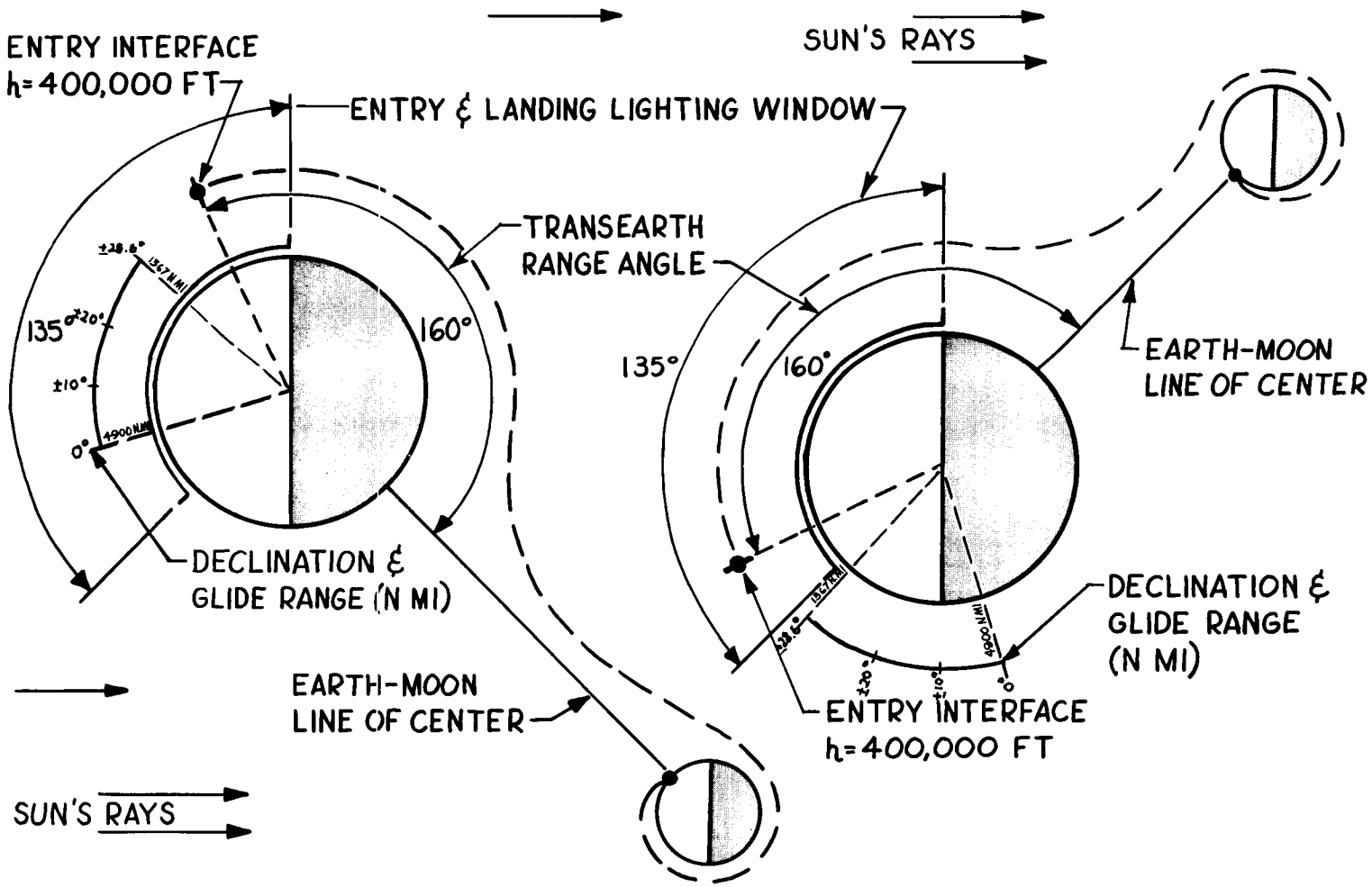

4-62 AP 13033
S1062-480 (53)

LUNAR LANDING MISSION LIGHTING REQUIREMENTS

SEA OF TRANQUILITY

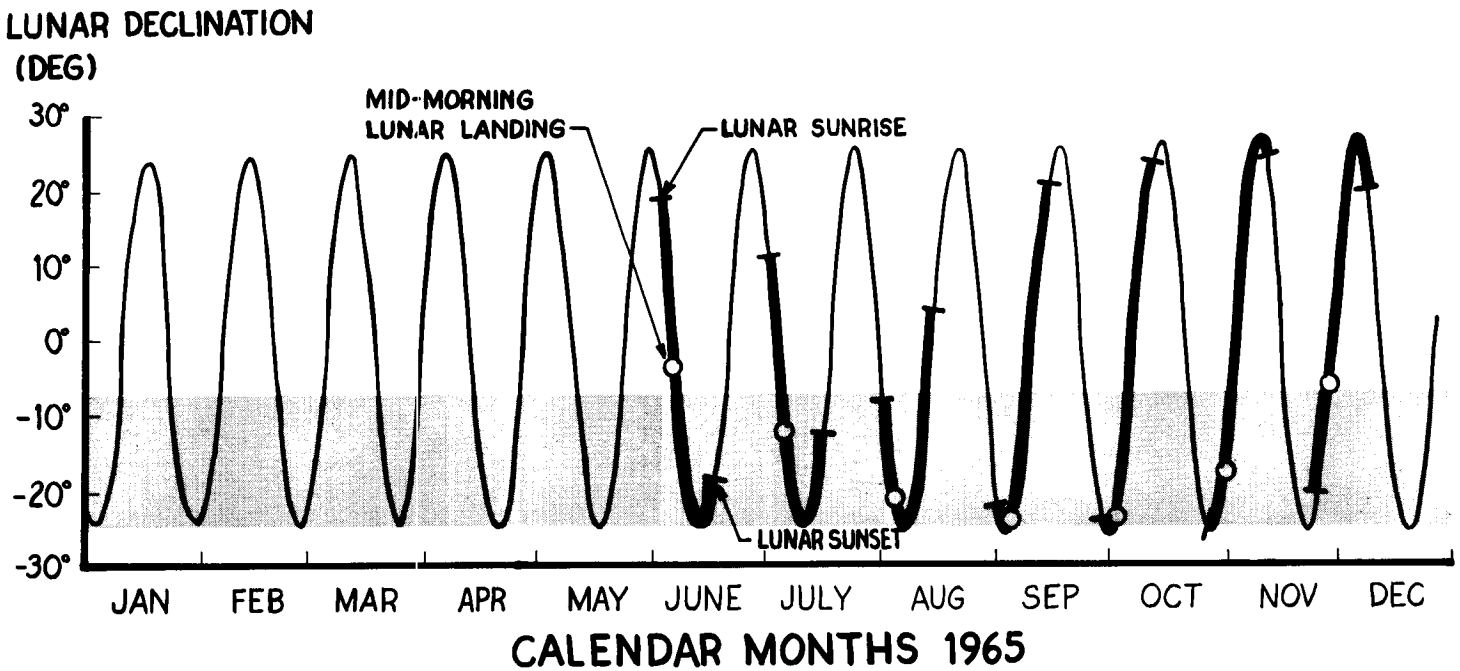

4-62 AP 13034
S1D62-480 (54)

DESIRABLE MISSION DATES (1965-1966)

EARTH LAUNCH TIME (GMT)	TRANSLUNAR TRANSIT TIME (HR)	LUNAR LANDING TIME (GMT)	LUNAR SURVEILLANCE TIME (HR)	LUNAR LAUNCH TIME (GMT)	TRANSEARTH TRANSIT TIME (HR)	EARTH LANDING TIME (GMT)	ENTRY RANGE (N.MI)	TOTAL MISSION TIME (HR)
				1965				
1910, 5 JUN	77.3	0030 9 JUN	25.2	0140 10 JUN	65	1840 12 JUN	4180	167.5
1735, 4 JUL	77.0	2230 7 JUL	25.9	0030 9 JUL	↓	1730 11 JUL	3260	167.9
1540, 3 AUG	64.9	0840 6 AUG	38.4	2300 7 AUG	↓	1600 10 AUG	2160	168.3
1500, 1 SEP	78.4	2120 4 SEP	25.7	2300 5 SEP	↓	1600 8 SEP	2150	169.1
1510, 1 OCT	65.9	0910 4 OCT	37.9	2300 5 OCT	↓	1600 8 OCT	3070	168.8
1635, 30 OCT	78.2	2250 2 NOV	25.4	0015 4 NOV	↓	1715 6 NOV	3860	168.6
1740, 29 NOV	66.8	1230 2 DEC	37.2	0140 4 DEC	↓	1840 6 DEC	5330	169.0
				1966				
1755 24 JUN	62.0	0755 27 JUN	41.0	0100 29 JUN	65	1800 1 JUL	2675	168.0
1605 23 JUL	74.6	1845 26 JUL	28.3	2300 27 JUL	↓	1600 30 JUL	2250	167.9
1435 22 AUG	65.3	0755 25 AUG	37.4	2120 26 AUG	↓	1420 29 AUG	2025	167.7
* 1440 20 SEP	75.1	1745 23 SEP	29.3	2300 24 SEP	↓	1600 27 SEP	2600	169.4
1635 20 OCT	62.4	0700 23 OCT	42.0	0100 25 OCT	↓	1800 27 OCT	4125	169.4
1755 18 NOV	74.7	2040 21 NOV	28.8	0125 23 NOV	↓	1825 25 NOV	4625	168.5

EARTH LAUNCH AZIMUTH CAPE CANAVERAL - 90°

EARTH LANDING AZIMUTH SAN ANTONIO - 72.3°

*FIRST SCHEDULED C-5 LUNAR LANDING & RETURN

4-62 AP 13035
S1D62-480 (55)

TRANSLUNAR GEOMETRY

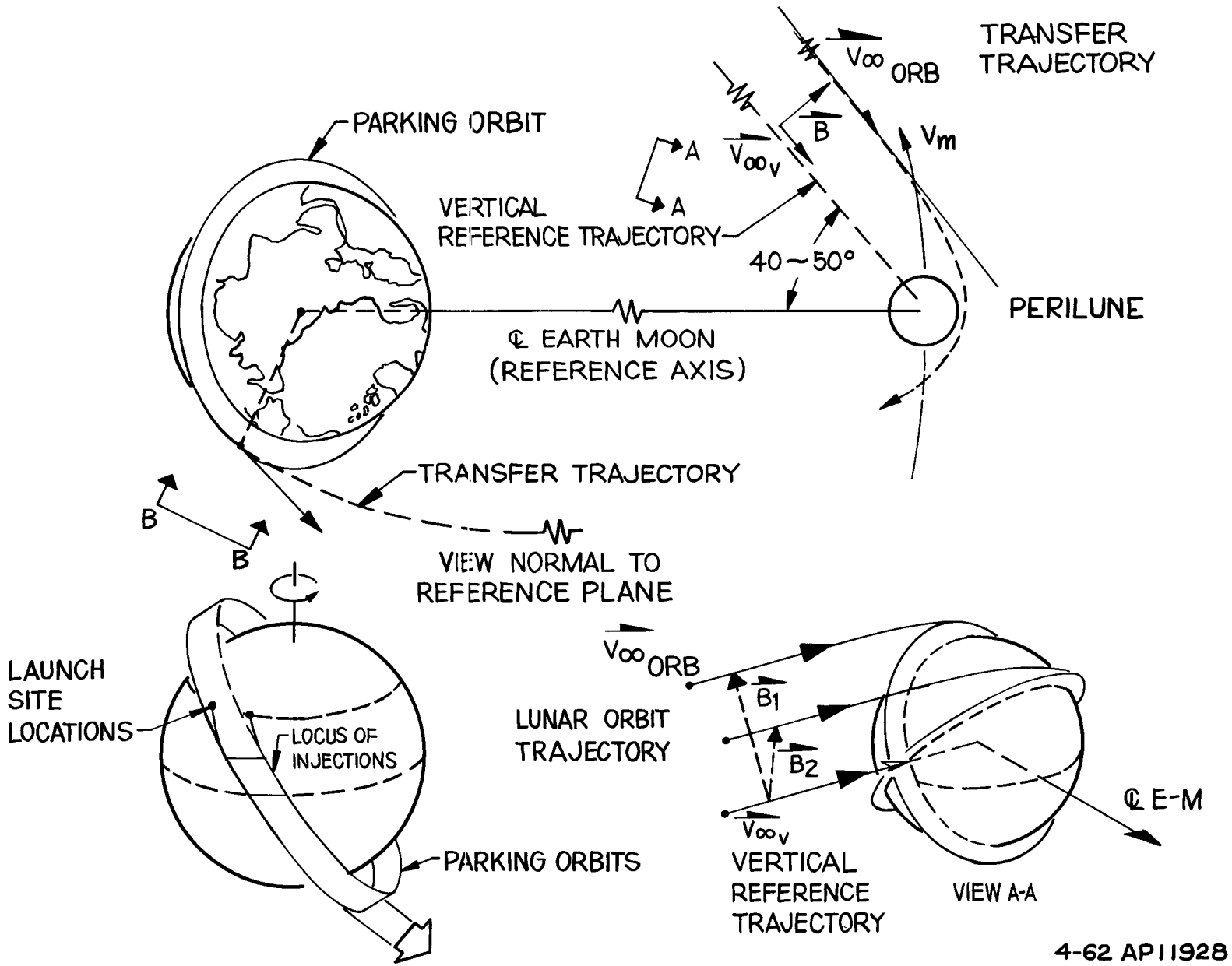

4-62 AP11928
S1062-480

TRANSEARTH GEOMETRY

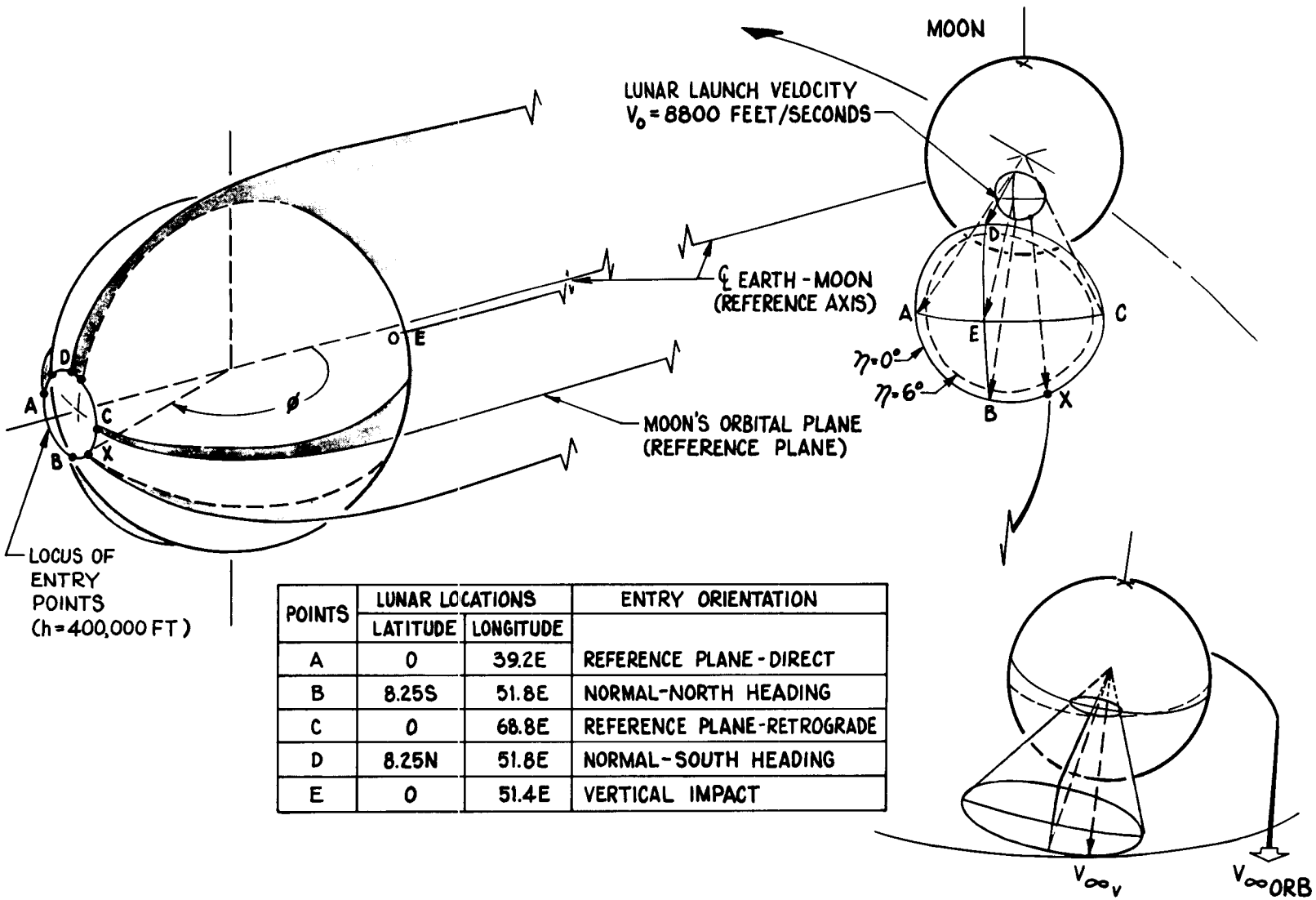

POINTS	LUNAR LOCATIONS		ENTRY ORIENTATION
	LATITUDE	LONGITUDE	
A	0	39.2E	REFERENCE PLANE - DIRECT
B	8.25S	51.8E	NORMAL-NORTH HEADING
C	0	68.8E	REFERENCE PLANE-RETROGRADE
D	8.25N	51.8E	NORMAL-SOUTH HEADING
E	0	51.4E	VERTICAL IMPACT

4-62 AP 11929
S1062-480 (57)

TRANSEARTH TRANSIT TIME

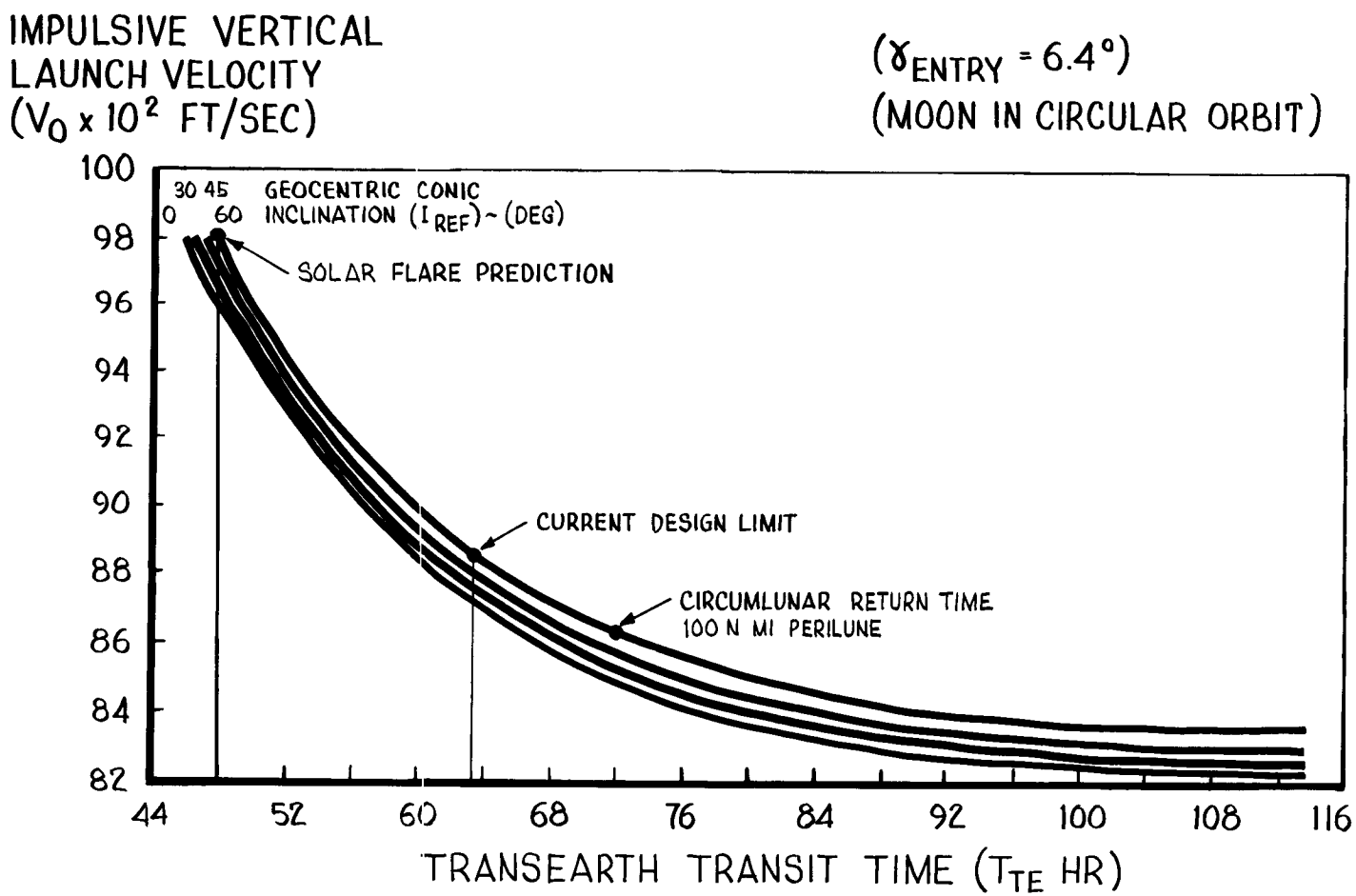

4-62 AP 13036
S1D62-480

LUNAR RETRO TRAJECTORY

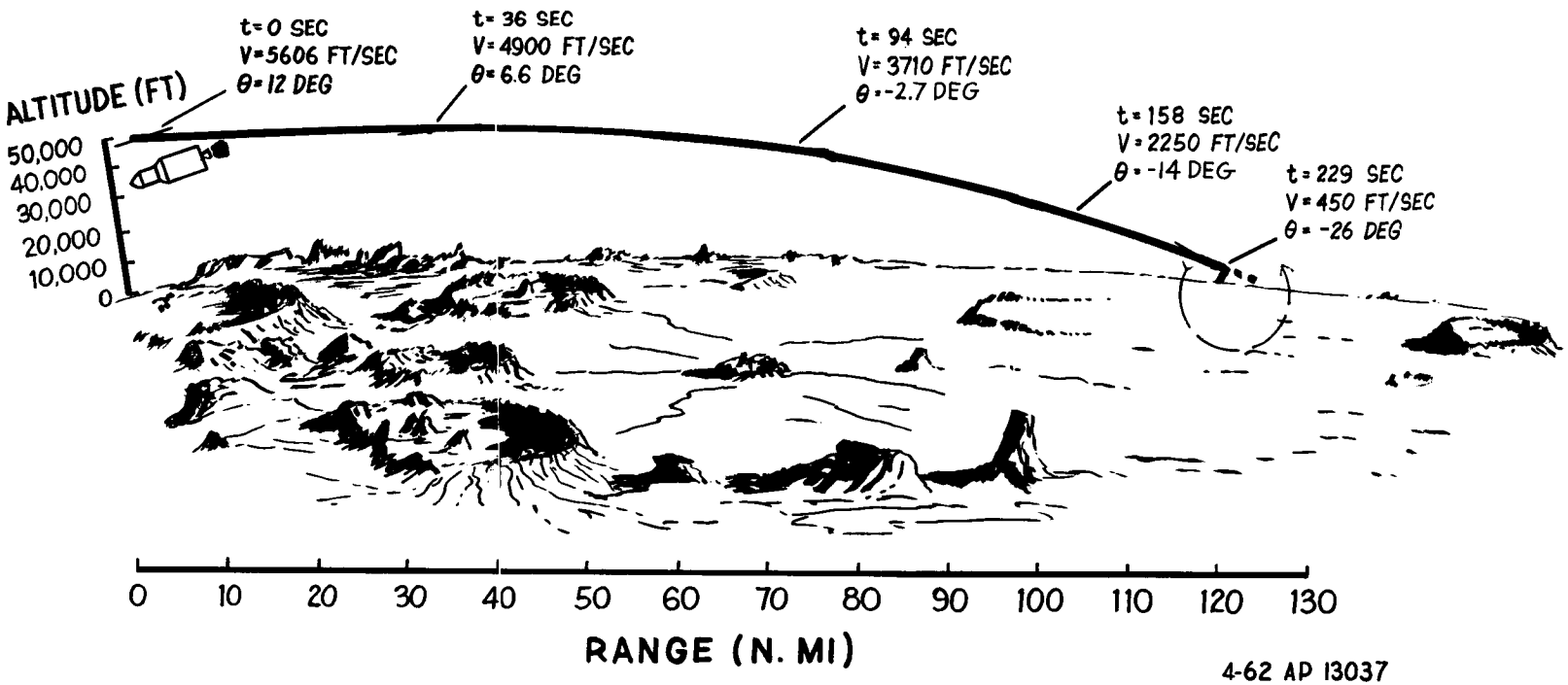

4-62 AP 13037
S1D62-480

LUNAR LANDING TRAJECTORY

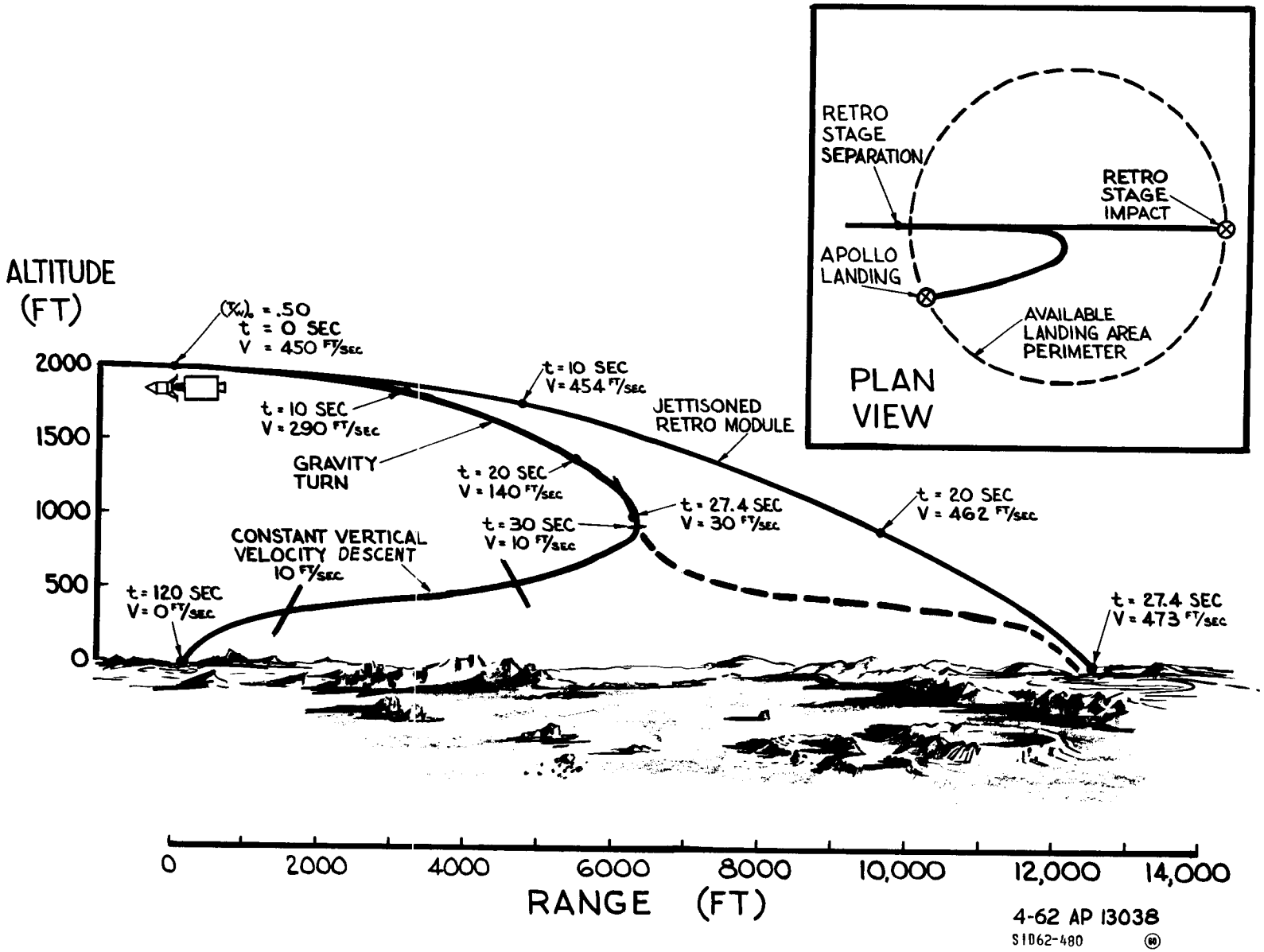

4-62 AP 13038
S1D62-480

LEV LANDING MANEUVERS
BASIC GROUND RULES

1. ABORT— 3 MIN AFTER INITIATING LANDING POINT
2. LANDING SITE LIGHTING - 9AM LUNAR MORNING
3. RENDEZVOUS RANGE ANGLES - 45° TO 135°
4. MINIMUM ΔV - TIMING TO RENDEZVOUS ON LANDING PASS
5. MULTIPLE PASSES FOR SURVEILLANCE

FLIGHT PLAN

FLIGHT-PLAN NOMENCLATURE

a, A LEV EJECTION FROM 100 N MI ORBIT
B C/M & S/M EJECTION INTO TIMING ORBIT

c, C 117 MIN LATER THAN b, B (OR N SURVEILLANCE ORBITS LATER) C/M & S/M INJECT TO 100 N MI ORBIT

d LEV LANDING (ALSO IMMEDIATE ABORT)

d' TAKE-OFF AFTER 3-MIN HOVER

e, E RENDEZVOUS AFTER IMMEDIATE ABORT

e', E RENDEZVOUS AFTER 3 MIN DELAYED TAKE-OFF

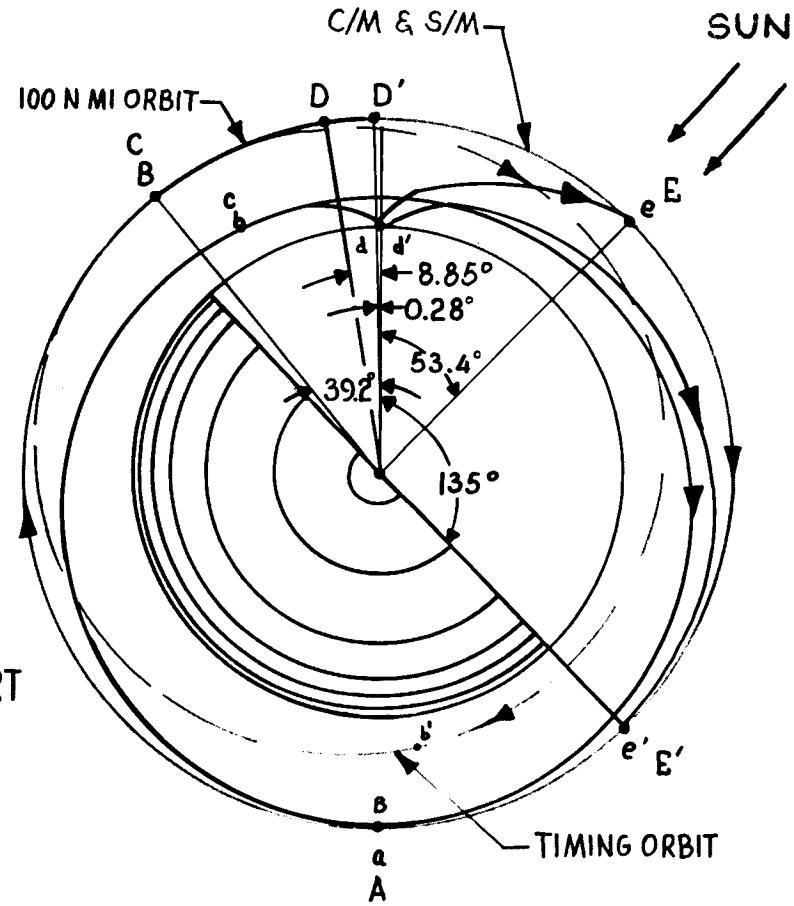

LOWER CASE - POSITIONS OF LEV

UPPER CASE - POSITIONS OF C/M & S/M

4-62 AP 13040
S1D62-480 (62)

ΔV REQUIREMENTS

COMPUTATION PLAN

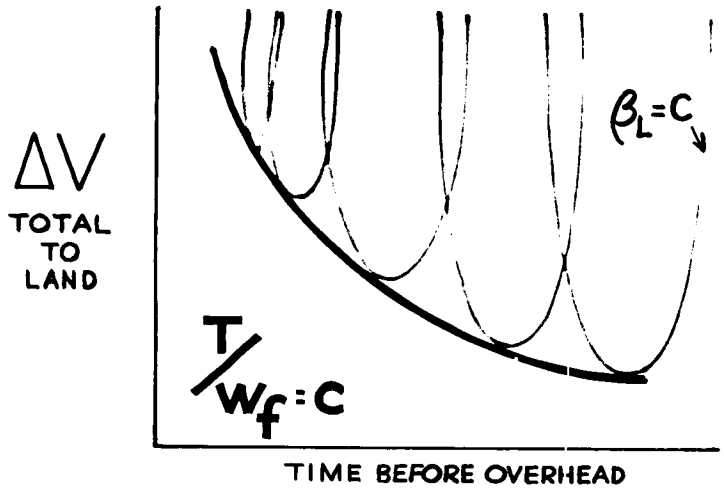

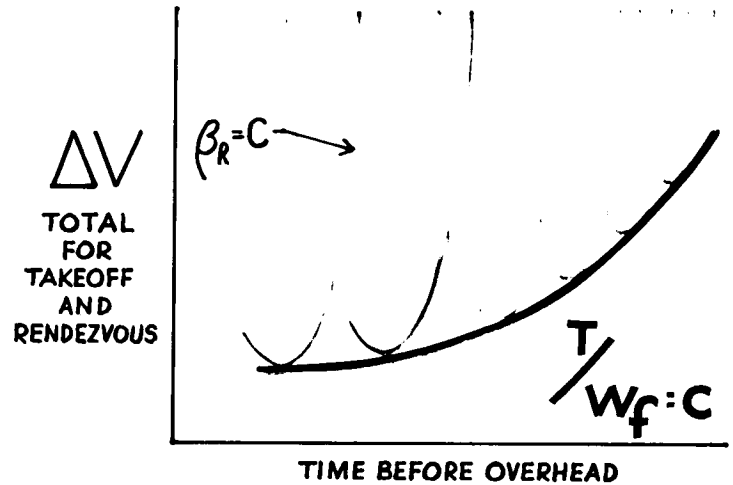

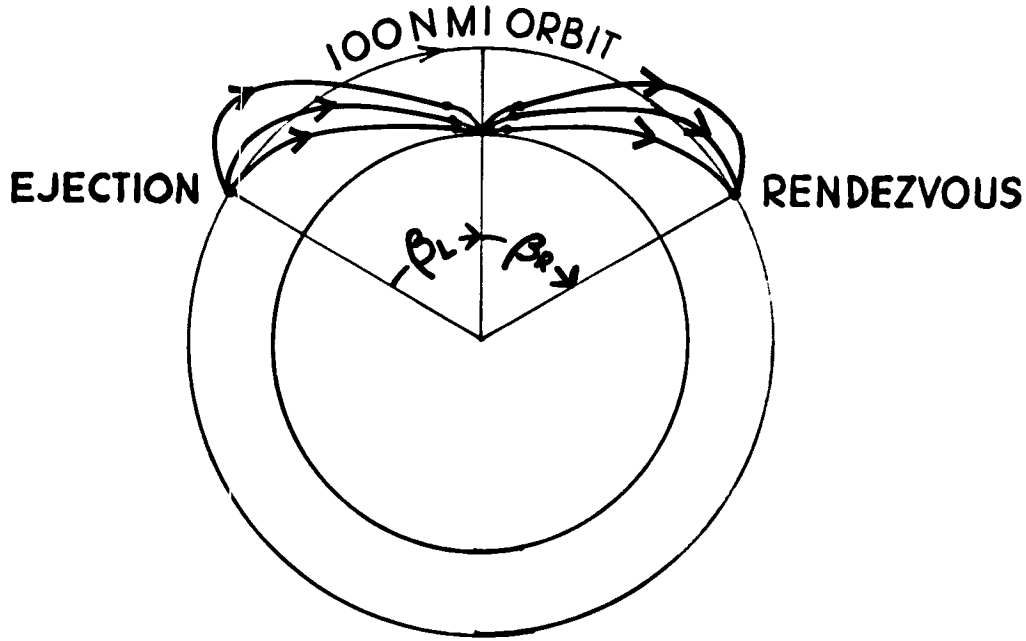

4-62 AP 13041
S1D62-480

ΔV REQUIREMENTS

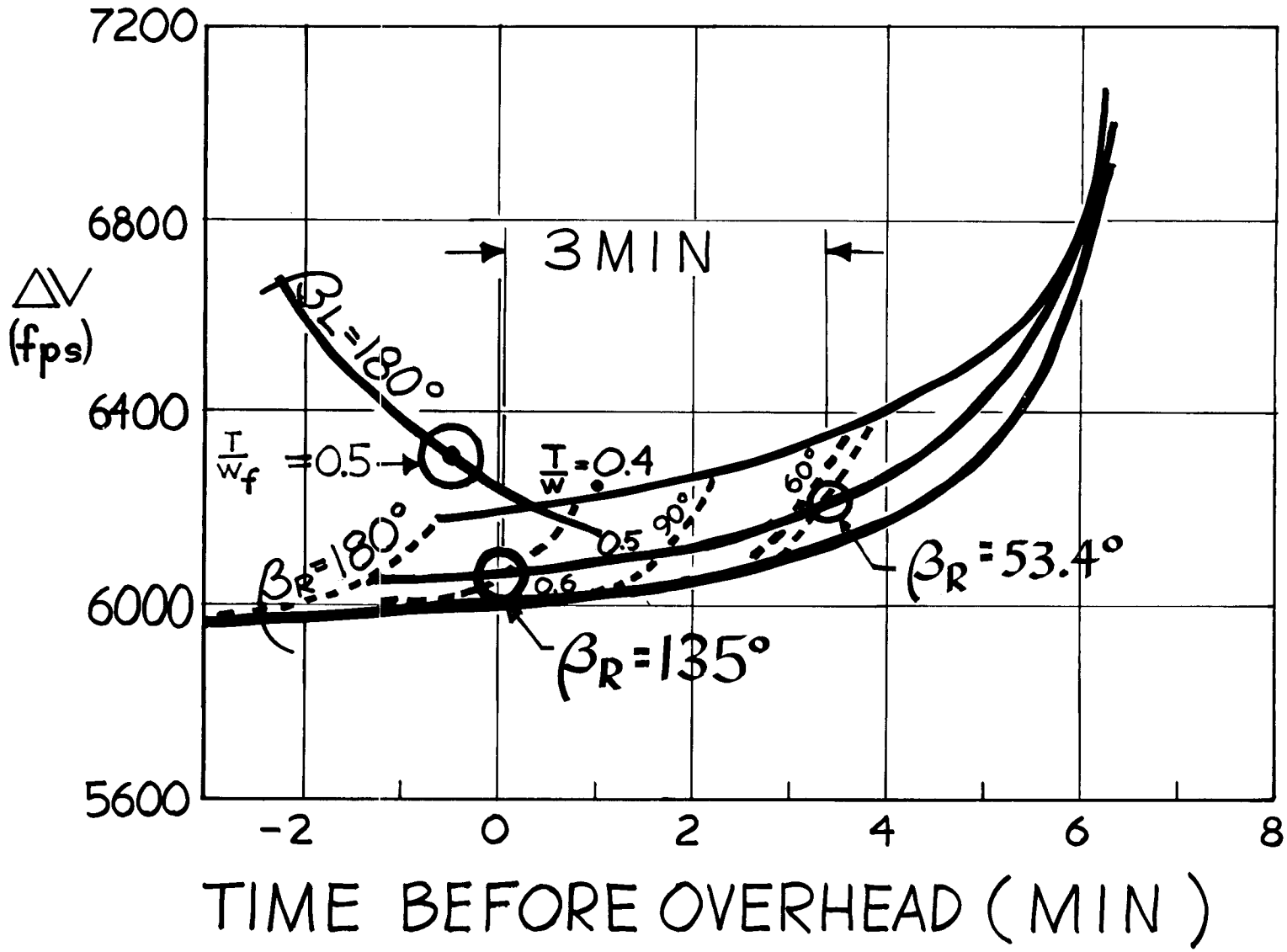

4-62 AP 13042
S1062-480

LUNAR LANDING ΔV REQUIREMENTS

DIRECT MISSION	
"FREE RETURN" CIRCUMLUNAR	
A. TRANSLUNAR MID COURSE	500
ORBIT INJECTION	3380
(5° PLANE CHANGE)	
ORBIT TRANSFER	123
MAIN RETRO	5330
CONTROL TOLERANCE 3%	280
	9613
B. LUNAR LANDING	
INITIAL DESCENT	501
LANDING MANUVER	563
CONTROL TOLERANCE	56
	1120
C. TRANSEARTH	
LUNAR BOOST	5980
TRANSEARTH INJECTION	3355
MID-COURSE	500
CONTROL TOLERANCE	500
TOTAL - S/M	10,355

LUNAR RENDEZVOUS			
FLIGHT PHASE	FREE RETURN CIRCUMLUNAR 100% MONTH	TRANSLUNAR EQUATORIAL 100%	ONCE A MONTH
A. TRANSLUNAR (C/M + S/M + LEV.)			
MID-COURSE	500	500	500
ORBIT INJECTION	3281	3164	3164
EQUATORIAL TRANSFER	1770	---	---
CONTROL TOLERANCE	167	110	110
	5718	3774	3774
B. TRANSEARTH (C/M + S/M Partial)			
ORBIT INJECTION	3972	3972	3264
MID-COURSE	500	500	500
CONTROL TOLERANCE	142	142	120
TIMING ORBIT	250	250	250
	4864	4864	4134
C. TOTAL - S/M	10582	8638	7908
LEV REQUIREMENTS			
DE-ORBIT AND RETRO TO 1000'	6190		
TRANSLATE AND LAND	638		
BOOST TO ORBIT	6290		
RENDEZVOUS	395		
CONTROL TOLERANCE	405		
TOTAL	13,918		

CONFIGURATION SUMMARY

$W_{S/M} = 3{,}029 + 1.18722\,W_P$

$W_{C/M} = 8125^*$

$I_{SP} = 315$ SEC

	TRANS-LUNAR INJECTION GROSS WEIGHT	S/M PROPELLANT WEIGHT		S/M STAGE WEIGHT		REMARKS
		STAGE #2	STAGE #1	STAGE #2	STAGE #1	
LUNAR RENDEZVOUS						
I. FREE RETURN CIRCUMLUNAR (100% OF TIME)	95,933	54,157		67,338		$W_{LEV} = 20{,}000^*$
II. TRANSLUNAR EQUATORIAL (100% OF TIME)	69,290	32,122		41,165		
III. TRANSLUNAR EQUATORIAL (ONCE A MONTH)	65,016	28,522		36,891		
IV. TRANSLUNAR EQUATORIAL (100% OF TIME)	74,500	29,730	5,880	38,325	7,350	
DIRECT						
I. SINGLE STAGE S/M	149,535	38,915	(LANDER)	49,230	1,692*	
II. TWO STAGE S/M	142,207	29,730	5880	38,325	8,960	
I. FREE RETURN CIRCUMLUNAR (100% OF TIME)	172,761	44,961		58,140	1954*	
II. TRANSLUNAR EQUATORIAL (100% OF TIME)	NO GO					
III. TRANSLUNAR EQUATORIAL (ONCE A MONTH)	NO GO					
I. FREE RETURN CIRCUMLUNAR (100% OF TIME)	180,812	37,815	7,478	50,994	11,392	30.2% OFF LOADED
II. TRANSLUNAR EQUATORIAL (100% OF TIME)	145,710	30,473	6026	39,516	9,181	5.13% OFF LOADED
III. TRANSLUNAR EQUATORIAL (ONCE A MONTH)	NO GO					

COMPATIBLE

COMPATIBLE

* JETTISONED AT TAKEOFF

4-62 AP 13044
S1062-480

LUNAR RENDEZVOUS CAPABILITY

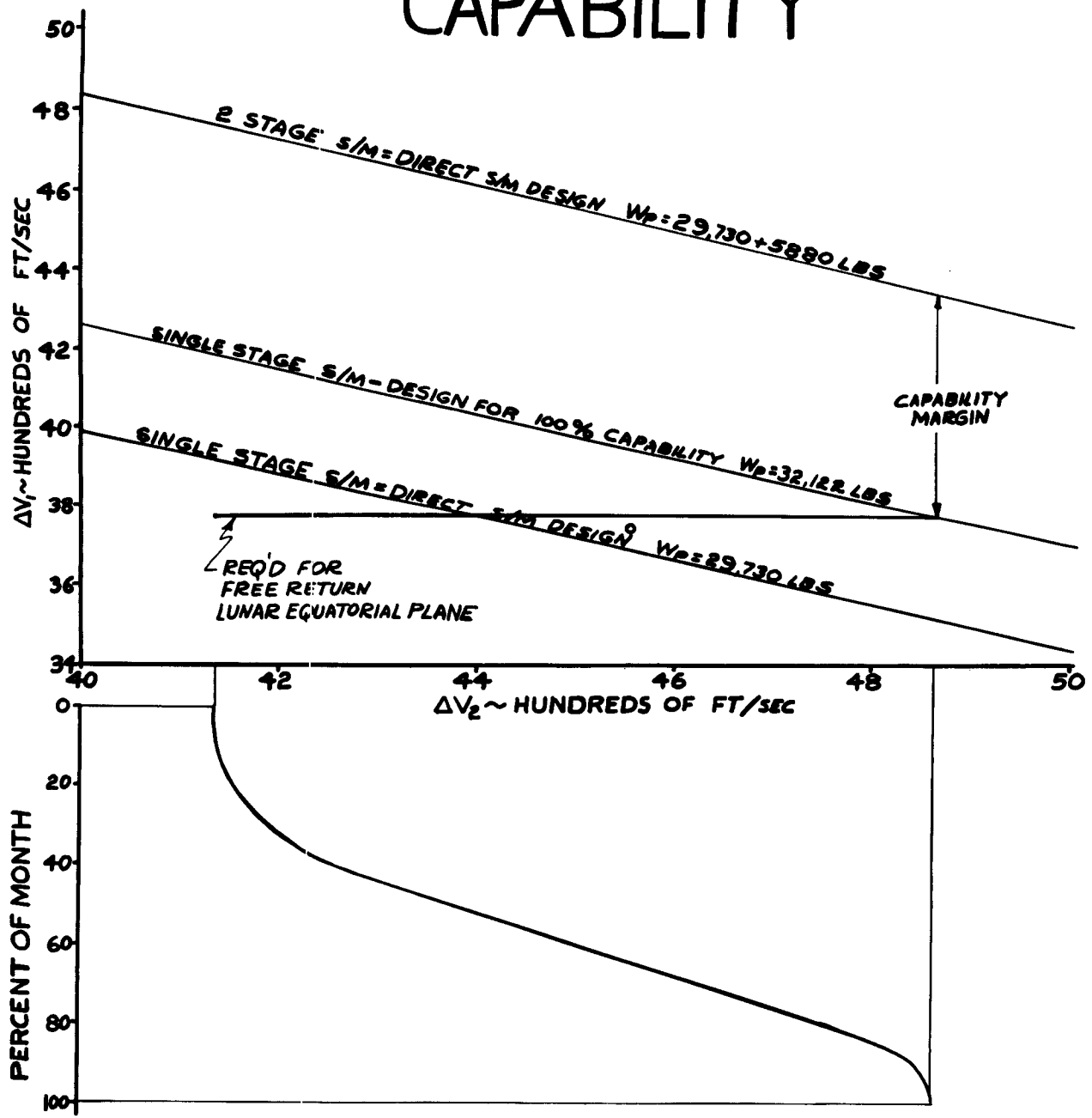

4-62 AP 13045 R
S1062-480 (87)

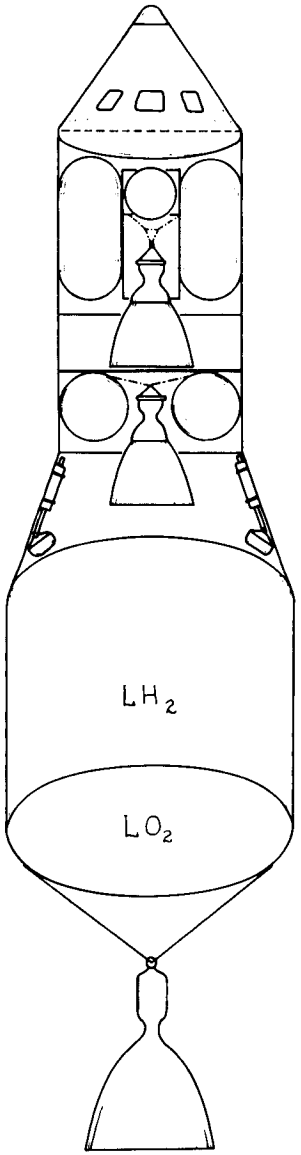

STAGE	TOTAL
8,125	
39,516 (30,473)	47,641
715	
9,181 (6,026)	57,537
863	
87,310 (74,214)	145,710

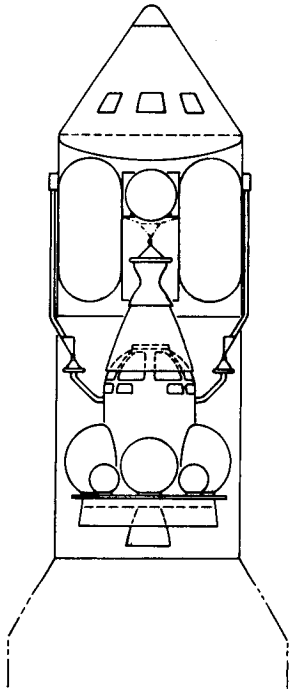

STAGE	TOTAL
8,125	
41,165 (32,122)	49,290
20,000	69,290

LUNAR RENDEZVOUS

DESIGN POINT

CONFIGURATION COMPARISON

DIRECT

S/M OFF LOADED 5%

—— TOTAL WEIGHT

—— PROPELLANT WEIGHT

4-62 AP 13046 R

S1062-480

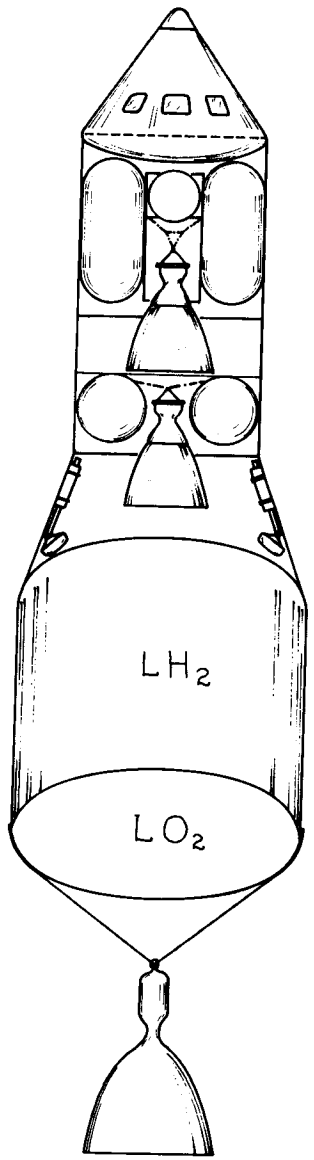

STAGE	TOTAL
8,125	
38,325 (29,730)	46,450
700	
8,960 (5,880)	56,110
841	
85,256 (72,400)	142,207

DIRECT
DESIGN POINT

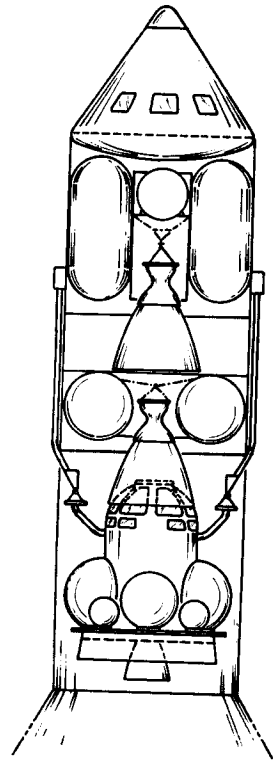

STAGE	TOTAL
8,125	
38,325 (29,730)	46,450
700	
7,350 (5,880)	54,500
20,000	74,500

LUNAR RENDEZVOUS
S/M #1 CAN BE OFF LOADED 4,000 LBS.

CONFIGURATION COMPARISON

— TOTAL WEIGHT

— PROPELLANT WEIGHT

4-62 AP 13047R
S1D62-480

APOLLO LAUNCH ESCAPE SYSTEM

4-62 AP 11906
S1D62-480

OUTLINE

- FLIGHT DYNAMICS & CONTROL
- STRUCTURAL DESIGN & DYNAMICS
- PROPULSION & THRUST VECTOR CONTROL

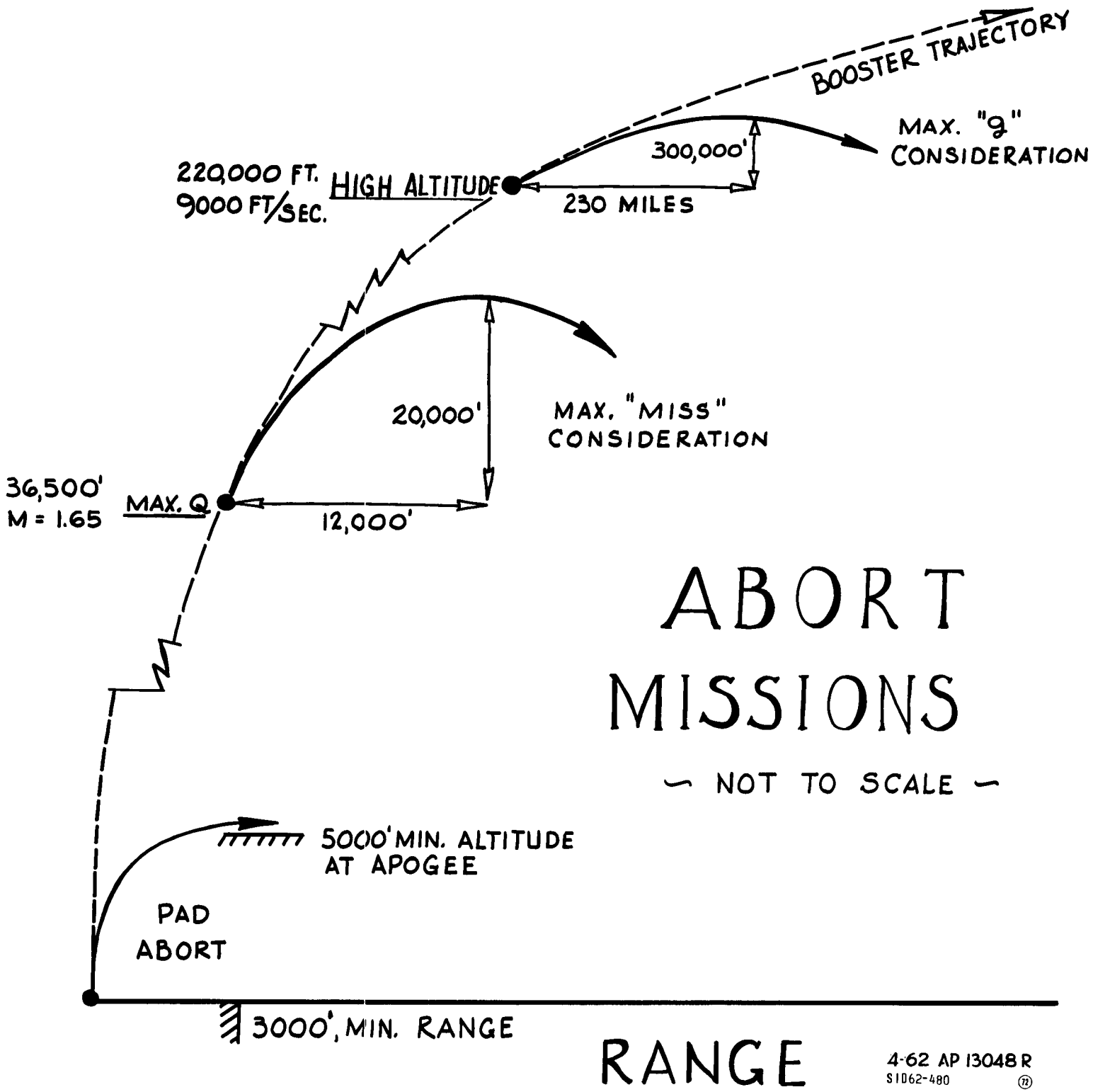
BOOSTER TRAJECTORY
MAX. "q" CONSIDERATION
300,000'
220,000 FT.
9000 FT/SEC.
HIGH ALTITUDE
230 MILES
20,000'
MAX. "MISS" CONSIDERATION
36,500'
M = 1.65
MAX. Q
12,000'
ABORT MISSIONS
— NOT TO SCALE —
5000' MIN. ALTITUDE AT APOGEE
PAD ABORT
3000', MIN. RANGE
RANGE
4-62 AP 13048 R
S1D62-480

LAUNCH ESCAPE SYSTEM
AERODYNAMIC CONFIGURATION

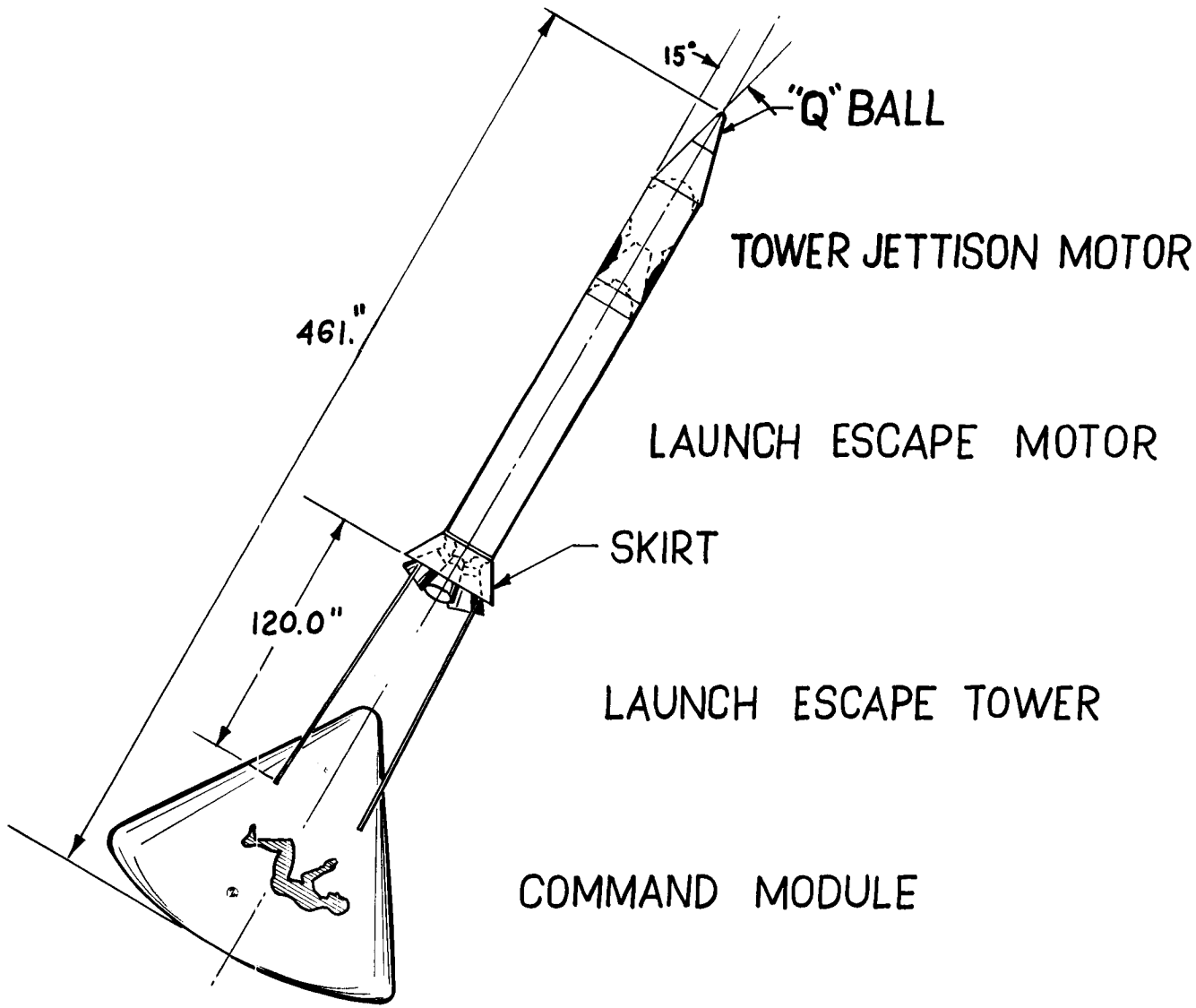

4-62 AP 13049 R
S1D62-480 (73)

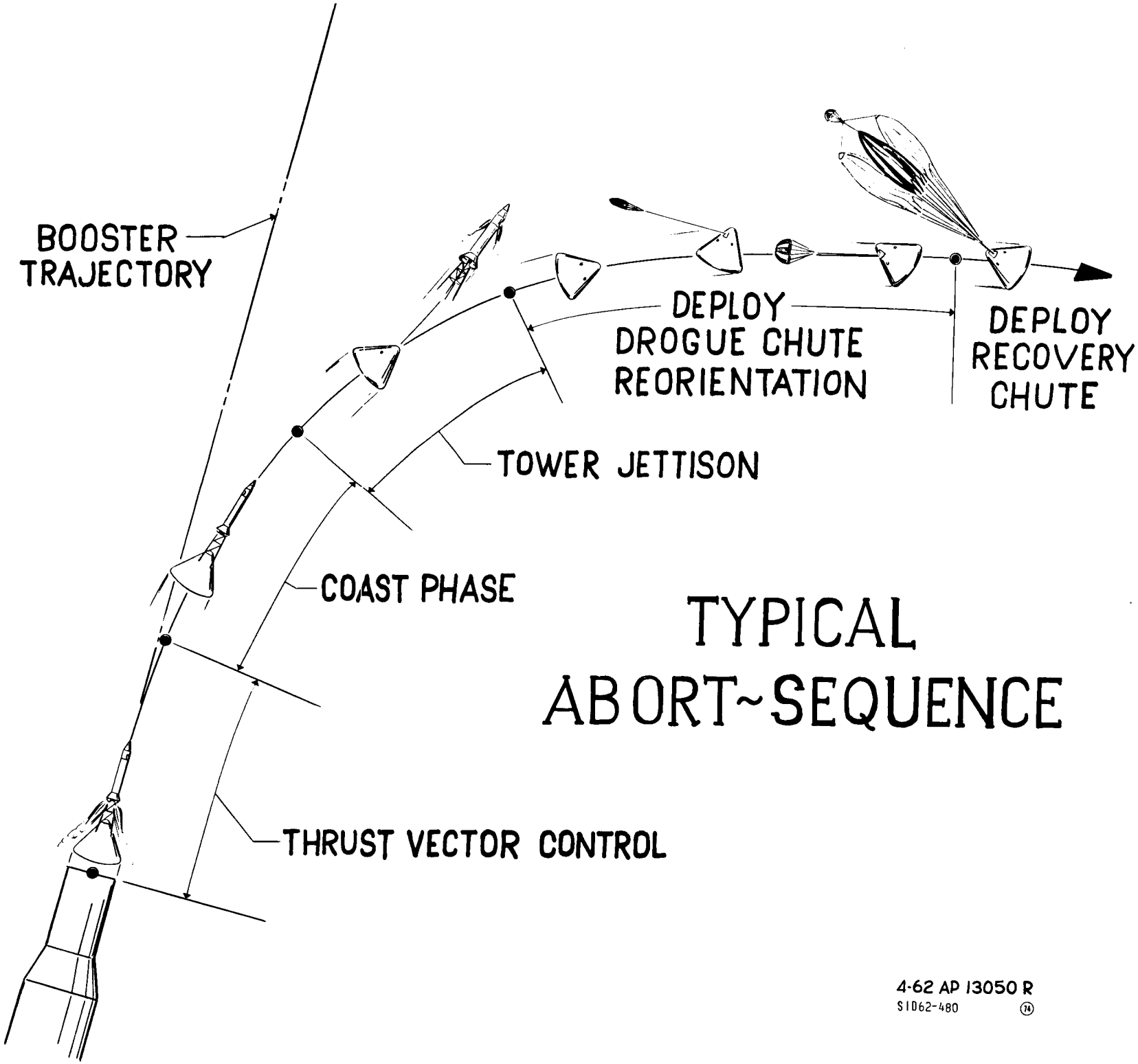

TYPICAL ABORT~SEQUENCE

4-62 AP 13050 R
S1D62-480 (74)

LAUNCH ESCAPE MOTOR
THRUST ~ TIME LIMITS

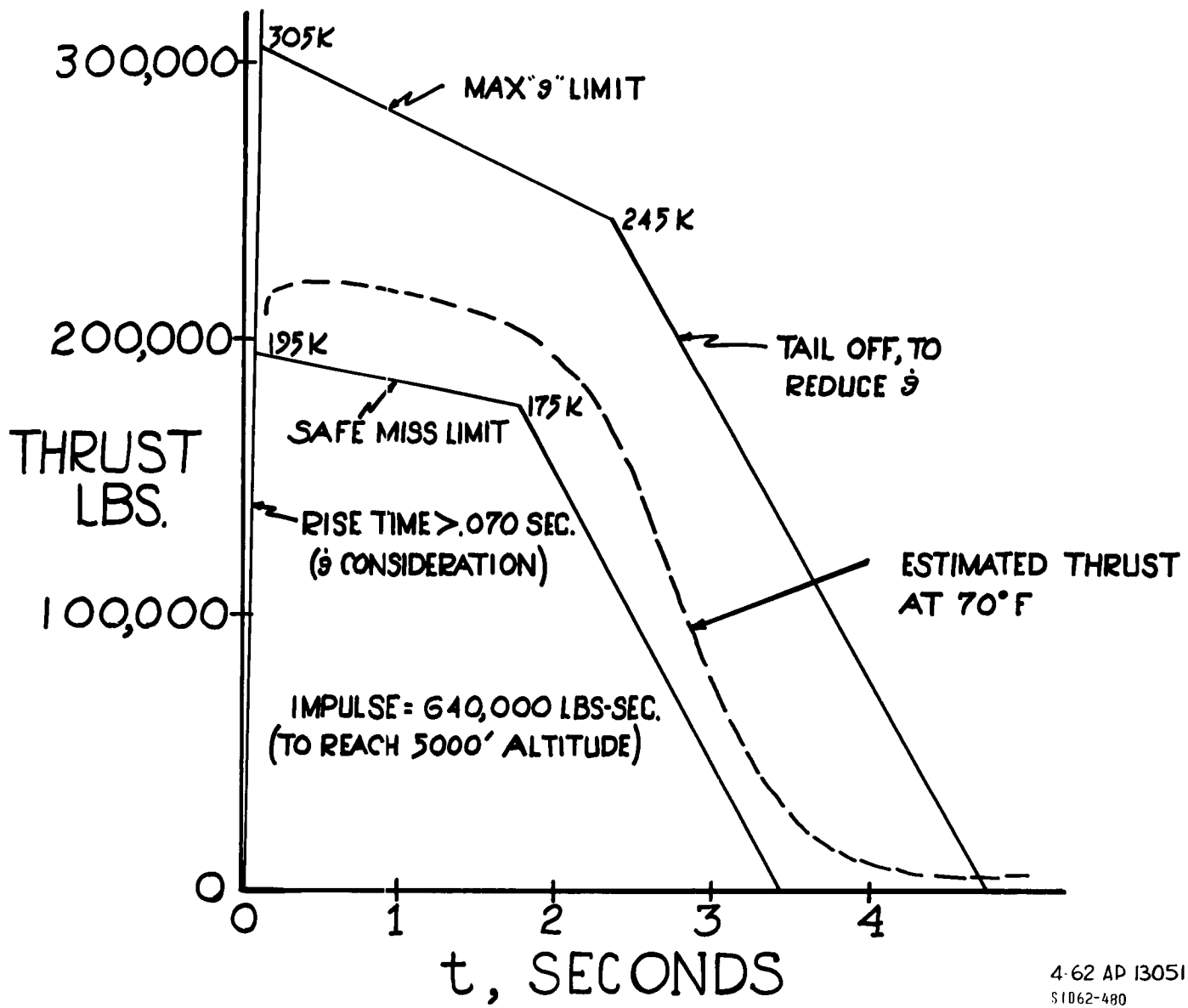

4-62 AP 13051 R
S1D62-480 (15)

EFFECT OF THRUST OFFSET

~ PAD ABORT ~

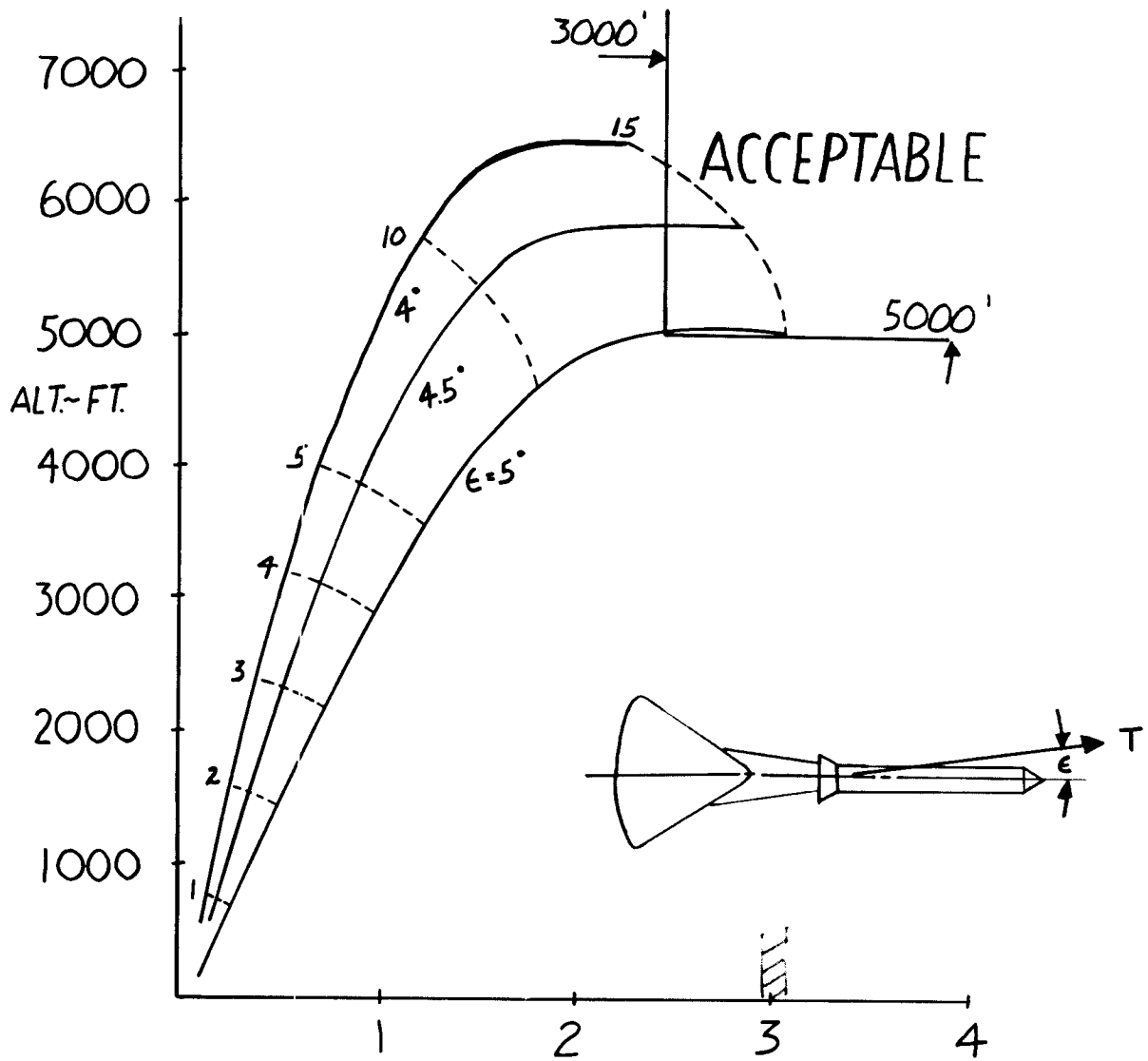

4-62 AP 13052 R
SID62-480

PAD ABORT PHILOSOPHY
NEED FOR CONTROL SYSTEM

a. FLEXIBILITY OF ABORT DIRECTION

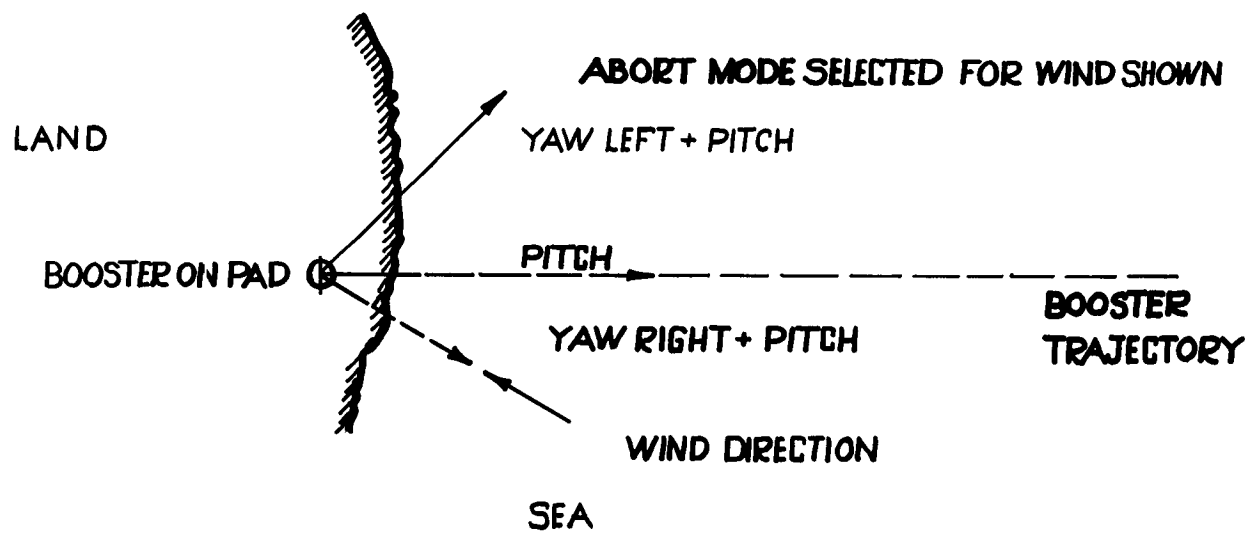

b. COUNTER DESTABILIZING JET EFFECTS

c. SENSITIVITY OF ESCAPE SYSTEM TO THRUST MISALIGNMENT

CONTROL PARAMETER FOR T.V.C.

1. RATE COMMAND IN PITCH AND/OR YAW WITH ROLL STABILIZATION

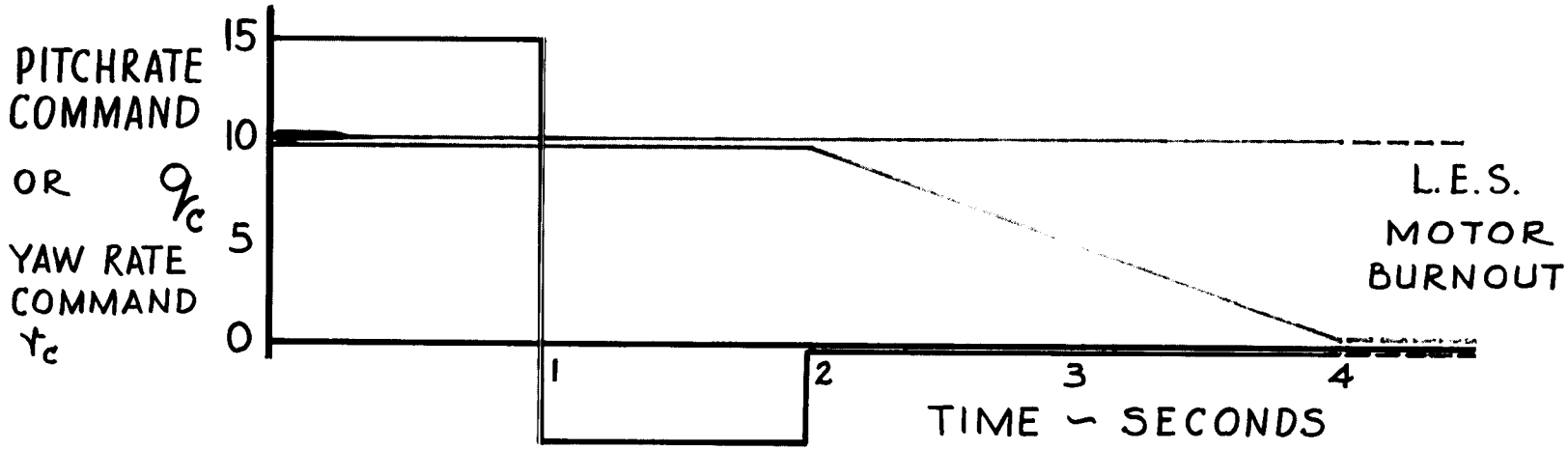

2. ATTITUDE COMMAND IN PITCH AND/OR YAW WITH 3 AXIS RATE STABILIZATION

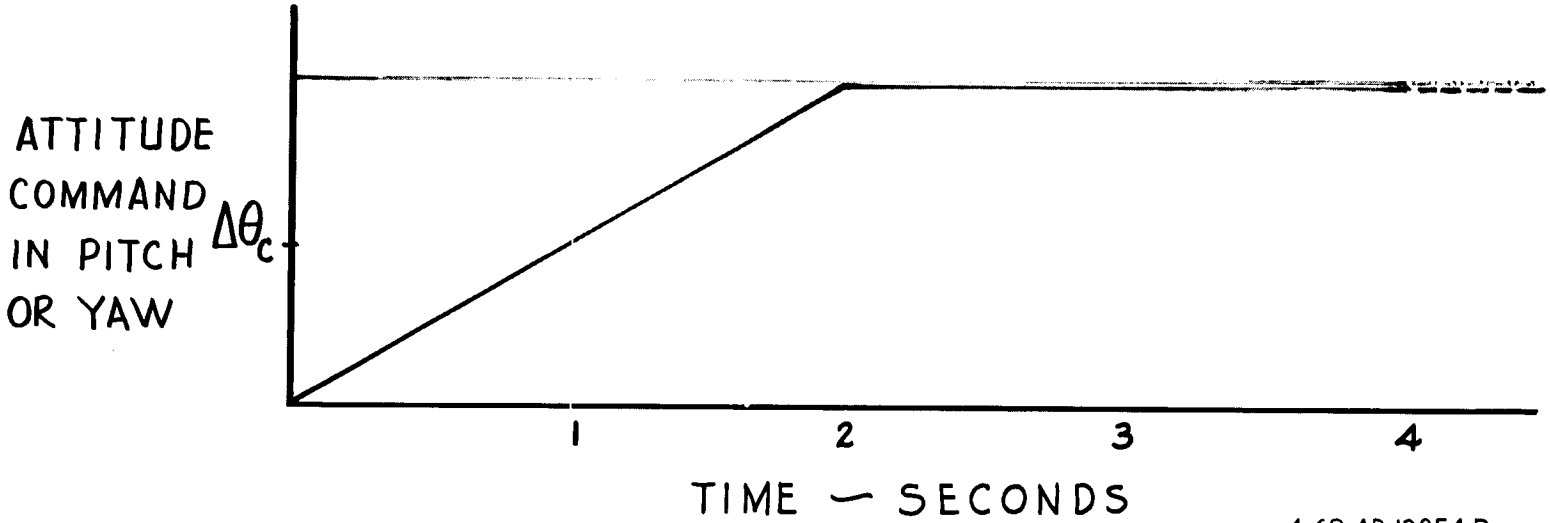

4-62 AP 13054 R
S1D62-480 (78)

PITCH CONTROL

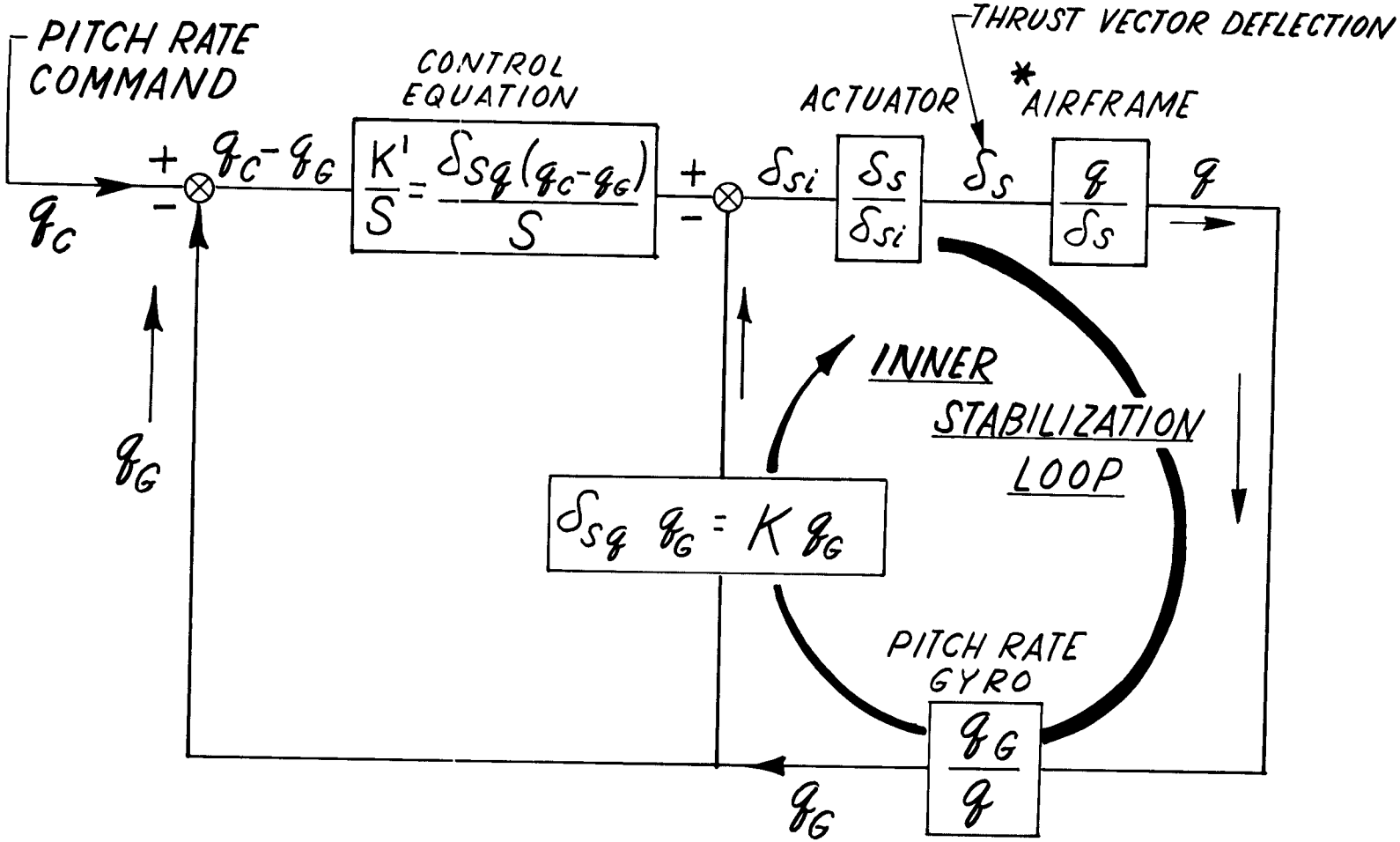

CONTROL EQUATION: $\delta_{si} = \delta_{sq}\, q_G + \delta_{sq} \int_0^t (q_C - q_G)\, dt$

* Includes; AERODYNAMICS, INERTIA CHARACTERISTICS and TOWER FLEXIBILITY.

4-62 AD 13055 R
S1D62-480

TYPICAL DUTY CYCLE FOR T.V.C. SYSTEM

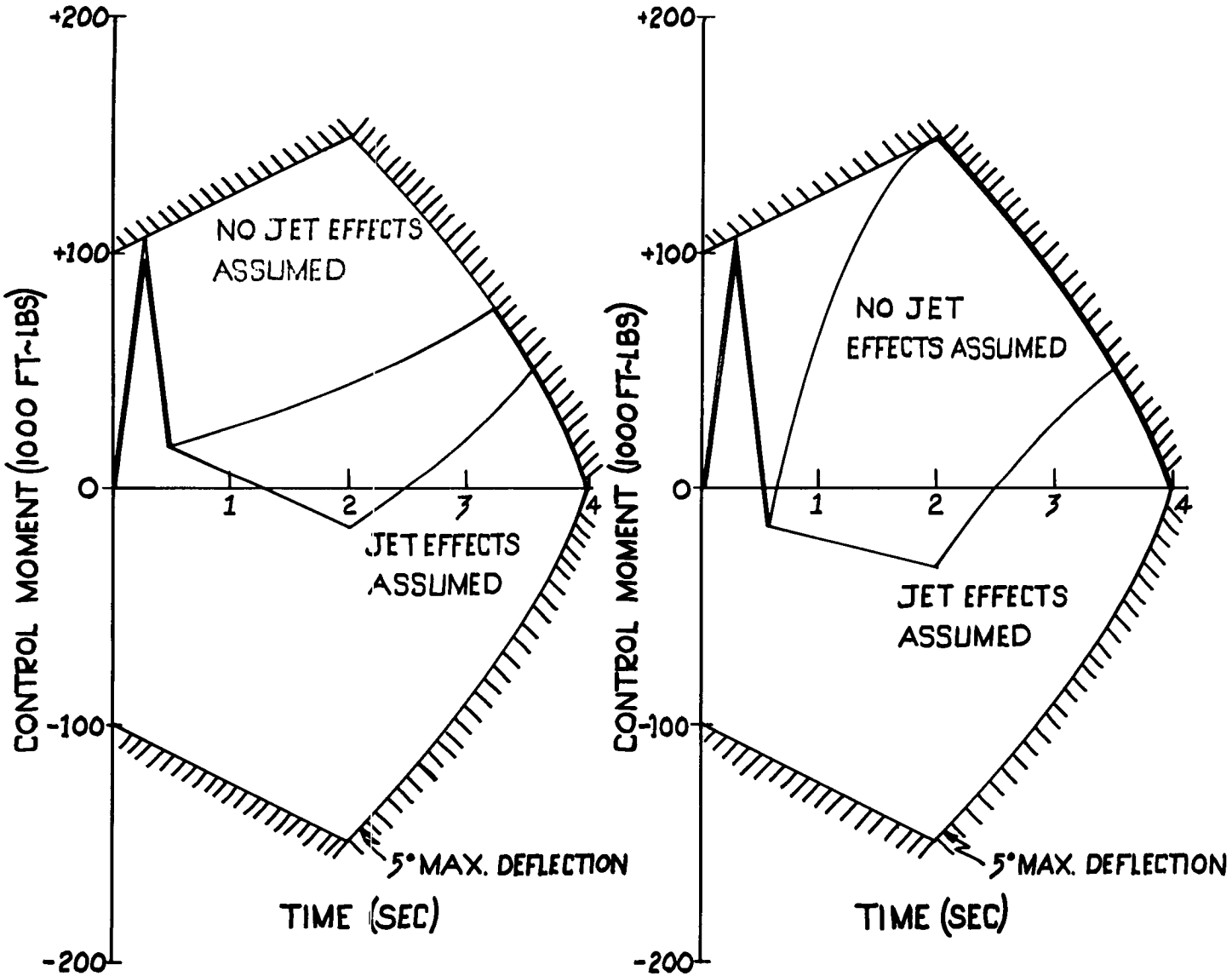

PAD ABORT
PITCH RATE COMMAND $q_c = 10°/SEC.$

MAXIMUM DYNAMIC PRESSURE ABORT
PITCH RATE COMMAND $q_c = 10°/SEC.$

4-62 AP 13056 R
S1D62-480 (60)

TOWER JETTISON MOTOR

DESIGN REQUIREMENTS

1. SAFE SEPARATION OF TOWER
2. FEET WITHDRAW WITHIN CONE OF TOTAL ANGLE 27° FOR FIRST 9 INCHES

PERFORMANCE

THRUST 33,000 LBS.
AXIAL FOR 1 SEC.

ALIGNMENT YAW 1° ± ½°
PITCH 0° ± ½°

TOWER SEPARATION IN LATERAL PLANE FROM THRUSTING BOOSTER (L.E.S. MOTOR NOT EXPENDED)

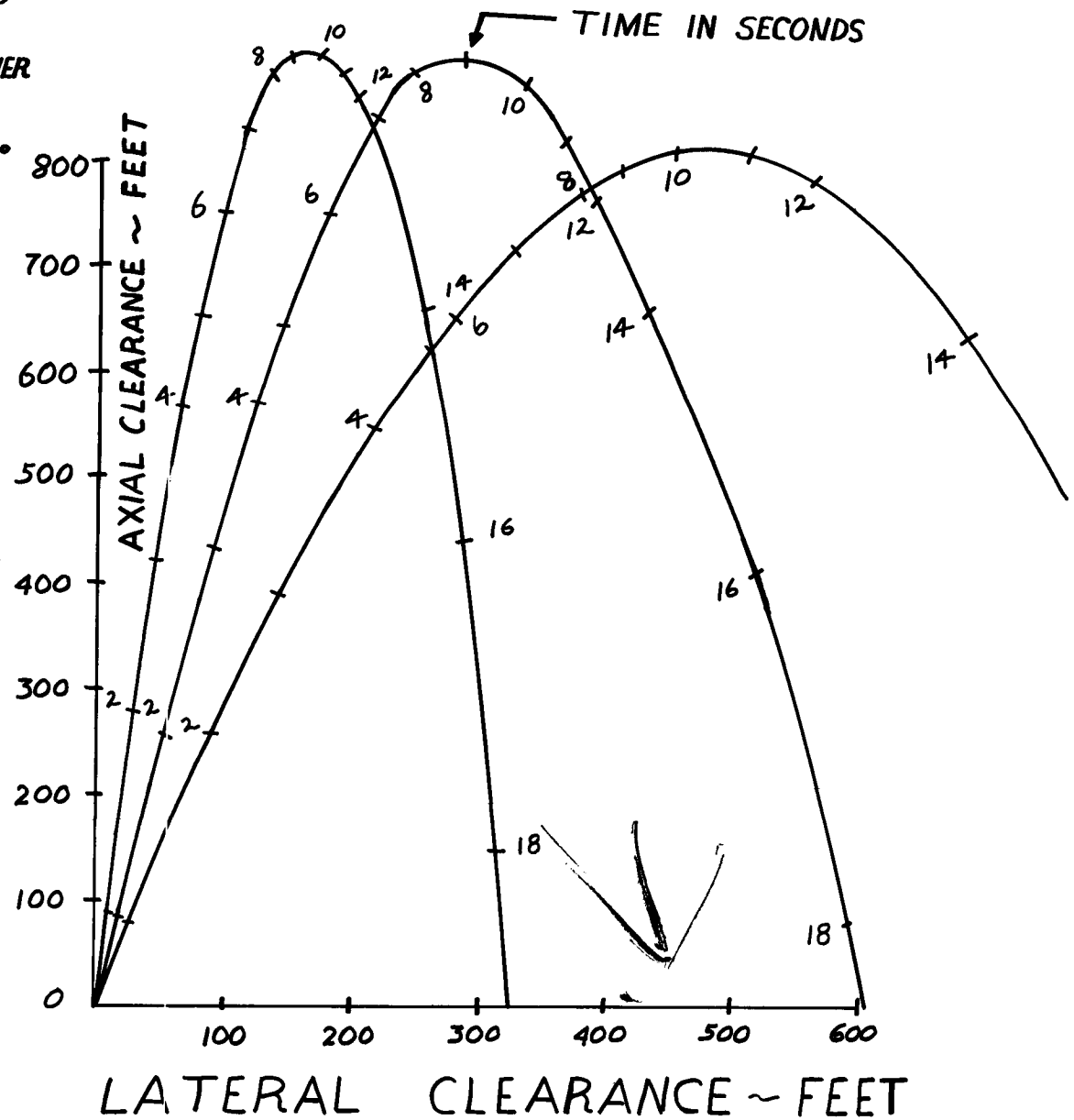

4-62 AP 13057 R S1D62-480 (11)

LAUNCH ESCAPE SYSTEM TRAJECTORIES

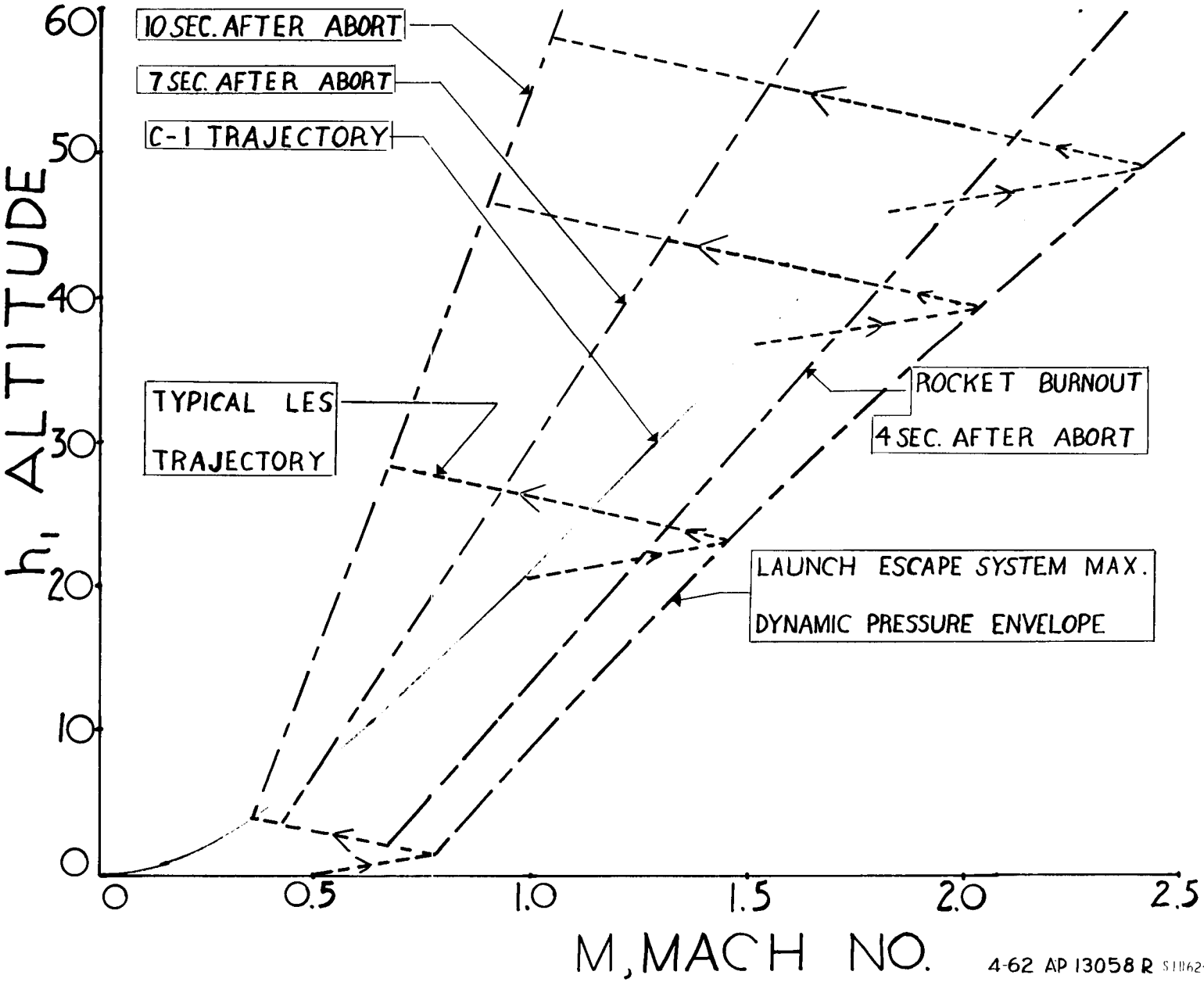

4-62 AP 13058 R S1062-480 (82)

ANGLE OF ATTACK
TO EXCEED 10 g ACCELERATION

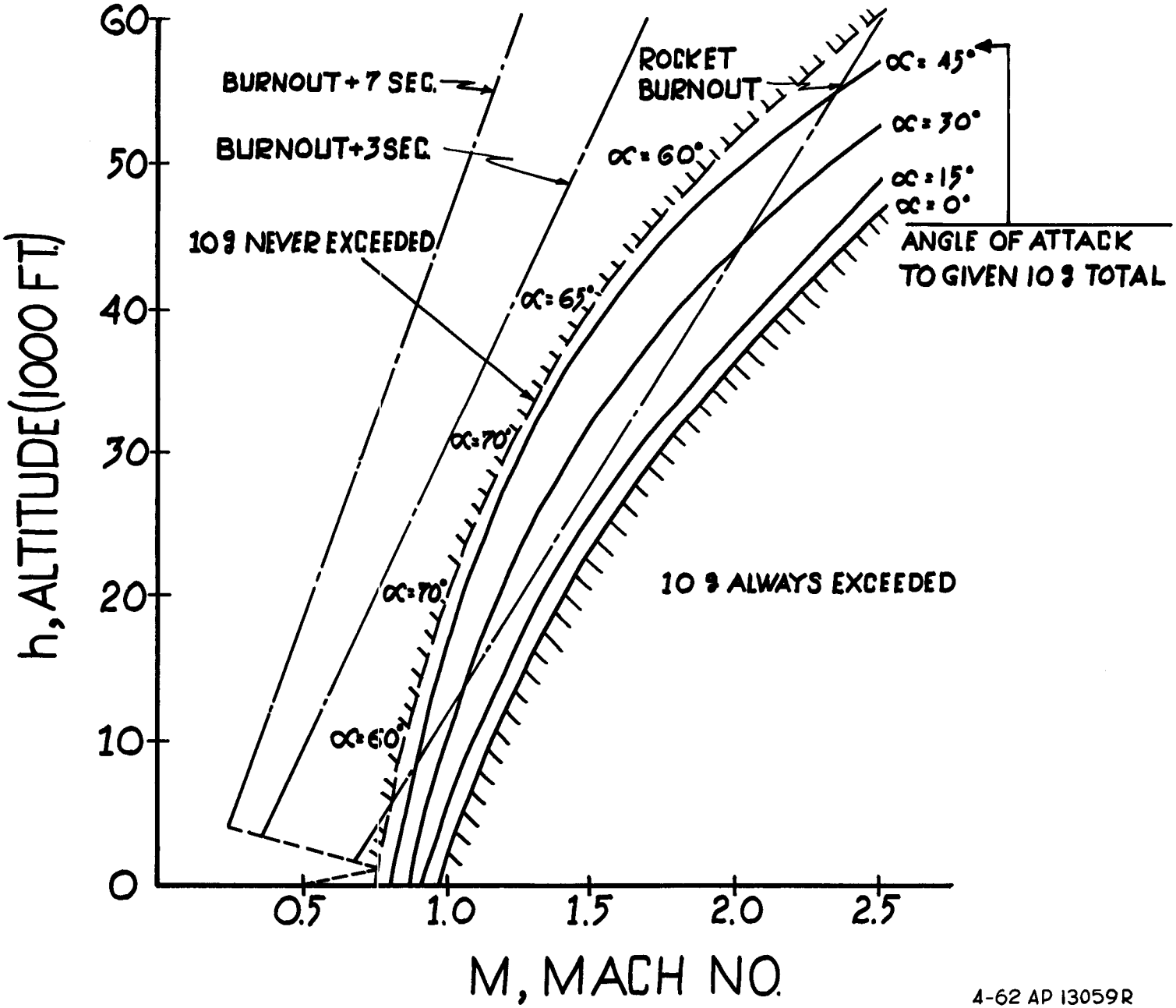

4-62 AP 13059R
S1D62-480

PITCHING MOMENT COEFFICIENT VERSUS ANGLE OF ATTACK

120 INCH TOWERS

MACH NO. 1.55

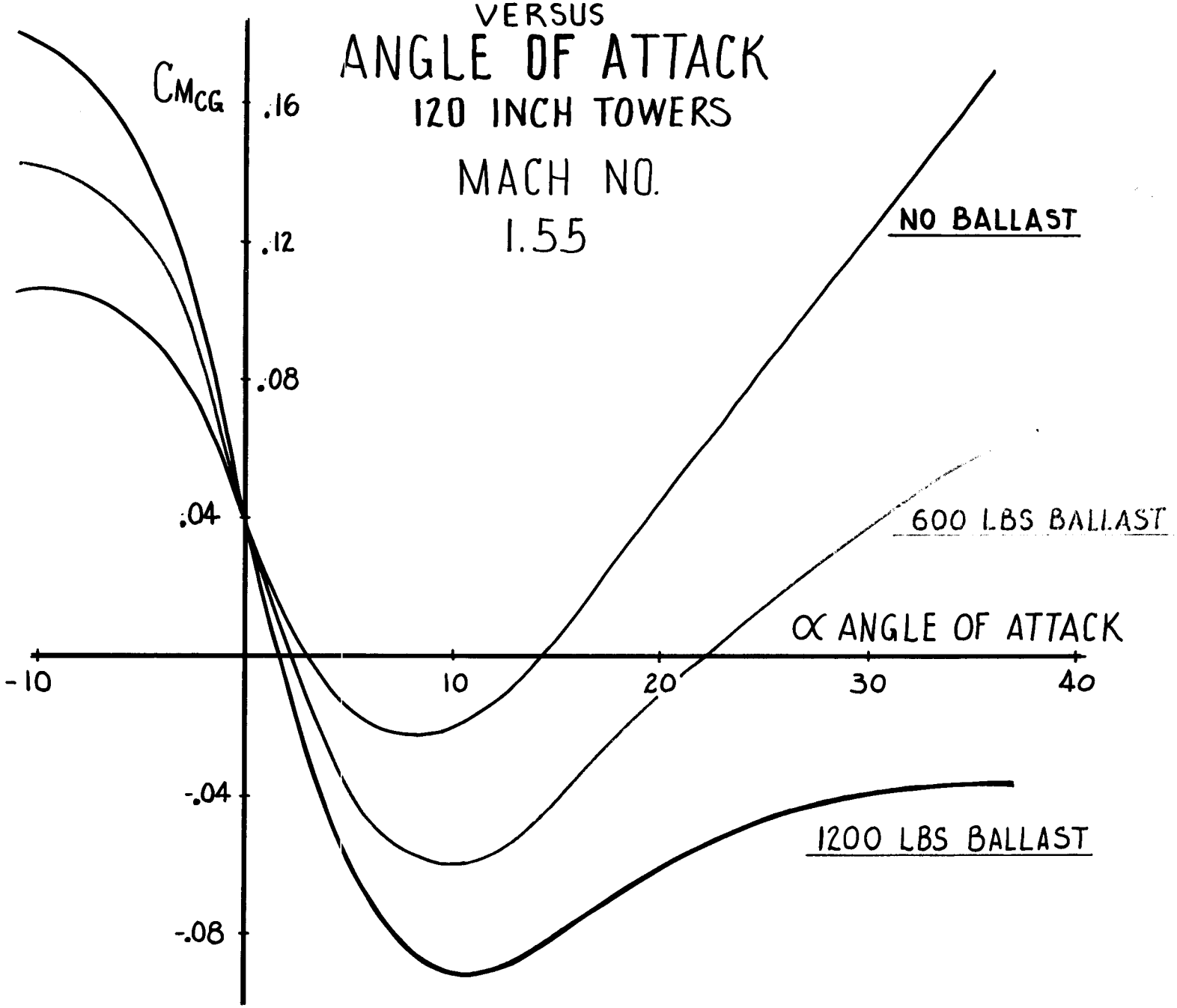

4-62 AP 13060 R
S1062-480

PITCHING MOMENT COEFFICIENT
VERSUS
ANGLE OF ATTACK
120 INCH TOWERS

MACH NO.
.90

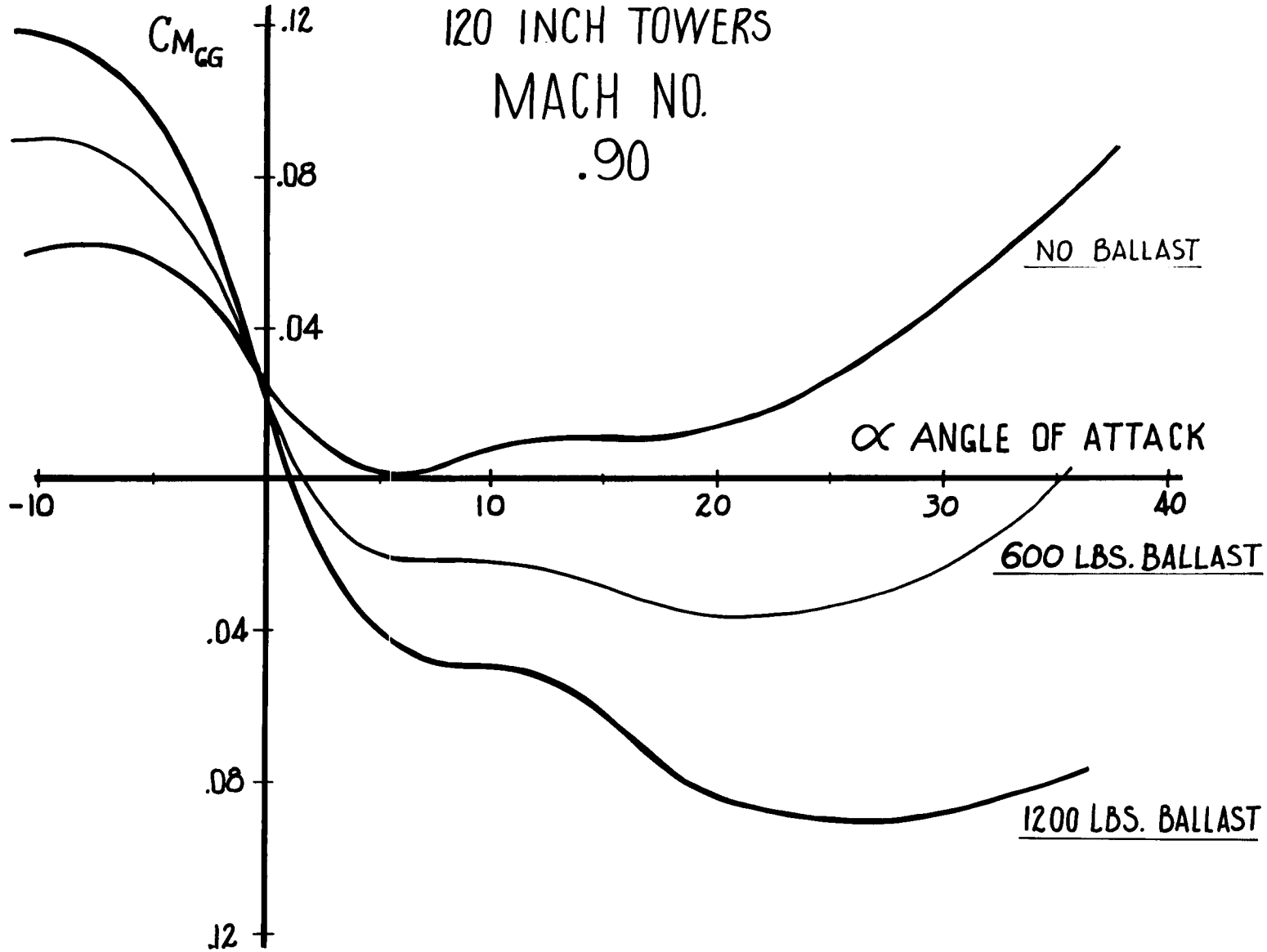

4-62 AP 13061 R
S1062-480

LAUNCH ESCAPE ROCKET ~ CONFIGURATIONS

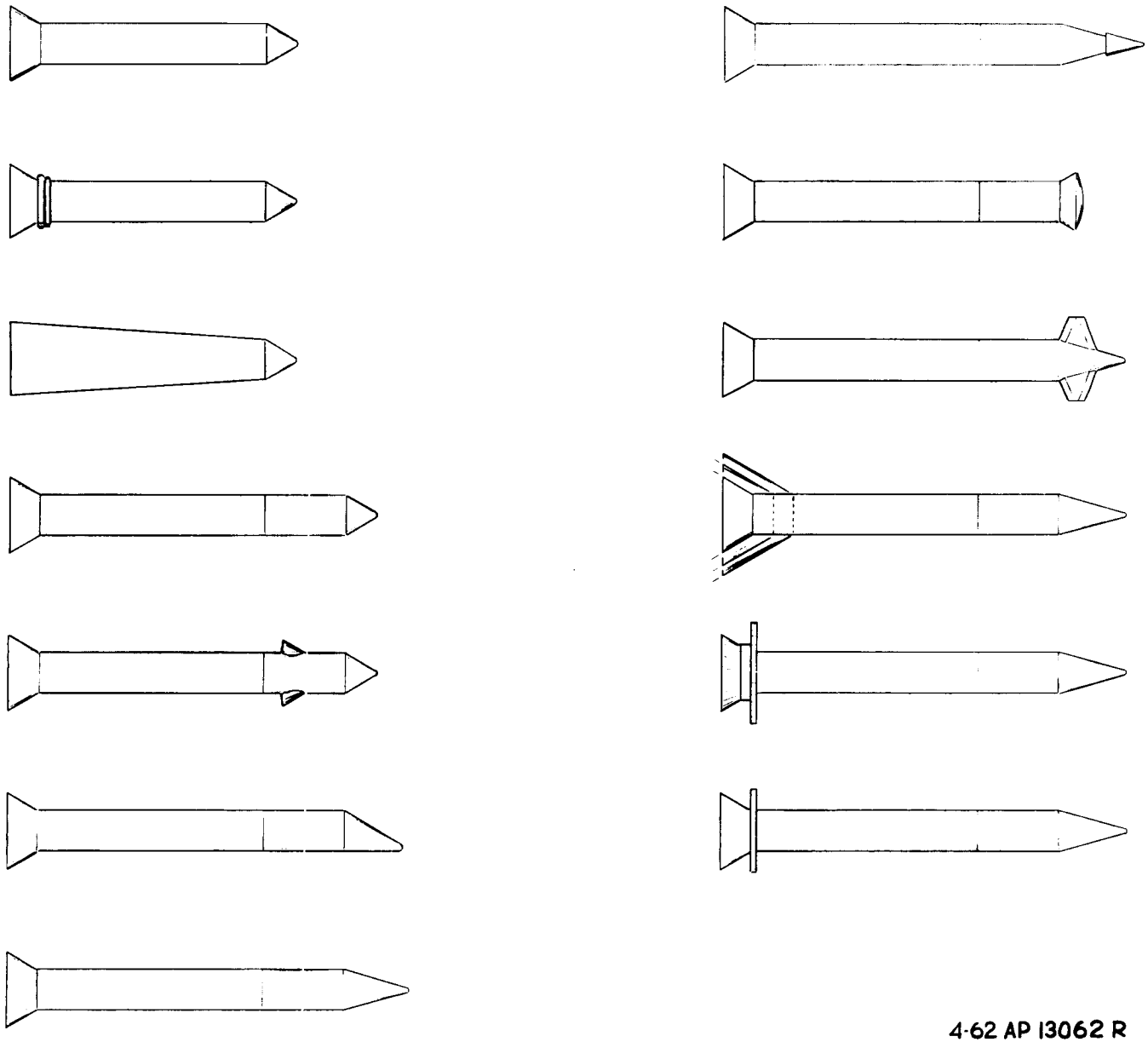

4-62 AP 13062 R
S1062-480

EFFECT OF SKIRT SIZE ON PITCHING MOMENT COEFFICIENT

120 INCH TOWER

MACH NO. 0.68

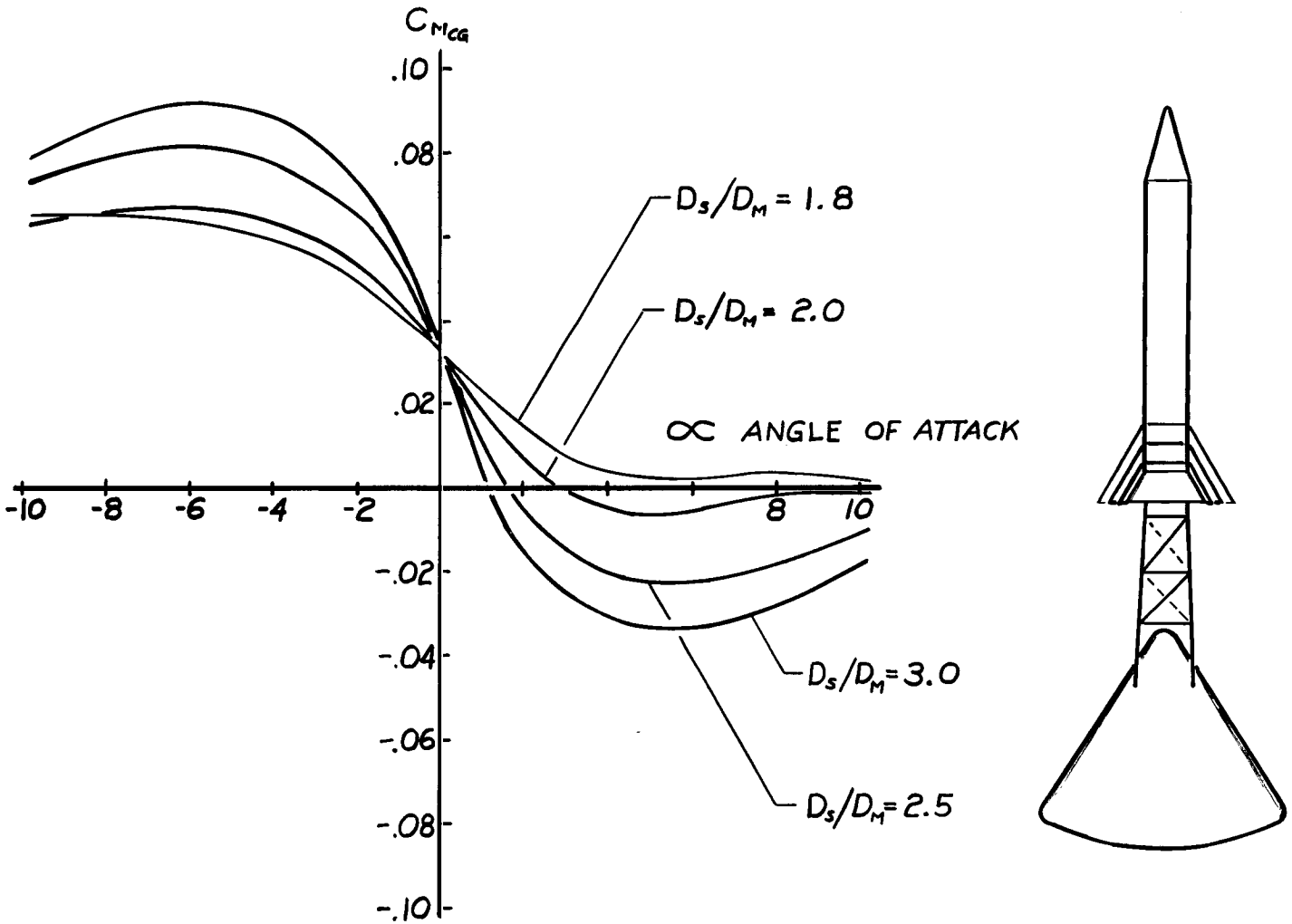

4-62 AP 13063 R
S1062-480 (17)

WAKE EFFECTS ON STABILITY

SYMMETRIC SKIRT

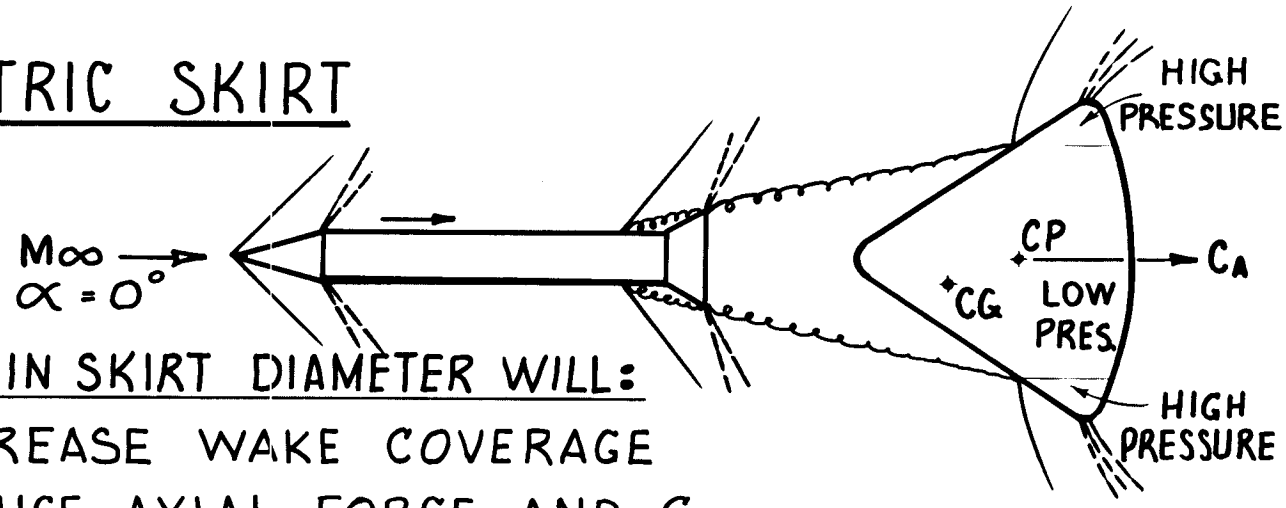

INCREASE IN SKIRT DIAMETER WILL:

(1.) INCREASE WAKE COVERAGE

(2.) REDUCE AXIAL FORCE AND C_{M_0}

(3.) INCREASES C_{N_α} AND MOVES C.P. AFT FROM (1), HENCE INCREASES C_{M_α}

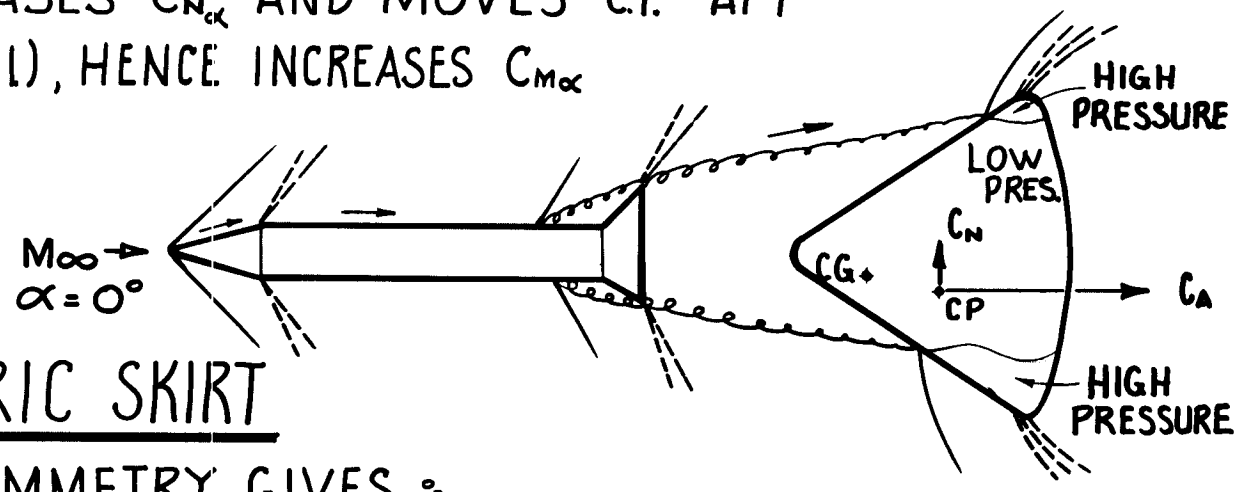

ASYMMETRIC SKIRT

SKIRT ASYMMETRY GIVES :-

(1.) ASYMMETRIC WAKE COVERAGE

(2.) AT $\alpha = 0$ AXIAL AND NORMAL FORCE ACTS AT C.P. LOCATED BELOW THE LONGITUDINAL AXIS

LAUNCH ESCAPE SYSTEM CONFIGURATION

JETTISON MOTOR

~35,000LB FOR 1 SEC
FIXED NOZZLE
WT 370 LB

ESCAPE MOTOR

~200,000 LB FOR 4 SEC
SWIVEL NOZZLE
WT 4470 LB

TOWER

TUBULAR TRUSS
6Al-4V TITANIUM
WT 750 LB (INCL BALLAST SKIRT, END FITTINGS & INSULATION)

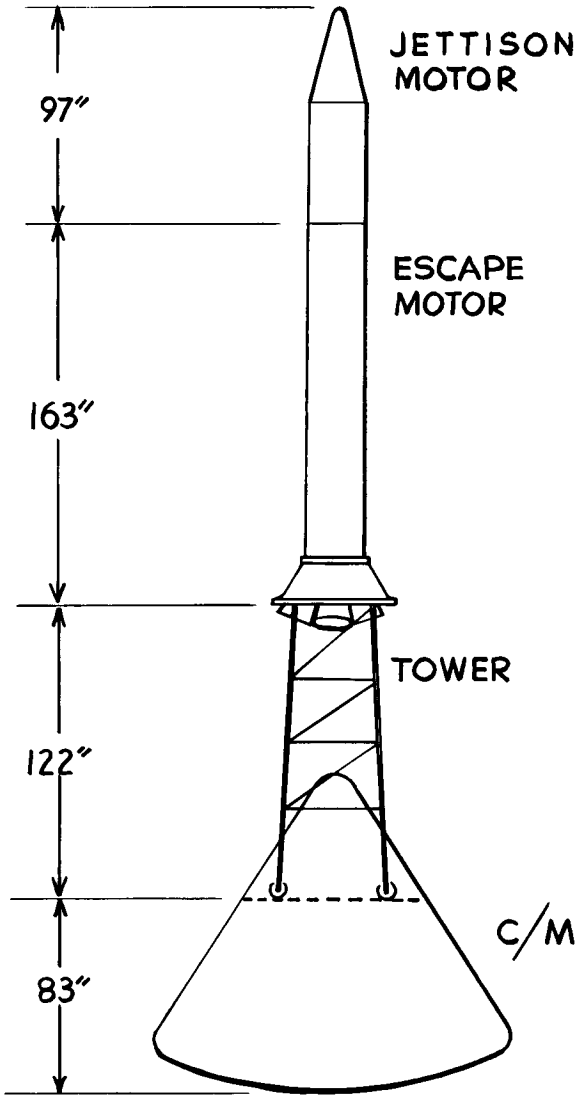

4-62 AP 11977
S1D62-480

DESIGN CHARACTERISTICS

- TOP

  ESCAPE MOTOR SKIRT USED
  FOR LOAD REDISTRIBUTION

  ADJUSTMENT PROVISION BETWEEN
  SKIRT & TOWER INTERFACE PLANE

- BOTTOM

  RELEASE MECHANISM-CENTER
  POINT-PROVEN BOMB SHACKLE

- TRUSS

  TUBULAR-WELDED
  6Al-4V TITANIUM MATL
  LOWER BAY-BENT
  INSULATION REQD

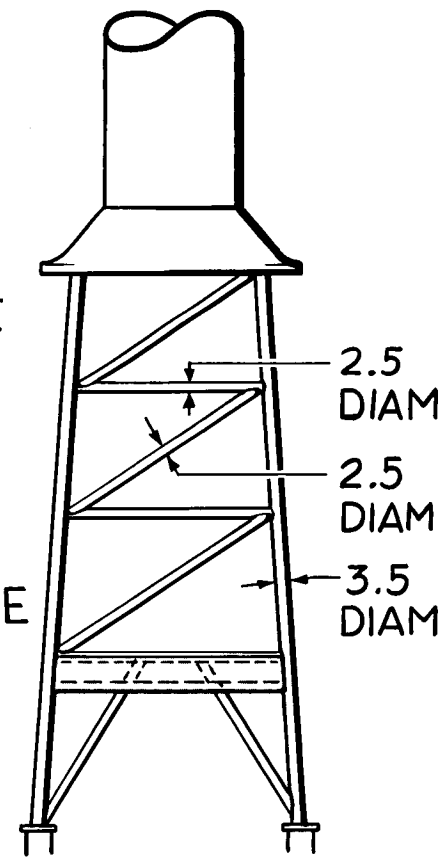

4-62 AP 11978
S1062-480

TOWER-ESCAPE MOTOR INTERFACE

- ADJUSTMENT
- LOAD REDISTRIBUTION SKIRT

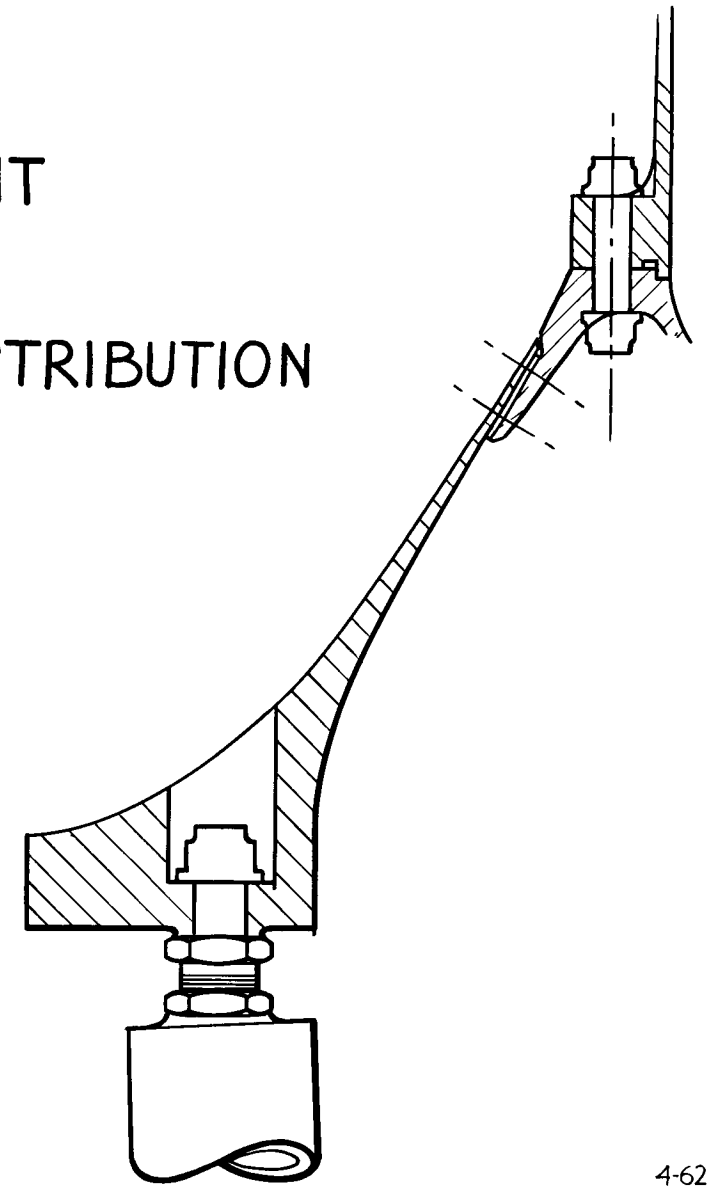

4-62 AP 11979
S1062-480

RELEASE MECHANISM

FOOT DETAIL

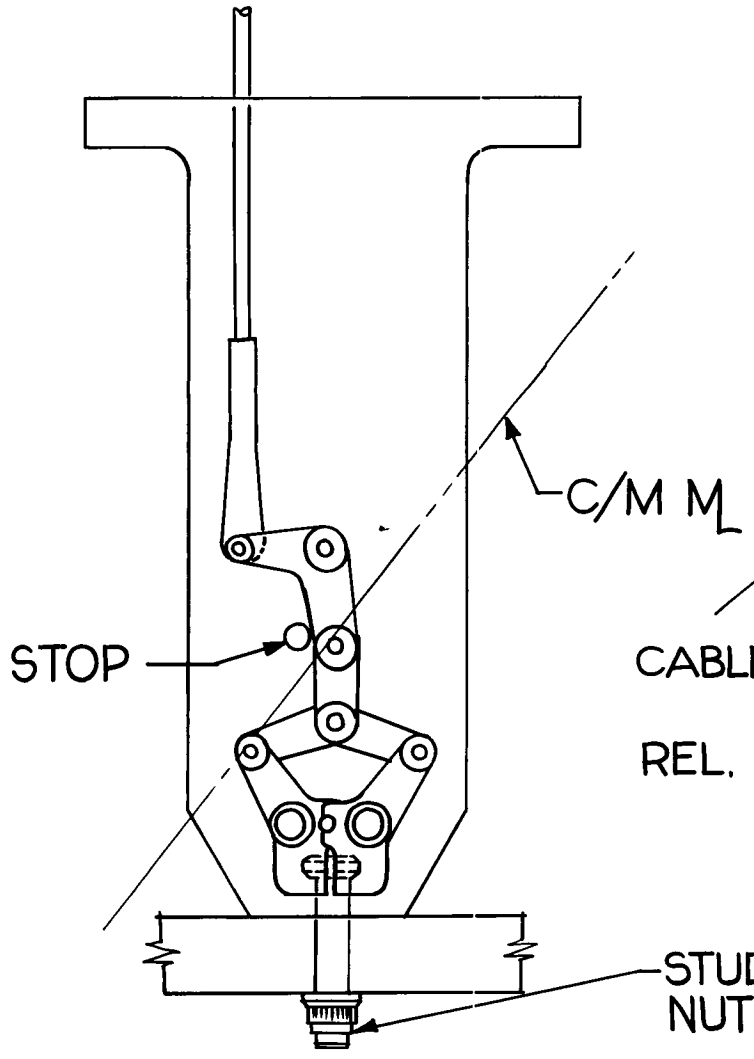

RIGGING

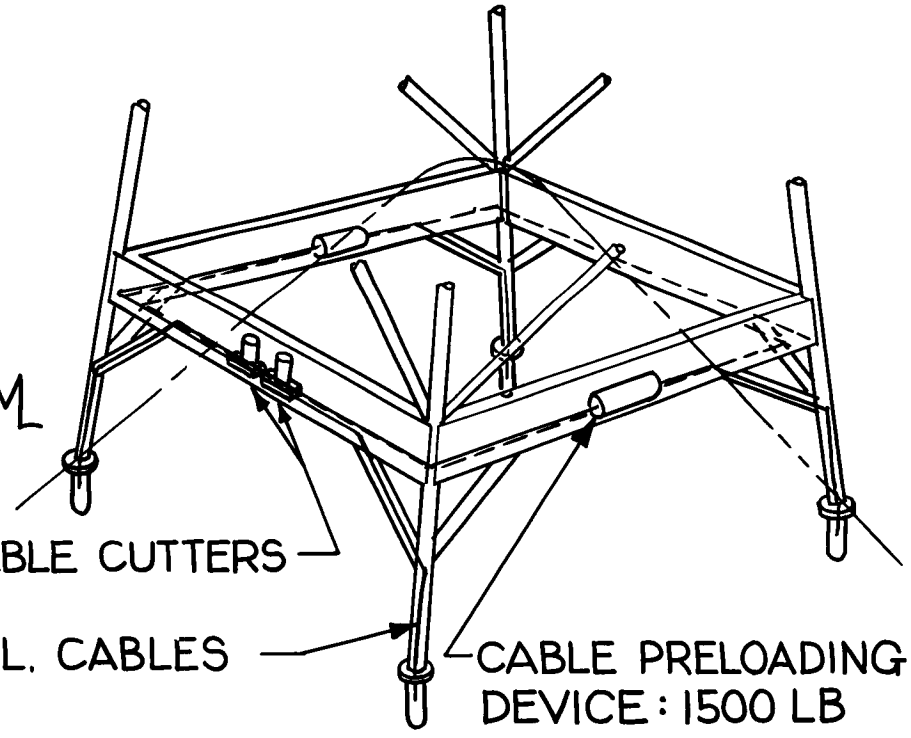

4-62 AP 11980
S1062-480 (82)

DESIGN CRITERIA

LOADS

- JETTISON MOTOR INTERFACE
  TENSION – J M BURNING
- ESCAPE MOTOR INTERFACE
  TENSION – MAX Q ABORT
- TOWER – C/M INTERFACE
  TENSION – VACUUM ABORT
- TORSION LOADING – ALL ENGINES
  HARD OVER

TEMPERATURE

- BOOST AERODYNAMIC HEATING
- ROCKET FLAME IMPINGEMENT

HEAT TRANSFER

- BOOST AERODYNAMIC HEATING
  $\dot{q}_{STAG} = 20$ BTU/FT^2-SEC AT 30,000 FT
- ROCKET BLAST IMPINGEMENT
  $\Delta\dot{q} = 666$ BTU/FT^2-SEC FOR 3 SEC
- THERMAL PROTECTION REQUIREMENTS
  THERMOLAG T-500 t=0.1" AT 500° F
  TEFLON t=0.18" AT 500°F
- INSULATION WT (MAX)
  THERMOLAG T-500 92 LB AT 500°F
  TEFLON 238 LB AT 500°F

DYNAMIC CHARACTERISTICS
NATURAL FREQUENCIES

LES CONDITION / MODE	COMPLETE SYSTEM	COMPLETE SYSTEM WITHOUT PROPELLANT	COMPLETE SYSTEM WITHOUT PROPELLANT OR BALLAST
TOWER CANTILEVER	3.4 cps	4.8 cps	
SA-5 1ST MODE (FREE-FREE)	2.1 cps	2.3 cps	2.4 cps
SA-5 2ND MODE (FREE-FREE)	3.6 cps	4.2 cps	4.4 cps
C/M & TOWER (FREE-FREE)	16.4 cps	21.2 cps	

4-62 AP 11983
S1062-480

DESIGN FEATURES

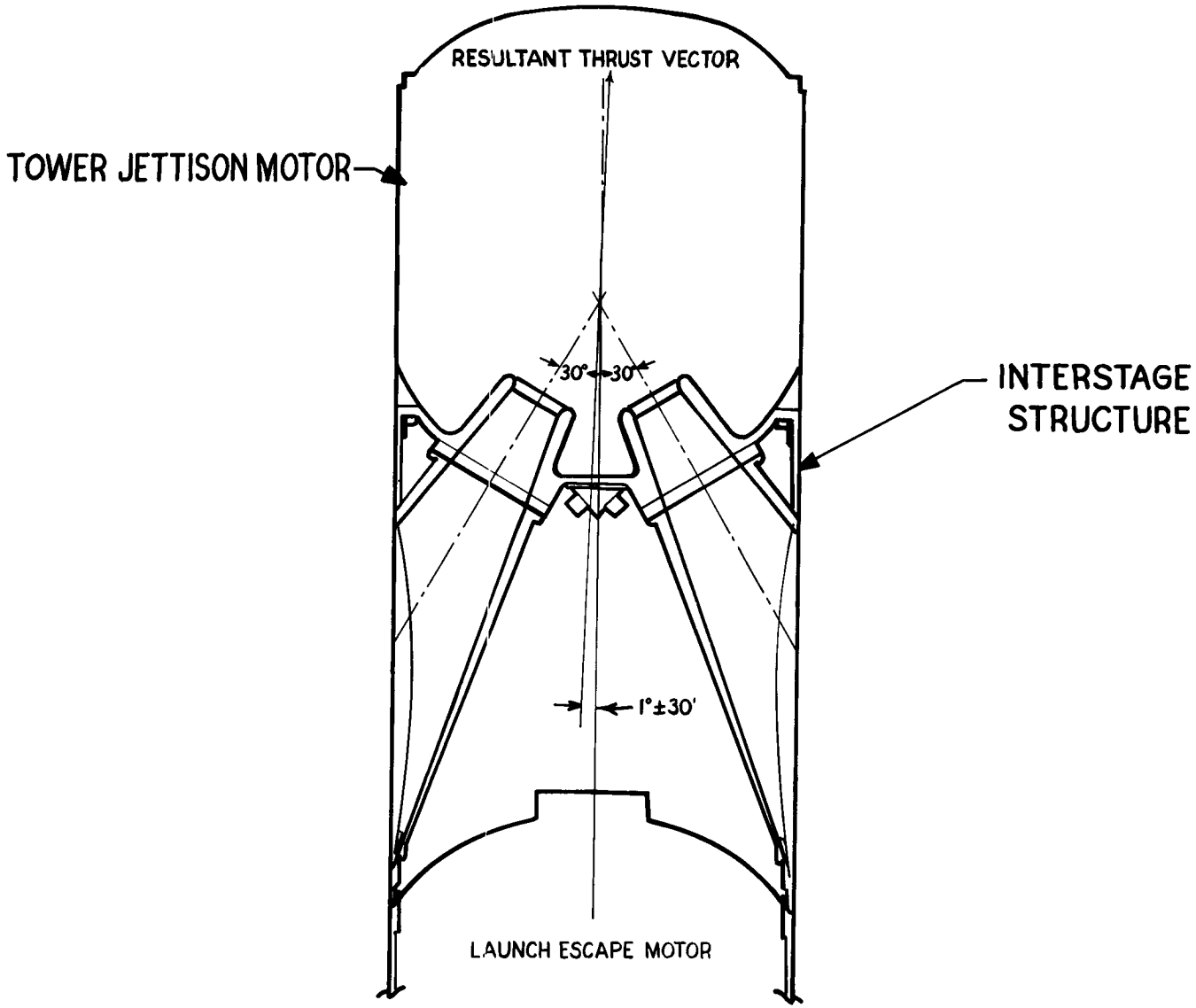

4-62 AP 11793A
S1062-480

JETTISON MOTOR PERFORMANCE

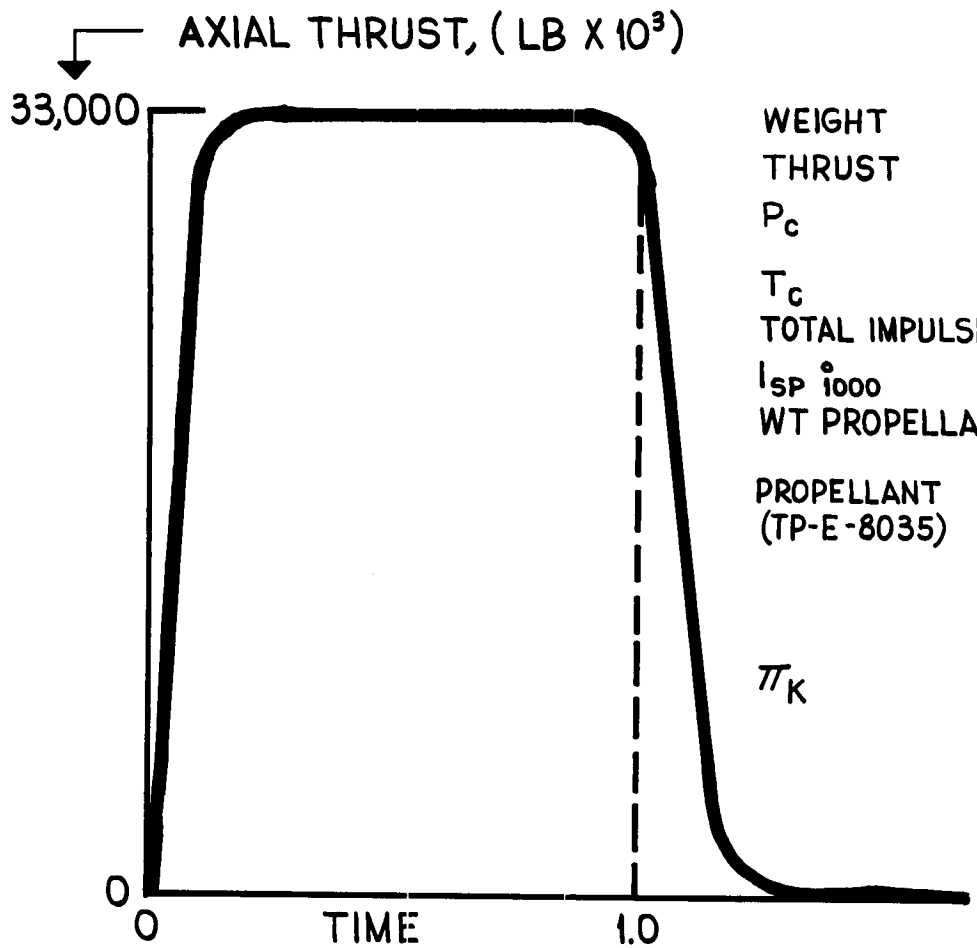

WEIGHT	370 LB
THRUST	33,000 LB (AXIAL)
P_c	1500 PSIA
T_c	4190° F
TOTAL IMPULSE	36,500 LB-SEC
I_{sp} @ 1000	218
WT PROPELLANT	183 LB
PROPELLANT (TP-E-8035)	POLYSULFIDE/PERCHLORATE
AP	74 %
TOTAL SOLIDS	79.1 %
POLYMER	20.9 %
π_K	0.125 % /°F

4-62 AP 11908
S1D62-480

LAUNCH ESCAPE MOTOR CONFIGURATION

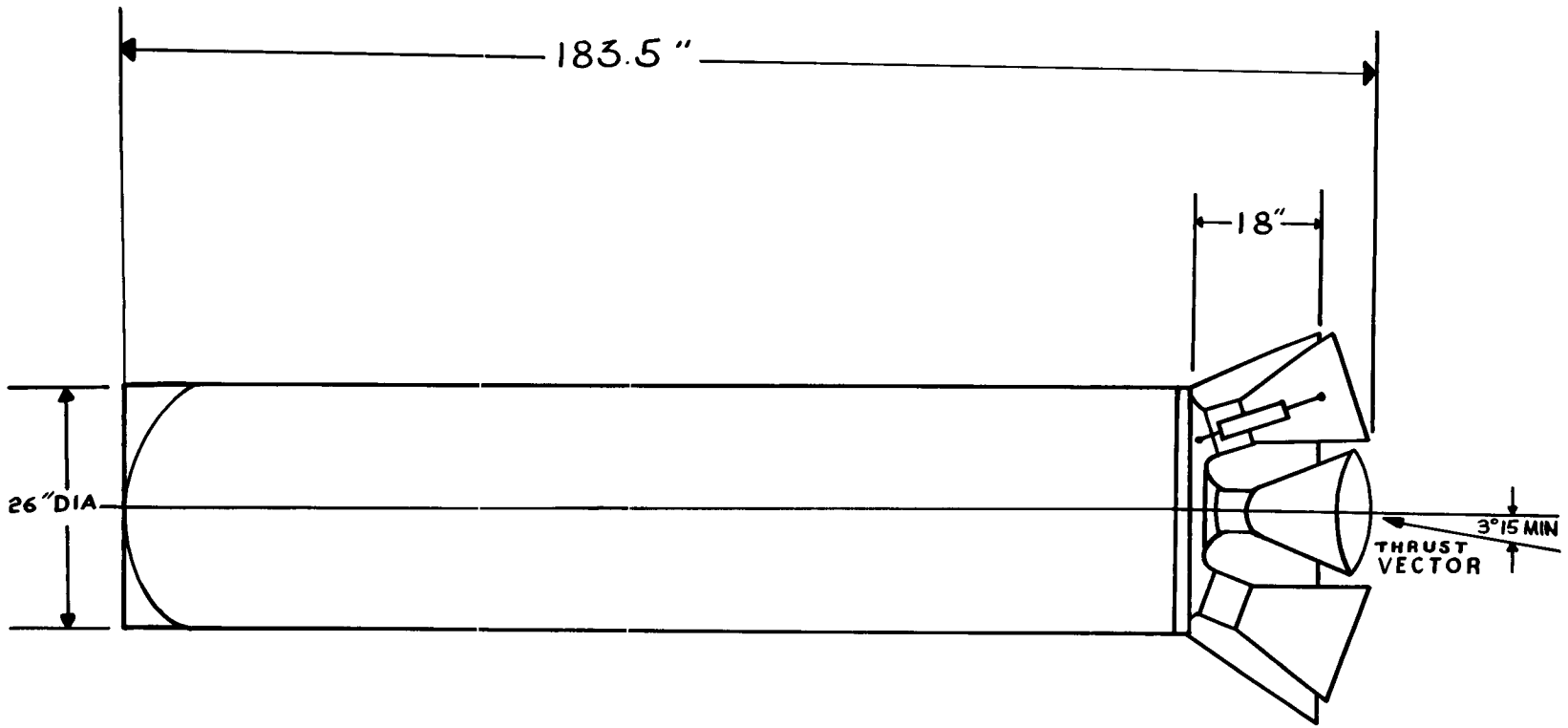

4-62 AP 11909
S1D62-480

LAUNCH ESCAPE MOTOR PERFORMANCE

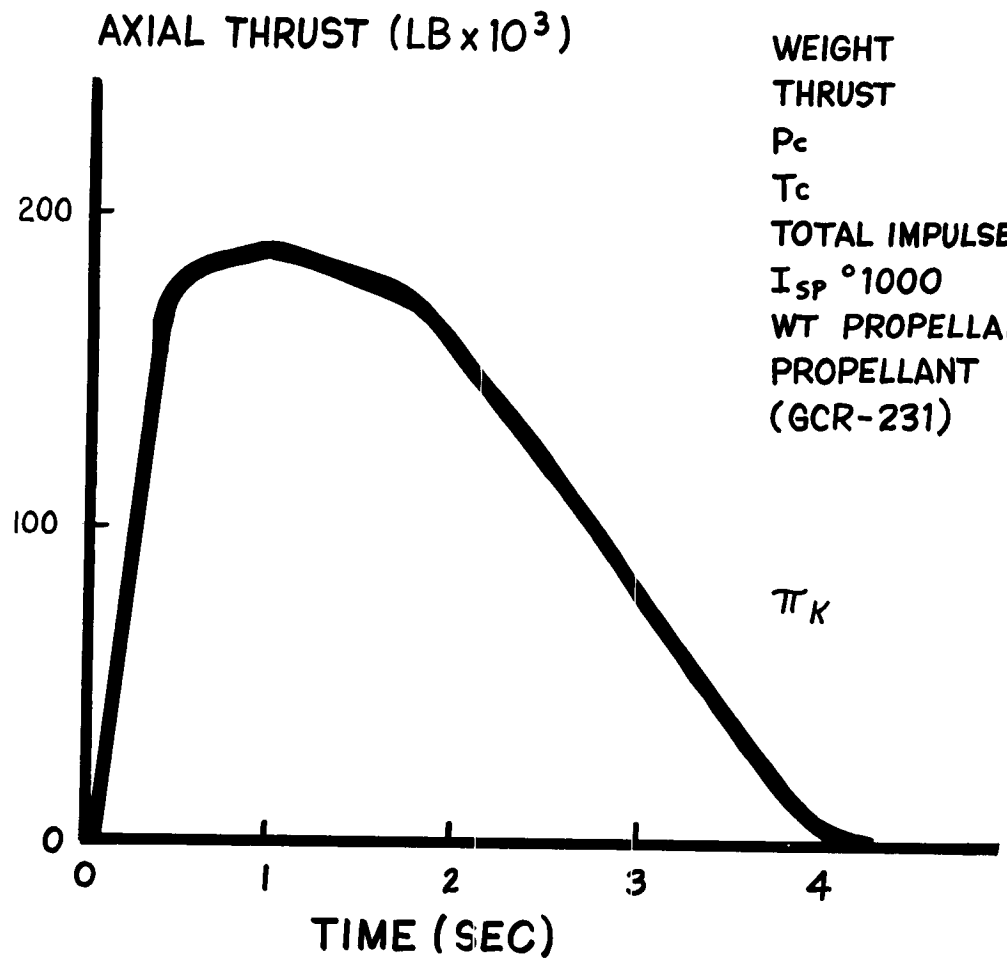

WEIGHT	4470 LB
THRUST	212,500 LB (AXIAL)
P_c	1800 PSIA
T_c	4600 °F
TOTAL IMPULSE	640,000 LB-SEC
I_{SP} °1000	219
WT PROPELLANT	3200 LB
PROPELLANT (GCR-231)	POLYSULFIDE/PERCHLORATE
AP -	72%
AL -	2%
TOTAL SOLIDS -	77.9%
POLYMER -	22.1%
π_K	0.15%/°F

4-62 AP 11910
S1062-480 (99)

APOLLO LAUNCH ESCAPE MOTOR TVC STUDY

THIS DOCUMENT CONTAINS INFORMATION AFFECTING THE NATIONAL DEFENSE OF THE UNITED STATES WITHIN THE MEANING OF THE ESPIONAGE LAWS, TITLE 18 U.S.C. SECTION 793 AND 794. ITS TRANSMISSION OR REVELATION OF ITS CONTENTS IN ANY MANNER TO AN UNAUTHORIZED PERSON IS PROHIBITED BY LAW.

[redacted]

4-62 AP 12105
S1062-480 (100)

TVC METHODS

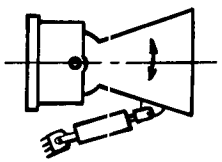

HINGED NOZZLE

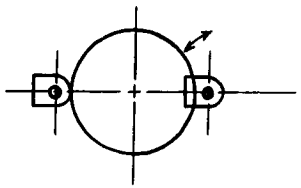

JET TABS

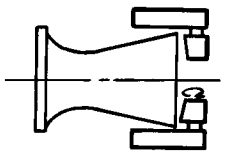

JET VANES

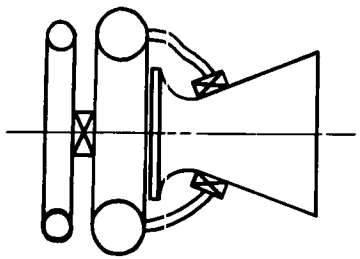

SECONDARY FLUID INJECTION

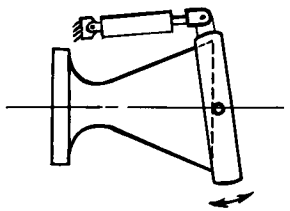

JETEVATOR

TVC STUDY GROUND RULES

SECONDARY INJECTION

- HARD OVER PITCH OR YAW - 4 SECONDS
- APPROX 0.1 SEC RESPONSE

HINGED NOZZLE

- CYCLIC COMMAND - 4 SEC
- APPROX 0.1 SEC RESPONSE

SECONDARY INJECTION

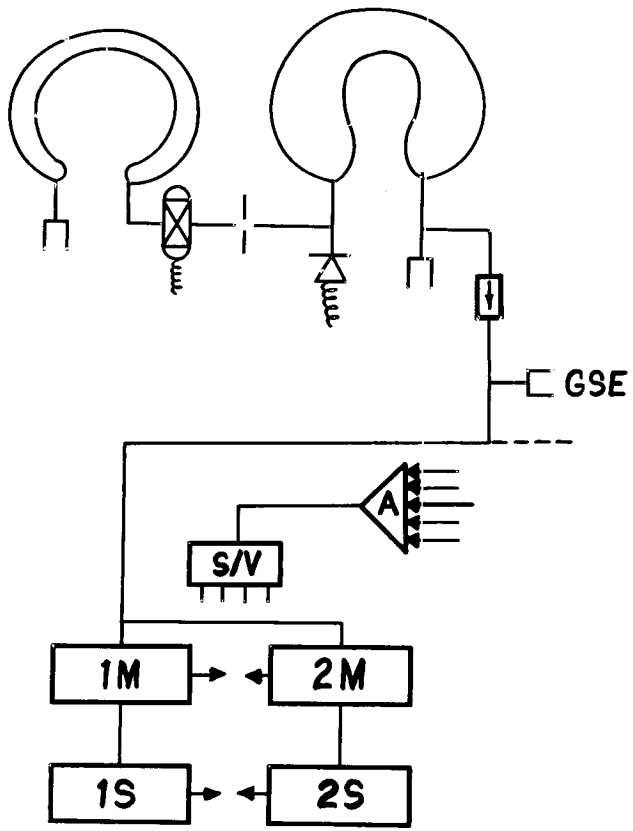

PARTIAL SCHEMATIC

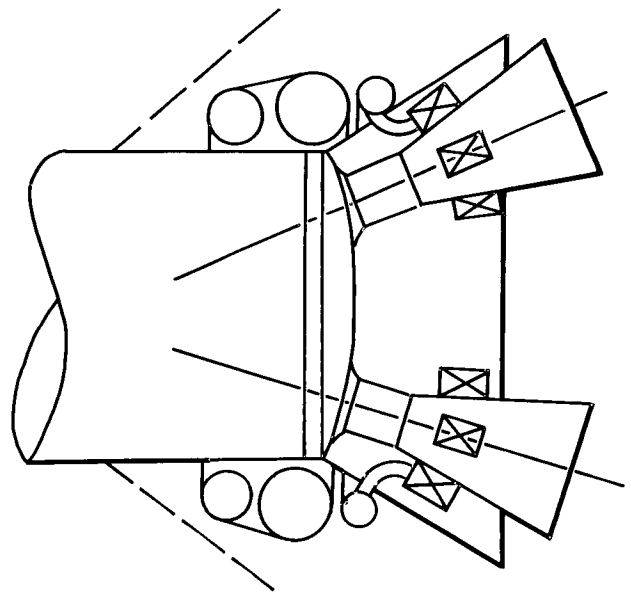

CONFIGURATION

4-62 AP 11913
S1D62-480 (103)

FLUID INJECTION TVC

$$I_{SP_S} = \frac{dF_S}{d\dot{w}_S}$$

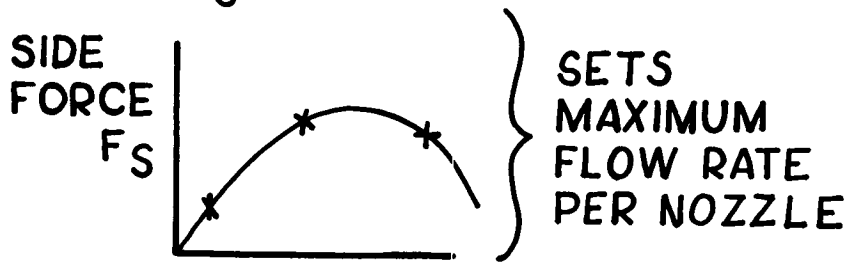

REQUIRES SPECIAL TAIL OFF CONTROL PROVISIONS

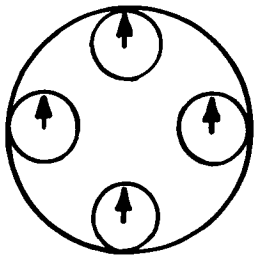

FLOW THROUGH <u>ALL</u> NOZZLES REQUIRED FOR MAXIMUM PITCH OR YAW (SIZES MAX FLOW RATE)

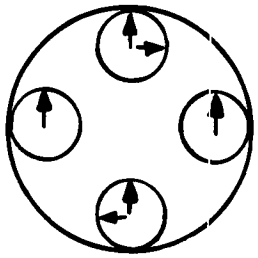

ROLL REDUCES MAX PITCH OR YAW (FOR MAX FLOW RATE)

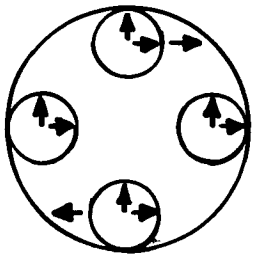

ROLL FLOW CANCELS COMPONENT OF COMBINED PITCH & YAW, INEFFICIENT USE OF FLUID OR COMPLICATED CONTROL PROVISIONS RESULT

WEIGHTS - SECONDARY INJECTION TVC

NITROGEN TOROIDAL TANK	240
FREON TANK	150
NITROGEN	160
FREON	700
EXPLOSIVE VALVE	5
RELIEF VALVE	20
INJECTOR VALVES	50
TANK SUPPORTS	150
MANIFOLDS & PLUMBING	75
TOTAL	1550
FLUIDS	860
DRY WEIGHT	690

NITROGEN	160
FREON	700
FLUIDS	860

HINGED NOZZLE

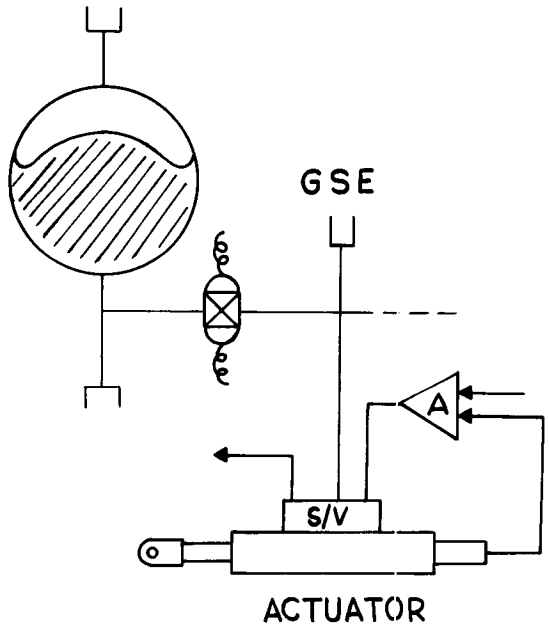

PARTIAL SCHEMATIC

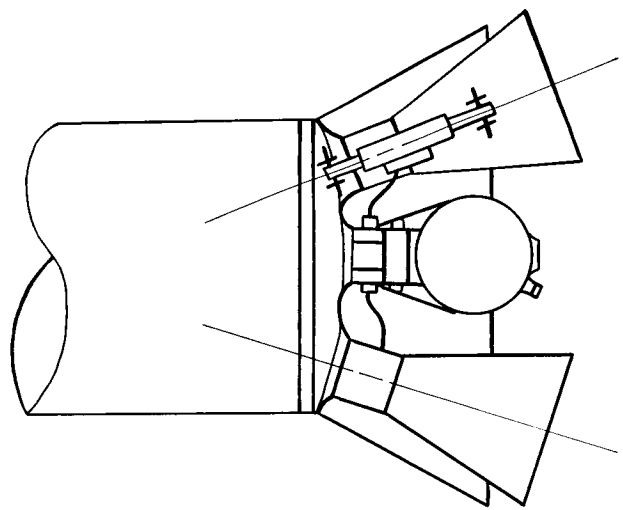

CONFIGURATION

SWIVEL NOZZLE TVC

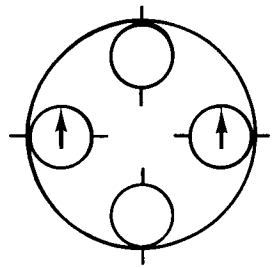

DISPLACEMENT OF ONLY 2 NOZZLES REQUIRED FOR EITHER MAXIMUM PITCH OR YAW

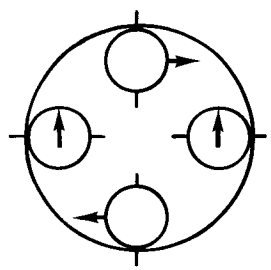

ROLL DOES NOT REDUCE MAXIMUM PITCH OR YAW

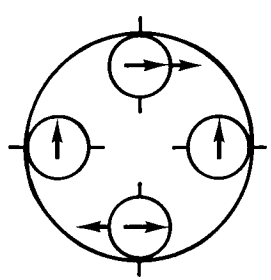

ROLL FLOW UNIMPORTANT FOR COMBINED PITCH AND YAW

WEIGHTS - SWIVEL NOZZLE TVC

ACTUATORS	21
ACTUATOR BRACKETS	10
FLEX LINES	22.5
MANIFOLD	7
EXPLOSIVE VALVE	2
RESERVOIR	23
OIL	4
NITROGEN	3
TANK SUPPORT	12
MIRROR MOUNT	2.5
TOTAL	107
FLUID	7
DRY WEIGHT	100

OIL	4
NITROGEN	3
FLUIDS	7

4-62 AP 12107
S1062-480

[redacted]

COMPARISON OF PROPELLANT GAS*

	MINUTEMAN	POLARIS	APOLLO
TEMPERATURE (°F)	5600	5450	4600
ALUMINUM (%)	16	16	2
PRESSURE (MAX; PSI)	955	500	2000
DURATION (SEC)	59	60	4
VECTOR ANGLE	±8°	—	±10°

*AT CHAMBER CONDITIONS

[redacted]

~~CONFIDENTIAL~~

TVC RELIABILITY GOALS

	RELIABILITY GOAL	CONFIDENCE LEVEL
APOLLO –	.9983	.95
POLARIS –		
SECONDARY INJECTION	.995	.80
MINUTEMAN		
SWIVEL NOZZLE	*.918	*.90

TESTS REQUIRED TO DEMONSTRATE RELIABILITY GOAL

			NO OF TESTS**
APOLLO –	.9983	.95	1500
	.9983	.50	400

* NOZZLE ONLY

** WITH NO FAILURES

~~CONFIDENTIAL~~

4-62 AP 12111

S1062-480 (118)

~~CONFIDENTIAL~~

ROCKET NOZZLE TEST EXPERIENCE

	ROCKET TESTS	MINIMUM TIME TO DIFFICULTY
SWIVEL NOZZLE (ALL TESTS, MINUTEMAN)	446	21 SEC
SWIVEL NOZZLE (FINAL DESIGN, MINUTEMAN)	212	>21 SEC
SECONDARY INJECTION (POLARIS)	8	(NO DIFFICULTY)

TVC
SELECTION FACTORS

	SECONDARY INJECTION	SWIVEL NOZZLE
TEST EXPERIENCE (RELIABILITY)		✓
DEVELOPMENT POTENTIAL (RELIABILITY)	✓	✓
SYSTEM SIMPLICITY, RELIABILITY ALLOCATION		✓
WEIGHT		✓
COST		✓
ENVELOPE		✓
SPEED OF DEVELOPMENT		✓
STORABILITY	✓	✓
MATERIALS COMPATIBILITY		✓
SYSTEM CHECKOUT-GSE		✓

RECOMMENDATION

HINGED NOZZLE
TVC SELECTED

APOLLO
ENVIRONMENTAL CONTROL
SYSTEM

4-62 AP 11945
SID62-480 (114)

ECS SCHEMATIC (ORIG)

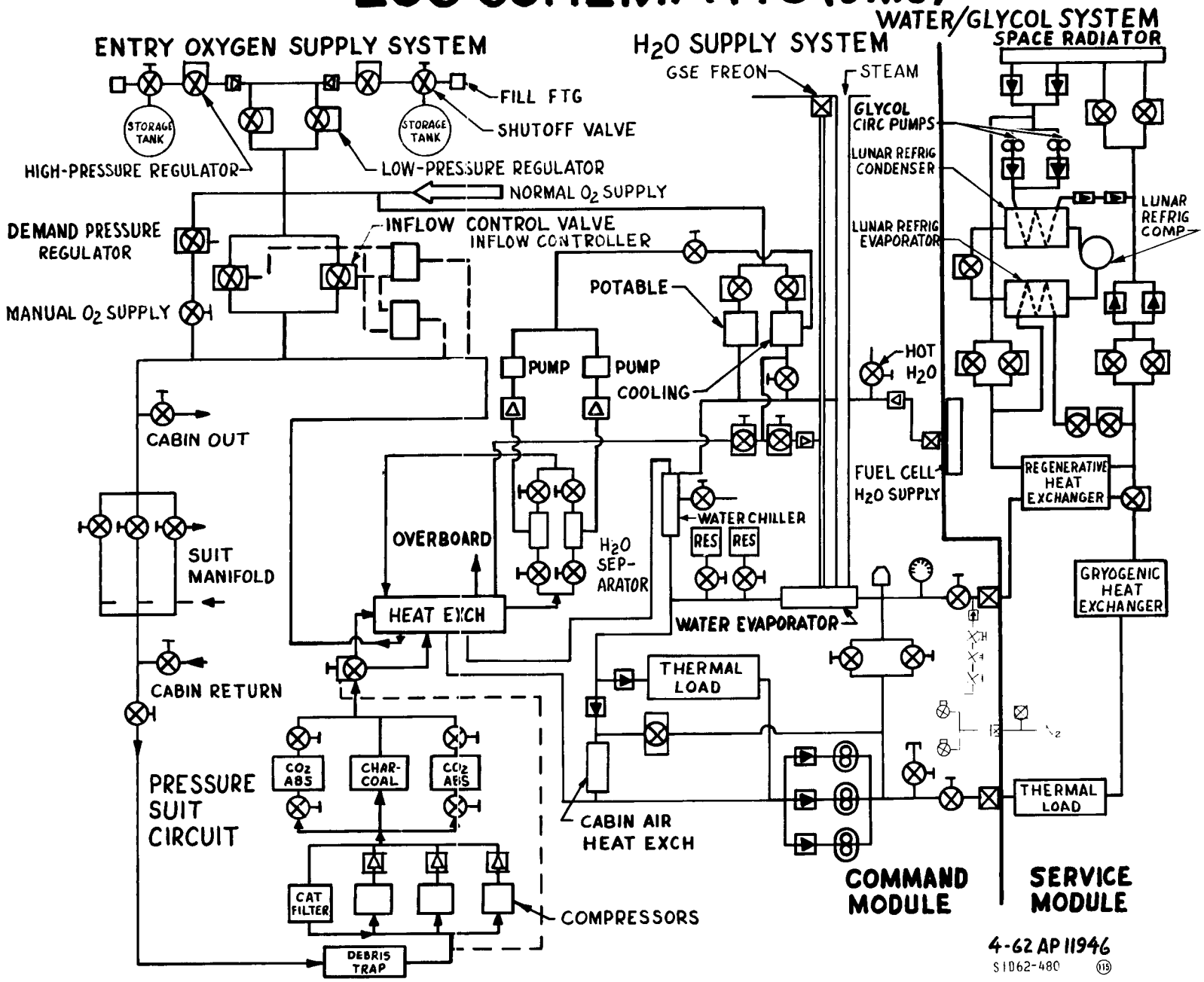

4-62 AP 11946
S1D62-480 (115)

PRESSURE SUIT CIRCUIT

ORIGINAL

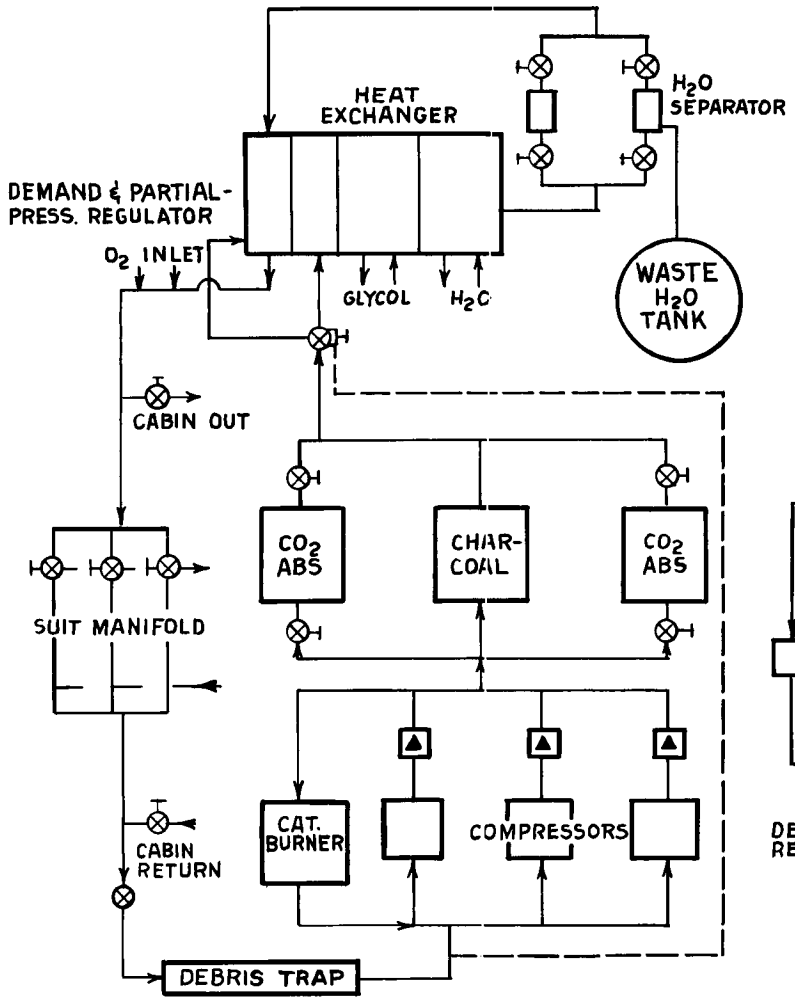

CURRENT

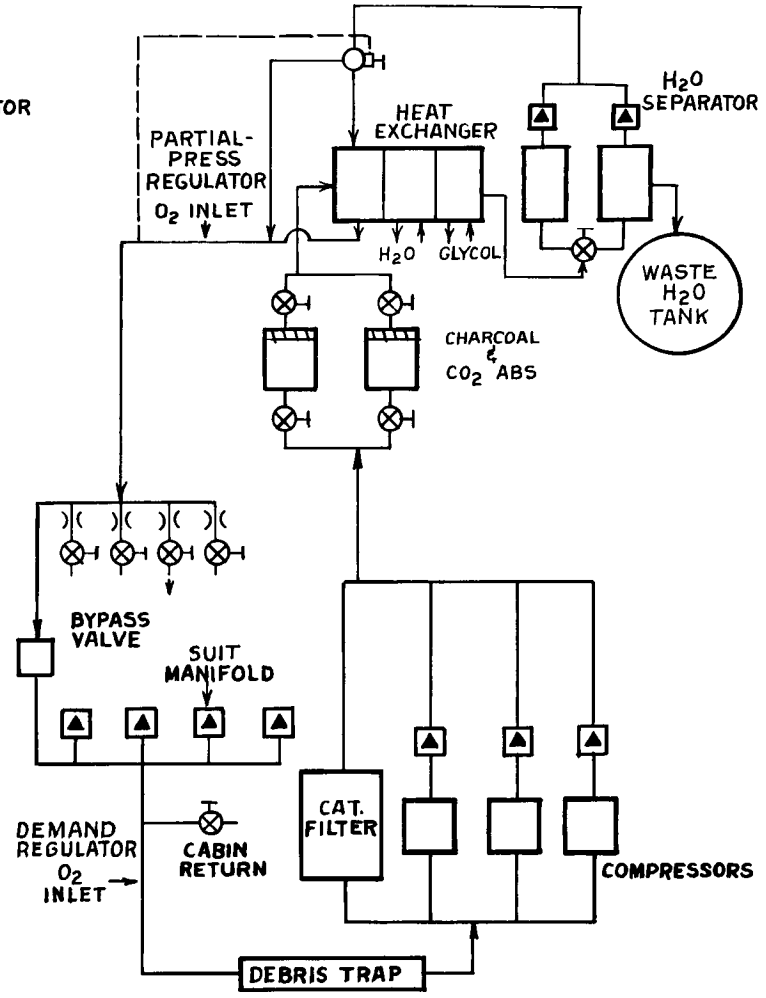

4-62 AP 11947
S1062-480 (116)

ENTRY - OXYGEN SUPPLY SYSTEM

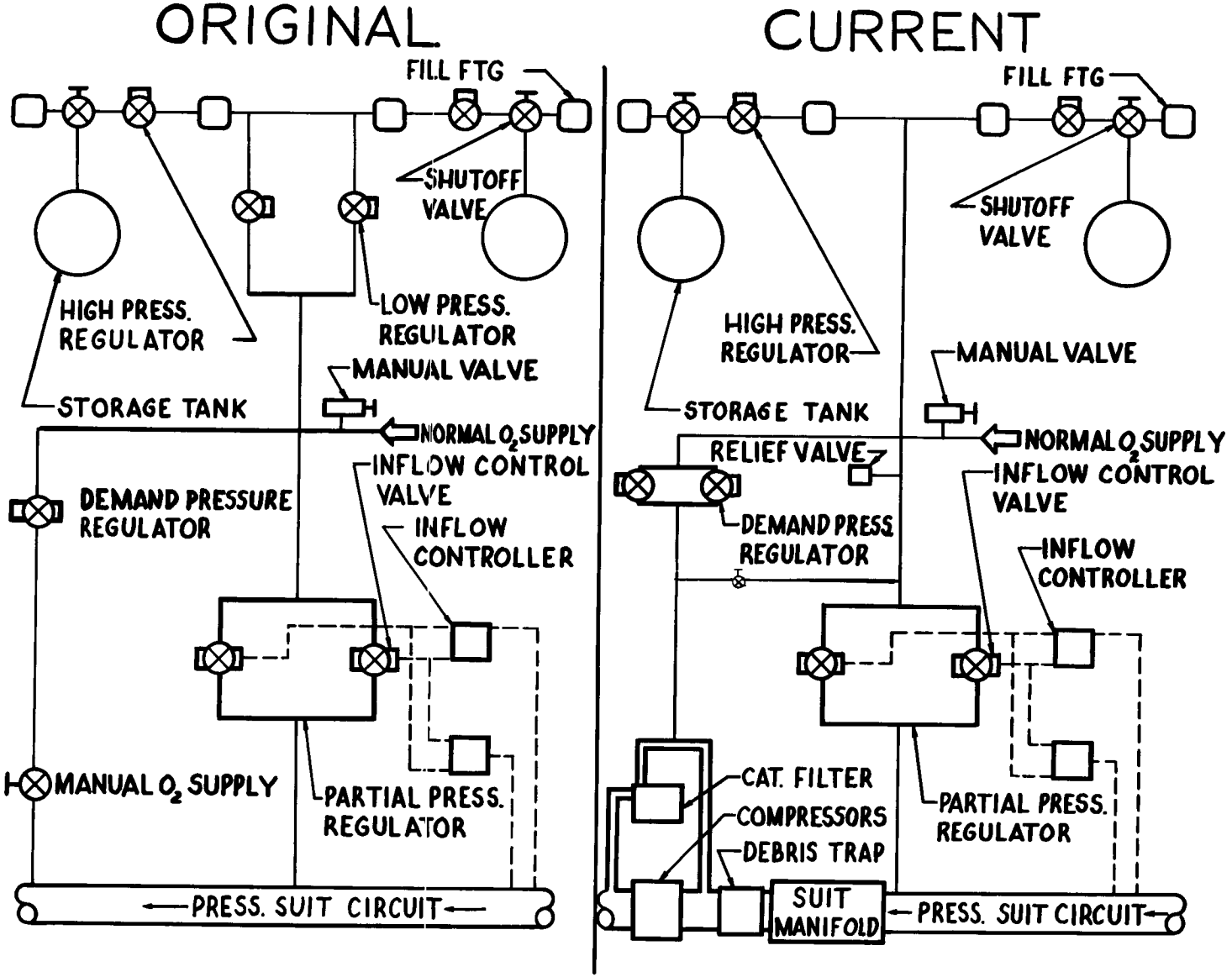

4-62 AP 11948
S1D62-480 (117)

WATER SUPPLY SYSTEM

ORIGINAL

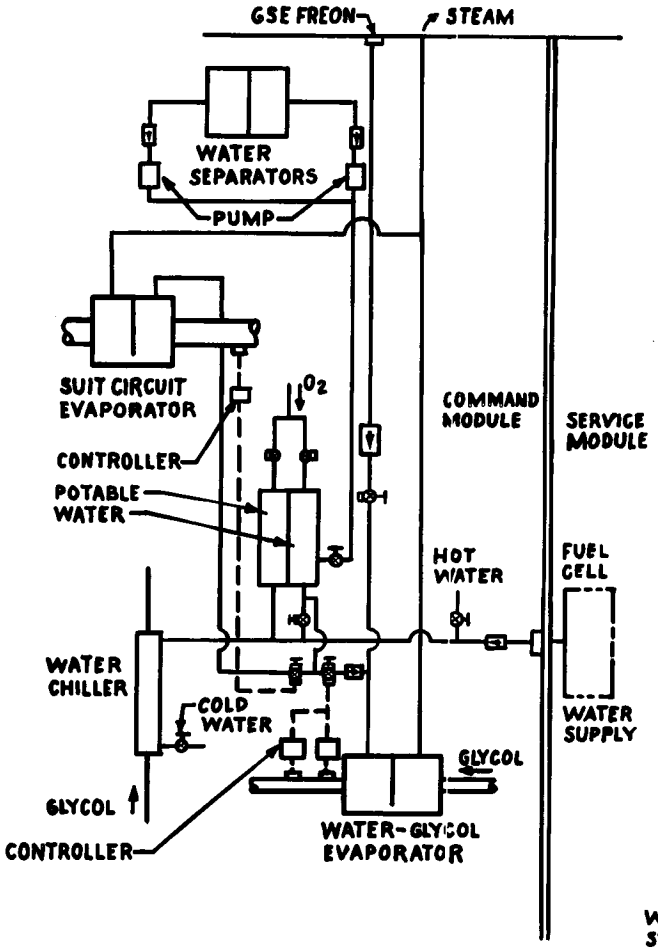

NOTE: WATER SUPPLY SYSTEM PER AIRESEARCH DWG 51175 DTD 1-25-62

CURRENT

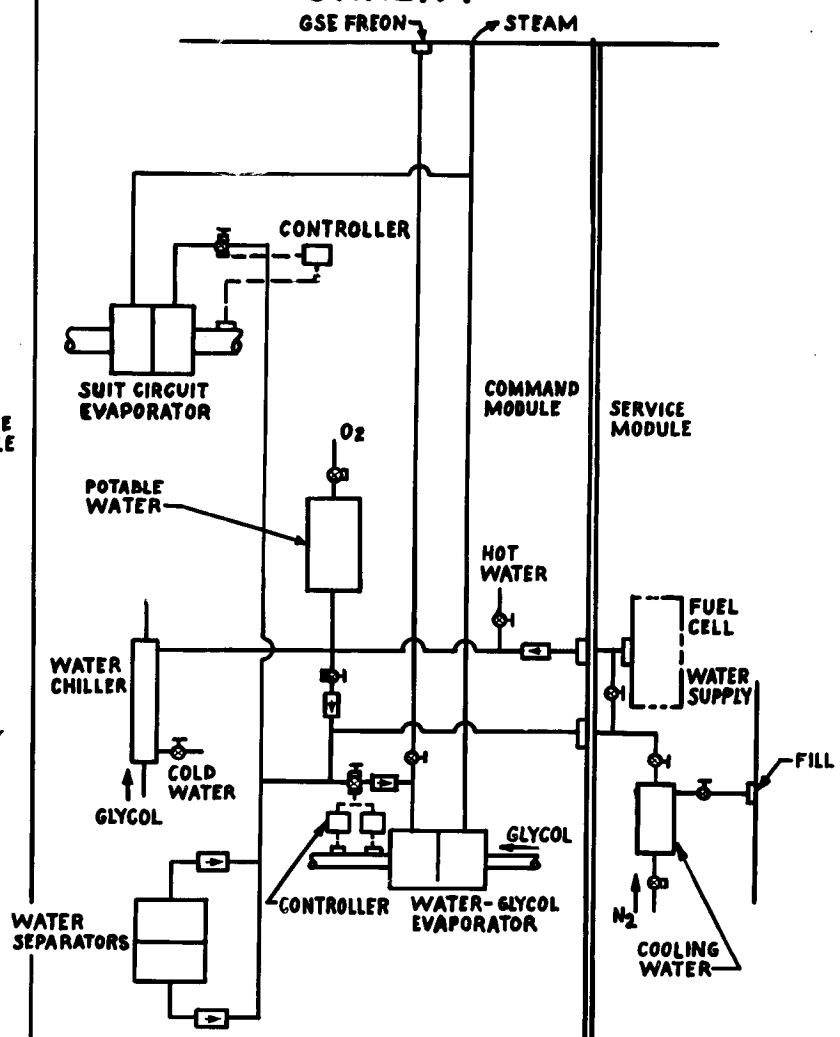

NOTE: WATER SUPPLY SYSTEM PER CURRENT AIRESEARCH SCHEMATIC 4-13-62

4-62 AP 11949
S1D62-480

WATER/GLYCOL SUBSYSTEM

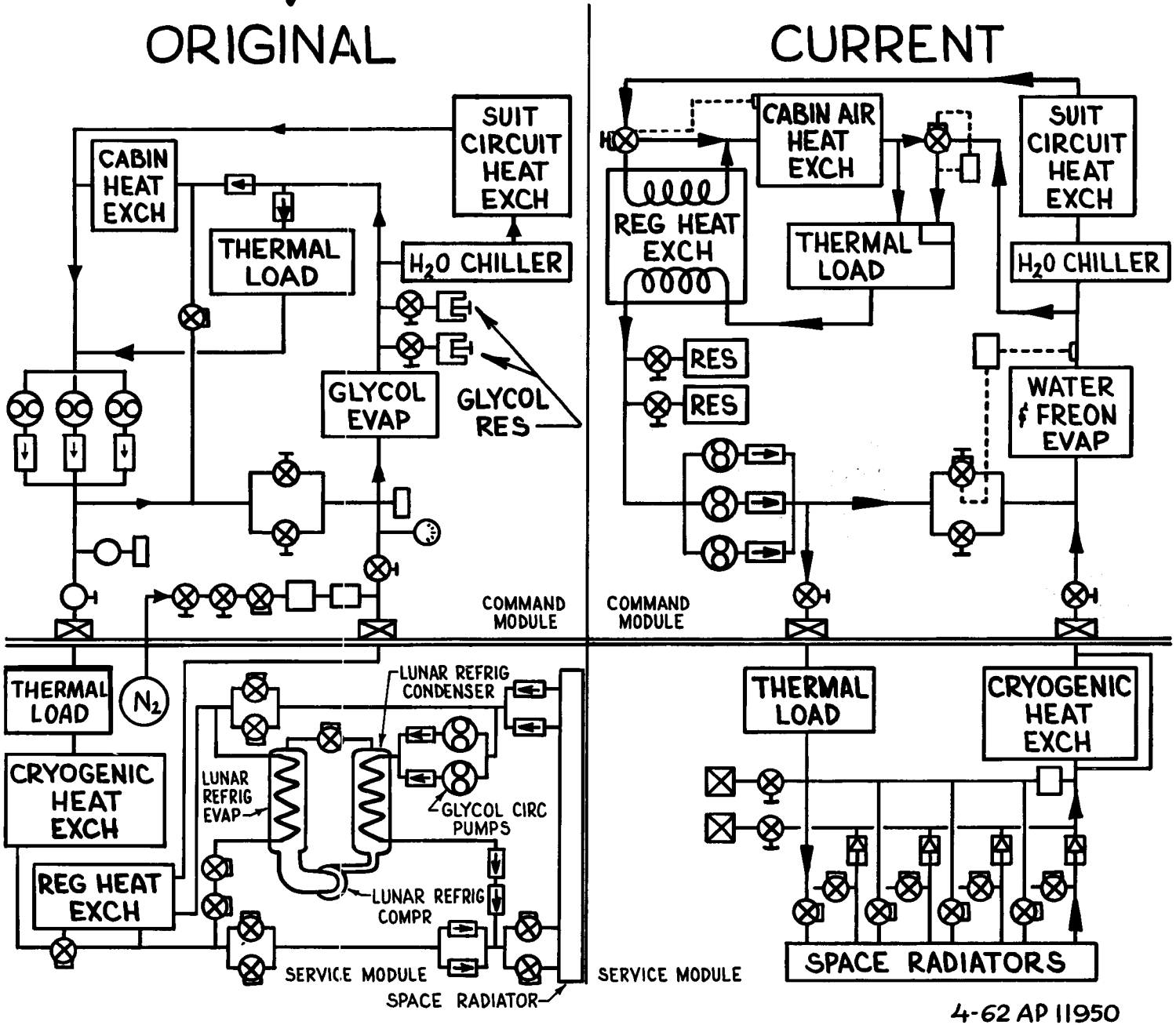

4-62 AP 11950
S1062-480

SUMMARY OF ECS CHANGES

- SUIT BYPASS SYSTEM - CHANGED
- CABIN FAN - ADDED
- REGENERATIVE HEAT EXCHANGER - REMOVED
- N_2 GAS LEAK CHECK PROVISION - REMOVED
- LUNAR REFRIGERATION PACKAGE - REMOVED

- SECONDARY ENTRY O_2 REGULATORS - REMOVED
- ONE ADDITIONAL SUIT OUTLET — ADDED
- CHARCOAL FILTER & CO_2 ABSORBERS - COMBINED
- DEPLOYABLE RADIATORS IN LIEU OF VERTICAL RADIATORS

ECS ELECT POWER REQMTS (WATTS)

AS OF 4-13-62

COMPONENTS	MISSION PHASES						
	PRE-LAUNCH	LAUNCH	ORBIT/ TRANSIT	LUNAR LAND OR TAKE-OFF	LUNAR OPER	EARTH ENTRY	POST LANDING
COMPRESSOR	167	167	137	131	141	131	0
PUMP	31	31	31	26	29	33	0
FAN	89	89	65	65	65	65	89
CONTROLS	13	13	13	13	13	13	0
TOTAL	300	300	246	235	248	242	89

ECS SCHEMATIC (CURRENT)

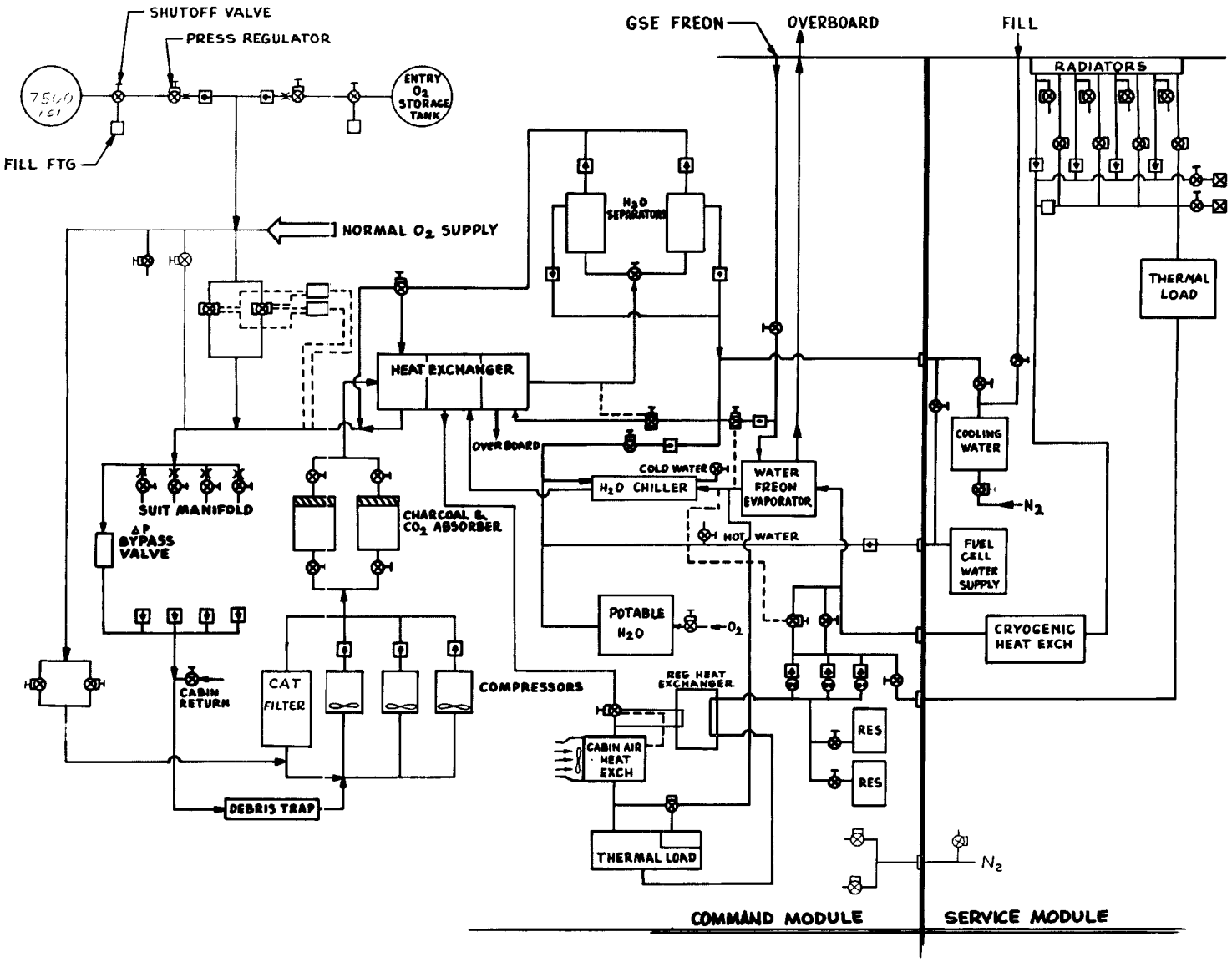

4-62 AP 11953
S1D62-480 (122)

SPACECRAFT TEMPERATURE CONTROL

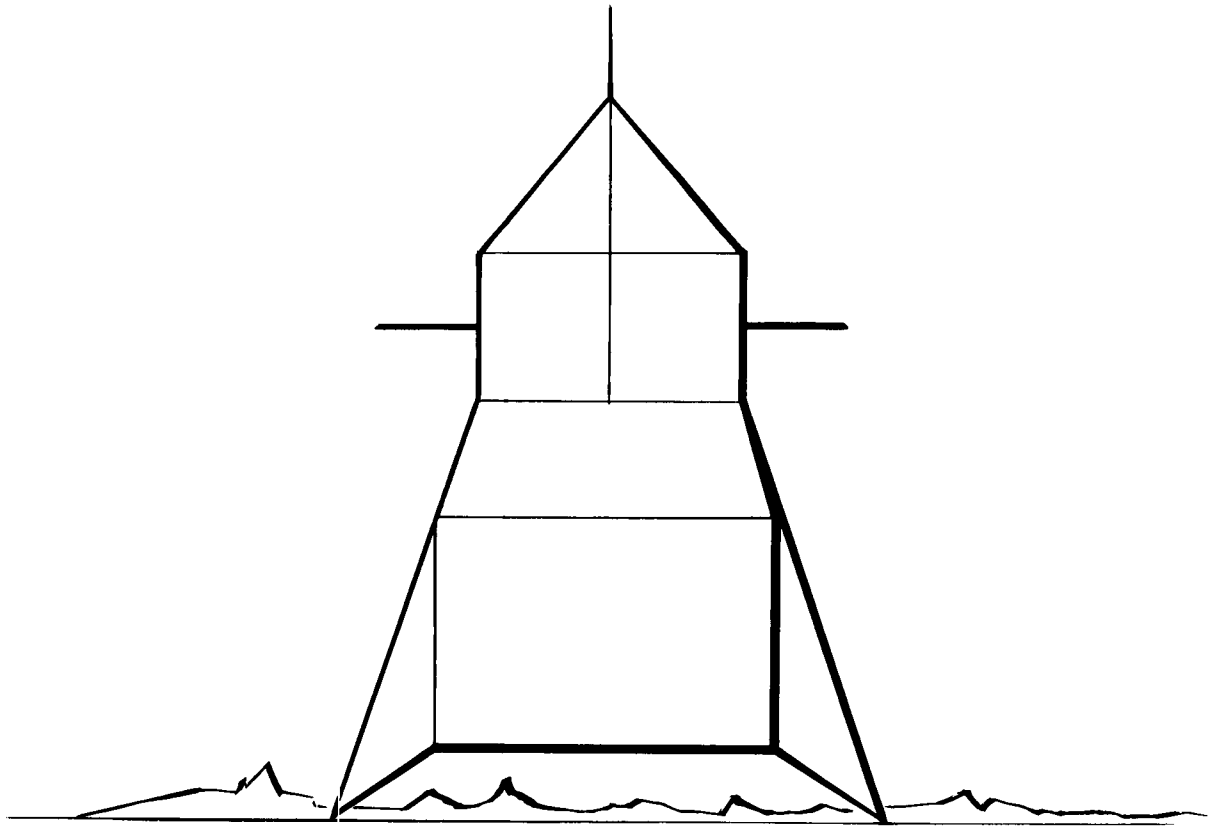

4-62 AP 11932
S1D62-480 (73)

COMMAND MODULE WALL HEAT TRANSFER

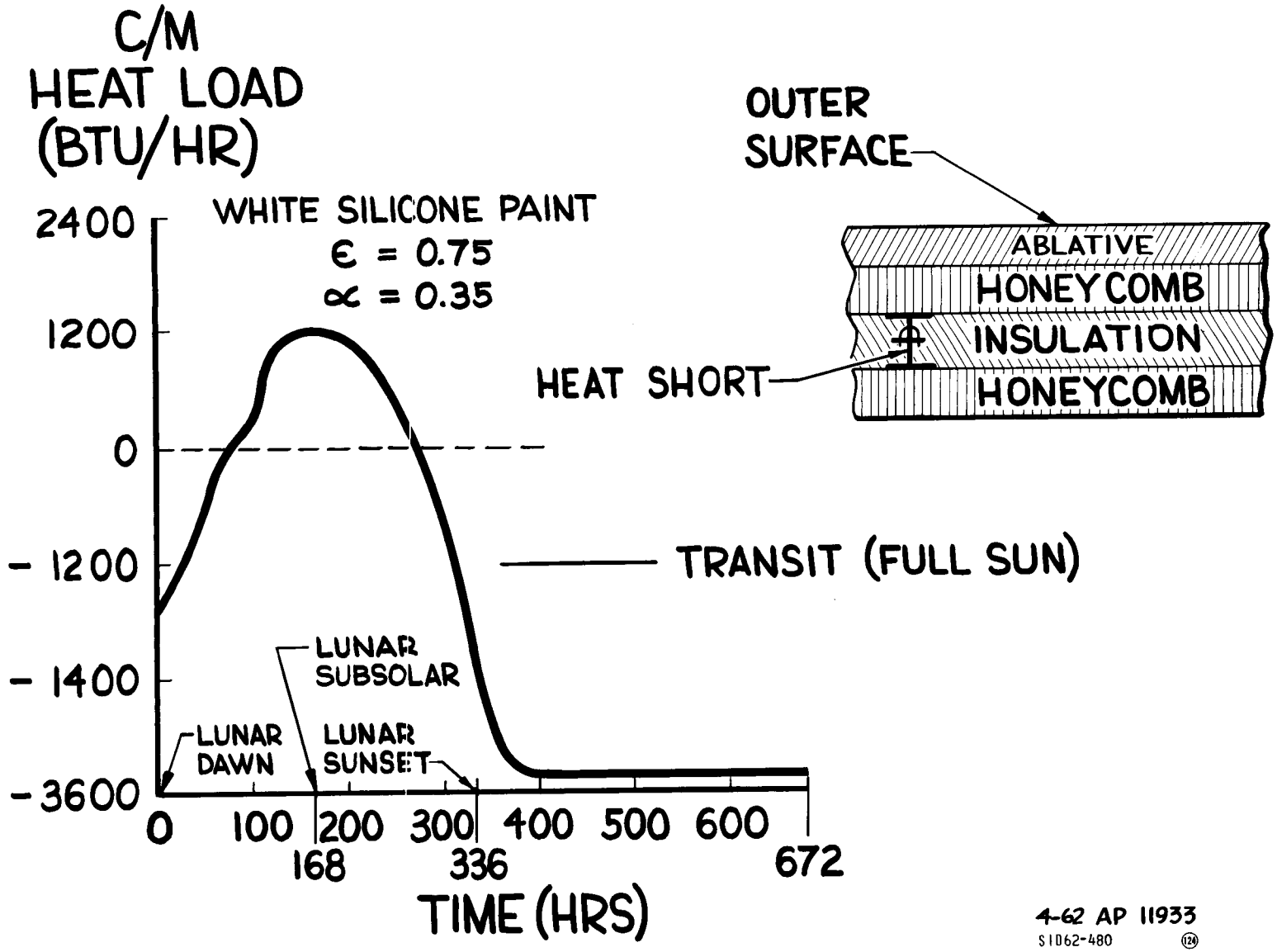

4-62 AP 11933
S1062-480 (124)

HEAT REJECTION - LUNAR DAY

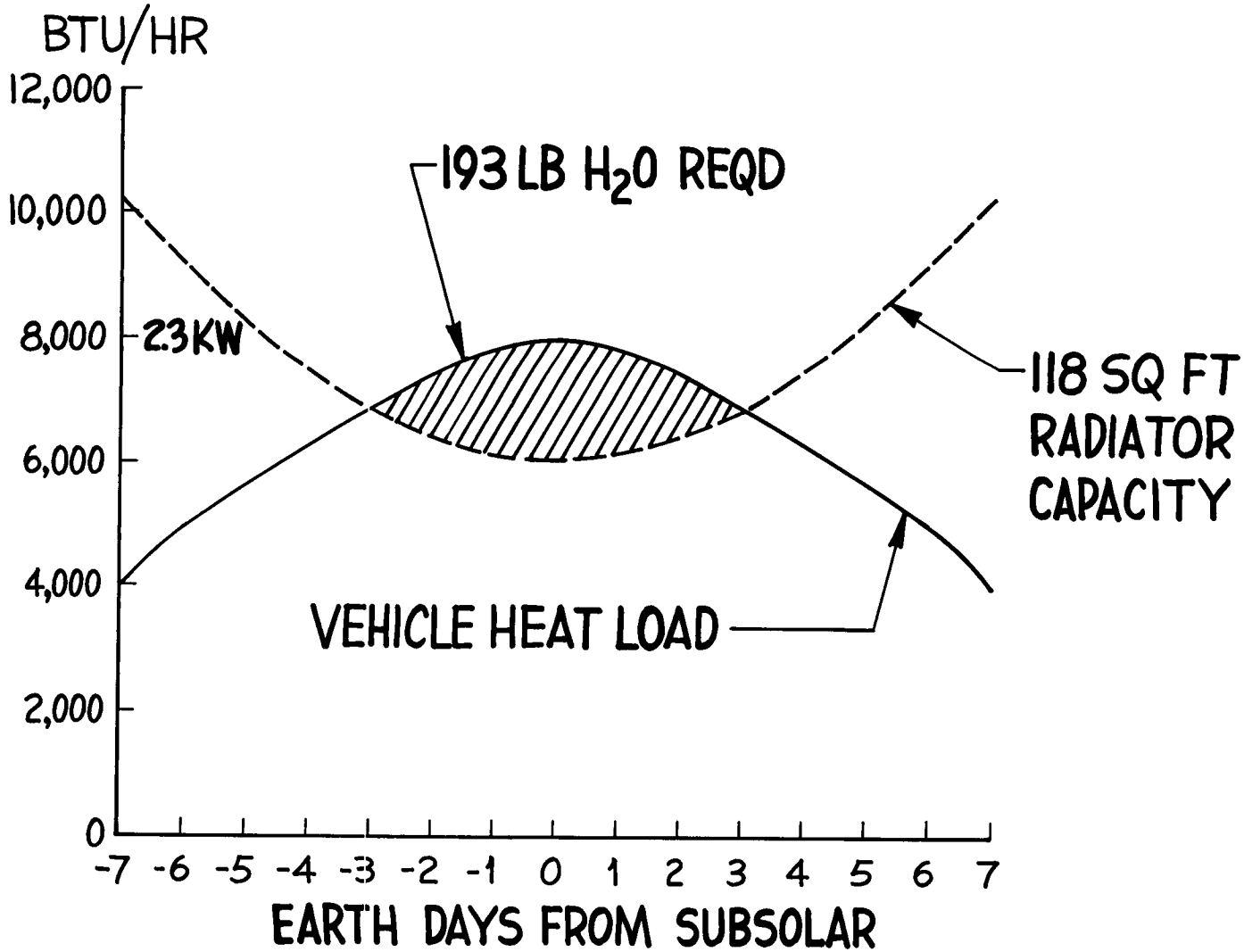

4-62 AP 11934
S1D62-480 (129)

ECS LIQUID LOOP-COOLING MODE-(LUNAR SUBSOLAR)

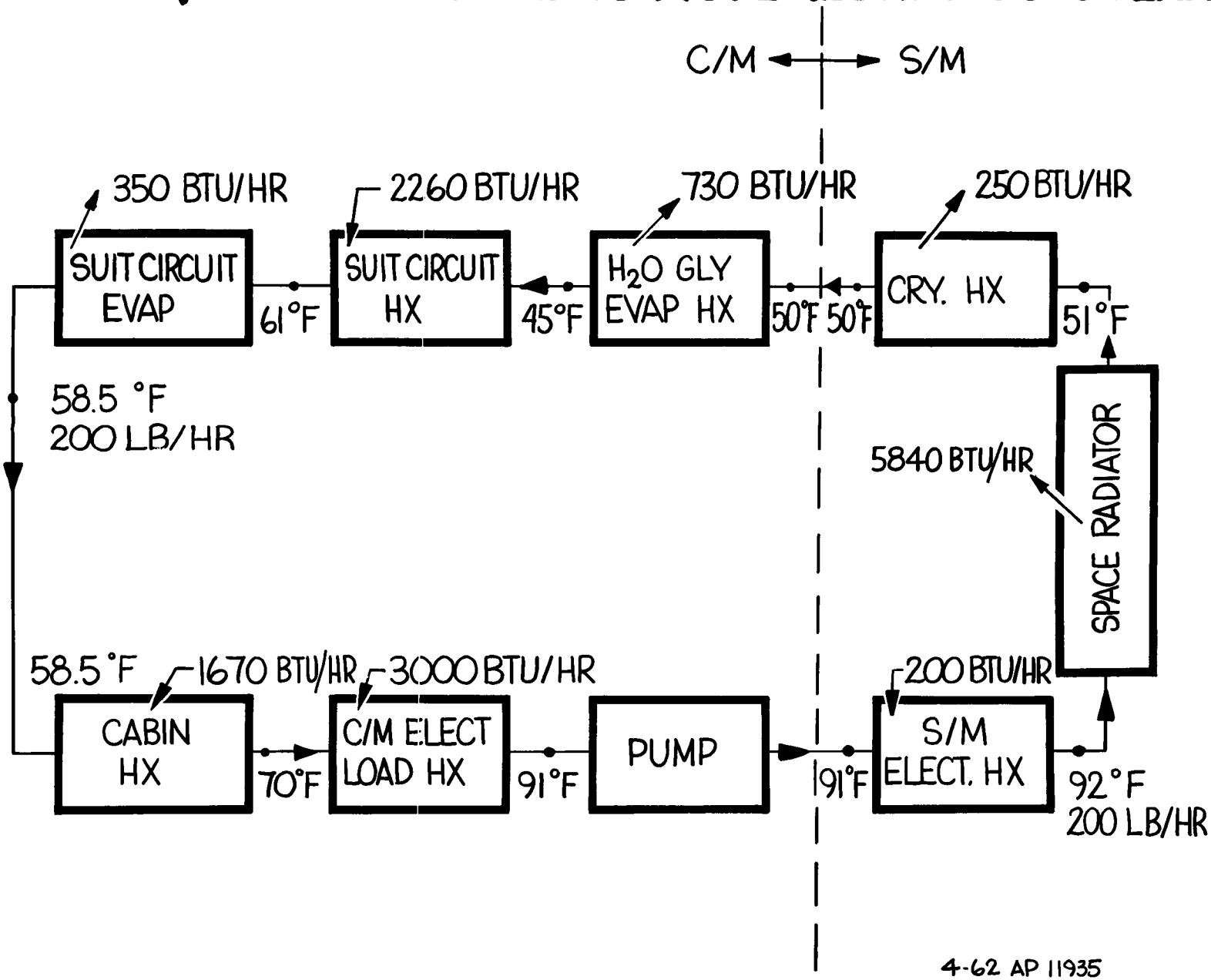

4-62 AP 11935
S1062-480

ECS LIQUID LOOP-HEATING MODE (LUNAR NIGHT)

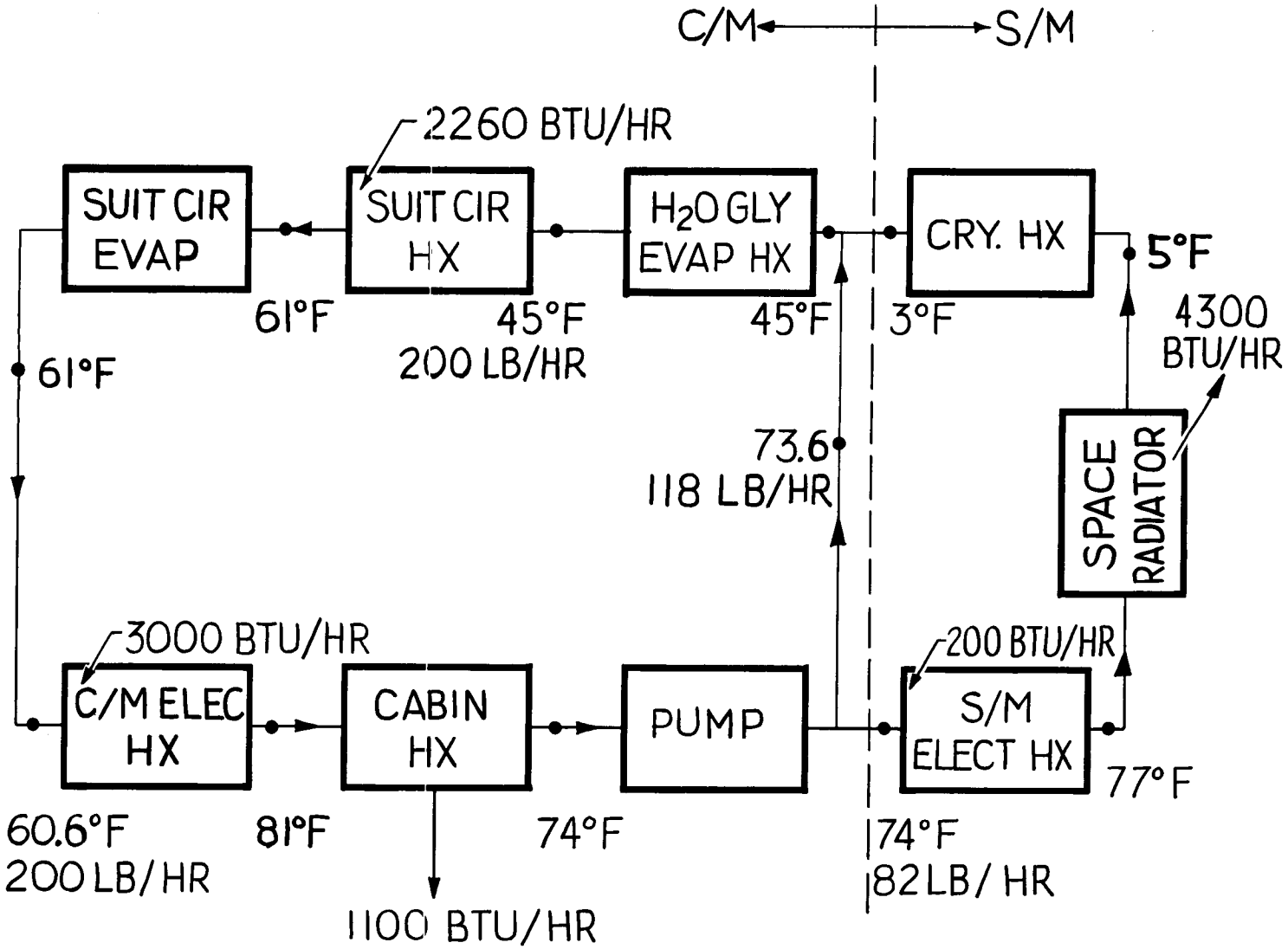

CABIN HEAT REQD: 3510 BTU/HR

4-62 AP 11936
S1062-480 (127)

ECS RADIATOR REQUIRMENTS (LUNAR NITE)

(5 °F COOLANT OUTLET)

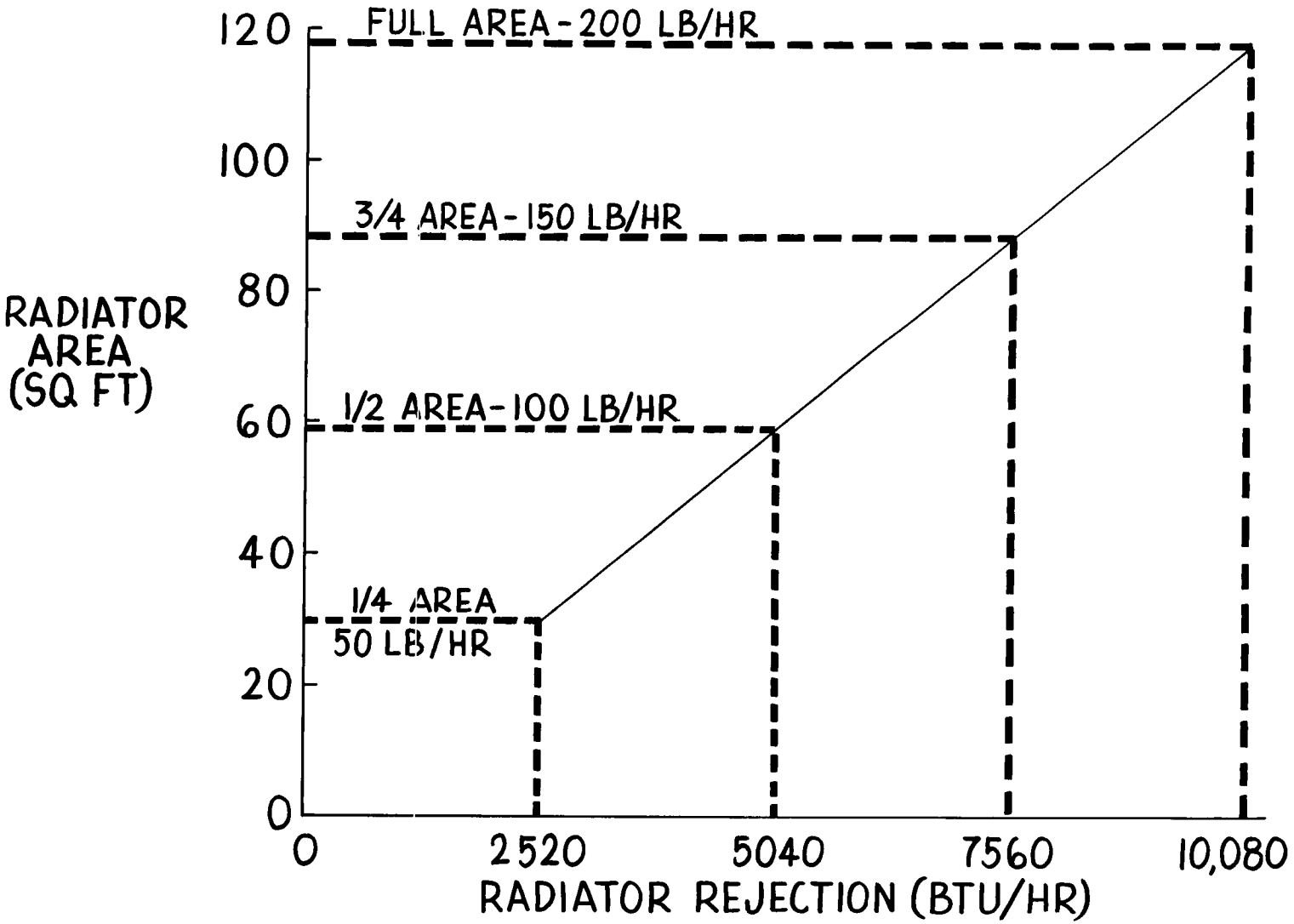

4-62 AP 11937
S1062-480

ECS LIQUID LOOP-HEATING MODE (LUNAR NIGHT)

(ALTERNATE)

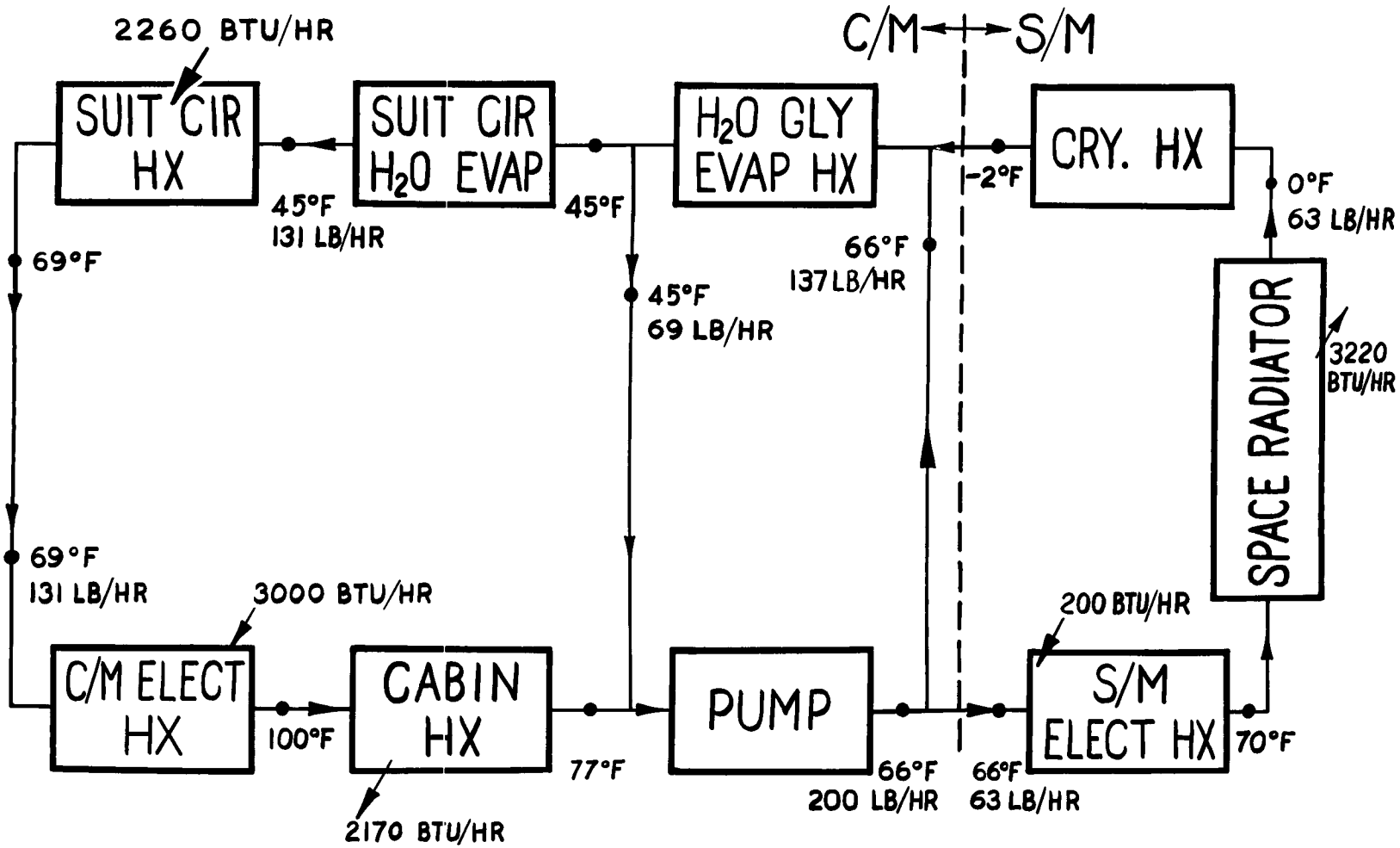

CABIN HEAT REQD: 3510 BTU/HR

4-62 AP 11938
S1062-480 (129)

COMMAND MODULE SUPPLEMENTAL HEATER SYSTEMS

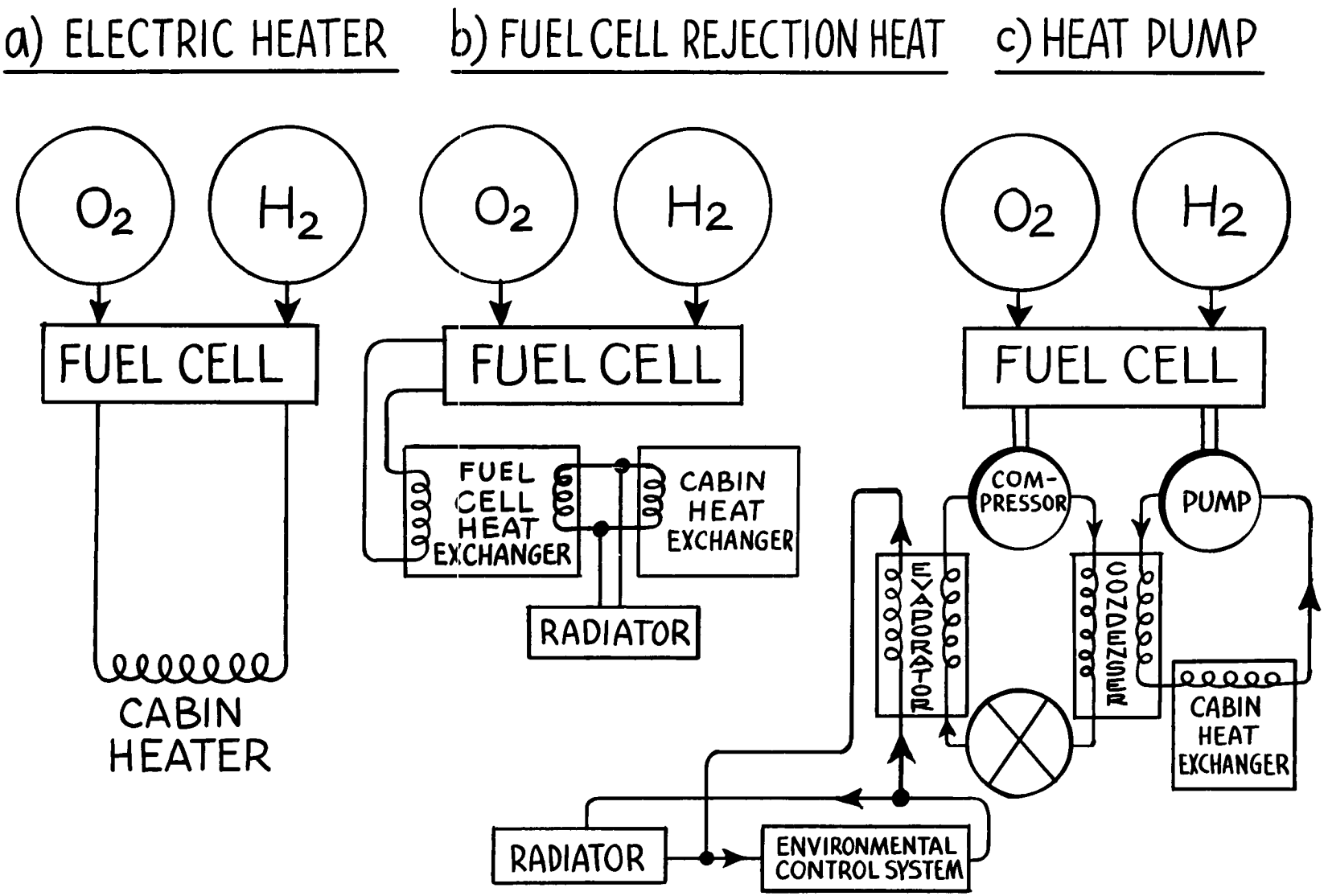

4-62 AP 11939
SID62-480

C/M SUPPLEMENTAL HEATER SYSTEM WEIGHT COMRARISON

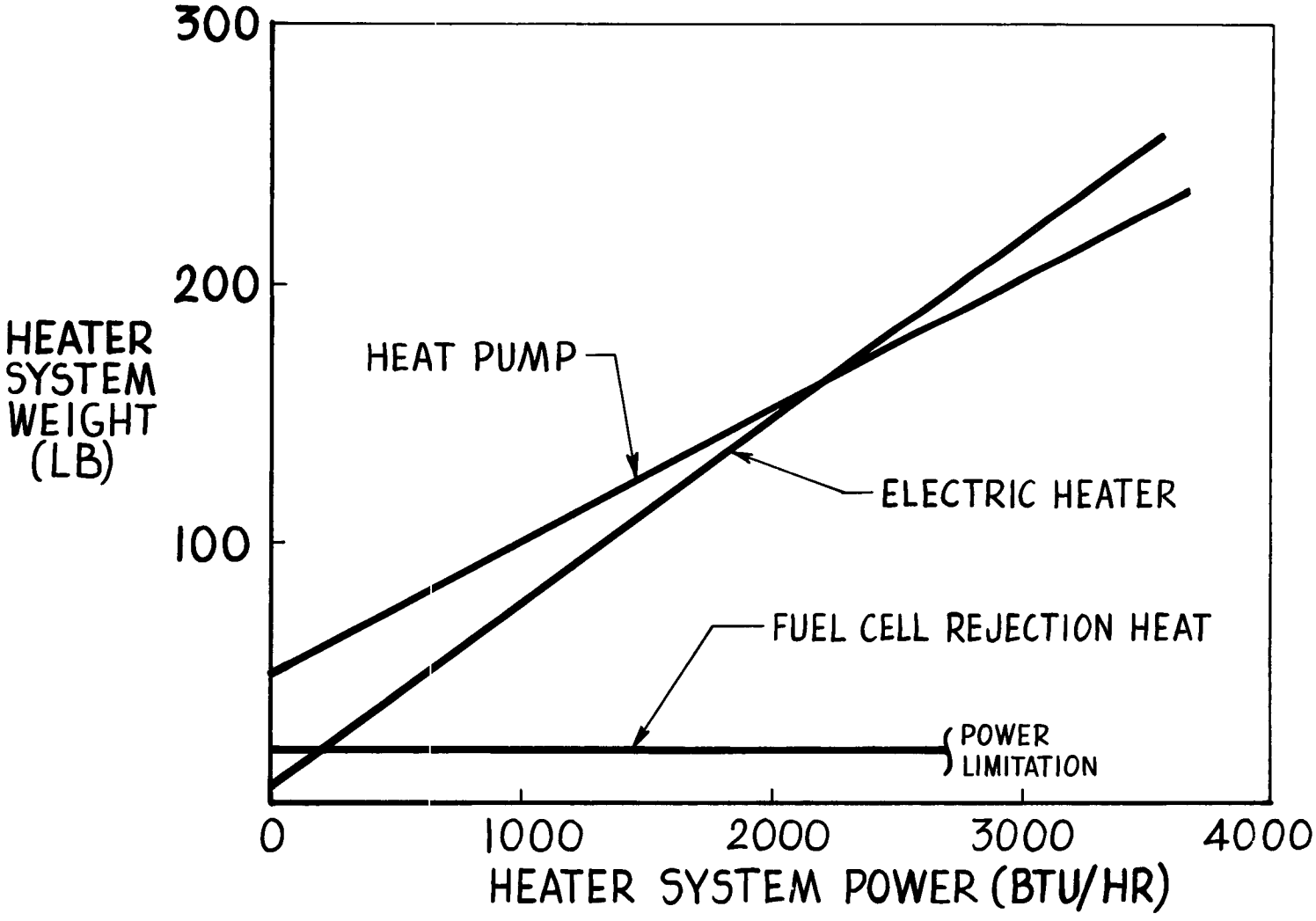

4-62 AP 11940
S1062-480 (131)

INTEGRATED ECS-EPS LIQUID LOOP-HEATING MODE

(LUNAR NIGHT)

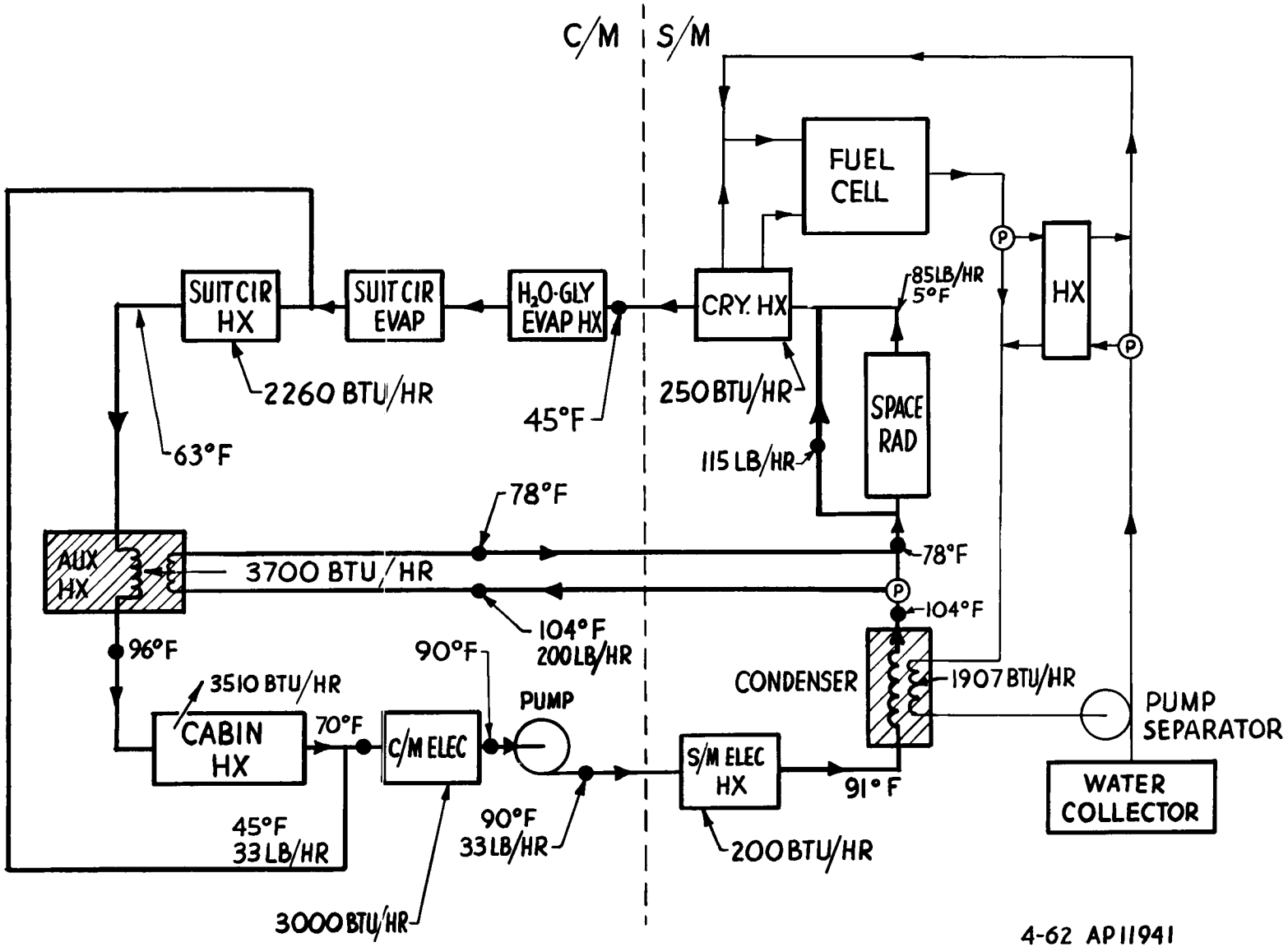

4-62 AP11941
S1D62-480

COMPARISON

INTEGRATED ECS & EPS LIQUID LOOP

ADVANTAGES

- REDUCED RADIATOR AREA (& POSSIBLY WEIGHT)
- REDUCED TEMPERATURE RANGE OF LIQUID
- ELIMINATION OF A LIQUID PUMP & REACTANTS FOR IT'S POWER
- REDUCED LIQUID
- REDUCED S/M PLUMBING
- ELIMINATION OF A LIQUID ACCUMULATOR
- CABIN ABOVE 70°F WITHOUT SUPPLEMENTAL REACTANTS

DISADVANTAGES

- ADDED PLUMBING BETWEEN S/M & C/M
- MORE COMPLEX SUBCONTRACTOR INTERFACES

S/M TEMPERTURE - TIME HISTORIES

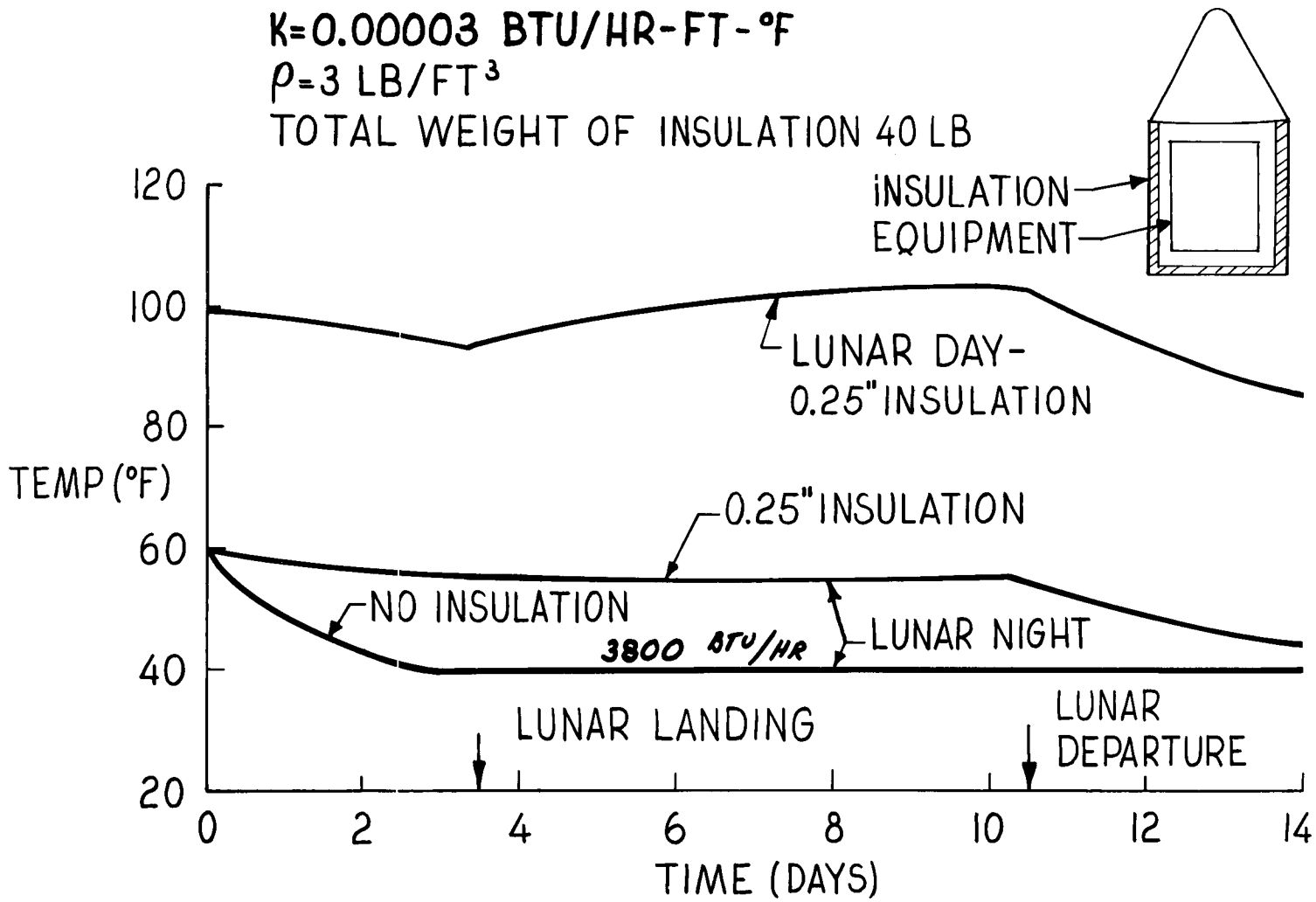

4-62 AP 11943
S1D62-480

SUMMARY

SPACECRAFT TEMPERATURE CONTROL

- C/M
  - PRESENT ECS WILL NOT PROVIDE LUNAR NIGHT CAPABILITY
  - FOR SMALL WEIGHT PENALTY-CAN HAVE LUNAR NIGHT CAPABILITY
  - INTEGRATED ECS-EPS LIQUID LOOP PROVIDES EXCELLENT SOLUTION TO VERSITILE TEMP CONTROL
  - RADIATOR AREA SELECTION REQUIRED TO PREVENT LIQUID FREEZING & LOW CABIN TEMPERATURES
- S/M
  - FOR RELATIVELY SMALL INSULATION WT, PASSIVE METHODS CAN BE USED FOR TEMP CONTROL DURING TRANSIT & LUNAR NIGHT
  - SOME SMALL ITEMS MAY NEED HEATING

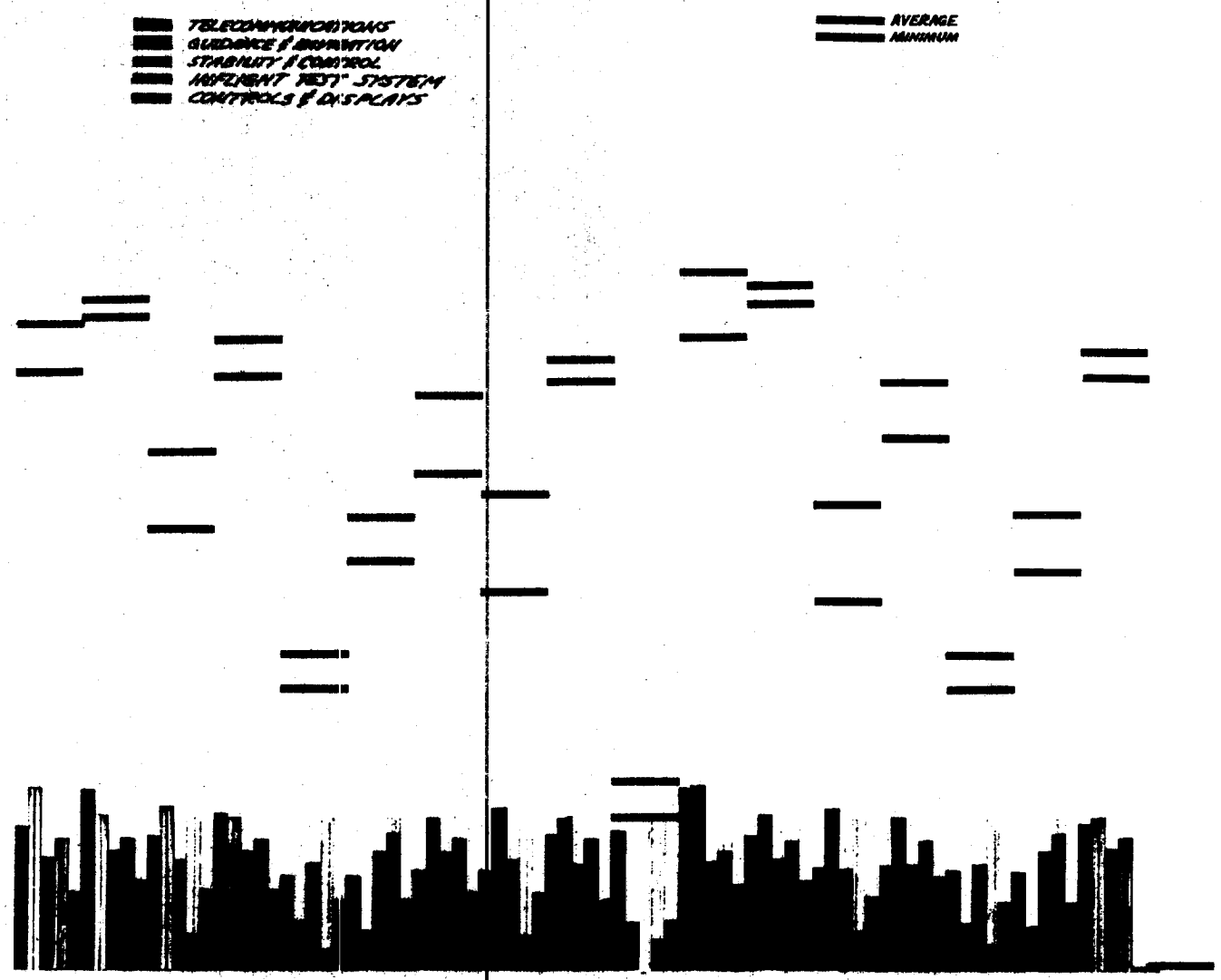

4-62 AP 13066-1R
S1B62-480

ELECTRONIC SYSTEMS POWER CONSUMPTION

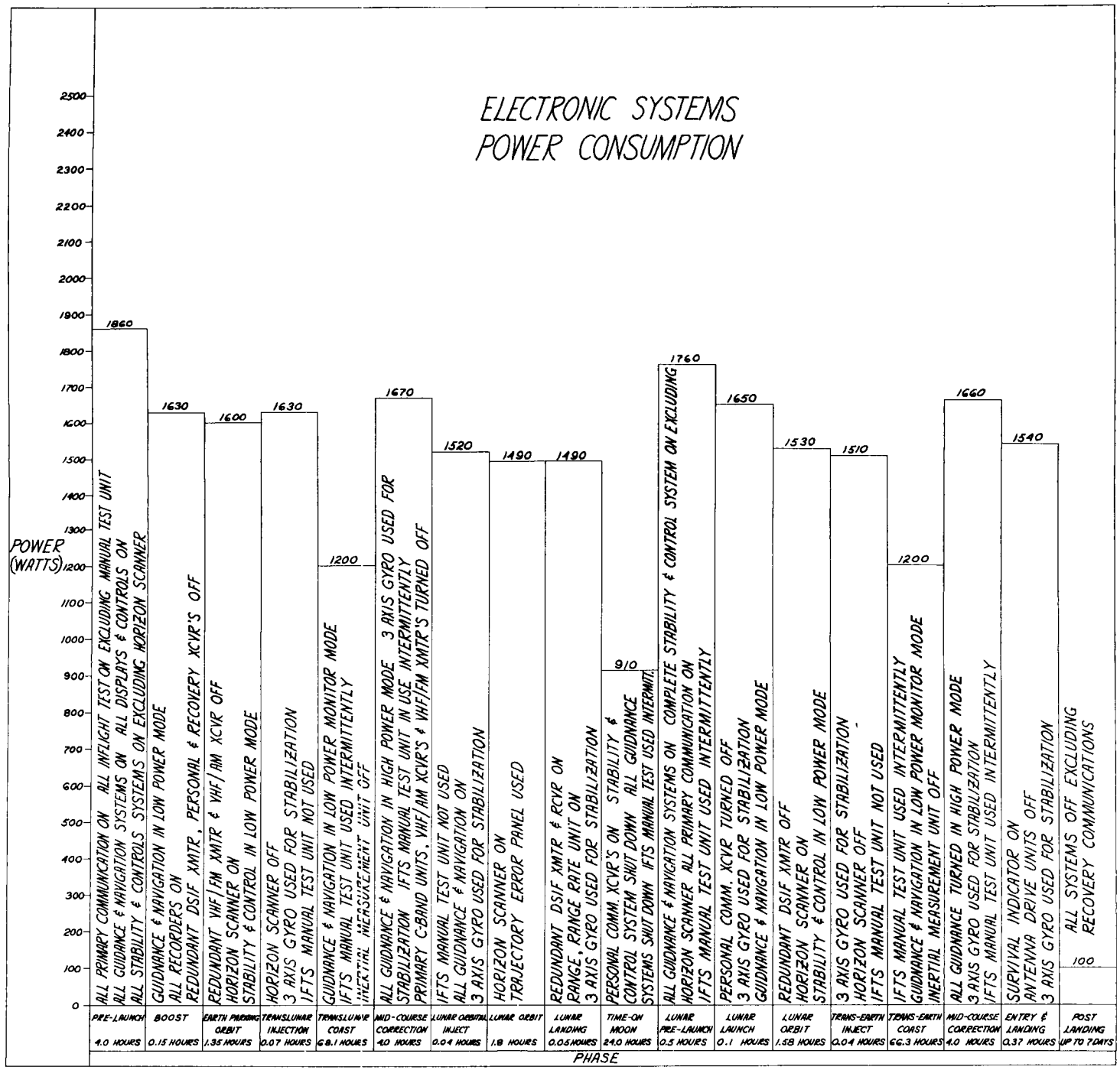

AVERAGE ELECTRICAL LOAD VS MISSION PHASE

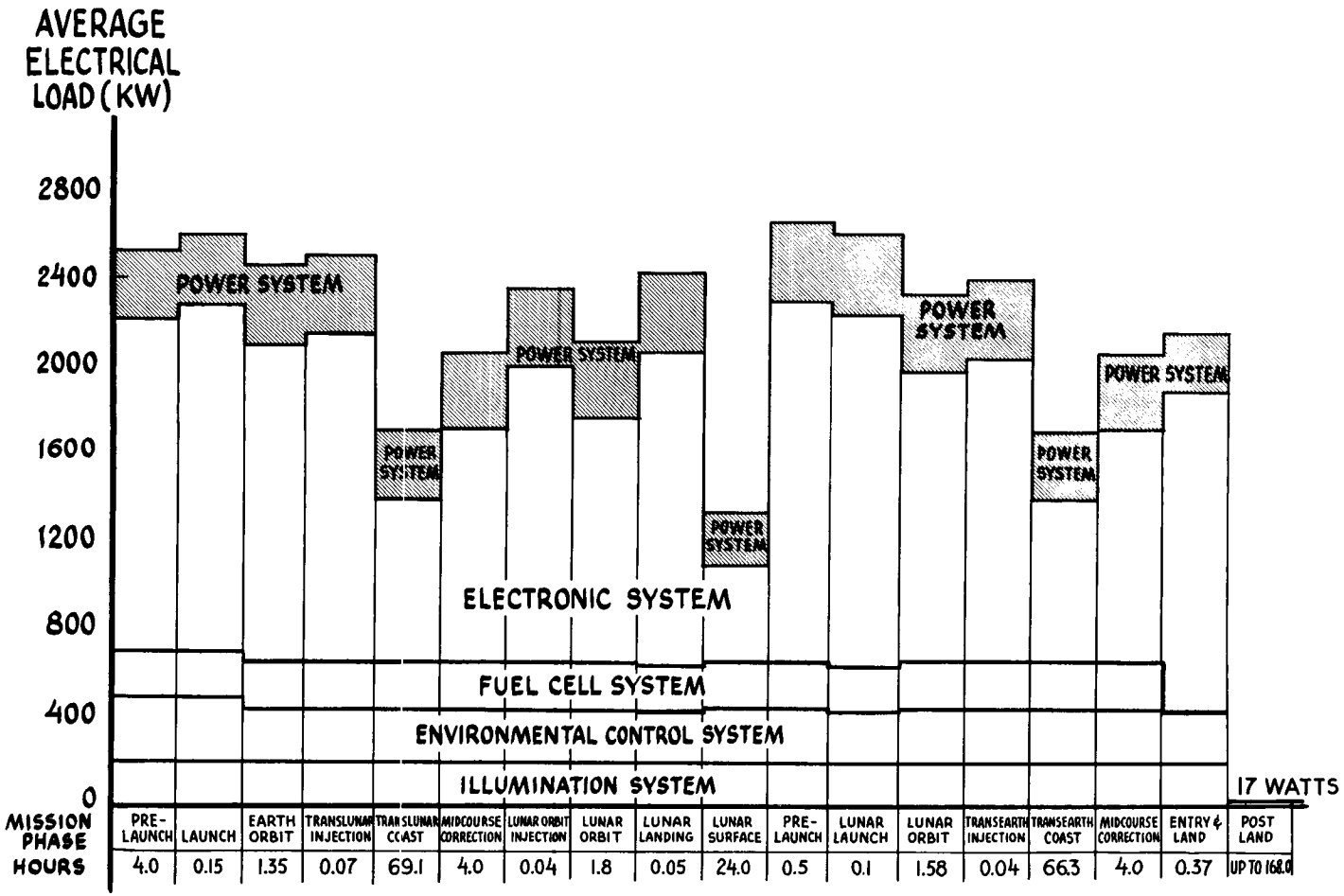

4-62 AP 11993
S1062-480

ELECTRICAL POWER SUMMARY

24-HR LUNAR STAY 174 HR TOTAL MISSION

PEAK POWER	— 2.815 KW
MIN POWER	— 1.245 KW
AVERAGE POWER	— 1.760 KW
TOTAL ENERGY	— 306 KW HR
FUEL CELL REACTANT WT	- 240 LB

7-DAY LUNAR STAY 336 HR TOTAL MISSION

PEAK POWER	— 2.815 KW
MIN POWER	— 1.245 KW
AVERAGE POWER	— 1.540 KW
TOTAL ENERGY	— 518 KW HR
FUEL CELL REACTANT WT	- 405 LB

EFFECT OF POWER CHANGES

POWER CHANGE	EFFECT
REDUCE AVERAGE BY 100W SAME PEAK & MIN	REDUCE FUEL CELL REACTANT WT BY 27 LB
REDUCE PEAK BY 300 W SAME AVERAGE & MIN	REDUCE FUEL CELL MODULE WT BY 48 LB
REDUCE PEAK BY 300 W REDUCE AVERAGE BY 100 W SAME MIN	REDUCE FUEL CELL REACTANT – 27 LB MODULE – 48 LB TOTAL 75 LB

WEIGHT CONTROL

- ESTABLISH OPTIMISTIC TARGET WEIGHT
- EXERCISE RIGID INTERIM WEIGHT CONTROL
- BASE PERFORMANCE ON TARGET PLUS SENSIBLE GROWTH FACTOR
- REALIZE EFFICIENT DESIGN

WEIGHT GROWTH EXPERIENCE

AIRCRAFT	PERCENT	REMARKS
X-15	8	7% EQUIP.
T-39	6	
F-107	10	
F-100	1	
XM-64	4	
INDUSTRY AVERAGE	8.6-14.2	JET FIGHTERS

4-62 AP 11996
S1D62-480

FUNCTIONS & RESPONSIBILITIES

- PREPARE ESTIMATES
- VENDOR WEIGHT CONTROL
- APPROVE LAYOUTS
- MONITOR DESIGN PROGRESS
- INVESTIGATIONS & TRADE-OFF STUDIES
- PERIODIC STATUS REPORTS

WEIGHT SUMMARY

	STATUS 10 MAR	STATUS 10 APR
COMMAND MODULE	8,125	8,125
SERVICE MODULE	(38,325)	(38,475)
BURN-OUT	8,595	8,650
PROPELLANT	29,730	29,825
LUNAR LAUNCH	46,450	46,600
LAUNCH ESCAPE	5,800	5,600
ADAPTER	700	700
TOTAL PAYLOADS	52,950	52,900

COMMAND MODULE

	STATUS 10 MAR	STATUS 10 APR
STRUCTURE	3670	
CREW SYSTEM	1228	
COMM & INSTR	944	
GUIDANCE & NAV	310	
STABILIZATION & CONTROL	175	
REACTION CONTROL	375	
ELECTRICAL POWER	321	
ENVIRONMENTAL CONTROL	368	
EARTH LANDING	484	
SCIENTIFIC EQUIPMENT	250	
COMMAND MODULE	8125	8125

4-62 AP 11988
S1062-480 (149)

SERVICE MODULE

	STATUS 10 MAR	STATUS 10 APR
STRUCTURE	2790	2810
COMM & INST	213	216
GUIDANCE & NAV	3	
REACTION CONTROL	674	674
ELECTRICAL POWER	902	871
ENVIRONMENTAL CONTROL	1290	1379
SEPARATION SYSTEM	23	
PROPULSION SYSTEM	2700	2700
PROPELLANT	29,730	29,825
SERVICE MODULE	38,325	38,475

4-62 AP 11989
S1062-480

LAUNCH ESCAPE SYSTEM

	STATUS 10 MAR	STATUS 10 APR
STRUCTURE	948	748
ELECTRICAL SYSTEM	15	15
PROPULSION SYSTEM		
MAIN THRUST	4397	4397
JETTISON	366	366
ATTITUDE CONTROL	74	74
LAUNCH ESCAPE SYSTEM	5800	5600

MERCURY SPEC CAPSULE ORBIT WT HISTORY

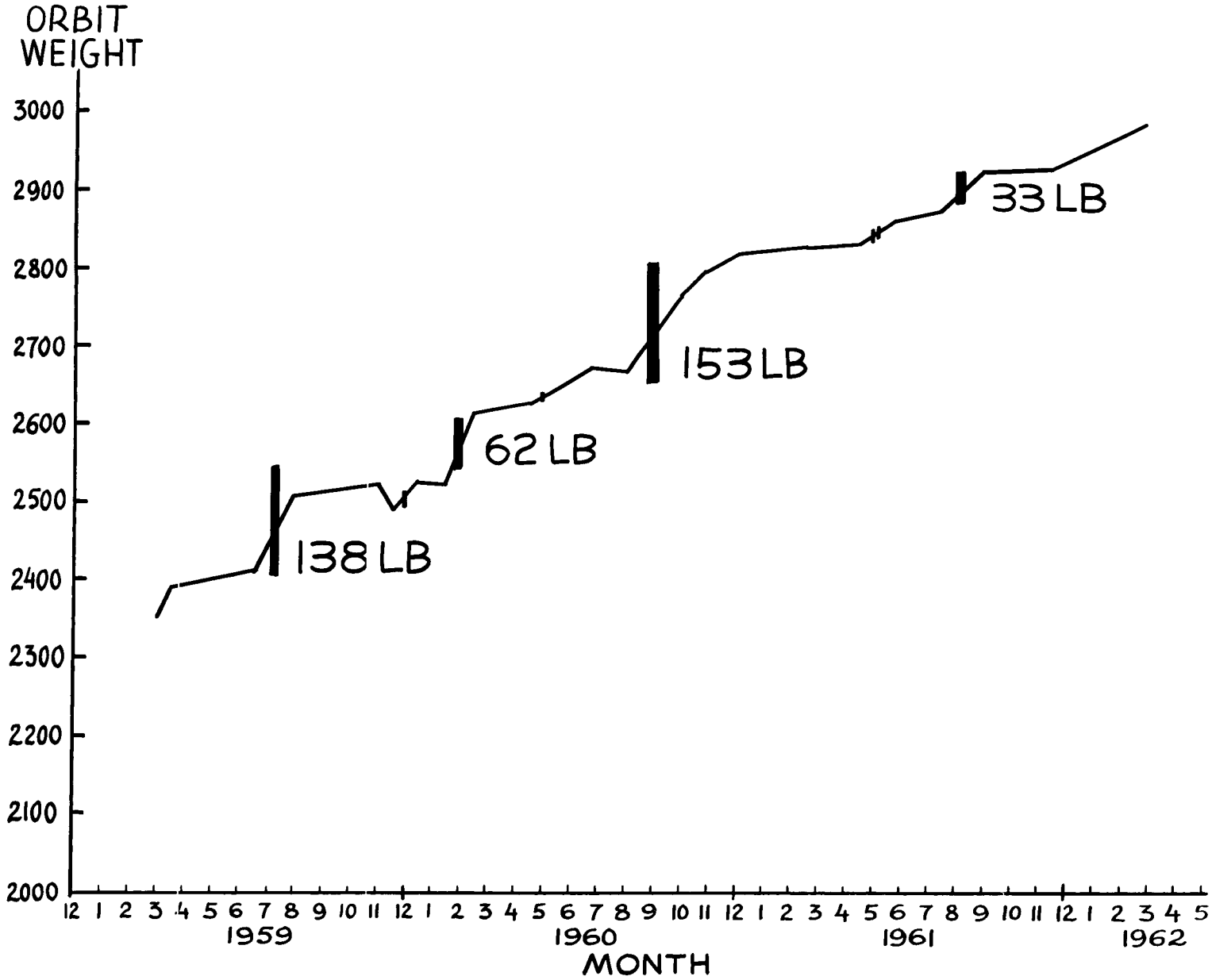

4-62 AP 13067
S1D62-480

SOME OF THE MAJOR DEVELOPMENT PROBLEM AREAS

DATE	DESCRIPTION	WT (LB)	
1-59 TO 6-59	ADDED POSIGRADES	50	
	VENDORS RE-EVALUATION	29	
	CIRCUITRY REVISION	59	
			138
1-60 TO 2-60	SHINGLE MODIFICATIONS	62	
			62
11-59 TO 7-61	IMPACT BAGS & BALLAST	153	
			153
7-61 TO 11-61	TELEMETRY INCREASE	11	
	INVERTER COOLING	9	
	INVERTER COOLING OUT	-9	
	ADD INSULATION	4	
	INVERTER COOLING DUCT	3	
	BALLAST	15	
			33
			336

4-62 AP 13068
S1062-480

WEIGHT ADDITION TO CYLINDRICAL SECTION

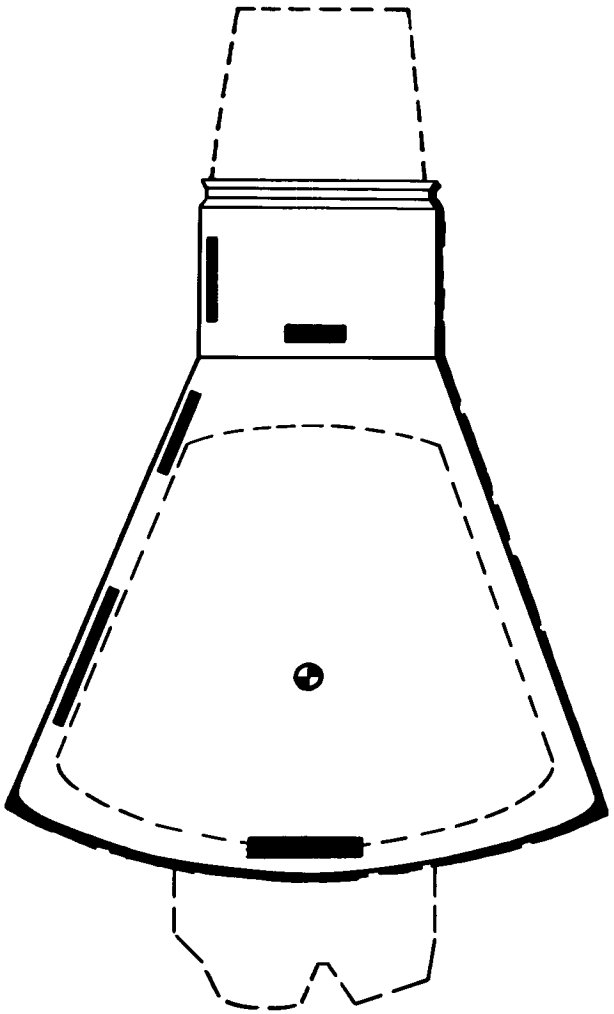

4-62 AP 13069
S1062-480

STRUCTURAL & EQUIPMENT INTEGRITY ASSURANCE

DATE	DESCRIPTION	WT (LB)
12-59	EQUIPMENT MODIFICATIONS	19
5-60	PARACHUTES	9
5-61	STRUCTURAL BEEF-UP	14
	BALLAST	15
		57

POTENTIAL DEVELOPMENT AREAS

HEAT PROTECTION - LEEWARD SIDE

METEOROID PROTECTION

RADIATION

EQUIPMENT DISTRIBUTION

BALLAST FOR L/D

WATER STABILITY

COMPOUNDING IN WEIGHT-DEPENDENT SYSTEMS

ANNUALLY RECURRING NORTHERN HEMISPHERE METEOR STREAMS

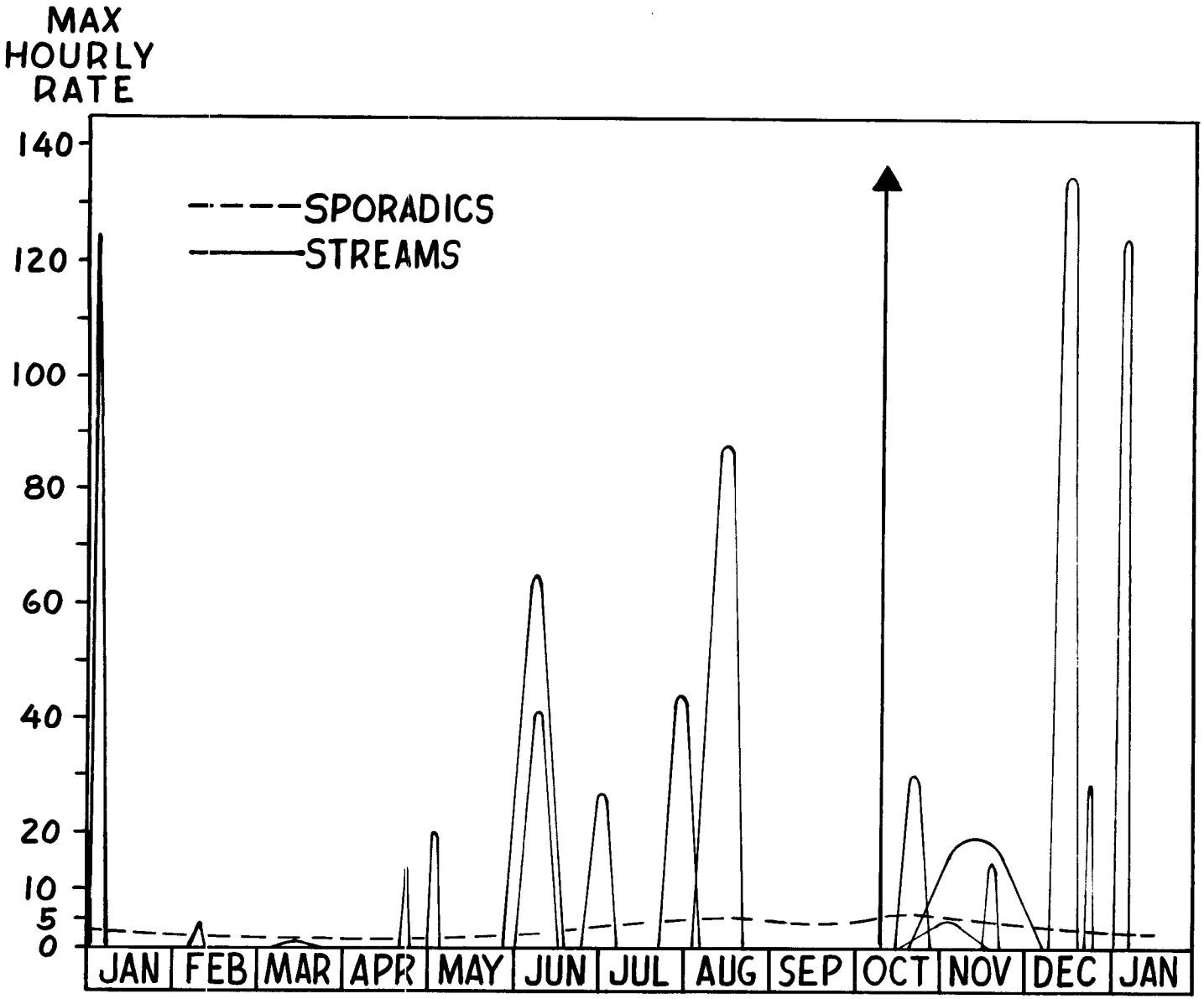

4-62 AP 13072
S1062-480

APOLLO
S/M-B

4-62 AP 13073 R
S1062-480 (154)

SERVICE MODULE STAGING

DOUBLE STAGE

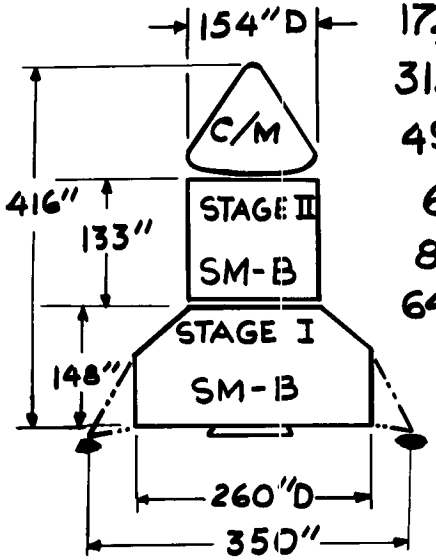

17,715 Lb- TRANSEARTH WT.- 19,800 Lb
31,665 Lb- PROPELLANT TAKE-OFF WT.- 35,500 Lb
49,380 Lb- LUNAR LAUNCH WT.- 55,300 Lb
6,260 Lb- LUNAR STAGED WT.- 2,300 Lb
8,570 Lb- PROPELLANT LANDING WT.- 12,400 Lb
64,210 Lb- LUNAR LANDING GROSS WT.- 70,000 Lb

SINGLE STAGE

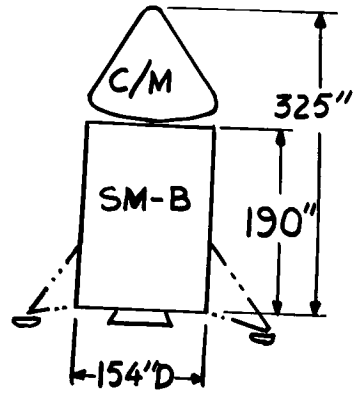

ADVANTAGES:

- LIGHTER OVERALL WEIGHT
- SHORTER ENGINE BURNING TIME
- PROTECTED LUNAR TAKE-OFF ENGINE
- LIGHTER LUNAR TAKE-OFF CONFIGURATION
- LITTLE CHANGE TO PRESENT PROGRAM
- LAUNCH PLATFORM FOR TAKE-OFF
- TAKE-OFF ENGINE NOT COMPLICATED BY LANDING REQUIREMENTS
- EXTENDED ABORT CAPABILITY

ADVANTAGES:

- NO STAGING REQUIRED
- SHORTER

RECOMMENDED:

DOUBLE STAGE SERVICE MODULE

4-62 AP 13074 R
S1062-480

CHANGES REQUIRED TO TRANSFORM A S/M-A TO A S/M-B STAGE II CONFIG.

PROPELLANT WEIGHT
(MAXIMUM CAPACITY)

S/M-A	S/M-B STAGE II
31,000 LB	32,285 LB

CHANGES REQUIRED:

47.85" NEW OUTSIDE RESERVOIR DIA (WAS 47")

230 LB ADDED WEIGHT AS FOLLOWS:

- 195 LB LARGER RESERVOIR
- 25 LB SUPPORTING STRUCTURE
- 10 LB ADDED ABLATIVE COOLING MATERIAL

SERVICE MODULE

	STATUS 10 MAR	SM-BII ESTIMATE
STRUCTURE	2,790	2,810
COMM & INSTR	216	216
REACTION CONTROL	674	674
ELECTRICAL POWER	902	902
ENVIRONMENTAL CONTROL	1,290	1,290
SEPARATION SYSTEM	23	28
PROPULSION SYSTEM	2,700	2,905
PROPELLANT	29,730	30,300
SERVICE MODULE	38,325	39,125

S/M-B STAGE ONE DESIGN GROUND RULES

PERFORMANCE REQUIREMENTS

- RETRO $\Delta V = 450$ fps
- MANEUVER & LAND $\Delta V = 1000$ fps

PAYLOAD (C/M + S/M_{II})

- $W_G = 49,380$ LB

COMPATIBLE WITH STAGE II

USE SIMILAR TECHNOLOGY & SYSTEMS

- ENGINE
- PROPELLANTS

— S/M-B STAGE TWO DESIGN GROUND RULES —

MINIMUM CHANGE TO S/M-A

MIN. ENGINE CHANGE

COMPATIBLE WITH LEM

- ADDED ΔV
- STOWAGE
- RENDEZVOUS & DOCKING-MECH ATTACH PROVISIONS

COMPATIBLE WITH C-1 21,700 LB TO ORBIT
C-5 87,000 LB TO ESCAPE

APOLLO LIFE SYSTEMS

PERSONAL PARACHUTES

SAFETY ADVANTAGES & ASPECTS

- PROBABILITY OF PARTIAL MISSION SUCCESS THROUGH ADDITIONAL CREW SURVIVAL CAPABILITY
- POSSIBLE IMPROVEMENT OF CREW MORALE
- MOTIVATIONAL IMPROVEMENT RESULTING FROM PERSONAL PARACHUTE DEMONSTRATION
- HUMAN PERFORMANCE OUTPUTS INCREASE DURING STRESSFUL REGIMES OF FLIGHT
- ASTRONAUT RECOMMENDATIONS

APOLLO LIFE SYSTEMS

CONSIDERATIONS

PERSONAL CHUTES

- 105 LB 3 CHUTES & CONTAINERS
- COMPROMISES CREW COMFORT
- COMPROMISES COUCH DESIGN
- COMPLICATES RESTRAINT-HARNESS DESIGN
- ONLY 46 SEC TO S L IMPACT
- POSSIBLE MORALE BOOST FOR ASTRONAUTS
- MAY BE USELESS DUE TO:
  PHYSICAL STATE OF ASTRONAUTS
  CAPSULE TUMBLING

NO PERSONAL CHUTES

- WEIGHT SAVINGS - APPLY SOME TO C/M CHUTE REDUNDANCY
- COMFORTABLE & SIMPLE SEAT
- SIMPLER RESTRAINT DESIGN
- NO ADDITIONAL DEVELOPMENT COSTS

4-62 AP 11872
S1D62-480

APOLLO LIFE SYSTEMS

C/M DESCENT RATES

DESCENT IN FEET PER SECOND

ALTITUDE

NO. OF C/M CHUTES	0	1	2	3
SEA LEVEL	240	36.5	26.3	21.9
5,000 FT	240	39.2	28.3	23.6
10,000 FT	260	42.7	31.7	25.6

FATALITY

PROBABLE INJURY

4-62 AP 11871
S1062-480

APOLLO LIFE SYSTEMS

BAILOUT PROCEDURE

40,000′ DROGUE CHUTE OPEN

15,000′ MAIN CHUTES OPEN

13,000′ DETECT COMPLETE FAILURE OF THE 3 MAIN CHUTES

NORMAL DESCENT 418 SEC

FREE FALL TO SL 46 SEC

?

1. DECISION TO BAILOUT
2. BLOW HATCHES & CUT C/M CHUTE RISERS
3. RELEASE SUIT ECS CONNECTORS
4. RELEASE RESTRAINT HARNESS
5. ROLL OVER & CLIMB TO HATCH
6. ASSUME BAILOUT CROUCH IN HATCH OPENING
7. JUMP !!! GERONIMO---------

? PERSONAL CHUTES OPEN

? IMPACT

4-62 AP 11869
SID62-480

APOLLO LIFE SYSTEMS

AVAILABLE TIME TO USE PERSONAL CHUTE

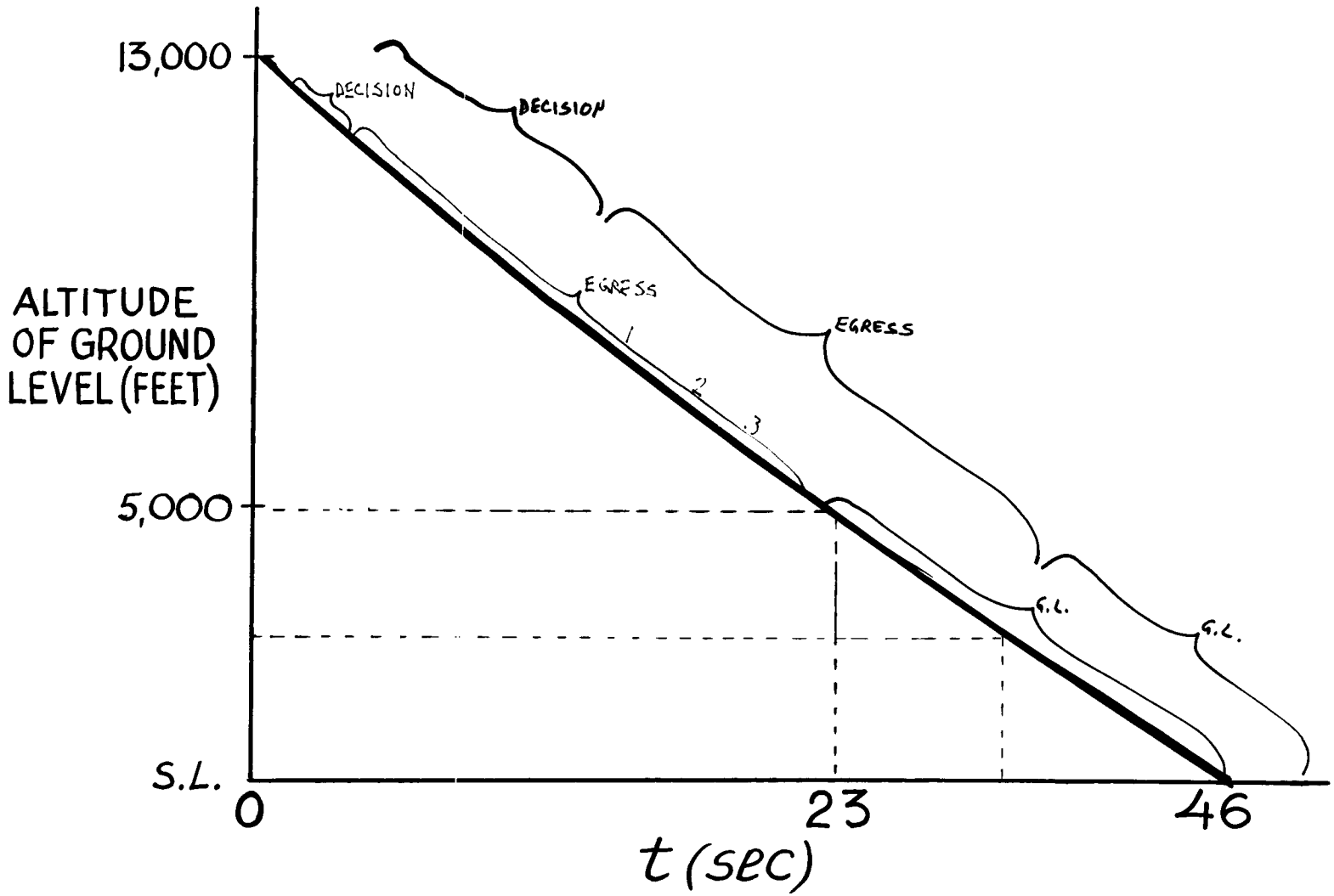

4-62 AP 11870
S1D62-480