~~CONFIDENTIAL~~

Z65·11328

Accession No. 51496

SID 62-99-23

10

MONTHLY WEIGHT AND BALANCE REPORT

FOR THE APOLLO SPACECRAFT

CONTRACT NAS 9-150

(U)

PARAGRAPH 5.1, EXHIBIT I

1 JANUARY 1964

Prepared by

Weight Control

CLASSIFICATION CHANGE

To UNCLASSIFIED

By authority of GDS-E0 11652

Changed by L. Shirley Date 12/31/72

Classified Document Master Control Station, NASA

Scientific and Technical Information Facility

This document contains information affecting the national defense of the United States within the meaning of the Espionage Laws, Title 18 U. S. C. Section 793 and 794. Its transmission or revelation of its contents in any manner to an unauthorized person is prohibited by law.

[redacted]

NORTH AMERICAN AVIATION, INC.

SPACE and INFORMATION SYSTEMS DIVISION

~~CONFIDENTIAL~~

~~CONFIDENTIAL~~

TABLE OF CONTENTS

	ITEM	PAGE
I.	INTRODUCTION	1
II.	MISSION WEIGHT, CENTER OF GRAVITY AND INERTIA SUMMARY	
	Apollo Lunar Orbital Rendezvous Mission	2
	Apollo Earth Orbit Mission	3
	Apollo Launch Abort Configuration	4
	Command Module Weight, Center of Gravity and Inertia	
	LOR Mission	5
	High Altitude Abort Condition	6
	Low Altitude Abort Condition	7
	Apollo Vehicle Dimensional Diagram	8
III.	CURRENT WEIGHT STATUS	
	Spacecraft Weight Status Summary	9
	Command Module Weight Status	10
	Command Module Airframe Changes	11 - 12
	Service Module Weight Status	13
	Launch Escape System Weight Status	14
	Launch Escape System Airframe Changes	15
	Adapter Weight Status	16
	Adapter Airframe Changes	17
IV.	ESTIMATED WEIGHT CHANGES TO LOR	
	Command Module LOR Changes	18 - 20
	Service Module LOR Changes	21
	Launch Escape System LOR Changes	22
	Adapter LOR Changes	23
V.	WEIGHT HISTORY	24 - 29
VI.	POTENTIAL WEIGHT AND C.G. CHANGES	30-32
VII.	SPACECRAFT DETAIL WEIGHT STATEMENT	33-57

~~CONFIDENTIAL~~

~~CONFIDENTIAL~~

INTRODUCTION

The January report is the second report utilizing the current Airframe 011 drawing release as a basis. The current weight status summarizes the changes from the previous Airframe 011 weight, and incorporates the estimated changes for the LOR Mission Spacecraft. This format allows weight status reporting consistent with airframe drawing release and continuous updating of the estimated LOR changes.

The current report reflects a spacecraft decrease of 75 pounds at injection and 30 pounds at the injected spacecraft condition less Service Module propellant. The current injected weight of 85,240 pounds is based on a Service Module loaded with sufficient propellant at a specific impulse of 313.0 to provide 10 per cent $\triangle$ V margin. This is based on a LEM weight, including crew, of 25,000 pounds.

The major change in the Command Module was due to an increase in the Communication System based on the current Collins status.

There were no changes to the Airframe Service Module, however, the Service Module estimates for the LOR Mission were revised by the deletion of the VHF requirement from the rendezvous radar installation.

The major changes in the Launch Escape System were due to a redesign in the aerodynamic flap, a revised estimate for the electrical wiring and an increase in ballast consistent with the combined Launch Escape and Command Module balance requirements.

The Earth Orbital Mission Weight Summary reflects a two stage Booster-to-Orbit injection without the use of Service Module propulsion and is based on a complete Service Module loaded with 2420 pounds of de-boost propellant. The Earth Orbit weight reported limits the orbital altitude capability with the Saturn I booster to 79.3 nautical miles. To obtain the 100 nautical orbital altitude with the Saturn I booster requires off loading the Command Module and Service Module.

~~CONFIDENTIAL~~

APOLLO LOR MISSION

WEIGHT, CENTER OF GRAVITY AND INERTIA SUMMARY

ITEM	WEIGHT POUNDS	CENTER OF GRAVITY*			MOMENTS OF INERTIA (SLUG-FT.^{2})		
		X	Y	Z	ROLL (X)	PITCH (Y)	YAW (Z)
COMMAND MODULE	9790	1043.9	-0.3	7.2	4492	4067	3818
SERVICE MODULE - Less Propellant	9910	907.9	0.2	0.1	6357	10585	10398
TOTAL - Less Propellant	19700	975.5	0.0	3.5	10906	34370	33878
PROPELLANT - S/M**	37680	906.2	5.3	-2.2	19397	20037	26859
TOTAL - With Propellant	57380	930.0	3.5	-0.2	30474	67903	74220
LUNAR EXCURSION MODULE	24460	623.0	-0.1	1.4	13616	12776	13247
ADAPTER - LEM - C-5	3400	642.7	0.0	0.0	8370	12271	12271
TOTAL - Injected	85240	830.4	2.3	0.2	52521	468743	475573
LAUNCH ESCAPE SYSTEM	7205	1294.0	0.0	-0.3	286	12429	12432
TOTAL - SPACECRAFT LAUNCH	92445	866.6	2.1	0.2	52816	789314	796154

NOTES: *Centers of gravity are in the NASA reference system except that the longitudinal axis has an origin 1000 inches below the tangency point of the command module substructure mold line.

**The propellant weight of 37680 pounds provides approximately 10% $\triangle$ V margin, and is determined from an estimated time line analysis. The propellant weight is based on a specific impulse of 313.0.

APOLLO EARTH ORBIT MISSION

WEIGHT, CENTER OF GRAVITY AND INERTIA SUMMARY

ITEM	WEIGHT POUNDS	CENTER OF GRAVITY*			MOMENTS OF INERTIA (SLUG-FT.^{2})		
		X	Y	Z	ROLL (X)	PITCH (Y)	YAW (Z)
COMMAND MODULE	9790	1043.9	-0.3	7.2	4492	4067	3818
SERVICE MODULE - Less Propellant	9910	907.9	0.2	0.1	6357	10585	10398
TOTAL - Less Propellant	19700	975.5	0.0	3.5	10906	34370	33878
PROPELLANT - S/M**	2420	848.9	27.3	-11.5	806	438	556
TOTAL - With Propellant	22120	961.6	2.9	1.9	12164	42367	42236
ADAPTER - C-1	885	778.5	-0.3	-0.5	1058	868	820
TOTAL - Injected	23005	954.6	2.8	1.8	13225	49396	49219
LAUNCH ESCAPE SYSTEM	7205	1294.0	0.0	-0.3	286	12429	12432
TOTAL - Spacecraft Launch	30210	1035.5	2.1	1.3	13526	198083	198083

NOTES: *Centers of gravity are in the NASA reference system except that the longitudinal axis has an origin 1000 inches below the tangency point of the Command Module substructure mold line.

**The earth orbital weights are based on a complete service module and includes 2420 pounds of propellant for an orbital altitude of about 79.3 nautical miles with a payload launch azimuth of 72°.

APOLLO LAUNCH ABORT CONFIGURATION

WEIGHT, CENTER OF GRAVITY AND INERTIA SUMMARY

ITEM	WEIGHT POUNDS	CENTER OF GRAVITY*			MOMENTS OF INERTIA (SLUG-FT.^{2})		
		X	Y	Z	ROLL (X)	PITCH (Y)	YAW (Z)
COMMAND MODULE	9790	1043.9	-0.3	7.2	4492	4067	3818
LAUNCH ESCAPE SYSTEM	7205	1294.0	0.0	-0.3	286	12429	12432
TOTAL - Launch Abort	16995	1149.9	-0.2	4.0	4829	72582	72286
LESS - MAIN AND PITCH MOTOR PROPELLANTS	-3210	1296.5	0.0	0.0	-69	-1330	-1330
TOTAL - LES Burnout	13785	1115.8	-0.2	5.0	4746	52887	52605

NOTE: *Centers of gravity are in the NASA reference system except that the longitudinal axis has an origin 1000 inches below the tangency point of the command module substructure mold line.

COMMAND MODULE

WEIGHT, CENTER OF GRAVITY AND INERTIA SUMMARY

LUNAR ORBIT RENDEZVOUS MISSION

VEHICLE MODE	WEIGHT POUNDS	CENTER OF GRAVITY			MASS INERTIA DATA (SLUG-FT.^{2})					
		X	Y	Z	Ixx	Iyy	Izz	Ixy	Ixz	Izy
COMMAND MODULE, LAUNCH	9790	1043.9	-0.3	7.2	4492	4067	3818	8	-227	-29
ADJUSTMENTS (NET)	-71									
Boost & Mission Coolants										
Food & Water Consumption										
Mission Waste Pickup										
Fuel Cell Water Pickup										
Docking Provisions										
Ablator B/O, Boost										
PRIOR TO ENTRY	9719	1042.8	-0.3	7.4	4483	3986	3729	21	-238	-22
Less: Propellant	-135	1022.6	-15.7	56.0						
Ablator Burnoff	-240	1024.4	0.0	12.5						
Entry Coolant	-6	1022.6	-63.4	-16.4						
Forward Heat Shield	-336	1098.3	-0.1	3.4						
Drogue Chutes	-50	1090.0	0.0	-22.0						
PRIOR TO MAIN CHUTE DEPLOYMENT	8952	1041.3	0.0	6.9	4135	3449	3251	11	-175	-12
Less: Main Chutes (3)	-461	1089.9	0.3	6.7						
Propellant	-135	1022.6	-5.5	57.2						
LANDING	8356	1038.9	-0.1	6.1	3982	3099	2925	12	-151	-23

NOTE: Mass inertia data is shown for accumulative totals only.

COMMAND MODULE + LEV

WEIGHT, CENTER OF GRAVITY AND INERTIA SUMMARY

HIGH ALTITUDE ABORT CONDITION

VEHICLE MODE	WEIGHT POUNDS	CENTER OF GRAVITY			MASS INERTIA DATA (SLUG-FT.^{2})					
		X	Y	Z	Ixx	Iyy	Izz	Ixy	Ixz	Iyz
COMMAND MODULE LAUNCH	9790	1043.9	-0.3	7.2	4492	4067	3818	8	-227	-29
Boost Cover	175	1100.7	0.0	0.0						
LEV Tower	577	1141.1	0.0	-2.4						
C/M, TOWER & COVER	10542	1050.2	-0.3	6.6	4621	5518	5258	12	-349	-30
Less: Boost Coolant	-4	1022.6	-63.4	-16.4						
Tower Insulation B/O	-104	1142.0	0.0	0.0						
Ablator Burnoff, Boost	-54	1032.8	0.0	10.9						
C/M, ABORT PHASE	10380	1049.3	-0.3	6.6	4542	5259	4996	10	-335	-31
Less: Propellant	-135	1022.6	-15.7	56.0						
Entry Coolant	-6	1022.6	-63.4	-16.4						
LEV Tower (A_t B/O)	-473	1140.9	0.0	-2.9						
Boost Cover	-175	1100.7	0.0	0.0						
Forward Heat Shield	-336	1098.3	-0.1	3.4						
Docking Provisions	-100	1110.0	0.0	0.0						
Drogue Chutes	-50	1090.0	0.0	-22.0						
PRIOR TO MAIN CHUTE DEPLOYMENT	9105	1041.3	0.0	6.9	4245	3552	3352	-4	-159	-21
Less: Main Chutes (3)	-461	1089.9	0.3	6.7						
Propellant	-135	1022.6	-5.5	57.2						
LANDING	8509	1039.0	-0.1	6.1	4092	3202	3026	-3	-135	-32

NOTE: Mass inertia data is shown for accumulative totals only.

COMMAND MODULE

WEIGHT, CENTER OF GRAVITY AND INERTIA SUMMARY

LOW ALTITUDE ABORT CONDITION

VEHICLE MODE	WEIGHT POUNDS	CENTER OF GRAVITY			MASS INERTIA DATA (SLUG-FT.^{2})					
		X	Y	Z	Ixx	Iyy	Izz	Ixy	Ixz	Izy
COMMAND MODULE, LAUNCH	9790	1043.9	-0.3	7.2	4492	4067	3818	8	-227	-29
Less: Oxidant	-180	1022.6	15.6	62.4						
Forward Heat Shield	-336	1098.3	-0.1	3.4						
Docking Provisions	-100	1110.0	0.0	0.0						
Drogue Chute	-50	1090.0	0.0	-22.0						
PRIOR TO MAIN CHUTE DEPLOYMENT	9124	1041.3	-0.6	6.5	4277	3532	3396	19	-145	-62
Less: Main Chutes (3)	-461	1089.9	0.3	6.7						
Fuel	-90	1022.6	-46.5	44.9						
LANDING	8573	1038.9	-0.2	6.1	4157	3230	3062	-1	-134	-29

NOTE: Mass inertia data is shown for accumulative totals only.

~~CONFIDENTIAL~~

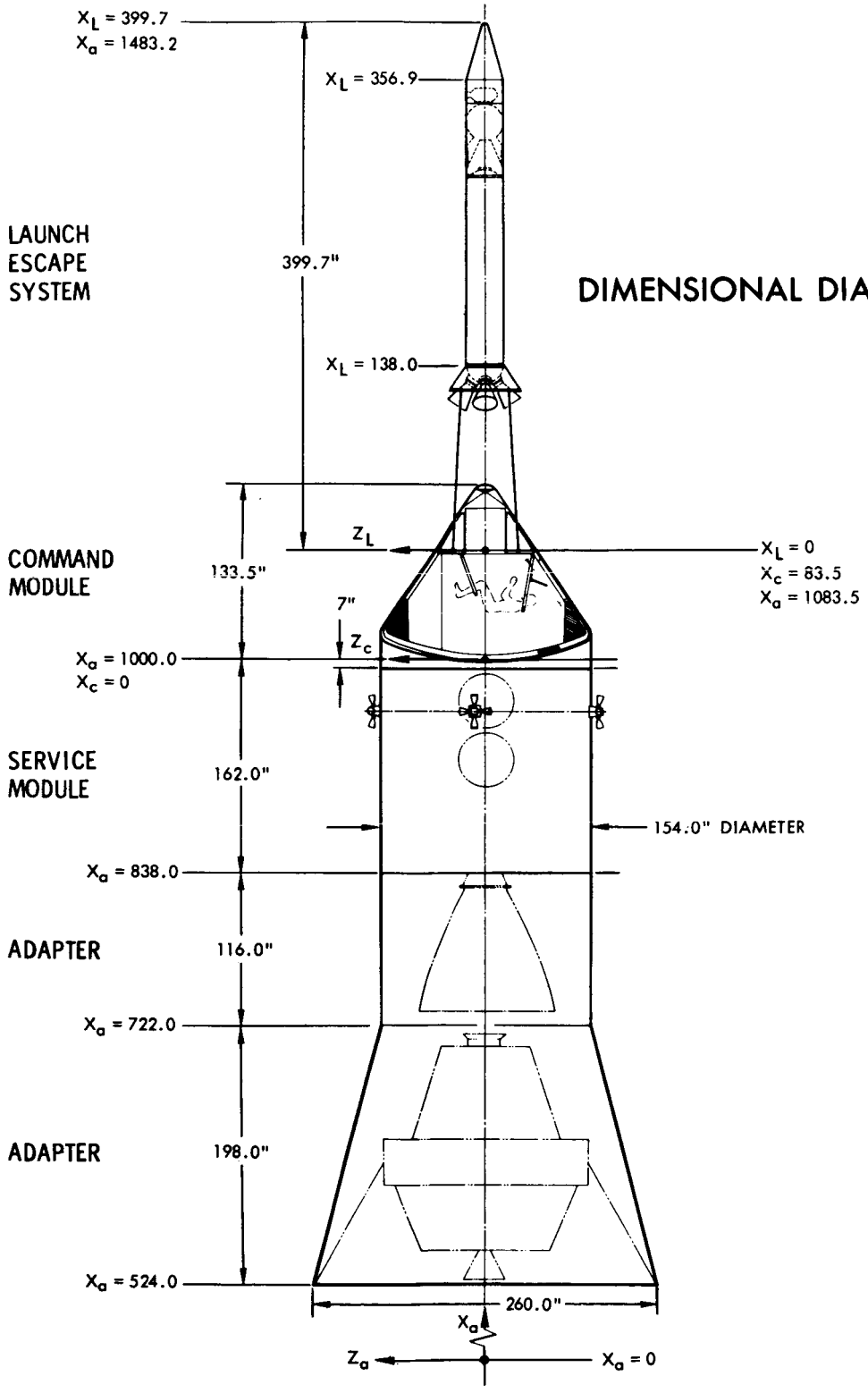

DIMENSIONAL DIAGRAM

~~CONFIDENTIAL~~

SPACECRAFT

WEIGHT STATUS SUMMARY

(LESS LEM)

ITEM	PREVIOUS AFRM 011 STATUS 12-1-63	CHANGE TO CURRENT AFRM	CURRENT AFRM 011 WEIGHT 1-1-64	ESTIMATED CHANGES TO LOR	CURRENT LOR WEIGHT 1-1-64	BASIS FOR CURRENT LOR STATUS		
						%EST	%CAL	%ACT
COMMAND MODULE	9920	+20	9940	-150	9790	51	47	2
SERVICE MODULE - B/O	9750		9750	+160	9910	20	73	7
LES	7100	-5	7095	+110	7205	40	51	9
ADAPTER	830	+55	885	+2515	3400	100		
TOTAL LESS PROPELLANT	27600	+70	27670	+2635	30305	44	51	5
LOR PROPELLANT	-	-	-	-	37680		100	
GROSS WEIGHT	-	-	-	-	67985	19	79	2

INJECTED SPACECRAFT

WEIGHT STATUS

ITEM	PREVIOUS LOR STATUS 12-1-63	CHANGE TO CURRENT	CURRENT LOR STATUS 1-1-64
COMMAND MODULE	9770	+20	9790
SERVICE MODULE	9960	-50	9910
ADAPTER	3400		3400
LEM	24460		24460
TOTAL S/C Injected Less Propellant	47590	-30	47560
PROPELLANT	37725	-45	37680
TOTAL INJECTED WEIGHT	85315	-75	85240

~~CONFIDENTIAL~~

COMMAND MODULE WEIGHT STATUS

ITEM	PREVIOUS AFRM 011 STATUS 12-1-63	CHANGE TO CURRENT AFRM	CURRENT AFRM 011 WEIGHT 1-1-64	ESTIMATED CHANGES TO LOR	CURRENT LOR WEIGHT 1-1-64	BASIS FOR CURRENT LOR STATUS		
						% EST	% CAL	% ACT
Structure	(4738)	(+9)	(4747)	(-66)	(4681)			
Structure - Less Ablator	3385	+9	3394	+14	3408	15	85	
Ablation Material	1353		1353	-80	1273	100		
Crew Systems	298		298		298	99	1	
Communications	392	+17	409	-9	400	92	8	
Instrumentation	480	+1	481	-305	176	100		
Controls and Displays	288	-3	285	+3	288	92	8	
Guidance and Navigation	420	+2	422		422	100		
Stabilization and Control	213	+1	214	-10	204	100		
Reaction Control	327		327		327	85	15	
Electrical Power	499		499		499	86	14	
Environmental Control	297		297	-4	293	48	52	
Earth Landing	663	-7	656		656	12	63	25
WEIGHT EMPTY	8615	+20	8635	-391	8244	54	44	2
Crew (3), (50, 70, 90 percentile)	528		528		528		100	
Crew System Equipment	270		270	-9	261	93	3	4
Food and Containers	80		80		80	100		
Reaction Control Propellant	270		270		270		100	
Environmental Control Chemicals	157		157		157		100	
Scientific Payload				+250	250	100		
GROSS WEIGHT	9920	+20	9940	-150	9790	51	47	2

[redacted]

~~CONFIDENTIAL~~

COMMAND MODULE

CURRENT AIRFRAME WEIGHT EMPTY CHANGES

STRUCTURE	(+9.0)
Increase inner to outer attach structure in the heat shield equipment area due to revised abort load analysis requiring additional structure at each of 15 attach locations.	+9.0
COMMUNICATIONS	(+17.0)
Increase S-band transponder due to calculation of wiring circuitry required to meet Apollo performance in lieu of estimated data.	+5.9
Increase S-band power amplifier due to current calculations reflecting additional components not previously listed in Collins estimates.	+3.5
Increase Signal Conditioner due to addition of heat sink material required by revised packaging, power supply and wiring weight estimates.	+7.6
INSTRUMENTATION	(+1.0)
Increase PCM equipment due to current Collins information reflecting calculated data in lieu of estimated.	+1.0
CONTROLS AND DISPLAYS	(-3.0)
Decrease MIT Navigator Display and control due to utilizing calculated data in lieu of estimated data.	-1.4
Decrease Manual Rotational Controls due to incorporating Minneapolis Honeywell data reflecting partial actual weights.	-1.6
GUIDANCE AND NAVIGATION	(+2.0)
Increase MIT components due to utilizing calculated data in lieu of estimated data.	+2.0
STABILIZATION AND CONTROL	(+1.0)
Increase ECA packages based on current Honeywell data reflecting partial actual weights.	+1.0

~~CONFIDENTIAL~~

~~CONFIDENTIAL~~

COMMAND MODULE

CURRENT AIRFRAME WEIGHT EMPTY CHANGES

EARTH LANDING SYSTEM		(-7.0)
Decrease the parachute system due to incorporating the Northrop status reflecting the following:		-10.2
Increase in drogue chute system due to adding a protective cover to the drogue chute risers as the risers may be burned by coming into contact with structure heated during entry.	+2.5	
Increase in drogue chute system due to adding a guide ring to the drogue mortar to prevent cutting the risers.	+7.8	
Increase in pilot chute system due to adding a protective cover to the pilot chute risers as the risers may be burned by coming in contact with structure heated during entry.	+1.4	
Decrease in main cluster due to redesigning main harness assembly to eliminate legs and links which were used between the suspension lines and the clevis.	-21.9	
Increase forward heat shield release system due to incorporating calculated weights from released drawings in lieu or pre-released drawings.		+3.2
TOTAL COMMAND MODULE CURRENT AIRFRAME WEIGHT EMPTY CHANGES		+20.0

~~CONFIDENTIAL~~

SERVICE MODULE WEIGHT STATUS

ITEM	PREVIOUS AFRM 011 STATUS 12-1-63	CHANGE TO CURRENT AFRM	CURRENT AFRM 011 WEIGHT 1-1-64	ESTIMATED CHANGES TO LOR	CURRENT LOR WEIGHT 1-1-64	BASIS FOR CURRENT LOR STATUS		
						% EST	% CAL	% ACT
Structure	2250		2250	+40	2290	11	74	15
Electronics	181		181	+120	301	100		
Reaction Control	580		580		580	61	39	
Electrical Power	1384		1384		1384	13	60	27
Environmental Control	87		87		87	19	77	4
Propulsion System	(3038)		(3038)		(3038)			
Engine Installation	715		715		715	82	18	
Propulsion System	2323		2323		2323	13	87	
WEIGHT EMPTY	7520		7520	+160	7680	26	65	9
RCS Propellant	838		838		838		100	
Electrical Power Super. Fluids	503		503		503		100	
Environmental Contr. Super. Fluids	208		208		208		100	
Main Propulsion Helium	99		99		99		100	
Main Propellant Residuals	(582)		(582)		(582)		100	
Trapped - System	225		225		225			
Trapped - Engine	67		67		67			
Mixture Ratio Tolerance	100		100		100			
Loading Tolerance	190		190		190			
BURNOUT WEIGHT	9750		9750	+160	9910	20	73	7
Main Propellant	-		-		37680		100	
GROSS WEIGHT	-		-		47590	4	95	1

~~CONFIDENTIAL~~

LAUNCH ESCAPE SYSTEM

WEIGHT STATUS

ITEM	PREVIOUS AFRM 011 STATUS 12-1-63	CHANGE TO CURRENT AFRM	CURRENT AFRM 011 WEIGHT 1-1-64	ESTIMATED CHANGES TO LOR	CURRENT LOR WEIGHT 1-1-64	BASIS FOR CURRENT LOR STATUS		
						% EST	% CAL	% ACT
Structure	1083	-52	1031		1031	9	75	16
Electrical System	58	+43	101		101	100		
Propulsion System								
Main Thrust	4764	+3	4767		4767	40	60	
Jettison	434		434		434			100
Jettison Motor Skirt	92		92		92			100
Pitch Control	55	-8	47		47	60	40	
Separation Provisions	49		49		49	61	39	
C/M Boost Prot. Cover				+175	175	100		
LES - NO BALLAST	6535	-14	6521	+175	6696	35	55	10
BALLAST	565	+9	574	-65	509	100		
TOTAL L.E.S.	7100	-5	7095	+110	7205	40	51	9

~~CONFIDENTIAL~~

~~CONFIDENTIAL~~

LAUNCH ESCAPE SYSTEM

CURRENT AIRFRAME CHANGES

STRUCTURE	(-52)
Decrease tower assembly due to revising the aerodynamic flap to a more efficient shape with reduced area.	-32
Decrease tower insulation due to utilizing Avcoat 5026-39 in lieu of Buna "N" insulation in conjunction with the flap redesign.	-19
PROPULSION	(-5)
Increase escape motor due to the addition of a dessicant pack to maintain the desired humidity.	+3
Decrease pitch motor due to the incorporation of a 1700 lb.-sec. specific impulse pitch motor in lieu of 3000 lb.-sec. version.	-8
BALLAST	(+9)
Increase ballast consistent with current Command Module and LES balance requirements.	+9
ELECTRICAL POWER	(+43)
Increase electrical wiring due to revised estimate based on current design.	+43
TOTAL LAUNCH ESCAPE SYSTEM CURRENT AIRFRAME WEIGHT CHANGES	-5

~~CONFIDENTIAL~~

ADAPTER

WEIGHT STATUS

ITEM	PREVIOUS AFRM 011 STATUS 12-1-63	CHANGE TO CURRENT AFRM	CURRENT AFRM 011 WEIGHT 1-1-64	ESTIMATED CHANGE TO LOR	CURRENT LOR WEIGHT 1-1-64	BASIS FOR CURRENT LOR STATUS		
						% EST	% CAL	% ACT
Structure	715	-6	709	+2333	3042			
Electrical	20		20	+50	70			
Separation System	95	+61	156	+132	288			
TOTAL ADAPTER	830	+55	885	+2515	3400	100		

~~CONFIDENTIAL~~

ADAPTER

CURRENT AIRFRAME WEIGHT CHANGES

STRUCTURE	(-6)
Decrease honeycomb face sheets based on refined design analysis.	-6
SEPARATION SYSTEM	(+61)
Increase separation system based on current layouts which reflect test results that increase the number of grains required to sever the honeycomb panels.	+61
TOTAL ADAPTER CURRENT AIRFRAME WEIGHT CHANGES	+55

~~CONFIDENTIAL~~

~~CONFIDENTIAL~~

COMMAND MODULE

CURRENT LOR WEIGHT EMPTY CHANGES

STRUCTURE	(-66)
Eliminate the heat shield substructure face sheet pads (scar weight) provided on the first few spacecrafts for designs that were not consummated (strakes, plugs, vents, etc.).	-26
Analyze structure design in detail based on a refinement of loading conditions, as the original design was accomplished on an extremely tight schedule utilizing a minimum of loads and equipment information.	-40
Incorporate a boost protection cover over the Command Module nose to be jettisoned with the Launch Escape System tower. This would allow the ablative material thickness on the nose to be reduced.	-30
Reduce the spacecraft temperature criteria from 250°F to 200°F. A saving of approximately one pound of ablative material can be removed for every degree reduction at start of entry.	-50
Refine secondary structure design by additional machining of extrusions utilized in coldplate closeouts, alternate materials, and a reduction of supports for scientific equipment.	-60
Reduce heat shield window glass thickness from 0.70 inch to 0.55 inch based on a more detailed thermal and structural analysis.	-10
Add LEM docking provisions for the LOR mission.	+150
COMMUNICATIONS	(-9)
Delete console interface connectors resulting in some complications in manufacturing and repair of console.	-9
INSTRUMENTATION	(-305)
Delete instrumentation required for flight qualification.	-305

~~CONFIDENTIAL~~

COMMAND MODULE

CURRENT LOR WEIGHT EMPTY CHANGES

CONTROLS AND DISPLAYS	(+3)
Reduce weight of displays by utilizing lamps in lieu of the barometric pressure indicator and by sharing cryogenic pressure and quantity readouts between the hydrogen and oxygen requirements.	-4
Delete the self-test capability of the SCS displays.	-2
Delete tail-off switch from delta V indicator.	-1
Delete present reaction jet solenoid power switching relays from the SCS mode select panel. Utilize a manual switch and circuit breakers for reaction jet solenoid power control.	-2
Replace roll attitude error needle servo drive with galvanometer movement.	-1
Add rendezvous radar panel required for LOR mission.	+13
STABILIZATION AND CONTROL	(-10)
Remove all elapsed time indicators prior to flight.	-1
Utilize partial potting in low dissipation ECA modules.	-5
Reduce total length of ECA package. Packages are presently designed to include growth capabilities.	-3
Delete multiple monitor relays in DC amplifiers.	-1
ENVIRONMENTAL CONTROL	(-4)
Utilize a combined tank with separate compartments for waste water and potable water.	-4
TOTAL COMMAND MODULE CURRENT LOR WEIGHT EMPTY CHANGES	-391

COMMAND MODULE

CURRENT LOR USEFUL LOAD CHANGES

CREW SYSTEMS	(-9)
Reduce life rafts due to design refinement utilizing higher strength to weight ratio materials.	-9
SCIENTIFIC EQUIPMENT	(+250)
Add scientific equipment based on current LOR mission requirements.	+250
TOTAL COMMAND MODULE CURRENT LOR USEFUL LOAD CHANGES	+241

~~CONFIDENTIAL~~

SERVICE MODULE

CURRENT LOR WEIGHT EMPTY CHANGES

STRUCTURE	(+40)
Add structural beef-up required to support the rendezvous radar equipment	+40
ELECTRONICS *	(+120)
Add rendezvous radar equipment consistent with the LOR requirements.	+120
TOTAL SERVICE MODULE CURRENT LOR WEIGHT EMPTY CHANGES	+160

NOTE: *The radar equipment weight has been reduced by 50 pounds subsequent to the December report due to the deletion of the VHF capability.

~~CONFIDENTIAL~~

LAUNCH ESCAPE SYSTEM

CURRENT LOR WEIGHT CHANGES

STRUCTURE	(+175)
Add a boost heat shield for protection of the forward compartment during boost heating. The addition of the boost heat shield reduces the forward compartment heat shield ablative thickness and lightens the injected spacecraft weight.	+175
BALLAST	(-65)
Decrease ballast consistent with current Command Module LES balance requirements.	-65
TOTAL LAUNCH ESCAPE SYSTEM CURRENT LOR WEIGHT CHANGES	+110

~~CONFIDENTIAL~~

ADAPTER

CURRENT LOR WEIGHT CHANGES

Utilize the S-IV B Adapter consistent with the current LOR mission requirements in lieu of the S-IV Airframe 011 Adapter. +2515

~~CONFIDENTIAL~~

WEIGHT HISTORY COMMENTS

LAUNCH ESCAPE SYSTEM

The design goal established for the LES is 6,300 pounds, excluding ballast. This weight was based on the September 1962 status weight of 6,600 pounds, including the necessary ballast to provide currently determined aerodynamic stability to prevent tumbling.

The original design goal of 5,900 pounds, as reported in the June status, SID 62-99-5, was based on an attitude controlled configuration. The current configuration weight includes a pitch motor and ballast not included in the original target weight.

COMMAND MODULE

The design goal established for the Command Module is 8,500 pounds. An estimated weight breakdown for the design goal is provided for comparative purposes.

The original design goal weight of 8,340 pounds, as reported in the June status, SID 62-99-5, did not include the proposed increases nor the Category I reductions presented in the July briefing and incorporated in the July Status Report.

SERVICE MODULE

The design goal established for the Service Module less usable propellant is 11,000 pounds. An estimated weight breakdown for the design goal is provided for comparative purposes. This configuration is sized for 45,000 pounds usable propellant for the 25,000 pound LEM.

The original design goal weight of 8,595 for the burnout condition was based on a lunar configuration sized for 31,000 pounds usable propellant.

~~CONFIDENTIAL~~

WEIGHT HISTORY

COMMAND MODULE

	DESIGN GOAL	AUTHORIZED CHANGES	DESIGN GOAL ADJUSTED 1-1-64
Structure	3824	+125	3949
Crew Systems	530		530
Communication	330	+ 33	363
Instrumentation	173	+ 7	180
Controls & Displays	261	+ 2	263
Guidance & Navigation	261	+161	422
Stabilization & Control	181		181
Reaction Control	195		195
Electrical Power	390	+11	401
Environmental Control	235	-12	223
Earth Landing	610		610
WEIGHT EMPTY	6990	+327	7317
Crew	528		528
Suits & Personal Equipment	304	- 8	296
Food & Containers	90		90
Reaction Control Propellant	210		210
Environmental Control Fluids	128		128
Scientific Payload	250		250
GROSS WEIGHT	8500	+319	8819

~~CONFIDENTIAL~~

COMMAND MODULE WEIGHT HISTORY

WEIGHT EMPTY AUTHORIZED CHANGES

STRUCTURE	(+125)
Change parachute attach to a two leg configuration for incorporation of the "Tumbling Concept" at earth impact attenuation. (CCA No. 93)	+125
COMMUNICATIONS	(+33)
Add a spacecraft up-data link for the purpose of providing current GOSS data within the spacecraft for display and comparison with the on-board computed data. (CCA No. 54).	+35
Change the present two speed data storage to a three speed machine to provide fast dump of data. (CCA No. 59)	-2
INSTRUMENTATION	(+7)
Increase the PCM output bit rate from 31,000 to 51,200 bit/sec. This change was originally considered to have negligible weight affect but has henceforth been reported by Collins to cause a seven pound increase. (CCA No. 44)	+7
CONTROLS & DISPLAYS	(+2)
Furnish and install a clock timer panel at the navigation station lower equipment bay. (CCA No. 84)	+2
GUIDANCE & NAVIGATION	(+161)
Increase the Guidance and Navigation per recent weight report from M.I.T. Since NAA does not have weight control responsibility for the M.I.T. design, the weight changes in their Weight and Balance Report will be considered as authorized changes.	+161
ELECTRICAL POWER	(+11)
Add two batteries to provide a source of power, separate from the primary D.C. power, to initiate pyrotechnic devices. (CCa No. 28).	+10
Add PLSS battery charging control to prevent overcharging battery (CCA No. 82)	+1

COMMAND MODULE WEIGHT HISTORY

WEIGHT EMPTY AUTHORIZED CHANGES

ENVIRONMENTAL CONTROL	(-12)
Add a CO_2 sensor to the ECS as a part of the ECS operational instrumentation. (CCA No.43)	+2
Add a surge tank to ECS and delete entry oxygen supply to provide early mission emergency gas flows. (CCA No. 52)	-7
Deletion of regenerative heat exchanger from the ECS heat exchanger package. (CCA No. 63)	-7
TOTAL COMMAND MODULE WEIGHT EMPTY CHANGES	+327

COMMAND MODULE WEIGHT HISTORY

USEFUL LOAD AUTHORIZED CHANGES

SUITS & PERSONAL EQUIPMENT		(-8)
Change the following GFE (NASA) responsibility items:		
Increase personal radiation dosimeters per NASA Crew Systems Meeting Number 19, Action Item Number 6.	+10	
Increase PLSS per Hamilton Standard status.	+36	
Delete initial charge water for coolant, from PLSS, as this item is now carried in the potable water tank.	-5	
Delete one PLSS consistent with requirements for LOR mission.	-48	
Delete primary oxygen from remaining PLSS.	-1	
TOTAL COMMAND MODULE USEFUL LOAD CHANGES		-8

~~CONFIDENTIAL~~

WEIGHT HISTORY

SERVICE MODULE

	DESIGN GOAL	AUTHORIZED CHANGES	DESIGN GOAL ADJUSTED 1-1-64
Structure	3203		3203
Electronics	145		145
Reaction Control	737		737
Electrical Power	1203		1203
Environmental Control	250		250
Propulsion System			
Engine Installation	606		606
Propellant System	2456		2456
WEIGHT EMPTY	8600		8600
Usable RCS Propellant	611		611
Usable Fuel Cell Reactants	479		479
Environmental Control Fluids	193		193
Main Propulsion Helium	139		139
Main Prop. Residuals	900		900
Unusable RCS Propellant	61		61
Unusable Fuel Cell Reactants	17		17
BURNOUT WEIGHT	11000		11000
Main Propellant	45000		45000
GROSS WEIGHT	56000		56000

~~CONFIDENTIAL~~

[redacted]

POTENTIAL WEIGHT AND CENTER OF GRAVITY CHANGES

COMMAND MODULE

STRUCTURE	(+25)
Addition of crushable core installation in the aft compartment.	+25
CREW SYSTEMS	(-63)
Change in crew and metabolic criteria based on astronaut data and new NASA metabolic rates.	
Crew	-49
Food and Containers	-12
Increase constant wear garments per Space Suit Interface Meeting.	+5
Delete requirement for the PLSS as there is no extra vehicular missions planned from the Command Module.	-45
Decrease mission duration from 14 days to 8 days:	
Food and Containers	-26
Chemical Disinfectant	-5
Increase crew couches based on current calculated weights.	+47
Increase crew couch attenuation system based on current designs.	+22
COMMUNICATION & INSTRUMENTATION	(-53)
Repackage PCM components	-18
Utilize Conic Corporation VHF/FM and unmodular HF.	-8
Delete PCM provision for flight qualification instrumentation growth.	-10
Utilize Rantec multiplexer.	-6
Decrease spares.	-11

[redacted]

~~CONFIDENTIAL~~

POTENTIAL WEIGHT AND CENTER OF GRAVITY CHANGES

COMMAND MODULE

STABILIZATION & CONTROL	(-34)
Utilize magnesium in lieu of aluminum on ECA base plates.	-25
Change internal package connectors from Amphenol to Cannon based on recent connector optimization study.	-9
ELECTRICAL POWER SYSTEM	(+321)
Increase wiring per current preliminary wire evaluation.	+250
Increase electrical Command Module to Service Module umbilical consistent with potential intermodular wiring requirement.	+85
Decrease inverters due to redesign of power transisters.	-14
ENVIRONMENTAL CONTROL SYSTEM	(-70)
Reduce lithium hydroxide and containers per change in Crew and Metabolic criteria based on astronaut data and new NASA metabolic rates.	-18
Reduce quantity requirements of lithium hydroxide due to mission duration decrease from 14 days to 8 days.	-47
Add re-entry oxygen required due to deletion of PLSS.	+4
Delete two lithium hydroxide charges by raising the maximum allowable CO_2 content.	-9
SCIENTIFIC EQUIPMENT	(-170)
Remove from Lower Equipment Bay	-35
Remove from Right Hand Equipment Bay.	-135
TOTAL POTENTIAL CHANGES, COMMAND MODULE	-44

~~CONFIDENTIAL~~

POTENTIAL WEIGHT AND CENTER OF GRAVITY CHANGES

SERVICE MODULE

ELECTRICAL POWER	(-219)
Reduce H_2 for 8 day mission in lieu of 14 day.	-12
Reduce O2 for 8 day mission in lieu of 14 day.	-280
Decrease in Fuel Cell Power System based on folded fuel cell design.	-50
Increase fuel cell reactants for 660 kw-hrs.	+58
Increase electrical Command Module to Service Module umbilical consistent with potential intermodular wiring requirement.	+65
ENVIRONMENTAL CONTROL	(+70)
Addition of propellant heating system to maintain fuel at temperature above freezing point.	+70
TOTAL POTENTIAL WEIGHT CHANGES - SERVICE MODULE	-149

[redacted]

DETAIL WEIGHT STATEMENT

COMMAND MODULE

SUMMARY

ITEM		CURRENT WEIGHT 1-1-64
WEIGHT EMPTY		8244
Structure	4681	
Crew Systems	298	
Communications	400	
Instrumentation	176	
Controls & Displays	288	
Guidance & Navigation	422	
Stabilization & Control	204	
Reaction Control	327	
Electrical Power	499	
Environmental Control	293	
Earth Landing	656	
USEFUL LOAD		1546
Crew Systems	869	
Reaction Control	270	
Environmental Control	157	
Scientific Payload	250	
GROSS WEIGHT		9790

[redacted]

DETAIL WEIGHT STATEMENT
COMMAND MODULE
STRUCTURE

ITEM		CURRENT WEIGHT 1-1-64
STRUCTURE		
Inner Structure		(1061)
Forward Section		207
Honeycomb	63	
Frames, Rings and Hatches	57	
Fittings and Attachments	87	
Center Section		665
Honeycomb Panels	196	
Longerons, Frames and Rings	263	
Window and Hatches	104	
Fittings and Attachments	102	
Aft Section		189
Honeycomb Panel	110	
Ring	79	
Secondary Structure		(556)
RH Equipment Bay and Coldplates		80
LH Equipment Bay		80
Fwd. LH Equipment Bay		20
Fwd. RH Equipment Bay and Coldplates		19
Main Display Panel and Coldplates		59
Lower Equipment Bay and Coldplates		195
Aft Equipment Bay		61
Crew Area		5
Heat Shield Equipment Area		37
Heat Shield Substructure		(1424)
Forward Section		195
Honeycomb Panels	109	
Frames and Rings	35	
Fittings and Mechanism	51	
Center Section		703
Honeycomb Panels	246	
Frames and Rings	107	
Doors and Covers	185	
Fittings, Mechanism and Attachments	141	
Air Vent	24	
Aft Section		526
Honeycomb Panels	350	
Frames and Rings	47	
Fittings and Attachments	81	
Toroidal Assembly	48	
Ablation Material		(1273)
Forward Section		116
Center Section		529
Aft Section		628
Insulation		(195)
Separation Provisions and Attachments		(22)
LEM Docking		(150)
TOTAL STRUCTURE		4681

[redacted]

DETAIL WEIGHT STATEMENT

COMMAND MODULE

CREW SYSTEMS

ITEM	CURRENT WEIGHT 1-1-64
CREW SYSTEMS	
Crew Couch Support and Restraint System	26.0
Waste Management	2.1
Egress Accessories - Hatch	3.0
Case Assembly - Map and Manual	2.0
Shelf Assy. - Work/Food Preparation	1.9
Food Storage Boxes	5.0
Structural Seats and Supports	258.0
TOTAL CREW SYSTEMS	298.0

[redacted]

[redacted]

DETAIL WEIGHT STATEMENT

COMMAND MODULE

COMMUNICATIONS

ITEM	CURRENT WEIGHT 1-1-64
COMMUNICATIONS	
Lower Bay	(258.7)
C-Band Transponder	20.8
Unified S-Band	30.9
S-Band Power Amplifier	17.5
VHF-FM Transmitter/HF Transceiver	15.2
VHF AM Trans. -Rec/VHF Rec. Bea.	15.1
Multiplexer	11.0
Spares	19.0
Signal Conditioner	40.0
Recorder	25.4
Audio Center	8.0
Premodulation Processor	13.8
Central Timing Equipment	8.0
Up Data Link and Provisions	25.0
VHF-HF Diplexer	1.7
VHF-UHF Diplexer	1.5
S-Band P.A. Spare Traveling Wave Tube	1.3
S-Band P.A. Spare Power Supply	4.5
Remote Equipment	(57.3)
VHF-HF Recovery Antenna & Transmission	11.4
C-Band Antenna & Transmission	11.7
2-KMC High Gain Antenna and Transmission	4.4
VHF-2 KMC Omni Ant., Trans. & Instl. Prov.	29.8
Electrical Provisions	(84.0)
Electrical Wiring	68.7
Data Distribution Panel	4.0
Coax	5.2
Connectors	6.1
TOTAL COMMUNICATIONS	400.0

[redacted]

~~CONFIDENTIAL~~

DETAIL WEIGHT STATEMENT

COMMAND MODULE

INSTRUMENTATION

ITEM	CURRENT WEIGHT 1-1-63
INSTRUMENTATION	
Lower Equipment Bay	(58.7)
PCM Unit No. 1	26.6
PCM Unit No. 2	21.1
Nuclear Radiation Detection Equipment	11.0
Remote Equipment	(47.0)
Sensors	35.0
Nuclear Radiation Detection Provisions	6.0
TV Camera	4.5
TV Viewfinder	1.5
Right Hand Bay Forward	(36.1)
Inflight Test System	
Comparators and Power Supply	16.5
Lamps	1.9
Switches	1.5
Meter	1.0
Chassis	9.1
Harness	4.1
Access Cable	2.0
Electrical Provisions	(34.2)
Inflight Test Electrical Provisions	30.3
Data Distribution Panel	3.9
TOTAL INSTRUMENTATION	176.0

~~CONFIDENTIAL~~

DETAIL WEIGHT STATEMENT
COMMAND MODULE
CONTROLS AND DISPLAYS

ITEM	CURRENT WEIGHT 1-1-64
MAIN DISPLAY PANEL	
Main Display Panel Control Station	(57.7)
SCS Mode Select	3.2
Delta Velocity	2.2
Flight Director Attitude Indicator	10.0
Attitude Set and Gimbal Position Display	4.8
SPS Gimbal Actuator	.5
Entry Monitoring Indicator	15.0
Launch Vehicle Emergency Detection System C-1	4.7
Master Caution and Abort Lt.	.3
IFTS Switch	.1
Barometric Indicator Light	.1
Event Timer	1.5
Mounting Panels	2.3
Rendezvous Radar	13.0
Main Display Panel Center Station	(60.4)
Audio Panel	1.2
Abort Light	.2
Reaction Control	11.2
GMT Readout	.8
ECS Gages and Controls	6.6
Crew Safety Controls	1.6
High Gain Antenna Control	2.6
G & N Computer Keyboard	15.0
Radiation Displays	3.0
Cryogenic	4.2
Caution and Warning Display	4.7
Mounting Panels	9.3
Main Display Panel System Management Station	(31.5)
Communications Control Panel	4.0
Master Caution Lights	.2
Power Distribution	6.1
Fuel Cells Controls	4.7
Service Propulsion	8.9
IFTS Switch	.1
Oxygen Warning	.1
Mounting Panels	7.4
Main Display Panel RH Console	(10.5)
Bus Switches	5.7
Audio Panel	1.2
Lighting Control	1.6
Mounting Panels	2.0
Main Display Panel LH Console	(7.9)
Mission Sequence Controls	1.0
Lighting Control	1.6
Audio Panel	1.2
SCS Power Control	2.2
Mounting Panels	1.9
TOTAL MAIN DISPLAY PANEL (To be brought forward)	168.0

~~CONFIDENTIAL~~

DETAIL WEIGHT STATEMENT

COMMAND MODULE

CONTROLS AND DISPLAYS

ITEM		CURRENT WEIGHT 1-1-64
REMOTE EQUIPMENT		
Lower Equipment Bay		(50.0)
Lighting Control Panel		1.2
G & N Controls and Displays		48.8
Map and Data Viewer	8.5	
Display and Control - Navigation	25.3	
Display and Control - Computer	15.0	
Left Hand Forward Equipment Bay		(2.6)
Clock		.8
Event Timer		1.6
Mounting Panel		.2
Crew Area Controls		(20.5)
Manual Control - Rotation		12.1
Manual Control - Translational		8.4
Caution and Warning		(16.5)
Detector		14.0
Spares		2.5
Electrical Provisions		(30.4)
Electrical Wiring		28.7
SCS/G & N Display Junction Box		1.7
TOTAL REMOTE EQUIPMENT		120.0
TOTAL MAIN DISPLAY PANEL		168.0
TOTAL CONTROLS AND DISPLAYS		288.0

~~CONFIDENTIAL~~

~~CONFIDENTIAL~~

DETAIL WEIGHT STATEMENT

COMMAND MODULE

GUIDANCE & NAVIGATION

ITEM	CURRENT WEIGHT 1-1-64
GUIDANCE AND NAVIGATION	
Electronic Equipment	(269.7)
Inertial Measurement	59.0
Navigation Base	27.2
Computer & Spare Tray	70.0
Computer Stored Spares	25.0
Power Servo Assembly	59.4
Coupling Display Unit	16.5
Bellows Assembly	12.6
Optical Equipment	(45.8)
Sextant	12.0
Telescope	9.0
Optical Base	21.0
Optical Eyepieces	3.8
Loose Stored Items	(45.8)
Film Cartridges (4)	3.0
Computer Loose Spares	17.3
Power Servo Assembly Loose Spares	16.7
CDU Spare Gear Box	3.0
Spare Relay & Diode Module	.3
Eye Relief Eyepiece	1.5
Horizon Photometer	4.0
Electrical Provisions	(59.7)
Cabling MIT	43.2
Cabling NAA	16.5
Coolant Hoses	(1.0)
TOTAL GUIDANCE AND NAVIGATION	422.0

~~CONFIDENTIAL~~

~~CONFIDENTIAL~~

DETAIL WEIGHT STATEMENT

COMMAND MODULE

STABILIZATION AND CONTROL

ITEM	CURRENT WEIGHT 1-1-64
STABILIZATION AND CONTROL	
Lower Equipment Bay	(186.2)
Rate Gyro Package	7.5
Body Mounted Gyro Package	12.8
Electronic Control Package - Pitch	29.0
Electronic Control Package - Roll	28.3
Electronic Control Package - Yaw	28.2
Electronic Control Package - Auxiliary	29.2
Display/BMAG ECA Package	36.7
Spare Gyro - BMAG (2)	2.0
Spare Gyro - Rate	.5
Spare Plug-In Module	12.0
Electrical Provisions	(17.8)
Wiring, etc.	16.3
SCS Power Junction Box	1.5
TOTAL STABILIZATION AND CONTROL	204.0

~~CONFIDENTIAL~~

~~CONFIDENTIAL~~

DETAIL WEIGHT STATEMENT

COMMAND MODULE

REACTION CONTROL SYSTEM

ITEM		CURRENT WEIGHT 1-1-64
REACTION CONTROL SYSTEM		
Propellant System		(74.6)
Oxidizer System		37.2
Tanks & Expulsion Devices	15.0	
Plumbing, Fittings & Insulation	11.4	
Valves & Regulators	10.3	
Sensors	.5	
Fuel System		37.4
Tanks & Expulsion Devices	15.2	
Plumbing, Fittings & Insulation	11.4	
Valves & Regulators	10.3	
Sensors	.5	
Pressure System		(55.4)
Tanks (4500 psi)		9.5
Plumbing, Fittings & Insulation		4.8
Valves & Regulators		38.6
Sensors		2.5
Engine System		(141.6)
Engines		99.6
Nozzle Extension		42.0
Electrical Provisions		(23.0)
Dumping System		(32.4)
Valves & Supports		13.0
Controls & Electrical Provisions		12.0
Plumbing & Fittings		5.0
Miscellaneous		2.4
TOTAL REACTION CONTROL SYSTEM		327.0

~~CONFIDENTIAL~~

[redacted]

DETAIL WEIGHT STATEMENT

COMMAND MODULE

ELECTRICAL POWER

ITEM	CURRENT WEIGHT 1-1-64
ELECTRICAL POWER	
Energy Source	(77.5)
Battery - Re-Entry (2)	45.0
Battery - Post Landing (1)	22.5
Battery - Pyrotechnic - Installation	10.0
Power Conversion	(123.0)
Inverter (3) & Control	117.0
Battery Charger & Controls	5.0
PLSS Battery Charging System	1.0
Power Distribution & Control	(95.3)
D-C Power Panel Assy	7.6
A-C Power Box Assy	11.9
Battery Circuit Breaker Panel	3.4
Lower Equipment Bay Panel	5.1
Terminal Distribution Panel (Bus)	9.0
Circuit Breaker Panel	4.7
Electrical Transmission (Wiring, Connectors, Cond., Sup.)	34.6
Ground Power Provisions	6.0
Power Control Panel Connectors	3.0
Installation Provisions	10.0
Electrical Common Utility	(203.2)
Electrical Transmission (Wiring, Conn., Cond., & Sup.)	87.7
Right Hand Circuit Breaker Panel	16.0
Left Hand Circuit Breaker Panel	10.5
Lighting Equipment	10.3
Lighting	5.0
Adapter Separation System	5.0
LES Separation System	3.5
S/M Pyrotechnic Initiation	3.0
Circuit Utilization Package	6.6
Sequencer	39.1
Installation Provisions	13.5
C/M to S/M Separation System Wiring & Hardware	3.0
TOTAL ELECTRICAL POWER	499.0

[redacted]

~~CONFIDENTIAL~~

DETAIL WEIGHT STATEMENT

COMMAND MODULE

ENVIRONMENTAL CONTROL SYSTEM

ITEM	CURRENT WEIGHT 1-1-64
ENVIRONMENTAL CONTROL SYSTEM	
Pressure Suit Circuit	(77.1)
Subcontractor Compressor, Heat Exchg., Val. & Cont.	68.6
Ducting, Conn., Clamps, etc.	6.5
CO_2 Sensor	2.0
Water-Glycol Circuit	(59.3)
Subcontractor Res., Evaporator, Pump, Val. & Cont.	28.4
Water-Glycol	18.4
Plumbing, etc.	12.5
Pressure & Temp. Control	(19.0)
Subcontractor Heat Exchg., Blower, Val. & Cont.	18.2
Ducting	0.8
Oxygen Supply System	(16.0)
Subcontractor Val. & Cont.	4.8
Plumbing	4.0
Oxygen Surge Tank	7.2
Water Supply System	(36.9)
Subcontractor Potable & Waste Tanks & Freon Tank	23.2
Plumbing	11.7
Water Separator Accum. Warn. Sys.	2.0
Subcontractor Common Items	(25.8)
Brackets, Plumbing, Elect. Wiring	11.5
Instrumentation	14.3
Waste Management System	(18.8)
Supports	(12.7)
Electrical Provisions	(21.0)
Manual Controls - Push Pull	(3.6)
N_2 Purge System	(2.8)
TOTAL ENVIRONMENTAL CONTROL SYSTEM	293.0

~~CONFIDENTIAL~~

[redacted]

DETAIL WEIGHT STATEMENT

COMMAND MODULE

EARTH LANDING SYSTEM

ITEM	CURRENT WEIGHT 1-1-64
EARTH LANDING SYSTEM	
Parachute System	(583.6)
Drogue Chute System	78.7
Main Cluster	417.7
Disconnect Main Cluster	3.1
Pilot Chute System	29.9
Sequence Control	12.2
Attach Provisions	42.0
Location Aids	(6.3)
Forward Heat Shield Release System	(51.1)
Drogue Disconnect Installation	(9.0)
Electrical Pyrotechnic Initiation Provisions	(6.0)
TOTAL EARTH LANDING SYSTEM	656.0

[redacted]

~~CONFIDENTIAL~~

DETAIL WEIGHT STATEMENT

COMMAND MODULE

USEFUL LOAD

ITEM	CURRENT WEIGHT 1-1-64
CREW SYSTEMS	
Government Furnished Equipment	(144.1)
Pressure Garment Assembly (3)	79.2
Portable Life Support System (1)	42.1
Garments - Constant Wear	9.0
Biomedical Instrumentation	2.0
Personal Radiation Dosimeters	11.8
Crew (50, 70, 90 Percentile)	(528.0)
Food and Associated Equipment	(83.5)
Food	67.5
Food Containers	12.5
Food Mouthpiece - Personal	2.0
Water Delivery Assembly - Personal	1.5
Crew Accessories	(8.0)
Lap Board Assembly	2.0
Manual Set	3.0
Map Set	1.0
Logbook Assembly	1.0
Tool Set - Inflight Maintenance	1.0
Crew Equipment	(26.2)
Shoe Straps	2.0
Hose Assembly - Umbilical	17.9
Belt Assembly - Inflight Maintenance	1.0
Hose Assembly - Recharging, Backpack	2.8
Suit Electrical Umbilical and Wire	2.5
Waste Management	(3.4)
Medical Equipment	(12.1)
Personal Hygiene Equipment	(15.6)
Light Assembly - Portable	(3.0)
Provisions Assembly - Crew Survival	(42.1)
Personal Communications	(3.0)
TOTAL CREW SYSTEM (To be brought forward)	869.0

[redacted]

DETAIL WEIGHT STATEMENT

COMMAND MODULE

USEFUL LOAD

ITEM		CURRENT WEIGHT 1-1-64
REACTION CONTROL		(270.0)
Usable Propellant		225.0
Residual Propellant		44.0
Trapped - System	30.8	
Mixture Ratio	2.7	
Expulsion Efficiency	7.8	
Loading Tolerance	2.7	
RCS Helium		1.0
ENVIRONMENTAL CONTROL		(157.0)
Lithium Hydroxide		112.0
Activated Charcoal		4.0
Containers for LiOH & Charcoal		12.5
Oxygen - Re-Entry		3.7
Water-Earth Orbit Cooling & Drinking		4.0
Water-Boost Cooling		4.0
Water-Emergency Re-Entry Cooling		6.0
Water-PLSS Initiated Charge		6.8
Chemical Disinfectant		4.0
SCIENTIFIC EQUIPMENT		(250.0)
TOTAL This page		677.0
TOTAL CREW SYSTEM (Brought forward from Page 46)		869.0
TOTAL USEFUL LOAD		1546.0

[redacted]

~~CONFIDENTIAL~~

DETAIL WEIGHT STATEMENT

SERVICE MODULE

SUMMARY

ITEM		CURRENT WEIGHT 1-1-64
WEIGHT EMPTY		7680
Structure	2290	
Electronics	301	
Reaction Control	580	
Electrical Power	1384	
Environmental Control	87	
Propulsion	3038	
USEFUL LOAD		2230
Reaction Control	838	
Electrical Power	503	
Environmental Control	208	
Propulsion	681	
BURNOUT WEIGHT		9910
MAIN PROPELLANT		37680
GROSS WEIGHT		47590

~~CONFIDENTIAL~~

[redacted]

DETAIL WEIGHT STATEMENT

SERVICE MODULE

STRUCTURE

ITEM	CURRENT WEIGHT 1-1-64
STRUCTURE	
Basic Body Structure	(1616)
Honeycomb Panels	567
Frame and Rings	6
Access Doors	15
Fittings and Attach Parts	42
Radial Beams	373
Internal Partitions	25
Forward Bulkhead	161
Aft Bulkhead	305
RCS Panels	122
Secondary Structure	(185)
Tank Support Shelf	29
Engine Support Structure	54
Antenna Support Structure	50
Aft Heat Shield	52
Insulation	(299)
Separation Provisions and Attachments	(16)
Fairing - C/M to S/M	(144)
Miscellaneous	(30)
TOTAL STRUCTURE	2290

[redacted]

[redacted]

DETAIL WEIGHT STATEMENT

SERVICE MODULE

ELECTRONICS SUBSYSTEM

ITEM	CURRENT WEIGHT 1-1-64
ELECTRONICS SUBSYSTEM	
Communications	(51.0)
High Gain Antenna	
Antenna	12.2
Gimbals	12.0
Earth Sensor	4.8
Antenna Boom	7.0
Antenna Locking Provisions	3.0
Coax	8.0
Coax Connectors	1.0
Supports	1.0
Wiring	2.0
Instrumentation	(130.0)
Sensors	30.0
Electrical Provisions	95.0
Supports	5.0
Rendezvous Equipment	(82.4)
Radar Package	30.0
X-Band Dish Ant., Trans. & Sup.	17.8
Antenna Boom	10.0
Antenna Actuation Mechanism	10.0
Electrical Provisions	3.0
Supports & Cooling Provisions	9.6
Diplexer	2.0
Transponder Equipment	(37.6)
Transponder	10.0
X-Band Flush Mntd. Omni Ant. (3)	3.0
X-Band Trans. & Supports	12.6
X-Band Power Divider	1.0
Electrical Provisions	3.0
Supports & Cooling Provisions	6.0
Diplexer	2.0
TOTAL ELECTRONICS SUBSYSTEM	301.0

[redacted]

[redacted]

DETAIL WEIGHT STATEMENT

SERVICE MODULE

REACTION CONTROL

ITEM		CURRENT WEIGHT 1-1-64
REACTION CONTROL SYSTEM		
Propellant Systems		(161.4)
Oxidizer System		80.5
Tanks & Expulsion Devices	28.8	
Plumbing, Fittings & Insulation	8.5	
Valves & Regulators	12.0	
Sensors	3.0	
Supports	18.2	
Quantity Gaging	10.0	
Fuel System		80.9
Tanks & Expulsion Devices	29.2	
Plumbing, Fittings & Insulation	8.5	
Valves & Regulators	12.0	
Sensors	3.0	
Supports	18.2	
Quantity Gaging	10.0	
Pressure System		(128.0)
Tanks (4500 psi)		19.0
Plumbing, Fittings & Insulation		6.0
Valves & Regulators		76.0
Sensors		7.0
Supports		20.0
Engine System		(150.4)
Engines		70.4
Reflectors & Insulation		80.0
Structural Provisions		(80.0)
Electrical Provisions		(60.2)
TOTAL REACTION CONTROL SYSTEM		580.0

[redacted]

~~CONFIDENTIAL~~

DETAIL WEIGHT STATEMENT

SERVICE MODULE

ELECTRICAL POWER

ITEM	CURRENT WEIGHT 1-1-64
ELECTRICAL POWER	
Fuel Cell Power System	(1196.6)
Fuel Cell Power Pack (Incl. Mount Instrumentation)	753.6
Intermodular - Radiator Plumbing	26.7
Fuel Cell Module Mount Attach	2.0
Fuel Cell H_2 System	
Subcontractor Components	153.2
Plumbing and Valves	5.5
Fuel Cell and ECS O_2 System	
Subcontractor Components	168.2
Plumbing and Valves and Supports	31.7
Water Glycol - Fuel Cell Heat Transfer System	7.0
Elect. Wiring - Supercritical Gas	10.0
Space Radiator (Outer Skin)	26.9
Fuel Cell Module Stabilization Webs	3.8
Fuel Cell Plumbing Supports	8.0
Power Distribution	(71.2)
Electrical Transmission	40.0
Power Distribution Box	31.2
Electrical Common Utility	(116.2)
Electrical Transmission	41.0
Sequencer	28.0
Adapter Separation System	7.0
C/M to S/M Separation System	18.0
Pyrotechnic Initiation	12.0
Provisions	10.2
TOTAL ELECTRICAL POWER	1384.0

~~CONFIDENTIAL~~

~~CONFIDENTIAL~~

DETAIL WEIGHT STATEMENT

SERVICE MODULE

ENVIRONMENTAL CONTROL SYSTEM

ITEM	CURRENT WEIGHT 1-1-64
ENVIRONMENTAL CONTROL SYSTEM	
Water-Glycol Circuit	(74.8)
Subcontractor Valves & Controls	6.0
Plumbing and Hardware	21.5
Water - Glycol	10.0
Space Radiator (Outer Skin)	37.3
Water Supply System	(7.5)
Plumbing and Hardware	7.0
Miscellaneous Brackets & Supports	.5
Oxygen Supply System	(3.0)
Plumbing and Supports	3.0
Common Items	(1.7)
Supports	1.7
TOTAL ENVIRONMENTAL CONTROL SYSTEM	87.0

~~CONFIDENTIAL~~

~~CONFIDENTIAL~~

DETAIL WEIGHT STATEMENT

SERVICE MODULE

MAIN PROPULSION

ITEM		CURRENT WEIGHT 1-1-63
MAIN PROPULSION		
Propellant Systems		(1356.0)
Oxidizer System		759.3
Tanks & Doors	557.0	
Skirts	59.8	
Plumbing, Fittings & Insulation	53.0	
Valves	4.5	
Quantity Indication	25.5	
Mixture Ratio Control	14.0	
Supports - Plumbing & Equipment	45.5	
Fuel System		596.7
Tanks & Doors	458.0	
Skirts	33.2	
Plumbing, Fittings & Insulation	42.0	
Valves	4.5	
Quantity Indication	25.5	
Supports - Plumbing & Equipment	33.5	
Pressure System		(925.0)
Tanks (4400 psi)		784.0
Tanks Supports		30.0
Plumbing, Fittings & Insulation		24.0
Valves, Regulators & Heat Exchanger		49.0
Supports - Plumbing & Equipment		38.0
Engine System		(715.0)
Engine		690.0
Closeouts - Throat to S/M		25.0
Electrical Provisions		(42.0)
TOTAL MAIN PROPULSION SYSTEM		3038.0

~~CONFIDENTIAL~~

~~CONFIDENTIAL~~

DETAIL WEIGHT STATEMENT

SERVICE MODULE

USEFUL LOAD

ITEM			CURRENT WEIGHT 1-1-64
REACTION CONTROL			(838.0)
RCS Propellant			835.0
Usable		790.0	
Residual		45.0	
Trapped System	4.0		
Mixture Ratio	9.0		
Expulsion Efficiency	24.0		
Loading Tolerance	8.0		
RCS Helium			3.0
ELECTRICAL POWER (Normal Mission)			(503.0)
Hydrogen - Supercritical Gas			58.5
Usable (Electrochemical Incl. Tolerance)		46.0	
Unusable (Residual & Instrument Error)		3.2	
Emergency Provisions		4.7	
Expended (Leakage & Purge)		4.6	
Oxygen - Supercritical Gas			444.5
Usable (Electrochemical Incl. Tolerance		377.0	
Unusable (Residual & Instrument Error)		17.5	
Emergency Provisions		44.0	
Expended (Leakage & Purge)		6.0	
ENVIRONMENTAL CONTROL (Normal Mission)			(208.0)
Oxygen - Supercritical Gas			208.0
Usable (Metabolic)		76.5	
Unusable (Residual & Instrument Error)		9.1	
Emergency Provisions		25.3	
Expended (Leakage, LEM, PLSS, Repress.)		97.1	
PROPULSION			(681.0)
Main Propulsion Helium			99.0
Main Propellant Residuals			582.0
Trapped - System		225.0	
Trapped - Engine		67.0	
Mixture Ratio Tolerance		100.0	
Loading Tolerance		190.0	
TOTAL USEFUL LOAD (Less Main Propellant)			2230.0

~~CONFIDENTIAL~~

[redacted]

DETAIL WEIGHT STATEMENT

LAUNCH ESCAPE SYSTEM

SUMMARY

ITEM	CURRENT WEIGHT 1-1-64
LAUNCH ESCAPE SYSTEM	
Strucutre	(1031)
Tower Assy	316
Escape Motor Skirt	208
Pitch Motor Structure	162
Nose Cone and Ballast Support	113
Attaching Parts	9
Tower Insulation	198
Skirt Insulation	25
Separation Provisions	(49)
Ballast	(509)
Propulsion	(5340)
Escape Motor	4767
Jettison Motor	434
Jettison Motor Skirt	92
Pitch Control Motor	47
Electrical Power	(101)
C/M Boost Protection Cover	(175)
TOTAL LAUNCH ESCAPE SYSTEM	7205

[redacted]

~~CONFIDENTIAL~~

DETAIL WEIGHT STATEMENT

ADAPTER

SUMMARY

ITEM	CURRENT WEIGHT 1-1-64
ADAPTER	
Structure	(3330)
Basic Body Structure	
Honeycomb Panels	2237
Longerons	44
Frames & Rings	208
Access Doors	50
Fittings & Attachings Parts	50
Secondary Structure	
LEM Supports	36
Insulation	387
Separation Provisions & Attach	288
Miscellaneous	30
Electrical Provisions	(70)
TOTAL ADAPTER	3400

~~CONFIDENTIAL~~