[redacted]

Z65·11788

DO NOT REMOVE THIS COPY

This reissue completely supercedes and replaces the 28 February 1964 reissue of this report.

ACCESSION NO. 67693-64

SID 63-143-4 -R-1

ACTUAL WEIGHT AND BALANCE REPORT

BOILERPLATE NO. 1

COMMAND MODULE FOR LAND AND WATER IMPACT (U)

CONTRACT 9-150

PARAGRAPH 8.10, EXHIBIT I 55

Reissued 19 May 1964

PREPARED BY

WEIGHT CONTROL GROUP

CLASSIFICATION CHANGE

To UNCLASSIFIED

By authority of GDS-E0 11652 Date 12/9/72

Changed by L. Shirley

Classified Document Master Control Station, NASA

Scientific and Technical Information Facilit[redacted]

This document con[redacted] information [redacted]ecting the national defense of the United States withi[redacted] the Espionage Laws, Title 18 U.S.C. Section 793 and 794, [redacted] or revelation of its contents in any manner to an unauth[redacted]ed by law.

[redacted]

NORTH AMERICAN AVIATION, INC.
SPACE and INFORMATION SYSTEMS DIVISION

T REMOVE THIS [redacted]

[redacted]

M158-D-4 VELLUM REV. 2-61

[redacted]

TABLE OF CONTENTS

SECTION	ITEM	PAGE
I	FACTORY WEIGHING	
	1. Introduction	1
	2. Weight, Center of Gravity and Inertia Summary	2
	3. Actual Weight and Balance, Boilerplate No. 1	3
	4. Corrections to Actual Weight and Balance	4
II	APPENDIX (A)	
	1. Introduction	5
	2. Weight, Center of Gravity and Inertia Summary	6
	3. Actual Weight and Balance, Boilerplate No. 1	7
	4. Missing Items Summary	8
	5. Weight Breakdown	9
III	APPENDIX (B)	
	1. Introduction	10
	2. Weight, Center of Gravity and Inertia Summary	11
	3. Actual Weight and Balance, Boilerplate No. 1	12
	4. Weight Breakdown	

[redacted]

[redacted]

SECTION I

FACTORY WEIGHING

[redacted]

[redacted]

ACTUAL WEIGHT AND BALANCE REPORT

FOR

BOILERPLATE NO. 1

COMMAND MODULE FOR LAND AND WATER IMPACT

INTRODUCTION

Boilerplate No. 1 Command Module actual weight and balance determination was conducted by the Apollo Weight Control Group personnel at the Space and Information Systems Division of North American Aviation, Inc. The weight and balance took place on March 15, 1963.

The Weight, Balance and Inertia Summary presents data for the impact condition. This condition simulates the Command Module weight and center of gravity with the forward heat shield jettisoned and the drogue, pilot, and main chutes deployed.

Changes due to structural rework, ballast adjustments and shortages are incorporated and summarized on the actual weight and balance sheet (page 3) as corrections. These corrections are provided in detail on page 4.

Additional actual weight and balance determinations will be made in the field at various times and will be incorporated as an appendix to this report.

[redacted]

WEIGHT, CENTER OF GRAVITY AND INERTIA SUMMARY

COMMAND MODULE FOR LAND AND WATER IMPACT

BOILERPLATE NO. 1

ITEM	WEIGHT	CENTER OF GRAVITY*			MOMENT OF INERTIA (SLUG FT.^{2})		
		Xa	Ya	Za	ROLL (X)	PITCH (Y)	YAW (Z)
TOTAL COMMAND MODULE AT IMPACT	8748	1040.1	0.1	6.6	4826	3735	3200

NOTE: *Centers of gravity are in the NASA reference system except that the longitudinal has an origin 998.7 inches below the tangency of the Command Module structure mold line.

[redacted]

63-143-4

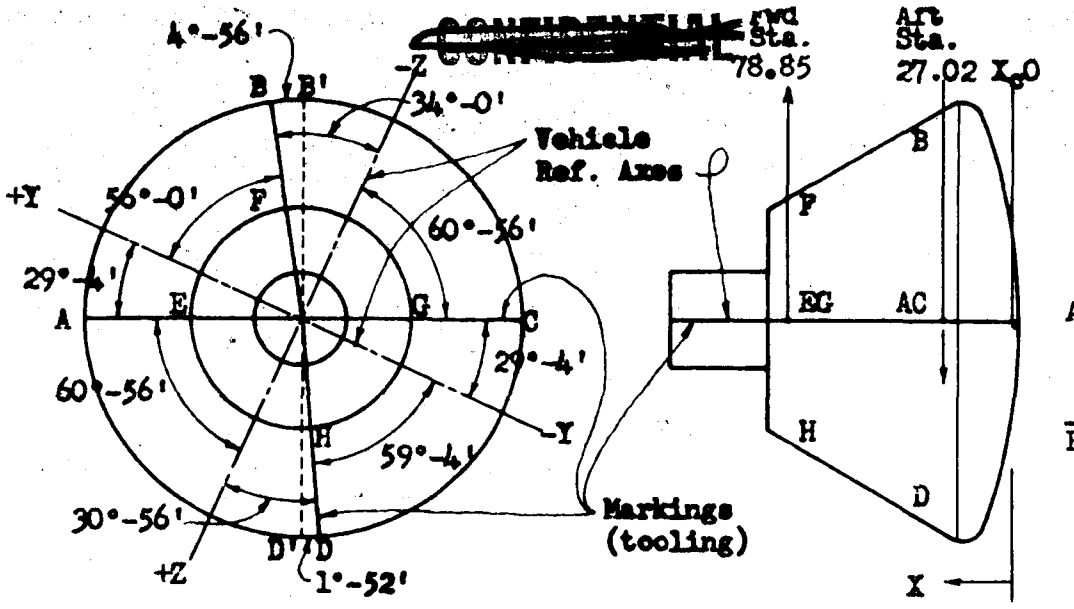

Approved:

Project Office

*Weight of fwd. fittings deducted from average reading (35 lbs.)

ACTUAL WEIGHT & BALANCE
BOILERPLATE NO. 1

Name: J. F. Kessler
Date: March 15, 1963

DESCRIPTION		AVER. READING	± CORR.	WEIGHT	LONG.	MOM.	LAT.	MOM.	VERT.	MOM.
Fwd Jack Position	G	2165	0	* 2165	78.85	170710			0	0
	F	2156	7	* 2163	78.85	170553	4.15	8976		
Aft Jack Position	D'	3489	-15	3474	26.81	93138			76.21	264754
	C	3083	-24	3059	27.02	82654	-76.12	-232851		
Aft Jack Position	B'	2867	+ 2	2869	27.02	77520			-75.84	-217585
	A	3270	+ 8	3278	27.02	88572	76.12	249521		
GROSS (as weighed)		TOTAL G + D' + B'		8508	40.12	341368			5.54	47169
		TOTAL F + C + A		8500	40.21	341779	3.02	25646		

Transfer to Vehicle Reference Axes

Y = (LATERAL ARM)(cos 29°- 4') - (VERTICAL ARM)(sin 29°- 4')

Z = (LATERAL ARM)(sin 29°- 4') + (VERTICAL ARM)(cos 29°- 4')

Y = (3.02)(.87406) - (5.54)(.48583) = -.05

Z = (3.02)(.48583) + (5.54)(.87406) = 6.31

DESCRIPTION	WEIGHT	X	WX	Y	WY	Z	WZ
TRANSFERRED GROSS (as weighed)	8504	40.2	341574	-.05	- 425	6.31	53660
LESS: Aft Fittings	-47	27.0	-1269	-.85	40	-.55	26
CORRECTION TOTAL (See page 4)	291	37.3	10854	4.7	1368	15.1	4394
CORRECTED WEIGHT AND C.G.	8748	40.1	351159	.11	983	6.64	58080

[redacted]

CORRECTIONS TO ACTUAL WEIGHT AND BALANCE

BOILERPLATE NO. 1

CORRECTIONS		WEIGHT	X	Y	Z
LESS:	Steel Ballast Plate	184	84.1	0.0	0.0
	Hard Point	24	28.0	-37.0	59.0
	*Couch Platform	1093	42.8	0.0	-12.3
PLUS:	Battery, Case and Mount	25	43.5	0.0	7.0
	Camera and Mount	35	50.0	0.0	- 8.0
	Simulated Airlock	15	96.6	0.0	0.0
	Wiring and Accell.(Est.)	100	40.0	0.0	-40.0
	Timer and Mount	5	43.0	23.0	-26.0
	Targets	21	50.0	14.5	27.4
	Sling (GSE)	65	100.0	0.0	0.0
	Ballast	233	44.6	0.3	52.4
	*Couch Platform	1093	43.3	0.0	-14.8
CORRECTION TOTAL		291	37.3	4.7	15.1

*A change in spacecraft couch conditions after the actual weight and balance neccessitated movement of the couch platform to provide maximum stroke in Z-Z footward direction.

[redacted]

SECTION II

APPENDIX (A)

[redacted]

[redacted]

APPENDIX (A)

INTRODUCTION

The enclosed data in Appendix (A) presents the weight, center of gravity, and inertia for Boilerplate Number 1, Impact Drop Test Number 69. These data are based upon actual weight and balance determinations, except the inertia values, performed by the Weight Control Group on 13 February 1964.

Page 8 indicates the items that were missing at the time the actual weight and balance was performed, but are to be added for the drop test. The total of these missing items are also shown on page 7 in addition to the items to be removed.

The correction values for the zero readings have been accounted for in the average reading column on page 7. The electronic weighing kit calibration corrections are indicated on page 7.

A weight breakdown for the configuration of Boilerplate Number 1 is presented on page 9.

A single load cell pull-up weight was performed prior to the actual weight and balance determination and directly afterwards with identical results of 8850 pounds, after the zero and kit calibration corrections were made. This is a direct comparison to the transferred gross weight of 8843.5 pounds as shown on page 7.

[redacted]

[redacted]

WEIGHT, CENTER OF GRAVITY AND INERTIA SUMMARY

BOILERPLATE No. 1 - LAND IMPACT

DROP No. 69

ITEM	WEIGHT	CENTER OF GRAVITY*			MOMENTS OF INERTIA (SLUG-FT.^{2})		
		X	Y	Z	ROLL (X)	PITCH (Y)	YAW (Z)
Total Command Module at Impact	8798.8	1040.28	-0.07	6.33	4846	3860	3315

NOTE: *Centers of gravity are in the NASA reference system except that longitudinal has an origin 998.7 inches below the tangency of the Command Module structure mold line.

[redacted]

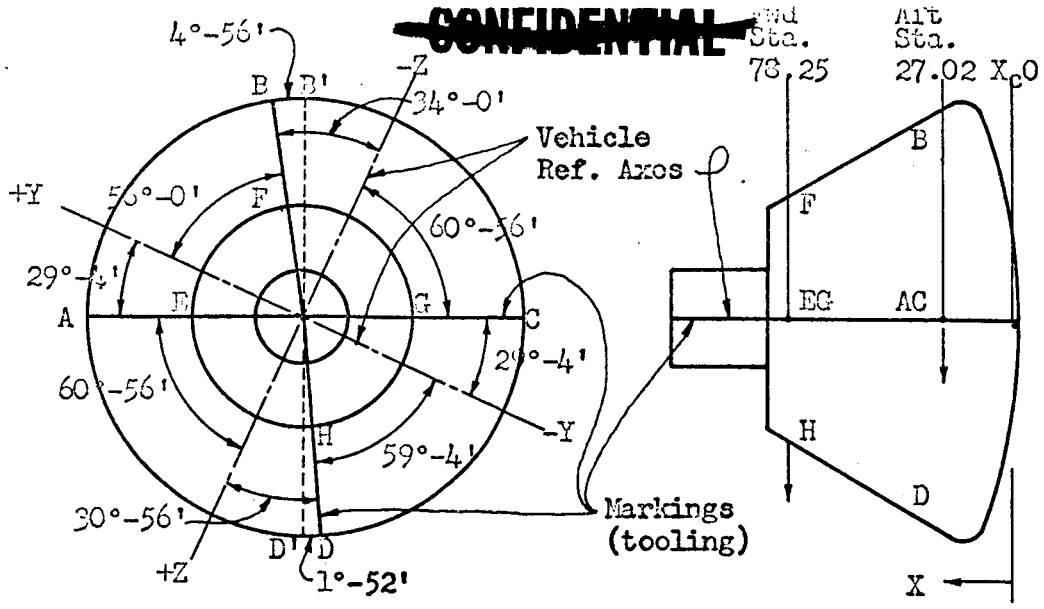

APPROVED:

R A Petley
PROJECT OFFICE

*Weight of Fwd. Fittings Deducted (-35 Lbs)

ACTUAL WEIGHT & BALANCE
BOILERPLATE NO. 1

Name: Kessler & Hughes
Date: 13 Feb 1964

DESCRIPTION	CELL LOC.	AVG. READING	+ CORR.	WEIGHT	LONG.	MOM.	LAT.	MOM.	VERT.	MOM.
Fwd Jack Position	F	2288	-2	* 2251	78.85	177491	4.15	9342		
	G	2270	-2	* 2233	78.85	176072			0.0	-
Aft Jack Position	A	3412	-2	3410	27.02	92138	76.12	259569		
	B'	2992	-2	2990	27.02	80790			-75.84	-226762
Aft Jack Position	C	3189	-3	3186	27.02	86086	-76.12	-242518		
	D'	3620	-3	3617	27.02	97731			76.21	275652
GROSS (as weighed)	F + A + C			8847	40.21	355715	2.98	26393		
	G + B' + D'			8840	40.11	354593			5.53	48890

Transfer to Vehicle Reference Axes

Y = (LATERAL ARM)(cos 29°- 4') - (VERTICAL ARM)(sin 29°- 4')

Z = (LATERAL ARM)(sin 29°- 4') + (VERTICAL ARM)(cos 29°- 4')

Y = (2.98)(.87406) - (5.33)(.48583) = -.08

Z = (2.98)(.48583) + (5.33)(.87406) = 6.28

DESCRIPTION	WEIGHT	X	WX	Y	WY	Z	WZ
TRANSFERRED GROSS (as weighed)	8843.5	40.16	355154	-.08	-707	6.28	55537
Corrections:							
Less: Aft Fittings	-47.2	27.00	-1274	-.85	40	-.55	26
Less: Hard Point	-24.0	28.00	-672	-37.00	888	59.00	-1416
Less: Dummy Couch Platform Struts	-27.0	58.40	-1577	0.00	-	-38.60	1042
Less: Dummy Couch Platform Struts	-49.0	63.80	-3126	0.00	-	9.70	-475
Less: Dummy Couch Platform Struts	-25.0	23.20	-580	0.00	-	-37.20	930
Plus: Missing Items (See Page 8)	+219.5	64.60	14179	-3.70	-820	-7.90	-1734
Less: ½ Steel Ballast Plate	-92.0	83.60	-7691	0.00	-	-19.00	1748
NET ADJUSTED WEIGHT	8798.8	40.28	354413	-0.07	-599	6.33	55658

[redacted]

MISSING ITEMS SUMMARY

BOILERPLATE NO. 1

ITEM	WEIGHT	CENTER OF GRAVITY			MOMENT		
		X_c	Y	Z	W_x	W_y	W_z
QUICK RELEASE SLING	72.0	100.0	0.0	0.0	7200	-	-
COUCH PLATFORM STRUTS	31.5	63.8	0.0	9.7	2010	-	306
COUCH PLATFORM STRUTS	23.0	58.4	0.0	-38.6	1343	-	-888
COUCH PLATFORM STRUTS	15.0	23.2	0.0	-37.2	348	-	-558
CAMERA	15.0	18.5	-37.0	28.0	278	-555	420
CAMERA	11.0	57.7	-28.9	-34.5	635	-378	-380
HARD LINE (Wiring)	45.0	51.0	0.0	-42.0	2295	-	-1890
BATTERY	15.0	18.0	7.5	48.5	270	113	728
REMOVE CENTER CRUSH-RIB	-8.0	25.0	0.0	66.0	-200	-	528
TOTAL MISSING ITEMS	219.5	64.6	-3.7	-7.9	14179	-820	-1734

These items were missing at the time of the actual weight and balance, but will be installed prior to the drop test. The weights of these items are actual weights and the center of gravity values are calculated.

[redacted]

~~CONFIDENTIAL~~

WEIGHT BREAKDOWN

COMMAND MODULE

BOILERPLATE NO. 1

TOTAL COMMAND MODULE		8799
BASIC STRUCTURE		4919
QUICK RELEASE SLING		72
CREW SYSTEM		1196
COUCH - LOAD PLATFORM	1126	
COUCH - STRUTS	70	
ELECTRICAL AND INSTRUMENTATION		240
CAMERAS AND MOUNTS	50	
DEFLECTION BEAM INDICATOR	55	
BATTERY AND MOUNT	25	
WIRING AND INSTRUMENTATION	110	
BALLAST		2372
INTERNAL	1362	
EXTERNAL	644	
AFT HEAT SHIELD	366	

~~CONFIDENTIAL~~

~~CONFIDENTIAL~~

SECTION III

APPENDIX (B)

~~CONFIDENTIAL~~

[redacted]

APPENDIX (B)

INTRODUCTION

The enclosed data in Appendix (B) presents the weight, center of gravity and inertia for Boilerplate No. 1, Dynamic Flotation Test. These data are based on an actual weight and balance determination performed by the Weight Control Group at the drop tower, on 20 April 1964.

Since the last drop test of Boilerplate No. 1, the aft bulkhead that had previously been cut out was re-installed to prevent water leakage. The dummy impact attenuation struts for the aft heat shield attach were re-installed, in lieu of the external attach ring. No ballast adjustments were made for the weight increase due to these modifications.

The H14-041 Revere CS-17 Force Indicator was used for this weight and balance determination. The calibration corrections are accounted for on page 12.

A weight breakdown for the configuration of Boilerplate No. 1 is presented on page 13.

WEIGHT, CENTER OF GRAVITY AND INERTIA SUMMARY

BOILERPLATE NO. 1 - LAND AND WATER IMPACT

DYNAMIC FLOTATION TEST

ITEM	WEIGHT	CENTER OF GRAVITY*			MOMENTS OF INERTIA (SLUG-FT.^{2})		
		X	Y	Z	ROLL (X)	PITCH (Y)	YAW (Z)
TOTAL COMMAND MODULE	9228	1037.94	-0.03	6.22	5110	3901	3282

NOTE: Centers of gravity are in the NASA reference system except that the longitudinal has an origin 998.7 inches below the tangency of the Command Module structure mold line.

[redacted]

~~CONFIDENTIAL~~

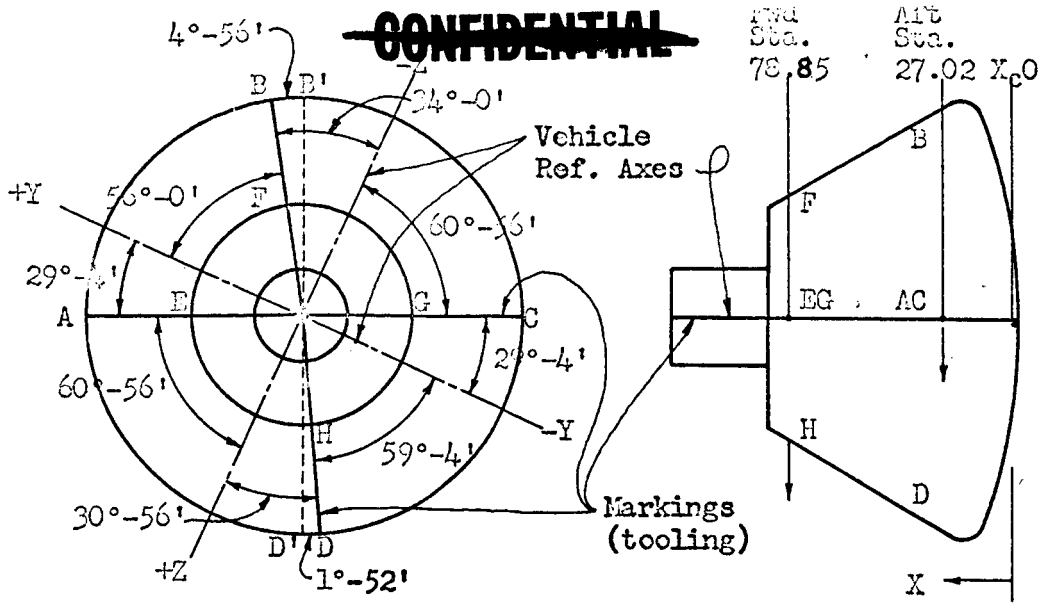

Approved:

Project Office

*Weight of Fwd. Fittings Deducted (-35 lbs.)

ACTUAL WEIGHT & BALANCE
BOILERPLATE NO. 1

Name: J. A. Hughes
Date: 20 April 1964

DESCRIPTION	CELL LOC.	AVE. WT.	CALIBR. CORR.	WEIGHT	LONG.	MOM.	LAT.	MOM.	VERT.	MOM.
Fwd Jack Position	F	1978.0	0.0	*1943.0	78.85	153206	4.15	8063		
	G	1980.0	0.0	*1945.0	78.85	153363			0.0	0
Aft Jack Position	A	3794.0	0.0	3794.0	27.02	102514	76.12	288799		
	B'	3344.0	0.0	3344.0	27.02	90355			-75.84	-253609
Aft Jack Position	C	3535.5	+1.8	3537.3	27.02	95578	-76.12	-269259		
	D'	3985.0	+2.0	3987.0	27.02	107729			76.21	303849
GROSS (as weighed)	TOTAL F + A + C			9274.3	37.88	351298	2.98	27603		
	TOTAL G + B'+D'			9276.0	37.89	351447			5.42	50240

Transfer to Vehicle Reference Axes

Y = (LATERAL ARM)(cos 29°- 4') - (VERTICAL ARM)(sin 29°- 4')

Z = (LATERAL ARM)(sin 29°- 4') + (VERTICAL ARM)(cos 29°- 4')

Y = (2.98)(.87406) - (5.42)(.48583) = -.03

Z = (2.98)(.48583) + (5.42)(.87406) = 6.19

DESCRIPTION	WEIGHT	X	WX	Y	WY	Z	WZ
TRANSFERRED GROSS (as weighed)	9275.2	37.88	351373	-.03	-278	6.19	57413
Corrections:							
LESS: Aft Jack Pads (4)	-47.2	27.00	-1274	-.85	40	-.55	26
CORRECTED WEIGHT AND C.G.	9228.0	37.94	350099	-.03	-238	6.22	57439

~~CONFIDENTIAL~~

[redacted]

WEIGHT BREAKDOWN

COMMAND MODULE

BOILERPLATE NO. 1

STRUCTURE		
BASIC STRUCTURE*		5538
SECONDARY STRUCTURE		2372
Internal Ballast	1362	
External Ballast	644	
Aft Heat Shield Ballast	366	
CREW SYSTEM		1226
LOAD PLATFORM - Couch	1126	
IMPACT ATTENUATION - Couch	100	
INSTRUMENTATION		45
ELECTRICAL POWER SYSTEM		30
MANUFACTURING VARIATION		17
COMMAND MODULE WEIGHT		9228

NOTE:* Basic structure does not include the forward cover.

[redacted]