Z65·11833

~~CONFIDENTIAL~~

CLASSIFICATION CHANGE

To UNCLASSIFIED

By authority of GDS-Ex 11652 Accession No. 1 7 4

Changed by L. Shirley Date 12/3/72

Classified Document Master Control Station, NASA

Scientific and Technical Information Facility

Copy #1

SID-63-271

ESTIMATED WEIGHT, BALANCE, INERTIA AND WEIGHT DISTRIBUTION FOR APOLLO AIRFRAME CONFIGURATIONS [U]

CONTRACT NAS 9-150 4545

20 MARCH 1963

PREPARED BY:

WEIGHT CONTROL

[redacted]

Downgraded at 3-year intervals; declassified after 12 years, DOD DIR 5200.10

This document contains information affecting the national defense of the United States within the meaning of the Espionage Laws Title 18 U.S.C. Section 793 and 794. Its transmission or revelation of its contents in any manner to an unauthorized person is prohibited by law.

NORTH AMERICAN AVIATION, INC.
SPACE and INFORMATION SYSTEMS DIVISION

~~CONFIDENTIAL~~

FORM M179 0-3 VELLUM REV. 2 61

[redacted]

TABLE OF CONTENTS

	ITEM	PAGE
I	INTRODUCTION	1, 2
II	AIRFRAME CONFIGURATION SUMMARY	3
III	AIRFRAME DIMENSIONAL DIAGRAM	4
IV	AIRFRAME 001 - PROPULSION TEST	
	Weight, Balance and Inertia Summary	5
	Mission Statement	5
	Command Module Weight Summary	6
	Service Module Weight Summary	7
	Weight Distribution	8, 9
V	AIRFRAME 002 - MAX "Q" LES VERIFICATION	
	Weight, Balance and Inertia Summary	10
	Mission Statement	10
	Command Module Weight Summary	11
	Service Module Weight Summary	12
	Launch Escape System Weight Summary	13
	Weight Distribution	14, 15
VI	AIRFRAME 004 - STATIC TEST NO. 1	
	Weight, Balance and Inertia Summary	16
	Mission Statement	16
	Command Module Weight Summary	17
	Service Module Weight Summary	18
	Launch Escape System Weight Summary	19
	Adapter Weight Summary	20
	Weight Distribution	21, 22
VII	AIRFRAME 005 - STATIC TEST NO. 2	
	Weight, Balance and Inertia Summary	23
	Mission Statement	23
	Command Module Weight Summary	24
	Weight Distribution	25
VIII	AIRFRAME 006 - HOUSE SPACECRAFT NO. 2	
	Weight, Balance and Inertia Summary	26
	Mission Statement	26
	Command Module Weight Summary	27
	Service Module Weight Summary	28
	Launch Escape System Weight Summary	29
	Adapter Weight Summary	30
	Weight Distribution	31, 32

[redacted]

[redacted]

TABLE OF CONTENTS
(CONTINUED)

	ITEM	PAGE
IX	AIRFRAME 008 - SPACECRAFT ENVIRONMENTAL PROOF	
	Weight, Balance and Inertia Summary	33
	Mission Statement	33
	Command Module Weight Summary	34
	Service Module Weight Summary	35
	Adapter Weight Summary	36
	Weight Distribution	37, 38
X	AIRFRAME 009 - MANNED FLIGHT - SUBORBITAL	
	Weight, Balance and Inertia Summary	39
	Mission Statement	39
	Abort Configuration	40
	Command Module Weight Summary	41
	Service Module Weight Summary	42
	Launch Escape System Weight Summary	43
	Adapter Weight Summary	44
	Weight Distribution	45, 46
XI	AIRFRAME 010 - PAD ABORT	
	Weight, Balance and Inertia Summary	47
	Mission Statement	47
	Command Module Weight Summary	48
	Launch Escape System Weight Summary	49
	Adapter Weight Summary	50
	Weight Distribution	51
XII	AIRFRAME 011 - MANNED FLIGHT - EARTH ORBITAL	
	Weight, Balance and Inertia Summary	52
	Mission Statement	52
	Abort Configuration	53
	Command Module Weight Summary	54
	Service Module Weight Summary	55
	Launch Escape System Weight Summary	56
	Adapter Weight Summary	57
	Weight Distribution	58, 59
XIII	DETAIL WEIGHT STATEMENT	60 - 89

[redacted]

~~CONFIDENTIAL~~

INTRODUCTION

This Report presents the estimated weight, balance, inertias and weight distributions for the nine airframe configurations. The basis for this estimated data is the Monthly Weight and Balance Report for the Apollo Spacecraft, SID 62-99-12, date 1 February 1963 as modified by the current definitions and objectives.

The command modules for airframes 002 and 010 will be ballasted to simulate the required Spacecraft configuration.

Airframe 006 command module reaction control propellant and all service module propellants and reactants will be simulated to duplicate the spacecraft characteristics.

Airframe 008 command and service module reaction control system and service propulsion system propellants will be simulated to duplicate spacecraft characteristics.

The estimated configuration weights of airframes 009 and 011 have been modified to reflect the requirements of crew, equipment and mission for the suborbital and orbital flight missions without the use of service module propulsion for injection. The propellant quantities reported are estimated amounts for test and/or retro.

~~CONFIDENTIAL~~

INTRODUCTION - CONTINUED

Centers of gravity data, derived from the February Monthly Weight and Balance Report, are based on the launch condition, and the Command Module "Z" co-ordinate will approach nine inches for the entry condition. All centers of gravity are in the NASA reference system, except the longitudinal axis has an origin 1000 inches below the tangency point of the Command Module substructure mold line.

The moments of inertia for all the airframes are reported in "slug feet squared."

The GSE ground adapter for airframe 001 is not defined. When the configuration is firm the weight data will be incorporated in a revision of this report.

This report will be periodically updated to reflect major weight changes, revised configurations and mission definitions.

AIRFRAME CONFIGURATION SUMMARY

	AIRFRAME NUMBER								
	001	002	004	005	006	008	009	010	011
TEST MISSION	SPACECRAFT PROPULSION SYSTEM QUALIFICATION	COMMAND MODULE LAUNCH ESCAPE SYSTEM MAX "Q" LES VERIFICATION	SPACECRAFT STATIC TEST NO. 1	COMMAND MODULE STATIC TEST NO. 2	HOUSE SPACECRAFT NO. 2	SPACECRAFT ENVIRONMENTAL PROOF	SPACECRAFT MANNED SUBORBITAL FLIGHT SERVICE MODULE QUALIFICATION	COMMAND MODULE LAUNCH ESCAPE SYSTEM PAD ABORT	SPACECRAFT SECOND MANNED FLIGHT ORBITAL
LAUNCH ESCAPE SYSTEM	-	6415	747	-	6430	-	6430	6415	6430
COMMAND MODULE	5263	9020	2245	2245	9020	9020	8346	9020	8543
SERVICE MODULE	9572	4440	2623	-	9920	9920	8183	-	9313
ADAPTER	-	-	630	-	630	630	630	1380	630
TOTAL*	14835	19875	6245	2245	26000	19570	23589	16815	24916

*Less Main SPS Propellant

~~CONFIDENTIAL~~

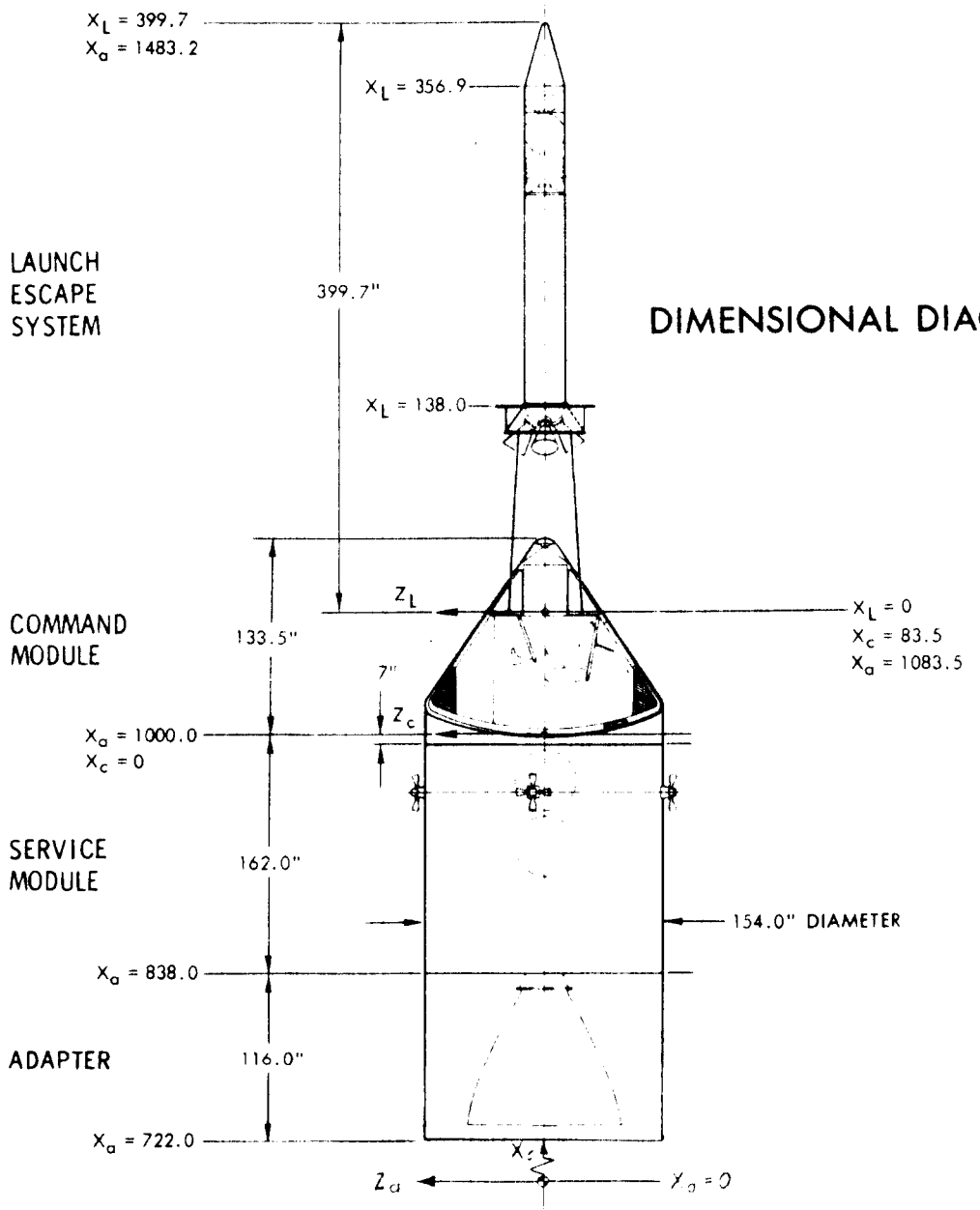

DIMENSIONAL DIAGRAM

~~CONFIDENTIAL~~

WEIGHT, BALANCE AND INERTIA SUMMARY

COMMAND MODULE AND SERVICE MODULE

PROPULSION SYSTEMS QUALIFICATION

AIRFRAME 001

AFRM TYPE AND NO.	WEIGHT POUNDS	CENTER OF GRAVITY			MOMENT OF INERTIA		
		X	Y	Z	ROLL (X)	PITCH (Y)	YAW (Z)
AFRM 001 - PROP. SYS. OPERATIONS							
COMMAND MODULE	5263	1031.0	1.2	3.3	2539	1935	1989
SERVICE MODULE - Less Propellant	9572	912.0	-0.3	0.8	6254	9974	9873
TOTAL - Less Propellant	14835	957.8	0.2	1.7	8799	24111	24061
PROPELLANT*	45000	915.5	0.0	0.0	23750	26600	34200
TOTAL - Less CSM Adapter	59835	926.0	0.1	0.4	32556	55020	62563

NOTE: *Tanks have been filled to maximum capacity.

MISSION STATEMENT: SPACECRAFT FOR PROPULSION SYSTEMS QUALIFICATION TEST

Utilize Hot Propulsion Ground Test to verify the spacecraft propulsion system and related subsystems under normal and emergency flight conditions.

~~CONFIDENTIAL~~

WEIGHT SUMMARY

COMMAND MODULE

PROPULSION SYSTEMS QUALIFICATION

AIRFRAME 001

ITEM		WEIGHT
WEIGHT EMPTY		[illegible]
Structure	[illegible]	
Crew Systems	[illegible]	
Communications & Instrumentation	396	
Guidance & Navigation	-	
Stabilization & Control	213	
Reaction Control	[illegible]	
Electrical Power	217	
Environmental Control	179	
Earth Landing	-	
USEFUL LOAD		1651
Crew Systems	[illegible]	
Reaction Control	[illegible]	
Environmental Control	20	
Scientific Payload	-	
GROSS WEIGHT		5263

~~CONFIDENTIAL~~

~~CONFIDENTIAL~~

WEIGHT SUMMARY

SERVICE MODULE

PROPULSION SYSTEMS QUALIFICATION

AIRFRAME 001

ITEM		SUBTOTAL WEIGHT
WEIGHT EMPTY		7538
Structure	3623	
Electronic Subsystem	103	
Reaction Control	599	
Electrical Power	1151	
Environmental Control	-	
Main Propulsion	3062	
USEFUL LOAD		2034
Reaction Control	835	
Electrical Power	483	
Environmental Control	-	
Propulsion	716	
GROSS WEIGHT		9572

WEIGHT, BALANCE AND INERTIA SUMMARY

SPACECRAFT

MAX "Q" LES VERIFICATION

AIRFRAME 002

AFRM TYPE AND NO.	WEIGHT POUNDS	CENTER OF GRAVITY			MOMENT OF INERTIA		
		X	Y	Z	ROLL (X)	PITCH (Y)	YAW (Z)
AFRM 002 - MAX "Q" LES VERIFICATION							
LAUNCH ESCAPE SYSTEM	6415	1294.7	0.0	0.0	219	7780	7780
COMMAND MODULE*	9020	1044.0	0.7	7.7	4224	3622	3596
SERVICE MODULE	4440	881.4	-1.4	-15.6	3311	5071	4753
TOTAL	19875	1088.6	0.0	0.0	8105	120592	119903

*Ballasted to Spacecraft Configuration

MISSION STATEMENT: COMMAND MODULE AND LAUNCH ESCAPE SYSTEM MAX. "q" LES VERIFICATION

Demonstrate command module structural integrity and qualify the launch escape system at Max. "q".

[redacted]

WEIGHT SUMMARY

COMMAND MODULE

LAUNCH ESCAPE VEHICLE - VEHICLE [illegible]

AS Flight 002

ITEM		CURRENT WEIGHT
WEIGHT EMPTY		3632
Structure	2498	
Electrical Power	417	
Environmental Control	161	
Earth Landing	556	
TOTAL WEIGHT EMPTY		3632
BALLAST		5388
GROSS WEIGHT		9020

~~CONFIDENTIAL~~

WEIGHT SUMMARY

SERVICE MODULE

LAUNCH ESCAPE SYSTEM - VERIFICATION

AIRFRAME 002

ITEM		CURRENT WEIGHT
WEIGHT EMPTY		2670
Structure	2218	
Space Radiator (ECS)	17	
Electrical Provisions	100	
LJ II Attaching Rings	335	
TOTAL WEIGHT EMPTY		2670
BALLAST		1770
GROSS WEIGHT		4440

~~CONFIDENTIAL~~

APOLLO

LAUNCH ESCAPE SYSTEM

LAUNCH ESCAPE SYSTEM - VERIFICATION

AIRFRAME 002

ITEM	CURRENT WEIGHT
LAUNCH ESCAPE SYSTEM	
Structure	1057
Ballast	79
Propulsion	5259
Electrical Power	20
TOTAL LAUNCH ESCAPE SYSTEM	6415

WEIGHT, BALANCE AND INERTIA SUMMARY

SPACECRAFT

STATIC TEST NO. 1

AIRFRAME 004

AFRM TYPE AND NO.	WEIGHT POUNDS	CENTER OF GRAVITY			MOMENT OF INERTIA		
		X	Y	Z	ROLL (X)	PITCH (Y)	YAW (Z)
AFRM 004 - STATIC TEST NO. 1							
LAUNCH ESCAPE SYSTEM	747	1107.2	0.0	0.0	75	1147	1147
COMMAND MODULE	2245	1044.8	0.3	-4.3	1492	1113	1104
SERVICE MODULE	2623	912.8	-0.1	0.1	2344	3167	3155
ADAPTER	630	779.8	0.0	0.0	545	599	599
TOTAL	6245	982.1	0.0	-1.5	4262	24391	24364

MISSION STATEMENT: SPACECRAFT FOR STATIC TEST NO. 1

Simulate critical loading conditions to verify spacecraft rigidity and structural integrity.

~~CONFIDENTIAL~~

WEIGHT SUMMARY

COMMAND MODULE

STATIC TEST NO. 1

AIRFRAME 004

ITEM	CURRENT WEIGHT
WEIGHT EMPTY	
Structure	2,45
TOTAL WEIGHT EMPTY	2,45

~~CONFIDENTIAL~~

WEIGHT SUMMARY

SERVICE MODULE

STATIC TEST NO. 1

AIRFRAME 004

ITEM	CURRENT WEIGHT
WEIGHT EMPTY	
Structure	2023
TOTAL WEIGHT EMPTY	2023

~~CONFIDENTIAL~~

~~CONFIDENTIAL~~

WEIGHT SUMMARY

LAUNCH ESCAPE SYSTEM

STATIC TEST NO. 1

AIRFRAME COA

ITEM	CURRENT WEIGHT
LAUNCH ESCAPE SYSTEM	
Structure	747
TOTAL LAUNCH ESCAPE SYSTEM	747

~~CONFIDENTIAL~~

~~CONFIDENTIAL~~

WEIGHT SUMMARY

ADAPTER

STATIC TEST NO. 1

AIRFRAME 004

ITEM	CURRENT WEIGHT
ADAPTER	
Structure C-1 Adapter	.030
TOTAL ADAPTER	.030

~~CONFIDENTIAL~~

WEIGHT, BALANCE AND INERTIA SUMMARY

COMMAND MODULE

STATIC TEST NO. 2

AIRFRAME 005

AFRM TYPE AND NO.	WEIGHT POUNDS	CENTER OF GRAVITY			MOMENT OF INERTIA		
		X	Y	Z	ROLL (X)	PITCH (Y)	YAW (Z)
AFRM 005 - STATIC TEST NO. 2							
COMMAND MODULE	2245	1044.8	0.2	-4.3	1392	1113	1104
TOTAL	2245	1044.8	0.2	-4.3	1392	1113	1104

MISSION STATEMENT: COMMAND MODULE FOR STATIC TEST NO. 2

Simulate re-entry thermal environment and impact landing conditions to verify structural integrity and crew support suitability.

~~CONFIDENTIAL~~

WEIGHT SUMMARY

COMMAND MODULE

STATIC TEST NO. 2

AIRFRAME 005

ITEM	CURRENT WEIGHT
WEIGHT EMPTY	
Structure	2245
TOTAL WEIGHT EMPTY	2245

WEIGHT, BALANCE AND INERTIA SUMMARY

SPACECRAFT

HOUSE S/C NO. 2

AIRFRAME 006

AFRM TYPE AND NO.	WEIGHT POUNDS	CENTER OF GRAVITY			MOMENT OF INERTIA		
		X	Y	Z	ROLL (X)	PITCH (Y)	YAW (Z)
AFRM 006 - HOUSE S/C NO. 2							
LAUNCH ESCAPE SYSTEM	6430	1295.1	0.0	0.0	230	7864	7864
COMMAND MODULE	9020	1044.0	0.7	7.7	[illegible]	3622	3596
SERVICE MODULE	9[illegible]20	911.0	0.0	0.4	664	10765	10625
ADAPTER	630	770.8	0.0	0.0	545	599	599
TOTAL	26000	1042.0	0.2	2.3	11704	157657	157421

MISSION STATEMENT: HOUSE SPACECRAFT NO. 2

Verify systems performance and compatibility in and between major modules, associated GSE and furnish support to AFRM 008.

CONFIDENTIAL

CONFIDENTIAL

[redacted]

WEIGHT SUMMARY

COMMAND MODULE

HOUSE S/C NO. 2

AIRFRAME 006

ITEM		CURRENT WEIGHT
WEIGHT EMPTY		7605
Structure	4032	
Crew Systems	512	
Communications & Instrumentation	384	
Guidance & Navigation	412	
Stabilization & Control	233	
Reaction Control	294	
Electrical Power	417	
Environmental Control	265	
Earth Landing	556	
USEFUL LOAD		1415
Crew Systems	772	
Reaction Control (Simulated)	242	
Environmental Control	151	
Scientific Payload	250	
GROSS WEIGHT		9020

[redacted]

~~CONFIDENTIAL~~

WEIGHT SUMMARY

SERVICE MODULE

HOUSE D/C NO. A

AIRFRAME COC

ITEM		CURRENT WEIGHT
WEIGHT EMPTY		7679
Structure	2623	
Electronic Subsystem	160	
Reaction Control	592	
Electrical Power	1151	
Environmental Control	78	
Main Propulsion	3062	
USEFUL LOAD (SIMULATED)		2241
Reaction Control	835	
Electrical Power	483	
Environmental Control	207	
Propulsion	716	
GROSS WEIGHT		9920

CONFIDENTIAL

WEIGHT SUMMARY

LAUNCH ESCAPE SYSTEM

HOUSE S/C NO. 2

AIRFRAME 006

ITEM	CURRENT WEIGHT
LAUNCH ESCAPE SYSTEM	
Structure	1072
Ballast	79
Propulsion	5259
Electrical Power	20
TOTAL LAUNCH ESCAPE SYSTEM	6430

~~CONFIDENTIAL~~

WEIGHT SUMMARY

ADAPTER

HOUSE S/C NO. 2

AIRFRAME 006

ITEM	CURRENT WEIGHT
ADAPTER	
Structure C-1 Adapter	630
TOTAL ADAPTER	630

WEIGHT, BALANCE AND INERTIA SUMMARY

COMMAND MODULE, SERVICE MODULE AND ADAPTER

S/C ENVIRONMENTAL PROOF

AIRFRAME 008

AFFM TYPE AND NO.	WEIGHT POUNDS	CENTER OF GRAVITY			MOMENT OF INERTIA		
		X	Y	Z	ROLL (X)	PITCH (Y)	YAW (Z)
AFFM 008 - S/C ENVIRONMENTAL PROOF							
COMMAND MODULE	[illegible]	1027.0	0.7	[illegible].7	42[illegible].4	3022	3596
SERVICE MODULE	9020	911.0	0.0	[illegible].4	[illegible]45	10765	10625
ADAPTER	[illegible]	779.[illegible]	0.0	0.0	545	[illegible]	[illegible]
TOTAL	10570	[illegible].1	0.3	[illegible]	11471	3[illegible]061	[illegible]

MISSION STATEMENT: SPACECRAFT FOR ENVIRONMENTAL PROOF

Simulate mission environments to verify the design adequacy of the complete spacecraft.

CONFIDENTIAL

CONFIDENTIAL

~~CONFIDENTIAL~~

WEIGHT SUMMARY

COMMAND MODULE

S/C ENVIRONMENTAL PROOF

AIRLAUNCH OOS

ITEM		CURRENT WEIGHT
WEIGHT EMPTY		7005
Structure	4032	
Crew Systems	512	
Communications & Instrumentation	704	
Guidance & Navigation	412	
Stabilization & Control	233	
Reaction Control	294	
Electrical Power	417	
Environmental Control	335	
Earth Landing	554	
USEFUL LOAD		1415
Crew Systems	772	
Reaction Control (Simulated)	242	
Environmental Control	151	
Scientific Payload	250	
GROSS WEIGHT		8020

~~CONFIDENTIAL~~

WEIGHT SUMMARY

SERVICE MODULE

S/C ENVIRONMENTAL PROOF

AIRFRAME 008

ITEM		CURRENT WEIGHT
WEIGHT EMPTY		7679
Structure	2623	
Electronic Subsystem	166	
Reaction Control	599	
Electrical Power	1151	
Environmental Control	78	
Main Propulsion	3062	
USEFUL LOAD		2241
Reaction Control (Simulated)	935	
Electrical Power	483	
Environmental Control	207	
Propulsion (Simulated)	716	
GROSS WEIGHT		9920

~~CONFIDENTIAL~~

WEIGHT SUMMARY

ADAPTER

S/C ENVIRONMENTAL PROOF

AIRFRAME 008

ITEM	CURRENT WEIGHT
ADAPTER	
Structure C-1 Adapter	630
TOTAL ADAPTER	630

WEIGHT, BALANCE AND INERTIA SUMMARY

SPACECRAFT

MANNED FLIGHT

AIRFRAME 009

ASSY TYPE AND NO.	WEIGHT POUNDS	CENTER OF GRAVITY			MOMENT OF INERTIA		
		X	Y	Z	ROLL (X)	PITCH (Y)	YAW (Z)
AFRM 009 - SUBORBITAL							
COMMAND MODULE	9346	1042.2	-0.6	[illegible]	[illegible]	[illegible]	[illegible]
SERVICE MODULE - Less Propellant	[illegible]	913.1	1.9	-1.1	[illegible]	[illegible]	[illegible]
TOTAL - Less Propellant	1[illegible]529	[illegible]	[illegible]	[illegible]	[illegible]	[illegible]	27359
PROPELLANT - S/M	4991	[illegible].1	[illegible].0	-11.6	1700	1100	1250
TOTAL - With Propellant	[illegible]1520	[illegible].0	[illegible]	-0.7	11481	40917	41263
ADAPTER - C-1	530	[illegible]	0.0	0.0	545	599	599
TOTAL - Injected	22010	[illegible]7.1	0.4	-0.6	12042	45433	45784
LAUNCH ESCAPE SYSTEM	6430	1[illegible]9.1	0.0	0.0	220	7864	7864
TOTAL 009 - Launch	28480	1025.[illegible]	0.0	-0.5	12307	103449	103885

MISSION STATEMENT: SPACECRAFT FOR LAUNCH AND RECOVERY QUALIFICATION SUBORBITAL FLIGHT

Test for qualification of launch vehicle, spacecraft and essential spacecraft systems for manned orbital flight.

CONFIDENTIAL

CONFIDENTIAL

WEIGHT, BALANCE AND INERTIA SUMMARY

SPACECRAFT

ABORT CONFIGURATION

AIRF. ABL 009

ARRM TYPE AND NO.	WEIGHT POUNDS	CG LOCATION			MOMENT OF INERTIA		
		X'	Y	Z	[illegible]	[illegible]	[illegible]
AFRM 009 - ABORT							
COMMAND MODULE	[illegible]	[illegible]	-0.[illegible]	[illegible]	[illegible]	3[illegible]	3059
LAUNCH ABORT SYSTEM	6430	[illegible].1	0.[illegible]	[illegible]	[illegible]	7[illegible]64	[illegible]864
TOTAL - Launch Abort	14776	[illegible].9	-0.3	3.5	[illegible]	[illegible]	60079
Less - Main and Pitch Motor Propellants	-3230	[illegible]7.[illegible]	[illegible]	0.0	-[illegible]	-13[illegible]	-13[illegible]
TOTAL - LES burnout	11546	1113.9	-0.[illegible]	[illegible]	[illegible]	[illegible]	[illegible]72

CONFIDENTIAL

CONFIDENTIAL

~~CONFIDENTIAL~~

WEIGHT SUMMARY

COMMAND MODULE

SUBORBITAL FLIGHT

AIRFRAME 009

ITEM		CURRENT WEIGHT
		7433
WEIGHT EMPTY	4032	
Structure	392	
Crew Systems	910	
Communications & Instrumentation	212	
Guidance & Navigation	221	
Stabilization & Control	294	
Reaction Control	301	
Electrical Power	235	
Environmental Control	556	
Earth Landing		910
USEFUL LOAD	139	
Crew Systems	242	
Reaction Control	35	
Environmental Control	-	
Scientific Payload		3346
GROSS WEIGHT		

~~CONFIDENTIAL~~

WEIGHT SUMMARY

SERVICE MODULE

SUBORBITAL FLIGHT

AIRPLANE 009

ITEM		CURRENT WEIGHT
WEIGHT EMPTY		7194
Structure	4023	
Electronic Subsystem	64	
Reaction Control	207	
Electrical Power	799	
Environmental Control	70	
Main Propulsion	2062	
USEFUL LOAD		1031
Reaction Control	245	
Electrical Power	242	
Environmental Control	103	
Propulsion	391	
GROSS WEIGHT		8103

~~CONFIDENTIAL~~

WEIGHT SUMMARY

LAUNCH ESCAPE SYSTEM

SUBORBITAL FLIGHT

AIRFRAME 009

ITEM	SUBUNIT WEIGHT
LAUNCH ESCAPE SYSTEM	
Structure	1071
Ballast	79
Propulsion	5259
Electrical Power	20
TOTAL LAUNCH ESCAPE SYSTEM	6430

~~CONFIDENTIAL~~

WEIGHT SUMMARY

ADAPTER

SUBORBITAL FLIGHT

AIRFRAME 009

ITEM	CURRENT WEIGHT
ADAPTER	
Structure - C-1 Adapter	630
TOTAL ADAPTER	630

WEIGHT, BALANCE AND INERTIA DATA

COMMAND MODULE, LES AND ADAPTER

PAD ABORT

AFRM NO. 010

AFRM TYPE AND NO.	WEIGHT POUNDS	CENTER OF GRAVITY			MOMENTS OF INERTIA		
		X	Y	Z	ROLL (X)	PITCH (Y)	YAW (Z)
AFRM 010 - PAD ABORT							
LAUNCH ESCAPE SYSTEM	6415	1294.7	0.0	0.0	210	7[illegible]0	7[illegible]0
COMMAND MODULE*	[illegible]	1044.0	0.7	7.7	[illegible]4	[illegible]	[illegible]6
Total - Less Ground Adapter	[illegible]	1142.2	0.4	4.5	[illegible]	[illegible]	[illegible]1

*Ballasted to Spacecraft Configuration

MISSION STATEMENT: COMMAND MODULE AND LAUNCH ESCAPE SYSTEM FOR PAD ABORT

Test for early qualification of the Launch Escape System to evaluate aerodynamic stability, structural integrity and system reliability.

~~CONFIDENTIAL~~

WEIGHT SUMMARY

LAUNCH ESCAPE SYSTEM

PAD ABORT

AIRFRAME 010

ITEM	CURRENT WEIGHT
LAUNCH ESCAPE SYSTEM	
Structure	1057
Ballast	79
Propulsion	5259
Electrical Power	20
TOTAL LAUNCH ESCAPE SYSTEM	6415

[redacted]

WEIGHT SUMMARY

ADAPTER

PAD ABORT

AIRFRAME CLC

ITEM	CURRENT WEIGHT
ADAPTER	
Structure Ground Adapter	1380
TOTAL ADAPTER	1380

WEIGHT, BALANCE AND INERTIA SUMMARY

SPACECRAFT

MANNED FLIGHT

AIRFRAME 011

ARFM TYPE AND NO.	WEIGHT POUNDS	CENTER OF GRAVITY			MOMENT OF INERTIA		
		X	Y	Z	ROLL (X)	PITCH (Y)	YAW (Z)
AFFM 011 - EARTH ORBITAL							
COMMAND MODULE	8543	1045.1	-0.8	6.8	3949	3455	3314
SERVICE MODULE - Less Propellant	9313	914.5	0.5	0.5	[illegible]	[illegible]	9374
TOTAL - Less Propellant	17856	974.0	[illegible]	3.5	[illegible]	[illegible]	[illegible]
PROPELLANT - S/M	2444	[illegible].0	[illegible].0	-11.6	800	[illegible]	[illegible]
TOTAL - With Propellant	20300	[illegible]	[illegible]	1.7	11114	[illegible]	[illegible]
ADAPTER - C-1	630	[illegible]	0.0	0.0	545	[illegible]	[illegible]
TOTAL - Injected	20930	954.3	3.3	1.6	11661	[illegible]	43272
LAUNCH ESCAPE SYSTEM	4430	1[illegible]5.1	0.0	0.0	[illegible]	[illegible]	[illegible]
TOTAL 011 - Launch	27360	[illegible]	[illegible]	1.3	[illegible]	174.57	174.41

MISSION STATEMENT: SPACECRAFT FOR SECOND MANNED FLIGHT EARTH ORBITAL QUALIFICATION

Verify feasibility of multimanned orbital space flight and safe earth recovery.

[redacted]

[redacted]

WEIGHT, BALANCE AND INERTIA SUMMARY

SPACECRAFT

ABORT CONFIGURATION

AIRFRAME 011

AREA TYPE AND NO.	WEIGHT POUNDS	CENTER OF GRAVITY			MOMENT OF INERTIA		
		X	Y	Z	ROLL (X)	PITCH (Y)	YAW (Z)
AREA 011 - ABORT							
CONTAINER MODULE	[illegible]	1[illegible]5.1	-0.[illegible]	[illegible]	[illegible]	[illegible]	3[illegible]
LANDING CAPSULE SHELL	[illegible]	1[illegible].1	[illegible]	[illegible]	[illegible]	7864	7[illegible]4
TOTAL - Landing Abort	1[illegible]	11[illegible].5	-0.1	[illegible]	[illegible]	[illegible]7	[illegible]
Less - Main and Site Motor Propellants	-3[illegible]	1[illegible]7.2	[illegible]	[illegible]	-[illegible]	-1[illegible]	-1[illegible]
TOTAL - Less Burnout	117[illegible]	11[illegible]	-0.1	[illegible]	[illegible]	[illegible]1[illegible]	[illegible]

CONFIDENTIAL

CONFIDENTIAL

~~CONFIDENTIAL~~

WEIGHT SUMMARY

COMMAND MODULE

CONTROL WEIGHT

AIRFRAME 011

ITEM		CURRENT WEIGHT
BASIC EMPTY		7635
Structure	1022	
Crew Systems	409	
Communications & Instrumentation	1038	
Guidance & Navigation	412	
Stabilization & Control	232	
Reaction Control	294	
Electrical Power	217	
Environmental Control	243	
Earth Landing	556	
USEFUL LOAD		91[illegible]
Crew Systems	143	
Reaction Control	2[illegible]	
Environmental Control	33	
Scientific Payload	-	
GROSS WEIGHT		8743

~~CONFIDENTIAL~~ SID 63-271

~~CONFIDENTIAL~~

WEIGHT SUMMARY

SERVICE MODULE

ORBITAL WEIGHT

AIRPLANE 011

ITEM		CURRENT WEIGHT
WEIGHT EMPTY		7770
Structure	6[illegible]	
Electronic Subsystem	1[illegible]	
Reaction Control	5[illegible]	
Electrical Power	1251	
Environmental Control	7[illegible]	
Main Propulsion	3062	
USEFUL LOAD		1534
Reaction Control	[illegible]	
Electrical Power	4[illegible]3	
Environmental Control	207	
Propulsion	29[illegible]	
GROSS WEIGHT		9312

~~CONFIDENTIAL~~

WEIGHT SUMMARY

LAUNCH ESCAPE SYSTEM

ORBITAL FLIGHT

AIRFRAME ONLY

ITEM	CURRENT WEIGHT
LAUNCH ESCAPE SYSTEM	
Structure	1072
Ballast	79
Propulsion	5259
Electrical Power	[illegible]
TOTAL LAUNCH ESCAPE SYSTEM	6430

~~CONFIDENTIAL~~

[illegible]

ADAPTER

[illegible] FLIGHT

[illegible] OIL

ITEM	CURRENT WEIGHT
ADAPTER	
Structure [illegible]	630
TOTAL A[illegible]	630

[redacted]

DETAIL WEIGHT STATEMENT

COMMAND MODULE SUMMARY

ITEM	WEIGHT - POUNDS								
AIRFRAME NUMBER	001	002	004	005	006	008	009	010	011
COMMAND MODULE									
Structure	2498	2498	2245	2245	4032	4032	4032	2498	4032
Crew Systems	405	0	0	0	512	512	392	0	400
Communications & Instrumentations	396	0	0	0	884	884	910	0	1038
Guidance & Navigation	0	0	0	0	412	412	412	0	412
Stabilization & Control	213	0	0	0	233	233	221	0	233
Reaction Control	294	0	0	0	294	294	294	0	294
Electrical Power	417	417	0	0	417	417	381	289	417
Environmental Control	179	161	0	0	265	265	235	[illegible]	243
Earth Landing	0	556	0	0	556	556	556	556	556
Useful Load	861	0	0	0	1173	1173	913	0	918
Ballast	0	5388	0	0	242	242	[illegible]	5677	0
TOTAL COMMAND MODULE	5263	9020	2245	2245	9020	9020	8346	9020	8543

[redacted]

CONFIDENTIAL

DETAIL WEIGHT STATEMENT

STRUCTURE

ITEM	WEIGHT - POUNDS								
AIRFRAME NUMBER	001	002	004	005	006	008	009	010	011
STRUCTURE									
HEAT SHIELD	(1281)	(1281)	(1281)	(1281)	(1281)	(1281)	(1281)	(1281)	(1281)
Forward Compartment	168	168	168	168	168	168	168	168	168
Crew Compartment	639	639	639	639	639	639	639	639	639
Aft Compartment	474	474	474	474	474	474	474	474	474
INNER STRUCTURE	(964)	(964)	(964)	(964)	(964)	(964)	(964)	(964)	(964)
Forward Section	208	208	208	208	208	208	208	208	208
Forward Sidewall	354	354	354	354	354	354	354	354	354
Aft Sidewall	206	206	206	206	206	206	206	206	206
Aft Bulkhead	196	196	196	196	196	196	196	196	196
SECONDARY STRUCTURE	(253)	(253)	(-)	(-)	(253)	(253)	(253)	(253)	(253)
ABLATION MATERIAL	(-)	(-)	(-)	(-)	(1348)	(1348)	(1348)	(-)	(1348)
MICROFIBER INSULATION	(-)	(-)	(-)	(-)	(186)	(186)	(186)	(-)	(186)
TOTAL STRUCTURE	2498	2498	2245	2245	4032	4032	4032	2498	4032

CONFIDENTIAL

[redacted]

DETAIL WEIGHT STATEMENT

CREW SYSTEMS

ITEM	WEIGHT - POUNDS								
AIRFRAME NUMBER	001	002	004	005	006	008	009	010	011
CREW SYSTEMS									
Personal Radiation Dosimeter	5.0	-	-	-	5.0	5.0	-	-	5.0
Portable Life Support System	-	-	-	-	60.0	60.0	-	-	-
Personal Communications	5.0	-	-	-	5.0	5.0	5.0	-	5.0
Seat Liners and Restraint Harness	36.0	-	-	-	36.0	36.0	36.0	-	36.0
Sleeping Restraint	-	-	-	-	4.0	4.0	-	-	-
Waste Management	18.0	-	-	-	18.0	18.0	-	-	-
Lighting System	15.0	-	-	-	15.0	15.0	15.0	-	15.0
Garments - Constant Wear	6.0	-	-	-	9.0	9.0	-	-	-
Emergency Water Device	-	-	-	-	1.5	1.5	-	-	-
Survival Kit	-	-	-	-	56.0	56.0	56.0	-	56.0
Shoe Straps	-	-	-	-	2.0	2.0	-	-	2.0
Food Reconstitution Device	-	-	-	-	4.0	4.0	-	-	-
Log Book, Pencils, Etc	1.	-	-	-	1.0	1.0	-	-	1.0
Hatch Egress	-	-	-	-	3.0	3.0	3.0	-	3.0
Lap Board	2.0	-	-	-	2.0	2.0	-	-	-
Manual - Maint. Maps and Case	-	-	-	-	6.0	6.0	-	-	-
Suit Umbilical Hose	10.0	-	-	-	10.	10.0	7.5	-	7.5
IFT Maint. Tool Belt	-	-	-	-	1.0	1.0	-	-	-
Structural Seats and Supports	258.0	-	-	-	258.0	258.0	258.0	-	258.0
Nuclear Radiation Detectors	7.0	-	-	-	7.0	7.0	7.0	-	7.0
IFT Maintenance Tool	-	-	-	-	1.0	1.0	-	-	-
Food Preparation Table	-	-	-	-	3.0	3.0	-	-	-
Personal Head Sets	4.5	-	-	-	4.5	4.5	4.5	-	4.5
Misc. Installation Equipment	37.5								
TOTAL CREW SYSTEMS	405	[illegible]	[illegible]	[illegible]	512	512	392		40[illegible]

[redacted]

DETAIL WEIGHT STATEMENT

COMMUNICATIONS & INSTRUMENTATION

ITEM	WEIGHT - POUNDS								
AIRFRAME NUMBER	001	002	004	005	006	008	009	010	011
TELECOMMUNICATIONS									
Lower Bay	(-)	(-)	(-)	(-)	(231.6)	(231.6)	(167.1)	(-)	(231.6)
C-Band Transponder	-	-	-	-	16.0	16.0	16.0	-	16.0
DSIF Trans. - Rec.	-	-	-	-	25.0	25.0	-	-	25.0
DSIF Power Amplifier	-	-	-	-	20.5	20.5	-	-	20.5
VHF FM Transmitter	-	-	-	-	5.7	5.7	5.7	-	5.7
VHF AM Trans. - Rec.	-	-	-	-	9.3	9.3	9.3	-	9.3
HF Transceiver	-	-	-	-	10.0	10.0	10.0	-	10.0
VHF Recovery Beacon	-	-	-	-	6.5	6.5	6.5	-	6.5
Multiplexer	-	-	-	-	9.0	9.0	9.0	-	9.0
Spares	-	-	-	-	19.0	19.0	-	-	19.0
PCM Telemetry - Unit No. 1 & 2	-	-	-	-	51.0	51.0	51.0	-	51.0
Signal Conditioner	-	-	-	-	10.4	10.4	10.4	-	10.4
Data Patch Panel Equipment	-	-	-	-	9.2	9.2	9.2	-	9.2
Recorder	-	-	-	-	15.0	15.0	15.0	-	15.0
Audio Center	-	-	-	-	5.0	5.0	5.0	-	5.0
Premodulation Processor	-	-	-	-	10.0	10.0	10.0	-	10.0
Central Timing Equipment	-	-	-	-	10.0	10.0	10.0	-	10.0
Remote Equipment	(-)	(-)	(-)	(-)	(148.4)	(148.4)	(148.4)	(-)	(148.4)
VHF/2 KMC OMNI Antenna	-	-	-	-	59.0	59.0	59.0	-	59.0
Antennas and Transmission	-	-	-	-	50.4	50.4	50.4	-	50.4
TV Camera	-	-	-	-	4.0	4.0	4.0	-	4.0
Instrumentation Sensors	-	-	-	-	35.0	35.0	35.0	-	35.0

[redacted]

DETAIL WEIGHT STATEMENT

COMMUNICATIONS & INSTRUMENTATION

ITEM	WEIGHT - POUNDS								
AIRFRAME NUMBER	001	002	004	005	006	008	009	010	011
TELECOMMUNICATIONS (CONTINUED)									
Supports	-	-	-	-	(12.0)	(12.0)	(12.0)	-	(12.0)
Electrical Provisions	-	-	-	-	(96.0)	(96.0)	(96.0)	-	(96.0)
Electronic Interface Provisions	-	-	-	-	(8.0)	(8.0)	(8.0)	-	(8.0)
Cooling Provisions	-	-	-	-	(21.0)	(21.0)	(21.0)	-	(21.0)
TOTAL TELECOMMUNICATIONS (To Be Brought Forward)	0	0	0	0	517	517	452.5	0	517

[redacted]

CONFIDENTIAL

DETAIL WEIGHT STATEMENT

COMMUNICATIONS & INSTRUMENTATION

ITEM	WEIGHT - POUNDS								
AIRFRAME NUMBER	001	002	004	005	006	008	009	010	011
CONTROLS & DISPLAYS									
Main Display Panel Control Station	(60.5)	(-)	(-)	(-)	(60.5)	(60.5)	(60.5)	(-)	(60.5)
Integrated Display	10.0	-	-	-	10.0	10.0	10.0	-	10.0
GMT Clock	0.7	-	-	-	0.7	0.7	0.7	-	0.7
Computer Data Insert and Display	15.0	-	-	-	15.0	15.0	15.0	-	15.0
Time to and From Clock	1.5	-	-	-	1.5	1.5	1.5	-	1.5
SCS Control Panel	6.0	-	-	-	6.0	6.0	6.0	-	6.0
Delta Velocity Control	2.5	-	-	-	2.5	2.5	2.5	-	2.5
Flight Director Attitude Indicator	10.5	-	-	-	10.5	10.5	10.5	-	10.5
Gimbal Angle Indicator	2.0	-	-	-	2.0	2.0	2.0	-	2.0
Altimeter	1.8	-	-	-	1.8	1.8	1.8	-	1.8
Survival Indicator	8.0	-	-	-	8.0	8.0	8.0	-	8.0
Master Caution Lights	2.5	-	-	-	2.5	2.5	2.5	-	2.5
Main Display Panel Center Station	(38.5)	(-)	(-)	(-)	(38.5)	(38.5)	(38.5)	(-)	(38.5)
Audio Panel	1.3	-	-	-	1.3	1.3	1.3	-	1.3
8 Day Clock	0.5	-	-	-	0.5	0.5	0.5	-	0.5
Indicator Light and Abort Light	0.7	-	-	-	0.7	0.7	0.7	-	0.7
Reaction Control System	7.0	-	-	-	7.0	7.0	7.0	-	7.0
Service Module Propulsion	7.0	-	-	-	7.0	7.0	7.0	-	7.0
Booster Situation Indicator	2.0	-	-	-	2.0	2.0	2.0	-	2.0
ECS - Gas Control	6.0	-	-	-	6.0	6.0	6.0	-	6.0
ECS - Liquid Control	6.0	-	-	-	6.0	6.0	6.0	-	6.0
Service Module Quad. Temp. Ind	3.0	-	-	-	3.0	3.0	3.0	-	3.0
SCS Power Control	2.0	-	-	-	2.0	2.0	2.0	-	2.0
IFTS Scan Select	1.0	-	-	-	1.0	1.0	1.0	-	1.0
Loudspeaker	2.0	-	-	-	2.0	2.0	2.0	-	2.0

CONFIDENTIAL

DETAIL WEIGHT STATEMENT

COMMUNICATIONS & INSTRUMENTATION

ITEM	WEIGHT - POUNDS								
AIRFRAME NUMBER	001	002	004	005	006	008	009	010	011
CONTROLS & DISPLAYS (CONTINUED)									
Main Display Panel Sys. Manag. Sta.	(40)	(-)	(-)	(-)	(40)	(40)	(40)	(-)	(40)
Communications Control Panel	8.0		-	-	8.0	8.0	8.0	-	8.0
Antenna Control	3.0	-	-	-	3.0	3.0	3.0	-	3.0
Abort Light and Master Caution	2.7	-	-	-	2.7	2.7	2.7	-	2.7
Power Distribution	12.3	-	-	-	12.3	12.3	12.3	-	12.3
Fuel Cell Reactants	9.0	-	-	-	9.0	9.0	9.0	-	9.0
Cyrogenic Storage	5.0	-	-	-	5.0	5.0	5.0	-	5.0
Main Display Panel Inst. Prov.	(27.0)	-	-	-	(27.0)	(27.0)	(27.0)	-	(27.0)
Main Display Right Hand Console	(11)	(-)	(-)	(-)	(11)	(11)	(11)	(-)	(11)
Nuclear Detection Display	3.0	-	-	-	3.0	3.0	3.0	-	3.0
Installation Provisions	5.7	-	-	-	5.7	5.7	5.7	-	5.7
Lighting Control	1.0	-	-	-	1.	1.0	1.0	-	1.0
Audio Panel	1.3	-	-	-	1.3	1.3	1.3	-	1.3
Main Display Left Hand Console	(12)	(-)	(-)	(-)	(12)	(12)	(12)	(-)	(12)
Installation Provisions	6.7	-	-	-	6.7	6.7	6.7	-	6.7
Lighting Control	1.0	-	-	-	1.0	1.0	1.0	-	1.0
Audio Panel	1.3	-	-	-	1.3	1.3	1.3	-	1.3
Boost Emergency, Earth Landing	3.0	-	-	-	3.0	3.0	3.0	-	3.0
Electrical Provisions	(29.0)	-	-	-	(29.0)	(29.0)	(29.0)	-	(29.0)
Environmental Provisions	(9.0)	-	-	-	(9.0)	(9.0)	(9.0)	-	(9.0)
TOTAL CONTROLS & DISPLAYS (To Be Brought Forward)	227	0	0	0	227	227	227	0	227

[redacted]

DETAIL WEIGHT STATEMENT

COMMUNICATIONS & INSTRUMENTATION

ITEM	WEIGHT - POUNDS								
AIRFRAME NUMBER	001	002	004	005	006	008	009	010	011
IFT AND CREW AREA CONTROLS									
In-Flight Test	(125)	(-)	(-)	(-)	(125)	(125)	(55.5)	(-)	(125)
Crew Readout Panel	3.0	-	-	-	3.0	3.	-	-	3.0
Manual Test Unit	15.0	-	-	-	15.0	15.0	-	-	15.0
Comparator	12.0	-	-	-	12.0	12.0	-	-	12.0
Programmer	11.0	-	-	-	11.0	11.0	-	-	11.0
Stimuli Generator	24.0	-	-	-	24.0	24.0	-	-	24.0
Panel Assy	15.0	-	-	-	15.0	15.0	15.0	—	15.0
Installation Provisions & Connectors	5.0	-	-	-	5.0	5.0	0.5	-	5.0
IFT-GSE Electrical Provisions	40.0	-	-	-	40.0	40.0	40.0	-	40.0
Crew Area Controls	(7.5)	(-)	(-)	(-)	(15)	(15)	(15)		(15)
Manual Control - Three Axis	3.5	-	-	-	7.0	7.0	7.0	-	7.0
Manual Control - Translation & Thrust	4.0	-	-	-	8.0	8.0	8.0	-	8.0
R & D Equipment							(160)		(154)
Instrumentation							128.0		123.0
Wiring & Mounting							32.0		31.0
Misc. Installation Equipment	(36.5)								
TOTAL IFT & CREW AREA CONTROLS	169	0	0	0	140	140	230.5	0	294
TOTAL CONTROLS & DISPLAYS	227	0	0	0	227	227	227	0	227
TOTAL TELECOMMUNICATIONS	0	0	0	0	517	517	452.5	0	517
TOTAL COMMUNICATIONS & INSTRUMENTATION	396	0	0	0	884	884	910	0	1038

[redacted]

CONFIDENTIAL

DETAIL WEIGHT STATEMENT

GUIDANCE & NAVIGATION

ITEM	WEIGHT - POUNDS								
AIRFRAME NUMBER	001	002	004	005	006	008	009	010	011
GUIDANCE & NAVIGATION									
Lower Equipment Bay	(-)	(-)	(-)	(-)	(412)	(412)	(412)	(-)	(412)
Inertial Platform	-	-	-	-	58.4	58.4	58.4	-	58.4
Sextant	-	-	-	-	12.0	12.0	12.0	-	12.0
Telescope - Scanning	-	-	-	-	9.0	9.0	9.0	-	9.0
Map and Visual Display	-	-	-	-	8.5	8.5	8.5	-	8.5
Display and Control - Navigation	-	-	-	-	39.5	39.5	39.5	-	39.5
Display and Control - Computer	-	-	-	-	15.0	15.0	15.0	-	15.0
Navigation Base	-	-	-	-	21.0	21.0	21.0	-	21.0
Computer	-	-	-	-	58.0	58.0	58.0	-	58.0
Power Servo Assy	-	-	-	-	29.0	29.0	29.0	-	29.0
Coupling Display Unit	-	-	-	-	15.0	15.0	15.0	-	15.0
Junction Box	-	-	-	-	11.0	11.0	11.0	-	11.0
Cabling - MIT	-	-	-	-	40.0	40.0	40.0	-	40.0
Cabling - NAA	-	-	-	-	16.6	16.6	16.6	-	16.6
Spares	-	-	-	-	40.0	40.0	40.0	-	40.0
Optical Base	-	-	-	-	19.0	19.0	19.0	-	19.0
Eye Pieces	-	-	-	-	5.0	5.0	5.0	-	5.0
Bellows and Adapter	-	-	-	-	15.0	15.0	15.0	-	15.0
TOTAL GUIDANCE & NAVIGATION	0	0	0	0	412	412	412	0	412

CONFIDENTIAL

CONFIDENTIAL

DETAIL WEIGHT STATEMENT

STABILIZATION & CONTROL

ITEM	WEIGHT-POUNDS								
AIRFRAME NUMBER	001	002	004	005	006	008	009	010	011
STABILIZATION & CONTROL									
Lower Equipment Bay	(158.2)	(-)	(-)	(-)	(178)	(178)	(166)	(-)	(178)
Rate Gyro Package	-	-	-	-	6.5	6.5	6.5	-	6.5
Body Mounted Gyro Package	-	-	-	-	10.5	10.5	10.5	-	10.5
Electronic Control Package - Pitch	28.4	-	-	-	28.4	28.4	28.4	-	28.4
Electronic Control Package - Roll	29.1	-	-	-	29.1	29.1	29.1	-	29.1
Electronic Control Package - YAW	28.4	-	-	-	28.4	28.4	28.4	-	28.4
Electronic Control Package-Auxiliary	30.5	-	-	-	30.5	30.5	30.5	-	30.5
Display/BMAG ECA Package	29.8	-	-	-	29.8	29.8	29.8	-	29.8
Spare Gyro - BMAG (2)	-	-	-	-	2.0	2.0	2.0	-	2.0
Spare Gyro - Rate	-	-	-	-	0.8	0.8	0.8	-	0.8
Spare Plug - In Module	12.0	-	-	-	12.0	12.0	-	-	12.0
Supports	(11.8)	-	-	-	(12.0)	(12.0)	(12.0)	-	(12.0)
Electrical Provisions	16.0	-	-	-	(16.0)	(16.0)	(16.0)	-	(16.0)
Environmental Control Provisions	(27.0)	-	-	-	(27.0)	(27.0)	(27.0)	-	(27.0)
TOTAL STABILIZATION & CONTROL	213	0	0	0	233	233	221	0	233

CONFIDENTIAL

[redacted]

DETAIL WEIGHT STATEMENT

REACTION CONTROL SYSTEM

ITEM	WEIGHT - POUNDS								
AIRFRAME NUMBER	001	002	004	005	006	008	009	010	011
REACTION CONTROL SYSTEM									
Propellant System	(85)	(-)	(-)	(-)	(85)	(85)	(85)	(-)	(85)
Tanks	17.0	-	-	-	17.0	17.0	17.0	-	17.0
Expulsion Devices & Tank Supports	16.0	-	-	-	16.0	16.0	16.0	-	16.0
Plumbing, Fittings & Insulation	23.0	-	-	-	23.0	23.0	23.0	-	23.0
Valves & Regulators	21.0	-	-	-	21.0	21.0	21.0	-	21.0
Sensors	1.0	-	-	-	1.0	1.0	1.0	-	1.0
Supports - Plumbing & Equipment	7.0	-	-	-	7.0	7.0	7.0	-	7.0
Pressure System	(65)	(-)	(-)	(-)	(65)	(65)	(65)	(-)	(65)
Tanks (4500 PSI)	9.0	-	-	-	9.0	9.0	9.0	-	9.0
Tank Supports	3.0	-	-	-	3.0	3.0	3.0	-	3.0
Plumbing, Fittings & Insulation	5.0	-	-	-	5.0	5.0	5.0	-	5.0
Valves & Regulators	39.0	-	-	-	39.0	39.0	39.0	-	39.0
Sensors	2.0	-	-	-	2.0	2.0	2.0	-	2.0
Helium	1.0	-	-	-	1.0	1.0	1.0	-	1.0
Supports - Plumbing & Equipment	6.0	-	-	-	6.0	6.0	6.0	-	6.0
Engine System	(121)	(-)	(-)	(-)	(121)	(121)	(121)	(-)	(121)
Engines	115.0	-	-	-	115.0	115.0	115.0	-	115.0
Supports	6.0	-	-	-	6.0	6.0	6.0	-	6.0
Electrical Provisions	(23.0)	-	-	-	(23.0)	(23.0)	(23.0)	-	(23.0)
TOTAL REACTION CONTROL	294	0	0	0	294	294	294	0	294

[redacted]

DETAIL WEIGHT STATEMENT

ELECTRICAL POWER

ITEM	WEIGHT - POUNDS								
AIRFRAME NUMBER	001	002	004	005	006	008	009	010	011
ELECTRICAL POWER									
Energy Source	(60)	(60)	(-)	(-)	(60)	(60)	(60)	(60)	(60)
Battery - Main (2)	36.0	36.0	-	-	36.0	36.0	36.0	36.0	36.0
Battery - Recovery (1)	18.0	18.0	-	-	18.0	18.0	18.0	18.0	18.0
Installation Provisions	6.0	6.0	-	-	6.0	6.0	6.0	6.0	6.0
Power Conversion	(107.6)	(107.6)	(-)	(-)	(107.6)	(107.6)	(71.6)	(-)	(107.6)
Inverter (3)	90.0	90.0	-	-	90.0	90.0	60.0	-	90.0
Inverter Controls	3.0	3.0	-	-	3.0	3.0	2.0	-	3.0
Battery Charger & Controls	5.0	5.0	-	-	5.0	5.0	-	-	5.0
Installation Provisions (Cold Plates)	9.6	9.6	-	-	9.6	9.6	9.6	-	9.6
Power Distribution & Control	(162)	(162)	(-)	(-)	(162)	(162)	(162)	(117)	(162)
Power Distribution Equipment									
Circuit Breakers	6.0	6.0	-	-	6.0	6.0	6.0	6.0	6.0
Battery Controls	5.0	5.0	-	-	5.0	5.0	5.0	-	5.0
No. 1 & No. 2 AC Buss Control	15.0	15.0	-	-	15.0	15.0	15.0	-	15.0
DC Busses (Diodes, etc.)	10.0	10.0	-	-	10.0	10.0	10.0	-	10.0
AC Busses	5.0	5.0	-	-	5.0	5.0	5.0	-	5.0
Utility System Controls	15.0	15.0	-	-	15.0	15.0	15.0	15.0	15.0
Mounting Hardware	2.0	2.0	-	-	2.0	2.0	2.0	-	2.0
Sequencer	10.0	10.0	-	-	10.0	10.0	10.0	10.0	10.0
Right Hand Circuit Breaker Panel	13.0	13.0	-	-	13.0	13.0	13.0	13.0	13.0

DETAIL WEIGHT STATEMENT

ELECTRICAL POWER

ITEM	WEIGHT - POUNDS								
AIRFRAME NUMBER	001	002	004	005	006	008	009	010	011
ELECTRICAL POWER (CONTINUED)									
Terminal Panels	5.0	5.0	-	-	5.0	5.0	5.0	5.0	5.0
Power Distr. Wiring & Prov.	40.0	40.0	-	-	40.0	40.0	40.0	40.0	40.0
Lighting Wiring & Provisions	5.0	5.0	-	-	5.0	5.0	5.0	-	5.0
Ground Power Provisions	6.0	6.0	-	-	6.0	6.0	6.0	6.0	6.0
Power Control Panel Connectors	3.0	3.0	-	-	3.0	3.0	3.0	-	3.0
Installation Provisions	22.0	22.0	-	-	22.0	22.0	22.0	22.0	22.0
Electrical - Common Utility	(87.4)	(87.4)	(-)	(-)	(87.4)	(87.4)	(87.4)	(82.4)	(87.4)
Utility Wiring & Circuit Comp.	20.0	20.0	-	-	20.0	20.0	20.0	20.0	20.0
Left Hand Circuit Breaker Panel	7.0	7.0	-	-	7.0	7.0	7.0	7.0	7.0
Umbilicals	35.0	35.0	-	-	35.0	35.0	35.0	35.0	35.0
Adapter Separation System	10.0	10.0	-	-	10.0	10.0	10.0	10.0	10.0
Launch Escape System Separation	5.0	5.0	-	-	5.0	5.0	5.0	5.0	5.0
Service Module Electrical Init.	5.0	5.0	-	-	5.0	5.0	5.0	-	5.0
Installation Provisions	5.4	5.4	-	-	5.4	5.4	5.4	5.4	5.4
Misc Installation Equipment								(30)	
TOTAL ELECTRICAL POWER	417	417	0	0	417	417	381	289	417

[redacted]

DETAIL WEIGHT STATEMENT

ENVIRONMENTAL CONTROL

ITEM	WEIGHT - POUNDS								
AIRFRAME NUMBER	001	002	004	005	006	008	009	010	011
ENVIRONMENTAL CONTROL									
Pressure Suit Circuit	(-)	(-)	(-)	(-)	(76.3)	(76.3)	(67.1)	(-)	(67.1)
Subcontractor Components	-	-	-	-	64.2	64.2	55.0	-	55.0
Ducting, Conn., Clamps, etc.	-	-	-	-	12.1	12.1	12.1	-	12.1
Water-Glycol Circuit	(-)	(-)	(-)	(-)	(49.7)	(49.7)	(41.1)	(-)	(41.1)
Subcontractor Components	-	-	-	-	27.7	27.7	25.1	-	25.1
Water-Glycol	-	-	-	-	18.4	18.4	12.4	-	12.4
Plumbing, etc.	-	-	-	-	3.6	3.6	3.6	-	3.6
Pressure & Temp. Control	(-)	(-)	(-)	(-)	(16.6)	(16.6)	(16.6)	(-)	(16.6)
Subcontractor Components	-	-	-	-	15.8	15.8	15.8	-	15.8
Ducting	-	-	-	-	0.8	0.8	0.8	-	0.8
Oxygen Supply System	(-)	(-)	(-)	(-)	(14.7)	(14.7)	(10.9)	(-)	(10.9)
Subcontractor Components	-	-	-	-	11.7	11.7	7.9	-	7.9
Plumbing	-	-	-	-	3.0	3.0	3.0	-	3.0
Water Supply System	(-)	(-)	(-)	(-)	(28.5)	(28.5)	(20.1)	(-)	(28.1)
Subcontractor Components	-	-	-	-	23.7	23.7	15.3	-	23.3
Plumbing	-	-	-	-	4.8	4.8	4.8	-	4.8
Subcontractor Common Items	(-)	(-)	(-)	(-)	(41.2)	(41.2)	(41.2)	(-)	(41.2)

[redacted]

CONFIDENTIAL

DETAIL WEIGHT STATEMENT

ENVIRONMENTAL CONTROL

ITEM	WEIGHT-POUNDS								
AIRFRAME NUMBER	001	002	004	005	006	008	009	010	011
ENVIRONMENTAL CONTROL (CONTINUED)									
Brackets, Plumbing, Elec. Wiring	-	-	-	-	16.6	16.6	16.6	-	16.6
Instrumentation	-	-	-	-	14.6	14.6	14.6	-	14.6
Radio Noise Filter Spec Allowance	-	-	-	-	10.0	10.0	10.0	-	10.0
Gas Analyzer (NASA)	-	-	-	-	(7.0)	(7.0)	(7.0)	-	(7.0)
Supports	-	-	-	-	(10.0)	(10.0)	(10.0)	-	(10.0)
Electrical Provisions	-	-	-	-	(21.0)	(21.0)	(21.0)	-	(21.0)
Pressure Suit Pressurization	(138)	(-)							
Special Equipment	138.0	-							
Glycol Cooling	(25)	(146)							
Special Equipment	25.0	146.0							
Misc. Installation Equipment	(16)	(15)							
TOTAL ENVIRONMENTAL CONTROL	179	161	0	0	265	265	235	0	243

CONFIDENTIAL

[redacted]

DETAIL WEIGHT STATEMENT

EARTH LANDING SYSTEM

ITEM	WEIGHT - POUNDS								
AIRFRAME NUMBER	001	002	004	005	006	008	009	010	011
EARTH LANDING SYSTEM									
Parachute System	(-)	(525.9)	(-)	(-)	(525.9)	(525.9)	(525.9)	(525.9)	(525.9)
Drogue Chute System	-	36.2	-	-	36.2	36.2	36.2	36.2	36.2
Drogue Disconnect Inst.	-	7.9	-	-	7.9	7.9	7.9	7.9	7.9
Main Cluster	-	412.5	-	-	412.5	412.5	412.5	412.5	412.5
Disconnect Main Cluster	-	9.7	-	-	9.7	9.7	9.7	9.7	9.7
Pilot Chute System	-	29.2	-	-	29.2	29.2	29.2	29.2	29.2
Sequence Control	-	25.4	-	-	25.4	25.4	25.4	25.4	25.4
Attach Provisions	-	5.0	-	-	5.0	5.0	5.0	5.0	5.0
Location Aids	-	(9.1)	-	-	(9.1)	(9.1)	(9.1)	(9.1)	(9.1)
Forward Heat Shield Release System	-	(16.0)	-	-	(16.0)	(16.0)	(16.0)	(16.0)	(16.0)
Electrical Pyrotechnic Initiation	-	(5.0)	-	-	(5.0)	(5.0)	(5.0)	(5.0)	(5.0)
TOTAL EARTH LANDING SYSTEM	0	556	0	0	556	556	556	556	556

[redacted]

DETAIL WEIGHT STATEMENT

USEFUL LOAD

ITEM	WEIGHT - POUNDS								
AIRFRAME NUMBER	001	002	004	005	006	008	009	010	011
USEFUL LOAD									
Crew Systems	(599)	(-)	(-)	(-)	(772)	(772)	(638)	(-)	(643)
Crew (3) (50, 70, 90 Percentile)	351.0	-	-	-	528.0	528.0	528.0	-	528.0
Pressure Garment Assy (3) NASA	90.0	-	-	-	90.0	90.0	90.0	-	90.0
Food	75.0	-	-	-	75.0	75.0	-	-	4.0
Food Containers	15.0	-	-	-	15.0	15.0	-	-	1.0
Water-Survival	18.0	-	-	-	18.0	18.0	18.0	-	18.0
Personal Hygiene Equipment	23.0	-	-	-	23.0	23.0	-	-	-
Biomedical Instrumentation (NASA)	2.0	-	-	-	2.0	2.0	2.0	-	2.0
Medical Equipment	17.0	-	-	-	17.0	17.0	-	-	-
Chemical Disinfectant	4.0	-	-	-	4.0	4.0	-	-	-
Reaction Control	(242)	(-)	(-)	(-)	(-)	(-)	(242)	(-)	(242)
RCS Propellant	242.0	-	-	-	-	-	242.0	-	242.0
Environmental Control	(14)	(-)	(-)	(-)	(151)	(151)	(33)	(-)	(33)
Lithium Hydroxide	4.0	-	-	-	112.0	112.0	3.0	-	3.0
Activated Charcoal	-	-	-	-	4.0	4.0	0.5	-	0.5
Containers for LiOH & Charcoal	-	-	-	-	6.0	6.0	0.5	-	0.5
Oxygen - Re-entry	-	-	-	-	2.0	2.0	2.0	-	2.0
Water-Launch & Re-Entry Cooling	-	-	-	-	10.0	10.0	10.0	-	10.0
Freon	10.0	-	-	-	10.0	10.0	10.0	-	10.0
Water - Earth Orbit Cooling	-	-	-	-	7.0	7.0	7.0	-	7.0
Misc. Installation Equipment	(6)								
Scientific Payload	-	-	-	-	(250.0)	(250.0)	-	-	-
TOTAL USEFUL LOAD	861	0	0	0	1173	1173	913	0	918

CONFIDENTIAL

CONFIDENTIAL

DETAIL WEIGHT STATEMENT

SERVICE MODULE

ITEM	WEIGHT - POUNDS								
AIRFRAME NUMBER	001	002	004	005	006	008	009	010	011
STRUCTURE									
Basic & Secondary Structure									
Radial Beams	477.0	477.0	477.0	-	477.0	477.0	477.0	-	477.0
Internal Structure & Engine Compartment Closeout	45.0	45.0	45.0	-	45.0	45.0	45.0	-	45.0
Outer Shell	920.0	920.0	920.0	-	920.0	920.0	920.0	-	920.0
Fairing - Command to Service	200.0	200.0	200.0	-	200.0	200.0	200.0	-	200.0
Engine Support	41.0	-	41.0	-	41.0	41.0	41.0	-	41.0
Antenna Support Structure	30.0	-	30.0	-	30.0	30.0	30.0	-	30.0
Forward Bulkhead Including Ring	148.0	148.0	148.0	-	148.0	148.0	148.0	-	148.0
Aft Bulkhead	478.0	378.0	478.0	-	478.0	478.0	478.0	-	478.0
Separation Provisions	20.0	20.0	20.0	-	20.0	20.0	20.0	-	20.0
Tank Support Shelf	30.0	30.0	30.0	-	30.0	30.0	30.0	-	30.0
Insulation	234.0	-	234.0	-	234.0	234.0	234.0	-	234.0
LJ II Attaching Ring		315.0							
Electrical Provisions		100.0							
TOTAL STRUCTURE	2623	2623	2623	0	2623	2623	2623	0	2623

[redacted]

[redacted]

[redacted]

DETAIL WEIGHT STATEMENT

SERVICE MODULE SUMMARY

ITEM	WEIGHT - POUNDS								
AIRFRAME NUMBER	001	002	004	005	006	008	009	010	011
SERVICE MODULE									
Structure	2623	2653	2623	0	2623	2623	2623	0	2623
Electronic Subsystem	103	0	0	0	166	166	94	0	166
Reaction Control	599	0	0	0	599	599	599	0	599
Electrical Power	1151	0	0	0	1151	1151	738	0	1251
Environmental Control	0	17	0	0	78	78	78	0	78
Main Propulsion	3062	0	0	0	3062	3062	3062	0	3062
Useful Load	2034	0	0	0	0	690	989	0	1534
Ballast	0	1770	0	0	2241	1551	0	0	0
TOTAL SERVICE MODULE	9572	4440	2623	0	9920	9920	8183	0	9313

[redacted]

CONFIDENTIAL

DETAIL WEIGHT STATEMENT

ELECTRONIC SUBSYSTEM

ITEM	WEIGHT - POUNDS								
AIRFRAME NUMBER	001	002	004	005	006	008	009	010	011
ELECTRONIC SUBSYSTEM									
Communications	(-)	(-)	(-)	(-)	(72)	(72)	(-)	(-)	(72)
Antenna Dish	-	-	-	-	10.0	10.0	-	-	10.0
Antenna Gimbals	-	-	-	-	13.0	13.0	-	-	13.0
Antenna Deployment Booms	-	-	-	-	25.0	25.0	-	-	25.0
Antenna Coax Cabling	-	-	-	-	16.0	16.0	-	-	16.0
Antenna Coax Cabling Supports	-	-	-	-	3.0	3.0	-	-	3.0
Antenna Control Electrical Prov.	-	-	-	-	5.0	5.0	-	-	5.0
Instrumentation	(64)	(-)	(-)	(-)	(64)	(64)	(64)	(-)	(64)
Sensors	30.0	-	-	-	30.0	30.0	30.0	-	30.0
Electrical Provisions	14.0	-	-	-	14.0	14.0	14.0	-	14.0
Supports	5.0	-	-	-	5.0	5.0	5.0	-	5.0
Signal Conditioner	15.0	-	-	-	15.0	15.0	15.0	-	15.0
In-Flight Test Provisions	(30)	(-)	(-)	(-)	(30)	(30)	(30)	(-)	(30)
IFT and GSE Electrical Prov.	30.0	-	-	-	30.0	30.0	30.0	-	30.0
Misc. Installation Equipment	(9)								
TOTAL ELECTRONIC SUBSYSTEM	103	0	0	0	166	166	94	0	166

CONFIDENTIAL

[redacted]

DETAIL WEIGHT STATEMENT

REACTION CONTROL

ITEM	WEIGHT - POUNDS								
AIRFRAME NUMBER	001	002	004	005	006	008	009	010	011
REACTION CONTROL									
Propellant System	(149)	(-)	(-)	(-)	(149)	(149)	(149)	(-)	(149)
Tanks	43.0	-	-	-	43.0	43.0	43.0	-	43.0
Expulsion Devices & Tank Support	35.0	-	-	-	35.0	35.0	35.0	-	35.0
Plumbing, Fittings & Insulation	17.0	-	-	-	17.0	17.0	17.0	-	17.0
Valves & Regulators	32.0	-	-	-	32.0	32.0	32.0	-	32.0
Sensors	6.0	-	-	-	6.0	6.0	6.0	-	6.0
Supports - Plumbing & Equipment	16.0	-	-	-	16.0	16.0	16.0	-	16.0
Pressure System	(133)	(-)	(-)	(-)	(133)	(133)	(133)	(-)	(133)
Tanks (4500 PSI)	19.0	-	-	-	19.0	19.0	19.0	-	19.0
Tank Supports	6.0	-	-	-	6.0	6.0	6.0	-	6.0
Plumbing, Fittings & Insulation	6.0	-	-	-	6.0	6.0	6.0	-	6.0
Valves & Regulators	76.0	-	-	-	76.0	76.0	76.0	-	76.0
Sensors	9.0	-	-	-	9.0	9.0	9.0	-	9.0
Helium	3.0	-	-	-	3.0	3.0	3.0	-	3.0
Supports - Plumbing & Equipment	14.0	-	-	-	14.0	14.0	14.0	-	14.0
Engine System	(179)	(-)	(-)	(-)	(179)	(179)	(179)	(-)	(179)
Engines	69.0	-	-	-	69.0	69.0	69.0	-	69.0
Reflectors & Insulation	110.0	-	-	-	110.0	110.0	110.0	-	110.0
Structural Provisions	(80.0)	(-)	(-)	(-)	(80.0)	(80.0)	(80.0)	-	(80.0)
Electrical Provisions	(58.0)	(-)	(-)	(-)	(58.0)	(58.0)	(58.0)	(-)	(58.0)
TOTAL REACTION CONTROL	599	0	0	0	599	599	599	0	599

[redacted]

[redacted]

DETAIL WEIGHT STATEMENT

ELECTRICAL POWER

ITEM	WEIGHT - POUNDS								
AIRFRAME NUMBER	001	002	004	005	006	008	009	010	011
ELECTRICAL POWER (CONTINUED)									
Electrical Utilities	(32)	(-)	(-)	(-)	(32)	(32)	(32)	(-)	(32)
Command-Service Separation Sys.	3.0	-	-	-	3.0	3.0	3.0	-	3.0
Adapter Separation System	10.0	-	-	-	10.0	10.0	10.0	-	10.0
Elect. Init. of Pyrotechnics	17.0	-	-	-	17.0	17.0	17.0	-	17.0
Supports	2.0	-	-	-	2.0	2.0	2.0	-	2.0
Battery	-	-	-	-	-	-	(75.0)	-	(100.0)
TOTAL ELECTRICAL POWER	1151	0	0	0	1151	1151	738	0	1251

[redacted]

[redacted]

DETAIL WEIGHT STATEMENT

ENVIRONMENTAL CONTROL

ITEM	WEIGHT - POUNDS								
AIRFRAME NUMBER	001	002	004	005	006	008	009	010	011
ENVIRONMENTAL CONTROL									
Water-Glycol Circuit - Airesearch	(-)	(-)	(-)	(-)	(26.6)	(26.6)	(26.6)	(-)	(26.6)
Subcontractor Components	-	-	-	-	8.5	8.5	8.5	-	8.5
Plumbing and Hardware	-	-	-	-	4.4	4.4	4.4	-	4.4
Radiator Provisions	-	-	-	-	5.6	5.6	5.6	-	5.6
Water-Glycol	-	-	-	-	3.4	3.4	3.4	-	3.4
Supports	-	-	-	-	4.7	4.7	4.7	-	4.7
Water Supply System	(-)	(-)	(-)	(-)	(7.5)	(7.5)	(7.5)	(-)	(7.5)
Subcontractor Components	-	-	-	-	0.6	0.6	0.6	-	0.6
Plumbing and Hardware	-	-	-	-	6.0	6.0	6.0	-	6.0
Supports	-	-	-	-	0.9	0.9	0.9	-	0.9
Oxygen Supply System	(-)	(-)	(-)	(-)	(3.4)	(3.4)	(3.4)	(-)	(3.4)
Plumbing and Supports	-	-	-	-	3.0	3.0	3.0	-	3.0
Subcontractor Components	-	-	-	-	0.4	0.4	0.4	-	0.4
Subcontractor Common Supports	(-)	(-)	(-)	(-)	(0.5)	(0.5)	(0.5)	(-)	(0.5)
Electrical Provisions	(-)	(-)	(-)	(-)	(23.0)	(23.0)	(23.0)	(-)	(23.0)
Space Radiator (Outer Skin)	(-)	(17.0)	(-)	(-)	(17.0)	(17.0)	(17.0)	(-)	(17.0)
TOTAL ENVIRONMENTAL CONTROL	0	17	0	0	78	78	78	0	78

[redacted]

DETAIL WEIGHT STATEMENT

MAIN PROPULSION

ITEM	WEIGHT - POUNDS								
AIRFRAME NUMBER	001	002	004	005	006	008	009	010	011
MAIN PROPULSION									
Propellant System	(1455)	(-)	(-)	(-)	(1455)	(1455)	(1455)	(-)	(1455)
Tanks & Integral Doors	990.0	-	-	-	990.0	990.0	990.0	-	990.0
Tank Skirts	200.0	-	-	-	200.0	200.0	200.0	-	200.0
Plumbing, Fittings & Insulation	95.0	-	-	-	95.0	95.0	95.0	-	95.0
Valves	9.0	-	-	-	9.0	9.0	9.0	-	9.0
Quantity Indication	70.0	-	-	-	70.0	70.0	70.0	-	70.0
Mixture Ratio Control	12.0	-	-	-	12.0	12.0	12.0	-	12.0
Supports - Plumbing & Equipment	79.0	-	-	-	79.0	79.0	79.0	-	79.0
Pressure System	(941)	(-)	(-)	(-)	(941)	(941)	(941)	(-)	(941)
Tanks (4500 PSI)	800.0	-	-	-	800.0	800.0	800.0	-	800.0
Tank Supports	30.0	-	-	-	30.0	30.0	30.0	-	30.0
Plumbing, Fittings, & Insulation	24.0	-	-	-	24.0	24.0	24.0	-	24.0
Valves, Regulators & Heat Exchanger	49.0	-	-	-	49.0	49.0	49.0	-	49.0
Supports - Plumbing & Equipment	38.0	-	-	-	38.0	38.0	38.0	-	38.0
Engine System	(640)	(-)	(-)	(-)	(640)	(640)	(640)	(-)	(640)
Engine	640.0	-	-	-	640.0	640.0	640.0	-	640.0
Electrical Provisions	(26.0)	(-)	(-)	(-)	(26.0)	(26.0)	(26.0)	(-)	(26.0)
TOTAL MAIN PROPULSION	3062	0	0	0	3062	3062	3062	0	3062

[redacted]

DETAIL WEIGHT STATEMENT

USEFUL LOAD

ITEM	WEIGHT - POUNDS								
AIRFRAME NUMBER	001	002	004	005	006	008	009	010	011
USEFUL LOAD									
Reaction Control	(835)	(-)	(-)	(-)	(-)	(-)	(245)	(-)	(445)
Usable RCS Propellant	790.0	-	-	-	-	-	200.0	-	400.0
Unusable RCS Propellant	45.0	-	-	-	-	-	45.0	-	45.0
Electrical Power	(483)	(-)	(-)	(-)	(-)	(483)	(241.5)	(-)	(483)
Usable Supercritical Reactants	-411-	- -	- -	- -	- -	-411-	-205.5-	- -	-411-
Hydrogen (Incl. 10% Reserve)	46.0	-	-	-	-	46.0	23.0	-	46.0
Oxygen (Incl. 10% Reserve)	365.0	-	-	-	-	365.0	182.5	-	365.0
Unusable Supercritical Reactants	-72-	- -	- -	- -	- -	-72-	-36-	- -	-72-
Hydrogen	10.0	-	-	-	-	10.0	5.0	-	10.0
Oxygen	62.0	-	-	-	-	62.0	31.0	-	62.0
Environmental Control	(-)	(-)	(-)	(-)	(-)	(207)	(103.5)	(-)	(207)
Oxygen - ECS	-	-	-	-	-	207.0	103.5	-	207.0
Propulsion	(716)	(-)	(-)	(-)	(-)	(-)	(399)	(-)	(399)
Main Propulsion Helium	99.0	-	-	-	-	-	99.0	-	99.0
Main Propulsion Residuals	617.0	-	-	-	-	-	300.0	-	300.0
TOTAL USEFUL LOAD	2034	0	0	0	0	690	989	0	1534

[redacted]

[redacted]

DETAIL WEIGHT STATEMENT

LAUNCH ESCAPE SYSTEM SUMMARY

ITEM	WEIGHT - POUNDS								
AIRFRAME NUMBER	001	002	004	005	006	008	009	010	011
LAUNCH ESCAPE SYSTEM									
Structure	0	1057	747	0	1072	0	1072	1057	1072
Ballast	0	79	0	0	79	0	79	79	79
Propulsion	0	5259	0	0	5259	0	5259	5259	5259
Electrical Power	0	20	0	0	20	0	20	20	20
TOTAL LAUNCH ESCAPE SYSTEM	0	6415	747	0	6430	0	6430	6415	6430

[redacted]

DETAIL WEIGHT STATEMENT

LAUNCH ESCAPE SYSTEM

ITEM	WEIGHT - POUNDS								
AIRFRAME NUMBER	001	002	004	005	006	008	009	010	011
LAUNCH ESCAPE SYSTEM									
Structure	(-)	(1057)	(747)	(-)	(1072)	(-)	(1072)	(1057)	(1072)
Tower Assy	-	272.0	272.0	-	272.0	-	272.0	272.0	272.0
Flow Separator and Skirt	-	297.0	240.0	-	297.0	-	297.0	297.0	297.0
Jettison Motor Skirt	-	94.0	94.0	-	94.0	-	94.0	94.0	94.0
Pitch Motor Structure	-	157.0	-	-	157.0	-	157.0	157.0	157.0
Nose Cone and Ballast Support*	-	96.0	-	-	111.0	-	111.0	96.0	111.0
Attaching Parts	-	25.0	25.0	-	25.0	-	25.0	25.0	25.0
Tower Insulation	-	45.0	45.0	-	45.0	-	45.0	45.0	45.0
Skirt Insulation	-	26.0	26.0	-	26.0	-	26.0	26.0	26.0
Flow Separator Insulation	-	45.0	45.0	-	45.0	-	45.0	45.0	45.0
Ballast	(-)	(79.0)	(-)	(-)	(79.0)	(-)	(79.0)	(79.0)	(79.0)
Propulsion	(-)	(5259)	(-)	(-)	(5259)	(-)	(5259)	(5259)	(5259)
Escape Motor	-	4764.0	-	-	4764.0	-	4764.0	4764.0	4764.0
Jettison Motor	-	440.0	-	-	440.0	-	440.0	440.0	440.0
Pitch Control Motor	-	55.0	-	-	55.0	-	55.0	55.0	55.0
Electrical Power	(-)	(20.0)	(-)	(-)	(20.0)	-	(20.0)	(20.0)	(20.0)
TOTAL LAUNCH ESCAPE SYSTEM	0	6415	747	0	6430	0	6430	6415	6430

*Q-Ball used on 002 & 010

[redacted]

DETAIL WEIGHT STATEMENT

ADAPTER

ITEM	WEIGHT-POUNDS								
AIRFRAME NUMBER	001	002	004	005	006	008	009	010	011
ADAPTER									
C-1 Adapter S/M	-	-	630.0	-	630.0	630.0	630.0	-	630.0
Ground Adapter	-	-	-	-	-	-	-	1380.0	-
TOTAL ADAPTER	0	0	630	0	630	630	630	1380	630

[redacted]