[redacted]

Copy NOT Needed

This reissue completely supersedes and replaces the 22 October 1963 issue of this report.

Accession No. 03499-65

40

SID 63-143-3

ACTUAL WEIGHT AND BALANCE REPORT

BOILERPLATE NO. 19

AIRPLANE DROP - PARACHUTE TEST

CONTRACT NAS 9-150

(U)

REISSUED 19 MARCH 1965

Paragraph 8.10 Exhibit I

Prepared By

Weight Control Group

"THIS DOCUMENT CONTAINS INFORMATION AFFECTING THE NATIONAL DEFENSE OF THE UNITED STATES WITHIN THE MEANING OF THE ESPIONAGE LAWS, TITLE 18, U.S.C. SECTIONS 793 AND 794. TRANSMISSION OR THE REVELATION OF ITS CONTENTS IN ANY MANNER TO AN UNAUTHORIZED PERSON IS PROHIBITED BY LAW."

GROUP-4

DOWNGRADED AT 3 YEAR INTERVALS; DECLASSIFIED AFTER 12 YEARS.

NORTH AMERICAN AVIATION, INC.
SPACE and INFORMATION SYSTEMS DIVISION

(NASA-CR-117232) ACTUAL WEIGHT AND BALANCE REPORT BOILERPLATE NO. 19, AIRPLANE DROP PARACHUTE TEST (North American Aviation, Inc.) 21 p

N79-76407

Unclas
00/18 11326

FF No. 602

(NASA CR OR TMX OR AD NUMBER) (CATEGORY)

CLASSIFICATION CHANGE

To UNCLASSIFIED

By authority of GDS-Boilerr

Changed by L. Shirley Date 2/13/72

Classified Document Master Control Station, NASA
Scientific and Technical Information Facility

RECEIVED MAY 5 1965 NASA DOCUMENT CENTER

[redacted]

C65-6144

[redacted]

TABLE OF CONTENTS

SECTION	ITEM	PAGE
I	FACTORY WEIGHING	
	Introduction	1
	Weight, Center of Gravity and Inertia Summary	2
	Actual Weight and Balance	3
	Northrop-Ventura Missing Items	4
II	APPENDIX (A) TEST SITE WEIGHING	
	Introduction	5
	Weight, Center of Gravity and Inertia Summary	6
	Actual Weight and Balance	7
III	APPENDIX (B) TEST SITE WEIGHING	
	Introduction	8
	Weight, Center of Gravity and Inertia Summary	9
	First Position - Horizontal Data Sheet	10
	Second Position - Horizontal Data Sheet	11
	Actual Weight and Balance	12
	Corrections to Actual Weight and Balance	13
IV	BOILERPLATE NO. 19 PARACHUTE TEST SUMMARY	14

[redacted]

TECHNICAL REPORT INDEX/ABSTRACT

ACCESSION NUMBER						DOCUMENT SECURITY CLASSIFICATION Confidential	

TITLE OF DOCUMENT

ACTUAL WEIGHT AND BALANCE REPORT
BOILERPLATE NO. 19
AIRPLANE DROP - PARACHUTE TEST

LIBRARY USE ONLY

AUTHOR(S)

J. F. Kessler

CODE	ORIGINATING AGENCY AND OTHER SOURCES	DOCUMENT NUMBER
	NAA - S&ID	SID 63-143-3

PUBLICATION DATE	CONTRACT NUMBER
3-19-65	NAS 9-150

DESCRIPTIVE TERMS

ABSTRACT

The actual weight and balance report is a contractural requirements for the Boilerplate and Airframe stacks. The data contained in this report is to present the parachute drop test configuration of Boilerplate No. 19, derived from the actual weight and balance determinations conducted at Downey and El Centro, California.

The Command Module is ballasted to various conditions in this report and a summary of all the drops is contained within. The latest configuration of Boilerplate No. 19 is ballasted to the Block I recovery weight, as specified in Specification MC 901-0001 "E".

FORM 131-V REV. 6-64

SECTION I

FACTORY WEIGHING

[redacted]

ACTUAL WEIGHT AND BALANCE REPORT

AIRPLANE DROP - PARACHUTE TEST

BOILERPLATE NO. 19

INTRODUCTION

The Boilerplate No. 19 Command Module actual weight and balance determination was conducted by the Weight Control Group personnel at the Space and Information Systems Division of North American Aviation, Inc. NASA representatives were present to witness the weighing.

The weight, center of gravity and inertia summary presents data for the following conditions:

1. The initial condition after the module is dropped from the airplane.

2. After forward heat shield is jettisoned and the drogue chute deployed.

3. After the pilot chutes and main chutes are deployed.

The weight, balance and inertia summary on Page 2 represents the actual weight and balance data and known modifications, shown on Pages 3 and 4, to bring the Command Module to the initial condition for the first airplane drop. Further weight adjustments will be made in the field for additional drops, and therefore, additional actual weight and balance determinations will be made at various times. This information will be incorporated as an appendix to this report.

[redacted]

[redacted]

WEIGHT, CENTER OF GRAVITY AND INERTIA SUMMARY

AIRPLANE DROP - PARACHUTE TEST

BOILERPLATE NO. 19

ITEM	WEIGHT	CENTER OF GRAVITY*			MOMENTS OF INERTIA (SLUG-FT.2)		
		X	Y	Z	ROLL (X)	PITCH (Y)	YAW (Z)
COMMAND MODULE - INITIAL	9519	1043.9	0.1	7.7	5000	4463	4250
LESS: Forward Cover	-378	1102.1	1.1	3.0	86	43	49
LESS: Drogue Chute	-28	1091.0	9.8	-22.1	-	-	-
C/M PRIOR TO MAIN CHUTE DEPLOYMENT	9113	1041.4	0.0	8.0	4905	4040	3829
LESS: Main Chutes	-436	1091.8	0.0	7.6	44	17	36
C/M AT IMPACT	8677	1038.9	0.0	8.0	4862	3647	3416

NOTES: *Centers of gravity are in the NASA reference system except that the longitudinal has an origin 998.7 inches below the tangency of the command module mold line.

[redacted]

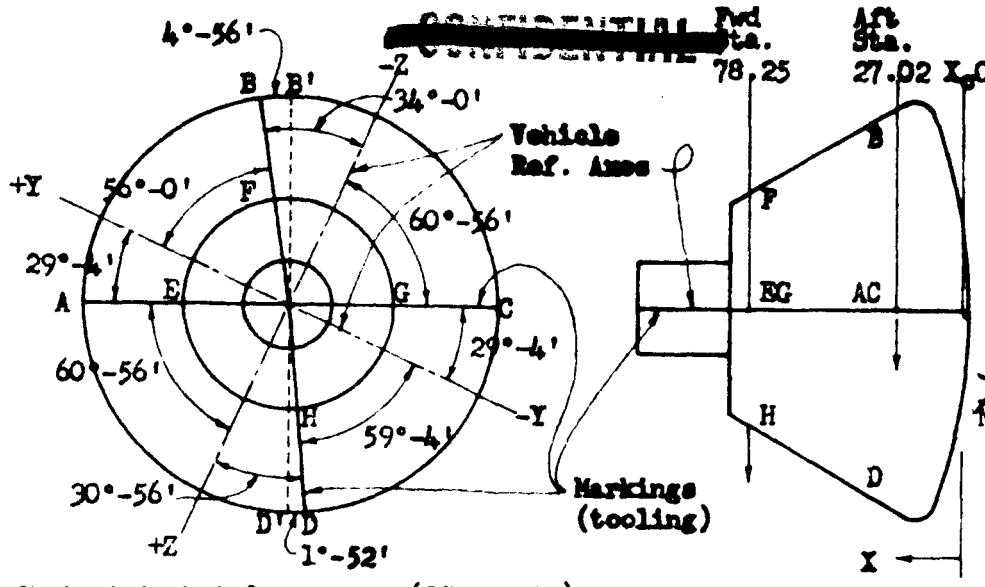

WITNESSED BY:

NASA REPRESENTATIVE

*Forward ftg's deducted from gross (35 pounds).

ACTUAL WEIGHT & BALANCE
BOILERPLATE NO. 19

Name: J. Kessler
Date: 28 May 1963

DESCRIPTION	REACT POINT	CORR.	WEIGHT	LONG.	MOM.	LAT.	MOM.	VERT.	MOM.
Fwd Jack Position	G	0	* 2955	78.85	233,002				
	F	-15	* 2990	78.85	235,762	4.15	12,409		
Aft Jack Position	D	-3	3645	27.02	98,488			76.08	277,312
	C	-14	3066	27.02	82,843	-76.12	-233,384		
Aft Jack Position	B	-4	2871	27.02	77,574			-75.84	-217,737
	A	+19	3413	27.02	92,219	76.12	259,798		
GROSS (as weighed)	TOTAL G+D+B		9471	43.19	409,064	4.10	38,823	6.29	59,575
	TOTAL F+C+A		9469	43.39	410,824				

Transfer to Vehicle Reference Axes

Y = (LATERAL ARM)(cos 29°- 4') - (VERTICAL ARM)(sin 29°- 4')

Z = (LATERAL ARM)(sin 29°- 4') + (VERTICAL ARM)(cos 29°- 4')

Y = (4.10)(.87406) - (6.29)(.48583) = .53

Z = (4.10)(.48583) + (6.29)(.87406) = 7.49

DESCRIPTION	WEIGHT	X	WX	Y	WY	Z	WZ
TRANSFERRED GROSS (as weighed)	9470.0	43.29	409944	.53	5,019	7.49	70,930
Corrections:							
LESS: Aft Fittings	-47.2	27.00	-1269	-.85	40	-.55	26
LESS: Internal Ballast	-95.3	65.00	-6195	37.00	-3,526	-21.00	2,001
PLUS: Forward Strakes	+20.0	97.50	1950	.00	0	.00	0
PLUS: N-V Missing Items*	+156.3	80.03	12509	-3.32	-520	.03	5
PLUS: Retention Instl.	+15.6	88.23	1376	.51	8	8.46	132
*See Page 4							
NET (as weighed) ADJUSTED WEIGHT	9519.4	43.94	418,315	.11	1,021	7.68	73,094

[redacted]

NORTHROP-VENTURA MISSING ITEMS

FOR

BOILERPLATE NO. 19

ITEM	WEIGHT	CENTER OF GRAVITY		
		X_c	Y	Z
Battery - PDS 2513	11.00	27.66	-34.40	18.00
Auxiliary Telemetry - PDS 1977	3.00	52.00	-22.00	12.60
Telemetry Multiplex	5.00	27.66	-20.00	0
Telemetry - PDS 1616	4.17	52.00	-39.40	-18.40
Camera - PDS 866	11.25	92.60	4.80	-10.00
Camera - PDS 866	11.25	105.00	0	11.80
Camera - PDS 866	11.25	105.00	0	-11.80
Camera - PDS 866	11.25	70.80	-28.00	21.00
Main Disconnect - PDS 1730	4.04	96.00	8.40	14.00
Sequence Control - PDS 2040	11.38	86.00	-10.40	-20.50
Inertia Switch - PDS 2060	4.96	86.00	-10.80	-24.00
Stabilization Fittings	43.00	76.90	3.30	-4.00
Harness Modification	24.70	96.70	18.10	7.70
TOTAL	156.25	80.03	-3.32	.03

NOTES: These items were missing for the Northrop-Ventura installation at the time the actual weight and balance was conducted.

[redacted]

SECTION II

APPENDIX (A)

TEST SITE WEIGHING

[redacted]

APPENDIX (A)

INTRODUCTION

The enclosed data in Appendix (A) presents the weight, center of gravity and inertia for Boilerplate Number 19, Airplane Drop Number 6 (first drop of Boilerplate Number 19).

The data presented on Page 6 is based upon actual weight and balance determinations, except that the moments of inertia are calculated values.

The weight and center of gravity of Boilerplate Number 19, for this airplane drop test, does not include the forward apex cover. Boilerplate Number 19 is ballasted to simulate Boilerplate Number 6 Command Module launch weight of 9000 pounds, but with the forward apex cover removed.

The correction column showing the corrections to the average readings is derived from the following zero reading corrections and the corrections from the calibration curves:

CELL LOCATION	ZERO CORRECTION	CALIBRATION CORRECTION	TOTAL + CORRECTION
F	-5.0	+1.2	-3.8
G	-6.0	+1.3	-4.7
A	-9.0	-5.6	-14.6
B'	-1.0	-4.7	-5.7
C	-4.0	-3.0	-7.0
D'	+4.0	-3.6	+0.4

Prior to the rotation of the Command Module to the first horizontal weighing position and after the rotation to the last horizontal weighing position, a single load cell pull up weight was performed with identical readings of 8594.3 pounds as compared to the transferred gross weight of 8604.8, referenced on Page 7.

DOWNGRADED AT 3 YEAR INTERVALS
DECLASSIFIED AFTER 12 YEARS
DOD DIR 5200.10

"THIS DOCUMENT CONTAINS INFORMATION AFFECTING THE NATIONAL DEFENSE OF THE UNITED STATES WITHIN THE MEANING OF THE ESPIONAGE LAWS, TITLE 18 U.S.C. SECTIONS 793 AND 794. ITS TRANSMISSION OR THE REVELATION OF ITS CONTENTS IN ANY MANNER TO AN UNAUTHORIZED PERSON IS PROHIBITED BY LAW."

~~CONFIDENTIAL~~

WEIGHT, CENTER OF GRAVITY AND INERTIA SUMMARY

COMMAND MODULE - BOILERPLATE NO. 19

AIRPLANE DROP NO. 6 - PARACHUTE TEST

ITEM	WEIGHT	CENTER OF GRAVITY*			MOMENTS OF INERTIA (SLUG-FT.^{2})		
		X	Y	Z	ROLL (X)	PITCH (Y)	YAW (Z)
Corrected Weight & C.G. (From Page 7) Airplane Drop No. 6 - Initial	** 8623.7	1039.67	0.50	7.52	4690	4010	3668
LESS: Drogue Chute	-28.0	1091.00	9.80	-22.10	——	——	——
Prior to Main Chute Deployment	8595.7	1039.50	0.47	7.62	4684	3989	3652
LESS: Main Chutes	-446.0	1091.90	0.00	7.60	45	17	37
TOTAL AT IMPACT	8149.7	1036.63	0.50	7.62	4639	3693	3336

NOTES: * Centers of gravity are in the NASA reference system except that the longitudinal has an origin 998.7 inches below the tangency of the Command Module structure mold line.

**The forward cover (375 pounds) is not included in this weight.

~~DOWNGRADED AT 3 YEAR INTERVALS; DECLASSIFIED AFTER 12 YEARS~~
DOD DIR 5200.10
~~CONFIDENTIAL~~
SID 63-143-3
"THIS DOCUMENT CONTAINS INFORMATION AFFECTING THE NATIONAL DEFENSE OF THE UNITED STATES WITHIN THE MEANING OF THE ESPIONAGE LAWS, TITLE 18, U.S.C. SECTIONS 793 AND 794. ITS TRANSMISSION OR THE REVELATION OF ITS CONTENTS IN ANY MANNER TO AN UNAUTHORIZED PERSON IS PROHIBITED BY LAW."

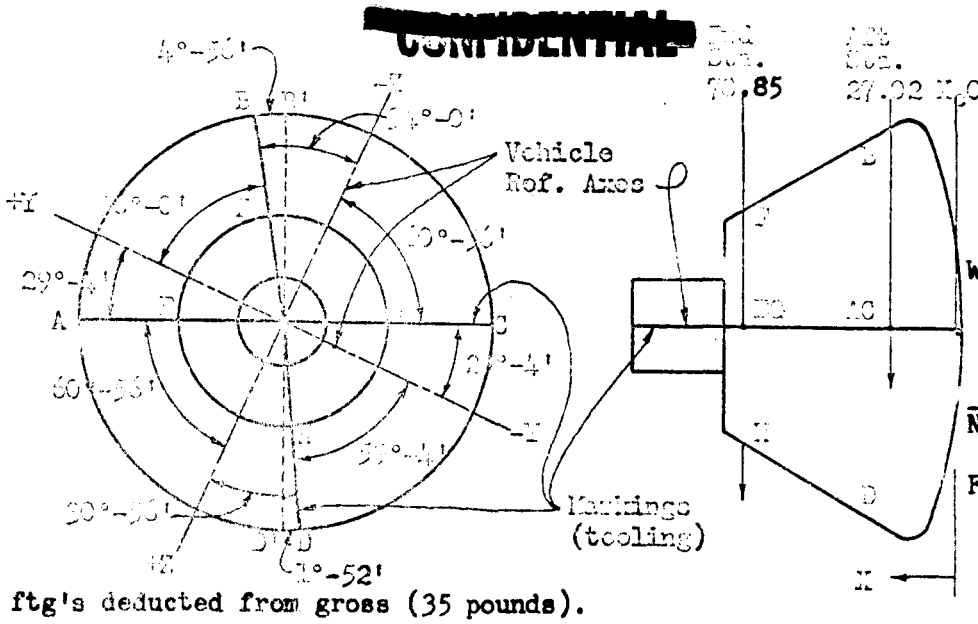

WITNESSED BY:

F Smith

NASA REPRESENTATIVE

FOR E. S. HILYER

*Forward ftg's deducted from gross (35 pounds).

ACTUAL WEIGHT & BALANCE
NAMEPLATE NO. 19

Name: Kessler & Hedger
Date: 10 October 1963

DESCRIPTION	LOC.	AVG. RDG.	+ CORR.	WEIGHT	ARM.	MOM.	LAT.	MOM.	VERT.	MOM.
[illegible]	F	2102	-3.8	*2063.2	78.85	162683	4.15	8562		
	G	2132	-4.7	*2092.3	78.85	164978			0.0	-----
[illegible]	A	3458	-14.6	3443.4	27.02	93041	76.12	262112		
	B'	2908	-5.7	2902.3	27.02	78420			-75.84	-220110
[illegible]	C	3102	-7.0	3095.0	27.02	83627	-76.12	-235591		
	D'	3613	+0.4	3613.4	27.02	97634			76.08	274907
[illegible]	TOTAL	F + A + C		8601.6	39.45	339351	4.08	35083		
	TOTAL	G + B + D		8608.0	39.62	341032			6.37	54797

Transfer to Vehicle Reference Axes

Y = (LATERAL ARM)(cos 29°- 4') - (VERTICAL ARM)(sin 29°- 4')

Z = (LATERAL ARM)(sin 29°- 4') + (VERTICAL ARM)(cos 29°- 4')

Y = (4.08)(.87406) - (6.37)(.48583) = .47

Z = (4.08)(.48583) + (6.37)(.87406) = 7.55

DESCRIPTION	WEIGHT	X	WX	Y	WY	Z	WZ
TRANSFERRED GROSS (as weighed)	8604.8	39.54	340192	.47	4044	7.55	64966
Corrections:							
Less: Aft Weighing Fittings	-47.2	27.00	-1274	-.85	40	-.55	26
Plus: N-V Stab. Chute Fitting	+42.6	26.36	1123	3.24	138	-4.01	-171
Plus: Camera Film	+4.0	93.44	374	-5.78	-23	2.78	11
Less: Pilot Chute Mortar Supt. Ftg	-4.8	83.00	-398	2.30	-11	10.03	-48
Plus: Pilot Chute Mortar Supt. Ftgs	+19.3	83.25	1607	3.89	75	6.60	127
Plus: N-V Drogue Guide Ring	+5.0	90.00	450	9.00	45	-20.00	-100
CONFIDENTIAL							
CORRECTED WEIGHT AND C.G.	8623.7	39.67	342074	.50	4308	7.52	64811

SECTION III

APPENDIX (B)

TEST SITE WEIGHING

[redacted]

APPENDIX (B)

TEST SITE WEIGHING

INTRODUCTION

The enclosed data in Appendix (B) presents the weight, center of gravity and inertia for Boilerplate Command Module No. 19, Parachute Drop Test No. 14 (the 9th drop of BP 19). The weight and centers of gravity presented are based on an actual weight and balance determination conducted at the El Centro, California test site on 2 February 1965. The inertia values presented are calculated.

The Command Module was weighed in two horizontal positions, with the second position being rotated approximately 90° counterclockwise from the first horizontal position. These weighings were accomplished by the use of the A14-154 Quotentiometer Readout System and the H14-041 Revere Load Cells. The load cells were calibrated at the Navy Standards Lab at Pomona, California into the A14-154 direct millivolt/volt reading instrument. The millivolt/volt reading is corrected to true pounds mass on the actual weight data sheets, pages 10 and 11.

Boilerplate Command Module No. 19 is ballasted to obtain the Block I weight (11000 pounds) with the forward apex cover jettisoned and all chutes in the stowed position, as defined by Specification MC 901-0001 "E", paragraph 3.2. In addition the Command Module is ballasted to obtain a center of gravity as specified by S&ID Apollo Project Office, based on a L/D of .34.

The weight and center of gravity corrections for the shortage items at the time of the weight and balance, plus the ballast corrections are indicated in detail on page 13. These corrections are applied to the Net (As Weighed) total, page 12, to arrive at the total corrected weight and center of gravity for this drop test, as shown on page 12.

The Command Module descent phase from launch time to C/M at touchdown is presented on page 9. The weight and centers of gravity of the drogue, pilot and main chutes deployed were determined by actual weights by Northrop-Ventura.

Page 14 of this report has been inserted to present a summary of all the drop tests of Boilerplate No. 19 to date.

[redacted]

WEIGHT, CENTER OF GRAVITY AND INERTIA SUMMARY

COMMAND MODULE - BOILERPLATE NO. 19

AIRPLANE DROP NO. 14 - PARACHUTE TEST

ITEM	WEIGHT	CENTER OF GRAVITY*			MOMENTS OF INERTIA (SLUG-FT.^{2})		
		Xa	Ya	Za	ROLL (Ixx)	PITCH (Iyy)	YAW (Izz)
COMMAND MODULE - INITIAL (Page 12)**	10995.0	1041.1	0.3	5.0	5672	4666	4305
LESS: DUAL DROGUES	-60.1	1089.8	0.0	-22.0	-	-	-
COMMAND MODULE - PRIOR TO DROGUE DISCONNECT	10934.9	1040.8	0.3	5.1	5662	4626	4274
LESS: DROGUE DISCONNECT (PARTIAL)	-6.0	1098.8	0.0	-18.7	-	-	-
COMMAND MODULE - PRIOR TO PILOT & MAIN CHUTE DEPLOYMENT	10928.9	1040.8	0.3	5.2	5661	4621	4270
LESS: PILOT AND MAIN CHUTES	-395.2	1090.3	-1.2	7.5	47	19	37
COMMAND MODULE - AT TOUCHDOWN	10533.7	1038.9	0.3	5.1	5614	4384	4016

NOTE: *Centers of gravity are in the NASA reference system except that the longitudinal (Xa) has an origin 998.7 inches below the tangency of the Command Module structure mold line.

**The Command Module initial weight and center of gravity does not include the forward apex cover. The initial configuration of the Command Module, for this drop test, is after the forward apex cover has been jettisoned and prior to the dual drogue deployment.

WEIGHT AND BALANCE DATA SHEET
COMMAND MODULE
POSITION NO. 1

[redacted]

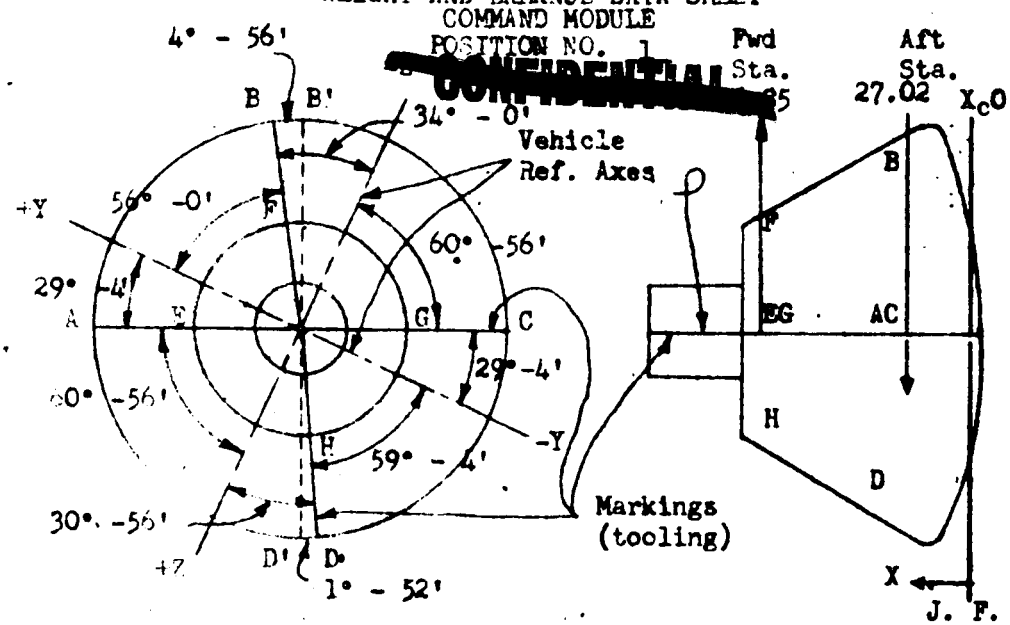

VEHICLE NO: Boilerplate No. 19

LOCATION: Hangar 225 El Centro

RECORDED BY: J. F. Kessler
T. N. Hunt

DATE PERFORMED: 2 February 1965

REACTION POINT A (Compression)

DETERMINATION NUMBER	LOAD CELL COLOR	GROSS READING	ZERO CORRECTION	CORRECTED READING	AVERAGE READING
1	Blue	16979	-278	16701	
2		16980	-284	16696	
					16699

REACTION POINT C (Compression)

DETERMINATION NUMBER	LOAD CELL COLOR	GROSS READING	ZERO CORRECTION	CORRECTED READING	AVERAGE READING
1	Yellow	16032	-305	15727	
2		16060	-323	15737	
					15732

REACTION POINT F (Tension)

DETERMINATION NUMBER	LOAD CELL COLOR	GROSS READING	ZERO CORRECTION	CORRECTED READING	AVERAGE READING
1	Red	11068	-306	10762	
2		11054	-305	10749	
					10756

WEIGHT DERIVATION

REACTION POINT	LOAD CELL COLOR	AVERAGE READING	CALIBRATION CORRECTION	GRAVITY CORRECTION	WEIGHT
A	Blue	16699	-	-	4193.0
C	Yellow	15732	-	-	3960.0
F	Red	10756	-	-	2697.8

VERIFIED BY: [redacted]

WEIGHT AND BALANCE DATA SHEET
COMMAND MODULE
POSITION NO. 2

[redacted]

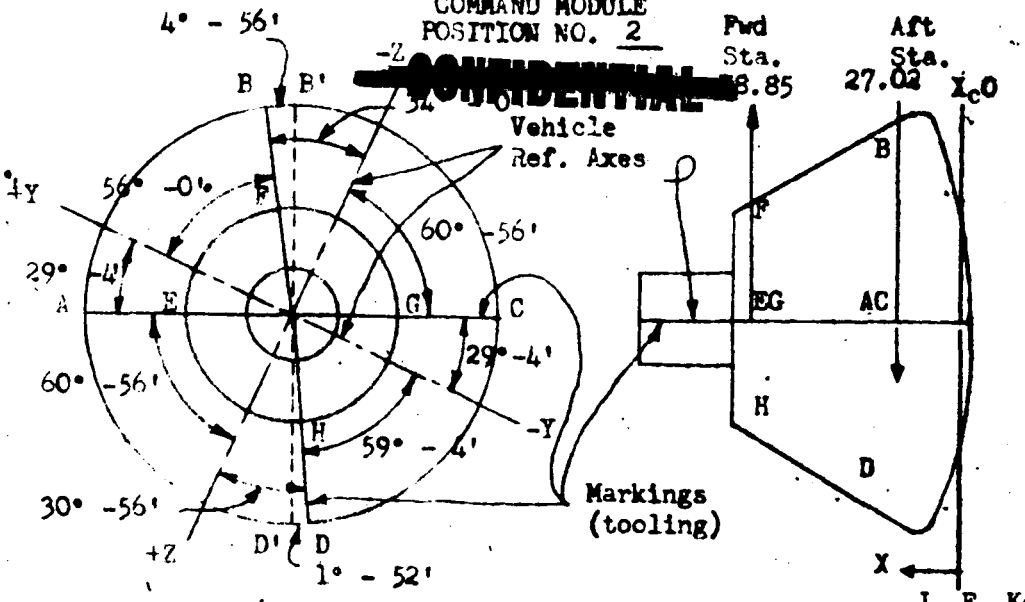

VEHICLE NO: Boilerplate No. 19

LOCATION: Hangar 225 El Centro

RECORDED BY: J. F. Kessler, T. N. Hunt

DATE PERFORMED: 2 Febr. 1965

REACTION POINT B' (Compression)

DETERMINATION NUMBER	LOAD CELL COLOR	GROSS READING	ZERO CORRECTION	CORRECTED READING	AVERAGE READING
1	Blue	15263	-265	14998	
2		15243	-268	14975	
					14987

REACTION POINT D' (Compression)

DETERMINATION NUMBER	LOAD CELL COLOR	GROSS READING	ZERO CORRECTION	CORRECTED READING	AVERAGE READING
1	Yellow	17717	-295	17422	
2		17825	-297	17528	
					17475

REACTION POINT G (Tension)

DETERMINATION NUMBER	LOAD CELL COLOR	GROSS READING	ZERO CORRECTION	CORRECTED READING	AVERAGE READING
1	Red	11116	-307	10809	
2		11038	-291	10747	
					10778

WEIGHT DERIVATION

REACTION POINT	LOAD CELL COLOR	AVERAGE READING	CALIBRATION CORRECTION	GRAVITY CORRECTION	WEIGHT
B'	Blue	14987	-	-	3761.5
D'	Yellow	17475	-	-	4400.0
G	Red	10778	-	-	2703.3

VERIFIED BY: [signature]

[redacted]

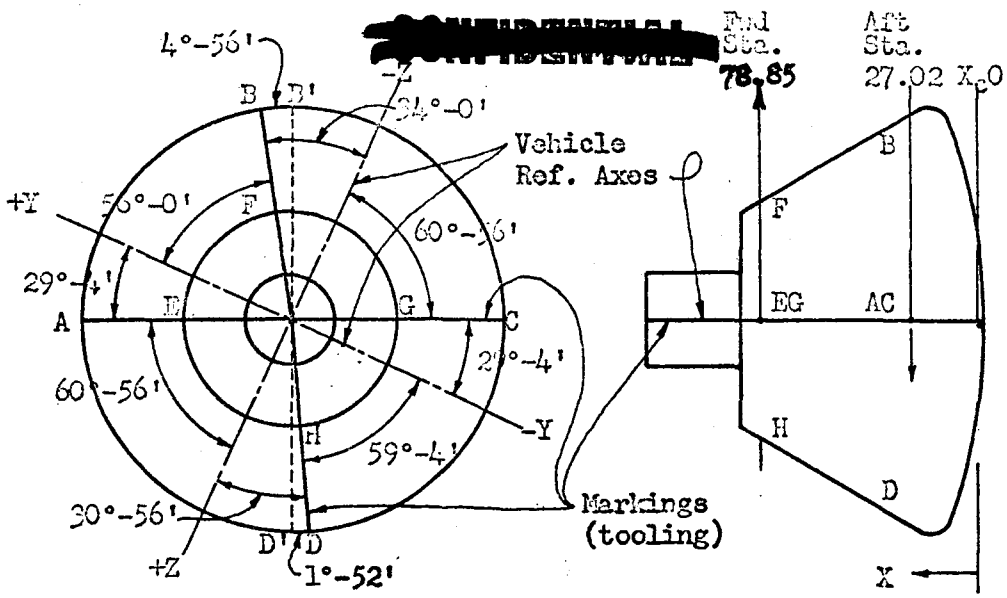

WITNESSED BY:

NASA

*Forward Ftg's deducted from gross (-35 pounds)

ACTUAL WEIGHT & BALANCE
ROLLERPLATE NO. 19

Name: J. F. Kessler
Date: 3 Febr. 1965

	CELL COLOR	CELL LOCATION	WEIGHT	LONG.	MOM.	LAT.	MOM.	VERT.	MOM.
Fwd Jack Position	Red	F	*2662.8	78.85	209962	4.15	11051		
	Red	G	*2668.3	78.85	210395			0.0	-
Aft Jack Position	Blue	A	4193.0	27.02	113295	76.12	319171		
	Blue	B'	3761.5	27.02	101636			-75.84	-285272
Aft Jack Position	Yellow	C	3960.0	27.02	106999	-76.12	-301435		
	Yellow	D'	4400.0	27.02	118888			76.08	334752
GROSS (as weighed)	TOTAL F + A + C		10815.8	39.78	430256	2.66	28787		
	TOTAL G + B' + D'		10829.8	39.79	430919			4.56	49480

Transfer to Vehicle Reference Axes

Y = (LATERAL ARM)(cos 29°- 4') - (VERTICAL ARM)(sin 29°- 4')

Z = (LATERAL ARM)(sin 29°- 4') + (VERTICAL ARM)(cos 29°- 4')

Y = (2.66)(.87406) - (4.56)(.48583) = .10

Z = (2.66)(.48583) + (4.56)(.87406) = 5.28

DESCRIPTION	WEIGHT	X	WX	Y	WY	Z	WZ
TRANSFERRED GROSS (as weighed)	10822.8	39.78	430588	.10	1082	5.28	57144
Corrections:							
Less: (4) Aft Jack Pads	-47.2	27.00	-1274	-.85	40	-.55	26
NET (As Weighed)	10775.6	39.84	429314	.10	1122	5.30	57170
Plus: Corrections - Page 13	+219.4	102.1	22401	7.6	1667	-9.7	-2128
Corrected Wt & C.G.	10995.0	41.08	451715	0.25	2789	5.01	55042

[redacted]

CORRECTIONS TO ACTUAL WEIGHT AND BALANCE

COMMAND MODULE

BOILERPLATE NO. 19

ITEM	+/-	WEIGHT	CENTER OF GRAVITY		
			Xa	Ya	Za
Plus: (2) Northrop-Ventura Camera's	+	27.3	94.0	0.0	0.0
Plus: (4) Northrop-Ventura Stab. Ftg's	+	42.6	76.9	3.3	-4.0
Plus: Simulated Ablative	+	5.2	78.9	0.0	-40.5
Plus: (2) B16-301042-15 Ballast	+	95.3	59.5	37.5	-21.3
Plus: (2) B16-301042-19 Ballast	+	51.3	78.8	33.9	0.0
Plus: (2) B16-301042-19 Ballast	+	51.3	78.8	-33.9	0.0
Relocate (2) B16-301042-27 Ballast (From)	-	51.8	8.0	0.0	-4.2
Relocate (2) B16-301042-27 Ballast (To)	+	51.8	78.5	-38.0	-10.6
Less: (2) B16-301042-11 Ballast	-	35.3	54.0	-29.5	-44.5
Less: (1) B16-301042-27 Ballast	-	25.9	10.0	42.2	28.8
Plus: (1) B16-306312 PCM Support	+	4.7	89.3	0.0	-32.5
Plus: N-V Changes*	+	2.9	165.5	-12.2	-16.9
TOTAL CORRECTIONS	+	219.4	102.1	7.6	-9.7

NOTE: *These Northrop-Ventura changes consist of various changes and represents the total.

[redacted]

SECTION IV

BOILERPLATE NO. 19

PARACHUTE TESTS SUMMARY

BOILERPLATE NO. 19 PARACHUTE TESTS SUMMARY

WEIGHT, CENTER OF GRAVITY AND INERTIA

ITEM	WEIGHT	CENTER OF GRAVITY (1)			MOMENTS OF INERTIA (SLUG-FT.^{2})		
		Xa	Ya	Za	ROLL (Ixx)	PITCH (Iyy)	YAW (Izz)
FACTORY WEIGHING (DOWNEY) (2)	9519.0	1043.9	0.1	7.7	5000	4463	4250
PARACHUTE TEST NO. 6 (BP 19 NO. 1) (3)	8623.7	1039.7	0.5	7.5	4690	4010	3668
PARACHUTE TEST NO. 7 (BP 19 NO. 2)	9514.6	1041.6	0.3	8.1	5044	4305	3967
PARACHUTE TEST NO. 8 (BP 19 NO. 3)	9514.6	1041.6	0.3	8.1	5044	4305	3967
PARACHUTE TEST NO. 9 (BP 19 NO. 4)	9578.1	1041.9	0.3	7.9	5058	4356	4005
PARACHUTE TEST NO. 10 (BP 19 NO. 5)	9568.8	1041.7	0.1	7.8	5060	4328	3971
PARACHUTE TEST NO. 11 (BP 19 NO. 6)	9528.3	1041.8	-0.1	8.1	5019	4338	3973
PARACHUTE TEST NO. 12 (BP 19 NO. 7)	9509.9	1041.8	-0.1	8.0	5015	4332	3957
PARACHUTE TEST NO. 13 (BP 19 NO. 8)	9501.4	1041.8	-0.1	8.0	5013	4324	3951
PARACHUTE TEST NO. 14 (BP 19 NO. 9)	10995.0	1041.1	0.3	5.0	5672	4666	4305

NOTES: (1) Centers of gravity are in the NASA reference system except that the longitudinal (Xa) center of gravity has an origin 998.7 inches below the tangency of the Command Module structure mold line.

(2) The factory weighing includes the forward apex cover, the other indicated weights do not include the forward apex cover, because the Command Module was dropped less cover.

These mass data represent the Command Module during descent, just prior to drogue chute deployment.

(3) The first five parachute drop tests were made with Boilerplate No. 3.