~~CONFIDENTIAL~~

COPY NO. 52

CONTRACT REQUIREMENTS	CONTRACT ITEM	MODEL	CONTRACT NO.	DATE
Exhibit E, Para. 5.2	Line Item 13.0	LEM	NAS 9-1100	1/14/63

Type II

Primary Code 713

2 65 10663

REPORT

NO. LED-490-7

DATE: 1 April 1964

LEM MASS PROPERTY REPORT [U]

CODE 26512

CLASSIFICATION CHANGE

To UNCLASSIFIED

By authority of Gill-Hallett

Changed by L. Shirley Date 12/3/72

Classified Document Master Control Station, NASA

Scientific and Technical Information Facility

PREPARED BY:
R. Demarest
R. Aeder

CHECKED BY:
S. Salina

APPROVED BY:
T. J. Kelly 1 Apr 64
T. J. Kelly

REVISIONS

DATE	REV. BY	REVISIONS & ADDED PAGES	REMARKS

AVAILABLE TO NASA HEADQUARTERS ONLY

This document contains information affecting the national defense of the United States, within the meaning of the Espionage Laws, Title 18 U.S.C., Sections 793 and 794, the transmission or revelation of which in any manner to an unauthorized person is prohibited by law.

GROUP 4 DOCUMENT
DOWNGRADED AT 3-YEAR
INTERVALS
DECLASSIFIED AFTER 12 YRS

~~CONFIDENTIAL~~

TABLE OF CONTENTS

	Page
Introduction	1
Mission History of Weight and Performance	3
LEM Performance Comparison - Ascent (Figure 1)	4
- Descent(Figure 2)	5
Sign Convention and Reference Axis (Figure 3)	6
LEM Mass Property History (Table 1)	7
Summary of LEM Sizing Mission and Weight Reporting Mission (Table 2)	8
LEM Weight By Stages At Earth Launch (Table 3)	9
LEM Stage Weight History (Table 4)	10
Summary Weight Statement	11
Weight Statement	13
LEM Weight Comparison At Separation By Stages (Table 5)	31
LEM Allowable Stage Weight Apportionments (Figure 4)	32
Discussion of Inert Weight Changes Since Last Report	33
Discussion of Pending Changes	35
Government Furnished Equipment	36
Table 6 - Government Furnished Equipment	37
List of References	40
Distribution List - External	41
- Internal	42

INTRODUCTION

This report includes the status of LEM Mass Properties as of March 15, 1964. The total weight at Separation of 27718# is 246# heavier than that shown in the previous report LED-490-6, Dated 1 March 1964. The vehicle meets the required performance (Δ V) and is 2128# below the designated control weight of 29500# at Translunar Injection. Figures 1 and 2 illustrate the present relationship of LEM weight and performance capability.

A summary of changes since the last report are as follows:

A.	Ascent stage Inert * Weight	+68 lbs.
B.	Ascent stage Propellant - Increased Inert Weight	+56 lbs.
C.	Descent stage Inert * Weight	+ 1 lbs.
D.	Descent stage Propellant - Increased Touchdown Wt.	+121 lbs.
	Total LEM Weight Change at Separation	+246 lbs.

A more detailed breakdown of the Inert changes since the last report is included on page 33.

LEM Allowable Stage Weight Apportionment (Figure 4) has been included in this report and will appear in all subsequent Mass Property Reports. The purpose of this curve is to (1) provide an aid for evaluation of the weight status for constant performance parameters and (2) provide a basis for Target weight apportionment.

The two limiting items are the propellant tank capacities of the ascent and descent stages. The ascent tank capacity allows a maximum Lunar Liftoff weight of 10500 pounds (or 10511 pound ascent stage at touchdown). The descent propellant tank capacity allows a maximum Separation Weight of 29870 pounds, which is based on a LEM weight of 29500 pounds (unmanned) at Translunar Injection.

In addition, to providing the relationship for the maximum LEM separation weights, other separation weights have been included. The current weight status has been plotted and as indicated is presently below the maximum limits of the curve.

Should the final LEM weight fall below the limits, two possibilities exist:

(1) Either add more payload and propellant to maintain performance, or
(2) Add propellant to increase performance (i.e. for more lunar landing and launch flexibility).

* Inert Weight includes all non-propulsion expendables.

If performance increase are desired, then Figures 1 and 2 would indicate the additional performance available.

In order to complete a LEM Target Weight apportionment, GAEC requires additional information about all Government Furnished Equipment.

Toward this end the Contractor has attempted to compile details of the Government Furnished Equipment Weight (See pg. 36) from all available sources and has shown that there are weight variations from those originally designated by NASA. Some of the revised G.F.E. weights received from sources other than ASPO are noted as being incorporated in this report.

The Contractor invites NASA to comment on this list as shown, and confirm these weight trends wherever possible. Revisions and comments to the original list should be submitted to GAEC by 15 April 1964 in order to include these values in the May 1 report and also prevent further delays in establishing LEM Target Weights.

A list of pending changes has been included to indicate items being considered for the LEM vehicle, but on which final disposition had not been reached at the time of this report.

This report is based on the Mission Time Profile and the ΔV Budget used in the previous Mass Property Report, LED-490-6, Dated 1 March 1964.

MISSION HISTORY OF WEIGHT AND PERFORMANCE

	1 March 1964			1 April 1964		
Condition	Weight	ΔV	Isp	Weight	ΔV	Isp
Earth Launch	27,126			27,372		
Separation	27,472	7389	301	27,718	7389	301
Touchdown	12,668			12,793		
Lunar Lift-off	9,121	6373	306	9,245	6373	306
Transfer Orbit	4,718	310	295	4,686	310	295
Burnout (Docked)	4,462			4,530		

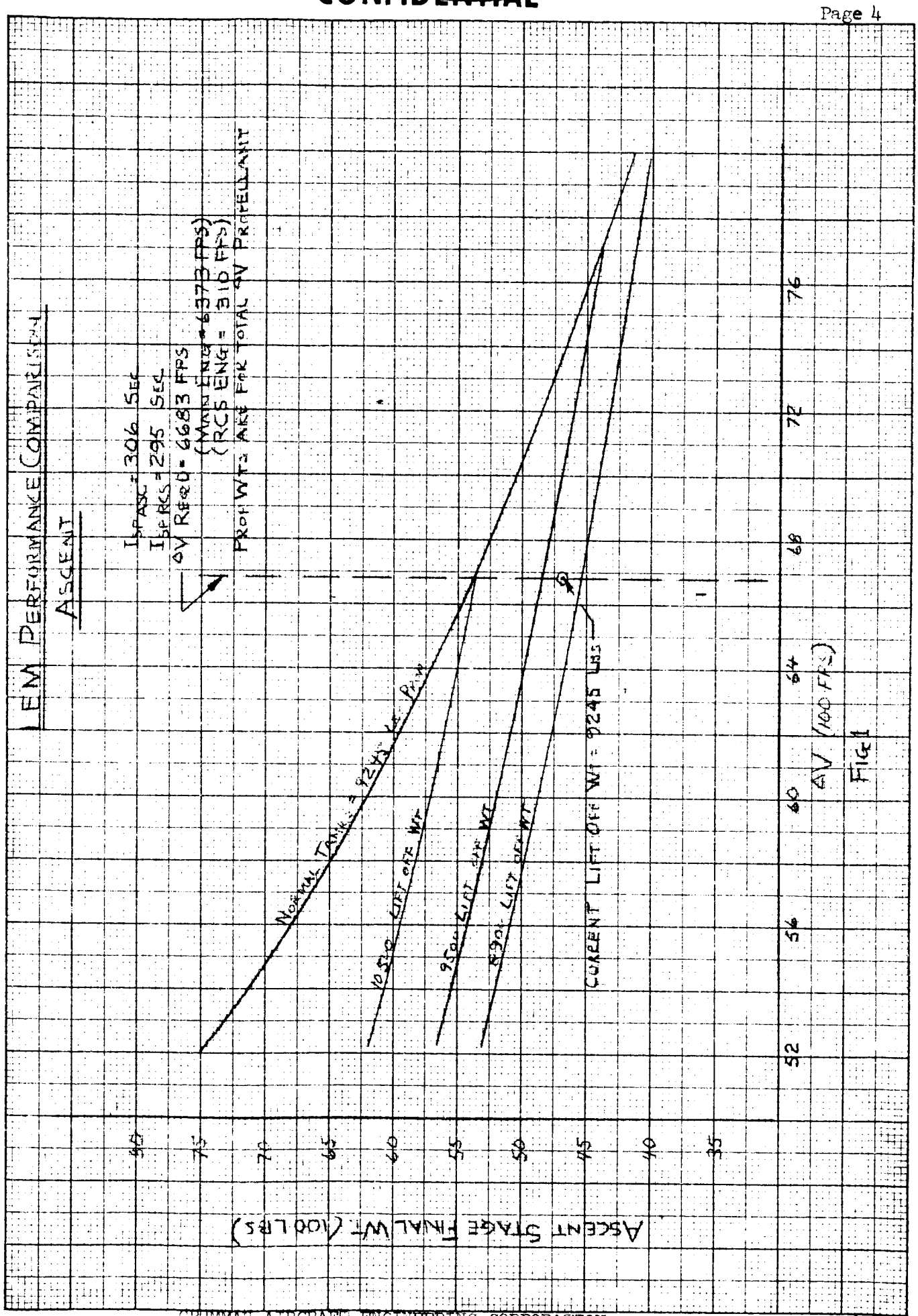
LEM PERFORMANCE COMPARISON
ASCENT
I_{SP} ASC = 306 SEC
I_{SP} RCS = 295 SEC
ΔV REQ'D = 6683 FPS
(MAIN ENG = 6373 FPS)
(RCS ENG = 310 FPS)
PROP WTS ARE FOR TOTAL ΔV PROPELLANT
NORMAL TANK = 92 WT. % PROP
10.5% LIFT OFF WT
9.5% LIFT OFF WT
8.9% LIFT OFF WT
CURRENT LIFT OFF WT = 9245 LBS
ASCENT STAGE FINAL WT (100 LBS)
80
75
70
65
60
55
50
45
40
35
52
56
60
64
68
72
76
ΔV (100 FPS)

Fig 1

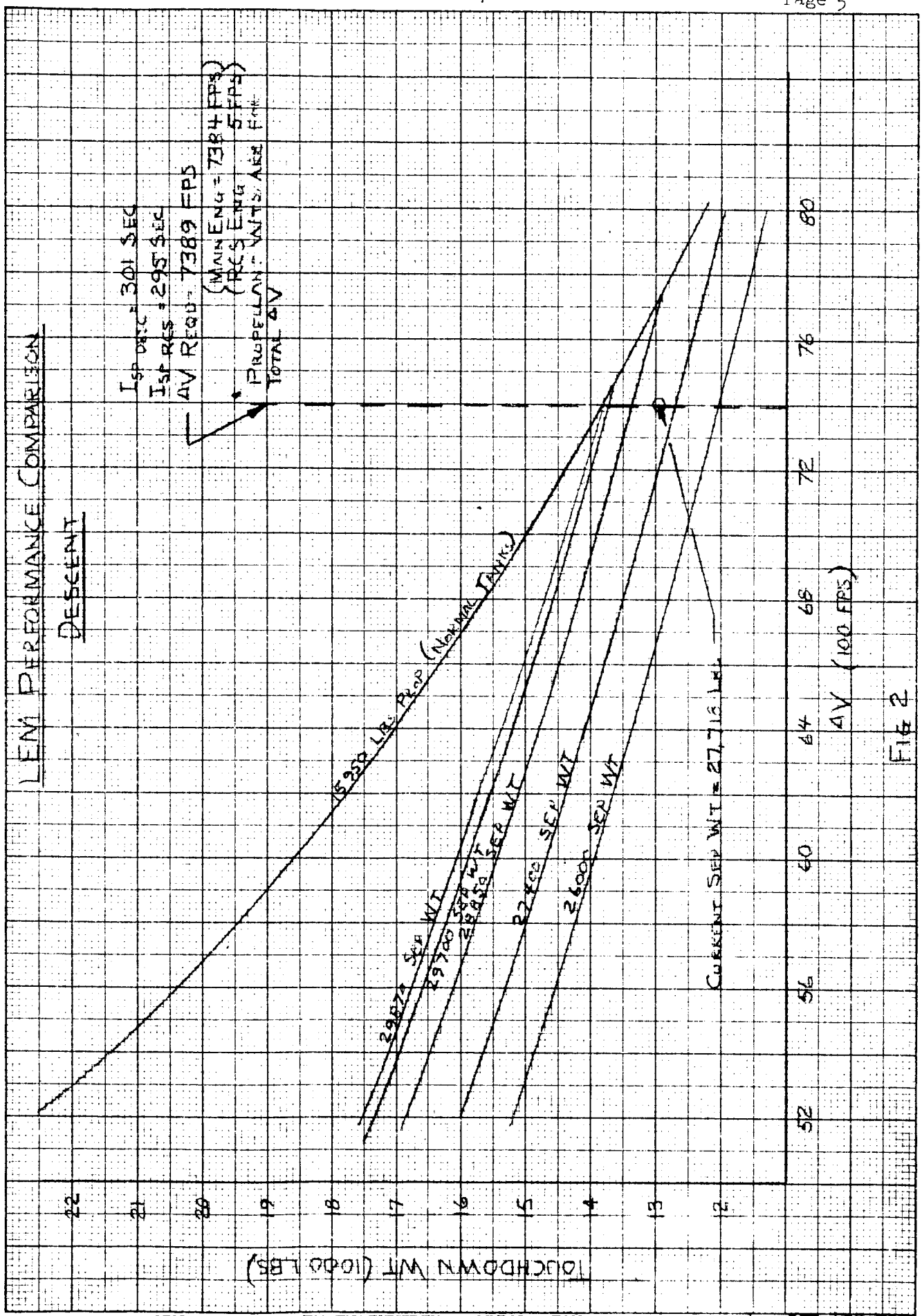
LEM PERFORMANCE COMPARISON
DESCENT
ISP DESC = 301 SEC
ISP RCS = 295 SEC
ΔV REQD = 7389 FPS
(MAIN ENG = 7384 FPS)
(RCS ENG 5 FPS)
PROPELLANT = WTS ABE FMK
TOTAL ΔV
5250 LBS PROP (NORMAL TANKS)
29870 SEP WT
29700 SEP WT
28850 SEP WT
27400 SEP WT
26000 SEP WT
CURRENT SEP WT = 27,716 LBS
TOUCHDOWN WT (1000 LBS)
22
21
20
19
18
17
16
15
14
13
12
52
56
60
64
68
72
76
80
ΔV (100 FPS)

FIG 2

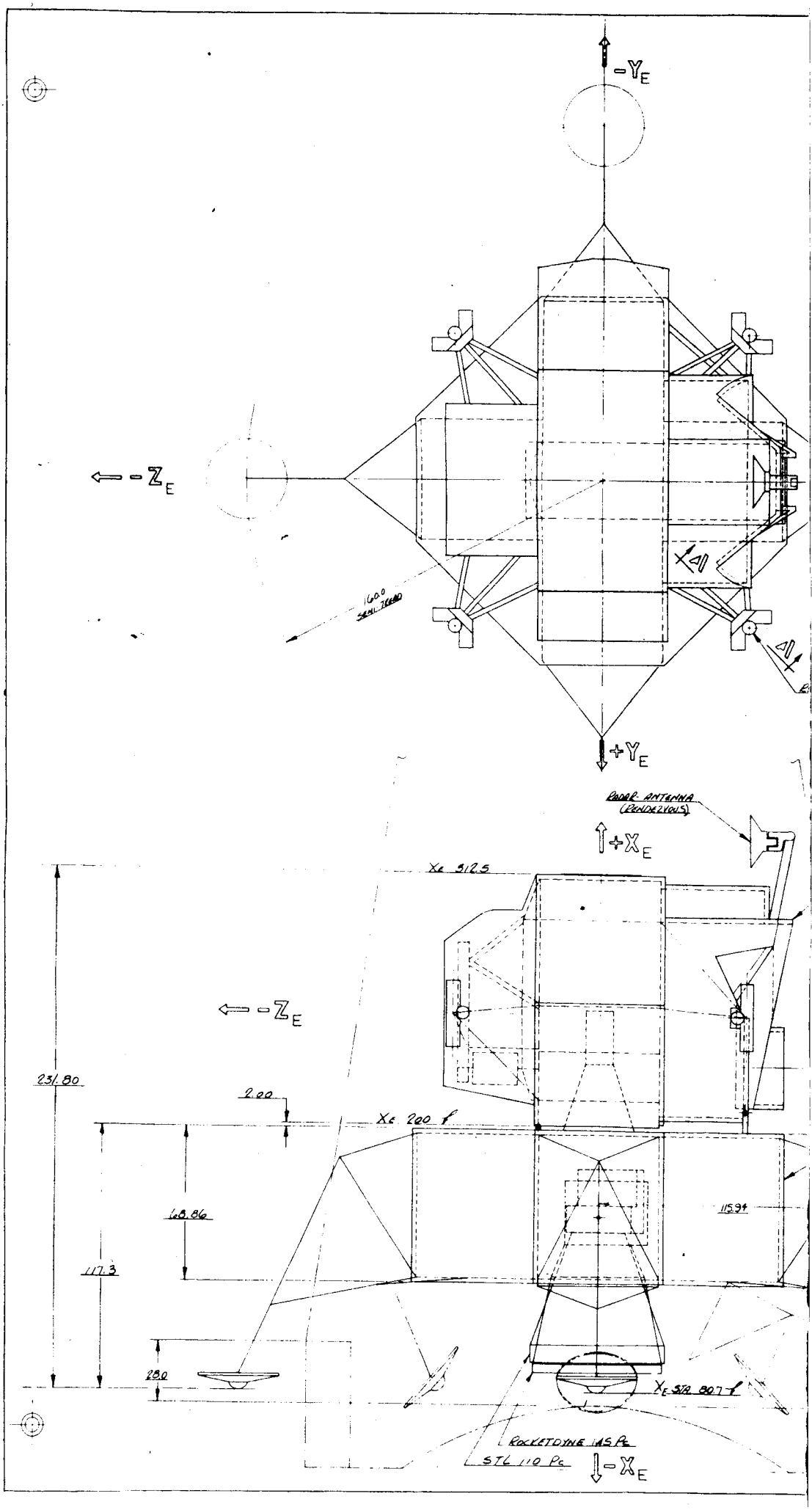
-YE
-ZE
+YE
160.0
SEMI-TORUS
RADAR ANTENNA
(RENDEZVOUS)
+XE
XE 512.5
-ZE
231.80
2.20
XE 200 f
68.86
117.3
28.0
159.9f
XE STA 807 f
ROCKETDYNE 145 Pc
STL 110 Pc
-XE

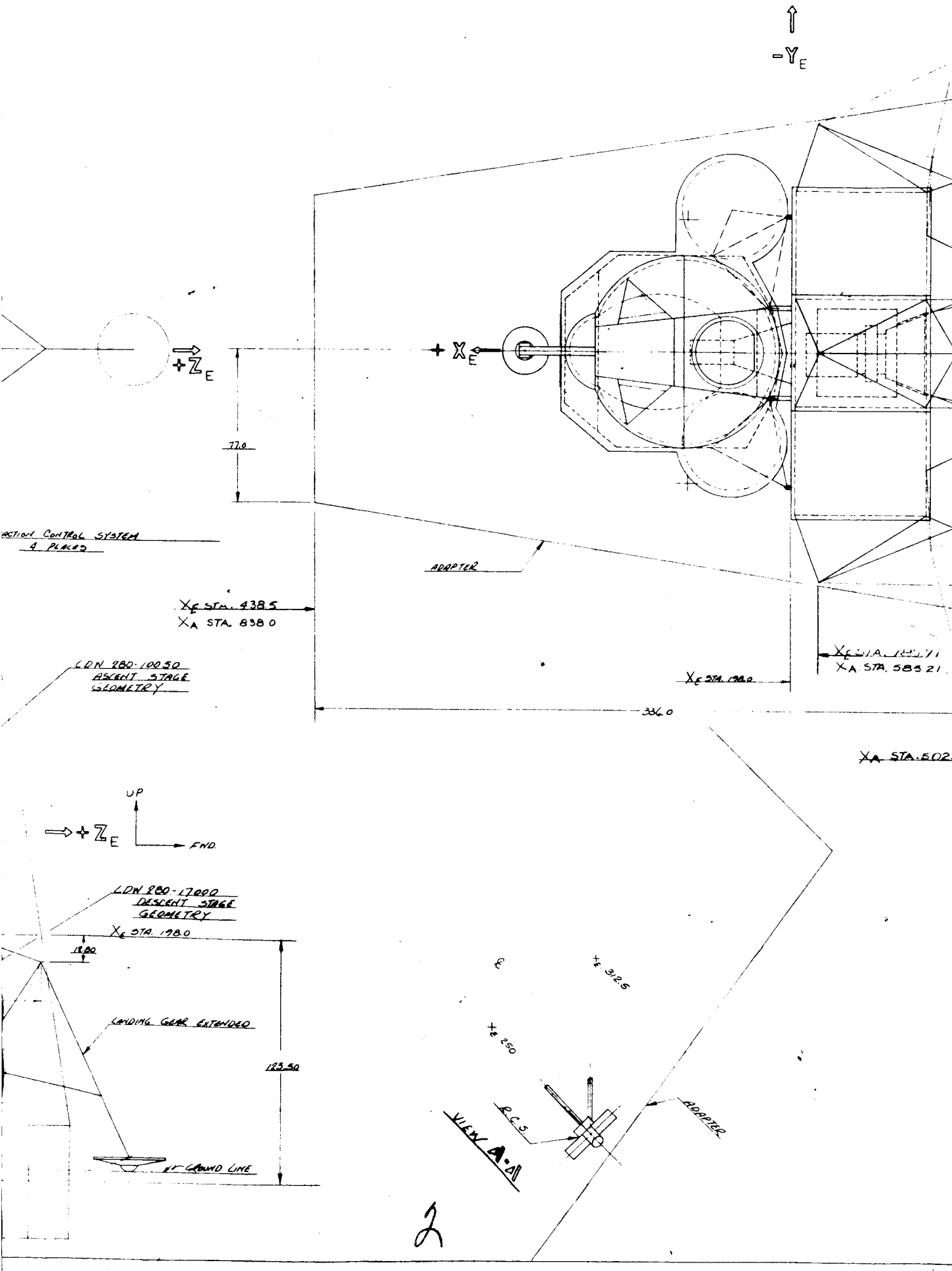
$-Y_E$
$+Z_E$
$+X_E$
77.0
ACTION CONTROL SYSTEM
4 PLACES
ADAPTER
X_E STA. 438.5
X_A STA. 838.0
LDW 280-10050
ASCENT STAGE
GEOMETRY
X_E STA. 198.0
336.0
X_A STA. 502
UP
FWD.
LDW 280-17000
DESCENT STAGE
GEOMETRY
X_E STA. 198.0
18.00
LANDING GEAR EXTENDED
123.50
GROUND LINE
312.5
250
R.C.S.
ADAPTER
VIEW A-A

2

	REVISION	BY & DATE	CHK	PROJ
A	REDESIGNED & REDRAWN	EVRC 12-14-63		1-2-64

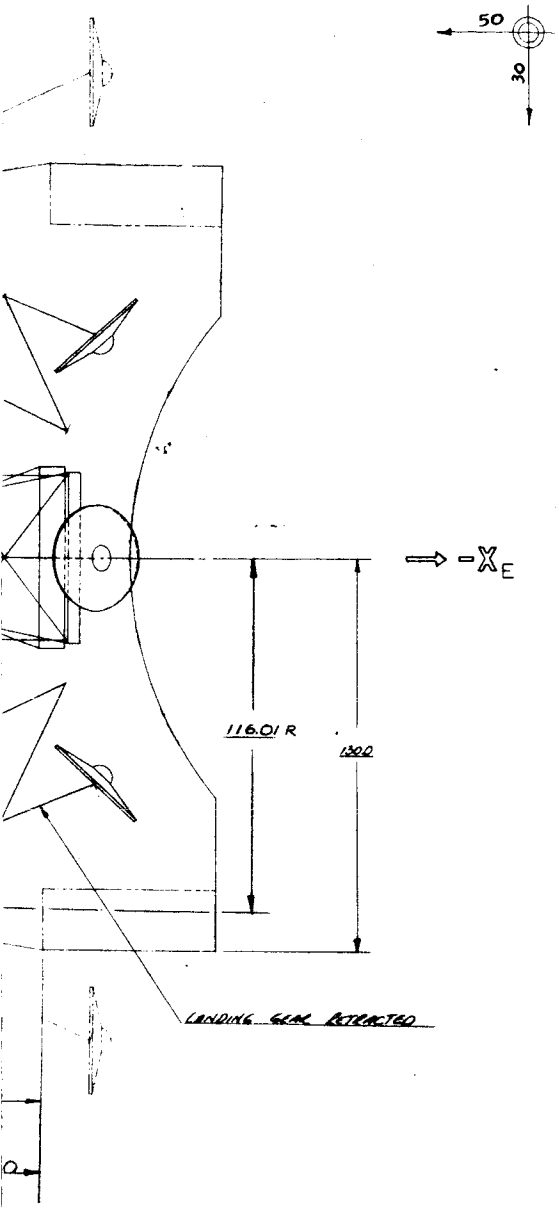

X_A NAA STATION
X_E LEM STATION

LEM AXIS REFERENCE SYSTEM
AND
SIGN CONVENTION

THIS DRAWING IS NOT NECESSARILY THE LATEST CONFIGURATION BUT IS REPRESENTIVE FOR PURPOSES OF REFERENCE AXIS ORIENTATION

LDW280 10000 Δ

LDW280-10000 Δ

3

UNLESS OTHERWISE SPECIFIED DIMENSIONS ARE IN INCHES TOLERANCE UNLESS SPECIFIED FRACTIONS - DECIMALS - ANGLES	DRAWN BY EVR CASE	GRUMMAN AIRCRAFT ENGRG CORP BETHPAGE, L. I. N. Y.
	LAYOUT BY DEC 7, 1963	GENERAL ARRANGEMENT
DIMS BRK AWTH	GRP LDR	LEM
CLASS II ENGRG CHANGE	SUPERVISOR	CONTRACT NO NAS 9-1100 DESIGNATION TYPE III
CLASS I ENGRG CHANGE	PROJ	CODE IDENT NO 26512 SIZE R LDW280-10000 Δ
1/10/64		SCALE 1:20 CONTRACT ITEM LINE 2 SHEET 1 OF 1
GRUMMAN REL INFO		
PRIM		
201		

SUPERSEDES LDW 280-10000 NO CHANGE

Table 1

LEM MASS PROPERTY HISTORY

MISSION PHASE	WEIGHT EARTH POUNDS	CENTER OF GRAVITY			MOMENTS OF INERTIA			PRODUCTS OF INERTIA		
		STATION INCHES	DISTANCE FROM THRUST AXIS		SLUG FT^2			SLUG FT^2		
		X	Y	Z	I_{xx}	I_{yy}	I_{zz}	I_{yz}	I_{xz}	I_{xy}
EARTH LAUNCH	27372	185.9	- .7	- .5	18006	19904	19745	-61	-17	58
SEPARATION	27718	187.0	- .7	0	19007	20849	20545	-46	317	96
HOHMANN TRANSFER ORBIT INSERTION	27401	187.0	- .7	0	18812	20699	20428	-47	316	95
HOVER	14448	208.2	-1.3	.1	10601	12507	14064	-40	315	178
TOUCHDOWN	12793	217.1	-1.4	.1	9555	9935	11730	-41	312	208
LIFT OFF	9245	241.2	- .5	.5	5670	2990	4925	-18	175	-11
HOHMANN TRANSFER ORBIT 50,000 Feet to 80 Miles	4686	253.8	- .9	1.2	2602	2474	1426	- 8	164	- 3
BURNOUT (DOCKED)	4530	253.4	-1.0	1.2	2544	2460	1369	- 4	164	- 3
POST-BURNOUT	3964	253.2	- .4	-3.2	2254	2184	1239	-11	171	3

[redacted]

Table 2

SUMMARY OF LEM SIZING MISSION & WEIGHT REPORTING MISSION

MISSION PHASE		SIZING[A] MISSION (Day Landing) Per Ref. 1 & 2		REPORTING[B] MISSION (Earthshine Landing) For Loading Expendables		REMARKS	
Description	Ltr.	Hours	Minutes	Hours	Minutes		
Prelaunch	C	10		10		Dormant Period	
Launch	D,E		12		12		
Earth Parking Orbit	F	4	30	2	48		
Translunar Injection	G		5		5		
Translunar Coast	H						
Prior to Transposition			20	1			
During Transposition			40				
Subsequent to Transposition	I	109		62	12		
Lunar Orbit	J						
Lunar Orbit Insertion			6		5		
Lunar Orbit Coast Prior to Sep.		2	30	2	30		
Lunar Orbit Checkout		1	30	1	30	Active Period	
LEM Separation, Checkout, and Insertion into Desc. Transfer Orbit	K		15		15	Post-Separation Period	Desc. Period- 1 Hr. 23 min. to 1 Hr. 21 min.
Coast in Descent Transfer Orbit		1			58		
Powered Descent (& Hover)			8		8		
Lunar Staytime	L	35		34	36		Lunar Stay Period
Powered Ascent	M		8		6		Ascent Period - 11 Hr. 37 min. to 10 Hr. 33 min.
Parking Orbit Contingency		9*		9			
Coasting Ascent Transfer		1	30		42		
Rendezvous			24		10		
Docking			15		15		
Crew Transfer			20		20		
Dormant LEM Time		127	23	78	52	* The 9 hour contingency time in lunar orbit following Lunar lift-off will be provided at the expense of lunar surface stay time.	
Active LEM Time		49	30	48	0		
Post-Separation LEM Time		(48)	(0)	(46)	(30)		
Total LEM Period		176	53	126	52		

[redacted]

Table 3

LEM WEIGHT BY STAGES

AT EARTH LAUNCH

		ASCENT STAGE	DESCENT STAGE	TOTAL
1.0	Structure	954.7	935.9	1890.6
2.0	Stabilization & Control	73.1	7.5	80.6
3.0	Navigation & Guidance	242.5	10.0	252.5
4.0	Crew Provisions *	148.2	5.0	153.2
5.0	ECS	323.2	170.6	493.8
6.0	Landing Gear	--	387.0	387.0
7.0	Instrumentation	282.5	235.0	517.5
8.0	Electrical Power Supply	810.9	291.1	1102.0
9.0	Propulsion Inert	633.9	1578.3	2212.2
10.0	Reaction Control	870.7	--	870.7
11.0	Communication	76.2	20.6	96.8
12.0	Controls & Displays	264.4	--	264.4
	Totals - Inert	4680.3	3641.0	8321.3
	Add Main Propulsion ΔV Propellant	4303.1	14747.2	19050.3
	Total with ΔV Propellant	8983.4	18388.2	27371.6

* Without crew, suits, radiation dosimeter, etc. (426.2#).

Table 4

LEM STAGE WEIGHT HISTORY

MISSION PHASE AND CONSUMABLE DESCRIPTION	ASCENT STAGE		DESCENT STAGE		TOTAL WEIGHT (LBS.)
	DRY WEIGHT (LBS.)	ΔV-PROPELLANT WEIGHT (LBS.)	DRY WEIGHT (LBS.)	ΔV-PROPELLANT WEIGHT (LBS.)	
EARTH LAUNCH AND TRANSLUNAR INJECTION	4391.2	4581.7	3651.5	14747.2	27371.6
Crew and Equipment	+426.2				
Water, Oxygen & Hydrogen			-79.8		
SEPARATION	4817.4	4581.7	3571.7	14747.2	27718.0
Landing Flare			-5.0		
Water, Oxygen & Hydrogen			-29.3		
Descent ΔV Propellant					
- Main				-14747.2	
- RCS		-28.2			
RCS- Attitude Propellant	-115.2				
LUNAR TOUCHDOWN	4702.2	4553.5	3537.4		12793.1
Scientific Samples & Equip.	+ 40.0		-210.0		
Jettisoned on Lurain	- 51.0		-3327.4		
LUNAR LIFT-OFF	4691.2	4553.5			9244.7
Water, Oxygen & Hydrogen	- 71.4				
Ascent ΔV Propellant					
- Main		-4303.1			
- RCS		- 250.4			
RCS- Attitude Propellant	- 89.9				
BURNOUT (DOCKING)	4529.9				4529.9

~~CONFIDENTIAL~~

LEM
WEIGHT STATEMENT

CODE	ITEM	3/1/64 WEIGHT AT SEPARATION	CURRENT WEIGHT STATUS: BURN OUT	CONS'D ON ASCENT	JET. ON LURAIN	CONS'D ON DESCENT	TOTAL SEPARATION	X-LUNAR EXPEND-ABLES	EARTH LAUNCH TOTAL
1.0	Structure	1865.2	954.7		935.9		1890.6		1890.6
2.0	Stabilization and Control	82.1	73.1		7.5		80.6		80.6
3.0	Navigation and Guidance	248.0	224.5		28.0		252.5		252.5
4.0	Crew Provisions	579.4	568.8		5.6	5.0	579.4	-426.2	153.2
5.0	Environmental Control	(419.1)	(241.2)	(54.6)	(123.4)	(16.3)	(435.5)	(58.3)	(493.8)
	-Inert	232.2	222.6	0	26.0	0	248.6	0	248.6
	-Expendables	186.9	18.6	54.6	97.4	16.3	186.9	58.3	245.2
6.0	Landing Gear	387.0			387.0		387.0		387.0
7.0	Instrumentation	518.5	322.5		195.0		517.5		517.5
8.0	Electrical Power	(1080.5)	(794.1)	(16.8)	(256.6)	(13.0)	(1080.5)	(21.5)	(1102.0)
	-Inert	936.8	794.1	0	142.7	0	936.8	0	936.8
	-Expendables	143.7	0	16.8	113.9	13.0	143.7	21.5	165.2
9.0	Propulsion	(21083.3)	(633.9)	(4303.1)	(1578.3)	(14747.2)	(21262.5)		(21262.5)
	-Inert	2212.2	633.9	0	1578.3	0	2212.2		2212.2
	-Expend. - ΔV Propellant	18871.1	0	4303.1	0	14747.2	19050.3		19050.3
10.0	Reaction Control	(847.1)	(387.0)	(340.3)		(143.4)	(870.7)		(870.7)
	-Inert	361.1	387.0	0		0	387.0		387.0
	-Expendables - Att. Prop.	205.1		89.9		115.2	205.1		205.1
	-ΔV Propellant	280.9		250.4		28.2	278.6		278.6

~~CONFIDENTIAL~~

LEM
WEIGHT STATEMENT

CODE	ITEM	3/1/64 WEIGHT AT SEPARATION	CURRENT WEIGHT STATUS: BURN OUT	CONS'D ON ASCENT	JET. ON LURAIN	CONS'D ON DESCENT	TOTAL SEPARATION	X-LUNAR EXPEND-ABLES	EARTH LAUNCH TOTAL
11.0	Communications	98.8	65.7		31.1		96.8		96.8
12.0	Controls & Displays	262.9	264.4				264.4		264.4
	Total								
	-Inert	7779.2	4511.3	0	3337.1	0	7848.4	-426.2	7422.2
	-Expend. -W/O Δ V Prop.	540.7	18.6	161.3	211.3	149.5	540.7	79.8	620.5
	- ΔV Prop. Only	19152.0	0	4553.5	0	14775.4	19328.9		19328.9
	Total	27471.9	4529.9	4714.8	3548.4	14924.9	27718.0	-346.4	27371.6
	Burnout Weight	4462.0	4529.9 Lbs.						
	Lift-off Weight	9120.6		9244.7 Lbs.					
	Touchdown Weight	12667.7			12793.1 Lbs.				
	Separation Weight	27471.9					27718.0 Lbs.		
	Earth Launch Weight	27125.5							27371.6 Lbs.

~~CONFIDENTIAL~~

LEM
WEIGHT STATEMENT

CODE	ITEM	3/1/64 WEIGHT AT SEPARATION	CURRENT WEIGHT STATUS: BURN OUT	CONS'D ON ASCENT	JET. ON LURAIN	CONS'D ON DESCENT	TOTAL SEPARATION	X-LUNAR EXPEND-ABLES	EARTH LAUNCH TOTAL
1.0	Structure	1865.2	954.7		935.9		1890.6		1890.6
1.1	Crew Compartment	(564.0)	(571.8)				(571.8)		(571.8)
1.1.1	Skin	115.7	107.6				107.6		107.6
1.1.2	MM Shielding	0	0				0		0
1.1.3	Thermal Protection	19.0	19.4				19.4		19.4
1.1.4	Bulkheads	4.9	0				0		0
1.1.5	Beams	30.0	30.0				30.0		30.0
1.1.6	Longerons	18.2	18.1				18.1		18.1
1.1.7	Stiffeners	37.8	35.6				35.6		35.6
1.1.8	Frames	12.1	12.1				12.1		12.1
1.1.9	Windows	40.7	40.7				40.7		40.7
1.1.10	Docking Tube With Drogue	129.6	137.9				137.9		137.9
1.1.11	Hatches	50.0	50.0				50.0		50.0
1.1.12	Equipment Support *	34.0	36.9				36.9		36.9
1.1.13	Flooring	51.8	51.8				51.8		51.8
1.1.14	Welds & Fasteners	20.2	31.7				31.7		31.7
1.2	Equipment Compartment	(91.9)	(110.8)				(110.8)		(110.8)
1.2.1	Skin	--	--				--		--
1.2.2	Thermal Protection	11.0	14.1				14.1		14.1
1.2.3	MM Shielding	0	0				0		0
1.2.4	Vertical Supports	7.3	16.4				16.4		16.4
1.2.5	Stiffeners	19.7	18.5				18.5		18.5
1.2.6	Misc. Support Structure	30.0	39.1				39.1		39.1
1.2.7	Cold Plates	18.7	17.4				17.4		17.4
1.2.8	Weld and Fasteners	5.2	5.3				5.3		5.3

* Includes structural cold plates.

~~CONFIDENTIAL~~

~~CONFIDENTIAL~~

~~CONFIDENTIAL~~

LEM
WEIGHT STATEMENT

CODE	ITEM	3/1/64 WEIGHT AT SEPARATION	CURRENT WEIGHT STATUS: BURN OUT	CONS'D ON ASCENT	JET. ON LURAIN	CONS'D ON DESCENT	TOTAL SEPARATION	X-LUNAR EXPEND-ABLES	EARTH LAUNCH TOTAL
1.3	Engine/Tank Compartment	(222.9)	(226.2)				(226.2)		(226.2)
1.3.1	Skin	--	--				--		--
1.3.2	Thermal Protection	35.7	35.7				35.7		35.7
1.3.3	MM Shielding	0	--				--		--
1.3.4	Bulkheads	111.8	125.8				125.8		125.8
1.3.5	Stiffeners	10.7	0				0		0
1.3.6	Engine Supports	6.0	6.0				6.0		6.0
1.3.7	Tank Supports	16.0	16.0				16.0		16.0
1.3.8	Deck	15.0	15.0				15.0		15.0
1.3.9	Beams	14.5	14.5				14.5		14.5
1.3.10	Weld and Fasteners	13.2	13.2				13.2		13.2
1.4	Bulkhead (Ascent)	(45.9)	(45.9)				(45.9)		(45.9)
1.4.1	Structure	18.7	18.7				18.7		18.7
1.4.11	Insulation	27.2	27.2				27.2		27.2
1.10	Descent Stage Structure	(940.5)			(935.9)		(935.9)		(935.9)
1.10.1	Skin (Closure)	140.8			124.4		124.4		124.4
1.10.2	Beams and Bulkheads	417.7			378.3		378.3		378.3
1.10.3	MM Shielding	0			0		0		0
1.10.4	Thermal Protection	92.0			92.0		92.0		92.0
1.10.5	Supports	140.8			192.0		192.0		192.0
1.10.6	L.G. Support Truss	81.2			81.2		81.2		81.2
1.10.7	Separation System	29.0			29.0		29.0		29.0
1.10.8	S-IV-B Attachment Penalty	24.0			24.0		24.0		24.0
1.10.9	Ladder	15.0			15.0		15.0		15.0

~~CONFIDENTIAL~~

CONFIDENTIAL

LEM
WEIGHT STATEMENT

CODE	ITEM	3/1/64 WEIGHT AT SEPARATION	CURRENT WEIGHT STATUS: BURN OUT	CONS'D ON ASCENT	JET. ON LURAIN	CONS'D ON DESCENT	TOTAL SEPARATION	X-LUNAR EXPEND-ABLES	EARTH LAUNCH TOTAL
2.0	Stabilization & Control	82.1	73.1		7.5		80.6		80.6
2.1	Guidance Coupler Assy. *	1.5	0				0		0
2.2	Att. Translation Control Assy.	22.0	22.0				22.0		22.0
2.3	Rate Gyro Assembly (2)	3.6	3.6				3.6		3.6
2.4	Inflight Monitor Assy.	10.0	10.0				10.0		10.0
2.5	Descent Engine Control Syst.	(7.5)			(7.5)		(7.5)		(7.5)
2.5.1	Descent Engine Control Assy.	1.5			1.5		1.5		1.5
2.5.2	Gimbal Drive Actuators (2)	6.0			6.0		6.0		6.0
2.6	Back Up Guidance System	(37.5)	(37.5)				(37.5)		(37.5)
2.6.1	Programmer Assembly	7.5	7.5				7.5		7.5
2.6.2	Att., Reference Assy. **	30.0	30.0				30.0		30.0

* Recoded to Controls and Display code.
** This is a strapped down system and includes sensor package 15#, electronics and power supply 15#.

CONFIDENTIAL

LEM
WEIGHT STATEMENT

CODE	ITEM	3/1/64 WEIGHT AT SEPARATION	CURRENT WEIGHT STATUS: BURN OUT	CONS'D ON ASCENT	JET. ON LURAIN	CONS'D ON DESCENT	TOTAL SEPARATION	X-LUNAR EXPEND-ABLES	EARTH LAUNCH TOTAL
3.0	Navigation & Guidance	248.0	224.5		28.0		252.5		252.5
3.1	GFE	(147.0)	(151.5)				(151.5)		(151.5)
3.1.1	IMU	42.0	42.0				42.0		42.0
3.1.2	AOT & Eyepieces	24.5	24.5				24.5		24.5
3.1.3	LGC	41.5	45.8				45.8		45.8
3.1.4	PSA	27.0	27.2				27.2		27.2
3.1.5	Star, Maintenance Book	2.0	2.0				2.0		2.0
3.1.6	Cabling	10.0	10.0				10.0		10.0
3.1.7	Navigation Base	--	--				--		--
3.1.8	Cold Plate	--	--				--		--
3.2	Rendezvous Radar	(73.0)	(73.0)				(73.0)		(73.0)
3.2.1	Gimbaled Antenna & Boom }	62.0	62.0				62.0		62.0
3.2.2	Electronics }								
3.2.3	Transponder	11.0	11.0				11.0		11.0
3.3	Landing Radar	(28.0)			(28.0)		(28.0)		(28.0)
3.3.1	Stabilizer Antenna	10.0			10.0		10.0		10.0
3.3.2	Electronics	18.0			18.0		18.0		18.0

~~CONFIDENTIAL~~

LEM
WEIGHT STATEMENT

CODE	ITEM		3/1/64 WEIGHT AT SEPARATION	CURRENT WEIGHT STATUS: BURN OUT	CONS'D ON ASCENT	JET. ON LURAIN	CONS'D ON DESCENT	TOTAL SEPARATION	X-LUNAR EXPEND-ABLES	EARTH LAUNCH TOTAL
4.0	Crew Provisions		(579.4)	568.8		5.6	5.0	579.4	-426.2	153.2
4.1	Crew Accessories - GFE		(133.0)	(133.0)				(133.0)	(-73.0)	(60.0)
4.1.1	Space Suits	(2)	60.0	60.0				60.0	-60.0*	0
4.1.2	Portable Life Supt Syst.	(2)	60.0	60.0				60.0		60.0
4.1.3	Radiation Dosimeter	(2)	5.0	5.0				5.0	- 5.0*	0
4.1.4	Miscellaneous		8.0	8.0				8.0	- 8.0*	0
4.2	Crew	(2)	353.2	353.2				353.2	-353.2*	0
4.3	Seats & Restraints	(2)	50.0	50.0				50.0		50.0
4.4	Lighting **		(25.0)	(20.0)			(5.0)	(25.0)		(25.0)
4.4.1	Landing		5.0				5.0	5.0		5.0
4.4.2	Hatchway		4.0	4.0				4.0		4.0
4.4.3	Cabin		8.0	8.0				8.0		8.0
4.4.4	Running (Docking)		8.0	8.0				8.0		8.0
4.5	Sustenance & Assoc. Equip.		(18.2)	(12.6)		(5.6)		(18.2)		(18.2)
4.5.1	Drinking Water		***							***
4.5.2	Food & Storage		15.7	10.1		5.6		15.7		15.7
4.5.3	First Aid Kit		2.5	2.5				2.5		2.5
4.6	Waste Management		--					--		--

* Crew, Space Suits, Radiation Dosimeter and Miscellaneous GFE is considered part of inert weight.
** Panel lighting (10#) is under Controls and Displays.
*** Drinking water is under ECS code.

~~CONFIDENTIAL~~

LEM
WEIGHT STATEMENT

CODE	ITEM	3/1/64 WEIGHT AT SEPARATION	CURRENT WEIGHT STATUS: BURN OUT	CONS'D ON ASCENT	JET. ON LURAIN	CONS'D ON DESCENT	TOTAL SEPARATION	X-LUNAR EXPEND-ABLES	EARTH LAUNCH TOTAL
5.0	Environmental Control	419.1	241.2	54.6	123.4	16.3	435.5	58.3	493.8
5.1	Atmosphere Revitalization Sect.	(120.2)	(92.8)		(27.4)		(120.2)		(120.2)
5.1.1	Suit Circuit Assembly	30.8	30.8				30.8		30.8
5.1.2	Cabin Recirculation Assy.	19.7	19.7				19.7		19.7
5.1.3	CO_2 Removal Cannister	3.3	3.3				3.3		3.3
5.1.4	Plumbing	18.4	18.4				18.4		18.4
5.1.5.1	LIOH Cartridges-PLSS (6)	26.4	8.8		17.6		26.4		26.4
5.1.5.2	LIOH Cartridges-ECS (4)	19.6	9.8		9.8		19.6		19.6
5.1.6	CO_2 System	2.0	2.0				2.0		2.0
5.2	Heat Transport Section	(64.4)	(79.3)				(79.3)		(79.3)
5.2.1	Coolant Recirculation Assy.	7.0	10.0				10.0		10.0
5.2.2	Valves & Switches	27.4	27.4				27.4		27.4
5.2.3	Cold Plates *	--	6.6				6.6		6.6
5.2.4	Coolant	30.0	35.3				35.3		35.3
5.3	O_2 Supply & Cabin Pressure Sect	(33.8)	(26.3)	(7.5)			(33.8)		(33.8)
5.3.1	GOX Accumulator	15.5	15.5				15.5		15.5
5.3.2	GOX	7.5		7.5			7.5		7.5
5.3.3	Valves & Switches	10.8	10.8				10.8		10.8
5.3.4	SOX & SOX Tank **	--							
5.4	Water Management Section	(168.4)	(10.5)	(47.1)	(94.5)	(16.3)	(168.4)	(58.3)	(226.7)
5.4.1	Water Tank	29.5	6.5		23.0		29.5		29.5
5.4.2	Water ***	133.4	0	47.1	70.0	16.3	133.4	58.3	191.7
5.4.3	Valves & Switches	5.5	4.0		1.5		5.5		5.5

* Included in Structures are structural cold plates.
** Included in EPS.
*** Includes Drinking Water.

[redacted]

[redacted]

LEM
WEIGHT STATEMENT

CODE	ITEM	3/1/64 WEIGHT AT SEPARATION	CURRENT WEIGHT STATUS: BURN OUT	CONS'D ON ASCENT	JET. ON LURAIN	CONS'D ON DESCENT	TOTAL SEPARATION	X-LUNAR EXPEND-ABLES	EARTH LAUNCH TOTAL
5.5	Plumbing - GAEC	(32.3)	(32.3)		(1.5)		(33.8)		(33.8)
	Heat Transport & Water Management	10.5	10.5		1.5		12.0		12.0
	Atmos. Revit. & Water Supply	20.0	20.0				20.0		20.0
	Heat Exchangers **** (3)	1.8	1.8				1.8		1.8
	Total ECS - Inert	232.2	222.6	0	26.0	0	248.6	0	248.6
	Total ECS - Expendables	186.9	18.6	54.6	97.4	16.3	186.9	58.3	245.2

**** Includes an additional heat exchanger for O_2 and two heat exchangers for H_2 in EPS.

[redacted]

LEM
WEIGHT STATEMENT

CODE	ITEM	3/1/64 WEIGHT AT SEPARATION	CURRENT WEIGHT STATUS: BURN OUT	CONS'D ON ASCENT	JET. ON LURAIN	CONS'D ON DESCENT	TOTAL SEPARATION	X-LUNAR EXPEND-ABLES	EARTH LAUNCH TOTAL
6.0	Landing Gear	387.0			387.0		387.0		387.0
6.1	Upper Struts	(156.0)			(156.0)		(156.0)		(156.0)
6.1.1	Tubes	104.0			104.0		104.0		104.0
6.1.2	Fittings	32.0			32.0		32.0		32.0
6.1.3	Shocks	20.0			20.0		20.0		20.0
6.2	Lower Struts	(67.0)			(67.0)		(67.0)		(67.0)
6.2.1	Tubes	28.0			28.0		28.0		28.0
6.2.2	Fittings	11.0			11.0		11.0		11.0
6.2.3	Shocks	28.0			28.0		28.0		28.0
6.3	Mechanism	104.0			104.0		104.0		104.0
6.4	Pads & Fittings	(60.0)			(60.0)		(60.0)		(60.0)
6.4.1	Pads	48.0			48.0		48.0		48.0
6.4.2	Fittings	12.0			12.0		12.0		12.0

[redacted]

LEM
WEIGHT STATEMENT

CODE	ITEM	3/1/64 WEIGHT AT SEPARATION	CURRENT WEIGHT STATUS: BURN OUT	CONS'D ON ASCENT	JET. ON LURAIN	CONS'D ON DESCENT	TOTAL SEPARATION	X-LUNAR EXPEND-ABLES	EARTH LAUNCH TOTAL
7.0	Instrumentation	518.5	322.5		195.0		517.5		517.5
7.1	Operational	(83.5)	(82.5)				(82.5)		(82.5)
7.1.1	Signal Conditioner	45.0	45.0				45.0		45.0
7.1.2	PCMTE	32.5	31.5				31.5		31.5
7.1.3	Data Storage Equipment	6.0	6.0				6.0		6.0
7.2	In-Flight Status System	(50.0)	(50.0)				(50.0)		(50.0)
7.2.1	On Board Checkout Equip.	25.0	25.0				25.0		25.0
7.2.2	Emergency Detection Equip.	10.0	10.0				10.0		10.0
7.2.3	Caution & Warning Equip.	15.0	15.0				15.0		15.0
7.3	Scientific Equipment	250.0	80.0		170.0		250.0		250.0
7.4	Sensors	(135.0)	(110.0)		(25.0)		(135.0)		(135.0)
7.4.1	Structure	10.0	10.0				10.0		10.0
7.4.2	Stabilization & Control	11.0	11.0				11.0		11.0
7.4.3	Navigation & Guidance	2.0	2.0				2.0		2.0
7.4.5	Environmental Control Sys.	21.0	21.0				21.0		21.0
7.4.7	Instrumentation	2.0	2.0				2.0		2.0
7.4.8	Electrical Power Syst.	9.0	9.0				9.0		9.0
7.4.9	Propulsion	53.0	28.0		25.0		53.0		53.0
7.4.10	Reaction Control System	21.0	21.0				21.0		21.0
7.4.11	Communications	6.0	6.0				6.0		6.0

[redacted]

[redacted]

LEM
WEIGHT STATEMENT

CODE	ITEM		3/1/64 WEIGHT AT SEPARATION	CURRENT WEIGHT STATUS: BURN OUT	CONS'D ON ASCENT	JET. ON LURAIN	CONS'D ON DESCENT	TOTAL SEPARATION	X-LUNAR EXPEND-ABLES	EARTH LAUNCH TOTAL
8.0	Electrical Power Supply *		1080.5	794.1	16.8	256.6	13.0	1080.5	21.5	1102.0
8.1	Power Generation Section **		(491.5)	(259.5)	(16.8)	(202.2)	(13.0)	(491.5)	(21.5)	(513.0)
8.1.1	Fuel Cells ***	(2)	150.0	150.0				150.0		150.0
8.1.2	Oxygen Tanks	(2)	23.6	2.8		20.8		23.6		23.6
8.1.3	Hydrogen Tanks	(3)	55.6	10.5		45.1		55.6		55.6
8.1.4.1	Oxygen-Ascent		11.6		11.6			11.6		11.6
8.1.4.2	-Descent		99.9			90.9	9.0	99.9	16.0	115.9
8.1.5.1	Hydrogen-Ascent		5.2		5.2			5.2		5.2
8.1.5.2	-Descent		27.0			23.0	4.0	27.0	5.5	32.5
8.1.6	Auxiliary Battery System		55.0	55.0				55.0		55.0
8.1.7.1	Plumbing ****-O_2 Feed		24.0	14.0		10.0		24.0		24.0
8.1.7.2	-H_2 Feed		28.4	16.0		12.4		28.4		28.4
8.1.8	Pyrotechnic Batteries	(2)	8.0	8.0				8.0		8.0
8.1.9	Battery Charger		3.2	3.2				3.2		3.2
8.2	Power Conversion Section		29.8	(29.8)				(29.8)		(29.8)
8.2.1	Inverters		29.8	29.8				29.8		29.8
8.2.2	Control Unit		-	-				-		-
8.3	Distribution Section		(80.0)	(80.0)				(80.0)		(80.0)
8.3.1	Distribution Boxes	(2)	20.0	20.0				20.0		20.0
8.3.2	Circuit Breaker Panels	(2)	30.0	30.0				30.0		30.0
8.3.3	Junction Boxes	(2)	10.0	10.0				10.0		10.0
8.3.4	Relay Boxes	(2)	20.0	20.0				20.0		20.0

[redacted]

[redacted]

LEM
WEIGHT STATEMENT

CODE	ITEM	3/1/64 WEIGHT AT SEPARATION	CURRENT WEIGHT STATUS: BURN OUT	CONS'D ON ASCENT	JET. ON LURAIN	CONS'D ON DESCENT	TOTAL SEPARATION	X-LUNAR EXPEND-ABLES	EARTH LAUNCH TOTAL
8.4	Electrical Provisions	(479.2)	(424.8)		(54.4)		(479.2)		(479.2)
8.4.2	Stabilization & Control	16.2	16.2				16.2		16.2
8.4.3	Navigation and Guidance	99.5	97.0		2.5		99.5		99.5
8.4.4	Crew System	2.5	2.5				2.5		2.5
8.4.5	Environmental Control	4.8	4.8				4.8		4.8
8.4.7	Instrumentation	198.0	171.0		27.0		198.0		198.0
8.4.8	Electrical Power	96.0	81.0		15.0		96.0		96.0
8.4.9	Propulsion	22.5	19.0		3.5		22.5		22.5
8.4.10	Reaction Control	17.0	17.0				17.0		17.0
8.4.11	Communications	18.0	11.6		6.4		18.0		18.0
8.4.12	Controls and Displays	4.7	4.7				4.7		4.7
	Total EPS - Inert	936.8	794.1	0	142.7	0	936.8	0	936.8
	Total EPS - Expendables	143.7	0	16.8	113.9	13.0	143.7	21.5	165.2

* Heat Exchangers and Glycol Plumbing are included under ECS.
** Based on a modified 76 KWH energy level.
*** Includes Fuel Cell Control Units.
**** Includes Pressure Regulators.

[redacted]

LEM
WEIGHT STATEMENT

CODE	ITEM	3/1/64 WEIGHT AT SEPARATION	CURRENT WEIGHT STATUS: BURN OUT	CONS'D ON ASCENT	JET. ON LURAIN	CONS'D ON DESCENT	TOTAL SEPARATION	X-LUNAR EXPEND-ABLES	EARTH LAUNCH TOTAL
9.0	Propulsion System	21083.3	633.9	4303.1	1578.3	14747.2	21262.5		21262.5
9.1	Propellant	(19087.1)	(50.0)	(4303.1)	(166.0)	(14747.2)	(19266.3)		(19266.3)
9.1.1.1	Usable - Ascent	4244.3		4303.1			4303.1		4303.1
9.1.1.2	- Descent	14626.8				14747.2	14747.2		14747.2
9.1.2.1	Trapped- Ascent	50.0	50.0				50.0		50.0
9.1.2.2	- Descent	166.0			166.0		166.0		166.0
9.2	Propellant System	(713.9)	(219.6)		(494.3)		(713.9)		(713.9)
9.2.1	Fuel Tanks - Ascent	98.0	98.0				98.0		98.0
9.2.2	- Descent	234.0			234.0		234.0		234.0
9.2.3	Oxid. Tanks- Ascent	98.0	98.0				98.0		98.0
9.2.4	- Descent	234.0			234.0		234.0		234.0
9.2.5	Plumbing - Ascent	23.6	23.6				23.6		23.6
9.2.6	- Descent	26.3			26.3		26.3		26.3
9.3	Pressurization System	(646.7)	(142.3)		(504.4)		(646.7)		(646.7)
9.3.1	Helium Tanks - Ascent	103.0	103.0				103.0		103.0
9.3.2	- Descent	400.0			400.0		400.0		400.0
9.3.3	Helium - Ascent	11.3	11.3				11.3		11.3
9.3.4	- Descent	44.0			44.0		44.0		44.0
9.3.5	Plumbing - Ascent	28.0	28.0				28.0		28.0
9.3.6	- Descent	60.4			60.4		60.4		60.4
9.4	Engines	(635.6)	(222.0)		(413.6)		(635.6)		(635.6)

[redacted]

[redacted]

LEM
WEIGHT STATEMENT

CODE	ITEM	3/1/64 WEIGHT AT SEPARATION	CURRENT WEIGHT STATUS: BURN OUT	CONS'D ON ASCENT	JET. ON LURAIN	CONS'D ON DESCENT	TOTAL SEPARATION	X-LUNAR EXPEND-ABLES	EARTH LAUNCH TOTAL
9.4.1	Engine - Ascent	204.0	204.0				204.0		204.0
9.4.2	- Descent	370.0			370.0		370.0		370.0
9.4.3	Shield - Ascent	5.0	5.0				5.0		5.0
	- Descent	14.6			14.6		14.6		14.6
9.4.4	Gimbal Actuators*	--					--		--
9.4.5	Engine Mount - Ascent	5.0	5.0				5.0		5.0
	- Descent	8.0			8.0		8.0		8.0
9.4.6	Misc. - Ascent	8.0	8.0				8.0		8.0
	- Descent	21.0			21.0		21.0		21.0
	Total Propulsion - Inert	2212.2	633.9	0	1578.3	0	2212.2		2212.2
	Total Propulsion - Expend.	18871.1	0	4303.1	0	14747.2	19050.3		19050.3

* Included in Stabilization and Control

[redacted]

[redacted]

LEM
WEIGHT STATEMENT

CODE	ITEM	3/1/64 WEIGHT AT SEPARATION	CURRENT WEIGHT STATUS: BURN OUT	CONS'D ON ASCENT	JET. ON LURAIN	CONS'D ON DESCENT	TOTAL SEPARATION	X-LUNAR EXPEND-ABLES	EARTH LAUNCH TOTAL
10.0	Reaction Control System	847.1	387.0	340.3		143.4	870.7		870.7
10.1	Propellant	(524.8)	(38.8)	(340.3)		(143.4)	(522.5)		(522.5)
10.1.1	Attitude Control	205.1		89.9		115.2	205.1		205.1
	ΔV	280.9		250.4		28.2	278.6		278.6
10.1.2	Trapped	38.8	38.8				38.8		38.8
10.2	Propellant System *	(131.3)	(131.3)				(131.3)		(131.3)
10.2.1	Fuel Tanks	20.5	20.5				20.5		20.5
10.2.2	Oxidizer Tanks	24.6	24.6				24.6		24.6
10.2.3	Plumbing								
	-Ascent Tie-In	7.0	7.0				7.0		7.0
	-Fuel & Oxidizer Syst. **	55.2	55.2				55.2		55.2
	-Thruster Isolation Valves	24.0	24.0				24.0		24.0
10.3	Pressurization System	(54.4)	(54.4)				(54.4)		(54.4)
10.3.1	Helium Tanks	21.0	21.0				21.0		21.0
10.3.2	Helium Gas	2.1	2.1				2.1		2.1
10.3.3	Plumbing	31.3	31.3				31.3		31.3
10.4	Thruster Inst. Assy.	(96.6)	(121.5)				(121.5)		(121.5)
	Thrust Chamber Assy.	70.2	91.9				91.9		91.9
	Cluster Hardware	26.4	29.6				29.6		29.6
	TCA Failure Device	0	--				--		--

* Capacity of usable prop. is 575.6#.
** Includes Propellant quantity gaging (12.0#).

[redacted]

[redacted]

[redacted]

LEM
WEIGHT STATEMENT

CODE	ITEM	3/1/64 WEIGHT AT SEPARATION	CURRENT WEIGHT STATUS: BURN OUT	CONS'D ON ASCENT	JET. ON LURAIN	CONS'D ON DESCENT	TOTAL SEPARATION	X-LUNAR EXPEND-ABLES	EARTH LAUNCH TOTAL
10.5	Quad Support Truss	40.0	41.0				41.0		41.0
	Total RCS - Inert	361.1	387.0	0		0	387.0		387.0
	Total RCS - Expendables	(486.0)	0	(340.3)		(143.4)	(483.7)		(483.7)
	-Att. Control Prop.	205.1		89.9		115.2	205.1		205.1
	- ΔV Propellant	280.9		250.4		28.2	278.6		278.6

[redacted]

LEM
WEIGHT STATEMENT

CODE	ITEM	3/1/64 WEIGHT AT SEPARATION	CURRENT WEIGHT STATUS: BURN OUT	CONS'D ON ASCENT	JET. ON LURAIN	CONS'D ON DESCENT	TOTAL SEPARATION	X-LUNAR EXPEND-ABLES	EARTH LAUNCH TOTAL
11.0	Communications	98.8	65.7		31.1		96.8		96.8
11.1	VHF LEM/CM	(31.0)	(20.4)		(10.6)		(31.0)		(31.0)
11.1.1	VHF-Signal Processing ERA *	15.7	15.7				15.7		15.7
11.1.2	Inflight Antenna (2)	3.3	3.3				3.3		3.3
11.1.3	Lunar Stay Antenna (1)	10.6			10.6		10.6		10.6
11.1.4	R.F. Switch	1.0	1.0				1.0		1.0
11.1.5	B.H. Flanges (3)	.4	.4				.4		.4
11.2	S-Band LEM/Earth	(56.8)	(45.3)		(10.0)		(55.3)		(55.3)
11.2.1	S-Band ERA **	24.0	24.5				24.5		24.5
11.2.2	Inflight Antenna (2)	2.3	2.3				2.3		2.3
11.2.3	Erectable Antenna	10.0			10.0		10.0		10.0
11.2.4	Steerable Antenna ***	19.0	17.0				17.0		17.0
11.2.5	R.F. Switch	1.0	1.0				1.0		1.0
11.2.6	B.H. Flanges (4)	.5	.5				.5		.5
11.3	Television ****	(11.0)			(10.5)		(10.5)		(10.5)
11.3.1	Camera, Portable - GFE	4.0			4.0		4.0		4.0
11.3.2	Lens - GFE	2.5			2.5		2.5		2.5
11.3.3	Camera Thermal Equip - GFE	2.5			2.5		2.5		2.5
11.3.4	Cable	2.0			1.5		1.5		1.5

* Includes Premodulation Processor and Audio Center 7.0#, Diplexer 2.0#, Transceiver 4.4#, and Case and Connectors 2.3#.

** Includes Transceiver 10.8#, Power Amplifier (including notch filter) 8.5#, Diplexer 1.0#, Antenna Electronics 1.5#, and Case and Connectors 2.7#.

*** Includes Earth Sensor and Drive.

**** Auxiliary Light for Television, if required, is considered part of GFE scientific equipment.

[redacted]

[redacted]

LEM
WEIGHT STATEMENT

CODE	ITEM	3/1/64 WEIGHT AT SEPARATION	CURRENT WEIGHT STATUS: BURN OUT	CONS'D ON ASCENT	JET. ON LURAIN	CONS'D ON DESCENT	TOTAL SEPARATION	X-LUNAR EXPEND-ABLES	EARTH LAUNCH TOTAL
12.0	Controls and Displays	262.9	264.4				264.4		264.4
12.1	Structure	--							
12.2	Stabilization & Controls	(73.4)	(74.9)				(74.9)		(74.9)
12.2.1	Flight Controls	57.8	59.3				59.3		59.3
12.2.2	Back-Up Guidance	7.8	7.8				7.8		7.8
12.2.3	Δ V Panel	7.8	7.8				7.8		7.8
12.3	Navigation & Guidance	(58.8)	(58.8)				(58.8)		(58.8)
12.3.1	GFE	56.5	56.5				56.5		56.5
12.3.2	Rendezvous & Landing Radar	2.3	2.3				2.3		2.3
12.4	Crew Provisions	3.3	3.3				3.3		3.3
12.5	Environmental Control	13.1	13.1				13.1		13.1
12.6	Lunar Landing System	--							
12.7	Instrumentation	9.1	9.1				9.1		9.1
12.8	Electrical Power	(23.3)	(23.3)				(23.3)		(23.3)
12.8.1	Cryogenic Storage	12.9	12.9				12.9		12.9
12.8.2	D.C. Power Distribution	4.0	4.0				4.0		4.0
12.8.3	A.C. Power Distribution	1.2	1.2				1.2		1.2
12.8.4	Pyrotechnic Subsystem	5.2	5.2				5.2		5.2

[redacted]

[redacted]

[redacted]

LEM
WEIGHT STATEMENT

CODE	ITEM	3/1/64 WEIGHT AT SEPARATION	CURRENT WEIGHT STATUS: BURN OUT	CONS'D ON ASCENT	JET. ON LURAIN	CONS'D ON DESCENT	TOTAL SEPARATION	X-LUNAR EXPEND-ABLES	EARTH LAUNCH TOTAL
12.9	Propulsion	10.0	10.0				10.0		10.0
12.10	Reaction Control	16.0	16.0				16.0		16.0
12.11	Communications	12.9	12.9				12.9		12.9
12.12	Instrument Panel & Side Consoles*	43.0	43.0				43.0		43.0

* Includes Display Panel Lights.

[redacted]

Table 5

LEM WEIGHT COMPARISON
AT SEPARATION BY STAGES

SUBSYSTEM CODE	ITEM	3/1/64 WEIGHT	CURRENT WEIGHT	WEIGHT
A.	Ascent Stage Weight at Separation	9285.7	9409.6	+123.9
1.0	Structure	924.7	954.7	+ 30.0
2.0	Stabilization and Control	74.6	73.1	- 1.5
3.0	Navigation and Guidance	238.0	242.5	+ 4.5
4.0	Crew Provisions	574.4	574.4	0
5.0	Environmental Control	306.8	323.2	+ 16.4
6.0	Landing Gear	---	---	
7.0	Instrumentation - Operational	243.5	242.5	- 1.0
	- Scientific	40.0	40.0	0
8.0	Electrical Power Supply	817.3	810.9	- 6.4
9.0	Propulsion System	(4878.2)	(4937.0)	(+58.8)
	Propulsion Inert	583.9	583.9	0
	Propellant (Includes 50# trapped)	4294.3	4353.1	+58.8
10.0	Reaction Control	(847.1)	(870.7)	(+23.6)
	Propulsion Inert	322.3	348.2	+25.9
	Propellant (Includes 38.8# trapped)	524.8	522.5	- 2.3
11.0	Communications	78.2	76.2	- 2.0
12.0	Controls and Displays	262.9	264.4	+ 1.5
B.	Descent Stage Weight at Separation	18186.2	18308.4	+122.2
1.0	Structure	940.5	935.9	- 4.6
2.0	Stabilization and Control	7.5	7.5	0
3.0	Navigation and Guidance	10.0	10.0	0
4.0	Crew Provisions	5.0	5.0	0
5.0	Environmental Control	112.3	112.3	0
6.0	Landing Gear - Fixed	387.0	387.0	0
7.0	Instrumentation - Operational	25.0	25.0	0
	- Scientific	210.0	210.0	0
8.0	Electrical Power Supply	263.2	269.6	+ 6.4
9.0	Propulsion System	(16205.1)	(16325.5)	(+120.4)
	Propulsion Inert	1412.3	1412.3	0
	Propellant (Includes 166# trapped)	14792.8	14913.2	+120.4
11.0	Communications (Portable)	20.6	20.6	0
	Total Separation Weight (A & B)	27471.9	27718.0	+246.1

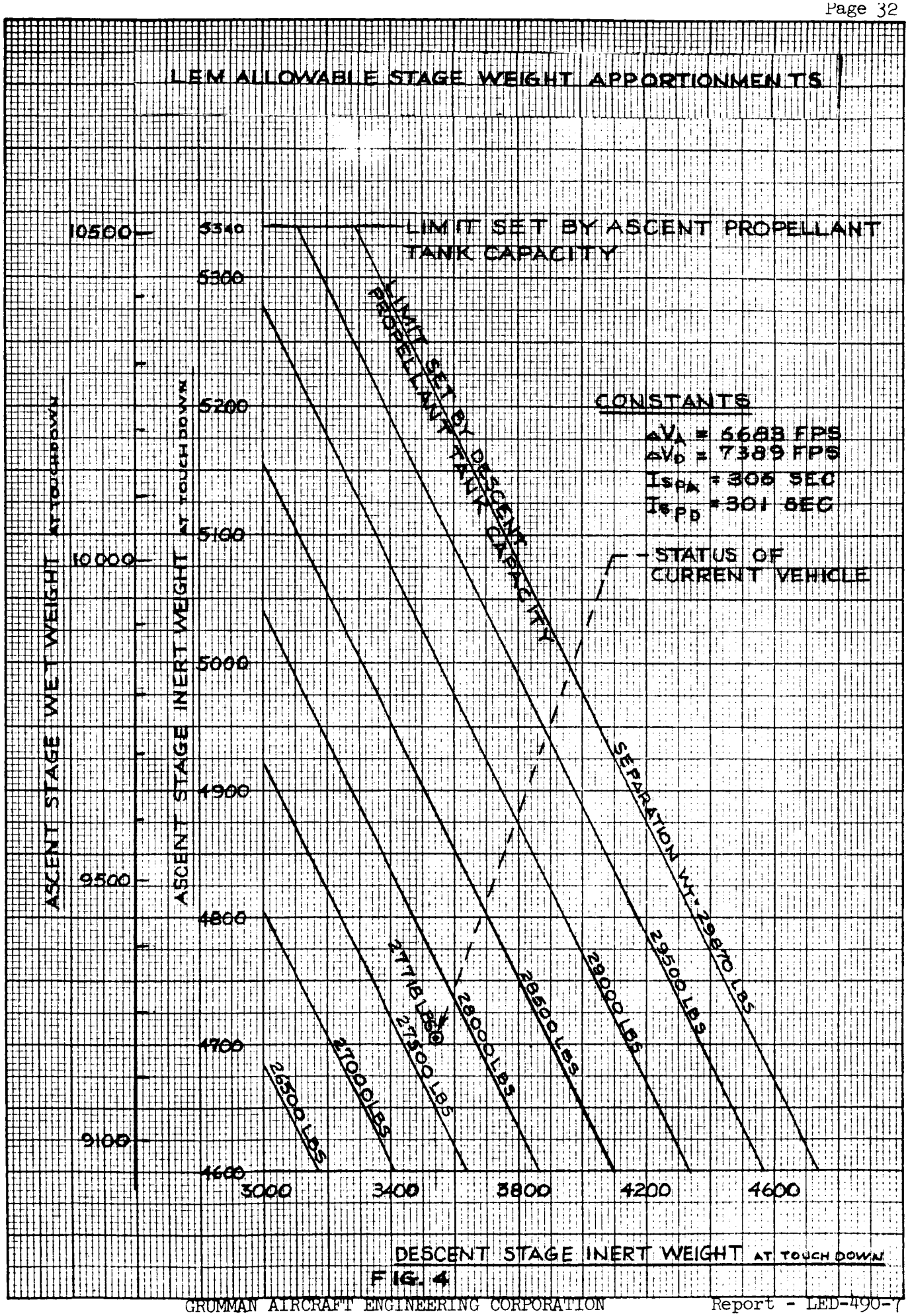
LEM ALLOWABLE STAGE WEIGHT APPORTIONMENTS
LIMIT SET BY ASCENT PROPELLANT TANK CAPACITY
LIMIT SET BY DESCENT PROPELLANT TANK CAPACITY
CONSTANTS
ΔV_A = 6683 FPS
ΔV_D = 7389 FPS
Is_PA = 305 SEC
Is_PD = 301 SEC
STATUS OF CURRENT VEHICLE
SEPARATION WT. 29870 LBS
29500 LBS
29000 LBS
28500 LBS
28000 LBS
27500 LBS
27000 LBS
26500 LBS
ASCENT STAGE WET WEIGHT AT TOUCHDOWN
ASCENT STAGE INERT WEIGHT AT TOUCHDOWN
10500
10000
9500
9100
5340
5300
5200
5100
5000
4900
4800
4700
4600
3000
3400
3800
4200
4600
DESCENT STAGE INERT WEIGHT AT TOUCHDOWN

FIG. 4

DISCUSSION OF INERT WEIGHT CHANGES BY STAGES SINCE LAST REPORT *

		Increment Weight Change		
		Ascent	Descent	Separation
1.0	Structure	(+30.0)	(-4.6)	(+25.4)
	Incorporated docking drogue provision in docking tubes and added one docking drogue (12 pounds). Provisions are estimated at 5 pounds in upper hatch and 3 pounds in forward hatch.	+20.0		+20.0
	Added descent engine gimbal actuator supports, previously omitted.		+15.2	+15.2
	Reconfigured descent tank support structure and interstage mount structure. Included are improved joint designs.		-19.8	-19.8
	Incorporated estimate of structural cold plate increment for redundant coolant loop. (See Environmental Control below).	+ 3.1		+ 3.1
	Recoded non-structural cold plates to Environmental Control.	- 4.4		- 4.4
	Revised estimate and distribution of ascent structure based on more current information.	+11.3		+11.3
2.0	Stabilization and Control	(- 1.5)		(- 1.5)
	Recoded guidance coupler items under Controls and Displays.	- 1.5		- 1.5
3.0	Navigation and Guidance	(+ 4.5)		(+ 4.5)
	Revised MIT data per Rev. 17 of E-1142, dated 2/15/64.	+ 4.5		+ 4.5
5.0	Environmental Control	(+16.4)		(+16.4)
	Increased coolant quantity based on current coolant loop's volume estimate.	+ 2.0		+ 2.0
	Incorporated estimate of redundant coolant loop per NASA Ltr. SE-5-63-245, dated 30 Dec. 1963. (See structure above for added structural cold plate increment.)	+ 8.4		+ 8.4
	Increased (1.6 pounds) and recoded from Structure (4.4 pounds) of non-structural cold plates.	+ 6.0		+ 6.0
7.0	Instrumentation	(- 1.0)		(- 1.0)
	Incorporated vendor negotiated weight for PCMTE.	- 1.0		- 1.0
8.0	Electrical Power Supply	(- 6.4)	(+ 6.4)	(0)
	Staged cabling for VHF Lunar Stay Antenna and for S-Band Erectable Antenna.	- 6.4	+ 6.4	0

* Inert weight excludes Δ V Propellant.

DISCUSSION OF INERT WEIGHT CHANGES BY STAGES SINCE LAST REPORT *

		Increment Weight Change		
		Ascent	Descent	Separation
10.0	Reaction Control	(+25.9)		(+25.9)
	Revised estimate for quad support truss based on later information.	- 5.0		- 5.0
	Incorporated weight increments for CSM designed thruster chamber assembly (+21.7 pounds) and cluster hardware (+3.2 pounds).	+24.9		+24.9
	Incorporated weight increase of quad support truss due to weight increase of CSM common usage thruster installation assembly.	+ 6.0		+ 6.0
11.0	Communications	(- 1.5)	(- .5)	(- 2.0)
	Incorporated vendors proposal weights for S-Band ERA unit (+ .5 pound) and steerable antenna (-2.0 pounds).	- 1.5		- 1.5
	Eliminated the reel for television cable.		- .5	- .5
12.0	Controls and Displays	(+ 1.5)		(+ 1.5)
	Recoded guidance coupler items from Stabilization and Control.	+ 1.5		+ 1.5
	Total Inert Weight Changes	+67.9	+ 1.3	+69.2

* Inert weight excludes ΔV Propellant.

PENDING CHANGES

The following list is comprised of those items which are currently being considered for incorporation into the LEM vehicle.

		Increment Weight * Ascent	Descent
1.0	Structure		
	Add micro-meteoroid shielding required to improve probability of no penetrations from:		
	.1911 to .8103 or	+23.0	+18.0
	.1911 to .995	+101.0	+135.0
3.0	Navigation and Guidance		
	Incorporate vendor's rendezvous radar weight estimate if justification of weight increase is acceptable to GAEC.	+ 9.4	
5.0	Environmental Control		
	Reconfigure LiOH loop to use PLSS type cartridges and the LEM type cartridges.	- 4.0	
6.0	Landing Gear		
	Reduce safety factor from 1.5 to 1.35.		-15.0
7.0	Instrumentation		
	Eliminate emergency detection system	-10.0	
	Add ground support equipment connectors	+50.0	
8.0	Electrical Power Supply		
	Revise power generation system due to modifying energy level and possible change in the fuel cell/battery configuration.	--	--
9.0	Propulsion		
	Use super critical helium in lieu of gaseous to pressurize propellant tanks.	-60.0	-320.0
	Incorporate vendor's propellant tank weight estimate if justification of weight increase is acceptable to GAEC.		+ 4.8
11.0	Communications		
	Increase in communication requirements resulting in the addition of data links and changing of VHF per Ref. 16.	+58.0	

* Note: Weights shown are not effective weights.

GOVERNMENT FURNISHED EQUIPMENT

The original guaranteed weights for government furnished equipment were provided in NASA letter SSS-LEM-63-20, dated 25 February 1963. Table 6 is the G.F.E. equipment as originally designated to the contractor compared with a list of unofficial weights compiled at GAEC.

The reasons for the comparison are:

1) Of the items clearly agreed to be G.F.E., there are weight differences between the original values and those of column 2.

2) There are items indicated as G.F.E. by various sources on which the contractor would like confirmation.

It is very desirable to have the G.F.E. list broken down in the detail shown in column 2, with the addition of sizes, volumes and other required provisions (i.e. energy, duty cycle, etc.).

This will aid the contractor in:

1) Calculation of accurate mass properties (i.e. weight, c.g. and inertias) for the vehicle in various phases of the mission.

2) Evaluating volume and storage considerations.

3) Providing power for those G.F.E. items requiring it.

Current report weights are indicated on Table 6 with a single asterisk (*).

Table 6

Code	Item	Q_{T_Y}.	Original Guaranteed Wt.	Presently Indicated Weight	Δ Wt.	Remarks
	Navigation & Guidance		187.0	151.5	-35.5	Present weights based on MIT Report E-1142 Rev. 17, dated Feb. 15, 1964.
3.1.1	I.M.U.	1	60.0	42.0*	-18.0	
3.1.2	Range Drift Unit **	1	20.0	24.5*	+ 4.5	
3.1.3	L.G.C.	1	60.0	45.8*	-14.2	
3.1.4	P.S.A.	1	25.0	27.2*	+ 2.2	
3.1.7	N.V.B.	1	--	--		
3.1.6	Cabling	1	20.0	10.0*	-10.0	
3.1.5	Star Maintenance Book	1	2.0	2.0*		
3.1.8	Cold Plate		--	--		
	Crew Provisions		465.0	528.6	+63.6	
4.1	Crew Accessories					
4.1.1	Space Suits	2	(60.0)*	(68.0)	(+8)	
	Torso	2		24.0		
	Helmet + Integ. Comm. & Telem.	2		12.4		Incl. Integral Communication and Telemetry Provisions.
	Boots - Lunar Exploration	2		8.8		
	Gloves	2		2.2		
	Thermal Coveralls	2		13.2		
	Const. Wear Garments	2		2.0		
	Emergency O_2 System	2		5.4		
	Accessories:					GAEC is not clear if these items are an integral part of the suit and, therefore, are assumed to be included in weights for itemized space suit articles noted above.
	Suit Press. Gage	2				
	" Low Pressure Warning	2				
	High O_2 Flow Warning	2				
	Suit Press. Relief Valve	2				
	Connectors	2				
	Sewing Kit	1 or 2				
	Lubricant	1 or 2				
	Tools & Belt.	2				
	Adhesive	1 or 2				
	Patches	4				
	Gloves	2				
	Disconnect Seals	1 or 2				

* Reported weights.
** Currently called AOT & Eyepieces.

Table 6 -Cont.

Code	Item	QTY.	Original Guaranteed Wt.	Presently Indicated Weight	△Wt.	Remarks
4.1.2	PLSS	2	60.0*	(81.2)	+21.2	See GFE spares noted below.
	Motor - Inverter	2		5.5		
	Fan	2		1.9		
	Battery	2		21.0		Presently indicated weights per Ref. 17.
	H_2O Boiler & Separator	2		9.7		
	Slave H_2O	2		**		
	Useful H_2O	2		**		
	Primary O_2 Regulator	2		3.2		
	Multiple Gas Connector	2		1.8		
	Primary O_2 Tank	2		6.5		
	" O_2	2		1.8		
	Flexible Hose	2		2.4		
	Steam Back Press. Valve	2		1.6		
	LiOH Cannister	2		2.6		
	LiOH Cartridge	2		**		
	Integral Cannister Structure	2		3.3		
	Miscellaneous Sensors	2		.5		
	Support Harness	2		1.3		
	Foamed Cover	2		4.4		
	Miscellaneous Brackets	2		3.1		
	Boiler Mounting Plate	2		1.7		
	Remote O_2 Control	2		.6		
	Electrical Harness	2		.3		
	Communications & Telem.	2		8.0		
4.1.3	Radiation Dosimeter	2	5.0*	5.0	0	
4.1.4	Miscellaneous		0	8.0*	+ 8.0	Undefined - added per telecon with J.L. Bullard.
	GFE Spares		--	--	--	Undefined
	Seals - Contaminent Container					
	Debris Trap, Sponge					
	Prim. O_2 Qty indicator					
	Antenna					
4.2	Crew	2	340.0	353.2*	+13.2	Change from 65 to 75 percentile men.
4.5	Sustenance & Assoc. Equipment		(0)	(13.2)	(+13.2)	Added per NASA Ltr. APCAL-63-97 (DBC:sh) dated 25 Sept. 1963.
4.5.2	Food		0	10.7*	+10.7	
4.5.3	First Aid Kit and Preventive Medicine		0	2.5*	+ 2.5	

* Reported weights.
** These items are accounted for under ECS.

Table 6 -Cont.

Code	Item	QTY.	Original Guaranteed Wt.	Presently Indicated Weight	△ Wt.	Remarks
4.6	Waste Management		--	--	--	GAEC is not clear if these items are an integral part of the suit and, therefore, are assumed to be included in weights for itemized space suit articles.
	Urine & Fecal Removal Equipment	2				
	Vomitus Removal Equip.	2				
	Vomitus Container	6				
	Instrumentation		250.0	250.0*	0	Weight breakdown per Ref. 3.
7.3	Scientific Equipment					
	Lunar Atmosphere Analyzer	1	20.0	20.0		
	Gravitometer	1	5.0	5.0		
	Magnetometer	1	10.0	10.0		
	Radiation Spectrometer	1	20.0	20.0		
	Specimen Return Container	1	12.0	12.0		
	Geological Equipment		50.0	50.0		
	Seismographic Equipment		8.0	8.0		
	Soil Temperature Equipment		10.0	10.0		
	Miscellaneous		115.0	115.0		Includes: (1) still & (2) motion picture cameras, TV auxiliary lighting, & 1 gimbal mounted telescope.
	Communications		0	9.0	+9.0	
11.3	Television					Added per NASA TWX SES-12-189/ T701/63-160 APCAL
11.3.1	Camera, Portable		0	4.0*	+4.0	
11.3.2	Lens		0	2.5*	+2.5	
11.3.3	Camera Thermal Equipment		0	2.5*	+2.5	
	Controls & Displays		63.0	56.5*	-6.5	
12.3.1	Govern. Furn. Equipment					Present weights based on MIT Report E-1142 Rev. 17, dated 15 Feb. 1964.
	CDU		6.0	15.0	+9.0	
	Miscellaneous C & D		50.0	15.0	-35.0	
	A.G.C. C & D		--	19.5	+19.5	
	Eye Register for Reticle		2.0	2.0		
	Two Digit Readout for Reticle		5.0	5.0		
	Total Weight		965.0	995.6	+30.6	

* Reported weights.

LIST OF REFERENCES

1. MSC letter SI-63-13-498, dated 26 November 1963, "Contract NAS 9-1100, Mission Time Line for Use in Developing Electrical Energy Profile."

2. MSC letter SO-63-543, dated 21 December 1963, "Contract NAS 9-1100, Mission Time Line for Use in Developing Electrical Energy Profile."

3. MSC letter SSS/LEM-63-20, dated 25 February 1963. Original list of government furnished equipment.

4. MSC letter APCAL 63-97(DBC:sh), dated 25 September 1963, "Contract NAS 9-1100, Contract Change Authorization No. 10."

5. MSC letter SE-5-63-245(OEM:jp), dated 30 December 1963, "Contract NAS 9-1100, Implementation of Actions Recommended at Project Apollo Systems' Meetings."

6. MSC TWX SES-12-189/T701/63-160 APCAL. TV camera to be considered government furnished equipment.

7. LMO-540-215, dated 23 January 1964, "Control Weight Mission."

8. LMO-500-37, Revision D, dated 8 February 1964, "LEMΔV Budget."

9. LMO-310-58, dated 14 September 1963, "Criteria Used For RCS Tank Sizing."

10. LMO-490-84, dated 26 November 1963, "Resizing of LEM Ascent and Descent Tanks, and Criteria Used."

11. LED-490-5, dated 31 January 1964, "LEM Mass Property Report."

12. LLO-340-133, Revision A, dated 9 December 1963, "Equipment Arrangement Ascent Stage" Drawing.

13. LDW-280-100-50, Revision B, dated 2 January 1964, "Geometry Ascent Stage -2 Tank" Drawing.

14. LDW-280-17000, Revision A, dated 13 December 1963, "General Arrangement Descent Stage" Drawing.

15. MIT Report E-1142, Rev. 17, dated 15 February 1964, "MIT Apollo Guidance and Navigation - Systems Status Report."

16. LMO-380-162, dated 12 December 1963, "Communication Subsystem Redesign."

17. SVHSER 2739, dated 10 July 1963, "Hamilton Standard Phase A Design Report of Apollo Space Suit Project."

EXTERNAL DISTRIBUTION LIST

Fifty Copies - (50)	NASA Manned Spacecraft Center Houston, Texas Attention: Apollo Document Control Office
Two Copies - (2)	NASA Headquarters 1520 H Street Washington, D.C. Attention: MAP.
One Copy - (1)	NASA Florida Operation Cape Kennedy, Florida Attention: S. Beddingfield HP.
One Copy - (1)	NASA Resident Apollo Spacecraft Program Office North American Aviation Inc. Space and Information Systems Division Downey, California
Two Copies - (2)	North American Aviation Inc. Space and Information Systems Division Downey, California Attention: H. Dunn, Dept. 696-610, Bldg. 6 Apollo Weight Control
Two Copies - (2)	NASA Marshall Space Flight Center Huntsville, Alabama Attention: R. Marmann R-P&VE-VAW

INTERNAL DISTRIBUTION LIST

Executive and Technical Review Board

Gavin, J. G. - Exec. - (1)
Hedrick, I. G. - Exec., Plt. 5 - (1)
Hutton, R. - Exec., Plt. 5 - (1)
Mullaney, R./Canning, F. - (1)

Program Staff

Coutinho, J. - (1)
Gardner, P. - (1)
Moorman, T. H.-(1)
Rathke, W./ Kelly, T.-(1)

Project Engineering

Barnes, T. - (1)
Carbee, R. - (1)
Whitaker, A. - (1)
Data Management File

Subsystems Engineers

Armani, L. - (1)
Crowell, R. -(1)
Dandridge, M. - (1)
Doennebrink, F. - (1)
Gaylo, B - (1)
Griffin, E. - (1)
Henderson, G. - (1)
Iverson, J. - (1)
Leather, J. - (1)
LEM Project Eng'g File
McCloughan, D. - (1)
Paulsrud, L. - (1)
Plunkett, R. - (1)
Reynolds, A.L. - (1)
Rigsby, J. - (1)
Russell, J. A. - (1)
Smith, W. - (1)
Spinner, C. R. - (1)
Sturiale, V. - (1)
Thompson, R. - (1)
Williams, O. - (1)

Systems Engineers

Fleisig, R. - (1)
Hilderman, R. - (1)
Katz, A. - (1)
Kress, R.
Lewin, N. Plt. 5 - (1)
Schuhlein, C. - (1)
Sherman, H. - (1)
Smith, G. - (1)
Stern, E. - (1)
Wiesinger, G. - (1)
Witte, R. - (1)

Engineering Staff

Doll, R. - (1)
Michel, J. F. - (1)

et al.

Bischoff, W. - (1)
Johnson, W. - (1)
Speiser, K. - (1)
Stone, R. - (1)