[redacted]

CLASSIFICATION CHANGE

UNCLASSIFIED

...thority of GDS-EO 11652

...d by L. Shirley Date 12/3/82

...fied Document Master Control Station, NASA

...ic and Technical Information Facility

PROJECT APOLLO

SYSTEMS DESCRIPTION

REVIEW REPORT (U)

(NASA-TM-X-66760) PROJECT APOLLO SYSTEMS DESCRIPTION REVIEW REPORT, 22 APRIL 1963 (NASA) 325 p

N79-76449

Unclas

00/18 11459

GROUP [redacted]
Downgrad[redacted]
interva[redacted]assified
after [redacted]

(ACCESSION NUMBER) (THRU)

325 (PAGES) None (CODE)

NASA-TMX-66760 (NASA CR OR TMX OR AD NUMBER) (CATEGORY)

FF No. 602(A)

[redacted]

April 22, 1963

[redacted]ASSIFIED DOCUM[redacted]ITLE UNCLASSIFIED

This material contains [redacted]ational defense of the United States within the meaning of the espionage laws, Titl[redacted]s. 793 and 794, the transmission or revelation of which in any manner to an unauthori[redacted]by law.

NATIONAL AERONAUTICS AND SPACE ADMINISTRATION

MANNED SPACECRAFT CENTER, HOUSTON, TEXAS

[redacted]

[redacted]

[redacted]

PURPOSE OF THE APOLLO SYSTEM DESCRIPTION

The Apollo System Description is intended to provide Apollo Program participants with a comprehensive and periodically up-dated collection of program objectives, major milestones and flight tests, principles of operation, and general description of equipment and performance.

This document is not intended for use as a specification. It does not set forth existing or contemplated requirements, nor does it in any way modify or affect any existing design, contract or sub-contract.

[redacted]

[redacted]

TABLE OF CONTENTS

CHAPTER 1 PROGRAM INFORMATION

SECTION I MANNED SPACECRAFT CENTER

		Page
1-1	MSC RELATIONSHIP TO APOLLO PROGRAM	1-1
1-2	INTRODUCTION	1-1
1-3	MSC ORGANIZATION	1-2
1-4	ASSOCIATE CONTRACTORS	1-2
	General	1-2
	Responsibility	1-2
1-5	PROGRAM PLAN	1-5
1-6	INTRODUCTION	1-5
1-7	OBJECTIVES	1-5
	General	1-5
	Growth Development	1-6
	Mission Objectives	1-6
1-8	GENERAL REQUIREMENTS	1-7
	Configuration for Lunar Landing	1-7
	Ground Support Equipment	1-7
	Launch Facilities	1-7
	Mission Control	1-8
	Ground Operational Support	1-8
	Mission Criteria	1-8
	Reliability [illegible]	1-9
1-9	GENERAL DEVELOPMENT PLAN	1-10
	Design	1-10
	Space Vehicle Development	1-10

[redacted]

[redacted]

		Page
	Training and Operational Support Development	1-11
	Development Plan Schedule	1-12
1-10	MISSION DESCRIPTION	1-14
1-11	CONFIGURATION	1-14
	Spacecraft	1-14
	Launch Vehicle	1-14
	Command Module	1-17
	Service Module	1-17
	Lunar Excursion Module	1-18
1-12	MISSION PROFILE	1-18

AVAILABLE TO NASA HEADQUARTERS ONLY

[redacted]

TABLE OF CONTENTS

CHAPTER 1 PROGRAM INFORMATION

SECTION II SPACECRAFT OPERATIONS

		Page
2-1	NORMAL OPERATION	2-1
2-2	PRE-LAUNCH	2-1
2-3	LAUNCH	2-2
2-4	POWERED FLIGHT	2-3
2-5	EARTH PARKING ORBIT	2-3
2-6	TRANSLUNAR INJECTION	2-4
2-7	TRANSLUNAR	2-5
2-8	LUNAR ORBIT	2-6
2-9	LUNAR DESCENT AND LANDING	2-7
2-10	LUNAR SURFACE OPERATIONS	2-8
2-11	LUNAR ASCENT	2-9
2-12	LUNAR RENDEZVOUS AND DOCKING	2-10
2-13	TRANSEARTH	2-11
2-14	RE-ENTRY AND LANDING	2-12
2-15	RECOVERY	2-14
2-16	POST FLIGHT	2-14
2-17	PLANNED OPERATIONS FOR CONTINGENCIES	2-14
2-18	CONTINGENCIES AND ABORT OPERATIONS	2-15
	Contingency Classification	2-15
	Decision Planning	2-15
	Launch Escape	2-15
	Earth Orbit	2-16
	Translunar Injection	2-16
	Translunar	2-16

[redacted]

		Page
	Lunar Orbit Injection	2-16
	Lunar Orbit and Landing	2-16
	Transearth	2-17
	Re-entry	2-17
2-19	MISSION ALTERNATIVES	2-17
	General	2-17
	Earth Orbits	2-18
	Lunar Reconnaissance Orbits	2-18
2-20	CREW OPERATIONS	2-18
2-21	NORMAL CREW ACTIVITY	2-18
	General	2-18
	CM Control Station	2-19
	CM Center Station	2-19
	CM System Management Station	2-19
	CM Navigation Station	2-19
	CM Sleep Position	2-20
	CM Food and Hygienic Position	2-20
	LEM Commander Station	2-20
	LEM Co-pilot Station	2-20
	CM Primary Crewman Responsibilities	2-21
2-22	CONTINGENCY CREW ACTIVITY	2-21
	General	2-21
	Contingency Operations	2-22
2-23	CREW TRAINING	2-23
	General Plan	2-23
	Training Goals	2-23

AVAILABLE TO NASA HEADQUARTERS ONLY

TABLE OF CONTENTS

CHAPTER 2 SPACECRAFT SYSTEMS DESCRIPTION

SECTION III SPACECRAFT

		Page No.
3-1	SPACECRAFT MODULAR DESIGN	3-1
3-2	SPACECRAFT - GENERAL CRITERIA FOR LOADS	3-1
3-3	FAIL-SAFE PRINCIPLES	3-1
3-4	LIMIT CONDITIONS	3-1
3-5	SAFETY FACTORS	3-1
	Ultimate Factor	3-2
3-6	PRESSURE VESSELS	3-2
	Proof Factor	3-2
	Ultimate Factor	3-2
3-7	HYDRAULIC AND PNEUMATIC SYSTEMS - FLEXIBLE HOSE, TUBING AND FITTINGS	3-2
	Proof Factor	3-2
	Burst Factor	3-2
3-8	PRESSURE STABILIZED STRUCTURES	3-2
3-9	SPECIAL FLIGHT LOADS	3-2
	Vibration	3-2
	Dynamic Loading	3-2
	Noise	3-3
	Aerodynamic Loads	3-3
	First Stage Boost	3-3
	End Boost First Stage	3-3
	Stage Separation	3-3
	Boost of Upper Stages	3-3

[redacted]

		Page No.
	Spacecraft Separation	3-4
3-10	VENTING	3-4
3-11	TEMPERATURE	3-4

[redacted]

TABLE OF CONTENTS

SECTION IV COMMAND MODULE

		Page No.
4-1	FUNCTION	4-1
4-2	DESCRIPTION	4-1
4-3	COMMAND MODULE ROLE IN SPACECRAFT	4-1
4-4	POSITION IN SPACECRAFT (SC)	4-1
4-5	REFERENCE AXES	4-16
4-6	OUTBOARD PROFILE	4-16
4-7	INBOARD REGIONS AND DUTY STATIONS	4-16
	Control Station	4-16
	Center Station	4-16
	Systems Management Station	4-16
	Navigation Station	4-16
4-8	WEIGHTS AND BALANCE	4-26
4-9	COMMAND MODULE WEIGHTS	4-26
	Control Weight	4-26
	Design Goal Weight	4-26
	Current Weight	4-26
4-10	CENTER OF GRAVITY (C.G.)	4-26
	General	4-26
4-11	INTERFACES	4-27
4-12	GENERAL	4-27
4-13	COMMAND MODULE TO SERVICE MODULE INTERFACES	4-27
	Structural	4-27
	Electrical - Fluid	4-28
	Mechanical	4-28
	Aerodynamic	4-28

[redacted]

		Page No.
	Acoustical	4-28
4-14	COMMAND MODULE TO LAUNCH ESCAPE SYSTEM INTERFACES	4-28
	Structural	4-28
	Electrical	4-28
	Mechanical	4-28
	Aerodynamic	4-29
	Acoustical	4-29
4-15	COMMAND MODULE TO LUNAR EXCURSION MODULE INTERFACES	4-29
4-16	MAJOR COMMAND MODULE SYSTEMS	4-30
4-17	STRUCTURAL SYSTEM	4-30
	General	4-30
	Equipment Description	4-30
	Inner Structure	4-30
	Heat Shield Structure	4-32
	Insulation	4-32
	Ablation Shield	4-32
	Hatches and Windows	4-32
	Structural Design Criteria	4-33
	Pressure	4-33
	Temperature	4-33
	Acceleration	4-33
	Vibration	4-33
	Acoustic Noise	4-36
	Interfaces	4-36
	Service Module	4-36
	Crew System	4-36
	Environmental Control System	4-36

[redacted]

[redacted]

		Page No.
	Other Interfaces	4-36
4-18	FLIGHT CREW	4-36
	Size and Number	4-36
	Crew Duties	4-37
	General	4-37
	Specific Duties	4-37
	Duty Stations	4-37
4-19	CREW SYSTEM	4-38
	General	4-38
	Equipment Description	4-39
	Controls and Displays	4-40
	Restraints, Support Equipment and Couches	4-42
	Sleeping Facilities	4-43
	Food and Water Management	4-43
	Waste Management	4-44
	Optical Subsystem	4-44
	Lighting Subsystem	4-44
	Storage Cabinets	4-45
	Survival Equipment	4-46
	Personal Hygiene and Bio-Medical Equipment	4-47
	Pressure Suit and Backpack	4-48
	Communications and Aural Equipment	4-50
	Environmental Control Subsystem	4-51
4-20	TELECOMMUNICATIONS	4-53
	General	4-53
	Equipment Description	4-54
	Performance	4-54

[redacted]

[redacted]

		Page No.
	General	4-54
	Detailed	4-54
	Interfaces	4-54
	Command Module/GOSS Communication	4-54
	Command Module/GOSS Tracking	4-64
	Electromagnetic Interference Compatibility	4-64
	Interchangeability	4-64
4-21	INSTRUMENTATION SYSTEM	4-64
	General	4-64
	Equipment Description	4-65
	Performance	4-65
	Interfaces	4-71
4-22	RECOVERY AIDS	4-71
	General	4-71
	Equipment Description	4-72
	Performance	4-72
	Interfaces	4-72
4-23	ELECTRICAL POWER SYSTEM	4-72
	General	4-72
	Equipment Description	4-72
	Major Components and Locations	4-72
	Fuel Cell Subsystem and Modules	4-76
	Reactant Tankage and Flow Arrangement	4-77
	Radiator Subsystem	4-77
	Auxiliary Power Subsystem	4-79
	Electrical Power Distribution Subsystem	4-79

[redacted]

[redacted]

		Page No.
	Operation	4-84
	Fuel Cell	4-84
	Power Distribution Subsystem Operation	4-86
	Interfaces	4-88
	Pre-launch Power Distribution	4-88
	Umbilical Connectors	4-88
	Sequencer	4-89
4-24	GUIDANCE AND NAVIGATION SYSTEM	4-89
	General	4-89
	Equipment Description	4-89
	Inertial Measurement Unit (IMU)	4-90
	Sextant (SXT)	4-90
	Apollo Guidance Computer (AGC)	4-91
	Displays and Controls	4-92
	Scanning Telescope (SCT)	4-92
	Power and Servo Assembly (PSA)	4-94
	Coupling Display Units (CDU)	4-94
	Operation	4-95
	Ascent Monitor Mode	4-95
	Orbital Navigation Mode	4-95
	Midcourse Navigation	4-96
	Attitude Control Mode	4-96
	Attitude Hold Mode	4-97
	ΔV Mode	4-97
	ΔV Monitor Mode	4-99
	Re-entry Mode	4-99

[redacted]

[redacted]

		Page No.
	Interfaces	4-100
4-25	STABILIZATION AND CONTROL SYSTEM	4-100
	General	4-100
	Equipment Description	4-101
	Attitude Reference	4-101
	Rate Gyro Package	4-101
	Control Electronic Assembly	4-101
	Manual Controls	4-102
	Displays	4-102
	Mode Selection	4-103
	Operation	4-103
	Atmospheric Abort	4-103
	Post-Atmospheric Abort	4-103
	Translunar and Transearth	4-104
	Rendezvous and Docking	4-104
	Re-entry	4-104
	Interfaces	4-105
	Displays	4-105
	Propulsion Commands	4-105
	Attitude Control	4-105
4-26	ENVIRONMENTAL CONTROL SYSTEM	4-105
	General	4-105
	Equipment Description	4-107
	Pressure Suit Circuit Subsystem	4-107
	Water-Glycol Circuit Subsystem	4-108
	Command Module Pressure and Temperature Control Subsystem	4-108

[redacted]

[redacted]

		Page No.
	Oxygen Supply Subsystem	4-108
	Water Supply Subsystem	4-109
	Operation	4-109
	Pressure Suit Circuit	4-109
	Water-Glycol Circuit	4-109
	Command Module Pressure and Temperature Controls	4-109
	Interfaces	4-115
	Electrical Power	4-115
	Crew Systems	4-115
	Displays	4-115
4-27	REACTION CONTROL SYSTEM	4-116
	General	4-116
	Equipment Description	4-116
	Pressurized Helium Subsystem	4-121
	Oxidizer Subsystem	4-122
	Engine Subsystem	4-122
	Performance	4-123
	Pressurization Subsystem Components	4-123
	Liquid Oxidizer Subsystem Components	4-123
	Liquid Fuel Subsystem Components	4-123
	Rocket Engine Subsystem	4-123
	Interfaces	4-124
	Crew System	4-124
	Guidance and Control Systems	4-124
	Telecommunications and Instrumentation Systems	4-124

[redacted]

[redacted]

		Page No.
4-28	LAUNCH ESCAPE SYSTEM	4-125
	General	4-125
	Equipment Description	4-125
	Launch Escape Tower	4-127
	Electrical Control Subsystem	4-127
	Separation Subsystem	4-127
	Launch Escape Motor Subsystem	4-127
	Jettison Motor Subsystem	4-127
	Pitch Control Motor Subsystem	4-127
	Wire Bundle Fairing	4-127
	Launch Escape Motor Structural Skirt	4-128
	Jettison Rocket Motor Adapter	4-128
	Flow Separator	4-128
	Pitch Control Rocket Adapter	4-128
	Ballast Enclosure	4-128
	Nose Cone	4-128
	Performance	4-128
	Interfaces	4-130
	General	4-130
	Physical Interface Description	4-130
	Functional Interface Description	4-130
4-29	EARTH LANDING SYSTEM	4-132
	General	4-132
	Equipment Description	4-132
	Drogue Parachute Assembly	4-133
	Main Parachute Pack Assembly	4-133

[redacted]

[redacted]

		Page No.
	Pilot Parachute Assembly	4-133
	Main Parachute Disconnect Assembly	4-133
	Harness Assembly	4-133
	Sequence Controller	4-133
	Heat Shield Separation Assembly	4-134
	Performance	4-134
	General	4-134
	Normal Mission	4-134
	Alternate Mission	4-135
	Interfaces	4-136
4-30	IN-FLIGHT TEST SYSTEM	4-136
	General	4-136
	Equipment Description	4-136
	Central Panel	4-136
	Programmer	4-136
	Switching Complex	4-138
	Comparator	4-138
	Crew Readout	4-138
	Manual Test Unit	4-138
	Stimuli Generator	4-138
	Operation	4-138
	General	4-138
	Automatic Monitoring	4-138
	Manual Testing	4-139
	Interfaces	4-139

[redacted]

		Page No.
4-31	EVENTS SEQUENCING	4-139
4-32	PRE-LAUNCH PHASE	4-139
	General	4-139
4-33	BOOST PHASE	4-139
	General	4-139
	Guidance & Navigation System	4-140
	Launch Escape System	4-140
	Earth Landing System	4-140
4-34	EARTH ORBITAL PHASE	4-140
4-35	OTHER LUNAR MISSION PHASES	4-141

[redacted]

TABLE OF CONTENTS

SECTION V SERVICE MODULE

		Page No.
5-1	FUNCTION	5-1
5-2	DESCRIPTION	5-1
5-3	WEIGHTS AND BALANCE	5-1
5-4	CONTROL WEIGHT	5-1
5-5	DESIGN GOAL WEIGHT	5-2
5-6	CENTER OF GRAVITY	5-2
5-7	INTERFACES	5-2
5-8	COMMAND MODULE	5-2
	Electrical	5-2
	Mechanical	5-2
	Fluids	5-2
5-9	ADAPTER	5-3
	Electrical	5-3
	Mechanical	5-3
5-10	GROUND SUPPORT EQUIPMENT	5-3
	Electrical	5-3
	Mechanical	5-3
	Fluids	5-3
5-11	GROUND OPERATIONAL SUPPORT SYSTEM	5-3
	Communications	5-3
5-12	MAJOR SERVICE MODULE SYSTEMS	5-4
5-13	STRUCTURAL SYSTEM	5-4
	Loads	5-4
	Thermal	5-4

[redacted]

		Page No.
	Configuration	5-5
	Internal Arrangement	5-7
5-14	SERVICE PROPULSION SYSTEM	5-7
	General	5-7
	Equipment Description	5-9
5-15	PROPELLANT SUPPLY SUBSYSTEM AND COMPONENTS	5-9
	General	5-9
	Construction	5-9
	Propellant Tanks	5-9
	Description of the Subsystem	5-13
	Operation	5-14
5-16	ENGINE SUBSYSTEM AND COMPONENTS	5-16
	General	5-16
	Construction	5-16
	Combustion Chamber	5-17
	Injector	5-17
	Nozzle Extension	5-17
	Propellant Valve Assemblies	5-17
	Thrust Mount	5-17
	Gimbals	5-18
	Instrumentation	5-18
5-17	REACTION CONTROL SYSTEM	5-18
	General	5-18
	Pressurized Helium Subsystem	5-21
	Oxidizer Subsystem	5-24
	Fuel Subsystem	5-25

[redacted]

		Page No.
	Rocket Engine Subsystem	5-25
	Interfaces	5-28
5-18	SUPERCRITICAL STORAGE SYSTEM	5-29
	General	5-29
	Equipment Description	5-29
	Cryogenic Storage Tanks	5-29
	Insulation	5-29
	Electrical Heaters	5-29
	Quantity Gaging	5-29
	Operation	5-29
	Interfaces	5-30
5-19	ENVIRONMENTAL CONTROL SYSTEM	5-30
	General	5-30
	Equipment Description	5-31
	Equipment Cold Plates	5-31
	Space Radiators	5-31
	Operation	5-31
5-20	ELECTRICAL POWER SYSTEM	5-34
	General	5-34
	Equipment Description	5-34
	Operation	5-34
	Interface	5-35
5-21	TELECOMMUNICATIONS	5-35
	General	5-35
5-22	SEQUENCE OF EVENTS	5-35

[redacted]

[redacted]

TABLE OF CONTENTS

SECTION VI LUNAR EXCURSION MODULE

		Page No.
6-1	FUNCTION	6-1
6-2	DESCRIPTION OF ROLE OF LEM IN THE SPACECRAFT	6-1
6-3	ROLE OF THE LUNAR EXCURSION MODULE IN THE SPACECRAFT	6-1
6-4	REFERENCE AXES	6-1
6-5	WEIGHTS AND BALANCE	6-1
6-6	CONTROL WEIGHT	6-1
6-7	DESIGN GOAL WEIGHT	6-2
6-8	CENTER OF GRAVITY	6-2
6-9	INTERFACES	6-2
6-10	MAJOR LUNAR EXCURSION MODULE SYSTEMS	6-3
6-11	STRUCTURAL SYSTEM	6-3
6-12	FLIGHT CREW	6-3
6-13	CREW SYSTEM	6-3
	General	6-3
	Equipment Description	6-3
	Controls and Displays	6-3
	Restraints, Support Equipment and Seats	6-3
	Food and Water Management	6-3
	Radiation Dosimeter	6-4
	First Aid Equipment	6-4
	Space Suits	6-4
	Portable Life Support Subsystems	6-4
6-14	TELECOMMUNICATIONS SYSTEM	6-4
	General	6-4

[redacted]

		Page No.
	Voice Communication	6-4
	Telemetry	6-5
	Television	6-5
6-15	INSTRUMENTATION SYSTEM	6-5
	General	6-5
	Operational Instrumentation Subsystem	6-5
	Clock	6-6
	Tape Recorder	6-6
	Cameras	6-6
	Telescope	6-6
	Flight Research and Development Instrumentation Subsystem	6-6
	Scientific Instrumentation Subsystem	6-7
	Lunar Atmosphere Analyser	6-7
	Gravitometer	6-7
	Magnetometer	6-7
	Radiation Spectrometer	6-7
	Specimen Return Container	6-7
	Rock and Soil Analysis Equipment	6-7
	Seismographic Equipment	6-8
	Soil Temperature Instrument	6-8
6-16	ELECTRICAL POWER SYSTEM	6-8
	General	6-8
6-17	GUIDANCE AND NAVIGATION SYSTEM	6-8
	General	6-8
6-18	STABILIZATION AND CONTROL SYSTEM	6-8
	General	6-8

[redacted]

		Page No.
	Equipment Description	6-9
6-19	ENVIRONMENTAL CONTROL SYSTEM	6-9
	General	6-9
	Equipment Description	6-10
	Oxygen Supply Subsystem	6-10
	Circulation Subsystem	6-10
	Atmosphere Purification Subsystem	6-10
	Temperature and Humidity Control Subsystem	6-10
6-20	REACTION CONTROL SYSTEM	6-10
	General	6-10
	Equipment Description	6-11
	Propellants	6-11
	Pressurization	6-11
	Propellant Tanks	6-11
	Propellant Feed Subsystem	6-11
	Thrust Chambers	6-11
6-21	LUNAR EXCURSION PROPULSION SYSTEM	6-11
	General	6-11
	Equipment Description	6-12
6-22	LUNAR TOUCHDOWN SYSTEM	6-12
	General	6-12
	Equipment Description	6-12
	Structure	6-12
	Lunar Landing Aids	6-12
	Inspection, Maintenance, and Servicing	6-12
6-23	LUNAR EXPLORATION	6-13

[redacted]

[redacted]

		Page No.
6-24	LUNAR ASCENT	6-13
6-25	SEQUENCE OF EVENTS	6-13

[redacted]

[redacted]

TABLE OF CONTENTS

SECTION VII SPACECRAFT ADAPTER

		Page No.
7-1	FUNCTION	7-1
7-2	DESCRIPTION	7-1
7-3	WEIGHTS AND BALANCE	7-2
7-4	INTERFACES	7-2
7-5	SERVICE MODULE	7-2
7-6	LUNAR EXCURSION MODULE	7-2
7-7	MAJOR ADAPTER SYSTEMS	7-3
7-8	STRUCTURAL	7-3
7-9	INSTRUMENTATION	7-3
7-10	EVENTS SEQUENCING	7-3

[redacted]

[redacted]

TABLE OF CONTENTS

CHAPTER 3 SPACECRAFT GROUND SUPPORT EQUIPMENT

SECTION VIII GROUND SUPPORT EQUIPMENT SUMMARY

		Page No.
8-1	DEFINITIONS	8-1
8-2	TESTING OF GROUND SUPPORT EQUIPMENT	8-2
8-3	PRIME CONTRACTOR TESTS	8-2
8-4	SUBCONTRACTOR TESTS	8-3

[redacted]

[redacted]

TABLE OF CONTENTS

SECTION IX LOCATION OF MAJOR GROUND SUPPORT EQUIPMENT

		Page No.
9-1	INTRODUCTION	9-1
9-2	DOWNEY	9-1
9-3	TEST PREPARATION AREA	9-1
	Test Objectives	9-1
	Phase I Tests	9-2
	Phase II Tests	9-2
	Phase III Tests	9-3
9-4	HOUSE SPACECRAFT TESTS	9-3
	Test Objectives	9-3
	Systems Evaluation	9-3
	Ground Support Equipment Evaluation	9-3
	BP-14 Tests	9-4
	AFRM-006 Tests	9-4
9-5	ENVIRONMENTAL TESTS	9-4
9-6	WHITE SANDS MISSILE RANGE	9-5
9-7	INTRODUCTION	9-5
	Monitor and Control Equipment	9-6
	Checkout Equipment	9-6
	Substitution Equipment	9-6
	Bench Maintenance Equipment	9-6
	Handling Equipment	9-6
9-8	CHECKOUT OPERATIONS AREA	9-7
	Deliveries and Assembly	9-7
	Checkout Plan	9-7

[redacted]

		Page No.
	Sequence of Operations	9-8
9-9	LAUNCH AREA	9-8
	Area Functions and Facilities	9-8
	Launch Pad Abort Checkout Plan	9-16
	Little Joe II Abort Checkout Plan	9-16
9-10	MANNED SPACECRAFT CENTER	9-17
9-11	ATLANTIC MISSILE RANGE	9-17
9-12	INTRODUCTION	9-17
9-13	OPERATIONS AT THE ATLANTIC MISSILE RANGE	9-17
	General	9-17
	Inspections	9-17
	Testing	9-21
	Operations Plans	9-21
	Operations and Checkout Building	9-21
	Fluid Test Complex	9-32
	Liquid Test Facility	9-32
	Static Test Stands	9-32
	Weight and Balance Facility	9-32
	Ordnance Storage	9-38
	Parachute and Paraglider Building	9-38
	Vertical Assembly Building-Launch Pad	9-38

[redacted]

TABLE OF CONTENTS

SECTION X TYPES OF GROUND SUPPORT EQUIPMENT

		Page No.
10-1	INTRODUCTION	10-1
10-2	HANDLING EQUIPMENT	10-1
10-3	TRANSPORTATION	10-1
	List of Transportation Equipment	10-1
10-4	POSITIONING EQUIPMENT	10-2
	General	10-2
	List of Positioning Equipment	10-2, 10-3
10-5	WEIGHTS AND BALANCE EQUIPMENT	10-3
	General	10-3
	List of Weights and Balance Equipment	10-3, 10-4
10-6	SUPPORT AND STORAGE EQUIPMENT	10-4
	General	10-4
	List of Support and Storage Equipment	10-4 to 10-8
10-7	SERVICING EQUIPMENT	10-9
10-8	LIQUID SERVICING EQUIPMENT	10-9
	List of Liquid Servicing Equipment	10-9 to 10-12
10-9	GAS SERVICING EQUIPMENT	10-12
	List of Gas Servicing Equipment	10-12 to 10-13
10-10	ELECTRICAL SERVICING EQUIPMENT	10-13
	Battery-Charging Unit	10-13
10-11	DESICCATING SYSTEMS	10-14
	List of Desiccating Systems	10-14
10-12	CLEANING EQUIPMENT	10-14
	Vacuum Cleaner Servicing Unit	10-14

[redacted]

[redacted]

		Page No.
10-13	CHECKOUT EQUIPMENT	10-15
10-14	FAULT DETERMINATION EQUIPMENT (AUTOMATIC & MANUAL)	10-15
	List of Fault Determination Equipment	10-15 to 10-24
10-15	ELECTRICAL SUPPORT EQUIPMENT	10-24
	List of Electrical Support Equipment	10-24 to 10-26
10-16	TELEMETRY GROUND STATION EQUIPMENT	10-26
	List of Telemetry Ground Station Equipment	10-26
10-27	DATA RECORDING AND DATA EQUIPMENT	10-27
	List of Data Recording and Data Equipment	10-27
10-18	AUXILIARY EQUIPMENT	10-27
10-19	SIMULATORS AND DUMMIES	10-27
	List of Simulators and Dummies	10-27 to 10-30
10-20	PROTECTIVE AND ENVIRONMENTAL CONTROL EQUIPMENT	10-30
	Protective Covers	10-30
	List of Protective Covers	10-31
	List of Protective and Environmental Control Equipment	10-31, 10-32
10-21	CLEANING EQUIPMENT	10-32
	List of Cleaning Equipment	10-32
10-22	UMBILICAL EQUIPMENT	10-32
	List of Umbilical Equipment	10-32
10-23	ALIGNMENT AND POSITIONING EQUIPMENT	10-33
	List of Alignment and Positioning Equipment	10-33

[redacted]

[redacted]

TABLE OF CONTENTS

CHAPTER 4 GROUND OPERATIONAL SUPPORT SYSTEM

SECTION XI FUNCTION AND DESCRIPTION

		Page No.
11-1	INTRODUCTION	11-1
11-2	FUNCTIONS	11-2
11-3	MISSION FUNCTIONS	11-3
	Direct Spacecraft Crew Support	11-3
	Indirect Spacecraft Crew Support	11-4
11-4	NON MISSION FUNCTIONS	11-5
11-5	DESCRIPTION	11-5
11-6	INTEGRATED MISSION CONTROL CENTER (IMCC)	11-5
	Major Systems	11-6
	Real Time Computer Complex (RTCC)	11-6
	Communication System	11-6
	Mission Control Center	11-7
	Simulation System	11-7
11-7	LAUNCH CONTROL CENTER (LCC)	11-7
11-8	RECOVERY CONTROL CENTERS (RCC)	11-7
11-9	GLOBAL TRACKING NETWORKS	11-8
	Near Earth Instrumentation Facility (NEIF)	11-8
	Deep Space Instrumentation Facility (DSIF)	11-11
	Tracking Ships	11-11
	Instrumented Recovery Aircraft	11-15
	Training and Checkout Aircraft	11-15
	Minitrack Network	11-15
	The Range and Range Rate Network	11-15

[redacted]

[redacted]

	Page No.
11-10 TRACKING FUNCTION AND INFORMATION FLOW	11-15
11-11 INTERSITE COMMUNICATION NETWORK	11-15

[redacted]

TABLE OF CONTENTS

SECTION XII GROUND OPERATIONAL SUPPORT SYSTEM OPERATION

	Page
(This section intentionally left vacant)	12-1

[redacted]

TABLE OF CONTENTS

CHAPTER 5 DEVELOPMENT PROGRAMS

SECTION XIII APOLLO REQUIREMENTS

		Page No.
13-1	OBJECTIVES	13-1
13-2	DEVELOPMENT REQUIREMENTS	13-1
13-3	MILESTONE SCHEDULE	13-2

[redacted]

TABLE OF CONTENTS

SECTION XIV LITTLE JOE II LAUNCH VEHICLE

		Page No.
14-1	FUNCTION	14-1
14-2	DESCRIPTION	14-1
14-3	LAUNCH VEHICLE	14-1
14-4	LAUNCHER	14-3
14-5	GROUND SUPPORT EQUIPMENT	14-5
14-6	LAUNCH VEHICLE SYSTEMS	14-6
14-7	STRUCTURAL SYSTEM	14-6
	General	14-6
	Description	14-6
14-8	PROPULSION SYSTEM	14-9
	General	14-9
	Algol Rocket Motors	14-9
	Characteristics	14-9
	Components	14-10
	Recruit Rocket Motors	14-11
	Characteristics	14-11
	Components	14-11
	Motor Arrangement & Firing Sequence	14-12
14-9	COMMAND DESTRUCT SYSTEM	14-12
	General	14-12
	Performance	14-14
	Input Signal Characteristics	14-14
	Output	14-16
	Arming	14-16

[redacted]

		Page No.
14-10	MEASUREMENT SYSTEM	14-16
	General	14-16
	Acceleration Measurement	14-17
	Temperature Measurements	14-17
	Pressure Measurements	14-17
	Voltage Measurements	14-17
	Strain Measurements	14-17
14-11	ELECTRICAL SYSTEM	14-17
	General	14-17
	Batteries	14-18
	Voltage Indication and Measurement	14-18
	Voltage Regulation	14-18
	Power Changeover	14-19
	Umbilical Power Disconnects	14-19
14-12	ATTITUDE CONTROL SYSTEM	14-19
14-13	ASSEMBLY PROCEDURE FOR LAUNCH VEHICLE	14-19
14-14	GENERAL	14-19
14-15	AFTERBODY INSTALLATION	14-24
14-16	MOTOR INSTALLATION	14-24
	General	14-24
	Recruit Motor Installation	14-24
	Algol Motor Installation	14-26
14-17	FOREBODY INSTALLATION	14-26
14-18	FIN INSTALLATION	14-29
14-19	PAYLOAD INSTALLATION	14-29

[redacted]

		Page No.
14-20	LAUNCHER	14-31
14-21	GENERAL	14-31
14-22	UMBILICAL ARM	14-31
14-23	SUPPORT ARMS	14-31
14-24	ARM ACTUATING CYLINDERS	14-33
14-25	MAST	14-34
14-26	SUPPORT PLATFORM	14-34
14-27	PIVOT FRAME	14-35
14-28	ELEVATION CONTROL SCREWJACKS	14-35
14-29	AZIMUTH TRUCKS	14-35
14-30	AZIMUTH TRACKS	14-36
14-31	GROUND SUPPORT EQUIPMENT, LITTLE JOE II	14-36
14-32	FOREBODY MATING STAND	14-36
14-33	FIN PIN TOOL	14-36
14-34	COMMAND DESTRUCT SYSTEM TEST SET	14-37
14-35	LAUNCHER CONTROL UNIT	14-38
14-36	VEHICLE AIR CONDITIONING UNIT	14-38
14-37	WEATHER SHIELD AND CONDITIONED AIR SEAL	14-39
14-38	TEST CONSOLE	14-39
	Vehicle Control Panel	14-39
	Support Equipment Panel	14-39
	Console Power Panel	14-40
	Communication Panel	14-40
	Unit Connections	14-40
14-39	BASIC ALIGNMENT CHECK KIT	14-40
14-40	RECRUIT MOTOR ASSEMBLY STAND	14-40

[redacted]

[redacted]

		Page No.
14-41	OTHER TOOLS	14-40
14-42	NOZZLE ALIGNMENT TOOL	14-40
14-43	LAUNCHER INDEX PIN ALIGNMENT TOOL	14-41
14-44	VEHICLE VENT PLUG STRAPS	14-41
14-45	VEHICLE BASE ALGOL HOLE COVERS	14-41
14-46	TARPAULINS	14-41
14-47	HANDLING EQUIPMENT	14-41
14-48	VEHICLE HOISTING SLING	14-41
14-49	VEHICLE AFT SLING	14-42
14-50	FIN SLING	14-42
14-51	MOTOR CRADLES AND DOLLIES	14-42
	Recruit Motor Support Cradle	14-42
	Algol Motor Storage Dolly	14-42
14-52	RECRUIT MOTOR SLINGS	14-43
	Horizontal Lifting Sling	14-43
	Vertical Lifting Sling	14-43
14-53	RECRUIT MOTOR VERTICAL HOIST ADAPTER	14-43
14-54	ALGOL MOTOR TRANSPORT/ERECTION DOLLY	14-44
14-55	ALGOL MOTOR LIFTING EQUIPMENT	14-44
	Shipping End Rings	14-44
	Horizontal Lifting Beam Assembly	14-44
	Erection Rings	14-45
	Erection Sling	14-45
	Hydra-Set	14-45
14-56	VEHICLE STORAGE CRADLE	14-45
14-57	VEHICLE STORAGE COVER	14-46
14-58	TRANSPORTATION EQUIPMENT	14-46

[redacted]

[redacted]

TABLE OF CONTENTS

SECTION XV DEVELOPMENT PROGRAM DESCRIPTIONS

		Page No.
15-1	PAD ABORT MISSIONS	15-1
15-2	MISSION OBJECTIVES	15-1
	General	15-1
	PA-1 Test Objectives	15-1
	PA-2 Test Objectives	15-3
15-3	CONFIGURATIONS	15-4
	PA-1 Hardware	15-4
	PA-2 Hardware	15-4
15-4	MISSION PROFILE	15-7
15-5	LITTLE JOE II MISSIONS	15-8
15-6	MISSION OBJECTIVES	15-8
	General	15-8
	Little Joe II-1 Test Objective	15-8
	Little Joe II-2 Test Objectives	15-8
	Little Joe III-3 Test Objectives	15-9
	Little Joe II-4 Test Objectives	15-10
15-7	CONFIGURATIONS	15-10
15-8	MISSION PROFILES	15-10
15-9	SATURN-1 MISSIONS	15-13
15-10	MISSION OBJECTIVES	15-13
	Mission A-101 (SA-6) Objectives	15-13
	Mission A-103 (SA-9) Objectives	15-15
	Mission A-105 (SA-10) Objectives	15-15
	Mission A-106 (SA-111) Objectives	15-16

[redacted]

[redacted]

		Page No.
15-11	CONFIGURATIONS	15-16
15-12	MISSION PROFILES	15-18
15-13	SATURN IB MISSIONS	15-18
15-14	MISSION OBJECTIVES	15-18
15-15	CONFIGURATIONS	15-18
15-16	MISSION PROFILES	15-18
15-17	SATURN 5 MISSIONS	15-18
15-18	MISSION OBJECTIVES	15-18
15-19	CONFIGURATIONS	15-23
15-20	MISSION PROFILES	15-23

[redacted]

LIST OF FIGURES

CHAPTER I PROGRAM INFORMATION

SECTION I GENERAL

Figure No.	Title	Page No.
1-1	Manned Spacecraft Center Organization	1-3
1-2	Organization of MSC Apollo Spacecraft Project Office	1-4
1-3	Apollo Spacecraft	1-15
1-4	Saturn 5/Apollo Configuration	1-16
1-5	Manned Lunar Mission Profile	1-20

SECTION IV COMMAND MODULE

4-1	Space Vehicle Configuration Lunar Landing Mission	4-2
4-2	Spacecraft Configuration Launch to Tower Jettison Nominal Mode	4-3
4-3	Spacecraft Configuration Launch to Tower Jettison Abort Mode	4-4
4-4	Spacecraft Configuration Tower Jettison to Translunar Injection Nominal Mode	4-5
4-5	Spacecraft Configuration Tower Jettison to Translunar Injection Abort Mode	4-6
4-6	Spacecraft Configuration Translunar Injection to LEM Descent Nominal Mode	4-7
4-7	Spacecraft Configuration Translunar Injection to LEM Descent Abort Mode	4-8
4-8	Spacecraft Configuration LEM Descent to Lunar Landing Nominal Mode	4-9
4-9	Spacecraft Configuration LEM Descent to Lunar Landing Abort Mode	4-10
4-10	Spacecraft Configuration Lunar Landing to Lunar Launch Nominal and Abort Modes	4-11
4-11	Spacecraft Configuration Lunar Launch to Rendezvous Nominal and Abort Modes	4-12
4-12	Spacecraft Configuration Rendezvous to LEM Jettison Nominal and Abort Modes	4-13

Figure No.	Title	Page No.
4-13	Spacecraft Configuration LEM Jettison to Entry Nominal and Abort Modes	4-14
4-14	Spacecraft Configuration Entry to Touchdown Nominal and Abort Modes	4-15
4-15	Reference Axes, Spacecraft	4-17
4-16	Command Module External Geometry	4-18
4-17	Area Designations	4-19
4-18	Area Designations	4-20
4-19	Area Designations	4-21
4-20	Area Designations	4-22
4-21	Area Designations, Side View	4-23
4-22	Area Designations	4-24
4-23	Area Designations	4-25
4-24	Command Module Structural Features	4-31
4-25	Telecommunications, System Block Diagram	4-55
4-26	Instrumentation System Schematic (To be supplied)	4-66
4-27	Interconnection of Recovery Aids Components (To be supplied)	4-73
4-28	Fuel System Block Diagram	4-78
4-29	Electrical System Block Diagram	4-82
4-30	Organization Diagram of Guidance Computer	4-93
4-31	ECS Schematic	4-106
4-32	Command Module Reaction Control System	4-117
4-33	Reaction Control System Command Module Schematic	4-118
4-34	Launch Escape System Configuration	4-126
4-35	Abort Missions (Not to Scale)	4-129
4-36	Release Mechanism	4-131
4-37	Block Diagram of a Typical In-Flight Test System	4-137

[redacted]

SECTION V SERVICE MODULE

Figure No.	Title	Page No.
5-1	Service Module	5-6
5-2	Internal Arrangement of the Service Module (To be supplied)	5-8
5-3	Service Propulsion System	5-10
5-4	Service Propulsion Systems Operating Pressures	5-15
5-5	Gimbal Actuator Duty Cycle	5-19
5-6	Service Module Reaction Control System	5-20
5-7	Reaction Control Engine Thrust Profile	5-26
5-8	Reaction Control Engine Specific Impulse	5-27
5-9	Service Module Water-Glycol Circuit	5-32

SECTION VII SPACECRAFT ADAPTER

7-1	General Arrangement - Earth Orbital Configuration	7-4
7-2	General Arrangement - Lunar Landing Configuration	7-5

SECTION IX LOCATION OF MAJOR GROUND SUPPORT EQUIPMENT

9-1	Boilerplates 6 and 12 Downey Flow Sequence	9-9
9-2	Boilerplates 6 and 12 WSMR Flow Sequence	9-10
9-3	Hazardous Assembly and Test Area	9-11
9-4	WSMR Launch Area	9-12
9-5	Blockhouse Layout	9-13
9-6	Pad Abort Adapter (BP-6)	9-14
9-7	Little Joe II Launch Configuration	9-15
9-8	Atlantic Missile Range Operations Facilities	9-18
9-9	Perspective of Fluid Test Complex	9-19
9-10	Perspective of Static Test Complex	9-20

[redacted]

[redacted]

Figure No.	Title	Page No.
9-11	Apollo Cape Checkout Plan	9-22
9-12	Checkout Plan - RCS Command Module	9-23
9-13	Checkout Plan - RCS Service Module	9-24
9-14	Checkout Plan - Environmental Control System	9-25
9-15	Checkout Plan - Electrical Systems	9-26
9-16	Checkout Plan - Reactant Supply and Fuel Cell Systems	9-27
9-17	Checkout Plan - Service Propulsion System	9-28
9-18	Apollo Parachute, Pyrotechnics, and Weight Balance Tests	9-29
9-19	Operations and Checkout Building	9-30
9-20	Command Module Operations and Checkout Test Plan	9-31
9-21	MSC Fluid Test Complex - Support Building	9-33
9-22	MSC Fluid Test Complex - ECS Building	9-34
9-23	MSC Fluid Test Complex - Hypergolic Test Building	9-35
9-24	MSC Fluid Test Complex - Cryogenic Test Building	9-36
9-25	MSC Weight and Balance Building	9-37
9-26	MSC Ordnance Storage Building	9-39
9-27	MSC Parachute and Paraglider Building	9-40
9-28	Vertical Assembly Building and Launch Pad Testing	9-41

CHAPTER 4 GROUND OPERATIONAL SUPPORT SYSTEM

SECTION XI FUNCTION AND DESCRIPTION

11-1	Tracking Function, Information Flow Paths	11-18
11-2	Apollo Ground Communications Network	11-22

SECTION XIV LITTLE JOE II LAUNCH VEHICLE

14-1	Launch Vehicle and Launcher	14-2
14-2	Launch Vehicle Quadrants	14-4

[redacted]

[redacted]

Figure No.	Title	Page No.
14-3	Launch Vehicle - Exploded View	14-7
14-4	Rocket Motor Arrangement and Firing Sequence	14-13
14-5	Command Destruct System Block Diagram	14-15
14-6	Umbilical Power Disconnects	14-20
14-7	Launch Area Orientation View	14-21
14-8	Recruit Motor Assembly Details	14-25
14-9	Algol Motor Erection Equipment	14-27
14-10	Fin Attach Bolt Installation	14-30
14-11	Vehicle Launcher	14-32
	SECTION XV DEVELOPMENT PROGRAM DESCRIPTIONS	
15-1	Pad Abort #1 (BP-6)	15-5
15-2	Pad Abort #2 (SC #010 Configuration	15-6

[redacted]

[redacted]

LIST OF TABLES

SECTION I

GENERAL

Table No.	Title	Page No.
1-1	Major Milestones for the Apollo Program	1-12
1-2	Apollo Flight Development Schedule	1-13

SECTION II

SPACECRAFT OPERATIONS

2-1	Typical Lunar Landing Mission Time Line Summary	2-2a

SECTION IV

COMMAND MODULE

4-1	Command Module, Limit External Pressure (Preliminary Information)	4-34
4-2	Command Module, Limit Accelerations (Preliminary Information)	4-35
4-3	Telecommunications System Components, Functions and Description	4-56
4-4	Telecommunications System Performance Values	4-60
4-5	Instrumentation System Components - Function and Description	4-67
4-6	Instrumentation System - Performance	4-69
4-7	Recovery Aids - Components, Functions, and Description	4-74
4-8	Recovery Aids - Performance	4-75
4-9	Location of Electrical Power System Components	4-76
4-10	Load Classifications Supplied for Different Power-Source Operating Modes	4-81
4-11	Operational Characteristics of the Environmental Control System	4-110
4-12	Operational Requirements of the Environmental Control System	4-113
4-13	Command Module Reaction Control System Components	4-119

[redacted]

[redacted]

LIST OF TABLES

SECTION V

SERVICE MODULE

Table No.	Title	Page No.
5-1	Service Propulsion System Components	5-11
5-2	Service Module Reaction Control System Components	5-22
5-3	Basic Radiator Operating Parameters	5-31
5-4	Space Radiator Characteristics	5-33

SECTION XI

FUNCTION AND DESCRIPTION

11-1	Mercury Network Tracking & Auxiliary Systems	11-9
11-2	Mercury Communication Facilities	11-10
11-3	Project Gemini Modification to Mercury Network	11-12
11-4	DSIF Station Location	11-13
11-5	DSIF Space Mission Frequencies	11-14
11-6	Geodetic Positions of Minitrack Stations	11-16
11-7	GSFC Range and Range Rate Stations	11-17

CHAPTER 5 DEVELOPMENT PROGRAMS

SECTION XIII

APOLLO REQUIREMENTS

13-1	Highlights of Apollo Flight Test Program	13-3

SECTION XV

DEVELOPMENT PROGRAM DESCRIPTIONS

15-1	Manned Spaceflight Schedule, Apollo Pad Abort & Little Joe II Launches	15-2
15-2	Little Joe II Configuration Summary	15-11

[redacted]

Table No.	Title	Page No.
15-3	Manned Spaceflight Schedule, Apollo-Saturn I Launches	15-14
15-4	Saturn I Configuration Summary	15-17
15-5	Preliminary Saturn I/Apollo Mission Profiles	15-19
15-6	Manned Spaceflight Schedule, Apollo-Saturn IB Launches	15-20
15-7	Saturn I-B/Apollo Mission Profile	15-21
15-8	Manned Spaceflight Schedule, Apollo Saturn V Launches	15-22
15-9	Saturn 5/Apollo Mission Profile	15-24

[redacted]

CHAPTER I PROGRAM INFORMATION

SECTION I

GENERAL

1-1 MSC RELATIONSHIP TO APOLLO PROGRAM

1-2 INTRODUCTION

A large number of participating organizations all over the United States are working at an accelerated pace toward accomplishment within this decade of a three-man expedition to the moon with safe return. These include not only various parts of the NASA and the Department of Defense, but also universities and many industrial contractors.

The NASA organization is structured to bring all of the many areas of effort together in an integrated fashion. Major responsibilities which must be integrated into the whole include flight mission and its analysis, the design, development and fabrication of many spacecraft and space modules, including the space propulsion systems, and the development of launch vehicle stages. It is further the responsibility of the NASA to integrate many areas of basic research with development and to provide the overall management direction.

Although many of the NASA centers participate in and will contribute to Project Apollo, the Marshall Space Flight Center at Huntsville, Alabama, the Manned Spacecraft Center at Houston, Texas, and the Launch Operations Center at the Atlantic Missile Range bear the major responsibilities.

The Manned Spacecraft Center at Houston is charged with spacecraft development and support of manned space flight missions. MSC provides a training center for crews that will fly the Apollo and other manned space flight missions. The lunar landing of the Apollo Spacecraft will be achieved as a culmination of a carefully planned flight test program. The flight tests aim to develop the launch

[redacted]

vehicles, spacecraft, and operational techniques in "buildup" missions that progress generally from the simple to the complex.

1-3 MSC ORGANIZATION

The Apollo Spacecraft Project Office at the Manned Spacecraft Center establishes the basis for coordination and direction of spacecraft development through the appropriate organizational authorities and lines of communication established with industrial contractors and others engaged in the effort of systems development for manned lunar exploration. The general organization of the Manned Spacecraft Center is shown on Figure 1-1. The functional division of the Apollo Spacecraft Project Office is illustrated in block diagram form on Figure 1-2.

1-4 ASSOCIATE CONTRACTORS

General - Contractors, subcontractors and suppliers participating in the manned spacecraft program provide the services required to accomplish development, delivery and support of spacecraft, ground support, and training equipment.

Responsibility - The technical administration and management of spacecraft development and support systems engineering is performed at the NASA-Manned Spacecraft Center at Houston, Texas.

Associate contractors participating in the manned spacecraft effort under auspices of the Manned Spacecraft Center are listed into three main groups.

Spacecraft Guidance System Design

Massachusetts Institute of Technology
Kollsman Instrument Corporation - Manufacturing
Raytheon Company - Manufacturing
A. C. Spark Plug Division - Manufacturing

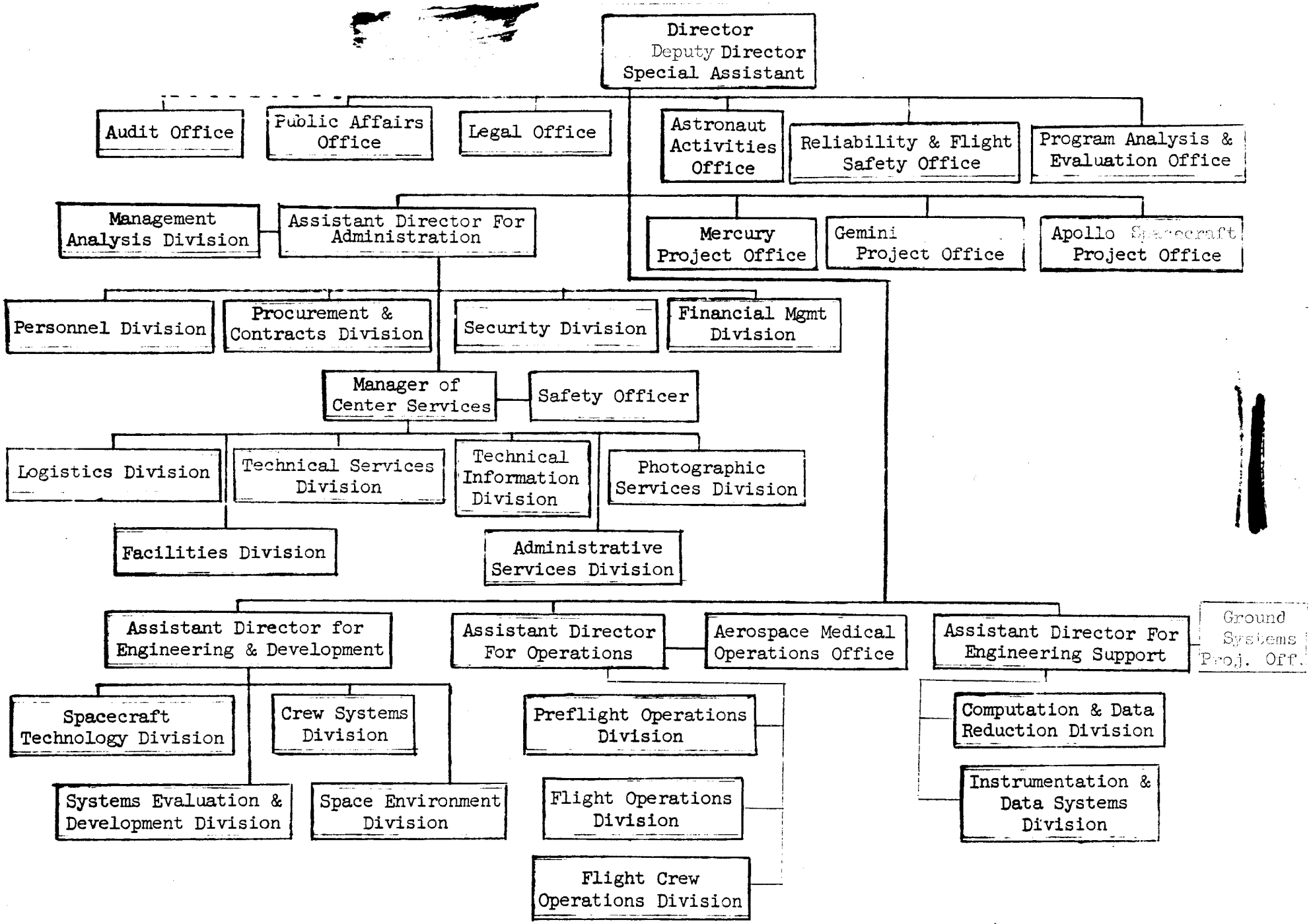

Figure 1-1 Manned Spacecraft Center Organization

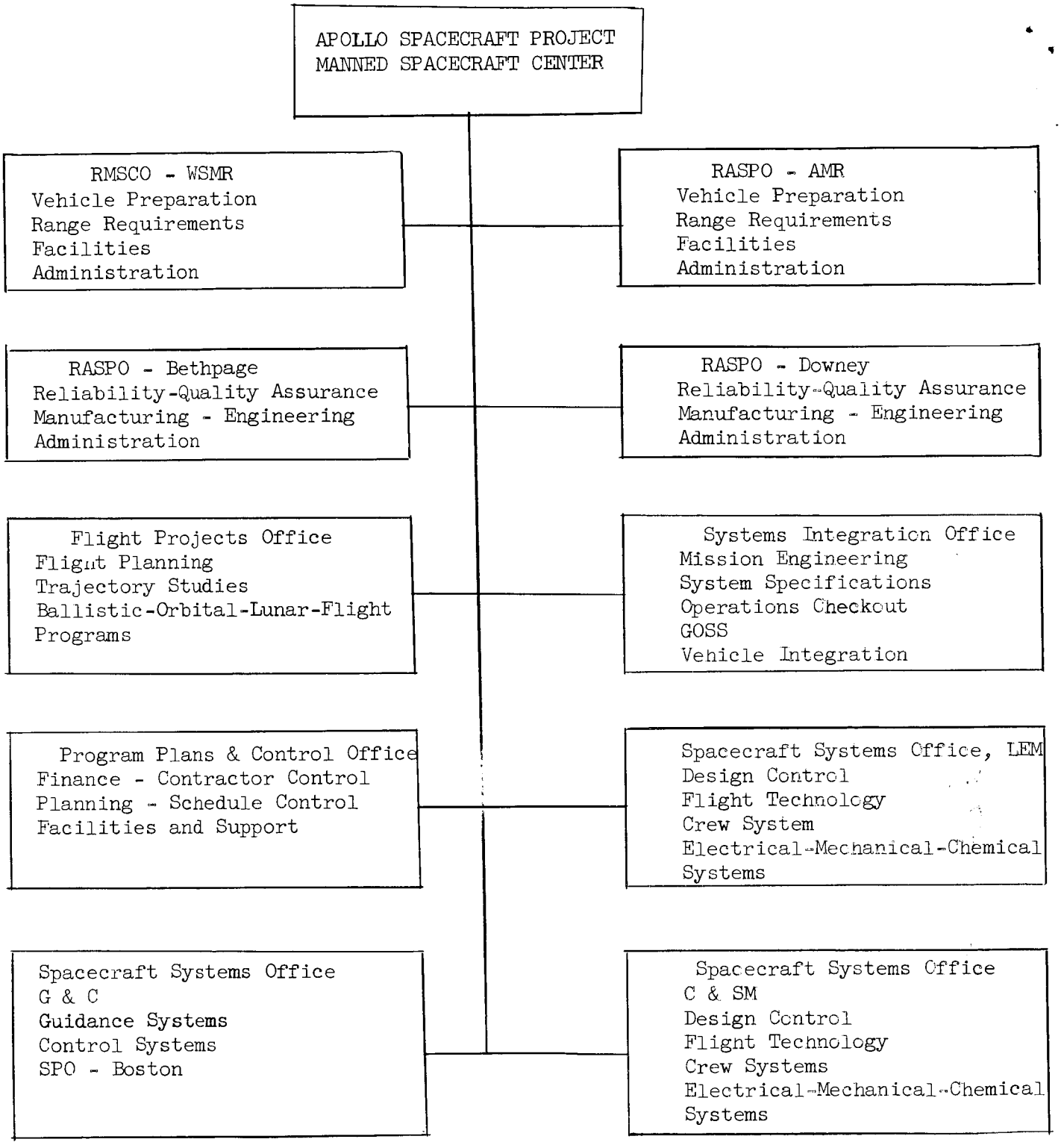

Figure 1-2 Organization of MSC Apollo Spacecraft Project Office

Lunar Excursion Module

Grumman Aircraft Engineering Corporation
Rocketdyne, Incorporated - Propulsion Engines
Other sub-system contracts are being negotiated

Command and Service Modules

North American Aviation, Inc.
Collins Radio Company - Telecommunications
Minneapolis-Honeywell Company - Stability Control System
Aerojet-General Corporation - Service Module Engine
Garrett Corporation - Environmental Control System
Marquardt Corporation - Reaction Control Engines
Avco Corporation - Heat Shield
Lockheed Aircraft Corporation - Gas Storage System
United Aircraft Corporation - Fuel Cells
Thiokol Chemical Corporation - Tower Jettison Motor
Northrop Corporation - Parachute Landing System
Westinghouse Electric Corporation - Electric Converter Unit
Melpar, Incorporated - Beacon Antennas
Aeronca Manufacturing Corporation - Honeycomb Panels
Sperry-Rand Corporation - In-flight Systems
Eagle-Picher Company - Re-entry Batteries
Transco Products, Incorporated - Telemetry Antennas
Bissett-Berman Corporation - Engineering Studies

1-5 PROGRAM PLAN

1-6 INTRODUCTION

The program plan that is presented provides a general description of Project Apollo philosophy, objectives, general requirements, and the sequence of planned developments.

1-7 OBJECTIVES

General - The objective of the Manned Lunar Exploration Program is to carry out a series of manned expeditions to the moon for the purpose of conducting exploration of the lunar surface. In implementing the design and operation of the whole Apollo System toward this objective there are three inherent goals which are embodied in the program. These are described in order of decreasing priority.

Crew safety and mission success are primary considerations and all system factors are developed to minimize the number of crew fatalities per mission success. Crew safety means the safe return of all three crew members whether or not the mission is completed. Mission success means the safe return of all three astronauts from a completed lunar landing mission.

A secondary goal is that of accomplishing a manned lunar landing mission at the earliest possible date. This is a national objective to be accomplished within the bounds of available resources but not at the expense of confidence in crew safety and mission success.

A third goal is one of making maximum accommodations in the Apollo systems design and operation and deriving maximum information from all missions toward a broader base of lunar activities. This goal, although important, is last in order of priority.

Growth Development - Detailed objectives for each lunar mission depend on the knowledge gained through unmanned missions prior to Apollo and upon the success of preceding Apollo missions. Lunar landing of a manned vehicle will be preceded by confirmation of certain system design and performance parameters as well as measurement of in-flight and lunar surface environments in unmanned and manned lunar flights.

Design of the spacecraft takes into account the consideration of desirable features for follow-on missions beyond the initial Apollo missions. Examples are the removal of landing site, stay-time, and day-night restrictions and provisions for separately-landed lunar support.

Mission Objectives - Mission definitions will represent a planned program for a series of spacecraft flights leading to lunar landings up to but not including the establishment of a permanent lunar base. All missions from unmanned developmental to the manned lunar landings will be carried out according to de-

tailed mission plans that will include specific actions to be taken in the event of foreseeable failures during any mission phase. The system design must be such that the entire crew will have a high probability of survival after any single failure. The lunar mission requires that two men be landed on the lunar surface with sufficient mobility that they be able to move beyond the area disturbed by the landing maneuver to permit significant exploration of the moon. It is expected that the objectives will be accomplished through a proper combination of vehicle configuration, design, and system operating philosophy.

1-8 GENERAL REQUIREMENTS

Configuration for Lunar Landing - The space vehicle configuration consists of S-IC, S-II, and S-IVB stages in the launch vehicle and a spacecraft consisting of Command, Service, and Lunar Excursion Modules and an Adapter and Launch Escape System. The spacecraft is provided with life support, communications, navigation and guidance and other systems that will permit it to accomplish the planned lunar mission, modify the mission, or abort safely without assistance from the earth. It is possible for a single astronaut to control either the Command Module or the Lunar Excursion Module.

Ground Support Equipment - In order to perform a particular mission, a specific launch vehicle and payload must be available, assembled, checked out, and static-tested prior to the given launch date. All functions necessary to support the operation of receiving, handling, assembly, test, checkouts, and launch of the space vehicle are performed by Ground Support Equipment (GSE).

Launch Facilities - Missions will originate at the Atlantic Missile Range (AMR), Cape Canaveral, Florida. A number of geometric and dynamics factors must be considered in the launch-ascent phases of a mission including the interrelation of lunar declination, launch delay, launch azimuth limits, lunar flight time, and

landing site location. The Launch Control Center (LCC) controls the launch operation until some specified point in the launch phase, at which time the Integrated Mission Control Center (IMCC) assumes primary responsibility for ground control.

Mission Control - During launch, tracking facilities at AMR are utilized to provide input for flight-data analysis and control. Guidance is accomplished by the Launch Guidance System contained in the Instrumentation Unit. The function of the Spacecraft Guidance System is the monitoring of the trajectory as a measure of system performance. Adequate communications and tracking equipment is provided between the spacecraft and the earth to permit the Integrated Mission Control Center (IMCC) and Ground Communication and Tracking System (GCTS) to monitor the performance of all pertinent equipment and condition of the astronauts.

Ground Operational Support - The Ground Operational Support System (GOSS) complexes provide the facilities to permit an adequate flow of data, communications and commands between the earth and the spacecraft. Throughout the mission the primary responsibility for command remains on earth with the IMCC. This responsibility may be delegated by IMCC to the astronauts in the spacecraft or to some other earth-based site under special conditions. For example, the IMCC may order an abort. Missions are to be conducted in accordance with a detailed plan including the actions to be taken in case of emergencies.

Mission Criteria - The lunar landing mission will be accomplished by using the Lunar Orbit Rendezvous (LOR) technique. The Apollo spacecraft is injected into a translunar trajectory by the S-IVB third stage; the spacecraft adapter and the S-IVB stage are jettisoned; and the LEM is repositioned. During the translunar trajectory, the spacecraft is controlled to enter a circular lunar orbit and is injected into the lunar orbit by the SM propulsion system. The LEM is separated

from the CSM and follows an equi-period transfer orbit to pericynthion. At pericynthion the LEM descent rocket engines are ignited, and descent to the surface of the moon is effected. After a lunar stay of up to 24 hours, the Lunar Excursion Module ascent stage boosts to rendezvous with the Apollo spacecraft. Following transfer of the astronauts and separation of the Lunar Excursion Module, the Command and Service Modules are injected into a transearth trajectory. The atmospheric entry is performed without the Service Module. Earth landing sites in both Texas and Australia are anticipated in order to reduce reentry range required for a 100 percent of the month capability. Site selection will depend on lunar declination.

Reliability Goals - Reliability goals established by NASA for each of the Apollo missions are a function of the nature of the mission and whether it is unmanned or manned. The nature of the mission may be classified as suborbital, earth-orbital, cislunar or lunar orbit, and landing missions.

The defined reliability and crew-safety goals for the Manned Lunar Landing Program are as follows:

a. Mission Reliability - The probability of accomplishing the mission objectives is defined as 0.90.

b. Crew Safety - Nominal - The probability that none of the crewmen shall have been subjected to conditions greater than the nominal limits, specified in design criteria, is defined as 0.90.

c. Crew Safety - Emergency - The probability that none of the crewmen shall have been subjected to conditions greater than the emergency limits, specified in design criteria, is defined as 0.999.

d. Launch Vehicle - Reliability has been apportioned by NASA, with a figure of 0.950.

e. Command and Service Module - Reliability has been apportioned, with a figure of 0.960.

f. Lunar Excursion Module - Reliability has been apportioned by NASA with a figure of 0.988.

g. Ground Support Equipment
(To be supplied.)

h. GOSS Complex - Reliability has been apportioned with a figure of 0.999.

1-9 GENERAL DEVELOPMENT PLAN

General - Prior to the first manned lunar-landing mission, numerous flight tests are required to gather fundamental information on the space environment, to verify design concepts and hardware performance, and to familiarize the astronauts and ground personnel with operating procedures under normal and emergency conditions. Along with data obtained in early Apollo flights, much information will be obtained from other programs.

A uniform set of design assumptions for the development of systems for manned lunar exploration is to be established through an adequate engineering model of the space environment and lunar surface conditions.

Space Vehicle Development - Four different launch vehicle configurations are scheduled to participate in the Apollo testing program. The first of these, the Little Joe II Vehicle, is to be used only for unmanned flights. The payload is a boilerplate or production CSM with escape tower and necessary instrumentation to qualify the escape system at high altitudes. A detailed description is presented in Chapter 5, Section XIV, Little Joe II Description.

[redacted]

The Saturn 1 Launch Vehicle is to be used for both manned and unmanned flights. Flight tests provide for testing the launch vehicle, Command and Service Modules, and Command Module reentry from earth orbit.

The Saturn 1B Launch Vehicle is to be used in connection with flight testing the Command, Service, and Lunar Excursion Module combination in the early development phase, and to provide launch vehicle developmental data.

The Saturn 5 Launch Vehicle is to be used in connection with testing the spacecraft Command Module at the reentry speeds encountered after return from the lunar mission, as well as for the manned lunar landing missions Development schedules for the Little Joe II, Saturn 1, Saturn 1B, and Saturn 5 missions are outlined under Chapter 5, Section XV, Development Program Descriptions.

Training and Operational Support Development - Starting with the Saturn 1 Launch Vehicle, manned flights are planned as training missions for the astronauts and ground operational personnel. When the Saturn 1B Launch Vehicle is qualified for manned missions, flight tests involving the complete spacecraft are planned. The earth-orbital missions provide an opportunity for perfecting various techniques and confirming operational planning and design requirements for crew safety. The effectiveness of life support systems and man-machine operational interfaces can be assessed with increasing confidence during this phase.

The Saturn 5 Launch Vehicle and Apollo Spacecraft configuration represents a carefully balanced design trade-off to insure flexibility throughout a range of missions. The configuration will not only provide qualification of the Apollo flight system but will as well develop earth-orbital, translunar and lunar-orbital operations technology, which in turn can be extended to support interplanetary exploration programs.

[redacted]

Development Plan Schedule - The development program is expected to proceed generally in the following order:

a. Saturn 1 Launch Vehicle development

b. Command Module propulsion system development

c. Service Module propulsion system development

d. Command Module structural demonstration

e. First manned Apollo (earth orbit) flight qualification

f. Spacecraft systems development (manned)

g. Crew training and spacecraft development

h. Saturn 1B Launch Vehicle development

i. Lunar Excursion Module propulsion system development

j. Saturn 5 Launch Vehicle development

k. Rendezvous development missions

l. First manned Saturn 5 flight

m. Circumlunar missions

n. Manned lunar landing missions

Major milestones of the Apollo Program are shown in Table 1-1. The Apollo Flight Development Schedule is shown in Table 1-2.

Table 1-1 MAJOR MILESTONES FOR THE APOLLO PROGRAM

MISSIONS	CALENDAR YEAR					
	1962	1963	1964	1965	1966	1967
Spacecraft R&D Concepts	△					
Research & Development Spacecraft		△				
Qualification of Prototype Spacecraft			△			
Manned Earth-Orbital Missions				△		
Circumlunar Missions					△	
Manned Lunar Landing Missions						△

CONFIGURATION	1962	1963	1964	1965	1966	1967	1968	1969
Pad Abort Tests		Δ	Δ					
Little Joe II		Δ Δ	Δ Δ					
Saturn 1		Δ	Δ Δ Δ	Δ Δ Δ	Δ Δ Δ			
Saturn 1B				Δ Δ	Δ Δ Δ Δ Δ	Δ Δ Δ Δ	Δ	
Saturn 5					Δ Δ Δ Δ	Δ Δ Δ Δ Δ	Δ Δ Δ Δ	
Boilerplate Spacecraft		Δ Δ Δ Δ	Δ Δ Δ Δ	Δ Δ	Δ Δ Δ			
Command Module			Δ Δ		Δ Δ Δ Δ			
Command Module Service Module			Δ Δ	Δ Δ Δ	Δ Δ	Δ Δ	Δ	
Command Module Service Module Lunar Excursion Module					Δ Δ	Δ Δ Δ Δ	Δ Δ Δ Δ	

Table 1-2 APOLLO FLIGHT DEVELOPMENT SCHEDULE

1-10 MISSION DESCRIPTION

1-11 CONFIGURATION

Spacecraft - Gross weight estimates for the Apollo Spacecraft are: Command Module - 9500 pounds; Service Module - 55000 pounds; Lunar Excursion Module - 250000 pounds; Adapter - 3200 pounds; and Launch Escape System - 6500 pounds. During launch, these components are arranged as shown on Figure 1-3.

Launch Vehicle - For the lunar landing mission, the Saturn 5 will boost the S-IVB third stage and the Apollo Spacecraft into earth-parking orbit. Injection into the translunar phase will be accomplished by the S-IVB. This configuration is shown on Figure 1-4.

The first stage (S-1C) is powered by five Rocketdyne F-1 engines with a total thrust of 7.5 million pounds. Engine propellants are liquid oxygen and RP-1. The second stage (S-II) is powered by five Rocketdyne J-2 engines with a total thrust of one million pounds. Engine propellants are LOX and liquid hydrogen. The third stage (S-IVB) is powered by one Rocketdyne J-2 engine with a thrust of 200,000 pounds. Engine propellants are LOX and liquid hydrogen. The interstage section between the second and third stage is conical and remains with the second stage after separation. An instrument unit containing the Saturn 5 Launch Vehicle guidance and flight control system instrumentation is installed in the adapter between the third stage and the Apollo Spacecraft.

[redacted]

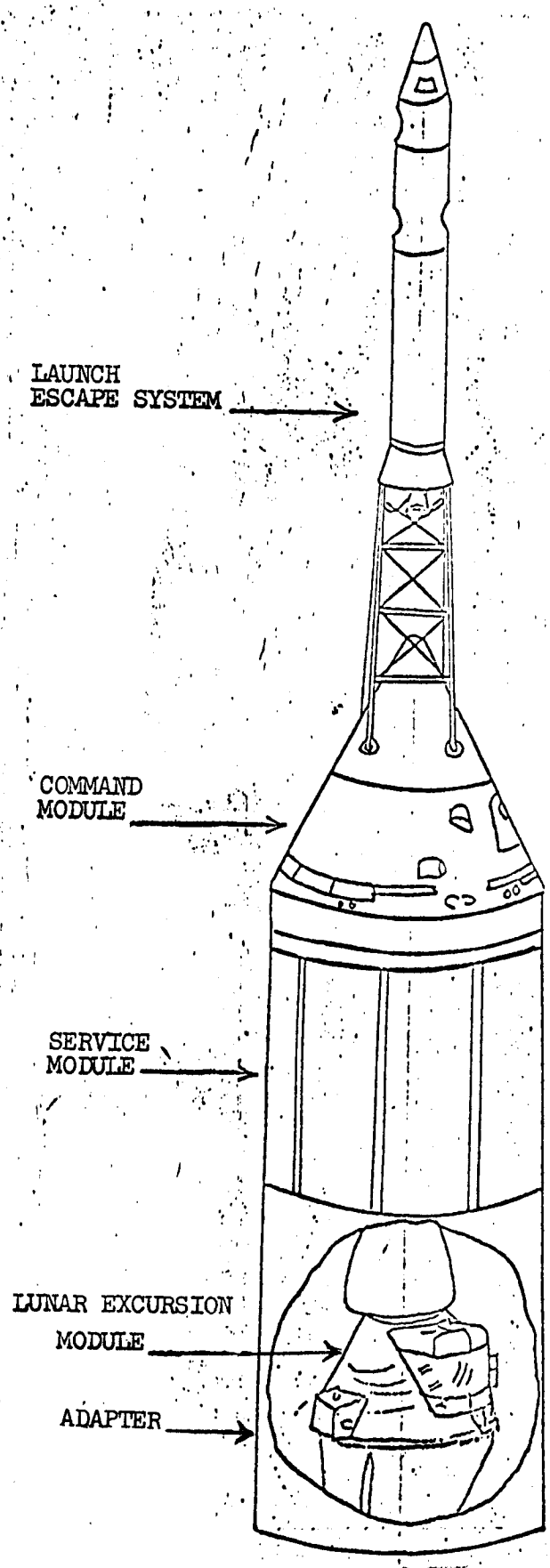

Figure 1-3 APOLLO SPACECRAFT

[redacted]

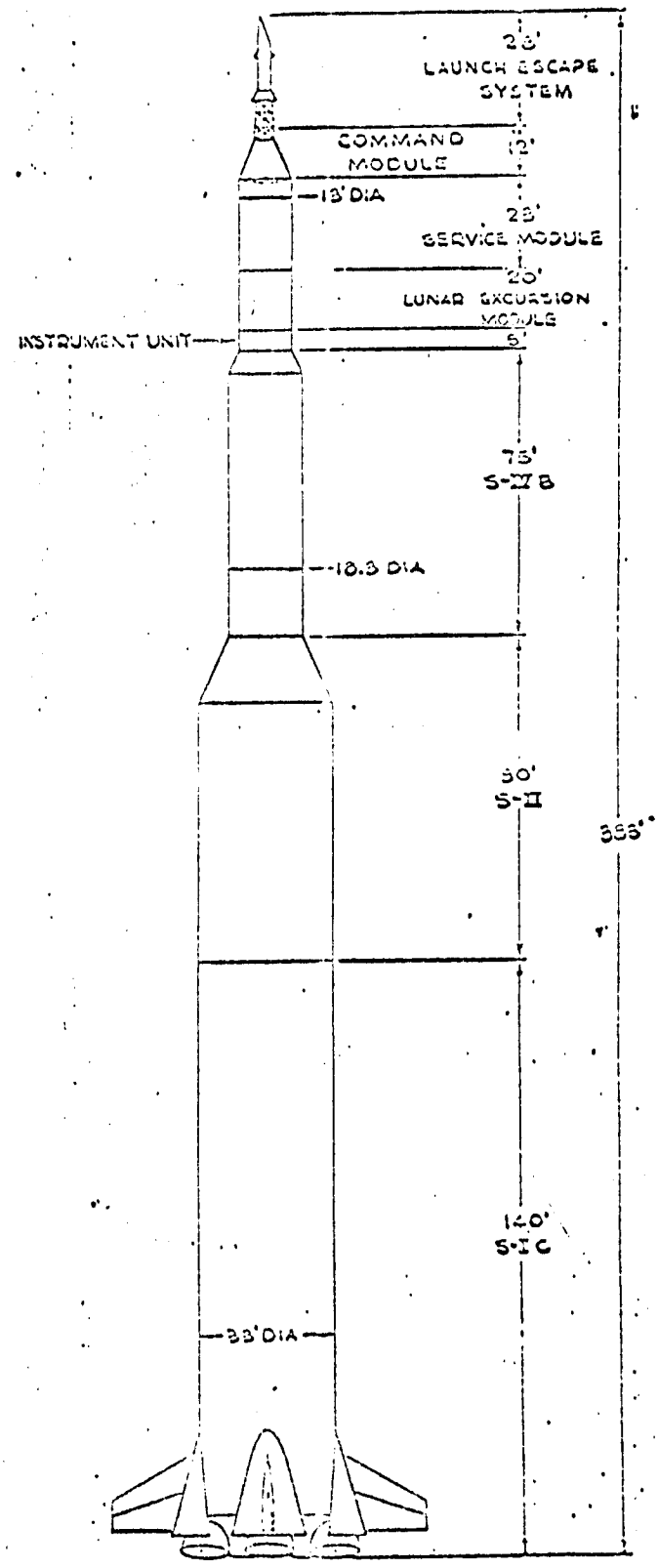

Figure 1-4 SATURN 5/APOLLO CONFIGURATION

Command Module - The Command Module of the spacecraft is the recoverable command center where all crew initiated control functions are exercised. Major systems and components of the Command Module include the following:

a. Structural System (including heat protection)

b. Flight Crew

c. Crew Systems (including displays and controls)

d. Communications System

e. Instrumentation System

f. Recovery Aids

g. Electrical Power System

h. Guidance and Navigation System

i. Stabilization and Control System

j. Environmental Control System

k. Reaction Control System

l. Launch Escape System

m. Earth-landing System

n. In-flight Test System

Service Module - The Service Module configuration includes the following major systems:

a. Structural System

b. Service Propulsion System

c. Reaction Control System

d. Supercritical Storage System

e. Environmental Control System

f. Electrical Power System

g. Communication System

h. Instrumentation System

Lunar Excursion Module - The Lunar Excursion Module includes the following major systems:

a. Structural System

b. Flight Crew

c. Crew Systems (including displays and controls)

d. Communication System

e. Instrumentation System

f. Electrical Power System

g. Guidance and Navigation System

h. Stabilization and Control System

i. Environmental Control System

j. Reaction Control System

k. Propulsion System

1-12 MISSION PROFILE

The Apollo Spacecraft is launched from Cape Canaveral into an earth parking orbit, then into a translunar trajectory by the Saturn 5 Launch Vehicle. The LES is jettisoned during second stage burn, as soon as dynamic pressure has reduced to the point where abort can be accomplished without it.

The Lunar Landing Mission is accomplished by a Lunar Orbit Rendezvous (LOR) mode. Two of the three crew members in the CM transfer to the LEM which separates and descends to the lunar surface. The third crew member remains in the CM orbiting the moon. After lunar exploration, the two crew members ascend in the LEM on a trajectory which permits rendezvous with the orbiting Command and Service Module (CSM). After the LEM crew transfers to the CM, the LEM is jettisoned.

The CSM is placed in a transearth trajectory and guided toward the reentry phase by SM propulsion. The SM is jettisoned prior to entry into the earth's atmosphere. The CM is decelerated for a safe landing on land or water by aerodynamic forces and maneuvers, and during the final phases of the landing sequence, by parachute deployment. A pictorial representation of the Apollo mission is given on Figure 1-5.

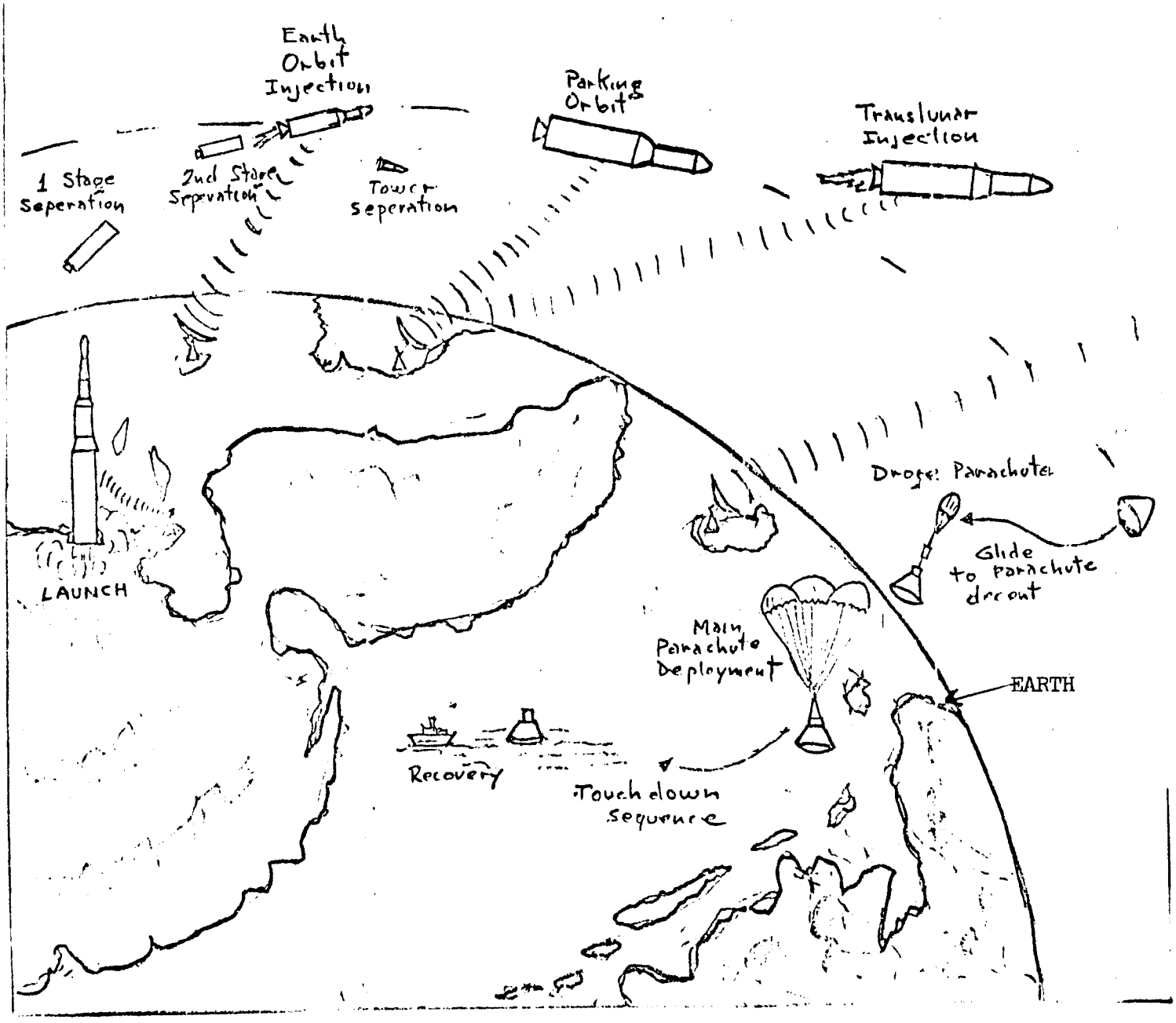

Figure 1-5 (Sheet 1 of 3)

MANNED LUNAR MISSION PROFILE

[redacted]

[redacted]

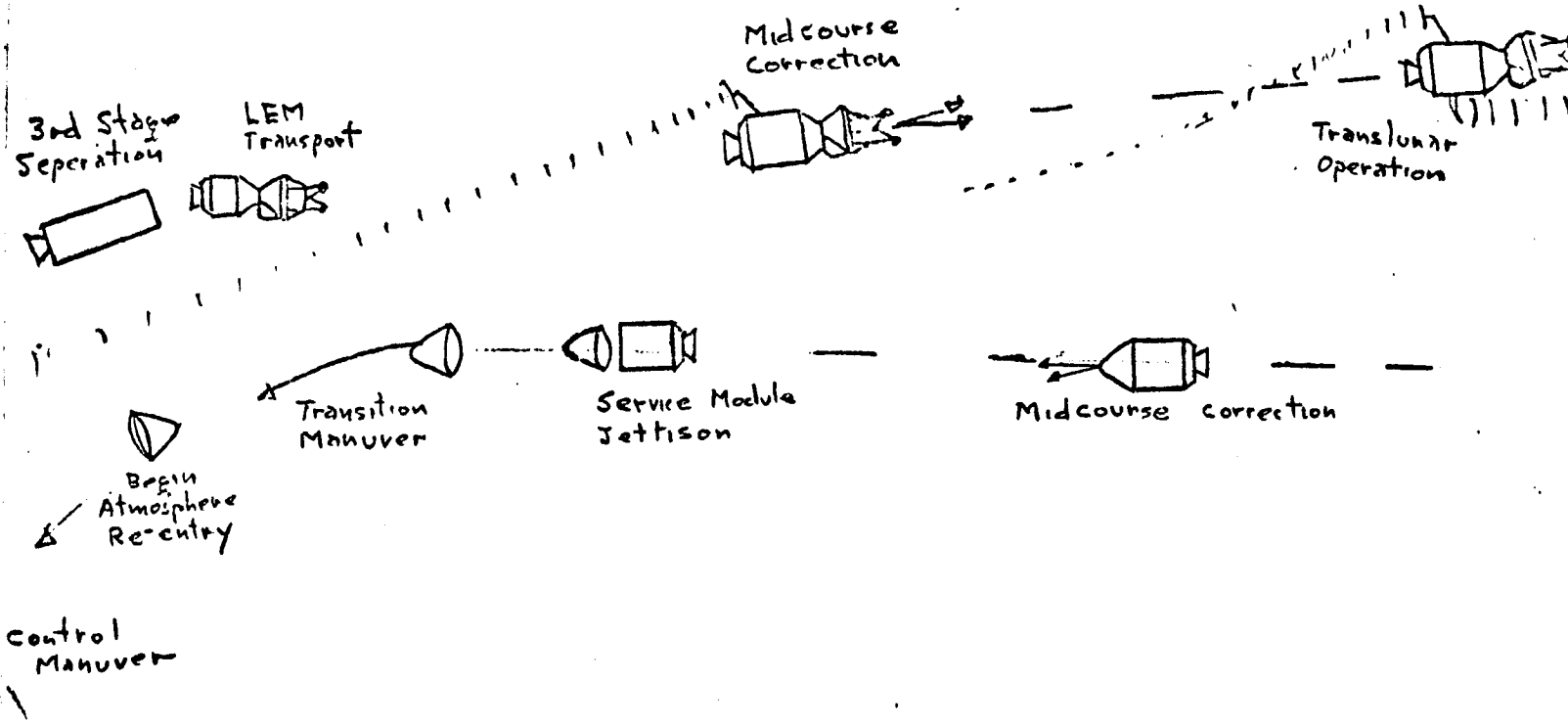

Figure 1-5 (Sheet 2 of 3)
MANNED LUNAR MISSION PROFILE

[redacted]

[redacted]

[redacted]

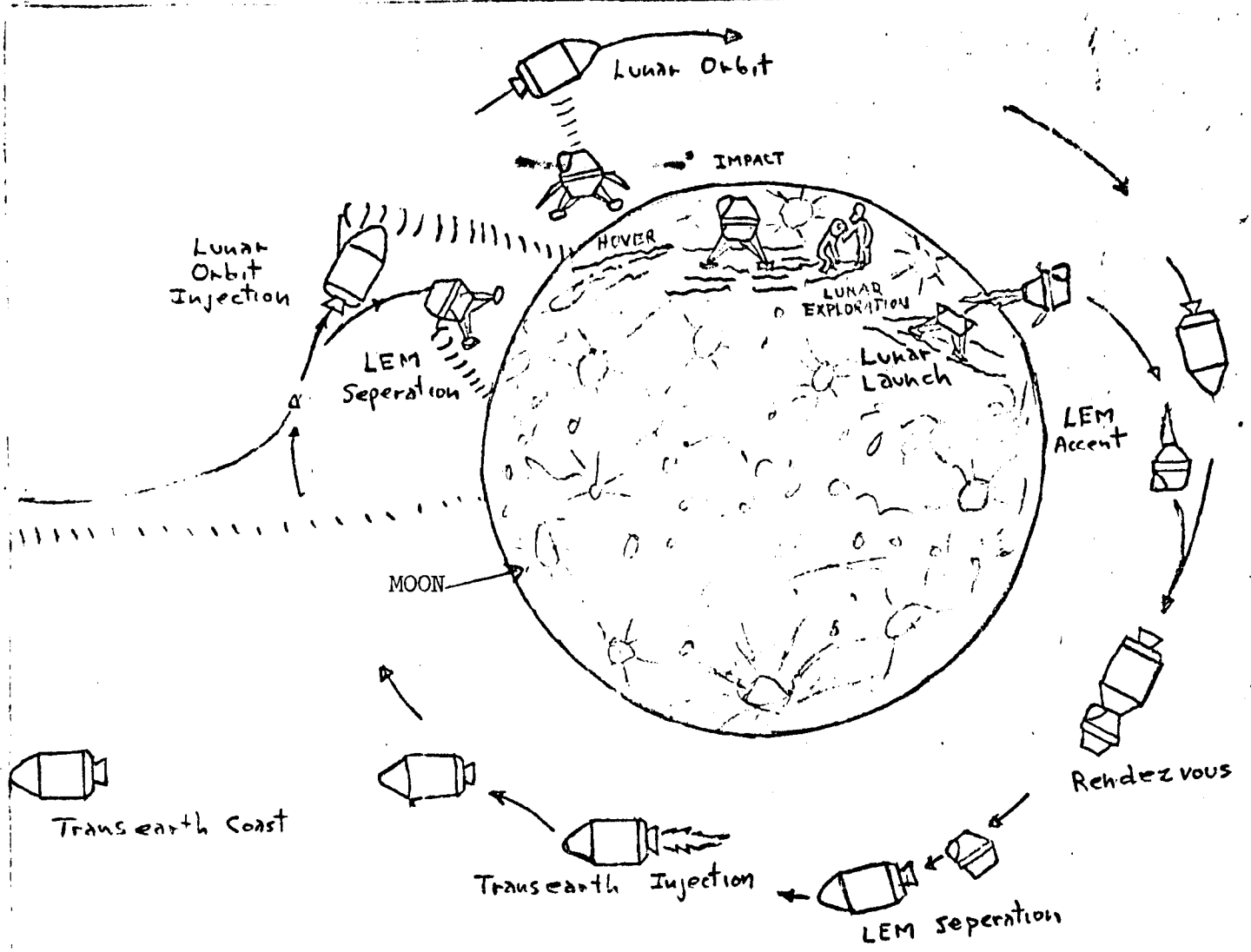

Figure 1-5 (Sheet 3 of 3

MANNED LUNAR MISSION PROFILE

[redacted]

SECTION II

SPACECRAFT OPERATIONS

2-1 NORMAL OPERATIONS

A typical Lunar Landing Mission time line summary is shown on Table 1-3. The table lists the major mission events and typical times associated with the various mission phases. A more detailed listing of the events that occur in each mission phase is discussed in the following paragraphs.

2.2 PRE-LAUNCH

The Launch Operations Center is responsible for the over-all planning and supervision of the assembly, checkout, and launch of the Apollo Space Vehicle Systems at the Atlantic Missile Range (AMR).

Launch Complex 39, located within the Apollo Program Area at AMR, will provide the facilities and equipment necessary to receive, final assemble, check out and launch Saturn 5 vehicles with their payloads.

The pre-launch phase begins with delivery of the spacecraft to the launch site and ends with the Saturn IC booster ignition. Major events of the pre-launch phase include the following:

a. Receiving and inspection of spacecraft components.

b. Spacecraft assembly and compatability tests.

c. Spacecraft systems test and checkout.

d. Flight readiness and acceptance tests.

e. Pre-launch preparation and servicing.

f. Pre-launch inspection and review.

g. Count down operation.

h. Launch operation.

2-3 LAUNCH

The launch phase begins with S-IC first stage ignition and ends with S-IVB third stage first-burn engine cutoff as the spacecraft and the S-IVB are injected into an earth parking orbit. Guidance for the ascent phase is under the control of the Launch Control Center and is accomplished by radio-inertial means.

[redacted]

MISSION TIME	PHASE	PHASE TIME	MISSION EVENT
T = 0	ASCENT	0	S-IC PROPULSION SYSTEM IGNITION (SPACE VEHICLE LIFT-OFF)
		12 SEC	SPACE VEHICLE PITCHOVER
		143 SEC	S-IC 1 ENGINE CUT-OFF
		148 SEC	S-IC 4 ENGINE CUT-OFF
			S-IC SEPARATION
			S-II ULLAGE ROCKET IGNITION
		150 SEC	S-II PROPULSION SYSTEM IGNITION
		155 SEC	LAUNCH ESCAPE SYSTEM JETTISON
		544 SEC	S-II 5 ENGINE CUT-OFF
			S-II SEPARATION
			S-IVB ULLAGE ROCKET IGNITION (3 SEC)
		547 SEC	S-IVB PROPULSION SYSTEM IGNITION
T = 0.196 HR		ET 706 SEC	S-IVB ENGINE CUT-OFF
	EARTH PARKING ORBIT	0	POST INJECTION CHECK (10 MIN)
		10 MIN	SYSTEMS CHECKOUT (15 MIN)
		25 MIN	EARTH ORBIT PARAMETERS CHECK (75 MIN)
		100 MIN	PREPARATION FOR TRANSLUNAR INJECTION (30 MIN)
		135 MIN	TRANSLUNAR INJECTION COUNTDOWN
T = 2.92 HR		ET 163.7 MIN	S-IVB ULLAGE ROCKET IGNITION (4 SEC)
	TRANSLUNAR INJECTION	0	
		2 SEC	S-IVB PROPULSION SYSTEM IGNITION
T = 3.01 HR		ET 314 SEC	S-IVB ENGINE CUT-OFF
	TRANSLUNAR COAST	0	POST INJECTION CHECK (15 MIN)
		0.50 HR	LEM TRANSPOSITION (15 MIN) ADAPTER SEPARATION S-IVB SEPARATION
		1.00 HR	PREPARATION FOR COAST (20 MIN)
		1.31 HR	SYSTEMS CHECKOUT (50 MIN) NAVIGATION FOR 1ST MIDCOURSE CORRECTION (5 HR., 10 SIGHTINGS)
		6.31 HR	SERVICE PROPULSION SYSTEM IGNITION
		7.00 HR	NAVIGATION FOR 2ND MIDCOURSE CORRECTION (5 HR., 10 SIGHTINGS)
		12.00 HR	SERVICE PROPULSION SYSTEM IGNITION
		17.00 HR	NAVIGATION FOR 3RD MIDCOURSE CORRECTION (30 HR., 10 SIGHTINGS)
		47.00 HR	SERVICE PROPULSION SYSTEM IGNITION
		52.00 HR	NAVIGATION FOR 4TH MIDCOURSE CORRECTION (10 HR., 10 SIGHTINGS)
		62.00 HR	SERVICE PROPULSION SYSTEM IGNITION
		63.75 HR	PREPARATION FOR LUNAR ORBIT INJECTION (1 HR)
T = 67.76 HR		ET 64.75 HR	S/M RCS ULLAGE ACCELERATION
	LUNAR ORBIT INJECTION	0	
		2 SEC	SERVICE PROPULSION SYSTEM IGNITION
T = 67.85 HR		ET 322 SEC	SERVICE PROPULSION SYSTEM CUT-OFF

ET = ELAPSED TIME

Table 2-1

Typical Lunar Landing Mission Time Line Summary

[redacted]

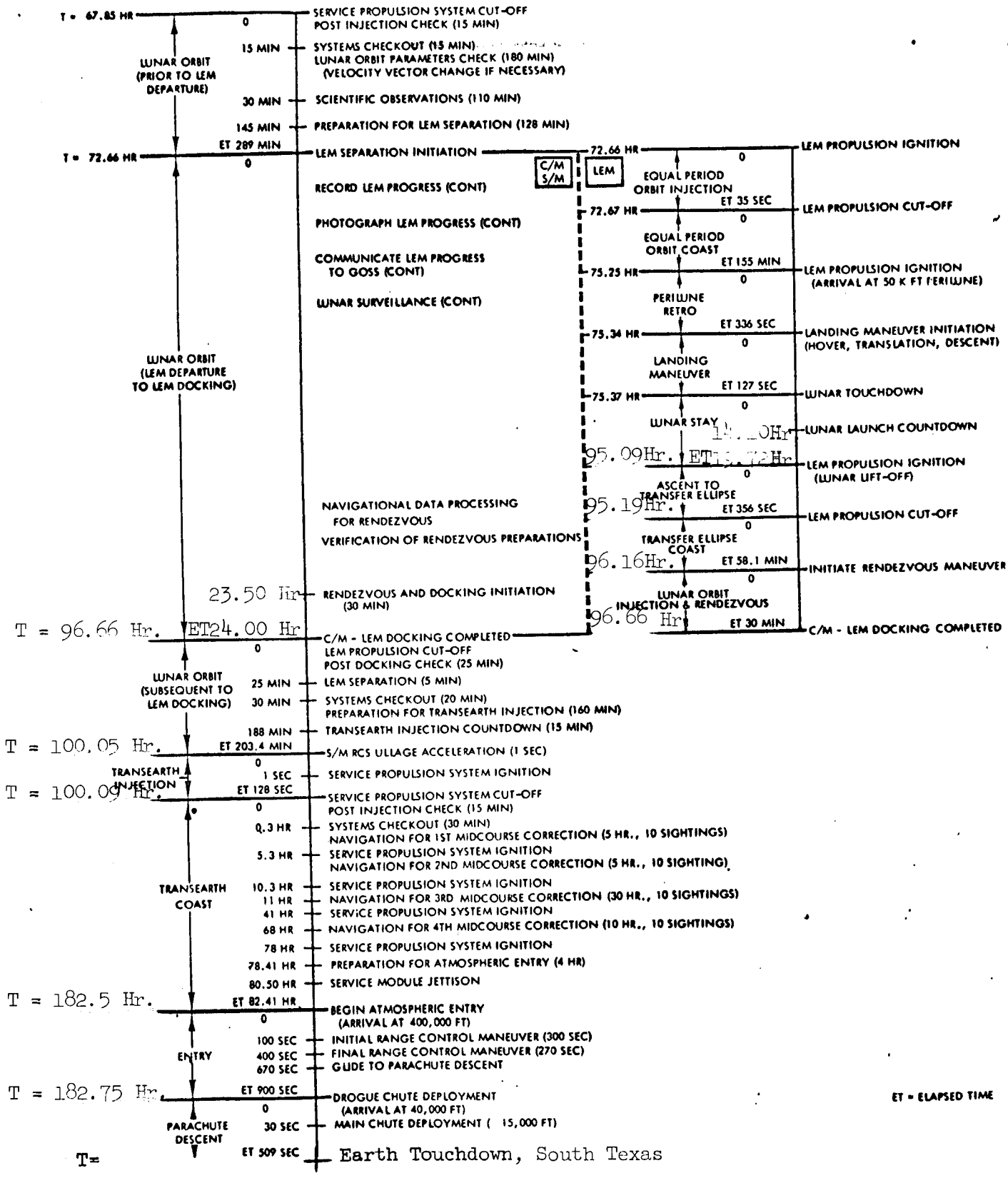

Table 2-1 (Cont'd.)

Typical Lunar Landing Mission Time Line Summary

2-4 POWERED FLIGHT

During ascent there is no requirement for any astronaut control. In the event of an abort in the sensible atmosphere, both the Inertial Measurement Unit and the Inertial Reference Integration Gyroscopes of the Guidance and Navigation System maintains spacecraft attitudes.

The approximate duration of the ascent phase is twelve minutes and includes the following major events:

a. S-IC propulsion system ignition

b. S-IC begin pitchover program

c. S-IC No. 1 engine cutoff

d. S-IC No. 2, 3, 4, and 5 engine cutoff

e. S-IC separation

f. S-II ullage rocket ignition

g. S-II propulsion system ignition

h. CM Launch Escape System jettison

i. S-II 5 engine cutoff

j. S-II separation

k. S-IVB ullage rocket ignition

l. S-IVB propulsion system ignition

m. S-IVB engine cutoff

n. S-IVB and spacecraft earth parking orbit achieved.

2-5 EARTH PARKING ORBIT

The earth parking orbit phase begins with the S-IVB first-burn cutoff, as the spacecraft and S-IVB are injected into the parking orbit, and ends with the S-IVB second-burn ignition signal for translunar injection. The duration of the

earth parking orbit is dependent on the following major variables:

a. Lunar declination

b. Launch azimuth

c. Orbit decay characteristics

d. Inertial guidance system accuracy

e. GOSS coverage

f. Spacecraft systems checkout requirements

Present plans indicate that for system checkout purposes and orbit determination, it is desirable to have from one to three earth orbits. Attitude stabilization during the earth parking orbit is provided by the S-IVB Stabilization and Control System which derives its reference and is driven by the Apollo Guidance System (AGS). The AGS has the capability of displaying spacecraft velocity, attitudes and other parameters on the guidance computer display panel.

During the earth orbit phase the spacecraft maintains communications and data exchange with the Near Earth Instrumentation Facilities (NEIF) on the ground and is under the command control of the Integrated Mission Control Center (IMCC).

Major events during the earth orbital phase are as follows:

a. Post injection attitude stabilization

b. Post injection spacecraft systems checkout

c. Earth parking orbit parameter determination

d. Translunar injection preparation

e. Translunar injection countdown

f. S-IVB propulsion signal

2-6 TRANSLUNAR INJECTION

The translunar injection phase begins with the S-IVB second-burn ignition

signal and ends with the S-IVB engine second cutoff signal. Major events are as follows:

a. S-IVB ullage rocket ignition

b. S-IVB propulsion system ignition

c. S-IVB engine second cutoff and insertion into translunar orbit

The translunar injection sequence is controlled by the Apollo Guidance System and is approximately five minutes in duration.

2-7 TRANSLUNAR

The translunar coast phase begins with S-IVB second engine cutoff and ends with the SM Propulsion System cutoff signal after injection into the lunar orbit. The duration of the translunar phase is dependent upon the following major parameters:

a. The earth-moon relationship at injection

b. Injection parameters

c. Lunar orbit altitude

d. Midcourse correction maneuvers

e. Translunar trajectory selection

From the above considerations the translunar transit time can vary from 60 to 80 hours. A nominal circumlunar trajectory with a 100 nautical mile lunar altitude approximates 60 hours transit time. The major events during this phase are as follows:

a. Translunar post injection check

b. LEM transposition

c. Adapter separation

d. S-IVB separation

e. Prepare for coast attitude stabilization

f. Spacecraft systems checkout

g. First midcourse correction if necessary

h. Second midcourse correction if necessary

i. Third midcourse correction if necessary

j. Fourth midcourse correction if necessary

k. Preparation for lunar orbit injection

l. SM ignition signal for injection at pericynthion

m. SM cutoff signal after injection into lunar orbit

Repositioning of the Lunar Excursion Module (LEM) is expected to require approximately forty-five minutes. Navigation sightings commence soon after translunar injection. Current plans require that navigation sightings be made every fifteen minutes up to the time for making the first velocity correction. Observations are used to determine spacecraft position and velocity and to update the guidance system to within suitable tolerances.

2-8 LUNAR ORBIT

The lunar orbit phase starts with the SM cutoff signal after injection into lunar orbit and ends at the ignition of the SM propulsion system for transearth injection.

Major events during the lunar orbit are summarized as follows:

a. Lunar orbit post injection check and stabilization

b. Spacecraft systems checkout

c. Lunar orbit parameters check

d. Scientific observations

e. Preparation for LEM separation

f. LEM separation

g. LEM descent and landing

h. Lunar surface operations

i. LEM ascent

j. LEM rendezvous

k. LEM docking

After LEM separation and departure, the spacecraft operations continue including photographic coverage and communication of LEM progress as it descends and lands. Communication with GOSS facilities on earth is maintained by the Command and Service Modules (CSM) in orbit. LEM progress is communicated to GOSS and thence indirectly to the CSM.

Navigational data processing of rendezvous requirements is computed by the spacecraft computer and verified by IMCC. LEM and spacecraft rendezvous docking maneuver is then initiated.

2-9 LUNAR DESCENT AND LANDING

The lunar orbit and descent phase starts with LEM landing stage first ignition signal and ends at lunar touchdown.

After the LEM with two crew members is separated from the CM, the LEM is oriented so that retro thrust can be applied in a direction toward the moon center. At a precise instant, one of the LEM engines is fired for a nominal time duration to change the flight path angle. This places the LEM in an orbit with period equal to that of the CSM orbit but with a pericynthion of approximately 50,000 feet. Then the gross descent maneuver is executed with altitude being reduced by the controlled thrust of all three LEM rocket engines.

Upon reaching an altitude of approximately 100 feet with zero velocity, two engines are shut down, and the vehicle hovers under the controlled thrust of the remaining engine while the crew visually locates the most acceptable landing point.

A maximum translational range of approximately 1000 feet with maneuver duration of approximately 45 seconds is available for landing.

The basic landing aids are crew vision and radar altimeter sensors. During the entire landing maneuver the LEM is within line-of-sight of the CM.

The major events for lunar landing proceed as follows:

a. LEM landing stage first ignition for equal period orbit injection

b. LEM landing stage first cut-off

c. LEM landing stage ignition of pericynthion retro

d. Landing maneuver initiation for hover, translation, and descent

e. Lunar touchdown

2-10 LUNAR SURFACE OPERATIONS

After the LEM has completed the descent and landing maneuvers, the commander makes an egress from the vehicle and performs an inspection of the immediate lunar surface and the LEM followed by preparations and checkout for launch. He then proceeds to perform observations, scientific investigations and collection of certain samples of the lunar environment. The co-pilot normally remains in the vehicle and maintains communications with the commander, the orbiting CSM while it is within his communication horizon, and the earth based control center through GOSS. For certain periods, the roles of the commander and the co-pilot in these activities are interchanged. Both crewmen may leave the LEM at the same time.

The initial lunar landing mission is designed for a nominal stay time on the surface of twenty-four hours. Each crewman's extra-vehicular life support equipment provides for a total of twenty-four hours of separation from the LEM

life support system. Maximum duration of continuous separation from the LEM is initially limited to four hours. In later missions the total lunar stay time may be increased by the use of logistic vehicles.

Operations and scientific investigations on the lunar surface will be dictated by individual mission requirements, and will be conducted in accordance with a planned development schedule that will factor in information and research data obtained from unmanned flights, other space programs, and previous lunar landing missions. The LEM provides the necessary support for the operation and control of the scientific equipment and for processing and transmitting of scientific data to earth.

2-11 LUNAR ASCENT

The Lunar Ascent phase begins with ascent stage first ignition signal and ends with LEM ascent stage engine final cut-off signal at completion of rendezvous.

Ideal conditions for launch from the lunar surface provide for minimum velocity transfer within the LEM trajectory plane and require zero transfer between the LEM trajectory and CSM orbital planes. As the LEM proceeds toward rendezvous, its trajectory follows a Hohmann transfer ellipse. Normally, for about a 24 hour stay time, the LEM launches during the thirteenth CSM orbit and proceeds directly toward rendezvous and docking. The major events for the lunar launch phase are:

a. Lunar launch checkout (performed on the lunar surface, paragraph 2-10).

b. Lunar launch countdown

c. LEM ascent stage first ignition and cutoff

d. Lunar ascent to Hohmann transfer ellipse

e. LEM ascent stage ignition for injection in CSM orbit

f. LEM ascent stage cutoff

g. Initiate rendezvous maneuver

h. CSM and LEM docking completed

A normal launch requires that the orbiting CSM lead the LEM by a predetermined orbit angle. This angle is a function of the ascent time and range traversed by the LEM during boost, the boost burnout altitude and CSM orbit altitude. The Apollo CSM is in line-of-sight and remains so through boost, coast and the actual rendezvous maneuver.

"Anytime" launch capability may be provided by using a parking orbit for late launch or an "overshoot" orbit for early launch. A late launch may be just a few minutes or over an hour late. In either case, the procedure would be to boost to an approximate 50,000 feet parking orbit and wait until the phase relationship is right to effect a Hohmann transfer. The early launch can be compensated by utilizing an "overshoot" orbit. In this event, the burnout velocity would be more than required for a Hohmann transfer. The orbit would have an apocynthion higher than the CSM altitude and rendezvous would take place at the second intersection of the orbits.

2-12 LUNAR RENDEZVOUS AND DOCKING

Lunar orbit rendezvous actually begins with midcourse adjustment to the transfer orbit of the LEM to reduce errors accumulated during the lunar boost phase. At a relative range of about 15,000 feet between the LEM and CSM, active collision-course control is initiated using terminal guidance techniques. A positive thrust applied at the completion of the terminal maneuver cancels the difference between the lunar orbit and the apocynthion velocities. Manual docking begins at a range of approximately 100 feet. The CM and LEM are joined in the same configuration as in the translunar phase. Both the LEM and SM propulsion are available to perform the maneuvers of rendezvous.

[redacted]

After the rendezvous and docking are completed, the LEM crew members are transferred back into the CM and the LEM is then separated. Final checkout and countdown procedures are then completed prior to the lunar escape maneuver.

2-13 TRANSEARTH

The transearth phase starts at the ignition of SM propulsion for transearth injection and ends with atmospheric re-entry at about 400,000 feet altitude. The major events occuring during this phase are as follows:

a. SM propulsion ignition for transearth injection

b. SM propulsion cutoff

c. Spacecraft systems checkout

d. First midcourse connection if necessary

e. Second midcourse connection if necessary

f. Third midcourse connection if necessary

g. Fourth midcourse connection if necessary

h. Preparation for SM jettison

i. SM jettisoned

The SM propulsion system is used for the lunar injection maneuver, and guidance is supplied by the spacecraft guidance system. The timing and flight conditions to be obtained are precomputed to yield a safe return trajectory and re-entry to achieve landing at the preselected earth landing site. Flight time will vary from 60 to 80 hours.

Injection into the transearth trajectory is possible at least once during each revolution in the lunar circular orbit. The position in the orbit, velocity, and out-of-plane velocity component at transearth injection control the flight path angle, inclination, and time at earth entry.

[redacted]

Navigational techniques include the determination of angles between stars and the earth or moon through use of the sextant, occultation of stars, and the interpretation and utilization of ground track data.

2-14 RE-ENTRY AND LANDING

This phase starts at atmospheric re-entry and ends at touchdown. Major events for the re-entry and landing phase are as follows:

a. Begin re-entry attitude stabilization

b. Control maneuvers

c. Ballistic re-entry

d. Aerodynamic flight

e. Forward compartment heat shield deployment

f. Drogue parachute deployment

g. Main parachute deployment

h. Parachute descent

i. Recovery aids deployed

j. Earth touchdown

The location of the re-entry point on the earth transfer orbit is determined by the declination of the moon at time of transearth insertion, the transmit time, and the transfer orbit inclination to the equator.

Locus of re-entry points for a landing site in Southern Texas and for one in Australia are presently anticipated for several lunar declinations. The track of a re-entry orbit that has a 30 degree inclination to the equator indicates that a range of 7000 to 8000 nautical miles after re-entry is required to return to Southern Texas from all lunar declinations. The Australia site reduces this range requirement to about 5300 nautical miles for northern lunar declinations.

To insure recovery of the CM, communication must exist and ground tracking must be accurate for altitudes exceeding about 300,000 feet. At low altitudes, communication must be resumed to assure prompt recovery. Land touchdown is the primary mode of landing and water landing is possible.

Following re-entry, when the mach number of the CM has become subsonic, the pilot arms a sequence control subsystem and events proceed as follows:

a. At 50,000 feet a barometric switch electrically initiates forward compartment heat shield deployment by firing of gas generators and cable cutters. Two units are actuated; each one cuts both cables, releases all four latches, and energizes two thrusters which push the forward heat shield away from the CM. The heat shield and linkage with the CM serves thereafter to attenuate the landing impact.

b. At 25,000 feet a barometric switch initiates firing of a mortar which deploys the drogue parachute to stabilize the CM.

c. Approximately 35 seconds later, at 15,000 feet, a barometric switch initiates firing of mortars which simultaneously deploys three pilot parachutes and releases the drogue parachute.

d. The pilot parachutes pull out the three main parachutes which are dereefed by reefing cutters eight seconds after deployment.

e. Normal parachute descent begins and the HF antenna is erected. The HF beacon provides electronic signals for location of spacecraft position.

f. The impact point is determined by a combination of ground tracking and ground and on-board computation. Data is transmitted to the recovery forces.

g. At impact the main parachutes are disconnected, the SOFAR bombs fired, the high intensity flash beacon is activated, and dye markers deployed by the crew. The VHF antenna is erected and communication may be accomplished for long (HF) or short (VHF) range.

2-15 RECOVERY

(to be supplied)

2-16 POST FLIGHT

The post-flight mission phase begins with the completion of the retrieval and recovery operation. As soon after touchdown as possible, the CM electrical checkout is performed at the primary recovery area to record the status of all subsystems. The test data will be correlated with previously recorded checkout data to correlate performance.

At the recovery support area each crew member is interrogated by a standardized procedure to obtain and identify all technical data and evaluate flight experience. Crew members undergo thorough physical examinations and a planned program of complete psychological testing to evaluate physical condition and the effects of the flight on sensory, motor, and cognitive functions. If necessary, a series of tests are performed over a period of time to evaluate physiological and psychological trends.

2-17 PLANNED OPERATIONS FOR CONTINGENCIES

2-18 CONTINGENCIES AND ABORT OPERATIONS

Contingency Classification - Contingencies are classified as follows:

a. Rectifiable, if the crew is able to isolate and repair or replace the faulty component.

b. Tolerable, if an alternate mission can be performed without endangering the crew.

c. Mission abort, if either the primary or alternate mission cannot be achieved without further endangering the crew. In this event the crew normally follows a prescribed abort procedure and lands in one of several pre-selected landing areas.

Decision Planning - Contingency situations are in reality planned-for emergencies. Such conditions are as completely as possible determined in advance for each mission phase and imagined situation, and possible recourse or alternatives planned. Ordinarily, a scheduled checkout procedure and evaluation precedes any emergency so that, in the event of such a condition, the commander and his associates already have on hand the information to support decisions.

Launch Escape - In the event of emergency during the launch and ascent phase of the mission, the Launch Escape System provides an abort capability throughout the first stage boost phase and for the first ten seconds following second stage ignition. Abort during first stage burning requires the initiation of CM and escape tower separation from the launch vehicle. The escape tower propulsion is used to attain a safe return trajectory. For aborts after ten seconds of second stage burning, the CM and SM are staged, and the Service Module Propulsion System is used for the abort propulsion and safe return trajectory.

Earth Orbit - Functions to be performed in abort from earth orbit include selecting the landing site and staging the CM and SM. Service Module propulsion is used to apply the de-orbit velocity impulse. Re-entry is controlled in a manner similar to nominal mission re-entry.

Translunar Injection - In the event the systems status check indicates that injection into the translunar phase is not advised, the spacecraft may be left in earth orbit for alternate mission objectives selected prior to the flight. Abort during the translunar insertion maneuver results in a highly elliptical orbit. After thrust termination and coasting in orbit, the landing site must be selected and proper velocity increment added by the SM propulsion to yield a safe return trajectory.

Translunar - Abort from translunar flight may be active or passive. At some point along the trajectory the quickest return to earth is to continue along the translunar trajectory and perform a circumlunar trajectory. Aborts early in the translunar trajectory require a velocity impulse and attitude change yielding a cislunar trajectory and giving a safe return to earth.

Lunar Orbit Injection - In the event that braking into lunar orbit is not advised, the translunar trajectory is such that a circumlunar mission may be accomplished providing a safe return to earth.

Lunar Orbit and Landing - In the event the lunar orbit is unsatisfactory or lunar landing is not advised, the LEM is separated from the CSM and SM propulsion is used to perform the lunar escape maneuver.

In the event the gross descent maneuver cannot be executed by LEM, it's equal-period orbit with the CSM will provide favorable conditions for carrying

it to rendezvous when the phase relationships are correct. In a properly executed gross descent the LEM may be aborted at any time up to the end of hover by injecting the LEM into a transfer ellipse.

Transearth - The spacecraft is provided with navigation and guidance equipment that will permit return of the CM to a landing site on earth without astronaut assistance.

Re-entry - An emergency re-entry mode which may be used in the event of re-entry guidance control failure is the use of a constant attitude mode whereby the pilot manually controls the bank angle so as to follow a predetermined constant attitude load-time history. The impact point will be determined by a combination of ground tracking and transmission to recovery forces.

2-19 MISSION ALTERNATIVES

General - Since the consideration of alternative missions arises from contingency and abort situations, a number of such missions are described above in paragraph 2-18.

Alternate mission possibilities depend upon the nature of the contingency as well as the time at which it occurs. Because of the large investment and effort involved in each Apollo launch, it is mandatory that the maximum possible systems qualification and scientific research be conducted during a contingency operation. These alternate missions, while productive, should be consistent with crew safety.

Utilizing the world-wide GOSS station inputs of data as processed by the computer complex, the IMCC will provide critical performance data and flight parameter changes for alternative missions. Either the spacecraft crew or the IMCC/GOSS complex will implement the required procedures.

Earth Orbits - The large performance capability of the upper propulsion stages, coupled with possible failure modes of lower stages, suggests another alternative is possible in the event a malfunction occurs in the lower stages. The contemplated alternative is somewhat different in principle than an abort in that separation from lower stages is accomplished with the intent to continue to an earth orbital mission. Due to the many types of possible booster malfunctions, alternate missions cannot be pre-programed into the guidance and sequence systems; therefore, the flight crew must command guidance and propulsion of the S-IVB and SM during alternate earth orbital missions.

Lunar Reconnaissance Orbits - This type of alternate mission would be conducted in the event a major failure was discovered within the LEM at any time prior to separation to its transfer orbit.

2-20 CREW OPERATIONS

2-21 NORMAL CREW ACTIVITY

General - The flight crew consists of three men who are selected from a group of astronauts. Individuals of the group of astronauts are continually being selected according to qualification criteria that is thorough and complete. One of the qualification objectives is the selection of crewmen that will provide an integrated astronaut-spacecraft combination.

The three crewmen are cross trained to be capable of manning any of the duty stations in the CM. One crewman, the commander normally has a position at the left hand or control station. The second crewman, the navigator is normally located at the navigation station. During launch and reentry he takes a position

at the center station. The third crewman is the systems manager, and he is normally located at the right hand or system management station. The CM commander has also been assigned as the LEM commander. Preliminary study indicates that the navigator may complete the LEM crew for lunar operations.

CM Control Station - The crewman in this position monitors all flight displays, operates all flight controls, and makes all flight mode selections. He also monitors booster operation, monitors conditions for safe flight versus abort, and operates the abort control. This position is manned during launch, earth parking orbit, translunar orbit injection, CM and LEM mating, midcourse corrections, lunar orbit injection and re-entry. During the lunar parking orbit the CM crewman divides his time between this station and the System Management Station.

CM Center Station - The crewman in this position assists the commander in all of his functions except flight mode selection and operation of abort control. He is capable of performing all of the commander's functions if required. He assists the crewman in the System Management Station and is capable of performing his functions. This position is manned during launch and re-entry.

CM System Management Station - The crewman in this position monitors the status of all spacecraft systems and controls the operating condition of all systems. This position is manned at all times except during portions of the lunar parking orbit.

CM Navigation Station - The crewman in this position aligns the Inertial Measuring Unit, makes navigational fixes, and monitors delta velocity maneuvers. He also monitors the In-Flight Test System panel and performs maintenance for the

Guidance and Navigation System. Ground based information is utilized as a check on the on-board test system. This position is manned during delta velocity maneuvers and just prior to and during scheduled navigational fixes.

CM Sleep Position - This position is utilized in accordance with the work-rest schedule and as required. The following work-rest cycle may be considered as a tentative guide in describing the Apollo crew duty.

a. Twenty-six hour cycle

b. The duty period will be no longer than 2 hours except during initial portion of flight, midcourse navigation (for navigator), lunar operations, and the terminal portion of the flight.

c. One hour off duty period between each duty period and before and after each sleep period.

d. Two four-hour sleep periods per cycle when possible.

CM Food and Hygienic Position - This position is utilized as required.

LEM Commander Station - The crewman in this position monitors all flight displays, operates all flight controls, and makes all flight mode selections. He also monitors LEM engine performance, monitors conditions for safe flight versus abort, and initiates abort if necessary. This position is manned during LEM checkout, lunar descent and lunar ascent.

LEM Co-pilot Station - The crewman in this position assists the commander in all of his functions except making flight mode selections and operation of abort control. He is capable of performing all of the commander's functions if

required. In his own duties, the co-pilot monitors the status of all LEM systems including control and operating conditions, aligns the LEM inertial measuring Unit, makes navigational fixes, and performs on-board maintenance. This position is manned during all LEM operations.

CM Primary Crewman Responsibilities - Crew member designation and activity is based upon primary duty responsibilities. The spacecraft commander occupies the control station on the left side which is a couch facing the main panel. He has primary cognizance of those controls and displays requiring time-critical response to insure crew safety and/or mission success. Under normal circumstances, his activity encompasses flight mode selection, implementation of navigation and guidance, and monitoring operational or exploration direction. He also serves as the commander of the LEM.

The navigator's primary responsibilities are the operation and maintenance of Guidance and Navigation equipment. He occupies the center couch during launch and re-entry and provides back-up for the commander in monitoring key systems performance during critical mission phases.

The system engineer occupies the right hand couch during all flight phases except portions of the lunar parking orbit. His primary responsibilities are to operate the In-flight Test System, and monitor and maintain all systems other than Guidance and Navigation. During critical mission phases, he monitors certain critical parameters of the spacecraft and propulsion systems.

2.22 CONTINGENCY CREW ACTIVITY

General - To achieve the crew safety probability of .999 as an operational goal, it is essential that every conceivable contingency affecting crew safety and mission success be anticipated by appropriate alternatives and action based

on redundancy in basic design or spacecraft systems operational mode, and on crew activity planning.

It is the responsibility of the spacecraft commander to take appropriate action if a contingency arises, and of his alternate in the event of the commander's incapacity. It is therefore essential that contingency operations comprise a significant portion of the training program for the spacecraft crew.

The crew is to be aided in decision-making functions by the Crew Safety System (CSS) as well as by the Ground Operational Support System and the Integrated Mission Control Center. The CSS on board the spacecraft consists of the necessary sensors, test equipment, and displays to detect and diagnose malfunctions and to allow the crew to make a reasonable assessment of the contingency. For emergency conditions and abort modes which have time requirements inconsistent with crew reaction times, the CSS is capable of initiating aborts automatically.

Contingency Operations - The rectifiable contingency classification discussed in 2-18 implies no major deviation in mission objectives. Flight crew members perform detailed systems testing to recognize and isolate degeneration or malfunction of a specific spacecraft system. The complexity of systems functions bring into play a diversity of crew skills and disciplines for deciding what to do in response to a system NO-GO, or indication of degradation.

If a tolerable contingency occurs, the alternate mission depends upon the nature of the contingency as well as the time at which it occurs. Because of the large investment and effort involved in each Apollo launch, crew safety, and maximum systems qualification, scientific research, and productiveness should be the keynote of such missions. Crew activity during various alternate missions varies extensively.

In the mission abort sequence the specific crew activities depend on the flight phase during which the abort occurs. Some of the more important crew activities include assessment, decision making, abort maneuvering, monitoring events, and evaluating equipment performance.

2-23 CREW TRAINING

General Plan - The astronaut training program for Apollo requires careful planning and programming to make the most effective use of the training time available within the tight scheduling of the manned lunar landing mission. This program is supported by the development of plans, personnel, facilities, and by training equipment, devices, aids, manuals, and simulation exercises. The training program exhibits a flexibility to incorporate changes that may occur in mission goals, systems design, and operational philosophy resulting from research and other space program developments.

Training Goals - The training includes the scientific and technical preparation to reinforce, as required, each crew member's individual experience and knowledge. This is accomplished through review, academic study, exercise and practice. Some of the training areas are:

a. Familiarization with the Apollo program mission objectives and spacecraft and crew performance requirements.

b. Training under exposure to anticipated stress environments.

c. Physical conditioning to maintain overall physical fitness and coordination.

d. Specific simulated mission and mission training

for development of proficiency in procedures. This includes participation in test and checkout of the spacecraft, practice of launch abort, and simulation of operational methods in the tracking and communications networks.

e. Spacecraft systems training for the attainment of proficiency in performance of required systems tasks. The flight crew is trained in the operation, inflight maintenance, and management of all spacecraft systems. These systems include electrical power, navigation and guidance, stabilization and control, Service Module propulsion, Command and Service Module reaction control, Lunar Excursion Module propulsion-reaction control, communications and instrumentation, launch escape, and earth landing.

f. Recovery and survival training for normal and emergency situations.

CHAPTER 2 SPACECRAFT SYSTEMS DESCRIPTION

SECTION III

SPACECRAFT

3-1 SPACECRAFT MODULAR DESIGN

The Spacecraft (SC) is composed of the Command Module (CM), the Service Module (SM), the Lunar Excursion Module (LEM), the Launch Escape System (LES), and the Spacecraft Adapter. The concept of having individual functional units or modules is employed so that systems peculiar to a specific mission can be modified without substantially affecting the design of systems common to general or ultimate missions. The principle of "effective weight" is realized through the use of separable modules. In a given total mission, optimum weight is attained for each phase of flight by proper jettisoning of expendable units.

3-2 SPACECRAFT - GENERAL CRITERIA FOR LOADS

3-3 FAIL-SAFE PRINCIPLES

Fail-safe principles apply to all spacecraft structures, systems, and components. Failures do not propagate sequentially.

3-4 LIMIT CONDITIONS

Load envelopes are established by the superposition of critical loads for all flight modes including the cumulative effects of additive type loads. All systems are capable of functioning under these conditions.

3-5 SAFETY FACTORS

All spacecraft structure has positive margins of safety over limit conditions.

Ultimate Factor - The ultimate factor is 1.5 applied to limit loads. In special cases, as justified by analysis and approved, the factor may be 1.35.

3-6 PRESSURE VESSELS

Proof Factor - Except as justified by analysis and approved in special cases, the proof factor is 1.33.

Ultimate Factor - The ultimate factor is 1.50.

3-7 HYDRAULIC AND PNEUMATIC SYSTEMS - FLEXIBLE HOSE, TUBING AND FITTINGS

Proof Factor - Applied to limit pressure

a. Less than 1.5 inches diameter - 2.0

b. Greater than 1.5 inches diameter - 1.5

Burst Factor - Applied to limit pressure

a. Less than 1.5 inches diameter - 4.0

b. Greater than 1.5 inches diameter - 2.5

3-8 PRESSURE STABILIZED STRUCTURES

No structure is pressure stabilized.

3-9 SPECIAL FLIGHT LOADS

Vibration - The analysis of the effect of propulsion system transients considers the engines to be deflected in the worst manner within allowable gimbal limits. The effects of the steady and transient imputs are combined. Vibration analysis recognizes the lower damping present in a vacuum.

Dynamic Loading - The calculation of dynamic loads includes the effects of engine start, rebound on the pad, lift-off transients including ground winds,

gusts, wind shears and buffeting. The coupling of the structural dynamics with the flight control system is included in the determination of dynamic loads. The structure withstands localized transient loads imposed by the operation of ballistic devices and other suddenly-applied forces such as drogue mortars, forward heat shield thrusters, and docking contacts.

Noise - The design accommodates exterior sound pressure levels encountered during any phase of a normal or aborted mission. Special attention is given to the sound pressure levels created on various parts of the spacecraft by the Launch Escape System during both launch and abort modes.

Aerodynamic Loads - The design accommodates buffet pressure and static differential pressure on the spacecraft and Adapter during the earth launch phases.

First Stage Boost - Structural loads during launch vehicle first stage operation include maximum control deflection of two of the thrusting engines balanced by rotary inertia and steady-state and dynamic loads associated with engine-out operation.

End Boost First Stage - Structural loads on the spacecraft at first stage cutoff include maximum control deflection of two of the thrusting engines. The transient phenomena associated with thrust decay also are considered, including effects of vehicle flexibility and interaction with liquid propellants.

Stage Separation - The separation of the lower stages is accomplished with no subsequent recontact and resulting dynamic load input to the spacecraft.

Boost of Upper Stages - Structural loads during launch vehicle upper stage operation include maximum control deflection of thrusting engines balanced by

rotary inertia and steady-state and dynamic loads associated with engine-out operation. Space vehicle structural dynamic response to thrust transient at thrust buildup and tailoff are considered, including effects of vehicle flexibility and interaction with liquid propellants.

Spacecraft Separation - The separation of the spacecraft from the launch vehicle is accomplished with no subsequent recontact and resulting dynamic load input to the spacecraft.

3-10 VENTING

All structures, other than pressure vessels and pressurized chambers are vented to minimize differential pressures across the structure. Sealed equipment accommodates all differential pressure conditions.

3-11 TEMPERATURE

Spacecraft design includes consideration of temperature extremes arising in all missions, mission phases and alternatives, including aborts.

SECTION IV

COMMAND MODULE

4-1 FUNCTION

The CM provides an in-flight command center for all crew-initiated control functions. It houses the crew, and the major CM systems described in paragraphs 4-17 through 4-30. These systems support the crew in command, control, communication, and observation during normal and contingency modes of operation. Another function of the CM is to sustain all normal and emergency structural loads. The structure of the CM also provides a vessel for pressurization, decreases radiation flux density reaching the crew, and provides protection against the damaging effects of meteoroids. Crew living quarters for all missions are provided within the CM, and the CM heat shield provides thermal protection for the crew and primary structure during re-entry.

4-2 DESCRIPTION

4-3 COMMAND MODULE ROLE IN SPACECRAFT

The CM houses the three man crew and provides all systems necessary for mission control during all the flight phases except those in which the LEM is active. During the lunar operations phase, two crew members transfer to the LEM, leaving one man in the CM. At the time of rendezvous, after lunar surface operations are completed, the entire crew is again transferred to the CM. The CM is the only recoverable module of the spacecraft.

4-4 POSITION IN SPACECRAFT (SC)

The position of the CM in the spacecraft and the configurations of the SC including the CM, SM, and LEM for various phases and modes of the lunar landing mission are shown on Figure 4-1 through 4-14.

[redacted]

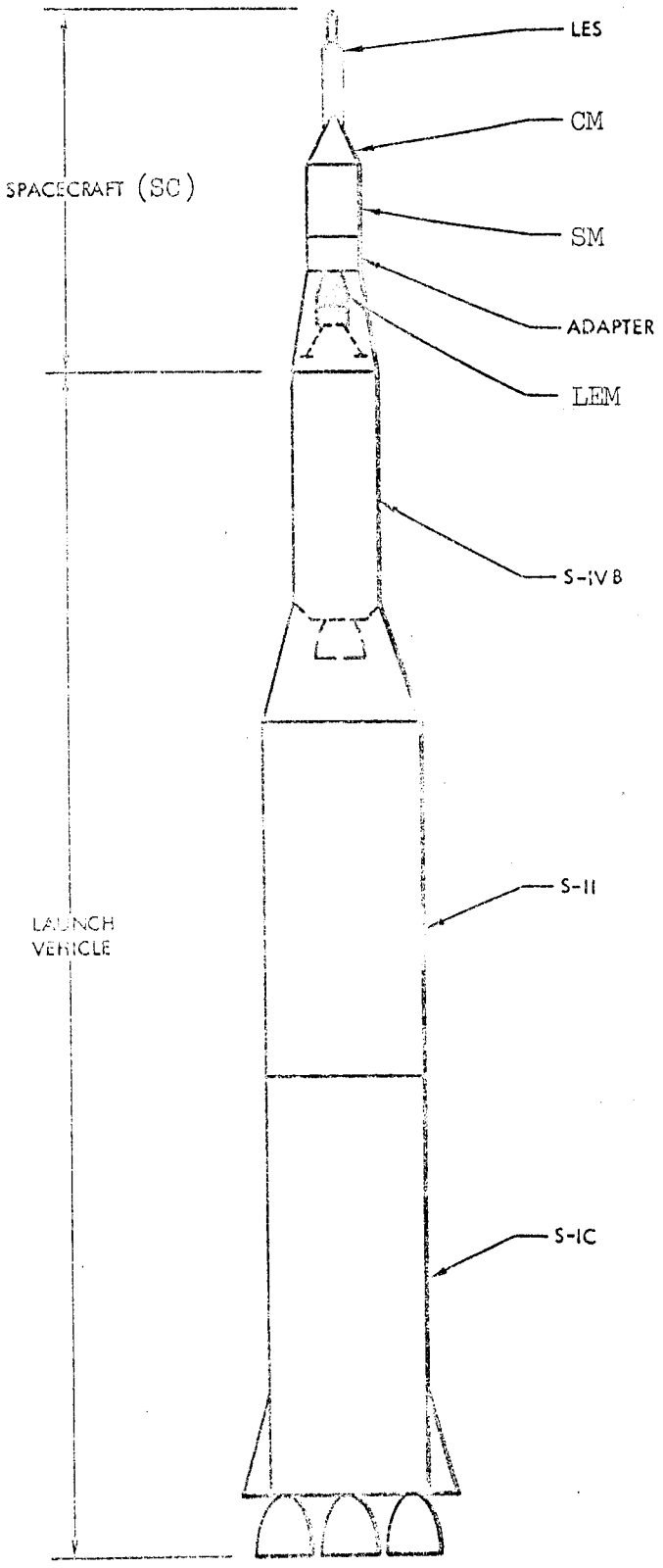

Figure 1-1. Space Vehicle Configuration Lunar Landing Mission

[redacted]

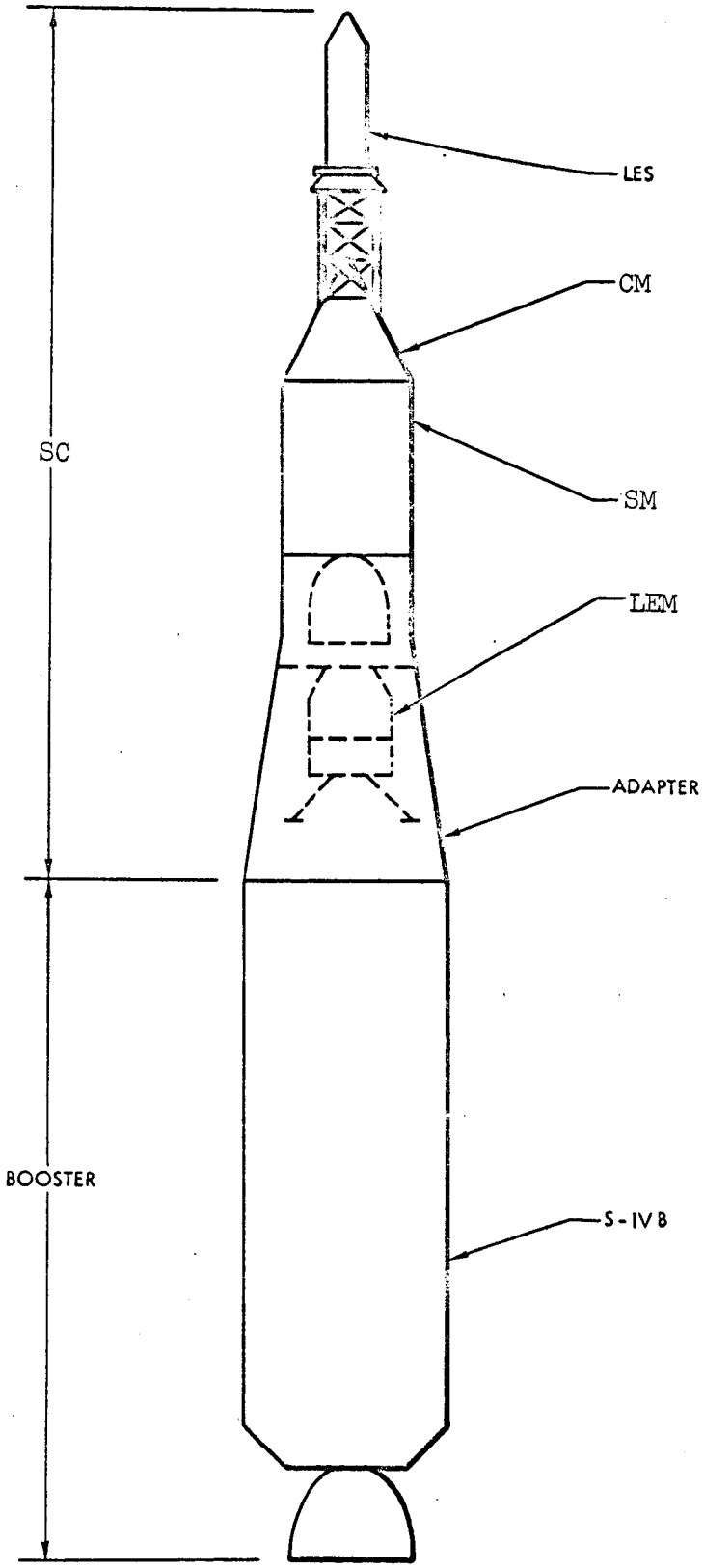

Figure4-2. Spacecraft Configuration Launch to Tower Jettison Nominal Mode

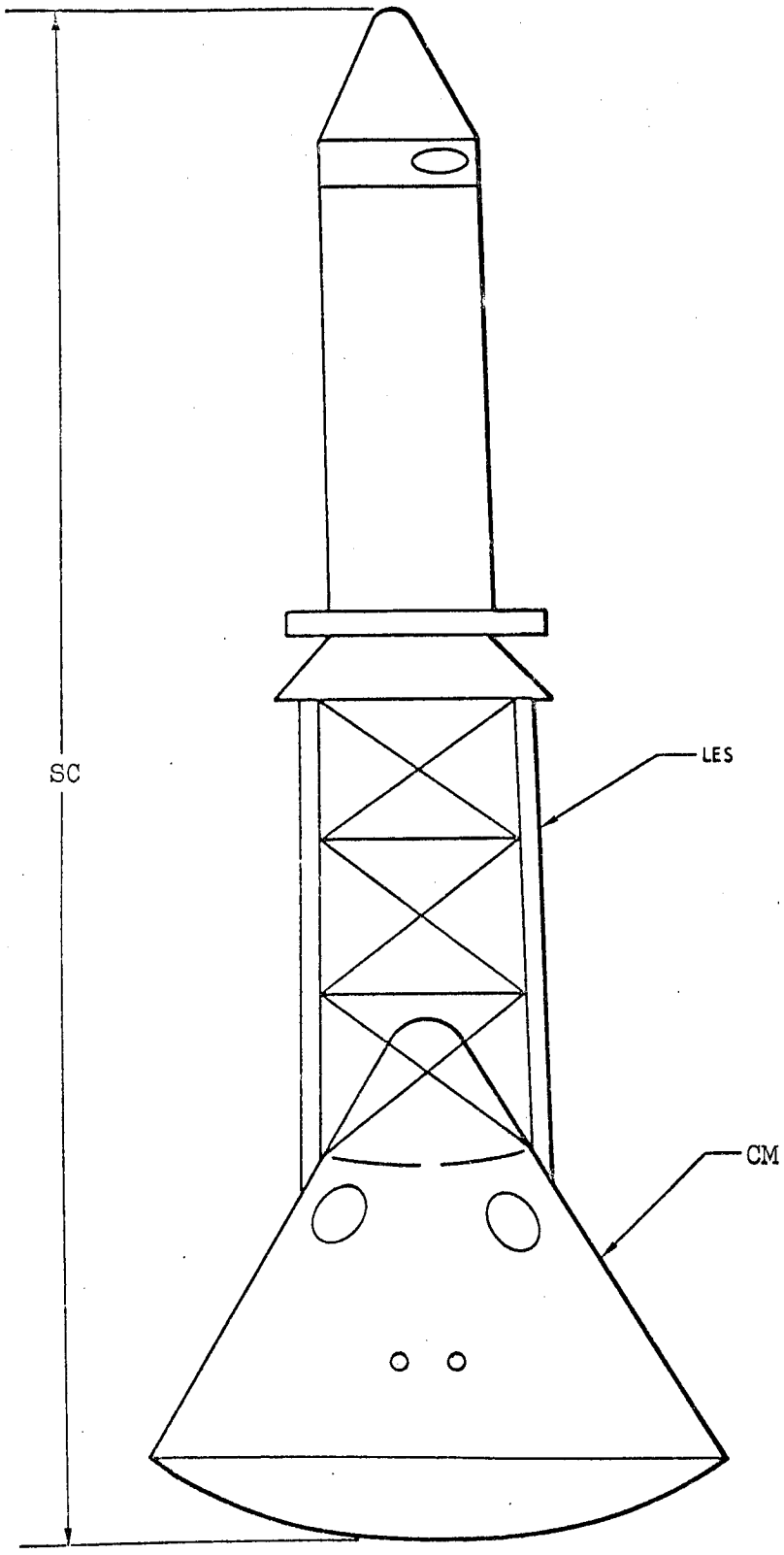

Figure4-3. Spacecraft Configuration Launch to Tower Jettison Abort Mode

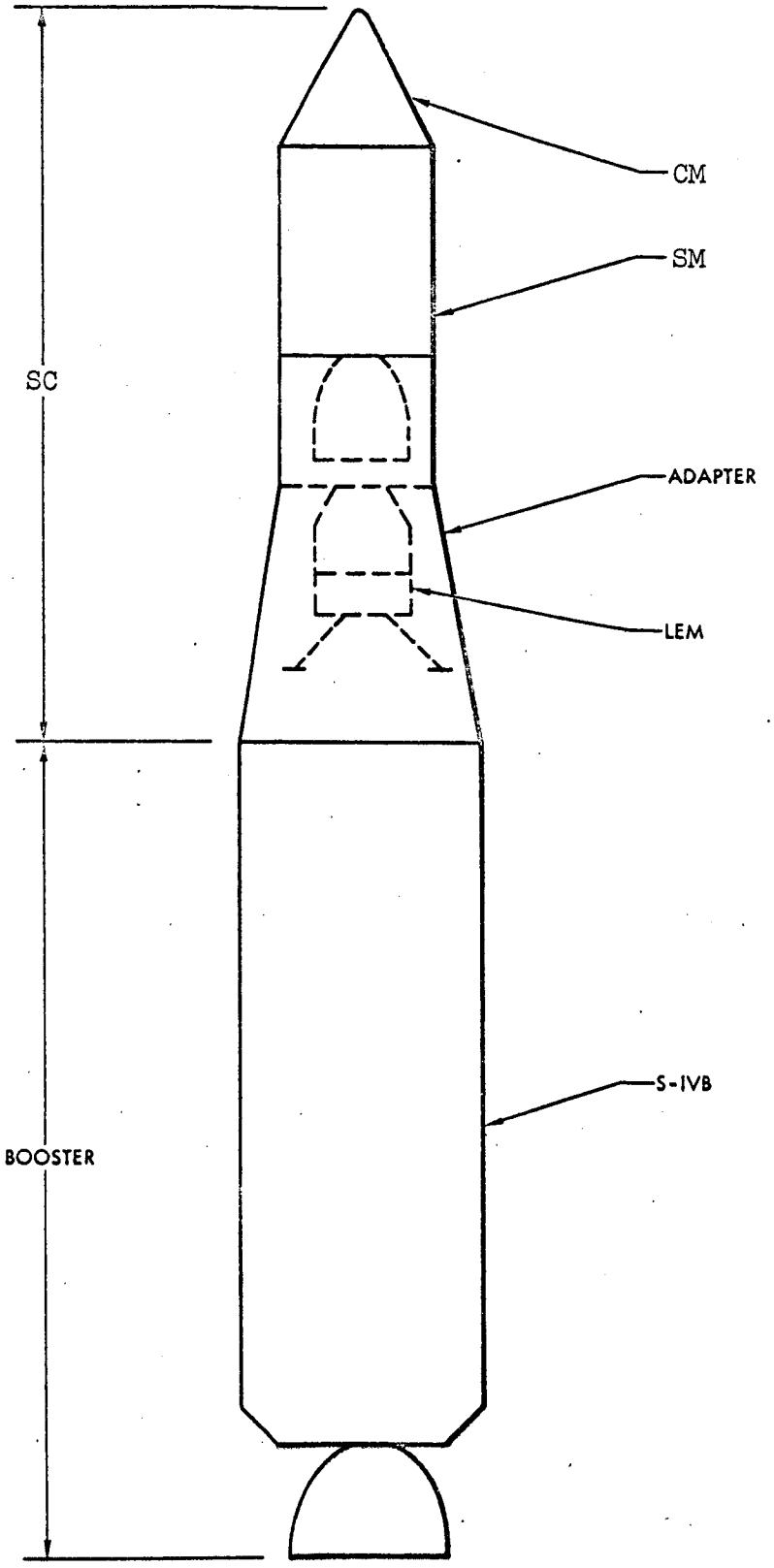

Figure4-4. Spacecraft Configuration Tower Jettison to Translunar Injection Nominal Mode

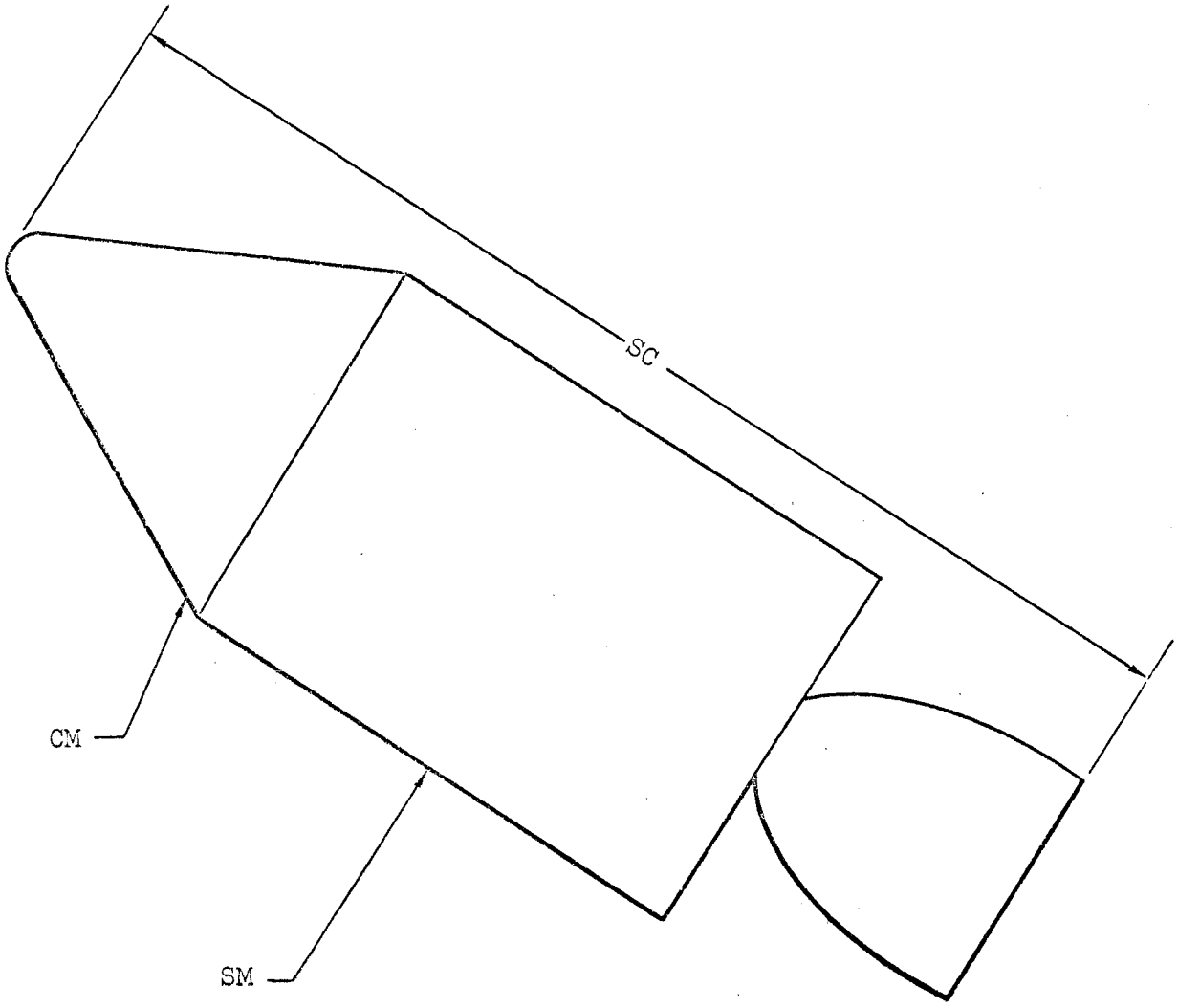

Figure4-5. Spacecraft Configuration Tower Jettison to Translunar Injection Abort Mode

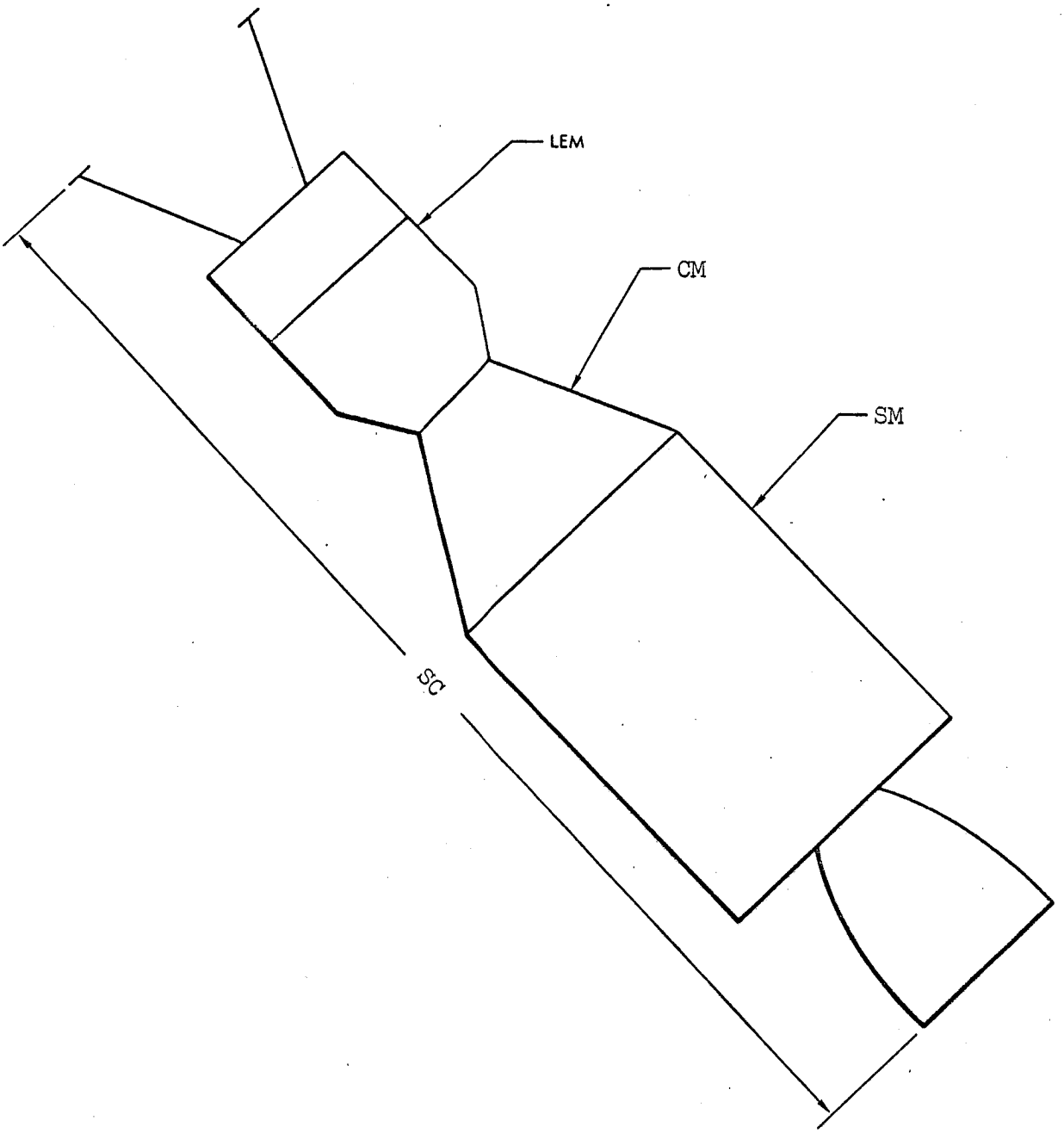

Figure4-6. Spacecraft Configuration Translunar Injection to LEM Descent Nominal Mode

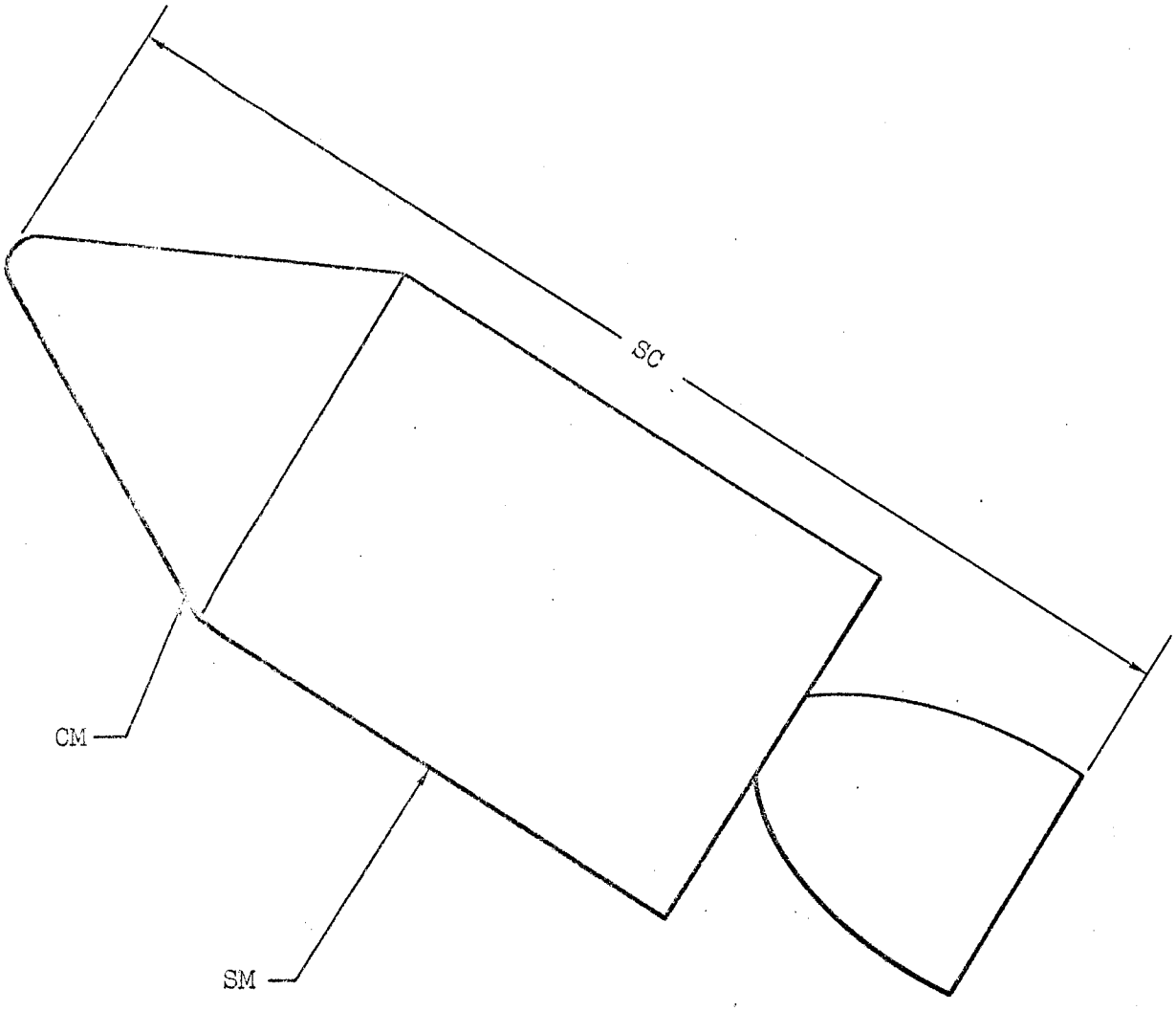

Figure4-7. Spacecraft Configuration Translunar Injection to LEM Descent Abort Mode

[redacted]

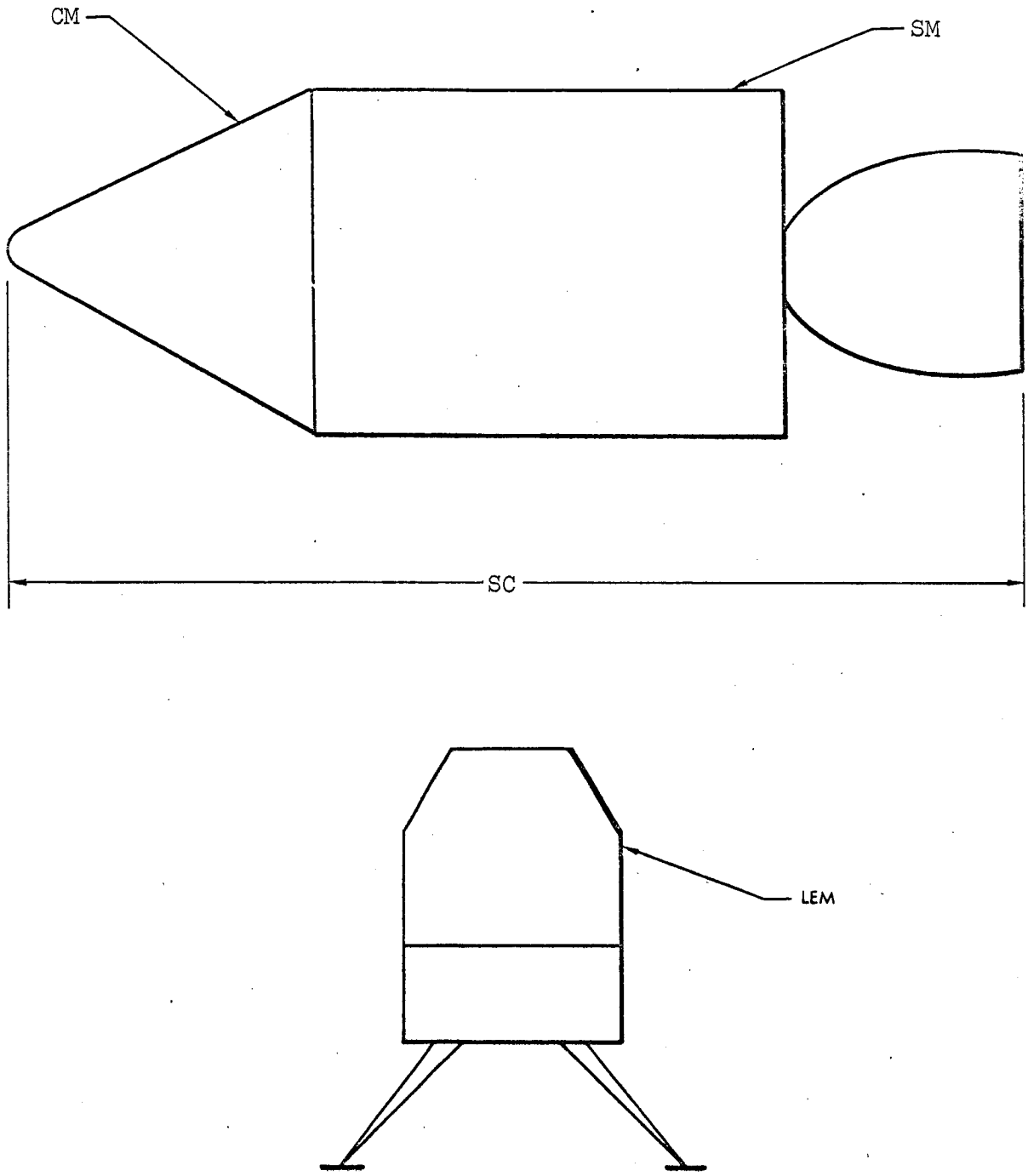

Figure4-8. Spacecraft Configuration LEM Descent to Lunar Landing Nominal Mode

[redacted]

[redacted]

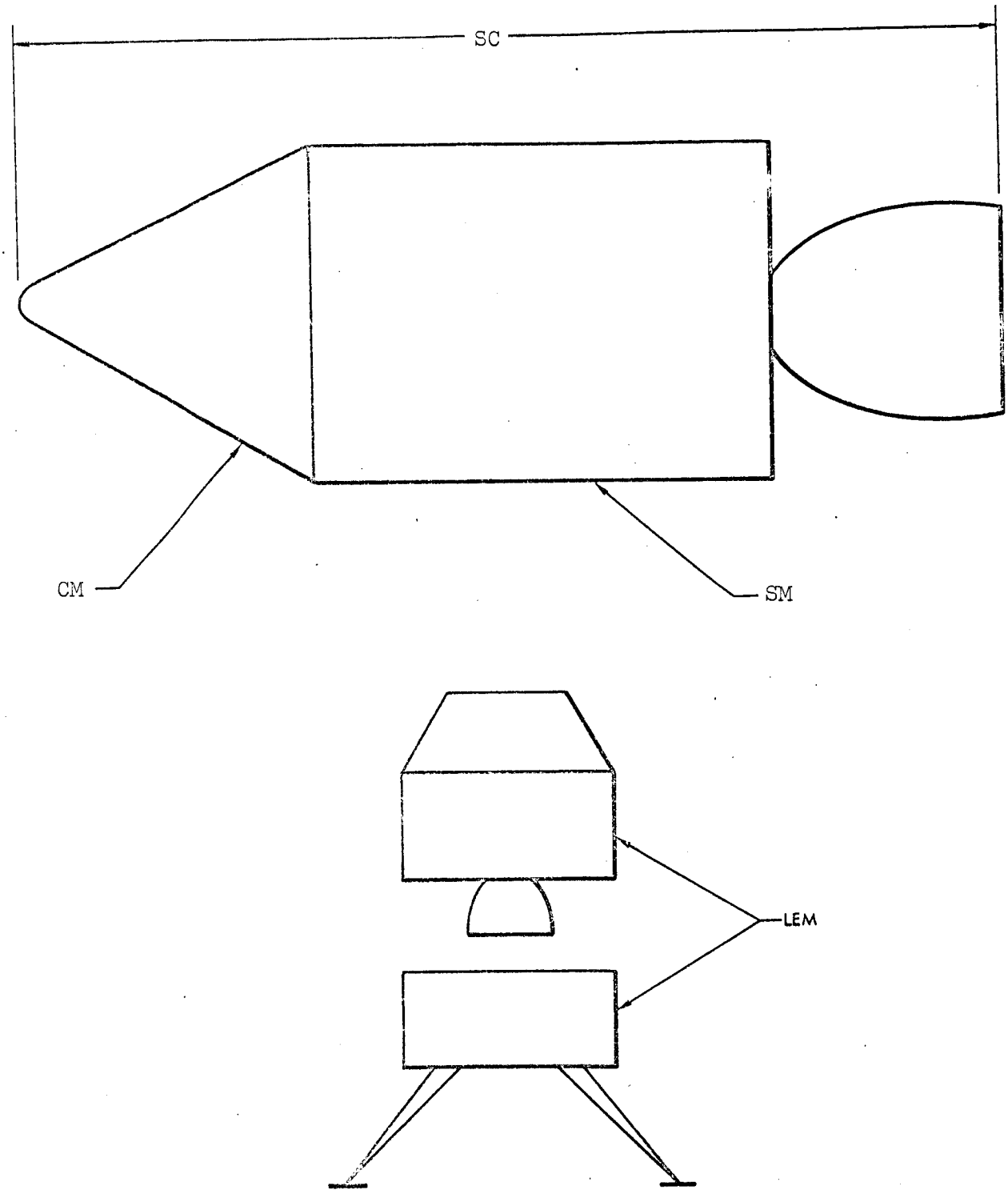

Figure 4-9. Spacecraft Configuration LEM Descent to Lunar Landing Abort Mode

[redacted]

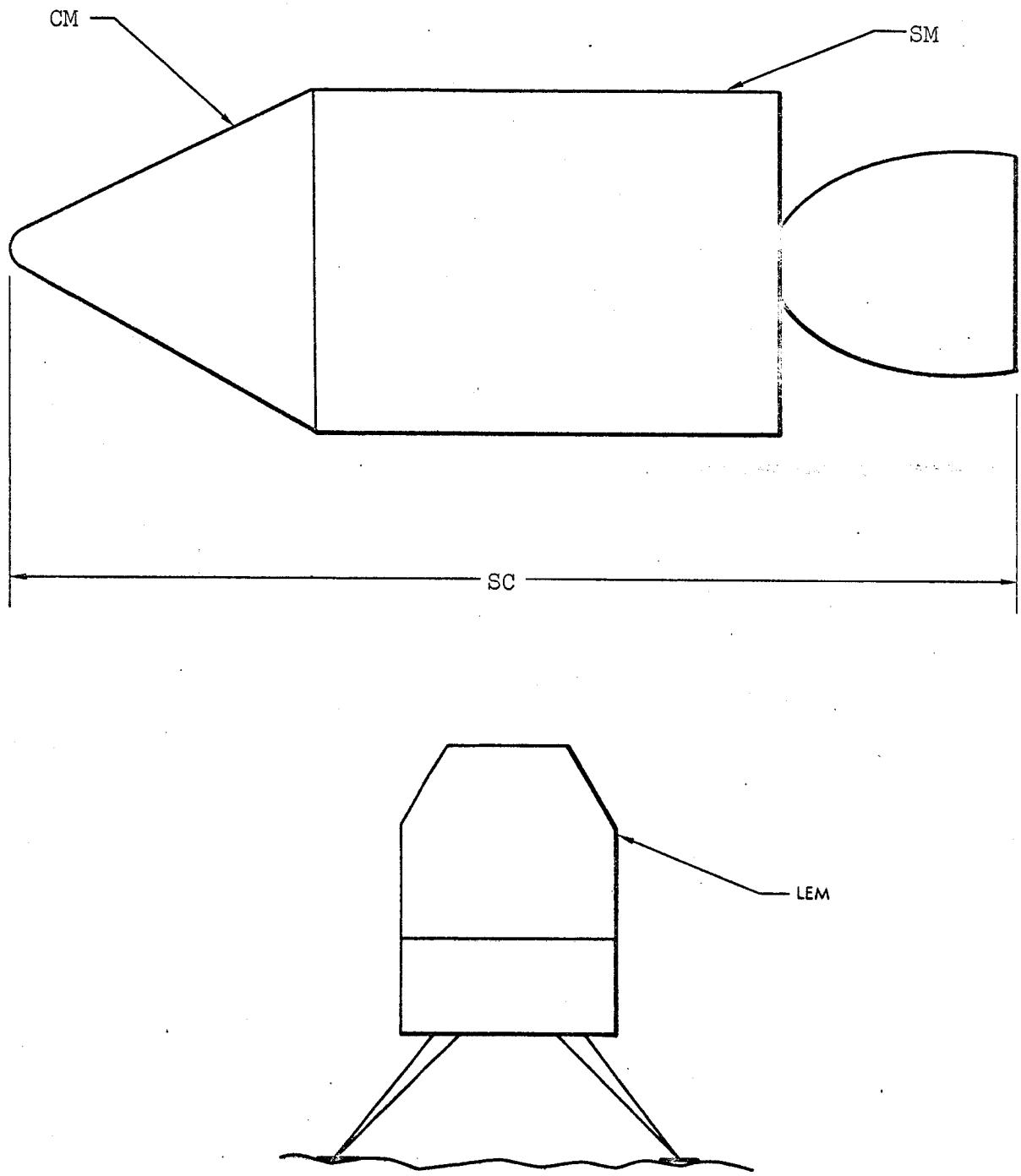

Figure4-10. Spacecraft Configuration Lunar Landing to Lunar Launch Nominal and Abort Modes

[redacted]

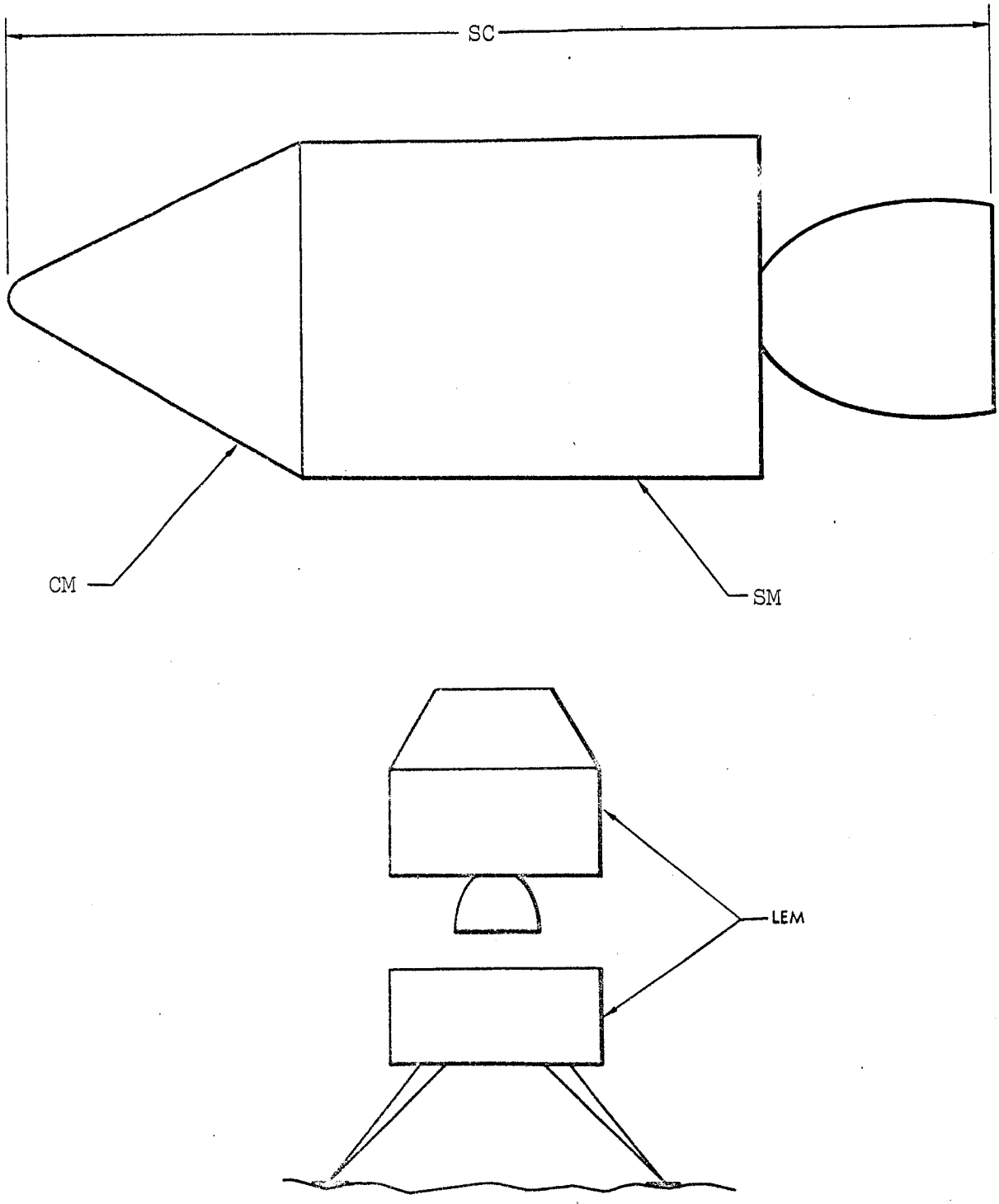

Figure4-11. Spacecraft Configuration Lunar Launch to Rendezvous Nominal and Abort Modes

[redacted]

[redacted]

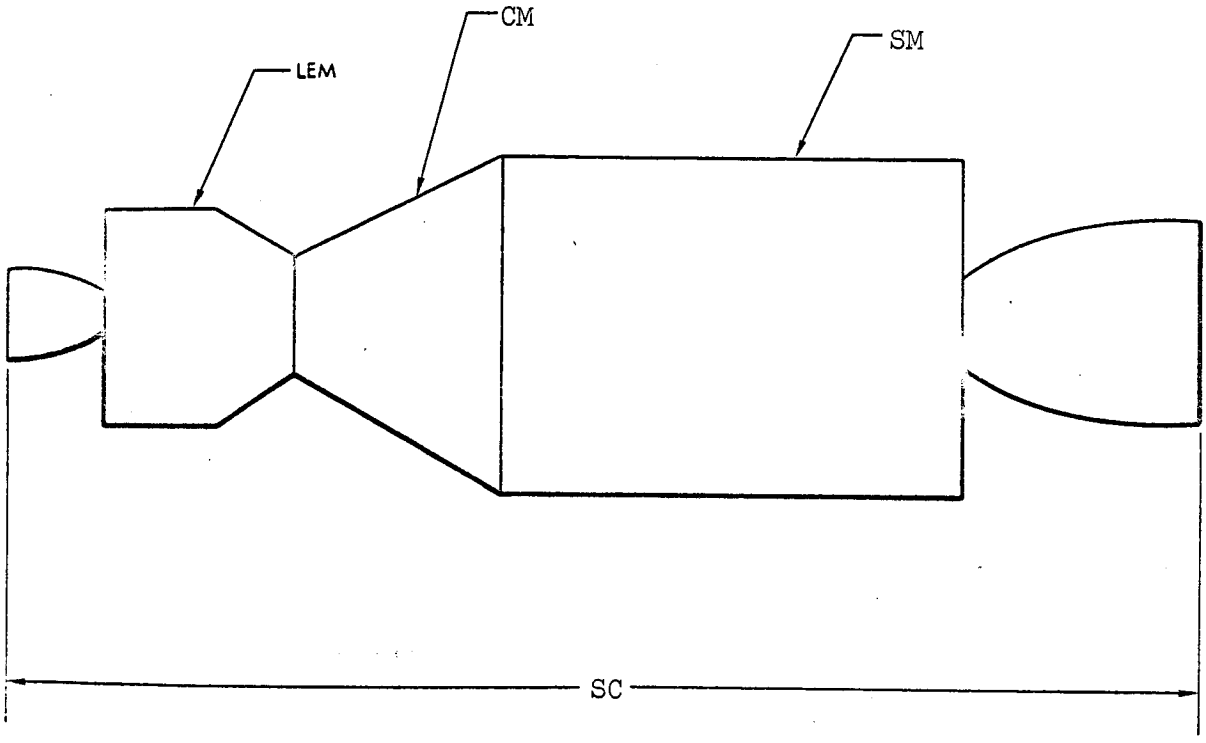

Figure 4-12. Spacecraft Configuration Rendezvous to LEM Jettison Nominal and Abort Modes

[redacted]

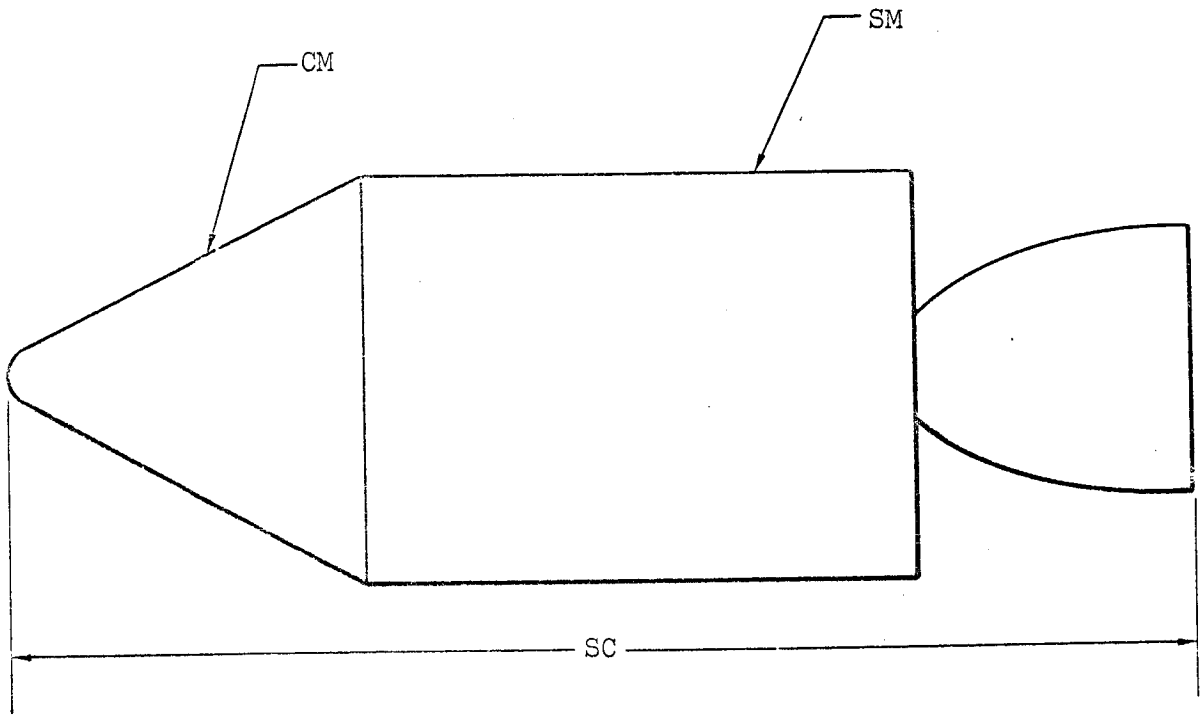

Figure4-13. Spacecraft Configuration LEM Jettison to Entry Nominal and Abort Modes

[redacted]

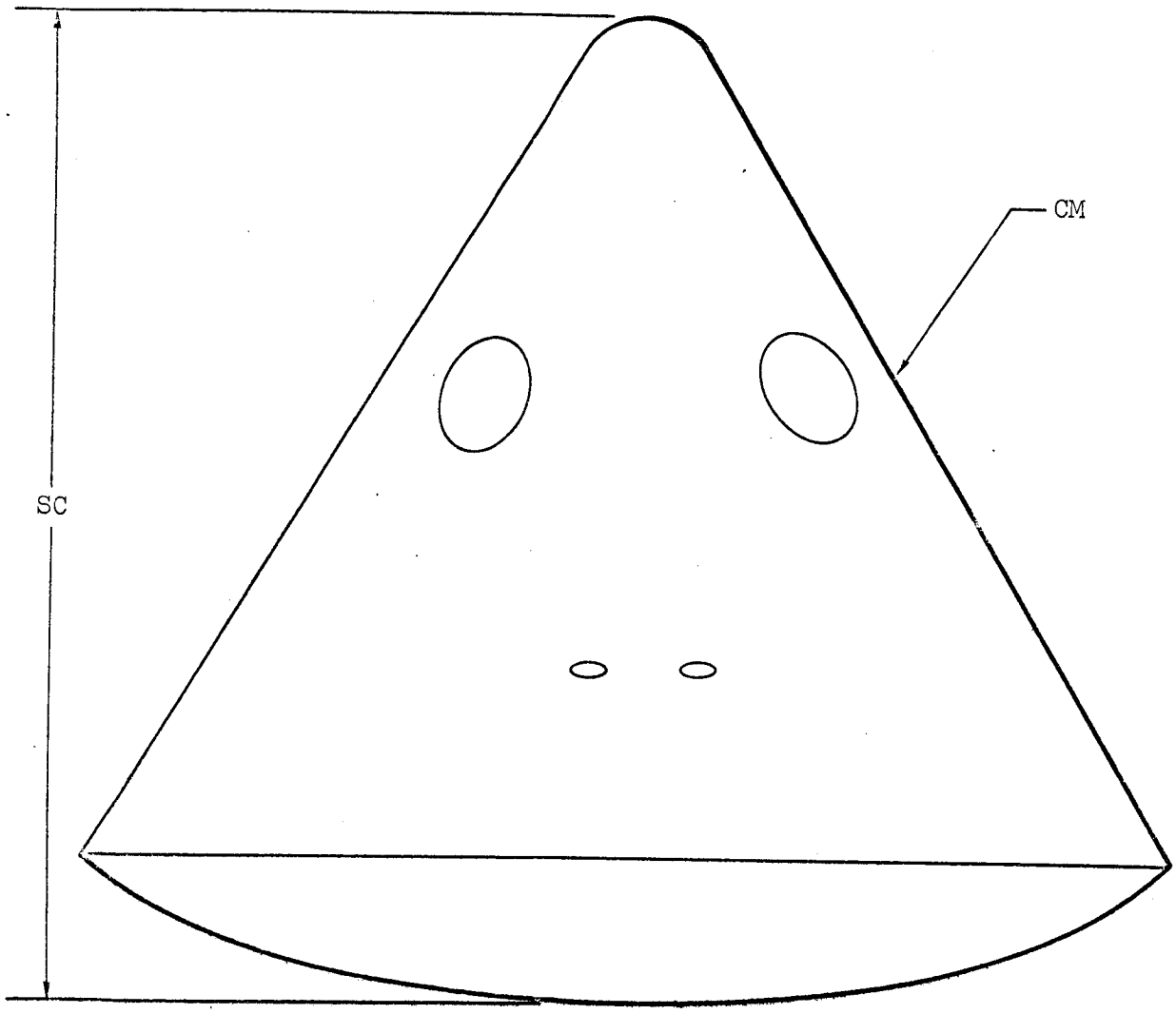

Figure4-14. Spacecraft Configuration Entry to Touchdown Nominal and Abort Modes

[redacted]

[redacted]

4-5 REFERENCE AXES

The reference axes of the CM are orthogonal as identified on Figure 4-15. The reference is to crew members in their normal earth launch position in the CM and remains unchanged for all missions, flight phases and modes. The X-axis is parallel to the nominal launch axis of the space vehicle and is positive in the direction of initial flight. The Y-axis is positive to the right of a crewman when he is facing positive X. The Z-axis is positive toward the crewman's feet.

4-6 INBOARD PROFILE

The inboard profile with typical dimensions is shown on Figure 4-16.

4-7 INBOARD REGIONS AND DUTY STATIONS

Inboard regions are indicated on Figures 4-17 through 4-23. Within the three regions duty stations are defined as follows:

Control Station - This is the left hand seat facing +X. Equipment location is designed for piloting and flight control.

Center Station - This is the middle seat. Equipment is designed for a -piloting and co-managing function particularly during launch and re-entry. It is planned to have this station unmanned for other flight phases.

Systems Management Station - This is the right hand seat from which system status is monitored.

Navigation Station - The navigation station, from which navigation sightings and trajectory computations are made, is located in the lower aft equipment bay (see Figure 4-18).

[redacted]

[redacted]

Positive direction of axes and angles (forces and moments) are shown by arrows. (When launch vehicle is at a launch angle of 90°, the positive "X" direction is vertically upwards.)

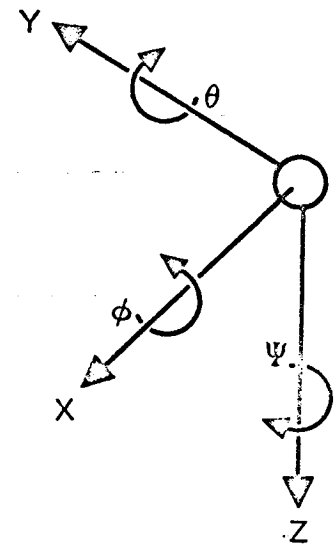

Axis		Moment About Axis		
Designation	Symbol	Designation	Symbol	Positive Direction
Longitudinal	X	Rolling	L	Y → Z
Lateral	Y	Pitching	M	Z → X
Normal	Z	Yawing	N	X → Y

Force	Angle		Velocities	
(Parallel to Axis Symbol)	Designation	Symbol	Linear (Components along Axis)	Angular
X	Roll	ϕ	U	p
Y	Pitch	θ	V	q
Z	Yaw	ψ	W	r

Figure 4-15. Reference Axes, Spacecraft

[redacted]

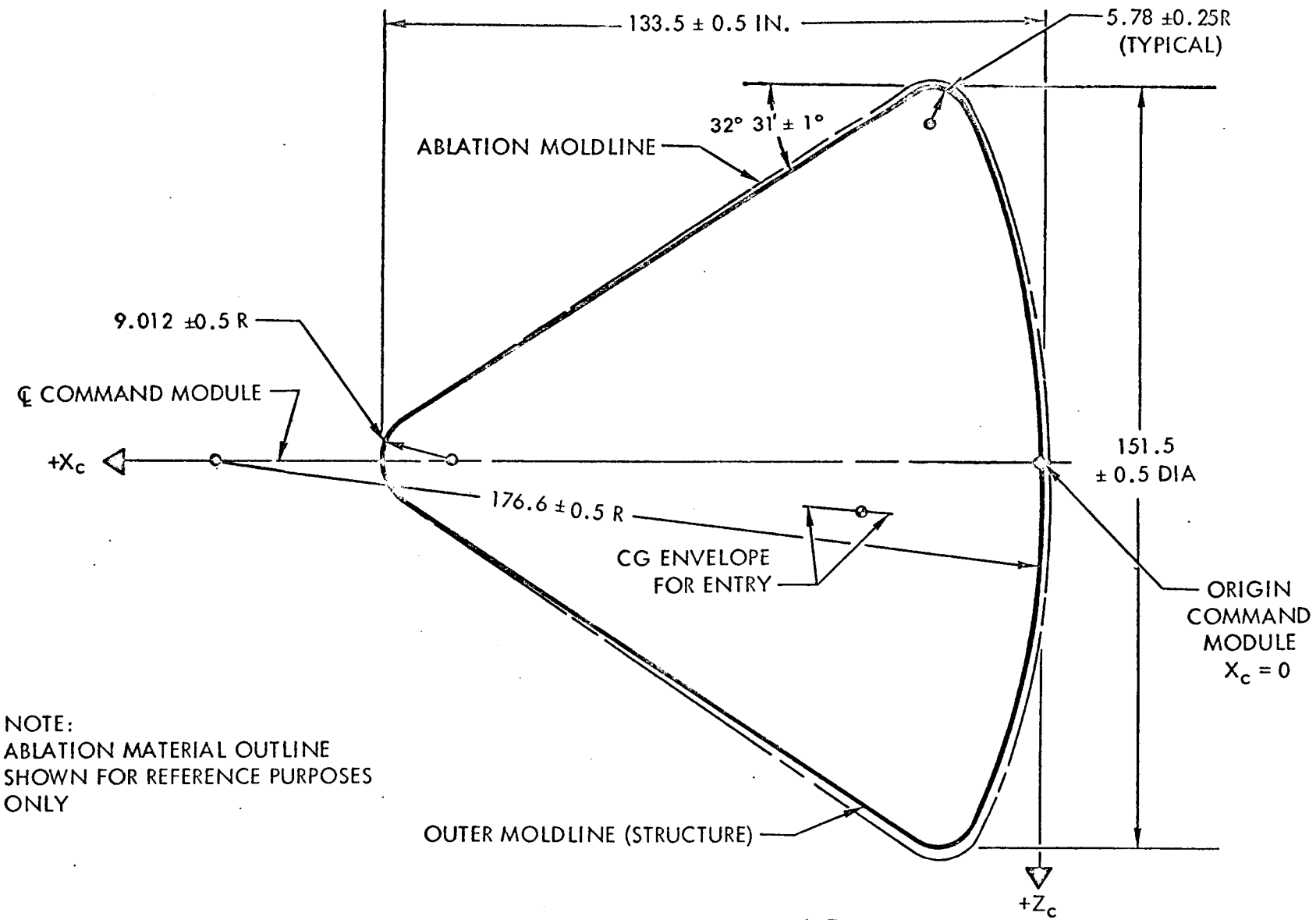

Figure 4-16. Command Module External Geometry

[redacted]

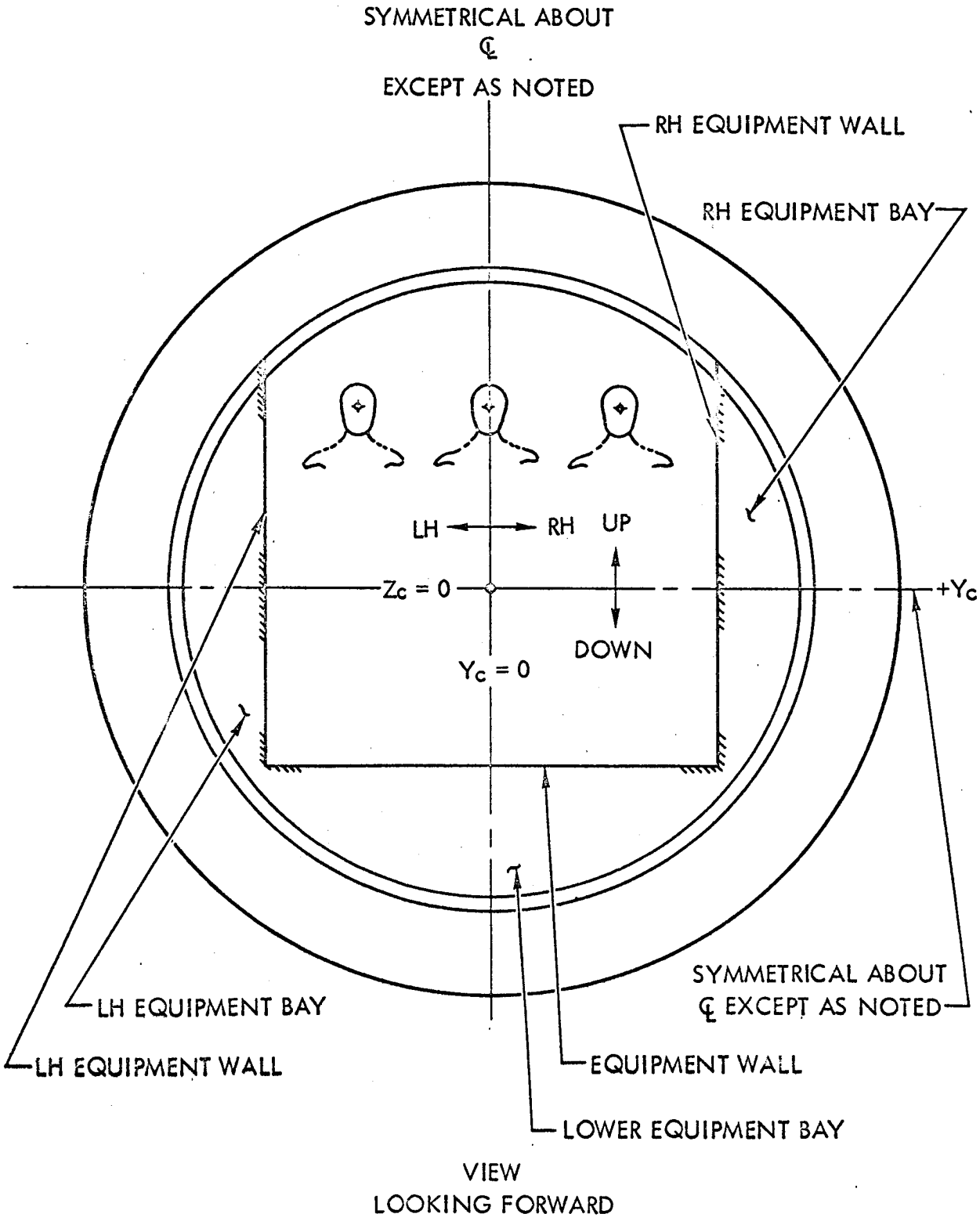

Figure 4-17. Area Designations

[redacted]

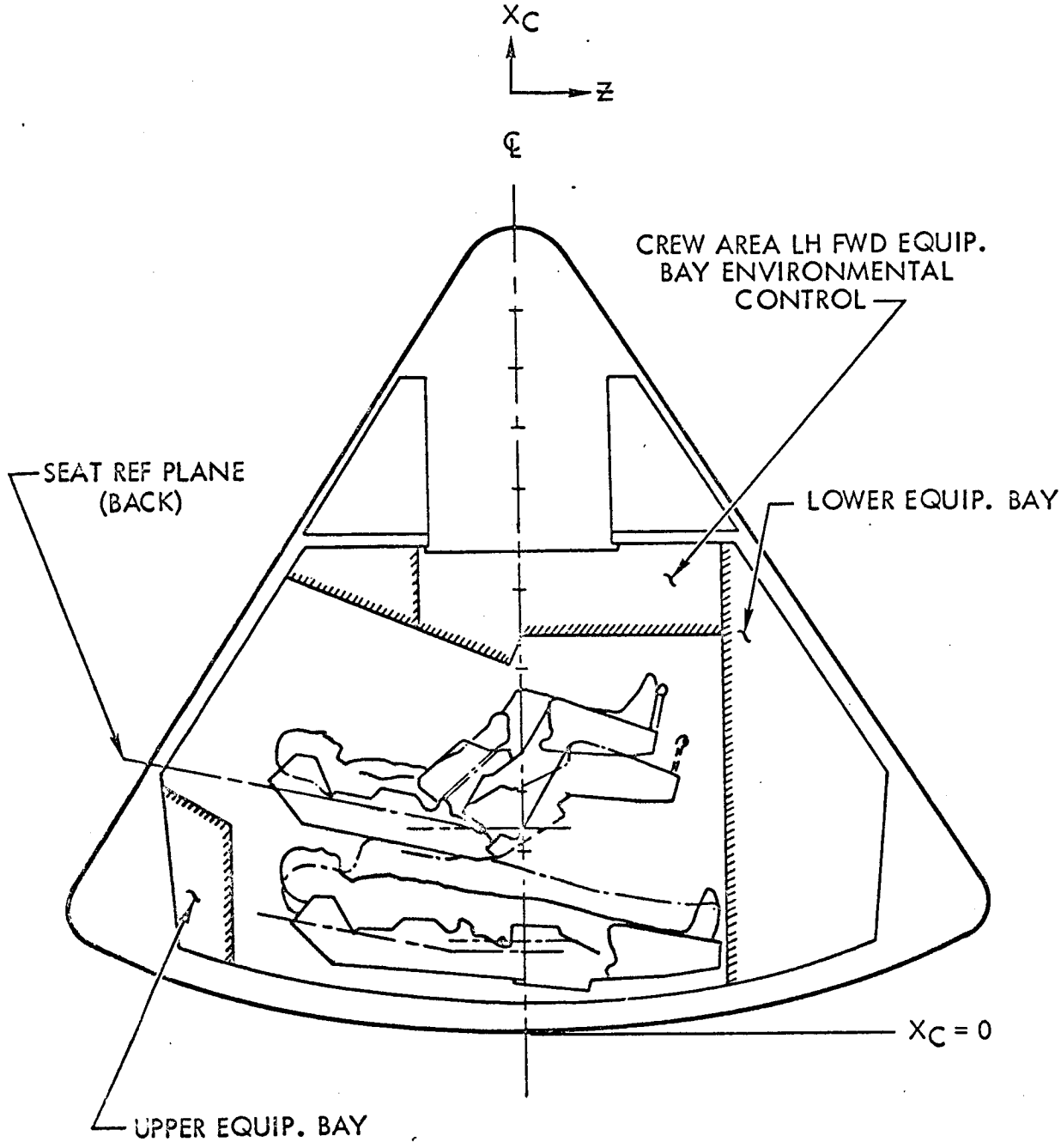

Figure 4-18. Area Designations

[redacted]

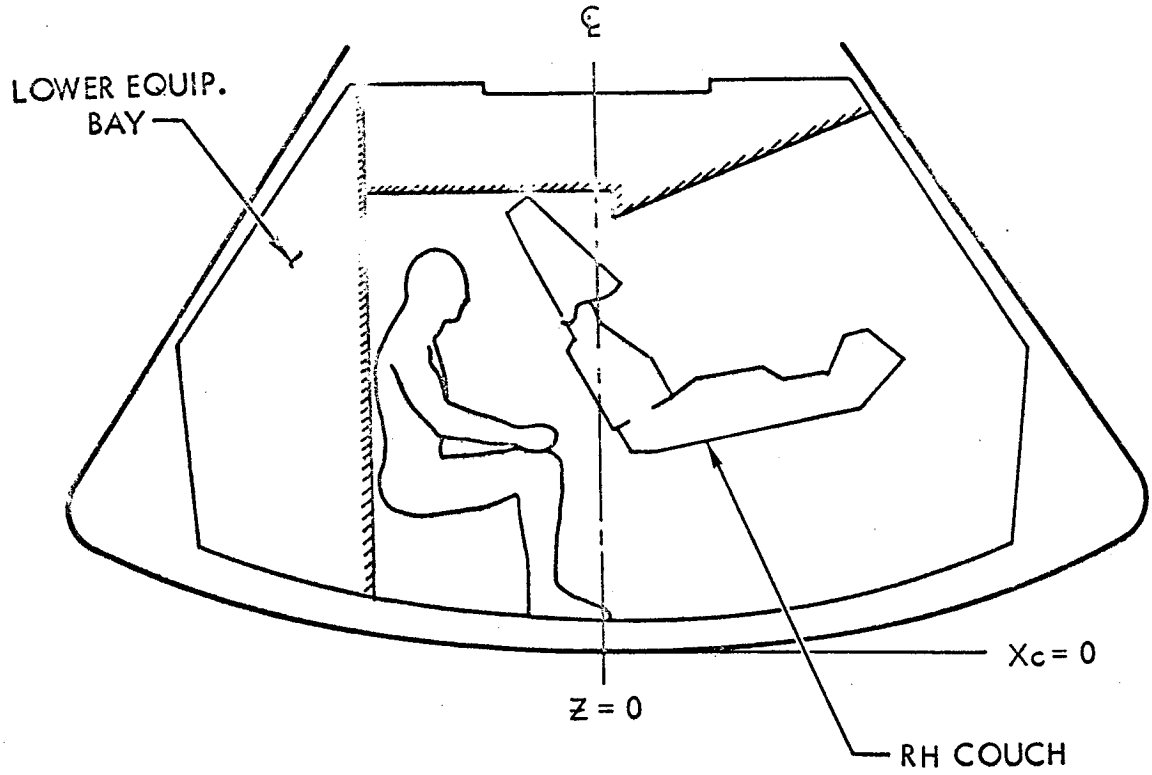

SANITATION AREA

Figure 4-19. Area Designations

[redacted]

[redacted]

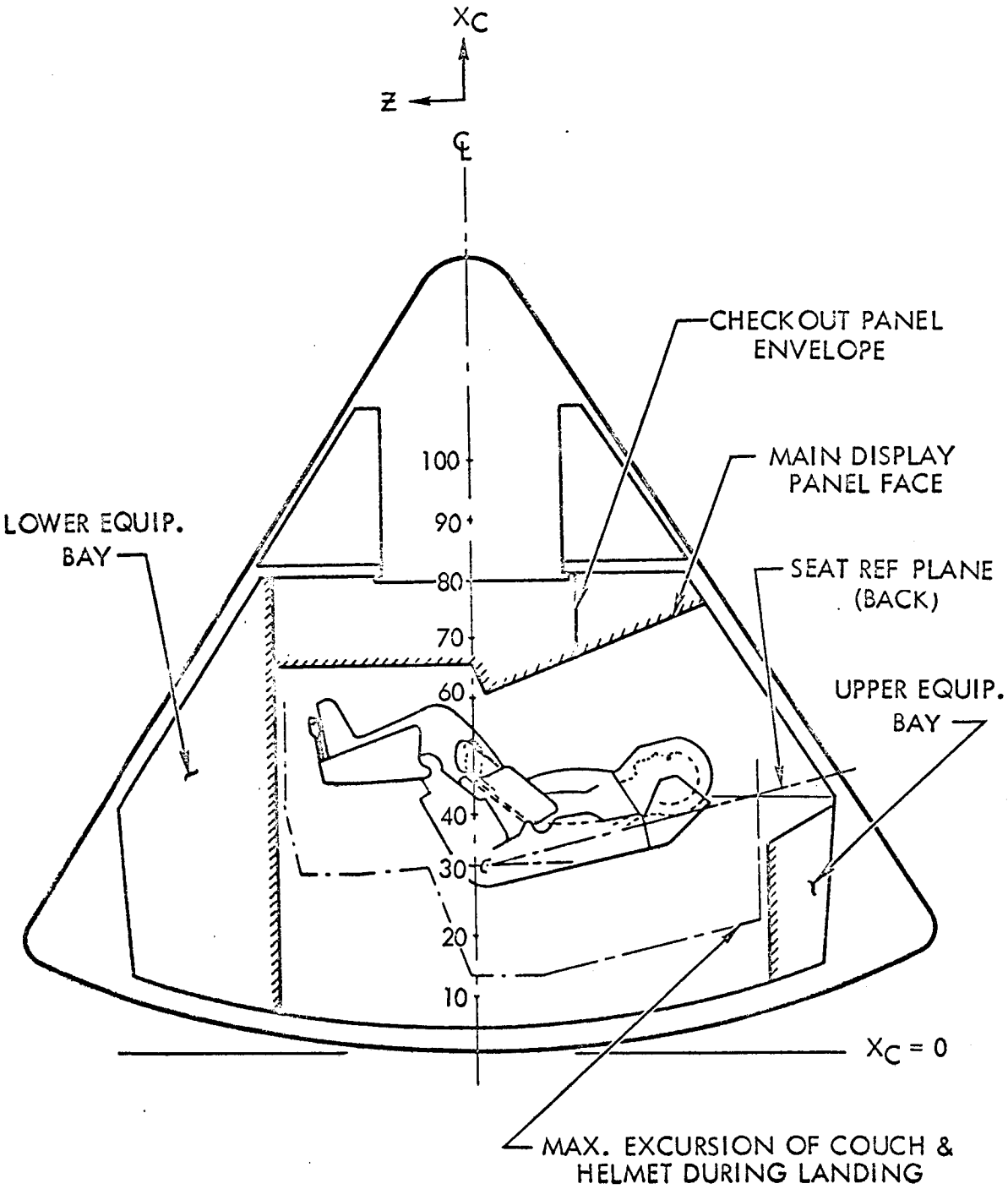

Figure 4-20. Area Designations

[redacted]

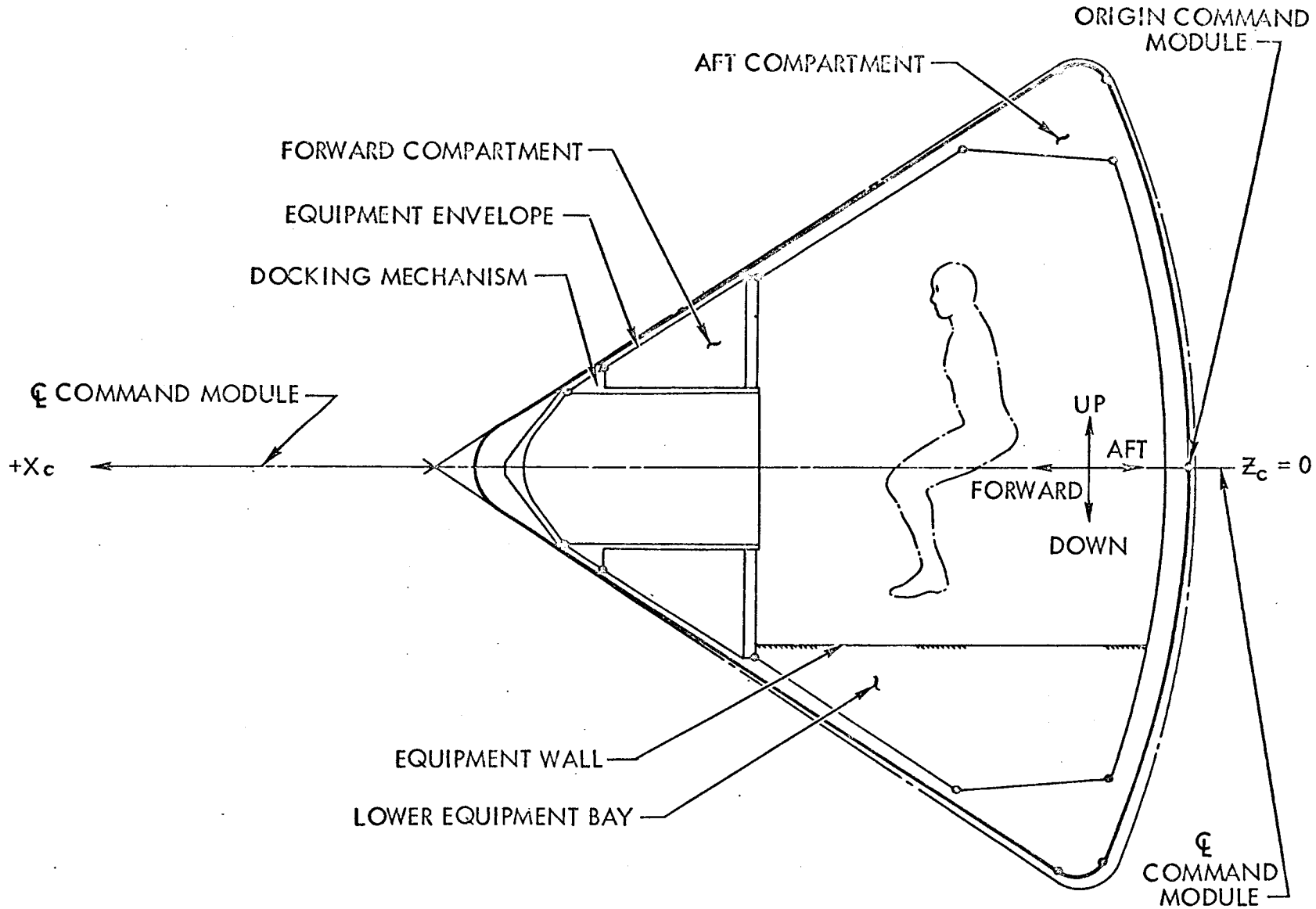

Figure 4-21. AREA DESIGNATIONS SIDE VIEW

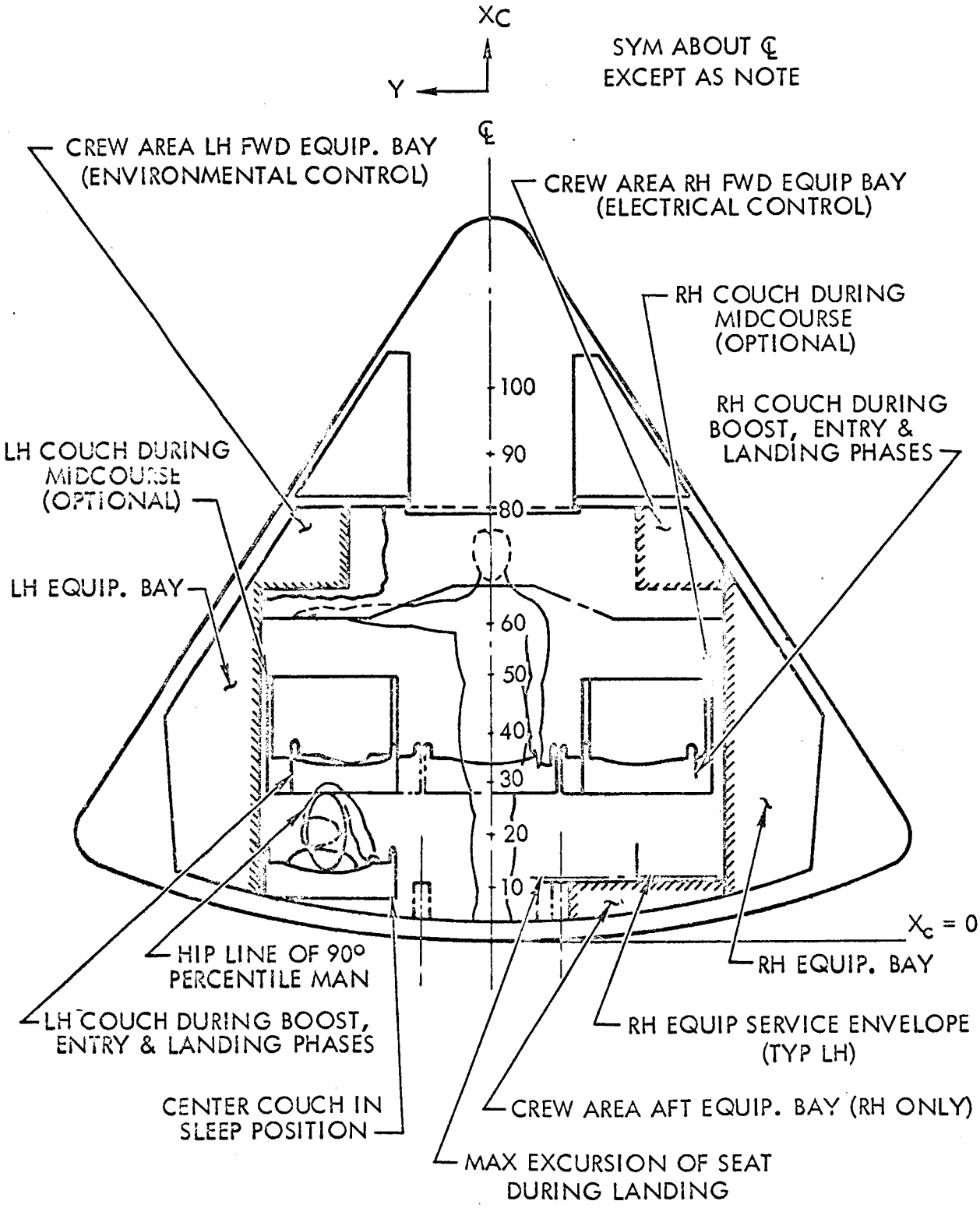

VIEW LOOKING TOWARD LOWER END OF CREW AREA

Figure 4-22. Area Designations

[redacted]

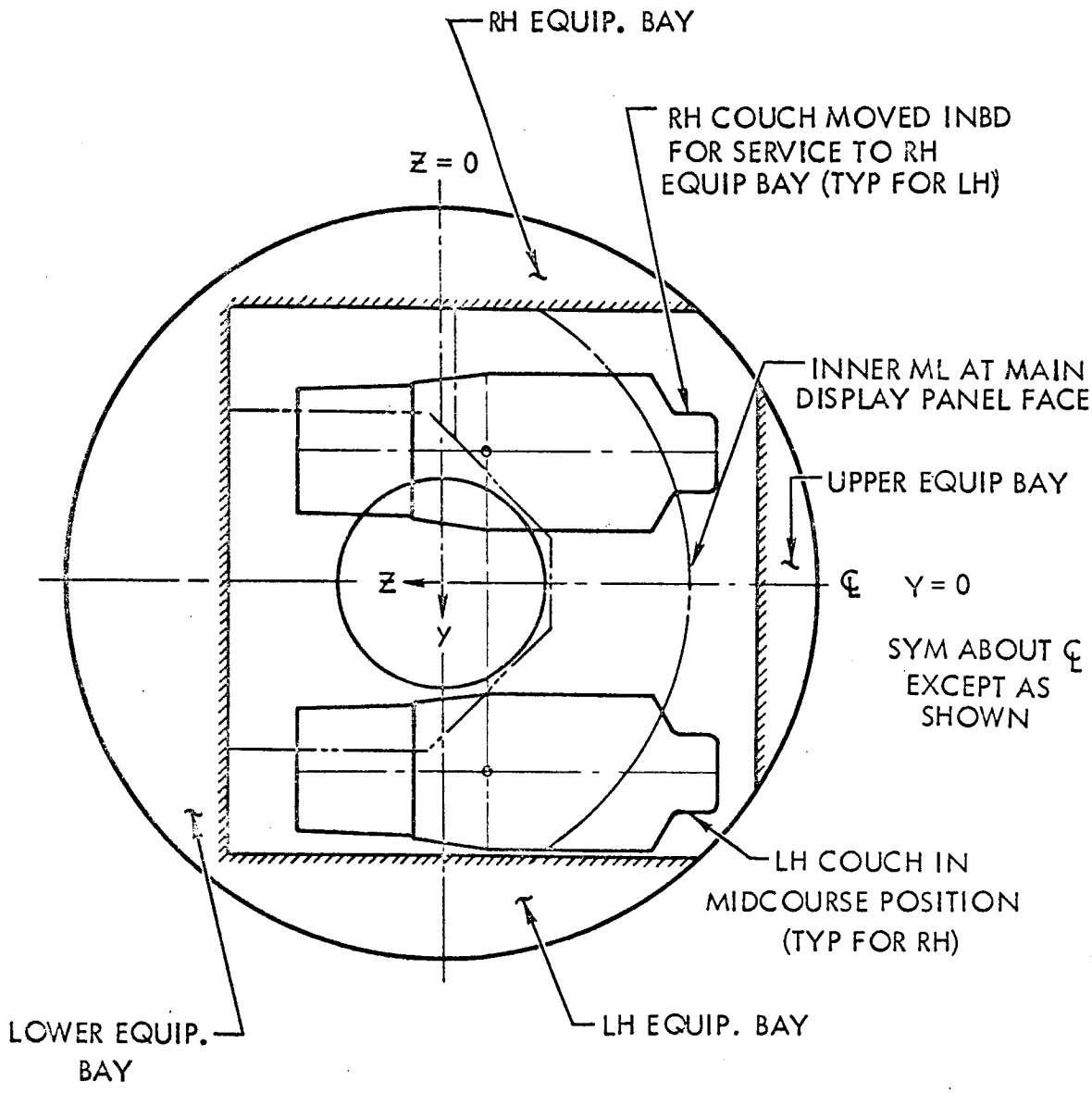

Figure 4-23. Area Designations

[redacted]

4-8 WEIGHTS AND BALANCE

4-9 COMMAND MODULE WEIGHTS

Control Weight - The control weight is used to determine critical design conditions for systems whose functions or performance margins may be reduced by increasing CM weight. In general, the control weight is a maximum value which cannot be exceeded without compromising the overall performance. The presently established control weight of the CM is 9500 pounds. This figure is applicable for all flight phases.

Design Goal Weight - The design goal weight is a more stringent requirement than the control value. It may be regarded as an optimistic value or working goal toward which weight-reduction efforts are directed. Relaxing of design goal values is possible, but depends on the compatibility of increased weight with other aspects of the design. The present design goal weight for the CM is 8500 pounds.

Current Weight - A current weight is defined for purposes of description. It falls between the weights defined above and becomes the actual weight at launch. The current weight, ideally a basis for computations, is one that becomes rationally modified to account for fuel utilization and jettisoning in certain mission phases.

4-10 CENTER OF GRAVITY (C.G.)

General - The location of the Command Module C.G. is specified along three reference axes, as defined in Section 4-5. These coordinate values apply to control weight, design goal weight, and current weight.

4-11 INTERFACES

4-12 GENERAL

The prime functional and physical interface areas of the Apollo CM are:

a. CM to SM

1. Structural
2. Electrical
3. Mechanical
4. Aerodynamic
5. Acoustical

b. CM to LES

1. Structural
2. Electrical
3. Mechanical
4. Aerodynamic
5. Acoustical

c. CM to LEM

1. Structural
2. Electrical
3. Electromagnetic
4. Inertial

4-13 COMMAND MODULE TO SERVICE MODULE INTERFACES

Structural - Loads are transferred between the modules by six compression pads, three tension ties, and three shear pads. The compression pads are a dense ablation material and carry shear in three of the six pads. Tension is carried by three steel rods projecting through the ablation material and located adjacent to alternate compression pads.

Electrical - Fluid - An electrically initiated linear shaped charge device located on the SM outer skin separates the electrical-fluid connection between the CM and SM.

Mechanical - Tension members are disconnected by a redundant electrically initiated linear shaped charge device which cuts the tension tie below the heat shield.

Aerodynamic - The aerodynamic interface between the CM and SM results from the aerodynamic expansion created over the cone-cylinder structural junction. Transonic effects at the junction have been thoroughly analyzed for the presently proposed configuration.

Acoustical - Acoustic buffering between the CM and SM is designed to insure a minimum of induced sound in the CM due to SM engine firing. The design figure for maximum engine sound intensity in the CM interior is 75 db.

4-14 COMMAND MODULE TO LAUNCH ESCAPE SYSTEM INTERFACES

Structural - The Launch Escape System (LES) is structurally attached to the CM through the four tower mounts.

Electrical - Two umbilical connectors provide a redundant electrical interface between the CM and LES.

Mechanical - Pyrotechnic-operated cable cutters will be actuated to free the tower from the CM. The cutters have a two-fold redundancy. Continuous stress in the restraining cables serves to maintain secure tower leg lock-on until the pyrotechnic guillotines are activated.

Aerodynamic - Aerodynamic effects of the LES on the CM during launch abort are compensated by proper selection of the CM center of gravity location and by application of a pitch impulse from the LES pitch control rocket.

Acoustical - The escape system motor flow separator is designed to restrict the CM interior sound level below the safe level of 75 db.

4-15 COMMAND MODULE TO LUNAR EXCURSION MODULE INTERFACES

(To be supplied.)

4-16 MAJOR COMMAND MODULE SYSTEMS

4-17 STRUCTURAL SYSTEM

General - The functions of the CM Structural System are to sustain normal ground and flight loads, maximum abort conditions and landing impact loads, provide a mounting surface for all CM systems, provide a vessel for pressurization, decrease the flux density due to radiation, provide some protection against the damaging effects of meteoroids, provide crew living quarters for all missions, and provide thermal protection during re-entry for the primary structure and the crew. A pictorial representation of the CM Structural System is shown on Figure 4-24.

Equipment Description - The structural and thermal protection features of the CM consist of the following:

a. A primary load-carrying inner structure

b. A heat shield structure

c. Insulation

d. Ablation shield

e. Hatches and windows

f. Attachments and disconnects

Inner Structure - The inner structure is the primary load-carrying structure of the CM. It is pressurized to 5 psi as the pressure cabin for the crew. Adhesive bonded aluminum alloy honeycomb sandwich construction is used with aluminum face sheets and with the inside face sheet fusion welded to provide a pressure seal. The honeycomb core depths are 1.50 inches on the spherical aft bulkhead, 0.75 inch on the side walls, 0.92 inch on the conical walls, and 0.75 inch on the forward bulkhead. Aluminum longerons are bonded into the sandwich for distribution of point loads at the four LES tower leg attachments and the six CM supports to the SM.

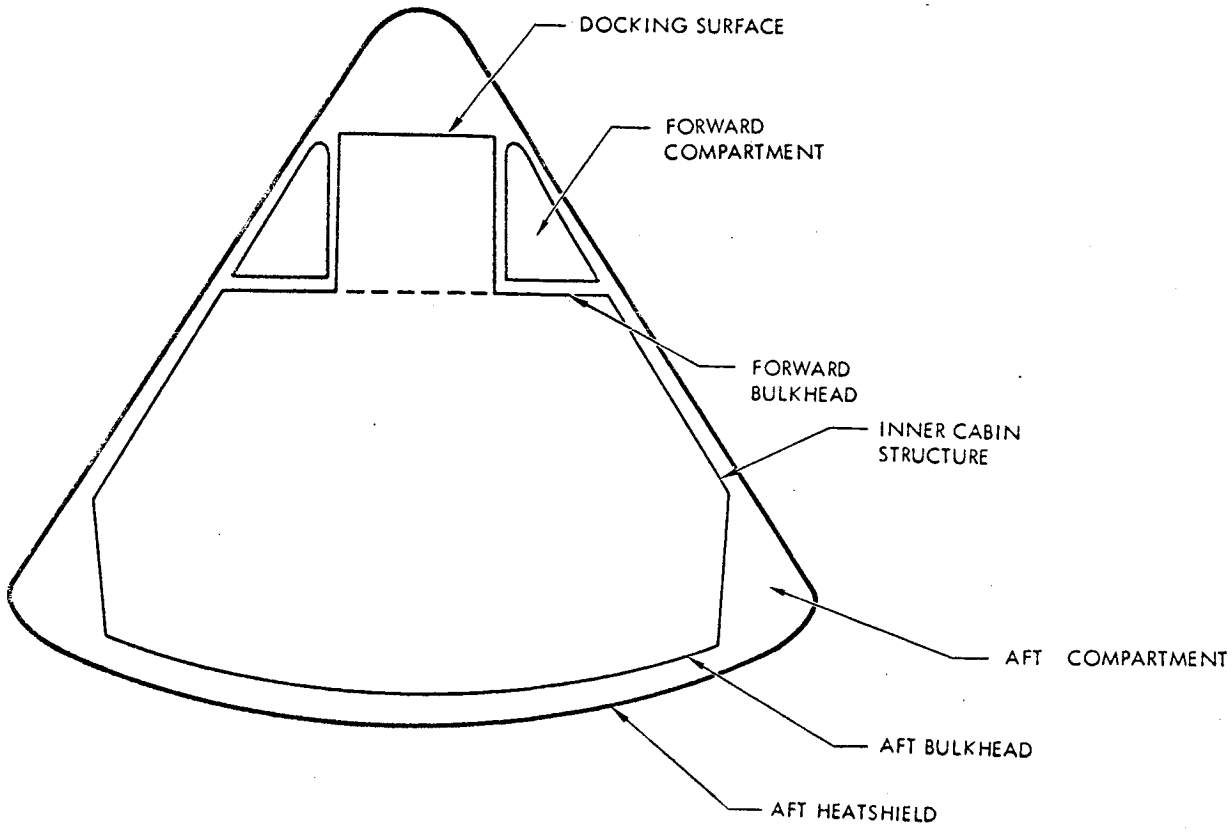

Figure 4-24. Command Module Structural Features

Heat Shield Structure - The heat shield structure is brazed honeycomb sandwich construction and is the primary support for the ablative material. The facing sheets and core are stainless steel. The aft compartment heat shield is a spherical segment with a 2.00 inches core depth. The crew compartment heat shield is a truncated cone of 0.50 inch core depth.

Insulation - The inner structure and equipment are insulated from the heat shield by a layer of batt type insulation. The crew compartment heat shield is attached to the inner structure by means of fiberglass laminate longerons.

Ablation Shield - The ablation shield is made of fiberglass honeycomb matrix bonded to brazed sandwich stainless steel backup structure. The fiberglass is filled with an ablative material.

Hatches and Windows

Top Hatch - This hatch is located forward of the upper equipment bay and symmetrical about the X-axis. The hatch is sized to pass crewmen equipped with pressurized suits and will be utilized for normal pad egress and post-landing egress.

Docking Hatch - This hatch is located at the CM apex and it is symmetrical about the X-axis. The hatch is large enough to pass a crewman with a pressurized suit. The hatch will be used for ingress and egress with the LEM for free space.

Windows - A total of five windows, each optically suitable for general observation, are located in the CM bulkhead. Each window has an inside shade for interior lighting control and an outer shade for protection against meteroid optical degradation and aerodynamic heating.

Two forward viewing windows are provided, one for the Control Station and one for the System Management Station. Two side viewing windows also serve the Control and System Management Stations. A single window in the top hatch will be used for general observation and photography.

Structural Design Criteria - The CM is designed to withstand the variable simultaneous dynamic environments resulting from normal and contingency missions as defined below.

Pressure - The extreme conditions for CM external pressure are given in Table 4-1.

Temperature - The CM is capable of withstanding external temperature extremes between -260° and +600° F. The maximum value of internal wall temperature is +250° F. Provisions are made for withstanding the effects of limited damage to the ablation material.

Acceleration - The load factors to which the CM will be subjected under typical flight modes are given in Table 4-2. Simultaneous longitudinal and transverse loads are considered.

Vibration - The CM withstands the structural vibration resulting from local response to acoustic excitation and coincident flight loads of up to 20 g (steep re-entry).

Table 4-1. Command Module, Limit External Pressure (Preliminary Information)

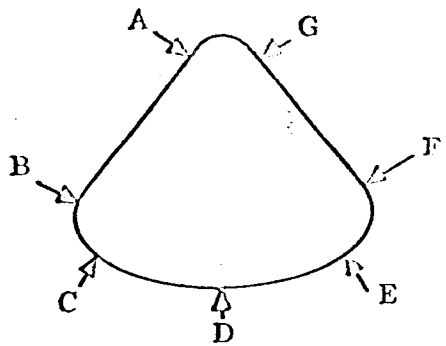

Condition	Mode**	PSIA							
		Po***	A	B	C	D	E	F	G
Pad abort	1	14.7	19.7	19.7	19.7	19.7	19.7	19.7	19.7
	2	14.7	17.5	17.5	14.2	14.2	14.2	17.5	17.5
	3	14.7	19.1	19.1	13.9	13.9	13.9	19.1	19.1
Maximum "q"		2.4	10.1	10.1*				10.1*	10.1
Maximum "q" abort	1	3.4	8.5	8.5	1.0	1.0	1.0	8.5	8.5
	2	3.2	11.5	11.5	0.8	0.8	0.8	11.5	11.5
	3	3.2	14.8	14.8	6.0	2.0	1.0	1.0	3.0
	4	3.2	2.2	2.2	11.2	14.8	11.2	2.2	2.2
	5	3.2	2.2	1.0	1.0	2.0	6.0	14.8	14.8
Re-entry	1	0.01	0.5	0.5	8.3	11.7	8.3	0.5	0.5
	2	0.01	0.5	0.5	9.2	13.4	16.0	0.8	0.8

* Add 4.7 psi buffet pressure
** Modes to be defined
*** Static air pressure at altitude

[redacted]

Table 4-2. Command Module, Limit Accelerations (Preliminary Information)

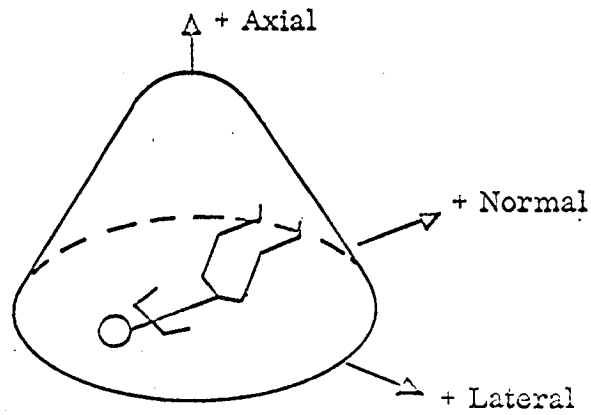

Condition	Mode **	Acceleration (G)		
		Axial	Normal	Lateral
Pad abort	1	+18	-0.6	±0.3
	2	+17.2	-0.6	±0.3
	3	0	-0.4	±0.2
Maximum "q"		+ 2.2	±0.25	±0.25
Maximum "q" abort	1	+ 9	-0.3	±0.2
	2	- 8	+0.3	±0.2
	3	- 6	-8.6	±0.1
	4	+13	0	0
	5	- 6	+8.6	±0.1
End boost stage I (EBSI)		+ 6.5	±2	
		+ 6.5	0	±2
Vacuum abort		+19	-2	0
Re-entry	1	+20	0	0
	2	+20	-2.2	±0.2
Lunar touchdown		+ 6	±3	±3

** Modes to be defined

[redacted]

Acoustic Noise - The CM withstands all acoustic excitation from the time of booster engine ignition to exit from the atmosphere and from time of atmospheric re-entry to earth landing. The noise spectrum extends from 5 to 10,000 cps, with overall levels between 145 and 163 db for up to 2-1/2 minutes duration. LES engine operation causes an acoustic level of 166 db for a two-second period.

Interfaces - The CM Structural System is integrated with the spacecraft systems as described in the following paragraphs.

Service Module - The SM is rigidly attached to the CM through a common interface; the two modules perform integrated system functions until the SM is separated prior to the re-entry phase.

Crew System - The crew members will be housed and protected from the atmospheric and space environment by the CM.

Environmental Control System - The Environmental Control System supplies the atmosphere for the pressurized CM.

Other Interfaces - The Structural System will provide mounting surfaces for all CM systems.

4-18 FLIGHT CREW

Size and Number - The required three man flight crew is restricted in size as defined in reference (1). The limitations on physical characteristics apply to height, weight, eye height, hip and shoulder breadth, sitting height, reach, and all other body dimensions critical to the spacecraft structural design. All undefined body dimensions are estimated by the most appropriate statistical and anthropometric methods.

Crew Duties - Mission task apportionment is designed to make maximum usage of the complete crew. Equality of crew utilization during critical mission phases is stressed.

General - The crew will be provided with information and means of control making possible a maximum contribution to the over-all system reliability and flexibility. The crew will monitor and control all parameter variations from the normal mission. Sequencing operations will utilize the crew in an alternate or backup mode. The crew will have the capability to terminate iniation or functioning of the automatic sequence operations prior to completion of the normal program (e.g., shutdown of booster stages, inhibit ignition of S-IVB engine, etc.). Crew member performance capabilities will be similar and assigned mission tasks interchangeable. Each will stand watch during non-critical mission phases and perform all command and system functions during such watches.

Specific Duties - The crew duties as a function of required mission activity are as follows:

a. Checkout - The crew will participate in all checkout operations prior to critical mission phases such as launch and translunar injection.

b. Control - The crew will have control over critical system functions for all phases of powered flight.

c. Watch - During non-critical flight phases, the crew will monitor all spacecraft systems and regulate them as necessary.

Duty Stations - Of the four defined duty stations, three are concerned with the launch and re-entry phases. These duty stations are the control station, the center or control-management station, and the right-side systems management station. The fourth duty station provides controls and displays for navigation

and equipment for maintenance and food preparation. Other duties are performed at appropriate locations.

4-19 CREW SYSTEM

General - The Crew System of the Apollo Spacecraft is considered to be that group of subsystems and components which support the operation and needs peculiar to the presence of human beings.

Examples of the crew system and cabin arrangement are indicated on Figures 4-18 through 4-23. There are two duty stations from which primary operation of the spacecraft can be controlled. These stations are side-by-side, with sufficient space between them to allow a third station to be occupied during acceleration flight phases. The center station is inactive during non-accelerated flight, and its supports and restraints are retracted into a stowed position. A support couch and restraint system are provided at each duty station; these are adjustable manually to allow free interchange of crewmen.

There are specific cabin areas assigned for sleeping and sanitation. Both areas accommodate a single crewman and are capable of being temporarily partitioned. Facilities are provided for waste disposal and control of infectious organisms.

Provisions for food and water include hot and cold water supply by the Environmental Control System. In addition, sufficient water is on board at launch to provide for a 72-hour landing and recovery time period in the event of an early abort.

Impact attenuation and vibration attenuation devices are incorporated into the support and restraint systems. Each crewman wears a full pressure suit during launch, re-entry, and similar critical flight phases. The same suits are used for extravehicular operations in the space environment and for survival in the event of cabin decompression. These suits are worn over a shirt-sleeve type garment, and are of the quick-don type. Their inflation pressure is 3.5 psia. When suits are worn inside the spacecraft, ventilation and communication are supplied via umbilicals to the spacecraft system. Self-contained environmental and wireless communication systems are used for extravehicular operation.

Equipment Description - The Crew System consists of the following subsystems and components:

a. Controls and Displays

b. Restraints, Support Equipment and Couches

c. Sleeping Facilities

d. Food and Water Management

e. Waste Management

f. Hatches and Windows

g. Optical Subsystem

h. Lighting Subsystem

i. Storage Cabinets

j. Survival Equipment

k. Personal Hygiene and Bio-medical Equipment

l. Pressure Suit and Backpack

m. Clothing and Accessories

n. Communication and Aural Equipment

o. Environmental Control Subsystem

p. Exercise Equipment

Controls and Displays - Controls and displays are provided to permit the crew to control the spacecraft and monitor parameters critical to mission performance. The following subsections describe the required controls and displays.

Primary Panel - The primary panel has three physical segments and is arranged to support three duty stations as follows:

a. Control Panel - The control panel is located above the left-hand couch. It contains controls and displays required for inflight control. The system displays and controls consist of:

   1. Stabilization and Control System mode select
   2. Flight commander controls and indicators
   3. Propulsion System controls
   4. Warning and caution lights
   5. Crew safety controls and displays

b. Center Panel - The center panel is located above the center couch and provides the displays and controls required by the navigator during launch and re-entry. The systems displays and controls consist of:

   1. Propulsion System displays
   2. Computer read out
   3. Computer keyboard
   4. Warning and caution lights

c. Systems Management Panel - The systems management panel is located above the right-hand couch and provides the controls and displays required for spacecraft systems management. Systems displays and controls consist of:

1. Environmental Control System
2. Electrical power distribution
3. Telecommunication
4. Fuel cells
5. Warning and caution lights

Left-Hand Console - The left-hand console provides additional space to support the control requirements for the commander. Located on this console are:

a. Lighting controls
b. Audio controls
c. Circuit breakers
d. Manual activation

Right-Hand Console - The right-hand console provides additional space to support the control requirements for the systems manager. Located on the console are:

a. Lighting controls
b. Audio controls
c. Circuit breakers

In-Flight Test Panel - This panel is located beneath the right side of the forward hatch and contains:

a. A test point matrix
b. An enunciator panel

c. An oscilloscope

d. A test meter

The leads for the meter and scope are of sufficient length to reach secondary test points which are located in the lower equipment bay modules. The status light and enunciator panel are visible from the commander's couch.

Guidance and Navigation Panel - This panel is located in the lower bay at the foot of the center couch. It contains controls and displays for navigation operations including:

a. Scanning telescope

b. Sextant

c. Coupling display units

d. Power controls

e. Radar controls

f. Clock

g. Viewer

h. Condition lights

i. Caution and warning lights

j. Lighting controls

k. Audio controls

l. Attitude controls

Restraints, Support Equipment and Couches - Each crewman is provided with a support couch for protection against acceleration loads. A couch provides full body support during all nominal and emergency acceleration conditions. The couches are adjustable to permit changes in body and leg angles thereby improving comfort during the coasting phases of the mission.

Couches are constructed to permit crewmen to interchange positions. Interchange requirements are accomplished by use of simple couch adjustment devices.

A restraint system is provided with each couch. The system allows the interchange of crewmen with simple attachment and adjustment for comfort and sizing. The restraint system provides adequate restraint for all nominal and emergency flight phases.

Impact attenuation beyond that required to maintain general spacecraft integrity is obtained through use of discrete shock mitigation devices for individual crew support and restraint systems. Attenuation devices provide for lateral as well as transverse acceleration loads.

Sleeping Facilities - The center couch can be re-positioned for use as a sleeping area. The area is located on the floor beneath the commander's couch and accommodates one crew member. An adjustable cover attached along three edges of the couch and the wall isolates the area. A two-way stretch, open mesh coverlet, when drawn over the crewman, holds him in place against an inflated mattress. The isolation cover closes out cabin light and reduces noise level. A manually operated light and a manually adjustable air supply are available to the resting crewman.

Food and Water Management - Food management includes provisions for food storage, preparation, and disposal of waste food bags, and operation and cleaning of a heating probe. Food storage is accomplished in the lower equipment bay, center section, in 15 flat drawers, 2" x 6" x various depths. Retainers cover the individually packaged freeze-dried food products to prevent them from floating out of open drawers. Reconstitution is accomplished with hot water injected by probe into the individual containers. Empty bags are compressed and stored in the waste disposal area of the lower equipment bay.

Waste Management

Collection and Storage of Liquid Human Waste - A urine cuff is supplied for each crew member.

One or three (to be determined) relief tubes will be supplied. Each tube is connected to a vacuum through an appropriate valve so that the urine can be vented overboard without chance of backup.

Collection and Storage of Solid Human Waste - Defecation-Emesis bags are supplied for crew use and are stored in empty food lockers in the lower equipment bay.

Optical Subsystem - Cameras are provided and controls are mounted on each crewman's instrument panel. The cameras permit pictorial recording of crew reactions, spacecraft interior and equipment functioning during all mission phases.

Lighting Subsystem - The CM is illuminated by indirect floodlighting of the primary and secondary duty station panels and general areas. Integral illumination is incorporated in the displays monitored or used throughout the mission. This lighting provides a totally integrated visual environment.

Indirect Illumination - The indirect illumination consists of multiple lamps located to provide even lighting with a minimum of glare. It is capable of intensity variation and control is provided for illumination of each functional crew station.

Integral Illumination - Light sources located within the displays provide contrast between indices and background when low luminance levels are desired and intensity is varied.

Portable Lights - Independent portable lights are provided in the CM to permit the crew members to view areas or equipment not normally lighted.

Rest Area Light - A small light in the rest station permits reading or writing.

Storage Cabinets - Storage space is available in lower, upper, right-hand, and left-hand equipment bays.

Lower Equipment Bay - The lower equipment bay has storage cabinets and drawers with recessed drawer pull latches. The sextant is located in the upper center of the bay with food storage cabinets directly below. Other inertial measuring equipment is located to the left of the food storage area and other Guidance and Navigation equipment is located to the right of the food storage area. Electronics, Guidance and Navigation, telecommunications and scientific equipment is stored below the food storage area. Space is provided for tools on the left side and waste storage on the right side of the lower equipment bay.

Upper Equipment Bay - The upper equipment bay is considered as a storage area for pressure suits, back packs, helmets, and survival equipment.

Right-Hand Equipment Bay - Cabinets on the upper left are for electronic modules and other spares. The lower left area contains cabinets with recessed pull latches for tools, medical and surgical supplies, toiletries, and hygiene supplies. The lower right-hand area contains cabinets for cleansing pads and clothes storage.

Left-Hand Equipment Bay - This bay contains the absorption cylinders above which are located some components of the Environmental Control System. The remainder of the bay is available for spare parts and instrument storage.

Survival Equipment - The following equipment and provisions are carried aboard the spacecraft for use either in normal or contingency modes:

a. One three-man life raft
b. Location aids - dyes, markers, signal mirrors and distress signals
c. Shark repellants
d. Desalting kits
e. Whistle
f. Nylon cord
g. Radiation dosimeters
h. Pressure suits
i. Knives
j. Matches

l. Food

m. Plastic tarp

n. Side arms and ammunition

o. First aid kit

Personal Hygiene and Bio-Medical Equipment

Oral Hygiene Supplies - Individual multiple use toothbrushes and ingestible dentrifices in air-tight sealed containers provide for adequate cleansing of teeth and gums by each crew member. A technique of brushing is followed so as to prevent particulate matter from escaping into the CM atmosphere and spreading contamination.

Razor - To provide well being and general cleanliness, a complete portable, battery operated, vacuum filtered raxor is provided. It is designed to hold all hair fragments obtained from 3 men for 14 days. The razor is stored in the same drawer as oral hygiene equipment, with a dividing partition and separate, transparent, retractable cover.

Toiletries (Defecation-Emesis Bags, Toilet Tissue) - The defecation-emesis bags for adequate storage of human waste material are interchangeable for defecation or emesis purposes. A maximum of 40 bags is provided. Toilet tissue also is provided.

Cleansing and Deodorizer Pads - Individual cleansing pads impregnated with lotion cleanser, disinfectant, and deodorizer provide for all-purpose washing needs. Deodorizer pads provide control of bacteria and noxious odors from armpits and groin regions. Wrapping material serves to preserve pads before use, act as a towel or wiping cloth during use, and act as a disposable container for used cleansing pads.

Blood Pressure Cuff - A standard clinical blood pressure arm cuff with aneroid (non-mercury) pressure sensor is provided. The cuff is designed to be used in measurement of arm systolic and diastolic blood pressures in conjunction with the stethoscope.

Stethoscope - A standard clinical model stethoscope having both a bell and diaphragm head is provided.

Oral Drugs - Oral drugs are supplied in pill form to be mixed with water in a spare drinking water bag prior to consumption. This includes drugs to combat pain, nausea, fatigue, allergic reactions, and infections. Water purification tablets and tranquilizers are included. These drugs have a slow onset of action.

Injectible Drugs - Injectible drugs include the same array as the oral drugs with the addition of drugs to combat shock. Syringes are disposable.

Antiseptics - Antiseptics are provided in individual absorbent cotton pad form with sealed bags similar to those of the deodorizer pads. Pads are used for cleansing around abrations, lacerations and contusions. After use each pad is replaced in its bag, sealed and stored in the waste disposal area.

Surgical Supplies - Surgical supplies include gauze, dressings, a small Velcro cuff tourniquet, a scalpel, a self-retaining retractor, suture with cutting needle, a tracheotomy tube, and a drainage tube.

Splints - Six balsa wood splints are supplied.

Pressure Suit and Backpack

Space Suit Assembly - A space suit assembly is provided for each crew member for extravehicular operations and for crew protection in the event

of cabin decompression. The space suit assembly consists of:

a. Pressure Garment Assembly (PGA)

b. Portable Lift Support System (PLSS)

c. Constant Wear Garment (CWG or undergarment)

d. Personal Communications System

Pressure Garment Assembly - The PGA is a full pressure, closed circuit, anthropomorphic type garment. Normal operating pressure of the suit is 3.5 psia. The pressurizing gas is 100% oxygen which serves both respiratory and ventilation requirements. Normally, the suit is comfortable for about four days and it meets the requirements for waste elimination and personal hygiene. All three unsuited CM crew members can don their suits within a single time period of five minutes. In addition to respiration and ventilation requirements of the crew, the suit assembly provides adequate insulation and thermal control to maintain a comfortable environment. The suit permits nearly unrestricted mobility within the confines of the CM. When pressurized to 3.5 psia it permits unassisted crew passage through the CM ingress/egress hatches. The suit head enclosure incorporates a device for permitting the intake of liquids and specially prepared solid or semi-solid foods while the suit is pressurized. The PGA is worn by all crew members during critical mission phases.

Portable Life Support System - The PLSS provides respiration and ventilation requirements for the space suit along with removal of carbon dioxide, water vapor, body contaminants, and thermal control for a minimum of four hours continuous operation without recharge. Two PLSS units may be temporarily attached to a single suit, or two suits to a single PLSS. It is possible for a suited crewman to don a PLSS unassisted. Provisions are made for the storage of two PLSS units aboard the CM.

Constant Wear Garment - The CWG is a closefitting undergarment which is worn by the crewman at all times and which constitutes primary clothing. These garments are comfortable and free of areas that would snag on spacecraft equipment. Each crewman is provided with a light weight cap, separate from the pressure suit helmet, to protect his head from injury as a result of collision with spacecraft equipment.

Clothes Storage - Two changes of clothes per man per mission are provided and storage of soiled clothes minimizes possible contamination.

Communications and Aural Equipment

Command Module, Intermodule and Spacecraft to Ground Communications - Two-way voice communication capability between individual crew members, between the spacecraft and earth-based stations, and between each module in a rendezvous maneuver is provided. Audio-controls consist of off-transmit-receive, VHF/DSIF, and intercom selections. Thumb knobs are provided for frequency selection and a switch is provided for "push-to-talk". Each crewman has his own audio control panel.

Extravehicular Communications - A suit-contained personal communications system consists of a headset, microphone and transceiver. The transceiver is located in the PLSS and is used only for extravehicular operations. Full duplex voice communication, with voice backup capability, between two extravehicular crewmen and with the CM, LEM, and earth is provided. Positive identification of transmitting crewman is provided. The system is capable of transmission of physiological and suit environmental data simultaneously with voice without interference. Manual switching for transmission of physiological data may be accomplished by any extravehicular crew member.

[redacted]

Environmental Control Subsystem - The environmental control subsystem regulates the cabin environment, including temperature, humidity, gas pressure, and gas composition, in such a fashion that the crew is able to operate in a shirt-sleeve condition. The environmental control subsystem is capable of operating automatically; however, manual overrides are provided.

Controls - The following controls are provided:

a. A manual override for the cabin compressors

b. A manual override for the suit compressors

c. A manual override for the nitrogen supply

d. A manual override for the catalytic burner

e. A manual override for the humidity controller

f. A manual override for the temperature controller

g. A control to activate the re-entry oxygen supply

h. Any other controls that may be determined necessary

Displays - The following displays are provided with the type of display to be determined:

a. Total cabin pressure

b. Cabin temperature

c. Oxygen partial pressure

d. Nitrogen partial pressure

e. Carbon dioxide partial pressure

f. Relative humidity

g. Carbon monoxide partial pressure

[redacted]

[redacted]

This page intentionally left blank.

[redacted]

[redacted]

4-20 TELECOMMUNICATIONS

General - The Telecommunications System of the Command Module performs the following functions during the lunar mission:

a. Transmit voice, telemetry, and TV signals to the GOSS stations.

b. Receive and demodulate voice transmissions from the GOSS stations.

c. Receive and retransmit in phase coherence Deep Space Instrumentation Facility (DSIF) -type pseudo-random noise codes to enable the GOSS stations to track the spacecraft in angle, velocity, and range during deep space phases.

d. Receive and respond to interrogating radar signals for tracking purposes during near-earth phases.

e. Provide antennas to transmit and receive electromagnetic radiation in a near omnidirectional manner.

f. Assemble and encode, in suitable form for transmission, the data required by the Mission Control Center during spacecraft missions.

g. Receive and respond to interrogating signals from the LEM.

h. Provide for voice communication between crew members, and provide for the transfer of audio signals to and from transmitters and receivers.

i. Provide two-way voice communication between crew members and the CM via a direct r-f link to the space suit personal communications equipment or LEM-CM relay.

[redacted]

j. Provide for reception, conditioning, and relaying of physiological data from the space suit personal communication equipment or LEM-CM relay.

Equipment Description - A Telecommunications System block diagram is given in Figure 4-25. The components of the system are listed and described functionally in Table 4-3 in which it should be noted that several components are physically located in the Service Module.

Performance

General - Communication equipment is designed to facilitate checkout and maintenance by ground personnel and by the crew. Each subsystem together with the inter-connecting cables are as nearly self-contained as possible to simplify removal from the spacecraft. The capability of removing, replacing, and adjusting subsystems with pressurized gloved hands is a design goal. Flexibility of design for incorporation of future additions or modifications is stressed.

Detailed - The detailed performance of the Telecommunications System components is given in Table 4-4.

Interfaces

Command Module/GOSS Communication - Communication between the CM and the GOSS is in the VHF band during the near-earth phase of all missions and the UHF/S-Band during translunar and lunar-orbital mission phases. In the near-earth phase, amplitude modulation is employed for simplex voice communication and PCM/FM is employed for transmission of CM telemetry data. The CM GOSS UHF/S-Band carrier frequency is either phase-modulated, frequency-modulated, or phase-shift-key modulated according to the transmission mode being employed. The GOSS is

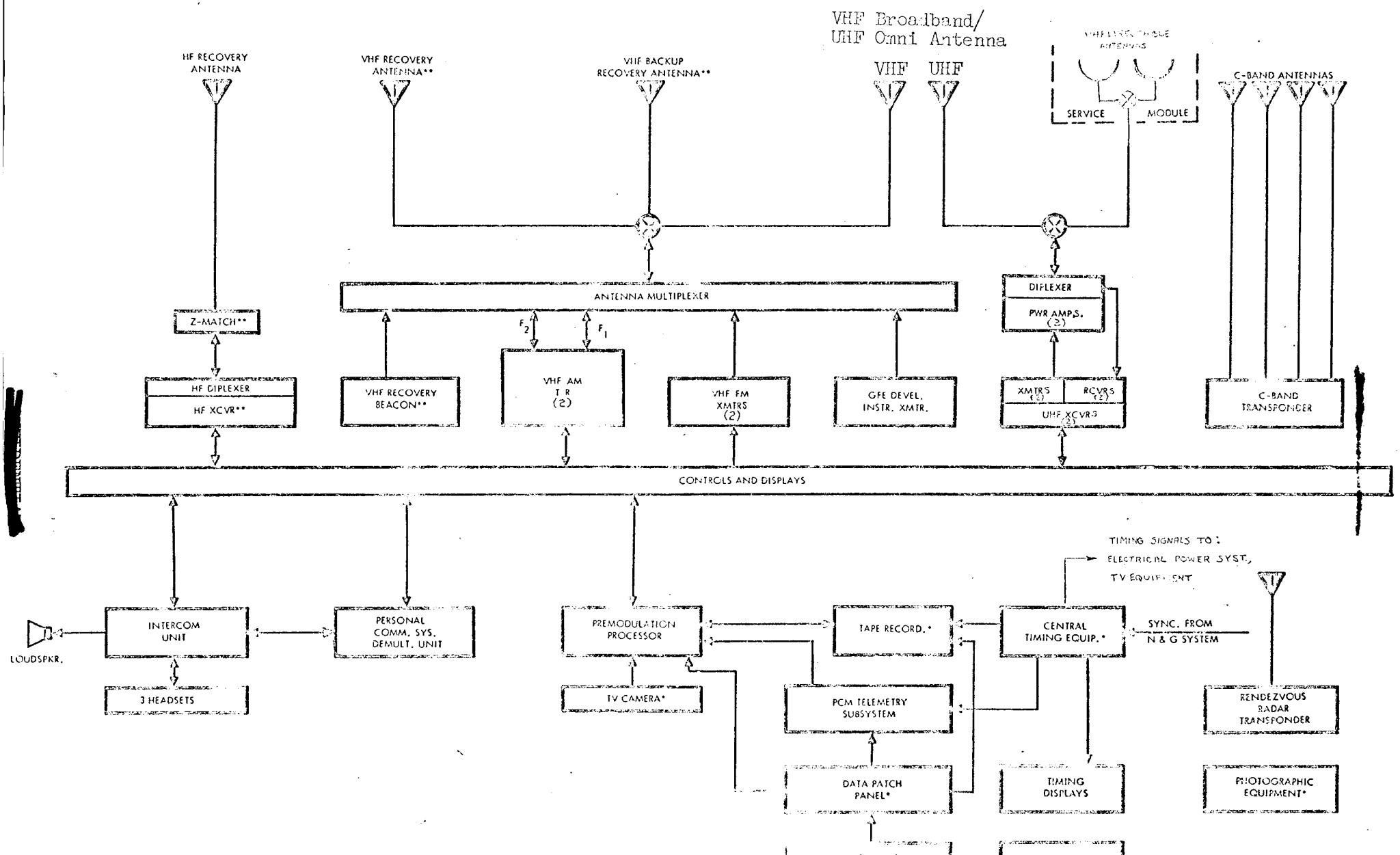

Figure 4-25. Telecommunications, System Block Diagram

Table 4-3 TELECOMMUNICATIONS SYSTEM COMPONENTS, FUNCTIONS AND DESCRIPTION

Component	Function and Description
VHF FM Transmitter Equipment (2 sets)	Two VHF FM Transmitters are supplied. One provides transmission of telemetry data during near-earth mission phases, the second transmitter gives redundant capability. The VHF broad-band antenna is shared between this transmitter and the VHF AM transceiver, by means of the VHF multiplexer.
VHF AM Transceiver Equipment (2 sets)	Provides two-way voice communications between the CM and earth during near-earth mission phases, between the CM and space-suit personal communications system transceiver, and between the CM and the LEM. It is also used for two-way voice contact with recovery aircraft during the post-landing phase. Two sets are supplied; one for normal operations, the second for redundant back-up. This equipment uses the VHF broad-band antenna (via multiplexer) except for recovery and post-landing. During recovery, the transceiver is switched to the VHF recovery antenna.
DSIF Transponder Equipment (2 sets)	DSIF transponder provides data and television transmission, ranging, two-way voice, and coherent doppler tracking during translunar mission phases. It is used for TV transmission during earth orbital missions. The UHF high-gain antennas are used with the transponder for normal translunar operations. For emergency and earth orbital operations, the UHF omni antenna is used.
(1) DSIF Receiver (2 each)	Two phase-lock, double conversion superheterodyne receivers are supplied. The second receiver is for redundancy. A diplexer is used to provide single-antenna operation of DSIF receiver and DSIF transmitter.
(2) DSIF Transmitter (2 each)	Serves as a driver for the DSIF power amplifier. This transmitter derives its excitation from either the DSIF receiver's local oscillator or from an auxiliary crystal oscillator. Two units are supplied; second transmitter is for redundancy.

Table 4-3 (Continued)

Component	Function and Description
DSIF Transponder Equipment (Continued)	
(3) DSIF Power Amplifier (2 each)	Two power amplifiers provide amplification of DSIF transmitter output for transmission from lunar ranges. Switching enables either amplifier to be used with either transmitter.
C-Band Transponder	Provides radar tracking capability during near-earth mission phases; compatible with the AN/FPS-16 radar system. The transponder includes four spaceborne superheterodyne receivers, pulse modulated transmitter, antenna multiplexer, and power supply. Input signals are coded two or three pulse interrogations; outputs are single pulse replies.
C-Band Antenna Equipment	Provided to supply antenna requirements for C-Band radar tracking function.
(1) C-Band Flush-mounted Antennas (4 each)	Four flush-mounted antennas are equally spaced around the periphery of the CM to provide essentially omni-directional pattern coverage.
(2) Comparator	An amplitude comparator is used to minimize nulls in the C-Band antenna pattern.
(3) Associated Components	These associated parts include power dividers and transmission lines (waveguide or coaxial).
VHF Omni Antenna Equipment	Provides antenna requirements for the following equipment: (a) VHF FM transmitters (b) VHF AM transceivers (c) NASA R&D transmitter
(1) VHF Broadband/UHF Omni Antenna	A 1/4 wavelength (at VHF) monopole mounted in nose of spacecraft, providing omni-directional coverage about the longitudinal axis. Used with VHF FM transmitters and VHF AM transceivers. Six slots in the antenna provide for operation at UHF/S-band in conjunction with the DSIF transponder for TV transmission during near-earth mission phases and for emergency communication during translunar mission phases. This antenna is jettisoned during re-entry, at the time of parachute deployment.

Table 4-3 (Continued)

Component	Function and Description
VHF Omni Antenna Equipment (Continued)	
(2) VHF Multiplexer	Allows simultaneous connection and operation of equipment listed above with the VHF antenna.
(3) Associated Components	These include power dividers, switches, and cables.
UHF High Gain Antenna Equipment* (2 sets)	Provides spacecraft antenna requirements for normal translunar communications. Two sets of equipment are located on opposite sides of the SM. Antennas are extended for operation by a deployment mechanism.
(1) UHF Higain Antennas (2 each)	Two antennas provide spherical coverage and redundancy. For use with the DSIF transponder.
(2) Gimbal Drives (2 each)	Provide pointing capability for the narrow-beam antennas.
(3) Associated Components	This equipment includes switches and cables.
Intercommunication Equipment	Provides crew intercommunication for both pressure-suit and shirt-sleeve environments, and voice transmission mode selection
(1) Audio Control Units (4 each)	One unit is provided on display panel for each crew member, fourth unit is at work station. Each unit contains dual earphone amplifiers, dual microphone amplifiers, and switches for selection of various modes of voice transmission. Earphone amplifiers have AVC capability; microphone amplifiers have AVC as well as peak clipping. VOX or PTT operation is selectable.
(2) Headsets (2 each)	Headsets containing dual microphones and dual earphones are provided at each crew station for use in shirt-sleeve environment.
(3) Personal Communications System Demultiplexing Unit	Demultiplexes voice signals and presents them to the audio control unit. Demultiplexes certain physiological and suit information for display.

* Located in Service Module

Table 4-3 (Continued)

Component	Function and Description
Premodulation Processor	Consists of subcarrier oscillators and electronic controls required to miltiplex and condition the various data channels to modulate the UHF transmitter
Telemetry Equipment	Processes data into forms suitable for radio transmission to earth. During deep-space operations, conditioned analog data will be encoded for transmission via the DSIF transponder. During near-earth mission phases, the VHF FM transmitter will be used.
(1) Analog Commutator	Suitable electronic commutation of analog signals allows flexible repetitive selection of inputs to the analog-to-digital converter.
(2) Analog-to-Digital (A-D) Converter.	Digitizes the output of the analog commutator.
(3) Digital Commutator	Suitable electronic commutation of digital signals allows flexible repetitive selection of inputs to the programmer.
(4) Programmer	Controls the operation of analog and digital commutators, A-D converter, and calibrator. Encodes digital data to PCM (NRZ) format for storage or transmission.
(5) Calibrator	Introduces selected calibration voltages into PCM data format on continuous basis. Upon crew command, interrupts all analog signals and inserts calibration signals on all these channels. Also operates in conjunction with the in-flight test program.
Control and Display Panels	Provides capability to control and monitor the Telecommunications System in all operating modes.

Table 4-4 TELECOMMUNICATIONS SYSTEM PERFORMANCE VALUES

Component	Performance Values	
VHF FM Transmitter Equipment	Frequency	225 mc to 260 mc (Preset)
	Frequency stability	0.01 percent
	Modulation	
	Type	FM
	Deviation capability	±125 kc
	Modulation capability	50 to 100 kilobits/second
	Linearity	±1% maximum deviation
	Power Output	10 watts
VHF AM Transceiver Equipment		
(1) Transmitter	Frequency	2 selectable frequencies in the band 243 to 300 mc
	Frequency stability	0.005 percent
	Modulation	
	Type	AM
	Information band width	15,000 cps
	Power Output	10 watts
(2) Receiver	Frequency	243 mc to 300 mc
	Noise Figure	10 db
	Predetection bandwidth	6 kc or 30 kc (selectable)
DSIF Transponder Equipment		
(1) DSIF Receiver	Type	Phase locked, double conversion super heterodyne
	Frequency	2100-2130 mc
	Signal Modulation	PM
	Noise Figure	To be supplied
	Bandwidth(s)	To be supplied
	Image rejection	40 db
	Spurious rejection	60 db
(2) DSIF Transmitter	Frequency	2280-2310 mc
	Excitation	
	*Mode 1	PM oscillator with provision for phase-locking to receiver frequency
	*Mode 2	Crystal oscillator ±0.001 percent frequency tolerance
	Modulation Type	
	*Mode 1	PM
	*Mode 2	PM
	Deviation	
	*Mode 1	$\pm \pi/2$ radians
	*Mode 2	To be supplied

* Mode definition to be supplied.

Table 4-4 (Continued)

Component		Performance Values
DSIF Transponder Equipment (Cont'd.)		
(2) DSIF Transmitter (Cont'd)	Frequency response-----	To be supplied
	Power Output----------	200 mw
(3) DSIF Power Amplifier	Power Output----------	20 watts or 5 watts (selectable)
	Frequency----------	2280-2310 mc
	RF Bandwidth----------	10 mc
C-Band Transponder Equipment		
(1) C-Band Transponder	Frequency----------	Any preset frequency in the band 5.4 to 5.9 kmc, 40 mc minimum separation
	Frequency stability	
	Transmitter----------	±4 mc
	Receiver----------	±2 mc
	Modulation----------	Pulse
	Pulse width----------	0.5 ± 0.05 microsecond
	Recovery time----------	140 microseconds max.
	Interrogation code-------	Capable of operation in accordance with IRIG recommendation 106-59
	Receiver sensitivity-----	70 dbm for 100% response to interrogation
	Image rejection----------	60 db minimum
	Transmitter power--------	2.5 kw (peak)
(2) Comparator	Utilizes the output of four superhet receivers to control switching of transmitter output to most favorable antenna, on a pulse-to-pulse basis.	
C-Band Antenna Equipment	General----------	Transmit and receive
	Frequency----------	5400 - 5900 mc
	Pattern coverage---------	Omni-directional in Y - Z plane
	Polarization----------	Right hand circular
	VSWR----------	1.5 to 1
	Power handling capability	2500 watts pulse, duty cycle 0.002
	Switching capability-----	Controlled by comparator

Table 4-4 (Continued)

Component	Performance Values	
VHF Omni-Antenna Equipment	General	Transmit and receive
	Frequency	(a) 225 to 300 mc *(b) 400 to 450 mc
	Pattern coverage	Omni-directional in Y-Z plane *0 db ± 3 db 10 db beamwidth 140 degrees
	Polarization	Vertical linear
	VSWR	2 to 1
	System insertion loss	4 db ± 1.3 db
	Power handling capability	20 watts cw
UHF High Gain Antenna Equipment**	General	Transmit and receive
	Frequency	2280-2310 mc
	Pattern coverage	6 degrees beamwidth - steerable
	Polarization	Right hand circular
	VSWR	1.5 to 1
	System insertion loss	2.5 ± 0.7 db
	Power handling capability	20 watts cw
	Gain	26 db nominal
UHF Omni Antenna Equipment***	General	Transmit and receive
	Frequency	2280-2310 mc
	Pattern coverage	Omni-directional in Y-Z plane
	Polarization	Vertical linear
	VSWR	1.5 to 1
	System insertion loss	4 ± 1.25 db
	Power handling capability	20 watts cw
Intercommunications Equipment	All inputs and outputs balanced, 600 ohms impedance. Headset microphone output 0 dbm. Headset earphone output 20 dbm. Frequency response (excluding earphones) 300 to 3000 cps; ± 3 db.	

* Definition to be supplied.
** Not including Sensor
*** This antenna is provided by means of slots in the VHF broadbeam antenna.

[redacted]

Table 4-4 (Continued)

Component	Performance Value	
Telemetry Equipment		
(1) Analog Commutator	Input level - 0 to 5 volts Input impedance-500 k ohm Source impedance-5000 ohm	PCM (output) Specifications:
(2) A-D Converter	Quantization to 8-bit words (256 levels)	*Accuracy - 0.25%
(3) Digital Commutator	Input impedance-500 k ohm	Bit rate (fixed) - to be supplied
(4) Programmer	PCM/NRZ format	Sync. - from ground station
(5) Calibrator	To be supplied	

*Definition to be supplied.

[redacted]

compatible with these modulation modes. The GOSS-CM UHF/S-Band carrier is phase modulated.

Command Module/GOSS Tracking - Spacecraft tracking during near-earth mission phases is accomplished by AN/FPS-16 C-band radar equipment operating in conjunction with a radar transponder in the CM. Transponder electrical characteristics are optimized for operation with the AN/FPS-16. During translunar and lunar orbital mission phases, the UHF/S-Band transponder is capable of receiving, demodulating, remodulating and retransmitting the pseudo-noise-coded ranging signal from the GOSS.

Electromagnetic Interference Compatibility - Electromagnetic interference which may be conducted or radiated from system components, and the vulnerability of this equipment to conducted or radiated interference are controlled within the limits given in reference (2).

Interchangeability - A study is to be performed to determine utilization of spares between the CM, SM, and the LEM.

4-21 INSTRUMENTATION SYSTEM

General - The Instrumentation System detects, measures, and displays all parameters required by the crew for monitoring and evaluating the integrity and environment of the spacecraft, performance of the spacecraft systems, and crew safety. It provides data for transmission to earth to facilitate ground assessment of spacecraft performance and failure analysis. It provides the crew with the necessary information if required for abort decision. In addition, the capability is provided for documenting the mission through photography and recording.

The Instrumentation System:

a. Converts to electrical signals those physical parameters which must be displayed, recorded, or transmitted.

b. Obtains photographic records of events occurring inside and outside the Command Module.

c. Provides an optical means for observing events external to the spacecraft.

d. Converts optical data to electrical signals through the use of TV equipment.

e. Conditions electrical signals to a common level to allow convenient display, recording and transmission.

f. Stores for future readout that data which cannot be transmitted to the ground in real time.

Equipment Description - The Instrumentation System consists of physical and bio-medical transducers, tape recorder, central timer, special radiation instruments, gas analysis components, signal conditioners, data patch panels, and a television camera. The Instrumentation System is shown schematically in Figure 4-26. A list of the instrumentation components with their functional description given in Table 4-5.

Performance - The Instrumentation System is constructed to facilitate maintenance by ground personnel and by the crew. Each component and appurtenances such as connecting cables are as nearly self-contained as possible to simplify removal from the spacecraft. Flexibility for incorporation of future additions or modifications is stressed throughout the design and assembly of

[redacted]

Figure 4-26

Instrumentation System Schematic

(To be supplied)

[redacted]

Table 4-5 INSTRUMENTATION SYSTEM COMPONENTS - FUNCTION AND DESCRIPTION

Component	Function and Description
Transducers	Accept physical parameters of spacecraft systems; convert to electrical signals for telemetry, data storage, or display to crew. The parameters include
(1) Vehicle	(a) Temperature (b) Pressure (c) Flow (d) Volume (e) Leak rate (f) Acceleration (g) Force (h) Vibration (i) Displacement (j) Angular velocity (k) Gas partial pressure (l) Acoustic noise (m) Strain (n) Char and ablation
(2) Bio-medical	(a) Sphygmomanometer (b) Clinical thermometer (c) Metabolic balance device (d) Pulmonary function device (e) Cardio-vascular measuring device (f) Stethoscope
Data Storage Equipment (2 sets)	Provides on-board storage and playback capability for analog and digital data. Data can be recorded during critical periods or communication blackouts and played back for later transmission or stored for playback after recovery. Two sets of data storage components are provided for redundancy and for continuous information storage during blackout periods.
(1) Tape Deck (2 each)	Consists of tape transport unit and record and playback heads. This unit holds magnetic tape and reels and contains tape drive mechanism.
(2) Recorder Electronics (2 each)	This unit is connected to tape heads to provide recording, erase, playback of magnetic tape.
Spacecraft Central Timing Equipment	Times various operations in spacecraft; consists of stable oscillator reference and dividers to supply various desired frequencies. Redundancy is incorporated for reliable operation. Sync input is obtained from the Guidance and Navigation System for the following systems or equipments: (a) Electrical Power System (b) Telemetry equipment (c) Data storage equipment (e) Television equipment (f) Crew display panel

Table 4-5 (Continued)

Component	Function and Description
Radiation Detection Equipment	Measures radiation rates and total dosages of various types of particles.
Scientific Instrumentation Equipment	Information to be supplied.
Gas Analysis Subsystem	A single instrument or individual sensors for determining the qualitative and quantitative composition of the cabin atmosphere.
Signal Conditioning Equipment	Conditions all analog signals to a standard level and form prior to commutation in the telemetry equipment.
Data Patch Panel Equipment	
(1) Input Analog Patch Panel	Provides facilities for connecting any analog signal to input of signal conditioner.
(2) Output Analog Patch Panel	Provides facilities for connecting output of any signal conditioner to any channel or channels of analog commutator.
(3) Digital Patch Panel	Ahead of digital commutator - permits flexible selection of digital data.
Television Equipment	
(1) Camera	The television camera provides real-time video for crew and earth-based receiving stations. Video transmitted directly to earth via DSIF transmitter for observation of crew and flight operations. Camera is capable of operation external to spacecraft for observing lunar surface operations.
(2) Monitor	A TV picture monitor on display panel allows crew to monitor output of camera, including data being transmitted.
(3) Associated Components	Permit operation of camera by the crew on the lunar surface and external to spacecraft.
Photographic Equipment	Description to be supplied.

Table 4-6 INSTRUMENTATION SYSTEM - PERFORMANCE

Component	Performance
Transducers	Sensor performance parameters such as accuracy, resolution, etc., are optimized for each measurement. Where possible, sensors will have an output voltage of 0 to 5 volts dc and an output impedance no greater than 5000 ohms.
Data Storage Equipment	
(1) Tape Decks (2)	Recording and playback speeds: 7.5 and 15 inches/second Tape format: 1 timing channel, 4 digital channels, 9 analog channels Tape capacity: 2300 feet (minimum) of 1 mil tape
(2) Recorder Electronics	Digital channels capable of 2,000 bits/inch NRZ digital data. Analog channels capable of 50 to 10,000 cps analog at tape speed of 15 inches/second.
Spacecraft Central Timing Equipment	Frequency standard accuracy of over 14 day period. Timing input from Guidance and Navigation System, 512,000 pps. (Outputs to be supplied). Parallel output of PDM time code for display. Following controls are provided: (a) Start (b) Set and reset (c) Advance and retard
Radiation Detection Equipment	a. Personal Dosimeter - Description to be supplied. b. Radiation Warning Instrument - A device operating on r-f, X-ray or ultraviolet principle. Description to be supplied.
Scientific Instrumentation Equipment	To be supplied.
Gas Analysis Subsystem	To be supplied.
Signal Conditioning Equipment	Outputs 0 to 5 vdc, output impedance not greater than 5000 ohms. Accuracy to be supplied.

Table 4-6 (Continued)

Component	Performance	
Data Patch Panel Equipment	Provision for changing of interconnections during mission.	
Television Equipment	Frame rate Line rate	10-15 frames/second 200-300 lines/frame
Photographic Equipment	To be supplied.	

all components and systems. Toward this end, the following features are provided:

a. Spare conductors are included in each wire group to permit system revisions or additions without necessitating retrunking of wire runs or additional bulkhead penetrations.

b. Insofar as possible, all spare contacts on relays, switches, contactors, etc., are wired and brought to an accessible point for future use.

c. A patch and programming panel is provided for the routing of signal inputs from sensors to any selected signal conditioner and from there to any desired commutator channel. Panel design provides the capability of "repatching" during a mission.

d. A design goal is that all replaceable components be constructed so as to be changeable by the gloved hand.

The performance capabilities of the Instrumentation System components are presented in Table 4-6.

Interfaces - Provision is made for optimum utilization of spares between the CM, SM, and the LEM.

4-22 RECOVERY AIDS

General - The Recovery Aids System provides the necessary equipment to accomplish the following objectives:

a. Locate and maintain a position plot of the CM after impact.

b. Establish and maintain voice communications between the CM and recovery forces.

Equipment Description - The components of the Recovery Aids System and their function and description are given in Table 4-7. The interconnection of these components is shown on Figure 4-27.

Performance - The description of performance is the same as for the Instrumentation System given in paragraph 4-21. Details are given in Table 4-8.

Interfaces - Recovery Aids are to be compatible with all existing and planned military and NASA recovery equipment.

4-23 ELECTRICAL POWER SYSTEM

General - The Electrical Power System has major components in both the CM and the SM. For clarity, the entire system will be discussed in this section and the components housed entirely in the SM will again be briefly discussed in the SM section.

Equipment Description

Major Components and Locations - The Electrical Power System is composed of the following major components:

a. Non-regenerative hydrogen - oxygen fuel cells

b. Mechanical accessories, including control components, reactants tankage, piping, radiators, condensors, hydrogen circulators and water extractors, isolation valves and other devices.

c. Zinc-silver oxide storage batteries

[redacted]

Figure 4-27

Interconnection of Recovery Aids Components

(To be supplied)

[redacted]

Table 4-7 RECOVERY AIDS - COMPONENTS, FUNCTIONS, AND DESCRIPTION

Components	Description and Function
VHF AM Transceiver	Described previously as part of Telecommunications System. Used for voice communications between CM and rescue aircraft after earth landing. Also provides direction-finding capability in event of VHF Recovery Beacon failure.
VHF Recovery Beacon Equipment	Provides aid to rescue aircraft in locating the spacecraft during post-landing phase. Compatible with presently available radio direction finding systems including ITT and SARAH receivers. Automatically actuated on impact during water landing.
VHF Recovery Antenna Equipment	Provides spacecraft antenna requirements for VHF radio recovery operations during the recovery and post-landing mission phases.
(1) VHF Recovery Antenna	Consists of an extendable VHF antenna which extends automatically after main parachute deployment. The output from the VHF multiplexer is switched to the VHF antenna after it is extended.
(2) Associated Components	This equipment includes switches, deployment mechanism, and cables.
Backup VHF Recovery Antenna	Provides redundant antenna functions for post-landing phase. Handles all outputs of VHF multiplexer in the event that VHF Recovery Antenna is not usable.
HF Transceiver Equipment	Provides direction finding, keyed CW, and voice communication during post-landing phase. Transceiver is single sideband, operating on one of the two separate frequencies; one for day and one for night transmission. Operates into HF recovery antenna.
HF Recovery Antenna Equipment	Provides spacecraft antenna requirements for HF operation.
(1) HF Recovery Antenna	Consists of an HF whip antenna that is extended after earth impact.
(2) Associated Components	This equipment includes switches, deployment mechanism, and cables.

Table 4-8 RECOVERY AIDS - PERFORMANCE

Components	Performance
VHF AM Transceiver	See Table 4-4.
VHF Recovery Beacon Equipment	Frequency---------- 243 mc Frequency stability---- 0.005 percent Modulation---------- Coded pulse or CW Power Output---------- 1 watt CW, 100 watts peak pulse
VHF Recovery Antenna Equipment	General---------- Transmit and receive Frequency---------- 225 to 260 mc, 300 mc Pattern coverage------- Omni-directional in Y - Z plane Beamwidth 90 degrees Polarization---------- Vertical linear VSWR---------- 2 to 1 System insertion loss-- 1 db Power handling capability---------- 90 watts pulse, 40 watts CW
Backup VHF Recovery Antenna	Extendable; deployed manually after landing
HF Transceiver Equipment	Frequency---------- 2 selectable preset frequencies in the band 2 to 20 mc Frequency stability---- To be supplied Modulation Type---------- SSB; KCW, voice or tone Tone Modulation------ 1000 cps Voice frequency response---------- 300 to 3000 cps at ± 3 db Power Output Voice---------- 5 watts peak envelope power Tone---------- 5 watts peak
HF Recovery Antenna Equipment	General---------- Transmit and receive Frequency---------- 2.5 mc, 8.4 mc Pattern coverage------- Omni-directional in Y - Z plane Polarization---------- Vertical linear VSWR---------- 2 to 1 System insertion loss-- 1 db Power handling capability---------- 20 watts peak envelope power

d. Battery chargers

e. Static inverters

f. Electrical Power System display and control panels

The major components of the Electrical Power System are located as shown in Table 4-9.

Table 4-9

LOCATION OF ELECTRICAL POWER SYSTEM COMPONENTS

Components	Location
Fuel cells and controls	Service Module
Tanks, radiators, heat exchangers, piping, valves	Service Module
Total reactants plus reserve	Service Module
Zinc-silver oxide batteries	Command Module
Battery chargers, inverters, power system display and control panels	Command Module
Command Module lighting	Command Module

Fuel Cell Subsystem and Modules - The Apollo fuel cell subsystem consists of three independent modules containing a number of non-regenerative hydrogen - oxygen fuel cells with their reactant tankage components. One module supplies the emergency power equipment of the space vehicle, and the remaining two modules are individually capable of supplying the normal power requirements.

Fuel cell modules are of a low pressure, intermediate temperature, Bacon type, employing dual-porosity nickel electrodes and operating at temperatures up to 500° F. Aqueous potassium hydroxide is used as the electrolyte. The fuel cell provides direct current electric power, employing hydrogen and oxygen as the reactants.

Reactant Tankage and Flow Arrangement - Sufficient tankage is provided to store all reactants for the fuel cell modules and environmental requirement for a 14-day mission. Reactants are kept in the supercritical form and storage provisions consist of two equal volume storage vessels for each reactant. The main oxygen storage vessels supply both the Environmental Control System and fuel cells.

a. Reserves - The oxygen tankage volume includes the fuel cell requirement plus 10 percent reserve and the environmental requirement. The hydrogen storage volume includes the fuel cell requirement plus 10 percent reserve.

b. Tank System Arrangement - Adequate valves and controls are provided to isolate identical reactant tanks from each other, and from the Environmental Control System and fuel cell modules. Valve arrangements allow flow from any reactant tank to any fuel cell module. The subsystem redundancy is 100 percent. Figure 4-28 presents the block diagram of the fuel system and connections.

Radiator Subsystem - The space radiator subsystem is used to dissipate waste heat generated in the fuel cells. Condensed water is separated and supplied to the Environmental Control System in potable form. The radiator subsystem is designed to be compatible with random radiator orientation in space. The radiator is fixed and located at the outer surface of the SM.

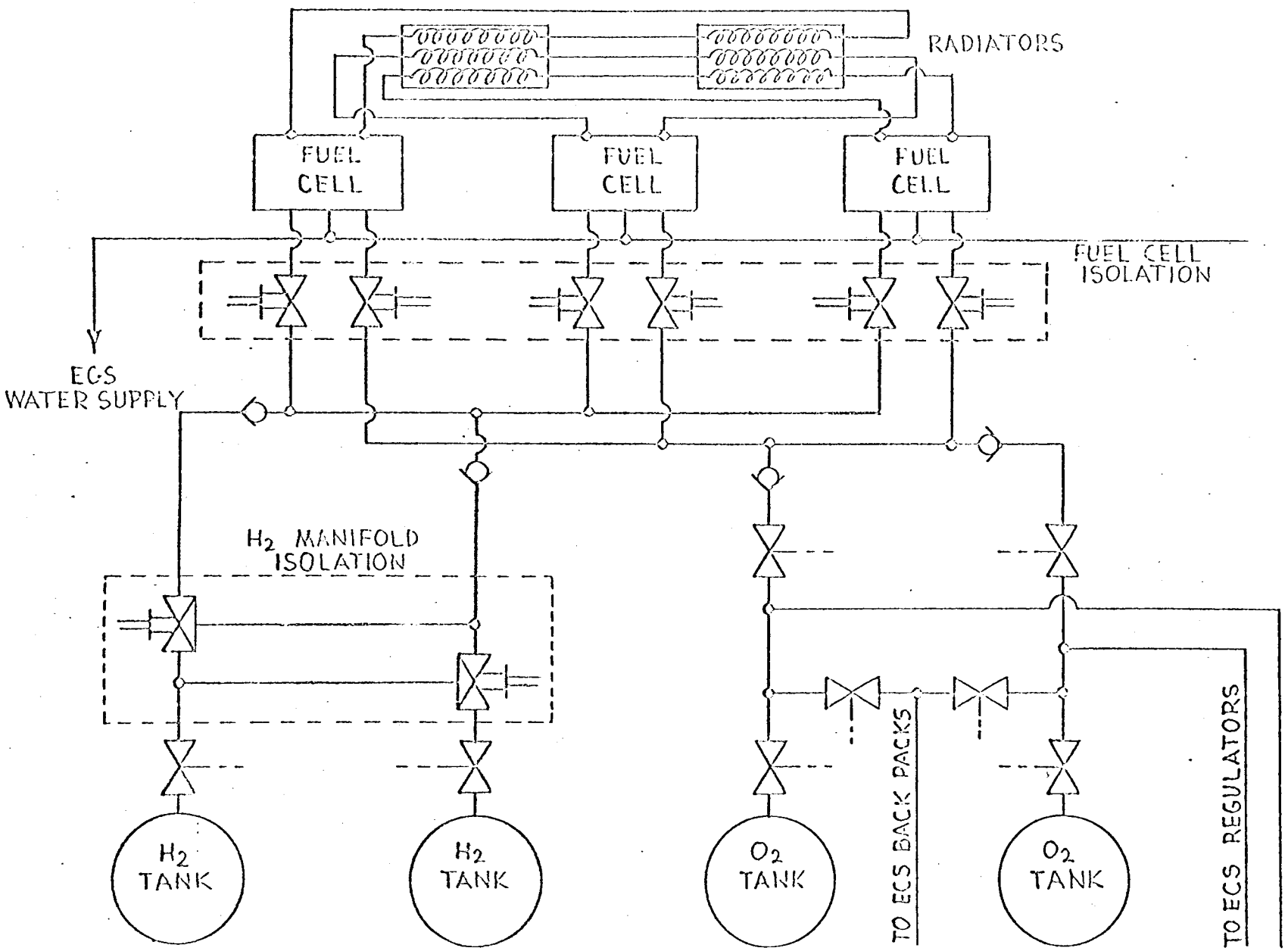

Figure 4-28. Fuel System Block Diagram

[redacted]

Auxiliary Power Subsystem - The auxiliary power subsystem is composed of the following components:

Re-entry and Recovery Batteries - Two zinc-silver oxide batteries are provided to supply all CM electrical power requirements during re-entry and recovery flight phases and the capacity of each battery is sufficient to supply essential loads in the event of failure of the other battery. Re-entry batteries are also used to supply peak system load demands during earlier flight phases. Two battery chargers are provided to recharge the re-entry batteries from fuel cell subsystem power after such use. Each re-entry battery may be charged by either battery charger in the event of failure of the other battery charger. At times other than re-entry and recovery use and recharging, these batteries are isolated from load busses.

Post-Landing Battery - One zinc-silver oxide battery is provided to supply essential loads during the post landing phase. This battery is normally fully charged and isolated from the main electrical power equipment. Provision is made to recharge the post-landing battery in flight from one of the battery chargers in the event of conditions such as excessive battery temperature. For normal post-landing conditions, unused capacity of the re-entry batteries also may be available for post-landing loads.

Electrical Power Distribution Subsystem

Load Classification and Power Source Operating Modes - All electrical loads supplied by the distribution system are classified as Essential, Non-essential, Pyrotechnic, or Post-Landing. Essential loads are defined as those loads, except for pyrotechnic circuits, which are mandatory for safe return of the CM from any point in any mission. Non-essential loads are

[redacted]

defined as those which are not necessary for successful completion of the mission. Pyrotechnic loads are those that are essential in employing pyrotechnic devices. Post-landing loads are those required after earth landing. Table 4-10 defines the load classifications and the provisions for various power-source operating modes.

DC Power Distribution - The output of all three fuel cell modules and both re-entry batteries is fed to each of two isolated redundant essential busses, A and B as shown in Figure 4-29. Redundant essential loads are connected alternately to essential buss A or B and non-redundant essential loads are connected to both essential busses, with isolation diodes used to retain isolation of essential busses A and B. Redundant pyrotechnic busses are also provided and supply only pyrotechnic loads.

All essential loads are thus connected to the two essential busses so that loss of power to either buss will not cause interruption of power to any essential load system.

The non-essential loads are connected to the non-essential buss and provision is made for manually disconnecting these loads as a group under contingency conditions. The non-essential buss is connected to both essential busses through isolating diodes.

Post-landing loads are supplied by the post-landing buss.

Inversion and Distribution of AC Power - Three static inverters are provided to supply 400 cps, 115/200 volts, 3-phase a-c power by inversion from the spacecraft primary d-c power sources. One inverter has capacity for supplying all spacecraft primary 400 cps power, with the other two inverters acting as redundant idle standby units. Transfer relays provide for manually

TABLE 4-10

Load Classifications Supplied for Different Power-Source Operating Modes

Flight Phase	Pre-Launch		Entry and Recovery		Post-Landing	
Power-Source Operating Mode	Normal	Emergency	Normal	Emergency	Normal	Emergency
Power-source equipment operating	Two or three fuel cells	One fuel cell	Two entry batteries	One entry battery	One entry battery and post-landing battery	Post-landing battery
Load classes supplied	Essential, Pyrotechnic, Non-Essential	Essential, Pyrotechnic	Essential, Pyrotechnic, Non-Essential	Essential, Pyrotechnic	Essential, Non-Essential, Post-Landing	Essential, Post-Landing

NOTE: This figure is for reference purposes only and does not represent actual hardware.

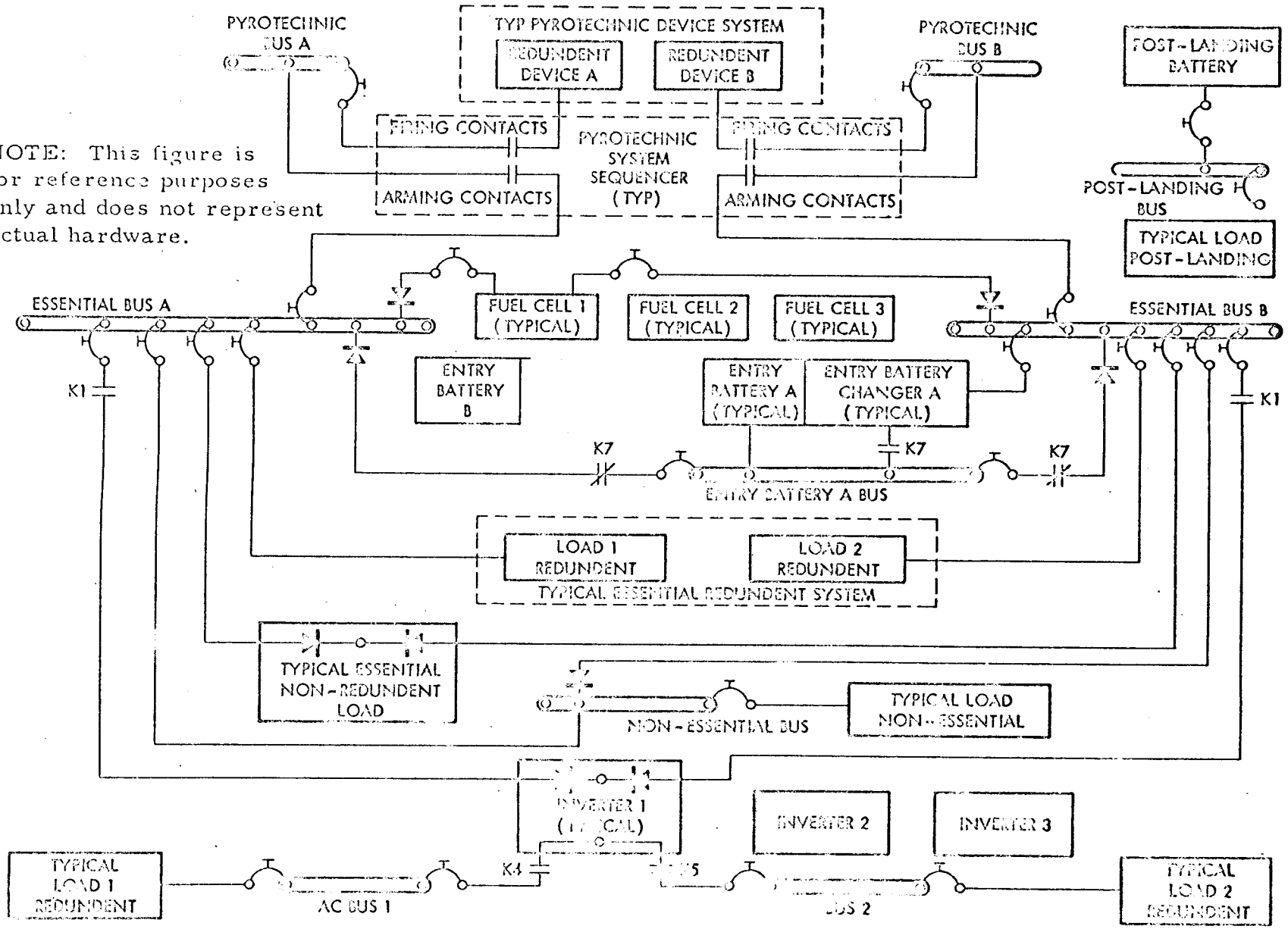

Figure 4-29 Electrical System Block Diagram

switching loads to one of the other inverters in event of inverter failure. Inverters supply a-c busses No. 1 and No. 2 as shown in Figure 4-29. Redundant essential loads are alternately connected to these busses. Provision is made to disconnect and isolate one of these busses from the inverter and the other buss in the event of buss failure.

Power Returns and System Grounding - Power distribution from the power sources is accomplished by a two-wire system for d-c loads and single-phase a-c loads, and a four-wire system for three-phase a-c loads. The power return current passes through the second d-c wire (or single-phase a-c wire), or the fourth a-c wire for unbalanced three-phase a-c loads, to a negative d-c buss and a neutral a-c buss. These two busses have the only ground connection to spacecraft structure in the spacecraft primary a-c and d-c power system. This ground connection is not interrupted by any control or switching device. The negative and neutral return connections to primary power in each load system are isolated from each other and are isolated from structure ground.

Circuit Protection - Circuit protection for the primary power system is provided by system circuit breakers and diodes shown in Figure 4-29. Circuit breakers are provided for each feeder from every buss for the following purposes:

a. To clear the busses of ground faults in the load system feeder wiring, or in other busses.

b. To protect feeder wiring from deterioration caused by faults or overloads.

c. To prevent production of smoke or toxic fumes in the CM.

Wiring, Control and Display - The power distribution subsystem includes all necessary connectors, wiring, switching, relays, controls, and indicating devices and interconnections between modules of various systems. Those are used for controlling electrical power sources, indicating source and line status and supplying and controlling power to all electrical systems. The distribution panels are maintained at ground potential, and are adequately enclosed and protected to minimize hazards to the crew and provide maximum protection for all the systems providing or requiring electrical service. Switching and control is accomplished by manually-operated circuit breakers or contractors in preference to electrically-operated contactors, except where the use of a remotely controlled device is necessary to reduce conductor weight or to locate circuit protection at an appropriate place.

External Power - Provision is made to energize the spacecraft Electrical Power System for an external 28-volt d-c power source through an umbilical connector. Transfer from external d-c power to internal d-c power is made with no interruption of buss power and without the possibility of any source feeding another during transfer. No provision is made for energizing the spacecraft a-c power distribution subsystem from an external a-c power source. The spacecraft inverter is used to perform this function using external d-c power.

Operation

Fuel Cell

Operating Conditions - Nominal cell operating pressure and temperatures are approximately 60 psia and 425° F to 500° F respectively.

Normal Operation - During all mission phases, from launch until

re-entry, the normal electrical power requirements of the spacecraft are supplied by one of two parallel fuel cell modules. The other fuel cell module acts as an alternate or standby unit. A third fuel cell module supplies power to emergency equipment of the spacecraft.

Emergency Operation - In the event of failure of any one fuel cell module the failed unit will be electrically and mechanically isolated from the subsystem and the remaining modules will supply the power demand. In the event two fuel cell modules fail, the remaining module will be capable of providing emergency levels of power. The spacecraft electrical power loads will be immediately reduced by the crew and manually scheduled to hold within the generating capabilities of the one remaining fuel cell module.

Terminal Voltage - The subsystem voltage in all phases of normal operations varies between the limits of 27 to 31 volts. In the emergency mode, with one module operating, voltage limits are the same and normal power will be supplied.

Fuel Consumption - Under normal conditions of operation, the specific fuel consumption does not exceed 0.9 pound of hydrogen plus oxygen per kw-hr.

Water Generation - The water generated by each fuel cell module is potable and is separated from the reactants. During potable water separation from the recirculating hydrogen stream, the entry of hydrogen into the water system is prevented. The water generation rates lie between 1.3 and 2.3 pounds per hour for normal operation and between 0.8 and 2.7 pounds per hour for contingency operation.

[redacted]

Start Up Heaters - Self-sustaining reaction in the fuel cells is initiated at a temperature of approximately 300° F. Internal heaters are provided to facilitate ground starting only. These heaters are not capable of heating modules to excessive temperatures with the fuel cell and its cooling system inoperative.

Power Distribution Subsystem Operation

DC Power - The following characteristics apply to all primary system d-c loads whether supplied from fuel cells, re-entry battery or post-landing battery, in either the normal or contingency operating modes. Values given are as sensed at the load, and therefore include line and diode voltage drops.

a. D-c steady-state voltage limits - 25 to 30 volts

b. D-c transient voltage limits - 25 to 30 volts, with recovery to steady-state conditions within 0.7 second

c. A-c ripple voltage limits - 250 millivolts peak-to-peak

[redacted]

AC Power - The following characteristics apply to all primary system a-c loads supplied (by inverters) from all d-c sources. Values given are as sensed at the load and therefore include line voltage drop. The a-c power described is available for all flight phases except post-landing.

a. Number of phases - three

b. Phase displacement - $120^{\circ} \pm 2^{\circ}$

c. Phase rotation - A-B-C referred to the buss phase designation

d. Nominal voltage - 115 volts line-to-neutral, 200 volts line-to-line

e. Steady-state voltage limits - 115 ± 2 volts, line-to neutral voltage

f. Transient voltage limits - 105 to 125 volts, recovery in 0.05 second.

g. Voltage unbalance - 2 percent maximum deviation of worst phase from average

h. Power interruption - No interruption of a-c power from pre-launch through earth landing phases for normal or contingency operating modes, except in the event of inverter failure. Power interruption in that event continues until a crewman manually switches over to a standby inverter.

i. Nominal frequency - 400 cps

j. Steady-state and transient frequency limits - For normal

operation the static inverter is synchronized to the spacecraft clock, with negligible frequency deviation as determined by clock accuracy. For emergency operation in event of loss of synchronizing signal of the spacecraft clock, the steady-state and transient frequency limits are 390 ± 10 cps.

Interfaces

Pre-launch Power Distribution - Ground Support Equipment d-c electrical power is received by the SM Electrical Power System to replace the use of fuel cells and batteries during system preflight checkout. Power demands on the ground power source vary from zero to 4,000 watts. Electrical power characteristics of ground power at the spacecraft load is the same as provided by the spacecraft power system. To provide voltage within these limits at the load, ground power should be maintained within the limits of 27 to 31 volts at the umbilical for steady-state and transient conditions. External d-c power is provided to the CM through two separate feeders to essential busses A and B. Each feeder is capable of alternately being energized to check the spacecraft essential buss isolation diode system. However, both feeders operating in parallel are used during maximum load conditions. The external d-c power does not ground the spacecraft negative buss. No external a-c power is required for system preflight checkout. External d-c power is used for this purpose, a-c power being supplied through the spacecraft inverter.

Umbilical Connectors - Release-type umbilical connectors are provided at the interface of separable modules. Two umbilical connectors provide a redundant electrical interface between the CM and the LES. An umbilical

connector provides an interface between the CM and the SM and contains electrical connectors, coaxial connectors, coolant lines, oxygen lines, and a water line. These umbilical connectors are provided with a separation mechanism, are designed to prevent heat transfer, and are sealed for corpuscular radiation protection.

Sequencer - A solid state sequencer is provided to arm and energize pyrotechnic devices and cause sequential operation of the Launch Escape and the Earth Landing Systems. The sequencer has redundant circuitry to provide for dual inputs to each pyrotechnic device.

4-24 GUIDANCE AND NAVIGATION SYSTEM

General - The CM Guidance and Navigation System provides guidance for the spacecraft during translunar injection, translunar trajectory, lunar orbit, transearth injection, and re-entry. The system also provides boost monitoring capability during earth launch and earth parking orbit for the purpose of initiating an abort, if required. Quantities measured by the system are position, velocity, and attitude of the spacecraft relative to an inertial reference. From this information, steering and thrust control signals are generated for the Stabilization and Control System, Reaction Control System, and SM Propulsion System.

Equipment Description - The major components of the Guidance and Navigation System are:

a. Inertial Measurement Unit (IMU)

b. Sextant (SXT)

c. Apollo Guidance Computer (AGC)

d. Displays and Controls (D&C)

e. Scanning Telescope (SCT)

f. Power and Servo Assembly (PSA)

g. Coupling Display Units (CDU)

Inertial Measurement Unit (IMU) - The IMU is a three-gimbal stabilized platform using three 25-size Inertial Reference Integrating Gyroscopes (IRIG). The stable member of the IMU has three 16-size Pulsed Integrating Pendulums (PIP). The axis orientation of the IMU is such that with all gimbal angles zero (gimbal axes orthogonal) the inner axis is aligned with the spacecraft pitch axis, the middle axis along the spacecraft yaw axis, and the outer gimbal axis along the spacecraft roll axis. All axes have unlimited angular freedom. To avoid gimbal lock, provision is made for accurately re-orienting the stable member about the middle axis. The IMU will be space-aligned by means of Sextant information, and, because of this, the IMU and Sextant are mounted along with the Scanning Telescope on a navigation base.

Sextant (SXT) - The SXT is used to:

a. Measure angle between line of sight to a star and line of sight to landmark on the earth or lunar surface.

b. Measure elevation of line of sight to a star above horizon of earth or moon.

c. Detect occultation of a star by earth or moon.

d. Provide erection signals for the inertial measurement unit.

The instrument consists of an optical assembly and a controller assembly. The optical assembly has two lines of sight incorporating high magnification optics (2° field of view). These lines of sight are capable of being separated up to 100°. Means for precise reading of the angle between two selected lines of sight are provided. Articulation of the lines of sight is accomplished by rotating the sextant head about an axis (shaft axis) perpendicular to the spacecraft surface and a second axis (trunnion axis) perpendicular to the lines of sight and the shaft axis. Depending on the results of research in high vacuum environment, the instrument will be mounted in the space environment or behind an optically flat window. The former configuration is preferred.

Some degree of attitude maneuvering will be required of the spacecraft in making sextant readings. The sextant controller will be used by the crewmen to provide resolved drive signals for the sextant and the Spacecraft Attitude Stabilization System during readings. The controller also reads the sextant angles into the Apollo Guidance Computer.

Apollo Guidance Computer (AGC) - The AGC is the control center of the guidance system. Stored within the AGC are the programs which perform the calculations necessary to navigate the vehicle to its destination. The computer accepts mission parameters in digital form from the other units of the Guidance and Navigation System through its input registers, and issues commands in digital form to the system through its output registers. The computer also stores data, displays data, and accepts data from the crew which may be pertinent to the mission. In general, the interfaces that the computer must have include IMU angle pickoffs as whole numbers, accelerometer readouts as increments of velocity, sextant angle readouts, sextant drive, information for pilot display.

and telemetry input signals to the Telecommunications System. As an integral part of the computer subassembly, there is incorporated the necessary equipment to operate and check out the computer. The control equipment will be made up of command buttons, mode selection switches, keyboard, and paper tape reader as input devices, and as output devices there will be meters, decimal number lights, and discrete lights. The computer subassembly will contain service access doors, provision for temperature control and cabling between computer modules.

An organizational diagram of the guidance computer is shown in Figure 4-30.

Displays and Controls - As previously described, there are several display and control elements associated with the AGC which are incorporated into a computer control panel. In addition to the computer controls, another important category of display and control equipment is the Map and Visual Data Display.

Large quantities of information in the form of maps, photographs, check lists and instructions, numerical data and other information vital to the success of the lunar mission are stored in the CM and are readily and conveniently available as needed by the crew. The information is stored on film and the crew can call up any desired frame in a few seconds, under control of the computer but with provision for manual operation as well.

Scanning Telescope (SCT) - The SCT is used for acquisition and low orbit landmark tracking functions in conjunction with the sextant. It incorporates a variable magnification feature (1 to 3 power) with corresponding field of view (60° to 20°).

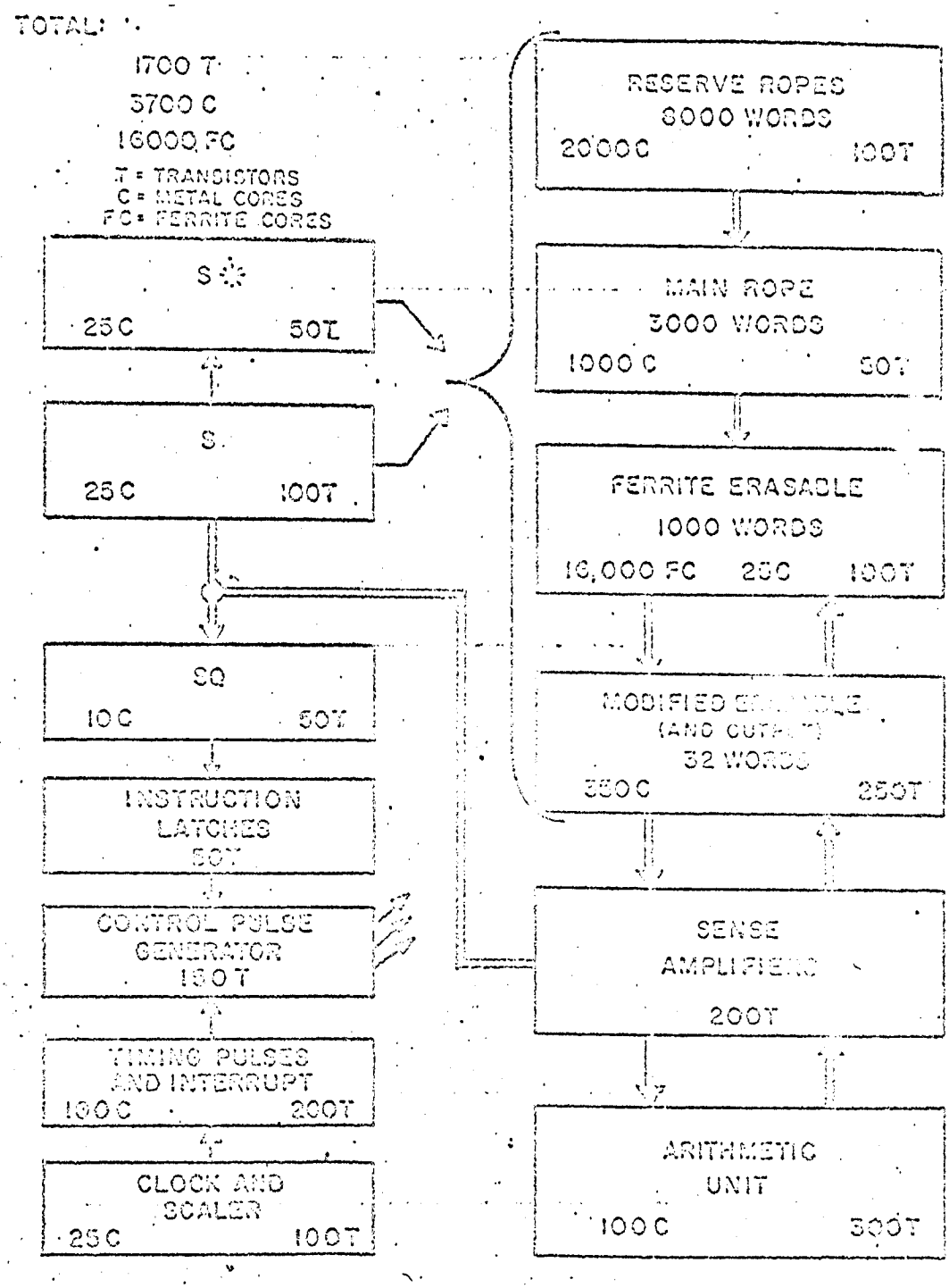

Figure 4-30. Organization Diagram of Guidance Computer

The scanning telescope drives are similar to the sextant drives. They are linked by analog electromechanical instrumentation to the scanning telescope in order that the scanning telescope may be used as a finder for the sextant.

Power and Servo Assembly (PSA) - The PSA contains the electrical apparatus for power distribution and signal conditioning within the Guidance and Navigation System and includes the following items:

a. Platform servo amplifiers, three required.

b. Accelerometer electronics, three required.

c. Gimbal mounted preamplifiers, six required.

d. Power supplies

   1. 100, 800, 3200 cps sine wave

   2. AC-DC converters

   3. Power distribution interlocks

e. Gimbal angle data buffer

f. IRIG torque generator amplifiers, three required

g. Buffers for analog displays

h. Drive electronics for sextant and scanning telescope

Coupling Display Units (CDU) - One of the main components of the Guidance and Navigation System is the CDU which enables the computer to communicate with the Inertial Measurement Unit and the Stabilization and Control System. The CDU is composed of three shafts which correspond to the three gimbal axes of the IMU. The shafts are driven by torque motors which may be controlled through a digital to analogue converter by the computer. The computer accepts information concerning the positions of the CDU shafts from incremental encoders mounted on the shafts. Also mounted on the shafts are coarse and fine resolvers

whose inputs are the outputs of the IMU gimbal resolvers. The resulting electrical output of the CDU resolvers is an error signal which represents the difference between the IMU gimbal position and CDU shaft position.

Operation

Ascent Monitor Mode - The ascent monitor mode of the G&N system is utilized to monitor the boost phases of the mission. The primary function of the system is to monitor the boost guidance performance by comparing actual boost trajectory against a pre-programmed trajectory. In this mode the system senses any deviation in the trajectories and hence a failure in the performance of the boost guidance system. If a failure is sensed the system informs the crew through the crew displays. The system has no control function in this mode of operation.

With the G&N system in this mode the CDU's are operating in a follow-up condition so that they follow any changes in the IMU gimbal positions. In so doing the CDU encoder output indicates actual IMU gimbal angle changes to the computer. At the same time the outputs of the IMU mounted accelerometers send velocity information to the computer via the PSA. The computer then compares the velocity and gimbal angle information received from the CDU & PSA against pre-programmed data in order to determine boost guidance performance.

The computer is also using the velocity and gimbal information to compute and update an abort-re-entry program which would be initiated by the crew in event of booster failure.

Orbital Navigation Mode - The orbital navigation mode is used to determine

the earth or lunar orbit parameters using on-board equipment. The scanning telescope is used to acquire and track predetermined landmarks.

The IMU provides a reference for measuring spacecraft attitude using the CDU's in the follow mode. The computer monitors the landmark line of sight angle using the telescope incremental encoders. When the navigator has centered the landmark in the telescope field of view he presses the "MARK" button. The instantaneous value of IMU and telescope angles, in addition to the time at which the button was pressed is stored by the computer. A series of similar sightings on each of a series of landmarks provides the computer with the required data to calculate the spacecraft orbit.

Midcourse Navigation - The primary method of determining the position and velocity of the spacecraft consists of a series of navigation sightings on stars and landmarks using the scanning telescope and sextant. These sightings are made periodically during the translunar and transearth phases, with the frequency of sightings increasing in the vicinity of the earth and moon.

Optics are electrically positioned in response to manual controls. Star and landmark line of sight information, represented in terms of shaft and trunnion angles, is supplied to the computer. The particular star and landmark to be sighted upon at any point in the trajectory is predetermined, and maps and celestial charts of these targets are available in the map and data viewer.

Attitude Control Mode - The attitude control mode is used during all powered phases of flight (except very small ΔV's) and for orientation of the spacecraft to a desired attitude.

For spacecraft reorientation the computer calculates the platform gimbal angles that are required to exist when the maneuver has been successfully performed. The CDU's are placed in the attitude control mode and the CDU resolvers positioned by the computer to correspond to the desired gimbal angles. The actual and desired angles are compared within the CDU's and the error signals transmitted to the Stabilization and Control to reorient the spacecraft. Attitude errors will exist until the spacecraft has been properly positioned or if the spacecraft should deviate from the desired position.

During thrusting periods the computer may command minor changes to the spacecraft attitude to compensate for any misalignment between the thrust vector and the C.G.

Attitude Hold Mode - The G&N attitude hold mode is used to hold the vehicle attitude to some desired position using the Inertial Measurement Unit to monitor spacecraft attitude changes. With the CDU's in the follow mode the spacecraft is positioned to the desired attitude by the crew using the Stabilization and Control System controls. The CDU resolvers are then locked to retain, as a reference, the gimbal angles that exist at the time the desired attitude is reached. The G&N system is then placed in the attitude hold mode, and the error signal from the CDU is initially zero. Any subsequent deviation of the spacecraft will change the gimbal angles and cause an error signal to be generated at the output of the CDU resolvers. This error signal is used by the Stabilization and Control System to maintain the desired spacecraft attitude.

ΔV Mode - The G&N ΔV mode is used to command and control the vehicle during velocity change maneuvers. Prior to the initiation of the ΔV mode information concerning the velocity and position of the vehicle is gathered

through midcourse navigation sightings utilizing the SXT and SCT. This information is used by the computer to determine the magnitude and direction of the required ΔV.

Periodically the computer may be interrogated by the crew to display the velocity change required. When the crew has determined that the required velocity change is large enough to affect mission requirements they prepare the vehicle and its systems for the maneuver. Preparation involves coarse and fine aligning the IMU so that the platform "x" accelerometer lies along the thrust vector. The vehicle is then positioned to align the thrust vector to the ΔV vector. This operation may be accomplished manually or under G&N control. The crew then manually biases the main SM propulsion engine nozzle so that thrusting will be through the vehicle c.g.

When the IMU has been aligned, the vehicle positioned, and the SM engine nozzle biased the crew places the G&N system into the ΔV mode. At this point an ullage maneuver is accomplished through the translational controls by the crew. The accelerometers on the IMU sense the ullage acceleration and transmit the information to the computer. At a predetermined level of ullage acceleration the computer will initiate a thrust-on signal to the SM main engine.

The direction of the velocity gained during the thrusting period is monitored by the accelerometers mounted on the IMU. This information is transmitted to the computer which controls the thrusting direction. The computer upon receiving information from the platform sensors that the vehicle is not following the planned thrust direction commands the CDU resolvers to the proper attitude. An attitude error results when the commanded CDU resolver position is compared to the IMU gimbal resolver outputs, which represent vehicle attitude.

This error signal is transmitted through the Stabilization and Control System to the SM engine gimbal actuators which change the engine nozzle position. In so doing the attitude error is nulled and the vehicle aligned correctly along the thrust vector.

The magnitude of velocity gained is also monitored by the IMU accelerometers and transmitted to the computer. When the proper magnitude of velocity has been gained the computer initiates an engine-off command to the SM engine, in so doing the computer also allows for engine tail-off.

The crew monitors the G&N ΔV through the "x" body-mounted accelerometer and ΔV monitor panel combination on the main control panel.

ΔV Monitor Mode - The function of the G&N ΔV monitor mode is to monitor very small ΔV's that may be performed by the Stabilization and Control System. The G&N system will primarily be monitoring the amount of ΔV and will have no control function in this mode.

In this mode of operation the IMU is aligned along the thrust vector. The IMU mounted accelerometers send velocity information to the computer via the PSA. The CDU's are in a follow mode and the CDU encoder is informing the computer of actual gimbal angle changes. The computer uses this information to update stored position and velocity data.

Re-entry Mode - The G&N re-entry mode is a vehicle control mode for the G&N system which is initiated upon entry at about 400,000 ft and continues until the recovery phase when the G&N system is shut down.

The purpose of this mode is to stabilize the vehicle during re-entry and execute a pullout maneuver at a determined point of the entry trajectory. Prior

to this mode of operation the SM has been jettisoned, the IMU has been coarse and fine aligned, and any necessary re-entry data has been entered into the computer.

Upon crew initiation of the G&N re-entry mode the computer determines the necessary vehicle re-entry attitude and commands the CDU resolvers to be set to that position. Actual position in gimbal angles from the IMU is compared to the command attitude within the CDU. Error signals which represent the difference between the required attitude and the actual attitude are generated at the CDU resolver outputs. These signals are transmitted to the Stabilization and Control System where they are used to activate the appropriate CM reaction jets to position the vehicle. Once the vehicle has been positioned, any subsequent deviation will change the gimbal angles and cause an error signal to be generated to reposition the vehicle.

At a determined point on the re-entry trajectory the G&N system is required to roll the vehicle for a pull-out maneuver. This maneuver is controlled by the computer. The computer commands the CDU's to the desired roll position and the vehicle is positioned through the same control loop as described for attitude control.

Interfaces - To be supplied.

4-25 STABILIZATION AND CONTROL SYSTEM

General - The Stabilization and Control System (S&C) performs the following functions essential to spacecraft operation:

a. Launch escape control

b. Angular orientation and stabilization of the spacecraft about three axes under command of the crew, the guidance system, or the self-contained standby inertial reference system.

c. Engine control for separation

d. Translational control during earth rendezvous and docking

e. Thrust vector control during midcourse corrections and lunar-orbital mission phases.

Equipment Description - The S&C System consists of the following basic components:

a. Attitude reference

b. Body rate gyro package

c. Control electronic assembly

d. Manual controls

e. Displays

Attitude Reference - The S&C attitude reference provides angular displacement signals in three axes for spacecraft control and crew display during the periods the IMU is not operating. The S&C attitude reference consists of three body-mounted gyros which have the capability of being replaced in flight without the use of precision alignment equipment. Provision is made to display the measured body angular displacement in terms of an inertial reference frame.

Rate Gyro Package - The S&C System provides the necessary spacecraft angular rate information for stabilizing the spacecraft in all modes of operation. The rate sensor package consists of three body-mounted rate gyros which are replaceable in flight without the use of precision equipment.

Control Electronic Assembly - The control electronic assembly contains all the electronics associated with the S&C System and is packaged to facilitate the in-flight repair capability concept. The electronic assembly accepts attitude and steering commands from the Guidance and Navigation System when it is operating. Attitude information is accepted from the S&C attitude reference

at all other times. The electronic assembly contains the necessary electronic circuitry to allow the crew to command changes in attitude, when required, from the manual controller. The electronic assembly contains the driver circuits for the SM engine gimbal actuators and for the Reaction Control System control valves. The circuitry provides the electrical signal to furnish the minimum impulse required during the navigation sightings and to maintain attitude stability. The electronic circuitry contains the necessary logic circuitry to allow any commanded translation maneuvers while maintaining attitude control and stability of the spacecraft.

Manual Controls - The crew's manual controls consist of stick type controllers; translation commands and rotation commands are on separate controllers. The controllers are designed for use with a pressure suit gloved hand. Rotational manual commands are in the form of rate commands to the S&C System. The crew is provided the capability of positioning the SM engine such that the thrust vector is aligned through the predicted spacecraft center of gravity upon ignition of the SM engine.

Displays - The S&C displays are designed to give the crew instantaneous visual information concerning the spacecraft attitude, attitude error, angular rate, incremental velocity and re-entry deceleration. Attitude is displayed on an all-attitude ball-type indicator and is obtained from the Guidance and Navigation System when it is operating. Displayed attitude is obtained from the S&C System at all other times. During velocity change maneuvers, velocity to be gained is displayed to the crew for monitoring the velocity change and shutting down the SM engine in the event the G&N System fails to do so. The actual velocity change information is the integrated output of a body-mounted accelerometer.

During the re-entry phase, spacecraft deceleration and roll position is displayed in the crew's zone of vision to enable the crewman to manually control the spacecraft in the event the G&N System is inoperative.

Mode Selection - The S&C System is designed to operate in various modes during a mission. Selection of the modes such as navigation sighting, velocity correction, and re-entry is controlled by the crew. A mode selector is provided to enable the crew member to switch to the desired mode of operation by a single control.

Operation - The S&C System performs such functions as CM stability augmentation, spacecraft attitude control and stabilization, and provides signals for manual control of the spacecraft during the following mission phases:

a. Atmospheric abort

b. Post-atmospheric abort

c. Translunar and transearth

d. Rendezvous and docking

e. Re-entry

Atmospheric Abort - The S&C System provides stability augmentation for the CM after launch escape system separation. The S&C System operates in a rate mode for an atmospheric abort condition. Provisions are made for the insertion of vehicle rotational commands by the crewman through use of a manual rotation controller.

Post-Atmospheric Abort - The S&C System provides attitude control and stabilization of the spacecraft by position control of the SM Propulsion System thrust vector for aborts occurring after the LES has been jettisoned and by use of the Reaction Control System. The S&C System is capable of accepting attitude and steering commands from the G&N System for path control.

Translunar and Transearth - The S&C System provides attitude stabilization and control in all modes of operation during the translunar and transearth phases of the mission. The S&C System satisfies the navigational sighting requirements for angular rates and orientation. It accepts attitude and attitude change information from the Guidance and Navigation System when the G&N System is operating. The S&C System provides attitude information to maintain spacecraft orientation and stability at all times when the G&N System is not operating. The S&C System also provides attitude, control, and velocity change information for display to enable the crew to accomplish transearth injection and velocity change maneuvers in the event of an inoperative guidance system.

Rendezvous and Docking - The S&C System provides attitude and rate information for crew display and CM and SM control and stabilization during the docking maneuver in the translunar phase. The required rotation and translation maneuvers are commanded from the crew hand controllers. The primary rendezvous and docking mission in the lunar orbit phase rests with the LEM. The spacecraft S&C System provides maneuver capability for backup completion of rendezvous and docking maneuver in the event the LEM is unable to complete the rendezvous and docking maneuver.

Re-entry - The S&C System provides rate stabilization of the CM in the pitch and yaw planes during the re-entry phase of the mission. The S&C System provides rate stabilization and accepts attitude and attitude change commands from the G&N System about the roll axis in the re-entry phase. The S&C System provides roll attitude spacecraft deceleration for display to enable the crew member to manually control the spacecraft roll attitude.

Interfaces

Displays - Display of separation thrust signals is required during LES operation, during the translunar injection, and during SM separation from the CM. Spacecraft attitude signals are displayed throughout the mission.

Propulsion Commands - Translational data are required during the launch phase, midcourse corrections, and lunar orbit maneuvers. Thrust vector control signals are required during the launch phase, translunar injection, and each operation of the SM propulsion system.

Attitude Control - Data and commands are provided to the S&C System by the Guidance and Navigation System, the crew, and the standby inertial reference system. The desired reorientation, translation, or stabilization is accomplished by means of reaction control jets. The SM Reaction Control System provides three-axis attitude stabilization and minor translational capability throughout the lunar mission from S-IVB jettison through SM separation from the CM. After the SM is jettisoned, the CM Reaction Control System provides three-axis control for re-entry orientation.

4-26 ENVIRONMENTAL CONTROL SYSTEM

General - The primary components of the Environmental Control System (ECS) are located in the CM, with the system controlling the environment of the Command Module only. Additional components of the system such as heat exchangers, water tanks, and gas storage vessels are located in the SM. A schematic is shown on Figure 4-31.

The ECS accomplishes the following functions for a three-man space flight of two weeks duration without requiring replenishment:

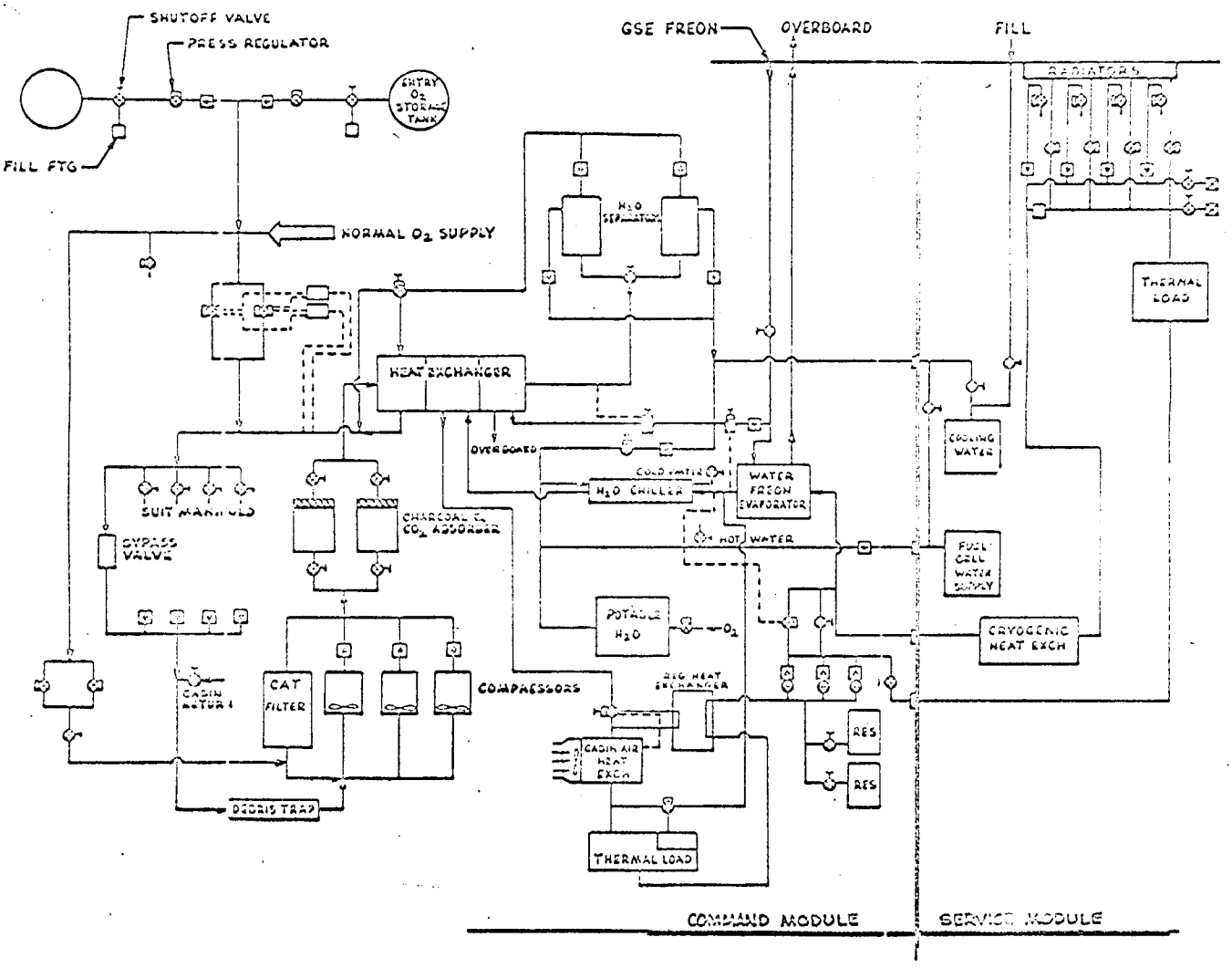

Figure 4-31. ECS Schematic

a. Provides a "shirtsleeve" environment in the CM.

b. Provides a conditioned atmosphere for pressure suit operation under normal and contingency conditions.

c. Provides thermal control of all equipment in the CM and SM under normal and contingency conditions.

d. Provides a habitable environment in the CM for the crew for a period of 24 hours after landing on land or water.

Equipment Description - The major equipment divisions of the ECS include the following subsystems:

a. Pressure suit circuit

b. Water-glycol circuit

c. Command Module pressure and temperature control

d. Oxygen supply

e. Water Supply

These subsystems are integrated so as to provide life support and environment control both in flight and on the launch pad.

Pressure Suit Circuit Subsystem - The pressure suit circuit automatically controls the flow, pressure, temperature, and composition of the pressure suit gas. This subsystem in conjunction with the CM pressure and temperature control subsystem, also controls the environmental conditions in the CM when any of the crew are out of their pressure suits. To provide these functions, the following equipment is used: water separators, a regenerative heat exchanger, oxygen partial pressure controls, oxygen demand regulators, a debris trap, air compressors, carbon dioxide and odor absorbers, a catalytic filter and air cooler, and a standby water evaporator. Component redundancies are provided to obtain the reliability required for missions.

Water-Glycol Circuit Subsystem - The water-glycol circuit subsystem is a closed, intermediate, heat-transfer loop which permits heat to be delivered from the space vehicle interior to two space radiator panels. This subsystem provides cooling for electronic and electrical equipment in the CM by means of pumps, heat exchangers, valves, and controls.

Command Module Pressure and Temperature Control Subsystem - This subsystem automatically maintains the pressure and temperature of the CM interior within prescribed limits. This function is accomplished, in conjunction with the pressure suit circuit subsystem, by means of regulated inflow recirculation blowers, a heat exchanger, a temperature control and sensor snorkel valves, CM pressure relief valve, and various other valves and controls.

Oxygen Supply Subsystem - The oxygen supply subsystem is subdivided as follows:

a. Normal oxygen supply

b. Partial pressure control

c. Re-entry oxygen supply

The normal oxygen supply is capable of supplying all of the required oxygen for the entire mission up to the re-entry phase. The supply functions by reducing the pressure of the space vehicle oxygen supply to the nominal working pressure of the suit circuits and potable water tank pressure controls and this is accomplished by suitable pressure regulators, demand regulators, and shutoff and check valves.

The partial pressure control monitors the oxygen partial pressure within the pressure suit loop and CM interior, and maintains the oxygen partial pressure at a predetermined minimum level. This function is accomplished by partial pressure sensors and controls, demand pressure regulators for 3.1 psia operation, and inflow control valves.

The re-entry oxygen supply storing gaseous oxygen at high pressure supplies the oxygen for mission completion after separation of the SM from the CM. During operation, the high pressure is reduced to the nominal working pressure of the suit circuit pressure controls. Oxygen storage tanks, high and low pressure regulators, and valves are used in the subsystem.

Water Supply Subsystem - In addition to supplying potable water for consumption by the crew members, the water supply subsystem provides supplementary cooling of the water-glycol heat transfer loop in the event of insufficient heat dissipation by the space radiators, and it provides contingency cooling of the suit loop. Potable water is stored prior to takeoff and is replenished from the fuel cell. These functions are accomplished utilizing water tanks, pressure controls, and valves.

Operation

Pressure Suit Circuit - The pressure suit circuit is capable of maintaining the comfort levels for crew members in conformance with requirements listed in Table 4-12 while operating under the conditions listed in Table 4-11.

Water-Glycol Circuit - The water-glycol equipment cooling circuit is capable of dissipating the major portion of the excess spacecraft internal heat and providing thermal control of critical equipment. Performance of the equipment cooling circuit is in conformance with the requirements listed in Table 4-12 while operating under the conditions listed in Table 4-11.

Command Module Pressure and Temperature Controls - The CM pressure and temperature controls are capable of regulating the CM atmospheric pressure and regeneratively conditioning the CM atmosphere in conformance with the requirements listed in Table 4-12 while operating under the conditions listed in Table 4-11.

[redacted]

Table 4-11 OPERATIONAL CHARACTERISTICS OF THE ENVIRONMENTAL CONTROL SYSTEM

PARAMETER	OPERATING MODE	
	Normal	Contingency
a. Pressure Suit Circuit		
Suit Conditions	(one or all of crew in suits)	(all crew in suits)
Suit Pressure (psia)	14.7 to 7.0	3.5
Inlet Air Temperature (°F)	50 to 80	50 to 80
Inlet Air Dew Point (°F)	40 to 60	50 to 60
Volume Flow Rate per Suit (cfm)	5 to 12	5 to 12
Pressure Drop (inches water)	6 to 9	5 (nominal)
Outlet Air Temperature (°F)	70 to 80	70 to 90
Outlet Air Humidity (%)	40 to 70	50 to 70
Outlet to Cabin (crew out of suits)		
Air Pressure (inches water above cabin pressure)	2 to 6	*
Air Temperature (°F)	50 to 80	*
Air Dew Point (°F)	40 to 60	*
Volume Flow Rate (cfm)	36 (nominal)	*
Inlet from Cabin (crew out of suits)		
Air Pressure (inches water below cabin pressure)	3 to 6	*
Air Temperature (°F)	75 ± 5	*
Humidity (%)	50 (Nominal	*

*Compartment Decompression

[redacted]

Table 4-11 (Continued)

PARAMETER	OPERATING MODE	
	Normal	Contingency
b. Water Glycol Circuit		
Radiator Outlet Temperature (°F)	0 to 70	0 to 70
Inlet Temperature Suit Circuit Heat Exchanger (°F)	40 to 50	40 to 50
Inlet from Electronic Cold Plates (°F)	60 to 70	60 to 70
Outlet from Electronic Cold Plates(°F)	80 to 100	80 to 100
Flow Rate Total (lbs/hr)	180 to 220	180 to 220
Coolant Pressure (psi)	20 to 60	20 to 60
c. Command Module Temperature and Pressure Control		
Temperature (°F)	70 to 80	40 to 75
Relative Humidity (%)	40 to 70	0*
Pressure Total (psia)	5.0 nominal to 15	3.5 (minimum for 5 min.)
O_2 Partial Pressure (mm Hg)	233 (nominal)	0*
CO_2 Partial Pressure (mm Hg)	0 to 7.6	0*
Noxious Gas	Below Toxic Level	0*
d. Oxygen Supply in Command Module		
Supply Pressure from Supercritical Storage (psi)	900	900
Supply Pressure from Re-entry Storage (psi)	7500	7500
Regulated Pressure (mm Hg)	160 to 190	3.5*

*Compartment Decompression

PARAMETER	OPERATING MODE	
	Normal	Contingency
e. Water Supply		
Supply Temperature from Fuel Cell (^{o}F)	180 to 220	180 to 220
Supply Pressure from Fuel Cell (psi)	7 to 60	7 to 60
Water Separator (lbs/hr recovered)	0.4 to 1.5	0.4 to 1.5
Water from Fuel Cell (lbs/hr)	1.1 to 2.3	0.5 to 1.0 (electrical contingency)
f. Air Lock Pressurization		
Decompression Time	To be supplied	
Recompression Time	To be supplied	

Table 4-12 OPERATIONAL REQUIREMENTS OF THE ENVIRONMENTAL CONTROL SYSTEM

	CM Min.	CM Max.	Pressure Suits Min.	Pressure Suits Max.
a. Total Pressure				
Normal Operation (psia)	7.0	15.0	0	3.5
Contingency Operation (psia)	3.5	3.5	3.5	3.5
b. Command Module Temperature Limits				
Normal Operation (°F)	70	80		
Contingency Operation (°F)	70	80		
c. Command Module Humidity Limits				
Normal Operation (%)	40	70		
Contingency Operation (%)	40	70		
d. Electronic Equipment Load				
Command Module	746 watts minimum 2344 watts maximum			
Service Module	60 watts minimum 580 watts maximum			
e. Freon Requirements* (Supplied by GSE)				
Suit Circuit Evaporator (lb/hr)	23.9 at launch			
Glycol Circuit Evaporator (lb/hr)	174.0 at launch			
f. Average Daily Metabolic Rates				
Oxygen Consumption	2.0 lbs/day/man			
Carbon Dioxide Production	2.5 lbs/day/man			
Heat Generation	11,800 Btu/day/man			
Water Consumption	6.0 lbs/day/man			

*Feed rates are based on 100° F saturated liquid supply and evaporation at 40°F saturation temperature with no superheating.

[redacted]

Table 4-12 (Continued)

g. Specific Metabolic Rates	Crew Activity		
Condition	At Rest	At Duty	At Repairs
Shirtsleeve Atmosphere			
Sensible Heat (Btu/man-hr)	195	220	225
Latent Heat (Btu/man-hr)	205	335	570
Oxygen Consumption (lb/man-hr)	0.0654	0.0917	0.131
Carbon Dioxide Production (lb/man-hr)	0.0765	0.107	0.153
Pressure Suit-Contingency			
Sensible Heat (Btu/man-hr)	170	180	190
Latent Heat (Btu/man-hr)	230	375	605
Oxygen Consumption (lb/man-hr)	0.0654	0.0917	0.131
Carbon Dioxide Production (lb/man-hr)	0.0765	0.107	0.153
Pressure Suit-Launch			
Sensible Heat (Btu/man-hr)	270		
Latent Heat (Btu/man-hr)	130		
Oxygen Consumption (lb/man-hr)	0.0654	0.0917	0.131
Carbon Dioxide Production (lb/man-hr)	0.0765	0.107	0.153
Pressure Suit-Re-entry			
Sensible Heat (Btu/man-hr)	260		
Latent Heat (Btu/man-hr)	405		
Oxygen Consumption (lb/man-hr)	0.11		
Carbon Dioxide Production (lb/man-hr)	0.129		

[redacted]

Interfaces

Electrical Power - Electrical power having the following characteristics is supplied to the Environmental Control System:

a. DC Power - to be supplied at a voltage of 28 $\pm$ 2.0 volts; AC ripple voltage not to exceed 0.250 volts, peak-to-peak.

b. AC Power - to be supplied at 208/120 volts, 400 cps.

c. Precision Power - components requiring precision power may be required to contain their own regulation and control provisions.

Crew Systems - The following controls are provided as part of the ECS for use by the crew:

a. A manual override for the cabin compressors

b. A manual override for the suit compressors

c. A manual override for the humidity controller

d. A manual override for the temperature controller

e. A control to activate the re-entry oxygen supply

f. Any other controls that may be determined necessary

Displays - The following displays are provided as part of the ECS for use by the crew:

a. Total cabin pressure

b. Cabin temperature

c. Oxygen partial pressure

d. Carbon dioxide partial pressure

e. Carbon monoxide partial pressure

f. Relative humidity.

4-27 REACTION CONTROL SYSTEM

General - The complete CM Reaction Control System (RCS) consists of two identical systems identified as system A and system B which are operated simultaneously during normal control operation. These systems are interconnected as whown on Figure 4-32. Each system consists of a pressurized helium storage and distribution subsystem, an oxidizer storage and distribution subsystem, a fuel storage and distribution subsystem and six rocket engine subsystems.

In the event of a failure of either system, the remaining system provides adequate control to complete the mission safely. Malfunction detection permits isolation of a failed system. Each system incorporates features for facilitating preflight servicing, checkout, and deactivation. The oxidizer and fuel subsystems are pressurized just prior to CM separation from the SM, at which time the RCS System is activated.

After separation and prior to application of aerodynamic moments, the RCS provides the CM with three-axis control for re-entry orientation. During re-entry the system provides roll control and pitch and yaw rate damping. The roll control engines are employed for CM orientation prior to touchdown.

During the boost phase, post maximum dynamic pressure aborts require the Reaction Control System to orient the CM for landing system deployment.

Equipment Description - The CM Reaction Control System consists of various components which are listed in Table 4-13 and shown on a schematic diagram on Figure 4-33. Each of these components is categorized into one of three major categories depending on the unit's function and location in the overall system.

Category A - Category A components, as listed in Table 4-13 are those components comprising the helium pressurization subsystem.

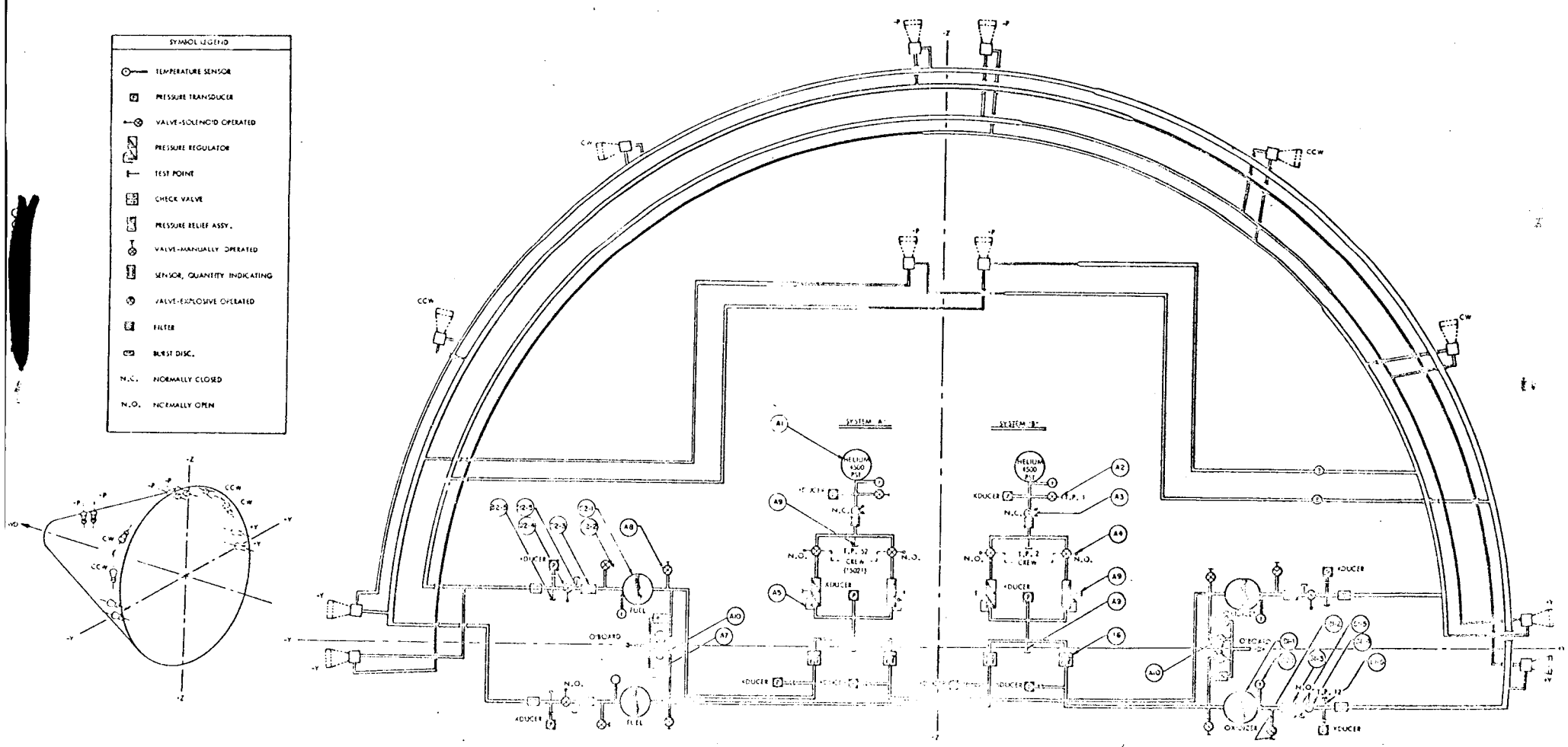

Figure 4-32. Command Module Reaction Control System

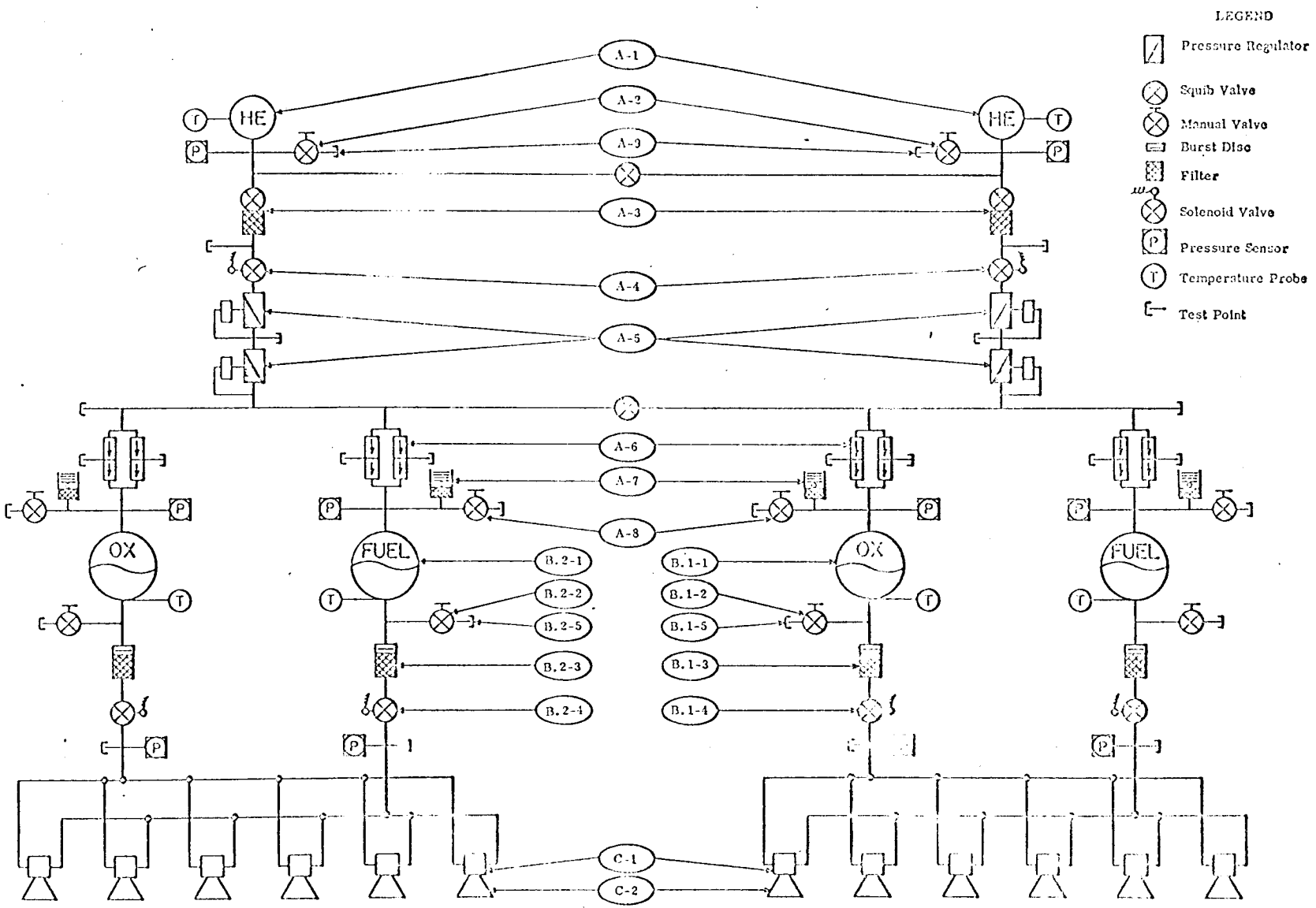

Figure 4-33. Reaction Control System Command Module Schematic

[redacted]

Table 4-13 COMMAND MODULE REACTION CONTROL SYSTEM COMPONENTS

CATEGORY	FIGURE CODE NO.	COMPONENT TITLE	FUNCTION
A	A-1	Vessel - Helium Pressure	Storage of high-pressure helium.
A	A-2	Valve-Helium Fill, Manual	Fill point during ground servicing operations.
A	A-3	Valve-Helium, Squib	Confine high-pressure helium to storage area during ground servicing operations.
A	A-4	Valve-Helium, Solenoid Operated	Isolate the storage area in the event of a downstream failure.
A	A-5	Regulator-Helium Pressure	Maintain the required constant downstream pressure.
A	A-6	Check Valve-Helium Pressure	Prevent oxidizer and/or fuel from backing up into helium system.
A	A-7	Relief Valve-Helium Pressure	Prevent overpressurization of fuel and oxidizer system.
A	A-8	Valve-Vent, Helium Pressure	Depressurizes low pressure side of helium system.
A	A-9	Coupling-Check, Helium Pressure	Provide pressure check point.
A	A-10	Valve-Helium, Squib	Connect helium system of systems A and B.
B.1	B.1-1	Tank-Oxidizer	Storage of nitrogen tetroxide (N_2O_4)
B.1	B.1-2	Valve-Oxidizer Fill Manual	Fill point during ground servicing operation.
B.1	B.1-3	Burst Diaphragm-Oxidizer	Confine N_2O_4 to storage area until it is pressurized.
B.1	B.1-4	Valve-Oxidizer, Solenoid Operated	Isolate storage area in the event of downstream failure.
B.1	B.1-5	Coupling-Check, Oxidizer	Provide pressure check point.
B.2	B.2-1	Tank - Fuel	Storage of a 50/50 blend of UDMH and hydrazine (N_2H_4)
B.2	B.2-2	Valve-Fuel Fill, Manual	Fill point during ground servicing operation.

[redacted]

Table 4-13 (Continued)

CATEGORY	FIGURE CODE NO.	COMPONENT TITLE	FUNCTION
B.2	B.2-3	Burst Diaphragm - Fuel	Confine fuel to storage area until it is pressurized.
B.2	B.2-4	Valve - Fuel, Solenoid	Isolate storage area in the event of downstream failure.
B.2	B.2-5	Coupling - Check, Fuel	Provide pressure check point.
C	C-1	Propellant Valves (2)	The valves are electrically actuated solenoid valves matched to provide simultaneous propellant injection to the thrust chamber.
C	C-2	Thrust Chamber	The thrust chamber combines the hypergolic propellants resulting in an exothermic reaction. The resulting high pressure gases are ejected through a nozzle and the gas momentum is converted into thrust.

Category B - Category B components, as listed in Table 4-13 are those components comprising the hypergolic propellant subsystem.

Category B.1 - Category B.1 components, as listed in Table 4-13 are those components comprising the liquid oxidizer subsystem.

Category B.2 - Category B.2 components, as listed in Table 4-13 are those components comprising the liquid fuel subsystem.

Category C - Category C components, as listed in Table 4-13 are those components comprising the rocket engine subsystem.

Pressurized Helium Subsystem - The pressurized helium subsystem is composed of the Category A components. Each helium supply is contained within one spherical tank which is cradle-mounted to minimize detrimental tank flexures. During ground service operations and prior to initial subsystem pressurization, the high pressure helium is confined to the storage tanks by means of the normally closed squib valve. The squib valve contains an integral helium filter to protect the downstream regulators and check valves from harmful foreign particles. The manually controlled normally open solenoid valve provides the means of isolating the storage tank from the downstream components in the event of downstream leakage or component failure. Upon command, the squib valve opens the helium supply to two individual pressure regulators connected in series. The check valves downstream of the regulators prevent the propellants from entering the helium subsystem in the event of failure of a propellant tank positive-expulsion device. The relief valve contains an integral helium filter and prevents detrimental pressure buildup in the propellant storage tanks. The vent valve provides means for venting the helium subsystem downstream of the check valves during propellant servicing and helium depressurization operations. The solenoid valves which connect the high pressure and regulated pressure areas of systems A and B

provide an alternate path for pressurized helium in the event that a regulator fails closed in either subsystem.

Oxidizer Subsystem - The oxidizer subsystem is composed of Category B.1 components. The fill valve provides for servicing the oxidizer subsystem during ground operations. The oxidizer supply is contained within a hemispherically domed cylindrical tank which is cradle-mounted and equipped with a positive-expulsion device. Pressurized helium from the helium subsystem acts on the opposite side of the positive-expulsion device forcing the oxidizer through the distribution system to the rocket engine at the required feed pressure. During ground service operations and prior to actuation of the helium subsystem squib valve, the oxidizer is confined to the storage tank by means of the burst diaphragm assembly. This assembly contains an integral filter to protect the rocket engines from harmful foreign particles. Upon initial pressurization of the subsystem, the pressurized oxidizer ruptures the burst diaphragm and flows to the normally closed oxidizer injector valves of the rocket engines. The manually controlled, normally open solenoid valve provides the means of isolating the oxidizer storage tank from the rocket engines in the event of a leak in the oxidizer distribution system or malfunction of a rocket engine.

Engine Subsystem - Each rocket engine subsystem is composed of Category C components. Activation of the propellant feed subsystem supplies propellant to the normally closed solenoid inlet valves mounted on the rocket engines. Electrical commands from the Stabilization and Control System open the oxidizer and fuel valves simultaneously. In the event of failure in the S&C System, the crewman commands the engines on a separate manual circuit. The propellants, under subsystem pressure, flow through their corresponding injector passages at high velocity, impinge in the combustion chamber and react exothermically. The ex-

pended high temperature gases flow through the chamber and nozzle, and exhaust through ports faired into the CM skin producing the required thrust.

Performance - The performance characteristics of the various portions of the RCS are as follows:

Pressurization Subsystem Components - All pressurization subsystem (Category A) components are compatible with high-grade oil-free commercial helium for long periods of exposure and intermittent exposures of short duration. Helium source pressure for the pressurization subsystem is approximately 4500 psig. Propellant is distributed to the engine at an approximate operating pressure of 170 psig.

Liquid Oxidizer Subsystem Components - All oxidizer subsystem (Category B.1) components are compatible with nitrogen tetroxide (N_2O_4) for long periods of exposure and intermittent exposures of short duration.

Liquid Fuel Subsystem Components - All fuel subsystem (Category B.2) components are compatible with a mixture of 50 percent hydrazine (N_2H_4) and 50 percent unsymmetrical dimethylhydrazine (UDMH) for long periods of exposure and intermittent exposures of short duration.

Rocket Engine Subsystem - The rocket engine is a pressure-fed, pulse-modulated, ablation-cooled, thrust generator with a dry weight of 8.5 pounds and has the following characteristics:

Fluid Compatibility - The rocket engine subsystem (Category C) components are compatible with nitrogen tetroxide and with a mixture of 50 percent hydrazine and 50 percent UDMH.

Thrust - During continuous operation the rocket engine develops a vacuum thrust of 100 plus or minus 5 pounds.

Specific Impulse - The rocket engine develops a specific impulse of at least 300 seconds when operating for periods in excess of 800 milliseconds and not less than 250 seconds when operating at pulse widths less than 800 milliseconds.

All components are designed to operate as required with negligible leakage.

Interfaces - The CM Reaction Control System has interfaces with the following spacecraft systems:

Crew System - Integration is achieved in:

Normal Functions - Preparation of the system for engine ignition is a normal crew function. The crew monitors the following system parameters:

a. Helium tank pressures and temperatures

b. Oxidizer manifold pressure

c. Fuel manifold pressure

Contingency Functions - In the event of a contingency, the crew is able to manually override the automatic system operation. The crew has the following additional capabilities:

a. Terminating or isolating the operation of either system A or B in the event of the failure of one of these systems.

b. Providing an alternate path for the pressurized helium in the event of the failure of the pressure regulation equipment.

Guidance and Control Systems - Integration is achieved with the Guidance and Navigation System and the Stabilization and Control System, and the RCS accepts control signals from them.

Telecommunications and Instrumentation Systems - The CM Reaction Control System is integrated with the Telecommunications and Instrumentation Systems. These systems also provide instrumentation and display values for the Crew System monitoring functions.

4-28 LAUNCH ESCAPE SYSTEM

General - The CM is fitted with a Launch Escape System (LES) as shown in Figure 4-34. The LES translates the CM to a safe distance from the launch vehicle in the event of a booster failure or imminent failure. The system is required to perform the escape function prior to lift-off and through LES jettison at altitude. The basic propulsion system is a solid-fuel motor with "step", or regressive, burning characteristics. Its nozzles are canted to avoid direct impingement of the exhaust jets on the CM. The LES is jettisoned at approximately maximum altitude after "pad escape" or an appropriate time after high dynamic pressure escape. For normal flights, jettisoning occurs during early operation of the second stage of the launch vehicle.

Equipment Description - The LES contains the following subsystems and components:

a. Launch escape tower

b. Electrical control subsystem

c. Separation subsystem

d. Launch escape motor subsystem

e. Jettison motor subsystem

f. Pitch control motor subsystem

g. Wire bundle fairing

h. Launch escape motor structural skirt

i. Jettison rocket motor adapter

j. Flow separator

k. Pitch control rocket motor adapter

l. Ballast enclosure

m. Nose cone

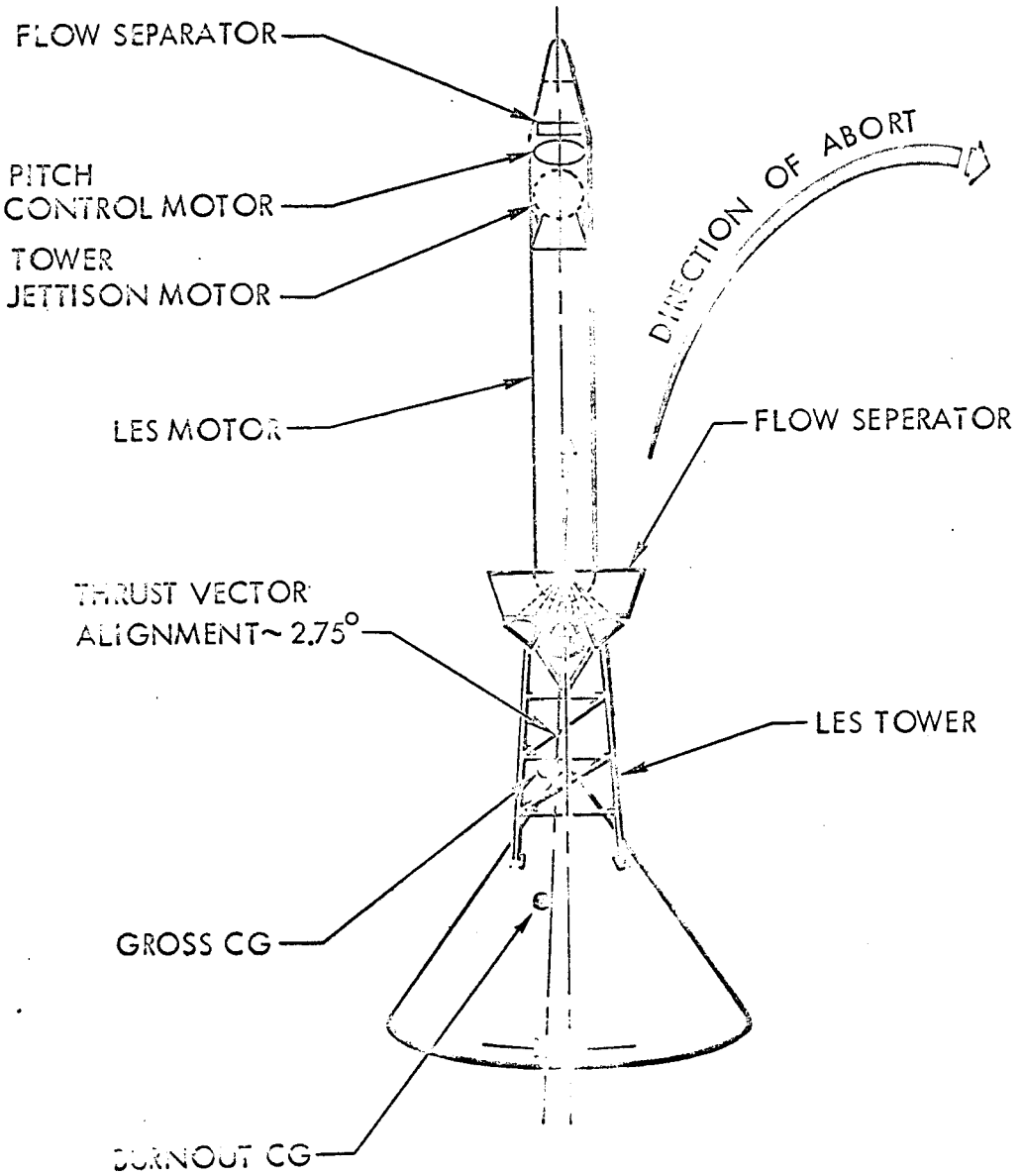

Figure 4-34 Launch Escape System Configuration

The rocket motors are provided with exploding bridge wire initiator systems. Ballast and/or aerodynamic flow control devices are used, if necessary, to meet CM launch escape requirements.

Launch Escape Tower - The launch escape tower is a four-legged truss structure connecting the launch escape rocket motors to the CM structure. The tower is made of titanium alloy. The four longitudinal members are attached at their lower ends to the CM by a release mechanism used for jettisoning the escape system, and, at their upper ends, to the structural skirt of the escape motor. The tower's thermal protection provides 400+° F thermal protection prior to tower jettison.

Electrical Control Subsystem - A solid state sequencer provides sequential operation commands for all phases of an escape and provides outputs to activate the SM-CM separation initiator, tower separation mechanism initiator, escape motor ignition, tower jettison motor ignition, thrust vector control initiator, telemetry signals, and recovery system initiators. Complete redundant circuitry is provided. The LES electrical wiring is routed up the tower legs and through the wire bundle fairing attached to the rocket motors.

Separation Subsystem - (To be supplied)

Launch Escape Motor Subsystem - (To be supplied)

Jettison Motor Subsystem - (To be supplied)

Pitch Control Motor Subsystem - (To be supplied)

Wire Bundle Fairing - The fairing is a V-shaped metal tube attached to and running longitudinally along the exterior of the ballistic enclosure, pitch control motor adapter, jettison motor adapter, and launch escape motor. This fairing protects the rocket motor ignition and "Q-ball" wiring.

Launch Escape Motor Structural Skirt - The skirt is a metal truncated cone with four longitudinal tubular members which transmit the load from the tower legs to the thrust ring of the launch escape motor.

Jettison Rocket Motor Adapter - The adapter is a sheet steel cylinder which supports and attaches the tower jettison motor to the launch escape motor. There are elliptical openings in the lower portion of the adapter to permit the exit of the jettison motor exhaust gas.

Flow Separator - The flow separator is a circular metal plate in the Y-Z plane which is attached to the escape motor structural skirt. The separator serves to decrease hot gas impingement upon the CM structure.

Pitch Control Rocket Adapter - This adapter is a sheet steel cylinder having an internal load bearing structure for supporting the pitch control motor. The adapter has a circular opening for the pitch rocket exhaust exit.

Ballast Enclosure - This enclosure is a sheet metal truncated cone having provisions for internal mounting of solid ballast.

Nose Cone - The nose cone is a sheet metal cone with an internal structure for supporting the Nortronic F 16 "Q" ball.

Performance - The variation of the required mission performance as a function of abort timing is shown in Figure 4-35. The three critical mission abort phases are:

a. Pad abort

b. Maximum dynamic pressure abort

c. High altitude abort

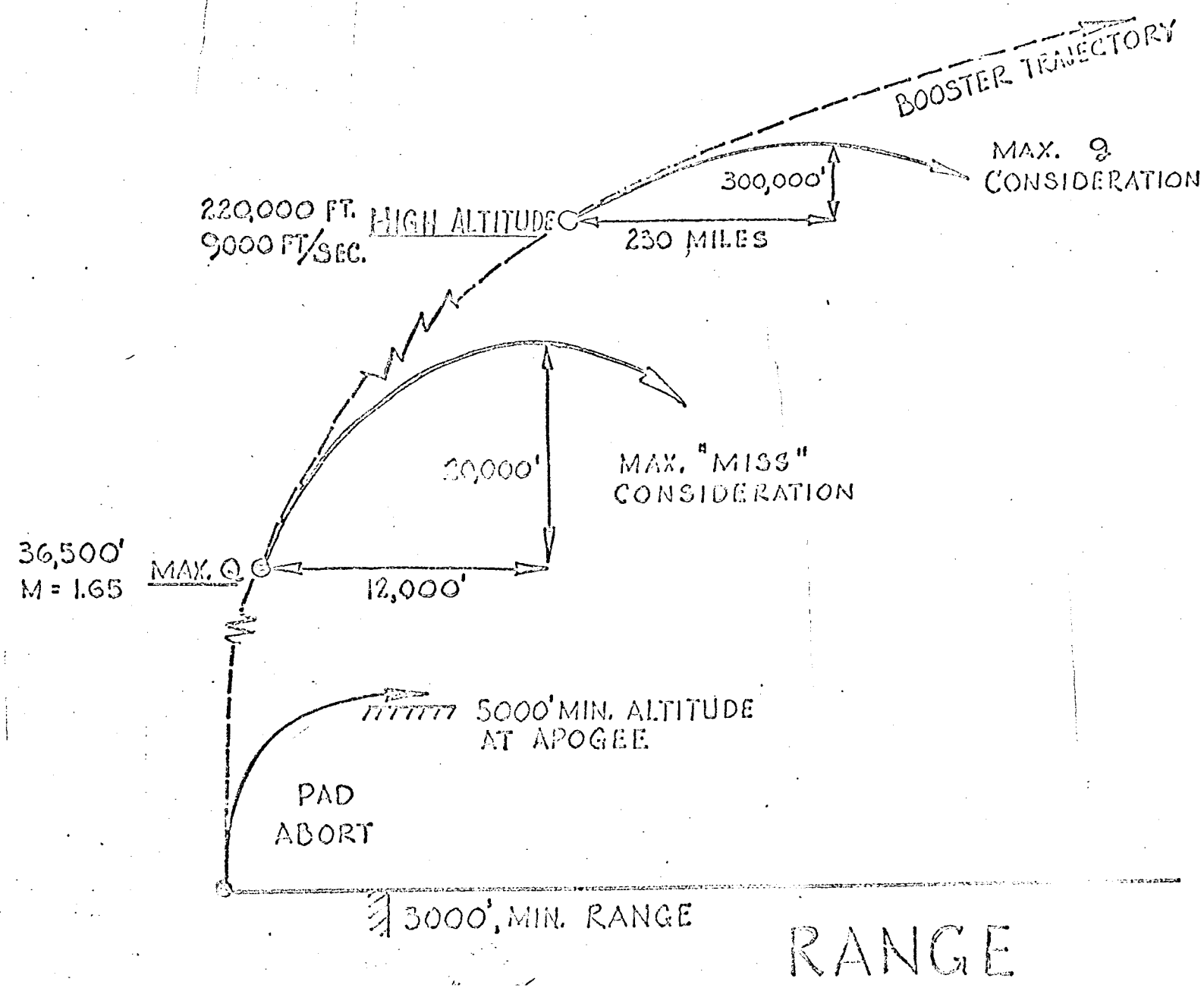

Figure 4-35. Abort Missions (Not to Scale)

The mission abort phases respectively entail:

a. 5000 feet apogee altitude and 3000 feet range at apogee consideration

b. Maximum miss consideration

c. Maximum g consideration

All of these relate to the effectiveness of the CM and launch vehicle trajectory departures.

Interfaces

General - The sole physical interface of the LES is the tower truss connection to the CM and associated tower separation devices.

Functional interfaces between the CM and LES are:

a. Sequence control signals

b. Steering command of the LES control system

Physical Interface Description - The LES is attached to the CM by a double-jawed toggle mechanism in each leg as shown in Figure 4-36. Each mechanism grasps a stud that is preloaded to the CM structure after the mechanism is locked. Diagonally opposite tower leg attach mechanisms are locked by a preloaded locking cable passing through two cable cutting guillotines.

Functional Interface Description - The launch escape sequence controller is initiated primarily from an externally derived signal. The sequencer then transmits properly timed signals to ignite the launch escape, jettison, and pitch motors. Sequencer signals also control the separation device operation. The Stabilization and Control System, located in the CM, commands the thrust vectoring of the launch escape motor.

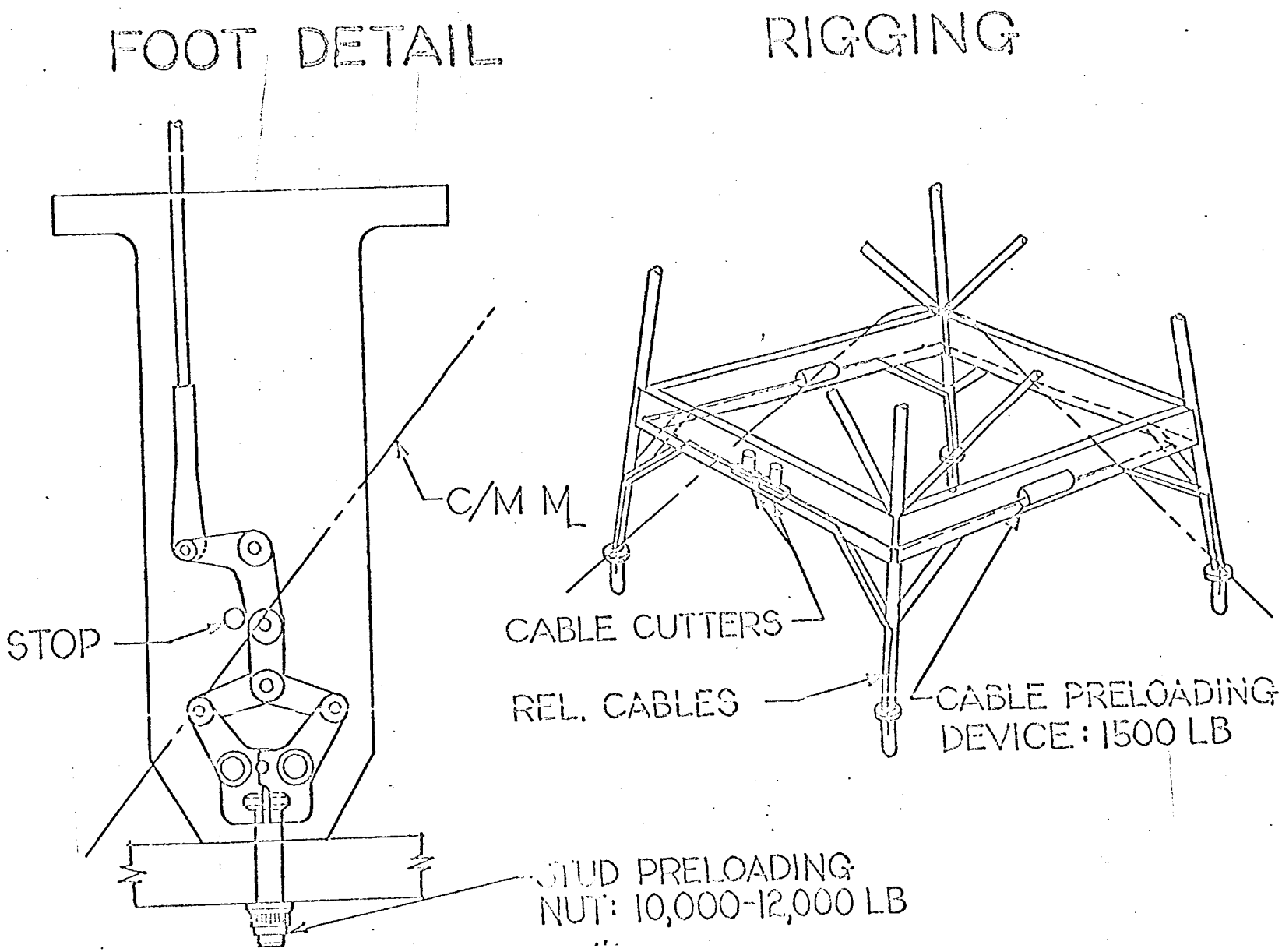

Figure 4-36. Release Mechanism

4-29 EARTH LANDING SYSTEM

General - The CM includes a parachute-type Earth Landing System (ELS) to be used under all flight conditions for earth-landing requirements. The CM is also compatible with the use of a moderate L/D terminal landing system, such as the parawing. The LES satisfies the following requirements after normal re-entry, or maximum dynamic pressure excape and pad escape during abort:

a. Post-entry stabilization

b. Velocity control (maximum vertical velocity at 500 feet of 30 fps, maximum horizontal velocity of 45 fps)

c. Impact attenuation

The landing system reduces the CM velocity to 33 feet per second at 5,000 feet altitude for a normal or abort landing mode, and for either land or water touchdown under the following dynamic conditions:

a. Equilibrium horizontal drift with a 30 knot wind

b. CM attitude not more than 8 degrees off the nominal descent attitude

c. CM fully stabilized with no pitch or yaw rates

Equipment Description - The ELS consists of the following major assemblies:

a. Drogue parachute assembly

b. Main parachute pack assembly

c. Pilot parachute assembly

d. Main parachute disconnect assembly

e. Harness assembly

f. Sequence Controller

g. Heat shield separation assembly

Drogue Parachute Assembly - This assembly consists of a 25 degree conical FIST-ribbon-design parachute, a deployment bag for protection and orderly deployment, a ballistic mortar for ejection, and a riser of sufficient length to place the parachute canopy in a favorable position with respect to module wake. The riser attach points are favorable to CM stability. In addition, a drogue disconnect assembly connects the drogue parachute riser to the CM.

Main Parachute Pack Assembly - The main parachute pack assembly consists of the main parachutes, designed to operate in a cluster of three, and a parachute riser all packed in the main parachute deployment bag which protects the assembly and ensures orderly deployment. The three individual main parachutes are simultaneously deployed by three individual ballistic-mortar-deployed pilot parachutes.

Pilot Parachute Assembly - Each pilot parachute assembly consists of a ring slot-type canopy designed to control the deployment and inflation of one main parachute, pilot parachute deployment bag, pilot parachute ballistic mortar assembly for ejection upon signal from the sequence controller, and a pilot parachute riser to restrain the pilot parachute during deployment and operation. The riser is of sufficient length to place the pilot parachute in a favorable position with respect to airflow around the CM and main canopy during inflation.

Main Parachute Disconnect Assembly - This unit connects the three main parachute risers to the spacecraft main harness assembly and disconnects upon signal after impact.

Harness Assembly - The harness attaches to the parachute attach fittings and extends to the main parachute disconnect assembly.

Sequence Controller - The controller contains necessary time delay relays and baroswitches to sequence properly the following operations:

a. Jettison of the forward compartment heat shield

b. Firing of the drogue mortar

c. Firing of the pilot parachute mortar

d. Arming of the main parachute disconnect impact switch

The sequence control system also provides conversion of crew command signals to equipment actuation signals.

Heat Shield Separation Assembly - The forward compartment heat shield separation assembly consists of devices for releasing the latch mechanism and thrusting the forward compartment heat shield away from the CM so that the parachute deployment sequence can be initiated.

Performance

General - The purpose of the ELS is to return the CM safely to earth whether it be following re-entry from a normal mission or following any one of the abort modes. Specifically, it provides (1) stabilization of the CM by means of a drogue parachute for normal flights, (2) reorientation of the CM by means of a drogue parachute for pad and other abort situations, and (3) reduction of the vertical landing velocity by means of a cluster of three main parachutes sized such that any two will satisfy the vertical landing velocity requirement.

Normal Mission - Following re-entry the crew arms the system and the normal sequence of operations proceed as follows:

a. At 50,000 feet, after the Mach number has become subsonic, a barometric switch initiates forward compartment heat shield deployment. The heat shield is then deployed by electrically firing gas generators and cable cutters. Two units are activated, each one cutting both cables, releasing all four latches,

and energizing two thrusters to push the forward heat shield away from the CM.

b. At 25,000 feet a barometric switch initiates firing of a mortar which deploys the drogue parachute to stabilize the CM.

c. Approximately 35 seconds later, at 15,000 feet, a barometric switch initiates firing of mortars which simultaneously deploy three pilot parachutes. The drogue parachute is released at the same time.

d. Pilot parachutes pull out the three main parachutes which are in the reefed condition.

e. Main parachutes are dereefed by reefing cutters 8 seconds after deployment. Normal descent begins and the VHF antenna is erected.

f. Impact - Main parachute is disconnected by crewman.

Alternate Mission - In the event of a contingency at low altitudes, the landing sequence will be armed by the abort signal. Since all barometric switches are closed, operation of the landing sequence is controlled entirely by time delays as follows:

Time (Seconds)	Event
0	Abort signal. CM-SM separation; forward heat shield separation into LES tower structure; LES tower jettison taking forward heat shield along.
3	Drogue parachute deployed. Drogue opens, reorients CM to proper attitude for main parachute deployment.
7	Pilot parachutes deploy. Landing sequence continues as normal.

The performance of the sequence control subsystem is such that the failure of critical components does not result in a failure of the entire system. This is accomplished by incorporating two parallel sequence control circuits which utilize crossover circuitry at critical components. In the event of failure of both circuits, any operation in the landing sequence can be initiated by the crewman at his discretion.

Interfaces - The automatic sequence controller coordinates all electrical, pyrotechnic, and mechanical interface areas between the spacecraft and the associated ELS. Sequence iniation can be commanded by either the crew or by the ground support complex.

4-30 IN-FLIGHT TEST SYSTEM

General - The In-Flight Test System (IFTS) provides the crew with the means for a rapid check on the status of the spacecraft systems and for isolating a malfunction. The system provides a centralized panel with a go-no go test point readout and a coded readout showing which system and subsystem failed. A means for manual testing and maintenance instructions are also supplied.

Equipment Description - A block diagram of a typical in-flight test system is shown in Figure 4-37. The IFTS consists of a (1) central panel, (2) programmer, (3) switching complex, (4) comparator, (5) crew readout, (6) manual test unit, and (7) stimuli generator.

Central Panel - The central panel for monitoring and manual testing by the crew is the termination area for all test point wiring originating in the spacecraft systems.

Programmer - The programmer is a sequential switching device used to control the switching complex and comparator.

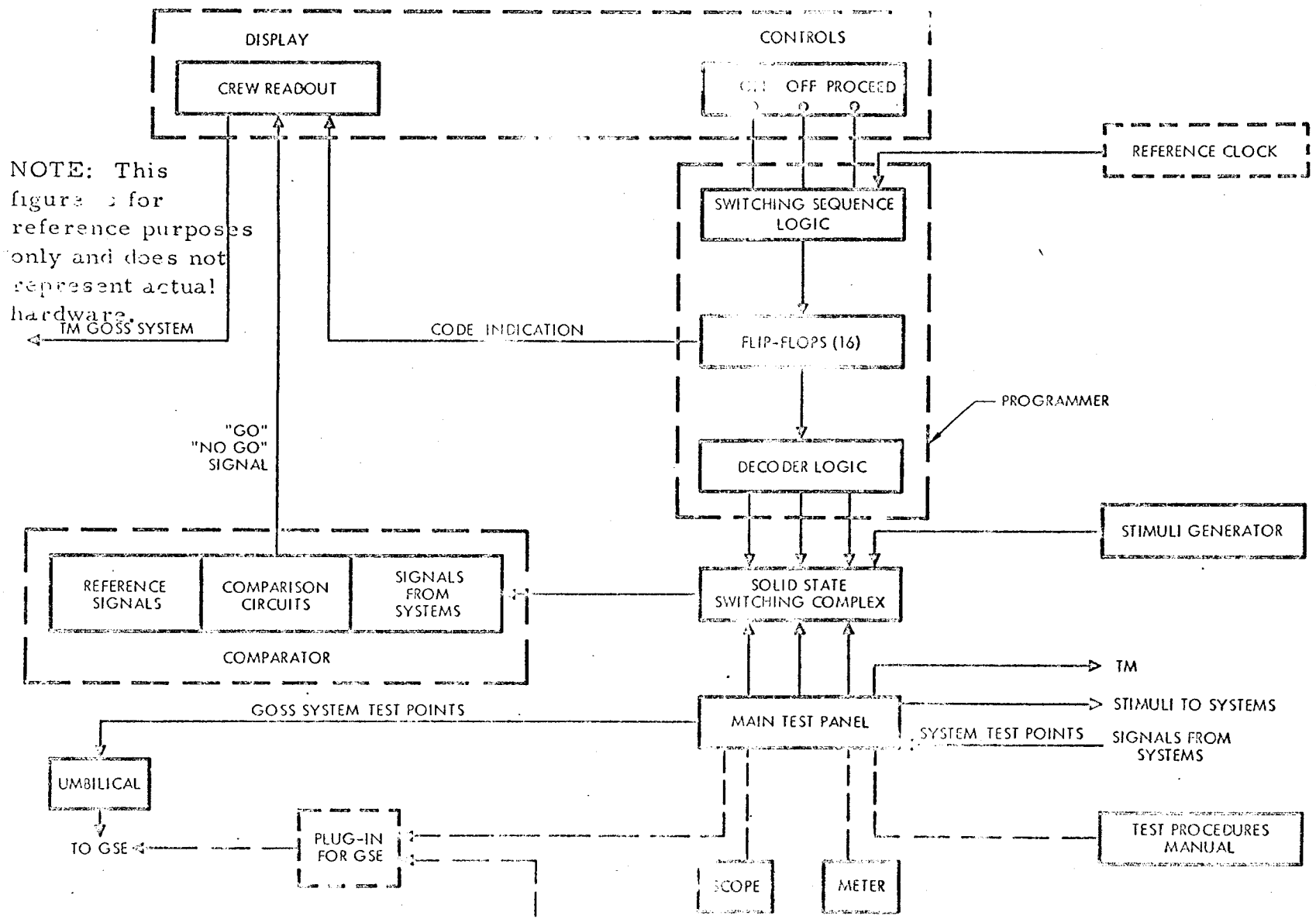

Figure 4-37 Block Diagram of a Typical In-Flight Test System

Switching Complex - The proper switching complex connects standard voltages and the test points to be monitored to the comparator.

Comparator - The comparator senses and compares the test signals and standard voltages.

Crew Readout - The crew readout displays the result of the comparator operation as a go-no go indication of the system or subsystem condition. It also provides a coded manual test reference for use in performing manual tests or for identifying maintenance instructions.

Manual Test Unit - The manual test unit, consisting of a scope and meter, is used in making limited diagnostic tests through test points accessible at the central panel. This is the first step in the maintenance of the spacecraft systems following a no go indication on the crew readout.

Stimuli Generator - The stimuli generator is used for two purposes:

a. For supplying stimuli and power to the non-operating redundant circuits during the go-no go sequential tests.

b. For supplying stimuli to the system, subsystem, or module under test to achieve a test point output.

Operation

General - An on-board manual provides test procedures, system data, identification of go-no go displays, manual testing methods, and maintenance procedures.

Automatic Monitoring - System and subsystem gross status are monitored and displayed to the crew on a qualitative basis by automatic go-no go interrogation of gross system test points. Provisions are made for control of automatic monitoring by the crew. A coded display indicates which system is out of the "go"

tolerance level.

Manual Testing - In addition to the gross test points, subsystem test points are available for providing detailed subsystem functional data. Manual testing may be employed as a verification or trouble-shooting procedure.

Interfaces - Automatic monitoring followed by manual testing may lead to a decision for an alternate mission or an abort.

The gross system test points and the subsystem test points are accessible to ground support equipment prior to launch. The IFTS is designed for compatibility with the spacecraft Prelaunch Automatic Checkout Equipment (PACE).

Accessibility to system, subsystem and module test points permit in-flight maintenance by the crew. Feasible on-board maintenance is limited by the tools and spares provided.

4-31 EVENTS SEQUENCING

4-32 PRE-LAUNCH PHASE

General - During the pre-launch phase of the lunar mission, a complete checkout of the entire spacecraft is performed. This phase is expected to consume approximately one day from initiation of checkout to lift-off. During the final stages of countdown the crew performs on-board system checks and confirms a "go" status. The detailed checkout plan for the pre-launch phase can be found in Reference (3).

4-33 BOOST PHASE

General - Status of all active CM systems is monitored during the launch phase by crew members and by GOSS. The near-earth telemetry and voice communi-

cations equipment are operating during this phase, along with the environmental control, electrical power, and other "full-time" systems of the CM.

Guidance & Navigation System - The CM Guidance and Navigation System provides continuous monitoring of the space vehicle trajectory during the boost phase. Any significant departure from the nominal trajectory is indicated to the crew for the purpose of initiating an abort.

Launch Escape System - In the event that an abort is initiated during the boose phase, the LES is automatically programmed to place the CM on a safe escape trajectory. During a normal mission, the LES is jettisoned ten seconds after S-II ignition.

Earth Landing System - In the event that a boost phase abort occurs, the LES is activated by the crew or by GOSS. Landing parachutes are automatically deployed, bringing the CM to a safe landing.

4-34 EARTH ORBITAL PHASE

A second checkout of the CM and SM systems is completed by the crew during this phase. Precision tracking by GOSS is also performed, utilizing the C-Band transponder. Checkout procedures similar to the prelaunch countdown are performed to insure a "go" status for the translunar injection. In the event of certain contingencies during this phase, a normal earth orbital mission may be continued and followed by a normal re-entry and landing. Certain other contingencies may lead to an abort maneuver utilizing the S-IVB stage or SM propulsion.

4-35 OTHER LUNAR MISSION PHASES

(To be supplied)

SECTION V

SERVICE MODULE

5-1 FUNCTION

The Service Module (SM) contains the Service Propulsion System plus selected equipment and stores which service the equipment and crew of the Command Module (CM). It is unmanned, does not require in-flight crew access and remains with the CM during lunar operations. It is separated from the CM prior to re-entry and is nonrecoverable. The SM provides propulsion capability for the Command-Service Module combination and its reaction control supplements that of the CM. Its structure provides a mounting surface and environmental protection for all Service Module systems, carries all ground and flight loads, and is compatible with the overall spacecraft structure.

5-2 DESCRIPTION

The SM consists of an unpressurized structure housing the service propulsion system and a majority of the spacecraft environmental control and electrical power systems. This equipment is designed to facilitate pre-flight repair or parts replacement. Fuel tankage thermal protection is provided where necessary.

The reference axes of the Service Module are orthogonal and correspond to the respective axes of the Command and Lunar Excursion Modules.

5-3 WEIGHTS AND BALANCE

Two weights are defined for the Service Module.

5-4 CONTROL WEIGHT

The control weight is used to determine critical design conditions for systems whose functions or performance margins would be reduced by increasing

the weight of the SM. The control weight is applicable only from lift-off to translunar injection and includes all reactants, stores, and propellants except the usable propellants of the service propulsion system. The control weight is 10,500 pounds.

5-5 DESIGN GOAL WEIGHT

The design goal (wt.) is used to determine nominal performance of system operations affected by SM weight variations. The design goal wt. is 9,500 pounds.

5-6 CENTER OF GRAVITY

(To be supplied)

5-7 INTERFACES

5-8 COMMAND MODULE

The umbilical devices between the CM and SM are disconnected prior to physical separation of the modules for any normal or abort mode.

Electrical - The umbilical device connects the circuitry necessary for integration of systems which are common to the SM and CM. Launch vehicle propulsion, control, and structural abort information are provided to the CM instrument panel through these devices. Information about the Lunar Excursion Module (LEM) inside the Adapter is transmitted to the CM.

Mechanical - Nonfragmenting explosive devices are used to disconnect the umbilicals and to separate the CM from the SM.

Fluids - Suitable connections are provided to conduct liquids and gases between the SM and CM. Provisions are made to prevent contamination either in mating or disconnection, and to ensure flow shut-off.

5-9 ADAPTER

Electrical - An umbilical device connects circuits for the launch vehicle propulsion, control, and structural information required for crew determination of existing abort requirements. Connections are also provided for circuits of the LEM which is inside the Adapter. The disconnects automatically separate upon pull-away of the spacecraft from the launch vehicle.

Mechanical - Nonfragmenting explosive devices are used to separate the SM from the Adapter.

5-10 GROUND SUPPORT EQUIPMENT

Electrical - The ground electrical power connection between the GSE and SM is a pull-away type disconnect located on the SM outer skin.

Mechanical - The SM design provides attachment points for support cradles, attitude positioners, hoisting adapters, tie down fittings, and braces for handling and transportation.

Fluids - The GSE and SM fluid system interfaces consist of fluid fill and return connections for propellants, potable water, liquid oxygen and hydrogen, and gaseous helium.

5-11 GROUND OPERATIONAL SUPPORT SYSTEM

Communications - The DSIF transponder and directional antennae are compatible with the DSIF network. DSIF antennae are designed and positioned so that no blanking will occur while the earth is in the line of sight.

5-12 MAJOR SERVICE MODULE SYSTEMS

5-13 STRUCTURAL SYSTEM

Loads - The SM structure accommodates all ground handling and flight loads including those listed as follows:

a. Boost - The external shell resists loads during the boost phase of flight.

b. Launch Escape - The SM structure is not impaired by actuation of the launch escape abort sequence in the launch pad position. Launch escape system aborts within the flight envelope do not impose catastrophic loads on the separation components or tankage.

c. Separation - Separation from the Adapter is accomplished with no subsequent recontact and resulting dynamic load input to the SM. Separation is not impaired by tolerances on spacecraft symmetry and assymmetrical thrusting of the launch vehicles. Separation mechanisms do not release parts which may damage critical components.

d. Jettison - Jettison of the SM is accomplished with no subsequent recontact and resulting dynamic load input to the CM. The disconnect mechanisms do not release parts which may result in danger to the CM.

Thermal - The structure withstands the variation of thermal environment during transportation, storage, prelaunch, and the launch and mission flight phases without impairment of structural integrity relative to subsequent loading conditions.

Configuration - The configuration of the SM is shown on Figure 5-1 and is described as follows:

a. External Shell - The external cylindrical shell consists of six structural panels of adhesive bonded aluminum honeycomb sandwich structure. Except for the radiator areas of the Electric Power and Environmental Control Systems, the panels are one-inch thick sandwich with 0.016 inch face plates and 3/8 inch hexagonal core of 0.002 inch foil thickness. The radiator panels are integral parts of the structural panels. The external shell provides the primary load path from the SM internal structure to the CM.

b. Aft Bulkhead - The aft bulkhead is an adhesive bonded aluminum honeycomb sandwich structure. Its total thickness is 3 inches, with 0.020 inch to 0.070 inch faceplates and a 1/4-inch hexagonal core of 0.002 inch foil thickness. The aft bulkhead covers the aft end of the SM and insulates the internal components from service propulsion engine heat. It provides primary support for the propellant tanks and service propulsion engine and transfers loads from these components to the external shell.

c. Forward Bulkhead - The forward bulkhead is an adhesive bonded aluminum honeycomb sandwich structure. Its total thickness is one inch, with 0.010 faceplates and 1/4-inch hexagonal core of 0.001 inch foil thickness. In addition to closing the forward end of the SM, the forward bulkhead transfers lateral propellant tank loads to the external shell and aids the external shell in taking the transverse loads of the radial beams.

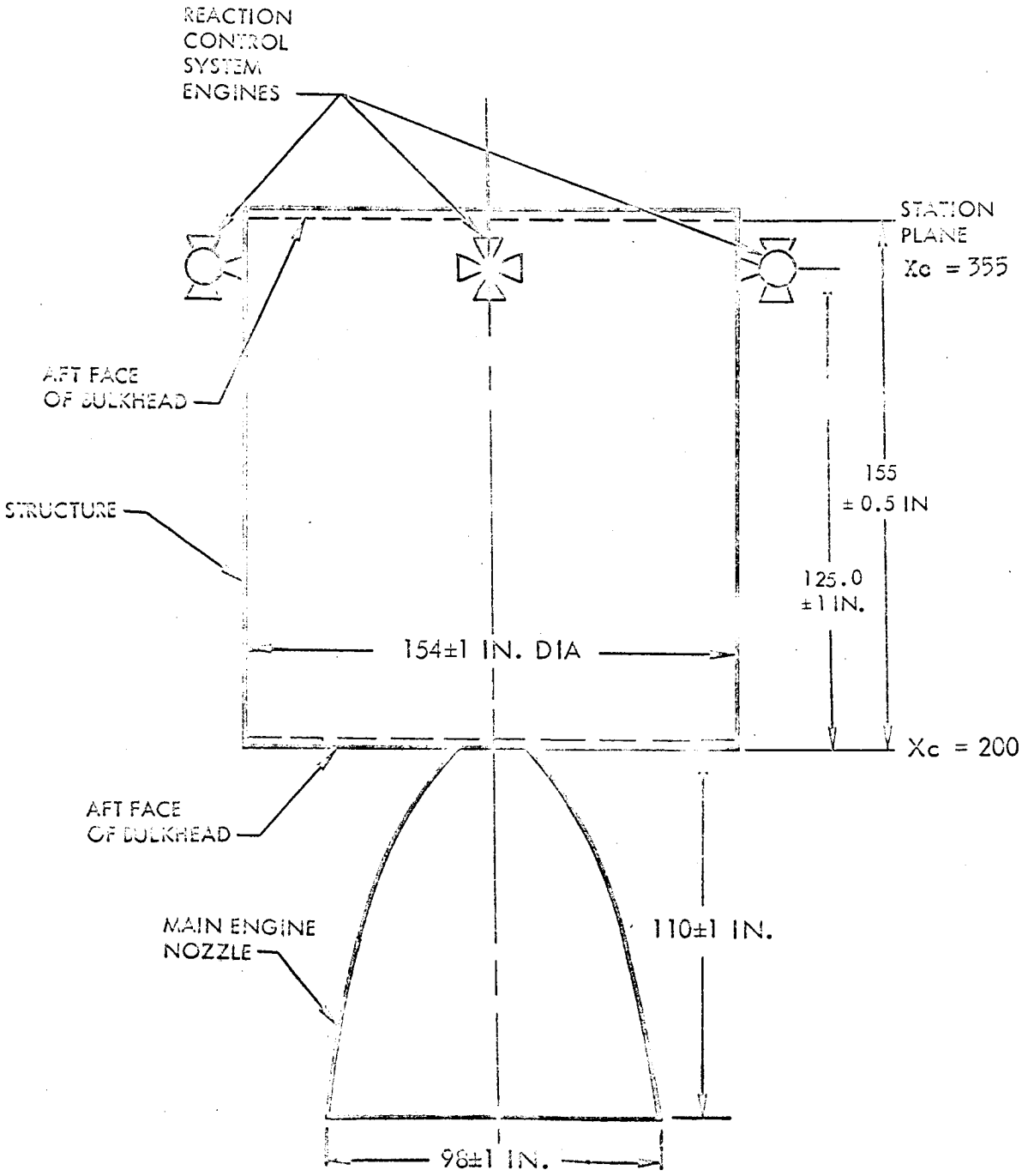

Figure 5-1 Service Module

d. Radial Beams - Six full length beams are radially oriented within the cylindrical shell, joining the external shell structure at the panel junction lines. These radial beams are milled from aluminum plate, with the thickness tapering from 0.090 inch to 0.020 inch in proportion to the imposed loads. The radial beams assist the forward bulkhead in transferring loads to the external shell and provide primary load paths from the CM attachment points to the external shell.

e. Attachment Points - The Command-Service Module attachment points are located on the forward ends of the radial beams and loads are transferred through the radial beams to the external shell of the SM. Six points, three for tension and three for shear are provided for the CM. Release of the CM from the SM occurs at the tension points. The SM-Adapter attachment is a continuous ring and bolt circle. Linear shaped charges are used for releasing the SM from the Adapter.

f. Access Provisions - The SM structure provides access for ground servicing of all integral system components. Equipment bays are accessible by removal of the structural panels of the external shell. In other areas partial panels may be removed.

Internal Arrangement - Exploded views of the Service Module are shown on Figure 5-2.

5-14 SERVICE PROPULSION SYSTEM

General - During lunar orbit missions, the Service Propulsion System provides propulsion for gross translunar and transearth midcourse velocity corrections,

Figure 5-2

Internal Arrangement of the Service Module

(To be supplied)

and for lunar orbit injection and transearth injection. During earth orbit missions, the system provides propulsion for earth orbital transfer and correction, and orbit ejection. The system is capable of providing the necessary thrust for post-atmospheric abort following jettison of the Launch Escape System.

Equipment Description - The Service Propulsion System consists of the propellant supply and the engine subsystems, as shown schematically on Figure 5-3. A list of components and their functions is shown in Table 5-1.

5-15 PROPELLANT SUPPLY SUBSYSTEM AND COMPONENTS

General - The propellant supply subsystem is a pressure-fed, series-connected, free flow system which provides usable propellant to the engine at the specified engine inlet conditions. The fuel is a mixture of 50% unsymmetrical dimethylhydrazine (UDMH) and 50% hydrazine (N_2H_4) by weight. The oxidizer is nitrogen tetroxide (N_2O_4). The propellant tanks are pressurized with gaseous helium to provide propellant flow.

Construction - All components are compatible with high-grade, oil-free, commercial helium for long periods of exposure. Oxidizer system components are compatible with a mixture of 50% hydrazine and 50% unsymmetrical dimethylhydrazine for long periods of exposure.

Propellant Tanks - Propellants are stored in four hemispherically domed, cylindrical tanks. Two of the tanks contain fuel in the amount of pounds minimum and two contain oxidizers in the amount of pounds. The paired tanks are connected in series and contain the necessary baffling and anti-vortexing devices to prevent sloshing and vortexing of propellant.

THIS FIGURE IS FOR REFERENCE ONLY AND
DOES NOT REPRESENT ACTUAL HARDWARE

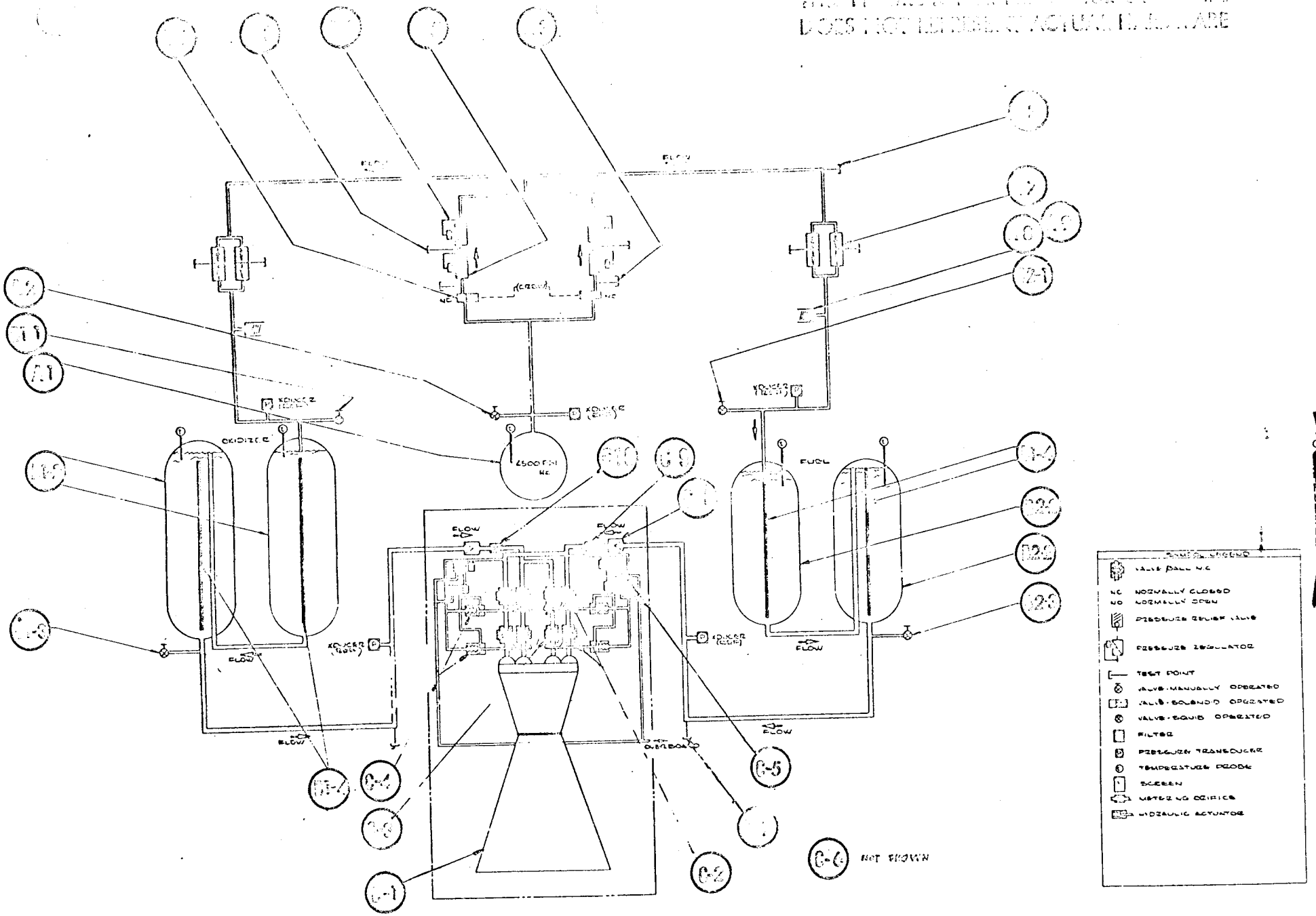

Figure 5-3 Service Propulsion System

[redacted]

Table 5-1 SERVICE PROPULSION SYSTEM COMPONENTS

Figure Code No.	Component Title	Quantity Reqd.
A-1	Vessel - Helium Pressure	2
A-2	Disconnect - Helium Fill and Drain, Manual	1
A-3	Coupling - Helium Pressure, Check	2
A-4	Valve - Solenoid Operated, N. C. Helium Pressure	2
A-5	Regulator - Primary, Helium Pressure	2
A-6	Regulator - Secondary, Helium Pressure	2
A-7	Valve - Helium Pressure Check	8
A-8	Valve - Helium Pressure Relief	2
A-9	Diaphragm - Helium Pressure Burst	2
B1-1	Disconnect - Oxidizer Vent, Manual	1
B1-2	Tank - Oxidizer	2
B1-3	Disconnect - Oxidizer Fill and Drain, Manual	1
B1-4	Propellant Quantity Gaging	4
B2-1	Disconnect - Fuel Vent, Manual	1
B2-2	Tank - Fuel	2
B2-3	Disconnect - Fuel Fill and Drain, Manual	1
C-1	Thrust Chamber Assembly	1
C-2	Valve Assembly - Fuel	4
C-3	Valve Assembly - Oxidizer	4
C-4	Actuator Assembly - Hydraulic	4
C-5	Valve Assembly - Solenoid	4
C-6	Valve Assembly - Check	
C-7	Disconnect Assembly	2
C-8	Filter, Fuel and Oxidizer	2
C-9	Metering Orifice, Fuel	1
C-10	Metering Orifice, Oxidizer	1

[redacted]

[redacted]

Table 5-1 (Continued)

Figure Code No.	Component Function
A-1	Storage tank for high pressure helium gas
A-2	Helium Fill and drain point during ground servicing operations
A-3	Provides pressure check point during checkout operations
A-4	Isolates the helium storage tank in the event of downstream leakage or component failure
A-5	Maintains the required downstream pressure
A-6	Maintains the required downstream pressure
A-7	Prevents the contact of fuel and oxidizer
A-8	Maintains structural integrity of propellant tanks in the event of pressure rise in tankage system
A-9	Prevents propellant from entering relief valve, prior to rupture
B1-1	Provides venting of propellant tanks during ground servicing operations
B1-2	Storage tank for N_2O_4 oxidizer supply
B1-3	Oxidizer fill and drain point during ground servicing operations Positively seals oxidizer supply in storage tanks prior to initial system pressurization
B1-4	Senses remaining fuel and oxidizer level-transmitted visually to crew
B2-1	Provides venting of propellant tanks during ground servicing operations
B2-2	Storage Tank for 50% N_2H_4 and 50% UDMH fuel supply
B2-3	Fuel fill and drain point during ground servicing operations Positively seals fuel supply in storage tanks prior to initial system pressurization
C-1	Combustion chamber
C-2	Serves as main propellant valve to control fuel flow to the combustion chamber
C-3	Serves as main propellant valve to control oxidizer flow to the combustion chamber
C-4	Controls position of gates in fuel and oxidizer main propellant valves
C-5	Controls fuel flow to the hydraulic actuators
C-6	Assures maintenance of pressure in actuator overboard feeder lines
C-7	Servicing point for applying fuel pressure for ground checkout of engine valving
C-8	Prevents foreign particles from entering injector
C-9	Meters fuel flow to control O/F ratio
C-10	Meters oxidizer flow to control O/F ratio

[redacted]

[redacted]

Each tank contains liquid level sensing devices which sense the level of either the fuel or oxidizer remaining. This information is presented in a visual display to the crew.

Description of the Subsystem - The helium supply is contained in two spherical tanks which are cradle mounted in order to eliminate detrimental skin flexures. Each tank contains cubic feet of helium.

Two pressure regulation units, connected in parallel, are located downstream of the helium storage tanks. Each contains a primary and secondary pressure regulator, connected in series. The upstream or primary regulator reduces the tank pressure of psig to a value slightly greater than the required downstream pressure. The secondary downstream regulator in the series reduces the output of the primary regulator to the required downstream pressure of psig. If the primary regulator fails open, the secondary regulator is capable of maintaining the required downstream pressure when subjected to the resulting increase in inlet pressure. Conversely, if the secondary regulator fails open, the outlet pressure of the primary regulator is within the permissible operating range of the engine.

Manually controlled, "normally closed" solenoid valves are installed upstream of each pressure regulation unit. These provide a means of isolating the helium tanks in the event of downstream leakage or component failure.

A pressure relief valve and a burst diaphragm-integral filter component are provided for each of the dual oxidizer and fuel tankage systems. The pressure relief valve maintains the structural integrity of the propellant tanks in the event of an excessive pressure rise within the tanks. The burst diaphragm is utilized to prevent propellant from entering the relief valves at normal operating pressure. The integral filter prevents foreign particles from entering the relief valve after rupture of the burst diaphragm. The normal operating

[redacted]

pressure is psig and the diaphragm burst pressure is psig.

Two check-valve assemblies are located downstream of the pressure regulators. One is located in the fuel tank pressurizing line and the other in the line to the oxidizer tanks. Each assembly consists of two units connected in parallel and each unit consists of two check valves installed in series. This provides a redundant check-valve system to prevent contact of fuel and oxidizer due to back-flow through the pressurizing lines.

Operation - Propellant supply subsystem operating pressures are as shown in Figure 5-4. During both steady state operation and the starting modes, the fuel and oxidizer pressures are within 2 psi of each other. The fuel temperature at the engine inlet is maintained within 30° F to 135° F.

Following the helium pressure regulators, the helium path is split with one path directed through a check valve assembly into one of the two fuel tanks. Similarly, the other helium path is to one of two oxidizer tanks. Fuel and oxidizer from the pressurized tanks are then forced through a standpipe into the corresponding tank of each of the dual tank assemblies. Fluids from the second tanks are filtered and fed directly to the engine fuel and oxidizer valves.

During a zero "g" condition, the initial ullage acceleration to force the propellant to the bottom of the tanks is provided by the Service Module Reaction Control System.

If it is found necessary to provide a method of propellant flow control to achieve optimum propellant utilization, this method will consist only of a crew-operated device installed in the oxidizer line and operable within the specified engine inlet limits. No method of flow control will be installed in the fuel side.

A propellant quantity indicating device senses the level of both fuel and oxidizer remaining and transmits this information as a visual display to the crew.

1ST STAGE REGULATOR OUTLET

LOCK UP ..... 207 PSI (MAX)
OPERATING ..... 198 ± 4 PSI

2ND STAGE REGULATOR OUTLET

LOCK UP ..... 182 PSI (MAX)
OPERATING ..... 173 ± 4 PSI

PROPELLANT TANK PRESSURE

NORMAL LOCK UP ..... 182 PSI (MAX)
2ND STAGE REGULATED ..... 207 PSI (MAX)
IN OPEN MODE ..... 212 MIN TO
RELIEF ..... 240 MAX PSI

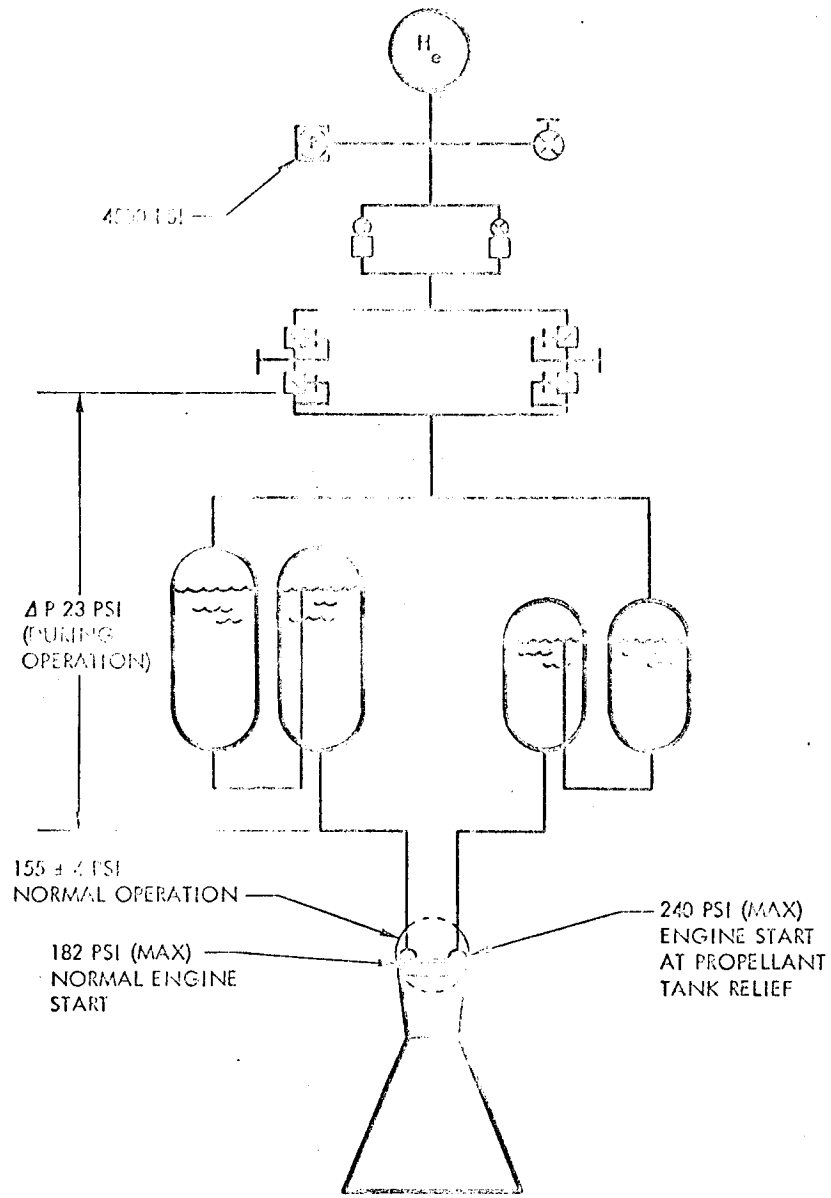

Figure 5-4 Service Propulsion Systems Operating Pressures

5-16 ENGINE SUBSYSTEM AND COMPONENTS

General - The service propulsion system engine is a liquid propellant rocket engine employing nitrogen tetroxide as the oxidizer and a mixture by weight of 50% hydrazine and 50% unsymmetrical dimethylhydrazine as the fuel. Combustion results from hypergolic ignition of the two propellants. The engine is pressure-fed, restartable, non-throttleable, and contains gimbal provisions for thrust vector control. Chamber cooling is accomplished by use of an ablative combustion chamber. A radiation-cooled nozzle extension is used to increase propulsion efficiency.

Construction - The rocket engine is designed and constructed to withstand all strains, shocks, vibration, and other conditions incident to shipping, storage, handling, installation, and operational service. In service the design provides for zero leakage throughout the range of operating pressures.

The principle of physical and functional interchangeability is employed for the nozzle extension, combustion chamber, thrust mount, gimbal, gimbal actuator assemblies, actuator fluid check valves and the propellant valve assembly which consists of the main propellant valves, valve actuators, pilot control valves, and the engine-mounted propellant lines. The injector is physically replaceable with interchangeable units.

The materials of construction are such that the function and performance of all engine components are not degraded when exposed to propellants. This exposure includes contamination with particles of a size limited to 250 microns.

The engine contains attaching pads or lifting lugs for the attachment of ground handling equipment for installation of the engine into the spacecraft or static facility, and for general ground handling and maintenance.

The dry weight of the rocket engine is 580 pounds.

Combustion Chamber - The combustion chamber has an outlet/inlet area ratio of 6:1. The chamber includes an integral metal flange on each end for mechanical attachment of the injector and nozzle extension, and supports for mounting the gimbal assembly. The inner chamber wall is constructed of ablative material and is designed to minimize the transmission of heat to the outer wall.

Injector - The injector has the necessary propellant volume and volume ratio to attain optimum propellant utilization during start and shutdown transients. Fuel and oxidizer passages are separated by parent metal or redundant weld joints. Fabrication procedures assure the absence of ships in injector passages and deburring of injector orifices after drilling operations. The injection pattern has optimized ignition characteristics, combustion stability, and temperature distribution on the inner wall of the combustion chamber.

Nozzle Extension - The nozzle extension terminates at an effective area ratio of 60:1 and is mechanically attached to the combustion chamber. The radiation cooled nozzle is contoured to produce maximum thrust and does not suffer performance degradation due to mechanical and thermal stresses during its life.

Propellant Valve Assemblies - Propellant flow is controlled by mechanically linked main propellant valves furnished in a redundant series-parallel arrangement as shown in Figure 5-3. The valves are controlled by hydraulic-type actuators and application of fuel pressure to the actuators is controlled by normally closed solenoid valves. The valving system ensures continued or subsequent engine operation in the event of a valve failure in the closed position and to prevent propellant loss for a valve failure in the open position.

Thrust Mount - The thrust mount is compatible with the airframe structural mounting attachments. The gimbal-thrust mount combination provides an

accurate means of aligning the gimbal bearing axes in the spacecraft reference system. The thrust mount design, through selection of a suitable natural frequency, does not amplify the basic combustion frequencies of the thrust chamber-injector or induce divergent vibratory characteristics.

Gimbals - The gimbals provide $\pm$ 8.5° engine inclination with respect to a line perpendicular to the engine mounting plane and turn the engine assembly at a rate of $\pm$ 0.35 radians per second. Electromechanical actuators for the gimbals incorporate redundancy to achieve the prescribed engine reliability level. The gimbal actuator has a duty cycle as defined on Figure 5-5.

Instrumentation - The engine is provided with the following instrumentation:

a. One combustion chamber pressure transducer

b. Redundant position potentiometers on each inter-linked fuel-oxidizer propellant valve.

c. Redundant gimbal angle position sensors for measurement of both pitch and yaw angles.

d. Two temperature sensors on the outside surface of the combustion chamber.

5-17 REACTION CONTROL SYSTEM

General - The SM Reaction Control System (RCS) consists of four identical and independent reaction control units located at 90° intervals around the circumference of the SM as indicated on Figure 5-6. Each unit consists of three storage and distribution systems, for helium, oxidizer, and fuel, and four rocket engine systems. The propellant is a combination of monomethylhydrazine (MMH) and nitrogen tetroxide (N_2O_4).

[redacted]

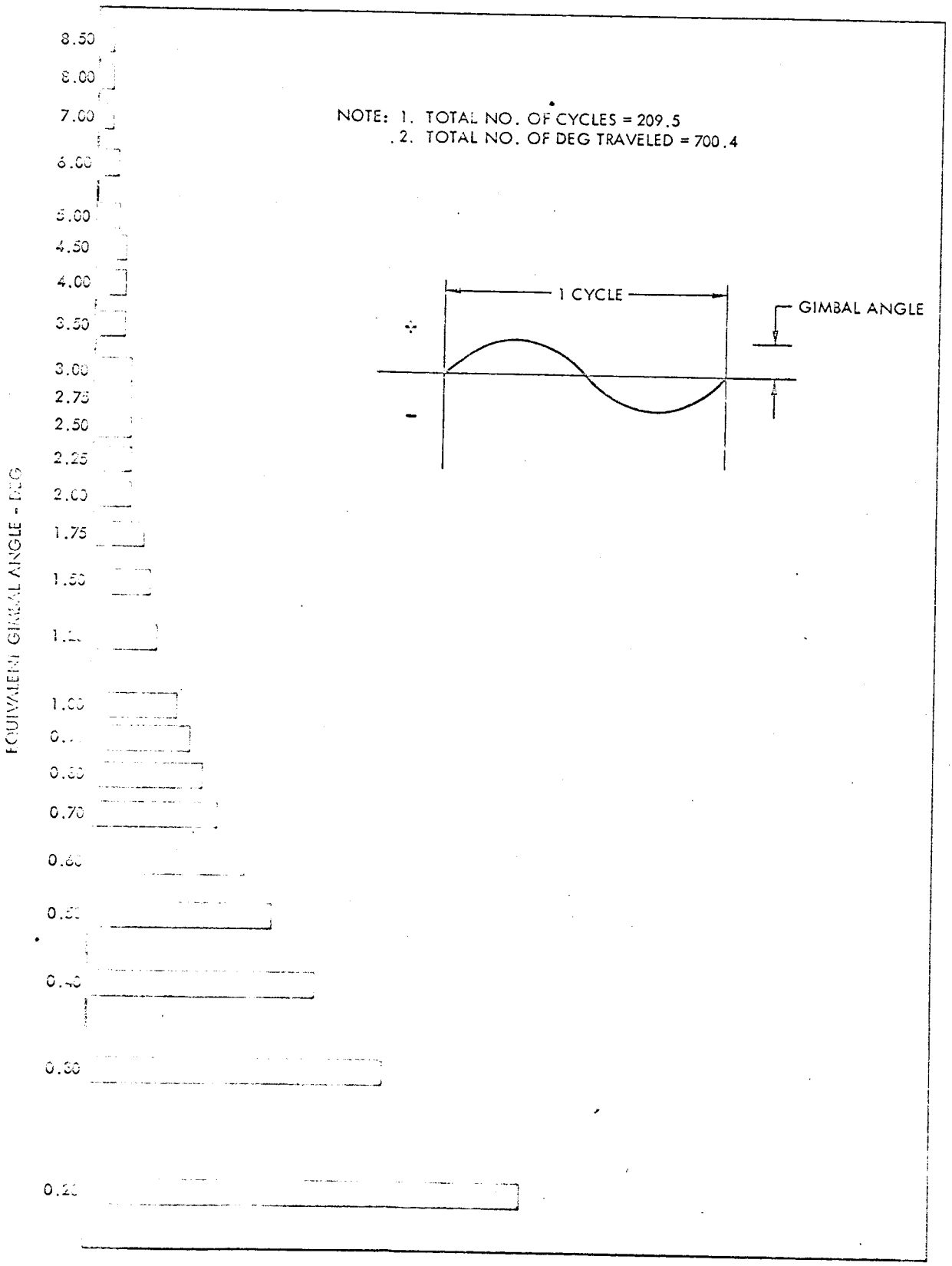

Figure 5-5 Gimbal Actuator Duty Cycle

[redacted]

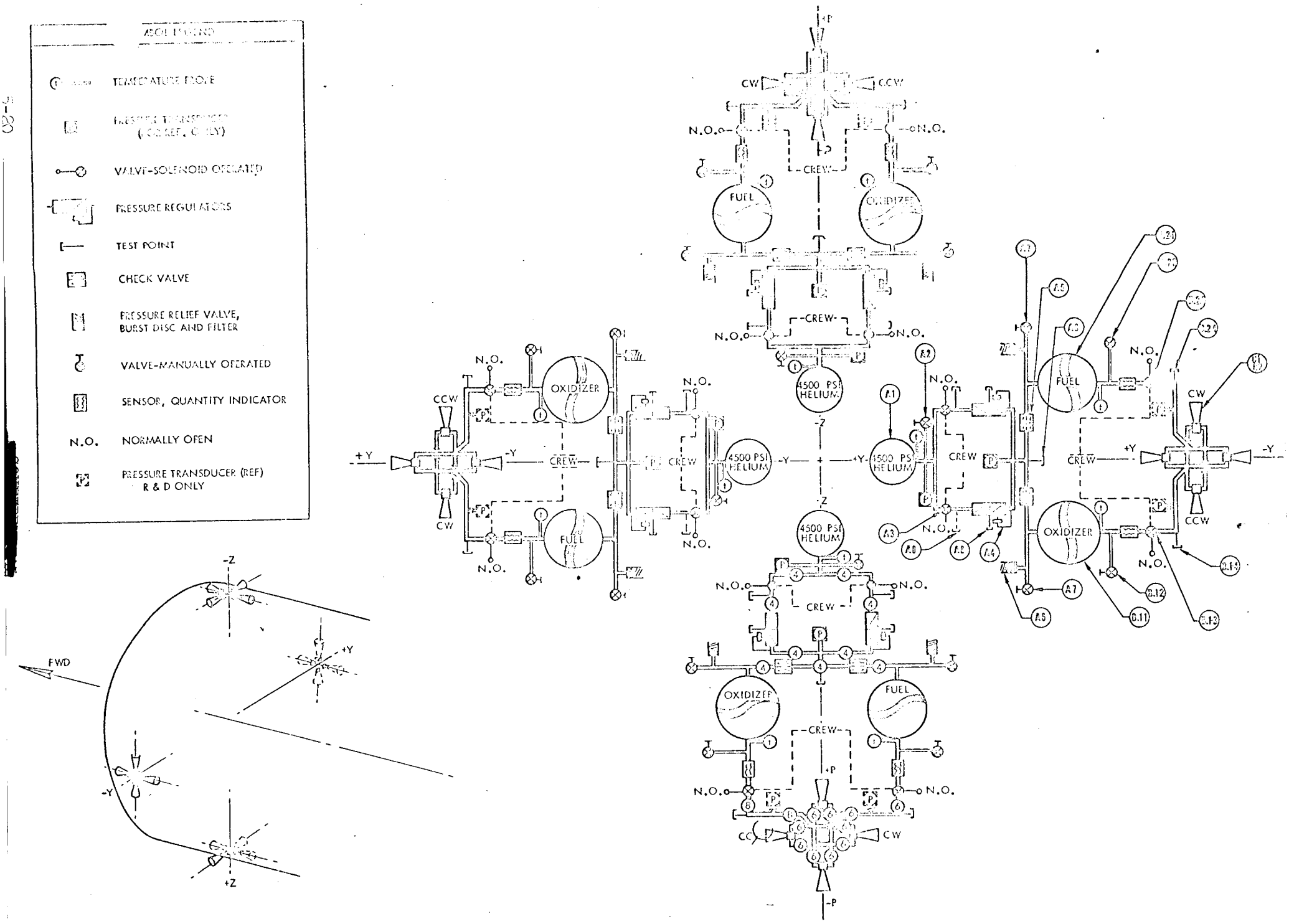

Figure 5-6 Service Module Reaction Control System

The RCS provides stabilization and altitude control about three axes of the spacecraft in all phases of flight subsequent to booster separation and prior to CM separation from the SM. It contains the flexibility to satisfy functional requirements of all missions. The system performs additional functions as follows:

a. Docking Maneuvers - The RCS provides three axis orientation and translational velocity increments necessary to accomplish initial docking with the LEM. This involves the maneuvering of the CSM to effect the joining of the LEM to the forward portion of the CM. The RCS is used as an emergency or back-up means of docking with the LEM after lunar landing and launch have been effected.

b. Velocity Corrections - The RCS provides ullage acceleration and minor velocity increments for the Service Propulsion System. The RCS provides spacecraft orientation while major velocity corrections are accomplished by the Service Propulsion System. In the event of malfunction of the Service Propulsion System during translunar flight, the RCS provides translational velocity increments up to a maximum of 100 feet per second to bring the spacecraft to an earth return trajectory.

c. Separations - The RCS provides translational acceleration for normal mode separation of the spacecraft from the launch vehicle. It also supplies a sustained acceleration of the SM for separation from the CM prior to re-entry.

Pressurized Helium Subsystem - This subsystem is composed of Category A components listed in Table 5-2 and Figure 5-6. The helium supply is contained within four spherical tanks which are cradle mounted to minimize detrimental skin flexures. A system of four pressure regulators connected in a parallel-series arrangement is located downstream of each helium storage tank. The first

Table 5-2 SERVICE MODULE REACTION CONTROL SYSTEM COMPONENTS

Category	Figure 5-3 Code No.	Component Title	Function
A	A-1	Vessel - Helium Pressure	Storage of high pressure helium
A	A-2	Valve - Helium Fill, Manual	Fill point during ground servicing operations
A	A-3	Valve - Helium, Solenoid Operated	Isolate the storage area in the event of a downstream failure
A	A-4	Regulator - Helium Pressure	Maintains the required constant downstream pressure
A	A-5	Check Valve Helium Pressure	Prevents oxidizer and/or fuel from backing up into helium system
A	A-6	Relief Valve Helium Pressure	Prevents overpressurization of the fuel and oxidizer system
A	A-7	Valve - Vent Helium Pressure	Depressurize low pressure side of helium system
A	A-8	Coupling - Check Helium Pressure	Provide pressure check points
B	B1-1	Tank Oxidizer	Storage of nitrogen tetroxide (N_2O_4)
B	B1-2	Valve - Oxidizer Fill, Manual	Fill point during ground servicing operation
B	B1-3	Valve - Oxidizer Solenoid Operated	Isolate storage area in the event of downstream failure
B	B1-4	Coupling - Check Oxidizer	Provide pressure check point
B	B2-1	Tank - Fuel	Storage of MMH
B	B2-2	Valve - Fuel Fill, Manual	Fill point during ground servicing operation
B	B2-3	Valve - Fuel Solenoid	Isolate storage area in the event of downstream failure

Table 5-2 (Continued)

Category	Figure 5-3 Code No.	Component Title	Function
B	B2-4	Coupling - Check Fuel	Provide pressure check point
C	C-1	Propellant Valves (2)	Control propellant flow to the engine on demand
C	C-2	Thrust Chamber	Provides impulse for spacecraft control

regulator in a parallel path reduces the upstream pressure of about 4500 psia to a valve slightly higher than the required downstream pressure. The second regulator, in series with the first, reduces the pressure to about 170 psia. If the upstream regulator fails open, the second regulator is capable of maintaining the required down-stream pressure. Conversely, if the second regulator fails open, the first regulator maintains the pressure within the permissible operating range. The parallel arrangement permits continued operation in the event either of the series regulators fail closed. A manually-controlled, normally-open solenoid valve is installed upstream of the pressure regulation system and actuation of this valve provides the means of isolating the helium tank in the event of down-stream leakage or component failure. Check valves downstream of the regulators prevent propellants from entering the helium subsystems in the event of failure of propellant tank positive-expulsion devices. Relief valves contain integral helium filters which prevent excessive pressure buildup in the propellant storage tanks. Vent valves provide means for releasing helium downstream of the check valves during propellant servicing operations and helium depressurization operations.

Oxidizer Subsystem - The oxidizer subsystem is composed of Category B1 components listed in Table 5-2. The fill valves provide for servicing the oxidizer subsystem during ground operations. Four hemispherically-domed cylindrical tanks for the oxidizer supply are cradle mounted. Pressurized helium acts on a positive expulsion device in each tank and this forces oxidizer to the rocket engines at the required feed pressure. A manually-controlled, normally-open solenoid valve provides the means of isolating the oxidizer storage tank from the rocket engine in the event of a leak in the oxidizer subsystem or a malfunction of a rocket engine.

Fuel Subsystem - The fuel subsystem is composed of Category B2 components listed in Table 5-2. The fill valves provide for servicing the fuel subsystem during ground operations. The fuel supply is contained within four hemispherically-domed cylindrical tanks which are cradle mounted. Other provisions for control of fuel flow include helium pressurization, and are like those described for the oxidizer subsystem.

Rocket Engine Subsystem - Each rocket engine subsystem is composed of Category C components listed in Table 5-2. Activation of the propellant feed system supplies propellant to the normally-closed solenoid inlet valves mounted on the rocket engines. Electrical signals from the Stabilization and Control System open the oxidizer and fuel valves simultaneously. In the event of failure in the S&C System, the engine valves may be operated on a separate manual circuit.

The RCS employs sixteen rocket engines mounted in clusters of four on the external surface of the SM. Eight rocket engines are for roll control, four are for pitch control and four are for yaw control. Control for each axis is supplied by pairs of engines arranged to provide rotation without translation. One engine of each pair is supplied by one of the independent propellant supply systems.

Each rocket engine is a pulse-modulated, pressure-fed, radiation-cooled thrust generator and has the following characteristics:

a. Thrust - It develops a vacuum thrust during continuous operation of 100 pounds plus or minus 5 percent.

b. Thrust Transient Rate - It develops a thrust buildup and decay as described in Figure 5-7.

c. Specific Impulse - Under vacuum conditions and continuous operation, the engine develops a specific impulse of 300 seconds when operating for periods in excess of one second as shown on Figure 5-8. The engine system achieves a minimum total

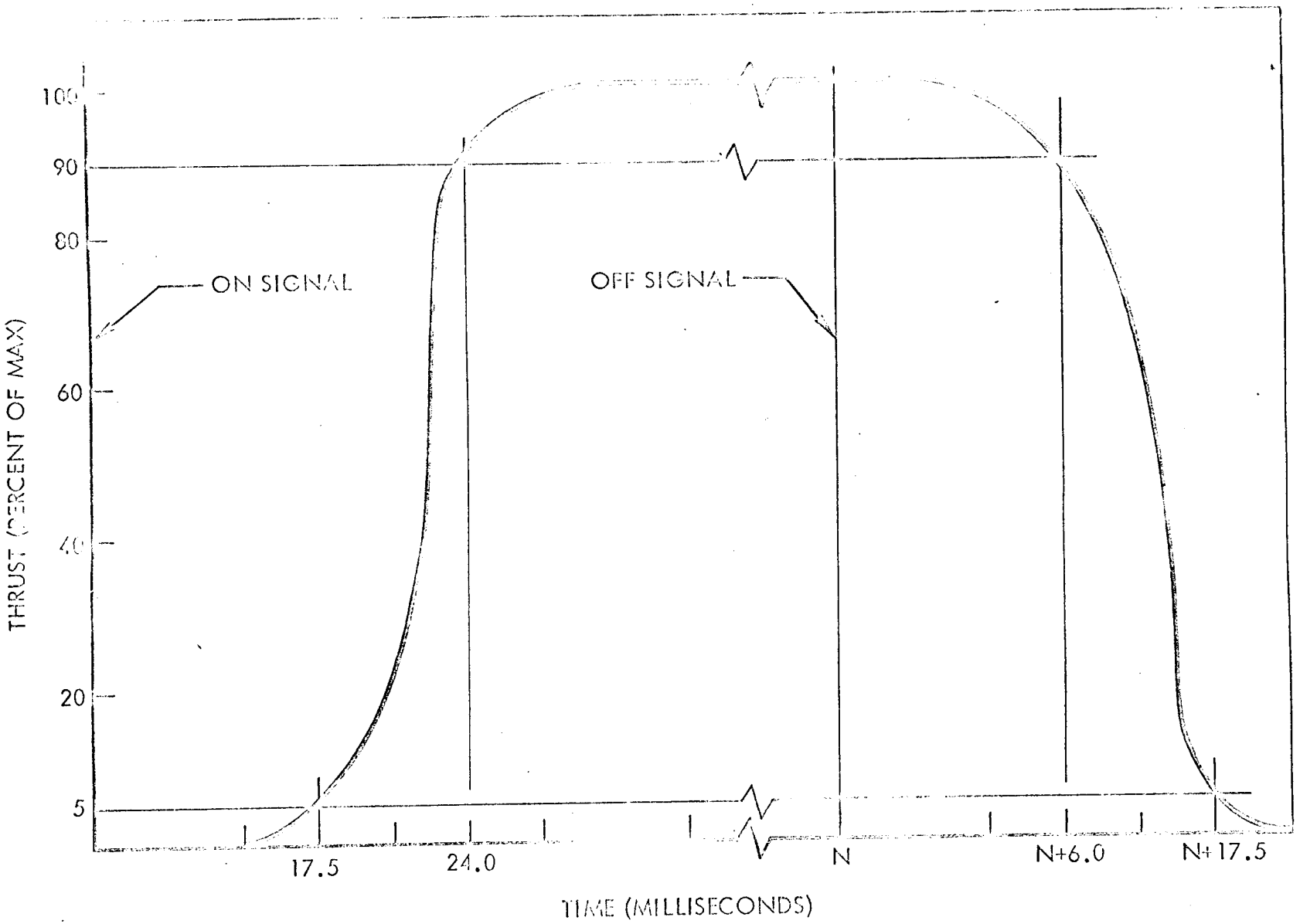

Figure 5-7

REACTION CONTROL ENGINE THRUST PROFILE

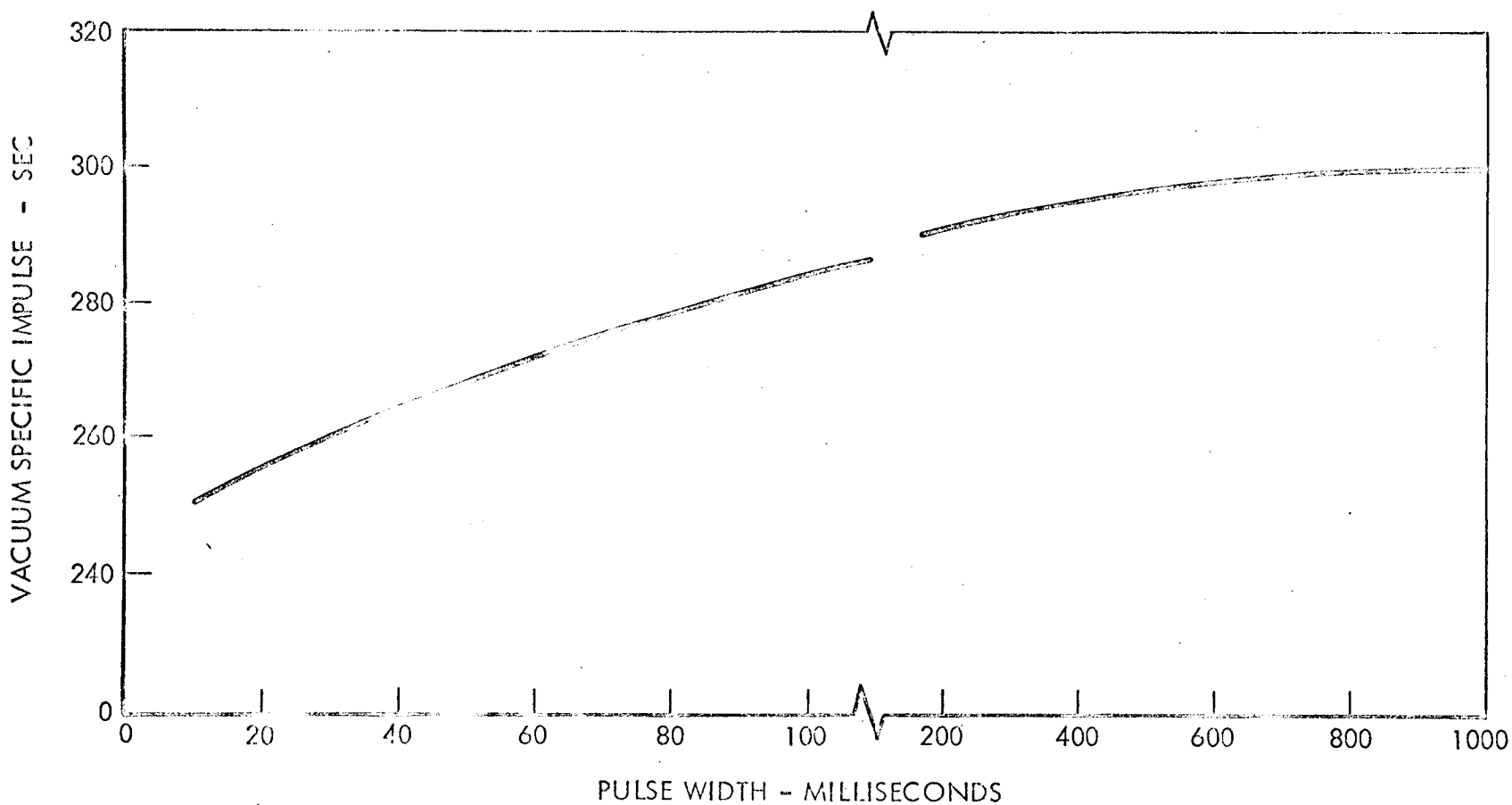

Figure 5-8

REACTION CONTROL ENGINE SPECIFIC IMPULSE

impulse bit, demonstrated by repeatability within plus or minus 15 percent, of not more than 0.65 pound-seconds.

d. Weight - Its dry weight does not exceed 3.75 pounds.

e. Reliability - It has a numerical reliability of no less than 0.994 over an operating life of 1000 seconds after completion of acceptance testing.

f. Pressures - Helium source pressure for the pressurization system is approximately 4500 psig. Propellant is provided to the engine at an approximate operating pressure of 170 psia.

g. Operation - The four independent units of the system may be used simultaneously during normal reaction control operation. The normal mode of operation for roll, pitch, or yaw control consists of firing two opposite engines to result in a couple about the appropriate axis.

Any three of the control units are capable of performing the maneuvers required for safe return of the CSM following failure of a single unit at any time during this mission. In the event of Stabilization and Control System malfunction, the crewman may assume manual control over operation of any combination of the 16 rocket engines through use of a separate control circuit. Means for identifying and isolating a failed unit and engine are provided.

The complete system incorporates features to facilitate preflight servicing, checkout, and deactivation.

Interfaces - During normal operation, the SM Reaction Control System receives electrical signals from the Stabilization and Control System for pulse-modulated control of engine total impulse. Electrical characteristics of the

system permit the use of common driver circuits from the SM and CM Reaction Control Systems.

5-18 SUPERCRITICAL STORAGE SYSTEM

General - This system stores hydrogen and oxygen as liquids, supplies gaseous oxygen for the CM cabin and pressure suit atmosphere and LEM pressure suit atmosphere, and supplies gaseous hydrogen and oxygen for fuel-cell operation. The system provides: A sufficient quantity of oxygen and hydrogen for safe return of the three man crew from a 14 day lunar landing mission; minimum, normal and contingency flow requirements; negligible loss of operating fluids; and storage in a supercritical state.

Equipment Description

Cryogenic Storage Tanks - Four spherical tanks are mounted on tubular flanges. pounds of oxygen are stored in each of two oxygen tanks and pounds of hydrogen are stored in each of two hydrogen tanks.

Insulation - The maximum allowable heat leak is about 1.09 watts (3.75 BTU/Hr.).

Electrical Heaters - Maximum flow rate conditions require 370 watts for oxygen and 30 watts for hydrogen. Redundant heaters are provided.

Quantity Gaging - Quantity Sensors are provided.

Operation - The Supercritical Storage System functions according to the following conditions:

a. Cool down and fill time - 40 minutes

b. Pressure buildup time - 50 minutes

c. System flow response	-	0.45 to 39 lb/hr in 45 seconds and return in 60 seconds
d. Standby time, tanks full	-	30 hours
e. Control pressure range	-	Oxygen: 820 to 900 psi at about - 280° F Hydrogen: 190 to 250 psi at about 415° F
f. Relief pressure		Oxygen: Open 1020 psia, reseat 1005 psia Hydrogen: Open 295 psia, reseat 280 psia

Interfaces - Tank capacity, tubing, valves, sensors and controls are compatible with the supply, measurement and control requirements of the CM and LEM.

5-19 ENVIRONMENTAL CONTROL SYSTEM

General - The SM Thermal Control System performs the following functions for a 14-day lunar landing mission.

a. Transfers heat through the coolant circuit to the CM.

b. Provides cooling for electronic equipment located in the SM.

c. Provides for thermal control of the Service Propulsion propellant feed subsystem.

d. Provides for control of heating from the Service Propulsion and Reaction Control Systems

e. Provides thermal control by radiation to space from the SM radiators.

The SM Thermal Control System uses both active and passive means of thermal control to accommodate heat dissipation of the CM equipment and crew,

and the SM equipment. A schematic of the system is shown on Figure 5-9.

Equipment Description

Equipment Cold Plates - The SM equipment cold plates provides for the transfer of waste heat from the electronic components to the liquid coolant.

Space Radiators - The space radiators are integral with the SM skin and dissipate CM and SM heat. Radiators are designed to provide cooling with random orientation of the spacecraft. For example, during lunar orbit the spacecraft may be assumed to be oriented with its x-axis toward the lunar surface within 30 degrees. For redundancy, dual coolant loops to multiple radiator panels are provided. Radiator design takes into account the water management planning.

Operation - The coolant enters the SM through a quick disconnect located at the interface of the CM and SM and circulates through the SM equipment cold plates and space radiators. In normal operation of the system prior to lift-off, space radiators are isolated and the total heat load is dissipated by liquid coolant in the water evaporator with ground support Freon.

Basic operating parameters are shown in Table 5-3. Space radiator characteristics are given in Table 5-4.

Table 5-3 BASIC RADIATOR OPERATING PARAMETERS

Parameters	Operating Mode	
	Normal	Contingency
Radiator Outlet Temperature degrees Fahrenheit	-20 to 100	-20 to 100
Flow Rate Total, lbs/hr	160 to 200	160 to 200
Coolant Pressure, psia	9 to 60	9 to 60

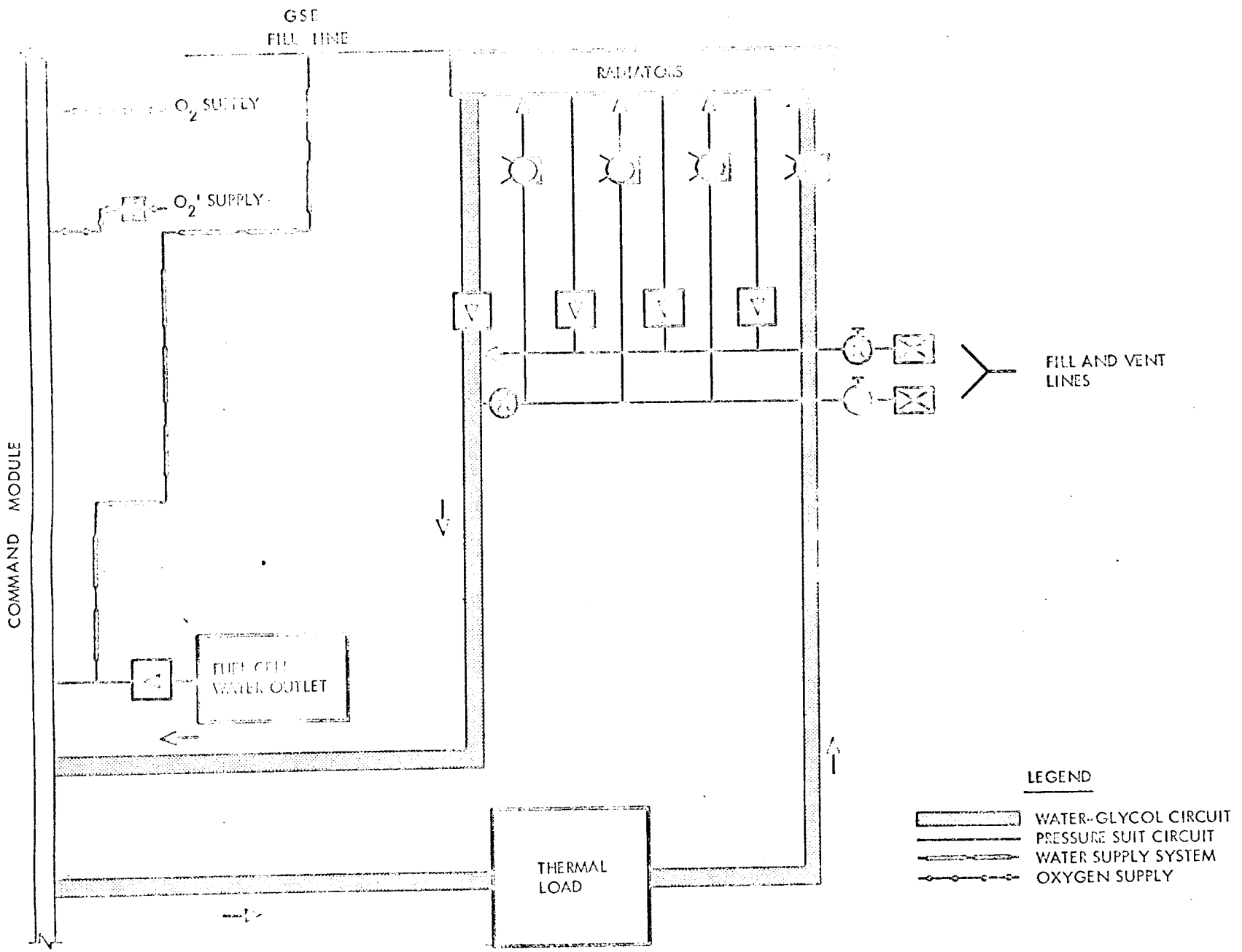

Figure 5-9 Service Module Water—Glycol Circuit

Table 5-4 SPACE RADIATOR CHARACTERISTICS

Number of Panels	2
Passages per Panel	9
Passage Flow Area/Tube	0.016 inch
Wall Thickness	0.032 inch
Radiator Area	82 ft^2
Emmissivity	0.95 coated
Material	Aluminum
Heat Load	
Earth Orbit	9240 BTU/hr
Translunar Coast	7083 BTU/hr
Lunar Orbit	5489 BTU/hr
Supplemental Water	
Earth Orbit	2.0 lbs/hr
Translunar Coast	0
Lunar Orbit	1.3 lb/hr
Tube Spacing	6 inches
Tube Length	93 inches
Fin Thickness	0.032 inch
Inlet Temperature	110° F. max.
Outlet Temperature	45° F. Normal
Average Surface Temperature	0 - 20° F.

5-20 ELECTRICAL POWER SYSTEM

General - The Electrical Power System is included in the Command Module section of this document (IV). However, the fuel cell modules, which provide the main d-c power source are located in the SM and the equipment is described briefly here.

Equipment Description - Fuel cell modules are of the intermediate temperature Bacon-type, utilizing dual porosity nickel electrodes and aqueous potassium hydroxide electrolyte. Electrode construction consists of fine pore, screen, coarse pore, and expanded metal plate, electron beam welded to a current collector backup plate. The active area electrode thickness is approximately 0.070 inches. A module stack consists of 31 Bacon-type cells, series connected, and hermetically sealed in a module tank. The hydrogen regeneration circuit is complete with pump, water separator, condenser, valves, controls and piping. The module secondary cooling circuit consists of coolant regenerator, pump, accumulator, valves, reactant preheaters, and controls. The reactant supply is complete with regulators, filters, and inert gas system for control and pressurization. Module weight does not exceed 215 pounds, excluding mounting structure to the spacecraft. Instrumentation and other devices necessary for normal and contingency operation are included in the modules.

Operation - The general operating characteristics are as follows:

a. Modules are operated in a closed cycle

b. Output Power - Each module has a nominal capacity of 1500 watts (net power) at an output voltage from 27.5 to 31.5 volts d-c. Modules have the capability of 35 percent overload continuously applied at 27.5 volts.

c. Nominal Pressure and Temperature - These are approximately 60 psia and 460° F respectively.

d. Specific Reactant Consumption - Normally, at a power output of 1500 watts per module, the specific reactant consumption does not exceed 0.8 pounds per KW hour.

e. Water Generation - Potagle water generated by the fuel cells is stored with a pH of approximately 7.0. A detection and control system is provided with each module to prevent contamination of collected water supply.

f. Start Up - Self-sustaining reaction within each module is initiated at a temperature of approximately 275° F. Integral heaters are provided with each module to facilitate ground start only. Flight operation is continuous.

Interface - Umbilical connectors provide a redundant electrical interface between the SM and the Adapter.

5-21 TELECOMMUNICATIONS

General - The UHF/S-Band directable antenna, used with a UHF transponder, consists of one parabolic antenna to maintain GOSS/CM communication during normal maneuvers in translunar and lunar orbital mission phases. The antenna is mounted on a retractable arm which is extended after lunar injection. A gimbal mount operated either automatically or manually permits antenna rotation to provide spherical coverage.

5-22 SEQUENCE OF EVENTS

The Service Module remains with the Command Module in the Apollo Mission until just prior to re-entry into the earths atmosphere. During this period,

the SM portion of the Environmental Control System establishes and maintains the CM environment, the SM Electrical Power System provides the CM with primary electrical power, the SM Reaction Control System provides stabilization and attitude control, and the SM propulsion system provides the propulsion capability for midcourse corrections, lunar orbit injection, and transearth injection.

SECTION VI

LUNAR EXCURSION MODULE

6-1 FUNCTION

The Lunar Excursion Module (LEM) serves as a vehicle for carrying two of the three-man crew and a development and scientific payload from the Command and Service Module (CSM) in lunar orbit to the lunar surface and back. The LEM also provides a base for lunar operations and crew exploration in the vicinity of the lunar touchdown point.

6-2 DESCRIPTION OF ROLE OF LEM IN THE SPACECRAFT

6-3 ROLE OF THE LUNAR EXCURSION MODULE IN THE SPACECRAFT

The LEM houses the two-man crew and all systems necessary to support the LEM during lunar descent, touchdown, lunar surface, ascent and rendezvous operations. The position of the LEM during the various mission phases is shown on Figures 4-1 through 4-12.

6-4 REFERENCE AXES

The reference axes of the LEM are orthogonal, remain unchanged for all flight phases, and are identical with those of the CSM as assembled in the earth launch configuration.

6-5 WEIGHTS AND BALANCE

6-6 CONTROL WEIGHT

The present control weight of the LEM, applicable in flight through separation of the LEM from the CSM, is 25,500 pounds. This value includes the ascent and descent stages but does not include the crew and their accoutrements.

6-7 DESIGN GOAL WEIGHT

The present design goal weight of the LEM is 24,500 pounds.

6-8 CENTER OF GRAVITY

(To be supplied)

6-9 INTERFACES

The Major Interfaces between the LEM and other modules of the spacecraft are described as follows:

a. LEM-Adapter - The Adapter is a structural fairing between the SM and the booster and encloses and supports the LEM during all mission phases prior to transposition of the LEM. Except for local protuberances between the Adapter inner surface and the LEM outer surface, a 30-inch clearance is maintained for service access. All external LEM components, such as control nozzles, antennas, egress hatches and optical devices maintain at least a 3-inch clearance.

b. LEM-Service Module - A minimum clearance of 10-inches is maintained between the SM engine nozzle exit plane and the LEM docking cone.

c. LEM-Command Module - The CSM Environmental Control System (ECS) provides an initial pressurization up to 4 73 pounds of pure oxygen for the LEM after transposition and docking has been accomplished.

The LEM and CM crew communicate directly during separation and descent to lunar landing, when in line of sight of each other during CSM lunar orbit, during ascent, and through rendezvous and docking.

6-10 MAJOR LUNAR EXCURSION MODULE SYSTEMS

6-11 STRUCTURAL SYSTEM

(To be supplied)

6-12 FLIGHT CREW

This is discussed in Section 4-18.

6-13 CREW SYSTEM

General - The crew system of the LEM is considered to be that group of subsystems and components which support the operation and needs perculiar to the flight crew.

Equipment Description

Controls and Displays - Controls and displays are designed and located to provide for maximum crew effectiveness in consideration of the division of crew tasks and responsibilities. During lunar landing and launch the crewmen are not required to be mobile. Although designed for two man operation, controls and displays permit one crew member to return the LEM to the CSM safely. Manual controls are designed with safety devices which prevent inadvertant actuation without degradation to normal operation.

Restraints, Support Equipment and Seats - Each crewman is provided with a seat capable of supporting acceleration loads during landing and launching. Seats are adjustable to provide for comfortable rest positions and for visability during rendezvous and docking. Restraints are provided with each seat.

Food and Water Management - Food and water is provisioned in the LEM prior to separation from the CM. Food is not refrigerated. It is of the

dehydrated or freeze dried type constituting a low bulk diet.

Radiation Dosimeter - Each crew member is provided with an accurate, simply read, personal dosimeter which is worn or placed immediately adjacent to the crew member at all times. Each dosimeter measures cumulative dose, contains a warning device, and has an output plug for telemetry connection.

First Aid equipment - The LEM is equipped with first aid supplies and preventive medicine for dealing with various human injuries and disorders.

Space Suits - Space suits are worn at all times by each crew member and provide for use in the LEM, for ingress and egress, and for extra-vehicular operations. They may be employed as unpressurized suits in the LEM atmosphere, as pressurized suits in conjunction with the LEM Environmental Control System, or as pressurized suits in conjunction with the Portable Life Support Systems.

Portable Life Support Subsystems - The portable life support sub-systems of a recirculating type are used in conjunction with the space suits during extra-vehicular operations. A separate system for each crew member is capable of supporting a crewman for four hours independent of the LEM, and can be recharged by the LEM. A portable system includes the communications tranceiver which is used by the crewmen while outside the LEM.

6-14 TELECOMMUNICATIONS SYSTEM

General - The Telecommunications System provides the capability for data and television transmission and voice communication.

Voice Communication - The system has the capability for voice communication between:

a. The LEM and CM when they are in line-of-sight.

b. The LEM and earth. This augments the communication link between the CM and earth.

c. The LEM and a crew member at a radial distance of up to 3 nautical miles from the LEM.

d. The crew members within the LEM.

Telemetry - The system provides for data transmission on either a time shared basis or simultaneously with voice. It is used to transmit the data obtained from the operational instrumentation system as required.

Television - The system includes a portable, near-commercial quality television subsystem capable of real time and high resolution picture transmission. Closed circuit television is provided for monitoring internal and external scenes.

6-15 INSTRUMENTATION SYSTEM

General - The Instrumentation System is comprised of the following subsystems:

a. Operational Instrumentation Subsystem

b. Flight Research and Development Instrumentation Subsystem

c. Scientific Instrumentation Subsystem

Operational Instrumentation Subsystem - The operational instrumentation subsystem detects, measures, and displays all data required by the crew for monitoring the LEM environment and evaluating the integrity and performance of the LEM systems. It provides data for transmission to earth, to facilitate ground assessment of LEM performance and failure analysis.

The capability is also provided for documenting the mission through photography and data recording. The subsystem has the following major components:

Clock - A real-time digital clock is provided as the LEM time reference. It is used for correlating data, to function as an integral part of all time-critical operations, and to drive time-based displays. The clock is synchronized to the Navigation and Guidance System clock, however accuracy requirements are established independently.

Tape Recorder - This component is provided for the storage of telemetry, voice, and possibly video information for later playback at the discretion of the crew. It may be used in conjunction with the scientific instrumentation subsystem.

Cameras - One still and two motion picture cameras are provided in the LEM for onboard and lunar surface use. The still camera is capable of high resolution and infra red and ultra violet photography of the lunar surface. Accessories include a telephoto lens, and adaptability to telescope and microscope equipment.

Telescope - A gimbal mounted telescope with reference axes information is provided to aid the visual studies and photography of the lunar surface and celestial bodies. Dual operating modes are provided for high power-narrow angle field of view or low power-wide angle field of view.

Flight Research and Development Instrumentation Subsystem - The flight research and development instrumentation subsystem provides for the measurement, display, recording, and telemetry of data required in the development of the LEM. Details of this system are to be supplied.

Scientific Instrumentation Subsystem - The scientific instrumentation subsystem is designed primarily for selenologic research. The subsystem includes tools and instruments necessary to perform the scientific experiments. Data, samples, and scientific packages are returned in the LEM to the CSM and nonessential equipment is discarded prior to lunar launch. The proposed components of the scientific instrumentation subsystem are as follows:

Lunar Atmosphere Analyser - This instrument provides the capability of determining the qualitative and quantitative chemical composition of the lunar atmosphere. It may be used as a backup component for determining the cabin atmosphere partial pressure.

Gravitometer - This instrument provides the capability for determining the direction and magnitude of the moon's gravitational field at the lunar surface.

Magnetometer - This instrument provides the capability for determining the direction and magnitude of the lunar magnetic field.

Radiation Spectrometer - This instrument provides the capability of determining the radiation spectrum at the lunar surface.

Specimen Return Container - This is a small container to be filled with lunar material. The container is sealed in a manner so that no material or bacteria can enter the container on the return flight.

Rock and Soil Analysis Equipment - This equipment provides for obtaining samples of the lunar surface material, for obtaining core samples, and for the analysis of these samples. A microscope is included for direct use or with the still camera provided in the operational instrumentation subsystem.

Coring equipment has a design so that it may be employed with the seismographic equipment.

Seismographic Equipment - This instrument provides the capability for investigating the subsurface structure of the moon by measurements taken after placing and exploding a charge below the lunar surface.

Soil Temperature Instrument - This instrument provides the capability for measuring lunar surface and subsurface temperatures.

6-16 ELECTRICAL POWER SYSTEM

General - The Electrical Power System supplies, regulates and distributes all electrical power required by the LEM. At present consideration is being given to a number of factors of design. Possible power sources include silver-zinc batteries, chemical engines using hypergolic fuels, hydrogen-oxygen engines and engines employing onboard propellents. Important factors in the selection are the time allowances for mission events such as rendezvous maneuvers, simplicity, reliability, and weight. The electrical characteristics will probably match those of the Command and Service Modules.

6-17 GUIDANCE AND NAVIGATION SYSTEM

General - Guidance and Navigation System is similar to the CM Guidance and Navigation System and the subsystems are designed to be interchangeable when possible. A discussion of the CM system is given in Section IV. Additional description of the LEM system is to be supplied.

6-18 STABILIZATION AND CONTROL SYSTEM

General - The Stabilization and Control System is employed in the same LEM mission events as the Navigation and Control System.

Equipment Description - The Stabilization and Control System consists of the following major components which are similar to the CM systems discussed in Section IV.

a. Attitude reference

b. Rate sensors

c. Control electronics assembly

d. Manual controls

e. Displays

f. Power supplies

6-19 ENVIRONMENTAL CONTROL SYSTEM

General - The LEM Environmental Control System (ECS) maintains the LEM cabin environment when space suits are unpressurized, provides for thermal protection of LEM equipment, and is used for recharging the portable life support subsystems. The ECS is designed to accomodate a reasonable number of egresses and ingresses, and during normal operation provides the following conditions in the LEM.

a.	Total Cabin Pressure (Oxygen)	5 ± 0.2 psia
b.	Relative Humidity	40 - 70%
c.	Carbon Dioxide Partial Pressure (Maximum)	7.6 mm Hg
d.	Temperature	$75^{\circ} \pm 5^{\circ}F$

In the event of cabin decompression, the system provides a conditioned oxygen atmosphere at 3.5 psia to the space suits, and it is capable of maintaining a cabin pressure of at least 3.5 psia for two minutes following a single 1/2 inch diameter puncture in the pressurized compartment.

Equipment Description - The Environmental Control System consists of the following subsystems:

Oxygen Supply Subsystem - The oxygen supply is supercritical with allowances for passive heating of the supply while the LEM is attached to the CM. Prior to LEM-CSM separation, additional heat will be furnished by electrical heaters to assure supercritical pressure.

Circulation Subsystem - The circulation subsystem has three parallel isolated blowers, any one of which will provide adequate circulation to both pressure suits simultaneously with a cabin ventilation flow of 12 cfm at 3.5 psia.

Atmosphere Purification Subsystem - Carbon dioxide is removed by passing the LEM cabin or suit exhaust gases through lithuim hydroxide. Noxious gases such as ozone, methane, hydrogen, carbon monoxide, freon, and odors are controlled by passing the gases through activated charcoal.

Temperature and Humidity Control Subsystem - A liquid coolant heat exchanger system is used to cool the circulating gases below the required dew point for condensate removal and humidity control, and, for control of space suit temperatures, a regenerative heat exchanger is provided. Condensed water vapor will be removed by either of two parellel centrifugal separators which are to be developed for this application.

6-20 REACTION CONTROL SYSTEM

General - The Reaction Control System provides thrusts about three axes to accomplish control. It also provides vernier translational thrusts for terminal rendezvous and docking.

Equipment Description - The Reaction Control System consists of two independent but interconnectable subsystems, each capable of meeting the total torque and impulse requirements. Each subsystem provides two rotational control about all axes.

Propellants - The same propellant combination as used for the Lunar Excursion Propulsion System are employed in the Reaction Control System.

Pressurization - Each subsystem has a gaseous helium storage and pressurization system. Quad check valves are used at each propellant tank feed. Redundant squib valves are used to isolate the high pressure helium until the system operates.

Propellant Tanks - Each subsystem has one oxidizer and one fuel tank, and each tank is equipped with a bladder for expulsion of propellant under zero gravity conditions. Bladders are capable of multiple cycling.

Propellant Feed Subsystem - Normally the pair of propellant tanks in each subsystem feed thrust chambers in that particular subsystem. However, reversible isolation valves allow propellant feed from the Lunar Excursion Propulsion System. In redundant modes of propellant feed, quad check valves are utilized to prevent transfer of propellants from one subsystem to the other or between either subsystem and the Propulsion System.

Thrust Chambers - The thrust chambers are radiation cooled.

6-21 LUNAR EXCURSION PROPULSION SYSTEM

General - The LEM Propulsion System employs propellants which are the same as and which may be used in the Reaction Control System. The LEM Propulsion System provides velocity increments to the LEM for descent, touch-

down, ascent, and rendezvous.

Equipment Description

(To be supplied)

6-22 LUNAR TOUCHDOWN SYSTEM

General - This system is designed to land the LEM safely on an essentially unknown lunar surface with a horizontal velocity limited to 5 feet per second and vertical velocity limited to 10 feet per second. The Lunar Touchdown System satisfies the general conditions of operation described below.

Equipment Description

Structure - The Lunar Touchdown System is attached to the LEM by hard points which accomodate variations of landing gear geometries. It has a load distribution capabilities which provide impact attenuation and a near vertical position satisfactory for egress, ingress and lunar launch. In all positions of stowage and deployment it does not interfere with the use of the Lunar Excursion Propulsion or Reaction Control Systems. The Lunar Touchdown System is normally deployed from within the LEM but deployment may be performed manually by the crew in space suits outside the LEM.

Lunar Landing Aids - Provision is made for the deployment of landing aids from the LEM at near the hover altitude.

Inspection, Maintenance, and Servicing - The design is such that advantage may be taken of the crew's capabilities outside the LEM both during flight and on the lunar surface for inspection, maintenance, and servicing.

6-23 LUNAR EXPLORATION

The LEM provides the necessary support for the operation and control of scientific and exploration equipment and for processing and transmitting of scientific data to earth.

Each crewman's extra-vehicular life support equipment provides for a total of 24 hours of separation from the LEM life support system which is the maximum duration of continuous separation from the LEM. One or both crewmen may be absent from the LEM but normally one will remain to provide an additional communication link. Lunar exploration will be conducted in accordance with a planned schedule to be supplied.

6-24 LUNAR ASCENT

(To be supplied)

6-25 SEQUENCE OF EVENTS

(To be supplied)

SECTION VII

SPACECRAFT ADAPTER

7-1 FUNCTION

The Spacecraft Adapter performs the physical mating of the launch vehicle to the Service Module. Present plans call for two types of Spacecraft Adapters; namely, the earth orbital mission Spacecraft Adapter shown on Figure 7-1, and the lunar landing mission Spacecraft Adapter shown on Figure 7-2. For the lunar landing mission, the Spacecraft Adapter houses the Lunar Excursion Module.

7-2 DESCRIPTION

The Spacecraft Adapter is a shell of adhesive bonded aluminum honeycomb reinforced with sheet metal and is structurally designed to perform to the design factors given in Section III and under the following induced environments:

a. Pressure - The Adapter can withstand an external buffet pressure of 4.7 psi at 0 to 4 cps in both symmetrically and asymmetrically loaded conditions.

b. Temperature - The Adapter can withstand the aerodynamic heating effects of boost leading to maximum Adapter temperatures of _____F.

c. Acceleration - The Adapter can withstand a maximum longitudinal load factor during boost of 6.5g simultaneously applied with a transverse load factor of 0.2g in any direction.

d. Vibration - The Adapter can withstand the structural vibration resulting from local response to acoustic excitation, buffet pressures, and transmitted vibrations applied simultaneously with accelerations up to 6.5g. The frequency ranges and peak levels for transient loadings are 20 to 200 cps at 8.0g to 296

to 2000 cps at 17.5g with 0.004 inches double amplitude. For steady state loadings the g levels extend from 4.0 to 8.75 g.

e. Acoustic Noise - The Adapter can withstand severe broad band acoustic and buffet pressure during launch and flight through the atmosphere. The acoustic spectrum extends from 5 to 10,000 cps with overall levels up to 168.5 db.

7-3 WEIGHTS AND BALANCE

Designed inertially symmetrical to the launch vehicle's roll axis, the Spacecraft Adapter affects only longitudinal center of gravity and center of pressure location. Control weight is 3200 pounds and design weight is 3000 pounds.

7-4 INTERFACES

All mechanical-electrical interfaces between the Spacecraft Adapter, Lunar Excursion Module and Service Module will function while maintaining compatible operation without affecting other systems.

7-5 SERVICE MODULE

a. Electrical - An umbilical disconnect between the Adapter and Service Module connects circuits that provide the launch vehicle propulsion, control, and structural abort information to the Command Module instrument panel. The disconnect automatically separates upon pullaway of the spacecraft from the launch vehicle.

b. Mechanical - Provisions are made for inflight separation of the Spacecraft Adapter from the Service Module.

7-6 LUNAR EXCURSION MODULE

(To be supplied.)

7-7 MAJOR ADAPTER SYSTEMS

7-8 STRUCTURAL

The Spacecraft Adapter is formed from adhesive bonded aluminum honeycomb and reinforced sheet metal. The required mechanical disconnects, the adapter blow-off system, and the electrical umbilical and associated disconnects are an integral part of the structure.

7-9 INSTRUMENTATION

(To be supplied.)

7-10 EVENTS SEQUENCING

For the lunar landing mission, the Spacecraft Adapter is blown off after the final S-IVB thrusting and prior to re-coupling of the Lunar Excursion Module.

In earth orbital Apollo missions, the Adapter separates from the Service Module and remains attached to the launch vehicle.

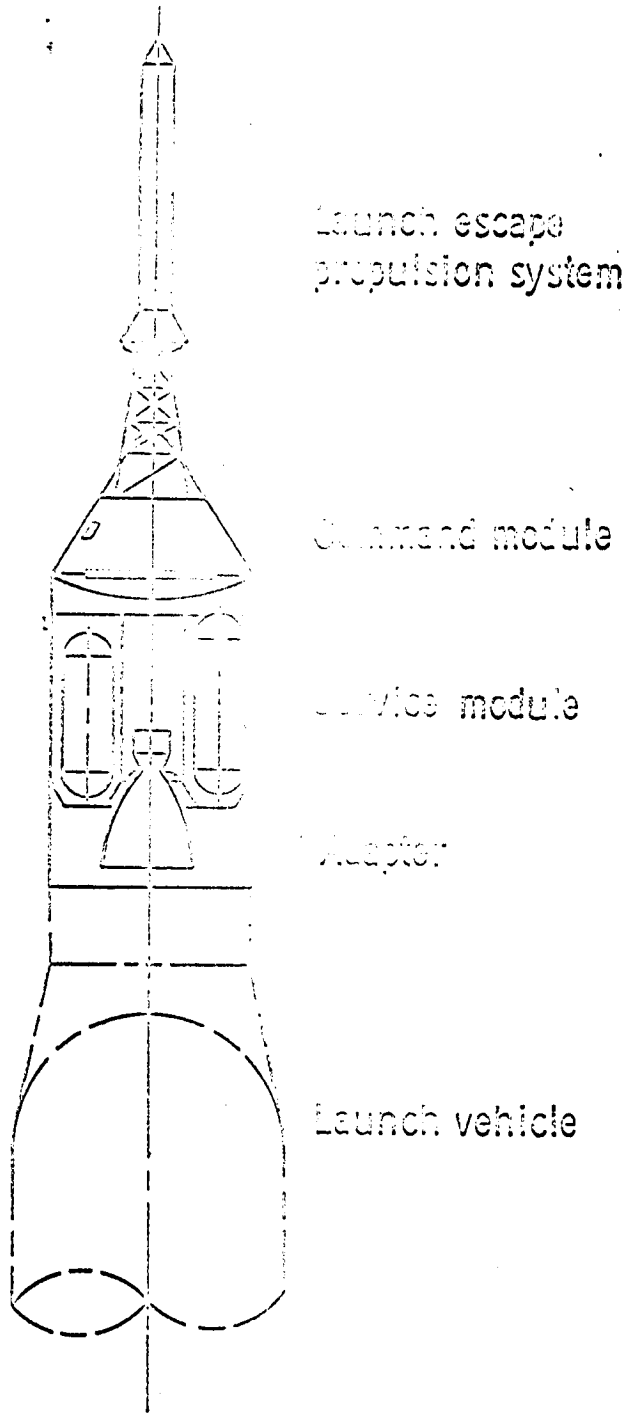

Figure 7-1 General Arrangement - Earth Orbital Configuration

[redacted]

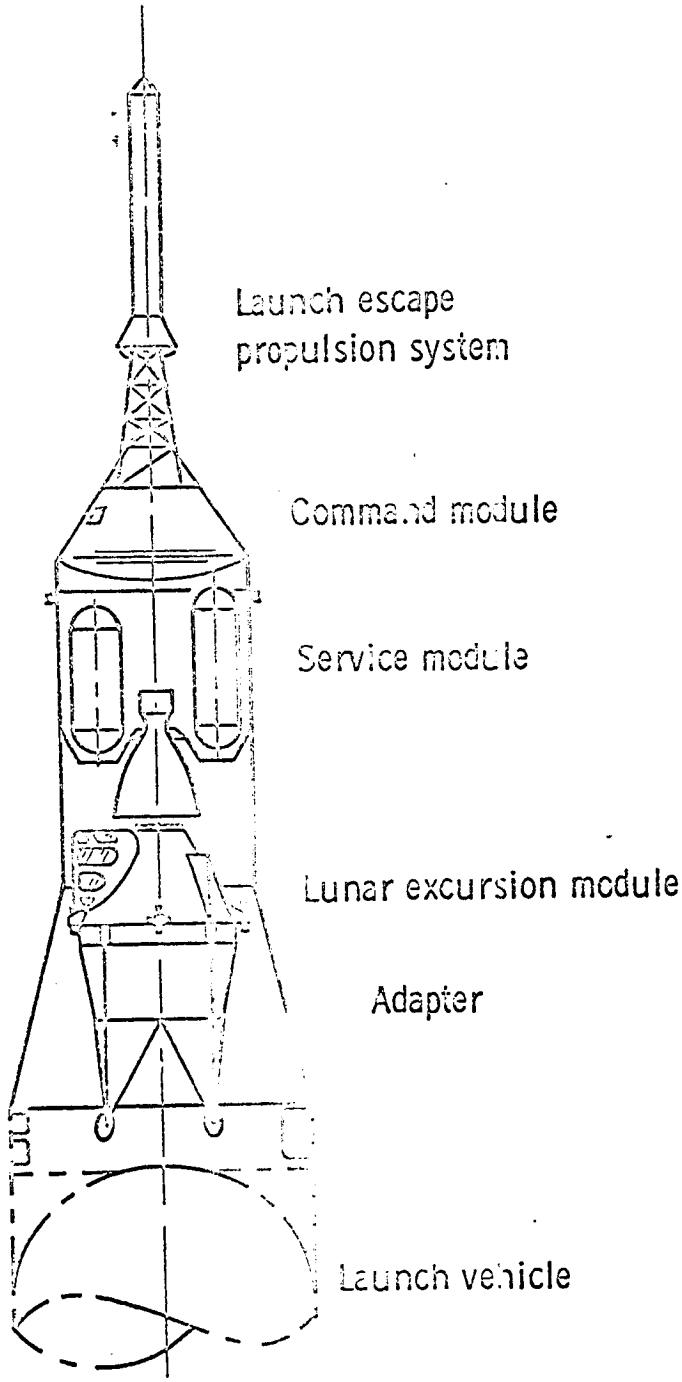

Figure 7-2 General Arrangement - Lunar Landing Configuration

[redacted]

CHAPTER 3 SPACECRAFT GROUND SUPPORT EQUIPMENT

SECTION VIII

GROUND SUPPORT EQUIPMENT SUMMARY

8-1 DEFINITIONS

The following categories comprise the spectrum of Ground Support Equipment (GSE) for supporting the Apollo program:

a. Handling, shipping, and mating equipment

b. Servicing equipment

c. Electrical testing equipment

d. Mechanical and electro-mechanical checkout equipment

e. Recovery equipment

f. Simulators

GSE includes all equipment required to inspect, test, adjust, calibrate, appraise, gauge, measure, repair, overhaul, assemble, disassemble, transport, safeguard, record, store, actuate, service, maintain, launch and otherwise support an end article.

In general GSE will take three forms:

a. Prime Equipment - All GSE used in the following areas is considered as prime equipment.

   1. Factory assembly

   2. Field assembly site

   3. Launch site and recovery area

   4. Training sites

   5. Any special testing site assigned by NASA

b. Development Equipment - All GSE used for engineering evaluation of spacecraft subsystems, modules, and systems, and compatibility tests, in or outside of factory areas,

constitutes development equipment. This equipment may or may not be identical in configuration to its counterpart in prime equipment.

c. Breadboard Equipment - All GSE fabricated to determine feasibility of a proposed or a preliminary design represents breadboard equipment.

8-2 TESTING OF GROUND SUPPORT EQUIPMENT

Components and subassemblies are initially developed and tested at contractor and subcontractor facilities and development progresses through subsystem and system tests. Additional GSE tests are conducted throughout development to emphasize interface areas so that complete systems problems may be resolved.

NAA Ground Support Equipment utilization in the various categories of equipment occurs progressively in the tests on spacecraft module boilerplates being developed. Utilization starts with the BP-1 and continues to BP-23. Servicing equipment use starts with BP-6. Combined checkout and handling GSE hardware is used on BP-20 and BP-21. A complete set of GSE is required on BP-14, BP-16, and BP-18.

8-3 PRIME CONTRACTOR TESTS

Contractor GSE tests are performed on fixtures for handling equipment and for installation and removal of hardware equipment from assemblies. Some of these tests are of a mockup variety to determine feasibility of design. Primary objectives are to determine adequacy of design, rigidity, maintainability, and adaptability to the Apollo spacecraft.

Tests are performed on recovery equipment items such as hoists, adapters, slings, and winches employing spacecraft boilerplate. Objectives

are to assure the effectiveness of the equipment and to reduce the time for recovering the Command Module from the water.

Combined system tests demonstrate the compatibility of checkout and spacecraft equipment, of associated GSE, and of peripheral equipment. Check-out test plans are devised for determining the adequacy of each subsystem, checkout task balance, and compatibility with an effective over-all Apollo checkout program.

8-4 SUBCONTRACTOR TESTS

Subcontractor GSE development tests include testing of structural, mechanical, electrical, and electro-mechanical components; subassemblies; assemblies, and associated complete consoles. Tests will include performance under specific conditions of vibration, shock, explosion resistance, and other environments.

SECTION IX

LOCATION OF MAJOR GROUND SUPPORT EQUIPMENT

9-1 INTRODUCTION

This section describes major tests conducted at various contractor facilities and at the White Sands and Atlantic Missile Ranges, and shows the relationship between Apollo spacecraft testing and the spacecraft Ground Support Equipment utilization.

9-2 DOWNEY

Spacecraft testing at Downey (NAA) is accomplished in three principal areas; the test preparation area, the house spacecraft test area, and the environmental test area.

After spacecraft subsystems acceptance testing has been completed at the subcontractor's facilities, the spacecraft subsystem installations are shipped to the prime contractors facility at Downey, California. Initial assembly of the spacecraft is carried out in the manufacturing area, and, upon completion, is certified as conforming to the approved configuration and transferred to the test preparation area.

9-3 TEST PREPARATION AREA

Test Objectives - Objectives of tests conducted in this area are the integration of Apollo spacecraft systems and the verification of compatibility of spacecraft and ground support equipment. The tests include inter-system calibration, alignment and matching of mechanical and electrical interfaces. Engineering modifications may be performed. Testing is done in three phases described below.

Phase I Tests - GSE received from manufacturing and subcontractors, and the spacecraft composed of escape tower, Command and Service Modules and spacecraft Adapter are assembled for the tests. Spacecraft modules, systems and subsystems are examined to insure conformance with the latest configurations, specifications, and engineering orders. A calibration check of all spacecraft instrumentation is performed. Then R&D instrumentation is installed according to NASA requirements and test objectives.

Phase II Tests - This phase encompasses various checkout tests on individual systems of the spacecraft, on GSE, and on GSE-module compatability. Detailed checkout procedures prescribed by the Apollo Test and Operations Department of NAA are employed. The CM and SM are mechanically positioned and electrically mated along with the LES Simulator. Tests include operation of the telemetry subsystem, recorders, beacons and antennas as well as detailed checks on electrical systems to the level of continuity and resistance measurements. Mechanical systems and components are functionally operated, and leak, or pressure tested. At the conclusion of successful individual tests, overall systems tests are conducted to ensure satisfactory simultaneous operation.

To ensure an operational capability and performance of events in a proper sequence, all systems, ground and internal power components, and spacecraft and mission abort sequences are tested in an operational manner.

An Electro-Magnetic Interference (EMI) test is conducted to determine whether EMI problems exist within the spacecraft and GSE systems.

Tests of the pyrotechnics substitution units are made by connecting various units to the checkout group and data recording group via the electrical junction box.

Phase III Tests - This phase is devoted to final tests and preparation of the test vehicle prior to shipment. The CM, SM, LES, and SC Adapter are subjected to weight and balance determinations. Dummy motors, the launch escape, launch escape jettison, and pitch control rocket motors are mounted in the LES.

Another integrated systems test similar to that in Phase II is performed with the CM and SM in the vertical attitude and the LES mated with the CM. Special attention is given to alignment.

After demating, spacecraft modules and associated GSE are prepared for shipment.

9-4 HOUSE SPACECRAFT TESTS

Test Objectives - The purpose of this test program is the evaluation of engineering design of the complete spacecraft and associated GSE during actual ground checkout conditions. House spacecraft testing is continuously performed on two vehicles, the BP-14 and AFRM-006, and effort is generally applied in the following ways:

a. Systems and Ground Support Equipment evaluation

b. Operations development

c. Design support

Results of the program are to assist in qualification of spacecraft design.

Systems Evaluation - Whenever possible all systems are tested and evaluated; for an exception, mission propulsion and reaction control engines will not actually be fired.

Ground Support Equipment Evaluation - The test effort is concerned with

evaluating the compatibility of spacecraft and GSE particularly with respect to access provisions and clearances for mounting spacecraft systems.

BP-14 Tests - This spacecraft is a boilerplate skeletal structure with removable skins to allow for mounting systems in their proper location. The BP-14 consists of the CM, SM, LES, and Adapter, and prototype systems are continuously updated to operational configuration. Non-operational propulsion devices consist of reject equipment for which instrumentation is provided to simulate their operation.

AFRM-006 Tests - The AFRM-006 spacecraft is maintained in the latest flyable manned configuration at all times. The systems and instrumentation capability are complete with propulsion devices similar to those of the BP-14 and anthropomorphic dummies in position in the spacecraft.

In initial testing of AFRM-006, the affects of vibration and acoustic environments in the spacecraft are to be investigated. Later testing of AFRM-006 is directed toward design support testing in conjunction with the BP-14.

9-5 ENVIRONMENTAL TESTS

The environmental test program is designed to provide an evaluation of design of a spacecraft flight configuration with all its systems, under simulated mission environmental conditions. The tests are to involve proof levels of environment, within practical limits of facilities and economy, and so are expected to provide evidence that the spacecraft can operate reliably under the critical environments of an actual mission. Propellant systems are to be operated without actual engine firings.

The spacecraft is mounted in the space simulator chamber in a fixture capable of rotating the spacecraft to simulate solar, earth albedo, and earth

radiation heat inputs. Simulators are utilized for the loads imposed by crew metabolic requirements. However, manned operations are required during certain portions of the tests to ascertain the capability for manual-modes of system operation. In addition to the thermal investigation at maximum and minimum energy conditions and testing of manned functions, special attention is given to CM leakage under launch and re-entry pressure profiles and aerodynamic heating. All systems will be serviced in accordance with the particular mission being simulated.

One spacecraft, the AFRM-008, consists of the CM, SM, and Adapter with systems appropriate for the tests. Other spacecraft vehicles may be assigned for the tests.

A complete set of servicing, handling, and checkout GSE is required in addition to a checkout and support area adjacent to the thermal-vacuum chamber.

9-6 WHITE SANDS MISSLE RANGE

9-7 INTRODUCTION

White Sands Missile Range (WSMR) is the site for evaluating the stability and operational characteristics of the LES. There are two types of tests for aborting the LES-CM combination. The first type is the pad abort from a ground adapter, and the second is an abort in conjunction with the Little Joe II booster. The primary objective of pad abort tests is to demonstrate the capability of the LES to propel the spacecraft to a safe distance during a pad abort. Other objectives of the pad abort tests are given in Section XV. Primary objectives for tests involving Little Joe II are to demonstrate the capability of the LES to propel the spacecraft to a safe distance from the launch vehicle, and to show the structural integrity of the escape tower during a maximum "q" abort. Other objectives of these tests are also given in Section XV.

Functional operation of equipment at WSMR entails insertion of stimuli to exercise and control the system under test, acquisition and measurement of system responses, and evaluation of system performance. The equipment is divided into five areas described below.

Monitor and Control Equipment - The monitor and control console with related equipment has the capability to command, monitor, and provide system response displays of a system or integral group of systems during preparation and launching of the spacecraft.

Checkout Equipment - Checkout consoles with related equipment are used to perform system diagnostic and confidence checks.

Substitution Equipment - These consoles and related equipment simulate conditions to be expected or desired of spacecraft systems or ground support equipment interfaces.

Bench Maintenance Equipment - Equipment and consoles are used to isolate a malfunctioning system, subsystem, or component; facilitate complete interface simulation of electrical and mechanical functions, and calibrate and align a single system.

Handling Equipment - Boilerplate vehicles first tested in the Downey Area (NAA) are transported to the Hazardous Area at WSMR for final preparation and then transported to the WSMR launch pad for the prescribed tests. After testing, the boilerplates are returned to the launch pad area or Downey for post-flight inspection which assists in mission analysis.

The handling equipment is used to store, handle, maintain, and transfer the spacecraft, systems and subsystems; and to provide ease in checkout, alignment, installation, maintenance, weighing and balancing, and cross-

country transportation of the spacecraft and its sub-assemblies.

9-8 CHECKOUT OPERATIONS AREA

Deliveries and Assembly - The CM and LES, and the LES motors from the WSMR ordnance storage area, are delivered to the hazardous assembly building in the checkout operations area. The Boilerplate 12 SM is delivered directly to the launch area for mating to the LJ-II launch vehicle.

Assembly includes installation of all instrumentation and electrical systems on the LES; and recovery system parachutes, pyrotechnic devices, and forward heat shield on the CM.

Checkout Plan - Major operations performed in the checkout operations area including installation and checkout of live pyrotechnics, are:

a. Post shipment examination

b. Launch Escape System assembly and alignment

c. Recovery system parachute installation

d. Weight and balance determinations of the Launch Escape System in a horizontal position

e. Command Module weight and center-of-gravity determinations in both horizontal and vertical positions

f. Over-all vehicle alignment

g. Weight and balance determinations after mating the Launch Escape System to the Command Module

h. Launch escape motor thrust vector alignment with respect to the center of gravity established from final weight and balance tests. Optical means are utilized to project this vector to a point on the CM so that the alignment can be re-established after the modules are separated

and remated.

i. Preparation of separated CM and LES for shipment to the launch area

Sequence of Operations - The sequence of various operations at Downey, and at the checkout and hazardous operations areas are shown on Figures 9-1, 9-2, and 9-3 respectively.

9-9 LAUNCH AREA

Area Functions and Facilities - The WSMR Launch Area is comprised of a blockhouse, launch pad, cable trench, utilities, gantry, and an umbilical tower. Arrangement of the facilities is shown on Figure 9-4. The launch pad for pad aborts is located in the extreme northwest corner of the launch area, and the gantry and umbilical tower for Little Joe II abort tests are located directly east of the pad abort launch pad. The blockhouse layout is shown on Figure 9-5. Figure 9-6 shows the Pad Abort Adapter and Figure 9-7 the Little Joe II launch configuration.

Minimum launch area operations are as follows:

a. Command Module - Launch Escape System reassembly

b. Ground Support Equipment/facility/test vehicle compatibility verification

c. Launch escape instrumentation calibration

d. System safety verification

e. Test vehicle/launch vehicle (LJ-II) mating BP-12 only

f. Integrated systems test

g. Final pre-countdown preparations (T-1 Day)

h. Countdown

i. Launch

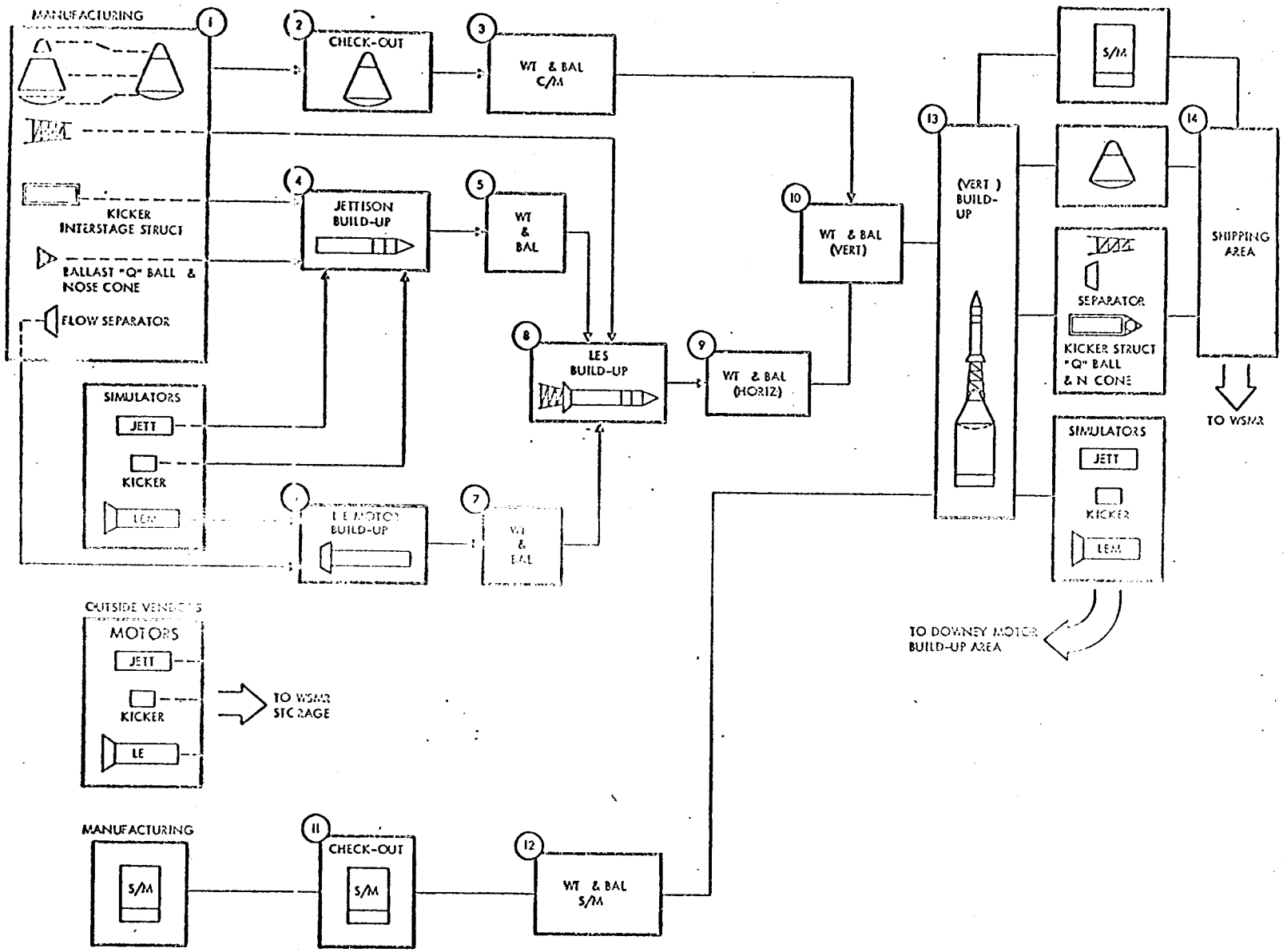

Figure 9-1 Boiler plates 6 and 12 Downey Flow Sequence

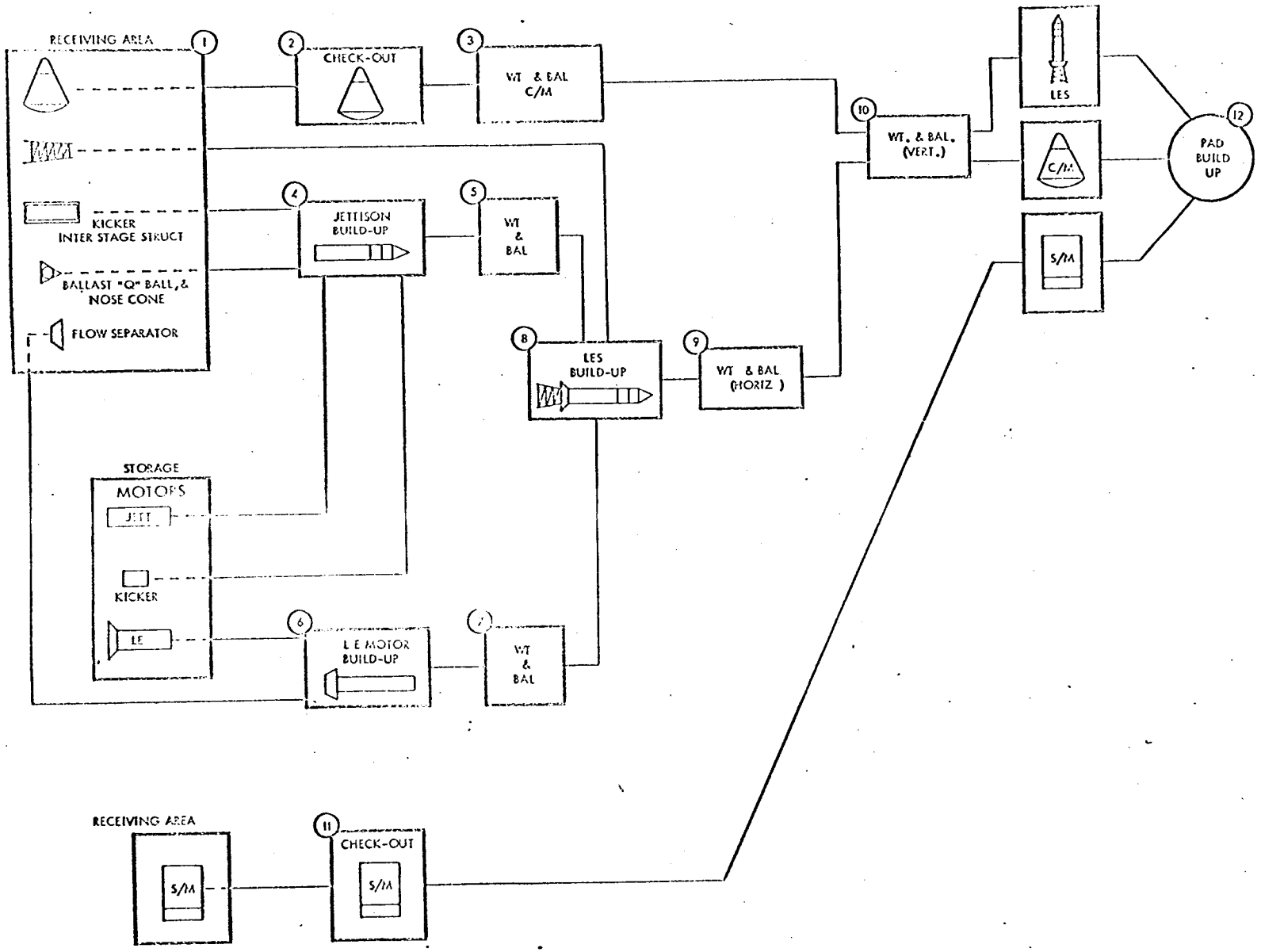

Figure 9-2 Boilerplate 6 and 12 WSMR Flow Sequence

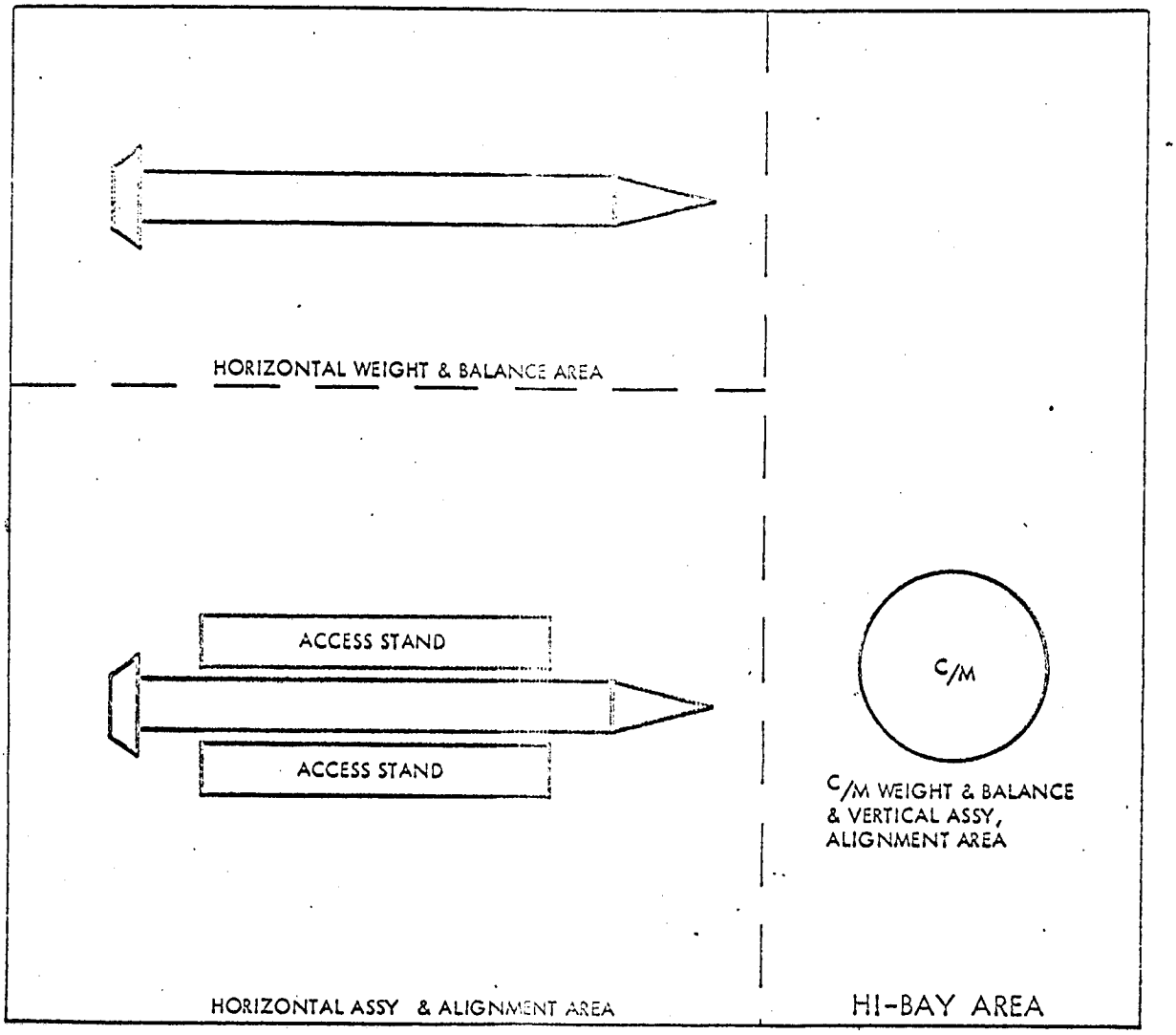

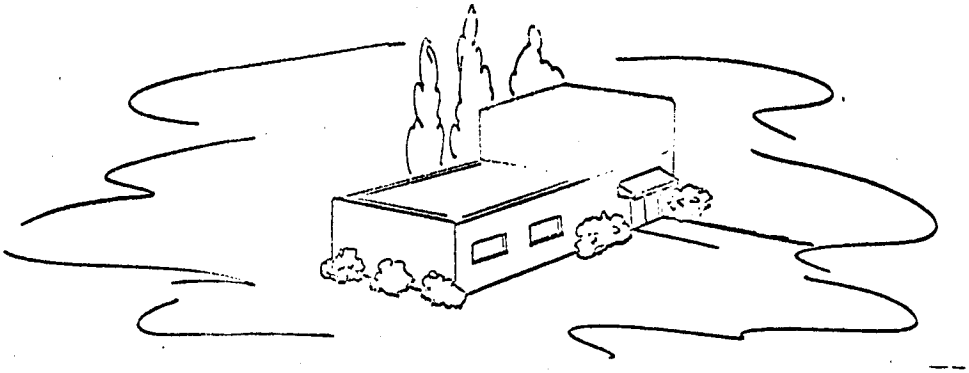

Figure 9-3 Hazardous Assembly and Test Area

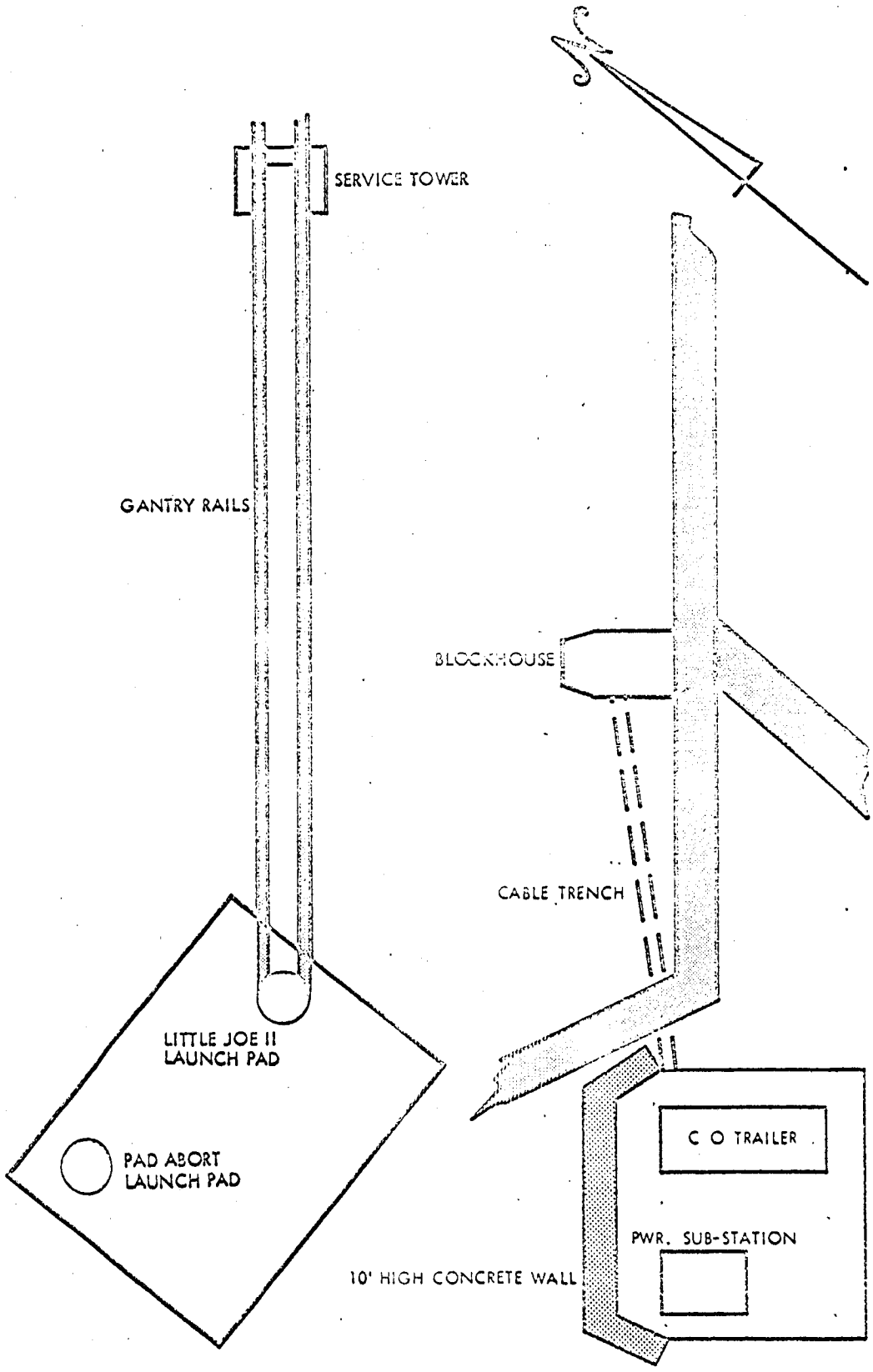

Figure 9-4 WSMR Launch Area

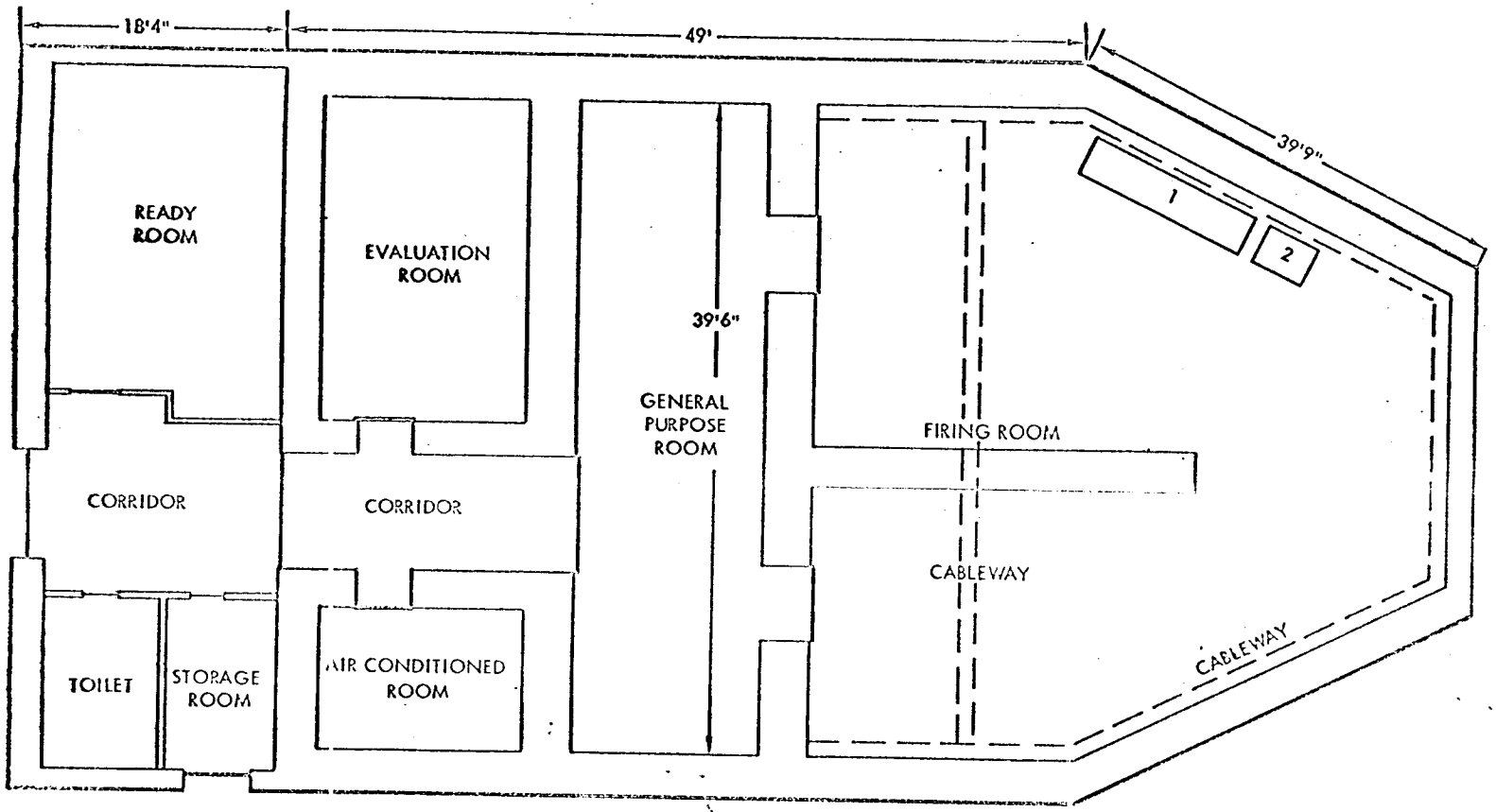

1. NAA - MONITOR & CONTROL EQUIPMENT C14-019
2. LITTLE JOE-II CONTACTOR EQUIPMENT

Figure 9-5 Blockhouse Layout

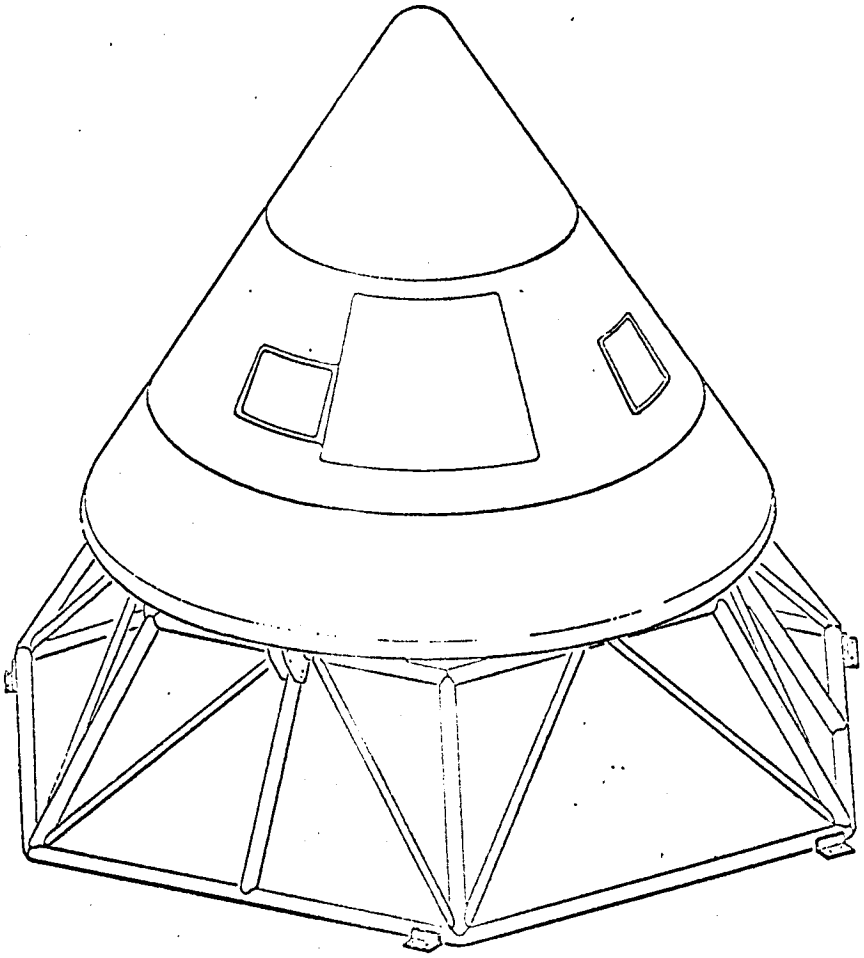

A14-013

Figure 9-6 Pad Abort Adapter (BP-6)

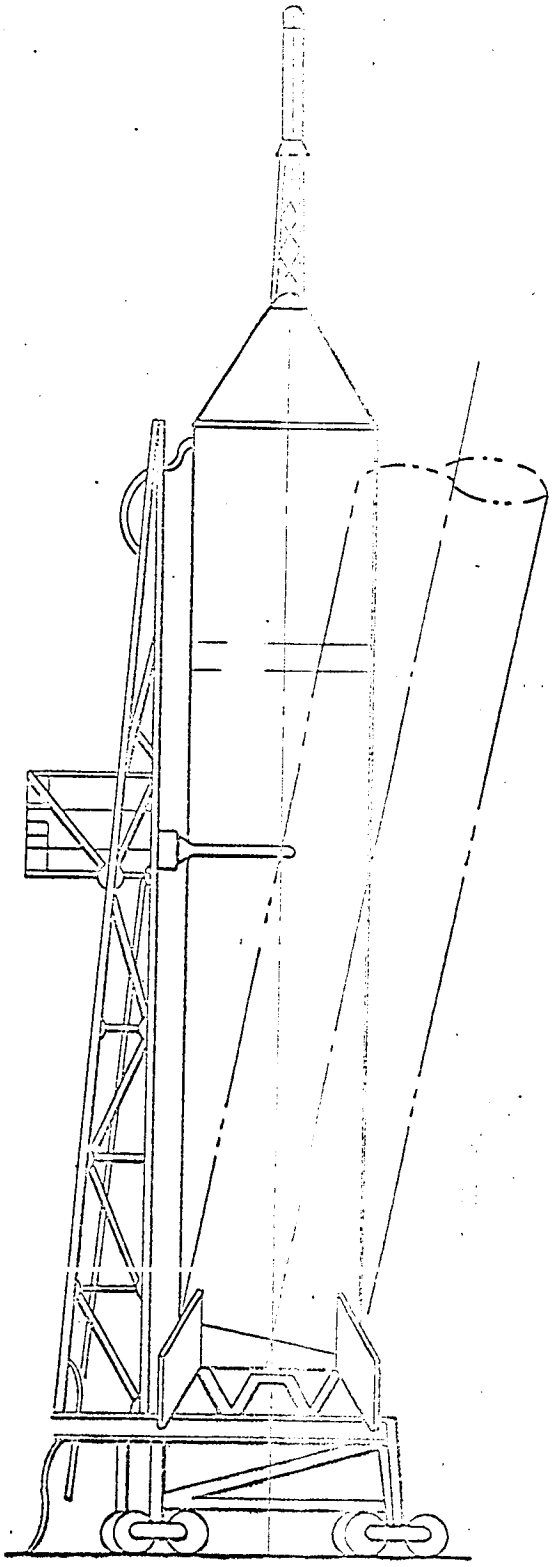

Figure 9-7 Little Joe II Launch Configuration

j. Post flight analysis

Launch Pad Abort Checkout Plan - Upon arrival of the pad abort test vehicle at the launch pad, the CM is mated to the pad abort adapter, the LES is mated to the CM, and electrical connections and overall vehicle alignment are verified.

The following tests are conducted:

a. GSE spacecraft compatibility

b. LES instrumentation calibration

c. Systems safety verification

d. Integrated systems test

e. Countdown operation

f. Abort from launch pad

Little Joe II Abort Checkout Plan - For this test the SM is first mated to the Little Joe II; mating of the test vehicle to the SM is preceded by systems safety verification. The tests follow the same general pattern as for the pad abort checkout. However, during the mating of the test vehicle, compatibility and overall alignment of the spacecraft is rechecked; and a launch operation precedes the abort in flight.

The recovery phase is accomplished by range recovery personnel with assistance from contractor personnel. It is mandatory to inspect the spacecraft at the impact area to make a proper disposition of unfired pyrotechnic devices. Following the launch and flight abort the spacecraft is retrieved and returned to the launch area via a tank retriever and flatbed trailer. A physical inspection is performed at the launch area and special tests may be conducted to investigate problem areas. The articles to be recovered are:

a. CM

b. Earth landing parachutes

c. LES tower and expended motors

d. CM forward heat shield (if possible)

e. Drogue Chutes (if possible)

9-10 MANNED SPACECRAFT CENTER

(To be supplied)

9-11 ATLANTIC MISSILE RANGE

9-12 INTRODUCTION

The plans, facilities and activities at the Atlantic Missile Range (AMR) described in this section pertain to the receiving, inspection and testing operations in which GSE may be employed prior to launch operations. To attempt an orientation of the reader, a number of figures are presented showing arrangement of complexes, buildings and test plans which involve the various operations with systems, subsystems and components.

9-13 OPERATIONS AT THE ATLANTIC MISSILE RANGE

General - Overall perspectives of the MSC complex at AMR are shown on Figures 9-8, 9-9 and 9-10. Some of the individual facilities are described later.

Inspections - Upon receipt of spacecraft hardware at AMR, various inspections and operations are performed as follows:

a. An inspection of all components to determine the extent, if any, of shipping damage

b. An inspection of all component part and serial numbers and comparison with work book configuration

c. A review of all existing design changes to determine any updating that may be required.

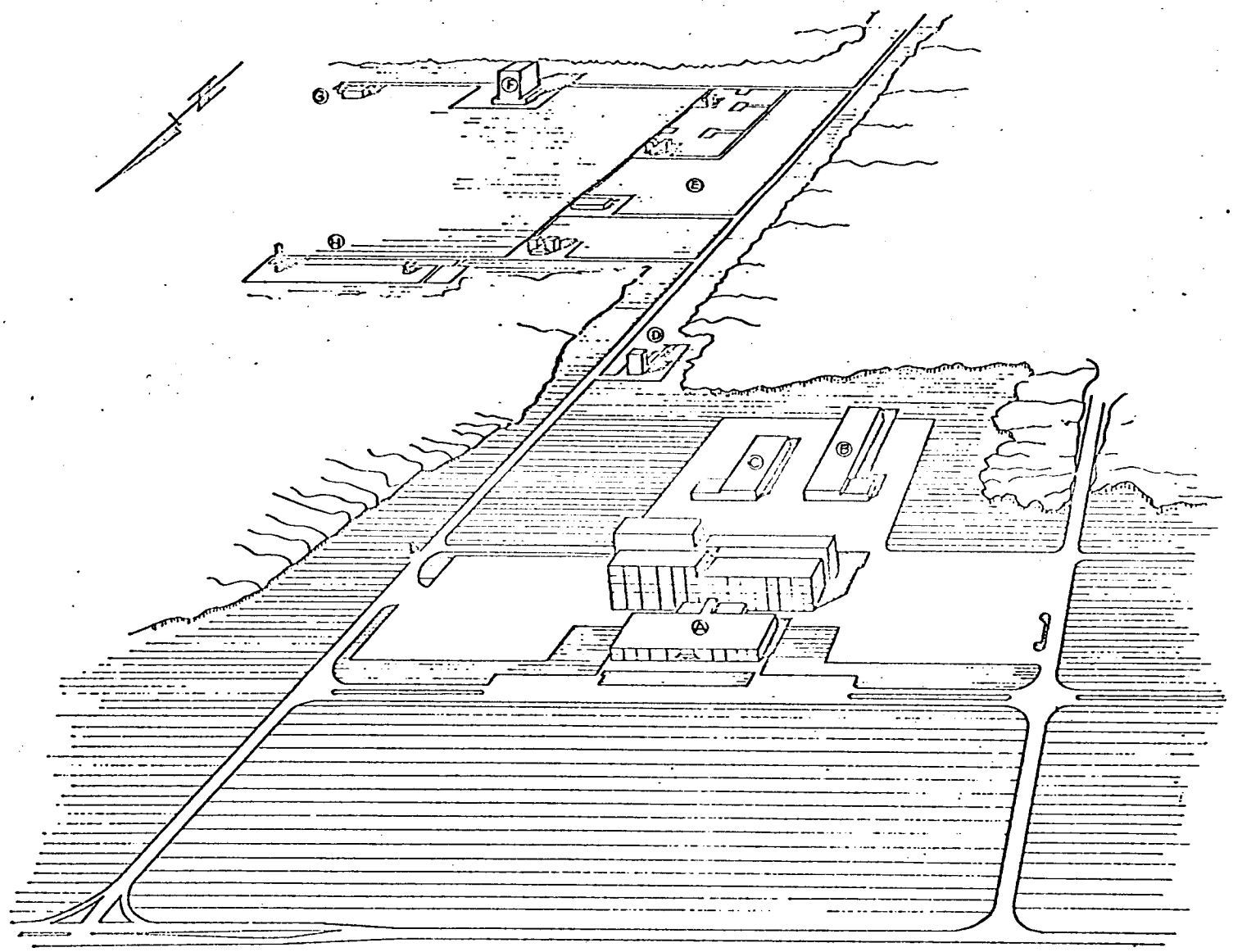

Figure 9-8 Atlantic Missile Range Operations Facilities

MSC FLUID TEST COMPLEX

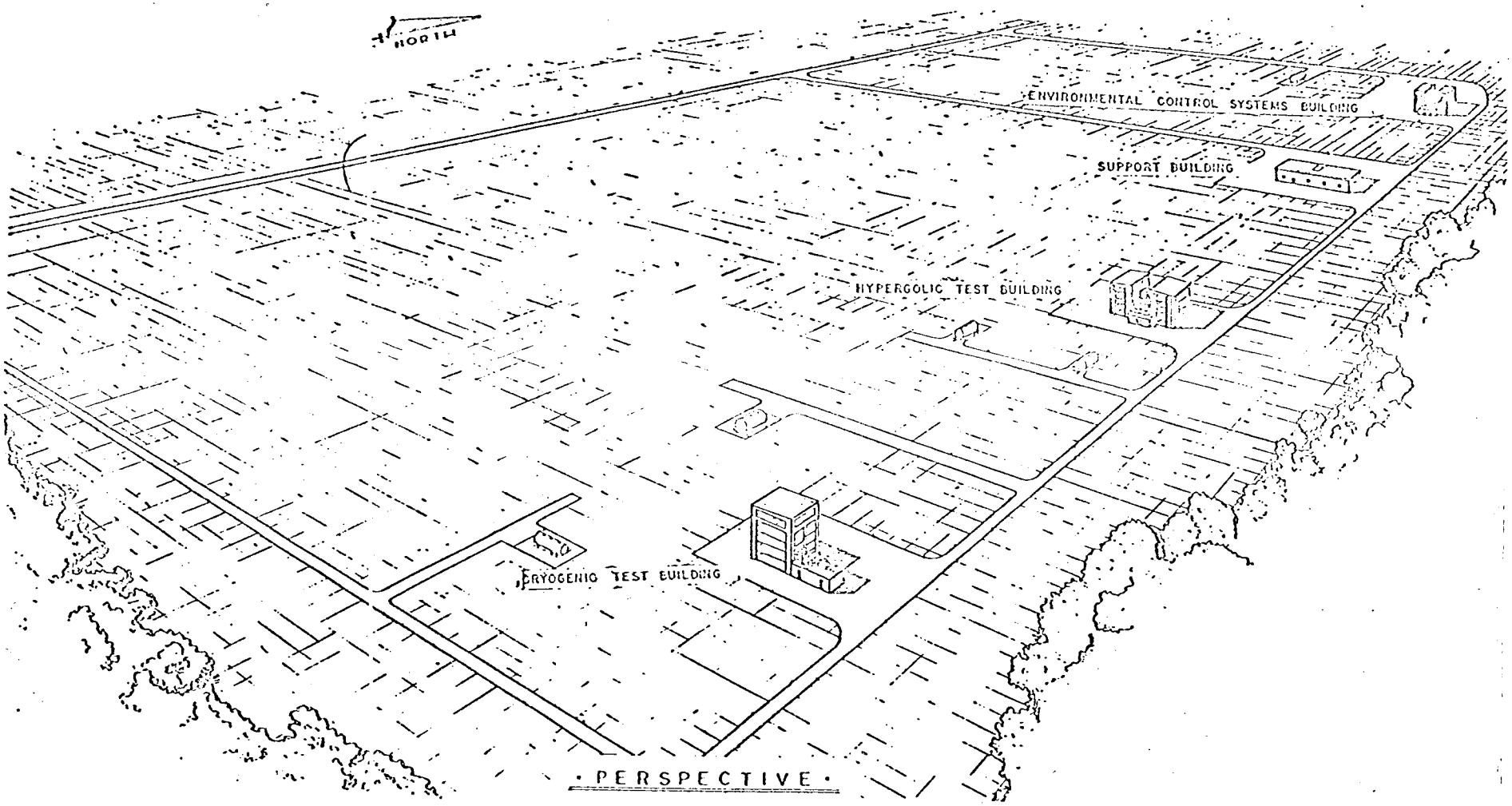

Figure 9-9 Perspective of Fluid Test Comple

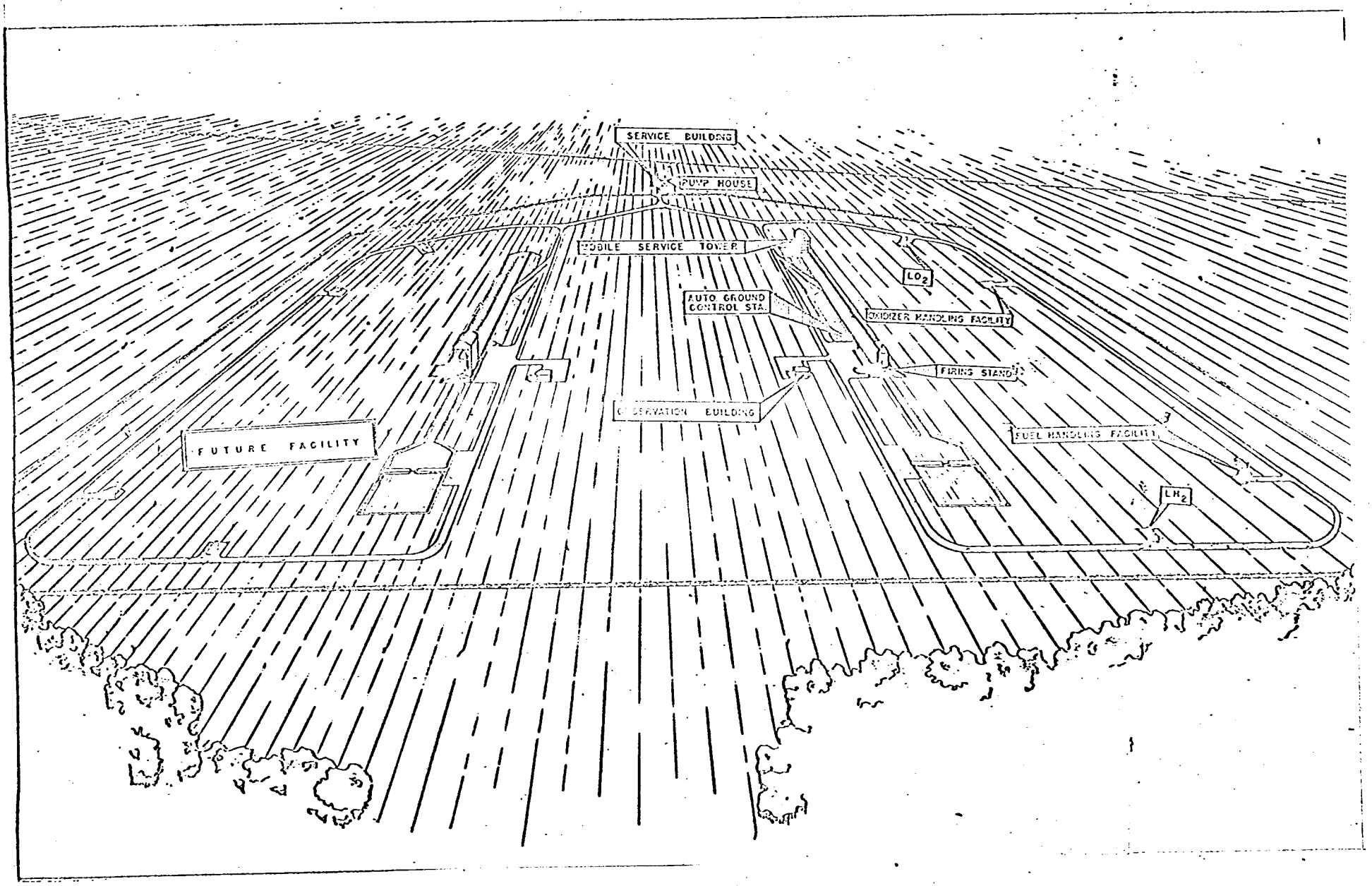

Figure 9-10 Perspective of Static Test Complex

Testing - In addition to the normal checks on functional performance, supplementary tests may be indicated by the inspections and reviews of the status of the systems. The testing program may be summarized as follows:

a. Any changes in instrumentation are followed by a complete calibration of affected instruments

b. All spacecraft systems receive functional testing

c. All GSE receives functional testing when connected to the spacecraft systems.

Practically the entire range of GSE is required in these operations and by far the largest portion is needed at the Operations and Checkout Building where the spacecraft modules are mated and various systems operated.

Operations Plans - An overall checkout testing plan is depicted on Figure 9-11. Samples of other test plans involving various operations appear on Figure 9-12 through 9-18. These samples represent progression through tests on some of the systems listed in the following paragraph. Since the progression of tests occurs from facility to facility, GSE is required for transportation as well as handling during a given test.

Operations and Checkout Building - The Operations and Checkout Building (O&C) and its location are shown on Figure 9-19. An example of a CM test plan for performance in this building is described on Figure 9-20. In addition to receiving and inspection, module cleaning, and final flight items installation, integrated systems and altitude chamber tests are performed. The following systems are involved.

a. Reaction Control System

b. Guidance and Navigation Instrumentation

c. Environmental Control System (CM & SM)

APOLLO CAPE CHECKOUT PLAN

JANUARY 15, 1963

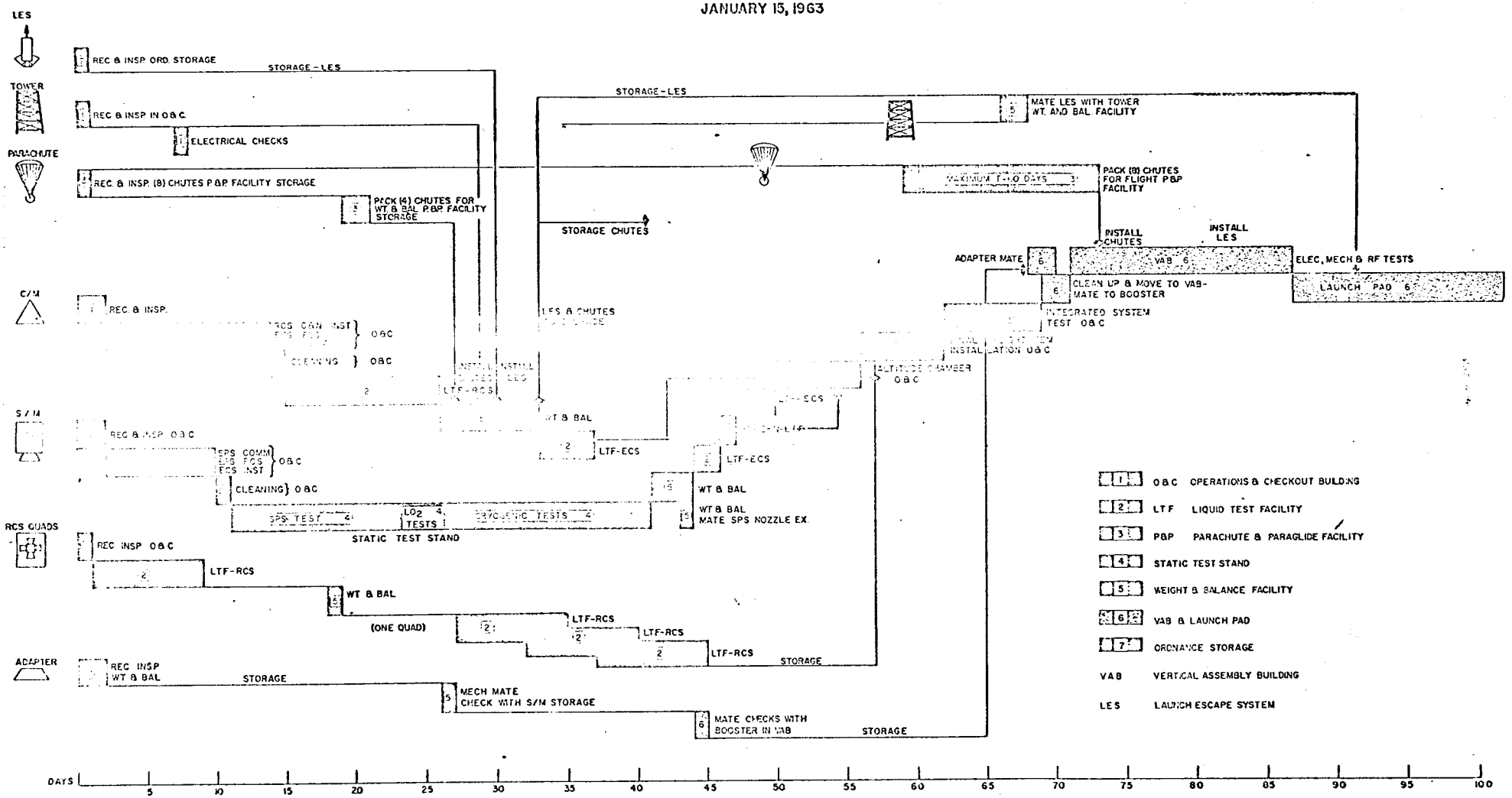

Figure 9-11 Apollo Cape Checkout Plan

RCS COMMAND MODULE

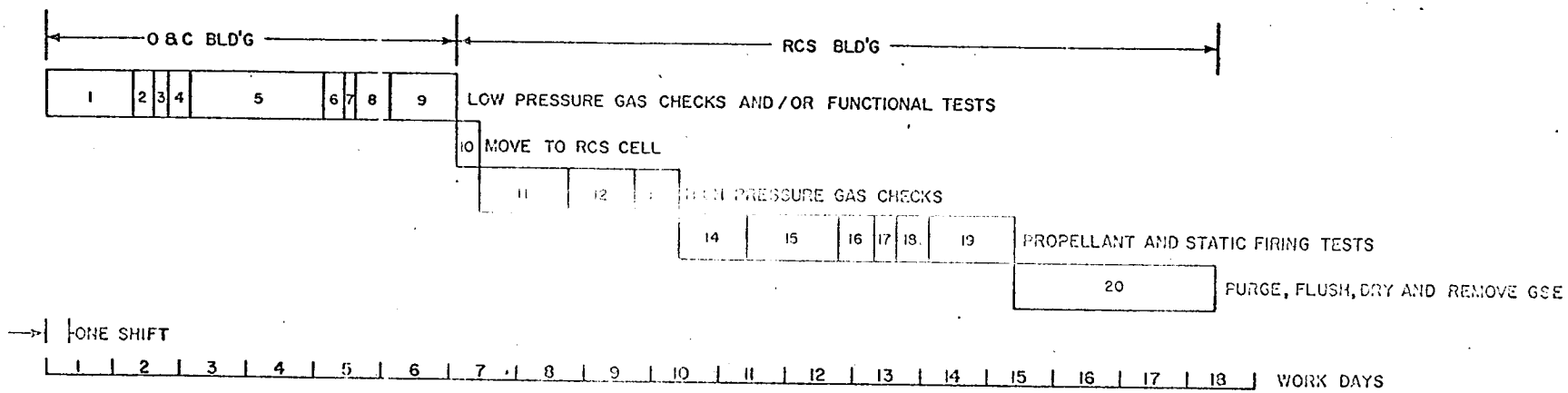

1 - RECEIVING AND GSE HOOKUP
2 - CHECK VALVE TEST
3 - LINE SOLENOID TEST
4 - BLADDER PERMEABILITY CHECK
5 - SIMULTANEOUS PRESSURE CHECK
6 - THROUGH VALVE LEAKAGE
7 - THRUSTER SOLENOID PRESSURE DROP TEST
8 - THRUSTER SOLENOID SYNC. AND ASSOC. TESTS
9 - 1000 PSI REGULATOR TEST
10 - MOVE TO RCS CELL
11 - GSE HOOKUP
12 - HIGH PRESSURE GAS CHECK
13 - REGULATOR CHECKS AT FLIGHT PRESSURE
14 - PROPELLANT TRANSFER LINE HOOKUP AND VALID
15 - FUEL AND OXIDIZER FILL
16 - PROPELLANT QUANTITY CALIBRATION
17 - STATIC FIRE PREPARATION
18 - STATIC FIRE
19 - DRAIN FUEL AND OXIDIZER
20 - PURGE, FLUSH, DRY AND REMOVE GSE

Figure 9-12 Checkout Plan - RCS Command Module

RCS SERVICE MODULE INDIVIDUAL QUAD

(ONE QUAD ONLY)

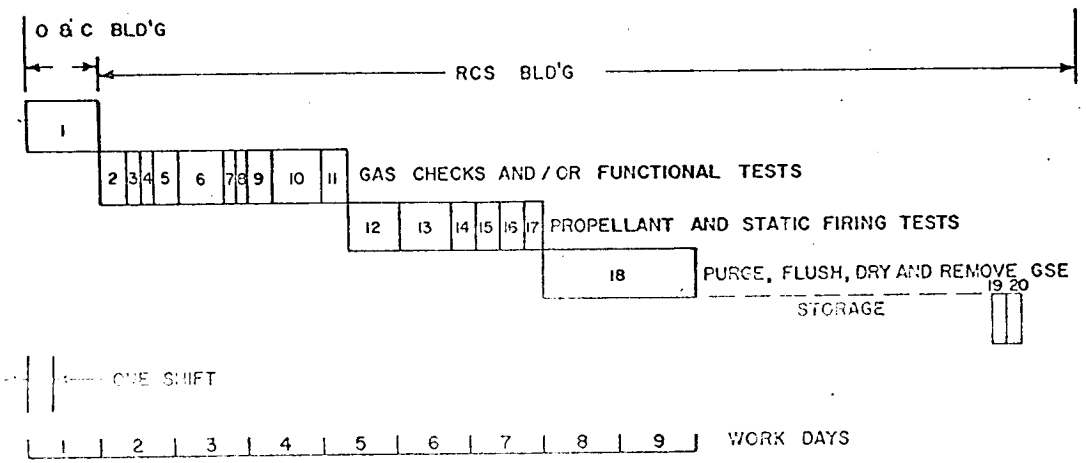

1 - RECEIVING AND INSPECTION
2 - GSE HOOKUP
3 - CHECK VALVE TEST
4 - LINE SOLENOID TEST
5 - BLADDER PERMEABILITY
6 - SIMULTANEOUS PRESSURE CHECK
7 - THROUGH VALVE LEAKAGE
8 - SOLENOID PRESSURE DROP TEST
9 - SOLENOID SYNC. TEST
10 - HIGH PRESSURE GAS CHECK
11 - REGULATOR CHECKS AT FLIGHT PRESSURE
12 - PROPELLANT TRANSFER LINE HOOKUP AND VALIDATION
13 - FUEL AND OXIDIZER FILL
14 - PROPELLANT QUANTITY CALIBRATION
15 - STATIC FIRE PREPARATION
16 - STATIC FIRE
17 - DRAIN FUEL AND OXIDIZER
18 - PURGE, FLUSH, DRY AND REMOVE GSE
19 - INSTALLATION TO SERVICE MODULE
20 - ELECTRICAL CHECK

Figure 9-13 Checkout Plan - RCS Service Module

ENVIRONMENTAL CONTROL SYSTEM

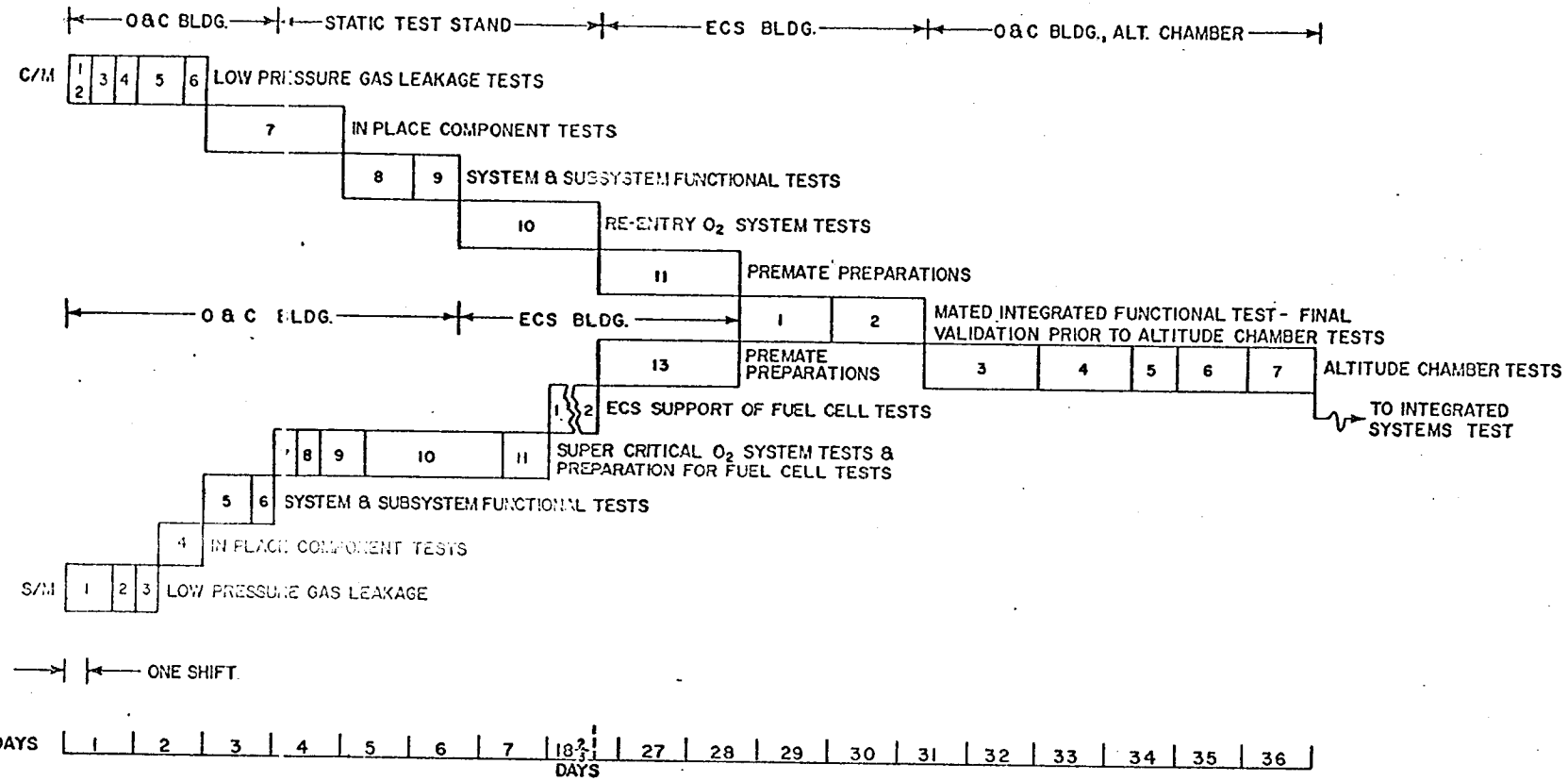

C/M TESTS

1. FREON SYSTEM
2. SUIT CIRCUIT
3. CABIN
4. WATER SYSTEM
5. GLYCOL SYSTEM
6. MISCELLANEOUS
7. ALL COMPONENTS CHECKED WITH RESPECT TO THE FOLLOWING AS APPLICABLE:
   a. FLOWRATES
   b. VALVE CRACKING POINTS
   c. ELECTRICAL CONTINUITY
   d. POWER CONSUMPTION
   e. MECH. LINKAGE RIGGING
   f. HANDLE PULL FORCES
   g. LEAKAGE
   h. PRESSURE REGULATION
   i. FUNCTIONAL OPERATION
   j. ETC.
8. FUNCTIONAL CHECK OF COOLING SYSTEMS SERVICED WITH COOLANT
9. FUNCTIONAL CHECKS OF GAS SYSTEMS OR SUBSYSTEMS WHERE PRACTICAL
10. HIGH PRESSURE LEAKAGE CHECK & CALIBRATION
11. PREMATE PREPARATION (ECS). NON-ECS INTERFACE CHECKS. WORK PERIOD.

S/M TESTS

1. GLYCOL SYSTEM
2. WATER SYSTEM
3. MISCELLANEOUS
4. SAME AS ITEM 7, C/M TESTS
5. FUNCTIONAL CHECK OF COOLING SYSTEMS SERVICED WITH COLLANT.
6. FUNCTIONAL CHECKS OF GAS SYSTEMS OR SUBSYSTEMS WHERE PRACTICAL.
7. COOLANT SERVICING
8. GAS LEAK CHECK
9. LOX SERVICING & CALIBRATION
10. FUNCTIONAL CHECK
    a. HEAT LEAK
    b. PRESSURE & TEMPERATURE SURVEILLANCE.
    c. OPERATIONAL CHECK
11. DUMP O_2 IF REQ'D PRIOR TO MOVE TO FUEL CELL FACILITY.
12. LOX & COOLANT SUPPORT (56 SHIFTS)
13. PREMATE PREPARATION (ECS). NON-ECS INTERFACE CHECKS. WORK PERIOD.

MATED C/M & S/M TESTS

1. SERVICE HIGH PRESSURE O_2. SERVICE COOLANT SERVICE LOX CALIBRATION
2. SEA LEVEL INTEGRATED FUNCTIONAL CHECK OF ECS - ASTRONAUT PARTICIPATION.
3. PREPARATION
   a. SERVICE
   b. CABLING
   c. ETC.
4. RUN # 1 - UNMANNED
   a. INSTRUMENTATION CALIBRATION
5. RUN # 2 - UNMANNED
   a. VALIDATION OF ECS IN ALL FLIGHT MODES WHERE PRACTICAL.
6. RUN # 3 - MANNED
   a. SIMULATED FLIGHT: MAN-SYSTEM COMPATIBILITY IN ALL MODES.
7. PREPARATION FOR/AND REMOVAL FROM CHAMBER.

Figure 9-14 Checkout Plan - Environmental Control System

ELECTRICAL SYSTEMS TESTS

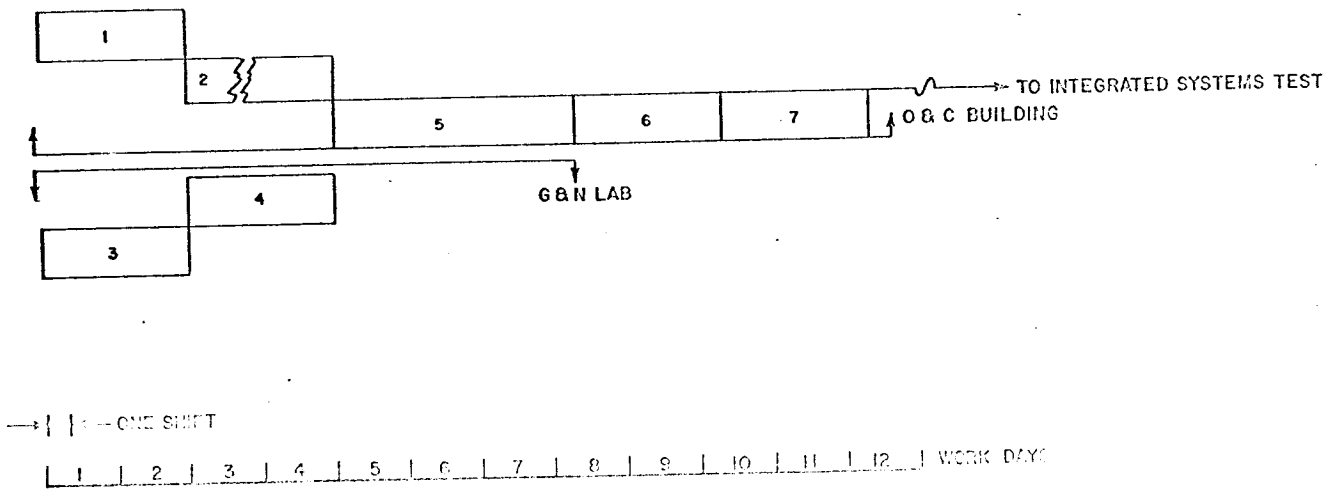

1. Electrical Power Checks (No power can be supplied to any system until all checks are completed. No Fuel Cell checks made)
   a) Distribution
   b) Regulation

   Service & Command Modules Checked Separately (Either Parallel Or Serially)

2. Instrumentation Calibration
   a) Must be completed before beginning systems tests

3. Platform & Sextant Optical Range
   a) Sextant - Navigation Base Alignment
   b) Sextant - Platform Erection Alignment
      1) Zero Index Checks
      2) Star Target Checks
   c) Platform Drift Tests
   d) Accelerometer Scale Factor Tests

4. G&N Systems
   a) Computer Tests
   b) Position Updating Tests
   c) Δ velocity Correction Tests
   d) Mode Tests

5. Electrical Sequencing
   a) Squib Voltage Checks
   b) Timer Checks
   c) Interlock Checks
   d) Event Relay Checks

6. Stabilization & Control System (No other work on S/C during these checks)
   a) BMAG - S/C Alignment Checks
   b) Rate Gyro Checks
   c) Jet Selection & Pulse Modulation Checks

7. Combined Stabilization & Controls, & G & N (Requires Panel Observers and Operators during Test)
   a) Mode Select Tests
   b) Manual Control Tests
   c) G&N - SGS Interface Tests

Figure 9-15 Checkout Plan - Electrical Systems

REACTANT SUPPLY AND FUEL CELL SYSTEMS

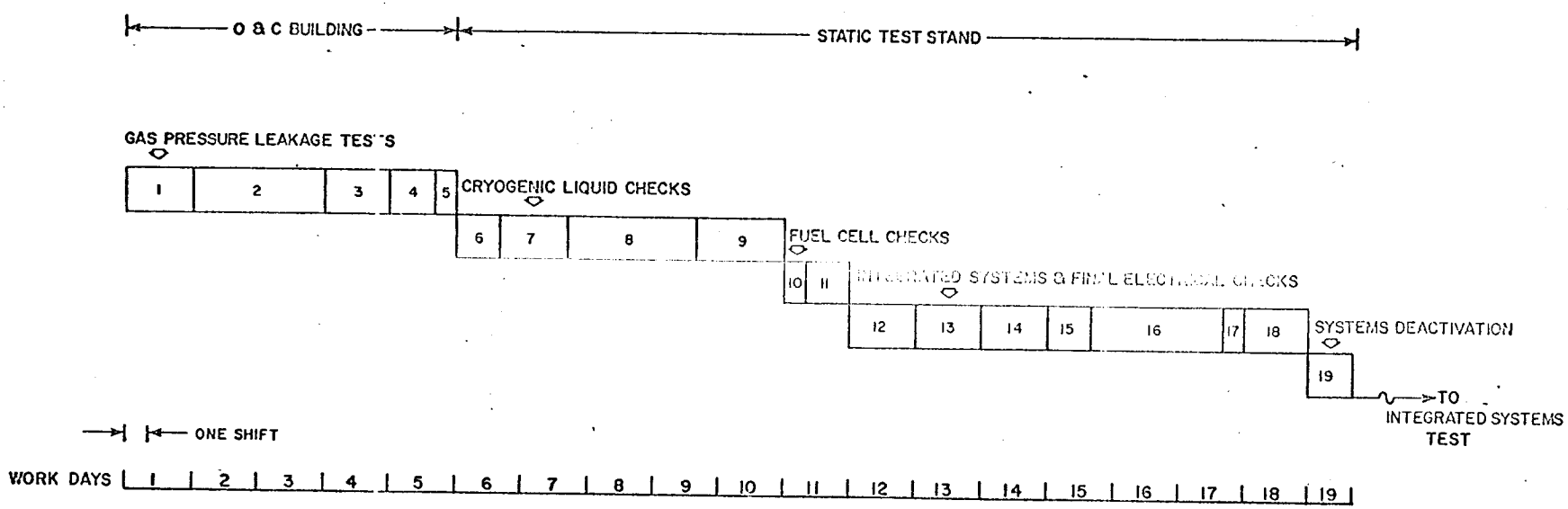

1. GAS PRESSURE CHECKS
2. TRANSDUCER & SENSOR CALIBRATION
3. ΔP REFERENCE SYSTEM CHECKS
4. HEAT EXCHANGER CHECKS
5. CONDENSER CHECKS
6. CHILL DOWN & FILL
7. EVALUATION OF CRYO. BOIL-OFF RATES
8. SUPERCRITICAL PRESSURE BUILDUP VS TIME & TEMP.
9. LEAKAGE CHECKS AT CRYO. TEMP.
10. FUEL CELL COOLANT CHECKS
11. SOLENOID OPERATIONAL CHECKS
12. AUTO REGULATING SYSTEM CHECKS
13. REACTANTS MASS FLOW RATE CHECKS
14. REGULATOR & REFERENCE SYSTEM CHECKS
15. WATER RESECTION SYSTEM CHECKS
16. EVALUATE REACTANT USAGE RATES
17. DETAILED ELECTRICAL CHECKS
18. INTEGRATED SYSTEMS & FINAL ELECTRICAL CHECKS
19. DEACTIVATE, PURGE, DRY & SEAL SYSTEM

Figure 9-16 Checkout Plan - Reactant Supply and Fuel Cell Systems

SERVICE PROPULSION SYSTEM

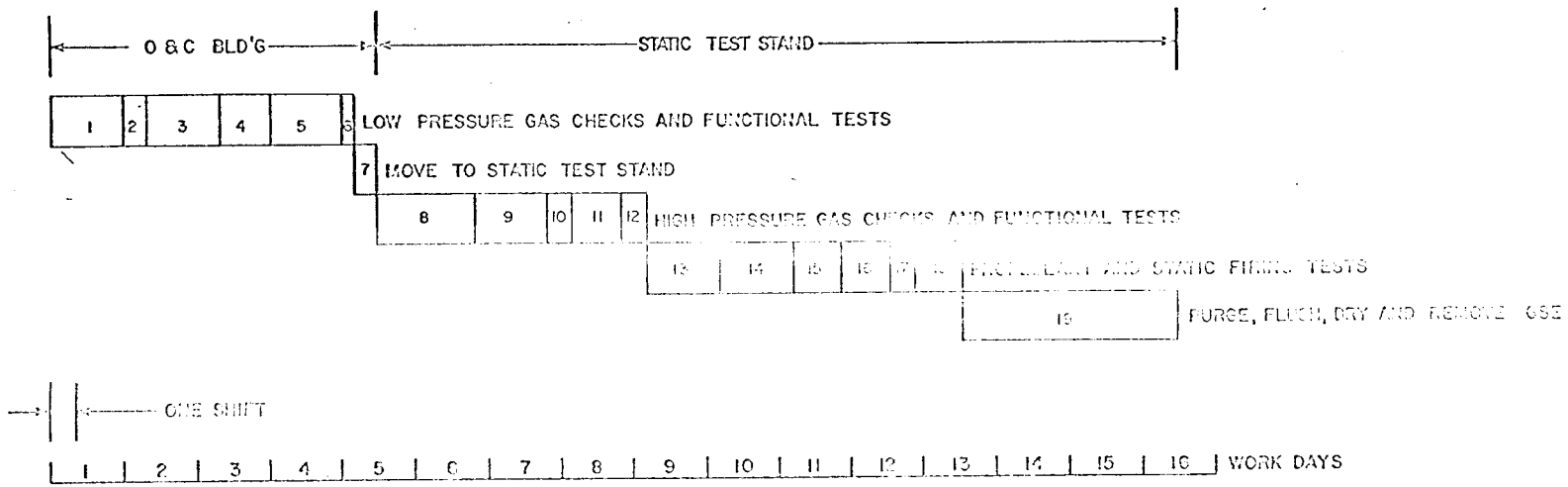

1 - RECEIVING AND GSE HOOKUP
2 - CHECK VALVE TEST
3 - SYSTEM LOW PRESSURE CHECK
4 - 1000 PSI REGULATOR CHECK
5 - ACTUATOR CHECKS
6 - LINE SOLENOID CHECK
7 - MOVE TO STATIC TEST STAND
8 - GSE HOOKUP
9 - HIGH PRESSURE GAS TEST
10 - REGULATOR CHECK AT FLIGHT PRESSURE
11 - GIMBALLING CHECK
12 - THRUST VECTOR ALIGNMENT
13 - PROPELLANT TRANSFER LINE AND HOOKUP VALID
14 - FUEL AND OXIDIZER FILL
15 - FUEL AND OXIDIZER QUANTITY CALIBRATION
16 - PREPARATION FOR STATIC FIRE
17 - STATIC FIRE
18 - DRAIN FUEL AND OXIDIZER
19 - PURGE, FLUSH, DRY AND REMOVE GSE

Figure 9-17 Checkout Plan - Service Propulsion System

APOLLO—PARACHUTE & PYRO & WT.-BALANCE TEST FLOW

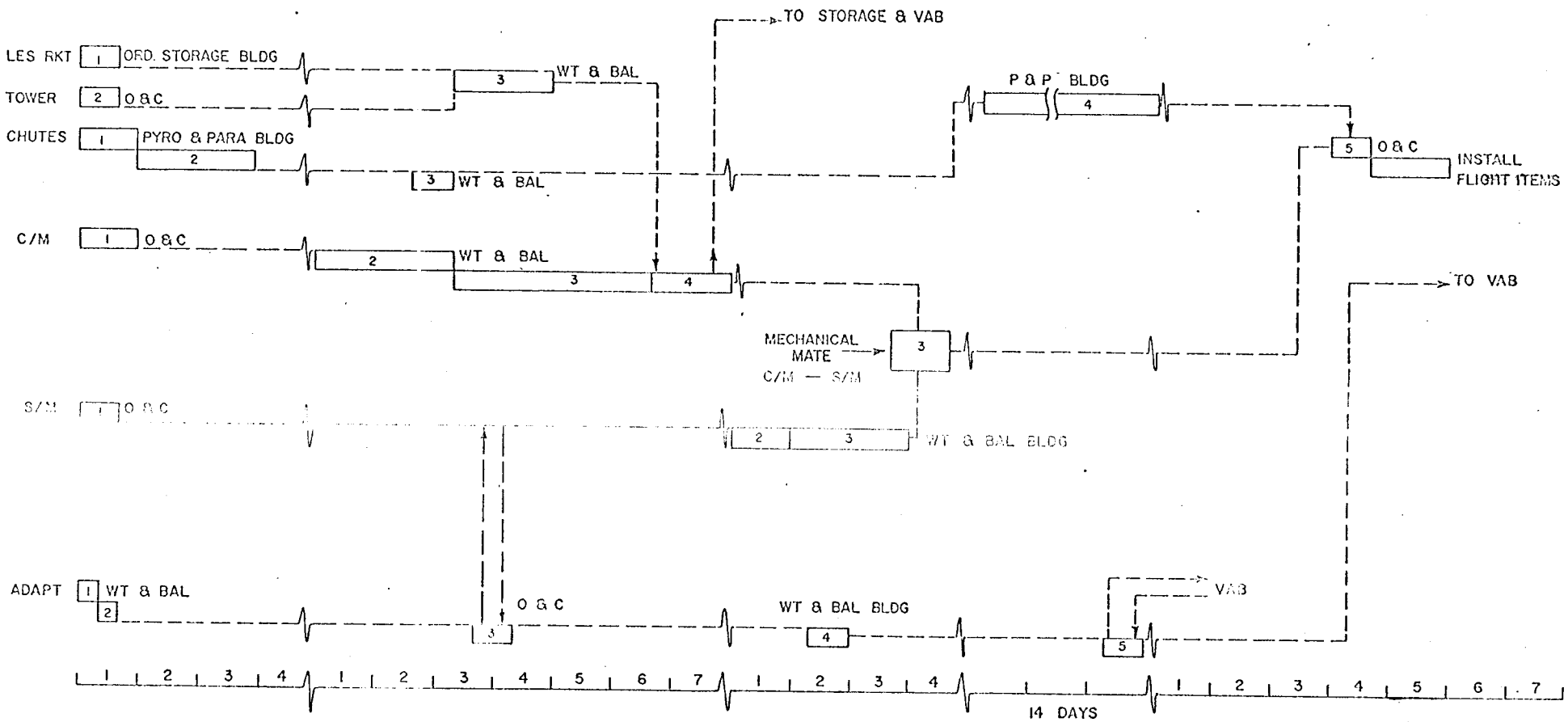

LES TESTS

1 - INSP. & RECEIVING
2 - ELECTRICAL TESTS ON TOWER
3 - WT & BAL OF LES & TOWER

C/M TESTS

1 - INSP. & RECEIVING
2 - PYRO INSTALLATION & RES. CHECKS
3 - WT. & BALANCE
4 - MATE & ALIGN LES TO C/M

S/M TESTS

1 - INSP. & RECEIVING
2 - PYRO INSTALL & RES. CHECKS
3 - WT. & BALANCE

ADAPTER TESTS

1 - INSP. & RECEIVING
2 - WEIGH
3 - TRIAL FIT AD./S/M
4 - PYRO INSTALL & RES. CHECKS
5 - TRIAL FIT AD/BOOSTER

CHUTES

1 - INSP. & RECEIVING
2 - PACK 4 CHUTES FOR WT. & BAL
3 - INSTALL 4 CHUTES
4 - PACK 8 CHUTES
5 - INSTALL 4 FLIGHT CHUTES

Figure 9-18 Apollo Parachute, Pyrotechnics, and Weight Balance Tests

MANNED SPACECRAFT CENTER FACILITIES

OPERATIONS and CHECKOUT BUILDING

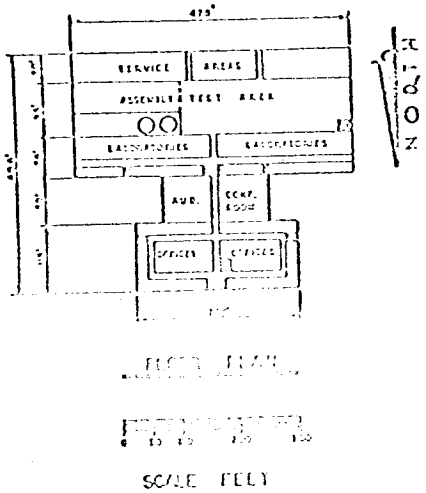

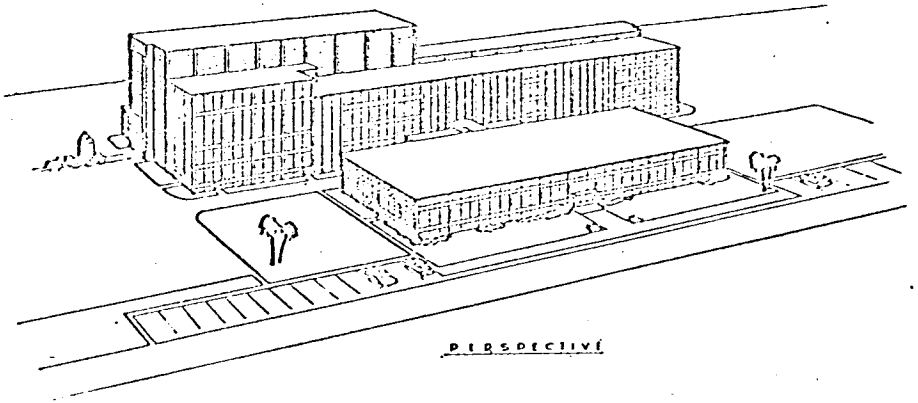

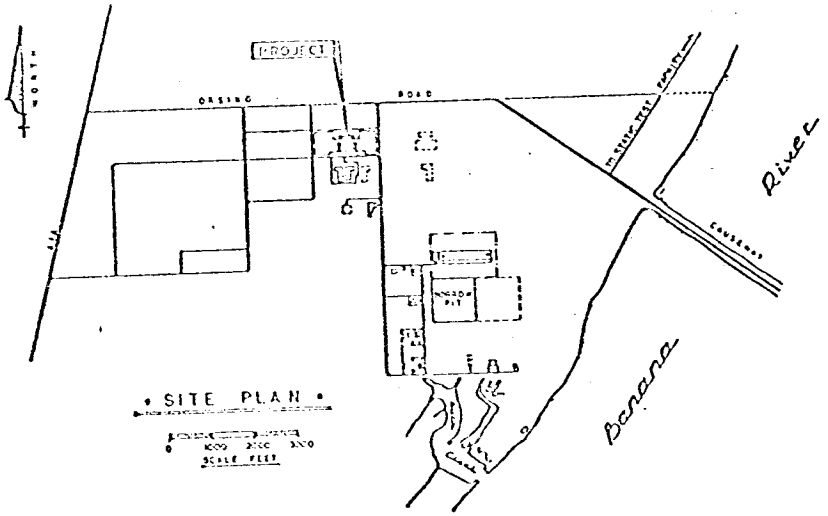

Figure 9-19 Operations and Checkout Building

C/M O & TESTING PLAN

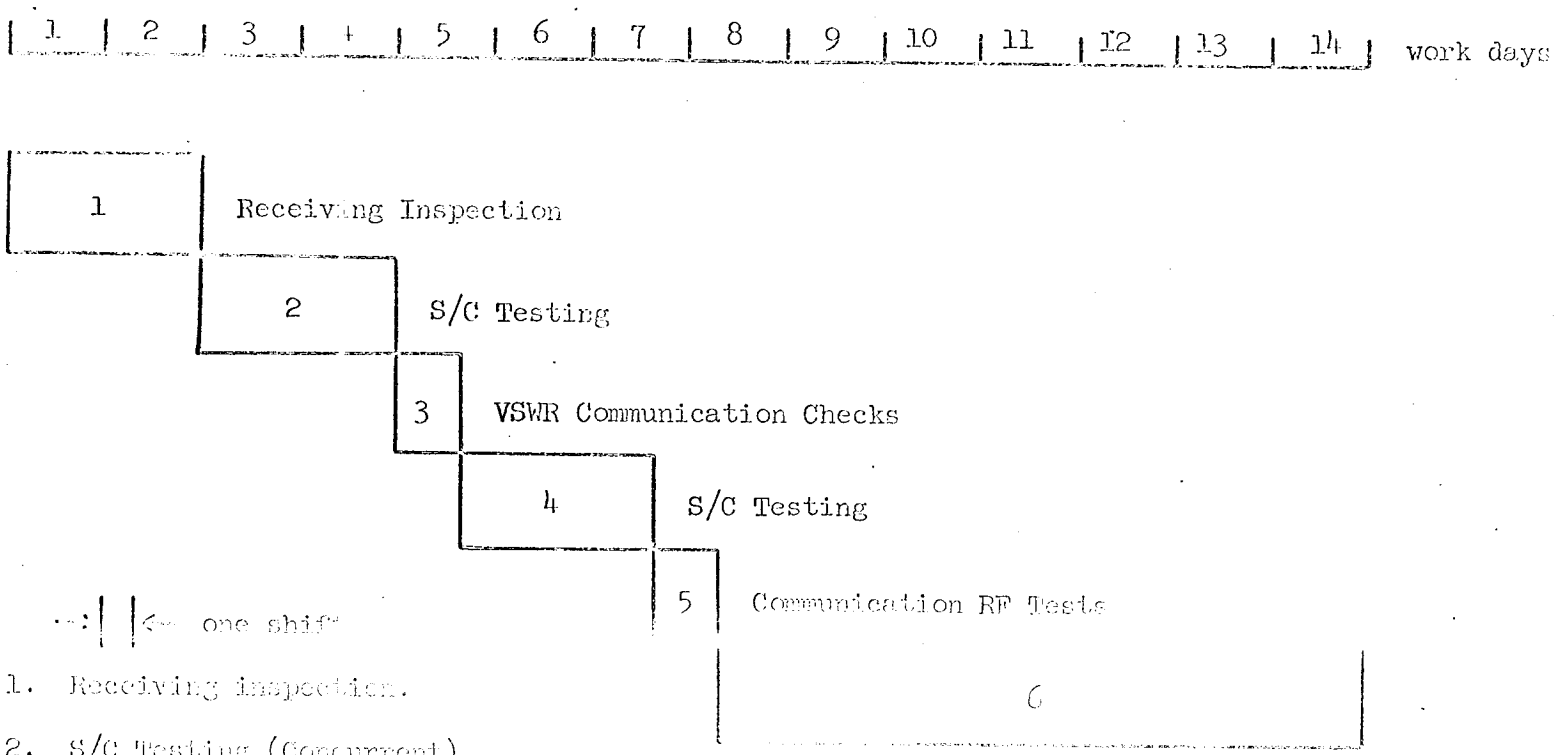

1. Receiving inspection.

2. S/C Testing (Concurrent)
   a) RCS
   b) ECS
   c) FCS
   d) EPS
   e) G & N
   f) Instrumentation

3. Communication VSWR Testing
   (No concurrent work)

4. S/C Testing (All systems on a concurrent basis)

5. Communication RF Testing
   (No concurrent work)

6. S/C Testing (All systems on a concurrent basis)

Figure 9-20 Command Module Operations and Checkout Test Plan

d. Flight Control System (CM & SM)

e. Electrical Power Supply (CM & SM)

f. Communications System (CM & SM)

g. Service Propulsion System

Fluid Test Complex - This complex shown on Figure 9-9 indicates four buildings, of which one is a support building illustrated on Figure 9-21 and three are test buildings described below.

Liquid Test Facility - Two buildings are employed, the Environmental Control Systems and the Hypergolic Test Buildings shown on Figures 9-22 and 9-23 respectively. Tests are performed on the following systems

a. CM Reaction Control System

b. CM and SM Environmental Control Systems

c. SM Reaction Control System

Static Test Stands - Two facilities are employed. The Hypergolic Test Building is used for Service Propulsion System tests and the Cryogenic Test Building shown on Figure 9-24 is used for the Liquid Oxygen and other Cryogenic Systems tests.

Weight and Balance Facility - The Weight and Balance Building shown on Figure 9-25 is employed for the following operations

a. Receiving and inspection of Adapter

b. Installation of parachutes

c. Weighing and balancing of the CM, SM, and LES

d. Mating or SPS nozzle extension

e. Weighing and balancing of RCS Quads

f. Weighing and balancing of Adapter

MANNED SPACECRAFT CENTER FACILITIES

FLUID TEST COMPLEX

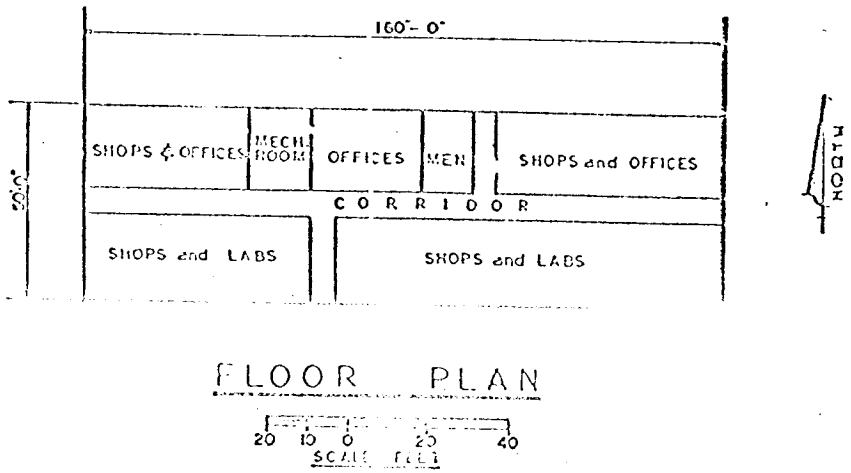

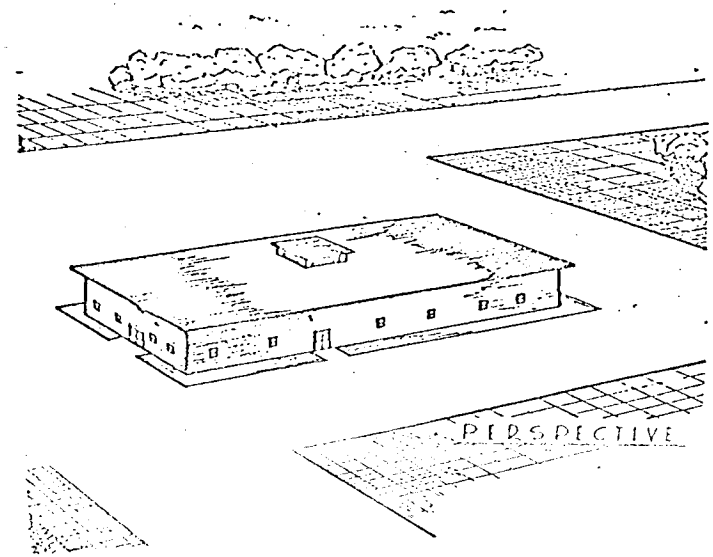

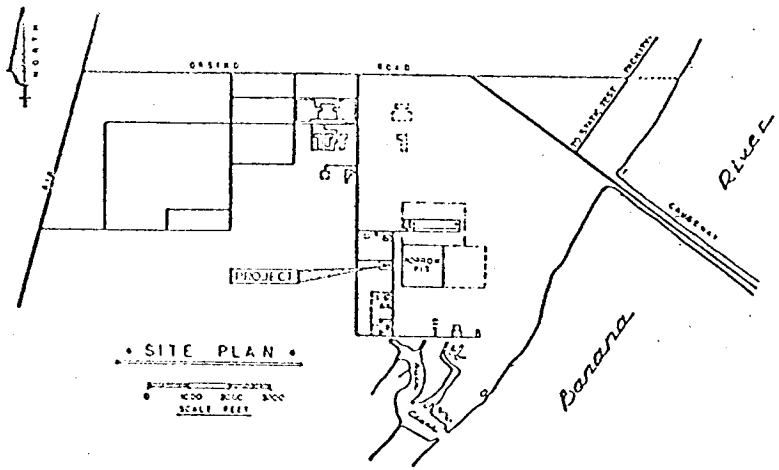

SUPPORT BUILDING

Figure 9-21 MSC Fluid Test Complex - Support Building

MANNED SPACECRAFT CENTER FACILITIES

FLUID TEST COMPLEX

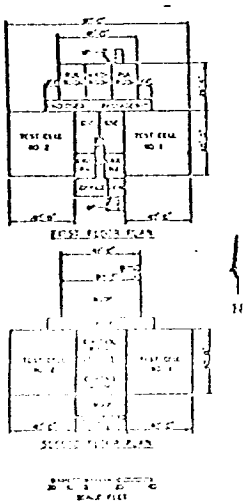

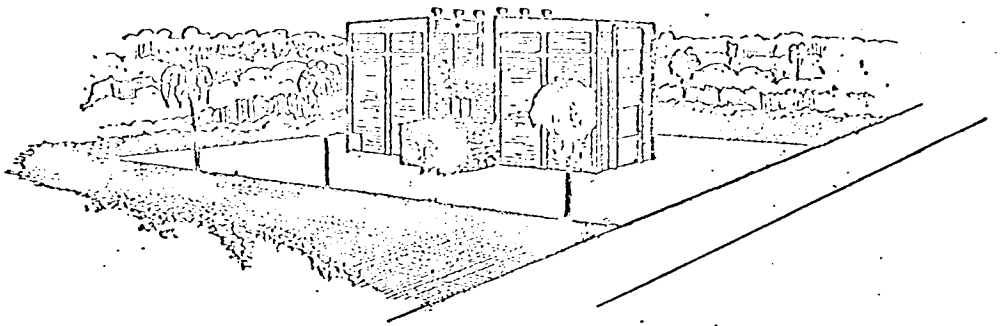

PERSPECTIVE

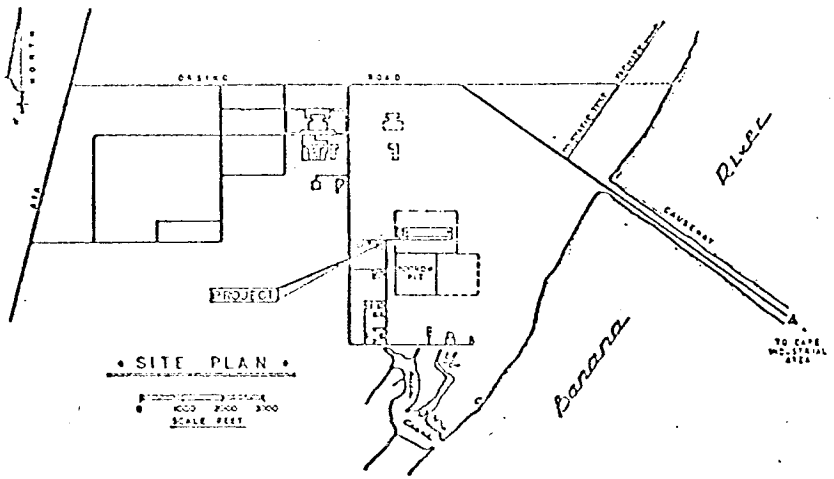

ENVIRONMENTAL CONTROL
SYSTEMS BUILDING

Figure 9-22 MSC Fluid Test Complex - ECS Building

MANNED SPACECRAFT CENTER FACILITIES

FLUID TEST COMPLEX

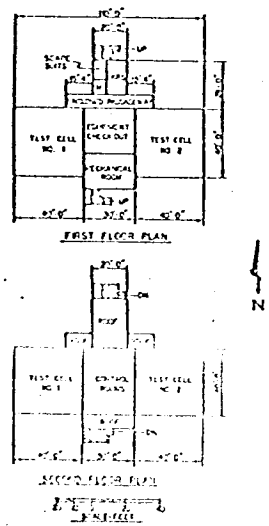

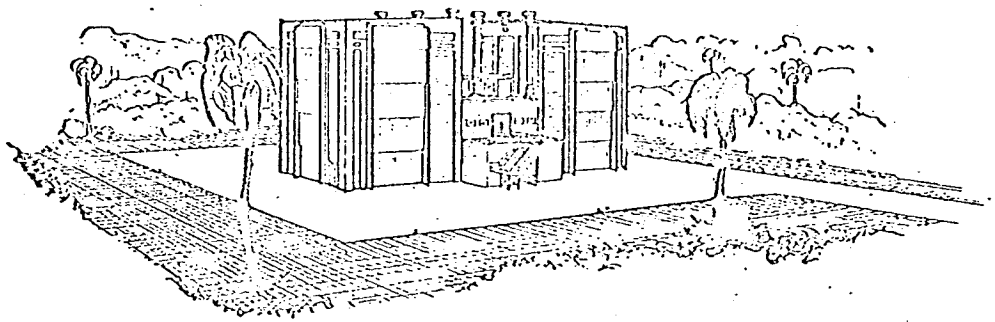

PERSPECTIVE

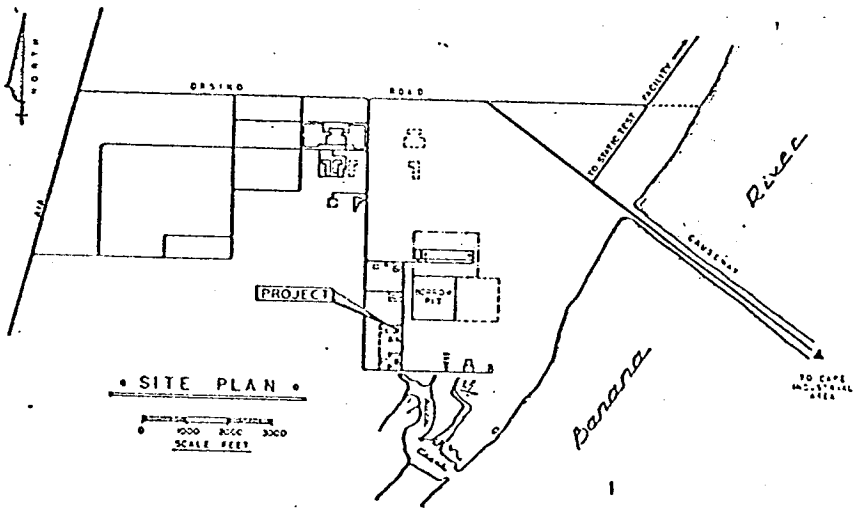

HYPERGOLIC TEST BUILDING

Figure 9-23 MSC Fluid Test Complex - Hypergolic Test Building

MANNED SPACECRAFT CENTER FACILITIES

FLUID TEST COMPLEX

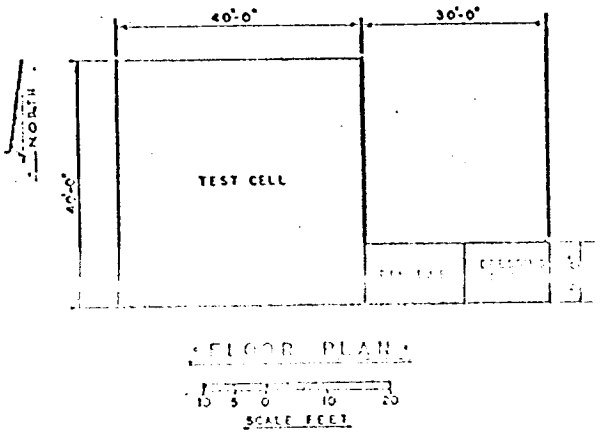

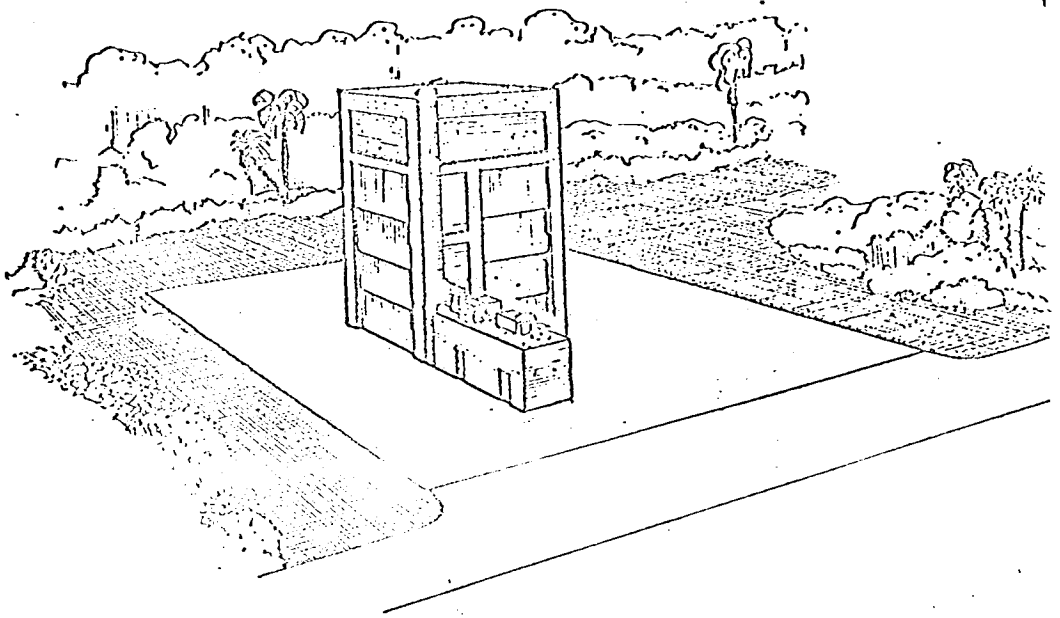

PERSPECTIVE

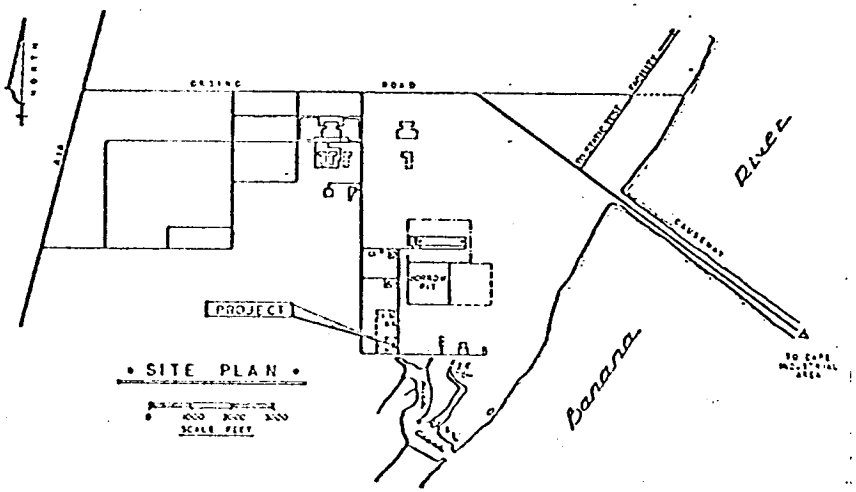

CRYOGENIC TEST BUILDING

Figure 9-24 MSC Fluid Test Complex - Cryogenic Test Building

MANNED SPACECRAFT CENTER FACILITIES

WEIGHT and BALANCE BUILDING

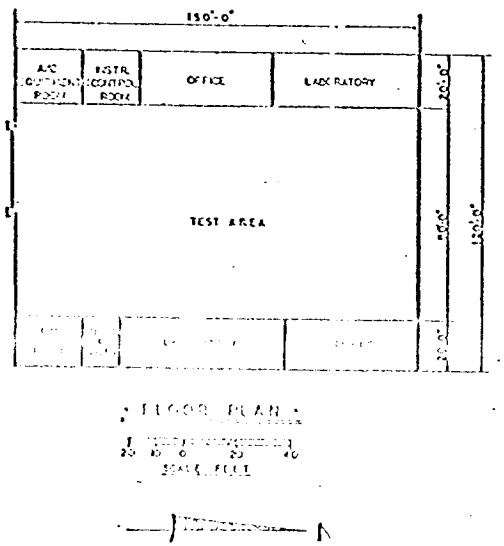

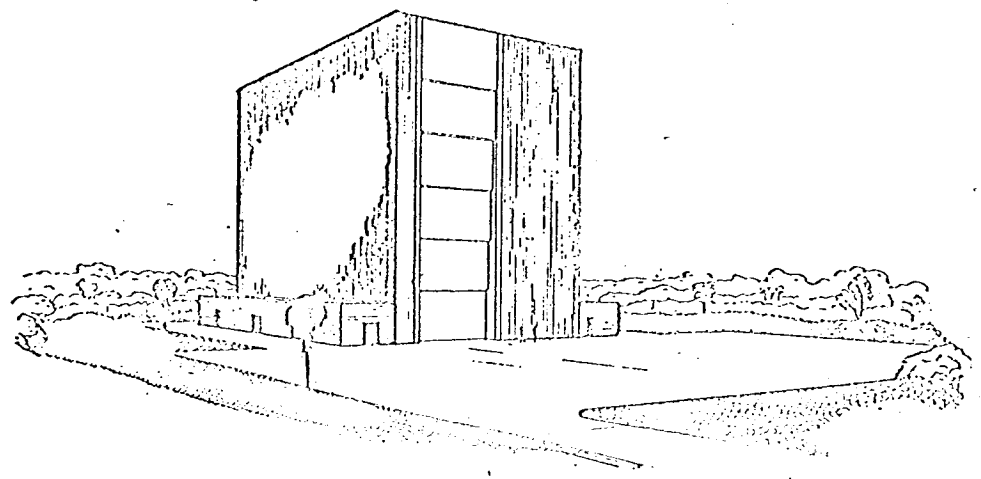

PERSPECTIVE

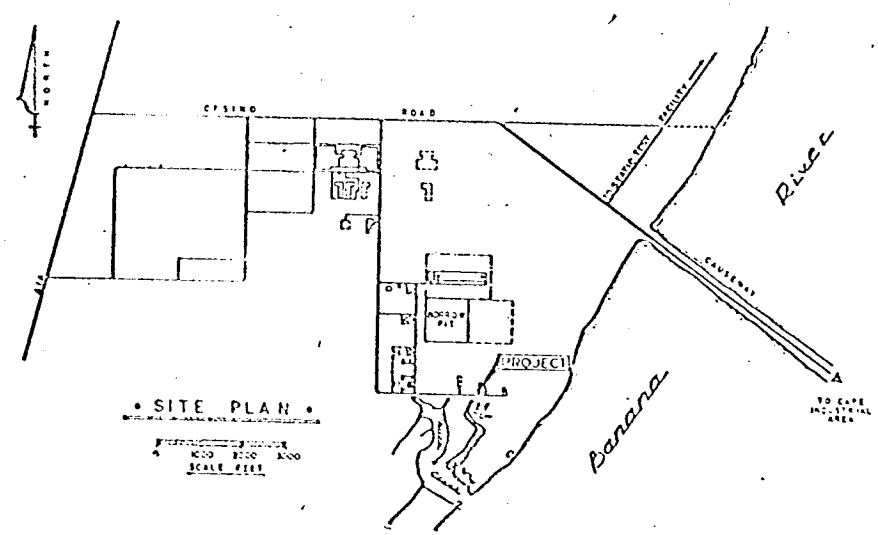

Figure 9-29 MSC Weight and Balance Building

Ordnance Storage - This building illustrated on Figure 9-26 is employed for the receiving, inspection and storage of ordnance components such as the LES motors.

Parachute and Paraglider Building - This building shown on Figure 9-27 is used for receiving and inspection, and packing and storing of parachutes.

Vertical Assembly Building-Launch Pad - Tests in these areas include mating of spacecraft and booster; electrical, mechanical and r-f tests; and installation of the LES. The sequence of testing and facility utilization are shown on Figure 9-28.

MANNED SPACECRAFT CENTER FACILITIES

ORDNANCE STORAGE BUILDING

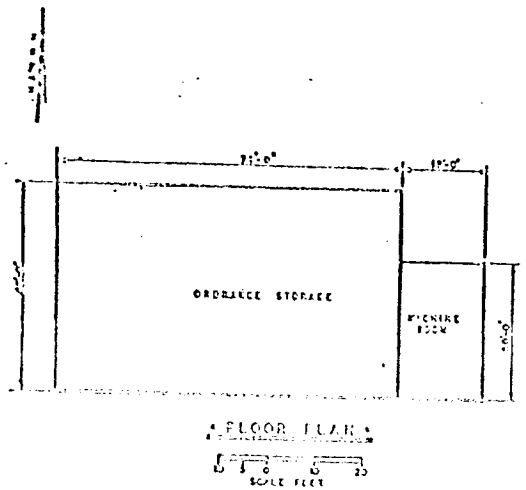

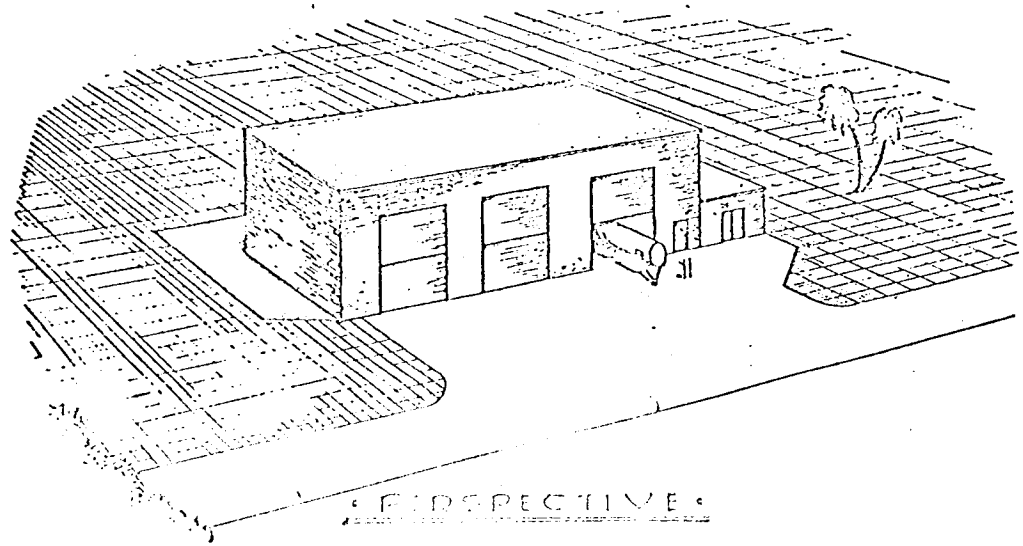

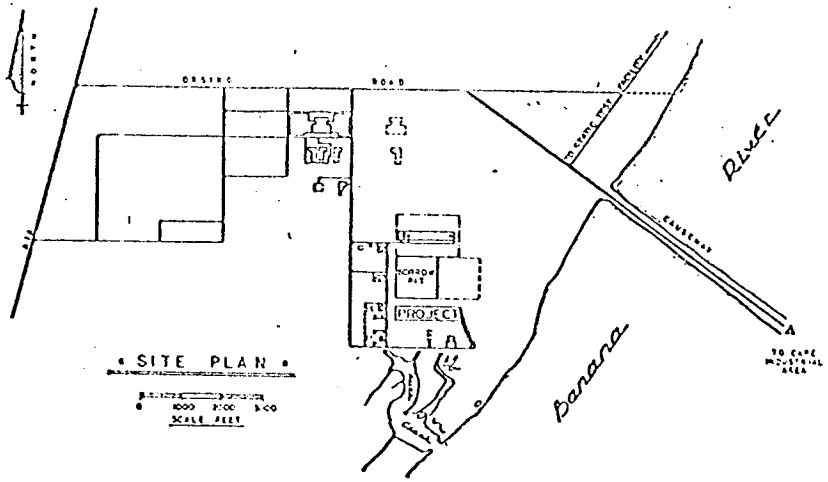

Figure 9-26 MSC Ordnance Storage Building

MANNED SPACECRAFT CENTER FACILITIES

PARACHUTE and PARAGLIDER BUILDING

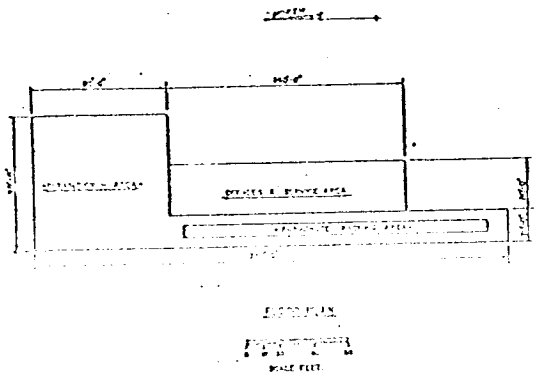

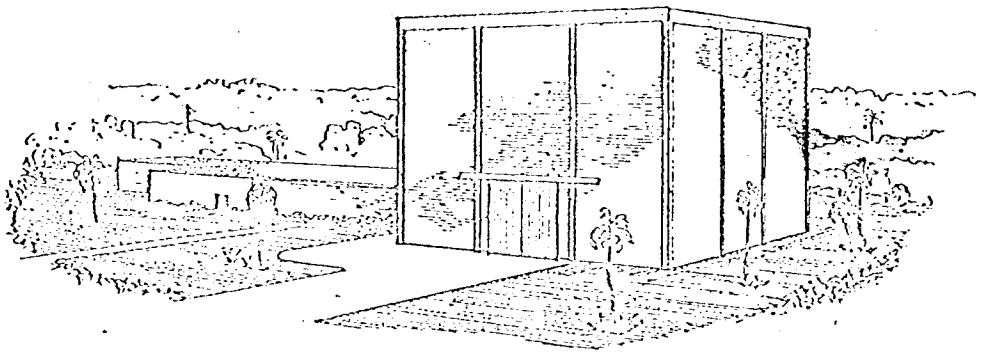

PERSPECTIVE

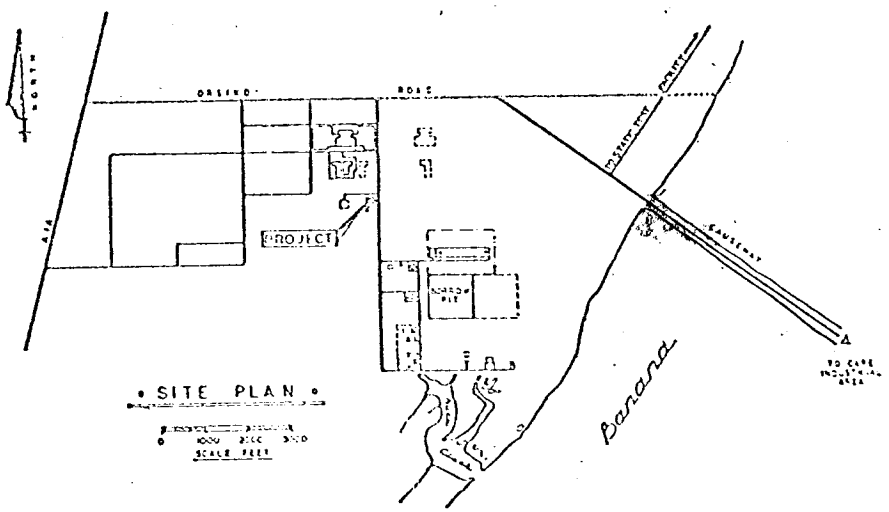

Figure 9-27 MSC Parachute and Paraglider Building

VERTICAL ASSEMBLY BUILDING AND LAUNCH PAD TESTING

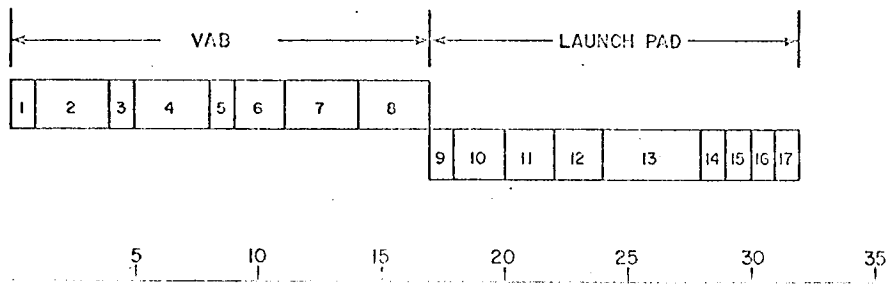

1. MODEL MATE
2. SIMULATED FLIGHT
   a. All Systems Functional
   b. Not Electrically Mated With Booster
3. ELECTRICAL MATE TO BOOSTER

   & ABORT (COMBINED INTERFACE)
4. WORK PERIOD
   a. Cleanup & Inspection
   b. Prepare To Move To Pad
5. ECS, RCS & FCS CHECKS
6. SIMULATED FLIGHT WITH BOOSTER
7. FLIGHT CONFIGURATION

   SEQUENCE & ABORTS
8. WORK PERIOD
9. MOVE TO PAD
10. RCS & CRYOGENIC PRACTICE LOADING
11. LAUNCH SIMULATION AND

    RF COMPATIBILITY
    a. Dry Countdown
    b. Egress Practice
    c. Suited Astronauts
    d. Cryogenics
12. SIMULATED FLIGHT WITH BOOSTER
13. WORK PERIOD
    a. Cleanup & Inspection
    b. Misc. Servicing
14. SPACECRAFT HYPERGOLIC SERVICING
15. SPACECRAFT PYROTECHNIC SERVICING
16. PRE-COUNT
17. COUNT

Figure 9-28 Vertical Assembly Building and Launch Pad Testing

[redacted]

SECTION X

TYPES OF GROUND SUPPORT EQUIPMENT

10-1 INTRODUCTION

A brief functional description of the presently planned Apollo Ground Support Equipment (GSE) is presented in this section. Information on equipment not described or just listed is to be supplied in subsequent editions of this document. Contractor's current model numbers are included where applicable to provide the reader with a reference if more detailed information is desired.

10-2 HANDLING EQUIPMENT

10-3 TRANSPORTATION

Spacecraft Vertical Transport Vehicle - NAA Model No. H14-036 - This powered transport vehicle provides a superstructure and mobile bed for transporting the assembled spacecraft, in the vertical position, from the assembly area to the launch pad over improved surfaces. It supports the assembled spacecraft safely and securely through the application of tiedowns and attachment points.

Positioning Trailer, Narrow Base - NAA Model No. H14-052 - This vehicle is provided to transport the heat shield, launch escape tower, and all GSE and handling slings for the LES. The trailer is constructed with rails at a 48-inch width and with a removable flat bed capable of being jacked 14 inches.

Aircraft Loading Set - NAA Model No. H14-058 - The aircraft loading set is used to transfer various components on pallets from the rail-transfer transport trailer to a C-133B aircraft. It is of light-weight construction

[redacted]

suitable for air transport and is capable of mating with the rail-transfer trailer and the 463L roller-conveyor system of the C-133B aircraft.

10-4 POSITIONING EQUIPMENT

General - A number of slings are required for handling various components of the spacecraft. They serve as a link between the handled item and the hoist, keep the handled item in a proper position during its transfer and are designed to have a high strength safety factor. The following list presents an identification of the various slings, and a few other items in the category of positioning equipment.

Command Module Sling - NAA Model No. H14-001

Launch Escape Tower Sling - NAA Model No. H14-002

Launch Escape System Motor Sling - NAA Model No. H14-003

Service Module Sling - NAA Model No. H14-022

Service Module Propulsion-Motor Sling - NAA Model No. H14-024

Sling, Flow Skirt-NAA Model No. H14-029

Jettison Motor Sling-NAA Model No. H14-043

Heat Shield Sling - NAA Model No. H14-056

Forward Compartment Shield Sling - NAA Model No. H14-057

Fuel and Oxidizer Tank Sling - NAA Model No. H14-060

Helium-Tank Sling - NAA Model No. H14-064

LO_2-Tank Sling - NAA Model No. H14-066

Antenna Sling - NAA Model No. H14-068

LH_2-Tank Sling - NAA Model No. H14-070

Spacecraft Sling (without LES) - NAA Model No. H14-073

Spacecraft Sling (with LES) - NAA Model No. H14-074

Sling-Horizontal Handling LES & LE Motor - NAA Model No. H14-085

Sling, Kicker Motor Interstage Structure - NAA Model No. H14-092

Sling-Jet Motor, Kicker Motor, Nose Cone - NAA Model No. H14-094

Sling Set-CM Test Vehicle - NAA Model No. H14-9001

Sling Set, Weight, and Balance - NAA Model No. H14-9006

Sling Assembly, Test Vehicle Adapter - NAA Model No. H14-9014

Adapter, Boiler Plate Sling - NAA Model No. H14-9002

SC Boilerplate Sling - NAA H14-9073

Sling Access Door SM - NAA Model No. H14-9077

Command Module Equipment Handling Set - NAA Model No. H14-019

Handling and Installation Set RCS - NAA Model No. H14-098

Equipment Handling Set - NAA Model No. H14-9019

Adapter, Rail Transfer, Flow Skirt - NAA Model H14-027

Adapter, Roll Over - NAA Model No. H14-084

Adapter BP Fitting Set - NAA Model No. H14-9004

Anthromorphic Handling Hornes - NAA Model No. H14-034

Polarity Test Fixture, G&N - NAA Model No. H14-089

Boatswains Chair - NAA Model No. H14-093

Hooks, Ballast Pickup LES - NAA Model No. H14-096

Wrench, Pitch Control Motor LES - NAA Model No. H14-099

Bridle, Parachute, Boiler Plate - NAA Model No. H14-9025

10-5 WEIGHTS AND BALANCE EQUIPMENT

General - All of the fixtures described in the list below are used for determination of weight and center of gravity of the subject item.

Launch Escape Weight-and-Balance Fixture - NAA Model No. H14-016 - The fixture incorporates a series of load cells mounted on a portable workstand and is mounted on casters.

Spacecraft Weight-and-Balance Fixture - NAA Model No. H14-017 - The fixture is utilized in the vertical checkout area prior to installation at the launch pad. It accomodates assembled equipment approximately 15 feet in diameter and 30 feet in height and includes reaction points for handling and installing the spacecraft equipment in the fixture. It provides for personnel access to the spacecraft equipment.

Service Module and Spacecraft Adapter Weight-and-Balance Fixture - NAA Model No. H14-059 -

(To be supplied)

Heat Shield, Weight and Balance Set - NAA Model No. H14-087 -

(To be supplied)

Jack Set - Weight and Balance - NAA Model No. H14-9015 -

(To be supplied)

SM and SC Adapter - Weight and Balance Fixture - NAA Model No. H14-9059 -

(To be supplied)

10-6 SUPPORT AND STORAGE EQUIPMENT

General - All equipment described in the list below is used for support of the subject item during storage and handling, unless otherwise specified. In general, the designs have a safety factor of about three times the maximum anticipated loads.

Command Module Support - NAA Model No. H14-008 - This support when attached to the CM forms a mounting platform which may be attached to the bed of a transport trailer.

Launch Escape System Alignment Stand - NAA Model No. H14-011 - The stand is used in conjunction with the LES optical alignment set for properly aligning the LES subsystems. It is also utilized in the vertical checkout area to support the escape system motor during maintenance, storage, servicing, and certain phases of transportation.

Escape-Tower Support - NAA Model No. H14-018 - This is employed to support the launch escape tower in a horizontal position during transportation and storage.

Service Module Support - NAA Model No. H14-030 - This support consists of a pair of welded tubular assemblies which clamp on the sides of the SM to form a pair of trunnion mounts for hoisting and roll-over operations. Cushion pads for the SM are provided. The support may be employed as a skid on a handling-rail.

Service Module Base-Support Stand - NAA Model No. H14-031 - This supports the SM on mounting pads at a suitable height from the floor in all maintenance and installation areas. The support and platform are of structural steel.

Service Module Workstand - NAA Model No. H14-032 - This item is a standard rail-type workstand.

Command Module Workstand - NAA Model No. H14-033 - This is a standard rail-type workstand.

Maintenance Stand - NAA Model No. H14-035 - This stand is for maintenance and modification of the CM in various work areas. It is a welded I-beam structure consisting of three working levels, stairways, and railing for supporting fifteen working men, and has an area for enclosing the CM.

Service Module Firing-Stand Adapter - NAA Model No. H14-037 - This item adapts the SM tiedown points to the static-firing test stands and provides restraint for the SM. It may also be used as a replacement for the SM during static-firing tests. It provides reaction points for the thrust of the LES motors and the SM Propulsion System.

Electrical Weight Kit (3000 lb. Capacity) - NAA Model No. H14-040 - (To be supplied)

Electrical Weight Kit (3000 lb. Capacity) - NAA Model No. H14-041 - (To be supplied)

Hoist Beam SM and SC Adapter - NAA Model No. H14-042 - (To be supplied)

Jettison-Motor Support - NAA Model No. H14-054 - This item is a standard rail-type stand assembly, for use in servicing and maintenance operations and in conjunction with a hoisting device.

Launch Escape Motor Support - NAA Model No. H14-055 - The support cradles the motor and serves as a connection to the hoisting device. It is of welded construction.

Fuel and Oxidizer Tank Support - NAA Model No. H14-061 - This support with clamps, spacers, racks, and tiedown fittings maintains several fuel and oxidizer tanks in a horizontal position for storage, checkout test, and certain phases of transportation.

Helium-Tank Support - NAA Model No. H14-065 - This support with sperical segments, braces, and clamping attachments is used for storage and during certain phases of transportation.

LO_2-Tank Support - NAA Model No. H14-067 - This item is similar to the helium tank support.

Antenna Support - NAA Model No. H14-069 - This support cradles the antenna and is used as a container and for handling during maintenance and ground checkout.

LH_2-Tank Support - NAA Model No. H14-071 - The LH_2-tank support has spherical segments, braces, and clamping attachments and is used for storage and certain phases of transportation.

Mission Propulsion-Engine Support - NAA Model No. H14-072 - This item cradles, holds, positions, raises, lowers, and protects the mission propulsion engine while in storage and during certain phases of transportation and facilitates installation or removal of the engine. The support has attachment fittings, positioning and lifting mechanisms and is used with other equipment to achieve moderate mobility.

Spacecraft Support Base - NAA Model No. H14-075 - This equipment provides support for the spacecraft while being transferred to various areas by a crane or trailer. The frame is of welded structural steel and the base has attachments for a sling and trailer mounting.

Fuel Cell Power Plant Service Dolly - NAA Model No. H14-081 -

(To be supplied)

LES Cradle Transport - NAA Model No. H14-083 -

(To be supplied)

Support Base and Stand - NAA Model No. H14-086 -

(To be supplied)

Stand Access Recovery Area - NAA Module No. H14-090 -

(To be supplied)

Stand Access - SM Hatch - NAA Module No. H14-091 -

(To be supplied)

Access Stand, Tower Adjustment Area - NAA Model No. H14-095 -

(To be supplied)

BP-25 Base Support - NAA Model No. H14-9026 -

(To be supplied)

Base Support, CM and Adapter - NAA Module No. H14-9030 -

(To be supplied)

General Purpose Dolly - NAA No. H14-9076 -

(To be supplied)

CM Support Base - NAA Model No. H14-9078 -

(To be supplied)

Support Stand CM - NAA Module No. H14-9079 -

(To be supplied)

Anthropomorphic Dummy Storage Rack - NAA Model No. H14-038 -

(To be supplied)

10-7 SERVICING EQUIPMENT

10-8 LIQUID SERVICING EQUIPMENT

Nitrogen Tetroxide N_2O_4 Transfer Unit - NAA Model No. S14-002 - This unit consists of a pump and controls for transferring N_2O_4 from ground storage to the CM and XM oxidizer-storage tanks, and for returning the oxidizer to ground storage tanks. Controls and instrumentation are module-type for rack-and-panel mounting. The panel displays include fluid flow, pressure, temperature, and total fluid transferred. The modules provide for maximum protection from possible operating hazards.

Water (H_2O) Transfer Unit - NAA Model No. S14-005 - The H_2O transfer unit includes a pump, storage tank and controls to transfer potable water from ground storage to the spacecraft and a receiver for water dumped from the spacecraft. Controls and instrumentation are of modular construction panel displays. Construction of stainless steel and maintenance of the transfer unit keeps the water in an uncontaminated potable condition.

50-50 EDMH and N_2H_4 Transfer Unit - NAA Model No. S14-008 - The 50-50 unsymmetrical dimethyl hydrazine and nitrogen hydrazine transfer unit consists of a pump and controls which safely transfer fuel from ground storage tanks to the SM and CM and for returning fuel to the ground storage tanks. The unit has modular construction and provides displays of fuel flow, pressure, temperature, and the total fuel transferred. The modules provide maximum protection from possible operating hazards. The transfer unit is a permanent installation at the launch and engine-test sites.

Fluid Distribution and Cable System, No. 1, Swing-Arm - NAA Model No. S14-012 - The system provides elevated positioning and separation of fluid

lines and cables from test equipment in the vertical checkout areas. All lines which can be blocked will incorporate safety devices, such as thermal relief valves. The swing arm will isolate the lines and cables from areas where damage may occur from vehicular or personnel movement.

Fluid Distribution and Cable System, No. 2 Swing Arm - NAA Model No. S14-013 - This swing arm is the same as No. 1 Swing Arm.

Fluid Distribution System (House) - NAA Model No. S14-014 - This fluid distribution system provides a link between the GSE systems and the spacecraft for the safe handling of exhaust fumes and for transmission of the fluids required for checkout and servicing of the spacecraft. Safety devices are provided to prevent failure of the distribution system during exposure to extreme environment. Hazardous fluids, which may be vented as a result of safety-device operation, are collected and disposed of safely at a remote area.

Freon Supply Unit - NAA Model No. S14-018 - This item is a freon supply and ground cooling unit of modular construction and consists of control valves, pumps, instruments, and a heat exchanger. The assembly provides the operator with a panel which displays all controls and instruments required for operation of the unit. The heat-exchanger loop dissipates the thermal loads generated in the spacecraft during ground operation and test with Freon which is supplied at temperatures, pressures, and flow rates to handle the spacecraft cooling load.

Ethylene Glycol - Water Transfer Unit - NAA Model No. S14-019 - The transfer unit consists of a pump and controls to transfer an ethylene glycol-water solution from a ground supply source or solution storage tank through the heat exchanger to the CM. The unit is of modular construction with a controls and instrumentation display. Material in contact with the fluid is

stainless steel and the system is designed and fabricated to prevent the entry of foreign matter after assembly and cleaning.

Inerting and Safing Recovery Unit - NAA Model No. S14-021 - The recovery unit consists of an inert-gas supply and a pumping and control system. It provides for removal of hazardous fluids from the CM at the recovery site, purging the CM storage tanks for safety, and safe storage and transfer of fluids. Installation of controls and instruments provides protection from hazards to personnel.

Liquid Hydrogen (LH_2) Transfer Unit - NAA Model No. S14-026 - The LH_2 transfer unit consists of a pump and controls for transferring LH_2 to the SM and for removing the hydrogen (H_2) leakage and boil-off to a safe location for disposal.

Liquid Oxygen (LO_2) Transfer Unit - NAA Model No. S14-032 - The LO_2 transfer unit provides a pump and a controls for transferring LO_2 to the fuel cells of the SM. The filtering elements remove ninety-eight percent of all foreign particles larger than 10 microns and 100 percent of all particles larger than 25 microns from the LO_2 and can operate 50 hours before any filter element requires cleaning or replacement.

Fluid Distribution Systems - These fluid distribution systems provide the necessary regulation and routing of gases, propellants, cryogenics, water, etc., from the storage areas to the test stands; adequate safety devices; and environmental protection. Hazardous fluids which are vented as a result of safety device operation are collected and disposed of safely at a remote area. The fluid distribution systems are in the following areas:

Engineering Acceptance Area - NAA Model No. S14-034

Static Firing Facility - NAA Model No. S14-035

AMR Hanger - NAA Model No. S14-036

Environmental Test Facility - NAA Model No. S14-037

RCS Facility - NAA Model No. S14-038

Pad No. 5 - NAA Model No. S14-039

Pad No. 34 - NAA Model No. S14-041

Pad No. 37 - NAA Model No. S14-042

Propulsion Development Test Facility - NAA Model No. S14-043

Environmental AEDC - NAA Model No. S14-045

Water Glycol Supply Unit - NAA Model No. S14-052 -

(To be supplied)

Ethylene Glycol Fluid Trim Control Unit - NAA Model No. S14-053 -

(To be supplied)

Fuel Cell Power Plant-Water Glycol Service Unit - NAA Model No. S14-054 -

(To be supplied)

Service Unit R&D (Instrument) Cooling System - NAA Model No. S14-055 -

(To be supplied)

10-9 GAS SERVICING EQUIPMENT

Module Leak-Test Unit - NAA Model No. S14-001 - The module leak-test unit is used for leak-testing the CM. It is an assembly containing instruments, controls, modular-type pumps, and a display panel.

Mass Spectrometer Leak Tester - NAA Model No. S14-003 - This tester includes a detectable-gas source and attachment device. It provides for performing sensitive tests of low-order leak rates for systems, subsystems, and components.

[redacted]

Re-entry Oxygen Supply Unit - NAA Model No. S14-006 - The supply unit is designed to charge the supercritical storage tanks for the CM with high-pressure breathable oxygen. It includes storage transfer, and boost systems which are free from contaminants and which satisfy test requirements of the spacecraft for fluid metering and allowable transfer time.

Helium (He) Transfer Unit - NAA Model No. S14-009 - This unit is a pump, control, and storage system for transfer of high-pressure helium gas, at specified conditions to the spacecraft.

Helium Booster Unit - NAA Model No. S14-022 - The booster unit is a compressor heat-exchanger system used to increase the pressure of helium, received in standard commercial high pressure bottles, by approximately 2000 psi, to the high pressures required for spacecraft storage. It includes provisions to filter and dry the helium and to maintain the temperature of the helium.

Nitrogen (N_2) Pressurization Unit - NAA Model No. S14-033 - The N_2 pressurization unit controls the supply of nitrogen by providing the precise pressures required for actuation and stimulation of mechanical and electro-mechanical components of the spacecraft. It is also used for purging, drying, and leak checking the various Apollo spacecraft systems.

10-10 ELECTRICAL SERVICING EQUIPMENT

Battery-Charging Unit - NAA Model No. S14-015 - This unit is used for charging the spacecraft silver zinc batteries. With manual control and over-load protective devices, it provides for a variable charging rate.

[redacted]

10-11 DESICCATING SYSTEMS

The following systems are provided for desiccating purposes:

Extended-Storage Desiccant System - NAA Model No. S14-007 - This desiccating system provides a means for recovery and storage of the desiccant utilized by the tank desiccating systems. The system is used in the assembly area and incorporates quick connect and disconnect features. Instrumentation provides temperature, time, and quality histories of the desiccant during recovery. Filter performance is at the nominal 10-micron level and provides absolute separation at and larger than the 25-micron level.

Helium (He) Tank Desiccant System - NAA Model No. S14-023

Liquid Hydrogen (LH_2) Tank Desiccant System - NAA Model No. S14-025

Nitrogen Tetroxide (N_2O_4) Tank Desiccant System - NAA Model No. S14-027

(N_2H_4) Tank Dessicant System - NAA Model No. S14-028

Liquid Oxygen (LO_2) Tank Desiccant System - NAA Model No. S14-031

10-12 CLEANING EQUIPMENT

Vacuum Cleaner Servicing Unit - NAA Model No. S14-044 - The cleaning unit provides an independent receiver and vacuum source for the purpose of withdrawing refuse from pick-up and distribution systems and trapping the refuse within the servicing unit. It regulates the incoming gas flow, filters the gas discharged to the atmosphere, and provides operator controls, safety provisions, and instrumentation. The servicing unit is used in the Engineering Acceptance, House Spacecraft and AMR site areas.

10-13 CHECKOUT EQUIPMENT

10-14 FAULT DETERMINATION EQUIPMENT (AUTOMATIC & MANUAL)

Barometric Checkout Group - NAA Model No. C14-002 - The CM barometric checkout group provides pneumatic simulation, control, and panel displays for checkout of the pressure altimeter, airspeed indicator, and other barometric devices used in the spacecraft atmospheric envelope. It provides instrumentation and controls for manipulation of atmospheric envelope parameters and their readout.

Carry On Test Adapter - NAA Model No. C14-005 -

(To be supplied)

Telecommunications System Checkout Group (Collins Radio) - NAA Model No. C14-008 - The CM checkout group performs checkout of the various telecommunication systems, including near-field communications, intercommunications, television, telemetry antennas recorders, VHF and UHF transmitters and receivers, C and S band transponders, HF and VHF recovery beacons, clocks, and ranging system equipment; and it is employed for checkout and troubleshooting of subsystems. The checkout group supplies stimuli and measurement equipment, and is integrated into the complete GSE complex to permit automatic or semi-automatic checkout after assembly of the spacecraft. It provides the proper logic levels, signals and commands to the equipment while in remote and automatic mode of operation, and also operates in manual modes for which visual displays are provided for verification and monitoring of functions. Each section of the checkout group is capable of performing checkout functions when operated separately.

Crew System Checkout Group - NAA Model No. C14-009 - The CM crew system checkout group performs checkout and monitoring functions on bio-medical and life sustaining devices, and associated equipment which is employed in connection with operational procedures for sustaining life. Means for checkout of personal equipment such as oxygen supply, human hygiene apparatus, survival gear and pressure suits, and bio-medical reporting are included. The group employs mechanical, man-machine, electrical and auxiliary equipment for these checkout operations. Some other examples of checkout areas are: communication from bio-medical devices to telemetry equipment, dosimeters, personal parachutes, couch operation and control, restraints, sleeping area, windows, compartment lighting, escape systems, water purification equipment, eating and drinking devices, lift rafts, location aids. The checkout group of equipment is employed for supporting installation, acceptance, and checkout of spacecraft systems. It may be used at Downey, at MSC and in the prelaunch area.

Command and Service Module Reaction Control System Checkout Group - NAA Model No. C14-011 - This checkout group is used in tests to determine functional integrity and flight readiness, to determine engine readiness, oxidizer pressure and temperature, quantity and condition of fuel, position of the engine gimbal, and condition of the propellant malfunction and fire and emergency warning systems. The checkout group provides the proper signals and checks on various subsystems and components of the CM and SM Reaction Control Systems. The checkout includes operation of the stabilization and control system and manual override controls, and tests for proper magnitude and duration of reaction-jet operate signals.

Pyrotechnics Systems and Sequence Checkout Equipment - NAA Model No. C14-013 (Explosive Devices Checkout Group) - The CM explosive devices checkout group performs the checkout tests on all pyrotechnic systems and components. It verifies proper functioning of all circuits to explosive devices including both sides of all redundant circuits. All units are set up for uniform test procedures where possible. It tests for unwarranted signals as well as for presence of the required signals.

Protractor Set - NAA Model C14-017 - The protractor set is used in conjunction with the stabilization and control checkout group and provides a means of measuring engine angular position for alignment and checkout of the SM propulsion engines. It provides an electrical signal proportional to the engine angular position.

Launch Escape System Bench Maintenance Equipment - NAA Model No. C14-029 - This equipment performs functional tests to determine whether the subsystem and components of the LES, and its GSE, are performing within specified limits. The equipment is able to locate failure of malfunctioning parts within the LES.

On-Board Recorders Checkout Group - NAA Model No. C14-031 - The group checks out the electrical and mechanical operation of the NASA R&D instrumentation recorders and equipment.

Antenna Checkout Group - NAA Model No. C14-032 - The antenna checkout group tests the telecommunication antennas in all checkout areas, and may be integrated into the GSE complex to permit automatic or semi-automatic checkout of the antenna systems at the launch site.

Command Module and Service Module Electrical Power System Bench Maintenance Equipment - NAA Model No. C14-040 - This equipment supplies necessary power and makes measurements to perform a complete functional test of each component of the CM and SM Electrical Power Systems. It is capable of performing malfunction location and isolation in order to facilitate repairs. For example, it functions in static and dynamic tests of pneumatic controllers, static and synamic load tests of electrical power generating and converting equipment, signal tracing under load to evaluate detailed circuit performance.

Navigation and Guidance System Bench Maintenance Equipment - NAA Model No. C14-041 - The equipment has the capability for functional testing and troubleshooting each removable component of the Navigation and Guidance System and associated ground support equipment. Included are the following checks and operational tests:

a. Operational of digital components.

b. Running of computer through all arithmetic operations to verify correctness of computer logic, including marginal tests to establish system reliability.

c. Conducting subroutines to identify faulty or marginal components.

d. Measurement of gyro and accelerometer constants to determine that constants are within allowable limits.

e. Checking of platform for balance, drag, and pickoff accuracy.

f. Optical checking of star sighter.

g. Testing of individual logic-circuit components to locate faults.

Crew Systems Bench Maintenance Equipment - NAA Model No. C14-047 - This equipment provides the means to verify whether crew system components that have been removed from the spacecraft function properly. Equipment to be tested will include bio-medical equipment, personal equipment, life-sustenance equipment, and survival equipment. The maintenance equipment aids in the repair of both electrical and mechanical components of the crew system. These are some of the checkout functions:

a. Check bio-medical sensors and associated electronic components.

b. Check electronic components of pressure suits, including communications and environmental equipment.

c. Test operation and calibration of radiation dosimeters.

Command Module and Service Module Reaction Control System Bench Maintenance Equipment - NAA Model No. C14-049 - Functional tests determine whether the subsystems and components of the CM and SM Reaction Control Systems and their GSE are performing within the specified limits. The bench maintenance equipment is used for identification of malfunctioning parts such as might be determined in testing propellant control valves for actuating speed, maximum flow rate, and shut-off leakage, and checking calibration of helium pressure regulators.

Pyrotechnics Bench Maintenance Equipment (Explosive Devices Bench Maintenance Equipment) - NAA Model No. C14-051 - The equipment is used to perform checkout tests of all pyrotechnic systems and components and to make detailed tests to identify malfunctioning parts. These uses include the performance of confidence tests on all explosive devices immediately prior to final installation in the spacecraft.

Telemetry/Radar/Command Bench Maintenance Equipment - NAA Model No. C14-053 - This equipment provides a means of performing functional tests on, and isolating malfunctions in, the telemetry, radar communications, command systems and their subsystems.

In-Flight Test and Maintenance Systems Bench Maintenance Equipment - NAA Model No. C14-058 - This maintenance equipment is employed in tests on modules of the on-board in-flight test and maintenance system and the programmer converter. In the event that a malfunction is indicated, the test set isolates the malfunction to a repairable level.

Propulsion System Checkout Group - NAA Model No. C14-075 - The SM checkout group performs checkouts of engine readiness, oxidizer pressure and temperature, quantity and condition of fuel, the engine gimbal, propellant malfunction system, and the fire and emergency warning systems. It performs functional tests on the two major subsystems, the vernier propulsion engines and the mission propulsion engines, and the associated propellant pressurization electrical control systems. Tests do not involve actual transfer of fuel and oxidizer because of the hazards, but are restricted to the checking of control devices and associated electrical circuits. Examples of tests are:

a. Frequency response of gimbal servo drive

b. Operation of attitude control and vernier engine solenoid valves and their control circuits.

c. Test of mission propulsion engine sequence controller

Propulsion-System Bench Maintenance Equipment - NAA Model No. C14-079 - In performance and troubleshooting tests on each subsystem and component of the SM Propulsion System and associated GSE the equipment is used in the following tests:

a. Perform functional and timing test on mission propulsion-engine sequence programmer.

b. Test function of vernier propulsion controller.

c. Test operation of solenoid valves.

d. Check and calibrate transducers.

e. Check calibration of pressure regulators and relief valves.

Fuel Cell Development Test Stand Bench Maintenance Equipment - NAA Model No. C14-084 -

(To be supplied)

Prototype SCS Bench Maintenance Equipment - NAA Model No. C14-092 -

The SCS bench maintenance group is that equipment used to evaluate performance of the Stablization and Control System and its components under bench conditions. Interface simulators are included to allow the SCS to be tested in an operating systems mock-up and gyros are rotated by the use of gyro attitude and rate tables. The bench maintenance group provides diagnostic capabilities to isolate malfunctions. Following are some of the equipment functions.

a. Check gyro performance.

b. Check servo-loops performance.

c. Supply stimuli to vector-jets throttle and position control subsystem.

d. Check components.

e. Check out attitude and rate display panel.

Environmental Control System High Pressure Gaseous Bench Maintenance Test Stand - NAA Model No. C14-109 -

(To be supplied)

Environmental Control System Low Pressure Gaseous Bench Maintenance Test Stand - NAA Model No. C14-110 -

(To be supplied)

Radar Transponder and Recovery Beacon Checkout Unit - NAA Model No. C14-112 -

(To be supplied)

Environmental Control System Bench Maintenance Test Stand - NAA Model No. C14-120 -

(To be supplied)

Environmental Control System Major Subassembly Bench Maintenance Test Stand - NAA Model No. C14-121 -

(To be supplied)

Test Set Nozzle Extension Flange Leak Test - NAA Model No. C14-125 -

(To be supplied)

Earth Landing System Sequence Bench Maintenance Equipment - NAA Model No. C14-126 -

(To be supplied)

Test Fixture, Q-Ball - NAA Model No. C14-137 -

(To be supplied)

Test Unit Combined System, Command Module - NAA Model No. C14-138 -

(To be supplied)

Test Unit Combined System, Service Module - NAA Model No. C14-139 -

(To be supplied)

Data Equipment Bench Maintenance Equipment - NAA Model No. C14-140 -

(To be supplied)

Deep Space Instrumentation Facility Transponder and Power AMR Equipment Bench Maintenance - NAA Model No. C14-141 -

(To be supplied)

C-Band Transponder Equipment Bench Maintenance Equipment - NAA Model No. C14-142 -

(To be supplied)

Communication and Antenna Equipment Bench Maintenance Equipment - NAA Model No. C14-143 -

(To be supplied)

10-15 ELECTRICAL SUPPORT EQUIPMENT

Test Conductor Group - NAA Model No. C14-019 - This equipment group controls combined or individual systems tests through the individual systems checkout groups. Tests may be controlled manually or automatically according to the prescribed program. A computer is programmed to analyze system performance and make decisions regarding alternate procedures. Information pertaining to the test being conducted is displayed and recorded. Data from spacecraft telemetry may be accepted and processed.

Electrical Junction-Box Set - NAA Model No. C14-025 - The CM electrical junction-box set consists of rack-mounted terminals, circuit breakers, warning lights, power switches, and other items for power distribution, overload protection and safety. Permanent installations of this equipment are provided at the Downey acceptance area and at the AMR hangar and launch areas. The junction-box set is a connection center for power and signal circuits between various groups of checkout equipment for different test arrangements.

Calibration Unit - NAA Model No. C14-056 - The calibration unit employs an assembly of primary and secondary standards suitable for verification of accuracy of transducers, pressure switches, gages, relief valves and like equipment. The unit consititutes a transfer standard for calibration of both spaceborne and GSE instrumentation. It includes circuitry to transmit stimuli to components being tested and to monitor signals from the components. It is to be used in all areas in which instrumentation systems are operated and checked out.

Propulsion-Test Control Group - NAA Model No. C14-076 - The test control group provides control of the mission propulsion system during all developmental, qualification, and acceptance test firings. Controls are identical to those in the spacecraft, and are to be utilized for evaluation of and as back-up to spacecraft controls in static firings controlled by the crew in the CM.

Stablization and Control System Bench Maintenance Equipment (Stablization and Control System Rate Table Auxiliary Equipment) - NAA Model No. C14-095 - This equipment is used during bench test activities to apply controlled rates to the stablization and control system rate gyro for checkout and maintenance purposes. Component and system response are evaluated as a function of this mechanical input.

Cable Set, Electrical - NAA Model No. C14-108 - The cable set contains the cable assemblies to provide electrical interconnection between GSE.

Signal Conditioner - NAA Model No. C14-135 -

(To be supplied)

Umbilical Junction Box - NAA Model No. C14-136 -

(To be supplied)

Pressure Vacuum Stimuli Group - NAA Model No. C14-154 -

(To be supplied)

Carry-On PCM System - NAA Model No. C14-210 -

(To be supplied)

Carry-On Stimuli Generator - NAA Model No. C14-220 -

(To be supplied)

Servicing Equipment Space Adapter - NAA Model No. C14-240 -

(To be supplied)

10-16 TELEMETRY GROUND STATION EQUIPMENT

Telemetry Ground Station (Van) (R&D) - NAA Model No. C14-021 - A telemetry station plus associated equipment, in a mobile van, is supplied by North American Aviation, Inc., Space and Information Systems Division, for use at field-test sites to support boilerplate test vehicles.

Telemetry Ground Station (AMRH) - NAA Model No. C14-022 - This telemetry ground station has a fixed location in the AMR hanger. It consists of receiving equipment only, but, in this sense, it augments GSE checkout of spacecraft systems. The ground station receives PAM from the launch vehicle and PCM from the spacecraft systems. It has the capability of decommutating, converting, recording and preparing this data for display and monitoring purposes.

Telemetry/Radar/Command Monitor Equipment (R&D) - NAA Model No. C14-090 - The equipment is used to monitor selected parameters of each individual spacecraft system during combined systems test, pre-launch, launch, and early flight operations. Limit comparators are provided to continuously monitor selected critical parameters for an out-of-tolerance condition. The information displayed allows the equipment operator to assess the overall system performance. Controls are provided for selection of data to be displayed and insertion of comparator limits. The equipment accepts serial binary coded decimal data for conversion and display.

10-17 DATA RECORDING AND DATA EQUIPMENT

Data-Recording Group - NAA Model No. C14-020 - The CM data-recording group records information from various test groups during test and launch operations. Data recorded consists of high-speed digital information (magnetic tape), low-speed digital information (printer, typerwriter), on-off signal information (Sanborn pen), and analog signal information (strip chart, X-Y plotter); and is accepted from individual system checkout groups, or from the test conductor group. Data is accepted without conversion or special processing.

Mobile Data-Recording Group - NAA Model No. C14-089 - The mobile data recording group is provided to record information from the various test groups during in-house spacecraft testing. It is used for trouble-shooting, for "quick-look" recorded data, and for acceptance tests.

Data Interleaving and Command System - NAA Model No. C14-230 -

(To be supplied)

10-18 AUXILIARY EQUIPMENT

10-19 SIMULATORS AND DUMMIES

Launch Escape Tower System Simulator - NAA Model No. A14-001 - The simulator is an auxiliary item of equipment to facilitate spacecraft systems checkout through simulation of actual launch escape tower system functions. When connected to the CM, the simulator receives and measures electrical signals, determines from signal characteristics whether or not the signals would reliably operate the launch escape tower systems, and transmits results of measurement and analysis to the CM system test group. Specific launch escape tower system functions to be simulated include yaw - engine start, thrust-chamber nozzle start, and jettison-motor start.

Command Module Simulator - NAA Model No. A14-002 - The simulator is an auxiliary device for testing the SM systems with the SM and CM unmated. The simulator includes subsystems and components to generate and receive electrical signals for performing checkout functions. The capabilities of the simulator include the following functions:

a. Provide for a load test of the power generating system.

b. Supply ground power to the SM busses.

c. Control fuel-cell operation and fuel-system pressurization.

d. Generate control commands for functional test of vernier propulsion, attitude control, and mission propulsion-engine firing sequence programmer.

e. Receive monitor signals from the glycol water cooling system.

f. Provide for functional tests of Telecommunications and Instrumentation Systems.

Explosive-Devices Simulator Set - NAA Model No. A14-003 - The explosive-devices simulator set is auxiliary equipment facilitating GSE combined systems checkout of the spacecraft and launch vehicle firing circuits without firing any of the explosive devices. The simulator measures the magnitude of the firing impulse to determine whether the explosive device would have fired, and verifies that no undesired impulses are present to cause accidental firing.

Service Module Simulator - NAA Model No. A14-016 - The simulator, when used in conjunction with the spacecraft adapter simulator and the launch vehicle simulator, assists in checkout of the CM without utilizing the SM. The simulator provides to either SM interface, a facsimile of the SM signals, power requirements, loads, and other functions. No provisions are made for simulation of self contained functions of the SM.

Spacecraft Adapter Simulator - NAA Model No. A14-017 - This simulator supplies signals and functions that are supplied operationally by the Adapter to the spacecraft and the launch vehicle, and so, facilitates combined-systems check-out of these neighbors without an adapter. Primarily, the adapter simulator consists of wiring, since only a few signals or functions have their origin in the Adapter. The signals are primarily sensor responses.

Launch Vehicle Simulator - NAA Model No. A14-018 - The equipment presents to the SM-CM combination (CSM), an interface which is electrically similar to the launch vehicle. It accepts control signals from the CSM and produces system responses to facilitate a complete functional checkout and test of the CM and SM functions. Specific functions simulated include:

a. Acceptance of on-off type command signals and generation of appropriate responses.

b. Receipt of servo-drive signals and feedback of appropriate signals.

c. Generation of calibrated analog signals to test the instrumentation system.

Launch Vehicle Intermodule Simulator, C-1 - NAA Model No. A14-021 -

(To be supplied)

Command Module Ground Support Equipment Verification Simulator - NAA Model No. A14-029 -

(To be supplied)

Service Module Ground Support Equipment Verification Simulator - NAA Model No. A14-030 -

(To be supplied)

Command Module Fluid System Intermodule Simulator - NAA Model No. A14-031 -

(To be supplied)

Service Module Fluid System Intermodule Simulator - NAA Model No. A14-032 -

(To be supplied)

Environmental Control System Metabolic Simulator - NAA Model No. A14-033 -

(To be supplied)

Launch Escape Motor Dummy - NAA Model No. A14-38 -

(To be supplied)

Launch Escape System Tower Jettison Motor Dummy - NAA Model No. A14-039 -

(To be supplied)

Launch Escape System Kicker Motor Dummy - NAA Model No. A14-040 -

(To be supplied)

Launch Escape System Equipment Simulator Set - NAA Model No. A14-048 -

(To be supplied)

10-20 PROTECTIVE AND ENVIRONMENTAL CONTROL EQUIPMENT

Protective Covers - Covers protect each of the major units of the spacecraft from the detrimental effects of weather during transporation. These covers are constructed of rubberized fabric, equipped with suitable means of attachment, and fit the contour of the particular unit. The following covers will be provided:

a. Spacecraft Adapter Cover - NAA Model No. A14-009

b. Command Module Cover - NAA Model No. A14-010

c. Service Module Cover - NAA Model No. A14-020

d. Launch Escape System Cover - NAA Model No. A14-022

e. Transport Cover Set - NAA Model No. A14-012

Cap and Plug Set - NAA Model No. A14-026 - The cap and plug set provides dustproof covers for all openings to maintain system cleanliness in the LES CM, and SM during shipment or storage. These cover all interface openings, ducts, and pipe openings.

Adapter Cap and Plug Set - NAA Model No. A14-027 - This set has the same functions for the Adapter as those described above.

Pressure Distribution Unit - NAA Model No. A14-034 -

(To be supplied)

Ground Air Circulating Unit - NAA Model No. A14-036 -

(To be supplied)

Adapter and Duct Set - NAA Model No. A14-037 -

(To be supplied)

Gyro Heater and Temperature Controller - NAA Model No. A14-042 -

(To be supplied)

Protective Closure and Installation Kit, Nozzle Extension - NAA Model No. A14-043 -

(To be supplied)

Nozzle Closure (Duct Cover) NAA Model No. A14-044 -

(To be supplied)

[redacted]

Nozzle Plug - NAA Model No. A14-045 -

(To be supplied)

10-21 CLEANING EQUIPMENT

Cleaning Positioner, Spacecraft (Command and Service Module Debris Tumbler) - NAA Model No. A14-014 - The CM and SM debris tumbler consists of a stand and rotatable gimbals. The tumbler can rotate the CM or SM through 360 degrees on any of the three axes to dislodge debris in order that it may be detected and removed.

Vacuum-Cleaner Set - NAA Model No. A14-025 - This set is provided to maintain CM cleanliness prior to spacecraft flight. Manually-operated, it provides hose and attachments for directing a vacuum source to the CM debris traps.

Vacuum Cleaner - NAA Model No. A14-035 -

(To be supplied)

10-22 UMBILICAL EQUIPMENT

Umbilical-Disconnect Set - NAA Model No. A14-019 - The disconnect set which performs connection and disconnection functions provides a grouped-connection configuration for the test area servicing facilities. The set consists of a match-plate and retractable-mechanism assembly with connections in a position which mate with the vehicle connections. Fluid disconnects are self-sealing and an open condition is indicated.

Umbilical Disconnect Set - (Boilerplate and House Spacecraft) - NAA Model No. A14-024 - This set is similar to the preceding set (Model No. A14-019) except that it is used with boilerplate spacecraft numbers 13 and 15 and the house spacecraft.

[redacted]

10-23 ALIGNMENT AND POSITIONING EQUIPMENT

Launch Escape System Optical-Alignment Set - NAA Model No. A14-007 - The LES optical-alignment set is used to optically align the nose cone, jettison motor, the main motors, thrust-vector motors, and the launch escape power prior to assembly to the spacecraft. It is a rail-guide-mounted table with supporting frame and optical mounting plates. Alignment of motors may be accomplished in the horizontal and vertical positions.

Holding Fixture - NAA Model No. A14-013 -During testing this fixture holds Boilerplates No. 6 and 20 to the launch pad by clamps and leveling lugs which separate in the proper sequence. It supports and positions the CM and launch escape propulsion system during pad abort tests.

Control Crane, Auxiliary - NAA Model No. A14-046 -

(To be supplied)

Box Level - NAA Model No. A14-047 -

(To be supplied)

CHAPTER 4 GROUND OPERATIONAL SUPPORT SYSTEM

SECTION XI

FUNCTION AND DESCRIPTION

11-1 INTRODUCTION

The Apollo Ground Operational Support System (GOSS) is a system of ground stations and complexes which are distributed world-wide and provide the Apollo spacecraft and launch vehicle with mission support during all phases from prelaunch through post-recovery. The Apollo GOSS includes the following:

a. Integrated Mission Control Center (IMCC) - provides overall mission control and coordination.

b. Launch Control Center (LCC) - provides detailed control of the prelaunch, countdown and launch phases of the Apollo mission.

c. Recovery Control Centers - provide detailed control of the equipment and personnel associated with the recovery phase of the mission at each of the recovery areas.

d. Global Tracking Networks - provide data collection, limited processing and transmission of information obtained from the space vehicle to the control centers. Receives data, information and commands as transmitted from the primary control centers, and transmits the data to the space vehicle.

e. Intersite Communications Facilities - provide world-wide communications between all of the Apollo GOSS sites.

The GOSS supports the Apollo missions by performing the following basic functions:

a. Provides over-all mission command and control for both manned and unmanned Apollo missions from prelaunch through post recovery.

b. Provides direct support to the spacecraft crew by supplying performance and status information and by recommending or commanding alternate missions or possible mission aborts.

c. Collects, analyzes and disseminates scientific data for use in future Apollo missions and other scientific programs.

d. Provides information that upon review may be disseminated to the general public.

The evolution of the GOSS has the inherent objective of conservation of national resources. The Apollo Ground Operational Support System is comprised of a large complex of equipment and personnel subsystems. Most of these establishments provide support for other NASA and/or military space exploration programs in addition to the Apollo program. Therefore, the needs of all space programs placed upon the GOSS are to be integrated as a set of requirements for one global system. Other programs include the Mercury and Gemini space programs, the Ranger and Surveyor lunar exploration programs, and the Mariner, Venus and Mars exploration programs which have various development-time scales in relation to that of Apollo. Since, in general, the requirements of the GOSS for each successive program are greater, the development of the Apollo GOSS is being accomplished in a "building block" fashion with the Mercury and present deep space programs serving as a base.

11-2 FUNCTIONS

The functions to be performed by the Apollo GOSS can be considered under two categories, Mission and Non-Mission, which are described below.

11-3 MISSION FUNCTIONS

These functions encompass activities through countdown, launch, flight, recovery, and post-recovery phases of any particular mission.

Direct Spacecraft Crew Support As Follows:

a. Provides two-way voice communications between the spacecraft crew and selected personnel in the ground control centers. This type of communication provides for a quick assessment of data and information from various sources, for an evaluation of situations which require deviations from the established detailed mission plan, for an integration of decision and command, and allows the GOSS personnel to obtain specific information that may not otherwise be readily available.

b. Provides for the reception, reduction, and display of selected spacecraft telemetry data at the Mission Control Centers so that performance and status of the spacecraft and crew can be monitored by the center's personnel.

c. Provides for the transmission of data, decisions, and command from the Command and Control Centers.

d. Provides spacecraft trajectory information and assists the flight crew to determine what, if any, trajectory changes or corrections are required and how the changes should be made.

e. Provides for the reception of television data from the LEM so that the GOSS personnel can aid the spacecraft crew in evaluating the lunar surface and lunar operations.

f. Provides for the derivation of data by the GOSS and transmission to the spacecraft. This information may be prime, or it may be data used for comparison or for updating spacecraft derived data.

g. Maintains throughout the mission a detailed alternate mission and mission abort plan so that the spacecraft crew can be immediately advised of recommended or required actions.

Indirect Spacecraft Crew Support As Follows:

a. Provides two-way voice communication between selected operating personnel located at each of the GOSS sites, and between the GOSS sites and Mission Control Centers, and associated government agencies.

b. Provides for transmission of spacecraft and crew data to the Mission Control Centers so that the data can be processed and displayed.

c. Provides for transmission of data to other GOSS sites for utilization at those sites or retransmission to the spacecraft.

d. Provides for transmission of GOSS site status and mission analysis information from each site to the Mission Control Centers for processing and display.

e. Provides for transmission of a time standard to all GOSS sites and the spacecraft to establish a common reference to which all data can be synchronized and properly identified.

f. Provides for recording of all pertinent data for use in analysis and training.

[redacted]

g. Locates and assists in recovering the spacecraft and crew from land or water anywhere on earth.

h. Provides for display of the over-all mission status and information for the Mission Control Centers personnel.

i. Provides for analysis of data so that potential hazards can be predicted or existing hazards determined.

11-4 NON MISSION FUNCTIONS

These functions encompass a variety of activities in general support of the Apollo Program, but, except for some overlap of functions to the mission category described above, do not include support of prime operational missions. These functions can be classified under the following:

a. Provides for personnel training.

b. Provides mission simulation in whole or in part so that system operation and proposed system changes can be evaluated.

c. Develops new procedures, techniques, and equipment in connection with presently planned and future space programs.

d. Evaluates and compares past mission and simulated mission performances.

e. Performs other administrative and technical functions.

11-5 DESCRIPTION

11-[illegible] INTEGRATED MISSION CONTROL CENTER (IMCC)

The IMCC, located at Clear Lake, near Houston, will have the capability of monitoring the spacecraft and directing the support elements for all phases of the Apollo missions, including unmanned and manned earth-orbital and lunar flights. The IMCC utilizes the services provided to it by the Launch Control

[redacted]

Center, the Global Tracking and Communication Networks, The Computer Complex at Houston, the Recovery Control Centers and forces, and the data reduction facilities.

Major Systems - The major systems of the IMCC are:

a. Real Time Computer Complex (RTCC)

b. Communication System

c. Mission Control Area

d. Simulation System

Real Time Computer Complex (RTCC) - The RTCC performs these functions:

a. Processes all the necessary calculations connected with the mission.

b. Performs and evaluates simulation exercises and training.

c. Collects tracking data from remote stations and continuously evaluates the performance of the spacecraft and GOSS.

d. Furnishes designated acquisition data to all remote stations.

e. Processes critical performance data to determine flight parameter changes to be made either by the spacecrew or GOSS.

f. Accepts and processes all telemetry data for display and recording.

g. Supplies information to all displays and consoles at IMCC.

h. Processes and analyzes all post flight data in conjunction with data reduction facilities.

i. Performs special calculations as required.

Communication System - This network system terminates at the IMCC facility. The data consists of voice, teletype, high-speed and low-speed

digital information, and television signals. The facility includes the intercommunication system for the Control Center.

Mission Control Center - This is the control point or operations room from which the mission control will be exercised. It will be the prime display area for aeromedical and spacecraft systems data and trajectory monitoring.

Simulation System - This system ties together the IMCC spacecraft trainer and the operational equipment. The system provides for the training of the flight controller personnel with the spacecraft crew in closed-loop exercises. It assists in the checkout of the IMCC and the GOSS prior to actual flight.

11-7 LAUNCH CONTROL CENTER (LCC)

The launch control, including the space vehicle preparation and checkouts, and the launch countdown will be conducted from the LCC at Cape Canaveral. LCC facilities include the displays and communications necessary for monitoring the progress of the mission countdown and powered flight phase.

11-8 RECOVERY CONTROL CENTERS (RCC)

The exact locations and operational configurations of the RCC's are not known at this time. Plans are being considered where one landing area would be located in South Texas and one in Western Australia. The RCC's would be equipped with re-entry and terminal tracking capabilities, spacecraft communication, meteorological aids, etc. There will be a communication link with the IMCC.

The IMCC supplies the RCC's with the acquisition data for tracking and the likely impact time and location of the re-entry vehicle.

The major functions of the RCC are to:

a. Supply the IMCC, on demand, information concerning the

disposition and readiness of recovery forces and any other information that may be useful to the IMCC.

b. Acquire the spacecraft by its own devices or from designated data, track the spacecraft throughout the re-entry period and relay the tracking and other data to the IMCC.

c. Establish the impact point and direct the recovery operations in the most expeditious manner.

d. Recover the crew and the spacecraft.

11-9 GLOBAL TRACKING NETWORKS

The GOSS tracking and communication facilities are composed of the following facilities.

a. Near Earth Instrumentation facilities. These are essentially the present Mercury Tracking Network.

b. Deep Space Instrumentation Facilities are currently the existing JPL stations.

c. Tracking ships and possible relay aircraft.

d. Instrumented recovery aircraft.

e. Training and checkout aircraft.

Other networks, such as Minitrack and the Goddard Range and Range Rate system, might be used if necessary or under contingency conditions.

Near Earth Instrumentation Facility (NEIF) - The primary near earth tracking and communications network to be used for Apollo earth orbital flights will be the present Project Mercury network, with some modifications inherited from Project Gemini and augmented as necessary to satisfy the special needs of Project Apollo.

The general tracking capabilities of the Mercury network are summarized in table 11-1. The communication facilities are listed in table 11-2. A new

SITE	CODE	LOCATION	COORDI-NATES	ACTIVE ACQUI-SITION AID	RADAR TRACKERS		SECONDARY DATA EQUIPMENT					Plotboards	RADAR HANDOVER SITES	ORGANIZATION
					"S" BAND	"C" BAND	P-C Conv.	C.P. Conv.	A-D Transm.	D-A RCVR.	D-TTY			
M-1	CNV	Cape Canaveral	28.5N 80.6W	--	MOD. II	FPS-16	*	*	*	*	*	*	*	DOD-AMR
M-2	BDA	Bermuda	32.4N 64.7W	*	Verlort	FPS-16	*				*	*	*	NASA
M-3	RKV	Mid-Atlantic Ship	28.0N 40.0W	*	-------	------	*		*	*		*		DOD-AMR
M-4	CYI	Grand Canary Island	27.7N 15.6W	*	Verlort	------	*		*	*	*	*		NASA
M-5	KNO	Kano, Nigeria	11.6N 8.3E	*	-------	------								NASA
M-6	ZZB	Zanzibar, E. Africa	7.3S 39.3E	*	-------	------								NASA
M-7	CSQ	Indian Ocean Ship	28.4S 73.7E	*	-------	------								DOD-AMR
M-8	MUC	Muchea, W. Australia	31.6S 115.9E	*	Verlort	------	*				*	*		WRE
M-9	WOM	Woomera, S. Australia	31.2S 137.1E	*	-------	FPS-16					*			WRE
M-11	CTN	Canton Island	2.8S 171.7W	*	-------	------								DOD-PMR
M-12	HAW	Kauai, Hawaii	22.2N 159.6W	*	Verlort	FPS-16	*				*	*		DOD-PMR
M-13	CAL	Point Arguello Calif.	36.4N 120.6W	*	Verlort	FPS-16	*				*	*	*	DOD-PMR
M-14	GYM	Guaymas, W. Mexico	28.0N 110.8W	*	Verlort	------	*				*	*	*	NASA
M-15	WHS	White Sands, N Mexico	32.4N 106.4W	*	-------	FPS-16					*		*	DOD-WSMR
M-16	TEX	Corpus Christi Texas	27.7N 97.2W	*	Verlort	------	*				*	*	*	DOD-WSMR
M-17	EGL	Eglin, Florida	30.5N 86.8W	*	MPQ-31	FPS-16	*		*		*		*	DOD-AFGC

TABLE 11-1. MERCURY NETWORK TRACKING & AUXILIARY SYSTEMS

[redacted]

TABLE 11-2 MERCURY COMMUNICATION FACILITIES

Sta Code	Sta No.	Station Name and/or Location	Pass Coverage	Telemetry Reception	Capsule Communication	Command Control	Acquisition FA	Acquisition SA	Acquisition M	Ground Communication Voice	Ground Communication TTY	Ground Communication SSB Radio	Timing
CNV	1A	Cape Canaveral	1,2,3	*	*	*	*	*		*	*		*
BDA	1B	Grand Bahama	1,2,3	*	*				*	*	*		AMR
CNY	1C	Grand Turk	1,2,3	*	*				*	*	*		AMR
PRA	2	Pretoria	1,2,3	*	*	*	*			*	*		*
AGI	3	Atlantic Ship	1,2,3	*	*		*				*	*	*
CNY	4	Grand Canary Island	1,2	*	*		*				*	*	*
KNO	5	Kano Nigeria	1,2	*	*			*			*	*	*
ZNZ	6	Zanzibar	1,2	*	*			*			*	*	*
ICS	7	Indian Ocean Ship	1,2,3	*	*		*				*	*	*
MUC	8	Muchea Australia	1,2,3	*	*	*	*			*	*	*	*
WOO	9	Woomera Australia	1,2	*	*		*			*	*		*
CTN	11	Canton Island	1,2	*	*			*			*		*
MUC	12	Muchea Island Hawaii	2,3	*	*	*	*			*	*		*
CAL	13	Point Arguello Calif.	2,3	*	*	*	*			*	*		*
GYM	14	Guaymas Mexico	1,2,3	*	*	*	*			*	*		*
WSS	15	White Sands, NM	1,2,3				*			*	*		*
TEX	16	Corpus Christi, Tex	1,2,3	*	*		*			*	*		
EGL	17	Eglin, Florida	1,2,3				*			*	*		*
		Goddard SFC		Ground Communications									*

Legend: FA = Fully Automatic, SA = Semi-Automatic, M = Manual, SSB = Single Side Band

PCM Telemetry, on site Data Processor, Displays and Associated Auxiliaries will be installed on the following stations for Gemini: Cape Canveral, Bermuda, Pretoria, NASA Ship, Canary I, Muches, Hawaii, Pacific Command Ship, Guaymas and Corpus Christi.

[redacted]

[redacted]

tracking station is planned for 1964 near Carnarvon in Western Australia. This station will be equipped with an advanced long range C-band precision tracking radar, the AN/FPQ-6. Some of the Mercury stations will be modified for Project Gemini, primarily by addition of PCM-FM telemetry facilities, on-site data processsng, and some other equipment. Expansion and changes to the existing communication links will also be made. The stations involved in the Project Gemini improvements, and the added capabilities are shown in table 11-3.

Deep Space Instrumentation Facility (DSIF) - The Deep Space Instrumentation Facility operated for NASA by JPL consists, at present, of three stations located at Goldstone, California; Johannesburg, South Africa; and Woomera, Australia. Table 11-4 and 11-5 show the location of these stations and their space mission frequencies respectively. Modifications of the present DSIF will be required to permit expanded telemetry, TV and voice communication with the spacecraft.

Tracking Ships - Instrumented tracking ships will be required to collect data during earth-orbital and lunar insertions, orbital tracking, and reentry. The exact number and locations of the tracking ships is not established at this time, but will probably be somewhere in the Atlantic, for insertion: in the Pacific, for landing in Texas; and in the Indian Ocean, for landing in Australia. One or two ships may be required in each location. The type of instrumentation on the ships is also undetermined at this time, but will probably be similar to a typical land-based remote station.

Relay aircraft may be required to pick up telemetry and other data from ships and retransmit the data to the land-based network in near real time.

[redacted]

TABLE 11-8. Project Gemini Modification to Mercury Network

Additional Facilities to be implemented shown thus *

STATION	PCM Telemetry	Data Processor	Displays	Command Encoders	R F Command Systems	Acquisition Aids
Cape Canaveral	*	*	*	*	*	*
Bermuda	*	*	*		*	*
Pretoria, S. A.	*	*	*			*
NASA Ship	*	*	*			
Canary Island	*	*	*	*	*	*
Muchea	*	*	*	*	*	*
Kauai	*	*	*	*	*	*
Pacific Comm. Ship	*	*	*	*	*	*
Guaymas	*	*	*			*
Corpus Christi	*	*	*	*	*	*
Ascension Island						*

NOTE: The provision of On-site data processor and its final capabilities and utilization are still under consideration.

[redacted]

TABLE 11-4

DSIF STATION LOCATION

DSIF LOCATION	CODE	GEODETIC LATITUDE	GEODETIC LONGITUDE
Goldstone, Calif.	GS	35.389° N.	116.848° W.
Johannesburg, S. Africa	J	25.891° S.	27.675° E.
Woomera, Australia	W	31.382° S.	136.886° E.

[redacted]

[redacted]

TABLE 11-5

DSIF SPACE MISSION FREQUENCIES

FREQUENCY, MC	YEAR OPERATIONAL IN DSIF	USE
2115 ± 5	1963(A)	Transmitter Frequency. (3 channels) for DSIF equipment.
Tentative DSIF Channels		
1) 2110-2111 13/16		Receiver Freq. (1 channel) for individual spacecraft Receiver/transponder
2) 2111 13/16 - 2114 12/16		
3) 2114 11/16 - 2120		
2295 ± 5	1963(A)	Receiver Freq. (3 channels) for DSIF equipment.
Tentative DSIF channels		
1) 2290-2293 1/3		Transmitter Freq. (1 channel) for individual spacecraft transmitter/transponder
2) 2293 1/3 - 2296 2/3		
3) 2296 2/3 - 2300		

NOTE: The transmitting and receiving frequencies of channels 1, 2, and 3 above, are in the ratio of 240/221 to be compatible with the spacecraft transponder. Channel number 2 and 3 are compatible with the JPL precision (3-MC bandwidth) Ranging System.

[redacted]

Instrumented Recovery Aircraft - Tracking aircraft may be used in the recovery areas to assist in spacecraft location and recovery.

Training and Checkout Aircraft - These aircraft simulate spacecraft characteristics and are used in the training of GOSS personnel and in checkout of GOSS equipment.

Minitrack Network - During contingency conditions the minitrack communications network may be used. This chain of stations runs roughly north-south and is tabulated in table 11-6.

The Range and Range Rate Network - The Range and Range Rate Network (R and $\dot{R}$) is being implemented by GSFC for their scientific satellite programs and could conceivably be used for Apollo spacecraft tracking and communications, provided duplicate facilities will be available and the system modified to carry expanded telemetry, voice and television, and provided these can be done in time for Apollo Manned Flights. This system could be used for both near earth and deep space applications. Table 11-7 shows the currently planned locations of the R and $\dot{R}$ stations.

11-10 TRACKING FUNCTION AND INFORMATION FLOW

Figure 11-1 shows the GOSS tracking functions and the proposed information flow paths for the Apollo mission.

11-11 INTERSITE COMMUNICATION NETWORK

The proposed Apollo Ground Communications Network is shown on Figure 11-2. The figure shows the basic communication links between the various sites and the communication center located at Clear Lake.

TABLE 11-6. GEODETIC POSITIONS OF MINITRACK STATIONS

STATION DESIGNATION	STATION LOCATION	EAST LONG.	LATITUDE	ELEVATION FT.
AGASTA	Antogagasta, Chile	289-43-36.838	S-23-37-15.993	1703
ALASKA	Fairbanks, Alaska	212-09-47.387	N-64-52-18.591	527
BPOINT	Blossom Point, Md.	282-54-48.170	N-38-25-49.718	15
GPORKS	East Grand Porks, Minnesota	262-59-21.556	N-48-01-20.668	823
JOBURG	Johannesburgh, S. Africa	027-42-27.931	S-25-52-58.862	4988
LIMAPU	Lima, Peru	282-50-58.184	S-11-46-36.492	161
NELCAL	San Diego, California	243-01-43.707	N-32-34-47.701	514
NEWFLD	St. John's, Newfoundland	307-16-43.240	N-47-44-29.049	400
OOMERA	Woomera, Australia	136-46-59.52	S-31-06-09.49	510
PANMIG	Antigua Island, B.W.I.	298-13-16.536	N-17-08-32.586	16
QUITOE	Quito, Ecuador	281-25-14.770	S-00-37-21.751	11703
SNTAGO	Santiago, Chile	289-19-51.283	S-33-08-58.106	2280
WNKFLD	Winkfield, England	359-18-14.615	N-51-26-44.122	215
FMYRS	Fort Myers, Florida	278-08-03.887	N-26-32-53.516	11.56
JETGLD	Goldstone Lake, California	243-06-02.776	N-35-19-48.525	3044

[redacted]

TABLE 11-7. GSFC RANGE & RANGE RATE STATIONS

LOCATION	COORDINATES		OPERATIONAL
	LATITUDE	EAST LONG	
Rosman, N. Carolina	35° 12'00"	277° 07'00"	1963
Johannesburg, S. Africa	-25° 52'58.8"	27° 42'27.9"	1963
Carnavon, W. Australia	-24° 52'00"	113° 38'00"	1963

There are other R & $\dot{R}$ stations planned for the GSFC scientific programs, but their locations are not definite at this time.

[redacted]

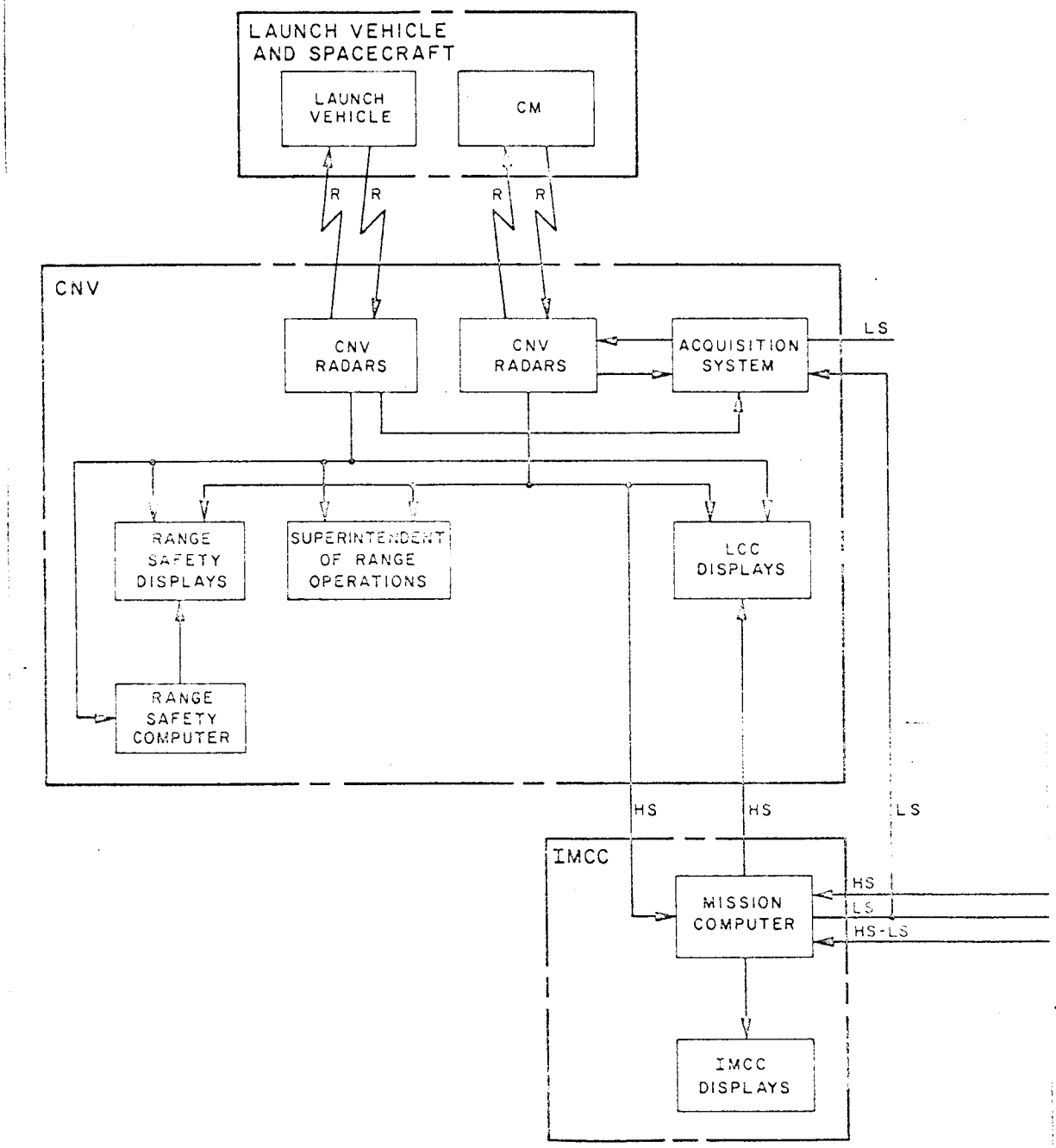

Figure 11-1. Tracking Function, Information Flow Paths

[redacted]

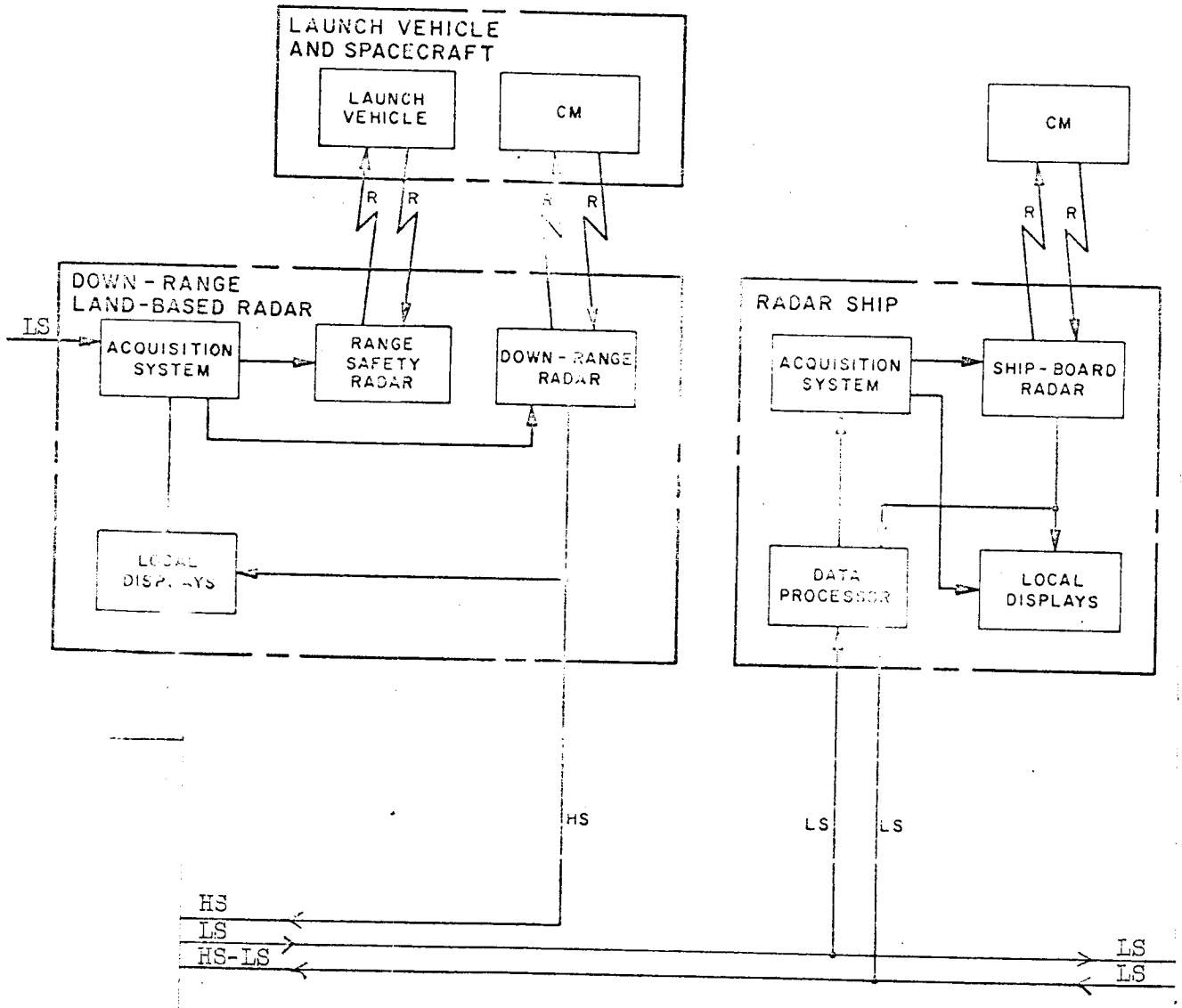

Figure 11-1 (Continued)
Tracking Function, Information Flow Paths

[redacted]

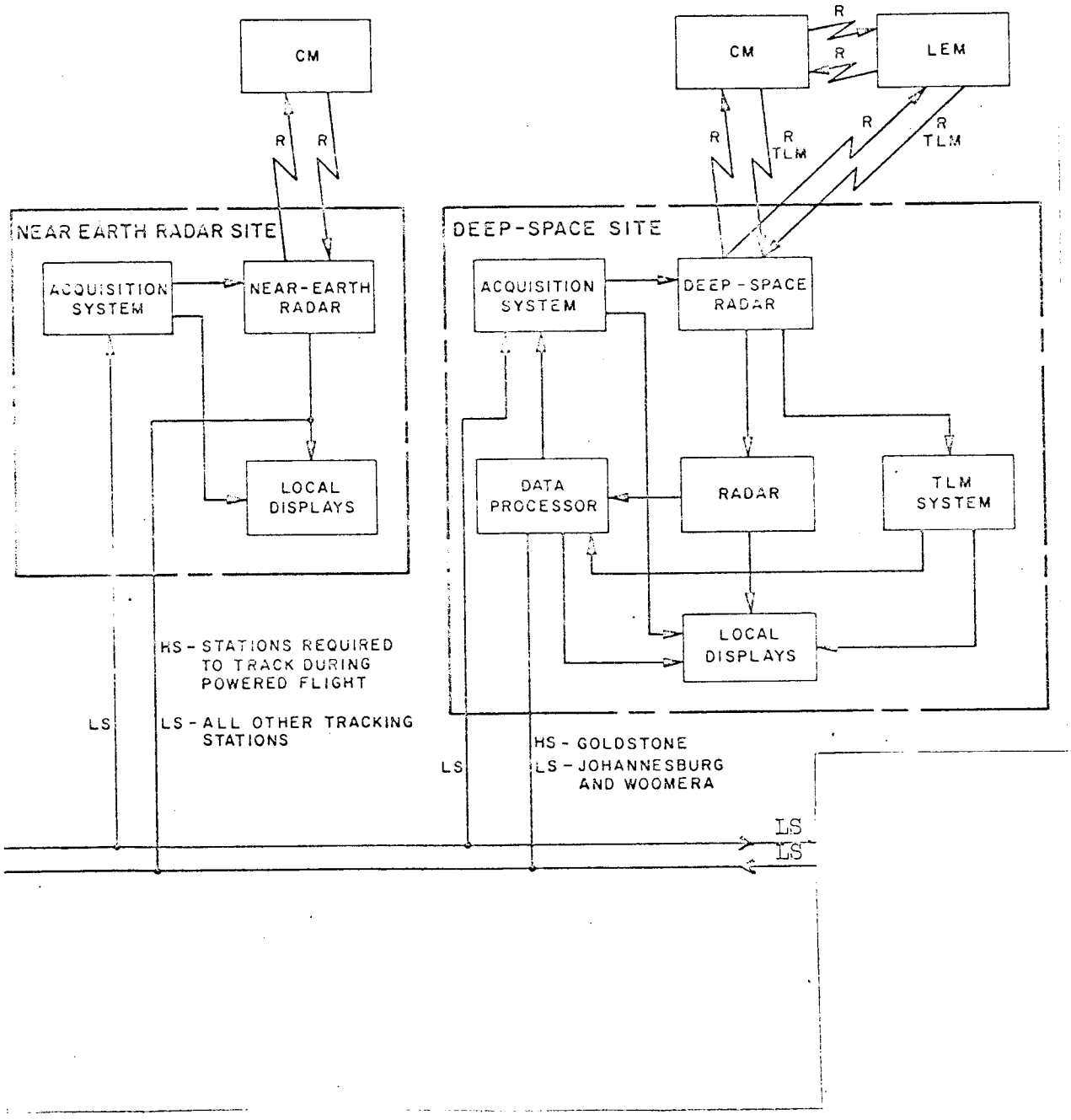

Figure 11-1 (Continued)
Tracking Function, Information Flow Paths

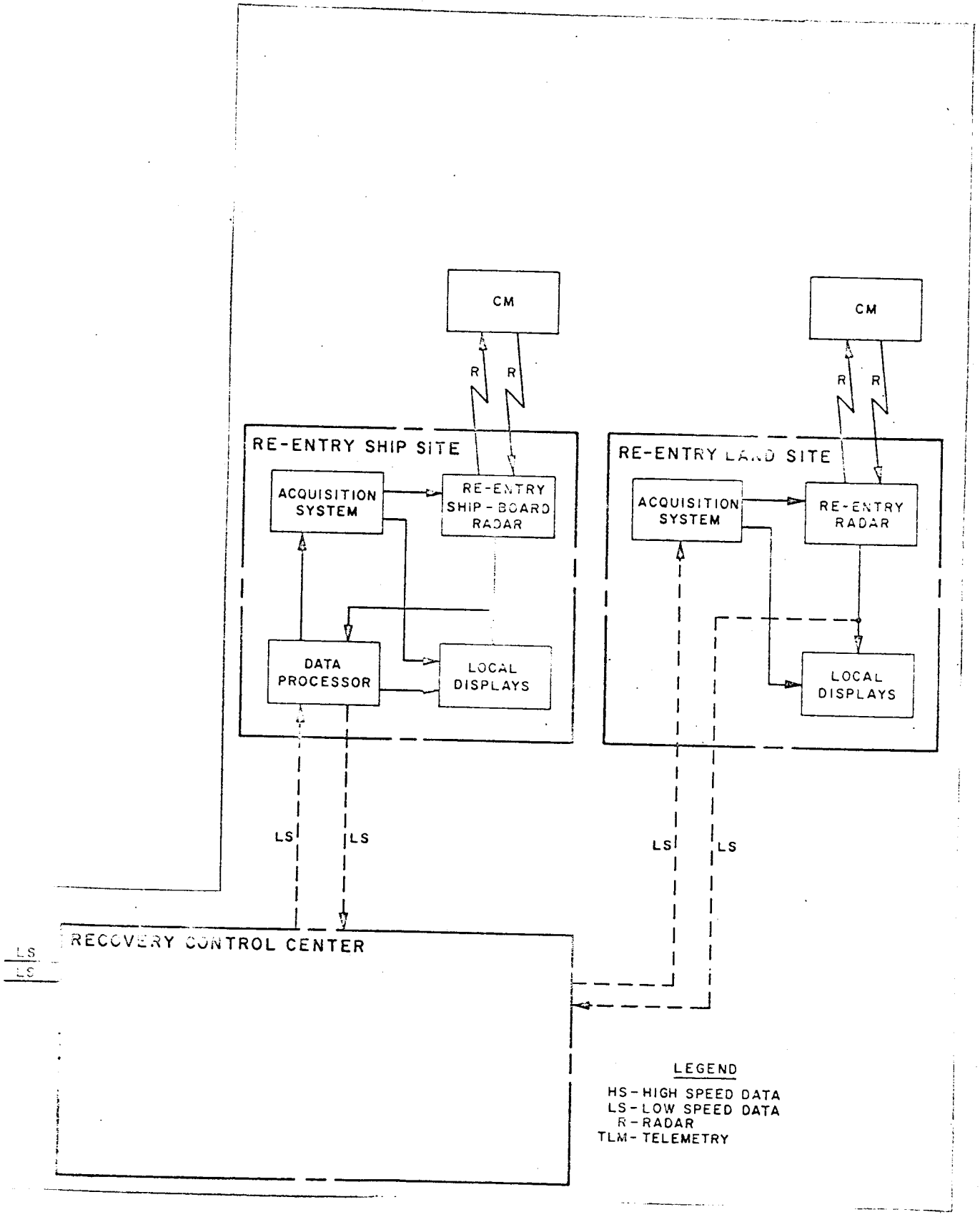

Figure 11-1 (Continued)
Tracking Function, Information Flow Paths

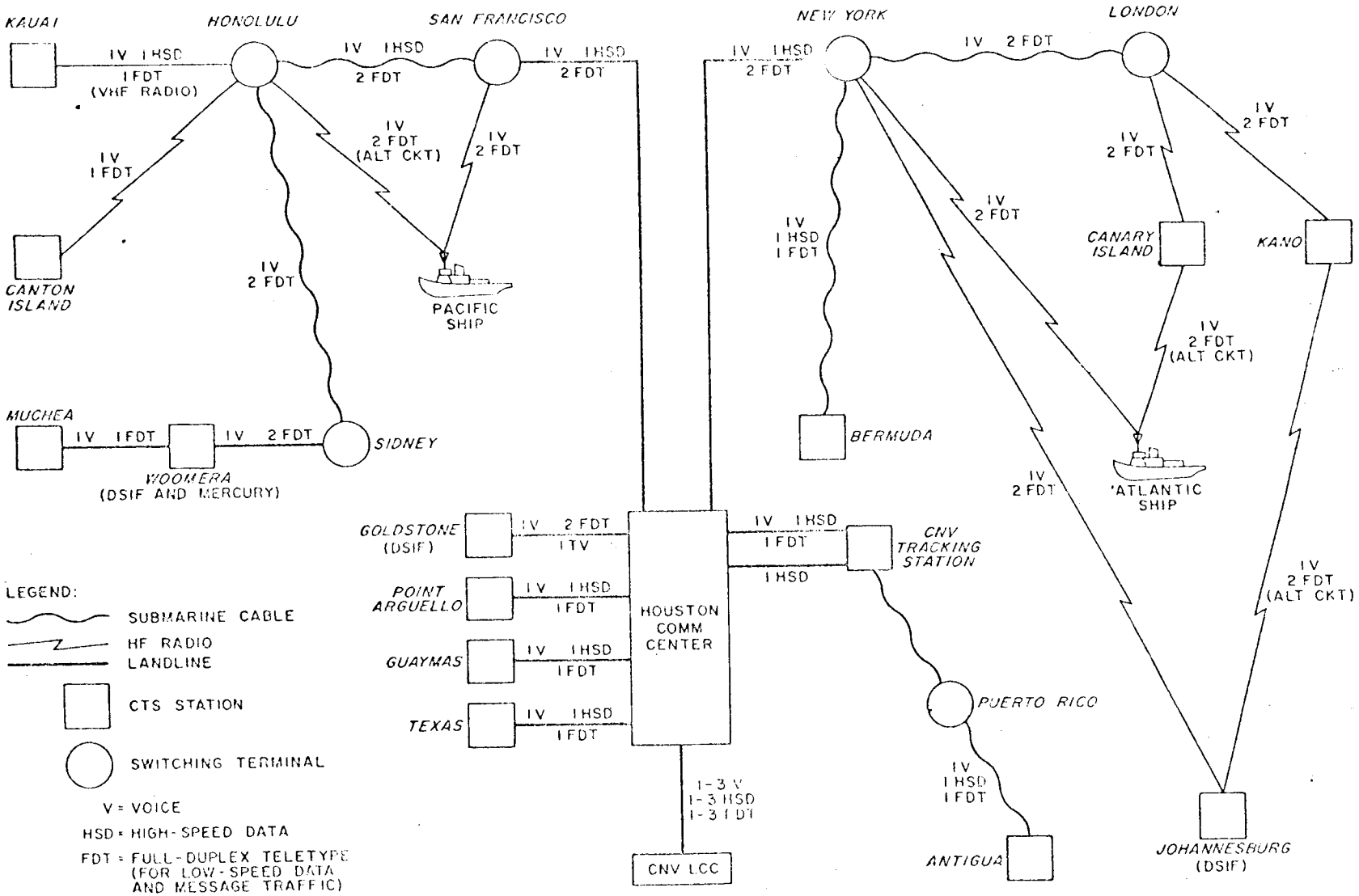

Figure 11-2. Apollo Ground Communications Network

SECTION XII

GROUND OPERATIONAL SUPPORT SYSTEM OPERATION

(This section intentionally left vacant)

CHAPTER 5 - DEVELOPMENT PROGRAMS

SECTION XIII

APOLLO REQUIREMENTS

13-1 OBJECTIVES

The primary objectives of the development program are evaluations of the flight dynamics and control of the various modules and the Launch Escape and Earth Landing Systems, evaluation of performance and integration of the Apollo systems functions, and, later in the program, evaluation and refinement in training and integration of the crew. Specific test mission objectives are described in Section XV Development Program Descriptions.

13-2 DEVELOPMENT REQUIREMENTS

Qualification-reliability testing is being accomplished to evaluate components and parts. As the program proceeds, qualification tests are to be performed on major subassemblies, subsystems, systems, modules, and combination of modules. Tests include variability in performance, off-limit performance, and life tests. Data obtained from all test sources, including life, development, qualification-reliability, qualification, and spacecraft ground and flight tests will be utilized to demonstrate reliability. The program includes similar development requirements for the Spacecraft Ground Support Equipment and the Ground Operational Support System. See Section I, paragraph 1-8 General Requirements.

The Apollo development test logic involves a progression of tests for each Apollo system from the earliest component testing through development, qualification-reliability, and integrated systems tests. Strict time phasing is required throughout the various test stages of the Apollo Spacecraft as increasingly exhaustive tests are performed toward ultimately qualifying the Apollo vehicle for manned space flight.

13-3 MILESTONE SCHEDULE

Significant milestones of the Apollo flight test program are shown in Table 13-1 and serve to illustrate the progressive development of the Apollo vehicle.

Table 13-1. Highlights of Apollo Flight Test Program

Flight No.	LV No.	Purpose of Test	SC No.	1963 1	1963 2	1963 3	1963 4	1964 1	1964 2	1964 3	1964 4	1965 1	1965 2	1965 3	1965 4	1966 1	1966 2	1966 3	1966 4	1967 1	1967 2	1967 3	1967 4
		Apollo LES qualification (Pad abort #1)	BP#6		△																		
	LJII#2	Apollo LES qualification at max. "q" abort	BP#12	△																			
		Apollo back-up CM for PA#1 or LJII #2	BP#23				△																
SA-5	S-I	Launch vehicle development	-----		△																		
SA-6	S-I	Launch environment	BP#13				△																
SA-8	S-I	Qual.Emerg.Det.Syst.,SM Adapter Struc.&Sep.Syst.	BP#18								△												
SA-10	S-I	Unmanned SC Qualif.(Orbital or Sub-orbital)	AFM#009								△												
SA-111	S-I	First manned flight	AFM#011									△											
SA-201	S-IB	Launch environment	BP#											△									
SA-202	S-IB	First S-IB Emerg. Det. Syst. C/O	-----																				
SA-205	S-IB	First Manned S-IB Flight	SC#														△						
SA-206	S-IB	AFM Develop.-Manned Flight	-----															△					
SA-501	S-V	First S-V Emerg. Det. Syst. C/O	BP#													△							
SA-502	S-V	Launch environment	-----														△						
SA-503	S-V	Command Module reentry qual.	AMF#															△					
SA-507	S-V	First Manned S-V Flight SC Qual., Lunar Mission	SC#																		△		

SECTION XIV

LITTLE JOE II LAUNCH VEHICLE

14-1 FUNCTION

Prior to flights using major launch vehicles, the Little Joe II Launch Vehicle will be used to qualify the unmanned Apollo Launch Escape System and Command Module at conditions simulating abort at high dynamic pressure. These tests include a high dynamic pressure ("q") abort test to determine stability and loads during abort with control failure, a high "q" abort test to qualify the Launch Escape System, a high altitude atmospheric abort test to qualify the Launch Escape Propulsion System, and a high "q" abort test to qualify the Command Module Structural System during abort with thrust vector control.

14-2 DESCRIPTION

The Launching System for the suborbital test program consists of the launch vehicle, the launcher, and the ground support equipment which are described below.

14-3 LAUNCH VEHICLE

The Little Joe II Launch Vehicle as shown on Figure 14-1 is a fin-stabilized airframe which uses solid fuel rocket motors as its source of propulsion power. Depending on the particular mission, the propulsion system consists of various combinations of Thiokol Recruit (booster) and Aerojet Algol (sustaining) motors, and their igniters and exhaust nozzles. In addition to the propulsion system, the vehicle incorporates the airborne portions of a command destruct system to terminate thrust of the sustaining rocket motors at any time during the powered portion of a flight, and a measurement system using sensors which operate in conjunction with the payload telemetry system. An electrical system contains all components for supply, conversion, distribution, and control of electrical power as required for the vehicle systems. Most of

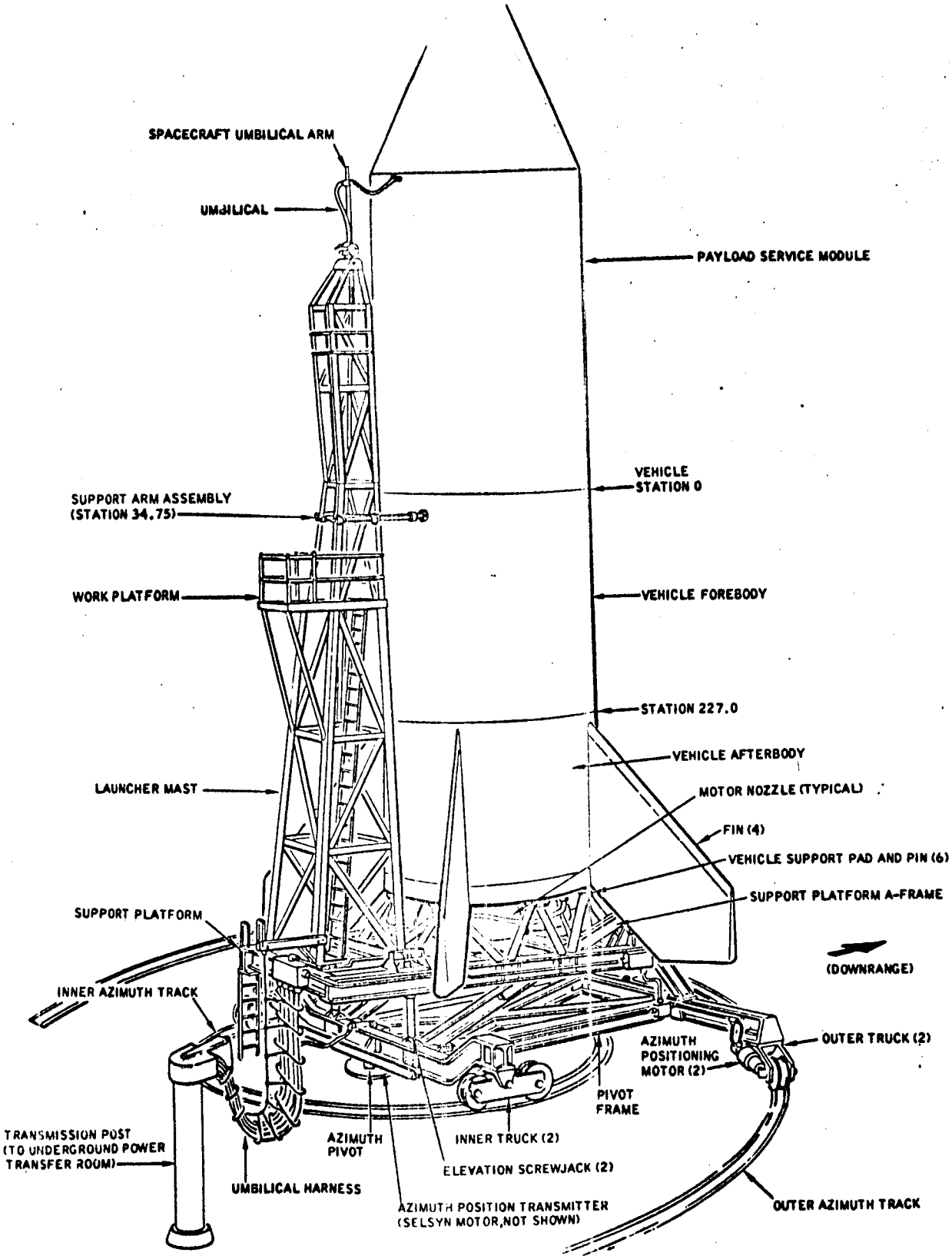

Figure 14-1 Launch Vehicle and Launcher

[redacted]

the components are located in an equipment area between Vehicle Stations 0.0 and 34.75, forward of the Algol motors. Three access doors spaced around the body provide access to the equipment area, and a crawlway permits movement of ground personnel within this area.

The airframe is a cylindrical structure with a truncated form corrugated skin and four stabilizing fins. The body is in two sections, with three main bulkheads, two in the afterbody and one in the forebody. One of the bulkheads in the afterbody supports the aft attachment fittings of the fins and absorbs motor thrust, and the other bulkhead in the afterbody supports the forward attachment fittings of the fins. The bulkhead in the forebody supports the forward ends of the sustaining rocket motors. A mating ring at Vehicle Station 0.0 interfaces the spacecraft Service Module; mating rings at Vehicle Station 227.0 interface the two body sections. The afterbody rests on the launcher pads and pins.

The vehicle quadrant layout and orientation with reference to launcher are shown on Figure 14-2.

14-4 LAUNCHER

The launcher, shown on Figure 14-1, is supported by four crane-type trucks which travel on tracks secured to the launch pad. Components of the launcher include two support beams, a pivot frame, a support platform, and a mast. Two A-frames, bolted to the pivot frame, serve as hinge points for the vehicle support platform while a screwjack assembly tilts the platform to the required elevation angle. Electric motors in the outer trucks pivot the launcher around a pivot pin to the required azimuth position or to the assembly and service position.

The mast, attached to the support platform, stabilizes the vehicle after installation on the launcher and until the vehicle has risen 2-1/4 inches from the platform during launch. When the vehicle has risen this distance, support hooks on the vehicle forebody rise free of the two support arms attached to the mast. These support arms then retract to avoid interference with the vehicle.

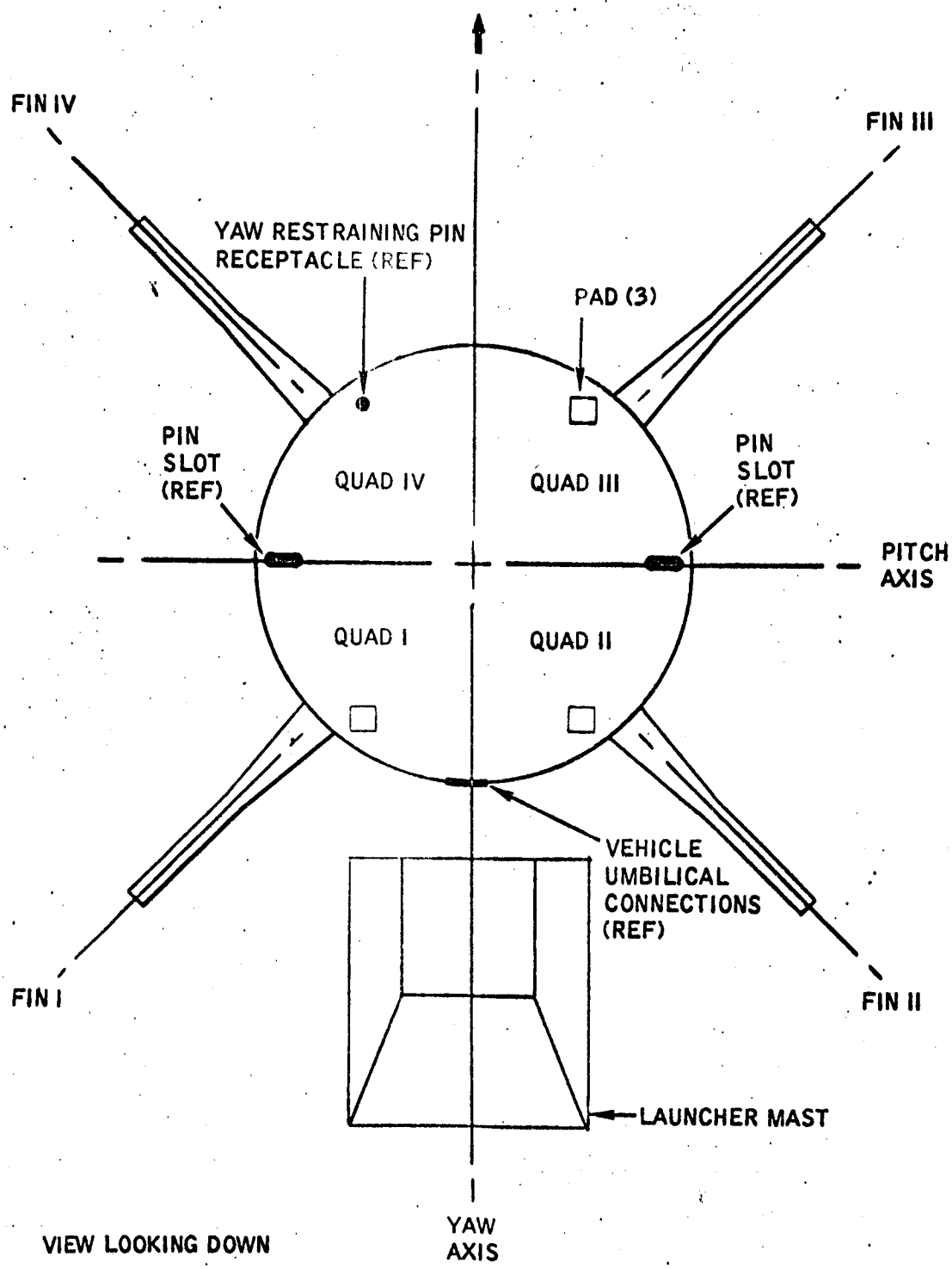

Figure 14-2 Launch Vehicle **Quadrants**

The mast also supports an umbilical arm which retracts five seconds prior to launch to free the spacecraft umbilical harness.

The support platform incorporates three pads and three pins mounted on tripods and bipods to support the vehicle. Two of these pins support the vehicle and prevent it from shifting when the platform is tilted; the third pin minimizes any shifting of the vehicle due to wind gusts, especially during lift-off. A removable work platform grating installed below the support platform provides working access to the vehicle and its rocket motors.

The pivot frame is mounted on the two support beams which in turn rest on the four azimuth trucks. This frame is the basic assembly of the launcher, and serves as a base and fulcrum for the other launcher sections.

The two screwjacks for elevation positioning are attached between the pivot frame and the support platform, and are driven by a single electric motor mounted on the screwjack transfer shaft housing.

14-5 GROUND SUPPORT EQUIPMENT

Ground support equipment includes a launch vehicle console, portable launcher control panel, launcher-position motor controller, and air conditioning ducting used in conjunction with government-furnished air conditioning equipment. In addition, there is a vehicle storage cradle, a covering bag, and a forebody mating stand. Other equipment includes various hoisting slings for the vehicle body, fins and motors.

Transportation is accomplished by highway truck and trailer. A lowboy trailer is provided for the vehicle body. Fins, motors, and other small equipment are transported by van truck. Ground support handling and storage equipment such as the launcher and support and handling cradles for the body sections, motors, and fins must be transported.

14-6 LAUNCH VEHICLE SYSTEMS

14-7 STRUCTURAL SYSTEM

General - The vehicle airframe consists of a cylindrical upper (forebody) and a lower (afterbody) shell and four fixed fins. The forebody is approximately 19 feet long, extending from Vehicle Station 0.0 at the payload interface to Vehicle Station 227.0 at the afterbody assembly splice; the afterbody is approximately 10 feet long, extending from the Vehicle Station 227.0 splice to Vehicle Station 350.0 at the vehicle base. Both body sections are 154.0 inches in diameter. The four fins, each 50 square feet in area, are bolted to the body at Vehicle Stations 278.80 and 348.025, and extend from Vehicle Station 262.227 to Vehicle Station 399.322. The leading edges of the fins are swept back 45 degrees with reference to the body centerline. See Figure 14-3 for an exploded view of the launch vehicle.

Description - Both body shells are of semi-monocoque construction and are fabricated from truncated form corrugated sheets stabilized by ring frames. A large built-up bulkhead at Vehicle Station 347.0 is the main structural member of the vehicle. This bulkhead is essentially a pyramid type structure approximately 21 inches thick at the periphery and 60 inches thick at the center, and consists of rocket motor housing tubes, upper and lower face plates, cylindrical interconnected members, launcher fittings and fin attachment fittings. The deep outer band assists in distributing the load uniformly to the skin.

Other major load-introduction bulkheads are at Vehicle Stations 34.75 and 278.80. The bulkhead at Vehicle Station 34.75 provides side support from the launcher and lateral support for the upper end of the sustaining motors. The Vehicle Station 278.80 bulkhead reacts to fin forward attachment fitting loads. Structural rings are used at the Vehicle Station 0.0 interface and at the Vehicle

[redacted]

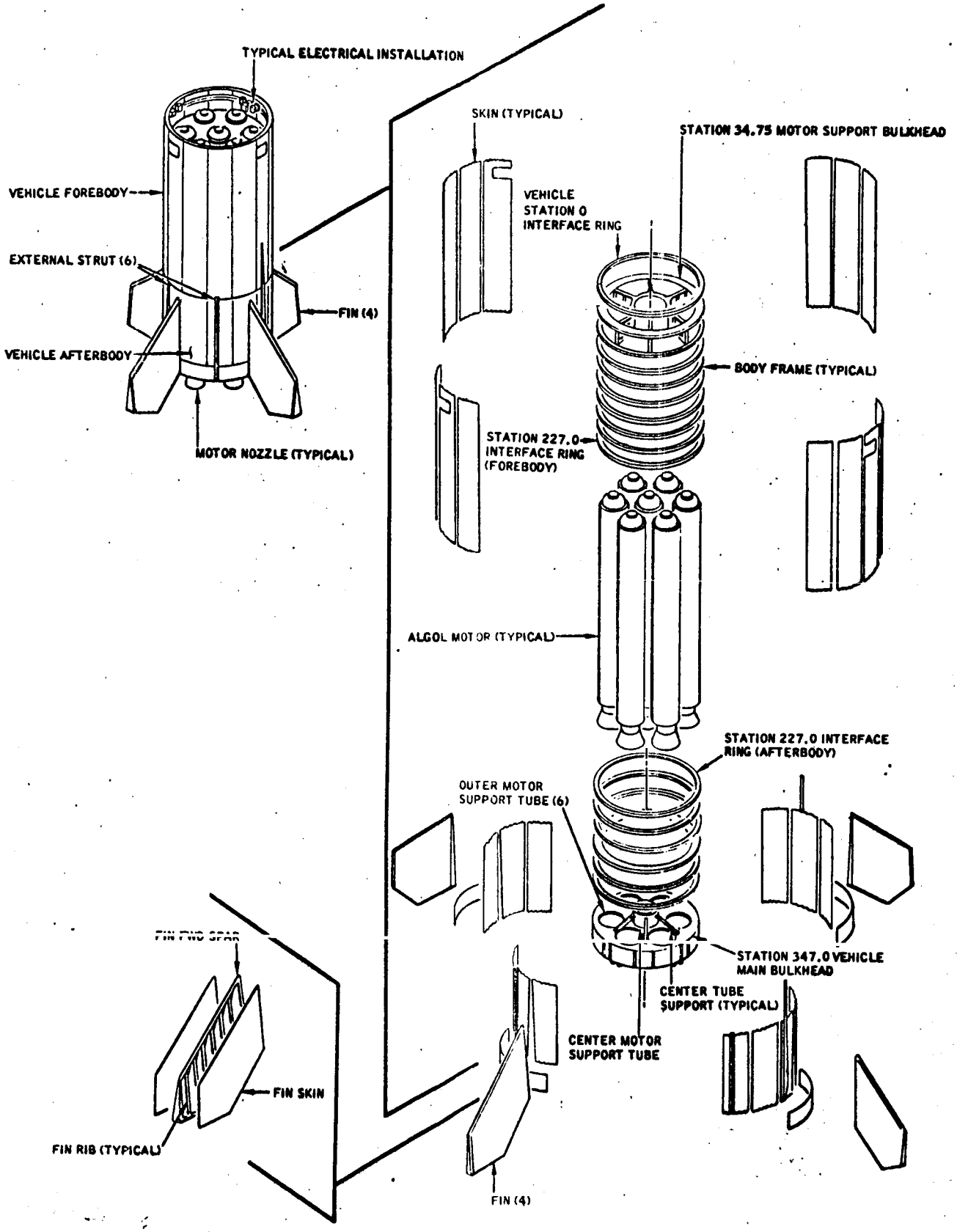

Figure 14-3 Launch Vehicle - Exploded View

[redacted]

Station 227.0 assembly splice. Hat section frames in the forebody are spaced between the two main bulkheads at 20-inch increments; in the afterbody these frames are spaced at 11-inch increments.

Six external T-section longerons are spaced around the afterbody, two extending from approximately Vehicle Station 227.0 to the vehicle base, and four extending from approximately Vehicle Station 279.13 to the base. The two longer longerons, 119.9 inches in length, are located in quadrants III and IV approximately 30 degrees from the quadrant III-IV juncture, resulting in a 60-degree separation. The four shorter longerons, 69.2 inches in length, are spaced at 60-degree intervals around the remaining portion of the vehicle perimeter.

Three access doors approximately 14 X 22 inches in size are located just below the Vehicle Station 0.0 interface to permit access to the electrical equipment after the payload has been mounted. The centerline of door No. 1 is 30 degrees counterclockwise from the juncture of quadrants I and II; doors No. 2 and 3 are spaced equally around the body from door No. 1. The electrical equipment is located in the free space between Vehicle Stations 0.0 and 34.75 forward of the sustaining rocket motors.

An air conditioning hatch above the Vehicle Station 347.0 bulkhead allows attachment of ducts from the service structure air conditioning unit. Pressure seals are installed at the lower ends of the rocket motors, at the thrust skirts.

The fins are a monospar structure, with the skin being stabilized by the forward support. The skins are also supported by chordwise stiffeners and ribs. Three bolts connect each fin to the body - two at the rear spar and one at the forward stub spar. The forward attachment fitting reacts to shear from a portion of the torsional load, and the rear fitting reacts to shear, drag and fin bending.

14-8 PROPULSION SYSTEM

General - The propulsion system for the Little Joe II Launch Vehicle consists of seven Algol ID, Mod 1 rocket motors, or a combination of Algol ID, Mod 1 and Recruit XM19, Mod 1B rocket motors. The Algol rocket motors are the sustaining motors which provide the primary source of thrust, while the Recruit rocket motors are booster motors which provide a source of short duration, high thrust to supplement the sustaining motors at launch. The exact number and combination of motors depend on power requirements for a particular flight.

The motors are bolted to retaining rings in the thrust bulkhead of the vehicle afterbody; adapters are required for attaching the Recruit motors and nozzles to the rings. The bulkhead at Vehicle Station 34.75 of the forebody provides lateral support for the Algol motors; there are no support provisions for the forward end of the Recruit motors.

Algol Rocket Motors

Characteristics - The Algol ID, Mod 1 rocket motor is manufactured by Aerojet-General Corporation, Sacramento, California. The motor is a solid propellant rocket rated at 103,200 pounds average thrust at sea level, firing at 70 degrees F nominal propellant grain temperature.

The over-all length of the motor (including nozzle) is approximately 351 inches; the diameter is approximately 40 inches. The motor weighs approximately 22,100 pounds loaded and 3000 pounds expended.

The longitudinal location of the center of gravity of the motor, as measured from the forward face of the forward skirt, with the nozzle in the null position, is approximately 163 inches loaded and 214 inches expended. The radial location of the center of gravity of the motor may vary from the vertical centerline of the motor chamber by approximately 0.3 inches loaded and 0.5 inches expended.

Components - The propellant is ANP-2639 AF. Environmental exposure is limited to 50 to 90 degrees F.

The motor chamber is a cylindrical section with fore and aft closures that maintain its integrity when subjected to internal pressures and thrust loads. Bosses are included in the fore and aft closures for mounting the ignition system and nozzle assembly, respectively.

The nozzle has an expansion ratio of 4.63:1. The nozzle is adjustable so that the centerline of the throat and expansion cone can be varied in only one plane from minus one to plus 14 degrees from the centerline of the motor. The adjustment locks in the required position and is adjustable on the ground only.

The ignition system ignites the grain in a reproducible fashion to 90 percent nominal chamber pressure within about 0.158 second and is initiated by an electrical signal. The current is approximately 5.0 ($\pm$0.5) amperes at about 28.0 ($\pm$2.0) volts DC.

The command destruct system destroys the pressure integrity of the motor chamber by external rupturing of the motor chamber dome around its perimeter.

Weather seals are installed in the igniter boss and the nozzle to restrict passage of vapor, dust, dirt, or foreign objects during shipment and storage. An adequate amount of desiccant material is placed inside the motor when both seals are in position, to maintain the relative humidity at 45 percent or less at 70 degrees F. The seal attached to the nozzle is a combination blast/weather seal fabricated from approximately 0.25 inch thick nitrile rubber and it withstands 50 psi internal motor pressure. Except for inspections, the seal remains in the installed position at all times; the seal blows off upon motor ignition. In the case of staged motors, the seal also provides base heating protection to prevent the exhaust of other ignited motors from contacting the propellant grain.

The nozzle boot protects the nozzle components from the effects of base heating. The boot attaches to the thrust bulkhead, providing continuity of the bulkhead insulation. The boot is fabricated from about 0.20-inch thick nitrile rubber which provides thermal protection by ablating approximately 0.084 inch within 132 seconds.

Four thermocouples, two inside and two outside the motor chamber, measure the propellant grain temperature differential. The leads from the thermocouples attach to a junction box affixed to the nozzle flange.

Recruit Rocket Motors

Characteristics - The Recruit XM19, Mod 1B rocket motor is manufactured by Thiokol Chemical Corporation, Elkton, Maryland. The motor is a solid propellant rocket rated at 34,460 pounds average thrust at sea level, firing at 70 degrees F nominal grain temperature.

The overall length of the motor (including straight nozzle) is approximately 101 inches; the diameter is approximately nine inches. The motor weighs approximately 352 pounds loaded and 82 pounds expended.

The longitudinal location of the center of gravity of the motor, as measured from aft end of the straight nozzle, is approximately 48 inches loaded and 54 inches expended.

Components - The propellant grain has a density of 0.063 pounds per cubic inch, and resembles hard rubber in appearance. The web (burning surface) of the solid propellant has a five-point star internal configuration.

The propellant chamber is a cylindrical section with forward and aft closures. Bosses are included in both closures. The boss in the forward closure is sealed with a plate; the boss in the aft closure accommodates the nozzle assembly.

When a motor is mounted in one of the outer motor positions of the vehicle afterbody, a canting adapter is installed in the aft closure and the nozzle is attached to the adapter. When a motor is mounted in the center motor position of the vehicle afterbody, only the nozzle is installed in the aft closure of the motor chamber, as a cant angle is not required.

The igniter is installed through the motor nozzle with lead wires entering through the nozzle. The igniter consists of two squibs connected in parallel within the unit. Each squib has a resistance of about 0.75 ohms minimum and 1.20 ohms maximum.

Motor Arrangement and Firing Sequence - The exact number and combination of Algol and Recruit motors, and the motor firing sequence, depends on power requirements for a particular flight. Figure 14-4 shows the motor arrangement and firing sequence for two types of flight tests.

The ignition circuitry has one of two configurations, one-stage firing or two-stage firing, depending on flight requirements for the particular mission. In one-stage firing, all motors ignite 15 ($\pm$0.5) seconds after the ignition timer receives the start signal. In two-stage firing, all first stage motors ignite 15 ($\pm$0.5) seconds after the ignition timer receives the start signal. All second stage motors ignite within 42 ($\pm$0.5) seconds after first stage ignition. The first stage motors use the external (blockhouse) electrical power source for ignition; all second stage motors use the vehicle primary electrical power source for ignition.

14-9 COMMAND DESTRUCT SYSTEM

General - A block diagram of the system is shown on Figure 14-5. The command destruct system receives radio command signals, generated by AN/FRW-2 UHF ground transmitters, and produces output signals to accomplish payload abort

(A)

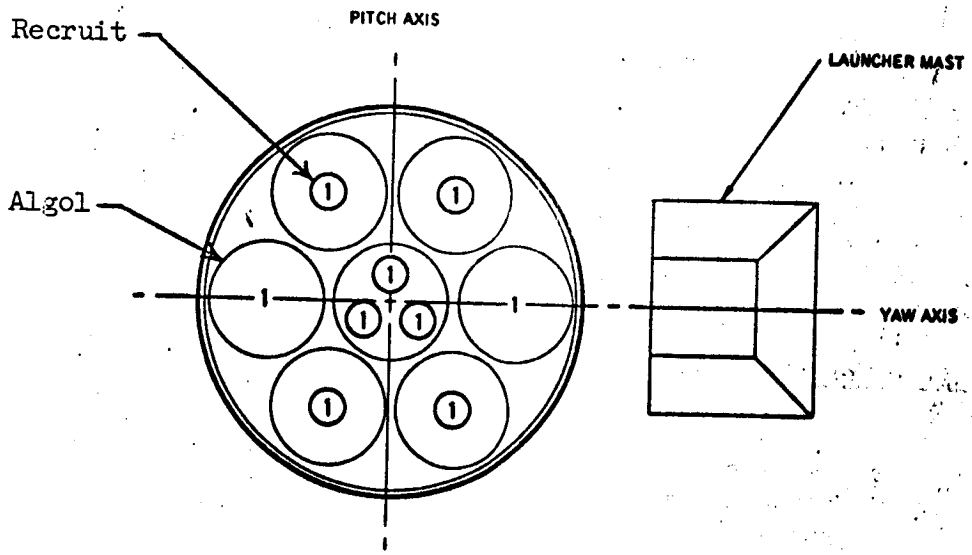

ABORT AT MAXIMUM DYNAMIC PRESSURE
(2 ALGOL, 7 RECRUIT)

(B)

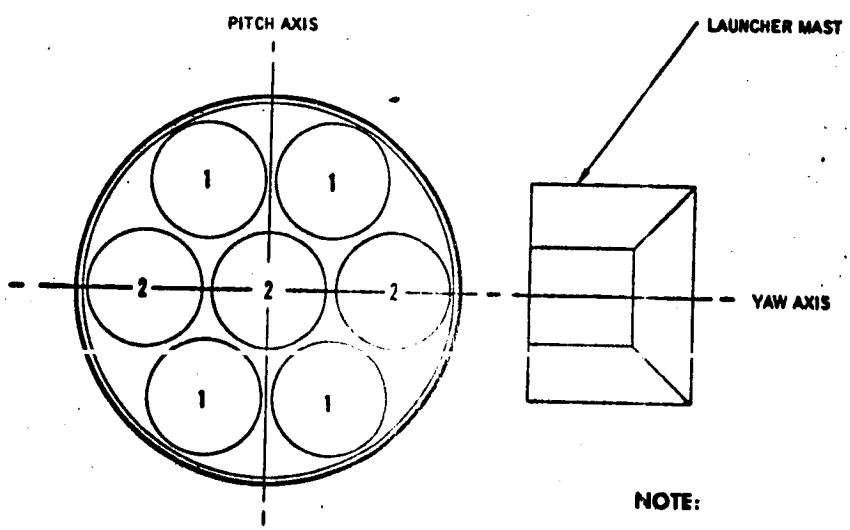

NOTE:

NUMBERS ON ROCKET MOTORS DENOTE SEQUENCE OF IGNITION FOR FIRST AND SECOND STAGE FIRING SEQUENCE. ROCKET MOTORS ARE FIRED WITHOUT COAST PHASE BETWEEN STAGES.

HIGH ALTITUDE ATMOSPHERIC ABORT
(7 ALGOL, SEE NOTE)

Figure 14-4 Rocket Motor Arrangement and Firing Sequence

[redacted]

and to terminate thrust of the rocket motors. The system consists of three antennae, an antenna coupler, a command receiver, two batteries for receiver and destruct power supply, a power, arming, and signal control unit, and a destructor unit; all equipment except the antennae, antenna coupler, and power, arming and signal control unit is government furnished. The system also includes the necessary transducers and circuitry to measure the received signal strength and destruct voltage for telemetering purposes. The three antennae are equi-spaced around the circumference of the vehicle forebody at Station 87.75. All three are matched to the command receiver by the antenna coupler. Each antenna is capable of receiving a command destruct signal of 409 mc frequency and transmitting it to the receiver.

Performance

Input Signal Characteristics - The system responds to command signals generated by the ground transmitters, that have the following characteristics:

a. Carrier frequencies: adjustable from 406 mc to 420 mc in one megacycle steps.

b. Carrier frequency tolerance: ±0.013 percent.

c. Carrier signal strength: between 950 microvolts per meter and 65 volts per meter.

d. Modulation: FM

e. Modulation deviation: 60 kc, ±10 percent peak deviation, for any number of tones. Two equal deviation modulating tones of frequencies.

f. Coding sequence: to be determined by WSMR

g. Equality of modulating tone deviations: ±10 percent

h. Tone frequency tolerances: ±1.0 percent

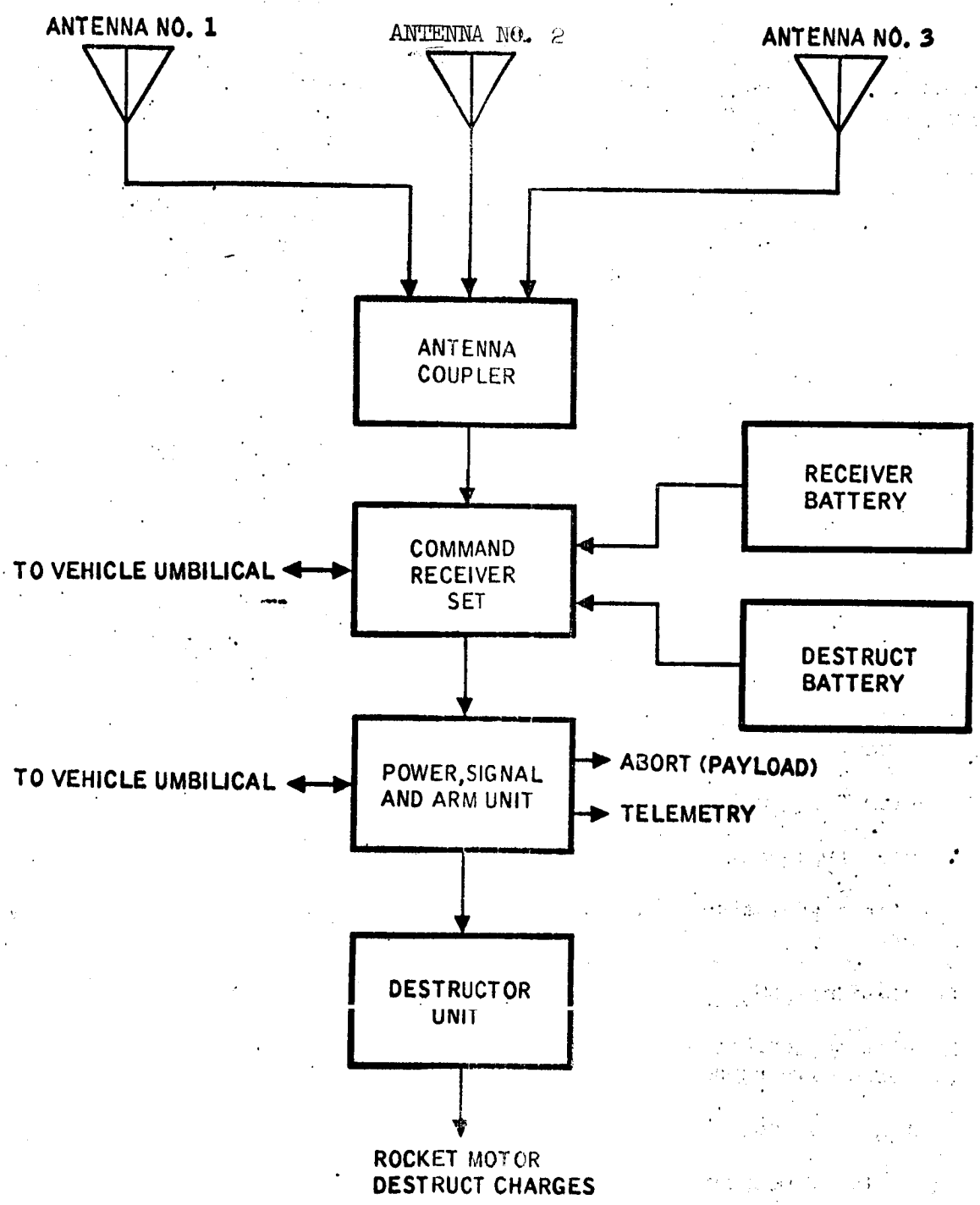

Figure 14-5 Command Destruct System Block Diagram

[redacted]

Output - Upon receipt of an input signal, the system responds with the following outputs:

a. A dual contact to the North American Aviation (NAA) abort system closes to initiate payload abort within 200 milliseconds after receipt of the destruct signal.

b. A 2-ampere current to the destructor unit ignites the primacord train. The firing of the primacord train is produced in not less than 3.0 nor more than 3.5 seconds after payload abort.

Arming - All arming and disarming operations are actuated by voltages between 22 and 30 volts DC at currents less than one ampere; the system is not armed prior to launch except for test purposes. The system is monitored by SAFE and ARM indicating lights located on the test console. Each destructor unit incorporates provisions for placing it in the safe condition to prevent accidental firing of the destruct charges.

14-10 MEASUREMENT SYSTEM

General - The measurement system senses vehicle flight characteristics and converts this information for transmission to ground receivers via the Command Module telemetry system. The system consists of transducers, signal amplifiers and attenuators, signal calibrators, a 28-volt DC battery, voltage regulator, and a NASA-furnished 90-channel, 10 sample per second commutator for sampling various transducer signals. Five basic characteristics of the vehicle detected and measured by the system during flight are: acceleration (forces), vehicle and components temperatures, vehicle and motor pressures, system voltages, and vehicle body strain.

Acceleration Measurements - Acceleration forces are obtained from eight accelerometers, four of which are installed in pairs in two opposing fins. Two transverse accelerometers are installed on each end of the vehicle body. The fin accelerometers measure the velocity of fin flutter and the transverse accelerometers measure acceleration along the transverse axes.

Temperature Measurements - The signals are received from one calorimeter and approximately fifteen sensors which indicate temperatures at various locations on the vehicle. The calorimeter indicates absorbed or evolved heat at the base of the vehicle. The temperature sensors monitor the following: structural temperatures at the base of the vehicle, rear surface temperature of the vehicle fins, electronic equipment box temperature, vehicle internal air temperature, electronics compartment air temperature, and rocket motor temperature.

Pressure Measurements - Pressure sensors measure vehicle internal pressure, pressures at various points on the base of the vehicle, and the Algol motor chamber internal pressures.

Voltage Measurements - Sensors provide voltage readings of the 28-volt DC battery and the regulated power supply output of the measurement system, and of the receiver automatic gain control of the command destruct system.

Strain Measurements - Four strain gage bridges provide indications of thrust bulkhead diagonal strain. One strain gage bridge is installed on alternate diagonals.

14-11 ELECTRICAL SYSTEM

General - Vehicle primary electrical power is supplied by two manually activated silver-zinc batteries. A third battery supplies power for vehicle

measurement systems only. While the vehicle is groundborne, a source of 28-volt DC power is applied to the vehicle from the blockhouse via the umbilical. Switches, indicating lights and other electrical devices necessary for control and regulation of the power system are located in the control and test consoles in the blockhouse.

Batteries - The two batteries used in the vehicle primary electrical power system are 28-volt, 10 ampere-hour, silver-zinc batteries. They are connected in parallel to assure a highly reliable, redundant power source. Interaction between the two batteries is prevented by battery output diodes. One 28-volt, five ampere-hour, silver-zinc battery is used to supply electrical power for the measurement system equipment. Each battery contains 19 cells with removable silver-plated intercell connectors and 15 encased in stainless steel. Batteries are stored in a dry, uncharged condition.

Voltage Indication and Measurement - A voltage sensor connected to each battery indicates that the battery voltage is within specified limits. A set of "normally-open" contacts connected in series with an indicator light on the test console in the blockhouse energize when the battery voltage is within limits. Battery voltage to the sensors is controlled by a relay mounted adjacent to the sensors and a switch on the test console. A selector switch and voltmeter, mounted on the console panel are used to determine actual voltage of each battery.

Voltage Regulation - A dc-to-dc converter is used for voltage regulation of the measurement-system power. The converter has input of 24 to 35.3 volts and an output of 28 ($\pm$0.1) volts at five amperes. Input is provided by the 28-volt measurement-system power source or by the external 21 to 29-volt DC power source.

Power Changeover - A motor-driven power changeover switch, mounted within the vehicle, transfers the vehicle electrical loads from the external power source (blockhouse) to the vehicle power sources. Switch contacts are the "make-before-break" type to prevent interruption in the power system during changeover. The switch is controlled from the console panel in the blockhouse and lights on the console panel indicate the position of the switch.

Umbilical Power Disconnects - Umbilical power connections are used for the monitoring, control and power circuits entering the vehicle . The disconnect receptacles are located at the base of the vehicle at the quadrant I and II juncture, as shown on Figure 14-6. Expendable jumper cables connect to the breakaway disconnect and terminate in a junction box which is mounted between the two launcher pad tripods most adjacent to the mast.

14-12 ATTITUDE CONTROL SYSTEM

(To be supplied)

14-13 ASSEMBLY PROCEDURE FOR LAUNCH VEHICLE

14-14 GENERAL

Preparation for installation of the vehicle includes a condition and alignment check of the launcher and azimuth tracks, using a transit and protractors. After the first mission the check includes a visual and transit check of the launcher assembly for heat warpage and other damage. As shown on Figure 14-7, the outer track extends far enough beyond the 45 degree azimuth angle to allow rotation of the launcher to align with the service structure; the inner track describes a complete circle. The launcher is rotated so that the support platform centerline bisects the service structure. The support platform is leveled and the removable work platform grating is installed over the pivot frame to

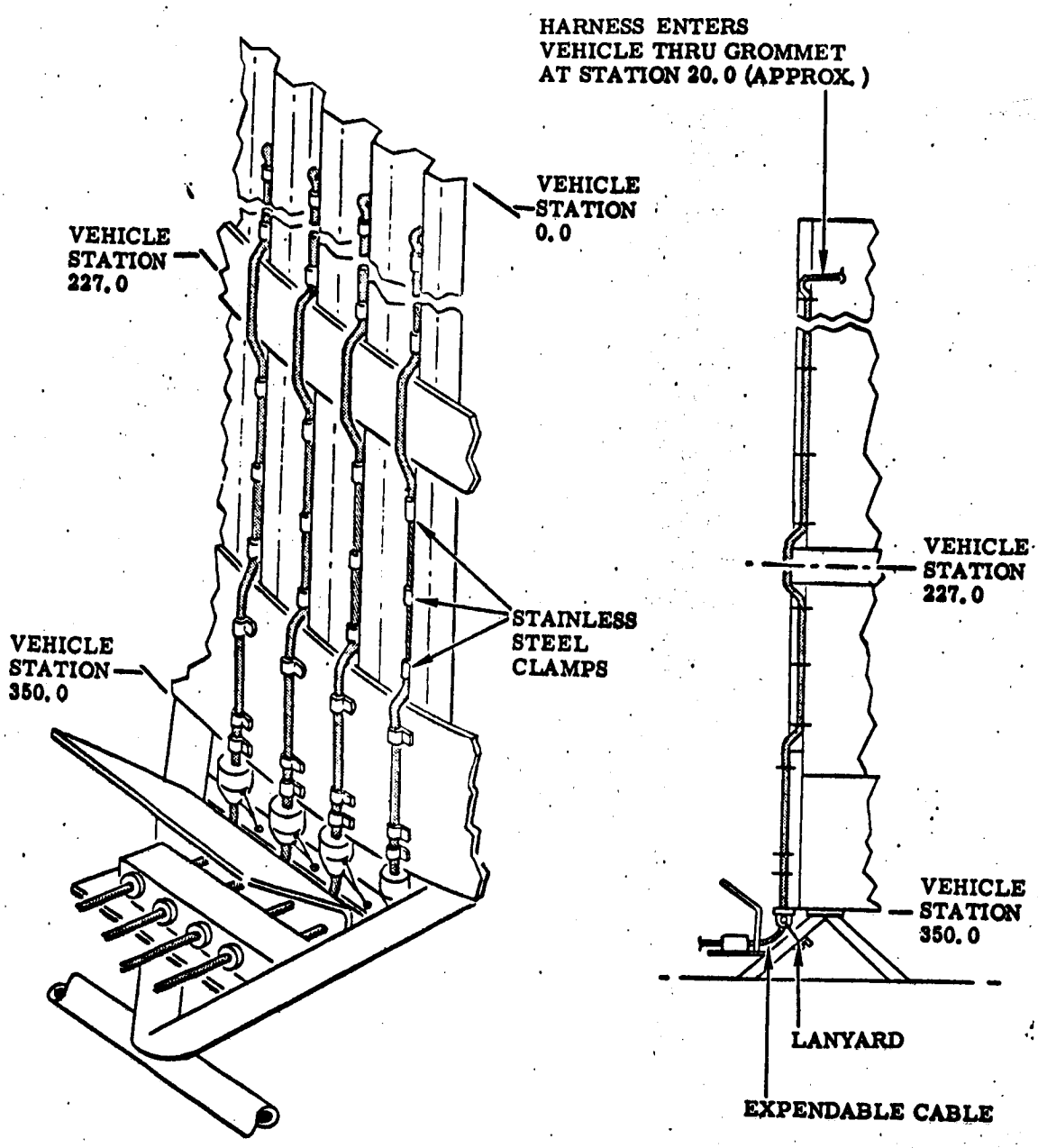

Figure 14-6 Umbilical Power Disconnects

[redacted]

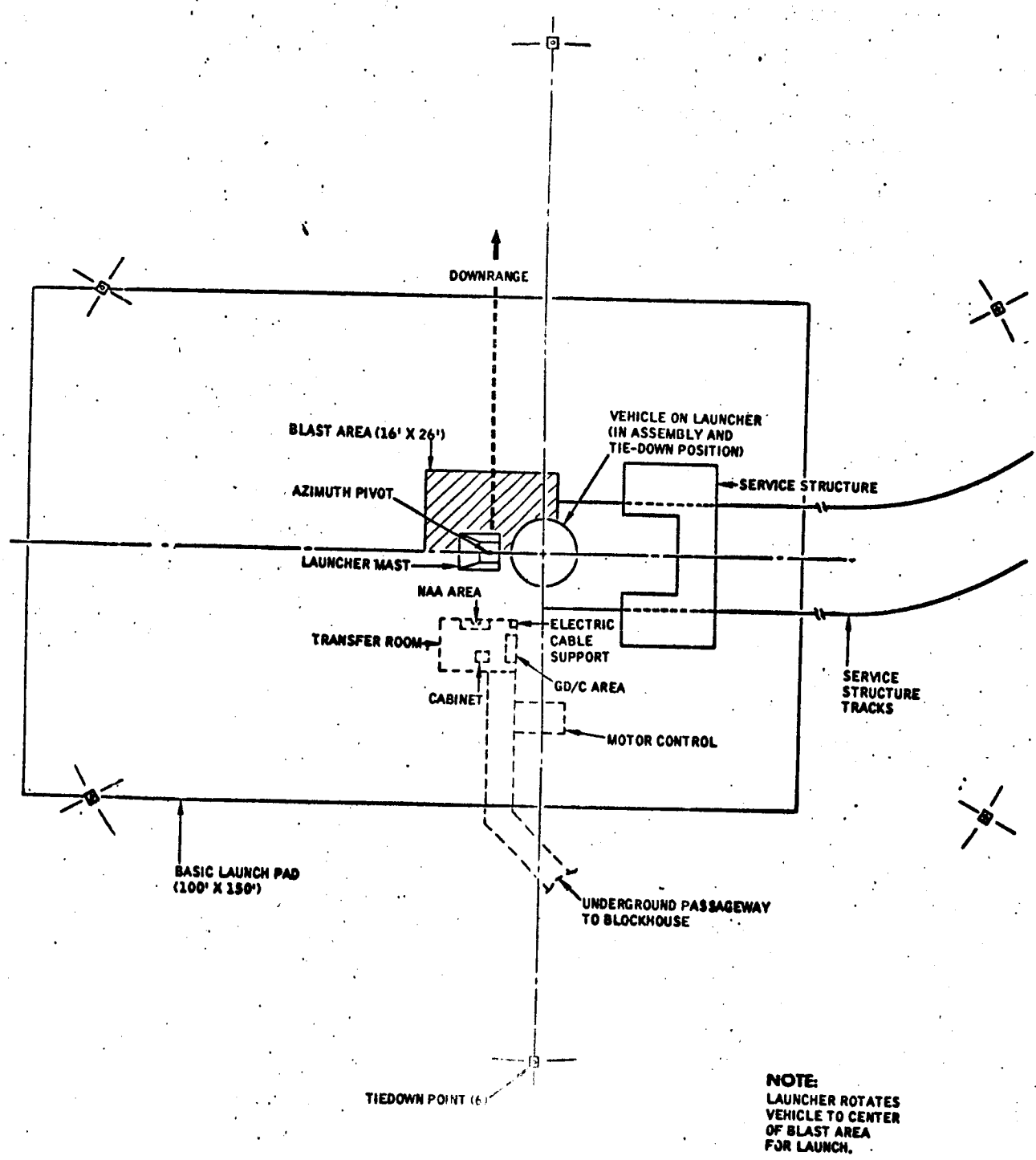

Figure 14-7 Launch Area Orientation View
Sheet 1 of 2

[redacted]

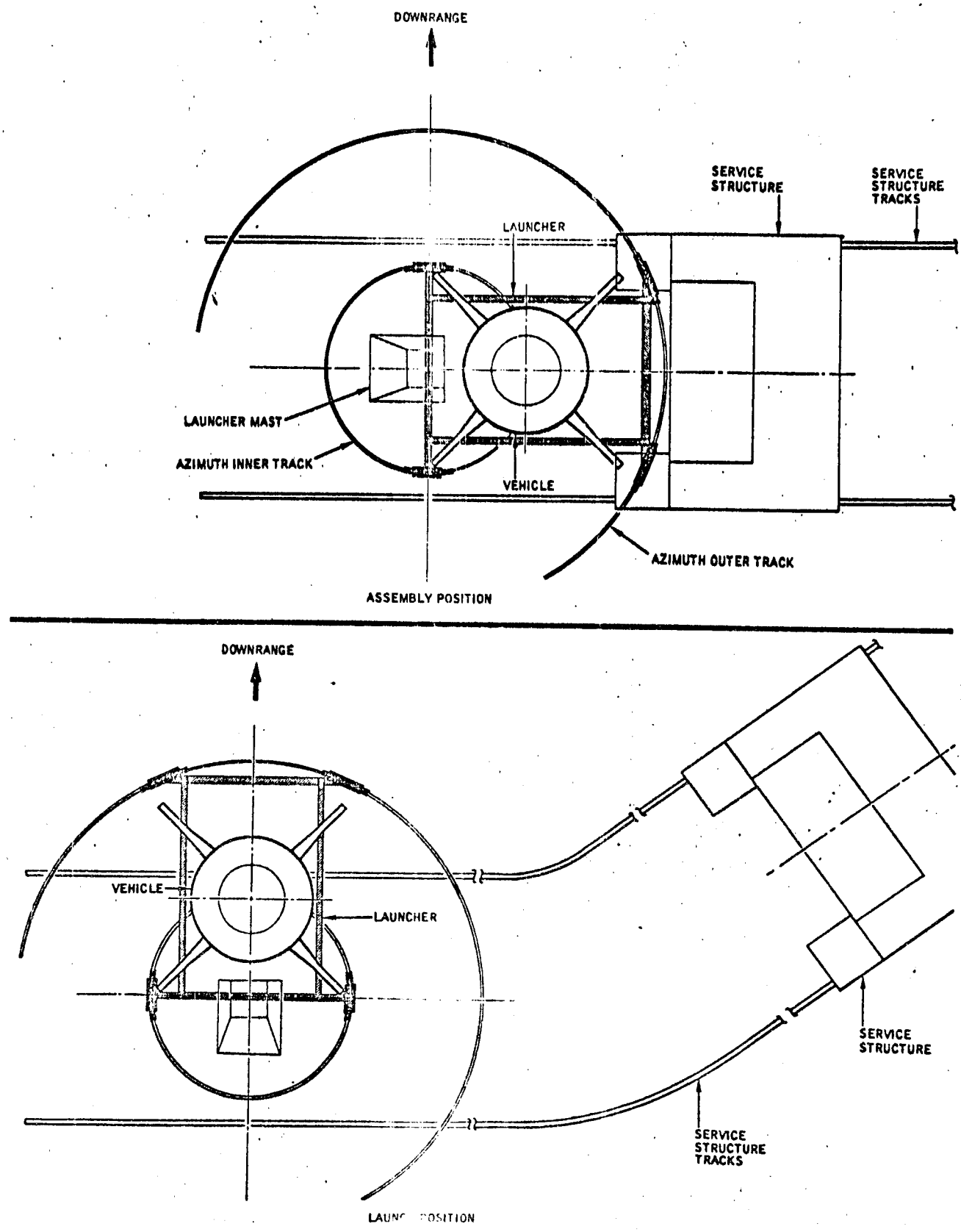

Figure 14-7 Launch Area Orientation View
Sheet 2 of 2

provide access to the lower side of the vehicle and to the motors. A basic alignment check kit is used to check the level of the launcher support platform, pads and pins.

The vehicle is built up on the launcher in the following sequence: afterbody, rocket motors, forebody and fins. The payload may be installed before or after the fins are installed. When installation is complete, the Algol rocket motor nozzles are adjusted to the required cant angle. The Recruit motors and nozzles are assembled on an adapter plate before installation in the vehicle afterbody.

To prevent excessive changes in motor grain temperature, the rocket motors are not removed from the controlled temperature storage area until the afterbody is installed on the launcher. In the vehicle, optimum motor grain temperature is maintained by the air conditioning unit and the weather shield.

In preparation for installation on the launcher, the vehicle forebody and afterbody assembly are removed from the lowboy transport trailer, or from the storage cradle, and raised to the vertical position. The two sections are separated and the forebody is placed on a mating stand and moved into the assembly building for spacecraft interface checks. The afterbody is loaded vertically onto a truck for transport to the launch site. A vehicle aft sling is used in conjunction with the vehicle hoisting sling to raise the aft assembly to the vertical position: only the hoisting sling is used to hoist either or both body sections after they are in the vertical position.

The fins are removed from the transport van or from the storage area and installed on individual work stands, which hold the fins for instrument changes, repairs, and later for installation and work on the attitude control system components. The stands can also be used to transport the fins from one area to another.

14-15 AFTERBODY INSTALLATION

Using the alignment check kit, the pads and pins are raised or lowered on their screwthreads to support the vehicle in a level position and to equally distribute the load. The pin on the swivel plate is pivoted to the correct position at this time.

With the hoisting sling the afterbody is lifted over the launcher support platform by the service structure crane. It is rotated and lowered to rest on the platform pads and pins. See Figure 14-2 for vehicle quadrant layout. The vehicle umbilical connections are mated at the lower side of the body.

14-16 MOTOR INSTALLATION

General - After the vehicle afterbody installation has been completed, the rocket motors are removed from the controlled temperature storage area and prepared for installation. Some missions require a combination of Algol (sustaining) and Recruit (booster) rocket motors, and when a combination is required, the Recruit motors are installed first, to preclude interference from the larger Algol motors.

Recruit Motor Installation - The Recruit motors require special mounting and nozzle canting adapters for installation in any of the outer motor positions. Assembly adapters are shown on Figure 14-8. The mounting adapter is placed in position on the Recruit motor assembly stand. A two-cable sling and overhead hoist are used to remove the motor from the support cradle and place it in the vertical position on the mounting adapter. Index marks are added to motor and nozzle canting adapter during a trial mating. With the index mark on the motor aligned with the index at the hole in the mounting adapter, the two are mated and fastened with cap screws. In installing the canting adapter and nozzle, the index mark on the canting adapter must also align with the index at the hole in the mounting adapter to ensure correct nozzle position. The entire assembly is

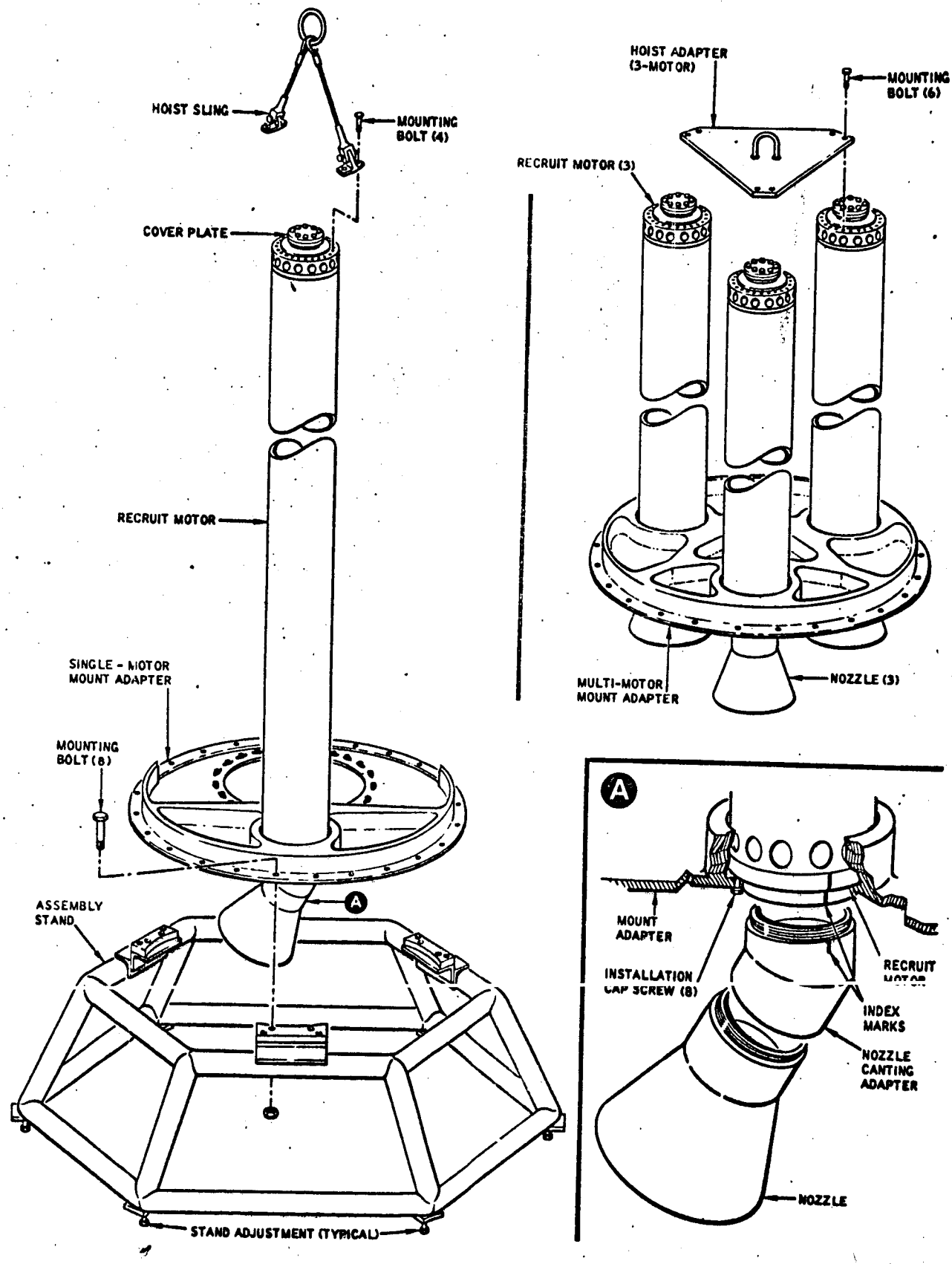

Figure 14-8 Recruit Motor Assembly Details

hoisted over the afterbody and lowered onto the thrust ring and motor mounting flange. With the mounting adapter and thrust ring index holes aligned, the mounting adapter is bolted to the retaining ring.

Another special mounting adapter is required for installing three Recruit motors in the center motor position of the afterbody. The procedure for attachment of the motors is the same as described for single motor except that a special nozzle canting adapter is not used. Installation in the afterbody requires a special hoist adapter, which is attached to all three motors.

Algol Motor Installation - With the motor on the storage dolly, the shipping end rings are removed from both motor thrust skirts and the erection rings are bolted to the skirts. Using a two-cable sling, spreader bar and an overhead hoist, the motor is transferred to the transport/erection dolly for assembly and transport to the launch area. As shown on Figure 14-9, the service structure crane raises the motor to the vertical position, with the aft erection ring axles pivoting on the pillow blocks of the dolly. After removal of the aft erection ring, the motor is hoisted over and into the vehicle afterbody, then lowered onto the thrust retaining ring. With the motor aft thrust skirt and thrust retaining ring index holes aligned, the motor is secured with cap screws. The forward erection ring is removed from the motor before installation of the forebody.

14-17 FOREBODY INSTALLATION

Installation of the forebody consists mainly of mating it with the afterbody, attaching the mast-mounted support arms to the vehicle rise-off hooks, adjusting the motor support pads at Vehicle Station 34.75 against the Algol motors, and installing the various access doors. The hoisting sling attachment is the same for both the forebody and afterbody.

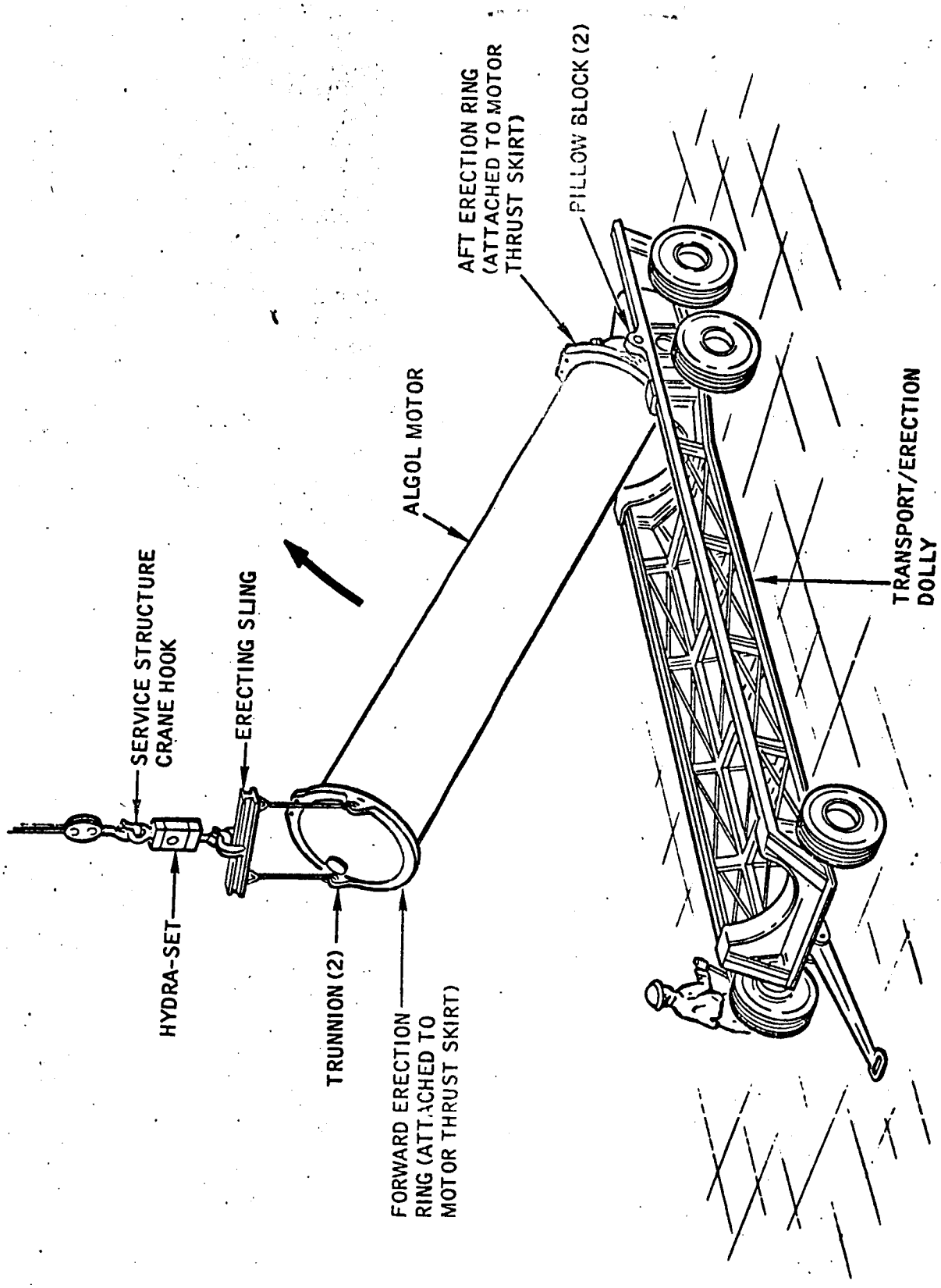

Figure 14-9 Algol Motor Erection Equipment

After the forebody is checked for interface mating with the spacecraft Service Module in the assembly building, it is transported to the launch site in the vertical position. The service structure crane is used to lift the forebody during installation. Before lowering into position on the afterbody, the forebody is rotated to place the support hooks at Vehicle Station 34.75 in line with the associated support arms on the mast. When lowered, care is taken to avoid contacting the Algol motors with the bulkhead motor support frames at Station 34.75. Dowel pins around the mating ring of the afterbody aid in aligning the bolt holes of the two mating rings.

When the bodies are properly mated, the mast-mounted support arms and the vehicle rise-off hooks at Vehicle Station 34.75 are in position to be connected. The arms are adjustable to accommodate manufacturing tolerances in the launcher and launch vehicle. The hooks are engaged at the support-arm roller fittings by depressing the ends of the arms and moving them forward and then upward into the hooks. At the same time, the spring-loaded switch trigger rods in the bores of the arms are retracted against their springs and released to bear against the outer edges of the hooks. After engagement, the arm fittings are adjusted to make a snug but non-binding fit in the hooks.

A brace assembly mounted between the support arms and secured to the mast protects the arms in the face of 60 to 80 mph winds and in the event of a rigging accident or bump. Compression clamps are now installed on the arms, at the support trunnions, but are removed before launching. The actuating cylinder for the support arms is charged with nitrogen a maximum of 12 hours before launch.

Serrated and slotted plates are used to adjust the support pads against the motors, three pads for the center motor, and four each for the outer motors. The three pads for the center motor are mounted on the motor support frame of the Vehicle Station 34.75 bulkhead, and the two inner pads for the outside motors

are mounted on half-frames. All frames are supported by six spokes radiating from the center motor support to the outer shell structure. The two outer pads for the outside motors are mounted on lateral bipod angles radiating at an angle to the spokes, on the horizontal plane, and attached at the juncture of the spokes and shell structure. Access doors are located at every other spoke.

14-18 FIN INSTALLATION

Each fin is attached to the afterbody at three points, one at the forward end and two at the aft end. The attachment bolts have a tolerance that provides a light drive fit which must be preserved. They are installed and removed with a fin pin tool that incorporates a sliding hammer. That portion of the bolt that extends past the fin attachment fittings is tapered and has a reduced diameter and shoulder at the threaded end. The fin pin tool is screwed onto the threaded end of the bolts for their installation and removal as shown on Figure 14-10.

The four cables of the fin sling are attached to matching plates on the fin; turnbuckles on each cable are used to make minor attitude adjustments when the fin attachment bolts are being installed. A small hoist on tracks on the bottom of the service structure level and above the fin attachment points is used for installing the fins. The alignment check kit is used to check vertical alignment of the fins.

14-19 PAYLOAD INSTALLATION

The service structure crane is used to lower the Service Module onto the frame of the forebody interfacing the vehicle at Station 0.0. As it is lowered, the Service Module is rotated to the correct position to mate with locating pins. The mating rings are then bolted together. Access is gained through openings on the perimeter at Vehicle Station 0.0. The spacecraft contractor accomplishes installation of the payload and its instrumentation.

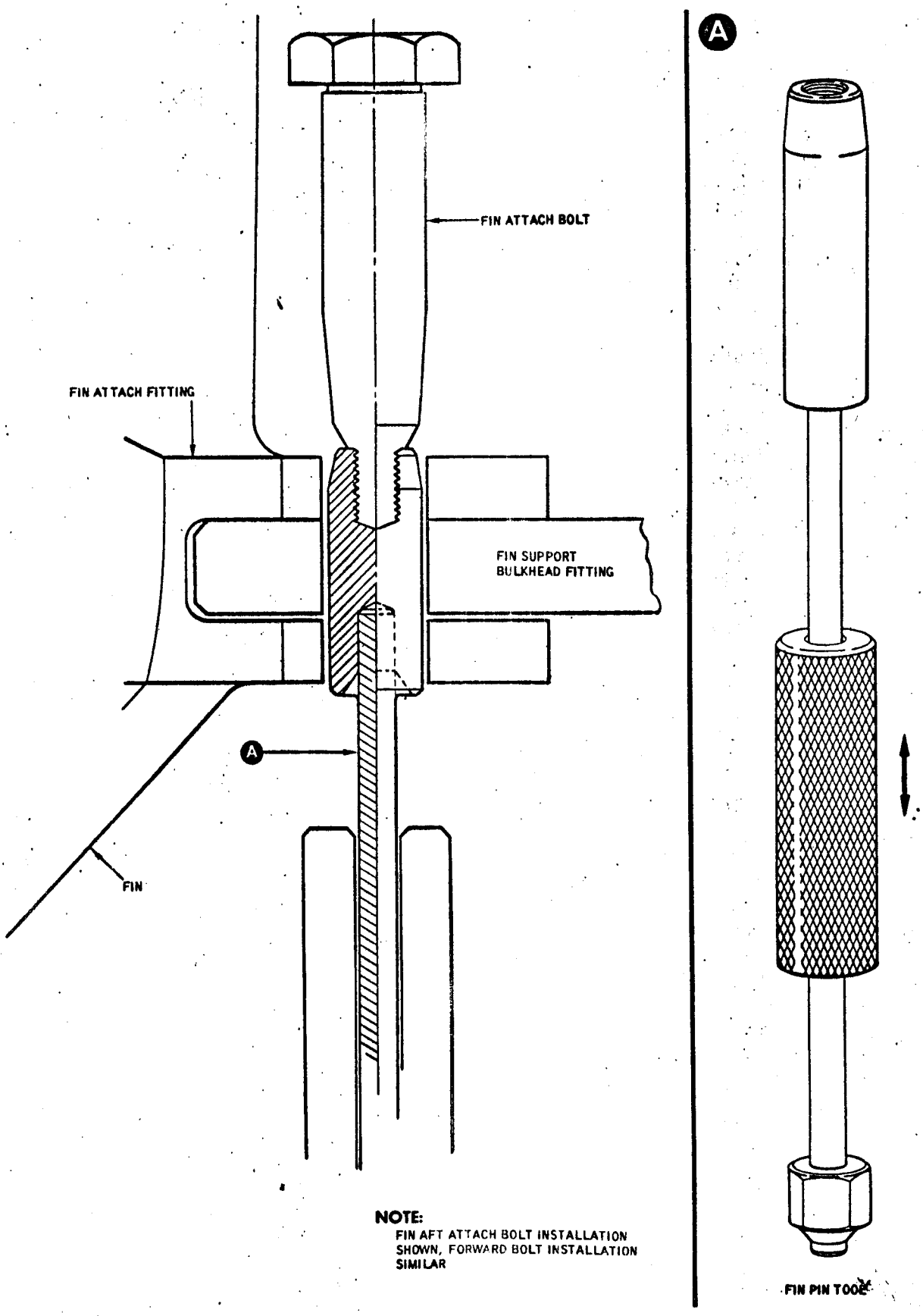

Figure 14-10 Fin Attach Bolt Installation

[redacted]

14-20 LAUNCHER

14-21 GENERAL

The launcher is shown on Figure 14-11. The launcher is a fabricated steel structure using heavy I-beams for the main supports. Components include a pivot frame mounted on double-flange, crane-type trucks for rotation to required azimuth positions, a support platform incorporating pads and pins for vehicle support, screwjacks for tilting the support platform to required elevation angles, and a launcher mast. The mast, attached to the support platform, incorporates two stabilizing support arms for the vehicle and a support arm for the payload umbilical harness. Two A-frames attach to the pivot frame and support the platform hinge points. The launcher is remotely adjustable for elevation and azimuth positions with angles being held within about ± 1/4 degree and ± 1/2 degree respectively. Adjustments may be made for launchings at angles ±45 degrees from some nominal direction.

14-22 UMBILICAL ARM

The support arm for the payload umbilical harness is hinge-mounted on the top of the mast. The arm is welded 3 inch outside diameter steel pipe approximately 10 feet long. One electrical plug mates with a receptacle in the spacecraft Service Module. Three 70-foot long umbilical cables are routed from the plug to a junction box on the launcher. A nitrogen cylinder actuates the umbilical arm and harness through a 20 degree arc away from the payload five seconds before launch.

14-23 SUPPORT ARMS

Two support arms, one mounted on each side of the mast and attached to associated hooks on the forebody of the launch vehicle at Station 34.75 support

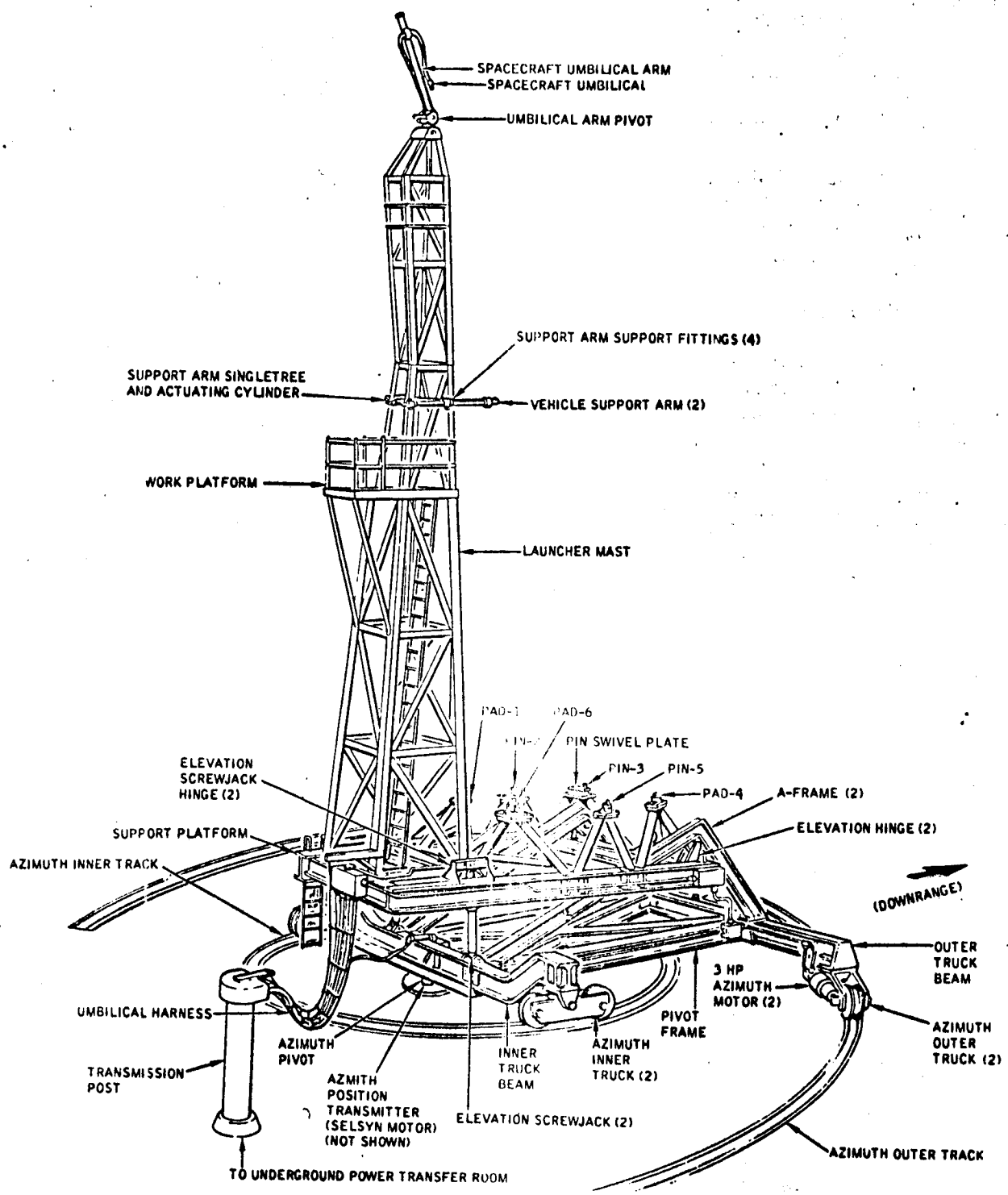

Figure 14-11 Vehicle Launcher

the vehicle at prescribed angles of inclination when the support platform tilts to the required elevation angle. Each of the arms is supported on the mast by two ball type bushings. The supports for the rear bushings include provisions for adjusting the arms in three planes by pivoting on forward bushing trunnions. The rear ends of the arms connect to a singletree which pivots on the rod end of a nitrogen-charged actuating cylinder; the other end of the cylinder is attached to a crossbrace on the mast.

When the vehicle has risen from the support platform two and one-quarter inches the hooks are carried off of the arm ends. This allows a rod in the bore of each arm to spring to a position that triggers an actuating switch located in the rear bushing of each arm. Both switches operate at approximately the same time to route electrical power to the control valve solenoid mounted on the nitrogen cylinder. The cylinder retracts the arms away from the vehicle a minimum of 10 inches in approximately 0.6 seconds. The closing of either switch completes the circuit to the solenoid on the actuating cylinder.

14-24 ARM ACTUATING CYLINDERS

Each of the actuating cylinders for the payload umbilical harness arm and the two vehicle support arms are self-contained. When the attached control valve on each cylinder is opened, nitrogen stored on the rod side is routed through tubing to the other side of the piston. The disparity in piston area at equalized pressure causes piston actuation.

Approximate characteristics are as follows: the cylinders have a 25.25 inch stroke and an operating pressure of 600 to 680 psig; the retracted length is 36.50 inches; the extended length 61.75 inches; an internal snubber with a 0.5-inch stroke at the last increment of piston travel protects the piston from bottoming in the cylinder.

14-25 MAST

The structure is seven feet square at the base and tapers to four feet square at the 30-foot level. A safety cage ladder extends from the base to a five-foot square work platform approximately midway up the mast. The mast is mounted on one end of the launcher support platform in a position opposite the elevation angle hinge-points. A blast shield protects the support arm assembly installed on the mast at the level opposite Vehicle Station 34.75.

14-26 SUPPORT PLATFORM

The support platform measures approximately 13 by 25 feet and is fabricated from I-beams and supporting cross members. The platform hinges mounted on the A-frames provide an axis for acquiring elevation angle when the two screwjacks between the platform and the pivot frame tilt the platform. An elevation protractor is installed on one side of one of the A-frame I-beams. As the support platform is elevated, the pitch angle is read on the protractor at the point opposite the lower edge of the platform I-beam.

The steel hinge pins at the elevation axis hinges are 6 by 12 inch cold rolled shafting. The pins at the attachment of the screwjacks to the platform and at the pivot frame are cold rolled steel and are 3 by 7 inches.

Three pads and three pins, mounted on bipods and tripods, support the vehicle on the platform. Two of the pins are fixed, while the third is mounted on a swivel plate. The fixed pins mate with slots in the vehicle and are in shear when the vehicle is tilted on the pitch axis. The pin on the swivel plate mates with a receptacle in the vehicle and is in shear across the yaw axis. The three pads, and the two support arms at Vehicle Station 34.75 of the forebody, comprise the balance of the vehicle support points.

14-27 PIVOT FRAME

The pivot frame, supported at four corners by two-wheel trucks, is the base assembly of the launcher. The frame is a structural steel rectangle approximately 19 by 23 feet. The azimuth pivot receptacle is located at the midpoint on one end of the frame below the mast. A bronze bushing in the receptacle mates with a pin and plate assembly attached to the concrete launch pad. A Selsyn motor connected to the azimuth pivot relays a signal to the blockhouse for azimuth position information. A-frames constructed from steel I-beams support the platform hinges at an elevated position.

14-28 ELEVATION CONTROL SCREWJACKS

The two screwjacks are hinge-mounted between the horizontal members of the support platform and the pivot frame, immediately below the mast and opposite the elevation axis hinge points. A 20-horsepower electric motor to drive the screwjacks is supported between the jack housings by the power transfer shaft housing. The motor assembly incorporates a bi-rotational locking mechanism and a magnetic disc brake. The screwjacks are 100 inches long when fully retracted and 159.68 inches long when fully extended. The screwjacks and motor are protected during launch by a steel blast shield of 1/4-inch plate covering an area of 60 square feet.

14-29 AZIMUTH TRUCKS

The basic frames of the trucks are steel and each unit has two double-flange cast steel wheels 24 inches in diameter. The wheel centers are approximately three feet apart, and the approximate height of each truck is 29 inches. The four trucks roll on two tracks to rotate the launcher around the azimuth pivot to the required azimuth position. Each of the two outer trucks are powered by an internally mounted 3-horsepower electric motor. Steel plate blast shielding protects the actuating assemblies during launch.

14-30 AZIMUTH TRACKS

The inner azimuth track is 100 feet long and completes a circle with a radius of 10 feet 10 inches, with the azimuth pivot in the center. The outer track is 135 feet long and forms a semi-circle with a radius of 25 feet 7 inches. The 45-degree nominal azimuth point approximately bisects the 135-foot length of the outer track. Thus, there is sufficient track extending past the 45-degree azimuth point allowing rotation of the launcher to obtain proper relationship with the service structure; a sufficient, though shorter, length of track extends past the nominal 315-degree azimuth to allow overrun of the launcher in the other direction during azimuth positioning.

14-31 GROUND SUPPORT EQUIPMENT, LITTLE JOE II

14-32 FOREBODY MATING STAND

The mating stand supports the bottom flange of the forebody at the Station 227.0 during shop mating of the payload adapter to check interface tolerances. The eight inch I-beam structure of the stand forms a square of fifteen feet and addition of brace members of the same material across each corner results in an octagonal shape inside the square. Leveling jacks and large casters are installed inside each of the four corners, and lugs welded to each of the octagon sides extend inward to serve as mounts for the forebody flange. This structure places the forebody close to the floor, with a total height of 19 feet 6 inches, to allow passage through the doorway of the assembly building. The forebody is left on the stand until time of installation on the launcher.

14-33 FIN PIN TOOL

The fin pin tool is used for inserting and removing the fin attachment bolts. A sliding weight on the shaft of the tool is used as a hammer to pull-drive the bolts, which have a light force fit. When a bolt is to be inserted,

a boss on the end of the pin tool is thrust into the attachment fitting bolt hole, the fin bolt is screwed into the end of the tool boss, and the tool draws the bolt into position in the fin attachment fittings. To remove a bolt, the tool boss is screwed onto the bolt and the tool drives the bolt, the boss of the tool following into the attachment fitting hole as the bolt is moved out. The bolt is then unscrewed from the tool boss and the tool is withdrawn.

14-34 COMMAND DESTRUCT SYSTEM TEST SET

This government-furnished unit is used to determine that the destruct system is functioning properly during checkout, under the environmental conditions at the launch site. The test set controls the input signal to the destruct command receivers with respect to signal strength, frequency, coding and modulation deviation. It monitors destruct system commands, voltages and other conditions. Destruct system operation is checked in these three ways:

a. Capability check of the destruct system to receive and properly operate with correctly coded signal: indication that the destruct receivers are operating; indication that the payload received an abort signal; and indication that a usable voltage was received at the destructor.

b. Capability check of the destruct system to reject an incorrectly coded signal: indication that the destruct receivers are operating and indication that no signal was sent to the payload abort or launch vehicle destructor.

c. Check for remote operation of the SAFE-ARM functions. The unit indicates at all times whether the destruct system is in the SAFE or ARM condition and whether the destruct system is operating from internal or external electrical power. A signal

with the following characteristics is transmitted through coax to the antenna coupler:

1.	Carrier frequency:	406-420 mc
2.	Carrier signal strength:	950 microvolts/meter (minimum)
3.	Modulation:	FM
4.	Modulation deviation:	60 kc ±10 percent peak deviation for any number of tones
5.	Coding:	Two equal deviation modulating tones

The test set is a "suitcase" portable type, and operates from an external source of 115-volt, 60 cps ac and 28-volt dc power. All inputs and outputs between the test set and the destruct system power, signal, and arm unit are 28-volt dc (±2 volts).

14-35 LAUNCHER CONTROL UNIT

The launcher control unit provides bi-directional control of the launcher azimuth and elevation within the limits of the positioning system. The unit consists of push-button switches and indicator lights which are lit when electric power is on. The unit is portable and can be operated from any position on the launch pad within its extension cable length of approximately 50 feet.

14-36 VEHICLE AIR CONDITIONING UNIT

The government-furnished vehicle environmental temperature control unit provides a flow of temperature conditioned air into the propulsion compartment of the launch vehicle. Sensing devides in ducts in the service structure ensures that an average temperature of 70 (±5) degrees F is maintained. Control circuits permit starting and stopping of the unit from the service structure of the blockhouse; performance is monitored from the blockhouse only. The flow, pressure, and temperature are manually variable and automatically maintained by a control

unit. An installation set includes an inlet and outlet duct with adapters for connection to the unit and vehicle.

14-37 WEATHER SHIELD AND CONDITIONED AIR SEAL

These are used to close and shield the open end of the afterbody and forebody against rain and dust during erection or maintenance of the launch vehicle. After the forebody has been installed over the rocket motors and secured to the afterbody, the unit retains the conditioned air until all remaining systems have been installed and checked. The unit is conical in shape, with a base approximately 13 feet in diameter, and extends about one foot below the edge of the vehicle body. Covering the vehicle completely, the unit is fitted snugly around the bottom with a purse-string type closure to minimize air leakage; the bottom edge of the unit is attached to the vehicle payload attachment channel with 120 clips between skin corrugations. Additional tie-downs attach to the vehicle, launcher or service structure for added support against wind and internal pressures. The unit is stressed for 0.5 psi internal pressure, and 60 mph winds. A frame retains the conical shape when the assembly is not pressurized.

14-38 TEST CONSOLE

The test console in the blockhouse monitors the vehicle systems, and incorporates the necessary controls for checkout and countdown. It consists of the following panels:

Vehicle Control Panel - This panel contains a dc voltmeter, ac voltmeter, frequency meter, selector and toggle switches, and indicator lights.

Support Equipment Panel - The support equipment panel consists of an elevation digital readout indicator, azimuth digital readout indicator, a remote control push button, toggle switches, power-on indicator lights and adjustable potentiometers.

Console Power Panel - This panel contains toggle switches and indicator lights.

Communication Panel - This panel contains the necessary interphone controls and jacks.

Unit Connections - Connections are provided from the test console to: the vehicle umbilical, the launcher positioning control system, the environmental control unit, the test conductor's console, and to facility power, which is 110- and 26-volt ac, 400 cps; 110-volt ac, 60 cps; and 28-volt dc.

14-39 BASIC ALIGNMENT CHECK KIT

This kit is used to check and level the launcher pads and pins, and to check the vertical alignment of the motors and fins. The kit consists of optical telescopes for vertical and horizontal measuring, fin alignment target adapters, measuring scales, and support stands for the telescopes and plumb bobs.

14-40 RECRUIT MOTOR ASSEMBLY STAND

The motor assembly stand is used to prepare Recruit motors for installation on the thrust retaining rings in the vehicle afterbody. The hexagonally shaped stand is constructed from standard 3-inch diameter pipe. The top of the stand includes plates for attachment of either a single- or multi-motor mount adapter. Six machine bolts and locknuts are installed in the bottom of the stand for leveling.

14-41 OTHER TOOLS

14-42 NOZZLE ALIGNMENT TOOL

This tool is used to align the Algol rocket motor nozzle cant angle. The unit consists essentially of a special straightedge and a clinometer.

14-43 LAUNCHER INDEX PIN ALIGNMENT TOOL

The pin alignment tool is used to check launcher index pin alignment. The unit has three liner bushings for checking the pins, and is constructed from steel channel with pressed, hardened steel bushings.

14-44 VEHICLE VENT PLUG STRAPS

These straps seal the vents at the upper end of the afterbody and the lower end of the forebody.

14-45 VEHICLE BASE ALGOL HOLE COVERS

The covers seal the motor holes until all motors are installed, to aid in preserving the motor grain temperatures in the correct range.

14-46 TARPAULINS

Government-furnished tarpaulins are used to shade the vehicle from the sun when cooling air is being used, and are also used for shading the rocket motors during installation.

14-47 HANDLING EQUIPMENT

14-48 VEHICLE HOISTING SLING

The hoisting sling is used alone to lift either or both vehicle bodies in the vertical position. It is used with the aft sling to move the forebody-afterbody assembly horizontally and to raise the assembly to the vertical position. The hoisting sling is capable of supporting the total load of the vehicle, less motors and fins. A spreader bar of welded tubular steel construction attaches to the vehicle body at two points. The bar has a U-bolt welded at each end; cables attach at each U-bolt and join in a common hoist ring. The cables are flexible stainless steel wire rope.

14-49 VEHICLE AFT SLING

The vehicle aft sling supports the aft end of the vehicle forebody-afterbody assembly during off-loading from the transport trailer and handling in the horizontal position. The sling consists of a hoist ring, two flexible, stainless steel, wire-rope cables, and two shackles. A U-bolt is welded to each shackle; the cables attach to each U-bolt and the hoist ring. With the body assembly lying horizontally, the shackles are bolted to the uppermost of the aft attachment fittings for fins III and IV when lifting the vehicle body from, or lowering onto, the transport trailer or storage cradle.

14-50 FIN SLING

This sling is used for handling the fins during installation, and serves to make small adjustments in attitude for installation convenience. The sling's load capability is 750 pounds. Sling construction consists of four wire-rope cables suspended from a ring, with each cable terminating in an attachment plate which mates with attachment fittings on the fins. A turnbuckle attached to each cable allows positioning of the fin for installation on the body.

14-51 MOTOR CRADLES AND DOLLIES

Recruit Motor Support Cradle - The motor support cradles for the Recruit rockets provide protection as well as support during motor checkout. Two support points on the unit, about 60 inches apart, can support a working load of 400 pounds. The support points are about six inches wide and are padded to prevent scarring or scratching the motor surface.

Algol Motor Storage Dolly - An Algol motor is transferred from the transport/erection dolly to a storage dolly for movement into and support in the controlled temperature storage area. The storage cradle is constructed from steel

tubing with the cradles at each end near the motor thrust skirts. Four fixed hard-rubber-tire wheels support the cradle. Fork lift points may also be employed.

14-52 RECRUIT MOTOR SLINGS

Two slings are used for all Recruit motor handling operations, including removal from the shipping containers. One sling is used for handling the motor in the horizontal position and the other is used for handling the motor in the vertical position.

Horizontal Lifting Sling - The horizontal lifting sling consists of a hoist ring; two flexible, stainless steel, wire-rope cables; and two attachment plates. The cables attach to each plate and join in the hoist ring. The attachment plates bolt to the forward and aft closure plates of the motor for lifting with an overhead hoist.

Vertical Lifting Sling - The vertical lifting sling consists of a hoist ring; two flexible, stainless steel, wire-rope cables; and two adapters. The cables attach to each adapter and join in the hoist ring. The adapters are bolted 180 degrees apart on the forward closure plate of the motor for lifting with an overhead hoist.

14-53 RECRUIT MOTOR VERTICAL HOIST ADAPTER

A hoist adapter is used for lifting the cluster of three motors for installation in the center motor position of the vehicle afterbody. The hoist adapter is positioned between the three motors and is attached to the forward closure plate of each motor with two bolts. A U-bolt is welded to the top of the hoist adapter to accommodate the service structure crane hook.

14-54 ALGOL MOTOR TRANSPORT/ERECTION DOLLY

A dual purpose dolly serves as the primary transport for moving the Algol rocket motors through the sequence of inspection before and after storage, check-out, motor buildup, and erection to the vertical position for installation in the vehicle. The dolly supports the motor in the horizontal position, and has pivot points for erecting the motor to the vertical position; lifting is by crane. The unit has six pneumatic-tired wheels; the two in front are steerable and two aft pairs are mounted in tandem. A cradle at each end of the dolly supports the motor near its thrust skirts. Pivot points for erecting are located midway between the tandem wheels, and are compatible with stub axles on the aft erection rings which are bolted to the ends of the motor at the thrust skirts. The unit includes a tow bar and brakes.

14-55 ALGOL MOTOR LIFTING EQUIPMENT

Shipping End Rings - These rings attach to the motor forward and aft thrust skirts, and are used for handling the motor in the horizontal position. The steel rings are circular, washer-shaped units weighing approximately 150 pounds. An extension on the top side of each ring includes provisions for attaching the horizontal lifting beam assembly. The shipping end rings are replaced by erection rings for handling the motor in the vertical position.

Horizontal Lifting Beam Assembly - This assembly attaches to the shipping end rings or erection rings for handling the motor in the horizontal position. The assembly consists of a 30-foot long tubular beam with cables extending from the ends to a pear-shaped link. The ends of the beam attach to the tops of the rings with ball lock pins that pass through clevises on the beam through the holes in the rings.

Erection Rings - Erection rings attach to the motor forward and aft thrust skirts for transferring the motor from the horizontal position to the vertical position, or vice versa, and for handling the motor in the vertical position. Trunnions project from the forward face of the forward ring at the three and nine o'clock positions for pin joining of the erecting sling clevises. Steel axles project beyond the ring diameter at the three and nine o'clock positions on the aft ring, to interface with the pillow blocks on the transport/erection dolly. Each ring also includes provisions on the top side for attaching the horizontal lifting beam assembly.

Erecting Sling - This sling attaches to the trunnions on the forward face of the forward erection ring for handling the motor in the vertical position. The sling consists of a five-foot long, welded steel, box structure with steel cables extending from each end. A clevis at the end of each cable allows for pin attachment to the forward erection ring trunnions. A steel eye is located in the center of the box structure for attachment of the hydra-set hook.

Hydra-Set - A hydra-set is installed between the service structure crane hook and the motor lifting equipment, the horizontal lifting beam or erecting sling, to permit raising and lowering the motor in small increments with precision control. The hydra-set consists of a case with a lifting eye on top, and an internal hydraulically-controlled piston; a lifting hook is attached to the lower side of the piston. Valves, mounted on the case, control the position of the piston. The unit is approximately 54 inches long with the piston fully extended and 42 inches long with the piston fully retracted.

14-56 VEHICLE STORAGE CRADLE

The storage cradle supports the launch vehicle body in the horizontal position for storage and maintenance. The cradle consists of four support posts

on a frame. Two of the support posts include provisions for attachment to fin attachment fittings on the afterbody. A padded, stainless steel sling is suspended between the other two posts to support the forward end of the vehicle body.

14-57 VEHICLE STORAGE COVER

The storage cover protects the vehicle body from dust, salt air and inclement weather. The cover is fabricated from vinyl plastic in two halves, the edges of which are heat-sealed together at the sides of the vehicle body. Each cover half has sufficient material for at least three reseals.

14-58 TRANSPORTATION EQUIPMENT

The launch vehicle, handling equipment and launcher are transported from the factory to the missile range facility via common highway truck transports, operating under wide-load restrictions.

The test vehicle and launcher are dismantled to facilitate shipment. Transport equipment consists of standard flat bed, low-boy, and closed van semi-trailers. Protective coatings, wrappings, cradles and crates protect the vehicle body and components of the launcher, actuating mechanisms, motors, controllers and similar items from damage during shipment.

Standard packaging and crating techniques are used for shipment of ground handling equipment such as vehicle hoist slings, motor cradles, and various smaller items of equipment.

SECTION XV

DEVELOPMENT PROGRAM DESCRIPTIONS

15-1 PAD ABORT MISSIONS

15-2 MISSION OBJECTIVES

General - The pad abort tests comprise the first phase of the abort test program, which is designed to evaluate and qualify the launch escape system (LES) capability for safely returning the Command Module to earth from any point in the launch sequence. The pad abort tests provide performance data at one extreme of the launch envelope, i.e., the static condition prior to first motion of the assembled spacecraft and launch vehicle. Two pad abort tests are planned at WSMR and tentative launch dates are shown on Table 15-1.

The purpose of the PA-1 flight test employing the BP-6 spacecraft is to determine the stability characteristics of the Apollo escape configuration and the operational characteristics of the escape systems during a pad abort. The purpose of the PA-2 flight test is to determine the structural integrity of the Command Module (AFRM-010), the operational characteristics of systems and subsystems, and to demonstrate the abort and recovery sequences during a pad abort.

PA-1 Test Objectives - The objectives of the PA-1 flight test are:

Primary:

a. Determine aerodynamic stability characteristics of the Apollo escape configuration during a pad abort.

b. Demonstrate the capability of the escape system to propel the Command Module to a safe distance from the launch

Table 15-1

SCHEDULE #1

MANNED SPACE FLIGHT SCHEDULE
APOLLO PAD ABORT AND LITTLE JOE II LAUNCHES
MASTER SCHEDULE

Apollo PROJECT
LEVEL NO. I

CONTRACTOR: NONE CONTRACT NO. SCHEDULE NO. I-3900-2

SCHEDULE APPROVAL DATE
LAST REPORT
CURRENT REPORT DEC. 19, 1962

MISSION	MILESTONES	CY 1962												CY 1963												CY 1964											
		J	F	M	A	M	J	J	A	S	O	N	D	J	F	M	A	M	J	J	A	S	O	N	D	J	F	M	A	M	J	J	A	S	O	N	D
	PA-1 (BP #6) LES QUALIFICATION																																				
	LJ II #1 L/V QUALIFICATION FLIGHT																																				
A-001	LJ II #2 (BP #12) LES QUAL @ MAX Q ABORT																																				
	PA-1 OR LJ II #2 BACKUP (BP #23)																																				
	(SEE NOTE 1)																																				
A-002	LJ II #3 (BP #22) CM STAB @ HI-ALT ABORT																																				
A-003	LJ II #4 (AFM #002) STRUC QUAL @ MAX Q																																				
	PA-2 (AFM #010) STRUCTURAL QUAL																																				

NOTES 1. IN THE EVENT THAT BP #23 IS REQUIRED AS BACKUP FOR LITTLE JOE II #2, LAUNCH VEHICLE LITTLE JOE II #3 WILL BE USED WITH BP #23, AND ADDITIONAL LAUNCH VEHICLE LITTLE JOE II #5 WILL BE ORDERED FOR AFM 002.

Table 15-1

vehicle during a pad abort.

c. Determine escape tower vibration during a pad abort.

d. Demonstrate the launch escape tower release mechanism.

e. Demonstrate operation of tower jettison motor.

f. Demonstrate the parachute recovery system.

Secondary:

a. Demonstrate abort and recovery timing sequence.

b. Determine dynamics of Command Module during jettisoning of the escape tower.

c. Demonstrate operation of research and development instrumentation and communications equipment to be used on subsequent flights.

d. Demonstrate compatibility of prototype ground support equipment with the Command Module.

e. Determine initial separation trajectory of the escape tower.

f. Demonstrate structural integrity of the escape tower during a pad abort.

PA-2 Test Objectives - The objectives of the PA-2 flight test are:

Primary:

a. Demonstrate the structural integrity of the production Command Module during a pad abort.

b. Determine the operational characteristics of subsystems during a pad abort.

c. Demonstrate abort sequences.

d. Demonstrate recovery sequences.

e. Demonstrate the parachute recovery system.

15-3 CONFIGURATIONS

PA-1 Hardware - The PA-1 flight test configuration, shown on Figure 15-1, is the BP-6 CM, LES, and a SM structural system. The CM encompasses the following systems:

a. Earth Landing System
   1. Sequence controller
   2. Drogue parachute subsystem
   3. Pilot parachute subsystem
   4. Main parachute subsystem
   5. Forward heat shield separation subsystem

b. Electrical Power System
   1. Main power batteries
   2. Electrical distribution subsystem
   3. CM to tower umbilicals
   4. Spacecraft sequencer
   5. Pyrotechnic subsystem

c. Telecommunications and Instrumentation System
   1. Instrumentation

d. Structural System
   1. Boilerplate structure - 6

PA-2 Hardware - The PA-2 flight test configuration, shown on Figure 15-2, is the production airframe (AFRM 010), a LES, a SM containing a structural system, and a CM to SM separation subsystem. The CM is comprised of the following systems:

a. Earth Landing Systems

b. Environmental Control System
   1. Pressure and temperature control

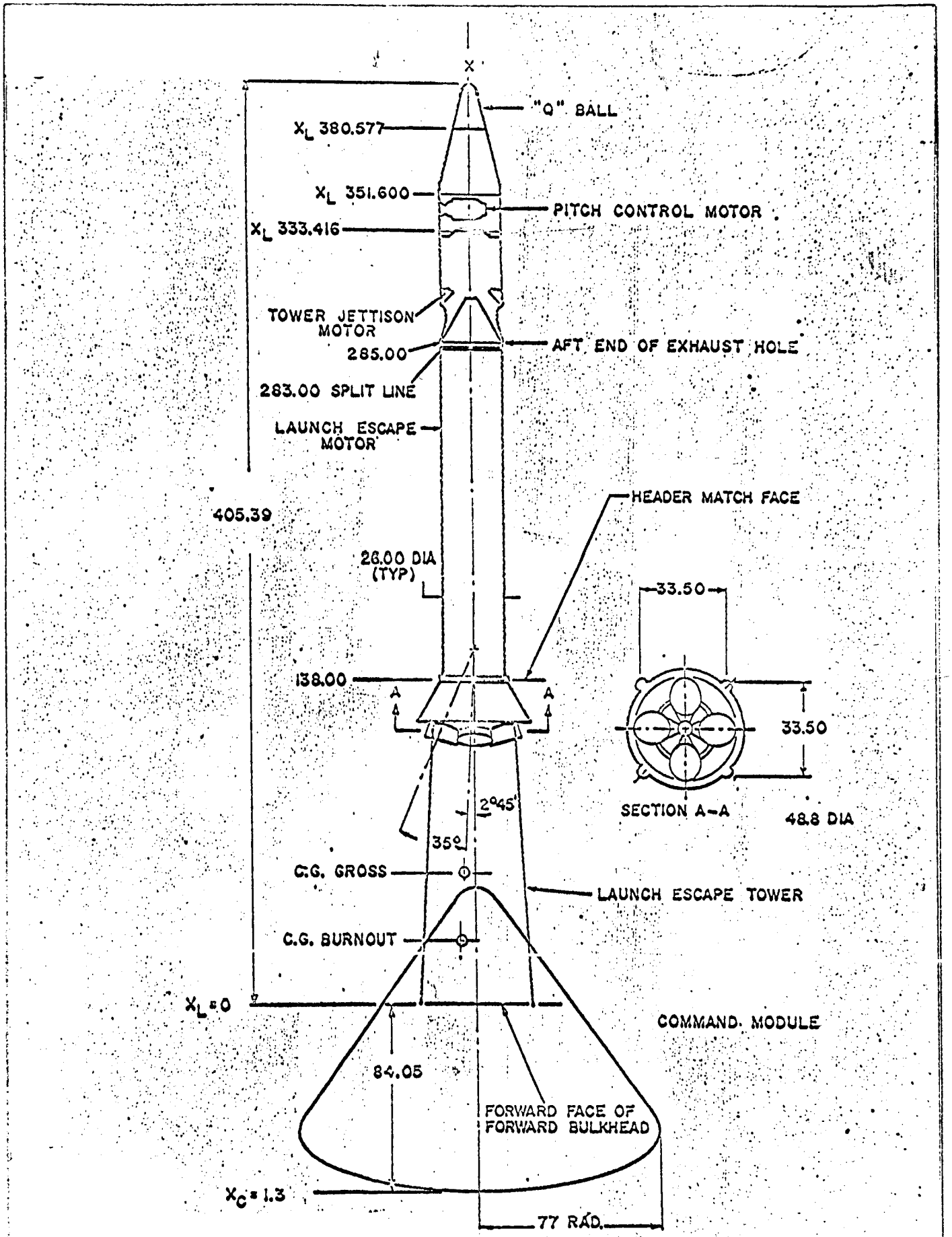

Figure 15-1 PAD ABORT #1(BP-6)

[redacted]

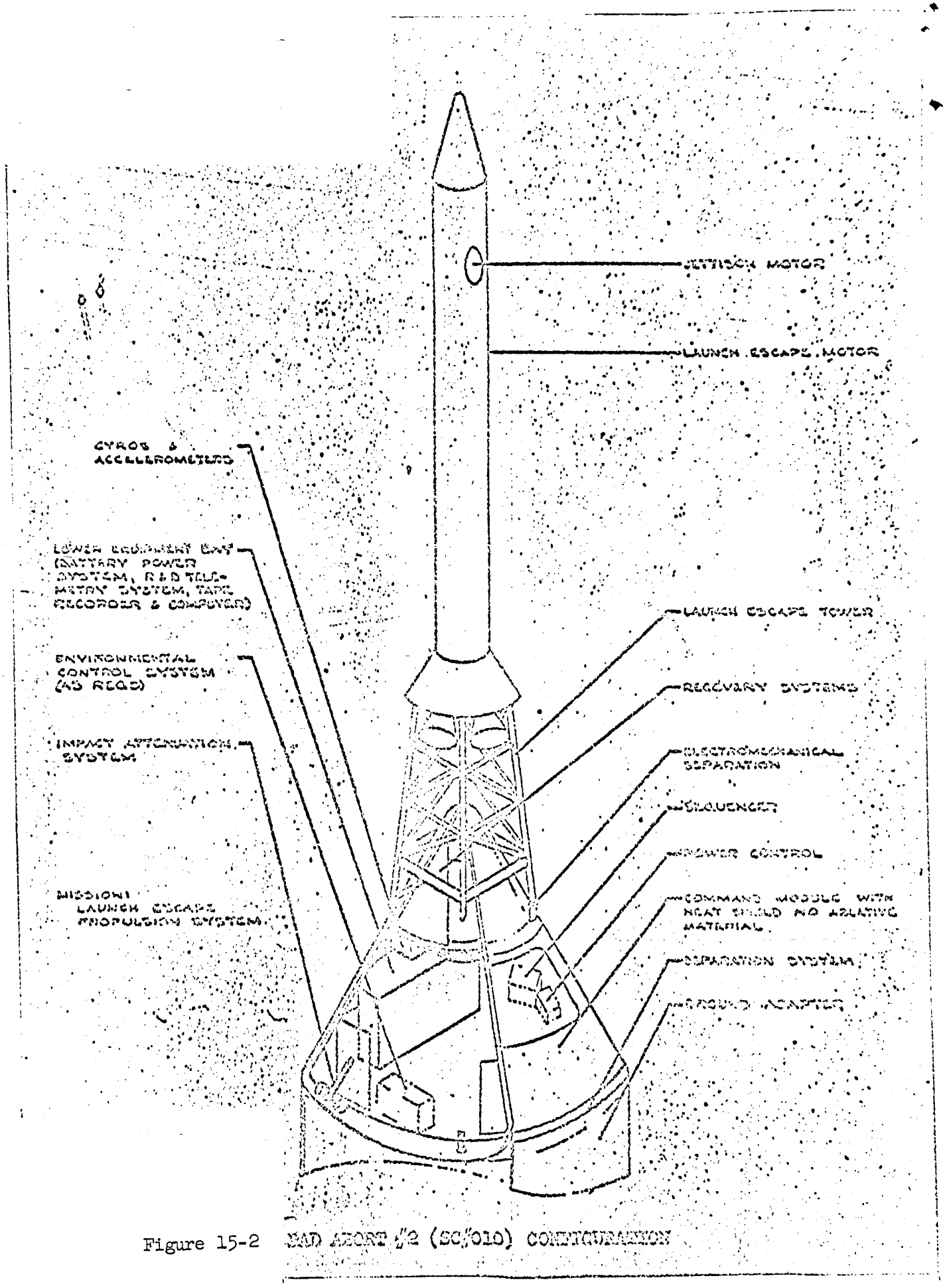

Figure 15-2 BAD ABORT #2 (SC#010) CONFIGURATION

[redacted]

c. Electrical Power System

1. Main power batteries

2. Static inverter

3. Electrical distribution subsystem

4. Interior illumination

5. CM to tower umbilicals

6. CM to SM umbilicals

7. Spacecraft sequencer

8. Pyrotechnic subsystem

d. Reaction Control System

e. Telecommunications and Instrumentation System

1. Instrumentation

f. Stabilization and Control System

(less visual indicator and manual controls)

g. Crew provisions

1. Crew accessories plus dummies (uninstrumented)

2. Crew couches

3. Crew restraints

h. Structural System

1. Airframe - 010

15-4 MISSION PROFILE

PA-1 and PA-2 flight tests are initiated by a simulated abort signal. The CM/LES aborts vertically from the pad and maintains a predetermined trajectory using the launch escape and pitch control motors. The LES system is jettisoned just before a 10,000 foot apogee, the forward heat shield is deployed, and the Earth Landing System deploys the pilot, drogue and main parachutes to effect landing of the CM.

15-5 LITTLE JOE II MISSIONS

15-6 MISSION OBJECTIVES

General - The Little Joe II test program provides a means of accomplishing early evaluation and qualification of the LES at high dynamic pressure in the transonic speed range. The tests simulate Apollo-Saturn boost environment without incurring the cost and schedule penalties associated with the use of Saturn boost vehicles. Four Little Joe II launches are presently programmed (Table 15-1) for 1963-1964 as shown in Table 15-1, and include: A Little Joe II #1 launch vehicle qualification flight, Little Joe II #2 (Flight Test A-001) LES qualification at maximum "g", Little Joe II #3 (Flight Test A-002) high altitude abort, and Little Joe II #4 (Flight Test A-003) CM structural qualification at maximum "g".

Little Joe II-1 Test Objective - This is a booster qualification flight with dummy payload.

Little Joe II-2 Test Objectives - The purpose of flight test A-001 is to demonstrate the structural integrity and operational characteristics of the LES and determine aerodynamic stability of the escape vehicle during abort at high dynamic pressure in the transonic speed range. The objectives of this flight are:

Primary:

a. Demonstrate the capability of the escape system to propel the Command Module to a predetermined distance from the Saturn launch vehicle.

b. Determine aerodynamic stability characteristics of the escape configuration for this abort condition.

c. Demonstrate satisfactory structural integrity of the escape tower.

d. Demonstrate the satisfactory operation of the abort and recovery sequence.

e. Demonstrate proper operation of the parachute recovery system.

Secondary:

a. Demonstrate Little Joe II - spacecraft compatibility.

b. Determine aerodynamic loads due to fluctuating pressures on the Command Module during a Little Joe II launch.

Little Joe II-3 Test Objectives - The purpose of flight test A-002 is to determine the stability characteristics of the Apollo escape configuration and the operational characteristics of the escape system during abort at about 180,000 feet altitude. The objectives of the flight are:

Primary:

a. Determine the aerodynamic stability of characteristics of the Command Module during a simulated abort from the Saturn C-1 launch vehicle just prior to tower jettison.

b. Demonstrate the capability of the launch escape system to propel the Command Module to a safe distance from the launch vehicle just prior to tower jettison.

c. Determine the capability of the reaction control system to rate stabilize the Command Module for re-entry.

Secondary:

a. Demonstrate the Parachute Recovery System.

Little Joe II-4 Test Objectives - The purpose of flight test A-003 is to demonstrate structural integrity of the production CSM and operational characteristics of certain CM systems during an abort at high dynamic pressures in the transonic speed range. The objectives of this flight are to:

Primary:

a. Demonstrate structural integrity of the production Command Module and Service Module under an abort at high dynamic pressures in transonic speed ranges.

b. Determine the operational characteristics of subsystems at the high dynamic pressure incurred by the escape configuration during an abort.

Secondary:

a. Determine the dynamics of the Command Module during an abort resulting in high dynamic pressure on the escape configuration.

b. Demonstrate abort and recovery sequences.

c. Demonstrate the Parachute Recovery System.

15-7 CONFIGURATIONS

The Little Joe II general launch vehicle configuration is shown on Figure 14-1. Specific configurations for the flight test missions are shown on Table 15-2.

15-8 MISSION PROFILES

Mission A-001, which employs BP-12, and mission A-003, which employs production airframe 002, are similar in flight profiles. The launch vehicle follows a non-lifting trajectory to a maximum "g" condition altitude; an

[redacted]

Table 15-2 LITTLE JOE II CONFIGURATION SUMMARY

Configuration	Mission		
	A-001	A-002	A-003
Little Joe II Booster	#1	#3	#4
Launch Escape System	X	X	X
Service Module	X	X	X
Structural System	X	X	X
Separation System	X	X	X
Command Module	BP-12	BP-22	AFRM-002
Environmental Control System	X	X	X
Pressure and Temperature Control	X	X	X
Electrical Power System			X
Entry of Post Landing Batteries		X	X
Main Power Batteries	X		X
Static Inverter			X
Electrical Distribution	X	X	X
Interior Illunination			X
CM to Tower Umbilicals	X	X	X
CM to SM Umbilicals	X	X	X
SC Sequencer	X	X	X
Pyrotechnic Subsystem	X	X	X
Reaction Control System		X	X
Telecommunication and Instrumentation System	X	X	X
Instrumentation	X	X	X
C-Band Transponder	X	X	X

[redacted]

Table 15-2 (Continued)

Configuration	Mission		
	BP-12	BP-22	AFRM-002
HF Recovery Transceiver			X
VHF Recovery Transceiver			X
VHF/FM Transmitter			X
VHF/AM Transmitter			X
Cameras		X	X
Stabilization and Control System		X (2)	X

(1) Little Joe II #2 booster is used for the launch vehicle qualification flight.

(2) Less visual indicator and manual controls

abort is initiated which in trajectory simulates that of the Saturn-1; the LES is fired to separate the CM from the booster; the LES is jettisoned; and the Earth Landing System sequence is initiated.

Mission A-002, which employs BP-22, will demonstrate a high altitude abort using the LES. The launch vehicle follows a controlled trajectory up to an altitude of about 180,000 feet and a Mach Number of about 5, approximately matching a point on the Saturn-1 trajectory. Abort is initiated and the Launch Escape and Earth Landing Systems are programmed to initiate recovery.

15-9 SATURN-1 MISSIONS

15-10 MISSION OBJECTIVES

Five Apollo Saturn-1 unmanned missions (A-101 through A-105) are planned prior to the first manned Apollo flight (A-106). The tentative launch schedule is shown on Table 15-3. The purpose of the unmanned Saturn-1 missions are to demonstrate and qualify the launch vehicle and CSM systems. Mission A-102 (SA-7) is a backup mission to A-101 (SA-6) and mission A-104 (SA-8) is a back-up mission to A-103 (SA-9).

Mission A-101 (SA-6) Objectives - The objectives of mission A-101 are:

Primary:

a. Qualify the launch vehicle.

b. Demonstrate the physical compatibility of launch vehicle and spacecraft under preflight and flight conditions.

c. Determine the launch and exit environmental parameters to verify design criteria.

Secondary:

a. Determine structural characteristics of the Launch Escape System.

Table 15-3

SCHEDULE #2

MANNED SPACE FLIGHT SCHEDULE

APOLLO-SATURN I

LAUNCHES-MASTER SCHEDULE

PROJECT LEVEL NO. 1

CONTRACTOR: NONE CONTRACT NO. SCHEDULE NO. 1-3100-2

SCHEDULE APPROVAL DATE

LAST REPORT

CURRENT REPORT DECEMBER 19, 1962

MISSION	MILESTONES
	SA -2 VEHICLE DEVELOPMENT BLOCK I
	SA - 3VEHICLE DEVELOPMENT BLOCK I
	SA-4 VEHICLE DEVELOPMENT BLOCK I
	SA-5 VEHICLE DEVELOPMENT BLOCK II
A-101	SA-6(BP # 13) LAUNCH ENVIRONMENT
A-102	SA-7(BP#15) BACKUP FOR SA-6
A-103	SA-9(BP#16) MODIFIED METEORITE EXPERIMENT
A-104	SA-8(MODIFIED BP#18)BACK UP METEORITE OR APOLLO A/T PAYLOAD (SEE NOTE I)
A-105	SA-10(AFM-009) UNMANNED S/C QUAL. (ORBITAL OR SUBORBITAL)
A-106	SA-111(AFM-011) FIRST MANNED FLT.
	SA-112(C/M S/M) MANNED FLT.
	SA-113(C/M S/M) MANNED FLT.
	SA-114(C/M S/M) MANNED FLT.
	SA-115 (C/M S/M) SPARE
	SA-116 (C/M S/M) SPARE

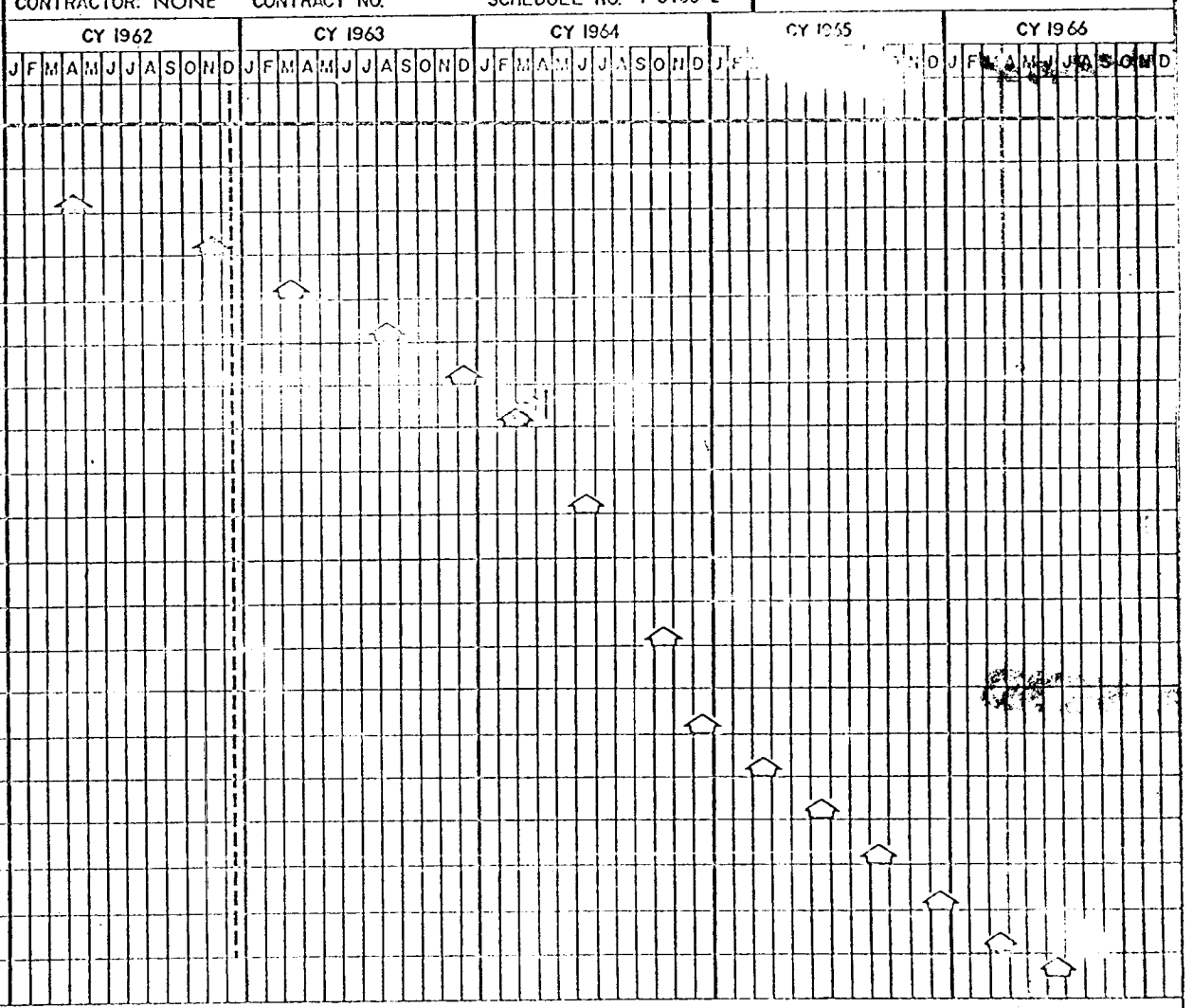

NOTES: 1. Qualification of EDS, service structure and adapter system.

b. Determine the tower separation characteristics.

c. Demonstrate the compatibility of the R&D communications and instrumentation systems with the launch vehicle systems.

d. Determine operational suitability of AMR ground tracking systems.

Mission A-103 (SA-9) Objectives - The objectives of mission A-103 are:

Primary:

a. Qualify launch vehicle.

b. Evaluate operation of complete EDS.

Secondary:

a. Demonstrate satisfactory tower separation.

Mission A-105 (SA-10) Objectives - This mission is the final qualification flight of the CSM prior to the first manned mission. The objectives of this flight are:

Primary:

a. Demonstrate the structural integrity of the adapter and CSM structure for flight loads to be encountered on manned C-1 flight.

b. Determine the operational characteristics of the SM propulsion system at zero "g".

c. Determine operational characteristics of CSM systems.

d. Demonstrate compatibility of production CSM with C-1.

e. Demonstrate recovery operational techniques.

Secondary:

a. Demonstrate the restart capability of the SM propulsion system.

b. Evaluate operation of the fuel cells in an oper loop operation.

c. Evaluate operation of the guidance and navigation system in an open loop operation.

Mission A-106 (SA-111) Objectives - This mission is the first manned Apollo orbital flight whose prime objective is to demonstrate this capability. Other objectives are:

Secondary:

a. Demonstrate proper operation of CSM systems with manual control.

b. Demonstrate the capability of the guidance system for injecting the CSM into earth orbit and operating in an orbital environment.

c. Demonstrate the operation of GOSS during manned operations.

d. Demonstrate the maneuvering capability of the Command Module RCS during re-entry.

e. Demonstrate the capability of the complete recovery operation.

15-11 CONFIGURATIONS

Table 15-4 summarizes the Saturn-1 configurations for missions A-101 through A-106. Three Saturn-1 manned missions are presently planned after A-106, however, the objectives and mission plans are presently undefined.

Table 15-4 SATURN-1 CONFIGURATION SUMMARY

CONFIGURATION	MISSION					
	A-101	A-102	A-103	A-104	A-105	A-106
Launch Vehicle	SA-6	SA-7	SA-9	SA-8	SA-10	SA-111
Command Module	BP-13	BP-15	BP-16	BP-18	AFRM 009	AFRM 011
Earth Landing System					X	X
Environmental Control System	X	X			X	X
Electrical Power System	X	X	X	X	X	X
Reaction Control System					X	X
Telecommunication and Instrumentation System	X	X			X	X
Stabilization & Control System					X	X
Guidance and Navigation System					X	X
Crew Provisions					X	X
Crew Safety System					X	X
Launch Escape System	X	X	X	X	X	X
Service Module	Str. Only	Str. Only	Str. Only	Str. Only	X	X
Service Propulsion System					X	X
Reaction Control System					X	X
Environmental Control System					X	X
Electrical Power System					X	X
Separation Systems					X	X
Adapter	X	X	X	X	X	X

15-12 MISSION PROFILES

The Saturn-1 - Apollo mission preliminary profiles are summarized on Table 15-5.

15-13 SATURN IB MISSIONS

15-14 MISSION OBJECTIVES

A total of twelve, Apollo-Saturn IB missions are presently programmed during the 1965 to 1968 time period. Nine of the missions are planned, and three are reserved as spare or backup missions if required. Table 15-6 lists the purpose of each mission and tentative launch dates.

15-15 CONFIGURATIONS

The first four scheduled Apollo-Saturn IB missions (SA 201 - SA 204) are comprised of boilerplate Command Modules, production Launch Escape Systems, boilerplate or airframe structure Service Modules, boilerplate Lunar Excursion Modules and production airframe Adapters. The remaining missions employ production airframes, with the LEM containing the ascent stage only.

15-16 MISSION PROFILES

The Saturn IB Apollo mission profiles are summarized on Table 15-7.

15-17 SATURN 5 MISSIONS

15-18 MISSION OBJECTIVES

Fifteen Apollo-Saturn 5 missions are presently programmed during the 1966 to 1968 time period. Six unmanned missions are scheduled prior to the first manned lunar mission (SA-507). Table 15-8 lists the purpose of each mission and tentative launch dates.

Table 15-5 PRELIMINARY SATURN I/APOLLO MISSION PROFILES

PROFILES	MISSIONS	A-101	A-102	A-103	A-104	A-105	A-106	A-107	A-108	A-109	A-110	A-111
	LAUNCH VEHICLE	SA-6	SA-7	SA-8	SA-9	SA-10	SA-111	SA-112	SA-113	SA-114	SA-115	SA-116
	UNMANNED	X	X	X	X	X						
	MANNED						X	X	X	X	X	X
S-I Stage ignition		1	1	This vehicle is a spare for SA-9 and has the same profile.	1	1	1	1	1	1	This vehicle is a back-up for SA-114 and has the same profile.	This vehicle is a back-up for SA-114 and has the same profile.
Liftoff		2	2		2	2	2	2	2	2		
S-I jettison		3	3		3	3	3	3	3	3		
S-IV ignition		4	4		4	4	4	4	4	4		
LES jettison		5	5		5	5	5	5	5	5		
Orbit injection	0-Orbits, d-days / Alt. - n.m.	6	6			*6 3-0/100	6 3-0/100	6 3-0/100	6 4-d/100	6 4-d/100		
S-IV jettison						*7	7	7	7	7		
Operate SM propulsion system						*8	8	8	8	8		
Spacecraft systems checko[illegible]						*9	9	9	9	9		
Retro using SM prop. system								10	10	10		
CM-SM separation						*10	10	11	11	11		
Re-entry - zero lift						*11	11					
Re-entry - controlled lift								12	12	12		
Recovery, Land (L) or Water (W)						*12-W	12-W	13-W	13-L	13-L		

NOTES: Circled numbers indicate the order in sequence of events
S-I Stage engine burn time - 146 seconds
S-IV Stage engine burn time - 463 seconds
*Orbital or suborbital

Table 15-6

SCHEDULE #3

MANNED SPACE FLIGHT SCHEDULE

APOLLO-SATURN I-B LAUNCHES MASTER SCHEDULE

PROJECT LEVEL NO. 1

CONTRACTOR: NONE CONTRACT NO. SCHEDULE NO. 1-3200-2

SCHEDULE APPROVAL DATE

LAST REPORT

CURRENT REPORT DECEMBER 19, 1962

MILESTONES	CY 1962				CY 1963				CY 1964				CY 1965				CY 1966				CY 1967				CY 1968			
	1	2	3	4	1	2	3	4	1	2	3	4	1	2	3	4	1	2	3	4	1	2	3	4	1	2	3	4
SA-201 (BP #) LAUNCH ENVIRONMENT															⬠													
SA-202 (BP #) EMERG DET SYS CHECKOUT																⬠												
SA-203 (BP #) EMERG DET SYS CHECKOUT																												
& SPARE FOR SA-201																	⬠											
SA-204 (BP #) EMERG DET SYS CHECKOUT																		⬠										
SA-205 (S/C #) MANNED-LEM T/O STG																												
DEVELOPMENT																		⬠										
SA-206 (AFM #) MANNED-ACCEPTANCE LEVEL																			⬠									
SA-207 (S/C #) MANNED-LEM T/O STG																												
DEVELOPMENT																				⬠								
SA-208 (S/C #) MANNED-LEM T/O STG																												
DEVELOPMENT																					⬠							
SA-209 (S/C #) MANNED-LEM T/O STG																												
DEVELOPMENT																						⬠						
SA-210 (S/C #) SPARE																							⬠					
SA-211 (S/C #) SPARE																								⬠				
SA-212 (S/C #) SPARE																									⬠			

NOTES

Table 15-7 SATURN I-B/APOLLO MISSION PROFILE

PROFILES	MISSION										
	LAUNCH VEHICLE	SA-201	SA-202	SA-203	*SA-204	SA-205	SA-206	SA-207	SA-208	SA-209	SA-210
	UNMANNED	X	X	X	X						
	MANNED					X	X	X	X	X	X
S-1 ignition		1	1	This vehicle is a spare for the SA-201 and SA-202 vehicles	1	1	1	1	1	1	1
Lift-off		2	2		2	2	2	2	2	2	2
Normal LES jettison		3	3		3	3	3	3	3	3	3
Orbit injection	Stay time (days)	4	4		4	4	4	4	4	4	4
	Altitude (n.m.)	100	100		100	100	? 100	? 100	? 100	? 100	? 100
Separate SC-LV					*5	5					
Separate manned LEM							5	5	5	5	5
Manual & automatic systems oper.					*6	6					
LEM Prop. System qualification							6	6	6	6	6
Orbital restart qualification of SM Propulsion System					*7	7					
Rendezvous & docking practice							7	7	7	7	7
Return crew to CM							8	8	8	8	8
Restart SM Propulsion System					*8	8	9	9	9	9	9
CM - SM Separation					*9	9	10	10	10	10	10
Controlled lift re-entry					*10	10	11	11	11	11	11
Recovery L (land) W (water)					*11	11-L	12-L	12-L	12-L	12-L	12-L

NOTES: Circled numbers indicate the order in sequence of events
S-I Stage burn time - 141 seconds
S-IVB burn time - ?
*This mission may be manned.

Table 15-8

SCHEDULE #4

MANNED SPACE FLIGHT SCHEDULE

APOLLO SATURN V LAUNCHES-MASTER SCHEDULE

PROJECT LEVEL NO. 1

CONTRACTOR: NONE CONTRACT NO. SCHEDULE NO. 1-3300-2

SCHEDULE APPROVAL DATE

LAST REPORT

CURRENT REPORT DECEMBER 19, 1962

MILESTONES	CY 1963				CY 1964				CY 1965				CY 1966				CY 1967				CY 1968				CY 1969			
	1	2	3	4	1	2	3	4	1	2	3	4	1	2	3	4	1	2	3	4	1	2	3	4	1	2	3	4
SA-501 (BP #) EMERG DET SYS CHECKOUT																												
SA-502 (BP #) LAUNCH ENVIRONMENT																												
SA-503 (BP #) REENTRY QUAL																												
SA-504 (AFM #) REENTRY QUAL																												
SA-505 (AFM #) REENTRY QUAL																												
SA-506 (BP #) EMERG DET SYS CHECKOUT																												
SA-507 (S/C #) MANNED LUNAR MISSION																												
SA-508 (S/C #) MANNED LUNAR MISSION																												
SA-509 (S/C #) MANNED LUNAR MISSION																												
SA-510 (S/C #) MANNED LUNAR MISSION																												
SA-511 (S/C #) MANNED LUNAR MISSION																												
SA-512 (S/C #) MANNED LUNAR MISSION																												
SA-513 (S/C #) MANNED LUNAR MISSION																												
SA-514 (S/C #) MANNED LUNAR MISSION																												
SA-515 (S/C #) MANNED LUNAR MISSION																												

NOTES

15-19 CONFIGURATIONS

The first three Apollo - Saturn 5 missions (SA-501, SA-502, and SA-503) are comprised of boilerplate Command Modules, Service Modules, and Lunar Excursion Modules, production airframe Adapters, and production Launch Escape Systems, with only the tower jettison motor active. Mission SA-504 and SA-505 have production Command Module and Launch Escape System, boilerplate Lunar Excursion and Service Modules, and production airframe Adapters. The remaining missions (SA-506 through SA-515) are presently programmed to employ production airframes.

15-20 MISSION PROFILES

The Saturn 5 Apollo mission preliminary profiles are summarized on Table 15-9.

Table 15-9 SATURN 5/APOLLO MISSION PROFILE

PROFILES	MISSION	SA-501	SA-502	SA-503	SA-504	SA-505S	SA-506	SA-507	SA-508	SA-509	SA-510	SA- *
	LAUNCH VEHICLE	X	X	X	X	X	X		X			
	UNMANNED							X		X	X	X
	MANNED											
S-IC ignition		1	1	1	1	1	1	1	1	1	1	1
Liftoff time (Time T)		2	2	2	2	2	2	2	2	2	2	2
Normal LES jettison (T + 167 sec.)		3	3	3	3	3	3	3	3	3	3	3
Orbit injection	Stay time (days)			4 ?			4 ?	4 ?	4 ?	4 ?	4 ?	4 ?
	Altitude (n.m.)			?			100	150	100	100	100	100
Program LV to achieve re-entry at 36,000 fps.					4	4						
Demonstrate S-IVB restart under zero g								5				
Retro to de-orbit, separate CM-SM					5	5						
Restart S-IVB for translunar injection									5	5	5	5
Re-entry in controlled lifting traj. upper limit of design re-entry corr.					6	6						
CM-LEM docking (translunar)								6	6	6	6	6
SC-S-IVB separation								7	7	7	7	7
Exercise LEM prop. system								8				
Perform midcourse corrections as required									8	8	8	8
Demonstrate LEM operation								9				
SM prop. syst. retro-lunar orbit									9	9	9	9
Demonstrate SM prop. sys.								10				
CM/SM-LEM separation **										10	10	10

NOTES: Circled numbers indicate order in sequence of events
* includes SA-511 through SA-515
** and *** These events repeated to conserve order of the circle numbers

S-IC Stage engine burn time - 150 seconds
S-II Stage engine burn time - 390 seconds
Total S-IVB burn time - 1020 seconds; Approximately 705 seconds for earth orbit injection

Table 15-9 SATURN 5/APOLLO MISSION PROFILE
(Continued)

PROFILES	MISSION											
	LAUNCH VEHICLE	SA-501	SA-502	SA-503	SA-504	SA-505S	SA-506	SA-507	SA-508	SA-509	SA-510	SA- *
	UNMANNED	X	X	X	X	X	X		X			
	MANNED							X		X	X	X
Lunar surface reconnaisance***									10			
Separate CM from SM/LEM								11				
Demonstrate op. LEM sys.									11			
LEM trj., Equiperoid lunar orbit										11	11	11
CM/SM-LEM separation**									12			
Lunar surface reconnaisance***										12	12	12
Select lunar landing site										13	13	13
Manned lunar landing										14	14	14
Remain on lunar surface - days										15 ?	15 ?	15 ?
Launch from lunar surface										16	16	16
CM/SM - LEM rendezvous and cres transfer										17	17	17
CM/SM-LEM separation										18	18	18
CM/SM transearth trajectory insertion									13	19	19	19
Midcourse corrections									14	20	20	20
CM/SM re-entry orientation and SM jettison									15	21	21	21
CM re-entry on controlled-lift trajectory								12	16	22	22	22
Recovery, Land (L) or Water (W)					7-W	7-W		13-L	17-L	23-L	23-L	23-L

NOTES: Circled numbers indicate order in sequence of events
* includes SA-511 through SA-515
** and *** These events repeated to conserve order of the circle numbers

[redacted]

Bibliography

1. Project Apollo, Lunar Landing Mission Design Plan, Review Draft, NASA-MSC, January 15, 1963

2. Preliminary Apollo Flight Plan for Pad Abort, Little Joe II, and C-1 Program, NASA-MSC, January 10, 1963

3. CM/SM/Adapter Systems, NASA-MSC, November 15, 1962

4. Manned Space Flight Schedules, Vol. 1, Level 1 Schedules and Resources Summaries, OMSF Program Station Review, January 25-26, 1963

5. Appendix A, Spacecraft Systems, NASA-MSC, November, 1962

6. Project Apollo, Lunar Excursion Modules, Exhibit B, NASA-MSC, December 20, 1962

7. Little Joe II Launch Vehicle Familiarization Manual, NASA-MSC, March 1, 1963

[redacted]

List of References

1. Hertzberg, H.T.E. and Daniels, G.S., Anthropometry of Flying Personnel, 1950, WADC TR 52-31, 1954

2. Military Specification MIL-I-6181D, Interference Control Requirements, Aircraft Equipment, Nov. 25, 1959

3. Detailed Checkout Plan, Pre-Launch Phase, presently unavailable