[redacted]

CLASSIFICATION CHANGE

To UNCLASSIFIED
By authority of GDS - EO 11652 Date 12/31/72
Changed by L. Shirley
Classified Document Master Control Station, NASA
Scientific and Technical Information Facility

Accession No. 03766-65

SID 62-99-38

Copy No. 5

MONTHLY WEIGHT AND BALANCE REPORT

FOR THE APOLLO SPACECRAFT

CONTRACT NAS 9-150

(U)

PARAGRAPH 8.10 EXHIBIT I

1 APRIL 1965

Prepared By

WEIGHT CONTROL

(NASA-CR-117615) MONTHLY WEIGHT AND BALANCE REPORT FOR THE APOLLO SPACECRAFT (North American Aviation, Inc.) 37 p

N79-76455

Unclas
00/18 11468

FF No. 602(A)
(PAGES) (CODE)
NASA-CR-117615
(NASA CR OR TMX OR AD NUMBER) (CATEGORY)
[redacted]

RECEIVED
APR 17 1965
NASA
DOCUMENT
CENTER

This document contains information affecting the national defense of the United States within the meaning of the Espionage Laws. Title 18 U.S.C. Section 793 and 794. Its transmission or revelation of its contents in any manner to an unauthorized person is prohibited by law.

NORTH AMERICAN AVIATION, INC.
SPACE and INFORMATION SYSTEMS DIVISION

GROUP-4
DOWNGRADED AT 3 YEAR INTERVALS;
DECLASSIFIED AFTER 12 YEARS.
~~CONFIDENTIAL~~

TABLE OF CONTENTS

	ITEM	PAGE
I.	INTRODUCTION	1-2
II.	MISSION WEIGHT, CENTER OF GRAVITY AND INERTIA SUMMARY	
	Block I Apollo Earth Orbit Mission	3
	Block I Apollo Launch Abort Configuration	4
	Block I Command Module Earth Orbit Mission	5
	Block I Command Module Low Altitude Abort Condition	6
	Block I Dimensional Diagram	7
	Block II Apollo Lunar Orbital Rendezvous Mission	8
	Block II Apollo Launch Abort Configuration	9
	Block II Command Module Lunar Orbital Rendezvous Mission	10
	Block II Command Module Low Altitude Abort Condition	11
	Block II Dimensional Diagram	12
III.	CURRENT WEIGHT STATUS	
	Block I CSM Weight Status Summary	13
	Block I Command Module Weight Status	14
	Block I Service Module Weight Status	15
	Block I Launch Escape System Weight Status	16
	Block I Adapter Weight Status	17
	Block II Spacecraft Weight Status	18
	Block II Command Module Weight Status	19
	Block II Service Module Weight Status	20
	Block II Launch Escape System Weight Status	21
	Block II Adapter Weight Status	22
	Command Module Weight Changes	23-26
	Service Module Weight Changes	27-28
	Launch Escape System Weight Changes	29
	Adapter Weight Changes	30
IV.	POTENTIAL WEIGHT CHANGES - BLOCK I AND II	
	Command Module	31-32
	Service Module	33-34
	Adapter	35
V.	GOVERNMENT FURNISHED EQUIPMENT LIST	
	Block I	36
	Block II	37

CASE FILE COPY

INTRODUCTION

The April report incorporates changes to the Block I and Block II standard manned vehicles subsequent to the March report. The change descriptions are included in the current weight status section. The current Block I status is based on the drawing release for CSM 012 and 014, and the Block II status is based on estimated data consistent with the CSM Master End Item Specification, SID 64-1345. Since the Block II LOR spacecraft requirements are defined in noted specification, the section titled "Estimated Weight Changes to LOR" has been deleted with the concurrence of the NASA-MSC Office of Mass Properties Control.

The Mission Weight, Center of Gravity and Inertia Summary section reflects the Block I CSM launch weight consistent with a booster payload capability in orbit of 32,500 pounds, as listed in SID 63-313.

The entry centers of gravity data reflects an unballasted Command Module L/D of 0.38 for Block I and 0.40 for Block II. Studies are in progress to relocate items in the Block I and II Command Modules to constrain the L/D to a nominal value of 0.34 at entry.

The ballast in the Block I LES has been reduced by 70 pounds from the March report to maintain the 8200 pound control weight. This results in a change in the LEV burnout center of gravity, along the X axis, of 1.6 inches (1125.0 to 1123.4). This change is acceptable at this time, pending actual verification of the 1125.0 requirement by future tests.

The current report reflects a Block II LOR Spacecraft increase of 220 pounds at injection and 115 pounds at the injected spacecraft condition less Service Module propellant. The current weight of 90,930 pounds is based on a Service Module propellant loading for a specific impulse of 313.0 seconds and a delta V budget as defined in SID 64-1344. The propellant weight also includes a loading tolerance of 210 pounds. A pending change is under consideration to increase the specific impulse of the SPS propellant above 313.0 seconds which reflects the three sigma low value at burnout. The pending change would offset the loading tolerance penalty to the useable propellant.

The LEM weight utilized is 29,500 pounds, excluding crew. Direction has been received from NASA-MSC to incorporate the 32,000 pound LEM. The Block II Spacecraft weight and balance summary will be revised to reflect the increased LEM after the delta V budget has been redefined.

~~CONFIDENTIAL~~

The current Block I status reflects an Airframe 012 drawing release based on a 10.6 day EO mission. The major changes in Block I are:

Command Module - Incorporation of potential change items STR-4 modification of forward section due to wrap-around loads, ECS-3 addition of oxygen back-up system for the oxygen surge tank, ELS-2 addition of an umbilical tension separation cylinder to the forward heat shield, C & D-1 addition of integral lighting to the flight director attitude indicator, and increase in the S-Band transponder based on dual in lieu of single transponder to meet reliability requirements.

Service Module - Incorporation of potential change items MPS-3 change to steel in lieu of titanium for the gimbal bearing per Aerojet status and RCS-3 redesign of engine mount to a heat sink type of mount.

Launch Escape System - Decrease in ballast due to constraining the LES to the 8200 pound control weight.

The current Block II status reflects an 8.3 day LOR mission. The major changes in the Block II are:

Command Module - Incorporation of potential change item STR-4 modification of forward section due to wrap-around loads, the addition of the Service Module RCS electric heater provisions and an increase in the S-band transponder based on Collins status.

Service Module - Incorporation of potential change items MPS-3 change to steel in lieu of titanium for the gimbal bearing per Aerojet status, RCS-3 redesign of engine mount to a heat sink type of mount, EPS-5 revised estimate of super insulation, the addition of the Service Module RCS heaters and an increase in the cryogenic system based on revised estimates.

Launch Escape System - Addition of ballast consistent with Command Module and LES balance requirements.

Adapter - Addition of provision to connect the Service Module disconnect plate on the +Z axis with the SLA disconnect on the -Z axis.

~~CONFIDENTIAL~~

TECHNICAL REPORT INDEX/ABSTRACT

ACCESSION NUMBER						DOCUMENT SECURITY CLASSIFICATION	
						[redacted]	

TITLE OF DOCUMENT	LIBRARY USE ONLY
Monthly Weight and Balance Report for the Apollo Spacecraft	
AUTHOR(S) D. D. Morgan	

CODE	ORIGINATING AGENCY AND OTHER SOURCES	DOCUMENT NUMBER
	NAA- S&ID	SID 62-99-38

PUBLICATION DATE	CONTRACT NUMBER
1 April 1965	NAS9-150

DESCRIPTIVE TERMS

ABSTRACT

The Monthly Weight and Balance Report for the Apollo Spacecraft is filed in accordance with Paragraph 8.10 Exhibit I and is a summary type weight report. This report reflects the current weight of the Block I and Block II manned vehicles and explains the changes in weight from the previous report. This report also reflects the mission weight, center of gravity, inertia summary and dimensional diagrams.

For Block I Mass Properties Design Data refer to SID 64-1700, dated 16 October 1964 and for Block II Mass Properties Design Data refer to SID 64-2142, dated 15 February 1965.

FORM 131-V REV. 6-64

AIRFRAME 014

APOLLO EARTH ORBIT MISSION

WEIGHT, CENTER OF GRAVITY AND INERTIA SUMMARY

1 APRIL STATUS

ITEM	WEIGHT POUNDS	CENTER OF GRAVITY*			MOMENTS OF INERTIA (SLUG-FT.^{2})		
		X	Y	Z	ROLL (X)	PITCH (Y)	YAW (Z)
COMMAND MODULE	10880	1041.7	0.2	5.9	5337	4978	4560
SERVICE MODULE - Less Propellant	9865	909.8	1.0	-0.4	6235	10714	10458
SLA Attachment Ring	75	837.1	0.0	-1.8	93	48	46
TOTAL - Less SPS Usable Propellant	20820	978.5	0.6	2.9	11711	35538	34818
SPS USABLE PROPELLANT - S/M**	8275	867.5	27.3	-11.5	2755	1856	2262
TOTAL - With Propellant	29095	946.9	8.2	-1.2	15643	53396	53730
SLA - Less SM Attaching Ring	3405	642.1	0.4	-2.0	8488	11293	11048
TOTAL - Injected	32500	915.0	7.4	-1.3	24171	125818	125946
LAUNCH ESCAPE SYSTEM	8200	1298.5	-0.1	-0.2	577	21529	21528
TOTAL - Spacecraft Launch	40700	992.2	5.9	-1.1	24828	355240	355444

NOTES: *Centers of gravity are in the NASA reference system except that the longitudinal axis has an origin 1000 inches below the tangency point of the Command Module substructure mold line.

**The propellant weight of 8275 is based on an Airframe 014 in orbit payload capability of 32,500 pounds consistent with SID 63-313.

[redacted]

[redacted]

BLOCK I

APOLLO LAUNCH ABORT CONFIGURATION

WEIGHT, CENTER OF GRAVITY AND INERTIA SUMMARY

1 APRIL STATUS

ITEM	WEIGHT POUNDS	CENTER OF GRAVITY*			MOMENTS OF INERTIA (SLUG-FT.2)		
		X	Y	Z	ROLL (X)	PITCH (Y)	YAW (Z)
COMMAND MODULE	10880	1041.7	0.2	5.9	5337	4978	4560
LAUNCH ESCAPE SYSTEM	8200	1298.5	-0.1	-0.2	577	21529	21528
TOTAL - Launch Abort	19080	1152.1	0.1	3.3	5952	93101	92645
LESS - MAIN AND PITCH MOTOR PROPELLANTS	-3198	1294.3	0.0	0.0	-71	-1285	-1285
TOTAL - LES Burnout	15882	1123.4	0.1	3.9	5871	75030	74582

NOTE: *Centers of gravity are in the NASA reference system except that the longitudinal axis has an origin 1000 inches below the tangency point of the Command Module substructure mold line.

BLOCK I

COMMAND MODULE

WEIGHT, CENTER OF GRAVITY AND INERTIA SUMMARY

EARTH ORBITAL MISSION

1 APRIL 1965

VEHICLE MODE	WEIGHT POUNDS	CENTER OF GRAVITY			MASS INERTIA DATA (SLUG-FT.^{2})					
		X	Y	Z	Ixx	Iyy	Izz	Ixy	Ixz	Iyz
COMMAND MODULE, LAUNCH	10880	1041.7	0.2	5.9	5337	4978	4560	17	-267	-5
Less: Boost & Mission Water	-8	1022.6	-63.4	-16.4						
Food	-59	1053.0	-28.6	37.0						
Add: Waste-Fecal	17	1039.0	47.0	12.0						
CO_2 Absorbed (22 Cart.)	51	1016.8	-4.2	27.7						
Potable Water	30	1022.6	-63.4	-16.4						
Waste Water	56	1022.5	-21.1	61.8						
PRIOR TO ENTRY	10967	1041.4	0.1	6.1	5399	5027	4594	30	-288	-6
Less: Propellant	-135	1022.6	-5.6	57.0						
Ablator Burnoff	-365	1016.2	-0.4	15.7						
Entry Coolant	-6	1022.6	-63.4	-16.4						
Forward Heat Shield	-414	1098.5	0.0	0.4						
Drogue Chutes	-56	1089.1	0.0	-21.0						
PRIOR TO MAIN CHUTE DEPLOYMENT	9991	1039.9	0.3	5.5	4939	4297	3939	25	-198	1
Less: Main Chutes (3)	-409	1090.8	-1.8	6.2						
Propellant	-135	1022.6	-5.6	57.0						
LANDING	9447	1038.0	0.4	4.7	4781	3948	3629	32	-178	10

NOTE: Mass inertia data are shown for accumulative totals only.

BLOCK I

COMMAND MODULE

WEIGHT, CENTER OF GRAVITY AND INERTIA SUMMARY

LOW ALTITUDE ABORT CONDITION

1 APRIL STATUS

VEHICLE MODE	WEIGHT POUNDS	CENTER OF GRAVITY			MASS INERTIA DATA (SLUG-FT.^{2})					
		X	Y	Z	Ixx	Iyy	Izz	Ixy	Ixz	Iyz
COMMAND MODULE, LAUNCH	10880	1041.7	0.2	5.9	5337	4978	4560	17	-267	-5
Less: Oxidant	-180	1022.6	14.5	62.7						
Forward Heat Shield	-414	1098.5	0.0	0.4						
Drogue Chutes	-56	1089.1	0.0	-21.0						
PRIOR TO MAIN CHUTE DEPLOYMENT	10230	1039.5	0.0	5.3	5104	4450	4054	27	-185	-36
Less: Main Chutes (3)	-409	1090.8	-1.8	6.2						
Fuel	-90	1022.6	-45.8	45.8						
LANDING	9731	1037.5	0.5	4.9	4979	4148	3826	23	-177	0

NOTE: Mass inertia data are shown for accumulative totals only.

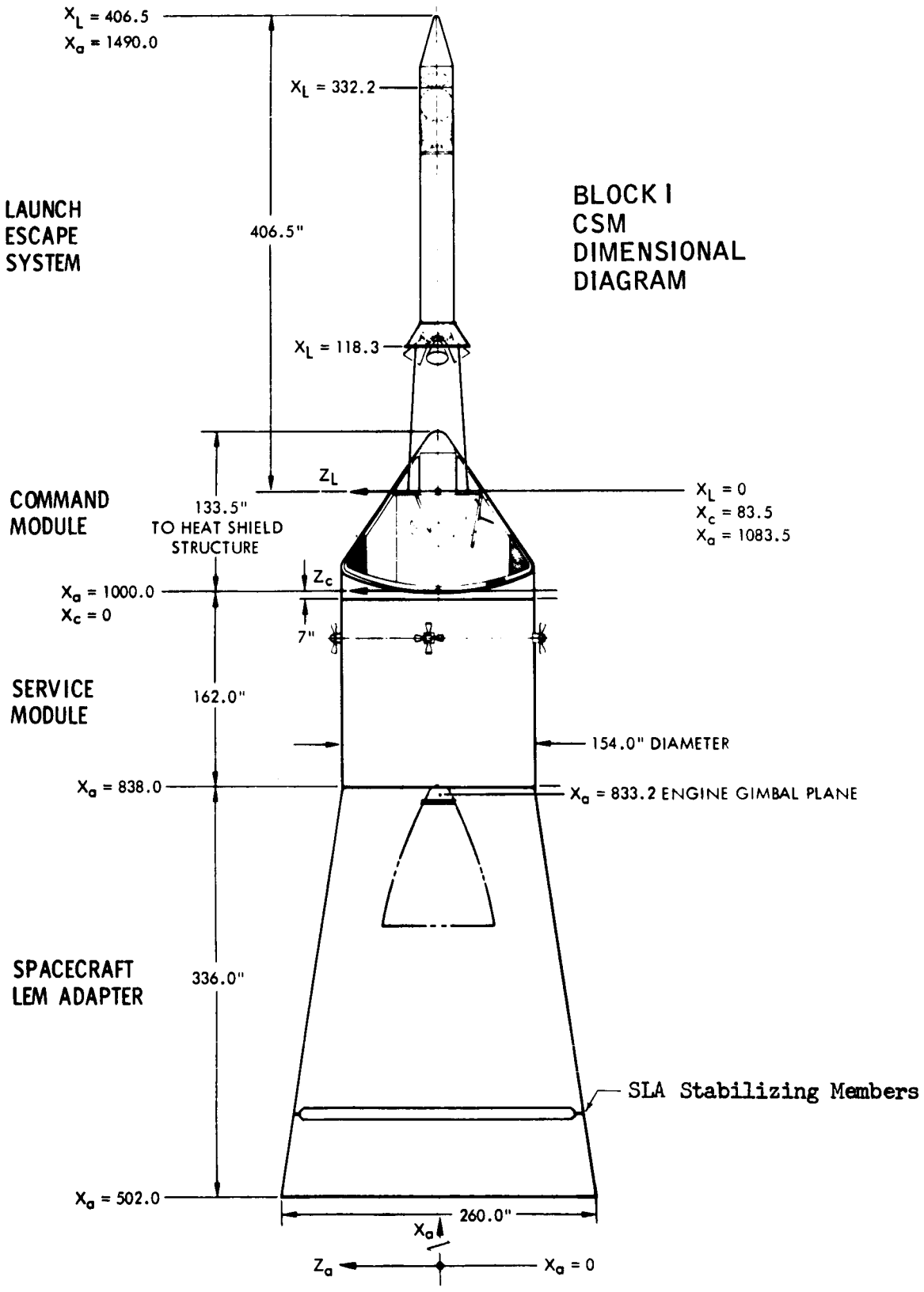
X_L = 406.5
X_a = 1490.0
X_L = 332.2
LAUNCH ESCAPE SYSTEM
406.5"
BLOCK I CSM DIMENSIONAL DIAGRAM
X_L = 118.3
Z_L
X_L = 0
X_c = 83.5
X_a = 1083.5
COMMAND MODULE
133.5" TO HEAT SHIELD STRUCTURE
Z_c
X_a = 1000.0
X_c = 0
7"
SERVICE MODULE
162.0"
154.0" DIAMETER
X_a = 838.0
X_a = 833.2 ENGINE GIMBAL PLANE
SPACECRAFT LEM ADAPTER
336.0"
SLA Stabilizing Members
X_a = 502.0
260.0"
X_a
Z_a
X_a = 0

BLOCK II

APOLLO LOR MISSION

WEIGHT, CENTER OF GRAVITY AND INERTIA SUMMARY

1 APRIL STATUS

ITEM	WEIGHT POUNDS	CENTER OF GRAVITY			MOMENTS OF INERTIA (SLUG-FT.^{2})		
		X	Y	Z	ROLL (X)	PITCH (Y)	YAW (Z)
COMMAND MODULE	10370	1041.9	-0.4	6.4	4847	4340	3999
SERVICE MODULE - Less Propellant	10050	915.1	-4.9	8.1	6495	11232	11311
SLA Attachment Ring	75	837.1	0.0	-1.8	93	48	46
TOTAL - Less SPS Usable Propellant	20495	979.0	-2.6	7.2	11462	33663	33417
SPS USABLE PROPELLANT - S/M**	37560	901.0	2.7	-1.1	19539	17870	24612
TOTAL - With Propellant	58055	928.5	0.8	1.8	31279	69131	75510
LUNAR EXCURSION MODULE	29500	588.5	0.0	0.0	19409	21485	21219
SLA - Less SM Attaching Ring	3375	643.3	0.8	-2.3	8475	11304	11051
TOTAL - Injected	90930	807.6	0.6	1.1	59189	610514	616355
LAUNCH ESCAPE SYSTEM	8140	1297.3	-0.1	-0.2	581	21021	21020
TOTAL - SPACECRAFT LAUNCH	99070	847.9	0.5	1.0	59773	1018207	1024046

NOTES: *Centers of gravity are in the NASA reference system except that the longitudinal axis has an origin 1000 inches below the tangency point of the Command Module substructure mold line.

**The 37560 pounds of SPS propellant includes the amount necessary for the 75 pound SLA ring, which remains with the Service Module after separation from the booster, and 210 pounds of loading tolerance allowance. This quantity is determined from an estimated time line analysis and the specific impulse of 313.0 second.

[redacted]

BLOCK II

APOLLO LAUNCH ABORT CONFIGURATION

WEIGHT, CENTER OF GRAVITY AND INERTIA SUMMARY

1 APRIL STATUS

ITEM	WEIGHT POUNDS	CENTER OF GRAVITY*			MOMENTS OF INERTIA (SLUG-FT.^{2})		
		X	Y	Z	ROLL (X)	PITCH (Y)	YAW (Z)
COMMAND MODULE	10370	1041.9	-0.4	6.4	4847	4340	3999
LAUNCH ESCAPE SYSTEM	8140	1297.3	-0.1	-0.2	581	21021	21020
TOTAL - Launch Abort	18510	1154.2	-0.3	3.5	5471	89610	89225
LESS - MAIN AND PITCH MOTOR PROPELLANTS	-3198	1294.3	0.0	0.0	-71	-1285	-1285
TOTAL - LES Burnout	15312	1125.0	-0.3	4.2	5389	71939	71564

NOTE: *Centers of gravity are in the NASA reference system except that the longitudinal axis has an origin 1000 inches below the tangency point of the Command Module substructure mold line.

BLOCK II

COMMAND MODULE

WEIGHT, CENTER OF GRAVITY AND INERTIA SUMMARY

LUNAR ORBIT RENDEZVOUS MISSION

1 APRIL STATUS

VEHICLE MODE	WEIGHT POUNDS	CENTER OF GRAVITY			MASS INERTIA DATA (SLUG-FT.^{2})					
		X	Y	Z	Ixx	Iyy	Izz	Ixy	Ixz	Iyz
COMMAND MODULE, LAUNCH	10370	1041.9	-0.4	6.4	4847	4340	3999	6	-299	27
Less: Boost & Mission Water	-8	1022.6	-63.4	-16.4						
Food	-48	1049.0	-38.6	25.8						
Docking	-150	1110.0	0.0	-2.5						
PLSS (1)	-53	1009.4	-0.2	-6.5						
Add: Waste-Fecal	14	1039.0	47.0	12.0						
CO_2 Absorbed (17 Cart.)	39	1016.6	-4.2	27.5						
Potable Water	30	1022.6	-63.4	-16.4						
Waste Water	56	1022.5	-21.1	61.8						
PRIOR TO ENTRY	10250	1040.8	-0.4	6.8	4896	4216	3816	18	-300	28
Less: Propellant	-135	1022.6	-5.6	57.0						
Ablator Burnoff	-365	1016.2	-0.4	15.7						
Entry Coolant	-6	1022.6	-63.4	-16.4						
Forward Heat Shield	-300	1090.0	0.0	1.0						
Drogue Chutes	-56	1089.1	0.0	-21.0						
PRIOR TO MAIN CHUTE DEPLOYMENT	9388	1040.2	-0.3	6.1	4462	3644	3360	12	-222	34
Less: Main Chutes (3)	-399	1090.4	-1.2	7.5						
Propellant	-135	1022.6	-5.6	57.0						
LANDING	8854	1038.2	-0.2	5.3	4308	3310	3063	14	-205	42

NOTE: Mass inertia data are shown for accumulative totals only.

BLOCK II

COMMAND MODULE

WEIGHT, CENTER OF GRAVITY AND INERTIA SUMMARY

LOW ALTITUDE ABORT CONDITION

1 APRIL STATUS

VEHICLE MODE	WEIGHT POUNDS	CENTER OF GRAVITY			MASS INERTIA DATA (SLUG-FT.^{2})					
		X	Y	Z	Ixx	Iyy	Izz	Ixy	Ixz	Iyz
COMMAND MODULE, LAUNCH	10370	1041.5	-0.4	6.4	4847	4340	3999	6	-299	27
Less: Oxidant	-180	1022.6	14.5	62.7						
Forward Heat Shield	-300	1090.0	0.0	1.0						
Docking Provisions	-150	1110.0	0.0	0.0						
Drogue Chutes	-56	1089.1	0.0	-21.0						
PRIOR TO MAIN CHUTE DEPLOYMENT	9684	1039.4	-0.7	5.8	4633	3809	3589	13	-207	-4
Less: Main Chutes (3)	-399	1090.4	-1.2	7.5						
Fuel	-90	1022.6	-45.8	45.8						
LANDING	9195	1037.4	-0.2	5.4	4512	3519	3272	2	-203	31

NOTE: Mass inertia data are shown for accumulative totals only.

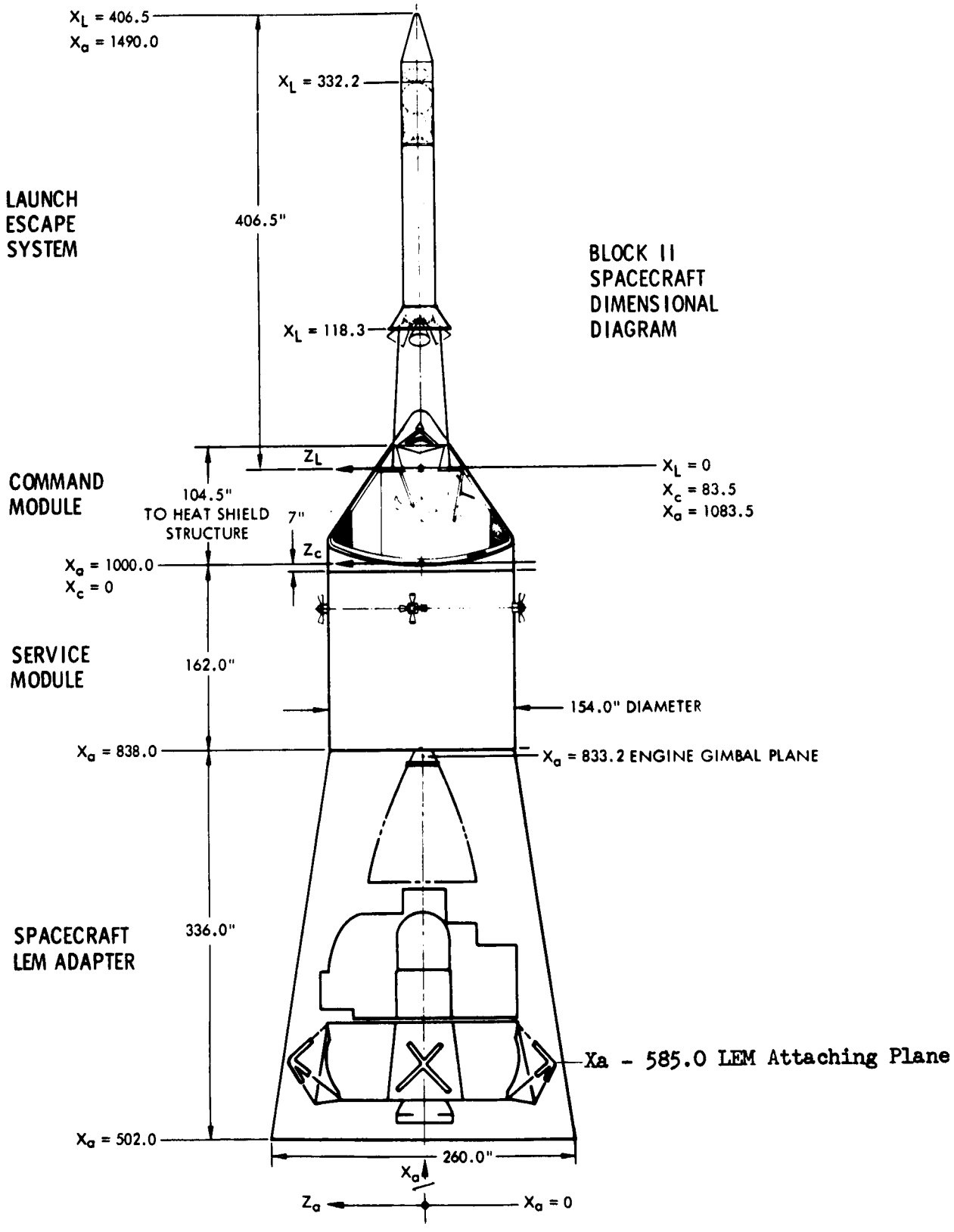
X_L = 406.5
X_a = 1490.0
X_L = 332.2
LAUNCH ESCAPE SYSTEM
406.5"
BLOCK II SPACECRAFT DIMENSIONAL DIAGRAM
X_L = 118.3
Z_L
X_L = 0
X_c = 83.5
X_a = 1083.5
COMMAND MODULE
104.5" TO HEAT SHIELD STRUCTURE
7"
Z_c
X_a = 1000.0
X_c = 0
SERVICE MODULE
162.0"
154.0" DIAMETER
X_a = 838.0
X_a = 833.2 ENGINE GIMBAL PLANE
SPACECRAFT LEM ADAPTER
336.0"
Xa - 585.0 LEM Attaching Plane
X_a = 502.0
260.0"
X_a
Z_a
X_a = 0

~~CONFIDENTIAL~~

BLOCK I

CSM

WEIGHT STATUS SUMMARY

ITEM	PREVIOUS STATUS 3-1-65	CHANGES TO CURRENT	CURRENT STATUS 4-1-65	BASIS FOR CURRENT BLOCK I STATUS		
				%EST	%CAL	%ACT
COMMAND MODULE	10850	+30	10880	20	76	4
SERVICE MODULE	9835	+30	9865	9	80	11
LAUNCH ESCAPE SYSTEM	8270	-70	8200	15	8	77
ADAPTER	3480		3480	25	63	12
TOTAL WEIGHT LAUNCH - LESS SPS USABLE PROPELLANT	32435	-10	32425	16	59	25

~~CONFIDENTIAL~~

~~CONFIDENTIAL~~

BLOCK I

COMMAND MODULE WEIGHT STATUS

ITEM	PREVIOUS STATUS 3-1-65	CHANGES TO CURRENT	CURRENT STATUS 4-1-65	BASIS FOR CURRENT BLOCK I STATUS		
				%EST	%CAL	%ACT
WEIGHT EMPTY	(9540)	(+30)	(9570)	(23)	(73)	(4)
Structure	5729	+10	5739	15	84	1
Stabilization & Control	196		196	10	90	
Guidance & Navigation	430		430		100	
Crew Systems	89		89	60	40	
Environmental Control	381	+14	395	16	38	46
Earth Landing System	598	-4	594	4	76	20
Instrumentation	120	+3	123	50	50	
Electrical Power	1095		1095	90	10	
Reaction Control	306	-3	303	14	86	
Communication	372	+12	384	25	75	
Controls & Displays	224	-2	222	2	96	2
USEFUL LOAD	(1310)	(-)	(1310)	(4)	(96)	
Scientific Equipment	80		80		100	
Crew Systems	837	-2	835	7	93	
Reaction Control	270		270		100	
Environmental Control	123	+2	125		100	
GROSS WEIGHT	10850	+30	10880	20	76	4

~~CONFIDENTIAL~~

CONFIDENTIAL

BLOCK I

SERVICE MODULE WEIGHT STATUS

ITEM	PREVIOUS STATUS 3-1-65	CHANGES TO CURRENT	CURRENT STATUS 4-1-65	BASIS FOR CURRENT BLOCK I STATUS		
				%EST	%CAL	%ACT
WEIGHT EMPTY	(7767)	(+30)	(7797)	(12)	(74)	(14)
Structure	2715	+19	2734	10	77	13
Environmental Control	74		74		100	
Instrumentation	46	+11	57	100		
Electrical Power	1552	-11	1541	24	30	46
Main Propulsion	3005	+17	3022	6	94	
Reaction Control	367	-2	365	13	87	
Communication & Rendezvous Radar	8	-4	4	100		
USEFUL LOAD	(2068)		(2068)		(100)	
Reaction Control	838		838		100	
Electrical Power	503		503		100	
Environmental Control	157		157		100	
Main Propulsion	570		570		100	
TOTAL SERVICE MODULE BURNOUT	9835	+30	9865	9	80	11

CONFIDENTIAL

~~CONFIDENTIAL~~

BLOCK I

LAUNCH ESCAPE SYSTEM

WEIGHT STATUS

ITEM	PREVIOUS STATUS 3-1-65	CHANGES TO CURRENT	CURRENT STATUS 4-1-65	BASIS FOR CURRENT BLOCK I STATUS		
				%EST	%CAL	%ACT
Structure	1537		1537		43	57
Ballast Installation Provision	29		29		100	
Electrical System	58		58	73	27	
Propulsion System						
Main Thrust	4794		4794			100
Jettison	438		438			100
Jettison Motor Skirt	90		90			100
Pitch Control	49		49			100
Separation Provisions	16		16	53	47	
C/M Boost Protective Cover	580		580	100		
LES - NO BALLAST	7591		7591	8	9	83
BALLAST	679	-70	609	100		
TOTAL LAUNCH ESCAPE SYSTEM	8270	-70	8200	15	8	77

~~CONFIDENTIAL~~

[redacted]

BLOCK II

COMMAND MODULE WEIGHT STATUS

ITEM	PREVIOUS STATUS 3-1-65	CHANGES TO CURRENT	CURRENT STATUS 4-1-65	BASIS FOR CURRENT BLOCK II STATUS		
				%EST	%CAL	%ACT
WEIGHT EMPTY	(8946)	(+22)	(8968)	(64)	(35)	(1)
Structure	5400	+10	5410	59	41	
Stabilization & Control	139		139	100		
Guidance & Navigation	400		400	100		
Crew Systems	88		88	71	29	
Environmental Control	399	+1	400	62	38	
Earth Landing System	578	-3	575	14	74	12
Instrumentation	41	+3	44	100		
Electrical Power	964	+4	968	93	7	
Reaction Control	306	-3	303	13	87	
Communication	337	+9	346	100		
Controls & Displays	294	+1	295	100		
USEFUL LOAD	(1404)	(-2)	(1402)	(4)	(96)	
Scientific Equipment	80		80		100	
Crew Systems	954	-3	951	6	94	
Reaction Control	270		270		100	
Environmental Control	100	+1	101		100	
GROSS WEIGHT	10350	+20	10370	56	43	1

[redacted]

~~CONFIDENTIAL~~

BLOCK II

SERVICE MODULE WEIGHT STATUS

ITEM	PREVIOUS STATUS 3-1-65	CHANGES TO CURRENT	CURRENT STATUS 4-1-65	BASIS FOR CURRENT BLOCK II STATUS		
				%EST	%CAL	%ACT
WEIGHT EMPTY	(7883)	(+70)	(7953)	(51)	(43)	(6)
Structure	2872	+19	2891	46	54	
Environmental Control	105		105	29	71	
Instrumentation	34	+14	48	100		
Electrical Power	1513	+20	1533	40	30	30
Main Propulsion	2791	+17	2808	62	38	
Reaction Control	371		371	20	80	
Communications & Rendezvous Radar	197		197	100		
USEFUL LOAD	(2097)		(2097)		(100)	
Reaction Control	838		838		100	
Electrical Power	503		503		100	
Environmental Control	150		150		100	
Main Propulsion	606		606		100	
TOTAL SERVICE MODULE BURNOUT	9980	+70	10050	40	55	5

~~CONFIDENTIAL~~

[redacted]

BLOCK II

LAUNCH ESCAPE SYSTEM

WEIGHT STATUS

ITEM	PREVIOUS STATUS 3-1-65	CHANGES TO CURRENT	CURRENT STATUS 4-1-65	BASIS FOR CURRENT BLOCK II STATUS		
				%EST	%CAL	%ACT
Structure	1537		1537		43	57
Ballast Installation Provisions	29		29		100	
Electrical	58		58	73	27	
Propulsion System						
Main Thrust	4794		4794			100
Jettison	438		438			100
Jettison Motor Skirt	90		90			100
Pitch Control	49		49			100
Separation Provisions	16		16	53	47	
C/M Boost Protective Cover	580		580	100		
LES - NO BALLAST	7591		7591	8	9	83
BALLAST	544	+5	549	100		
TOTAL LAUNCH ESCAPE SYSTEM	8135	+5	8140	15	8	77

[redacted]

~~CONFIDENTIAL~~

BLOCK II

ADAPTER WEIGHT STATUS

ITEM	PREVIOUS STATUS 3-1-65	CHANGES TO CURRENT	CURRENT STATUS 4-1-65	BASIS FOR CURRENT BLOCK II STATUS		
				%EST	%CAL	%ACT
Structure	3053		3053	16	70	14
Electrical	70	+20	90	86	14	
Separation System	302	+5	307	90	10	
TOTAL ADAPTER	3425	+25	3450	25	63	12

~~CONFIDENTIAL~~

COMMAND MODULE

CURRENT WEIGHT EMPTY CHANGES

	BLOCK I	BLOCK II
STRUCTURE	(+10.0)	(+10.0)
Increase the inner structure forward section based on structural modification of this area due to parachute suspension system wrap-around loads. This change incorporates potential Item STR-4. The weight incorporated is less than previously quoted in the potential list based on a revised estimate.	+10.0	+10.0
ENVIRONMENTAL CONTROL SYSTEM	(+14.0)	(+1.0)
Increase the pressure suit circuit due to adding a suit heat exchanger temperature control for the water boiling mode to insure that the performance of the temperature control circuit complies with the specification requirements.	+5.0	+5.0
Increase the post-landing ventilation system based on revised estimate of current system requirements.	+7.9	+3.9
Increase the oxygen system due to adding an oxygen tank required for backup of surge tank during re-entry for vehicles which do not carry PLSS's. This change incorporates potential item ECS-3.	+2.0	-
Increase the oxygen and pressurization systems due to adding EVT and LEM pressurization control provisions based on current estimate of Block II ECS requirements.	-	+3.0
Decrease the waste management system based on actual weight of urine disposal locks.	-1.4	-1.4
Delete lithium hydroxide by-pass provisions for the Block II Command Module as this item is currently being reported in the AiResearch status weights.	-	-10.0
Increase the AiResearch components based on incorporating February status weights.	+0.5	+0.5

COMMAND MODULE

CURRENT WEIGHT EMPTY CHANGES

	BLOCK I	BLOCK II
EARTH LANDING SYSTEM	(-4.0)	(-3.0)
Increase the forward heat shield release system due to adding an umbilical tension separation cylinder to the forward heat shield consistent with requirement to inspect and attach the instrumentation umbilical in the forward compartment. This function has been deleted from the lunar vehicle. This change incorporates potential Item ELS-2.	+5.0	-
Decrease the main parachute system main cluster and pilot chute system based on Northrop status reflecting actual in lieu of calculated weights.	-4.0	-3.0
Decrease the main parachute system attach provisions based on calculation of attachment hardware.	-2.6	-
Decrease drogue disconnect installation based on utilizing titanium in lieu of steel for the cutter blades.	-2.4	-
INSTRUMENTATION	(+3.0)	(+3.0)
Transfer the instrumentation sensors from Reaction Control System due to recoding consistent with system design responsibility.	+3.0	+3.0
ELECTRICAL POWER SYSTEM	(-)	(+4.0)
Add wiring provisions for the electrical heater temperature control of the Service Module RCS engines based on current Block II requirements.	-	+4.0
REACTION CONTROL SYSTEM	(-3.0)	(-3.0)
Transfer the instrumentation sensor to Instrumentation consistent with system design responsibility.	-3.0	-3.0
COMMUNICATIONS	(+12.0)	(+9.0)
Increase the S-Band transponder based on Collins status reflecting a dual in lieu of single transponder to meet reliability.	+11.0	-

COMMAND MODULE

CURRENT WEIGHT EMPTY CHANGES

	BLOCK I	BLOCK II
COMMUNICATIONS (Continued)		
Increase the S-Band transponder for Block II based on Collins status reflecting a new estimate for the transponder.	-	+7.0
Increase the TV equipment based on revised estimates and the addition of a flexible cable.	+1.6	-
Decrease various Communications components based on Collins status reflecting revised estimates.	- .6	-
Increase the VHF/AM transceiver based on NASA redirection to utilize RCA design in lieu of Collins design.	-	+1.0
Increase the VHF recovery beacon due to adding a test connector per current requirements.	-	+0.7
Increase the PCM equipment based on revised estimate.	-	+0.3
CONTROLS AND DISPLAYS	(-2.0)	(+1.0)
Decrease SCS mode select due to replacing Honeywell mode select panel with functional switches.	-3.0	-
Add integral lighting controls required to control the illumination of the Flight Director Attitude Indicators. This change incorporates potential Item C & D-1	+1.0	-
Increase the lower equipment bay audio panel based on revised estimate of current requirements.	-	+1.0
TOTAL COMMAND MODULE CURRENT WEIGHT EMPTY CHANGES (To be brought forward)	+30.0	+22.0

COMMAND MODULE

CURRENT USEFUL LOAD CHANGES

	BLOCK I	BLOCK II
CREW SYSTEM	(-2.0)	(-3.0)
Delete portable light from the Command Module consistent with NASA direction per CCA 286.	-2.0	-3.0
ENVIRONMENTAL CONTROL SYSTEM	(+2.0	(+1.0)
Increase Lithium Hydroxide cartridges based on adding by-pass requirements.	+1.0	+1.0
Add oxygen for back-up of surge tank oxygen required on vehicles which do not carry PLSS's. This change incorporates potential Item ECS-3.	+1.0	-
TOTAL COMMAND MODULE CURRENT USEFUL LOAD CHANGES	-	-2.0
TOTAL COMMAND MODULE CURRENT WEIGHT EMPTY CHANGES	+30.0	+22.0
TOTAL COMMAND MODULE CURRENT WEIGHT CHANGES	+30.0	+20.0

SERVICE MODULE

CURRENT WEIGHT EMPTY CHANGES

	BLOCK I	BLOCK II
STRUCTURE	(+19.0)	(+19.0)
Increase the aft bulkhead due to increasing the amount of thixotropic paste based on edge member to core shear requirements and manufacturing techniques.	+18.0	+18.0
Increase the separation provision based on a redesign to replace the flexible linear shape charge separation system with a guillotine cutter system.	+1.0	+1.0
INSTRUMENTATION	(+11.0)	(+14.0)
Transfer the instrumentation sensors from Reaction Control System due to recoding consistent with system design responsibility.	+11.0	+11.0
Increase the radiation detection based on current procurement specification weight.	-	+3.0
ELECTRICAL POWER SYSTEM	(-11.0)	(+20.0)
Decrease the fuel cell based on Pratt and Whitney status incorporating a one piece reactant manifold in lieu of a multisection manifold.	-11.0	-11.0
Increase the cryogenic system based on Beech information reflecting a revised estimate for the super insulation and the addition of a flange to facilitate interchangeability of tank hemispheres for manufacturing. This change incorporates potential item EPS-5.	-	+13.0
Increase the cryogenic system due to a revised estimate based on utilizing more Block I weights than previously estimated per AiResearch preliminary Block II status.		+13.0
Add wiring provisions for the electric heater temperature control of the Service Module RCS engines based on current Block II requirements.	-	+5.0

SERVICE MODULE

CURRENT WEIGHT EMPTY CHANGES

	BLOCK I	BLOCK II
MAIN PROPULSION SYSTEM	(+17.0)	(+17.0)
Increase pressure system tanks due to weld land revision to correct under pressure burst difficulties.	+4.0	+4.0
Increase the SPS engine based on current Aerojet status reflecting a material change from titanium to steel for the gimbal bearing due to manufacturing difficulties brazing titanium to steel. This change incorporates potential item MPS-3.	+13.0	+13.0
REACTION CONTROL SYSTEM	(-2.0)	(-)
Transfer instrumentation sensors to Instrumentation due to recoding consistent with system design responsibility.	-11.0	-11.0
Increase quantity gauging system based on Giannini status reflecting actual weights.	+1.0	+1.0
Add heaters to the engines based on current Block II requirements.	-	+2.0
Increase engine mounts based on a redesign to a heat sink type of mount consistent with electric heater temperature control system. This change incorporates potential item RCS-3.	+8.0	+8.0
COMMUNICATION AND RENDEZVOUS RADAR	(-4.0)	(-)
Decrease orbital HF antenna based on calculations furnished by system design section.	-4.0	-
TOTAL SERVICE MODULE CURRENT WEIGHT CHANGES	+30.0	+70.0

LAUNCH ESCAPE SYSTEM

CURRENT WEIGHT CHANGES

	BLOCK I	BLOCK II
BALLAST	(-70.0)	(+5.0)
Increase the ballast consistent with Command Module LES balance requirement.	-	+5.0
Decrease the ballast due to constraining the LES to the 8200 pound control weight.	-70.0	-
TOTAL LAUNCH ESCAPE SYSTEM CURRENT WEIGHT CHANGES	-70.0	+5.0

ADAPTER

CURRENT WEIGHT CHANGES

	BLOCK I	BLOCK II
ELECTRICAL PROVISIONS	(-)	(+20.0)
Increase wiring due to adding provisions to connect the Service Module disconnect plate on the +Z axis to the SLA disconnect plate on the -Z axis.	-	+20.0
SEPARATION PROVISIONS	(-)	(+5.0)
Increase separation provision based on added provisions for the wire routed from the +Z axis to the -Z axis.	-	+5.0
TOTAL ADAPTER CURRENT WEIGHT CHANGES	-	+25.0

COMMAND MODULE

POTENTIAL WEIGHT CHANGES

	BLOCK I	BLOCK II
STRUCTURE	(+37)	(+37)
Increase the flotation system based on evaluation of current system requirements which necessitate rigid canisters with related latching. (Item STR-3, Dtd. 2-1-65)	+20	+20
Increase the inner structure forward section due to adding bonded doublers to the forward cylinder based on current impact criteria. (Item STR-5, Dtd. 4-1-65)	+17	+17
GUIDANCE AND NAVIGATION	(-13)	(-46)
Decrease the Guidance and Navigation equipment based on incorporating the current MIT report date 15 March 1965. (Item G&N, Dtd. 4-1-65)	-13	-46
CREW SYSTEM	(+2)	(+2)
Increase the pressure suit assembly electrical umbilical based on actual weights or prototype item. (Crew-2, Dtd. 4-1-65)	+2	+2
ENVIRONMENTAL CONTROL	(+78)	(+5)
Add water for the cooling during earth orbit based on the inability of the radiators to supply sufficient cooling. (Item ECS-1, Dtd. 10-1-64)	+78	-
Add a suit compressor inverter to the pressure suit circuit due to Block II requirements to maintain an oxygen flow of 12 CFM/Man in lieu of 10 CFM/Man in lieu of 10 CSM/Man in a 3.5 psia (suited) condition per current specification requirements. (Item ECS-4, Dtd. 4-1-65)	-	+5
INSTRUMENTATION	(+8)	(+8)
Add a runaway RCS engine detection unit to detect possible failures within the SCS and RCS. (Item Instr.-2, Dtd. 1-1-65)	+8	+8
ELECTRICAL POWER SYSTEM	(-)	(-10)
Decrease the wiring provisions for rendezvous radar equipment based on CCA 303. (Item EPS-6, Dtd. 4-1-64)	-	-10

COMMAND MODULE

POTENTIAL WEIGHT CHANGES

	BLOCK I	BLOCK II
REACTION CONTROL SYSTEM	(+4)	(+4)
Add a vent line to each fuel and oxidizer tank to increase the service life by reducing cycling of bladder during fill and drain operations. (Item RCS-1, Dtd. 2-1-65)	+4	+4
COMMUNICATIONS	(-2)	(-)
Replace the current HF whip antenna and utilize HF stem recovery antenna from DeHavilland Aircraft Ltd. (Item COM-1, Dtd. 12-1-64)	-2	-
CONTROLS & DISPLAYS	(+2)	(-)
Add radiation detection provisions. (Item C&D-3, Dtd. 1-1-65)	+2	-
TOTAL COMMAND MODULE POTENTIAL WEIGHT CHANGES	+116	-

SERVICE MODULE

POTENTIAL WEIGHT CHANGES

	BLOCK I	BLOCK II
STRUCTURE	(+7)	(-7)
Increase the forward bulkhead based on calculation of Block II layout drawings. (Item STR-1, Dtd. 3-1-65)	-	+16
Remove RCS plume heat shields and add cork sheet for thermal protection against RCS engine boost heating. This item was previously listed as RCS-3. (Item STR-2, Dtd. 10-1-64)	-5	-
Add support structure for supplemental water supply system required for extended earth orbital missions. (Item STR-3, Dtd. 4-1-65)	+12	-
Delete the support structure for the rendezvous radar installation per CCA 303. (Item STR-4, Dtd. 4-1-65)	-	-23
ENVIRONMENTAL CONTROL SYSTEM	(+150)	(+31)
Increase the ECS radiator from 90 square feet to 130 square feet based on prereleased drawings reflecting current system requirements. (Item ECS-1, Dtd 3-1-65)	-	+34
Add a water supply storage system (includes 112 pounds of water) to be used as a supplement to the existing Command Module ECS waste water supply during extended earth-orbital flights. The mission duration cannot be fulfilled with present ECS heat rejection capabilities. (Item ECS-2, Dtd. 4-1-65)	+150	-
Delete cooling provision for the rendezvous radar installation per CCA 303 (Item ECS-3, Dtd. 4-1-65)	-	-3
INSTRUMENTATION	(+3)	(-)
Add radiation detection provisions. (Item Instr. -2 Dtd. 1-1-65)	+3	-

SERVICE MODULE

POTENTIAL WEIGHT CHANGES

	BLOCK I	BLOCK II
ELECTRICAL POWER	(+23)	(+5)
Increase wiring provisions based on potting connectors due to humidity requirements. (Item EPS-2, Dtd. 11-1-64)	+15	-
Increase fuel cell based on the addition of start-up potasium hydroxide wetting agent. (Item EPS-4, Dtd. 2-1-65)	+8	+8
Delete wiring provisions for the rendezvous radar installation per CCA 303. (Item EPS-6, Dtd. 4-1-65)	-	-3
PROPULSION SYSTEM	(+60)	(+60)
Add dual propellant retention screens external to the existing reservoir to increase the reliability of the SPS. (Item MPS-1, Dtd. 1-1-65)	+40	+40
Modify SPS engine to use pneumatic action for the propellant valves to meet Apollo requirements for reliability and start or shutdown impulse accuracy. (Item MPS-2, Dtd. 1-1-65)	+20	+20
RENDEZVOUS RADAR	(-)	(-80)
Delete the rendezvous radar equipment per CCA 303. (Item RR-1, Dtd. 4-1-65)	-	-80
TOTAL SERVICE MODULE POTENTIAL WEIGHT CHANGES	+243	+9

ADAPTER

POTENTIAL WEIGHT CHANGES

	BLOCK I	BLOCK II
STRUCTURE	(-)	(+125)
Add auxiliary (GSE) work platform provisions at Station Xa 525 per NASA Letter 14292MA, dated 11-19-64. (Item ADP-2, Dtd. 3-1-65)	-	+10
Revise access hole sizes and quantity per RECP No. CSM.64-21. (Item ADP-3, Dtd. 3-1-65)	-	+32
Increase size of SLA-LEM +Z access door per RECP No. CSM 65-7. (Item ADP-4, Dtd. 3-1-65)	-	+20
Add a retracting capability for the SLA-LEM Umbilical mechanism to provide clearance for withdrawal of the LEM when the panels are deployed at 45 degrees. (Item ADP-5, Dtd. 3-1-65)	-	+5
Increase the aft section honeycomb panel face sheets based on increased LEM weight consistent with CCA 290. (Item ADP-10, Dtd. 4-1-65)	-	+58
ELECTRICAL POWER	(-)	(-12)
Increase electrical provisions to provide for mounting the LEM pyrotechnic sequencer system on the SLA. This item includes boxes, structure and wire. (Item ADP-6, Dtd. 3-1-65)	-	+13
Reroute wiring from -Z axis to +Z axis to reduce length of wire. (Item ADP-9, Dtd. 4-1-65)	-	-25
TOTAL ADAPTER POTENTIAL WEIGHT CHANGES	-	+113

[redacted]

BLOCK I

GOVERNMENT FURNISHED EQUIPMENT

The following GFE items and associated weights are consistent with SID 63-313, CSM Technical Specification.

Item		Weight-Pounds
GFE Total		(1348.5)
Guidance and Navigation		430.0
Crew (50, 70, 90)		528.0
Crew Equipment		251.0
Pressure Garment Assembly (3)	84.0	
Constant Wear Garments - Gas Cooled (6)	5.6	
Radiation Dosimeters	5.0	
Food Set (10.6 Days)	60.5	
Probe	0.5	
Medical Kit - Emergency	2.6	
Clinical Instrumentation	2.1	
Biomedical Instrumentation	3.9	
Survival Equipment	68.1	
GFE Growth Allowance	18.7	
Instrumentation (R&D)		34.5
Gas Chromatograph	9.5	
GFE Growth Allowance	25.0*	
Scientific Equipment		80.0
Q-Ball		25.0

*Note: The current status weight does not include this allowance.

[redacted]

[redacted]

BLOCK II

GOVERNMENT FURNISHED EQUIPMENT

The following GFE items and associated weights are consistent with SID 64-1344, CSM Technical Specification.

Item		Weight-Pounds
GFE Total		(31018.8)
LEM		29500.0
Guidance and Navigation		400.0
Crew (50, 70, 90)		528.0
Crew Equipment		371.0
Pressure Garment Assembly (3) (Incl. Comm.)	102.0	
Portable Life Support System (2) (Incl. Comm.)	106.0	
Emergency Oxygen System (2)	6.5	
Constant Wear Garments - Gas Cooled (7)	6.5	
Liquid Cooled Garments (2)	9.0	
External Thermal Garment	13.4	
Radiation Dosimeters	5.0	
Food Set (8.3 days)	49.5	
Probe	0.5	
Medical Kit-Emergency	2.8	
Clinical Instrumentation	1.5	
Biomedical Instrumentation	4.3	
Spacesuit Assembly Spare Parts	4.0	
Survival Equipment	60.0	
TV Camera		8.8
Scientific Equipment		80.0
Rendezvous Radar		106.0*
Q-Ball		25.0

*Note: The current status has been reduced to 84.4 pounds per NASA Letter PPS1/L137-64-822.

[redacted]