[redacted]

Z65-11672

This reissue supersedes and replaces all previous issues of this specification

SINGLE COPY ONLY

51748

Accession No. _____

Copy No. 49 SID 62-1001-R-1

APOLLO FLIGHT RESEARCH AND DEVELOPMENT INSTRUMENTATION PERFORMANCE AND INTERFACE SPECIFICATION FOR BOILERPLATES AND AIRFRAMES

(U)

30 December 1963 NAS 9-150

Exhibit I, Paragraph 4.1

CLASSIFICATION CHANGE

To UNCLASSIFIED

By authority of GDI-Fall 62

Changed by L. Shirley Date 12/3/62

Classified Document Master Control Station, NASA

Scientific and Technical Information Facility

[redacted]

This document contains [redacted] the national defense of the United States within the [redacted] Espionage Laws. Title 18 U.S.C. Section 793 and 794. [redacted] or revelation of its contents in any manner to an unauth[redacted]hibited by law.

NORTH AMERICAN AVIATION, INC.

SPACE and INFORMATION SYSTEMS DIVISION

[redacted]

[redacted]

TABLE OF CONTENTS

Paragraph	Title	Page
1.	SCOPE	1
1.1	Scope	1
1.2	Specification Organization	1
2.	APPLICABLE DOCUMENTS	1
2.1	Applicability	1
2.2	Precedence	2
3.	REQUIREMENTS	2
3.1	General	2
3.2	Interface Requirements	2
3.2.1	Mechanical	2
3.2.1.1	Location and Weight	2
3.2.2	Electrical	2
3.2.2.1	Electrical Signals	2
3.3	Environment	2
3.4	Reliability	2
4.	QUALITY ASSURANCE PROVISIONS	3
5.	PREPARATION FOR DELIVERY	3
6.	NOTES	3
6.1	Intended Use	3

Number	Title	Page
Tab A	BOILERPLATE BP-6	Ai
Tab B	BOILERPLATE BP-12	Bi
Tab C	BOILERPLATE BP-13	Ci
Tab D	BOILERPLATE BP-15	Di
Tab E	BOILERPLATE BP-18	Ei
Tab F	BOILERPLATE BP-22	Fi
Tab G	BOILERPLATE BP-23	Gi

CON~~FIDENTIAL~~

APOLLO FLIGHT RESEARCH AND DEVELOPMENT INSTRUMENTATION PERFORMANCE AND INTERFACE SPECIFICATION FOR BOILERPLATES AND AIRFRAMES

1. SCOPE

1.1 Scope. - This specification defines the Flight R and D Instrumentation performance and interface requirements for Boilerplates BP-6; BP-12; BP-13; BP-15; BP-18; BP-22 and BP-23.

1.2 Specific Organization. - Specific instrumentation performance and interface requirements for individual boilerplates are contained in tab sections of this specification. As information becomes available, existing tabs will be revised to include the latest information.

Tab A - Apollo BOILERPLATE BP-6
Tab B - Apollo BOILERPLATE BP-12
Tab C - Apollo BOILERPLATE BP-13
Tab D - Apollo BOILERPLATE BP-15
Tab E - Apollo BOILERPLATE BP-18
Tab F - Apollo BOILERPLATE BP-22
Tab G - Apollo BOILERPLATE BP-23

2. APPLICABLE DOCUMENTS

2.1 Applicability. - The following documents of the issue in effect on date of contract unless otherwise specified, form a part of this specification to the extent specified herein.

2.1.1 Non-Government Documents

SPECIFICATIONS

North American Aviation, Inc., Space and Information Systems Division (NAA/S&ID)

MC 999-0002B	Specification for Electromagnetic Interference Control for the Apollo Spacecraft System, dated 3 January 1963

2.2 Precedence. - In case of conflict, the order of precedence shall be as follows:

(a) The contract.
(b) This specification.
(c) Other documents referenced herein.

3. REQUIREMENTS

3.1 General. - Flight research and development instrumentation (FRDI) shall be installed in various boilerplates for evaluation of functional operation of the boilerplate and its installed equipment. Requirements necessary to ensure interface compatibility between this instrumentation and the spacecraft, such as measurements to be made, and equipment location, weight, and size limitations are listed in the various tabs. Electromagnetic interference (EMI) measures (see document MC 999-0002B) shall be incorporated and made compatible with research and development instrumentation.

3.2 Interface Requirements.

3.2.1 Mechanical.

3.2.1.1 Location and weight. - Location, size and weight limitations are specified in applicable tabs.

3.2.2 Electrical.

3.2.2.1 Electrical signals. - Electrical signal interfaces between the sensor sub-systems and the telemetering and recording devices shall be accomplished at the signal conditioning box as shown in the instrumentation block diagram of Figure 3 of the applicable tab and the NASA detailed instrumentation drawing referenced therein.

3.3 Environment. - All FRDI equipment shall be capable of withstanding without damage or impairment of operation, the effects of vibration, temperature, acceleration, pressure, acoustic noise, and other environmental conditions to be encountered during the mission of the vehicle as well as during storage and transportation.

3.4 Reliability. - The reliability of the FRDI as a system and on a component basis shall ensure that the instrumentation will perform its required function during the mission of the boilerplate.

4. QUALITY ASSURANCE PROVISIONS

Not Applicable

5. PREPARATION FOR DELIVERY

Not Applicable

6. NOTES

6.1 Intended Use. - This specification is intended to be used as the document which describes the flight research and development instrumentation performance and interface requirements.

TAB A

APOLLO FLIGHT RESEARCH AND DEVELOPMENT INSTRUMENTATION PERFORMANCE AND INTERFACE SPECIFICATION FOR BOILERPLATE BP-6

TABLE OF CONTENTS

Paragraph	Title	Page
1.	SCOPE	A1
1.1	Scope	A1
2.	APPLICABLE DOCUMENTS	A1
2.1	Applicability	A1
2.1.1	Non-Government Documents	A1
2.1.2	Precedence	A1
3.	REQUIREMENTS	A1
3.1	General	A1
3.1.1	Configuration	A2
3.1.2	Electromagnetic Interference	A2
3.2	PERFORMANCE	A2
3.2.1	General	A2
3.3	INTERFACE	A2
3.3.1	Interface Requirements	A2
3.3.1.1	Interface Definition	A2
3.3.1.2	Mechanical Interface	A2
3.3.1.3	Electrical Interface	A2
3.3.1.4	Functional Interface	A2
4.	QUALITY ASSURANCE PROVISIONS	A2
5.	PREPARATION FOR DELIVERY	A2
6.	NOTES	A3
6.1	Intended Use	A3
6.2	Definitions	A3
6.2.1	Performance	A3
6.2.2	Boilerplate	A3

FIGURES

Number	Title	Page
Figure 1	Instrument Location Apollo Boilerplate BP-6	A4
Figure 2	Command Module Static Pressure Measurement Apollo Boilerplate BP-6	A5
Figure 3	Instrumentation Block Diagram Apollo Boilerplate BP-6	A6
Figure 4	Installation Configuration of Instrumentation System Block Diagram Apollo Boilerplate BP-6	A7
Figure 5	R and Z Bus Control Diagram Apollo Boilerplate BP-6	A8
Figure 6	Typical Pressure Transducer Diagram Apollo Boilerplate BP-6	A9
Figure 7	Pin Assignments for Pressure Transducers Apollo Boilerplate BP-6	A10
Figure 8	Modulation Assembly Diagram Apollo Boilerplate BP-6	A11
Figure 9	Bus A, Bus B and Current Monitor Diagram Apollo Boilerplate BP-6	A12
Figure 10	Bus A and Bus B Calibration Circuits Apollo Boilerplate BP-6	A13
Figure 11	Typical Attitude Gyro Diagram Apollo Boilerplate BP-6	A14
Figure 12	Pin Assignments for Attitude Gyros Apollo Boilerplate BP-6	A15
Figure 13	Typical Vibration Transducer Signal System Diagram Apollo Boilerplate BP-6	A16
Figure 14	R and Z Calibration Circuit Diagram for Tape Recorder Apollo Boilerplate BP-6	A17
Figure 15	Sequencer Diagram Apollo Boilerplate BP-6	A18
Figure 16	Tape Recorder Diagram Apollo Boilerplate BP-6	A19
Figure 17	Rate Gyro Diagram Apollo Boilerplate BP-6	A20
Figure 18	Timer Diagram Apollo Boilerplate BP-6	A21
Figure 19	Pin Assignments Signal Conditioner Apollo Boilerplate BP-6 (Sheet 1 of 2)	A22
Figure 19	Pin Assignments Signal Conditioner Apollo Boilerplate BP-6 (Sheet 2 of 2)	A23

TABLES

Number	Title	Page
Table I	Flight Research and Development Instrumentation Boilerplate BP-6	A25

CON~~FIDENTIAL~~

APOLLO FLIGHT RESEARCH AND DEVELOPMENT INSTRUMENTATION PERFORMANCE AND INTERFACE SPECIFICATION FOR BOILERPLATE BP-6

1. SCOPE

1.1 Scope. - This specification tab defines the instrumentation performance and interface requirements for Boilerplate BP-6.

2. APPLICABLE DOCUMENTS

2.1 Applicability. - Unless otherwise specified, the following documents of the issue in effect on the date of contract, form a part of this specification to the extent specified herein.

2.1.1 Non-Government Documents.

SPECIFICATIONS

North American Aviation, Inc., Space and Information Systems Division (NAA/S&ID)

MC 999-0002B	Specification for Electromagnetic Interference Control for Apollo Spacecraft System, dated 3 January 1963
SID 63-556	Apollo Measurement Requirements for Boilerplate BP-6, dated 4 November 1963

2.1.2 Precedence. - For this specification, the order of precedence in case of conflict shall be as follows:

(a) The contract
(b) This specification
(c) Other documents referenced herein.

3. REQUIREMENTS

3.1 General. - The flight research and development (R and D) instrumentation shall be installed on Boilerplate BP-6 in the location shown in Figure 4

and as specified in Figure 1 and Table 1. The measurements to be made, the power required and the weights of the various instrument packages shall be as shown in Table 1. The signal inputs and outputs for instrumentation are shown in wiring diagrams (see Figures 5 through 22).

3.1.1 Configuration. - The configuration of flight R and D instrumentation shall be as shown in Figures 1 through 4.

3.1.2 Electromagnetic Interference. - The flight R and D instrumentation shall conform to the electromagnetic interference requirements as specified in Specification MC 999-0002B.

3.2 Performance

3.2.1 General. - The performance parameters for the flight research and development instrumentation for Boilerplate BP-6 are expressed in documents SID 62-1408 and SID 63-556.

3.3 Interface

3.3.1 Interface Requirements. - The following paragraphs define the requirements for electrical, mechanical, and functional interfaces for the Apollo Flight R and D Instrumentation for BP-6.

3.3.1.1 Interface Definition. - Interface is defined as the junction point or points within or between systems or subsystems where matching or accommodation must be properly achieved in order to make their operation compatible with the successful operation of all other functional entities.

3.3.1.2 Mechanical Interface. - The Flight R and D Instrumentation mechanical interface is definitized in Interface Control Document (ICD) (document number to be supplied).

3.3.1.3 Electrical Interface. - The Flight R and D Instrumentation electrical interface is definitized in ICD (document number to be supplied).

3.3.1.4 Functional Interface. - The Flight R and D Instrumentation functional interface is definitized in ICD (document number to be supplied).

4. QUALITY ASSURANCE PROVISIONS

Not Applicable

5. PREPARATION FOR DELIVERY

Not Applicable

6. NOTES

6.1 Intended Use. - This specification is intended to be used to define the performance requirements and interface of Flight R and D Instrumentation for Boilerplate BP-6.

6.2 Definitions. - For purposes of this specification, the following terms are defined.

6.2.1 Performance. - Performance is the ability to operate and function as an entity, without malfunctions, until the objective is accomplished.

6.2.2 Boilerplate. - Boilerplate is defined as a simulated item, including the necessary research and development instrumentation, to make an integrated assembly.

CON[redacted]

1 Q-BALL (1) THREE DIFFERENTIAL PRESSURE TRANSDUCERS, PART OF NOSE CONE)

2 ACCELEROMETERS (2) (Y-AXIS X_L380, Y_LO, Z_L6), AND (Z-AXIS X_L380, Y_L6, Z_L0)

3 PITCH CONTROL MOTOR CHAMBER PRESSURE (1) (X_L345, Y_L0, Z_L-13)

4 ESCAPE MOTOR CHAMBER PRESSURE (X_L290, Y_L0, Z_L0)

5 VIBRATION TRANSDUCER AMPLIFIER (3) (INSIDE SKIRT X_L = 120) (Y-AXIS AMP Y_L = 25, Z_L0) (X-AXIS AMP Y_L0 Z_L-25) (Z AXIS AMP Y_L0 Z_L25)

6 VIBRATION TRANSDUCER (3) (INSIDE SKIRT - X_L120, Y_L25, Z_L0)

7 VIBRATION TRANSDUCER AMPLIFIER (3) (ON FLANGE OF TOWER LEG X_L24)

8 VIBRATION TRANSDUCER (3) (ON FLANGE OF TOWER LEG - X_L9.5, Y_L-24 Z_L-26)

9 ACCELEROMETER (4) (INSIDE C/M, (X_C78.5, Y_C0, Z_C21))

10 RATE GYRO (1) (THREE AXIS PKG INSIDE C/M (X_C78.5, Y_CO, Z_C21))

11 ATTITUDE GYRO (3) (INSIDE C/M, (X_C78.5, Y_C0, Z_C21))

12 PRESSURE (40) (4 ON BASE OF C/M 90° APART).

(8 at X_C50)* *THESE PRESSURE LOCATIONS ARE SHOWN IN FIGURE 2.

(8 at X_C71)*

(4 at X_C79)*

(4 at X_C100)*

13 TEMPERATURE TOWER JETTISON MOTOR EBW (X_L310)

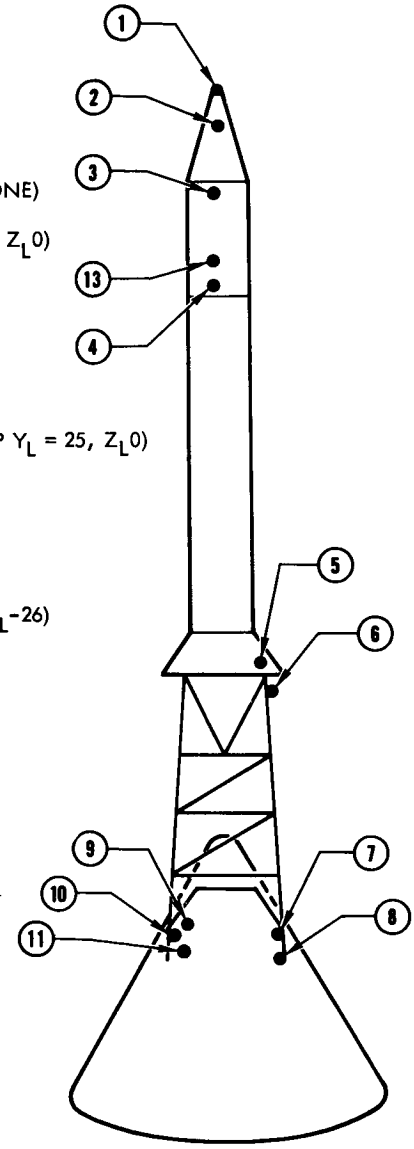

Figure 1. Instrumentation Location Apollo Boilerplate BP-6

CON[redacted]

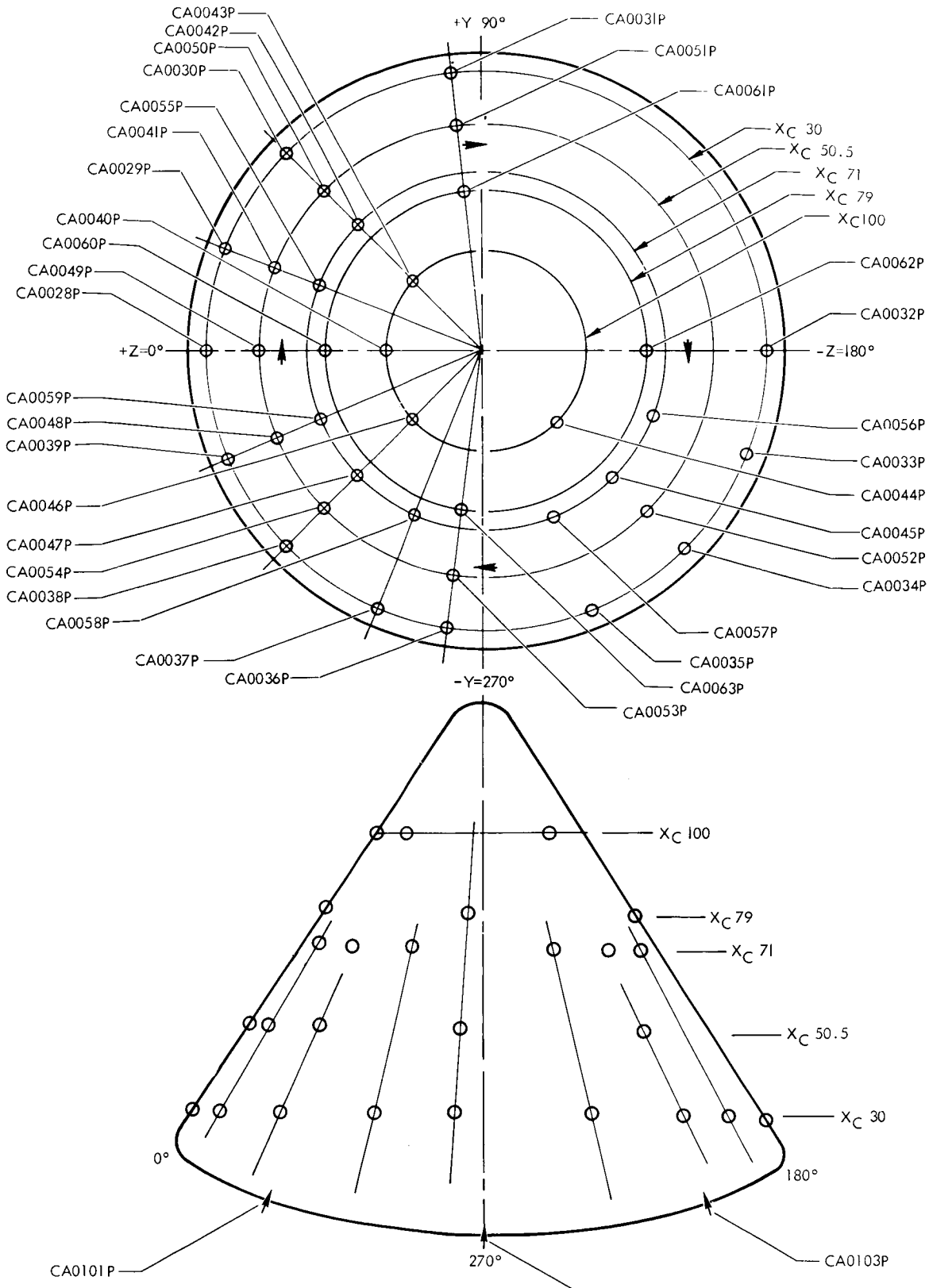

NOTE: DIAGRAM IS NOT DRAWN TO SCALE.

Figure 2. Command Module Static Pressure Measurement Locations
Apollo Boilerplate BP-6

~~CONFIDENTIAL~~

CONFI[redacted]

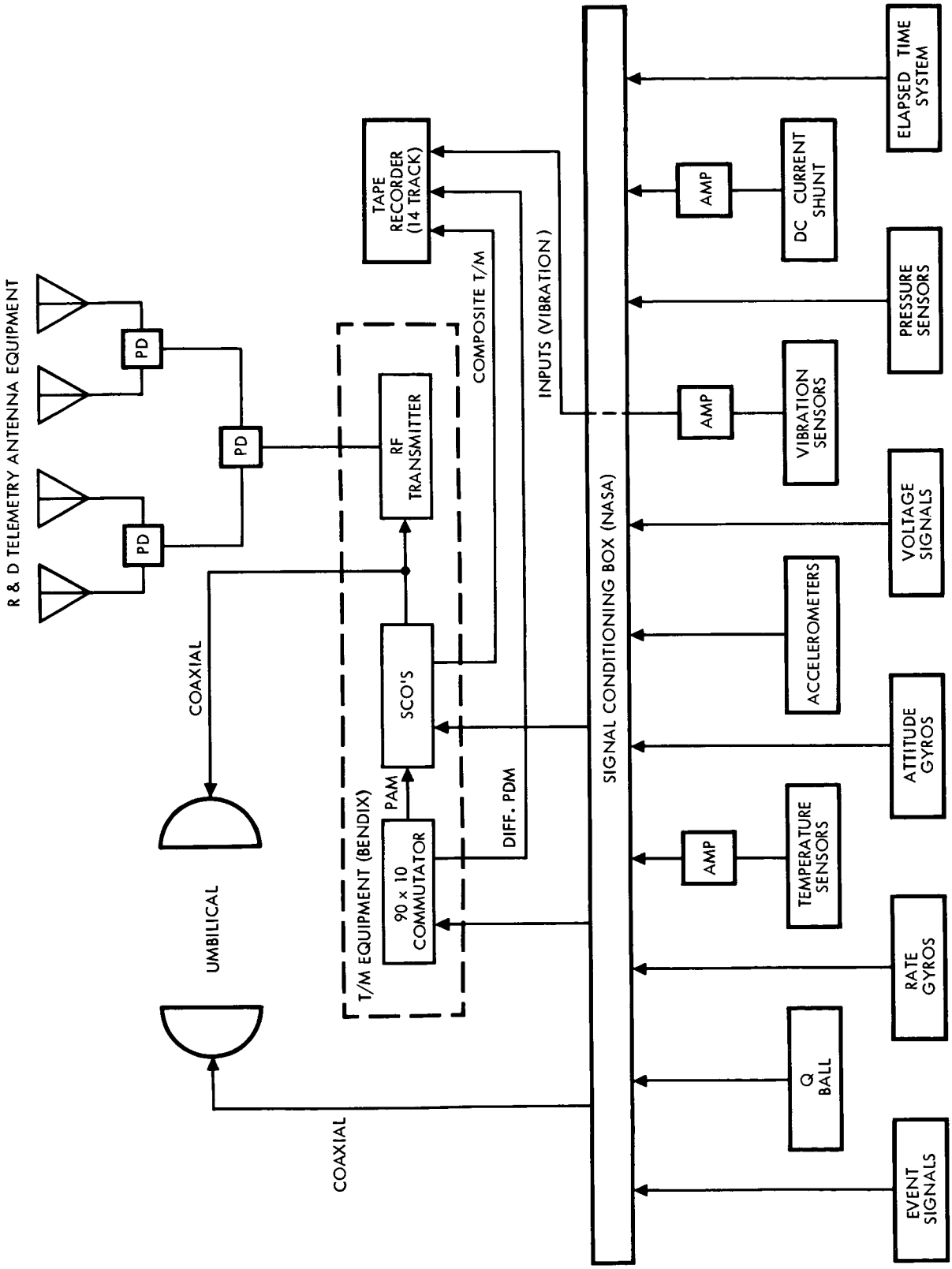

Figure 3. Instrumentation Block Diagram Apollo Boilerplate BP-6

[redacted]

CON[redacted]

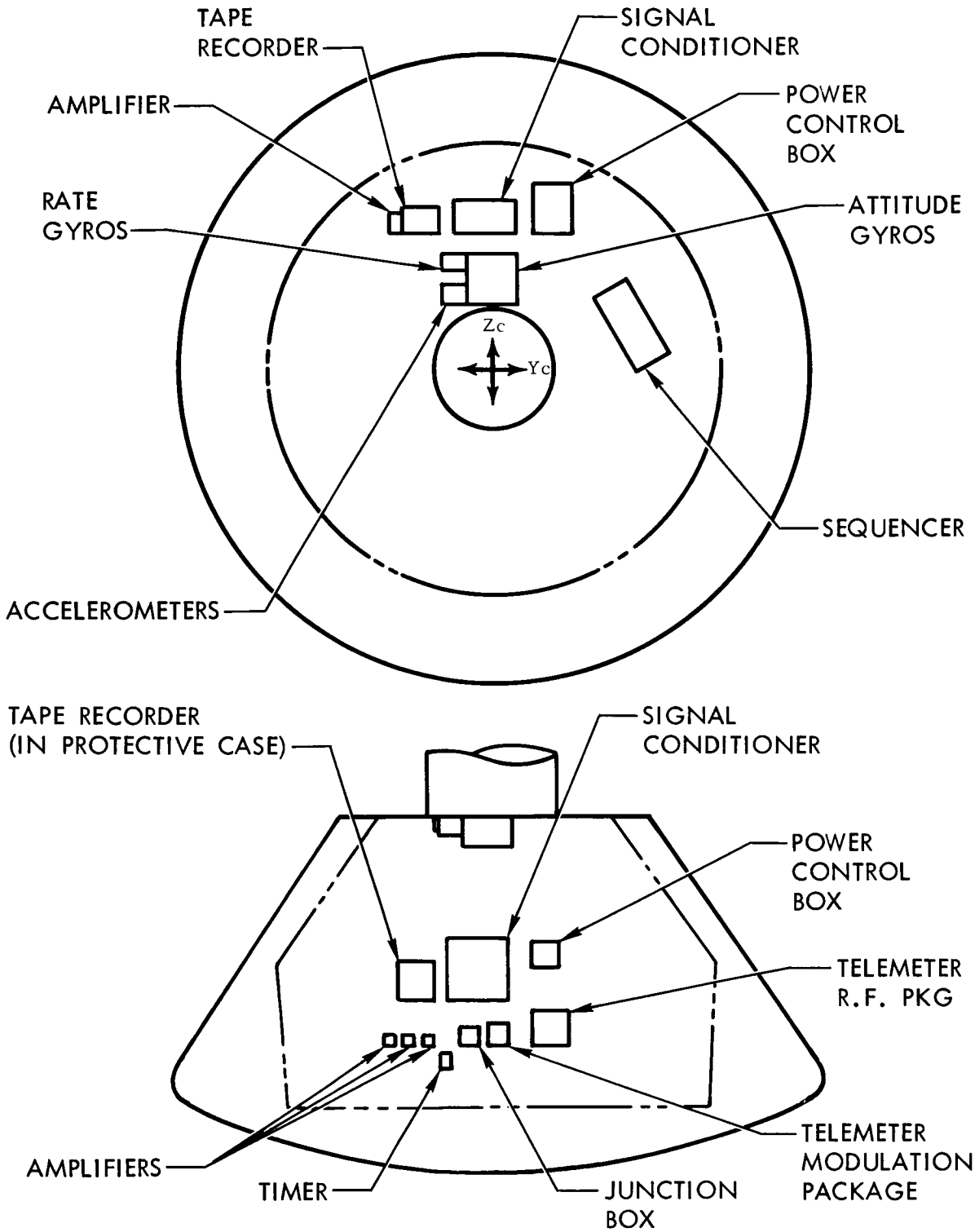

Figure 4. Installation Configuration of Instrumentation System Block Diagram Apollo Boilerplate B/P-6

CON[redacted]

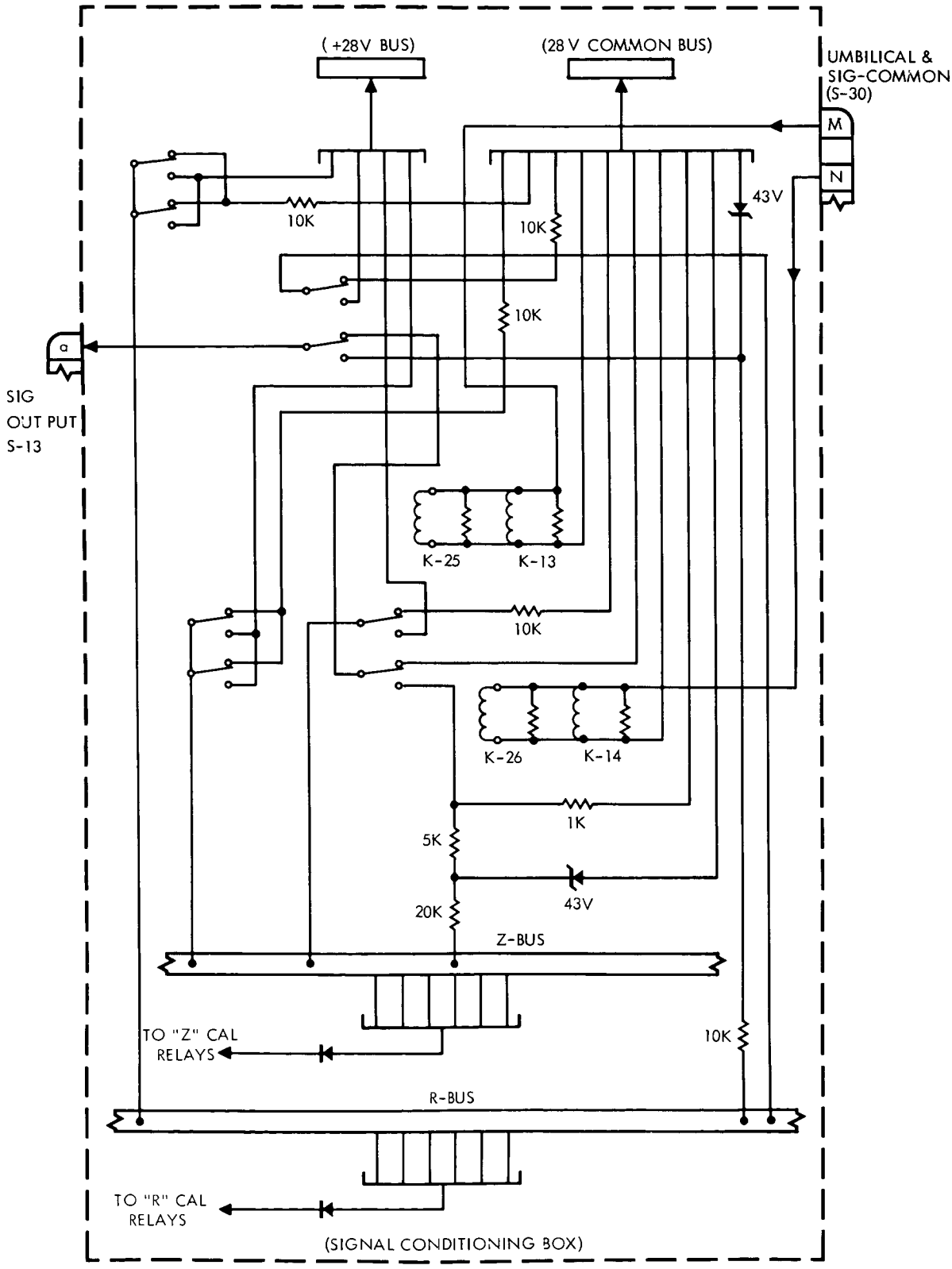

Figure 5. R and Z Bus Control Diagram Apollo Boilerplate BP-6

~~CONFIDENTIAL~~

CON[redacted]

NOTE:

1 FOR INDIVIDUAL PIN DESIGNATIONS SEE FIGURE 7 - DWG. NO. SX 530,141

2 CHAMBER PRESSURE MEASUREMENT FOR P/C MOTOR AND ESCAPE MOTOR ARE ROUTED TO CONTINUOUS T/M CHANNELS, SEE DOCUMENT NAA/SID 63-556

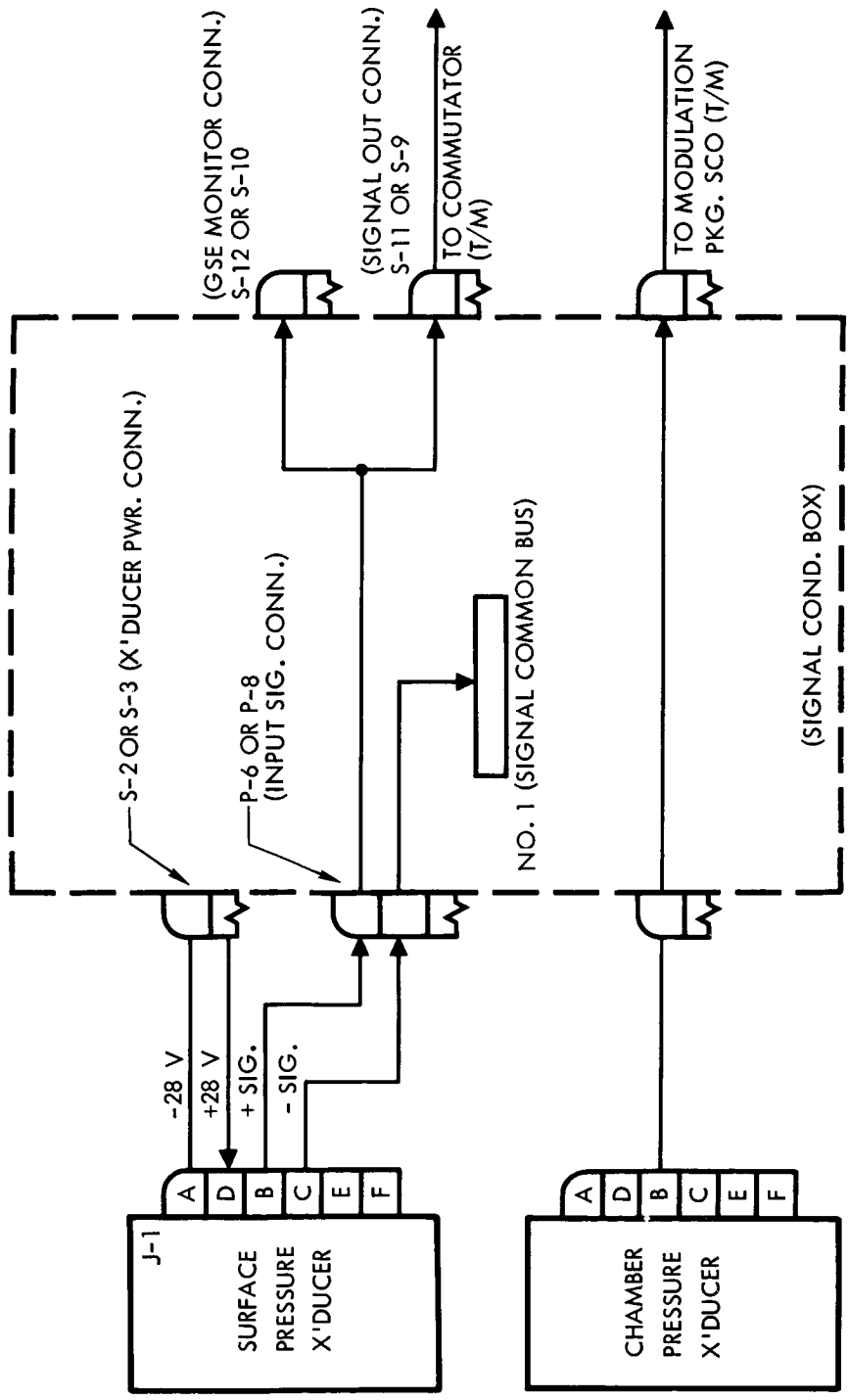

Figure 6. Typical Pressure Transducer Diagram Apollo Boilerplate BP-6

[redacted]

CON[redacted]

PRESSURE X'DUCER	PINS D&A To S-C Box	PINS B&C To S-C Box	SIGNAL In S-C Box	SIGNAL Out S-C Box
1	S2-A, B	P6-A, B	P6-A	S11-LL
2	S2-C, D	P6-C, D	P6-C	S11-KK
3	S2-E, F	P6-E, F	P6-E	S11-JJ
4	S2-G, H	P6-G, H	P6-G	S11-HH
5	S2-J, K	P6-J, K	P6-J	S11-GG
6	S2-L, M	P6-L, M	P6-L	S11-FF
7	S2-N, P	P6-N, P	P6-N	S11-EE
8	S2-R, S	P6-R, S	P6-R	S11-DD
9	S2-T, U	P6-T, U	P6-T	S11-CC
10	S2-V, W	P6-V, W	P6-V	S11-BB
11	S2-X, Y	P6-X, Y	P6-X	S11-AA
12	S2-Z, a	P6-Z, a	P6-Z	S11- Z
13	S2-b, c	P6-b, c	P6-b	S11- y
14	S2-d, e	P6-d, e	P6-d	S11- x
15	S2-f, g	P6-f, g	P6-f	S11- w
16	S2-h, i	P6-h i	P6-h	S11- v
17	S2-j, k	P6-j, k	P6-j	S11- u
18	S2-m, n	P6-m, n	P6-m	S11- t
19	S2-p, q	P6-p, q	P6-p	S11- s
20	S2-r, s	P6-r, s	P6-r	S11- r
21	S2-t, u	P6-t, u	P6-t	S11- q
22	S2-v, w	P6-v, w	P6-v	S11- p
23	S2-x, y	P6-x, y	P6-x	S11- n
24	S2-z, AA	P6-z, AA	P6-z	S11- m
25	S2-BB, CC	P6-BB, CC	P6-BB	S11- k
26	S2-DD, EE	P6-DD, EE	P6-DD	S11- j
27	S2-FF, GG	P6-FF, GG	P6-FF	S11- i
28	S2-HH, JJ	P6-HH, JJ	P6-HH	S11- h
29	S2-KK, LL	P6-KK, LL	P6-KK	S11- g
30	S3-A, B	P8-h, i	P8-h	S9- S
31	S3-C, D	P8-j, k	P8-j	S9- T
32	S3-E, F	P8-m, n	P8-m	S9- U
33	S3-G, H	P8-p, q	P8-p	S9- v
34	S3-J, K	P8-r, s	P8-r	S9- W
35	S3-L, M	P8-t, u	P8-t	S9- X
36	S3-N, P	P8-v, w	P8-v	S9- Y
37	S3-R, S	P8-x, y	P8-x	S9- Z
38	S3-T, U	P8-z, AA	P8-Z	S9- a
39	S3-V, W	P8-BB, CC	P8-BB	S9- b
40	S3-X, Y	P8-DD, EE	P8-DD	S9- c
41	S3-j, k	P8-FF, GG	P8-FF	S9- d
42	S3-Z, a	P8-HH, JJ	P8-HH	S9- e

Figure 7. Pin Assignments for Pressure Transducers
Apollo Boilerplate BP-6

[redacted]

~~CONFIDENTIAL~~

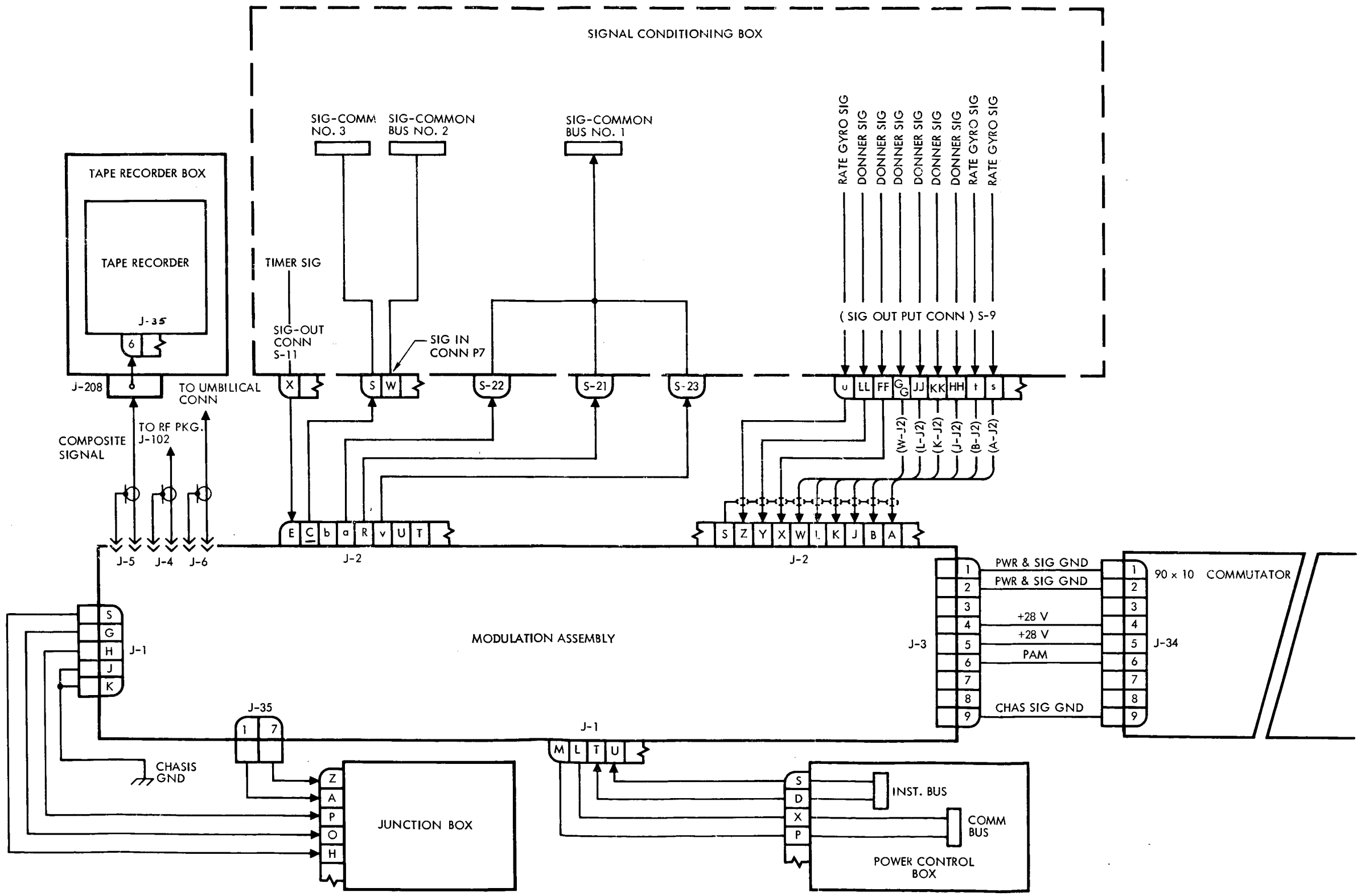

Figure 8. Modulation Assembly Diagram Apollo Boilerplate BP-6

~~CONFIDENTIAL~~

CONFIDENTIAL

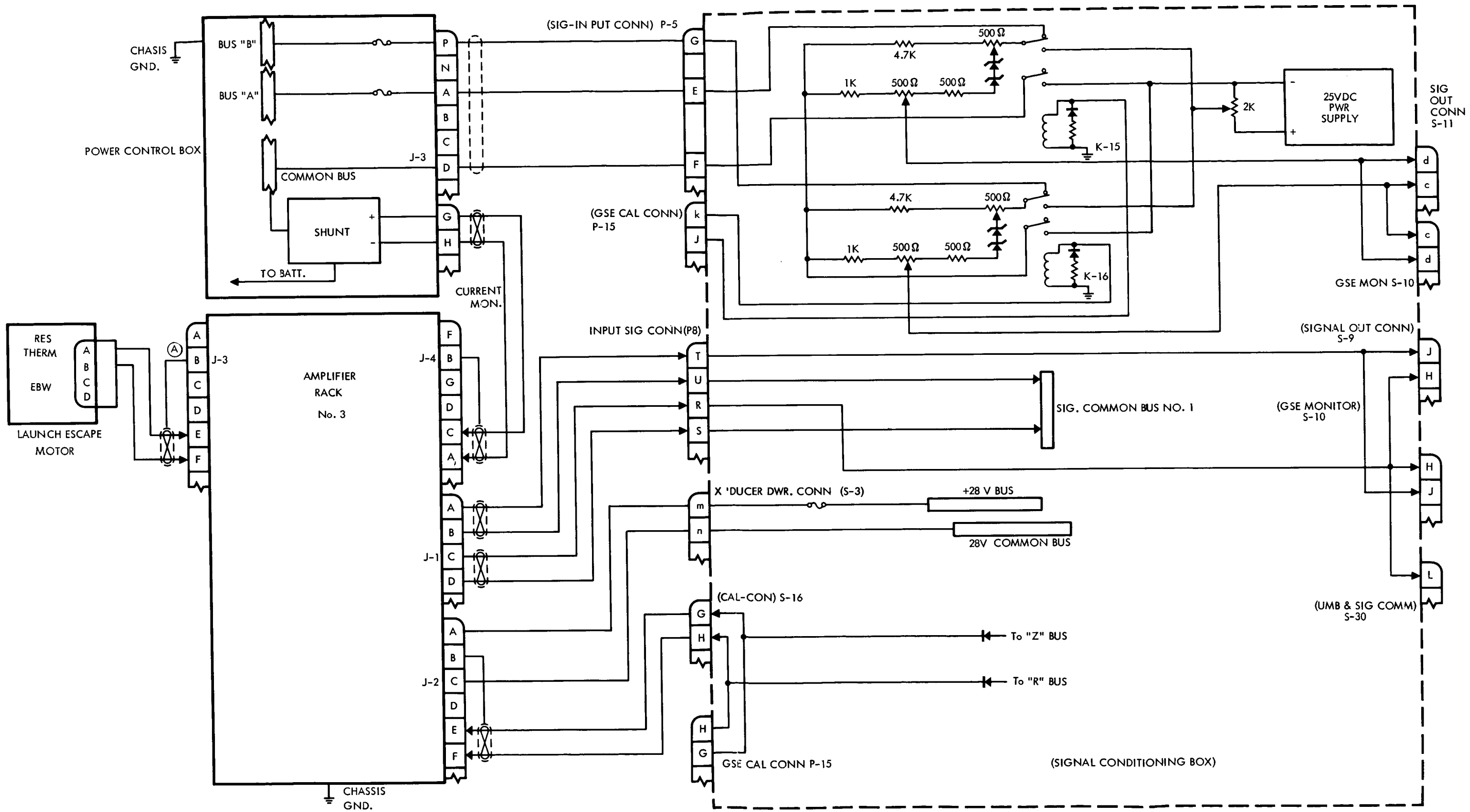

Figure 9. Bus A, Bus B and Current Monitor Diagram Apollo Boilerplate BP-6

CONFIDENTIAL

CONF[redacted]

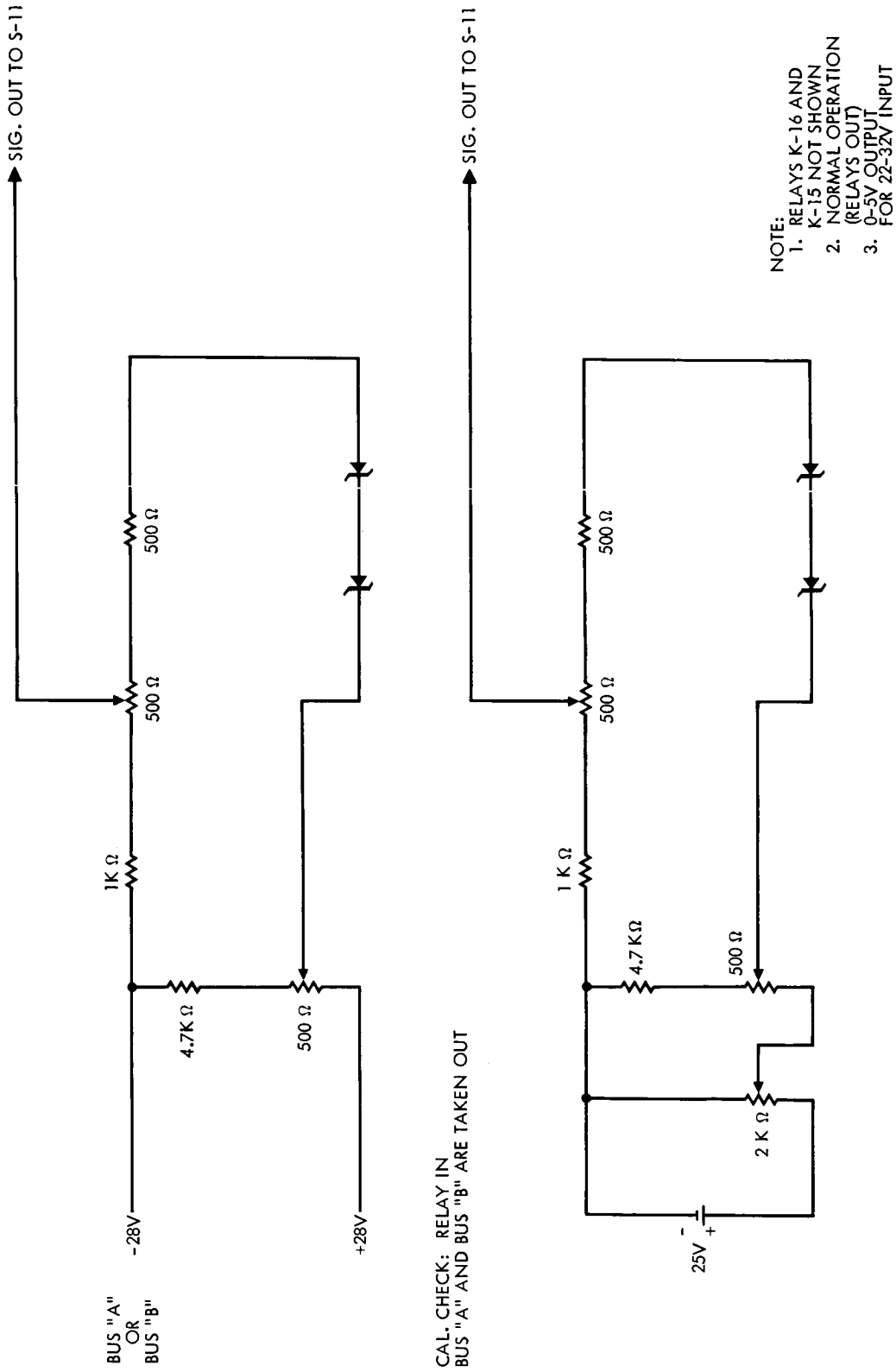

Figure 10. Bus A and Bus B Calibration Circuits Apollo Boilerplate BP-6

CON[redacted]

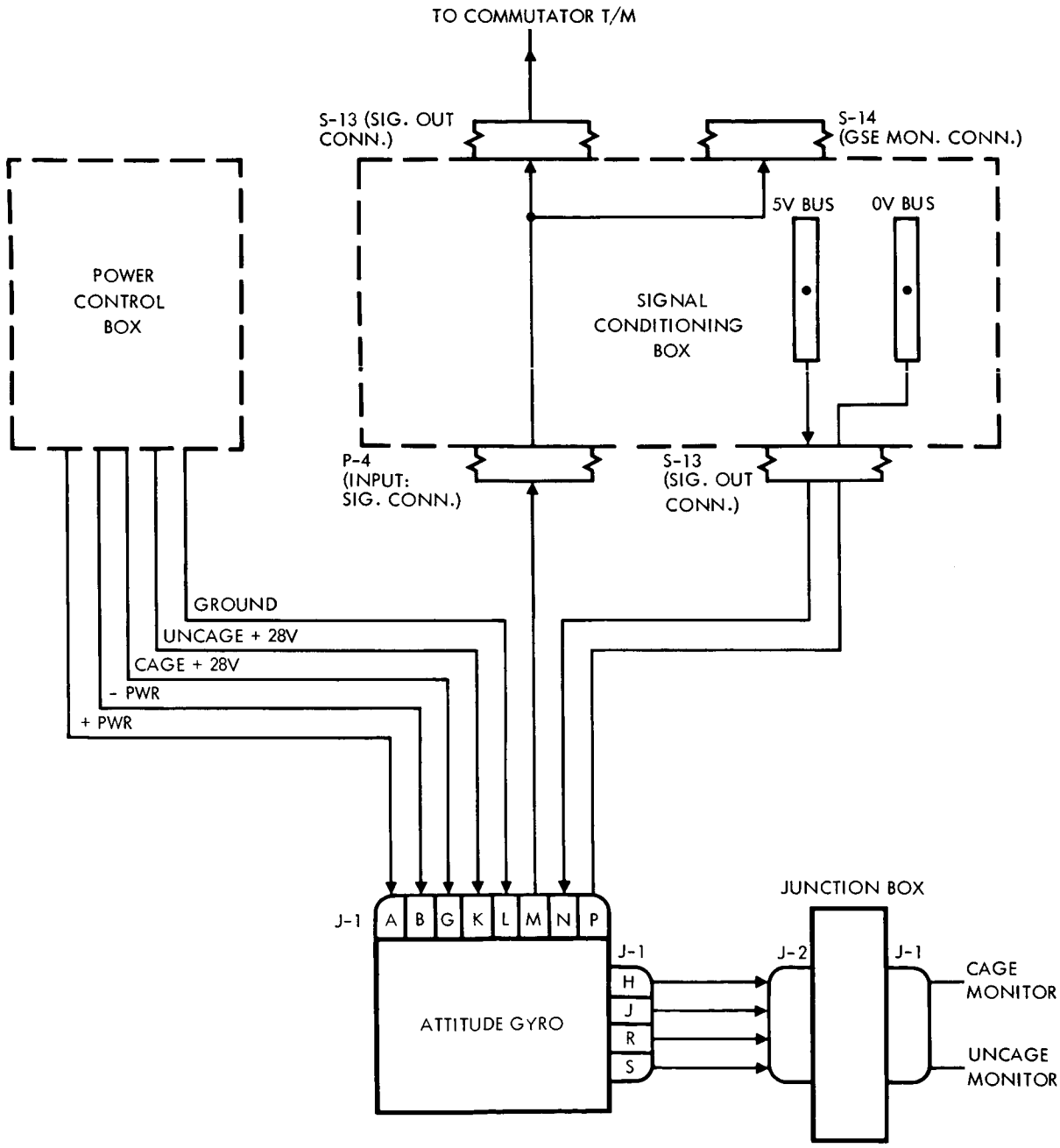

Figure 11. Typical Attitude Gyro Diagram Apollo Boilerplate BP-6

[redacted]

[redacted]

ATTITUDE GYROS (Roll, Pitch, Yaw)

Gyro Connector	Power Control Box Connector		
	Roll	Pitch	Yaw
A (+) Power	J2-B	J2-C	J2-E
B (-) Power	J2-R	J2-D	J2-F
G Cage (+28 v Command)	J2-A	J2-S	J2-G
K Uncage (+28 v Command)	J2-N	J2-T	J2-H
L Common	J2-P	J2-X	J2-U

Note: Pin Assignments on all three gyros are the same.

Signal Conditioning Box Pin Assignments

Roll Attitude Gyro		Pitch Attitude Gryo	
M	P4-A	M	P4-C
N	S13-n	N	S13-q
P	S13-m	P	S13-p
	Junction Box		Junction Box
H	J2-E	H	J2-A
J	J2-N	J	J2-D
R	J2-G	R	J2-C
S	J2-F	S	J2-B
	TM		TM
	S-13C		C-13B
	S-14C		S-14B

Figure 12. Pin Assignments for Attitude Gyros Apollo Boilerplate BP-6

[redacted]

CON[redacted]

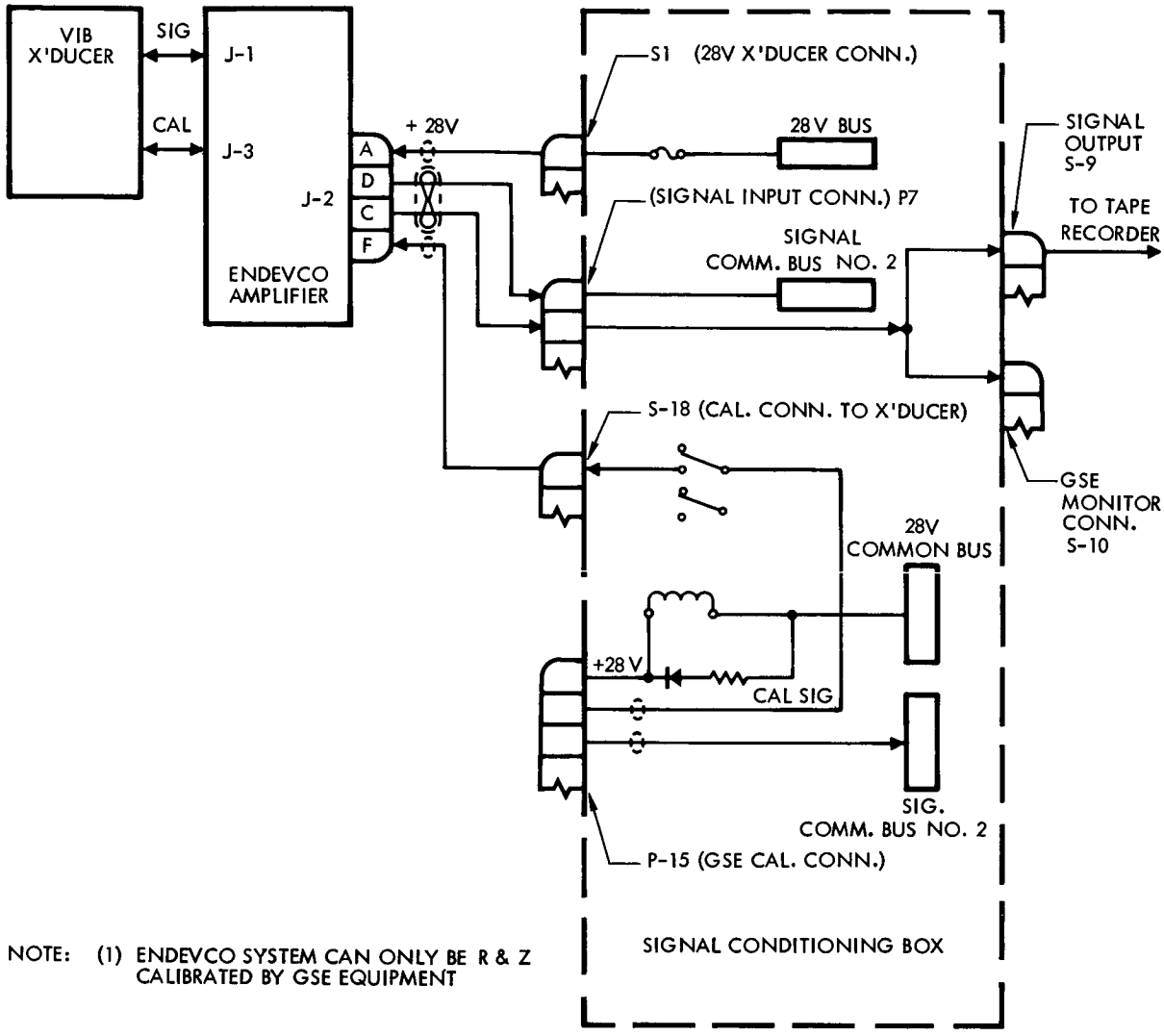

NOTE: (1) ENDEVCO SYSTEM CAN ONLY BE R & Z CALIBRATED BY GSE EQUIPMENT

(2) PIN DESIGNATIONS

ENDEVCO SYSTEM NO. 1

A	S1-T	RELAY	K-23
D	P7-c	y	S-9
C	P7-b	y	S-10
F	S18-BB	q	P-15
		n	P-15

ENDEVCO SYSTEM NO. 2

A	S1-R	RELAY	K-21
D	P7-a	z	S-9
C	P7-Z	z	S-10
F	S18-CC	S	P-15
		n	P-15

ENDEVCO SYSTEM NO. 3

A	S1-N	RELAY	K-17
D	P7-Y	AA	S- 9
C	P7-X	AA	S-10
F	S18-DD	u	P-15
		n	P-15

ENDEVCO SYSTEM NO. 4

A	S1-V	RELAY	K-24
D	P7-e	x	S-9
C	P7-d	x	S-10
F	S18-EE	P	P-15
		n	P-15

ENDEVCO SYSTEM NO. 5

A	S1-X	RELAY	K-22
D	P7-g	w	S-9
C	P7-f	w	S10
F	S18-FF	r	P-15
		n	P-15

ENDEVCO SYSTEM NO. 6

A	S1-Z	RELAY	K-18
D	P7-i	v	S-9
C	P7-h	V	S-10
F	S18-GG	t	P-15
		n	P-15

Figure 13. Typical Vibration Transducer Signal System Diagram Apollo Boilerplate BP-6

[redacted]

CON[redacted]

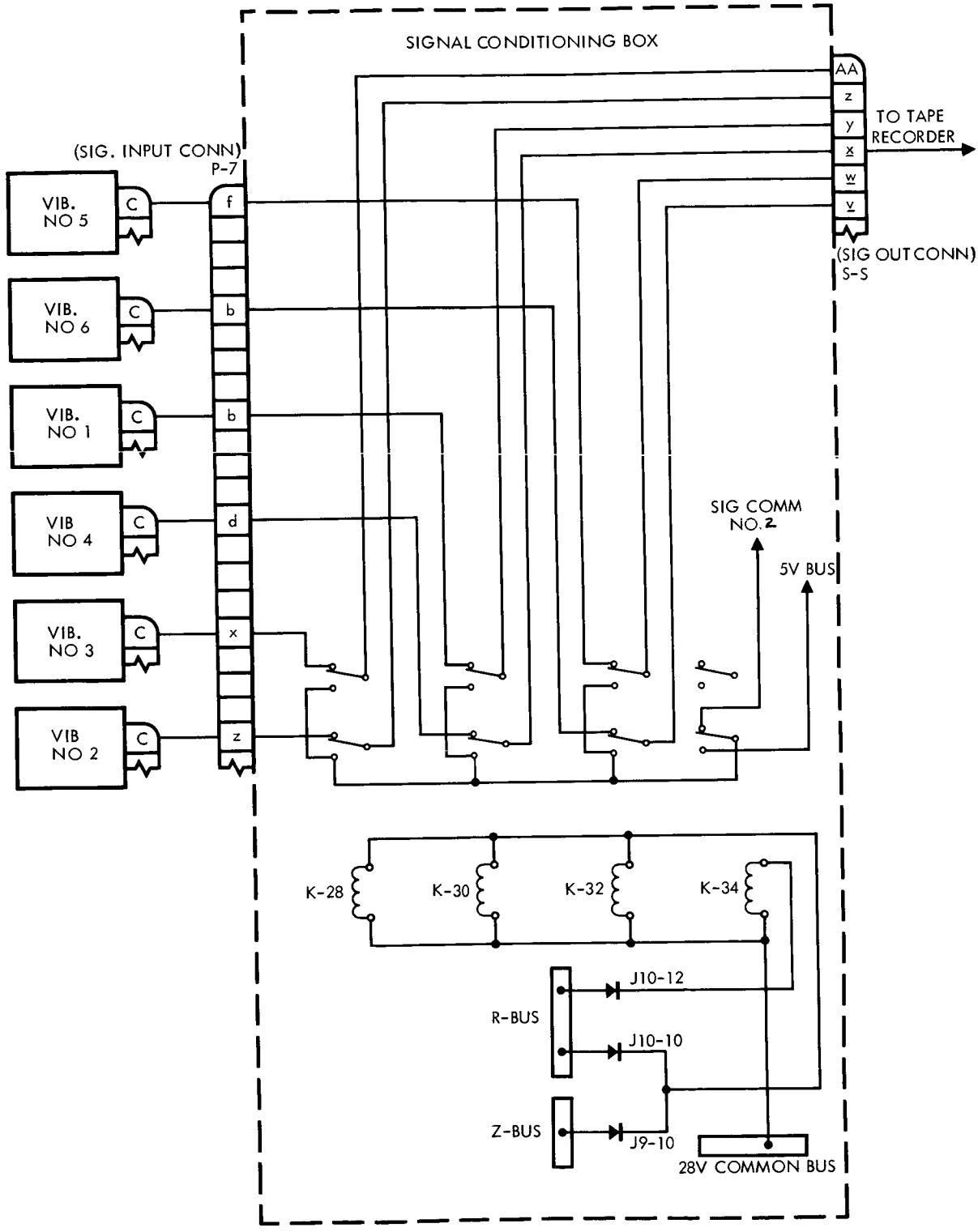

Figure 14. R and Z Calibration Circuit Diagram for Tape Recorder Apollo Boilerplate BP-6

[redacted]

[redacted]

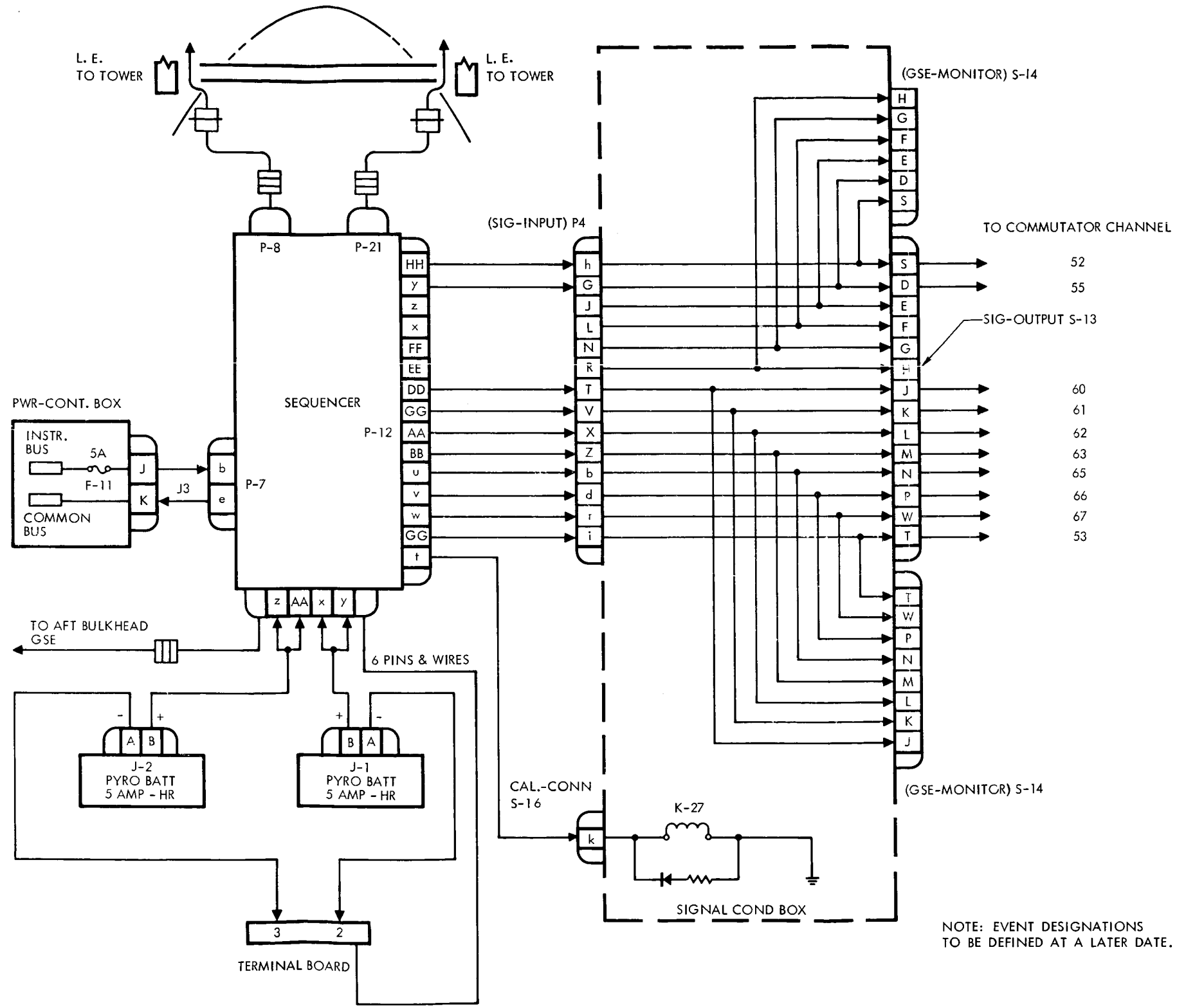

Figure 15. Sequencer Diagram Apollo Boilerplate BP-6

[redacted]

~~CONFIDENTIAL~~

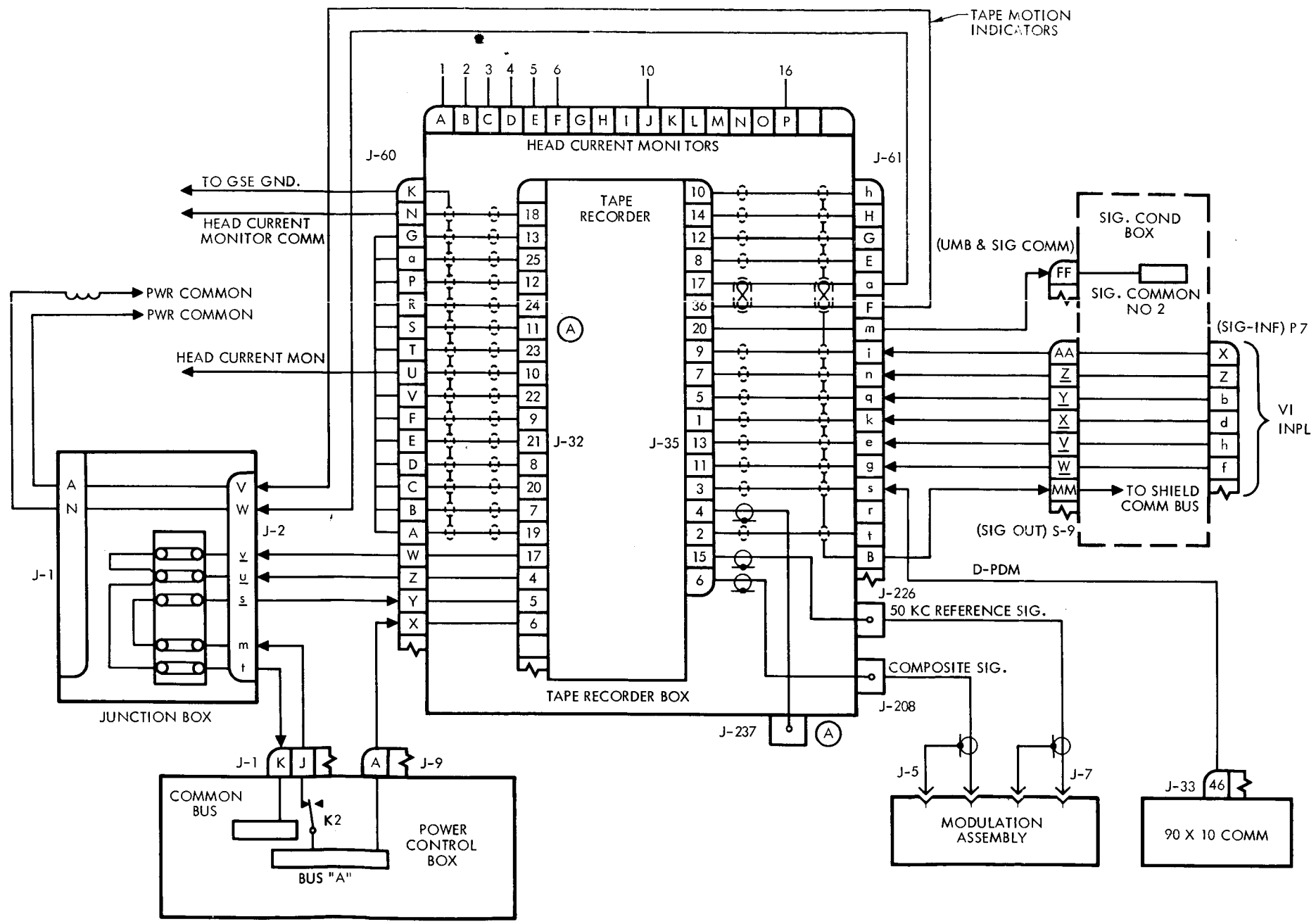

Figure 16. Tape Recorder Diagram Apollo Boilerplate BP-6

~~CONFIDENTIAL~~

CON[redacted]

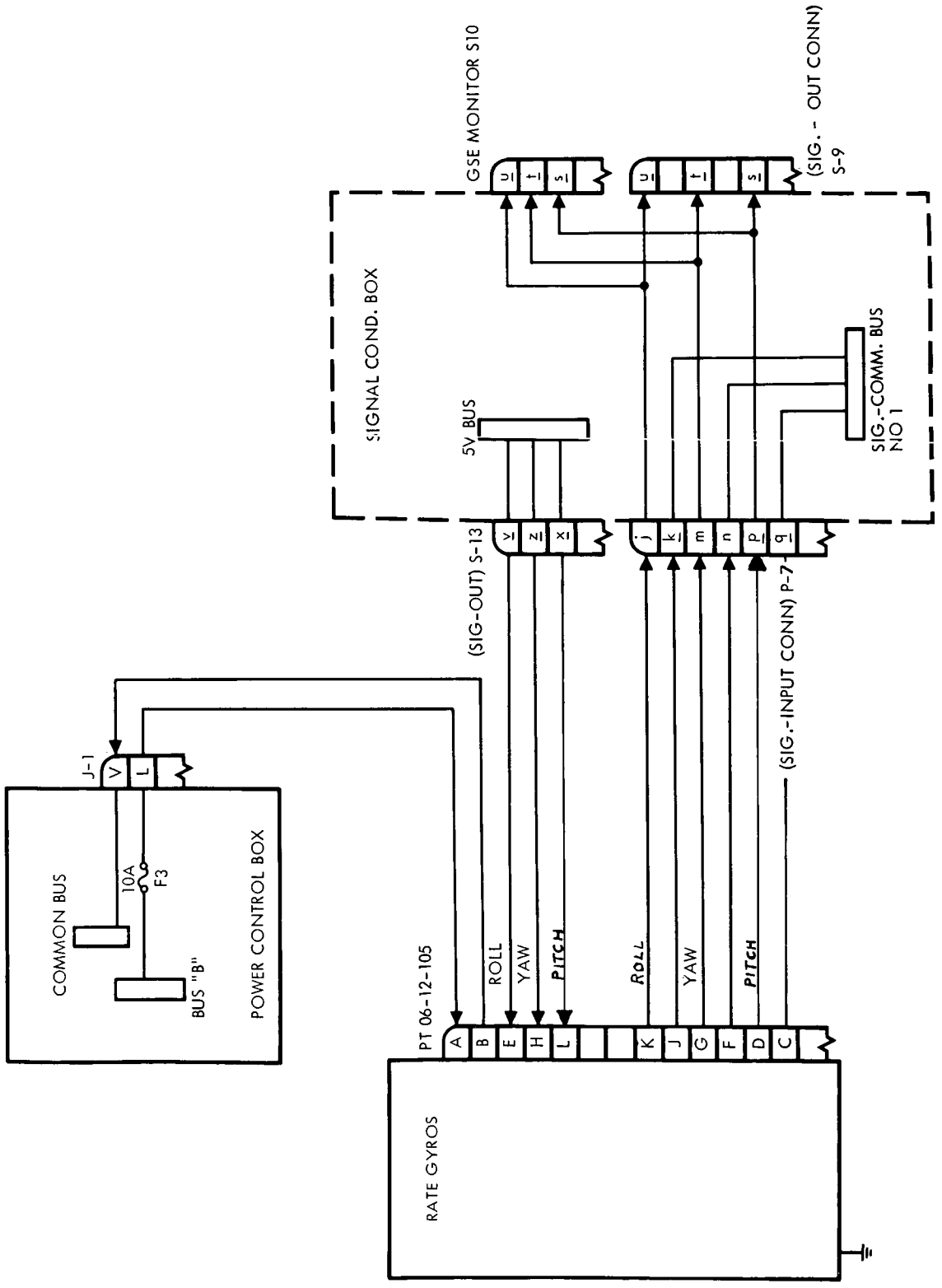

Figure 10. Rate Gyro Diagram Apollo Boilerplate BP-6

~~CONFIDENTIAL~~

CONF[redacted]

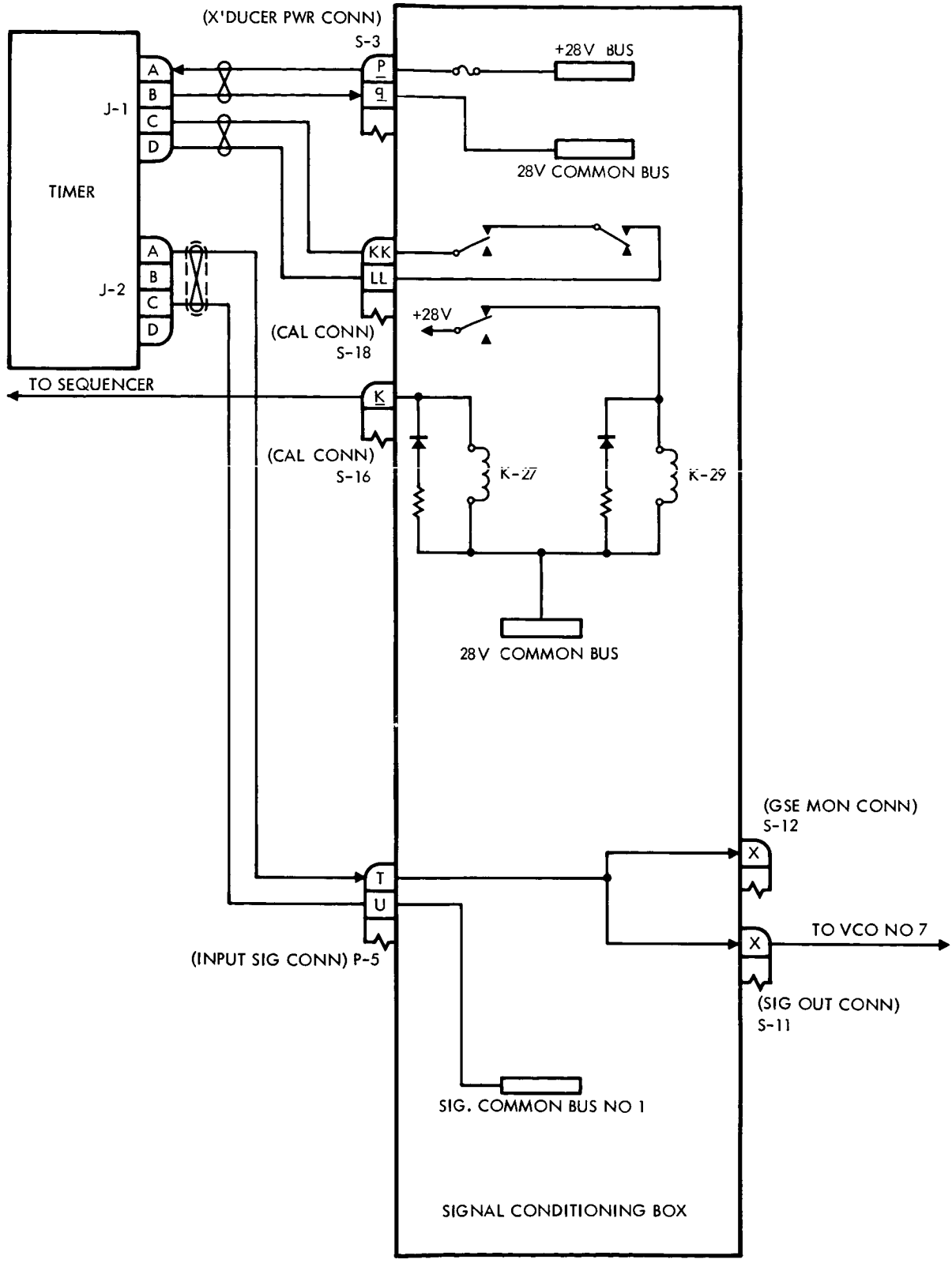

Figure 18. Timer Diagram Apollo Boilerplate BP-6

[redacted]

CO[redacted]

SYSTEM
DONNER

#1

D	P7-A	S- 9	LL
E	P7-B	S-10	LL
F	S1-A	P-15	x
G	S16-n	P-15	y
C		S-14	w +
A		S-14	v -
B			

#2

D	P7-E	S-9	JJ
E	P7-F	S-10	JJ
F	S1-E	P-15	BB
G	S16-s	P-15	CC
C		S-14	z -
A		S-14	AA +
B			

#3

D	P7-J	S-9	GG
E	P7-K	S-10	GG
F	S1-J	P-15	FF
G	S16-w	P-15	GG
C		S-14	t
A		S-14	u
B			

#4

D	P7-L	S-9	FF
E	P7-M	S-10	FF
F	S1-L	S-15	HH
G	S16-y	P-15	JJ
C		S-14	r -
A		S-14	s +
B			

Figure 19. Pin Assignment Signal Conditioner Apollo Boilerplate BP-6 (Page 1 of 2)

CO[redacted]

#5

D	P7-G	S- 9	HH
E	P7-H	S-10	HH
F	S1-G	P-15	DD
G	S16-u	P-15	EE
C		S-14	x -
A		S-14	y +
B			

#6

D	P7-C	S-9	KK
E	P7-D	S-10	KK
F	S1-C	P-15	z
G	S16-q	P-15	AA
C		S-14	CC +
A		S-14	BB -
B			

Figure 19. Pin Assignment Signal Conditioner Apollo Boilerplate BP-6 (Page 2 of 2)

~~CONFIDENTIAL~~

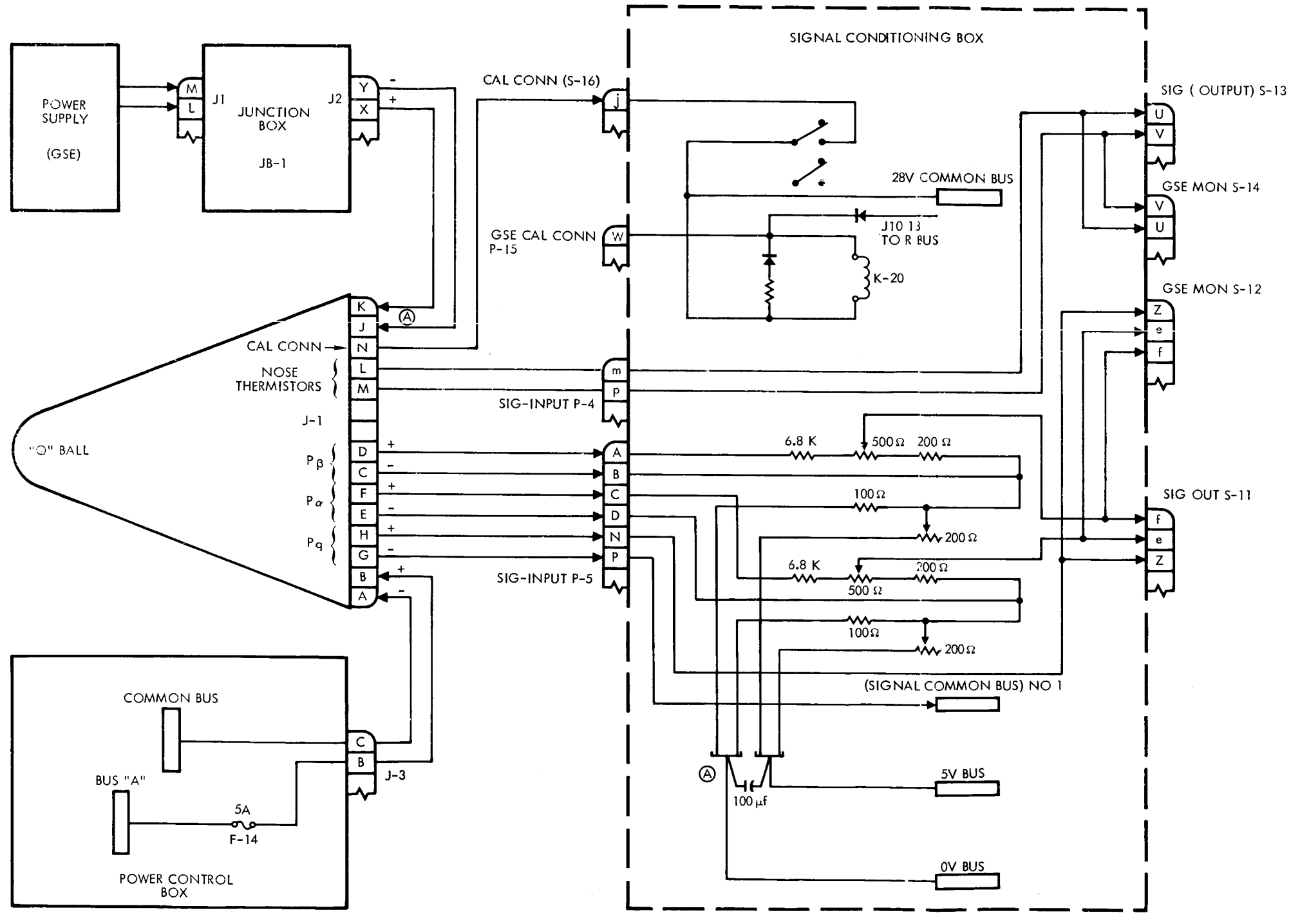

Figure 20. Q-Ball Diagram Apollo Boilerplate BP-6

~~CONFIDENTIAL~~

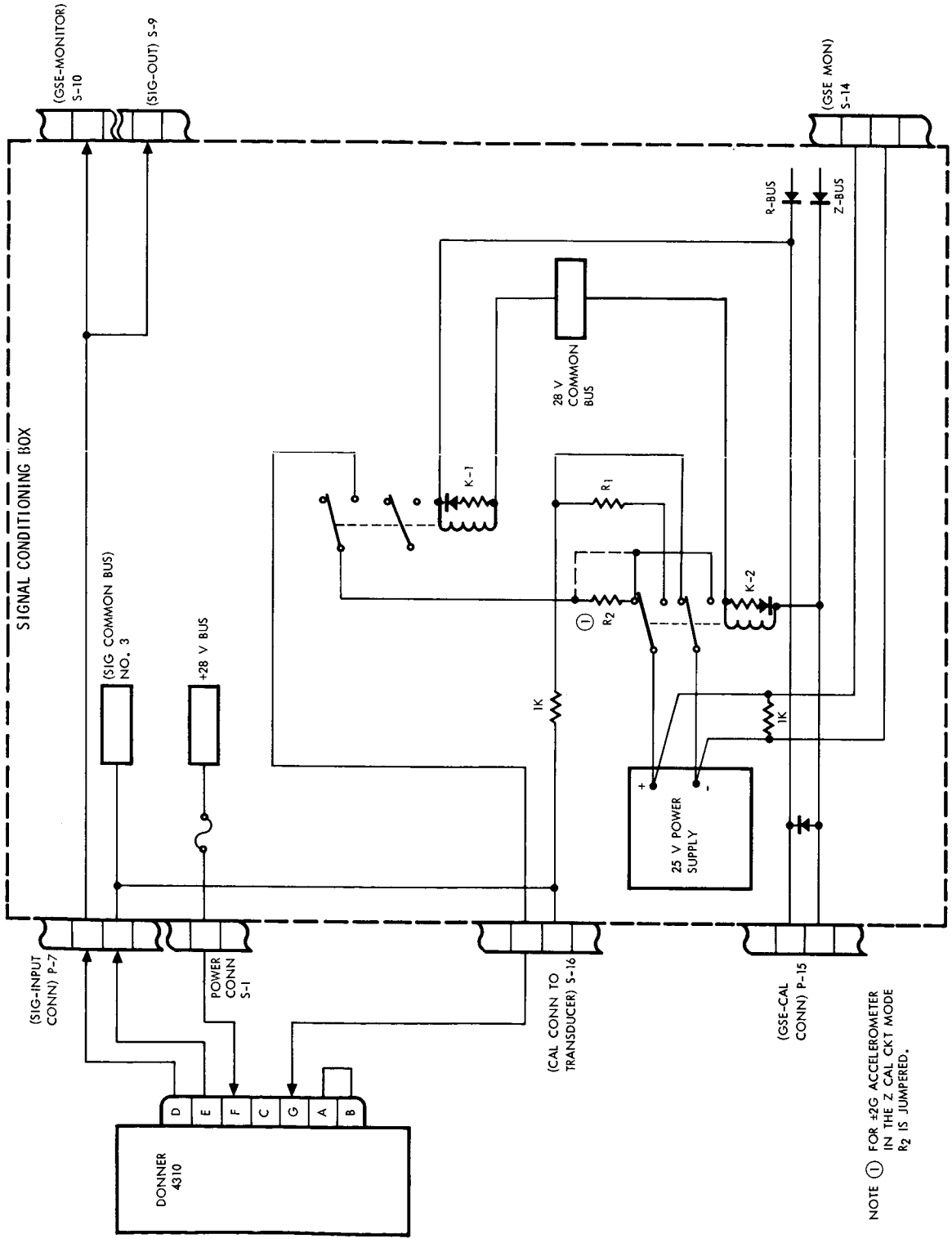

Figure 21. Typical Accelerometer Diagram Apollo Boilerplate BP-6

[redacted]

SYSTEM DONNER

#1

D	P7-A	S-9	LL
E	P7-B	S-10	LL
F	S1-A	P-15	x
G	S16-n	P-15	y
C		S-14	w
A		S-14	v
B			

#2

D	P7-E	S-9	JJ
E	P7-F	S-10	JJ
F	S1-E	P-15	BB
G	S16-s	P-15	CC
C		S-14	z
A		S-14	AA
B			

#3

D	P7-J	S-9	GG
E	P7-K	S-10	GG
F	S1-J	P-15	FF
G	S16-w	P-15	GG
C		S-14	t
A		S-14	u
B			

SYSTEM DONNER

#4

D	P7-L	S-9	FF
E	P7-M	S-10	FF
F	S1-L	S-15	HH
G	S16-y	P-15	JJ
C		S-14	r
A		S-14	s
B			

#5

D	P7-G	S-9	HH
E	P7-H	S-10	HH
F	S1-G	P-15	DD
G	S16-u	P-15	EE
C		P-14	x
A		S-14	y
B			

#6

D	P7-C	S-9	KK
E	P7-D	S-10	KK
F	S1-C	P-15	z
G	S16-q	P-15	AA
C		S-14	CC
A		S-14	BB
B			

Figure 22. Signal Conditioner Pin Assignment Apollo Boilerplate BP-6

[redacted]

[redacted]

TABLE I. FLIGHT RESEARCH AND DEVELOPMENT INSTRUMENTATION-BOILERPLATE BP-6

EQUIPMENT DESCRIPTION

NAME	NASA TYPE	RANGE	PWR PER UNIT (W)	LOCATION	WEIGHT PER UNIT (LBS.)
Timer	5.2.1.1.0		1.5	CM Interior $X_c = 26$, $Y_c = 5$ $Z_c = 42$	1.5
Acceleration Transducer	2.8.1.1	+20/ -10g	0.3	$X_c = 78.5$ $Y_c = 0$ $Z_c = 21$	0.5
Acceleration Transducer	2.8.1.1	±2g	0.3	$X_c = 78.5$ $Y_c = 0$ $Z_c = 21$	0.5
Acceleration Transducer	2.8.1.1	±10g	0.3	$X_c = 78.5$ $Y_c = 0$ $Z_c = 21$	0.5
Acceleration Transducer	2.8.1.1	±10g	0.3	$X_c = 78.5$ $Y_c = 0$ $Z_c = 21$	0.5
Acceleration Transducer	2.8.1.1	±10g	0.3	$X_L = 380$ (above jettison motor) $Y_L = 0$ $Z_L = 6$	0.5
Acceleration Transducer	2.8.1.1	±10g	0.3	$X_L = 380$ (above jettison motor) $Y_c = 6$ $Z_L = 0$	0.5
Vibration Sys. Transducer	2.19.1.2.2	±200g	1.32	$X_c = 82$ $X_L = 9.5$	1.125
Amplifier	2.11.1.1			$X_L = 24$ $X_L = 26$	

[redacted]

TABLE I. FLIGHT RESEARCH AND DEVELOPMENT INSTRUMENTATION-BOILERPLATE BP-6 (CONT)

EQUIPMENT DESCRIPTION

NAME	NASA TYPE	RANGE	PWR PER UNIT (W)	LOCATION	WEIGHT PER UNIT (LBS.)
Pressure Transducer	2.7.1.5	8-15 psia	0.18	*0°, 90°, 180°, 270°, at 50-inch Rad.	0.50
Rate Gyroscope	2.3.2.1	±100°/sec.		X_c = 78.5 near CG	8.5
		±175°	23	X_c = 78.5 Y_c = 0, Z_c = 21	6.5
Q-Ball	ME 901-0014-0001	±40°	15	Nose Cone	22.3
Q-Ball	ME 901-0014-0001	0-1250 psf		Nose Cone	22.3
Temperature Transducer Resistance Thermometer	2.18.2.2	0-150C	2.5	CM Interior	2.0
Amplifier	2.11.1.1				

*Angular location is referenced to +Z axis (+Z = 0) and increases clockwise looking down on CM.

[redacted]

TABLE I. FLIGHT RESEARCH AND DEVELOPMENT INSTRUMENTATION-BOILERPLATE BP-6 (CONT)

EQUIPMENT DESCRIPTION

NAME	NASA TYPE	RANGE	PWR PER UNIT (W)	LOCATION	WEIGHT PER UNIT (LBS.)
Temperature Transducer Resistance Thermometer	2.18.2.2		2.5	(2) TM RF Pkg. Interior 0-150C	2.0
Amplifier	2.11.1.1			(1) Tower Jettison motor EBW Module-50/175°C	
Pressure Transducer	2.7.1.5	0-2500 psid	0.18	Top of LES Motor $X_L = 290$, $Y_L = 0$ $Z_L = 0$	0.50
Pressure Transducer	2.7.1.5	2-22 psia	0.18	*$X_c = 30$: 0°, 22.5°, 41°, 90°, 180°, 202.5°, 221°, 247°, 270°, 292.5°, 319°, 337° $X_c = 37$: 0°, 22.5°, 90°, 180°, 202.5°, 247.5°, 270°, 292°, 337.5° $X_c = 50$: 0°, 45°, 90°, 225°, 270°, 315°	0.50

*Angular location is referenced to +Z axis (+Z = 0) and increases clockwise looking down on CM.

[redacted]

[redacted]

TABLE I. FLIGHT RESEARCH AND DEVELOPMENT INSTRUMENTATION-BOILERPLATE BP-6 (CONT)

EQUIPMENT DESCRIPTION

NAME	NASA TYPE	RANGE	PWR PER UNIT (W)	LOCATION	WEIGHT PER UNIT (LBS.)
				X_c = 71; 22.5°, 202.5°, 247.5°, 292.5°, 337.5°,	
Pressure	2.7.1.5	2-22 psia	0.18	X_c = 79: 0°, 90°, 180°, 270°,	0.50
		22 to 32 v dc		Power Control Box	
Pressure Transducer	2.7.1.5	0-2500 psid	0.18	X_L = 345 Y_L = 0 Z_L = -13	0.50
Signal Conditioning Box	2.12.1.1.0		44W	Command Module	66
(3) Amplifier Racks (2 Amp/ Rack)	5.13.1.1.2			Command Module	1.0
Power Control Box	1.5.1.1.0			Command Module	11.25
Telemetry Sub-carrier Assy. consisting of:			18.9	Command Module	11.5

[redacted]

TABLE I. FLIGHT RESEARCH AND DEVELOPMENT INSTRUMENTATION-BOILERPLATE BP-6 (CONT)

EQUIPMENT DESCRIPTION

NAME	NASA TYPE	RANGE	PWR PER UNIT (W)	LOCATION	WEIGHT PER UNIT (LBS.)
1. Commutator					
2. Ref. Freq. Osc.					
3. Subcarrier Osc.					
4. Mixer Amp. (Tape Input)					
5. Matching Amp (TXMR & H. L.)					
6. Sig/Calib. Relays and Limiters					
7. Multipoint Voltage Calibrator	VC-1-B				
8. Commutator Heater Assy.					
Tape Recorder			90	Command Module	28.5
Antenna Sys. consisting of:				Command Module	53
Multiplexer Filter and Power Divider					
Antenna					

TABLE I. FLIGHT RESEARCH AND DEVELOPMENT INSTRUMENTATION-BOILERPLATE BP-6 (CONT)

EQUIPMENT DESCRIPTION

NAME	NASA TYPE	RANGE	PWR PER UNIT (W)	LOCATION	WEIGHT PER UNIT (LBS.)
Power Divider Cables					
Junction Box				Command Module	4.5
Battery (Main)	1.1.1.2.0			Command Module	30
Battery (Pyro) and Containers	1.1.1.1.0			Command Module	8
Current Amplifier	2.11.1.1		2.5	Command Module	1.0
				ELS Sequencer	
				Signal Conditioning Box	

[redacted]

TABLE I. FLIGHT AND RESEARCH AND DEVELOPMENT INSTRUMENTATION BOILERPLATE BP-6

EQUIPMENT DESCRIPTION

NAME	NASA TYPE	RANGE	PWR PER UNIT (W)	LOCATION	WEIGHT PER UNIT (LBS.)
Tower Jettison Motor Fire Relay Closures (A & B)				ELS Sequencer	
R & Z Calibration Monitor				Signal Conditioning Box	

[redacted]

[redacted]

TAB B

APOLLO FLIGHT RESEARCH AND DEVELOPMENT INSTRUMENTATION PERFORMANCE AND INTERFACE SPECIFICATION FOR BOILERPLATE BP-12

TABLE OF CONTENTS

Paragraph	Title	Page
1.	SCOPE	B1
1.1	Scope	B1
2.	APPLICABLE DOCUMENTS	B1
2.1	Applicability	B1
2.1.1	Non-Government Documents	B1
2.1.2	Precedence	B2
3.	REQUIREMENTS	B2
3.1	General	B2
3.1.1	Configuration	B2
3.1.2	Electromagnetic Interference	B2
3.2	PERFORMANCE	B2
3.2.1	General	B2
3.3	INTERFACE	B2
3.3.1	Interface Requirements	B2
3.3.1.1	Interface Definition	B2
3.3.1.2	Mechanical Interface	B2
3.3.1.3	Electrical Interface	B3
3.3.1.4	Functional Interface	B3
4.	QUALITY ASSURANCE PROVISIONS	B3
5.	PREPARATION FOR DELIVERY	B3
6.	NOTES	B3
6.1	Intended Use	B3
6.2	Definitions	B3
6.2.1	Performance	B3
6.2.2	Boilerplate	B3

FIGURES

Number	Title	Page
Figure 1	Instrumentation Sensor Location Apollo Boilerplate BP-12	B4
Figure 2	Pressure Sensor Locations Command Module Apollo Boilerplate BP-12	B5
Figure 3	Instrumentation Block Diagram Apollo Boilerplate BP-12	B6
Figure 4	Timer Diagram Apollo Boilerplate BP-12	B7
Figure 5	Typical Attitude Gyro Diagram Apollo Boilerplate BP-12	B8
Figure 6	Pin Assignments for Attitude Gyro Apollo Boilerplate BP-12	B9
Figure 7	Rate Gyro Diagram Apollo Boilerplate BP-12	B10
Figure 8	Typical Pressure Transducer Diagram Apollo Boilerplate BP-12	B11
Figure 9	Pin Assignments for Pressure Transducer Apollo Boilerplate BP-12	B12
Figure 10	Chamber Pressure Transducer Diagram Apollo Boilerplate BP-12	B13
Figure 11	Q-Ball Diagram Apollo Boilerplate BP-12	B14
Figure 12	Typical Accelerometer Diagram Apollo Boilerplate BP-12	B15
Figure 13	Pin Assignments for Accelerometer Apollo Boilerplate BP-12 (Sheet 1 of 2)	B16
Figure 13	Pin Assignments for Accelerometer Apollo Boilerplate BP-12 (Sheet 2 of 2)	B17
Figure 14	R and Z Bus Control Diagram Apollo Boilerplate BP-12	B18
Figure 15	NAA Sequencer Loading Apollo Boilerplate BP-12	B19
Figure 16	C-Band Beacon No. 1 Apollo Boilerplate BP-12	B20
Figure 17	C-Band Beacon No. 2 Apollo Boilerplate BP-12	B21
Figure 18	Temperature System Diagram Apollo Boilerplate BP-12 (Sheet 1 of 2)	B22
Figure 18	Temperature System Diagram Apollo Boilerplate BP-12 (Sheet 2 of 2)	B23
Figure 19	Bus A, Bus B, and Current Monitor Diagram Apollo Boilerplate BP-12	B24
Figure 20	Pressure Transducer Diagram Apollo Boilerplate BP-12 (Sheet 1 of 6)	B25

FIGURES (Continued)

Number	Title	Page
Figure 20	Pressure Transducer Diagram Apollo Boilerplate BP-12 (Sheet 2 of 6)	B26
Figure 20	Pressure Transducer Diagram Apollo Boilerplate BP-12 (Sheet 3 of 6)	B27
Figure 20	Pressure Transducer Diagram Apollo Boilerplate BP-12 (Sheet 4 of 6)	B28
Figure 20	Pressure Transducer Diagram Apollo Boilerplate BP-12 (Sheet 5 of 6)	B29
Figure 20	Pressure Transducer Diagram Apollo Boilerplate BP-12 (Sheet 6 of 6)	B30
Figure 21	R.F. Package Diagram Apollo Boilerplate BP-12	B31
Figure 22	Modulation Package Diagram Apollo Boilerplate BP-12	B32
Figure 23	Tape Recorder Diagram Apollo Boilerplate BP-12	B33
Figure 24	Camera System Diagram Apollo Boilerplate BP-12	B34

TABLES

Number	Title	Page
Table I	Flight Research and Development Instrumentation Boilerplate BP-12	B35
Table II	Flight Research and Development Antennas Boilerplate BP-12	B39

APOLLO FLIGHT RESEARCH AND DEVELOPMENT INSTRUMENTATION PERFORMANCE AND INTERFACE SPECIFICATION FOR BOILERPLATE BP-12

1. SCOPE

1.1 Scope. - This specification defines the Flight R and D Instrumentation performance and interface requirements for Boilerplate BP-12.

2. APPLICABLE DOCUMENTS

2.1 Applicability. - Unless otherwise specified, the following documents of the issue in effect on the date of contract form a part of this specification to the extent specified herein.

2.1.1 Non-Government Documents.

SPECIFICATIONS

North American Aviation, Inc., Space and Information Systems Division (NAA/S&ID)

SID 63-562	Apollo Measurement Requirements Boilerplate 12, dated 4 October 1963
MC 999-0002B	Specification for Electromagnetic Interference Control for Apollo Spacecraft System, dated 3 January 1963

INTERFACE COORDINATION DOCUMENTS

North American Aviation, Inc., Space and Information Systems Division (NAA/S&ID)

MH01-02040-116	Communication and Instrumentation Equipment to Vehicle BP-12 NASA-MSC-ESD to NAA

2.1.3 Precedence. - For this specification, the order of precedence in case of conflict shall be as follows:

(a) The contract

(b) This specification

(c) Other documents referenced herein.

3. REQUIREMENTS

3.1 General. - The flight research and development R & D instrumentation shall be installed on Boilerplate BP-12 in the location shown in Figures 1 and 2. The power required and the weights of the various instrument packages, shall be as shown in Table I. The signal inputs and outputs for instrumentation are shown in wiring diagrams (see Figures 3 through 24).

3.1.1 Configuration. - The configuration of flight R and D instrumentation shall be as shown in Figures 1 through 24.

3.1.2 Electromagnetic Interference. - The Flight R and D Instrumentation shall conform to the interference requirements as specified in Specification MC 999-0002B.

3.2 Performance

3.2.1 General. - The required measurement parameters for the flight research and development instrumentation for Boilerplate 12 are expressed in document SID 63-562.

3.3 Interface

3.3.1 Interface Requirements. - The following paragraphs define the requirements for electrical, mechanical and functional interface for the Apollo Flight R and D Instrumentation for BP-12.

3.3.1.1 Interface Definition. - Interface is defined as the junction point or points within or between systems or subsystems where matching or accommodation must be properly achieved in order to make their operation compatible with the successful operation of all other functional entities.

3.3.1.2 Mechanical Interface. - The Flight R and D Instrumentation mechanical interface is definitized in Interface Control Document (ICD MH01-02040-116).

3.3.1.3 Electrical Interface. - The Flight R and D Instrumentation electrical interface is definitized in ICD (document number to be supplied).

3.3.1.4 Functional Interface. - The Flight R and D Instrumentation functional interface is definitized in ICD (document number to be supplied).

4. QUALITY ASSURANCE PROVISIONS

Not applicable

5. PREPARATION FOR DELIVERY

Not applicable

6. NOTES

6.1 Intended Use. - This specification is intended to be used to define the performance and interface requirements of Flight R and D Instrumentation for Boilerplate Number 12.

6.2 Definitions. - For purposes of this specification, the following terms are defined.

6.2.1 Performance. - Performance is the ability to operate and function as an entity, without malfunctions, until the objective is accomplished.

6.2.2 Boilerplate. - Boilerplate is defined as a simulated item including the necessary research and development instrumentation to make an integrated assembly.

[redacted]

1. Q-BALL (1) (THREE DIFFERENTIAL PRESSURE TRANSDUCERS, PART OF NOSE CONE).
2. ACCELEROMETERS (2) (Y-AXIS X_L380, Y_L0, Z_L6), & (Z-AXIS X_L380, Y_L6, Z_L0).
3. PITCH CONTROL MOTOR CHAMBER PRESSURE (1) (X_L345, Y_L0, Z_L-13).
4. LAUNCH ESCAPE MOTOR CHAMBER PRESSURE (1) (X_L290, Y_L0, Z_L0).
5. LAUNCH ESCAPE TOWER CAMERA (1) (X_L85).
6. COMMAND MODULE CAMERA (1) (X_C124).
7. ACCELEROMETER (4) (INSIDE C/M (X_c78.5, Y_c0, Z_c21).
8. RATE GYRO (1) (THREE AXIS PKG. INSIDE C/M (X_c78.5, Y_c0, Z_c21).
9. ATTITUDE GYRO (3) (INSIDE C/M (X_c78.5, Y_c0, Z_c21).
10. PRESSURES-FLUCTUATING (12)

    (1 AT X_c119, ON CM 355°) (2 at X_a = 881 on S/M 177° & 357°)

    (1 AT X_a = 930 ON SM 357°) (4 at X_a = 974 on S/M 87°, 177°, 267°, & 357°)

    (2 AT X_c = 12 ON S/M 177° & 357°) (1 at X_c = 40 on C/M 357°)

    (1 AT X_c = 70 C/M 357°)
11. PRESSURES (48) (12 ON BASE OF C/M 90° APART).

    (12 AT X_c30)

    (8 AT X_c50.5)

    (8 AT X_c71)

    (3 AT X_c79)

    (1 AT X_c80.3)

    (4 AT X_c100)
12. SERVICE MODULE CAMERA (1) (X_a870)

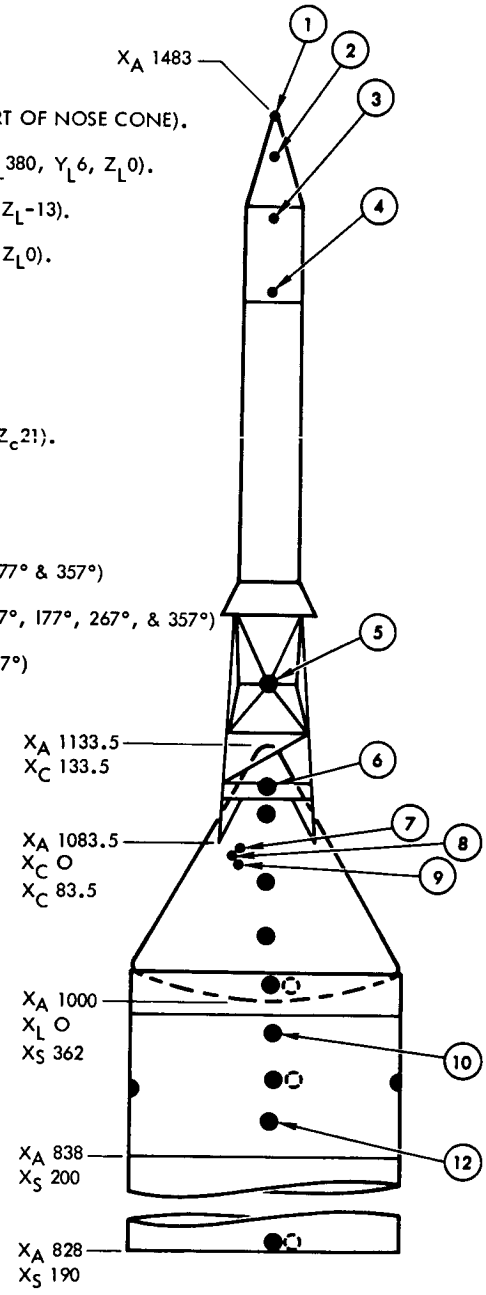

Figure 1. Instrumentation Sensor Location Apollo Boilerplate BP-12

[redacted]

CO[redacted]

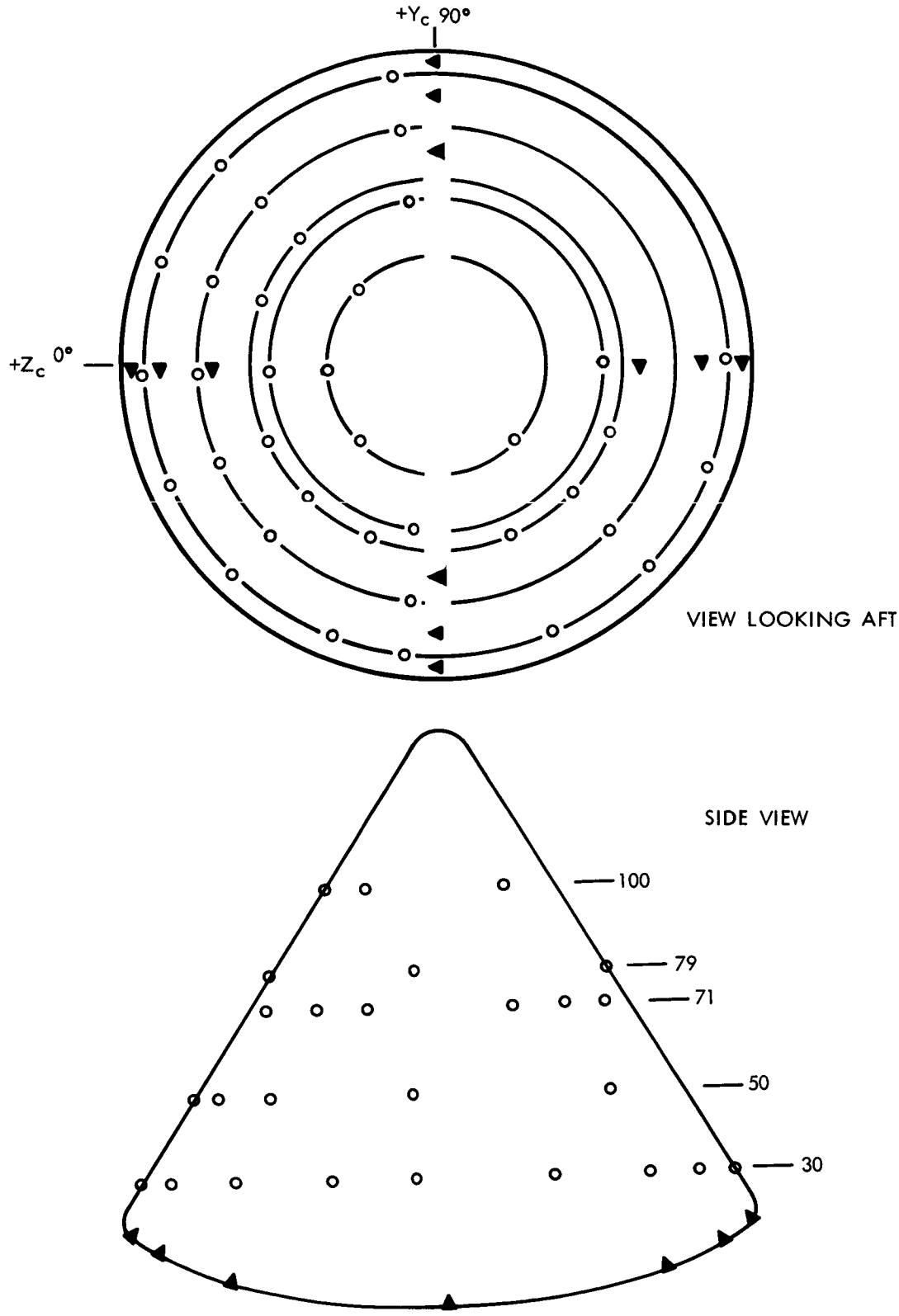

Figure 2. Pressure Sensor Location Apollo Boilerplate BP12

CO[redacted]

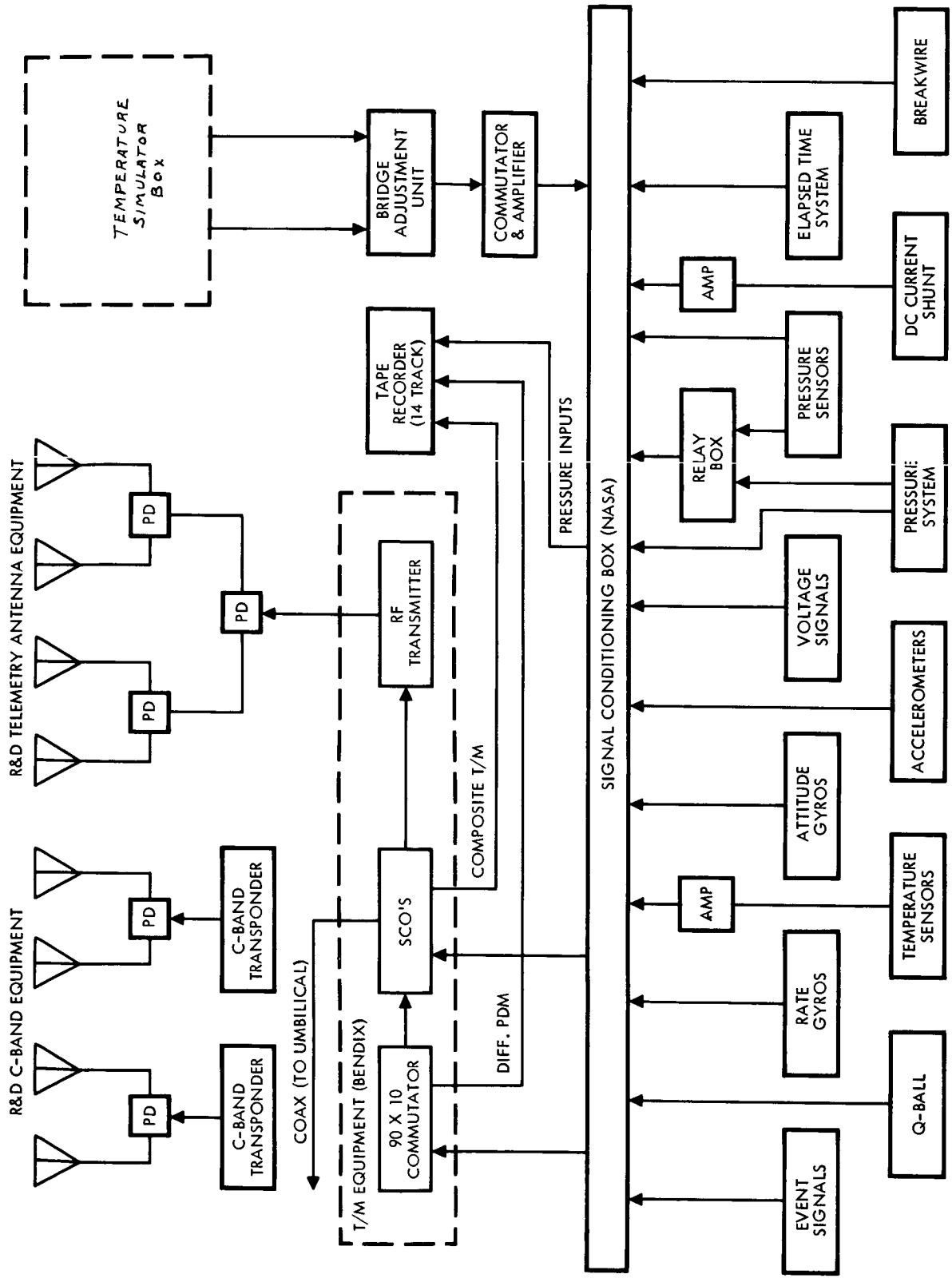

Figure 3. Instrumentation Block Diagram Apollo Boilerplate BP-12

[redacted]

~~CONFIDENTIAL~~

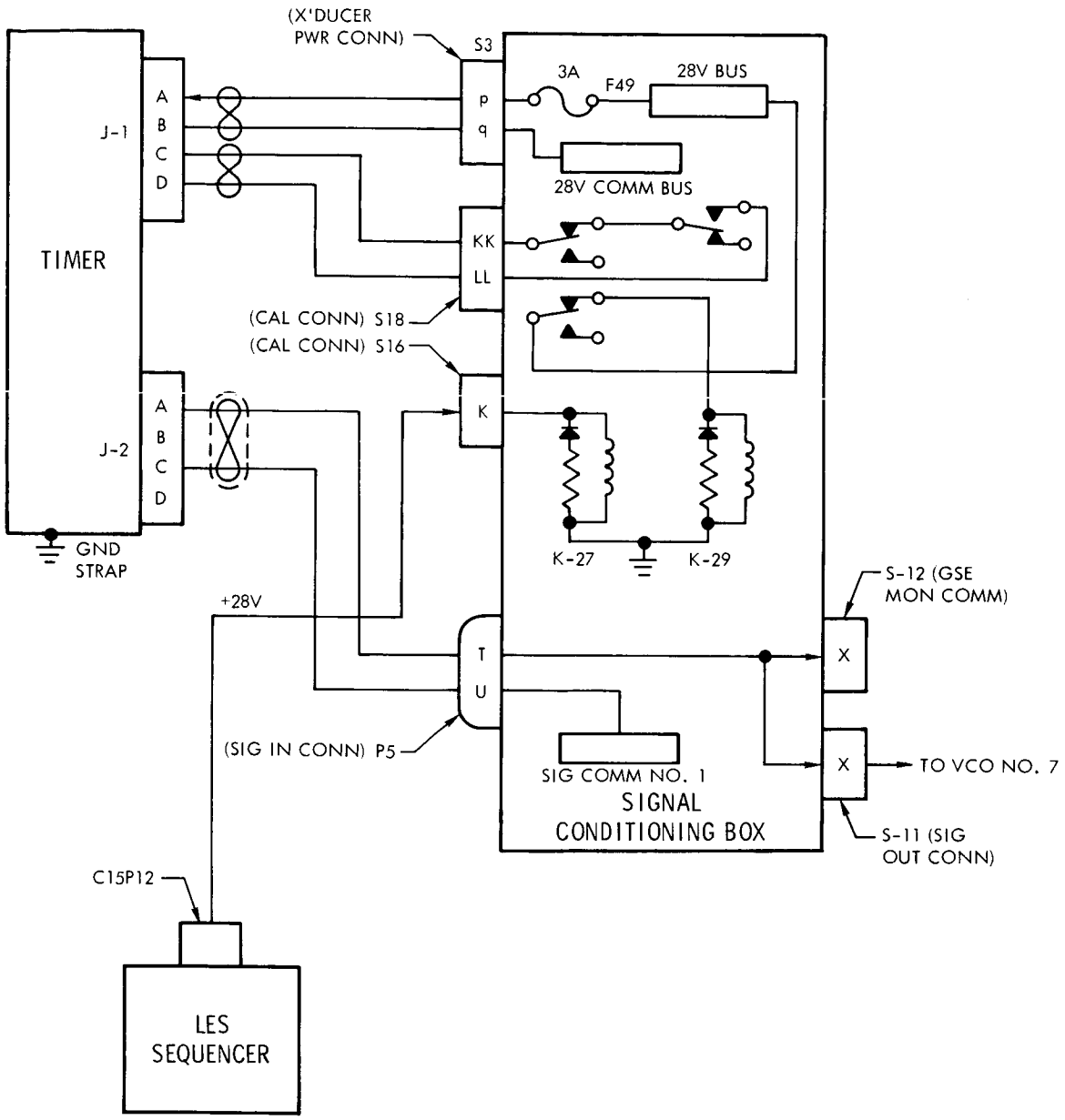

Figure 4. Timer Diagram Apollo Boilerplate BP-12

~~CONFIDENTIAL~~

~~CONFIDENTIAL~~

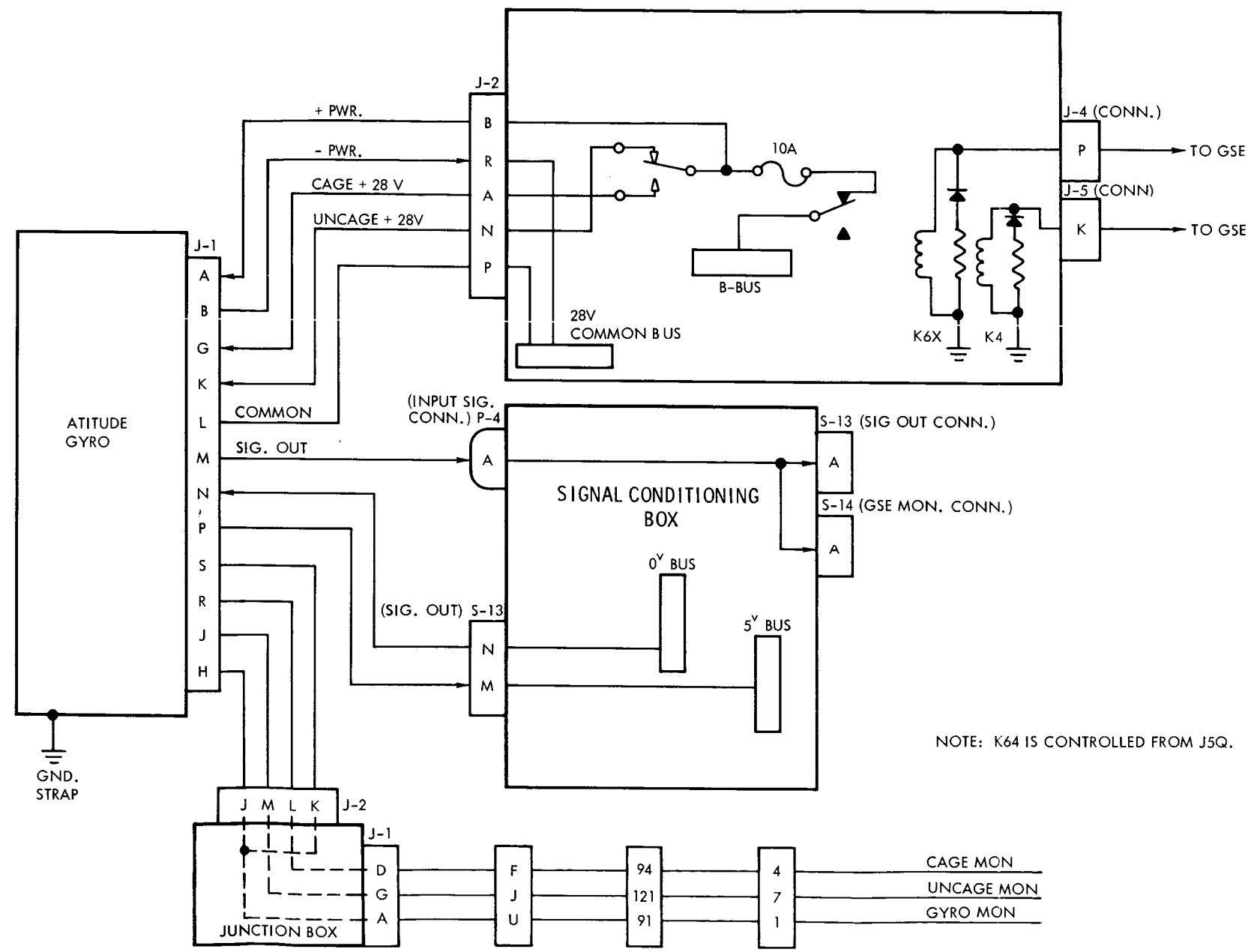

Figure 5. Typical Atitude Gyro Diagram Apollo Boilerplate BP-12

~~CONFIDENTIAL~~

[redacted]

ATTITUDE GYROS: Roll, Pitch, Yaw (Same Pin Assignment on All Three Gyros)

	POWER CONTROL BOX CONN.		
	Roll	Pitch	Yaw
A (+) Power	J2-B	J2-C	J2-E
B (-) Power	J2-R	J2-D	J2-F
G Cage (+28V Command)	J2-A	J2-S	J2-G
K Uncage (+28V Command)	J2-N	J2-T	J2-H
L Common	J2-P	J2-X	J2-U

SIGNAL CONDITIONING BOX PIN ASSIGNMENTS

Roll Attitude Gyro

M P4-A
N S-13-n
P S-13-m
H To Junction Box J2-J
J To Junction Box J2-M
R To Junction Box J2-L
S To Junction Box J2-K

To TM S-13 C
S-14 A

Pitch Attitude Gyro

M P4-C
N S13-q
P S13-p
H To Junction Box J2-A
J To Junction Box J2-D
R To Junction Box J2-C
S To Junction Box J2-B

To TM S-13 B
S-14 B

YAW ATTITUDE GYRO

M P4-E
N S13-s
P S13-r
H To Junction Box J2-E
J To Junction Box J2-N
R To Junction Box J2-G
S To Junction Box J2-F

To TM S-13 C
S-14 C

Figure 6. Pin Assignments for Attitude Gyros
Apollo Boilerplate 12

[redacted]

~~CONFIDENTIAL~~

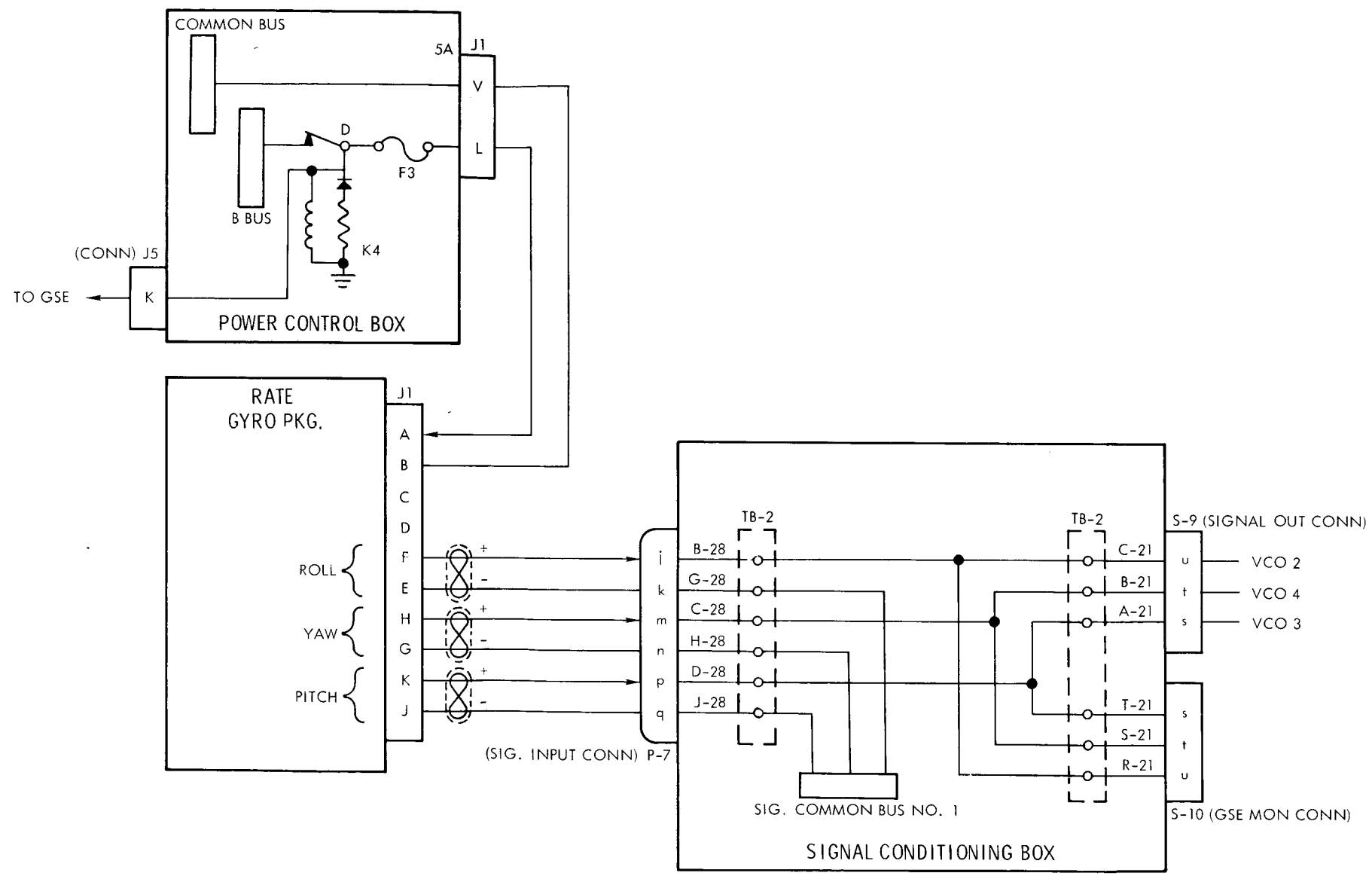

Figure 7. Rate Gyro Diagram Apollo Boilerplate BP-12

~~CONFIDENTIAL~~

[redacted]

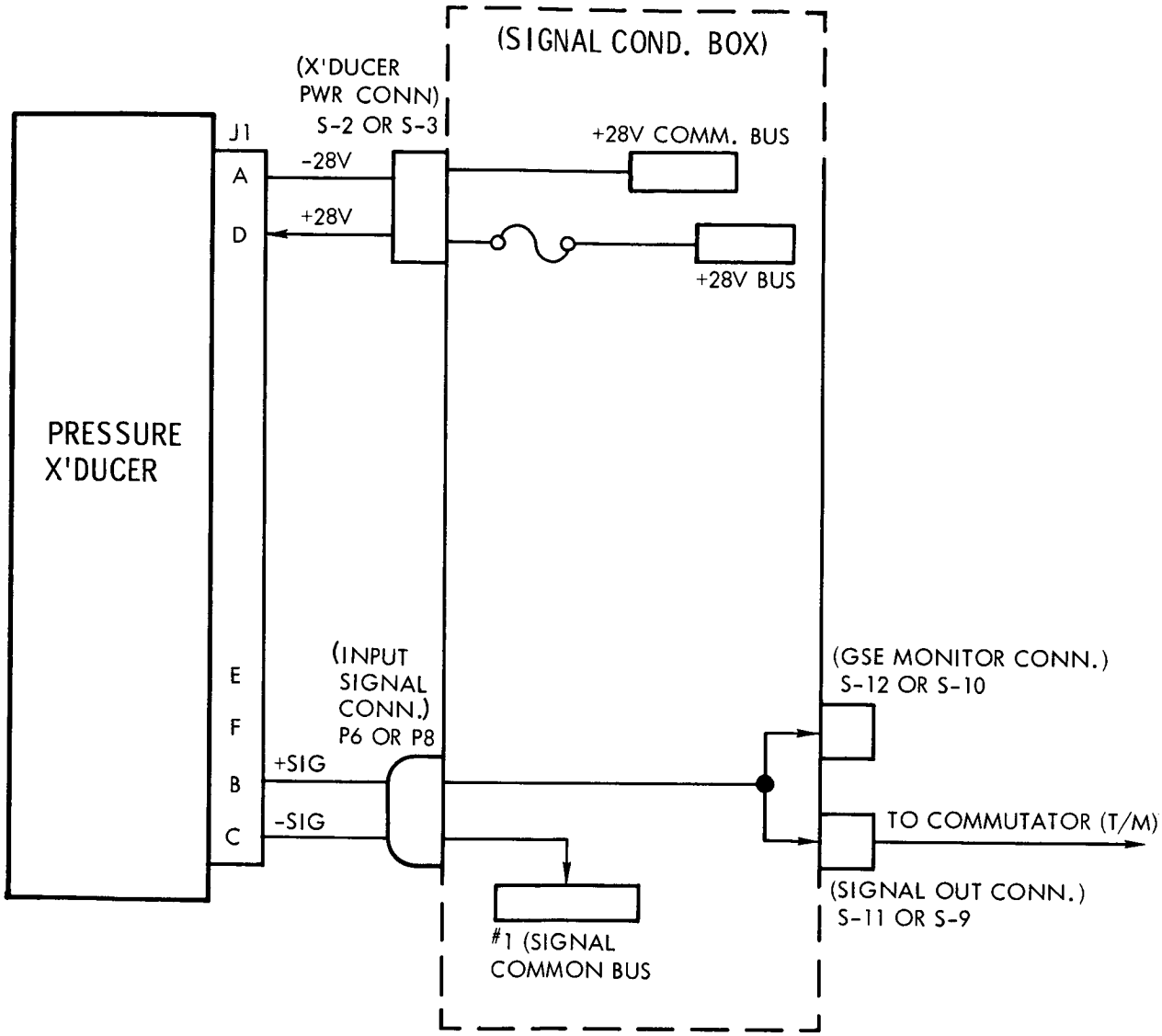

NOTE: FOR INDIVIDUAL PIN DESIGNATIONS SEE

Figure 8. Typical Pressure Transducer Diagram Apollo Boilerplate BP-12

[redacted]

~~CONFIDENTIAL~~

PRESSURE X'DUCER	PINS D&A To S-C Box	PINS B&C To S-C Box	SIGNAL in S-C Box	SIGNAL out S-C Box
1	S2-A, B	P6-A, B	P6-A	S11-LL
2	S2-C, D	P6-C, D	P6-C	S11-KK
3	S2-E, F	P6-E, F	P6-E	S11-JJ
4	S2-G, H	P6-G, H	P6-G	S11-HH
5	S2-J, K	P6-J, K	P6-J	S11-GG
6	S2-L, M	P6-L, M	P6-L	S11-FF
7	S2-N, P	P6-N, P	P6-Nq	S11-EE
88	S2-R, S	P6-R, S	P6-R	S11-DD
9	S2-T, U	P6-T, U	P6-T	S11-CC
10	S2-V, W	P6-V, W	P6-V	S11-BB
11	S2-X, Y	P6-X, Y	P6-X	S11-AA
12	S2-Z, a	P6-Z, a	P6-Z	S11-Z
13	S2-b, c	P6-b, c	P6-b	S11-y
14	S2-d, e	P6-d, e	P6-d	S11-x
15	S2-f, g	P6-f, g	P6-f	S11-w
16	S2-h, i	P6-h, i	P6-h	S11-v
17	S2-j, k	P6-j, k	P6-j	S11-u
18	S2-m, n	P6-m, n	P6-m	S11-t
19	S2-p, q	P6-p, q	P6-p	S11-s
20	S2-r, s	P6-r, s	P6-r	S11-r
21	S2-t, u	P6-t, u	P6-t	S11-q
22	S2-v, w	P6-v, w	P6-v	S11-p
23	S2-x, y	P6-x, y	P6-x	S11-n
24	S2-z, AA	P6-z, AA	P6-z	S11-m
25	S2-BB, CC	P6-BB, CC	P6-BB	S11-k
26	S2-DD, EE	P6-DD, EE	P6-DD	S11-j
27	S2-FF, GG	P6-FF, GG	P6-FF	S11-i
28	S2-HH, JJ	P6-HH, JJ	P6-HH	S11-h
29	S2-KK, LL	P6-DD, LL	P6-KK	S11-g
30	S3-A, B	P8-h, i	P8-h	S9-S
31	S3-C, D	P8-j, k	P8-j	S9-T
32	S3-E, F	P8-m, n	P8-m	S9-U
33	S3-G, H	P8-p, q	P8-p	S9-v
34	S3-J, K	P8-r, s	P8-r	S9-W
35	S3-L, M	P8-t, u	P8-t	S9-X
36	S3-N, P	P8-v, w	P8-v	S9-Y
37	S3-R, S	P8-x, y	P8-x	S9-Z
38	S3-T, U	P8-z, AA	P8-Z	S9-a
39	S3-V, W	P8-BB, CC	P8-BB	S9-b
40	S3-X, Y	P8-DD, EE	P8-DD	S9-c
Interior Temp.	S3-z, AA	P8-f, g	P8-f	S9-R

Figure 9. Pin Assignments for Pressure Transducer
Apollo Boilerplate No. 12

~~CONFIDENTIAL~~

~~CONFIDENTIAL~~

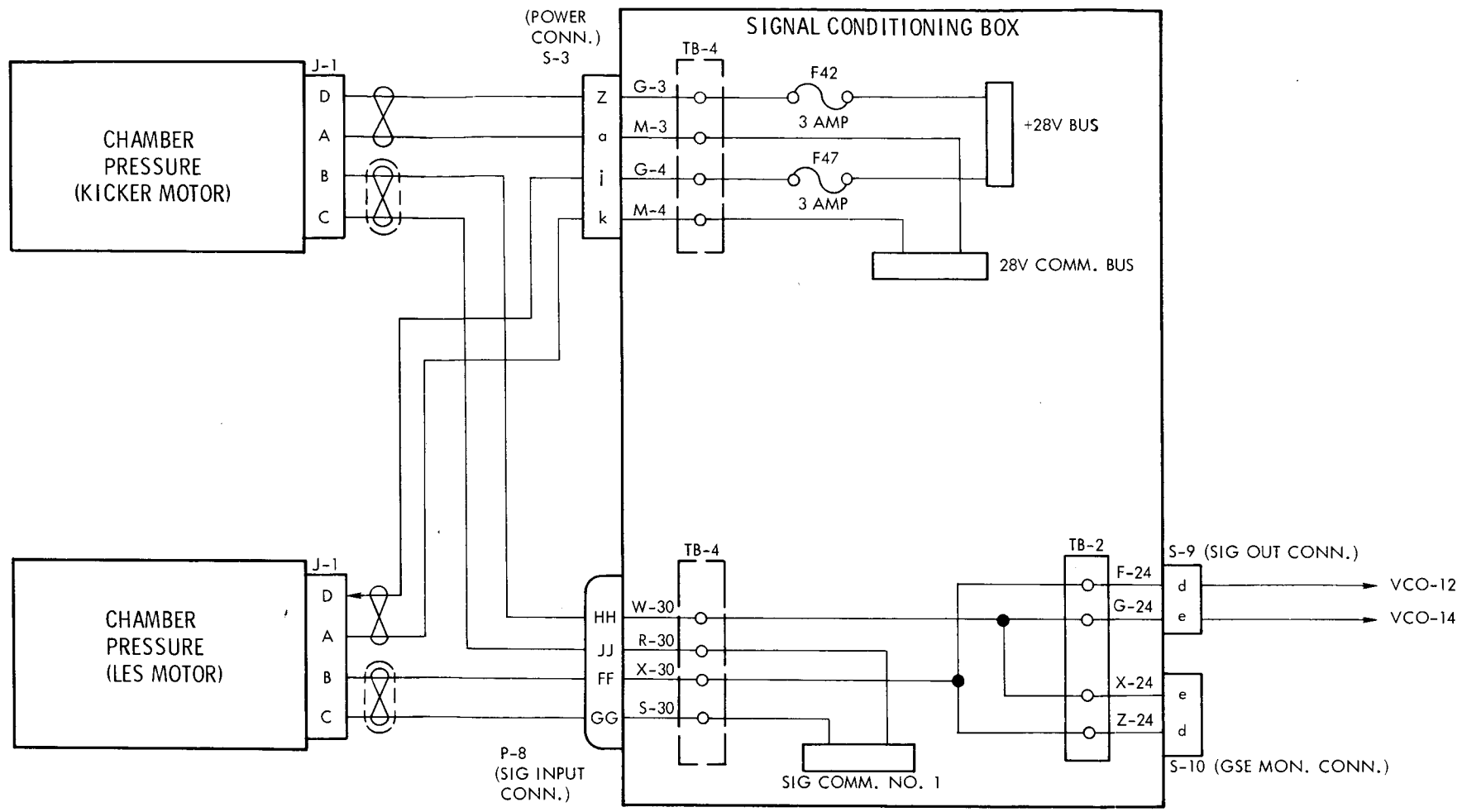

Figure 10. Chamber Pressure Transducer Diagram BP-12

~~CONFIDENTIAL~~

~~CONFIDENTIAL~~

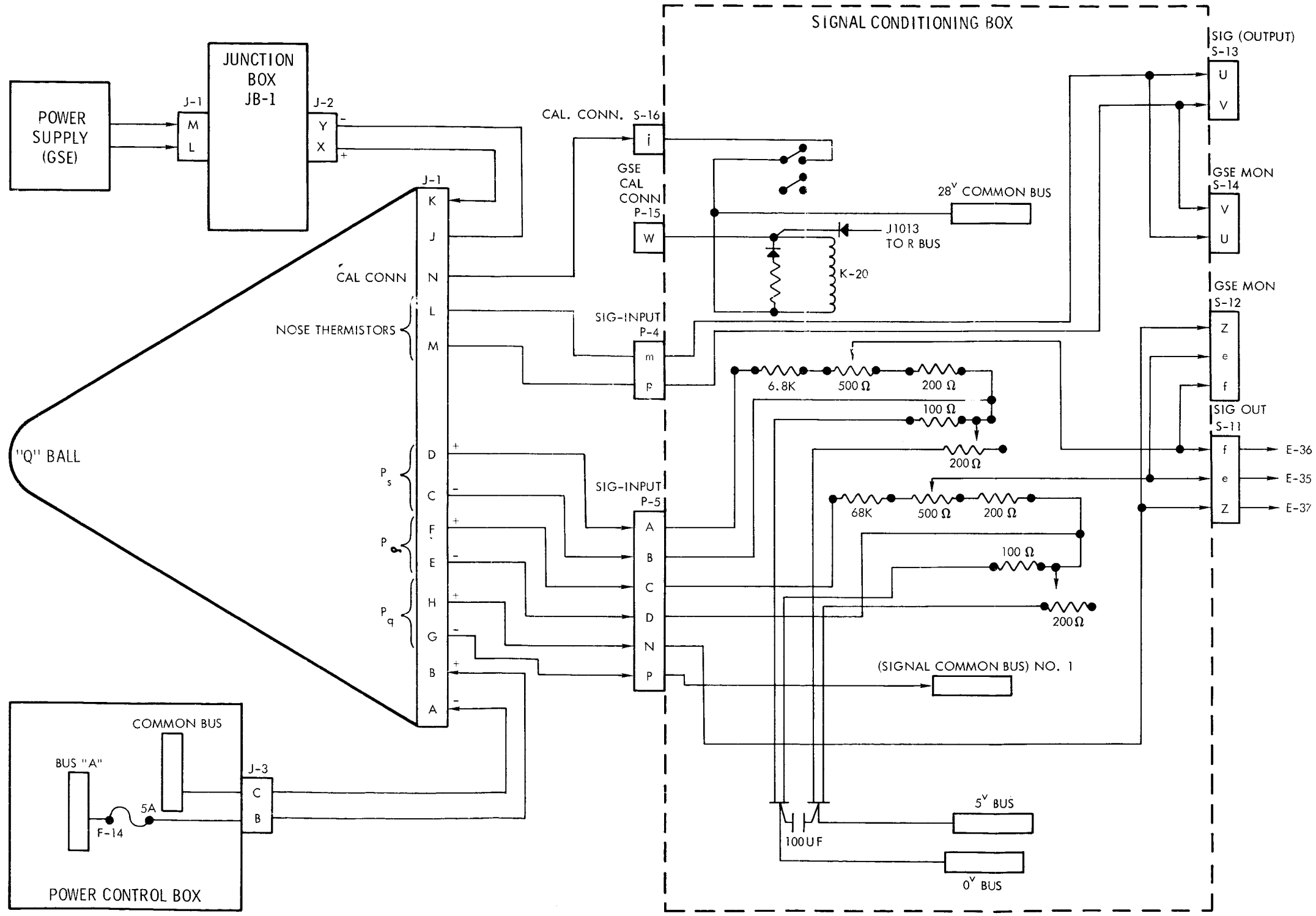

Figure 11. Q-Ball Diagram Apollo Boilerplate BP-12

~~CONFIDENTIAL~~

SID 62-1001 Tab B

~~CONFIDENTIAL~~

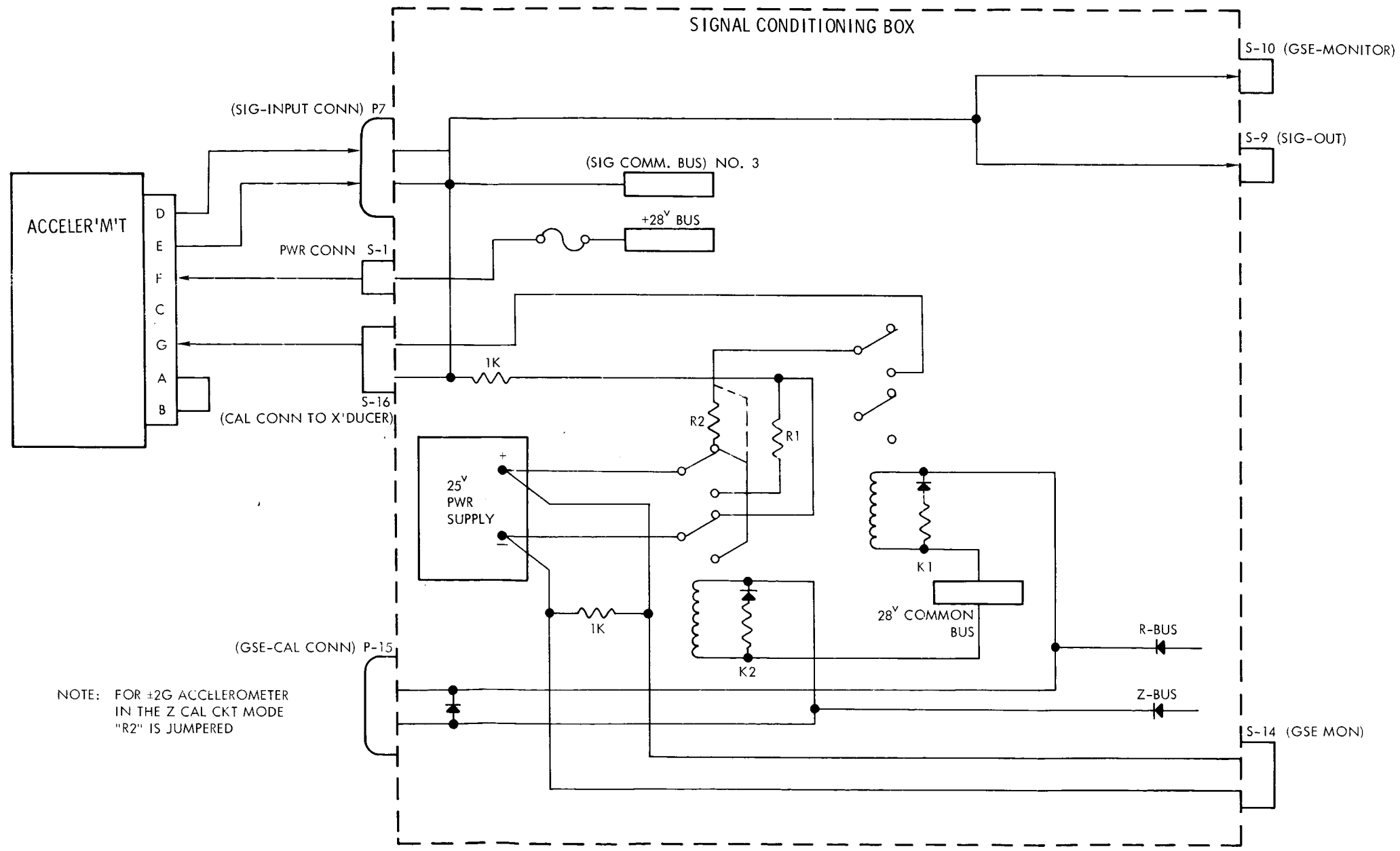

NOTE: FOR ±2G ACCELEROMETER IN THE Z CAL CKT MODE "R2" IS JUMPERED

Figure 12. Accelerometer (Typical) Diagram Apollo Boilerplate BP-12

~~CONFIDENTIAL~~

~~CONFIDENTIAL~~

SYSTEM DONNER	SIGNAL CONDITIONER CONNECTOR ASSIGNMENT			
#1				
D	P7-A	S-9	LL	VCO No. 8
E	P7-B	S-10	LL	
F	S1-A	P-15	x	
G	S16-n	P-15	y	
C		S-14	w	
A		S-14	v	
B				
#2				
D	P7-E	S-9	JJ	VCO No. 6
E	P7-F	S-10	JJ	
F	S1-E	P-15	BB	
G	S16-s	P-15	CC	
C		S-14	z	
A		S-14	AA	
B				
#3				
D	P7-J	S-9	GG	VCO No. 5
E	P7-K	S-10	GG	
F	S1-J	P-15	FF	
G	S16-w	P-15	GG	
C		S-14	t	
A		S-14	u	
B				
#4				
D	P7-L	S-9	FF	VCO No. 11
E	P7-M	S-10	FF	
F	S1-L	S-15	HH'	
G	S16-y	P-15	JJ	
C		S-14	r	
A		S-14	s	
B				
#5				
D	P7-G	S-9	HH	VCO No. 9
E	P7-H	S-10	HH	
F	S1-G	P-15	DD	
G	S16-u	P-15	EE	
C		P-14	x	
A		S-14	y	
B				

Figure 13. Pin Assignments for Accelerometer Apollo Boilerplate BP-12 (Sheet 1 of 2)

~~CONFIDENTIAL~~

[redacted]

SYSTEM DONNER	SIGNAL CONDITIONER CONNECTOR ASSIGNMENT			
#6				
D	P7-C	S-9	KK	VCO No. 10
E	P7-D	S-10	KK	
F	S1-C	P-15	z	
G	S16-q	P-15	AA	
C		S-14	CC	
A		S-14	BB	
B				

Figure 13. Pin Assignments for Accelerometer
Apollo Boilerplate BP-12 (Sheet 2 of 2)

~~CONFIDENTIAL~~

[redacted]

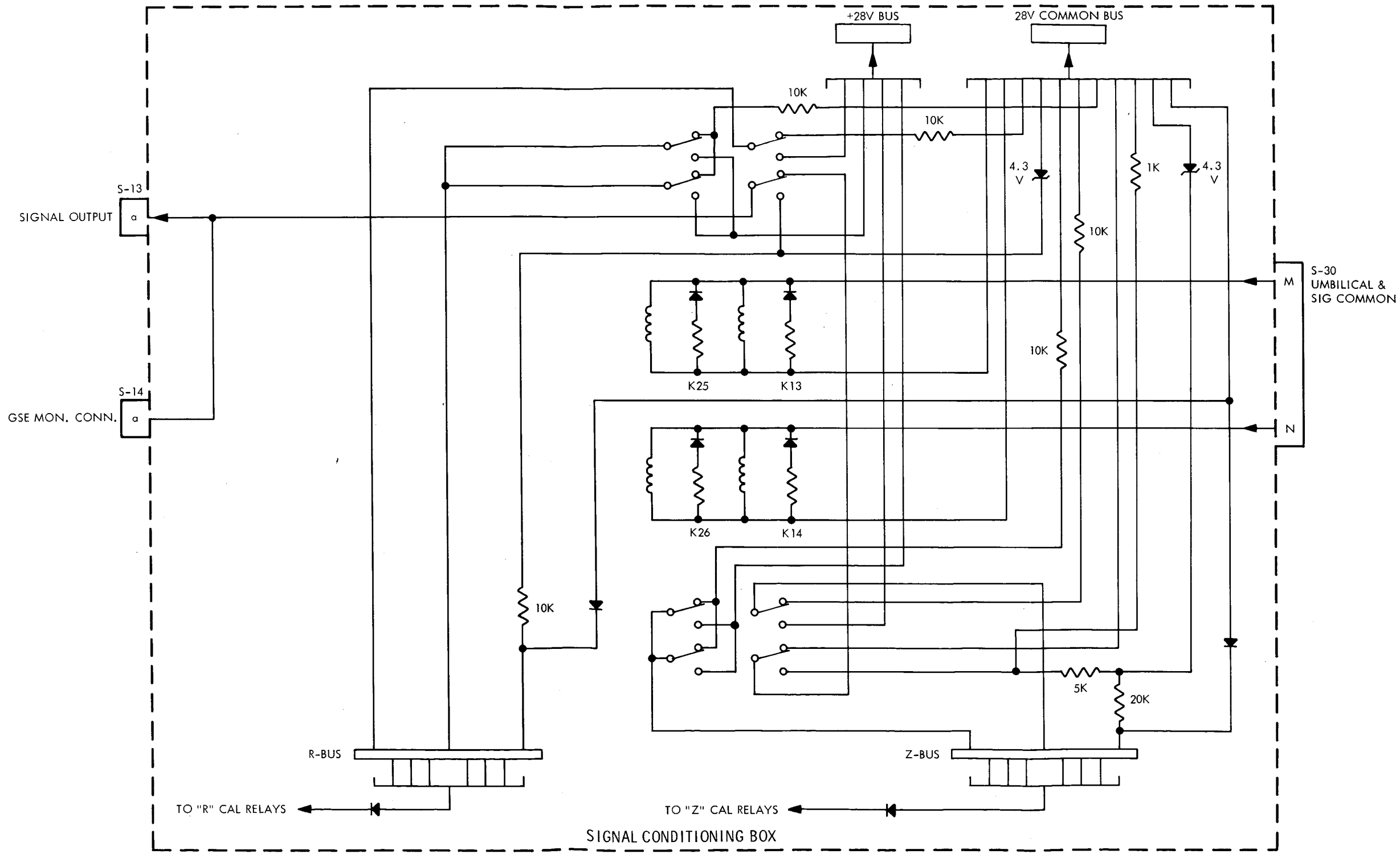

Figure 14. R & Z Bus Control Diagram

[redacted]

~~CONFIDENTIAL~~

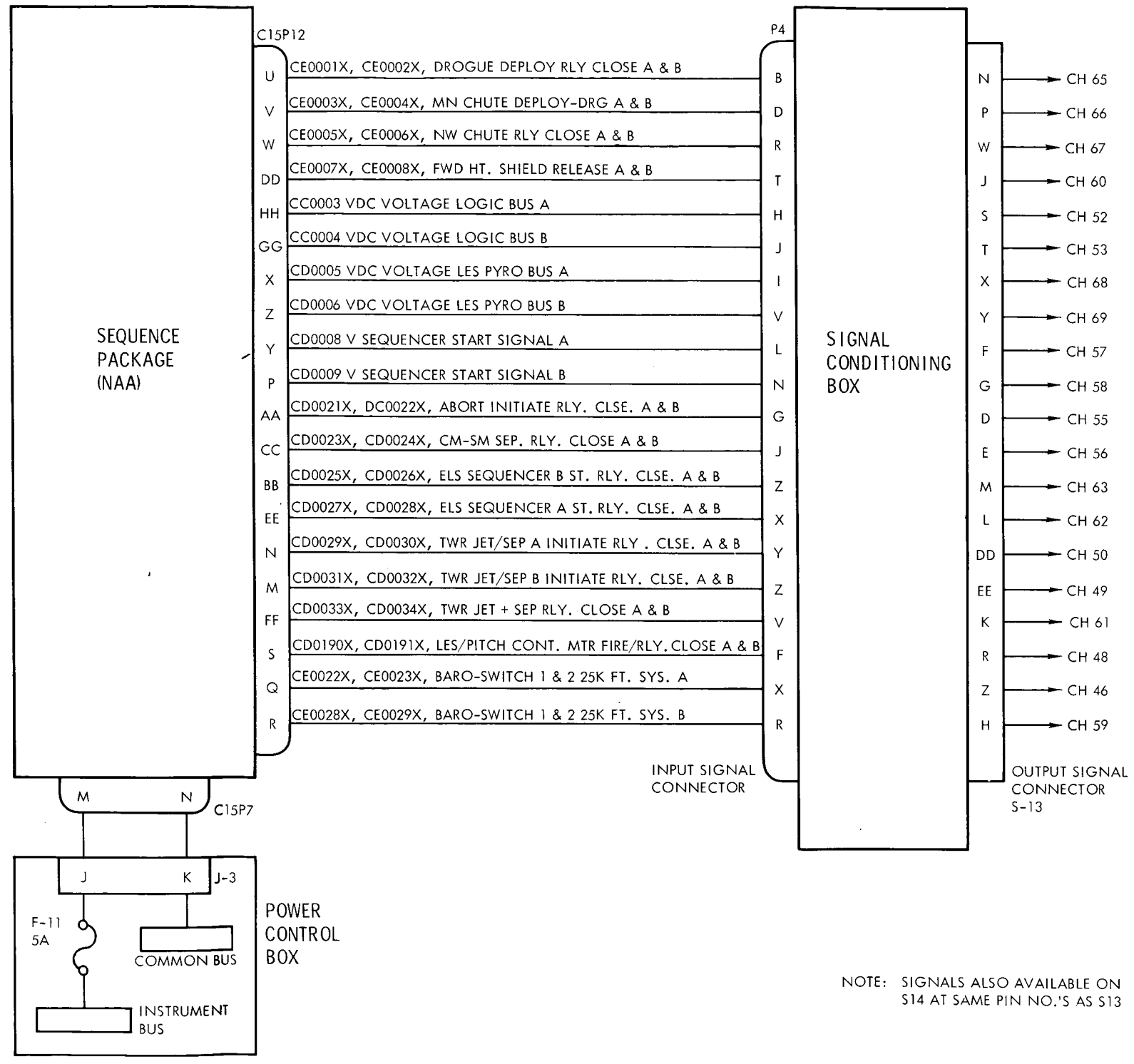

NOTE: SIGNALS ALSO AVAILABLE ON S14 AT SAME PIN NO.'S AS S13

Figure 15. NAA Sequencer Loading Diagram Apollo Boilerplate BP-12

~~CONFIDENTIAL~~

~~CONFIDENTIAL~~

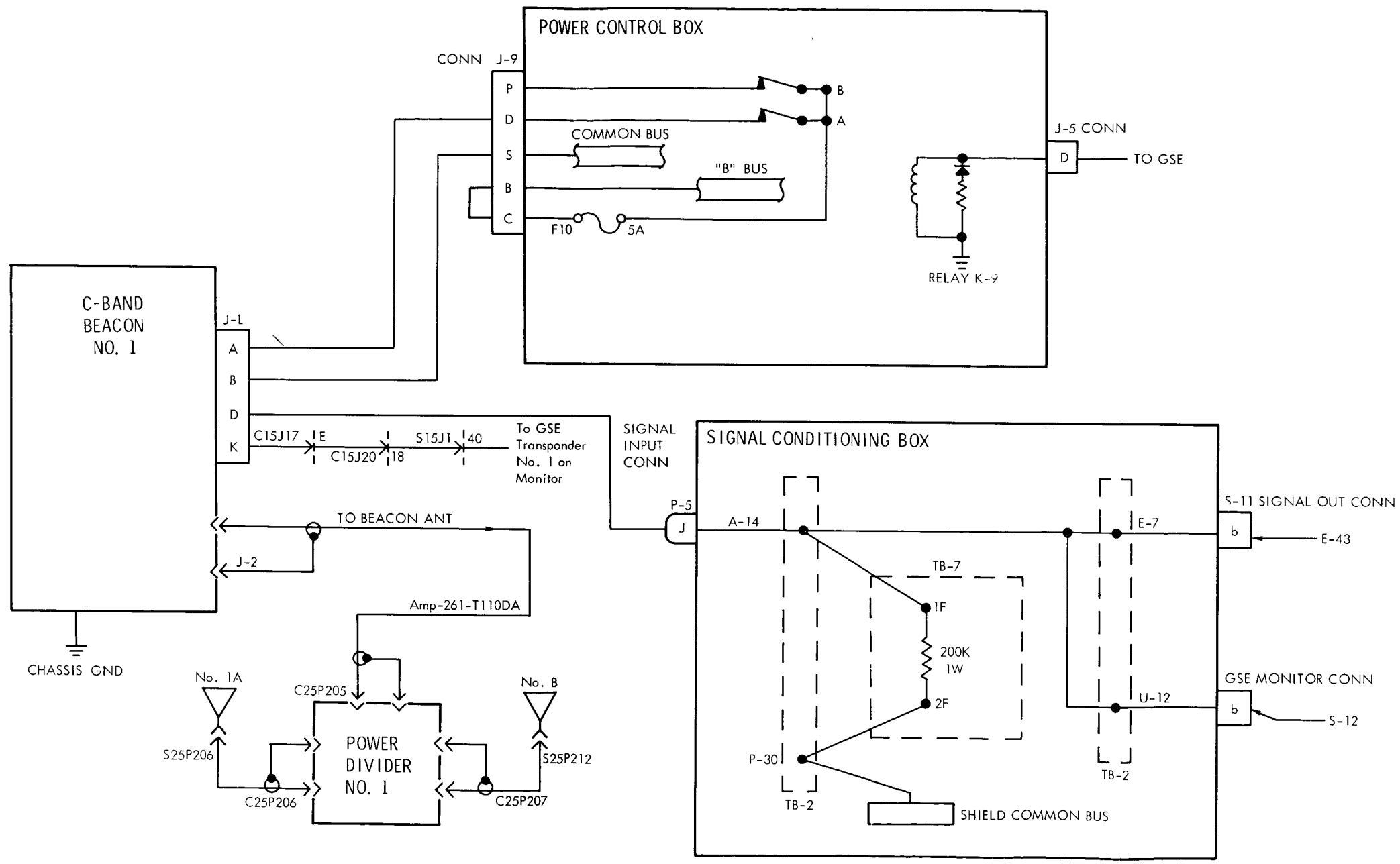

Figure 16. C-Band Beacon No. 1 Diagram Apollo Boilerplate BP-12

~~CONFIDENTIAL~~

~~CONFIDENTIAL~~

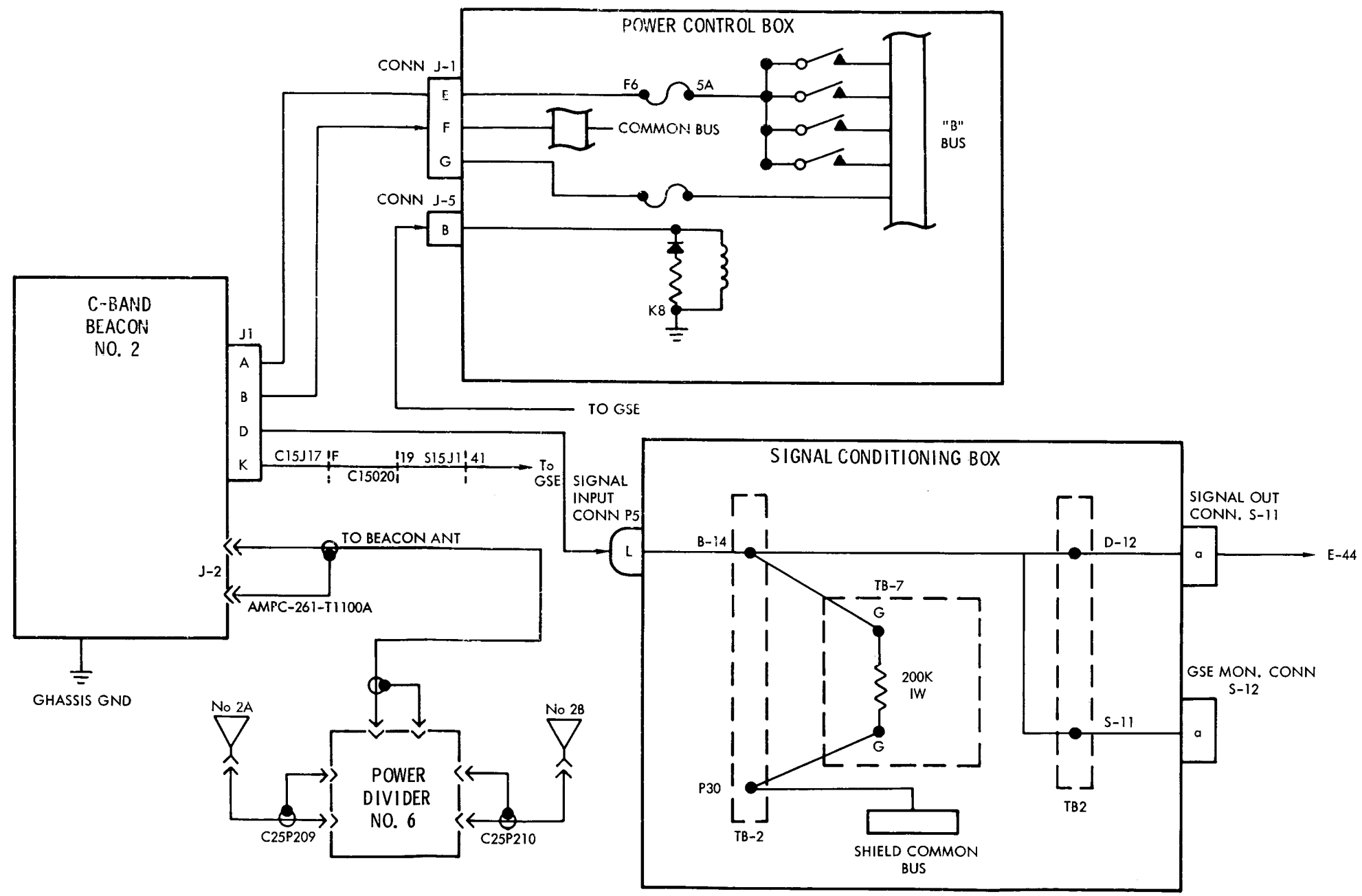

Figure 17. C-Band Beacon No. 2 Diagram Apollo Boilerplate BP-12

~~CONFIDENTIAL~~

[redacted]

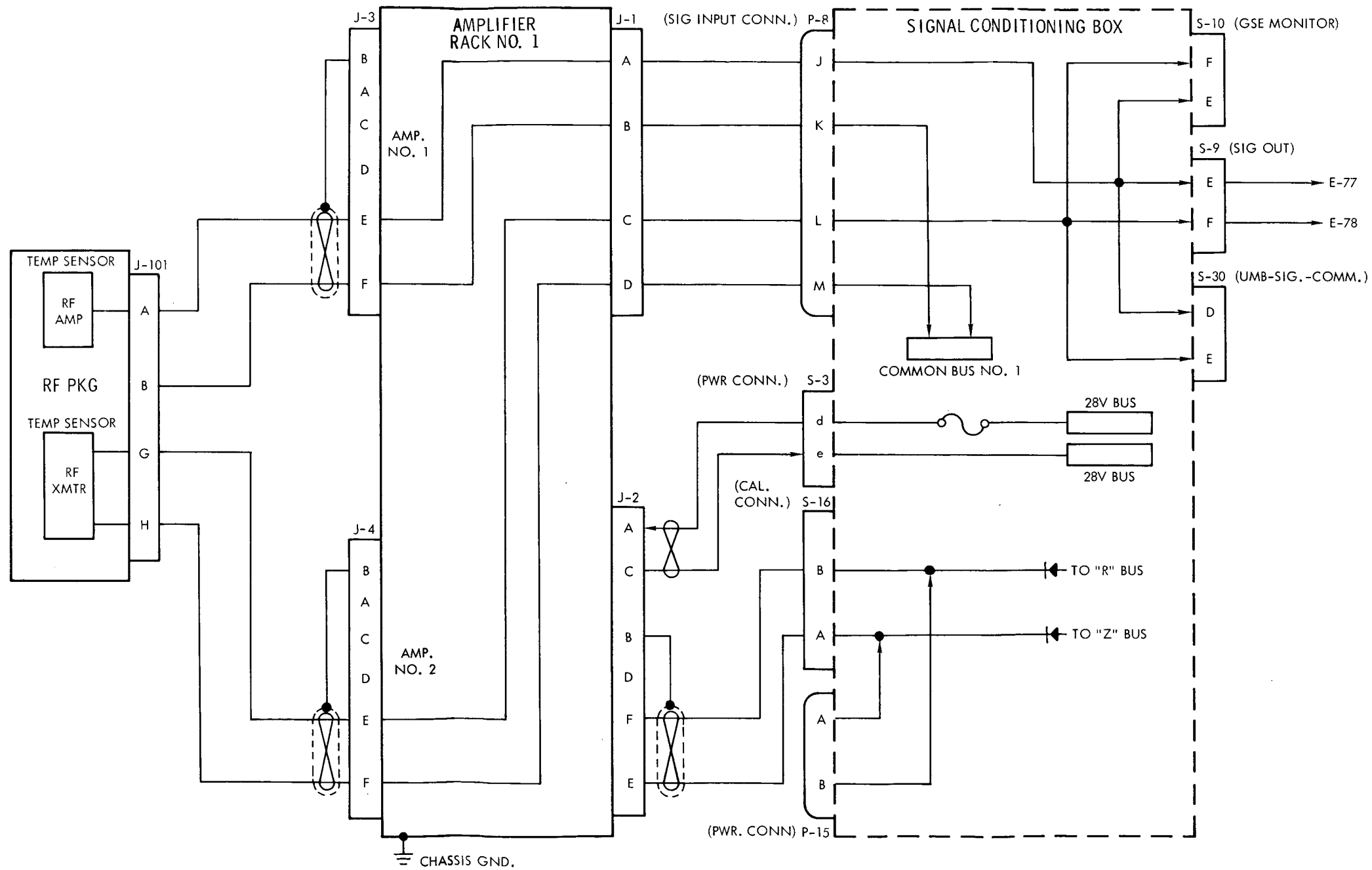

Figure 18. Temperature System Diagram Apollo Boilerplate BP-12 (Sheet 1 of 2)

[redacted]

~~CONFIDENTIAL~~

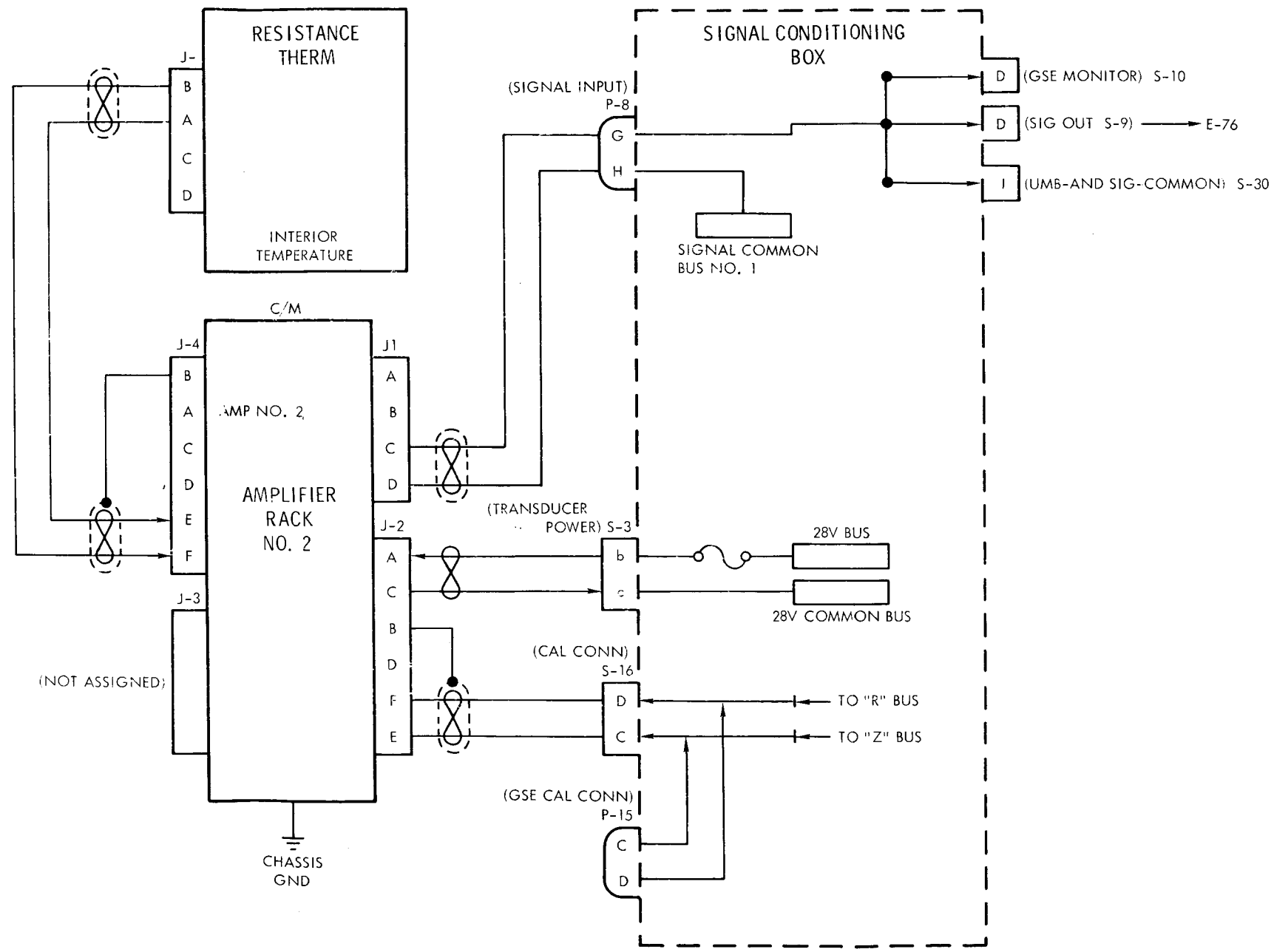

Figure 18. Temperature System Diagram Apollo Boilerplate BP-12 (Sheet 2 of 2)

~~CONFIDENTIAL~~

~~CONFIDENTIAL~~

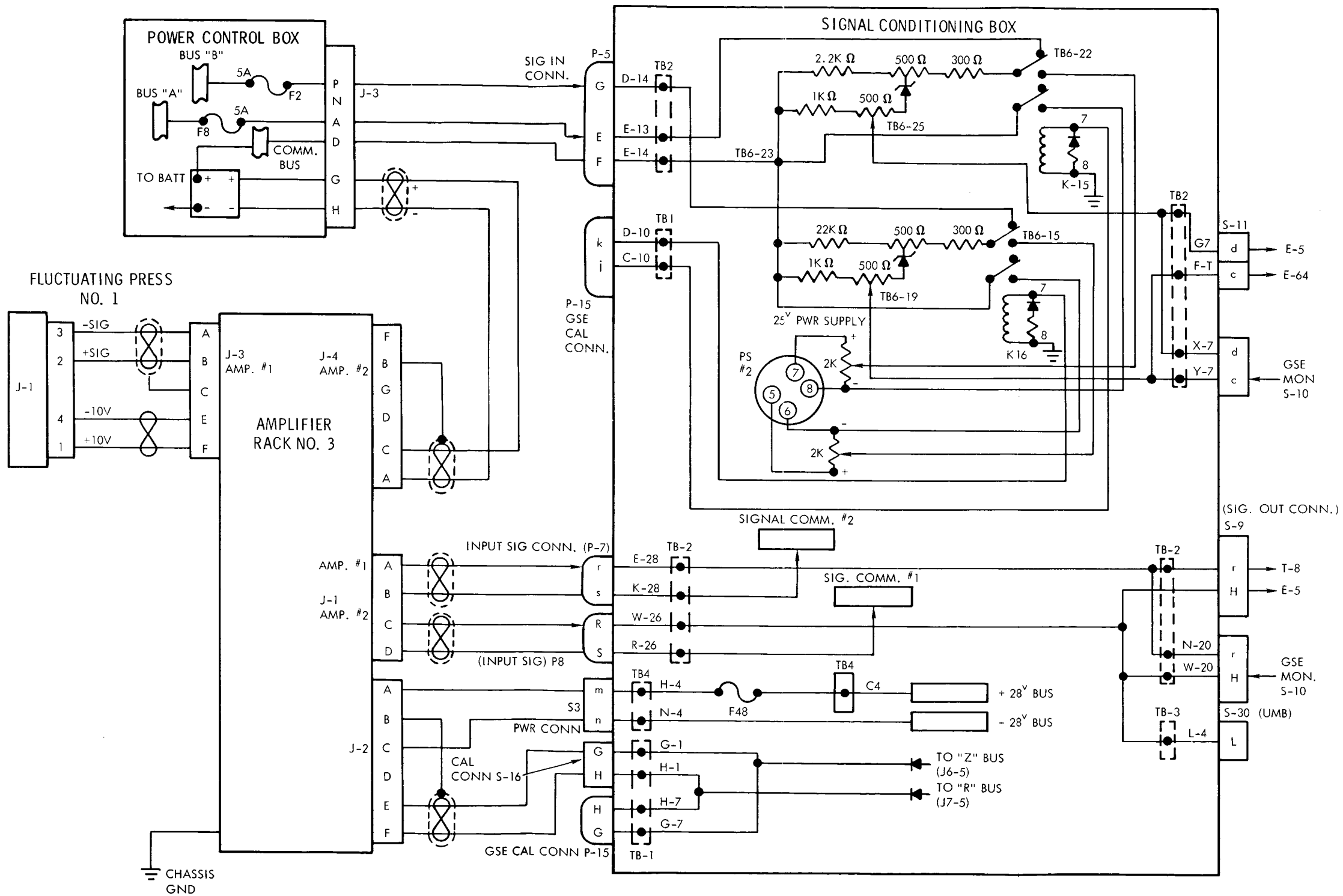

Figure 19. Bus A, Bus B and Current Monitor Diagram Apollo Boilerplate BP-12

~~CONFIDENTIAL~~

~~CONFIDENTIAL~~

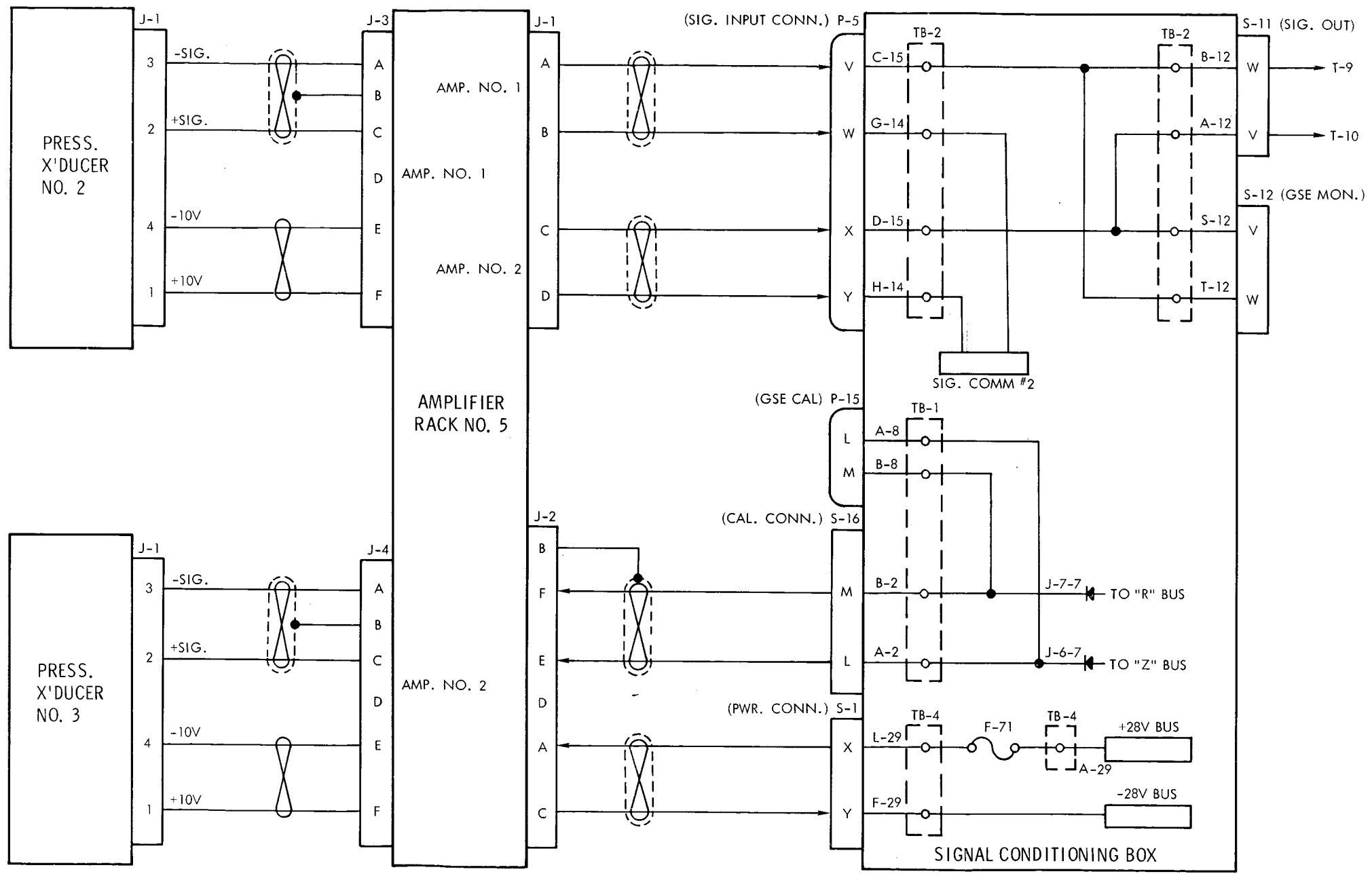

Figure 20. Pressure Transducer Diagram Apollo Boilerplate BP-12
(Sheet 1 of 6)

~~CONFIDENTIAL~~

[redacted]

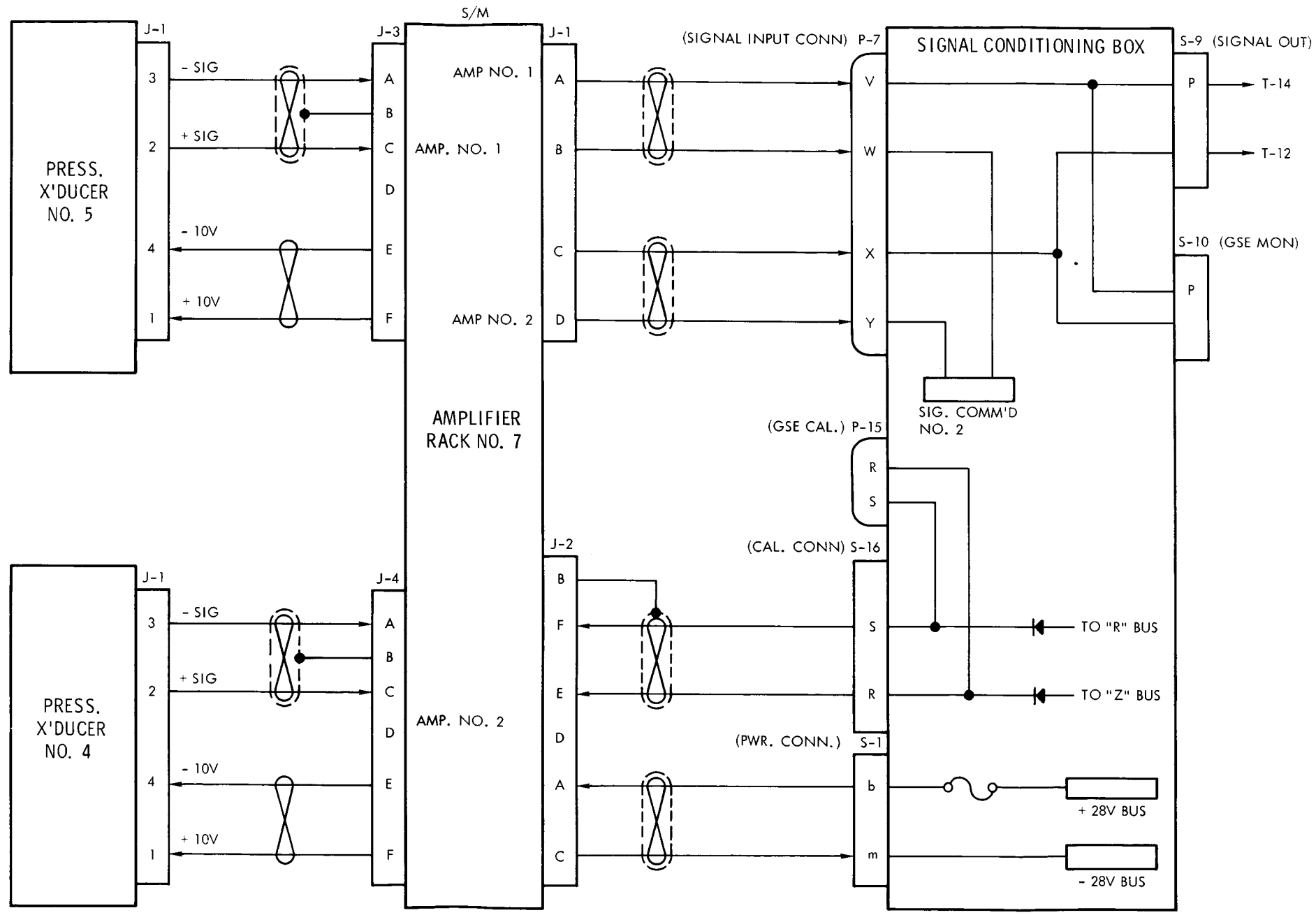

Figure 20. Pressure Transducer Diagram Apollo Boilerplate BP-12
(Sheet 2 of 6)

[redacted]

~~CONFIDENTIAL~~

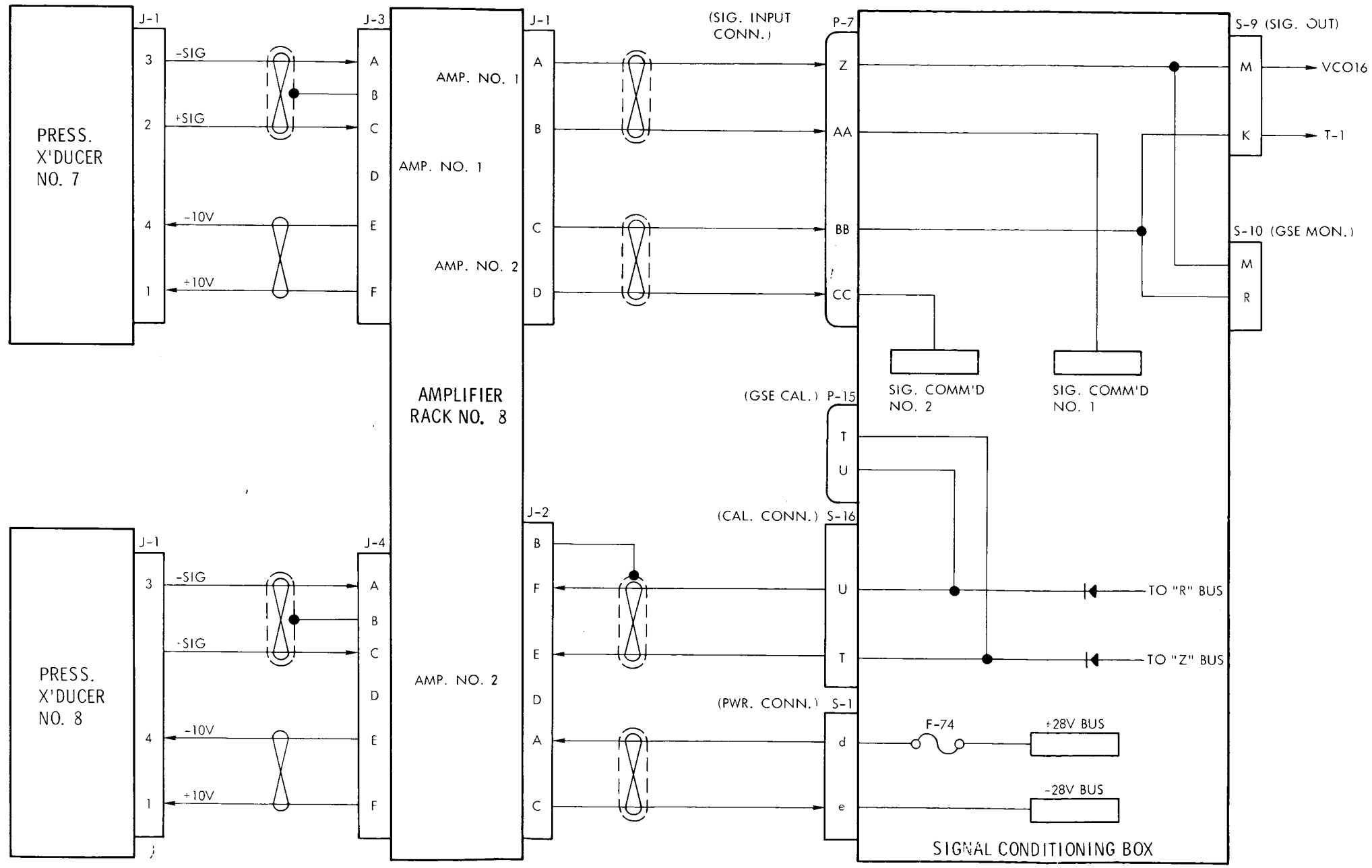

Figure 20. Pressure Transducer Diagram Apollo Boilerplate BP-12
(Sheet 3 of 6)

~~CONFIDENTIAL~~

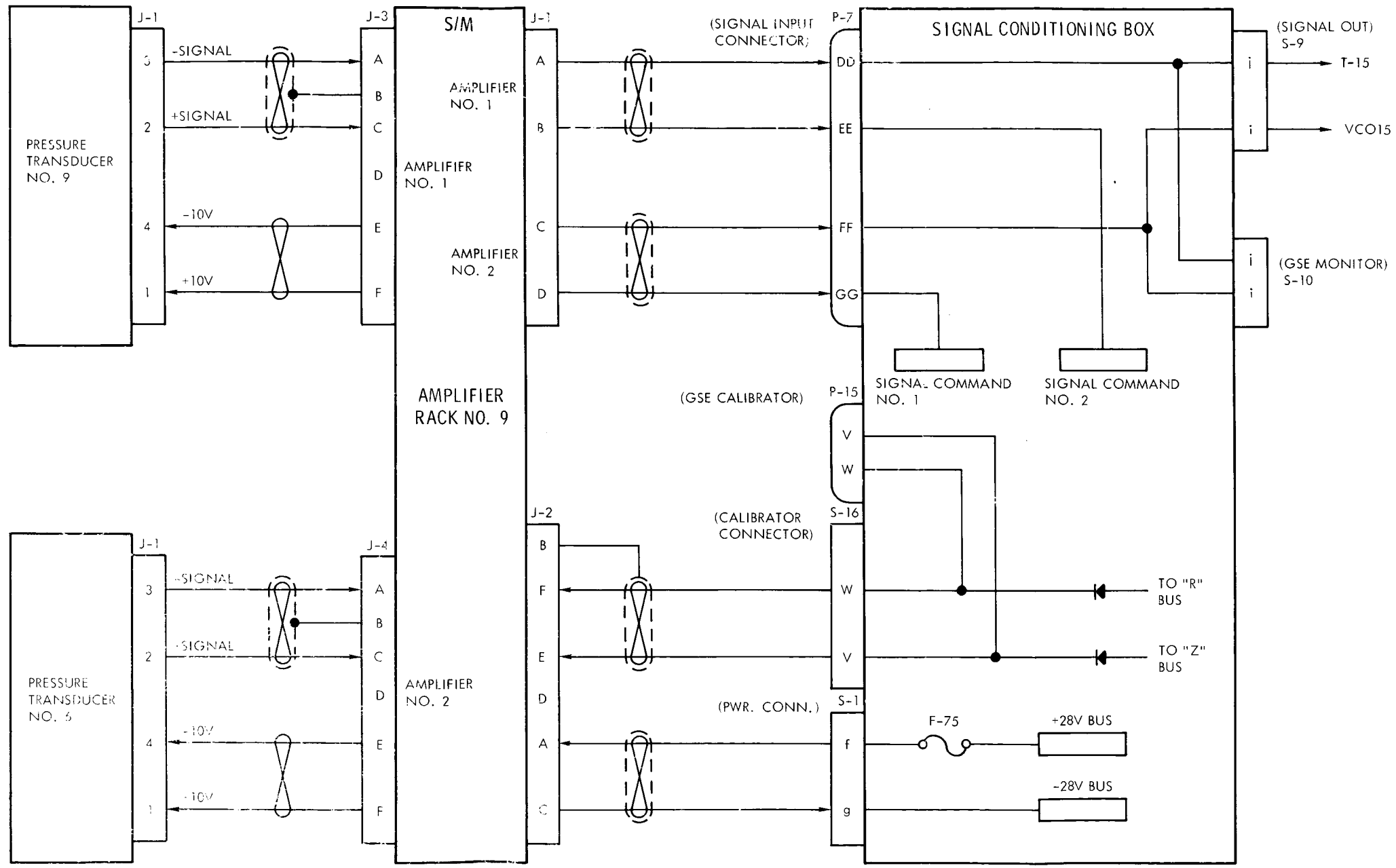

Figure 20. Pressure Transducer Diagram Apollo Boilerplate BP-12
(Sheet 4 of 6)

~~CONFIDENTIAL~~

~~CONFIDENTIAL~~

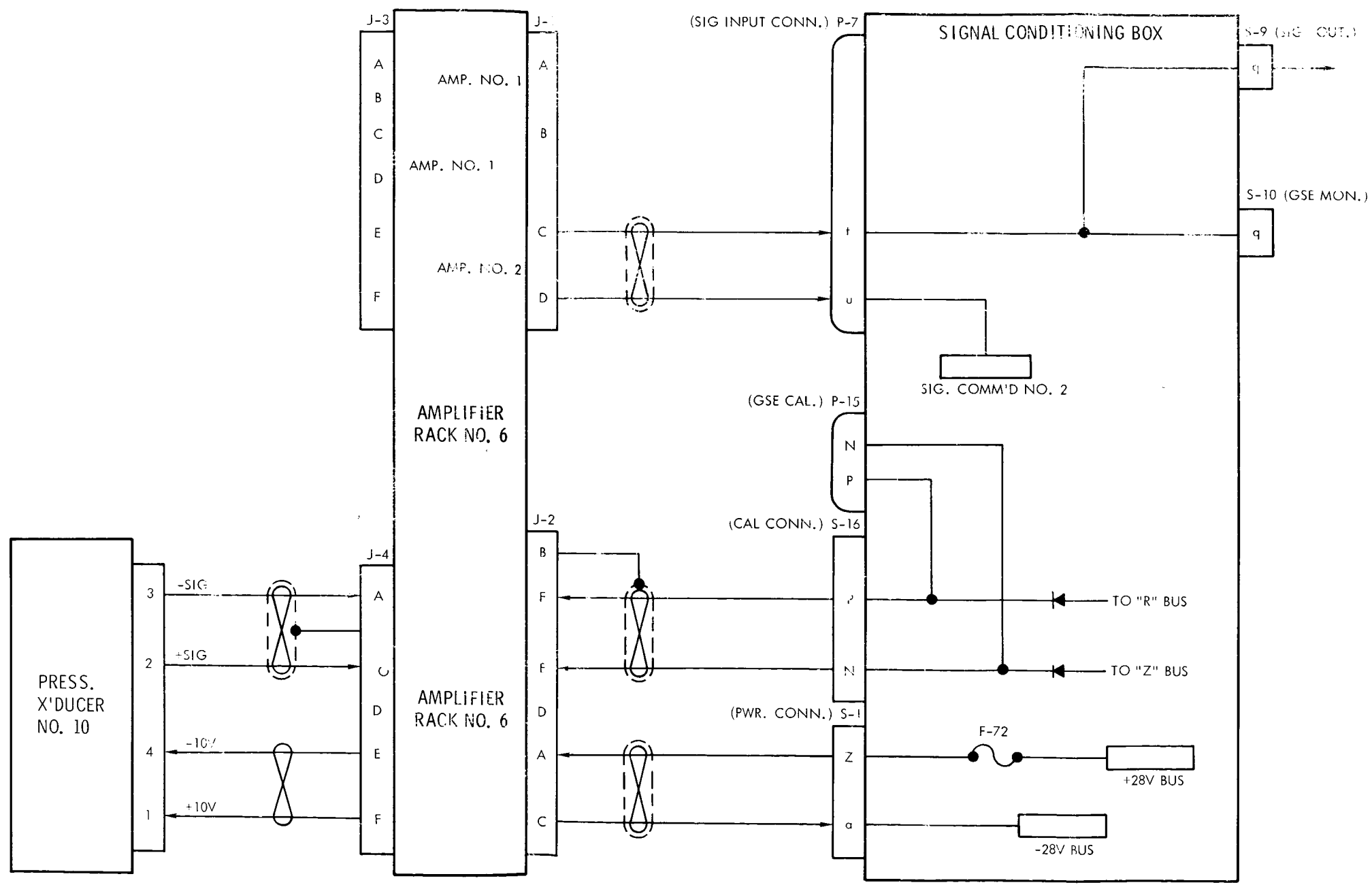

Figure 20. Pressure Transducer Diagram Apollo Boilerplate BP-12
(Sheet 5 of 6)

~~CONFIDENTIAL~~

[redacted]

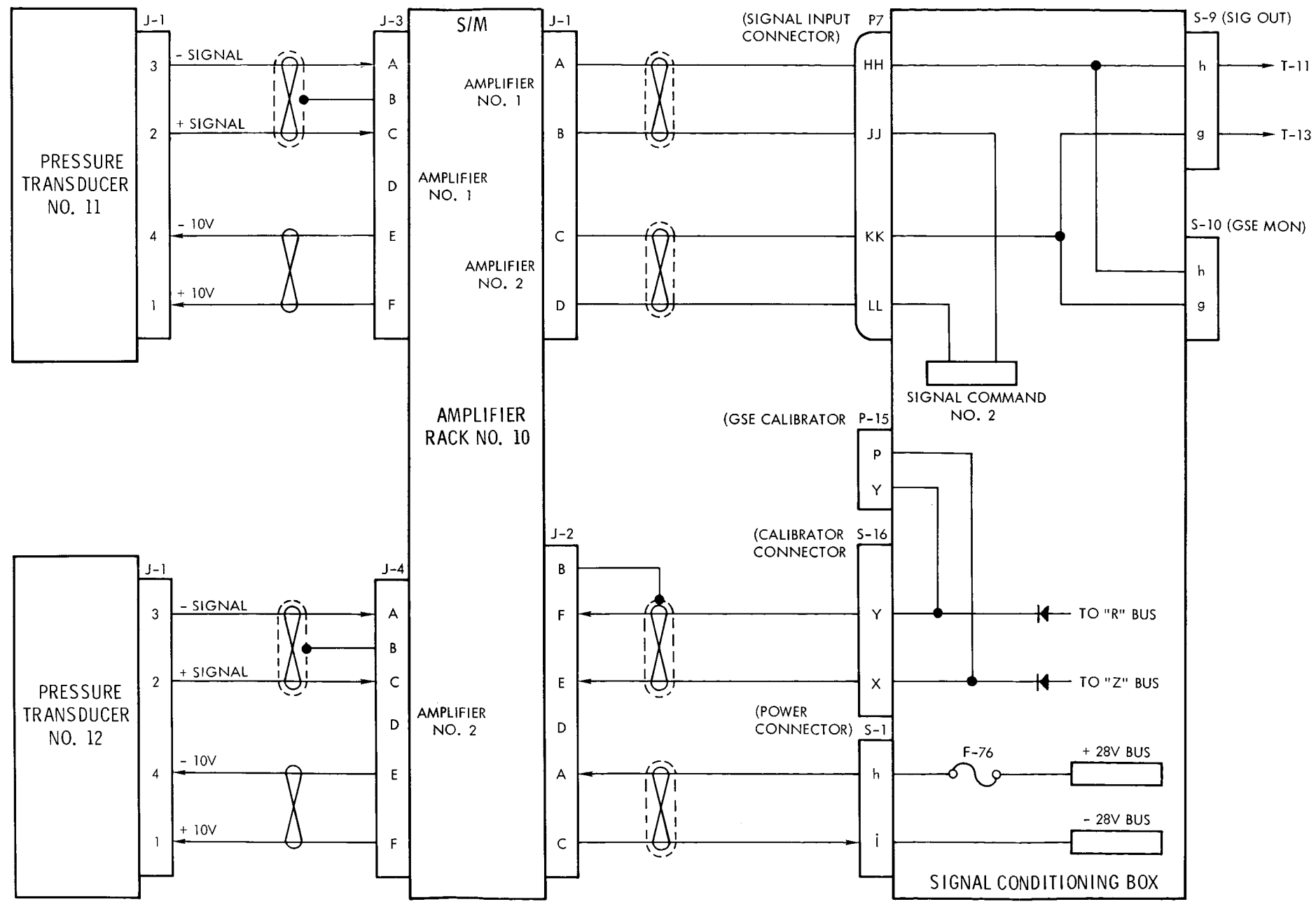

Figure 2a Pressure Transducer Diagram Apollo Boilerplate BP-12
(Sheet 6 of 6)

[redacted]

SID 62-1001 Tab B

CO[redacted]

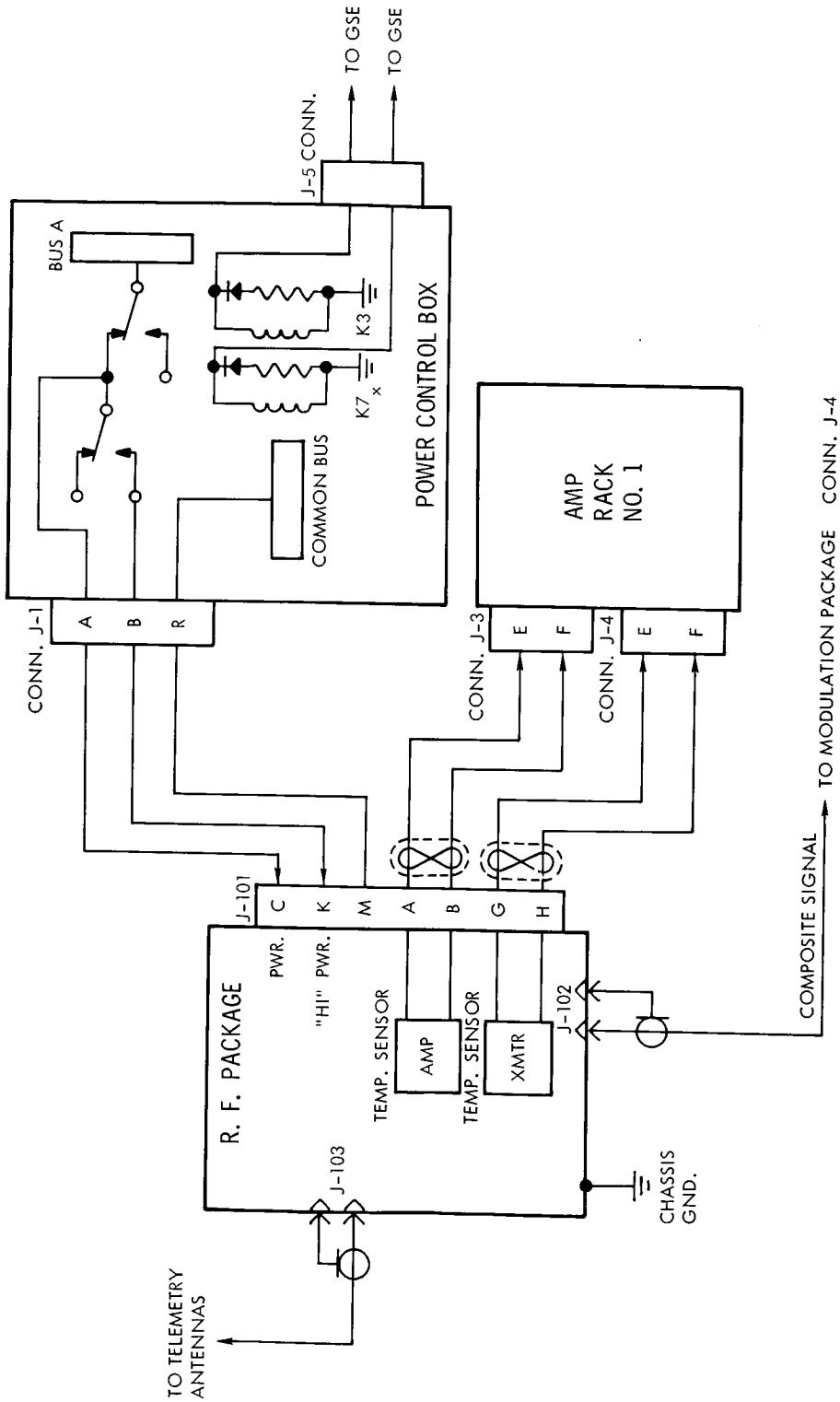

Figure 21. R. F. Package Diagram Apollo Boilerplate BP-12

[redacted]

SID 62-1001 Tab B

C[redacted]

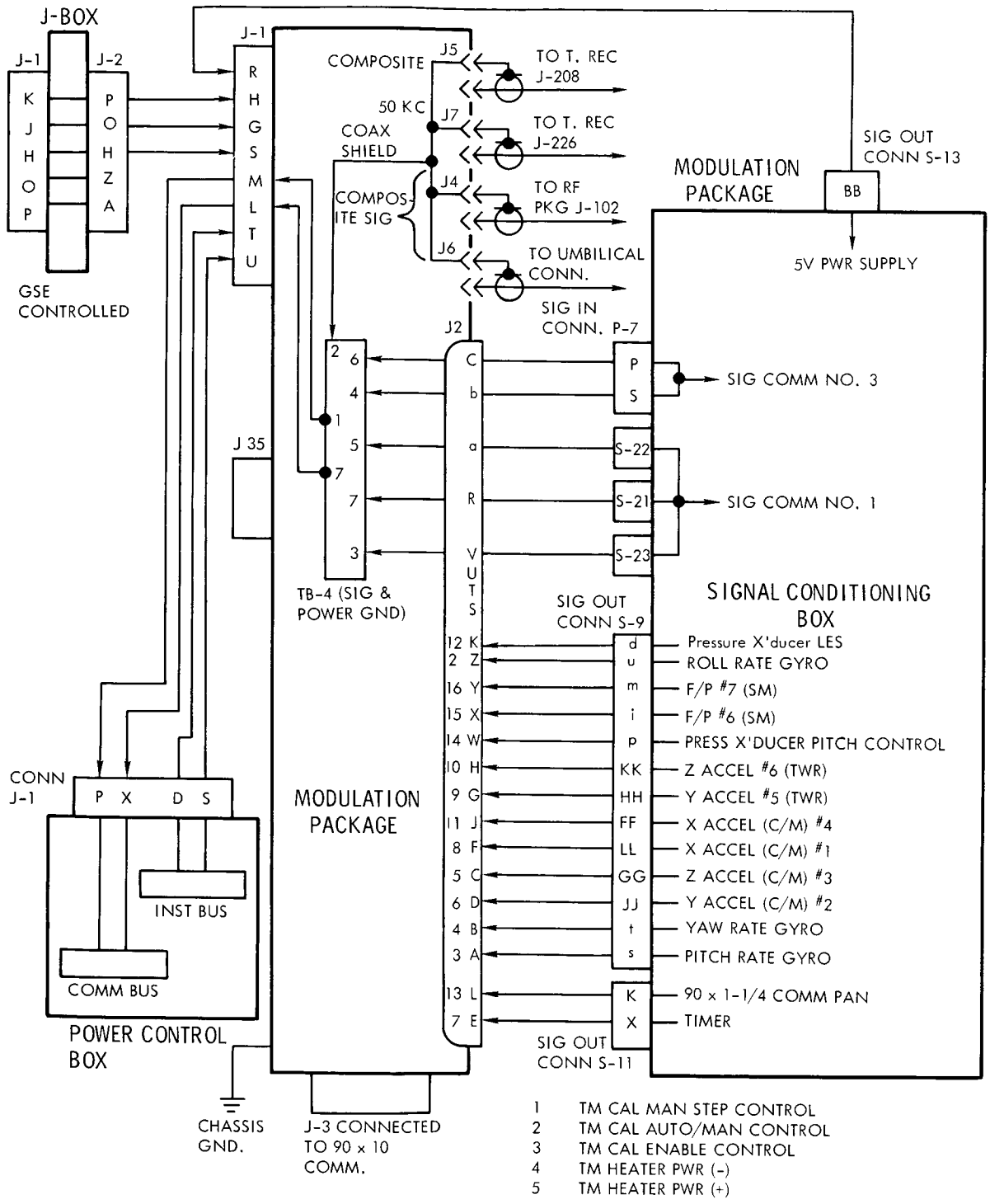

Figure 22. Modulation Package Diagram Apollo Boilerplate BP-12

[redacted]

SID 62-1001 Tab B

~~CONFIDENTIAL~~

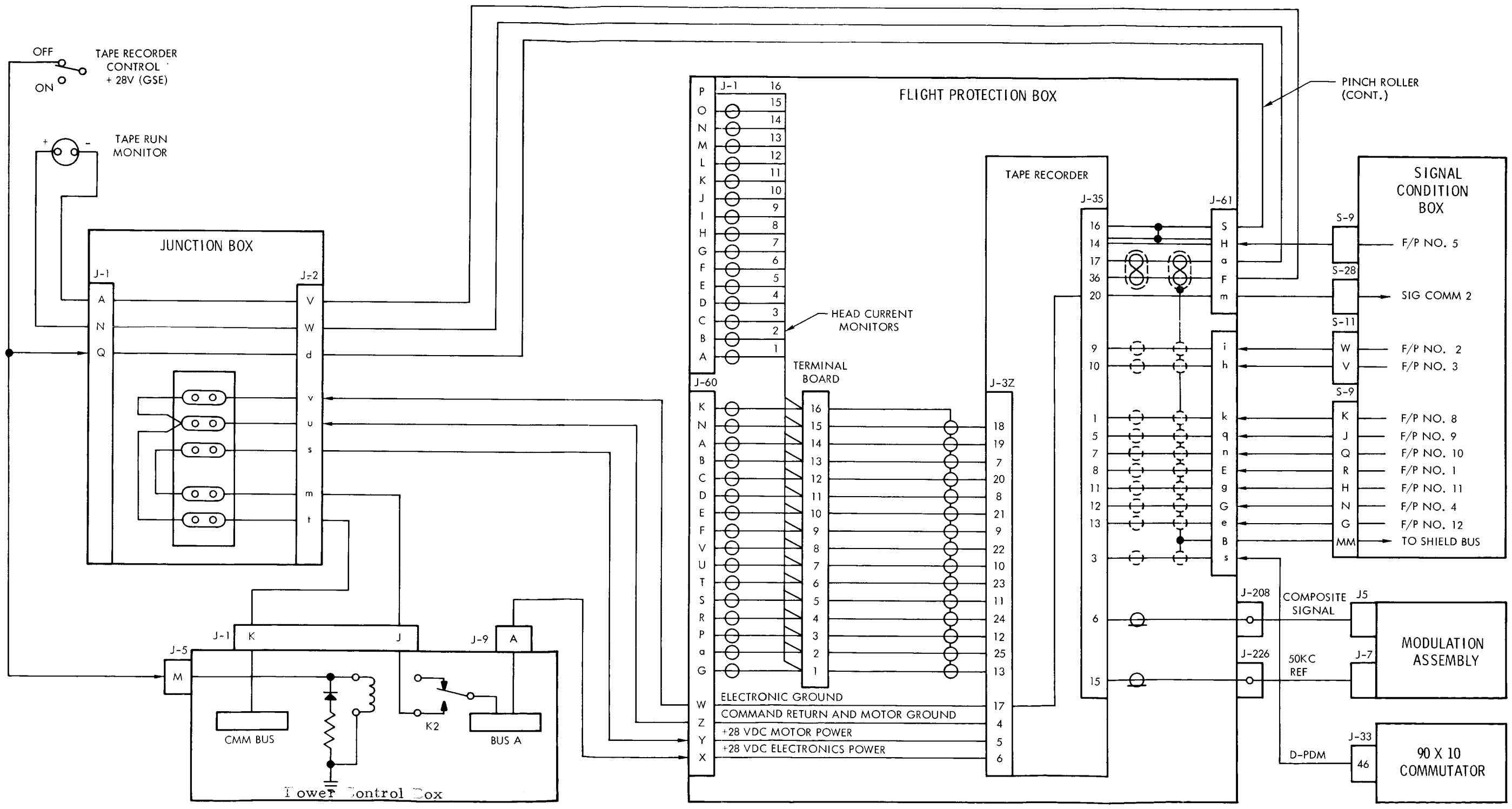

Figure 23. Tape Recorder Diagram Apollo Boilerplate BP-12

~~CONFIDENTIAL~~

SID 62-1001 Vol B

CO[redacted]

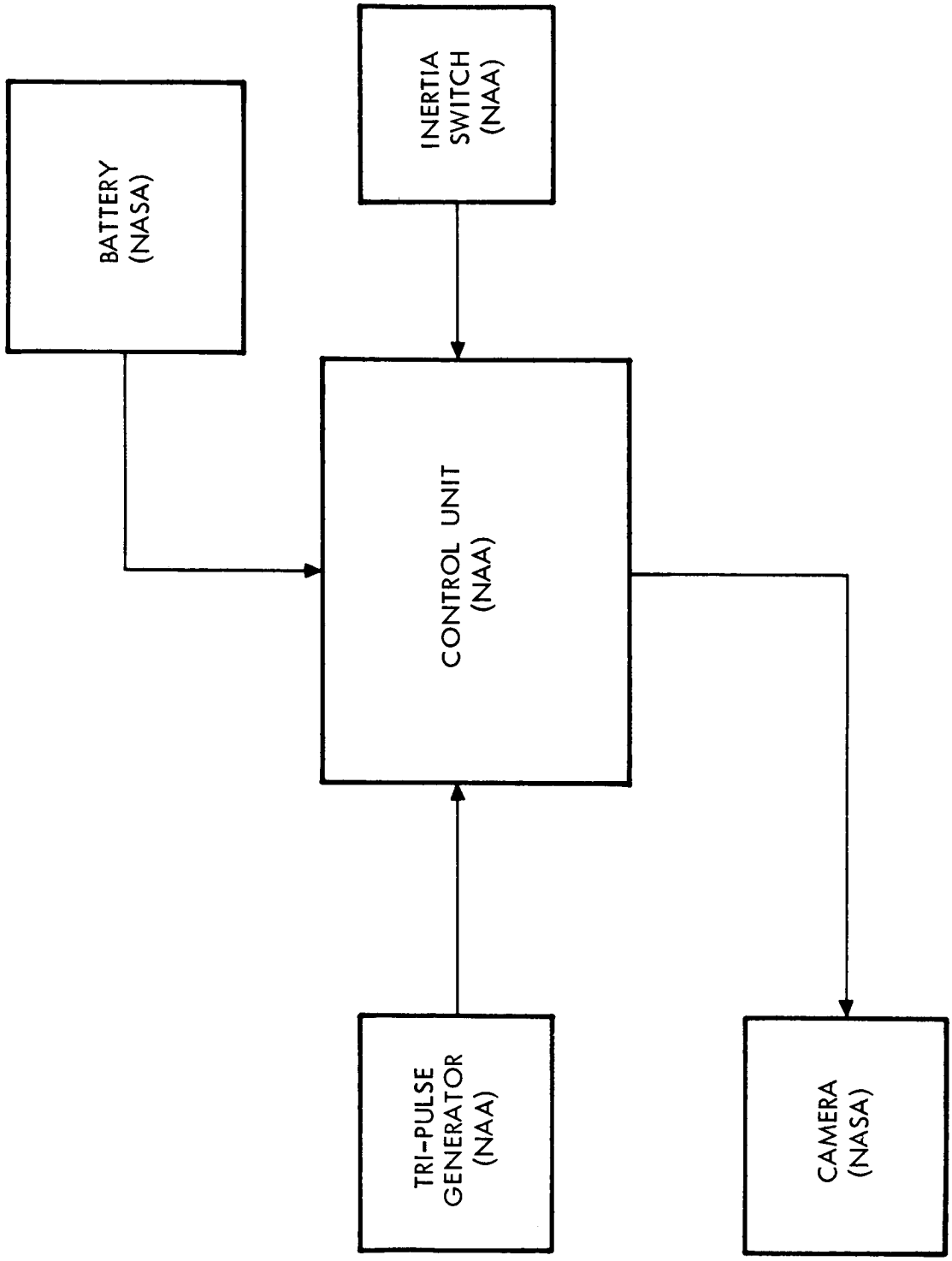

Figure 24. Camera System Diagram Apollo Boilerplate BP-12

[redacted]

[redacted]

TABLE I. FLIGHT RESEARCH AND DEVELOPMENT

INSTRUMENTATION - BOILERPLATE BP-12

Equipment Description			Power Per Unit (w)	Weight Per Unit (lbs)
Name	NASA Type No.	Range		
Timer	5.2.1.1.0		1.5	1.5
D.C. Amplifier Rack	5.13.1.1			1.0
Tape Recorder	5.1.1.2		70	35
Signal Conditioning Box	2.12.1.1.0		54	66
Rate Gyro	2.3.2.1	±60°/sec	22	5.7
Attitude Gyro		±170°	23	6.5
Main Battery (120 Amp hrs.)	1.1.1.3.0			52.7
Pyro Battery (5 Amp hrs.)	1.1.1.1.0			7.8
Acceleration Transducer	2.8.1.1	-10g/+20g	0.3	0.5
Acceleration Transducer	2.8.1.1	±10g	0.3	0.5

[redacted]

TABLE I. FLIGHT RESEARCH AND DEVELOPMENT INSTRUMENTATION -

BOILERPLATE BP-12 (Continued)

	Equipment Description			Power Per Unit (w)	Weight Per Unit (lbs)
	Name	NASA Type No.	Range		
	Acceleration Transducer	2.8.1.1	±2g	0.3	0.5
Pressure system consists of:	(1)Transducer (1)Amplifier	2.7.2.3.1 2.11.1.1	0-15 psia	2.5	0.5 1.0
	Pressure Transducer	2.7.1.5	0-15 psia	0.18	0.5
	Pressure Transducer	2.7.1.5	0-2500 psid	0.18	0.5
	Pressure Transducer	2.7.1.5	2-22 psia	0.18	0.5
	Pressure Transducer	2.7.1.5	2-15 psia	0.18	0.5
	Power Control Box	1.5.1.1.1		20	11.25
	Junction Box	1.8.1.1.0			4.5
	D.C. Amplifier	2.11.1.1		2.5	1.0

TABLE I. FLIGHT RESEARCH AND DEVELOPMENT INSTRUMENTATION -

BOILERPLATE BP-12 (Continued)

	Equipment Description			Power Per Unit (w)	Weight Per Unit (lbs)
	Name	NASA Type No.	Range		
	C-B Transponder			36	10.8
Temperature System consisting of:	(1)Resistance Thermometer	2.18.2.2.1	0-150°C	2.5	1.3
	(1)Amplifier				
	Q-Ball		±40° 0-1250 psf	15	22.3
Temperature System* consisting of:	(1)Bridge Adjustment Unit	2.18.2.2.1		15	20
	(1)Commutator and Amplifier				
Camera System consisting of:	(1)Pyro Battery (5 ampere-hours)	1.1.1.1.0			7.8
	(1)Camera				15
	(1)Tri-pulse Generator				1.5
	(1)Inertia Switch (3g)				4.5

*This system will be a passenger unit for evaluation

[redacted]

TABLE I. FLIGHT RESEARCH AND DEVELOPMENT INSTRUMENTATION -

BOILERPLATE BP-12 (Continued)

	Equipment Description			Power Per Unit (w)	Weight Per Unit (lbs)
	Name	NASA Type No.	Range		
Camera System consisting of: (Continued)	(1)Camera Control Unit				
	Pressure Transducer	2.7.1.5.3	0-15 psia	0.18	0.5
	Relay Box	1.10.1.1.0			10.0

[redacted]

TABLE II. FLIGHT RESEARCH AND DEVELOPMENT

ANTENNAS - BOILERPLATE BP-12

	Equipment Description			Power Per Unit (w)	Weight Per Unit (lbs)
	Name	NASA Type No.	Range		
Beacon Antenna System; consisting of:	(4)Antennas	ME 481-0003-0001			
	(2)Power Dividers	ME 481-0003-0002			
Telemetry Antenna System; consisting of:	(4)Antennas	ME 481-0001-0001			
	(3)Power Dividers	ME 481-0001-0003			

[redacted]

TAB C

APOLLO FLIGHT RESEARCH AND DEVELOPMENT INSTRUMENTATION PERFORMANCE AND INTERFACE SPECIFICATION FOR BOILERPLATE BP-13

[redacted]

TABLE OF CONTENTS

Paragraph	Title	Page
1.	SCOPE	C1
1.1	Scope	C1
2.	APPLICABLE DOCUMENTS	C1
2.1	Applicability	C1
2.1.1	Non-Government Documents	C1
2.1.2	Other Documents	C1
2.1.3	Precedence	C2
3.	REQUIREMENTS	C2
3.1	General	C2
3.1.1	Configuration	C2
3.1.2	Electromagnetic Interference	C2
3.2	PERFORMANCE	C2
3.2.1	General	C2
3.3	INTERFACE	C2
3.3.1	Interface Requirements	C2
3.3.1.1	Interface Definition	C3
3.3.1.2	Mechanical Interface	C3
3.3.1.3	Electrical Interface	C3
3.3.1.4	Functional Interface	C3
4.	QUALITY ASSURANCE PROVISIONS	C3
5.	PREPARATION FOR DELIVERY	C3
6.	NOTES	C3
6.1	Intended Use	C3
6.2	Definitions	C3
6.2.1	Performance	C3
6.2.2	Boilerplate	C3

LIST OF ILLUSTRATIONS

Number	Title	Page
Figure 1.	Typical Accelerometer System Diagram Apollo Boilerplate BP-13	C4
Figure 2.	Pin Assignments for Accelerometer Circuit Apollo Boilerplate BP-13	C5
Figure 3.	Vibration System Diagram Apollo Boilerplate BP-13	C6
Figure 4.	Pin Assignments for Vibration System Apollo Boilerplate BP-13	C7
Figure 5.	Pressure Transducer Diagram Apollo Boilerplate BP-13	C8
Figure 6.	Pin Assignments for Pressure Transducer Apollo Boilerplate BP-13	C9
Figure 7.	Pressure Transducer Circuit Diagram Apollo Boilerplate BP-13	C10
Figure 8.	Pin Assignments for Pressure Transducer Circuit Apollo Boilerplate BP-13	C11
Figure 9.	Strain Gauge Circuit Diagram Apollo Boilerplate BP-13	C12
Figure 10.	Pin Assignments for Strain Gauge Circuit Apollo Boilerplate BP-13	C13
Figure 11.	Temperature Measurement System Diagram Apollo Boilerplate BP-13	C14
Figure 12.	Pin Assignments for Calorimeter Apollo Boilerplate BP-13	C15
Figure 13.	Pin Assignments for R.F. Package Temperature Monitor Apollo Boilerplate BP-13	C16
Figure 14.	Pin Assignments for Resistance Thermometers Apollo Boilerplate BP-13	C17
Figure 15.	Bus A, Bus B and Current Monitor Diagram Apollo Boilerplate BP-13	C18
Figure 16.	C-Band Transponder Circuit Diagram Apollo Boilerplate BP-13	C19
Figure 17.	LES Sequencer Schematic Diagram Apollo Boilerplate BP-13	C20
Figure 18.	Modulation Package Diagram Apollo Boilerplate BP-13 (Sheet 1 of 2)	C21
Figure 18.	Modulation Package Diagram Apollo Boilerplate BP-13 (Sheet 2 of 2)	C22

LIST OF ILLUSTRATIONS (Continued)

Number	Title	Page
Figure 19.	R.F. System Diagram Apollo Boilerplate BP-13	C23
Figure 20.	R and Z Bus Central Diagram Apollo Boilerplate BP-13	C24

APOLLO FLIGHT RESEARCH AND DEVELOPMENT INSTRUMENTATION PERFORMANCE AND INTERFACE SPECIFICATION FOR BOILERPLATE BP-13

1. SCOPE

1.1 Scope. - This specification defines the flight R and D instrumentation performance and interface requirements for Boilerplate BP-13.

2. APPLICABLE DOCUMENTS

2.1 Applicability. - Unless otherwise specified, the following documents of the issue in effect on the date of contract form a part of this specification to the extent specified herein.

2.1.1 Non-Government Documents.

SPECIFICATIONS

North American Aviation, Inc., Space and Information Systems Division, (NAA/S&ID)

SID 63-563	Apollo Measurement Requirements Boilerplate 13, dated 27 September 1963
MC 999-0002B	Specification for Electromagnetic Interference Control for Apollo Spacecraft System, dated 3 January 1963

2.1.2 Other Documents.

INTERFACE COORDINATION DOCUMENTS

North American Aviation, Inc., Space and Information Systems Division, (NAA/S&ID)

MH01-02041-116	Communication and Instrumentation to Command Module Structure (Xc=14.07 to Xc-48.50) BP-13 ESD-NAA
MH01-02042-116	Communication and Instrumentation to Command Module Structure (Xc=38.13) BP-13 ESD-NAA

MH01-02043-116	Communication and Instrumentation to Command Module Structure (Xc=26.13) BP-13 ESD-NAA
MH01-02044-116	Communication and Instrumentation to Command Module Structure (Xc=48.50) BP-13 ESD-NAA
MH01-02045-116	Communication and Instrumentation to Command Module Structure (Xc=82.75) ESD-NAA

2.1.3 Precedence. - For this specification the order of precedence in case of conflict shall be as follows:

(a) The contract
(b) This specification
(c) Other documents referenced herein.

3. REQUIREMENTS

3.1 General. - The flight research and development (R and D) instrumentation shall be installed on boilerplate BP-13 in the location shown in figure (to be supplied). The measurements to be made, the power required and the weights of the various instrument packages shall be as shown in Table 1. The signal inputs and outputs per instrumentation are shown in wiring diagrams. (See Figures 1 through 20).

3.1.1 Configuration. - The configuration of flight R and D instrumentation shall be as shown in Figures 1 through 20.

3.1.2 Electromagnetic Interference. - To be supplied.

3.2 PERFORMANCE

3.2.1 General.- The measurement parameters for the flight research and development instrumentation for Boilerplate 13 are expressed in document SID 63-563.

3.3 INTERFACE

3.3.1 Interface Requirements. - The following paragraphs define the requirements for electrical, mechanical and functional interface for the Apollo Flight R and D instrumentation for BP-13.

3.3.1.1 Interface Definition. - Interface is defined as the junction point or points within or between systems or subsystems where matching or accommodations must be properly achieved in order to make their operation compatible with the successful operation of all other functional entities.

3.3.1.2 Mechanical Interface. - The flight R & D Instrumentation mechanical interface is definitized in Interface Control Documents (ICD's) MH01 - 02041 - 116; MH01 - 02042 - 116; MH01 - 02043 - 116; MH01 - 02044 - 116; and MH01 - 02045 - 116.

3.3.1.3 Electrical Interface. - The flight R & D Instrumentation electrical interface is definitized in ICD (document number to be supplied).

3.3.1.4 Functional Interface. - The flight R & D instrumentation functional interface is definitized in ICD (document number to be supplied).

4. QUALITY ASSURANCE PROVISIONS

Not Applicable

5. PREPARATION FOR DELIVERY

Not Applicable

6. NOTES

6.1 Intended Use. - This specification is intended to be used to define the performance and interface requirements of flight R & D instrumentation for Boilerplate 13.

6.2 Definitions. - For purposes of this specification, the following terms are defined.

6.2.1 Performance. - Performance is the ability to operate and function as an entity, without malfunctions, until the objective is accomplished.

6.2.2 Boilerplate. - Boilerplate is defined as a simulated item including the necessary research and development instrumentation to make an integrated assembly.

~~CONFIDENTIAL~~

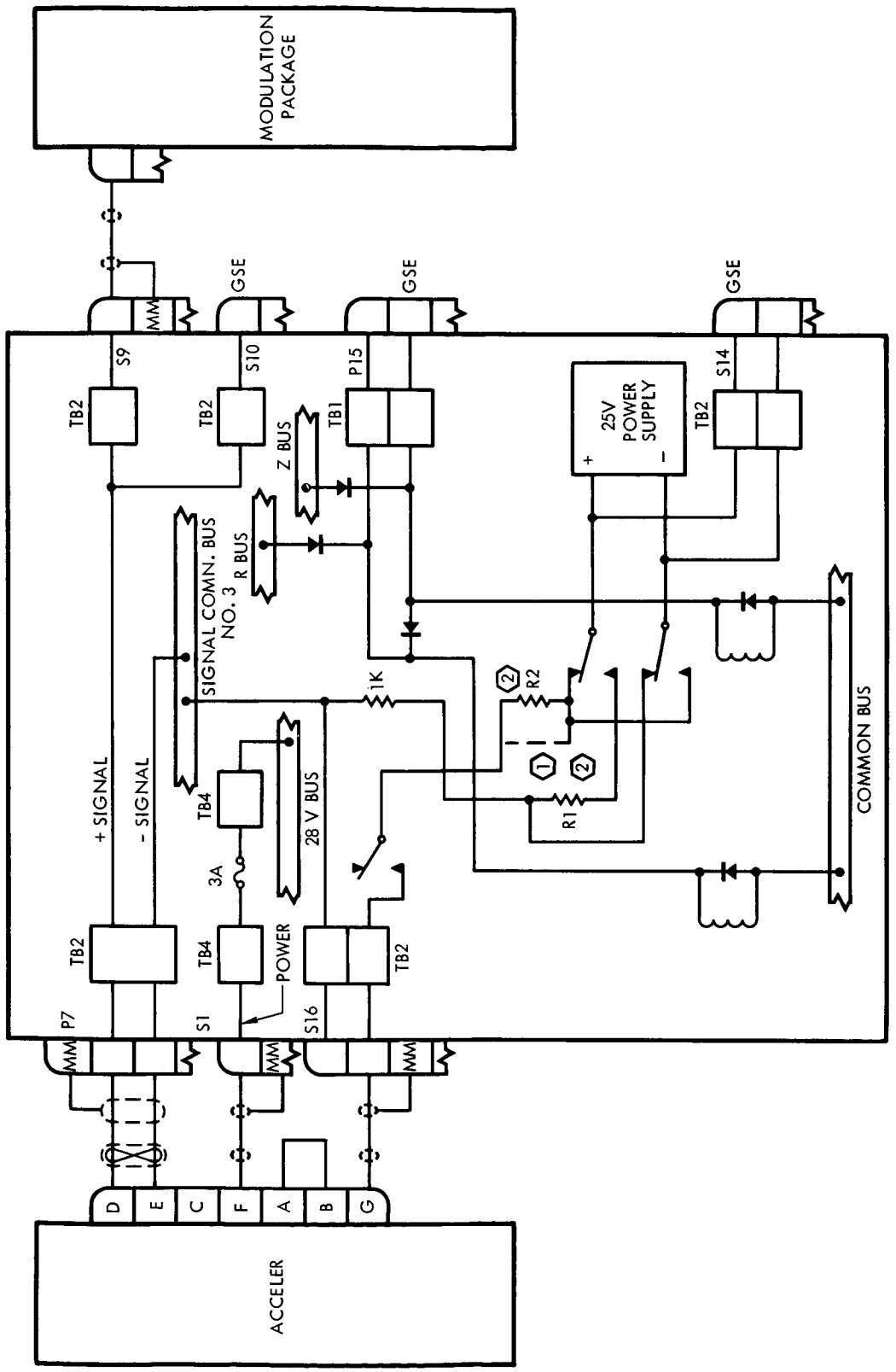

NOTE:
1. FOR ± 2G ACCELEROMETERS IN THE Z CAL. CKT. "R2" IS JUMPERED.
2. VALUES OF RESISTORS CUSTOM MADE FOR EACH ACCELEROMETER. FOR INDIVIDUAL PIN AND TB DESIGNATIONS SEE THE TABLES IMMEDIATELY FOLLOWING THIS SHEET.

Figure 1. Typical Accelerometer System Diagram Apollo Boilerplate BP-13

~~CONFIDENTIAL~~

CONFIDENTIAL

Accelerometer		Accel. to SC Box & Terms				GSE		SC Box to Mod. Pack.		
		+Signal (Pin D)		-Signal (Pin E)		Connector		Connector		Mod.
Meas Code No.	Range	SC Box	TB 2	SC Box	TB 2	SC Box	TB 2	SC Box	TB 2	Plug
LA0011A	±2g	P7-A	A25	P7-B	F25	S10-LL	R24	S9-LL	D24	B-J2-F
LA0012A	±3g	P7-E	C25	P7-F	H25	S10-JJ	T24	S9-JJ	B24	B-J2-E
CA0001A	-2g +10g	P7-J	E26	P7-K	K25	S10-GG	N23	S9-GG	E23	C-J2-F
CA0007A	±3g	P7-G	D25	P7-H	J25	S10-HH	U24	S9-HH	A24	E-J2-D
CA0005A	±3g	P7-C	B25	P7-D	G25	S10-KK	S24	S9-KK	C24	C-J2-D
SA0004A	±2g	P7-L	A26	P7-M	F26	S10-FF	P23	S9-FF	D23	C-J2-E
SA0003A	±2g	P7-R	C26	P7-S	H26	S10-DD	S23	S9-DD	B23	A-J2-D

Accelerometer		Accelerometer to Signal Condition Box							
		Power (Pin F)				Cal Sig.		Cal. Sig. Return	
Meas Code No.	Range	Plug	TB 4	Fuse	TB 4	Plug	TB 2	Plug	TB 2
LA0011A	±2g	S1-A	F27	3A	A27	S16-n	E4	S16-m	F4
LA0012A	±3g	S1-E	H27	3A	C27	S16-s	J4	S16-r	K4
CA0001A	-2g +10g	S1-J	K27	3A	E27	S16-w	C5	S16-v	D5
CA0007A	±3g	S1-G	J27	3A	D27	S16-u	A5	S16-t	B5
CA0005A	±3g	S1-C	G27	3A	B27	S16-q	G4	S16-p	H4
SA0004A	±2g	S1-N	G28	3A	B28	S16-y	E5	S16-x	F5
SA0003A	±2g	C1-R	H28	3A	C28	S16-BB	J5	----	---

Accelerometer	Calibration						Power Supply					
	R. Cal. Cmd.			A Cal. Cmd.			+25V			-25V		
Meas Code No.	Rly	TB 1	Plug	Rly	TB 1	Plug	Term No.	TB 2	Plug	Term No.	TB 2	Plug
LA0011A	K1	E11	P15-x	K2	F11	P15-y	1-7	H2	S19-w	1-8	H1	S14-V
LA0012A	K5	J11	P15-BB	K6	K11	P15-cc	1-3	J5	S14-AA	1-4	H5	S14-z
CA0001A	K9	C12	P15-FF	K10	D12	P15-GG	2-1	G6	S14-u	2-2	F6	S14-t
CA0007A	K7	A12	P15-DD	K8	B12	P15-EE	1-5	H4	S14-y	1-6	H3	S14-x
CA0005A	K3	G11	P15-z	K4	H11	P15-AA	1-1	H6	S14-CC	1-2	K5	S14-BB
SA0004A	K11	D12	P15-HH	K12	F12	P15-JJ	2-3	E6	S14-s	2-4	G5	S14-r
SA0003A	K30	G12	P15-KK	K28	H12	P15-LL	2-7	K2	S14-GG	2-8	J2	S14-FF

Figure 2. Pin Assignments for Accelerometer Circuit Apollo Boilerplate BP-13

[redacted]

[redacted]

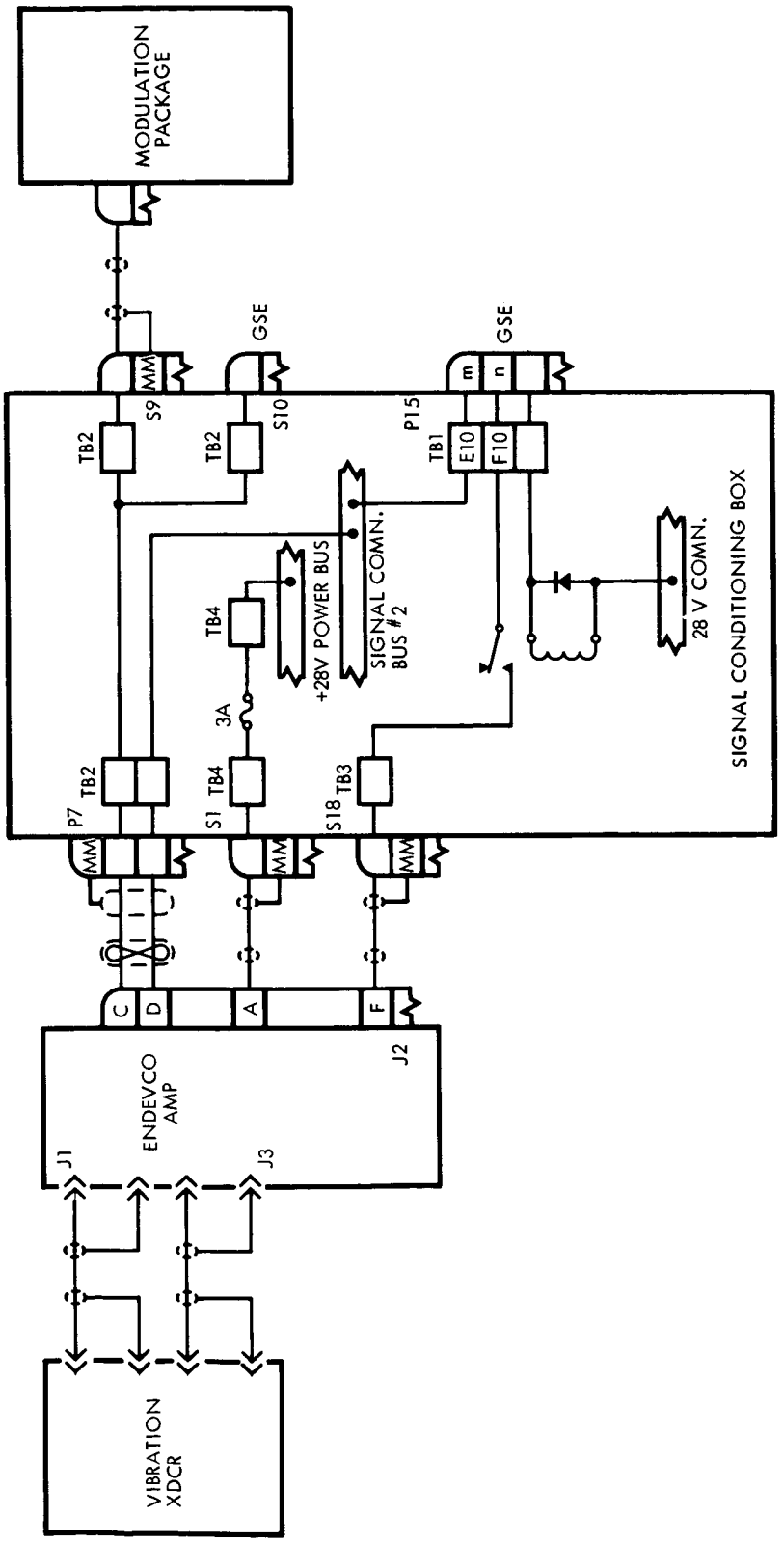

NOTE:
1. ENDEVCO SYSTEM CAN ONLY BE "R" AND "Z" CALIBRATED BY GSE EQUIPMENT.

Figure 3. Vibration System Diagram Apollo Boilerplate BP-13

[redacted]

Vibration	Amplifier to Signal Cond. Box				Calibration		GSE Mon. Output	Sig. Cond. Box Signal Out	Modulation Pack Signal In
	Pin A	Pin B	Pin C	Pin F	Control In	Rly			
SA0021D	S1-T	P7-c	P7-j	S18-BB	P15-q	K23	S10-u	S9-u	A-J2-Y
SA0088D	S1-p	P7-e	P7-h	S18-EE	P15-p	K24	S10-v	S9-v	B-J2-Z
SA0087D	S1-r	P7-g	P7-f	S18-FF	P15-r	K22	S10-w	S9-w	C-J2-Z
SA0086D	S1-t	P7-i	P7-d	S18-GG	P15-t	K18	S10-x	S9-x	C-J2-P

Figure 4. Pin Assignments for Vibration System Apollo Boilerplate BP-13

~~CONFIDENTIAL~~

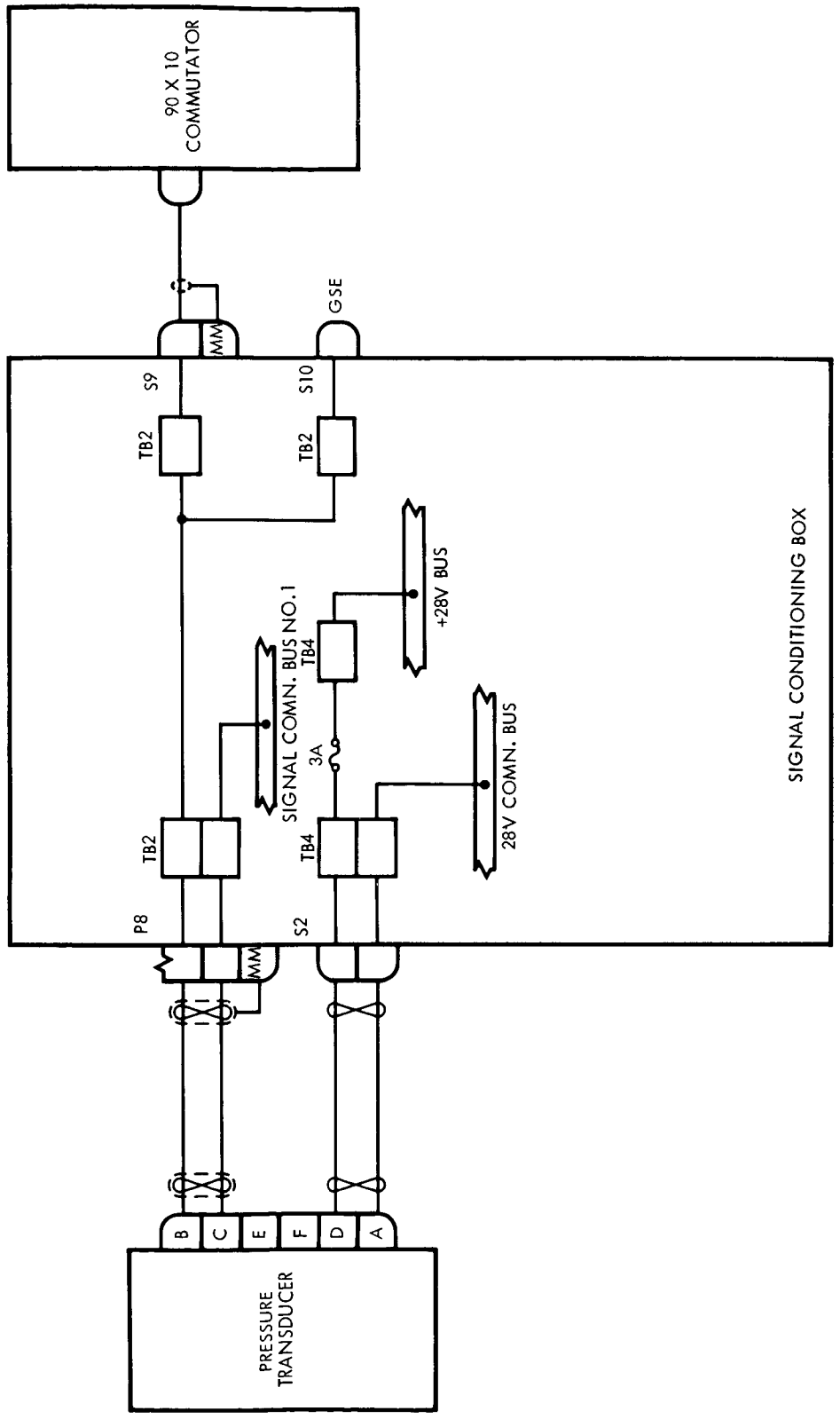

Figure 5. Pressure Transducer Diagram Apollo Boilerplate BP-13

~~CONFIDENTIAL~~

[redacted]

Pressure Xder Meas No.	Signal In to Signal Cond. Box				SC Box Out	Commutator Signal In
	Pin A	Pin B	Pin C	Pin D		
CA0071P	S2-B	P8-T	P8-U	S2-A	S9-J	J33-16
CA0072P	S2-D	P8-V	P8-W	S2-C	S9-K	J33-17
CA0073P	S2-F	P8-X	P8-Y	S2-E	S9-L	J33-18
CA0074P	S2-H	P8-Z	P8-a	S2-G	S9-M	J33-19
CA0075P	S2-K	P8-b	P8-c	S2-J	S9-N	J33-20
CA0076P	S2-M	P8-d	P8-e	S2-L	S9-P	J33-21
CA0077P	S2-P	P8-f	P8-g	S2-N	S9-R	J33-22
CA0078P	S2-S	P8-h	P8-i	S2-R	S9-S	J33-23
CA0079P	S2-U	P8-j	P8-k	S2-T	S9-T	J33-24
CA0611P	S2-W	P8-m	P8-n	S2-V	S9-U	J33-38

Press. Xder Meas. No.	Transducer to Signal Conditioning Box & Terminals										GSE		SC Box to Commutator		
	+28V Power (Pin D)				-28V (Pin A)		+Signal (Pin B)		-Signal (Pin C)						
	SC Box	TB 4	Fuse	TB 4	SC Box	TB 4	SC Box	TB 2	SC Box	TB 2	SC Box	TB 2	SC Box	TB 2	Comtr.
CA0071P	S2-A	F7	3A	A7	S2-B	L7	P8-T	V26	P8-U	P26	S10-J	V20	S9-J	J20	J33-16
CA0071P	S2-A	G7	3A	B7	S2-D	M7	P8-V	U26	P8-W	N26	S10-K	U20	S9-K	K20	J33-17
CA0073P	S2-E	H7	3A	C7	S2-F	N7	P8-X	Y27	P8-Y	T27	S10-L	Y21	S9-L	F21	J33-18
CA0074P	S2-G	J7	3A	D7	S2-H	P7	P8-Z	X27	P8-a	S27	S10-M	X21	S9-M	G21	J33-19
CA0075P	S2-J	K7	3A	E7	S2-K	R7	P8-b	W27	P8-c	R27	S10-N	W21	S9-N	H21	J33-20
CA0076P	S2-L	F8	3A	A8	S2-M	L8	P8-d	V27	P8-e	P27	S10-P	V21	S9-P	J21	J33-21
CA0077P	S2-N	G8	3A	B8	S2-P	M8	P8-f	U27	P8-g	N27	S10-R	U21	S9-R	K21	J33-22
CA0078P	S2-R	H8	3A	C8	S2-S	N8	P8-h	Y28	P8-i	T28	S10-S	Y22	S9-S	F22	J33-23
CA0079P	S2-T	J8	3A	D8	S2-U	P8	P8-j	X28	P8-k	S28	S10-T	X22	S9-T	G22	J33-24
CA0611P	S2-V	K8	3A	E8	S2-W	R8	P8-m	W28	P8-n	R28	S10-U	W22	S9-U	H22	J33-38

Figure 6. Pin Assignments for Pressure Transducer Apollo Boilerplate BP-13

[redacted]

~~CONFIDENTIAL~~

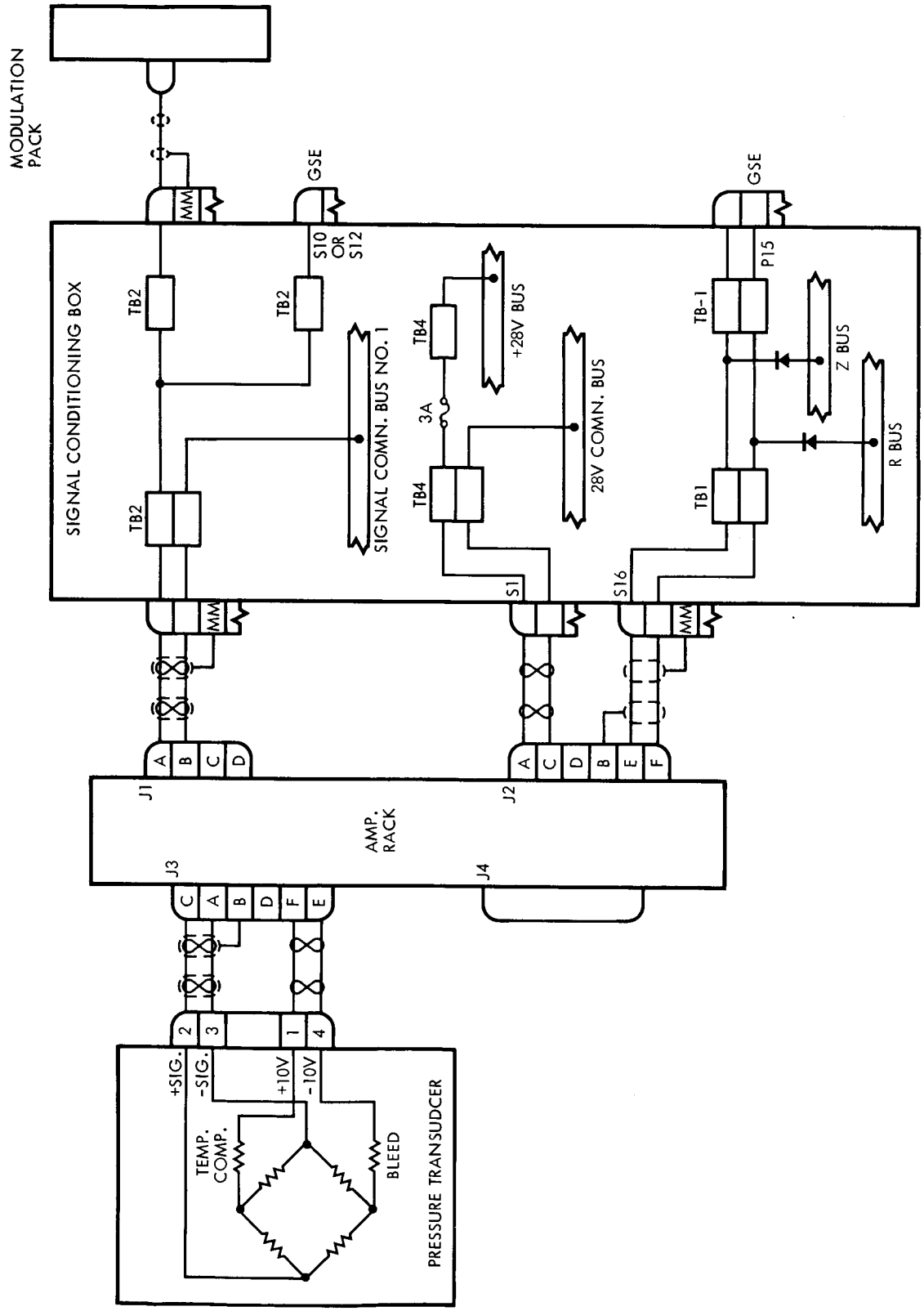

Figure 7. Pressure Transducer Circuit Diagram Apollo Boilerplate BP-13

~~CONFIDENTIAL~~

[redacted]

Press. Xder. Meas. No.	Amp. Rack & Plug Input	Amp. Rack to Sig. Cond. Box & SC Terminals						GSE Plug & Terminals		Sig. Cond. to Mod. Pack.		
		+Signal			-Signal					SC Box		
		Amp.	SC Box	TB 2	Amp.	SC Box	TB 2	Pin	TB 2	Pin	TB 2	Mod. Pack
CA0179P	Amp 8-J4	J1-C	P5-v	E17	J1-D	P5-w	J16	S12-H	N8	S11-H	D8	B-J2-P
CA0180P	Amp 7-J4	J1-C	P5-t	D17	J1-D	P5-u	H16	S12-J	S9	S11-J	A9	C-J2-X
CA0181P	Amp 7-J3	J1-A	P5-r	C17	J1-B	P5-s	G16	S12-K	R9	S11-K	B9	B-J2-X
SA0182P	Amp 6-J4	J1-C	P7-KK	D30	J1-D	P7-LL	E30	S10-g	T19	S9-g	A19	A-J2-X
SA0183P	Amp 6-J3	J1-A	P7-HH	C30	J1-B	P7-JJ	H30	S10-h	S19	S9-h	B19	C-J2-W
SA0184P	Amp 5-J4	J1-C	P7-FF	B30	J1-D	P7-GG	G30	S10-i	R19	S9-i	C19	B-J2-W
SA0185P	Amp 5-J3	J1-A	P7-DD	F30	J1-B	P7-EE	F30	S10-j	P19	S9-j	D19	A-J2-W
SA0186P	Amp 4-J4	J1-C	P7-BB	E29	J1-D	P7-CC	K29	S10-k	N19	S9-k	E19	C-J2-L
SA0187P	Amp 4-J3	J1-A	P7-z	D29	J1-B	P7-AA	J29	S10-m	T20	S9-m	A20	B-J2-L
SA0188P	Amp 3-J4	J1-C	P7-x	C29	J1-D	P7-y	H29	S10-n	S20	S9-n	B20	A-J2-K
SA0189P	Amp 3-J3	J1-A	P7-v	B29	J1-B	P7-w	G29	S10-p	R20	S9-p	C20	C-J2-K
SA0190P	Amp 2-J4	J1-C	P7-t	A29	J1-D	P7-u	F29	S10-q	P20	S9-q	D20	B-J2-K
SA0191P	Amp 2-J3	J1-A	P7-r	E28	J1-B	P7-s	K28	S10-r	N20	S9-r	E20	A-J2-J
SA0192P	Amp 1-J4	J1-C	P5-X	D15	J1-D	P5-Y	H14	S10-V	T12	S11-V	A12	C-J2-J
SA0193P	Amp 1-J3	J1-A	P5-V	C15	J1-B	P5-W	G14	S12-W	S12	S11-W	B12	B-J2-J

Amp Rack No.	Amp. Rack to Sig. Cond. Box Power						R Cal.				Z Cal.			
	+28V (J2-A)			-28V (J2-C)			Amp (J2-F)		GSE		Amp (J2-E)		GSE	
	SC Box	TB4	Fuse	TB4	SC Box	TB4	SC Box	TB1	SC Box	TB1	SC Box	TB1	SC Box	TB1
8	S1-KK	J32	3A	D32	S1-LL	K32	S16-D	D1	P15-D	D7	S16-C	C1	P15-C	C7
7	S1-g	G30	3A	B30	S1-k	M30	S16-B	B1	P15-B	B7	S16-A	A1	P15-A	A7
6	S1-h	F30	3A	A30	S1-i	L30	S16-Y	B3	P15-Y	B9	S16-X	A3	P15-X	A9
5	S1-f	K29	3A	E29	S1-g	R29	S16-W	K2	P15-W	K8	S16-V	J2	P15-V	J8
4	S1-d	J29	3A	D29	S1-e	P29	S16-U	H2	P15-U	H8	S16-U	G2	P15-T	G8
3	S1-b	H29	3A	C29	S1-c	N29	S16-S	F2	P15-S	F8	S16-R	E2	P15-R	E8
2	S1-Z	G29	3A	B29	S1-a	M29	S16-P	D2	P15-P	D8	S16-N	C2	P15-N	C8
1	S1-X	F29	3A	A29	S1-Y	L29	S16-M	B2	P15-M	B8	S16-L	A2	P15-L	A8

Figure 8. Pin Assignments for Pressure Transducer Circuit Apollo Boilerplate BP-13

[redacted]

~~CONFIDENTIAL~~

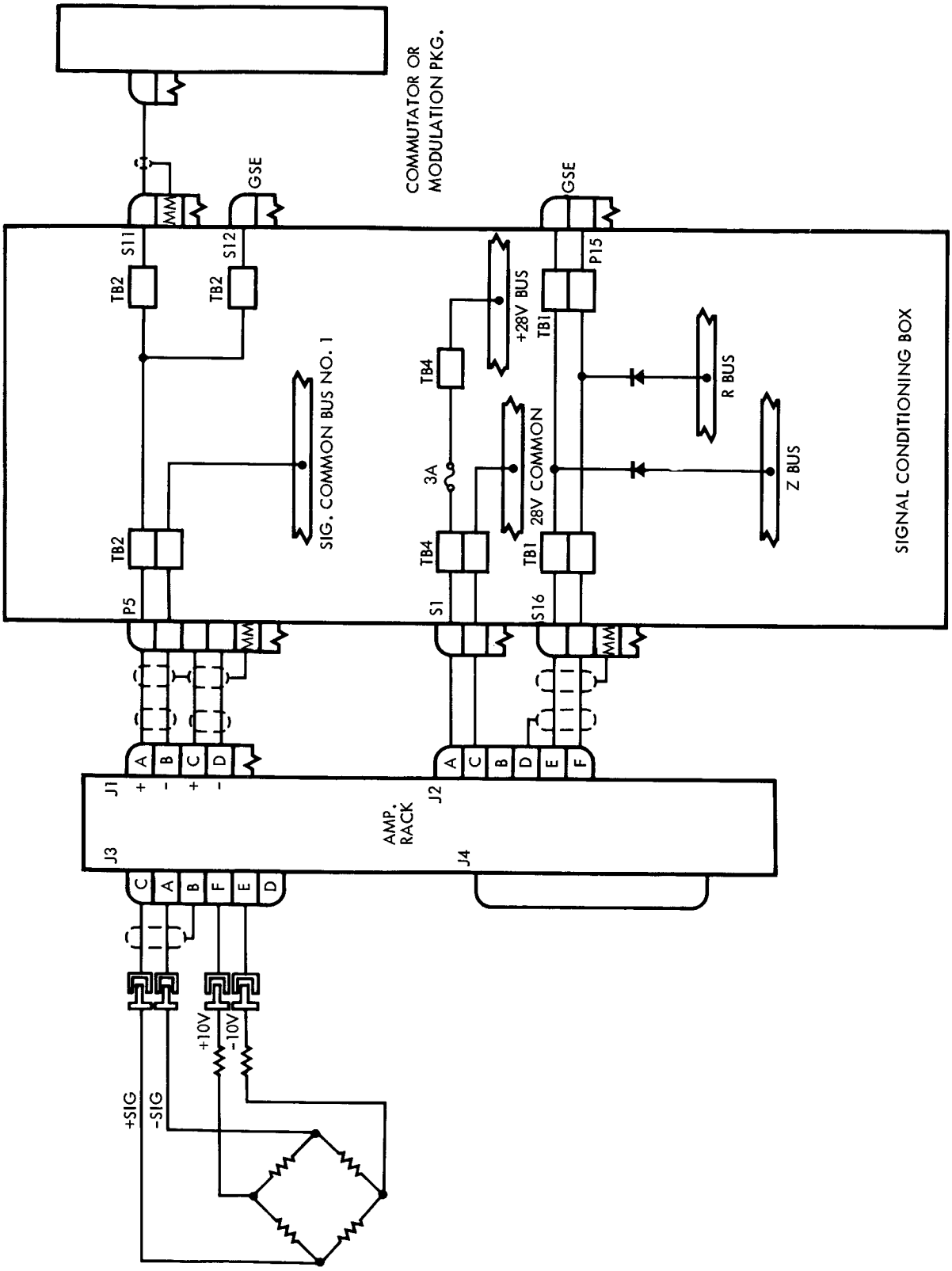

Figure 9. Strain Gauge Circuit Diagram Apollo Boilerplate BP-13

~~CONFIDENTIAL~~

~~CONFIDENTIAL~~

Strain Gauge Meas. No.	Amp. Rack & Plug Input	Amp. Rack to Sig. Cond. Box & SC Terminals						GSE Plug & Terminals		SC Box		Mod. Pack
		+ Signal			-Signal							
		Amp	SC Box	TB2	AMP	SC Box	TB2	Pin	TB2	Pin	TB2	
AA0195S	Amp 9-J3	J1-A	P5-Z	E15	J1-B	P5-a	J14	S12-U	N11	S11-U	C11	A-J2-G
AA0194S	Amp 9-J4	J1-C	P5-b	A16	J1-D	P5-c	K14	S12-T	P11	S11-T	B11	A-J2-H
AA1097S	Amp 10-J3	J1-A	P5-d	B16	J1-B	P5-e	F15	S12-S	R11	S11-S	A11	B-J2-H
AA0198S	Amp 10-J4	J1-C	P5-f	C16	J1-D	P5-g	G15	S12-R	N10	S11-R	C10	C-J2-H
SA2120S	Amp 11-J3	J1-A	P7-m	C28	J1-B	P7-a	G27	S10-t	S21	S9-t	B21	B-J2-Y
SA2121S	Amp 11-J4	J1-C	P7-p	D28	J1-D	P7-Y	F27	S10-s	T21	S9-s	A21	B-J2-Y

Amp. Rack No.	Amp. Rack to Sig. Cond. Box Power						R Cal.				Z Cal.			
	+28V (J2-A)				-28V (J2-C)		Amp (J2-F)		GSE		Amp (J2-E)		GSE	
	SC Box	TB4	Fuse	TB4	SC Box	TB4	SC Box	TB1	SC Box	TB1	SC Box	TB1	SC Box	TB1
9	S1-v	G31	3A	B31	S1-w	M31	S16-F	F1	P15-F	F7	S16-E	E1	P15-E	E7
10	S1-x	H31	3A	C31	S1-y	N31	S16-H	H1	P15-H	H7	S16-G	G1	P15-G	G7
11	S1-V	K28	3A	E28	S1-m	H30	S18-DD	A22	P17-u	B15	S18-CC	K21	P17-t	A15

Figure 10. Pin Assignments for Strain Gauge Circuit Apollo Boilerplate BP-13

~~CONFIDENTIAL~~

[redacted]

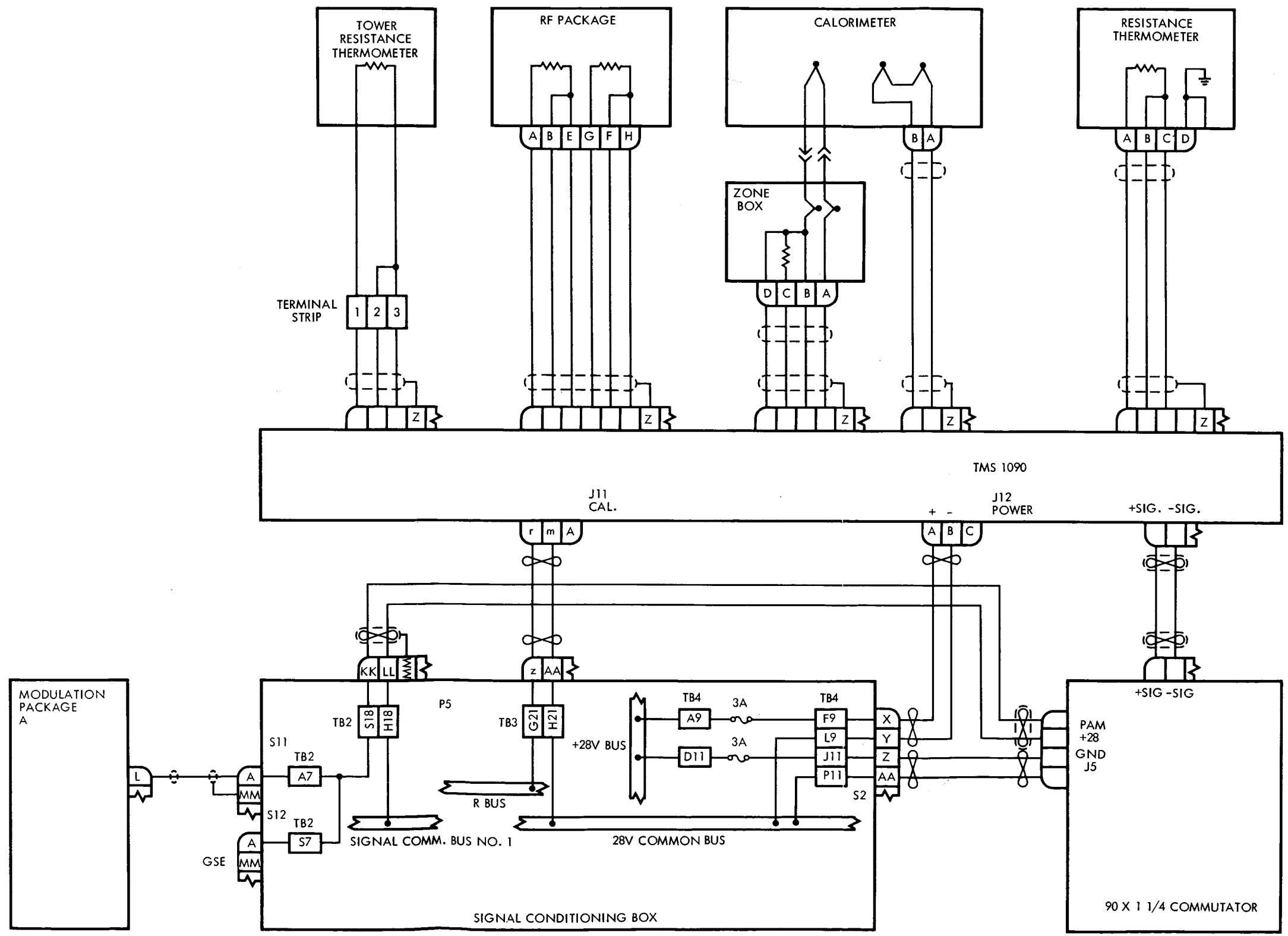

Figure 11. Temperature Measurement System Diagram Apollo Boilerplate BP-13

[redacted]

~~CONFIDENTIAL~~

Calor. Meas. No.	Calorimeter to TMS SCB						TMS 1090 SCB to Commutator				Commutator Channel Number
	Calor. Plug		Zone Box Plug				TMS 1090 Out		Commutator In		
	PinA	PinB	PinA	PinB	PinC	PinD	+Signal	-Signal	+Signal	-Signal	
CA0580R	J1-a	J1-b					J7-u	J7-v	J1-AA	J1-BB	12
CA0651T			J2-C	J2-D	J2-e	J2-d	J7-C	J7-D	J2-W	J2-X	32
CA0581R	J1-X	J1-Y					J7-w	J7-x	J1-CC	J1-DD	13
CA0652T			J2-E	J2-F	J2-g	J2-f	J7-E	J7-F	J2-Y	J2-Z	33
CA0582R	J1-V	J1-W					J7-Y	J7-z	J1-EE	J1-FF	14
CA0653T			J3-G	J3-H	J3-J	J3-h	J8-G	J8-H	J2-AA	J2-BB	34
CA0583R	J1-S	J1-T					J7-AA	J7-BB	J1-HH	J1-JJ	15
CA0654T			J31-L	J31-L	J31-j	J31-i	J8-J	J8-K	J2-CC	J2-DD	35
CA0584R	J1-A	J1-B					J7-GG	J7-HH	J7-KK	J7-LL	16
CA05655T			J3-x	J3-y	J3-z	J3-KK	J8-L	J8-M	J2-EE	J2-FF	36
CA0585R	J1-C	J1-D					J7-JJ	J7-KK	J1-MM	J1-NN	17
CA0656T			J3-AA	J3-BB	J3-CC	J3-LL	J8-a	J8-b	J2-HH	J2-JJ	37
CA0586R	J1-E	J1-F					J7-MM	J7-NN	J1-PP	J1-RR	18
CA0657T			J3-M	J3-N	J3-m	J3-k	J8-c	J8-d	J2-KK	J2-LL	38
CA0587R	J2-G	J2-H					J7-PP	J7-LL	J1-SS	J1-TT	19
CA0658T			J3-HH	J3-JJ	J3-PP	J3-NN	J8-e	J8-f	J2-MM	J2-NN	39
CA0588R	J2-K	J2-L					J7-EE	J7-FF	J1-UU	J1-VV	20
CA0659T			J3-MM	J3-DD	J3-EE	J3-FF	J8-g	J8-h	J2-PP	J2-RR	40
CA0589R	J2-x	J2-y					J7-CC	J7-DD	J1-WW	J1-XX	21
CA0660T			J3-P	J3-R	J3-p	J3-n	J8-i	J8-j	J2-SS	J2-TT	41
CA0590R	J2-AA	J2-BB					J7-k	J7-m	J1-YY	J1-ZZ	22
CA0661T			J3-a	J3-b	J3-v	J3-u	J8-u	J8-v	J2-UU	J2-VV	42
CA0591R	J2-M	J2-N					J7-n	J7-p	J2-A	J2-B	23
CA0662T			J3-X	J3-Y	J3-GG	J3-t	J8-w	J8-x	J2-WW	J2-XX	43
SA0596R	J2-HH	J2-JJ					J7-q	J7-r	J2-C	J2-D	24
SA0667T			J3-V	J3-W	J3-s	J3-r	J8-y	J8-z	J2-YY	J2-ZZ	44
SA0597R	J2-MM	J2-DD					J7-s	J7-t	J2-E	J2-F	25
SA0668T			J3-S	J3-T	J3-U	J3-q	J8-AA	J8-BB	J3-A	J3-B	45
SA0598R	J2-P	J2-R					J7-N	J7-P	J2-H	J2-J	26
SA0669T			J3-A	J3-B	J3-w	J3-c	J8-GG	J8-HH	J3-C	J3-D	46
SA0599R	J2-a	J2-b					J7-R	J7-S	J2-K	J2-L	27
SA0670T			J3-C	J3-D	J3-e	J3-d	J8-JJ	J8-KK	J3-E	J3-F	47
AA0592R	J2-X	J2-Y					J7-T	J7-U	J2-M	J2-N	28
AA0663T			J3-E	J3-F	J3-g	J3-f	J8-MM	J8-NN	J3-H	J3-J	48
AA0593R	J2-V	J2-W					J7-V	J7-W	J2-P	J2-R	29
AA0664T			J4-G	J4-H	J4-h	J4-h	J8-PP	J8-LL	J3-K	J3-L	49
AA0594R	J2-S	J2-T					J7-X	J7-Y	J2-S	J2-T	30
AA0665T			J4-K	J4-L	J4-j	J4-i	J8-EE	J8-FF	J3-M	J3-N	50
AA0595R	J2-A	J2-B					J7-A	J7-B	J2-U	J2-V	31
AA0666T			J4-x	J4-y	J4-z	J4-KK	J8-CC	J8-DD	J3-P	J3-R	51

Figure 12. Pin Assignments for Calorimeter Apollo Boilerplate BP-13

~~CONFIDENTIAL~~

RF Package		RF Pack to TMS 1090						TMS 1090 to 90 x 1 1/4 Commtr.				Commtr. Channel
								TMS 1090 Out		Commtr. In		
Meas. No.	Pkg	Pin A	Pin E	Pin B	Pin G	Pin F	Pin H	+Sig	-Sig	+Sig	-Sig	
CT0201T	A	J1-z	J1-y	J1-x				J7-L	J7-M	J1-M	J1-N	6
CT0202T	A				J1-BB	J1-CC	J1-AA	J7-a	J7-b	J1-P	J1-R	7
CT0203T	B	J1-m	J1-N	J1-M				J7-c	J7-d	J1-S	J1-T	8
CT0204T	B				J1-PP	J1-JJ	J1-HH	J1-e	J7-f	J1-U	J1-V	9
CT0205T	C	J1-EE	J1-DD	J1-MM				J7-g	J7-h	J1-W	J1-X	10
CT0206T	C				J1-p	J1-R	J1-P	J7-i	J7-j	J1-Y	J1-Z	11

Figure 13. Pin Assignments for RF Package Temperature Monitor Apollo Boilerplate BP-13

Resistance Thermometer		Resistance Therm to TMS 1090			TMS 1090 to Commutator				Commtr. Channel
					TMS 1090 Out		Commtr. In		
Meas. No.	Location	Pin A or Terminal 1	Pin B or Terminal 2	Pin C or Terminal 3	+Sig	-Sig	+Sig	-Sig	
CA0610T	Interior CM	J1-G	J1-H	J1-J	J7-G	J7-H	J1-H	J1-J	4
SA0612T	Interior SM	J1-K	J1-L	J1-j	J7-J	J7-K	J1-K	J1-L	5
LA0600T	Tower	J4-AA	J4-BB	J4-CC	J8-k	J8-m	J3-S	J3-T	52
LA0601T	Tower	J4-M	J4-N	J4-m	J8-n	J8-p	J3-U	J3-V	53
LA0602T	Tower	J4-HH	J4-JJ	J4-PP	J8-q	J8-r	J3-W	J3-X	54
LA0603T	Tower	J4-MM	J4-DD	J4-EE	J8-s	J8-t	J3-Y	J3-Z	55
LA0604T	Tower	J4-P	J4-R	J4-r	J8-N	J8-P	J3-AA	J3-BB	56
LA0605T	Tower	J4-a	J4-b	J4-v	J8-R	J8-S	J3-CC	J3-DD	57
LA0606T	Tower	J4-X	J4-Y	J4-GG	J8-T	J8-U	J3-EE	J3-FF	58
LA0607T	Tower	J4-V	J4-W	J4-s	J8-V	J8-W	J3-HH	J3-JJ	59

Figure 14. Pin Assignments for Resistance Thermometers Apollo Boilerplate BP-13

[redacted]

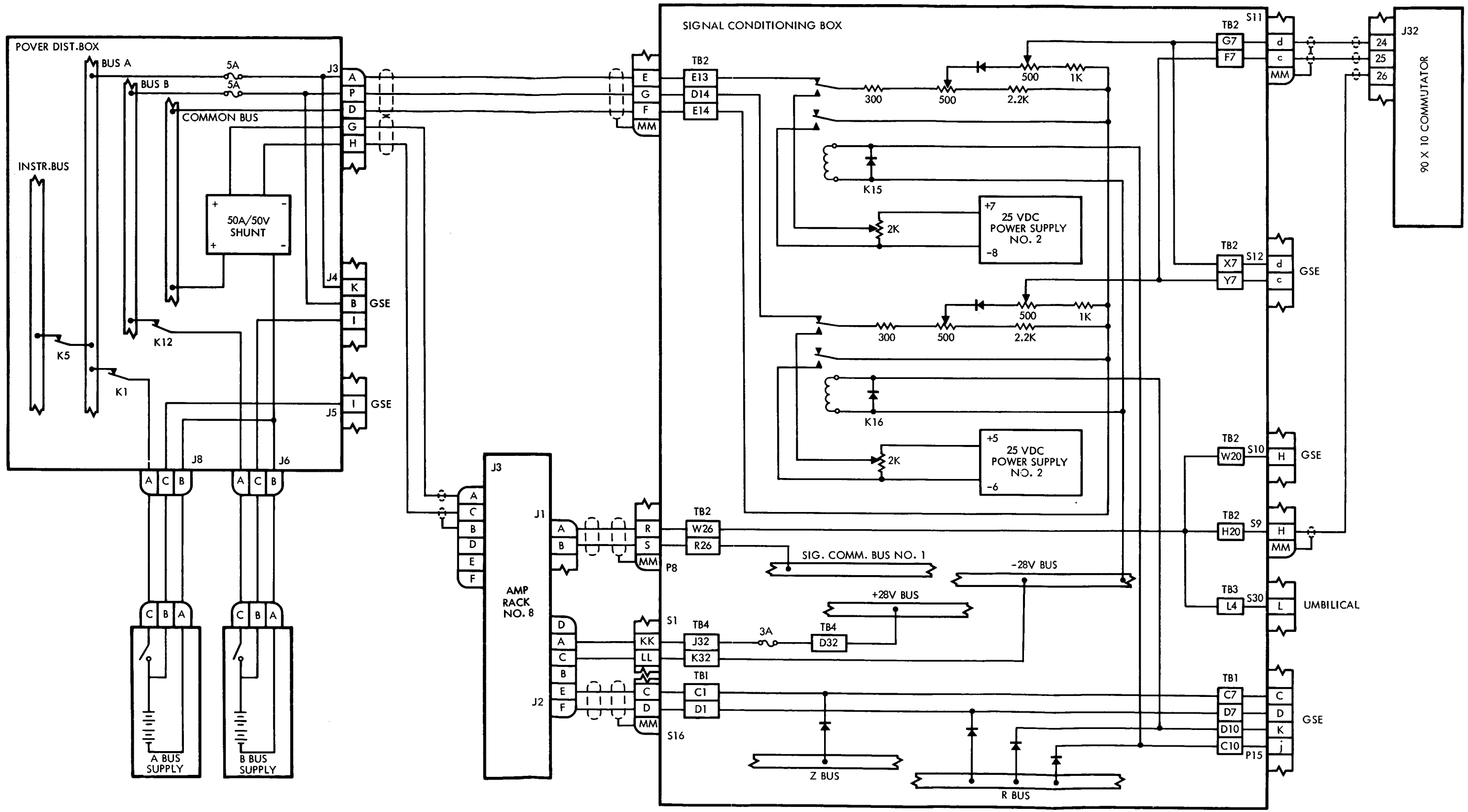

Figure 15. Bus A, Bus B and current Monitor Diagram Apollo Boilerplate BP-13

[redacted]

[redacted]

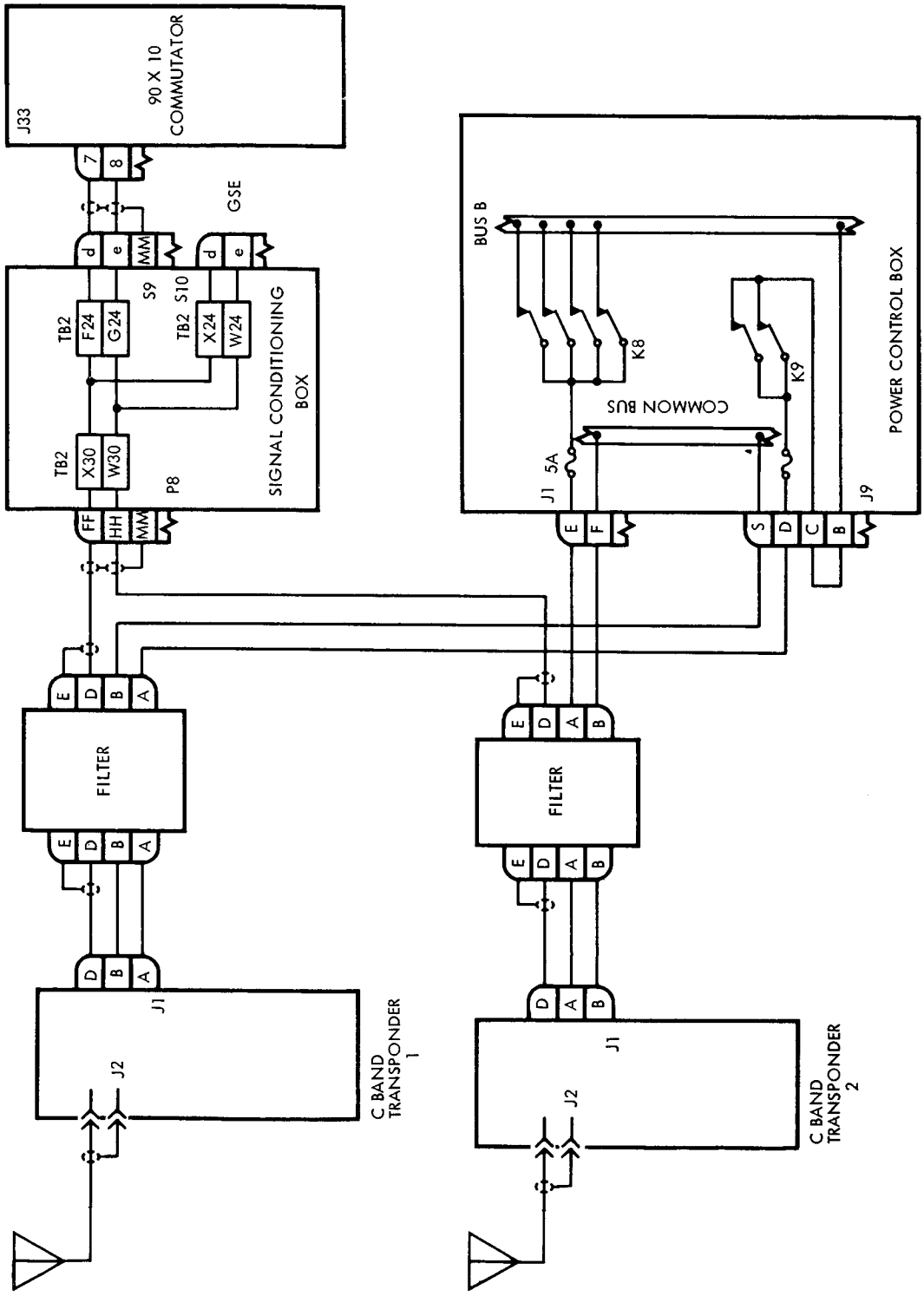

Figure 16. C-Band Transponder Circuit Diagram Apollo Boilerplate BP-13

[redacted]

~~CONFIDENTIAL~~

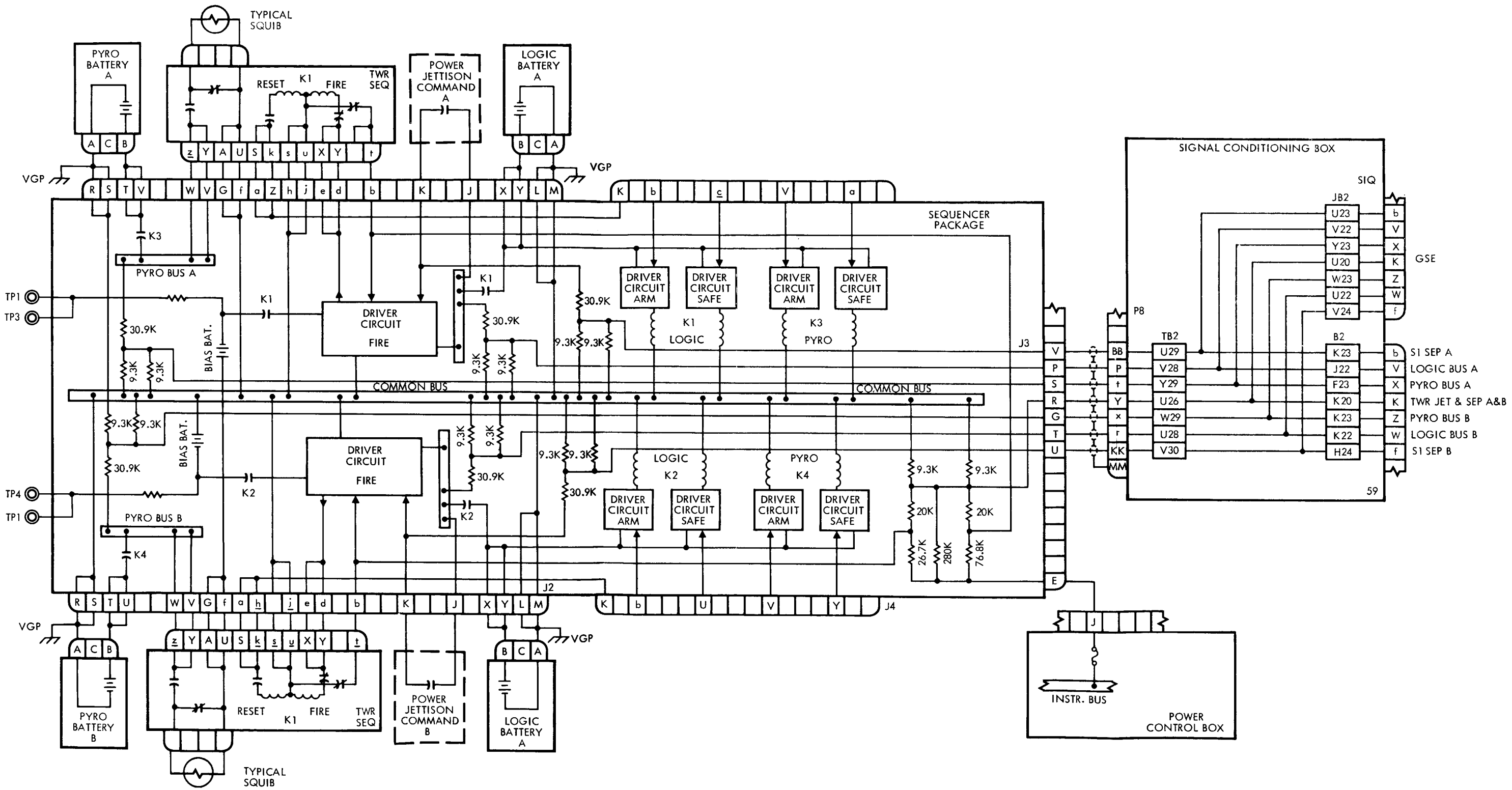

LES SEQUENCER SCHEMATIC

Figure 17. Apollo Boilerplate BP-13

~~CONFIDENTIAL~~

CONFIDENTIAL

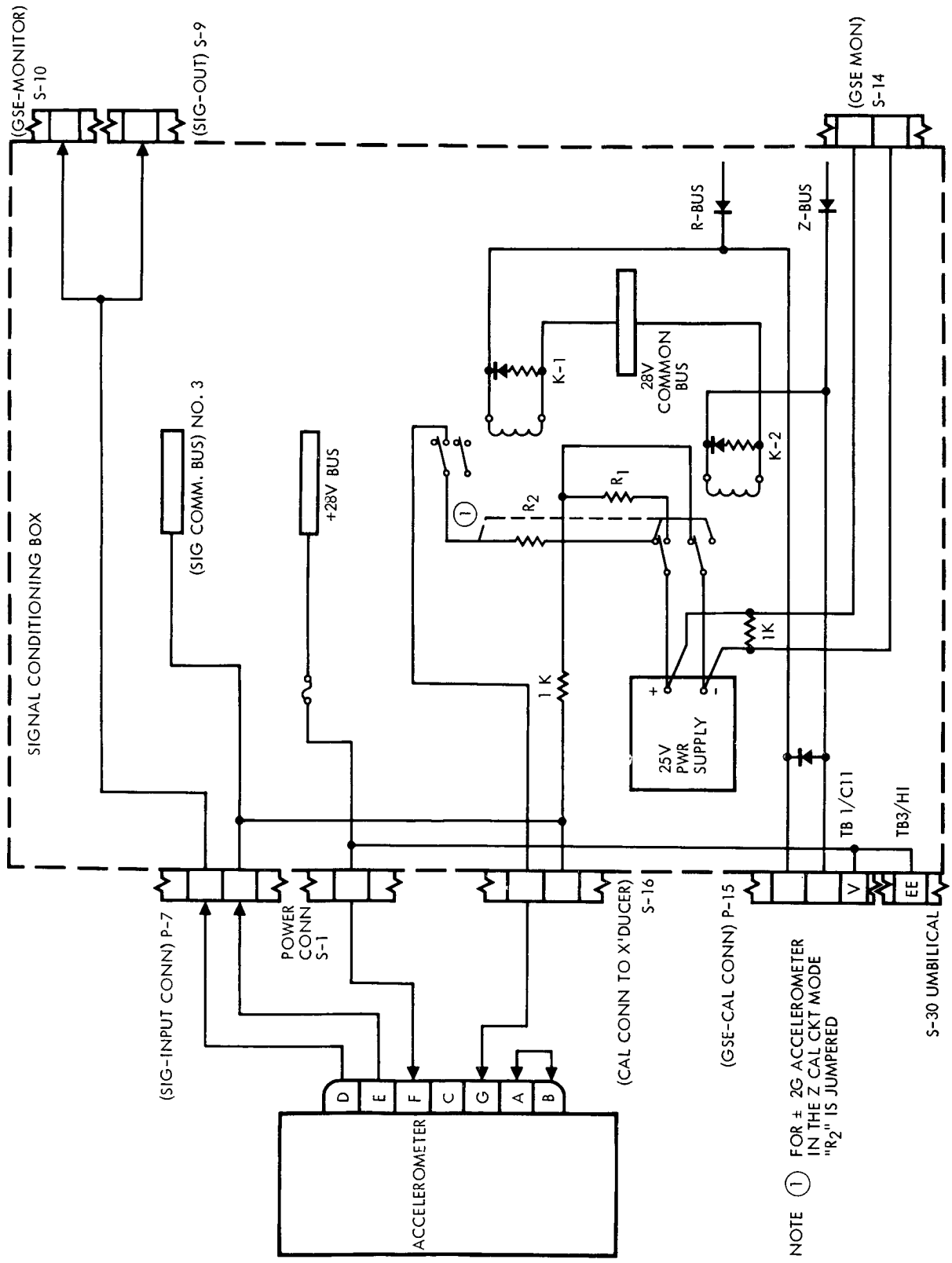

Figure 18. Modulation Package Diagram Apollo Boilerplate BP-13 (Sheet 1 of 2)

CONFIDENTIAL

[redacted]

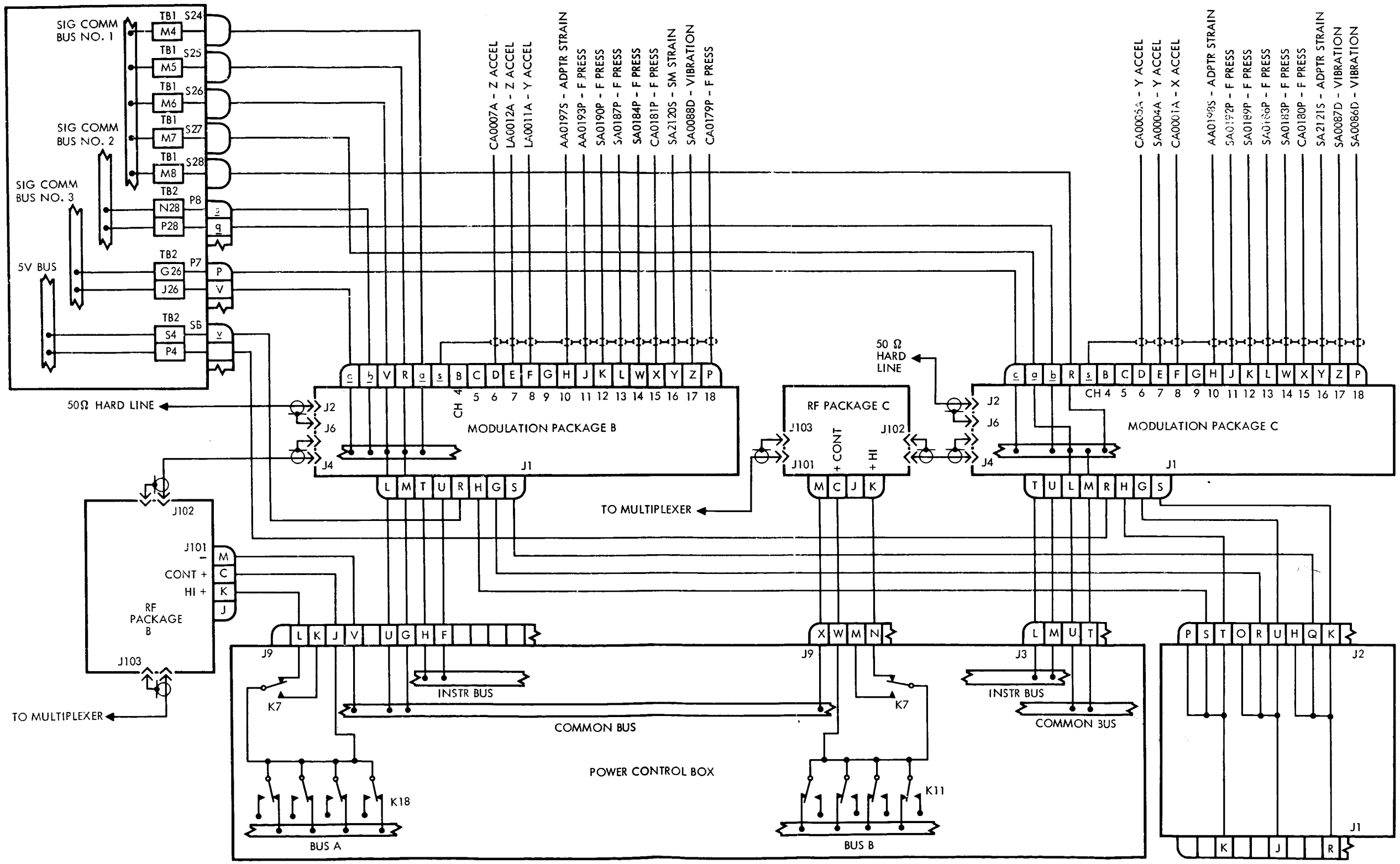

Figure 18. Modulation Package Diagram Apollo Boilerplate BP-13 (Sheet 2 of 2)

[redacted]

[redacted]

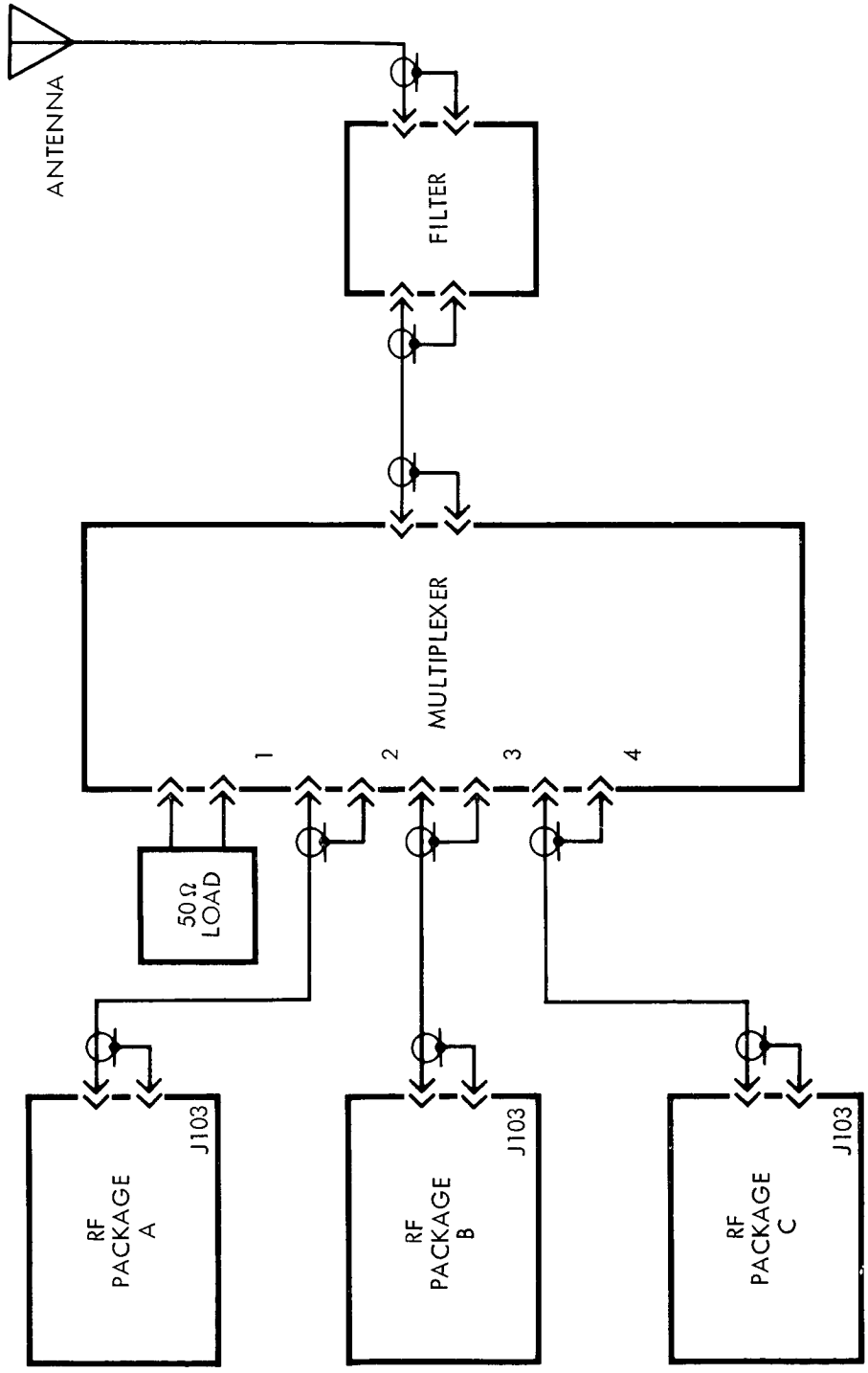

Figure 19. RF System Diagram Apollo Boilerplate BP-13

[redacted]

~~CONFIDENTIAL~~

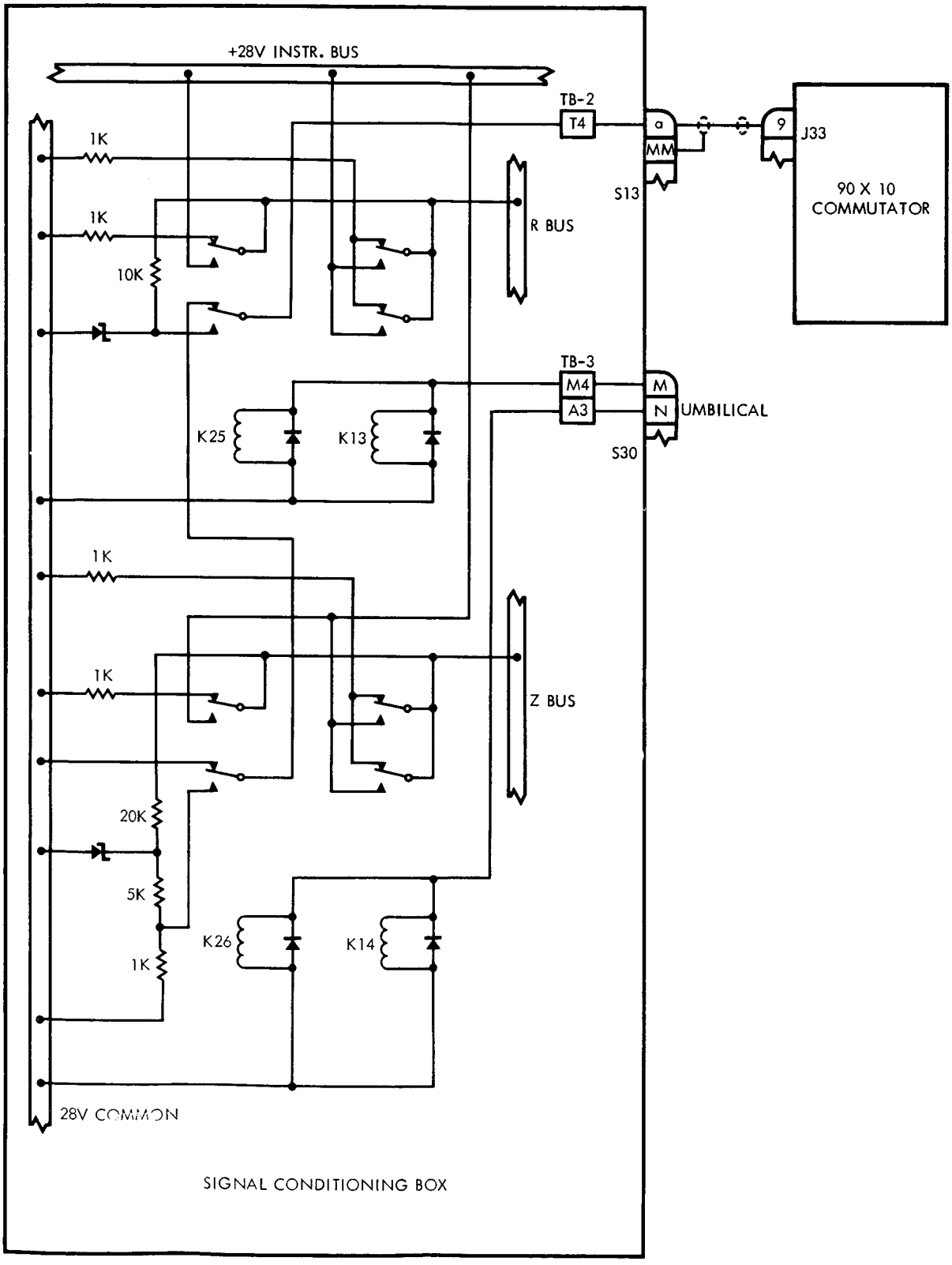

Figure 20. R & Z Bus Control Diagram Apollo Boilerplate BP-13

~~CONFIDENTIAL~~

[redacted]

TAB D

APOLLO FLIGHT RESEARCH AND DEVELOPMENT INSTRUMENTATION PERFORMANCE AND INTERFACE SPECIFICATION FOR BOILERPLATE BP-15

TABLE OF CONTENTS

Paragraph	Title	Page
1.	SCOPE	D1
1.1	Scope	D1
2.	APPLICABLE DOCUMENTS	D1
2.1	Applicability	D1
2.1.1	Non-Government Documents	D1
2.1.2	Other Documents	D1
2.1.3	Precedence	D2
3.	REQUIREMENTS	
3.1	General	D2
3.1.1	Configuration	D2
3.1.2	Electromagnetic Interference	D2
3.2	PERFORMANCE	D2
3.2.1	General	D2
3.3	INTERFACE	D3
3.3.1	General	D3
3.3.1.1	Interface Definition	D3
3.3.1.2	Mechanical Interface	D3
3.3.1.3	Electrical Interface	D3
3.3.1.4	Functional Interface	D3
4.	QUALITY ASSURANCE PROVISIONS	D3
5.	PREPARATION FOR DELIVERY	D3
6.	NOTES	D3
6.1	Intended Use	D3
6.2	Definitions	D3
6.2.1	Performance	D3
6.2.2	Boilerplate	D4

~~CONFIDENTIAL~~

LIST OF ILLUSTRATIONS

Figure Number	Title	Page
Figure 1.	Accelerometer Circuit Diagram Apollo Boilerplate BP-15 (Sheet 1 of 4)	D5
Figure 1.	Accelerometer Circuit Diagram Apollo Boilerplate BP-15 (Sheet 2 of 4)	D6
Figure 1.	Accelerometer Circuit Diagram Apollo Boilerplate BP-15 (Sheet 3 of 4)	D7
Figure 1.	Accelerometer Circuit Diagram Apollo Boilerplate BP-15 (Sheet 4 of 4)	D8
Figure 2.	Pin Assignments Accelerometer Circuits Apollo Boilerplate BP-15	D9
Figure 3.	Vibration System Diagram Apollo Boilerplate BP-15	D10
Figure 4.	Pin Assignments Vibration System Apollo Boilerplate BP-15	D11
Figure 5.	Pressure Transducer Diagram Apollo Boilerplate BP-15	D12
Figure 6.	Pin Assignments Pressure Transducer Apollo Boilerplate BP-15	D13
Figure 7.	Pressure Transducer Diagram Apollo Boilerplate BP-15	D14
Figure 8.	Pin Assignments Pressure Transducer Apollo Boilerplate BP-15	D15
Figure 9.	Strain Gauge Diagram Apollo Boilerplate BP-15	D16
Figure 10.	Pin Assignments Strain Gauge Apollo Boilerplate BP-15	D17
Figure 11.	Lift-off Circuit Diagram Apollo Boilerplate BP-15	D18
Figure 12.	Temperature Measurement System Diagram Apollo Boilerplate BP-15	D19
Figure 13.	Calorimeter Pin Assignments Apollo Boilerplate BP-15	D20
Figure 14.	Pin Assignments R.F. Package Temperature Monitor Apollo Boilerplate BP-15	D21
Figure 15.	Pin Assignments Resistance Thermometers Apollo Boilerplate BP-15	D22
Figure 16.	Bus A, Bus B and Current Monitor Diagram Apollo Boilerplate BP-15	D23
Figure 17.	C-Band Transponder Diagram Apollo Boilerplate BP-15	D24

~~CONFIDENTIAL~~

LIST OF ILLUSTRATIONS (Continued)

Figure Number	Title	Page
Figure 18.	LES Circuit Monitor Diagram Apollo Boilerplate BP-15	D25
Figure 19.	Modulation Package A Schematic Diagram Apollo Boilerplate BP-15	D26
Figure 20.	Modulation Package B and C Schematic Diagram Apollo Boilerplate BP-15	D27
Figure 21.	R.F. System Diagram Apollo Boilerplate BP-15	D28
Figure 22.	5-Volt Regulated Power Supply Diagram Apollo Boilerplate BP-15	D29

~~CONFIDENTIAL~~

APOLLO FLIGHT RESEARCH AND DEVELOPMENT INSTRUMENTATION PERFORMANCE AND INTERFACE SPECIFICATION FOR BOILERPLATE BP-15

1. SCOPE

1.1 Scope. - This specification tab defines the flight research and development instrumentation performance and interface requirements for Boilerplate BP-15.

2. APPLICABLE DOCUMENTS

2.1 Applicability. - Unless otherwise specified, the following documents of the issue in effect on the date of contract, form a part of this specification to the extent specified herein.

2.1.1 Non-Government Documents

SPECIFICATIONS

North American Aviation, Inc., Space and Information Systems Division (NAA/S&ID)

SID 63-565	Apollo Measurement Requirements for Boilerplate BP-15, dated 14 October 1963
MC 999-0002B	Specification for Electromagnetic Interference Control for Apollo Spacecraft System, dated 3 January 1963

2.1.2 Other Documents

INTERFACE CONTROL DOCUMENTS

North American Aviation, Inc., Space and Information Systems Division (NAA/S&ID)

MH01-02050-116	Communication and Instrumentation to Command Module Structure (X_c = 38.13) BP-15 ESD-NAA
MH01-02051-116	Communication and Instrumentation to Command Module Structure (X_c = 26.13) BP-15 ESD-NAA
MH01-02052-116	Communication and Instrumentation to Command Module Structure (X_c = 48.50) BP-15 ESD-NAA
MH01-02053-116	Communication and Instrumentation to Command Module Structure (X_c = 82.75) BP-15 ESD-NAA

2.1.3 Precedence. - For this specification, the order of precedence in case of conflict shall be as follows:

(a) The contract
(b) This specification
(c) Other documents referenced herein

3. RFQUIREMENTS

3.1 General. - The flight research and development (R and D) instrumentation shall be installed on Boilerplate BP-15 in the location shown in Figure (to be supplied). The power required and the weights of the various instrument packages, shall be as shown in Table (to be supplied). The signal inputs and outputs for instrumentation are shown in wiring diagrams (see Figures 1 through 22).

3.1.1 Configuration. - The configuration of flight R and D instrumentation shall be as shown in Figures (to be supplied).

3.1.2 Electromagnetic Interference. - The flight R and D instrumentation shall conform to the electromagnetic interference requirements as specified in Specification MC 999-0002B.

3.2 PERFORMANCE

3.2.1 General. - The measurement parameters for the flight research and development instrumentation for Boilerplate BP-15 are expressed in document SID 63-565.

3.3 INTERFACE

3.3.1 Interface Requirements. - The following paragraphs define the requirements for electrical and functional interface for the Apollo Flight R and D Instrumentation for BP-15.

3.3.1.1 Interface Definition. - Interface is defined as the junction point or points within or between systems or subsystems where matching or accommodation must be properly achieved in order to make their operation compatible with the successful operation of all other functional entities.

3.3.1.2 Mechanical Interface. - The Flight R and D Instrumentation Mechanical interface is definitized in Interface Control Documents (ICD's) MH01-02050-116; MH01-02051-116; MH01-02052-116; and MH01-02053-116.

3.3.1.3 Electrical Interface. - The Flight R and D Instrumentation electrical interface is definitized in ICD (document number to be supplied).

3.3.1.4 Functional Interface. - The Flight R and D Instrumentation functional interface is definitized in ICD (document number to be supplied).

4. QUALITY ASSURANCE PROVISIONS

Not applicable.

5. PREPARATION FOR DELIVERY

Not applicable.

6. NOTES

6.1 Intended Use. - This specification is intended to be used to define the performance and interface requirements of Flight R & D Instrumentation for Boilerplate BP-15.

6.2 Definitions. - For purposes of this specification, the following terms are defined.

6.2.1 Performance. - Performance is the ability to operate and function as an entity, without malfunctions, until the objective is accomplished.

6.2.3 Boilerplate. - Boilerplate is defined as a simulated item, including the necessary research and development instrumentation, to make an integrated assembly.

~~CONFIDENTIAL~~

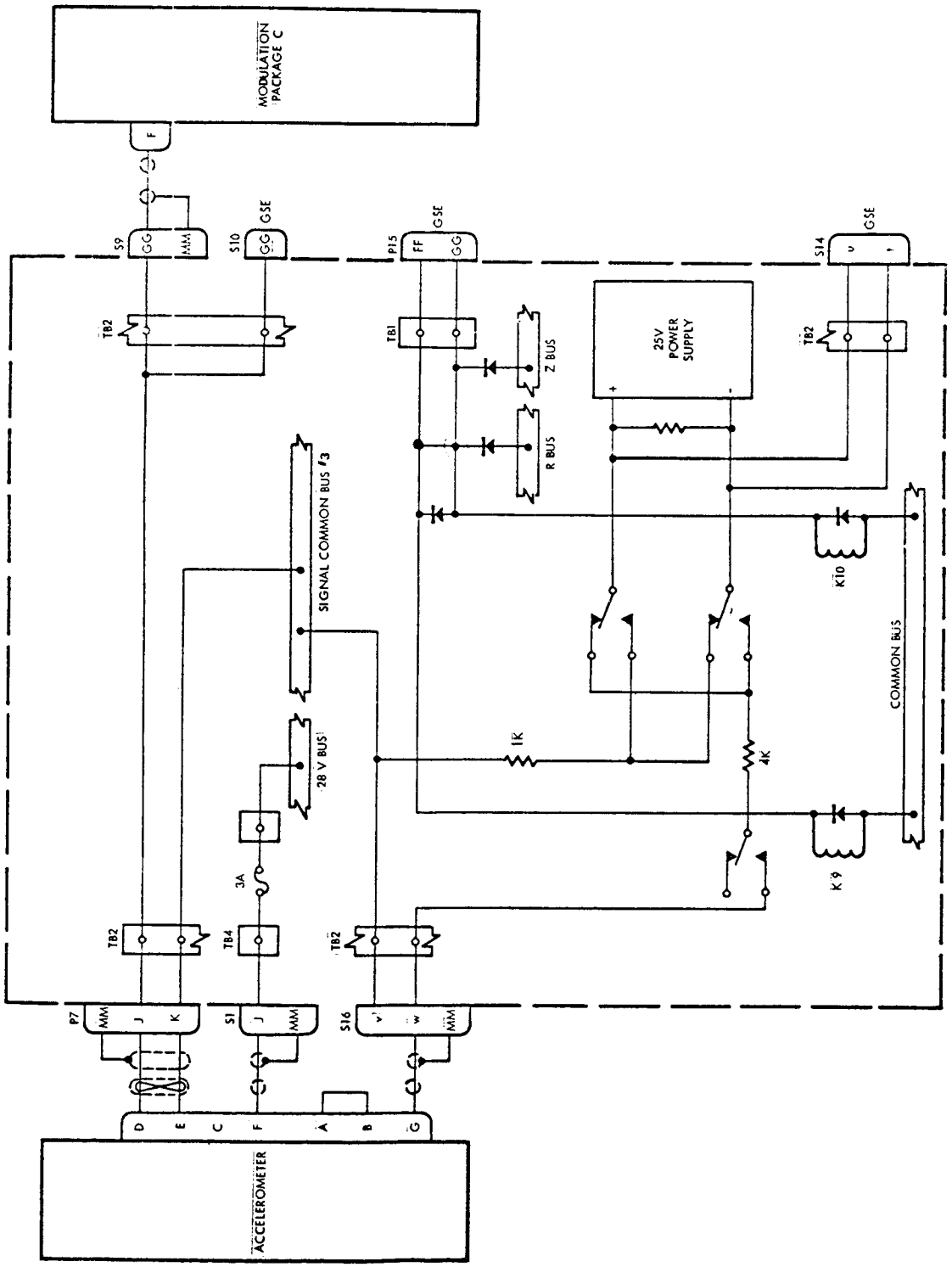

Figure 1. Accelerometer Circuit Diagram Apollo Boilerplate BP-15 (Sheet 1 of 4)

~~CONFIDENTIAL~~

[redacted]

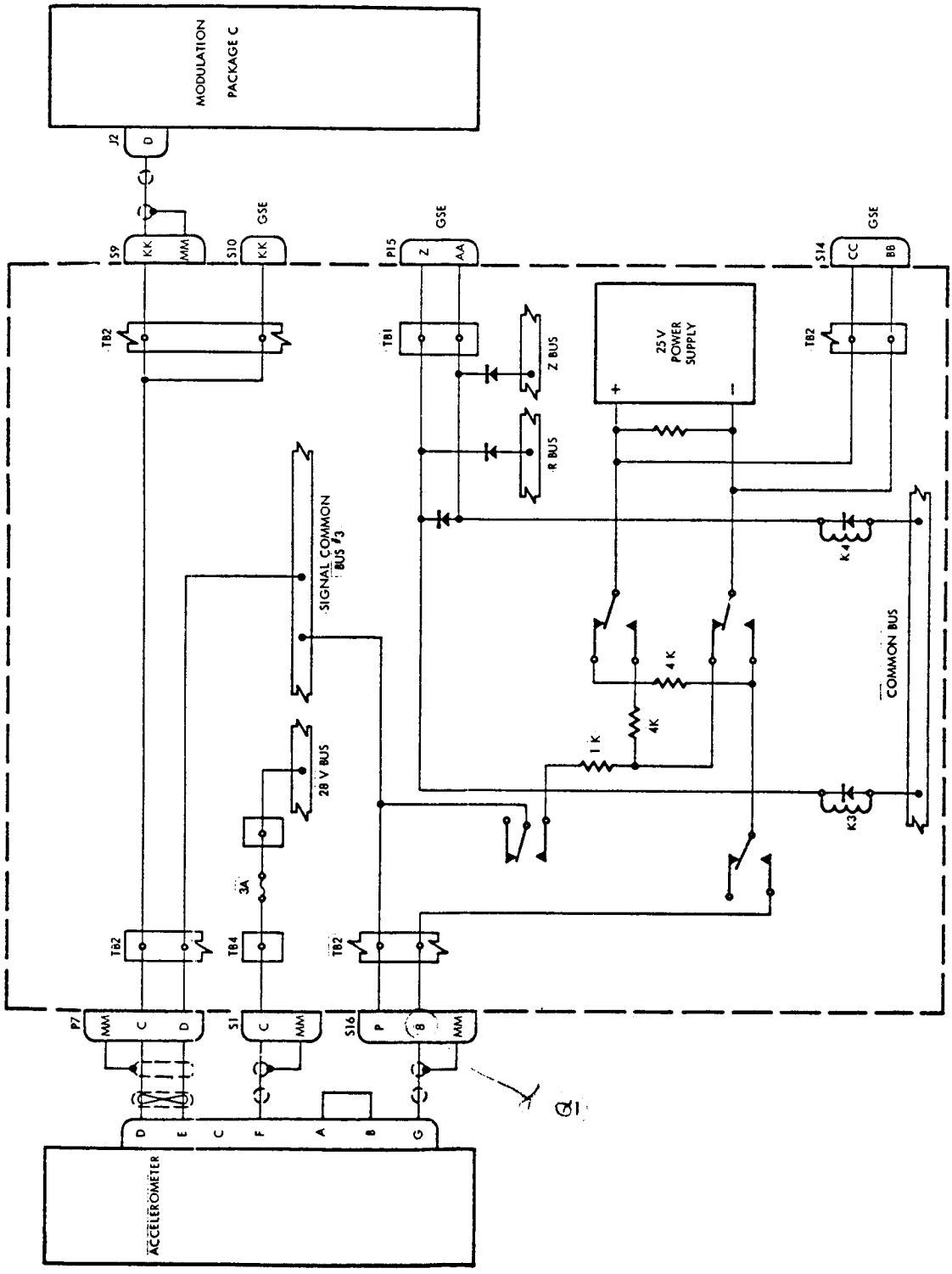

Figure 1. Accelerometer Circuit Diagram Apollo Boilerplate BP-15 (Sheet 2 of 4)

[redacted]

~~CONFIDENTIAL~~

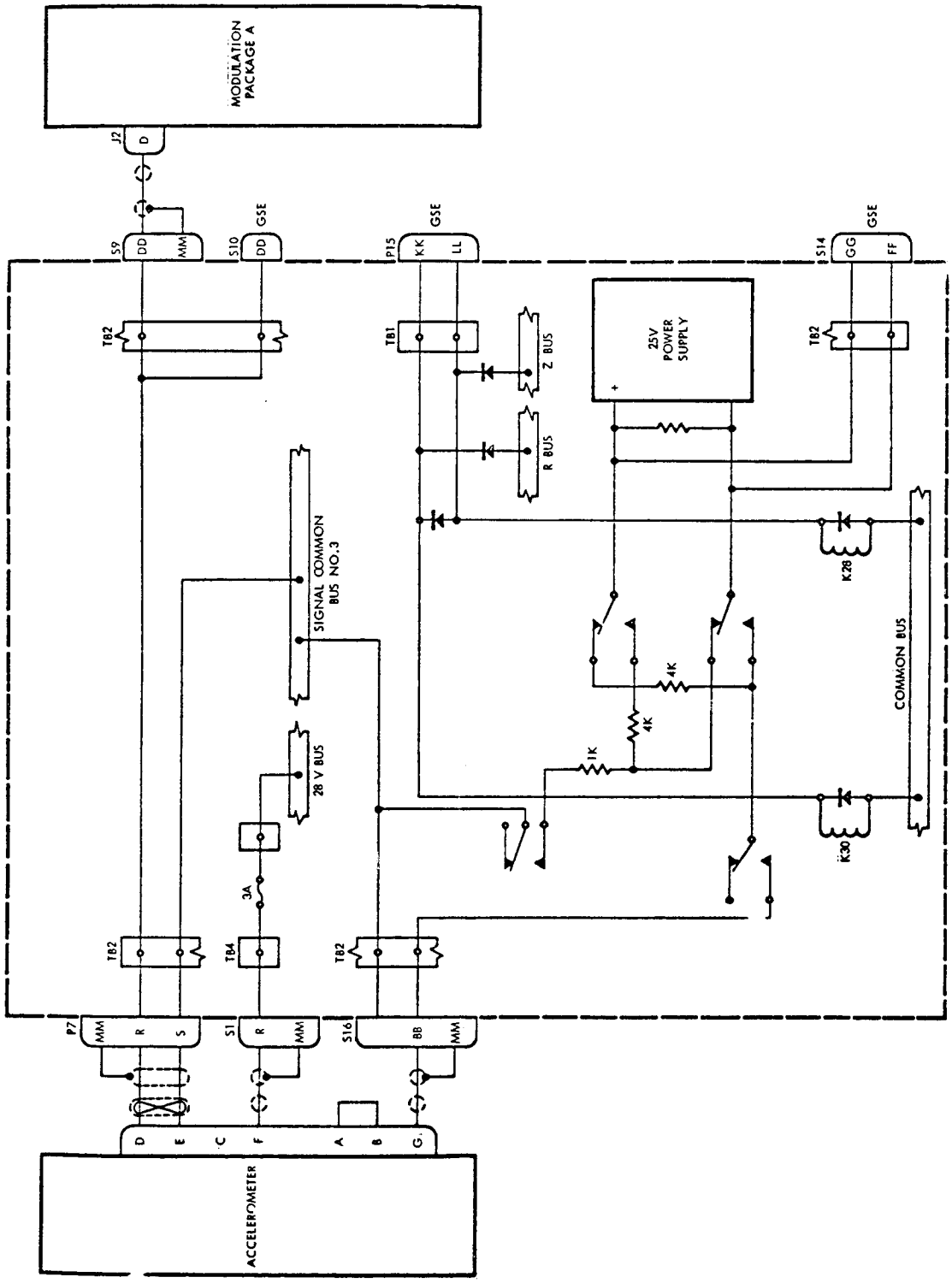

Figure 1. Accelerometer Circuit Diagram Apollo Boilerplate BP-15 (Sheet 3 of 4)

~~CONFIDENTIAL~~

~~CONFIDENTIAL~~

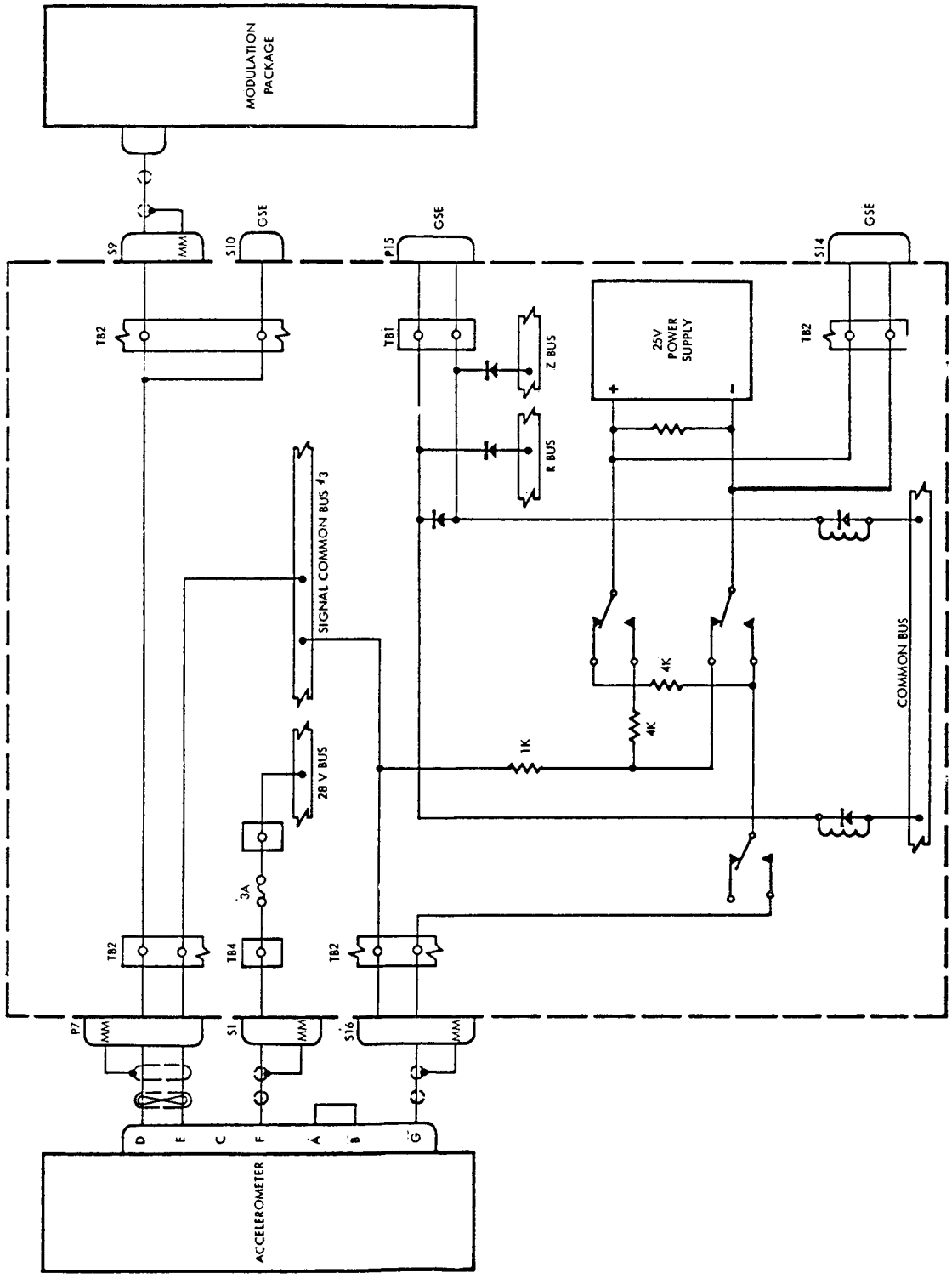

Figure 1. Accelerometer Circuit Diagram Apollo Boilerplate BP-15 (Sheet 4 of 4)

~~CONFIDENTIAL~~

~~CONFIDENTIAL~~

Accelerometer		Accel. to SC Box & Terms				GSE Connector		SC Box to Mod. Pack.		
		+Signal (PinD)		-Signal (PinE)				Connector		Mod.
Meas Code No.	Range	SC Box	TB 2	SC Box	TB 2	SC Box	TB 2	SC Box	TB 2	Plug
LA0011A	±2G	P7-A	A25	P7-B	F25	S10-LL	R24	S9-LL	D24	B-J2-F
LA0012A	±3G	P7-E	C25	P7-F	H25	S10-JJ	T24	S9-JJ	B24	B-J2-E
CA0001A	-2G +10G	P7-J	E25	P7-K	K25	S10-GG	N23	S9-GG	E23	C-J2-F
CA0007A	±3G	P7-G	D25	P7-H	J25	S10-HH	U24	S9-HH	A24	B-J2-D
CA0005A	±3G	P7-C	B25	P7-D	G25	S10-KK	S24	S9-KK	C24	C-J2-D
SA0004A	±2G	P7-L	A26	P7-M	F26	S10-FF	P23	S9-FF	D23	C-J2-E
SA0003A	±2G	P7-R	C26	P7-S	H26	S10-DD	S23	S9-DD	B23	A-J2-D

Accelerometer		Accelerometer to Signal Condition Box							
		Power (Pin F)				Cal Sig.		Cal. Sig. Return	
Meas Code No.	Range	Plug	TB 4	Fuse	TB	Plug	TB 2	Plug	TB2
LA0011A	±2G	S1-A	F27	3A	E24	S16-n	F4	S16-m	E4
LA0012A	±3G	S1-E	H27	3A	E24	S16-s	J4	S16-r	J4
CA0001A	-2G +10G	S1-J	K27	3A	E24	S16-w	C5	S16-v	C5
CA0007A	±3G	S1-G	J27	3A	E24	S16-u	B5	S16-t	H5
CA0005A	±3G	S1-C	G27	3A	E24	S16-q	H4	S16-p	G4
SA0004A	±2G	S1-N	G28	3A	E24	S16-y	F5	S16-x	E5
SA0003A	±2G	S1-R	H28	3A	E24	S16-BB	J5	——	——

Accelerometer	Calibration						Power Supply					
	R Cal. Cmd.			Z Cal. Cmd.			+25V			-25V		
Meas Code No.	Rly	TB 1	Plug	Rly	TB 1	Plug	Term No.	TB 2	Plug	Term No.	TB 2	Plug
LA0011A	K1	E11	P15-x	K2	F11	P15-J	1-7	H2	S14-w	1-8	H1	S14-V
LA0012A	K5	J11	P15-BB	K6	K11	P15-CC	1-3	J5	S14-AA	1-4	H5	S14-z
CA0001A	K9	C12	P15-FF	K10	D12	P15-GG	2-1	G6	S14-u	2-2	F6	S14-t
CA0007A	K7	A12	P15-DD	K8	B12	P15-EE	1-5	H4	S14-y	1-6	H3	S14-x
CA0005A	K3	G11	P15-z	K4	H11	P15-AA	1-1	H6	S14-CC	1-2	K5	S14-BB
SA0004A	K11	D12	P15-HH	K12	F12	P15-JJ	2-3	E6	S14-s	2-4	G5	S14-r
SA0003A	K30	G12	P15-KK	K28	H12	P15-LL	2-7	K2	S14-GG	2-8	J2	S14-FF

Figure 2. Pin Assignments Accelerometer Circuits Apollo Boilerplate BP-15

SID 62-1001 Tab D

~~CONFIDENTIAL~~

~~CONFIDENTIAL~~

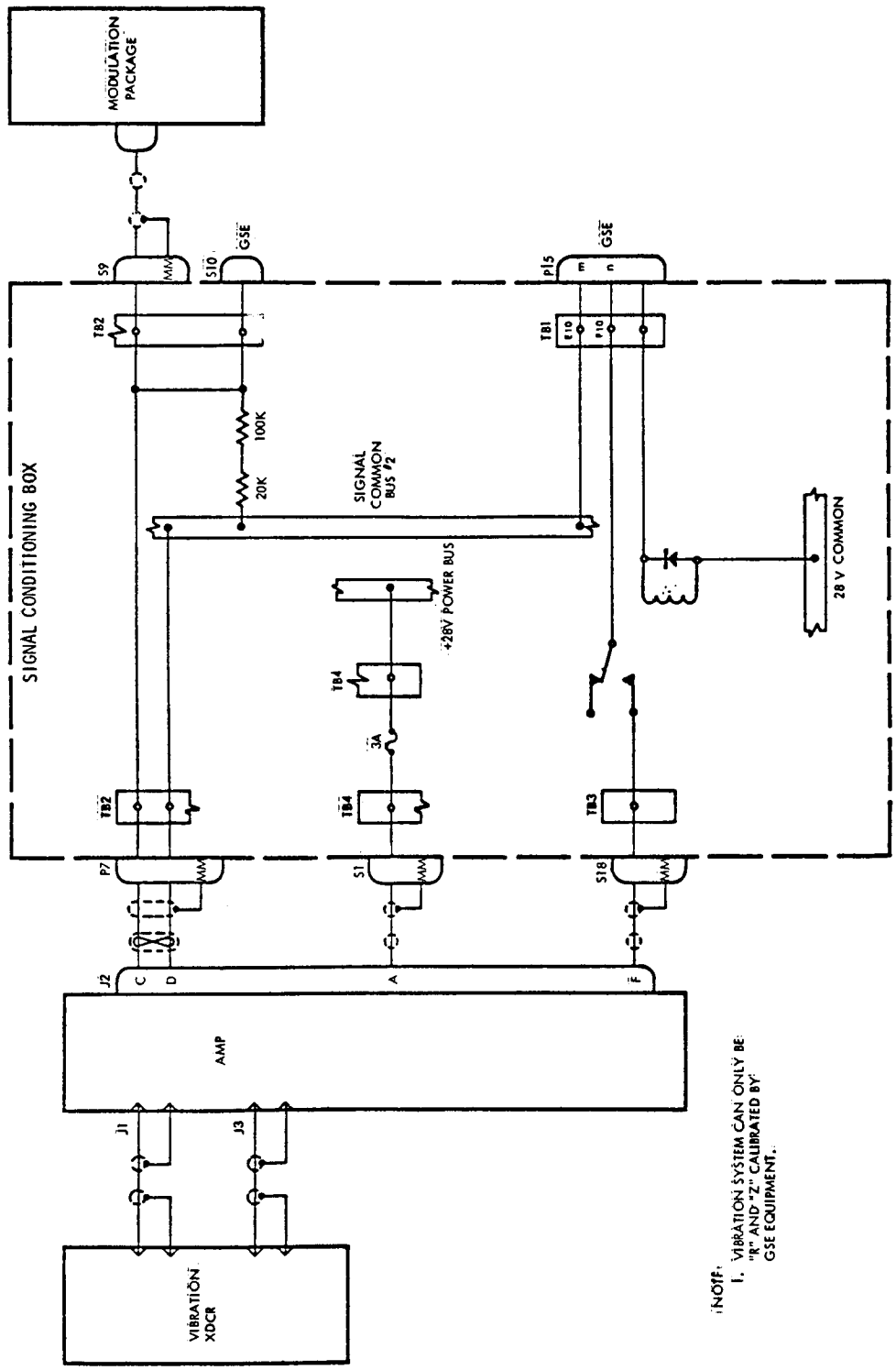

Figure 3. Vibration System Diagram Apollo Boilerplate BP-15

~~CONFIDENTIAL~~

[redacted]

Vibration	Amplifier to Signal Cond. Box				Calibration		GSE Mon. Output	Sig. Cond. Box Signal Out	Modulation Pack Signal In
	Pin A	Pin D	Pin C	Pin F	Control In	Rly			
SA0021D	S1-T	P7-c	P7-j	S18-BB	P15-q	K23	S10-u	S9-u	A-J2-Y
SA0088D	S1-p	P7-e	P7-h	S18-EE	P15-p	K24	S10-v	S9-v	B-J2-Z
SA0087D	S1-r	P7-g	P7-f	S18-FF	P15-r	K22	S10-w	S9-w	C-J2-Z
SA0086D	S1-t	P7-i	P7-d	S18-GG	P15-t	K18	S10-x	S9-x	C-J2-P

Figure 4. Pin Assignments Vibration System Apollo Boilerplate BP-15

[redacted]

~~CONFIDENTIAL~~

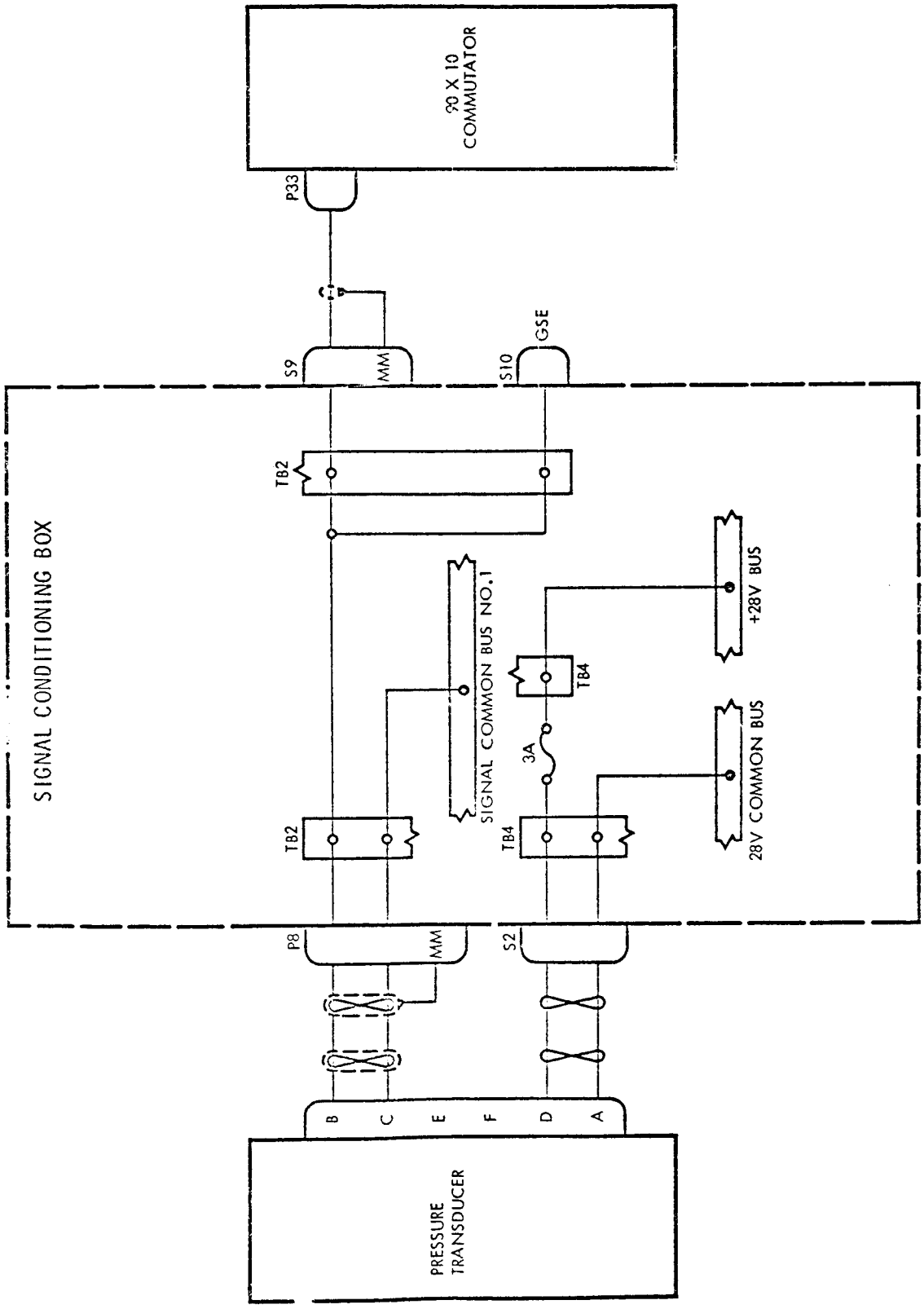

Figure 5. Pressure Transducer Diagram Apollo Boilerplate BP-15

~~CONFIDENTIAL~~

[redacted]

Press. X'ducer	Transducer to Signal Conditioning Box & Terminals										GSE		SC Box to Commutator		
	+28 V Power (Pin D)				-28 V (Pin A)		+ Signal (Pin B)		- Signal (Pin C)						
Meas No.	SC Box	TB 4	Fuse	TB 4	SC Box	TB 4	SC Box	TB 2	SC Box	TB 2	SC Box	TB 2	SC Box	TB 2	Comtr.
CA0071P	S2-A	F7	3A	A7	S2-B	L7	P8-T	V26	P8-U	P26	S10-J	V20	S9-J	J20	J33-16
SA0613P	S1-L	F28	3A	E24	S1-M	L28	P5-HH	F18	P5-JJ	K17	S12-B	B7	S11-B	B7	J33-37
CA0072P	S2-C	G7	3A	B7	S2-D	M7	P8-V	U26	P8-W	N26	S10-K	U20	S9-K	K20	J33-17
CA0073P	S2-E	H7	3A	C7	S2-F	N7	P8-X	Y27	P8-Y	T27	S10-L	Y21	S9-L	F21	J33-18
CA0074P	S2-G	J7	3A	D7	S2-H	P7	P8-Z	X27	P8-a	S27	S10-M	X21	S9-M	G21	J33-19
CA0075P	S2-J	K7	3A	E7	S2-K	R7	P8-b	W27	Pi-c	R27	S10-N	W21	S9-N	H21	J33-20
CA0076P	S2-L	F8	3A	A8	S2-M	L8	P8-d	V27	P8-e	P27	S10-P	V21	S9-P	J21	J33-21
CA0077P	S2-N	G8	3A	B8	S2-P	M8	P8-f	U27	P8-g	N27	S10-R	U21	S9-R	K21	J33-22
CA0078P	S2-R	H8	3A	C8	S2-S	N8	P8-h	Y28	P8-i	T28	S10-S	Y22	S9-S	F22	J33-23
CA0079P	S2-T	J8	3A	D8	S2-U	P8	P8-j	X28	Pi-k	S28	S10-T	X22	S9-T	G22	J33-24
CA0611P	S2-V	K8	3A	E8	S2-W	R8	P8-m	W28	P8-n	R28	S10-U	W22	S9-U	H22	J33-38

Figure 6. Pin Assignments Pressure Transducer Apollo Boilerplate BP-15

[redacted]

[redacted]

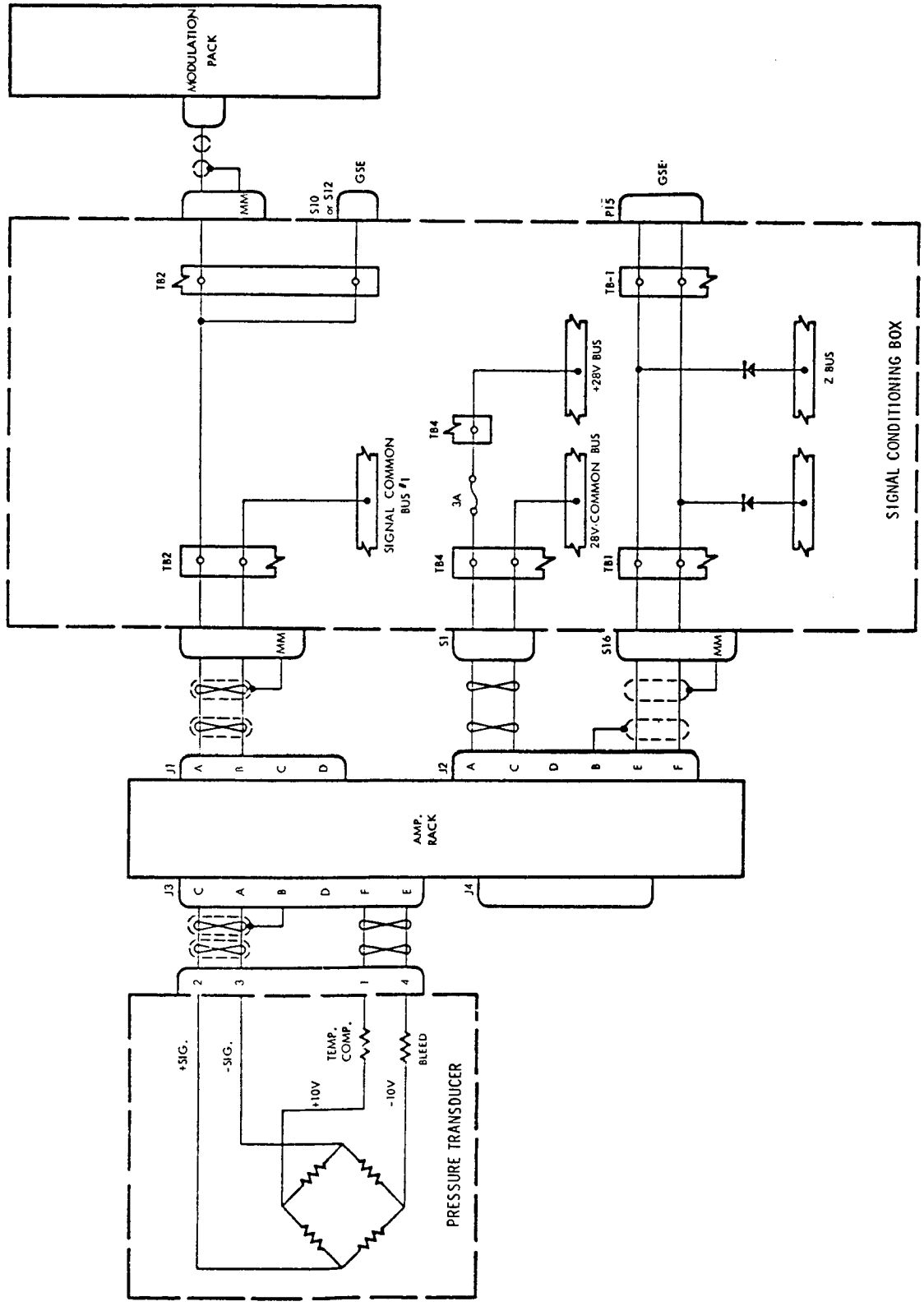

Figure 7. Pressure Transducer Diagram Apollo Boilerplate BP-15

[redacted]

Press. Xder. Meas No.	Amp. Rack & Plug Input	Amp. Rack to Sig. Cond. Box & SC Terminals						GSE Plug & Terminals		Sig. Cond. to Mod. Pack.		
		+ Signal			- Signal					SC Box		Mod. Pack
		Amp.	SC Box	TB 2	Amp.	SC Box	TB 2	Pin	TB 2	Pin	TB 2	
CA0179P	Amp 8-J4	J1-C	P5-v	E17	J1-D	P5-w	J16	S12-H	W8	S11-H	D8	B-J2-P
CA0180P	Amp 7-J4	J1-C	P5-t	D17	J1-D	P5-u	H16	S12-J	S9	S11-J	A9	C-J2-X
CA0181P	Amp 7-J3	J1-A	P5-r	C17	J1-B	P5-s	G16	S12-K	R9	S11-K	B9	B-J2-X
SA0182P	Amp 6-J4	J1-C	P7-KK	D30	J1-D	P7-LL	E30	S10-g	T19	S9-g	A19	A-J2-X
SA0183P	Amp 6-J3	J1-A	P7-HH	C30	J1-B	P7-JJ	H30	S10-h	S19	S9-h	B19	C-J2-W
SA0184P	Amp 5-J4	J1-C	P7-FF	B30	J1-D	P7-GG	G30	S10-i	R19	S9-i	C19	B-J2-W
SA0185P	Amp 5-J3	J1-A	P7-DD	A30	J1-B	P7-EE	F30	S10-j	P19	S9-j	D19	A-J2-W
SA0186P	Amp 4-J4	J1-C	P7-BB	E29	J1-D	P7-CC	K29	S10-k	N19	S9-k	E19	C-J2-L
SA0187P	Amp 4-J3	J1-A	P7-z	D29	J1-B	P7-AA	J29	S12-A	T20	S11-A	A20	A-J2-L
SA0188P	Amp 3-J4	J1-C	P7-x	C29	J1-D	P7-y	H29	S10-n	S20	S9-n	B20	A-J2-K
SA0189P	Amp 3-J3	J1-A	Pu-v	B29	J1-B	P7-w	G29	S10-p	R20	S9-p	C20	C-J2-K
SA0190P	Amp 2-J4	J1-C	P7-t	A29	J1-D	P7-u	F29	S10-q	P20	S9-q	D20	B-J2-K
SA0191P	Amp 2-J3	J1-A	P7-r	E28	J1-B	P7-s	K28	S10-r	N20	S9-r	E20	A-J2-J
SA0192P	Amp 1-J4	J1-C	P5-X	D15	J1-D	P5-Y	H14	S12-V	T12	S11-V	A12	C-J2-J
SA0193P	Amp 1-J3	J1-A	P5-V	C15	J1-B	P5-W	G14	S12-W	S12	S11-W	B12	B-J2-J

Amp. Rack No.	Amp. Rack to Sig. Cond. Box Power						R Cal.				Z Cal.			
	+28V (J2-A)				-28V (J2-C)		Amp. (J2-F)		GSE		Amp. (J2-E)		GSE	
	SC Box	TB 4	Fuse	TB 4	SC Box	TB 4	SC Box	TB 1	SC Box	TB 1	SC Box	TB 1	SC Box	TB 1
8	S1-KK	J32	3A	D32	S1-LL	K32	S16-D	D1	P15-D	D7	S16-C	C1	P15-C	C7
7	S1-j	G30	3A	B30	S1-k	M30	S16-B	B1	P15-B	B7	S16-A	A1	P15-A	A7
6	S1-h	F30	3A	A30	S1-i	L30	S16-Y	B3	P15-Y	B9	S16-X	A3	P15-X	A9
5	S1-f	K29	3A	E29	S1-g	R29	S16-W	K2	P15-W	K8	S16-V	J2	P15-V	J8
4	S1-d	J29	3A	D29	S1-e	P29	S16-U	H2	P15-U	H8	S16-T	G2	P15-T	G8
3	S1-b	H29	3A	C29	S1-c	N29	S16-S	F2	P15-S	F8	S16-R	E2	P15-R	E8
2	S1-z	G29	3A	B29	S1-a	M29	S16-P	D2	P15-P	D8	S16-N	C2	P15-N	C8
1	S1-X	F29	3A	A29	S1-Y	L29	S16-M	B2	P15-M	B8	S16-L	A2	P15-L	A8

Figure 8. Pin Assignments Pressure Transducer Apollo Boilerplate BP-15

[redacted]

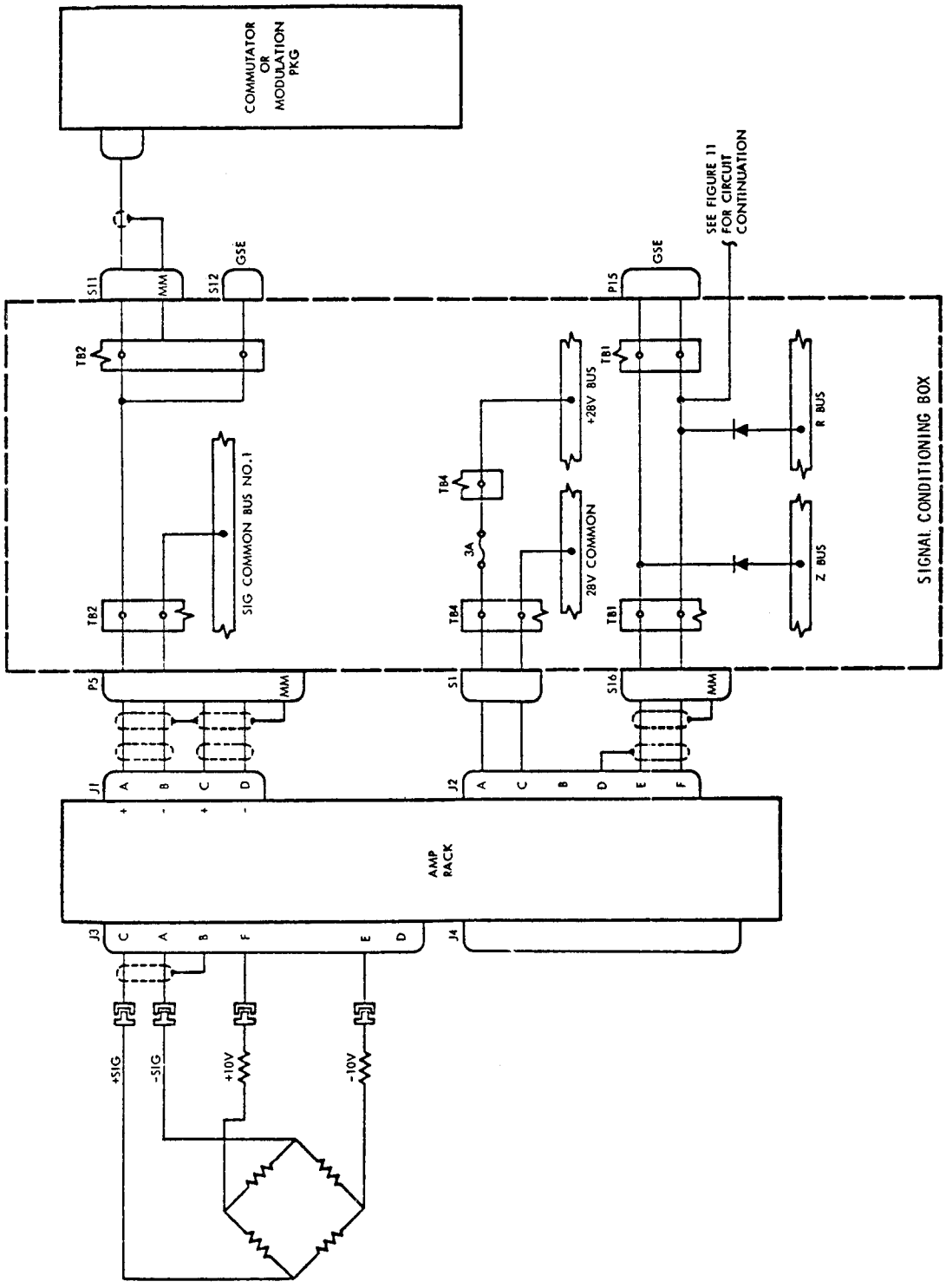

Figure 9. Strain Gauge Diagram Apollo Boilerplate BP-15

[redacted]

[redacted]

Strain Gauge Meas. No.	Amp. Rack & Plug Input	Amp. Rack to Sig. Cond. Box & SC Terminals: + Signal Amp	+ Signal SC Box	+ Signal TB 2	- Signal Amp	- Signal SC Box	- Signal TB 2	GSE Plug & Terminals Pin	GSE Plug & Terminals TB 2	Sig. Cond. to Mod. Pack SC Box Pin	SC Box TB 2	Mod. Pack
AA0195S	Amp 9-J3	J1-A	P5-Z	E15	J1-B	P5-a	J14	S12-U	N11	S11-U	C11	A-J2-G
AA0196S	Amp 9-J4	J1-C	P5-b	A16	J1-D	P5-c	K14	S12-T	P11	S11-T	B11	A1J2-H
AA0197S	Amp 10-J3	J1-A	P5-d	B16	J1-B	P5-e	F15	S12-S	R11	S11-S	A11	B-J2-H
AA0198S	Amp 10-J4	J1-C	P5-f	C16	J1-D	P5-g	G15	S12-R	N10	S11-R	C10	C-J2-H
SA2120S	Amp 11-J3	J1-A	P7-m	C28	J1-B	P7-a	G27	S10-t	S21	S9-t	B21	B-J2-Y
SA2121S	Amp 11-J4	J1-C	P7-p	D28	J1-D	P7-y	F27	S10-s	T21	S9-s	A21	C-J2-Y

Rack Amp. Rack No.	Amp. Rack to Sig. Cond. Box Power: +28V (J2-A) SC Box	+28V (J2-A) TB4	+28V (J2-A) Fuse	+28V (J2-A) TB4	-28V (J2-C) SC Box	-28V (J2-C) TB4	R Cal. Amp. (J2-F) SC Box	R Cal. Amp. (J2-F) TB1	R Cal. GSE SC Box	R Cal. GSE TB1	Z Cal. Amp. (J2-E) SC Box	Z Cal. Amp. (J2-E) TB1	Z Cal. GSE SC Box	Z Cal. GSE TB1
9	S1-v	G31	3A	B31	S1-w	M31	S16-F*	F1	P15-F	F7	S16-E	E1	P15-E	E7
10	S1-x	H31	3A	C31	S1-y	N31	S16-H	H1	P15-H	H7	S16-G	G1	P15-G	G7
11	S1-V	K28	3A	E28	S1-m	H30	S18-DD	A22	P17-u	B15	S18-CC	K21	P17-t	A15

* Note: The Lift Off Signal applies a momentary R calibration on Amplifier Rack number 9.

Figure 10. Pin Assignments Strain Gauge Apollo Boilerplate BP-15

[redacted]

~~CONFIDENTIAL~~

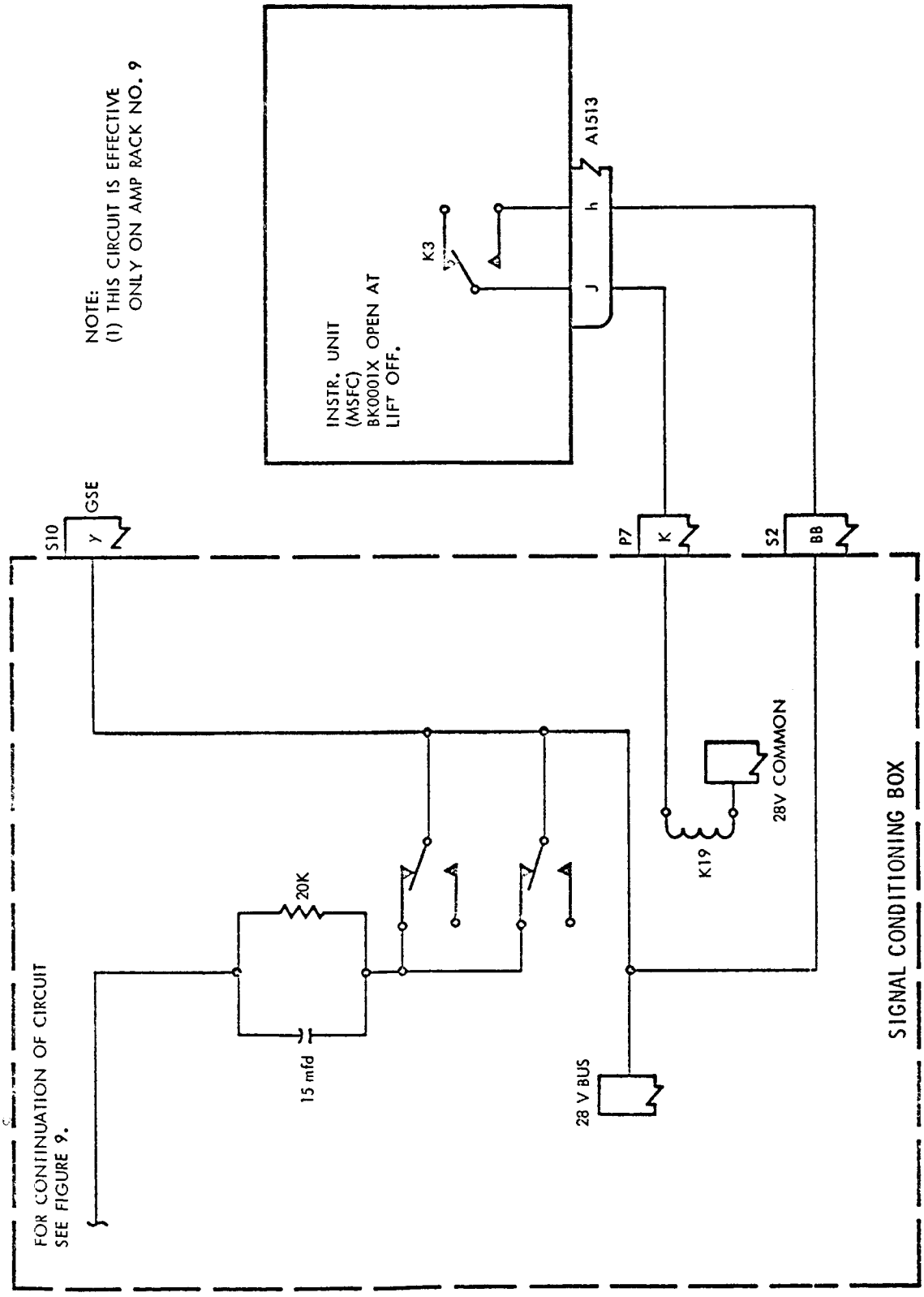

Figure 11. Lift-Off Circuit Diagram Apollo Boilerplate BP-15

~~CONFIDENTIAL~~

~~CONFIDENTIAL~~

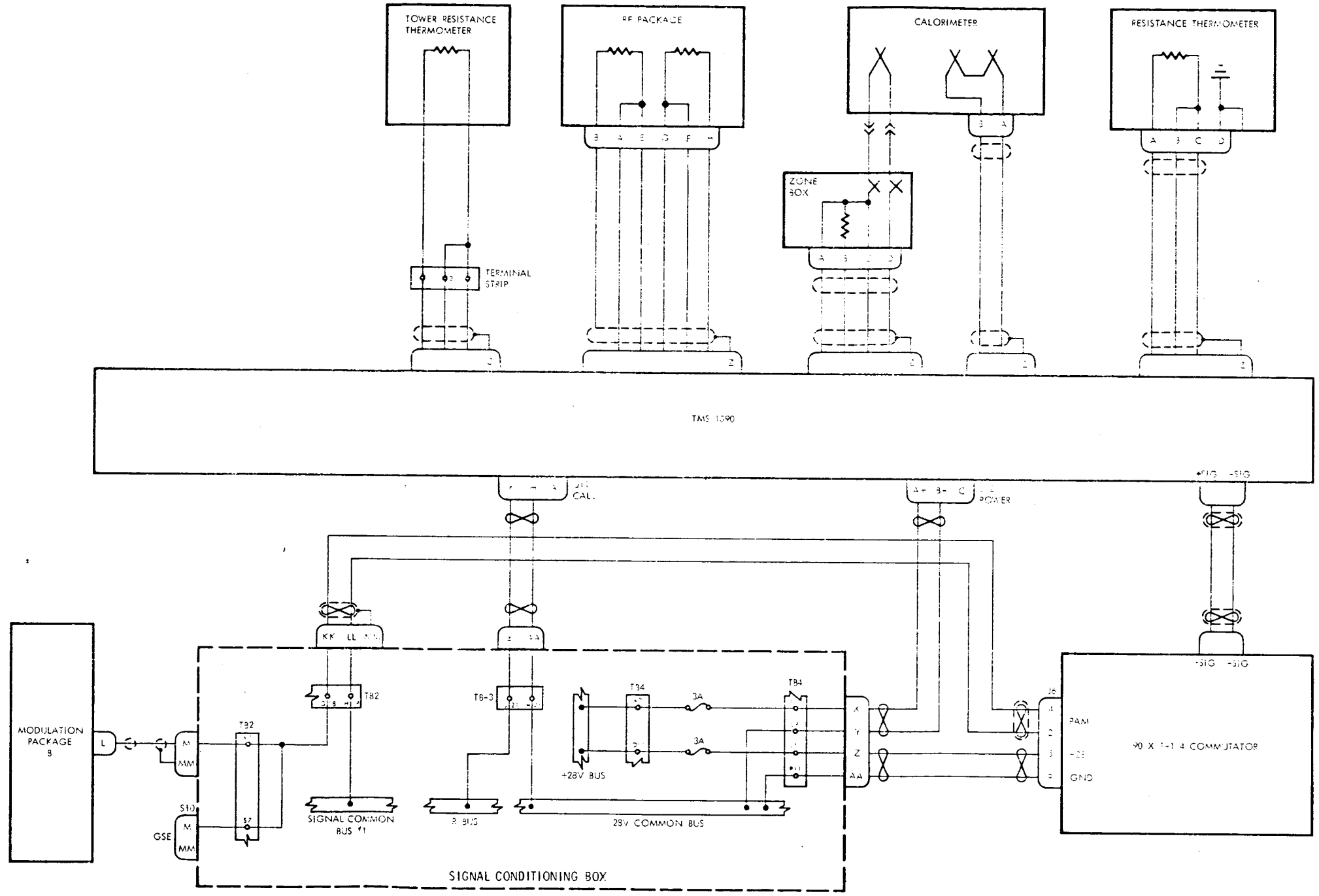

Figure 12. Temperature Measurement System Diagram Apollo Boilerplate BP-15

~~CONFIDENTIAL~~

[redacted]

CALOR. MEAS. NO.	CALORIMETER TO TMS 1090 SCB						TMS 1090 SCB TO COMMUTATOR				COMMUTATOR CHANNEL NUMBER
	CALOR. PLUG		ZONE BOX PLUG				TMS 1090 OUT		COMMUTATOR IN		
	Pin A	Pin B	Pin A	Pin B	Pin C	Pin D	+Signal	-Signal	+Signal	-Signal	
CA0580R	J1-a	J1-b					J7-u	J7-v	J1-AA	J1-BB	12
CA0651T			J2-C	J2-D	J2-e	J2-d	J7-C	J7-D	J2-W	J2-X	32
CA0581R	J1-X	J1-Y					J7-w	J7-x	J1-CC	J1-DD	13
CA0652T			J2-E	J2-F	J2-g	J2-f	J7-E	J7-F	J2-Y	J2-Z	33
CA0582R	J1-V	J1-W					J7-Y	J7-z	J1-EE	J1-FF	14
CA0653T			J3-G	J3-H	J3-J	J3-h	J8-G	J8-H	J2-AA	J2-BB	34
CA0583R	J1-S	J1-T					J7-AA	J7-BB	J1-HH	J1-JJ	15
CA0654T			J3-K	J3-L	J3-j	J3-i	J8-J	J8-K	J2-CC	J2-DD	35
CA0584R	J1-A	J1-B					J7-GG	J7-HH	J7-KK	J1-LL	16
CA0655T			J3-x	J3-y	J3-z	J3-KK	J8-L	J8-M	J2-EE	J2-FF	36
CA0585R	J1-C	J1-D					J7-JJ	J7-KK	J1-MM	J1-NN	17
CA0656T			J3-AA	J3-BB	J3-CC	J3-LL	J8-a	J8-b	J2-HH	J2-JJ	37
CA0586R	J1-E	J1-F					J7-MM	J7-NN	J1-PP	J1-RR	18
CA0657T			J3-M	J3-N	J3-m	J3-k	J8-c	J8-d	J2-KK	J3-LL	38
CA0587R	J2-G	J2-H					J7-PP	J7-LL	J1-SS	J1-TT	19
CA0658T			J3-HH	J3-JJ	J3-PP	J3-NN	J8-e	J8-f	J2-MM	J2-NN	39
CA0588R	J2-K	J2-L					J7-EE	J7-FF	J1-UU	J1-VV	20
CA0659T			J3-MM	J3-DD	J3-EE	J3-FF	J8-g	J8-h	J2-PP	J2-RR	40
CA0589R	J2-x	J2-y					J7-CC	J7-DD	J1-WW	J1-XX	21
CA0660T			J3-P	J3-R	J3-p	J3-n	J8-i	J8-j	J2-SS	J2-TT	41
CA0590R	J2-AA	J2-BB					J7-k	J7-m	J1-YY	J1-ZZ	22
CA0661T			J3-a	J3-b	J3-v	J3-u	J8-u	J8-v	J2-UU	J2-VV	42
CA0591R	J2-M	J2-N					J7-n	J7-p	J2-A	J2-B	23
CA0662T			J3-X	J3-Y	J3-GG	J3-t	J8-w	J8-x	J3-WW	J2-XX	43
SA0553R	J2-HH	J2-JJ					J7-q	J7-r	J2-C	J2-D	24
SA0667T			J3-V	J3-W	J3-s	J3-r	J8-y	J8-z	J2-YY	J2-ZZ	44
SA0554R	J2-MM	J2-DD					J7-s	J7-t	J2-E	J2-F	25
SA0668T			J3-S	J3-T	J3-U	J3-q	J8-AA	J8-BB	J3-A	J3-B	45
SA0598R	J2-P	J2-R					J7-N	J7-P	J2-H	J2-J	26
SA0669T			J3-A	J3-B	J3-w	J3-c	J8-GG	J8-HH	J3-C	J3-D	46
SA0555R	J2-a	J2-b					J7-R	J7-S	J2-K	J2-L	27
SA0670T			J3-C	J3-D	J3-e	J3-d	J8-JJ	J8-KK	J3-E	J3-F	47
SA0550R	J2-X	J2-Y					J7-T	J7-U	J2-M	J2-N	28
AA0663T			J3-E	J3-F	J3-g	J3-f	J8-MM	J8-NN	J3-H	J3-J	48
SA0551R	J2-V	J2-W					J7-V	J7-W	J2-P	J2-R	29
AA0664T			J4-G	J4-H	J4-j	J4-h	J8-PP	J8-LL	J3-K	J3-L	49
AA0594R	J2-S	J2-T					J7-X	J7-Y	J2-S	J2-T	30
AA0665T			J4-K	J4-L	J4-j	J4-i	J8-EE	J8-FF	J3-M	J3-N	50
SA0552R	J2-A	J2-B					J7-A	J7-B	J2-U	J2-V	31
AA0666T			J4-x	J4-y	J4-z	J4-KK	J8-CC	J8-DD	J3-P	J3-R	51

Figure 13. Calorimeter Pin Assignments Apollo Boilerplate BP-15

[redacted]

[redacted]

RF Package		RF Pack to TMS 1090						TMS 1090 to 90 x 1-1/4 Commutator				Commtr. Ch
								TMS 1090 Out		Commutator In		
Meas. No.	Pkg	Pin A	Pin E	Pin B	Pin G	Pin F	Pin H	+Sig	-Sig	+Sig	-Sig	
CT0201T	A	J1-z	J1-y	J1-x				J7-L	J7-M	J1-M	J1-N	6
CT0202T	A				J1-BB	J1-CC	J1-AA	J7-a	J7-b	J1-P	J1-R	7
CT0203T	B	J1-M	J1-N	J1-M				J7-c	J7-d	J1-S	J1-T	8
CT0204T	B				J1-PP	J1-JJ	J1-HH	J7-e	J7-f	J1-U	J1-V	9
CT0205T	C	J1-EE	J1-DD	J1-MM				J7-g	J7-h	J1-W	J1-X	10
CT0206T	C				J1-p	J1-R	J1-P	J7-i	J7-j	J1-Y	J1-Z	11

Figure 14. Pin Assignments R. F. Package Temperature Monitor Apollo Boilerplate BP-12

[redacted]

Resistance Thermometer		Resistance Therm to TMS 1090			TMS 1090 to Commutator				Commtr. Ch
		Pin A or Terminal 1	Pin B or Terminal 2	Pin C or Terminal 3	TMS 1090 Out		Commutator In		
Meas. No.	Location				+Sig	-Sig	+Sig	-Sig	
CA0610T	Interior CM	J1-G	J1-H	J1-J	J7-G	J7-H	J1-H	J1-J	4
SA0612T	Interior SM	J1-K	J1-L	J1-j	J7-J	J7-K	J1-K	J1-L	5
LA0600T	Tower	J4-AA	J4-BB	J4-CC	J8-k	J8-m	J3-S	J3-T	52
LA0601T	Tower	J4-M	J4-N	J4-m	J8-n	J8-p	J3-U	J3-V	53
LA0602T	Tower	J4-HH	J4-JJ	J4-PP	J8-q	J8-r	J3-W	J3-X	54
LA0603T	Tower	J4-MM	J4-DD	J4-EE	J8-s	J8-t	J3-Y	J3-Z	55
LA0604T	Tower	J4-P	J4-R	J4-P	J8-N	J8-P	J3-AA	J3-BB	56
LA0605T	Tower	J4-a	J4-b	J4-v	J8-R	J8-S	J3-CC	J3-DD	57
LA0606T	Tower	J4-X	J4-Y	J4-GG	J8-T	J8-U	J3-EE	J3-FF	58
LA0607T	Tower	J4-V	J4-W	J4-s	J8-V	J8-W	J3-HH	J3-JJ	59

Figure 15. Pin Assignments Resistance Thermometers Apollo Boilerplate BP-15

~~CONFIDENTIAL~~

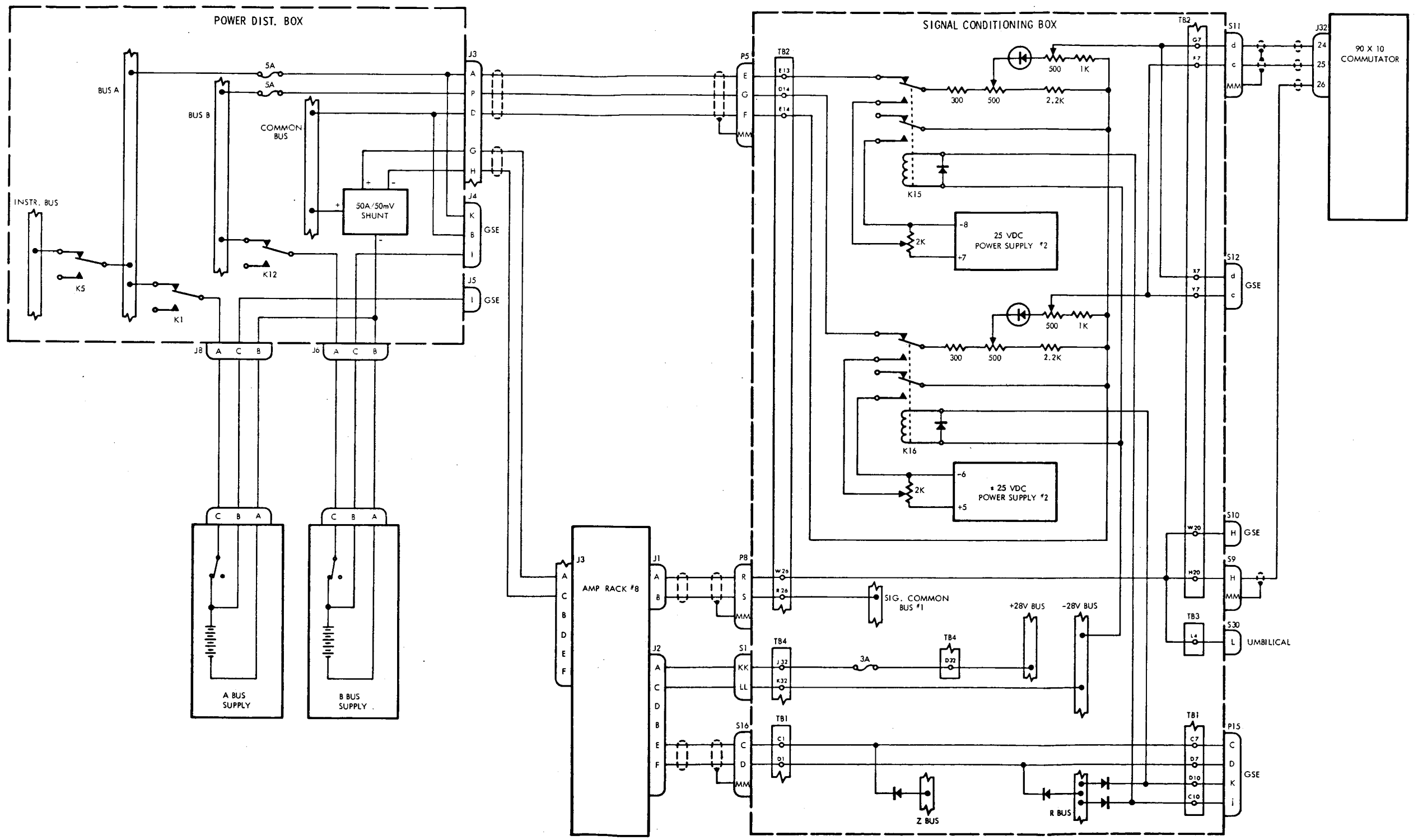

Figure 16. Bus "A", Bus "B" and Current Monitor Diagram Apollo Boilerplate BP-15

~~CONFIDENTIAL~~

~~CONFIDENTIAL~~

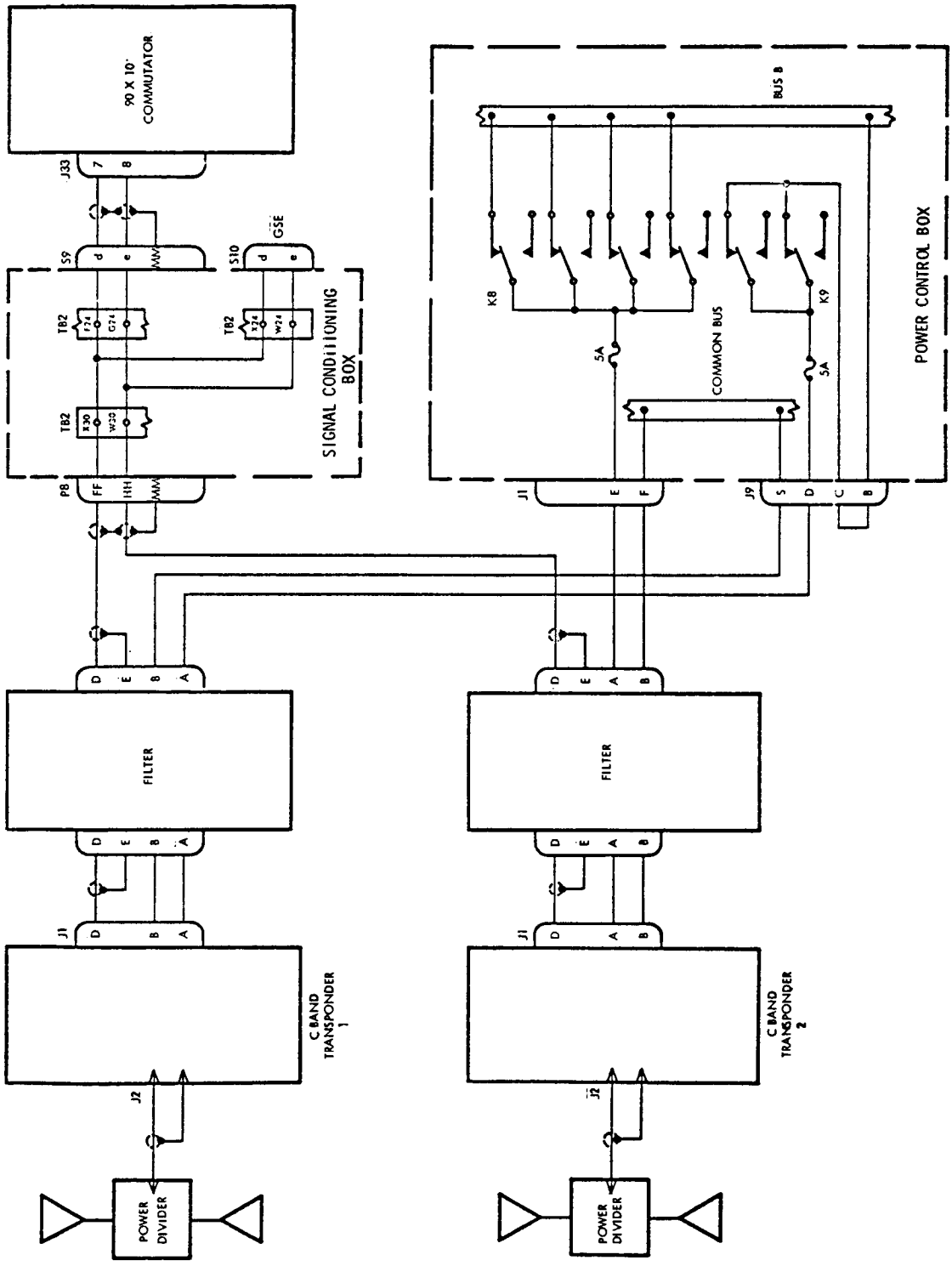

Figure 17. C-Band Transponder Diagram Apollo Boilerplate BP-15

~~CONFIDENTIAL~~

~~CONFIDENTIAL~~

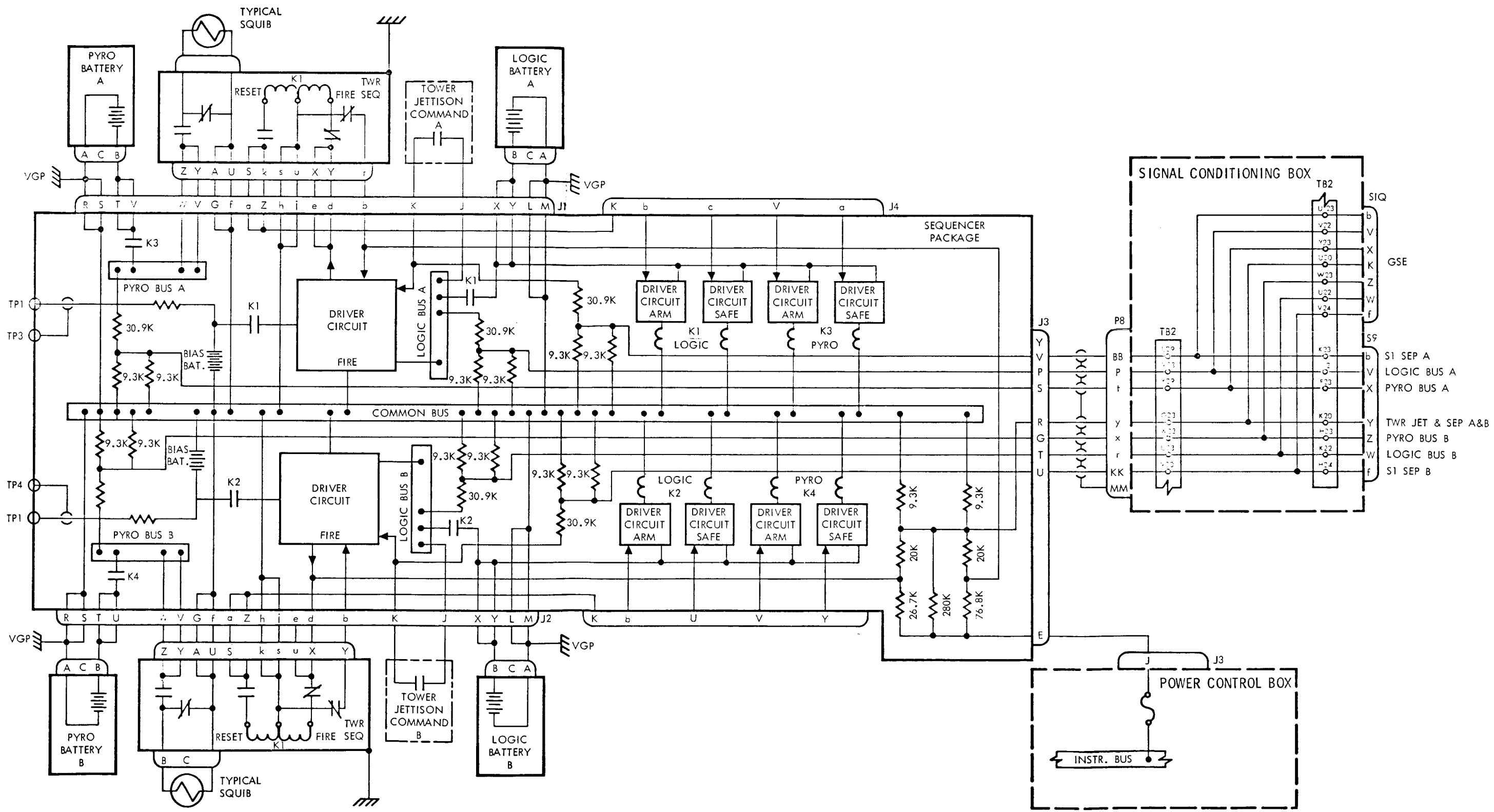

Figure 18. LES Circuit Monitor Diagram Apollo Boilerplate BP-15

~~CONFIDENTIAL~~

~~CONFIDENTIAL~~

CONFIDENTIAL

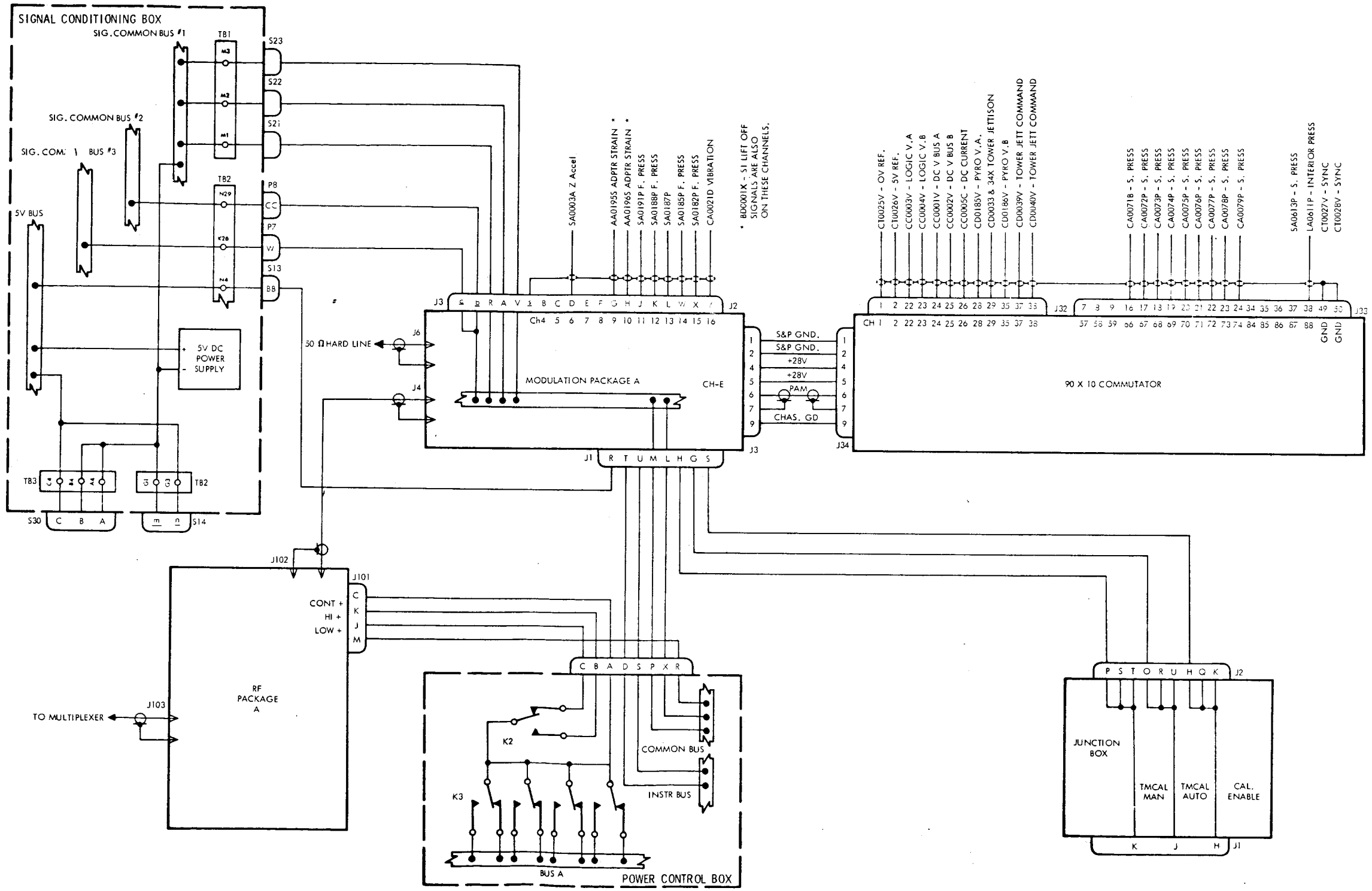

Figure 19. Modulation Package A Schematic Diagram Apollo Boilerplate BP-15

~~CONFIDENTIAL~~

~~CONFIDENTIAL~~

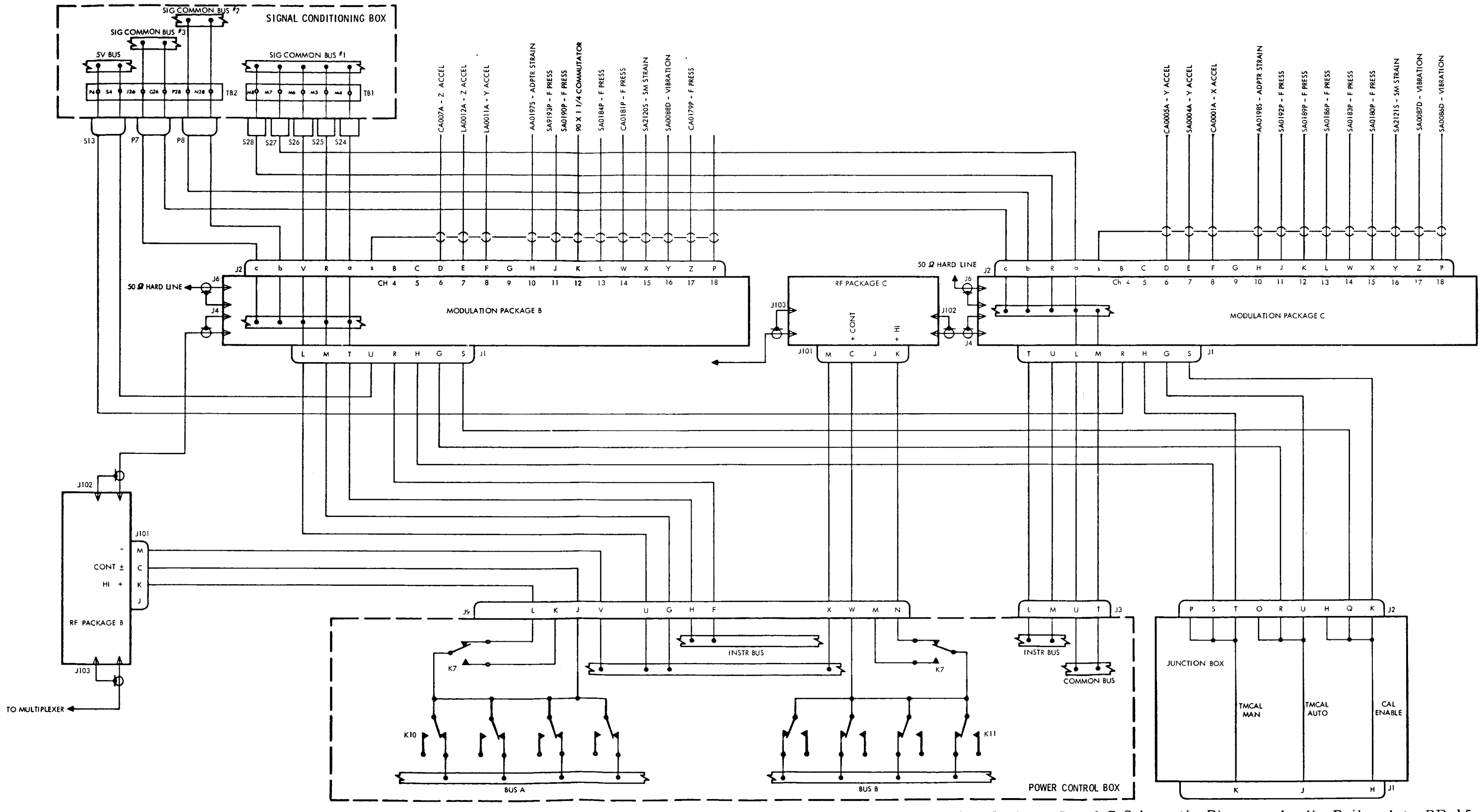

Figure 20. Modulation Package B and C Schematic Diagram Apollo Boilerplate BP-15

~~CONFIDENTIAL~~

CO[redacted]

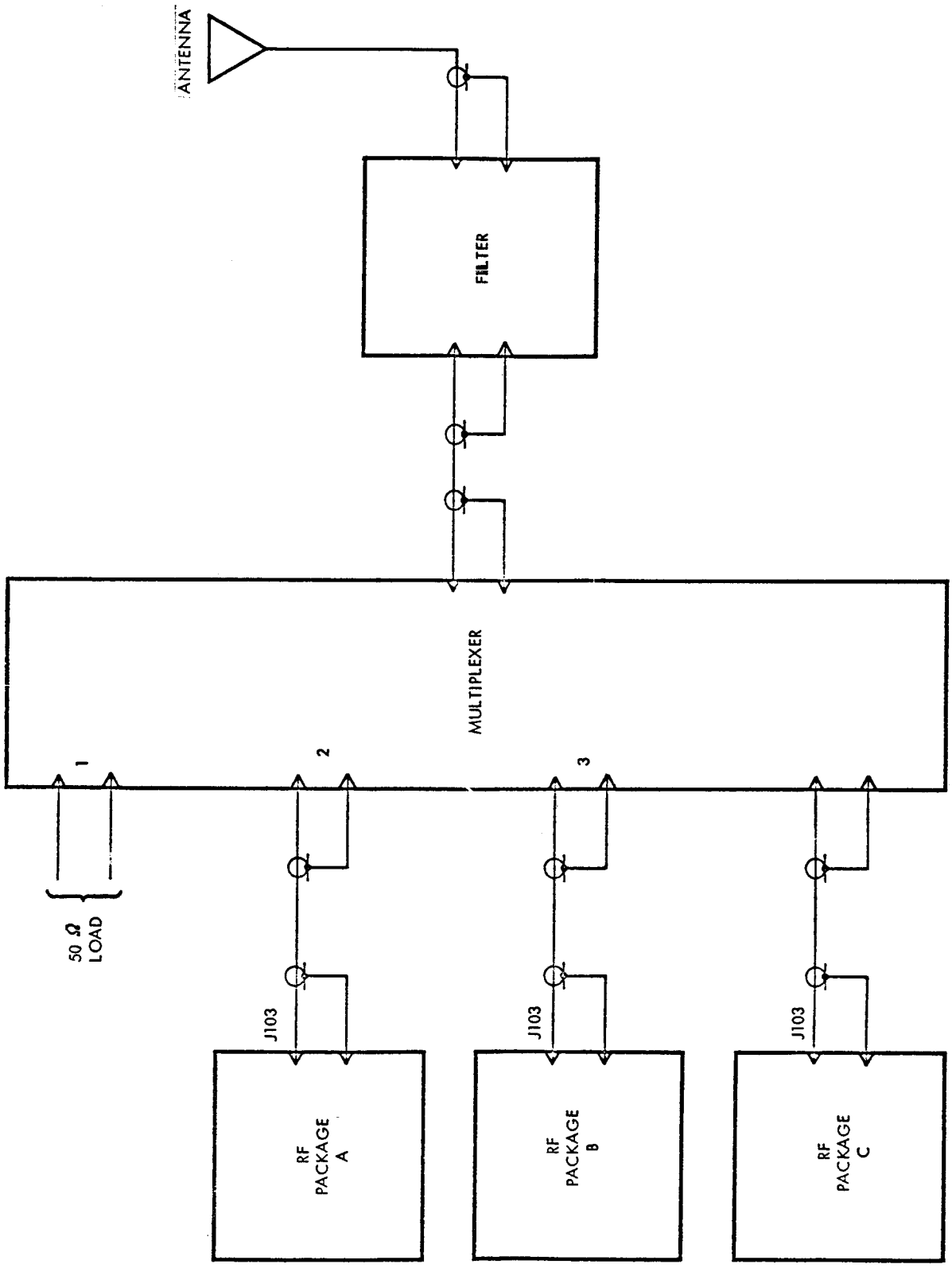

Figure 21. R.F. System Diagram Apollo Boilerplate BP-15

~~CONFIDENTIAL~~

~~CONFIDENTIAL~~

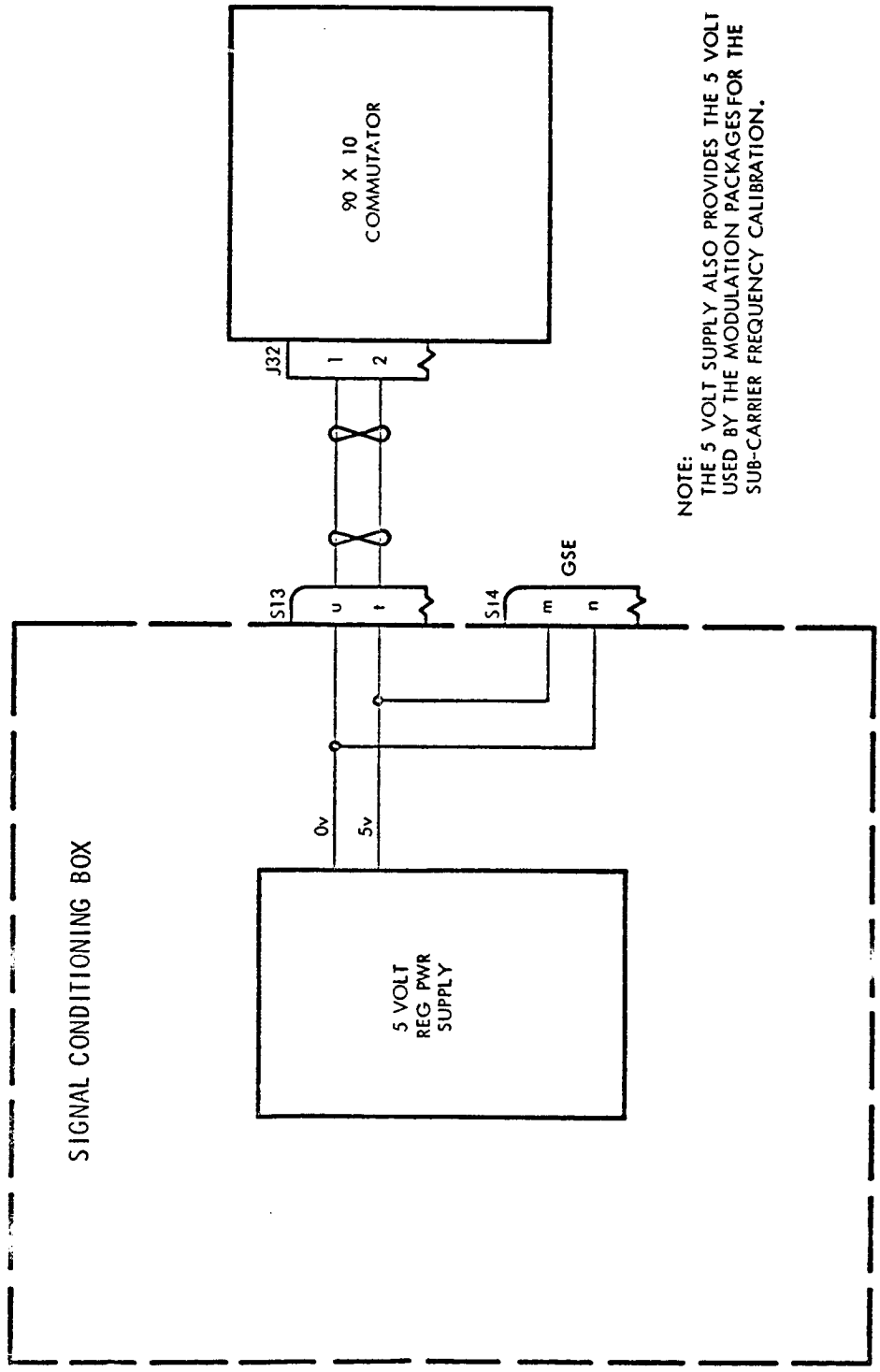

Figure 22. 5-Volt Regulated Power Supply Diagram Apollo Boilerplate BP-15

~~CONFIDENTIAL~~

[redacted]

TAB E

APOLLO FLIGHT RESEARCH AND DEVELOPMENT INSTRUMENTATION PERFORMANCE AND INTERFACE SPECIFICATION FOR BOILERPLATE BP-18

(Information not available at this time)

CO[redacted]

TAB F

APOLLO FLIGHT RESEARCH AND DEVELOPMENT INSTRUMENTATION PERFORMANCE AND INTERFACE SPECIFICATION FOR BOILERPLATE B-22

(Information not available at this time)

[redacted]

TAB G

APOLLO FLIGHT RESEARCH AND DEVELOPMENT INSTRUMENTATION PERFORMANCE AND INTERFACE SPECIFICATION FOR BOILERPLATE BP-23

TABLE OF CONTENTS

Paragraph	Title	Page
1.	SCOPE	G1
1.1	Scope	G1
2.	APPLICABLE DOCUMENTS	G1
2.1	Applicability	G1
2.1.1	Non-Government Documents	G1
2.1.2	Precedence	G1
3.	REQUIREMENTS	G1
3.1	General	G1
4.	QUALITY ASSURANCE PROVISIONS	G1
5.	PREPARATION FOR DELIVERY	G2
6.	NOTES	G2
6.1	Intended Use	G2

CO[redacted]

APOLLO FLIGHT RESEARCH AND DEVELOPMENT INSTRUMENTATION PERFORMANCE AND INTERFACE SPECIFICATION FOR BOILERPLATE BP-23

1. SCOPE

1.1 Scope. - This specification defines the Flight R and D Instrumentation performance and interface requirements for Boilerplate BP-23.

2. APPLICABLE DOCUMENTS

2.1 Applicability. - The following documents of the issue in effect on the date of contract, form a part of this specification to the extent specified herein.

2.1.1 Non-Government Documents.

SPECIFICATIONS

North American Aviation, Inc., Space and Information Systems Division (NAA/S&ID)

SID 63-573	Apollo Measurement Requirements for Boilerplate BP-23, dated 21 June 1963

2.1.2 Precedence. - For this specification, the order of precedence in case of conflict shall be as follows:

(a) The contract
(b) This specification
(c) Other documents referenced herein.

3. REQUIREMENTS

3.1 General. - Boilerplate BP-23 shall be used as a backup end item in the event of a scrub or failure of Boilerplate BP-6 or BP-12.

4. QUALITY ASSURANCE PROVISIONS

Not Applicable

5. PREPARATION FOR DELIVERY

Not Applicable

6. NOTES

6.1 Intended Use. - This specification is intended to be used to define the performance and interface requirements for Flight R and D Instrumentation for Boilerplate BP-23.

DISTRIBUTION FOR GFE PERFORMANCE AND INTERFACE SPECIFICATIONS (PARAGRAPH 4.1)

Address	Copies
National Aeronautics and Space Administration Atlantic Missile Range Operations Port Canaveral, Florida Attn: Mr. B.P. Brown	5
NASA Headquarters 1520 H Street Washington, D. C. Attn: Mr. G.M. Low, MD(P)	6
Grumman Aircraft Engineering Corporation Bethpage, Long Island, New York Attn: P. Gardiner	1
MIT Instrumentation Laboratory 75 Cambridge Parkway Cambridge 39, Massachusetts	1
NASA Resident Apollo Spacecraft Project Officer Grumman Aircraft Engineering Corporation Bethpage, Long Island, New York Attn: Mr. Jack Small	1
National Aeronautics and Space Administration Post Office Drawer D White Sands Missile Range White Sands, New Mexico	2
National Aeronautics and Space Administration Manned Spacecraft Center Transportation Officer Elington Building 381 Houston, Texas Attn: Apollo Document Control Center Elington 336 - TO BE OPENED BY ADDRESSEE ONLY	40

*The distribution for this report has been accomplished in compliance with paragraph 1.2 of Exhibit I of contract NAS9-150 and the NASA Apollo Documentation Distribution List (NASA-MSC letter SP-63-478, dated 2 October 1963).

Address	Copies
National Aeronautics and Space Administration Headquarters NASA Plant Officer P.O. Box 2500 Daytona Beach, Florida Attn: Administrative Contracting Officer	2
National Aeronautics and Space Administration Manned Spacecraft Center Resident Apollo Spacecraft Project Office NAA 12214 Lakewood Boulevard Downey, California	1
National Aeronautics and Space Administration Ames Research Center Moffett Field, California Attn: Library	2
National Aeronautics and Space Administration Lewis Research Center Cleveland, Ohio Attn: Library	2
National Aeronautics and Space Administration Flight Research Center Edwards AFB, California Attn: Research Library	2
National Aeronautics and Space Administration Jet Propulsion Laboratory Pasadena, California Attn: Library	2
National Aeronautics and Space Administration Langley Research Center Langley AFB, Virginia Attn: Mr. A.T. Mattson	2
National Aeronautics and Space Administration Goddard Space Flight Center Greenbelt, Maryland Attn: Manned Flight Support Office, Code 512	2
National Aeronautics and Space Administration George C. Marshall Space Flight Center Huntsville, Alabama Attn: M-SAT-AP	2
National Aeronautics and Space Administration Resident Apollo Spacecraft Project Office MIT Instrumentation Laboratory 75 Cambridge Parkway Cambridge 39, Massachusetts	1