[redacted]

(NASA-CR-117685) ACTUAL WEIGHT AND BALANCE BOILERPLATE 28 COMMAND MODULE /U/ (North American Aviation, Inc.) 12 p

N79-76480

Unclas
00/18 11562

FF No. 602(A)

12 (PAGES)

NASA-CR-117685 (NASA CR OR TMX OR AD NUMBER)

(CODE)

(CATEGORY)

[redacted]

Accession No. 08263-65

36

SID 63-143-19

ACTUAL WEIGHT AND BALANCE

BOILERPLATE 28 [redacted]

COMMAND MODULE

CONTRACT NAS 9-150

19 AUGUST 1965

Exhibit I, Paragraph 8.10
Prepared By

Weight Control

CLASSIFICATION CHANGE

To UNCLASSIFIED

By authority of [illegible]
Changed by [illegible] Date [illegible]
Classified Document Master Control Station, NASA
Scientific and Technical Information Facility

[redacted]

This [redacted] of the United [redacted] contents in any manner to an [redacted] person [redacted] by law.

NORTH AMERICAN AVIATION, INC.
SPACE and INFORMATION SYSTEMS DIVISION

[redacted]

FORM M158-D-3 VELLUM REV. 2-61

TECHNICAL REPORT INDEX/ABSTRACT

C65-9443

ACCESSION NUMBER	DOCUMENT SECURITY CLASSIFICATION
	Confidential

TITLE OF DOCUMENT

Actual Weight and Balance Report Boilerplate 28

Command Module

LIBRARY USE ONLY

AUTHOR(S)

D. D. Morgan

CODE	ORIGINATING AGENCY AND OTHER SOURCES	DOCUMENT NUMBER
	NAA - S&ID	SID 63-143-19

PUBLICATION DATE	CONTRACT NUMBER
19 August 1965	NAS 9-150

DESCRIPTIVE TERMS

ABSTRACT

The Apollo test requirement 101001 establishes and defines a test program utilizing a full-scale test vehicle for impact testing, through a development and demonstration phase, leading toward eventual system varification. Tests are performed within the range of condition set forth under Apollo impact criteria in Apollo Requirements Manual 6(ARM-6).

[redacted]

FORM 131-V REV. 6-64

[redacted]

TABLE OF CONTENTS

SEGMENT	ASPO-PS5-13-12 REFERENCE PARAGRAPH	PAGE
TITLE PAGE AND TABLE OF CONTENT	2.4.5.1	ii
INTRODUCTION SUMMARY	2.4.5.2	
INTRODUCTION		1
MODULE MASS PROPERTIES SUMMARY		2
WEIGHT SUMMARY STATEMENT	2.4.5.3	
COMMAND MODULE		3
WEIGHT AND BALANCE LOG		
TOTAL WEIGHT AND C.G. DERIVATION		4
HORIZONTAL WEIGHING - POSITION 1		5
HORIZONTAL WEIGHING - POSITION 2		6
SHORTAGE LIST		7
MASS DISTRIBUTION	2.4.5.6	
COMMAND MODULE		8
VEHICLE DIAGRAM	2.4.5.8	
DIMENSIONAL DIAGRAM		9

RECEIVED SEP 10 1965 NASA DOCUMENT CENTER

[redacted]

[redacted]

ACTUAL WEIGHT AND BALANCE

BOILERPLATE 28

COMMAND MODULE [redacted]

INTRODUCTION

This actual weight and balance report is submitted per paragraph 2.4.5 of NASA requirements Document ASPO-PS5-13-12 as deviated by attachment "A" of enclosure to NAA Letter 65MA5254 dated 7 May 1965.

The actual weight and balance determination of Boilerplate Command Module No. 28 was conducted by the Apollo Weight Control Group at the S&ID of North American Aviation Inc. The weight and centers of gravity were obtained using calibrated electronic weighing equipment.

The Boilerplate No. 28 Command Module is a test vehicle ballasted for a tower drop, water impact, simulating the normal impact condition for the Block I Manned Command Module, based on a launch weight of 11500 pounds. The objective of this test is to evaluate the structure for compatibility with the "No Leakage" criteria and is representative of drop configuration No. 97.

The weight, center of gravity, and inertia summary, page 2, presents data for the Command Module as dropped from the tower for the water impact test.

Page 3 reflects a functional breakdown summary of the Command Module.

Pages 4 through 7 presents the derivation of the actual weight and centers of gravity of the Command Module. Included are corrections made due to tare weight and air buoyancy.

Page 8 presents the weight distribution curve for the Command Module.

The dimensional diagram page 9 shows the Apollo Spacecraft X_a station which has an origin 1000 inches aft of the tangency of the Command Module structure mold line.

[redacted]

[redacted]

ACTUAL WEIGHT AND BALANCE

BOILERPLATE 28

COMMAND MODULE

MODULE MASS PROPERTIES SUMMARY

ITEM	WEIGHT	CENTER OF GRAVITY*			MOMENT OF INERTIA**		
		X	Y	Z	Ixx	Iyy	Izz
COMMAND MODULE	10250	1038.6	0.3	4.3	5801	4191	4365
COUCHES AND DUMMIES***	890	1042.1	-0.1	-9.0	186	51	186

*Centers of gravity are in the NASA Reference System except that the longitudinal axis has an origin 998.7 inches below the tangency point of the Command Module substructure mold line.

**Moments of inertia units are slug feet squared about the center of gravity.

***Included in Command Module Weight.

[redacted]

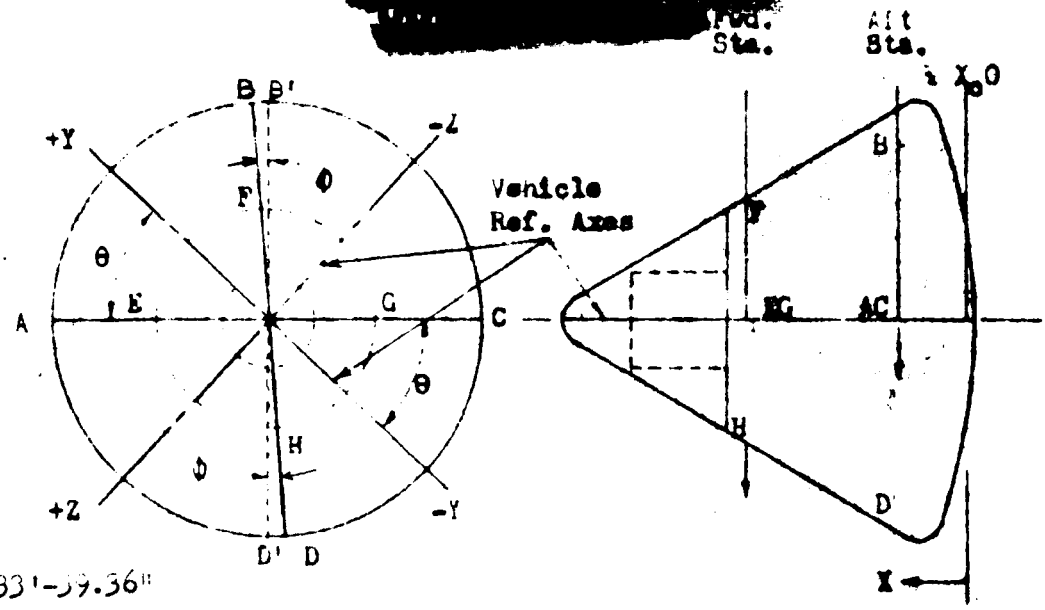

$\theta = 17°-33'-39.36''$
$\phi = 4°-29'-25.50''$

ACTUAL WEIGHT & BALANCE
BOILERPLATE NO. 28

Name: J. F. Kessler
Date: 23 July 1965

DESCRIPTION		± CORR.	AVER. RDG.	WEIGHT	LONG	MOM.	LAT	MOM.	VERT	MOM.
Fwd Jack Position	F		1579.4	1579.4	80.01	126368	3.44	5433		
	G		1579.4	1579.4	80.01	126368			3.44	5433
Aft Jack Position	A		4292.8	4292.8	30.24	129814	74.49	319771		
	B'		3967.5	3967.5	30.24	119977			-74.49	-295539
Aft Jack Position	C		4141.8	4141.8	30.24	125248	-74.49	-308523		
	D'		4468.7	4468.7	30.24	135133			74.49	332873
GROSS (as weighed)				10014.0	38.09	381430	1.67	16681		
				10015.6	38.09	381478			4.27	42767

Transfer to Vehicle Reference Axes (L = LAT. ARM, V = VERT. ARM)

$Y = L(\cos\theta - \sin\theta\tan\phi) - V\frac{\sin\theta}{\cos\phi} =$ +.261

$Z = \frac{1}{\cos\theta}\left(Y\sin\theta + \frac{L\sin\phi + V}{\cos\phi}\right) =$ +4.712

$\sin\theta = .30172$
$\cos\theta = .95340$
$\tan\theta =$
$\sin\phi = .07829$
$\cos\phi = .99693$
$\tan\phi = .07853$

DESCRIPTION	WEIGHT	X	WX	Y	WY	Z	WZ
TRANSFERRED GROSS (as weighed)	10014.8	38.09	381454	.26	2604	4.71	47170
Corrections:							
Plus: Corrections (Next Page)	+235.0	58.31	13703	3.92	921	-13.05	-3067
NET (AS WEIGHED)	10249.8	38.55	395157	0.34	3525	4.30	44103

[redacted]

WEIGHT AND BALANCE DATA SHEET

COMMAND MODULE

POSITION NO. 1

θ = 17°-33'-39.36"

ϕ = 4°-29'-25.5[illegible]

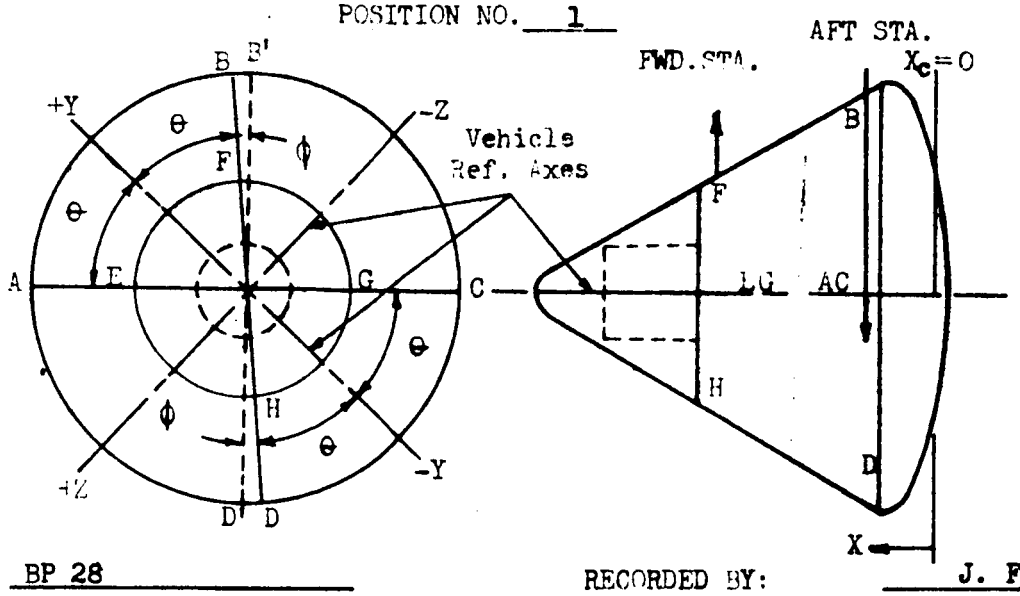

VEHICLE NO: BP 28

LOCATION:

RECORDED BY: J. F. Kessler

DATE PERFORMED: 22 July 1965

REACTION POINT B' (COMPRESSION)

DETERMINATION NUMBER	LOAD CELL COLOR	GROSS READING	ZERO CORRECTION	CORRECTED READING	AVERAGE READING
1	Yellow	15858	-94	15764	3968.7
2		15862	-117	15745	3963.8
3		15849	-80	15769	3970.0
				AVE.	3967.5

REACTION POINT D' (COMPRESSION)

DETERMINATION NUMBER	LOAD CELL COLOR	GROSS READING	ZERO CORRECTION	CORRECTED READING	AVERAGE READING
1	Blue	17849	-72	17777	4470.0
2		17852	-87	17765	4468.0
3		17850	-85	17765	4468.0
				AVE.	4468.7

REACTION POINT G (TENSION)

DETERMINATION NUMBER	LOAD CELL COLOR	GROSS READING	ZERO CORRECTION	CORRECTED READING	AVERAGE READING
1	Red	6298	-70	6228	
2		6404	-101	6303	1578.7
3		6420	-113	6307	1580.0
				AVE.	1579.4

WEIGHT DERIVATION

REACTION POINT	LOAD CELL COLOR	AVERAGE READING	GROSS WEIGHT	TARE	WEIGHT
B'	Yellow	3967.5	3967.5	0	3967.5
D'	Blue	4468.7	4468.7	0	4468.7
G	Red	1579.4	1579.4	0	1579.4

VERIFIED BY: _____

SID 63-143-19

[redacted]

[redacted]

WEIGHT AND BALANCE DATA SHEET

COMMAND MODULE

POSITION NO. 2

θ = 17°-33'-39.36"
ϕ = 4°-29'-25.50"

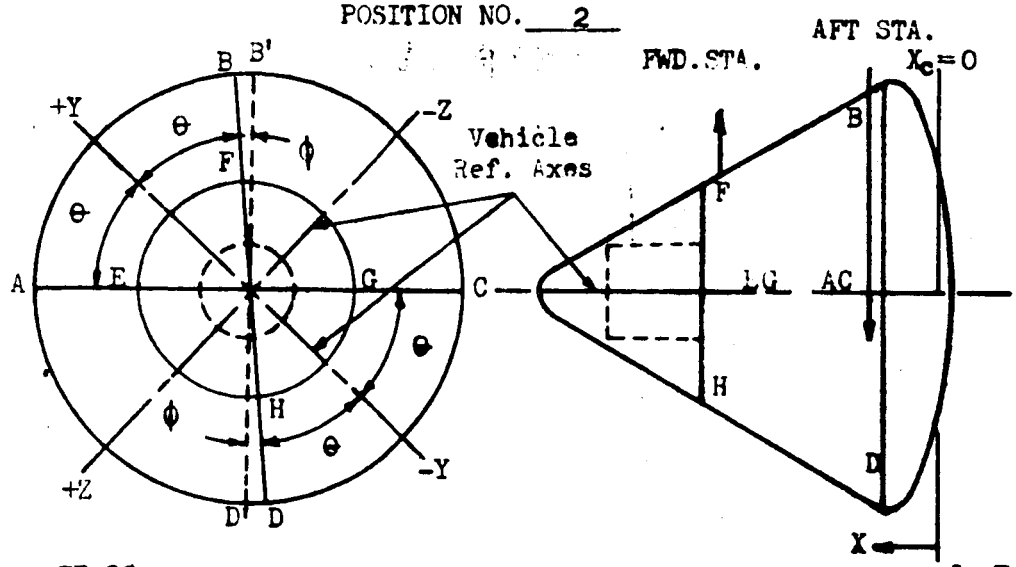

VEHICLE NO: BP 28

RECORDED BY: J. F. Kessler

LOCATION:

DATE PERFORMED: 22 July 1965

REACTION POINT A (COMPRESSION)

DETERMINATION NUMBER	LOAD CELL COLOR	GROSS READING	ZERO CORRECTION	CORRECTED READING	AVERAGE READING
1	Yellow	17170	-90	17080	4301.0
2		17104	-89	17015	4284.5
				AVE.	4292.8

REACTION POINT C (COMPRESSION)

DETERMINATION NUMBER	LOAD CELL COLOR	GROSS READING	ZERO CORRECTION	CORRECTED READING	AVERAGE READING
1	Blue	16545	-70	16475	4141.5
2		16565	-88	16477	4142.1
				AVE.	4141.8

REACTION POINT F (TENSION)

DETERMINATION NUMBER	LOAD CELL COLOR	GROSS READING	ZERO CORRECTION	CORRECTED READING	AVERAGE READING
1	Red	6388	-99	6289	1575.3
2		6418	-96	6322	1583.5
				AVE.	1579.4

WEIGHT DERIVATION

REACTION POINT	LOAD CELL COLOR	AVERAGE READING	GROSS WEIGHT	TARE	WEIGHT
A	Yellow	4292.8	4292.8	0	4292.8
C	Blue	4141.8	4141.8	0	4141.8
F	Red	1579.4	1579.4	0	1579.4

VERIFIED BY: _____ [redacted] SID 63-143-19

[redacted]

ACTUAL WEIGHT AND BALANCE

CORRECTIONS

BP 28 - 23 JULY 1965

ITEM	+/-	WEIGHT	Xc	WX	Y	WY	Z	WZ
REMOVAL ITEMS								
Trunnion Fittings	-	14.7	79.05	-1162	0.0	-	0.0	-
Jack Pad & Hoist Fitting (Fwd)	-	20.0	79.05	-1581	0.0	-	0.0	-
Jack Pad Fittings (2) & H/Ftg.	-	36.2	30.24	-1095	0.0	-	0.0	-
Hard Point Ftg.	-	46.0	26.6	-1224	-23.0	1058	63.0	-2898
SHORTAGE ITEMS								
Stroke Recorder L/H $X-X^{FT.}$	+	4.0	62.7	251	-12.3	-49	13.8	55
Stroke Recorder R/H $X-X^{FT.}$	+	4.0	62.7	251	12.3	49	13.8	55
Stroke Recorder L/H $X-X^{FT.}$	+	4.0	54.8	219	-12.3	-49	-39.6	-158
Stroke Recorder R/H $X-X^{HD}$	+	4.0	54.8	219	12.3	49	-39.6	-158
Stroke Recorder L/H Z-Z	+	4.8	24.0	115	-15.0	-72	38.8	186
Stroke Recorder R/H Z-Z	+	4.8	24.0	115	15.0	72	38.8	186
Load Links for Dummies	+	15.0	43.0	645	0.0	-	-10.0	-150
Gyro, Battery & Supports	+	57.0	72.0	4104	30.0	1710	17.0	969
Aux. Battery-For Skip Sup.	+	38.0	65.0	2470	40.0	1520	0.0	-
Water Tank & Water (15#)	+	20.0	23.0	460	-23.0	-460	63.0	1260
Pitch Indicator	+	19.0	84.5	1606	32.5	618	0.0	-
(2) Batteries	+	37.6	45.5	1711	-50.0	-1880	-6.0	-226
Hard Line Cover Plate	+	3.0	72.0	216	0.0	-	-34.0	-102
Trunnion (To Load Platform)	+	25.0	29.0	725	-72.0	-1800	0.0	-
Dummy Ant.	+	10.5	35.0	368	4.0	42	70.5	740
Camera T-49	+	11.5	24.5	282	2.0	23	-50.0	-575
Camera T-49	+	14.9	74.5	1110	-31.5	-469	0.0	-
Camera T-49	+	14.9	89.0	1326	0.0	-	0.0	-
Camera	+	14.9	74.5	1110	31.5	469	0.0	-
(2) Batteries	+	45.0	32.5	1463	2.0	90	-50.0	-2250
TOTAL CORRECTIONS	+	235.0	58.31	13704	3.92	921	-13.05	-3066

[redacted]

[redacted]

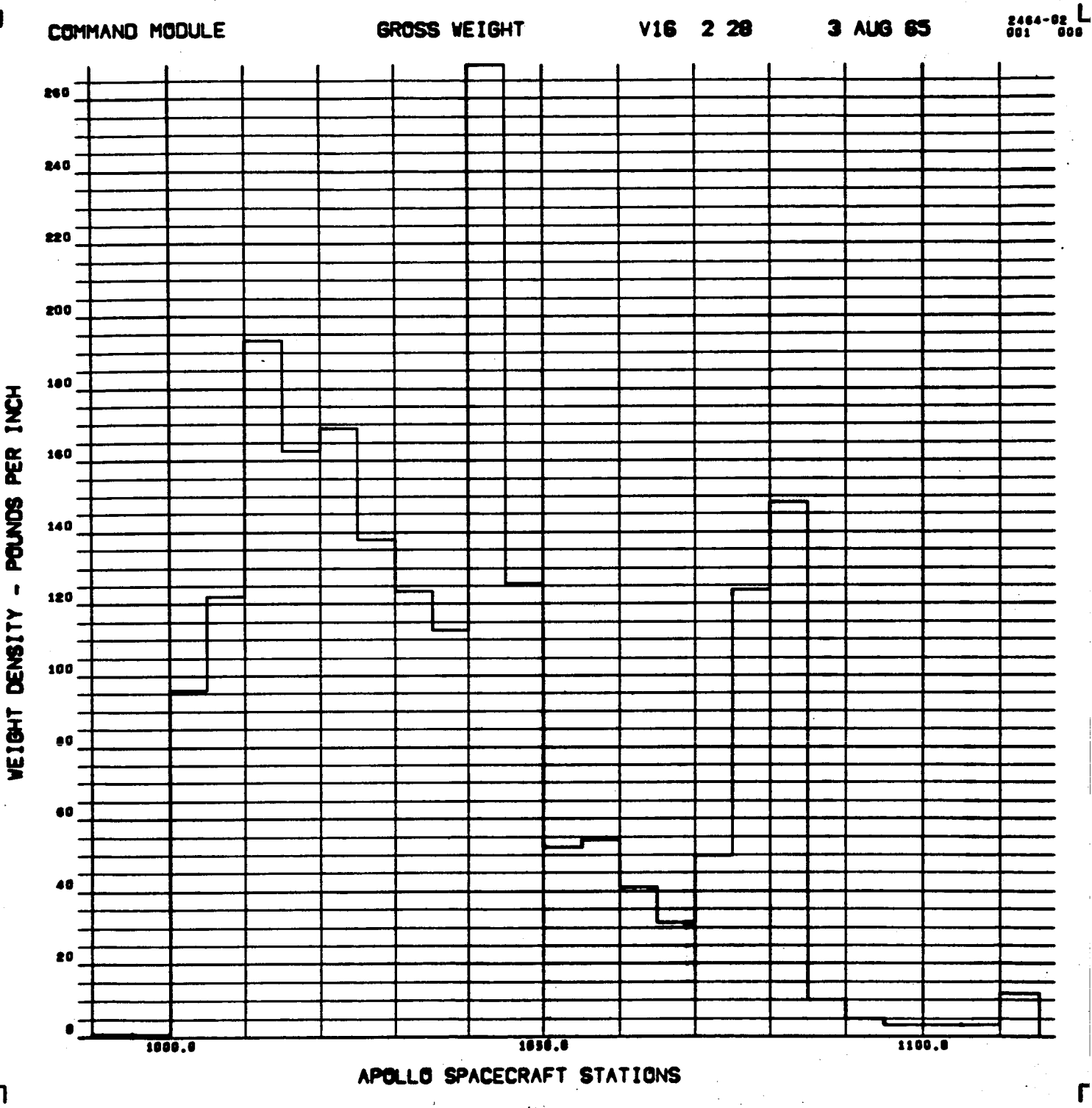

[redacted]

[redacted]

BOILERPLATE 28

DIMENSIONAL DIAGRAM

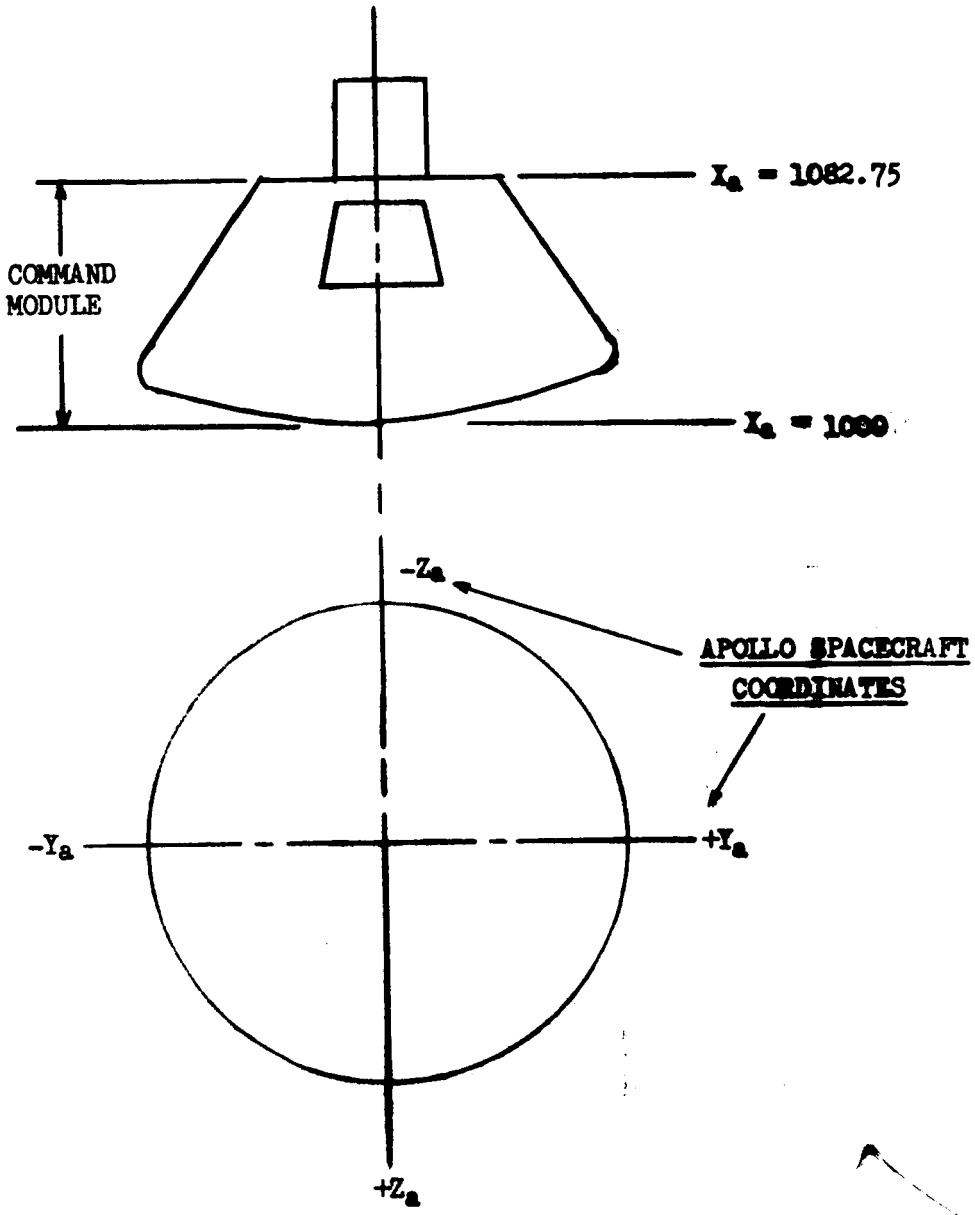

[redacted]